Department of Energy
Richland Operations Office
P.O. Box 550
Richland, Washington 99352

12-EMD-0023

JAN 10 2012

Mr. E. R. Skinnarland
Nuclear Waste Program
State of Washington
Department of Ecology
3100 Port of Benton Boulevard
Richland, Washington 99354

Dear Mr. Skinnarland:

CLASS 1 MODIFICATIONS TO THE HANFORD FACILITY RESOURCE CONSERVATION AND RECOVERY ACT (RCRA) PERMIT, QUARTER ENDING DECEMBER 31, 2011

In accordance with Hanford Facility RCRA Permit Condition I.C.3, enclosed for your notification are the Class 1 modifications for the quarter ending December 31, 2011. Enclosure 1 includes the Class 1 modification information that has been cleared for public release. Enclosure 2 includes the Class 1 modification information that contains Official Use Only (OUO) information and is not for public distribution.

These modifications update information in Part III of Permit Revision 8C. The modifications pertain to the 400 Area Waste Management Unit, the Liquid Effluent Treatment Facility and 200 Area Effluent Treatment Facility, the Integrated Disposal Facility, and the Waste Treatment and Immobilization Plant. The Class 1 modifications are being made to ensure that activities are conducted in compliance with the Permit. A record of these modifications is maintained in the Hanford Facility Operating Record.

The Department of Energy recently determined that it is inappropriate to apply Freedom of Information Act Exemption 2 to the OUO markings on the Enclosure 2 documents. Instead, Exemption 7 should be applied. For your convenience, the OUO markings on the Enclosure 2 documents have been updated and will be reflected in the Hanford Facility Operating Record.

Document transmitted contains OUO information.
When separated from Enclosure 2,
handle this document as non-sensitive information

If you have any questions, please contact me, or your staff may contact Ray J. Corey, Assistant Manager for Safety and Environment on (509) 376-0108.

Sincerely,

Matt McCormick
Manager

Enclosures

cc w/encls:
P. G. Harrington, ORP (CD ROM)
Ecology NWP Library (Hardcopy)
Environmental Portal, LMSI, A3-95 (CD ROM)
Administrative Record, TSD: H-0-1, H-0-8, T-3-4, H6-08 (Hard Copy & CD ROM)
HF Operating Record (J. K. Perry, MSA, H7-28) (CD ROM)

cc w/o encls:
F. W. Bond, Ecology
D. M. Busche, BNI
A. S. Carlson, Ecology
B. L. Curn, URS
S. L. Dahl, Ecology
L. L. Fritz, MSA
J. A. Hedges, Ecology
L. A. Huffman, ORP
D. L. McDonald, Ecology
A. L. Prignano, Ecology
J. R. Seaver, CHPRC

Document transmitted contains OUO information.
When separated from Enclosure 2,
handle this document as non-sensitive information.

ENCLOSURE 1

CLASS 1 MODIFICATIONS FOR QUARTER ENDING DECEMBER 31, 2011

Mr. Ron R. Skinnarland, Ecology

Consisting of 941 pages, including cover sheet

Hanford Facility RCRA Permit Modification Notification Forms
Part III, Operating Unit 16
400 Area Waste Management Unit

Index

Page 2 of 29:	Part III, OU-16, Permit Conditions
Page 3 of 29:	Addendum A, Section X
Page 4 of 29:	Addendum A, Section XI
Page 5 of 29:	Addendum A, Comments
Page 6 of 29:	Addendum B, Section B.1
Page 7 of 29:	Addendum B, Section B.1.1
Page 8 of 29:	Addendum B, Section B.1.2
Page 9 of 29:	Addendum B, Section B.2.2
Page 10 of 29:	Addendum B, Section B.3
Page 11 of 29:	Addendum B, Section B.4
Page 12 of 29:	Addendum B, Section B.6
Page 13 of 29:	Addendum C, Section C
Page 14 of 29:	Addendum C, Section C.1.1
Page 15 of 29:	Addendum C, Section C.1.1.1
Page 16 of 29:	Addendum C, Section C.1.1.2
Page 17 of 29:	Addendum C, Section C.1.1.2.3
Page 18 of 29:	Addendum C, Section C.1.2
Page 19 of 29:	Addendum C, Section C.1.2.1
Page 20 of 29:	Addendum C, Section C.1.2.2.1
Page 21 of 29:	Addendum C, Section C.1.2.2.2
Page 22 of 29:	Addendum C, Section C.1.3.2
Page 23 of 29:	Addendum C, Section C.1.3.3
Page 24 of 29:	Addendum C, Section C.2.1
Page 25 of 29:	Addendum C, Section C.2.2
Page 26 of 29:	Addendum C, Section C.2.3
Page 27 of 29:	Addendum C, Section C.3
Page 28 of 29:	Addendum J, Section J.3.2.5
Page 29 of 29:	Addendum J, Section J.7

Submitted by Co-Operator:

C J Simpkins for LTB 12/15/11
Leonard T. Blackford Date

Reviewed by DOE Program Office:

Jonathan Dowell 12.16.11
Jonathan A. Dowell Date

Hanford Facility RCRA Permit Modification Notification Form

Unit:	Permit Part
400 Area Waste Management Unit	**Part III, Operating Unit 16**

Description of Modification:

Part III, Operating Unit 16, Permit Conditions:

OPERATING UNIT GROUP 16 PERMIT CONDITIONS
400 Area Waste Management Unit

UNIT DESCRIPTION:

The 400 Area Waste Management Unit (WMU) is in the Property Protected Area (PPA) at the Fast Flux Test Facility (FFTF), in Hanford's 400 Area. The 400 Area WMU consists of two container storage units:

- Fuel Storage Facility (FSF, Building 403). The FSF is a large steel-frame, metal-sided, high bay building. Its dimensions are 34 x 27 x 12 meters (112 x 90 x 40 feet). The container storage unit is on the ground-level floor. In it are two large steel boxes that store sodium-contaminated core component pots (CCPs). The Permittees do not plan to store more mixed waste than is currently stored in the facility; however, the FSF is physically capable of storing additional mixed waste. They will store any additional wastes at the 400 Area WMU in the Interim Storage Area.
- Interim Storage Area, 4718 (ISA). The ISA consists of 156 x 247 meters (513 x 247 feet) totally fenced area. This area is for aboveground dry cask storage of spent fuel. A concrete pad in the ISA, which measures 27 x 37 meters (90 x 120 feet), was used for dry cask storage, but will not necessarily be used for mixed waste management. The rest of the ISA surface is gravel. The ISA is generally flat. However, it is graded to drain in accordance with the general drainage plan for the FFTF PPA. Inside the ISA, there is also one building along the west fence line, and open on the side. This building, Building 432A, is not authorized for mixed waste management.

The scale map in Addendum A shows the location of each storage unit. The only mixed waste stored in these two container storage units is elemental sodium, and sodium potassium (D001, D003, and WSC2), sodium hydroxide (D002), and potassium hydroxide (D002) and debris (e.g., piping, equipment, and components) contaminated with elemental sodium, ~~and~~ sodium potassium, sodium hydroxide ~~(D002)~~, and potassium hydroxide. ~~This waste stream is designated as (D001, D003, and WSC2).~~ The 400 Area WMU will not store, treat, or dispose of bulk metallic sodium or bulk sodium hydroxide.

LIST OF ADDENDA SPECIFIC TO OPERATING UNIT GROUP 16

Addendum A	Part A Form, dated December 31, 2011~~October 1, 2008~~
Addendum B	Waste Analysis Plan, dated December 31, 2011~~June 30, 2009~~
Addendum C	Process Information, dated December 31, 2011~~June 30, 2009~~
Addendum D	Groundwater Monitoring – Reserved
Addendum E	Security Requirements, dated June 30, 2009
Addendum F	Preparedness and Prevention, dated June 30, 2009
Addendum G	Personnel Training, dated September 30, 2009
Addendum H	Closure Plan, dated June 30, 2009
Addendum I	Inspection Requirements, dated September 30, 2009
Addendum J	Contingency Plan, dated December 31, 2011~~June 30, 2009~~

WAC 173-303-830 Modification Class	Class 1	Class 1	Class 2	Class 3
Please mark the Modification Class:	X			

Enter relevant WAC 173-303-830, Appendix I Modification citation number: A.1
Enter wording of WAC 173-303-830, Appendix I Modification citation:
Administrative and Information Changes

Modification Approved/Concur ☐ Yes ☐ Denied (state reason below)	Reviewed by Ecology:
Reason for denial:	F. W. Bond Date

[1] Class 1 modifications requiring prior Agency approval.

[2] If the proposed modification does not match any modification listed in WAC 173-303-830 Appendix I, then the proposed modification should automatically be given a Class 3 status. This status may be maintained by the Department of Ecology, or down graded to a Class 1, if appropriate.

Hanford Facility RCRA Permit Modification Notification Form

Unit:	Permit Part
400 Area Waste Management Unit	**Part III, Operating Unit 16**

Description of Modification:
Addendum A, Section X:

A. Permit Type	B. Permit Number	C. Description
E	AIR 06-1007	WAC 246-247, Radiation Protection – Air Emissions
E	AIR 10~~06~~-41~~1~~0-21~~1~~	WAC 246-247, Radiation Protection – Air Emissions
E	UST 45 10 1	WAC 173-216, State Waste Discharge Permit Program ~~400 Area/FFTF~~

WAC 173-303-830 Modification Class	Class 1	Class 1	Class 2	Class 3
Please mark the Modification Class:	X			

Enter relevant WAC 173-303-830, Appendix I Modification citation number: A.1
Enter wording of WAC 173-303-830, Appendix I Modification citation:
Administrative and Information Changes

Modification Approved/Concur ☐ Yes ☐ Denied (state reason below)
Reason for denial:

Reviewed by Ecology:

F. W. Bond Date

[1] Class 1 modifications requiring prior Agency approval.

[2] If the proposed modification does not match any modification listed in WAC 173-303-830 Appendix I, then the proposed modification should automatically be given a Class 3 status. This status may be maintained by the Department of Ecology, or down graded to a Class 1, if appropriate.

Hanford Facility RCRA Permit Modification Notification Form	
Unit: **400 Area Waste Management Unit**	Permit Part **Part III, Operating Unit 16**

Description of Modification:
Addendum A, Section XI:

The Fast Flux Test Facility (FFTF) was a 400-megawatt (thermal) liquid-metal cooled (sodium) research and test reactor located in the 400 Area of the Hanford Facility. The FFTF developed and tested advanced fuels and material for the Liquid Metal Fast Breeder Reactor program. The FFTF was constructed in the late 1970's and first went critical on February 9, 1980. FFTF operated successfully from 1982 to 1992. The Department of Energy (DOE) issued a shutdown order in December 1993, and since that time, the DOE has been de-fueling the reactor and deactivating systems, as they were no longer needed. Mixed waste stored in the 400 Area Waste Management unit can include elemental sodium (Na), sodium potassium (NaK) (D001, D003, WSC2) and sodium hydroxide or potassium hydroxide (D002); as well as debris (for example piping, equipment, and components) contaminated with Na or NaK, ~~elemental sodium and~~ sodium hydroxide, or potassium hydroxide. The mixed waste stored in the 400 Area Waste Management unit is limited to wastes generated from the 400 Area. Mixed waste will be stored in containers (for example drums and boxes) until treatment capabilities are available.

Greater-than 90-day Storage Areas:

Fuel Storage Facility (Building 403)

The Fuel Storage Facility (FSF) is a one-level reinforced concrete substructure covered by a steel frame metal-sided high bay building. Building dimensions are 34 x 27 x 12 meters (112 x 90 x 40) high. The principal equipment in the FSF is a belowground cell containing a carbon steel storage vessel approximately 6.4 meters (21 feet) in diameter and 7.3 meters (24 feet) deep for storing up to 466 FFTF spent fuel assemblies in liquid sodium. Adjacent buildings and below-grade cells contain the natural draft heat exchanger used to cool the FSF pool. With the exception of two areas, which are radiation areas (cells 907 and 906); all accessible areas are Radioactive Material Areas. The process design capacity for the FSF is 1,000 gallons.

Interim Storage Area

The 400 Area Interim Storage Area (ISA) consists of 156 x 75 meters (513 x 247 feet) totally fenced area with perimeter lighting that has been designated for above ground dry cask storage of spent fuel. A concrete pad, which measures 27 x 37 meters (90 x 120 Feet), was used for cask storage. The process design capacity for the ISA is 19,000 gallons.

WAC 173-303-830 Modification Class	Class 1	Class 1	Class 2	Class 3
Please mark the Modification Class:	X			

Enter relevant WAC 173-303-830, Appendix I Modification citation number: F.b.4
Enter wording of WAC 173-303-830, Appendix I Modification citation:
Storage of different wastes that do not require different management standards

Modification Approved/Concur ☐ Yes ☐ Denied (state reason below) Reason for denial:	Reviewed by Ecology: F. W. Bond Date

[1] Class 1 modifications requiring prior Agency approval.

[2] If the proposed modification does not match any modification listed in WAC 173-303-830 Appendix I, then the proposed modification should automatically be given a Class 3 status. This status may be maintained by the Department of Ecology, or down graded to a Class 1, if appropriate.

Hanford Facility RCRA Permit Modification Notification Form	
Unit: **400 Area Waste Management Unit**	Permit Part **Part III, Operating Unit 16**

Description of Modification:
Addendum A, Comments:

Comments:

~~In Section VII. Facility Operator Information, there is no change to DOE as the Facility Owner/Operator; only a change in Co-Operator*. The change in Co-Operator* will be effective October 1, 2008.~~

WAC 173-303-830 Modification Class	Class 1	Class 1	Class 2	Class 3
Please mark the Modification Class:	X			

Enter relevant WAC 173-303-830, Appendix I Modification citation number: A.1
Enter wording of WAC 173-303-830, Appendix I Modification citation:
Administrative and Information Changes

Modification Approved/Concur ☐ Yes ☐ Denied (state reason below) Reason for denial:	Reviewed by Ecology: F. W. Bond Date

[1] Class 1 modifications requiring prior Agency approval.

[2] If the proposed modification does not match any modification listed in WAC 173-303-830 Appendix I, then the proposed modification should automatically be given a Class 3 status. This status may be maintained by the Department of Ecology, or down graded to a Class 1, if appropriate.

Hanford Facility RCRA Permit Modification Notification Form	
Unit: **400 Area Waste Management Unit**	Permit Part **Part III, Operating Unit 16**

Description of Modification:
Addendum B, Section B.1:

B.1 UNIT DESCRIPTION

The 400 Area WMU is a non-land based unit located in the 400 Area of the Hanford Facility and contains two container storage dangerous waste management units. The 400 Area WMU is operated in accordance with requirements in the Hanford Dangerous Waste permit established pursuant to the provision of WAC 173-303-630. The mission of the 400 Area WMU is to store mixed waste until it is treated. Treatment is not currently provided for mixed waste stored at the 400 Area WMU.

WAC 173-303-830 Modification Class	Class 1	Class [1]1	Class 2	Class 3
Please mark the Modification Class:	X			

Enter relevant WAC 173-303-830, Appendix I Modification citation number: A.1
Enter wording of WAC 173-303-830, Appendix I Modification citation:
Administrative and Information Changes

Modification Approved/Concur ☐ Yes ☐ Denied (state reason below)
Reason for denial:

Reviewed by Ecology:

F. W. Bond Date

[1] Class 1 modifications requiring prior Agency approval.

[2] If the proposed modification does not match any modification listed in WAC 173-303-830 Appendix I, then the proposed modification should automatically be given a Class 3 status. This status may be maintained by the Department of Ecology, or down graded to a Class 1, if appropriate.

Hanford Facility RCRA Permit Modification Notification Form

Unit:	Permit Part
400 Area Waste Management Unit	**Part III, Operating Unit 16**

Description of Modification:
Addendum B, Section B.1.1:

B.1.1 Description of Unit Processes and Activities

The 400 Area WMU includes the FSF (Building 403) and the ISA. The locations and ~~unit~~ boundar~~y~~ies of these two container storage units is documented in Figures C.1 and C.2 of Addendum C, and the topographic map in Addendum A ~~is represented by the perimeter of each of these noncontiguous storage locations, as shown on the topographic map related to the Addendum A, Part A Form on file with Ecology~~.

Addendum A, Part A Form identifies waste quantities and the process design capacity for the 400 Area WMU. Sodium (Na) and sodium potassium (NaK) contamination is associated with the ~~sodium~~ Na and NaK used as coolant in the FFTF reactor. The 400 Area WMU will continue to receive Na and NaK ~~sodium~~-contaminated waste and debris ~~as it is generated~~ from decommissioning of the FFTF. In addition, Na ~~sodium~~-contaminated waste, and NaK containing components, generated in association with former FFTF operations and currently in storage at other Hanford Facility locations, could be transferred to the 400 Area WMU for consolidation with other 400 Area-generated waste. Transfers of mixed waste to the 400 Area WMU will be conducted under Permit Condition II.Q.

WAC 173-303-830 Modification Class	Class 1	Class [1]1	Class 2	Class 3
Please mark the Modification Class:		X		

Enter relevant WAC 173-303-830, Appendix I Modification citation number: F.4.b
Enter wording of WAC 173-303-830, Appendix I Modification citation:
Storage of different wastes that do not require different management standards

Modification Approved/Concur ☐ Yes ☐ Denied (state reason below) Reason for denial:	Reviewed by Ecology:
	F. W. Bond — Date

[1] Class 1 modifications requiring prior Agency approval.

[2] If the proposed modification does not match any modification listed in WAC 173-303-830 Appendix I, then the proposed modification should automatically be given a Class 3 status. This status may be maintained by the Department of Ecology, or down graded to a Class 1, if appropriate.

Hanford Facility RCRA Permit Modification Notification Form	
Unit: **400 Area Waste Management Unit**	Permit Part **Part III, Operating Unit 16**

Description of Modification:
Addendum B, Section B.1.2

B.1.2 Identification and Classification of Waste

Waste types not specifically identified in ~~Addendum A, Part A Form~~this Waste Analysis Plan are prohibited from storage in the 400 Area WMU dangerous waste management units. The waste can only exhibit the characteristics of ignitability, reactivity, and/or corrosivity.

Waste is designated using manufacturers' product information, Material Safety Data Sheets (MSDSs), laboratory analysis provided by the generator, and/or reference material such as Registry of Toxic Effects of Chemical Substances (published by the National Institutes for Occupational Safety and Health). Addendum A, Part A Form identifies dangerous waste numbers for waste types stored at the 400 Area WMU. These dangerous waste numbers and corresponding references are as follows:

Dangerous Waste Number (Characteristic)	Reference
D001 (ignitable)	WAC 173-303-090(5)
D002 (corrosive liquid)	WAC 173-303-090(6)
D003 (reactive)	WAC 173-303-090(7)
WSC2 (corrosive solid)	WAC 173-303-090(6)/104

WAC 173-303-830 Modification Class	Class 1	Class [1]1	Class 2	Class 3
Please mark the Modification Class:	X			

Enter relevant WAC 173-303-830, Appendix I Modification citation number: A.1
Enter wording of WAC 173-303-830, Appendix I Modification citation:
Administrative and Information Changes

Modification Approved/Concur ☐ Yes ☐ Denied (state reason below) Reason for denial:	Reviewed by Ecology:
	F. W. Bond — Date

[1] Class 1 modifications requiring prior Agency approval.

[2] If the proposed modification does not match any modification listed in WAC 173-303-830 Appendix I, then the proposed modification should automatically be given a Class 3 status. This status may be maintained by the Department of Ecology, or down graded to a Class 1, if appropriate.

Hanford Facility RCRA Permit Modification Notification Form	
Unit: **400 Area Waste Management Unit**	Permit Part **Part III, Operating Unit 16**

Description of Modification:
Addendum B, Section B.2.2:

B.2.2 Verification of Waste

Verification is an assessment performed at waste receipt to substantiate that the waste stream received at the 400 Area WMU is the same as represented by the analysis information and/or supporting documentation. Verification includes a container ~~a~~ receipt inspection. Documentation to be reviewed as part of verification activities may include the container inventory documentation, a container listing report, and the waste profile documentation. Before acceptance into the ISA~~For all TSD locations within the 400 Area WMU~~, each container or group of containers is inspected ~~before acceptance~~ by waste operations personnel for damage, proper closure, marking, and proper accompanying documentation.

WAC 173-303-830 Modification Class	Class 1	Class [1]1	Class 2	Class 3
Please mark the Modification Class:		X		

Enter relevant WAC 173-303-830, Appendix I Modification citation number: -830(4)(d)
Enter wording of WAC 173-303-830, Appendix I Modification citation:
Request approval as Class 1 prime

Modification Approved/Concur ☐ Yes ☐ Denied (state reason below) Reason for denial:	Reviewed by Ecology: F. W. Bond Date

[1] Class 1 modifications requiring prior Agency approval.

[2] If the proposed modification does not match any modification listed in WAC 173-303-830 Appendix I, then the proposed modification should automatically be given a Class 3 status. This status may be maintained by the Department of Ecology, or down graded to a Class 1, if appropriate.

Hanford Facility RCRA Permit Modification Notification Form	
Unit: **400 Area Waste Management Unit**	Permit Part **Part III, Operating Unit 16**

Description of Modification:
Addendum B, Section B.3:

B.3 SELECTING WASTE ANALYSIS PARAMETERS

Na and NaK~~Sodium~~ is the material of interest to support safe storage of the waste (including contaminated piping, appurtenances, and debris) at the 400 Area WMU. ~~Sodium~~ Na and NaK consists of un-reacted elements (either Na or a mixture of Na and K, respectively)~~is a single element waste~~ (i.e., no other chemical contamination) as it was contained in closed-loop cooling systems throughout FFTF reactor operation. In addition, the ignitable and reactive properties of sodium and potassium metal are well known and documented (MSDSs and FFTF operating history), and the Na and NaK~~sodium~~ waste to be stored in the 400 Area WMU storage units is consistent with these properties. Analytical data exist for the Na and NaK ~~sodium~~ contained in the FFTF cooling system, therefore, no further sampling and analyses of the sodium waste are planned.

Based on known chemical properties of sodium and a mixture of sodium and potassium metal, small amounts of concentrated sodium hydroxide or potassium hydroxide and trace amounts of hydrogen may be generated if the sodium comes in contact with water vapor in the air during storage. Due to the potential formation of sodium or potassium hydroxide having a pH greater than 12.5, debris contaminated with Na or NaK ~~the sodium~~ metal is designated as a corrosive (D002 and WSC2, corrosive liquid and solid, respectively). In the event that liquid is identified in Na or NaK ~~sodium~~ waste secondary containment, the liquid will be managed under the generator provisions of WAC 173-303-200 and is beyond the scope of this WAP.

WAC 173-303-830 Modification Class	Class 1	Class [1]1	Class 2	Class 3
Please mark the Modification Class:		X		

Enter relevant WAC 173-303-830, Appendix I Modification citation number: F.4.b
Enter wording of WAC 173-303-830, Appendix I Modification citation:
Storage of different wastes that do not require different management standards

Modification Approved/Concur ☐ Yes ☐ Denied (state reason below) Reason for denial:	Reviewed by Ecology: F. W. Bond — Date

[1] Class 1 modifications requiring prior Agency approval.

[2] If the proposed modification does not match any modification listed in WAC 173-303-830 Appendix I, then the proposed modification should automatically be given a Class 3 status. This status may be maintained by the Department of Ecology, or down graded to a Class 1, if appropriate.

Hanford Facility RCRA Permit Modification Notification Form

Unit:	Permit Part
400 Area Waste Management Unit	**Part III, Operating Unit 16**

Description of Modification:
Addendum B, Section B.4:

B.4 SELECTING SAMPLING PROCESSES

Additional analytical data are not required to store safely the Na or NaK ~~sodium~~ contaminated waste at the 400 Area WMU. Therefore, no additional waste sampling is planned.

WAC 173-303-830 Modification Class	Class 1	Class [1]1	Class 2	Class 3
Please mark the Modification Class:		X		

Enter relevant WAC 173-303-830, Appendix I Modification citation number: F.4.b
Enter wording of WAC 173-303-830, Appendix I Modification citation:
Storage of different wastes that do not require different management standards

Modification Approved/Concur ☐ Yes ☐ Denied (state reason below)
Reason for denial:

Reviewed by Ecology:

F. W. Bond Date

[1] Class 1 modifications requiring prior Agency approval.

[2] If the proposed modification does not match any modification listed in WAC 173-303-830 Appendix I, then the proposed modification should automatically be given a Class 3 status. This status may be maintained by the Department of Ecology, or down graded to a Class 1, if appropriate.

Hanford Facility RCRA Permit Modification Notification Form

Unit:	Permit Part
400 Area Waste Management Unit	**Part III, Operating Unit 16**

Description of Modification:
Addendum B, Section B.6:

B.6 SELECTING WASTE RE-EVALUATION FREQUENCIES

Additional analytical data are not required to store safely the Na and NaK ~~sodium~~ contaminated waste at the 400 Area WMU. Therefore, there is no need to select a waste re-evaluation frequency.

WAC 173-303-830 Modification Class	Class 1	Class [1]1	Class 2	Class 3
Please mark the Modification Class:		X		

Enter relevant WAC 173-303-830, Appendix I Modification citation number: F.4.b
Enter wording of WAC 173-303-830, Appendix I Modification citation:
Storage of different wastes that do not require different management standards

Modification Approved/Concur ☐ Yes ☐ Denied (state reason below) Reason for denial:	Reviewed by Ecology: F. W. Bond	Date

[1] Class 1 modifications requiring prior Agency approval.

[2] If the proposed modification does not match any modification listed in WAC 173-303-830 Appendix I, then the proposed modification should automatically be given a Class 3 status. This status may be maintained by the Department of Ecology, or down graded to a Class 1, if appropriate.

Hanford Facility RCRA Permit Modification Notification Form	
Unit: **400 Area Waste Management Unit**	Permit Part **Part III, Operating Unit 16**

Description of Modification:
Addendum C, Section C

C. PROCESS INFORMATION

This Addendum discusses the processes used to store sodium (Na) -and sodium potassium (NaK)-contaminated waste at the 400 Area WMU. It includes a description of the containers used to store mixed waste at the two waste storage areas, the container management practices, the use of secondary containment systems, and special procedures related to ignitable, reactive, and incompatible wastes.

WAC 173-303-830 Modification Class	Class 1	Class [1]1	Class 2	Class 3
Please mark the Modification Class:		X		

Enter relevant WAC 173-303-830, Appendix I Modification citation number: F.4.b
Enter wording of WAC 173-303-830, Appendix I Modification citation:
Storage of different wastes that do not require different management standards

Modification Approved/Concur ☐ Yes ☐ Denied (state reason below) Reason for denial:	Reviewed by Ecology: F. W. Bond Date

[1] Class 1 modifications requiring prior Agency approval.

[2] If the proposed modification does not match any modification listed in WAC 173-303-830 Appendix I, then the proposed modification should automatically be given a Class 3 status. This status may be maintained by the Department of Ecology, or down graded to a Class 1, if appropriate.

Hanford Facility RCRA Permit Modification Notification Form	
Unit: **400 Area Waste Management Unit**	Permit Part **Part III, Operating Unit 16**

Description of Modification:
Addendum C, Section C.1.1

C.1.1 Description of Containers

All mixed waste stored at the 400 Area WMU is packaged in containers. The specific size and type of container is dictated by the size, shape, or form of the waste. Containers generally consist of:

- Standard metal containers [e.g., 208-liter (55-gallon) drums]
- Large metal boxes [e.g., 1.2 meters by 1.2 meters by 2.4 meters (4 feet by 4 feet by 8 feet), 2.7 meters by 2.7 meters by 3.7 meters (9 feet by 9 feet by 12 feet)] fabricated to accommodate the size and shape of a particular component or piece of debris
- Unique components removed from FFTF that, when closed in accordance with WAC 173-303-630(5)(a), can serve as a primary container (e.g., large pumps, valves, tube bundles, cold traps).

Specific debris or components removed from FFTF may require the design and fabrication of additional boxes and, in some cases, containers smaller than 208-liter (55-gallon) may be appropriate for the waste type. The remainder of this Addendum describes storage of ~~sodium~~Na and NaK ~~-~~-contaminated waste in standard metal containers [e.g., 208-liter (55-gallon) drums], large metal boxes, and unique components. Metallic containers (either carbon steel or stainless steel) are compatible with ~~sodium~~Na and NaK for storage.

~~Sodium~~Na and NaK-contaminated waste stored at the 400 Area WMU is designated ignitable (D001) and reactive (D003) per WAC 173-303-090(7). In addition to D003, this waste may also exhibit the characteristics of corrosivity from generation of small quantities of sodium hydroxide or potassium hydroxide due to the reaction of waste residuals with atmospheric moisture. Therefore, waste managed in the FSF and the ISA are also designated as D002 (corrosive liquids) and WSC2 (corrosive solid)~~is assigned dangerous waste numbers D001 and WSC2~~.

The 400 Area WMU consists of two container storage dangerous waste management units: the FSF (Building 403) and the ISA. The ISA is an outdoor storage area with a concrete pad and a gravel-surface pad. Refer to the map in Addendum A, Part A Form, and Figures C.1 and C.2 in this Addendum for locations of these storage sites within the FFTF PPA. A combined maximum of 75,686 liters (20,000 gallons, 1,000 gallons in the FSF and 19,000 gallons in the ISA) of the ~~sodium~~Na or NaK contaminant could potentially be stored in the two 400 Area WMU container storage units.

WAC 173-303-830 Modification Class	Class 1	Class [1]1	Class 2	Class 3
Please mark the Modification Class:		X		

Enter relevant WAC 173-303-830, Appendix I Modification citation number: F.4.b
Enter wording of WAC 173-303-830, Appendix I Modification citation:
Storage of different wastes that do not require different management standards

Modification Approved/Concur ☐ Yes ☐ Denied (state reason below) Reason for denial:	Reviewed by Ecology:
	F. W. Bond — Date

[1] Class 1 modifications requiring prior Agency approval.

[2] If the proposed modification does not match any modification listed in WAC 173-303-830 Appendix I, then the proposed modification should automatically be given a Class 3 status. This status may be maintained by the Department of Ecology, or down graded to a Class 1, if appropriate.

Hanford Facility RCRA Permit Modification Notification Form	
Unit: **400 Area Waste Management Unit**	Permit Part **Part III, Operating Unit 16**

Description of Modification:
Addendum C, Section C.1.1.1

C.1.1.1 Description of Containers in the FSF (Building 403)

The Core Component Pots (CPPs), cylindrical containers previously used to hold assemblies and other components are stored in FSF (Building 403) in two large metal boxes. Each box measures 1.78 meters by 2.29 meters by 3.56 meters (5.84 feet by 7.51 feet by 11.68 feet). The box serves as the primary container for the residual sodium inside the CCPs. Each CCP has been emptied of sodium to the extent practicable, but a maximum of 14 liters (3.7 gallons) of radiologically contaminated sodium remains in each CCP.

The volume of actual sodium in each box is estimated to be less than 757 liters (200 gallons). Each box lid is closed with an elastomer gasket and bolted flange closures. An inert gas (argon or nitrogen) cover is maintained on storage of each box to prevent contact of the metallic sodium with the water vapor in the air. Shielding is provided for worker protection and to meet as low as reasonably achievable (ALARA) requirements.

WAC 173-303-830 Modification Class	Class 1	Class [1]1	Class 2	Class 3
Please mark the Modification Class:	X			

Enter relevant WAC 173-303-830, Appendix I Modification citation number: A.1
Enter wording of WAC 173-303-830, Appendix I Modification citation:
Administrative and information changes

Modification Approved/Concur ☐ Yes ☐ Denied (state reason below)
Reason for denial:

Reviewed by Ecology:

F. W. Bond Date

[1] Class 1 modifications requiring prior Agency approval.

[2] If the proposed modification does not match any modification listed in WAC 173-303-830 Appendix I, then the proposed modification should automatically be given a Class 3 status. This status may be maintained by the Department of Ecology, or down graded to a Class 1, if appropriate.

Hanford Facility RCRA Permit Modification Notification Form	
Unit: **400 Area Waste Management Unit**	Permit Part **Part III, Operating Unit 16**

Description of Modification:
Addendum C, Section C.1.1.2

C.1.1.2 Description of Containers in the ISA

The ISA is an outdoor storage area, which includes a concrete pad and an additional area of open level ground. The three ~~two~~ types of containers anticipated to be stored in the ISA are the ~~unique components and~~ standard metal containers, large metal boxes, and unique components described in Sections C.1.1.2.1 through ~~and~~ C.1.1.2.3 respectively.

WAC 173-303-830 Modification Class	Class 1	Class [1]1	Class 2	Class 3
Please mark the Modification Class:	X			

Enter relevant WAC 173-303-830, Appendix I Modification citation number: A.1
Enter wording of WAC 173-303-830, Appendix I Modification citation:
Administrative and information changes

Modification Approved/Concur ☐ Yes ☐ Denied (state reason below) Reason for denial:	Reviewed by Ecology: F. W. Bond Date

[1] Class 1 modifications requiring prior Agency approval.

[2] If the proposed modification does not match any modification listed in WAC 173-303-830 Appendix I, then the proposed modification should automatically be given a Class 3 status. This status may be maintained by the Department of Ecology, or down graded to a Class 1, if appropriate.

Hanford Facility RCRA Permit Modification Notification Form	
Unit: **400 Area Waste Management Unit**	Permit Part **Part III, Operating Unit 16**

Description of Modification:
Addendum C, Section C.1.1.2.3

C.1.1.2.3 Storage of Unique Components in the ISA

Unique components can be stored in the ISA. Unique components are anticipated to be removed as intact units, except for severed inlet and outlet piping. The inlets and outlets are closed as part of the removal process to prevent any residual ~~sodium~~Na or NaK inside the component from reacting with water vapor in the air to form sodium hydroxide or potassium hydroxide, respectively. Each component, once closed, serves as the primary container for the sodium waste residue on the interior surfaces of the component.

WAC 173-303-830 Modification Class	Class 1	Class [1]1	Class 2	Class 3
Please mark the Modification Class:		X		

Enter relevant WAC 173-303-830, Appendix I Modification citation number: F.4.b
Enter wording of WAC 173-303-830, Appendix I Modification citation:
Storage of different wastes that do not require different management standards

Modification Approved/Concur ☐ Yes ☐ Denied (state reason below) Reason for denial:	Reviewed by Ecology: F. W. Bond — Date

[1] Class 1 modifications requiring prior Agency approval.

[2] If the proposed modification does not match any modification listed in WAC 173-303-830 Appendix I, then the proposed modification should automatically be given a Class 3 status. This status may be maintained by the Department of Ecology, or down graded to a Class 1, if appropriate.

.

Hanford Facility RCRA Permit Modification Notification Form	
Unit: **400 Area Waste Management Unit**	Permit Part **Part III, Operating Unit 16**

Description of Modification:
Addendum C, Section C.1.2

C.1.2 Container Management Practices

During the container receipt inspection, any discrepancies that have been noted are resolved in accordance with Addendum B, Waste Analysis Plan. Appropriate labels are applied to the containers before acceptance at any of the ~~three~~ two waste storage locations in the 400 Area WMU to meet the requirements of WAC 173-303-630(3) and WAC 173-303-395(6). The container packaging and container handling are designed to maintain containment of the waste, maintain damage-free and contamination-free containers, limit storage intrusion, and limit human exposure to mixed waste.

The subsections below describe the container management practices for the FSF and the ISA.

WAC 173-303-830 Modification Class	Class 1	Class [1]1	Class 2	Class 3
Please mark the Modification Class:	X			

Enter relevant WAC 173-303-830, Appendix I Modification citation number: A.1
Enter wording of WAC 173-303-830, Appendix I Modification citation:
Administrative and information changes

Modification Approved/Concur ☐ Yes ☐ Denied (state reason below) Reason for denial:	Reviewed by Ecology: F. W. Bond Date

[1] Class 1 modifications requiring prior Agency approval.

[2] If the proposed modification does not match any modification listed in WAC 173-303-830 Appendix I, then the proposed modification should automatically be given a Class 3 status. This status may be maintained by the Department of Ecology, or down graded to a Class 1, if appropriate.

Hanford Facility RCRA Permit Modification Notification Form	
Unit: **400 Area Waste Management Unit**	Permit Part **Part III, Operating Unit 16**

Description of Modification:
Addendum C, Section C.1.2.1

C.1.2.1 Container Management Practices for the FSF

The FSF is a steel-framed, metal-sided, one-story building that is erected on a reinforced concrete substructure. It has no electrical service, lighting, ~~and~~ ventilation, ~~but no~~ and water services. The reinforced concrete floor has a load rating of approximately 0.49 kilograms per square centimeter (1,000 pounds per square foot). The loaded weight of each storage container is approximately 8,256 kilograms (18,200 pounds), which provides a floor load factor of safety of approximately four (Figure C.1).

The drip pan is placed on the floor and the large metal box is placed onto the drip pan. A forklift/rigging packet is provided as an integral part of the base of each metal box. Lifting slings are also available on each box and the overhead bridge crane can be used to lift and position the box.

Sodium is stored at room temperature under an inert gas blanket to protect sodium from reaction with air.

Shielding is provided for worker protection and to meet ALARA requirements. Containers are inspected in accordance with Addendum I, Inspections Requirements for deterioration and leakage ~~once each week~~ using a mirror to view ~~all~~ the outer surfaces (sides and top) of the waste boxes. The aisle space requirements of WAC 173-303-630(5)(c) do not apply because there are only two containers. The waste is stored in a manner equivalent to WAC 173-303-630(5)(c) and the International Fire Code as interpreted by the Hanford Fire Department.

WAC 173-303-830 Modification Class	Class 1	Class [1] 1	Class 2	Class 3
Please mark the Modification Class:		X		

Enter relevant WAC 173-303-830, Appendix I Modification citation number: A.8
Enter wording of WAC 173-303-830, Appendix I Modification citation:
Changes to remove permit conditions that are no longer applicable

Modification Approved/Concur ☐ Yes ☐ Denied (state reason below) Reason for denial:	Reviewed by Ecology: F. W. Bond — Date

[1] Class 1 modifications requiring prior Agency approval.

[2] If the proposed modification does not match any modification listed in WAC 173-303-830 Appendix I, then the proposed modification should automatically be given a Class 3 status. This status may be maintained by the Department of Ecology, or down graded to a Class 1, if appropriate.

Hanford Facility RCRA Permit Modification Notification Form	
Unit: **400 Area Waste Management Unit**	Permit Part **Part III, Operating Unit 16**

Description of Modification:
Addendum C, Section C.1.2.2.1

C.1.2.2.1 Management of Standard Metal Containers in the ISA

The waste is stored in standard metal containers [e.g., 208-liter (55-gallon) drums], as described in Section C.1.1.2.1. Standard metal containers are placed into the container storage modules by means of a forklift or by manual placement depending on weight of the container and storage configuration.

Container storage modules in the ISA will be placed in a manner equivalent to the International Fire Code as interpreted by the Hanford Fire Department.

Standard metal containers placed into a container module can be stored four to a pallet, and multiple pallets will constitute a row of containers. Since only one row of pallets can be placed within the container storage modules, there are no aisles between rows, and therefore, the 30-inch aisle spacing requirement of WAC 173-303-630(5)(c) does not apply. Spacing between the pallets and the walls of the container storage module will be maintained to facilitate inspection and emergency response. Standard metal containers can be stacked two high within the container storage modules.

Standard metal containers managed in container storage modules are positioned so labels are visible for inspection. Receipt inspections of the containers are preformed at the time the containers are loaded into the module according to Addendum B, Waste Analysis Plan. Standard metal containers in storage are visually inspected ~~at least weekly~~ in accordance with ~~WAC 173-303-630(6) (refer to~~ Addendum I, Inspection Requirements~~)~~.

~~Container receipt inspections of standard metal containers are performed at the storage location within the ISA. The standard metal containers are visually inspected at least weekly while in storage (refer to Addendum I, Inspection Requirements).~~

WAC 173-303-830 Modification Class	Class 1	Class [1]1	Class 2	Class 3
Please mark the Modification Class:		X		

Enter relevant WAC 173-303-830, Appendix I Modification citation number: A.8
Enter wording of WAC 173-303-830, Appendix I Modification citation:
Changes to remove permit conditions that are no longer applicable

Modification Approved/Concur ☐ Yes ☐ Denied (state reason below) Reason for denial:	Reviewed by Ecology: F. W. Bond — Date

[1] Class 1 modifications requiring prior Agency approval.

[2] If the proposed modification does not match any modification listed in WAC 173-303-830 Appendix I, then the proposed modification should automatically be given a Class 3 status. This status may be maintained by the Department of Ecology, or down graded to a Class 1, if appropriate.

Hanford Facility RCRA Permit Modification Notification Form	
Unit: **400 Area Waste Management Unit**	Permit Part **Part III, Operating Unit 16**

Description of Modification:
Addendum C, Section C.1.2.2.2

C.1.2.2.2 Management of Large Metal Boxes in the ISA

The waste is stored in large metal boxes as described in Section C.1.1.2.2. Large metal boxes in the ISA ~~will be~~are placed in a manner equivalent to the International Fire Code as interpreted by the Hanford Fire Department. Prior to placement of a large metal box in the ISA, a drip pan described in Section C.1.3.2 will be placed at the storage location. The large metal box serves as the primary container. The drip pan used for secondary containment of the large metal box is placed on the ground; the large metal box is placed in the drip pan, and elevated from the base of the drip pan. Each large metal box is handled and positioned in a manner to prevent rupture and container leakage.

Container receipt inspections of large metal boxes are performed at the storage location within the ISA. The large metal boxes in storage are visually inspected~~ at least weekly while in storage~~ in accordance with ~~(refer to~~ Addendum I, Inspection Requirements~~)~~.

WAC 173-303-830 Modification Class	Class 1	Class [1]1	Class 2	Class 3
Please mark the Modification Class:		X		

Enter relevant WAC 173-303-830, Appendix I Modification citation number: A.8
Enter wording of WAC 173-303-830, Appendix I Modification citation:
Changes to remove permit conditions that are no longer applicable

Modification Approved/Concur ☐ Yes ☐ Denied (state reason below)
Reason for denial:

Reviewed by Ecology:

F. W. Bond Date

[1] Class 1 modifications requiring prior Agency approval.

[2] If the proposed modification does not match any modification listed in WAC 173-303-830 Appendix I, then the proposed modification should automatically be given a Class 3 status. This status may be maintained by the Department of Ecology, or down graded to a Class 1, if appropriate.

Hanford Facility RCRA Permit Modification Notification Form	
Unit: **400 Area Waste Management Unit**	Permit Part **Part III, Operating Unit 16**

Description of Modification:
Addendum C, Section C.1.3.2

C.1.3.2 Secondary Containment System Capacity

Each secondary containment system is designed to provide a base underlying the boxes, containers, or components that is free of cracks or gaps and is sufficiently impervious (WAC 173-303-630(7)(a)(i)). For outdoor storage, the capacity of the containment (e.g., drip pan) will also meet the 25-year 24-hour storm value of 3.35 centimeters (1.32 inches) (WAC 173-303-630(7)(a)). In rare cases, when a container can contain free liquids, the drip pan will also be designed to meet the requirements of WAC 173-303-630(7)(a)(iii). Since sodium melts at 98 degrees C, an event causing liquid sodium to be released into the secondary containment is extremely unlikely. Although, NaK is typically liquid at ambient conditions, most if not all NaK will have been drained from contaminated debris and components. Spills or leaks of liquid NaK into secondary containment will be negligible and unlikely to pose any human health or environment threats. Since run-on is prevented as described in Section C.1.3.3, additional capacity is not required for run-on.

WAC 173-303-830 Modification Class	Class 1	Class [1]1	Class 2	Class 3
Please mark the Modification Class:		X		

Enter relevant WAC 173-303-830, Appendix I Modification citation number: F.4.b
Enter wording of WAC 173-303-830, Appendix I Modification citation:
Storage of different wastes that do not require different management standards

Modification Approved/Concur ☐ Yes ☐ Denied (state reason below) Reason for denial:	Reviewed by Ecology:
	F. W. Bond — Date

[1] Class 1 modifications requiring prior Agency approval.

[2] If the proposed modification does not match any modification listed in WAC 173-303-830 Appendix I, then the proposed modification should automatically be given a Class 3 status. This status may be maintained by the Department of Ecology, or down graded to a Class 1, if appropriate.

Hanford Facility RCRA Permit Modification Notification Form	
Unit: **400 Area Waste Management Unit**	Permit Part **Part III, Operating Unit 16**

Description of Modification:
Addendum C, Section C.1.3.3

C.1.3.3 Control of Run-On

There is not a credible pathway, through which run-on can come into contact with the sodium-contaminated waste or enter the secondary containment for the waste containers. The contour of the ground and the 400 Area storm water drainage systems around the FSF and the ISA prevents run-on. Waste containers stored at the ISA are stored either on covered drip pans or in weather-tight storage modules. Run-on is prevented in either case.

Refer to Section C.1.4 for a discussion of response to accumulation of water from a known source (e.g., rainwater or snowmelt) in secondary containment.

WAC 173-303-830 Modification Class	Class 1	Class [1]1	Class 2	Class 3
Please mark the Modification Class:	X			

Enter relevant WAC 173-303-830, Appendix I Modification citation number: A.1
Enter wording of WAC 173-303-830, Appendix I Modification citation:
Administrative and informational changes

Modification Approved/Concur ☐ Yes ☐ Denied (state reason below) Reason for denial:	Reviewed by Ecology:
	F. W. Bond — Date

[1] Class 1 modifications requiring prior Agency approval.

[2] If the proposed modification does not match any modification listed in WAC 173-303-830 Appendix I, then the proposed modification should automatically be given a Class 3 status. This status may be maintained by the Department of Ecology, or down graded to a Class 1, if appropriate.

Hanford Facility RCRA Permit Modification Notification Form	
Unit: **400 Area Waste Management Unit**	Permit Part **Part III, Operating Unit 16**

Description of Modification:
Addendum C, Section C.2.1

C.2.1 Management of Reactive Waste in Containers

Wastes managed at the FSF and the ISA are designated as reactive solely with respect to the requirements of WAC 173-303-090(7)(a)(ii) and (iii). Management of these wastes as documented in this Addendum provide appropriate protection from contact with water and the risk of generation of potentially explosive hydrogen gas. The reactive designation for waste identified in the Addendum A, Part A Form, is not based on WAC 173-303-090(7)(a)(vi), (vii) or (viii), which address explosives and materials that can be detonated. Therefore, no specific management requirements are necessary with respect to the potential for explosion or detonation.

WAC 173-303-830 Modification Class	Class 1	Class [1]1	Class 2	Class 3
Please mark the Modification Class:		X		

Enter relevant WAC 173-303-830, Appendix I Modification citation number: F.4.b
Enter wording of WAC 173-303-830, Appendix I Modification citation:
Storage of different wastes that do not require different management standards

Modification Approved/Concur ☐ Yes ☐ Denied (state reason below)
Reason for denial:

Reviewed by Ecology:

F. W. Bond Date

[1] Class 1 modifications requiring prior Agency approval.

[2] If the proposed modification does not match any modification listed in WAC 173-303-830 Appendix I, then the proposed modification should automatically be given a Class 3 status. This status may be maintained by the Department of Ecology, or down graded to a Class 1, if appropriate.

Hanford Facility RCRA Permit Modification Notification Form	
Unit: **400 Area Waste Management Unit**	Permit Part **Part III, Operating Unit 16**

Description of Modification:
Addendum C, Section C.2.2

C.2.2 Management of Ignitable and Reactive Waste in Containers

Waste storage limits and spacing requirements are equivalent to those specified in the International Fire Code as interpreted by the Hanford Fire Department demonstrating compliance with the requirements of WAC 173-303-395(1).

A qualified staff member will inspect the areas storing mixed waste annually as specified in WAC 173-303-395(1)(d). This inspection will be performed in the presence of a professional person who is familiar with the International Fire Code~~, including the local, state, or federal fire marshal~~.

WAC 173-303-830 Modification Class	Class 1	Class [1]1	Class 2	Class 3
Please mark the Modification Class:	X			

Enter relevant WAC 173-303-830, Appendix I Modification citation number: A.1
Enter wording of WAC 173-303-830, Appendix I Modification citation:
Administrative and informational changes

Modification Approved/Concur ☐ Yes ☐ Denied (state reason below) Reason for denial:	Reviewed by Ecology: F. W. Bond Date

[1] Class 1 modifications requiring prior Agency approval.

[2] If the proposed modification does not match any modification listed in WAC 173-303-830 Appendix I, then the proposed modification should automatically be given a Class 3 status. This status may be maintained by the Department of Ecology, or down graded to a Class 1, if appropriate.

Hanford Facility RCRA Permit Modification Notification Form	
Unit: **400 Area Waste Management Unit**	Permit Part **Part III, Operating Unit 16**

Description of Modification:
Addendum C, Section C.2.3

C.2.3 Design of Areas to Manage Incompatible Wastes

Only waste as documented in Addendum B Waste Analysis Plan ~~with the waste codes identified in the Addendum A, Part A Form,~~ will be stored in the 400 Area WMU.

WAC 173-303-830 Modification Class	Class 1	Class [1]1	Class 2	Class 3
Please mark the Modification Class:	X			

Enter relevant WAC 173-303-830, Appendix I Modification citation number: A.1
Enter wording of WAC 173-303-830, Appendix I Modification citation:
Administrative and informational changes

Modification Approved/Concur ☐ Yes ☐ Denied (state reason below) Reason for denial:	Reviewed by Ecology: F. W. Bond Date

[1] Class 1 modifications requiring prior Agency approval.

[2] If the proposed modification does not match any modification listed in WAC 173-303-830 Appendix I, then the proposed modification should automatically be given a Class 3 status. This status may be maintained by the Department of Ecology, or down graded to a Class 1, if appropriate.

Hanford Facility RCRA Permit Modification Notification Form	
Unit: **400 Area Waste Management Unit**	Permit Part **Part III, Operating Unit 16**

Description of Modification:
Addendum C, Section C.3

C.3 AIR EMISSIONS CONTROL

Air emission requirements of WAC 173-303-690 through WAC 173-303-691 do not apply to mixed waste stored at the 400 Area WMU. The air emission standards of WAC 173-303-692 (Subpart CC) apply to tank, surface impoundment, and container storage units. However, since containers that are used solely for management of mixed waste are exempt, all containers in the FSF and the ISA are exempt from the requirements of WAC 173-303-692.

WAC 173-303-830 Modification Class	Class 1	Class [1]1	Class 2	Class 3
Please mark the Modification Class:	X			

Enter relevant WAC 173-303-830, Appendix I Modification citation number: A.1
Enter wording of WAC 173-303-830, Appendix I Modification citation:
Administrative and informational changes

Modification Approved/Concur ☐ Yes ☐ Denied (state reason below) Reason for denial:	Reviewed by Ecology:
	F. W. Bond — Date

[1] Class 1 modifications requiring prior Agency approval.

[2] If the proposed modification does not match any modification listed in WAC 173-303-830 Appendix I, then the proposed modification should automatically be given a Class 3 status. This status may be maintained by the Department of Ecology, or down graded to a Class 1, if appropriate.

Hanford Facility RCRA Permit Modification Notification Form	
Unit: **400 Area Waste Management Unit**	Permit Part **Part III, Operating Unit 16**

Description of Modification:
Addendum J, Section J.3.2.5

J.3.2.5 Hazardous Material, Dangerous and/or Mixed Waste Spill

Spills can result from many sources including container spills or leaks, damaged packages or shipments, or personnel error. Spills of mixed waste are complicated by the need to deal with the extra hazards posed by the presence of radioactive materials.

- The discoverer notifies the BED and initiates SWIMS response:
  - **S**tops work
  - Warns others in the vicinity
  - Isolates the area
  - Minimizes exposures to the hazards ~~the spill if possible~~
  - Requests the BED **S**ecure ventilation
- The BED determines if emergency conditions exist, requiring response from the Hanford Fire Department based on classification of the spill and injured personnel, and evaluates the need to perform additional protective actions.
- If the Hanford Fire Department resources are not needed, the spill is mitigated with resources identified in Section J.4 and proper notifications are made.
- If the Hanford Fire Department resources are needed, the BED calls 911 (373-3800 if using a cellular phone).
- The BED sends a representative to meet the Hanford Fire Department.
- The BED provides a formal turnover to the IC when the IC arrives at the ICP.
- The BED informs the Hanford Site Emergency Response Organization as to the extent of the emergency (including estimates of dangerous waste, mixed waste, or radioactive material quantities released to the environment).
- If operations are stopped in response to the spill, the BED ensures that systems are monitored for leaks, pressure buildup, gas generation, and ruptures.
- Hanford Fire Department stabilizes the spill.

WAC 173-303-830 Modification Class	Class 1	Class [1]1	Class 2	Class 3
Please mark the Modification Class:		X		

Enter relevant WAC 173-303-830, Appendix I Modification citation number: -830(4)(d)
Enter wording of WAC 173-303-830, Appendix I Modification citation:
Request approval as Class 1 prime

Modification Approved/Concur ☐ Yes ☐ Denied (state reason below) Reason for denial:	Reviewed by Ecology: F. W. Bond — Date

[1] Class 1 modifications requiring prior Agency approval.

[2] If the proposed modification does not match any modification listed in WAC 173-303-830 Appendix I, then the proposed modification should automatically be given a Class 3 status. This status may be maintained by the Department of Ecology, or down graded to a Class 1, if appropriate.

Hanford Facility RCRA Permit Modification Notification Form	
Unit: **400 Area Waste Management Unit**	Permit Part **Part III, Operating Unit 16**

Description of Modification:
Addendum J, Section J.7

J.7 BUILDING EMERGENCY ORGANIZATION BUILDING EMERGENCY DIRECTOR

FFTF BEDs		
TITLE	**WORK LOCATION**	**WORK PHONE**
~~S&M Operations Manager~~ Facility Operations	MO 294	~~376-0702~~ 373-1355

Names and home telephone numbers of the BEDs are available from the POC (373-3800) in accordance with Permit Condition II.A.4.

WAC 173-303-830 Modification Class	Class 1	Class [1]1	Class 2	Class 3
Please mark the Modification Class:	X			

Enter relevant WAC 173-303-830, Appendix I Modification citation number: B.6.d
Enter wording of WAC 173-303-830, Appendix I Modification citation:
Changes in name, addresses, or phone number of coordinators

Modification Approved/Concur ☐ Yes ☐ Denied (state reason below)
Reason for denial:

Reviewed by Ecology:

F. W. Bond Date

[1] Class 1 modifications requiring prior Agency approval.

[2] If the proposed modification does not match any modification listed in WAC 173-303-830 Appendix I, then the proposed modification should automatically be given a Class 3 status. This status may be maintained by the Department of Ecology, or down graded to a Class 1, if appropriate.

Hanford Facility RCRA Permit Modification
Part III, Operating Unit 16
400 Area Waste Management Unit

Remove and replace the following sections for Part III, Operating Unit 16:

- Remove Permit Conditions dated June 30, 2009 and replace with Permit Conditions dated December 31, 2011
- Remove Addendum A dated October 1, 2008 and replace with Addendum A dated December 31, 2011
- Remove Addendum B dated June 30, 2009 and replace with Addendum B dated December 31, 2011
- Remove Addendum C dated June 30, 2009 and replace with Addendum C dated December 31, 2011

PART III, OPERATING UNIT GROUP 16 PERMIT CONDITIONS

400 Area Waste Management Unit

UNIT DESCRIPTION:

The 400 Area Waste Management Unit (WMU) is in the Property Protected Area (PPA) at the Fast Flux Test Facility (FFTF), in Hanford's 400 Area. The 400 Area WMU consists of two container storage units:

- Fuel Storage Facility (FSF, Building 403). The FSF is a large steel-frame, metal-sided, high bay building. Its dimensions are 34 x 27 x 12 meters (112 x 90 x 40 feet). The container storage unit is on the ground-level floor. In it are two large steel boxes that store sodium-contaminated core component pots (CCPs). The Permittees do not plan to store more mixed waste than is currently stored in the facility; however, the FSF is physically capable of storing additional mixed waste. They will store any additional wastes at the 400 Area WMU in the Interim Storage Area.
- Interim Storage Area, 4718 (ISA). The ISA consists of 156 x 247 meters (513 x 247 feet) totally fenced area. This area is for aboveground dry cask storage of spent fuel. A concrete pad in the ISA, which measures 27 x 37 meters (90 x 120 feet), was used for dry cask storage, but will not necessarily be used for mixed waste management. The rest of the ISA surface is gravel. The ISA is generally flat. However, it is graded to drain in accordance with the general drainage plan for the FFTF PPA. Inside the ISA, there is also one building along the west fence line, and open on the side. This building, Building 432A, is not authorized for mixed waste management.

The scale map in Addendum A shows the location of each storage unit. The only mixed waste stored in these two container storage units is elemental sodium, and sodium potassium (D001, D003, and WSC2), sodium hydroxide (D002), and potassium hydroxide (D002) and debris (e.g., piping, equipment, and components) contaminated with elemental sodium, sodium potassium, sodium hydroxide, and potassium hydroxide. The 400 Area WMU will not store, treat, or dispose of bulk metallic sodium or bulk sodium hydroxide.

LIST OF ADDENDA SPECIFIC TO OPERATING UNIT GROUP 16

Addendum A	Part A Form, dated December 31, 2011
Addendum B	Waste Analysis Plan, dated December 31, 2011
Addendum C	Process Information, dated December 31, 2011
Addendum D	Groundwater Monitoring – Reserved
Addendum E	Security Requirements, dated June 30, 2009
Addendum F	Preparedness and Prevention, dated June 30, 2009
Addendum G	Personnel Training, dated September 30, 2009
Addendum H	Closure Plan, dated June 30, 2009
Addendum I	Inspection Requirements, dated September 30, 2009
Addendum J	Contingency Plan, dated December 31, 2011

DEFINITIONS

The term **"CCP" or Core Component Pot** means one of 109 cylindrical containers, each containing 3.75 gallons of un-reacted sodium totaling 405 gallons, currently stored as mixed waste in the FFTF Fuel Storage Facility. The CCPs were previously filled with sodium and used in the FFTF Interim Decay Storage Vessel to store spent FFTF Driver Fuel Assemblies under inert gas.

ACRONYMS

FFTF	Fast Flux Test Facility
CCP	Core Component Pot
PPA	Property Protected Area
ISA	Interim Storage Area
FSF	Fuel Storage Facility
WMU	Waste Management Unit

III.16.A COMPLIANCE WITH UNIT-SPECIFIC PERMIT CONDITIONS

III.16.A.1 The Permittees will comply with all conditions in this Chapter and its addenda with respect to dangerous waste management and dangerous waste management units in the 400 Area WMU, in addition to conditions in Permit Parts I and II.

III.16.B GENERAL WASTE MANAGEMENT

III.16.B.1 The Permittees are authorized to accept, according to the waste acceptance procedure documented in Addendum B, Section B.2, mixed debris generated from demolition and decommissioning of the Fast Flux Test Facility reactor system containing or contaminated with residual elemental sodium and sodium hydroxide. The Permittee will store these wastes in the ISA.

III.16.B.2 The Permittees are authorized to store core component pots generated prior to the effective date of this permit in two large metal boxes in the 400 Area WMU, FSF.

III.16.B.3 The Permittees are authorized store mixed waste in the ISA up to a maximum capacity of 19,000 gallons.

III.16.B.4 The Permittees will maintain the physical structure of dangerous waste management units in the 400 Area WMU as documented in the Unit Description above and Addendum C, Figures C.1 and C.2.

III.16.B.5 The Permittees will maintain appropriate administrative controls and work practices to ensure that only wastes specified in Permit Condition III.16.B.1, are received by the ISA for storage, and that no co-mingling or cross-contamination of the waste stream specified in Permit Condition III.16.B.1 with any other waste stream may occur.

III.16.C WASTE ANALYSIS

III.16.C.1 The Permittees will have an accurate and complete waste profile for the waste stream identified in Permit Condition III.16.B.1. This waste profile will be signed and dated upon approval by the 400 Area WMU authorized representative. [WAC 173-303-380(1)(a)]

III.16.C.2 The Permittees will make a copy of the waste profile required by Permit Condition III.16.C.1 available upon request. [WAC 173-303-815(2)(b)(ii)]

III.16.D RECORDKEEPING AND REPORTING

III.16.D.1 The Permittees will place the following into the Hanford Facility Operating Record, 400 Area WMU File required by Permit Condition II.I.2. [WAC 173-303-380]

III.16.D.2 Records required by WAC 173-303-380(1)(o), incorporated by reference;

III.16.E SECURITY

III.16.E.1 The Permittees will post warning signs at all entrances to the FSF and the ISA specified in Addendum E, Section E.1.1. [WAC 173-303-310(2)(a)]

III.16.F PREPAREDNESS AND PREVENTION

III.16.F.1 The Permittees will comply with the Addendum F, Preparedness and Prevention requirements specific to the 400 Area WMU. [WAC 173-303-340]

III.16.G CONTINGENCY PLAN

III.16.G.1 The Permittees will comply with Addendum J, Contingency Plan in addition to the requirements of Permit Condition II.A when applicable. [WAC 173-303-350]

III.16.H INSPECTIONS

III.16.H.1 The Permittees will perform inspections of the 400 Area WMU according to Addendum I, Inspection Plan for inspecting all monitoring equipment, safety and emergency equipment, security devices, and operating and structural equipment that help prevent, detect, or respond to hazards to the public health or the environment pursuant to the requirements of WAC 173-303-320 [WAC 173-303-320(2)]

III.16.I TRAINING PLAN

III.16.I.1 The Permittees will include Addendum G unit-specific training requirements in the written training plan required by Permit Condition II.C. [WAC 173-303-330]

III.16.J OTHER GENERAL REQUIREMENTS

III.16.J.1 The Permittees will comply with the requirements of WAC 173-303-395(1)(a)-(c), incorporated by reference, for prevention of reaction of ignitable, reactive, or incompatible wastes.

III.16.J.2 Land Disposal Restriction Requirements

III.16.J.2.a The Permittees will ensure a schedule of compliance and any applicable associated work requirements are included in the land disposal restrictions report required by the HFFACO Milestone M-26, incorporated by reference by Permit Condition II.O for treatment and/or acquisition of treatment capacity for wastes which are or are expected to be stored in the 400 Area WMU container storage units.

III.16.K CLOSURE

III.16.K.1 The Permittees will close the 400 Area WMU Container Storage Units in accordance with Addendum H, Closure Plan. [WAC 173-303-610(4)]

III.16.L POST CLOSURE

Reserved

III.16.M CRITICAL SYSTEMS

Reserved

III.16.N RESERVED

III.16.O CONTAINERS

III.16.O.1 Container Management Standards

III.16.O.1.a The Permittees will ensure that all containers remain in good condition. If a container holding mixed waste is not in good condition (e.g., severe rusting or corrosion, or apparent structural defects), or if it begins to leak, the Permittee must transfer the waste from the container to a container that is in good condition or place the leaking container in an appropriate over-pack container. [WAC 173-303-630(2)]

III.16.O.1.b	The Permittees shall ensure that all containers are constructed of carbon steel or stainless steel, or other materials compatible with metallic sodium and sodium hydroxide. [WAC 173-303-630(4)]
III.16.O.1.c	The Permittees must remove spilled or leaked waste within secondary containment pursuant to WAC 173-303-630(7)(a)(ii), incorporated by reference.
III.16.O.1.d	Requirements for the Fuel Storage Facility
III.16.O.1.e	The Permittee will maintain an inert gas (argon or nitrogen) cover within each large metal box to prevent contact of the metallic sodium with the water vapor in the air and the formation of free liquids.
III.16.O.1.f	The Permittees will place large boxes stored in the FSF in drip pans to ensure a base free of cracks or gaps, and ensure that the large boxes are elevated or otherwise protected from contact with accumulated liquids.
III.16.O.1.g	Requirements for the Interim Storage Area
III.16.O.1.h	The Permittee may store wastes in the ISA in standard metal containers (e.g., 208-liter drums), large metal boxes fabricated to accommodate the size and shape of a particular component or debris, or unique components removed from FFTF that when closed in accordance with WAC 173-303-630(5)(a) serve as a primary container.
III.16.O.1.i	The Permittees will manage unique components stored in the ISA on the gravel surface with sufficient open space between components and between components and the fence line to accommodate inspections and movement of equipment.
III.16.O.1.j	The Permittees will not place wastes in the open-sided structure (Building 432A) within the ISA identified in the Unit Description above.

WASHINGTON STATE DEPARTMENT OF ECOLOGY

Dangerous Waste Permit Application Part A Form

Date Received	Reviewed by:	Date: 09222008
Month Day Year	Approved by:	Date: 09222008
09192008		

I. This form is submitted to: (place an "X" in the appropriate box)

☒	Request modification to a final status permit (commonly called a "Part B" permit)
☐	Request a change under interim status
☐	Apply for a final status permit. This includes the application for the initial final status permit for a site or for a permit renewal (i.e., a new permit to replace an expiring permit).
☐	Establish interim status because of the wastes newly regulated on: (Date)
	List waste codes:

II. EPA/State ID Number

WA7890089677

III. Name of Facility

US Department of Energy – Hanford Facility

IV. Facility Location (Physical address not P.O. Box or Route Number)

A. Street

825 Jadwin

City or Town	State	ZIP Code
Richland	WA	99352

County Code (if known)	County Name
005	Benton

B. Land Type	C. Geographic Location		D. Facility Existence Date
	Latitude (degrees, mins, secs)	Longitude (degrees, mins, secs)	Month Day Year
F	Refer to TOPO Map (Section XV.)		03 02 1943

V. Facility Mailing Address

Street or P.O. Box

P.O. Box 550

City or Town	State	ZIP Code
Richland	WA	99352

VI. Facility contact (Person to be contacted regarding waste activities at facility)		
Name (last)	**(first)**	
Brockman	David	
Job Title	**Phone Number (area code and number)**	
Manager	(509) 376-7395	
Contact Address		
Street or P.O. Box		
P.O. Box 550		
City or Town	**State**	**ZIP Code**
Richland	WA	99352

VII. Facility Operator Information	
A. Name	**Phone Number**
Department of Energy Owner/ Operator CH2M HILL Plateau Remediation Company Co-Operator for 400 Area Waste Management Unit*	(509) 376-7395 (509) 376-0556*
Street or P.O. Box	
P.O. Box 550 P.O. Box 1600 *	

City or Town	State	ZIP Code
Richland	WA	99352

B. Operator Type	F

C. Does the name in VII.A reflect a proposed change in operator?	☐ Yes ☒ No Co-Operator* change
If yes, provide the scheduled date for the change:	Month: 10 / Day: 01 / Year: 2008

D. Is the name listed in VII.A. also the owner? If yes, skip to Section VIII.C.	☐ Yes ☒ No

VIII. Facility Owner Information	
A. Name	**Phone Number (area code and number)**
David A. Brockman, Operator/ Facility-Property Owner	(509) 376-7395
Street or P.O. Box	
P.O. Box 550	

City or Town	State	ZIP Code
Richland	WA	99352

B. Owner Type	F

C. Does the name in VIII.A reflect a proposed change in owner?	☐ Yes ☒ No
If yes, provide the scheduled date for the change:	Month / Day / Year

IX. NAICS Codes (5/6 digit codes)													
A. First							**B. Second**						
5	6	2	2	1		Waste Treatment & Disposal	9	2	4	1	1	0	Administration of Air & Water Resource & Solid Waste Management Programs
C. Third							**D. Fourth**						
5	4	1	7	1		Research & Development in the Physical, Engineering, & Life Sciences							

X. Other Environmental Permits (see instructions)

A. Permit Type	B. Permit Number	C. Description
E	AIR 06-1007	WAC 246-247, Radiation Protection – Air Emissions
E	AIR 10-412	WAC 246-247, Radiation Protection – Air Emissions
E	UST 451 1	WAC 173-216, State Waste Discharge Permit Program

XI. Nature of Business (provide a brief description that includes both dangerous waste and non-dangerous waste areas and activities)

The Fast Flux Test Facility (FFTF) was a 400-megawatt (thermal) liquid-metal cooled (sodium) research and test reactor located in the 400 Area of the Hanford Facility. The FFTF developed and tested advanced fuels and material for the Liquid Metal Fast Breeder Reactor program. The FFTF was constructed in the late 1970's and first went critical on February 9, 1980. FFTF operated successfully from 1982 to 1992. The Department of Energy (DOE) issued a shutdown order in December 1993, and since that time, the DOE has been de-fueling the reactor and deactivating systems, as they were no longer needed. Mixed waste stored in the 400 Area Waste Management unit can include elemental sodium (Na), sodium potassium (NaK) (D001, D003, WSC2) and sodium hydroxide or potassium hydroxide (D002); as well as debris (for example piping, equipment, and components) contaminated with Na or NaK, sodium hydroxide, or potassium hydroxide. The mixed waste stored in the 400 Area Waste Management unit is limited to wastes generated from the 400 Area. Mixed waste will be stored in containers (for example drums and boxes) until treatment capabilities are available.

Greater-than 90-day Storage Areas:

Fuel Storage Facility (Building 403)

The Fuel Storage Facility (FSF) is a one-level reinforced concrete substructure covered by a steel frame metal-sided high bay building. Building dimensions are 34 x 27 x 12 meters (112 x 90 x 40) high. The principal equipment in the FSF is a belowground cell containing a carbon steel storage vessel approximately 6.4 meters (21 feet) in diameter and 7.3 meters (24 feet) deep for storing up to 466 FFTF spent fuel assemblies in liquid sodium. Adjacent buildings and below-grade cells contain the natural draft heat exchanger used to cool the FSF pool. With the exception of two areas, which are radiation areas (cells 907 and 906); all accessible areas are Radioactive Material Areas. The process design capacity for the FSF is 1,000 gallons.

Interim Storage Area

The 400 Area Interim Storage Area (ISA) consists of 156 x 75 meters (513 x 247 feet) totally fenced area with perimeter lighting that has been designated for above ground dry cask storage of spent fuel. A concrete pad, which measures 27 x 37 meters (90 x 120 Feet), was used for cask storage. The process design capacity for the ISA is 19,000 gallons.

EXAMPLE FOR COMPLETING ITEMS XII and XIII (shown in lines numbered X-1, X-2, and X-3 below): A facility has two storage tanks that hold 1200 gallons and 400 gallons respectively. There is also treatment in tanks at 20 gallons/hr. Finally, a one-quarter acre area that is two meters deep will undergo *in situ vitrification*.

Section XII. Process Codes and Design Capacities								Section XIII. Other Process Codes								
Line Number		A. Process Codes (enter code)			B. Process Design Capacity 1. Amount	B. Process Design Capacity 2. Unit of Measure (enter code)	C. Process Total Number of Units	Line Number		A. Process Codes (enter code)			B Process Design Capacity 1. Amount	B Process Design Capacity 2. Unit of Measure (enter code)	C. Process Total Number of Units	D. Process Description
X	1	S	0	2	1,600	G	002	X	1	T	0	4	700	C	001	In situ vitrification
X	2	T	0	3	20	E	001									
X	3	T	0	4	700	C	001									
	1	S	0	1	20,000	G	003		1							
	2								2							
	3								3							
	4								4							
	5								5							
	6								6							
	7								7							
	8								8							
	9								9							
1	0							1	0							
1	1							1	1							
1	2							1	2							
1	3							1	3							
1	4							1	4							
1	5							1	5							
1	6							1	6							
1	7							1	7							
1	8							1	8							
1	9							1	9							
2	0							2	0							
2	1							2	1							
2	2							2	2							
2	3							2	3							
2	4							2	4							
2	5							2	5							

XIV. Description of Dangerous Wastes

Example for completing this section: A facility will receive three non-listed wastes, then store and treat them on-site. Two wastes are corrosive only, with the facility receiving and storing the wastes in containers. There will be about 200 pounds per year of each of these two wastes, which will be neutralized in a tank. The other waste is corrosive and ignitable and will be neutralized then blended into hazardous waste fuel. There will be about 100 pounds per year of that waste, which will be received in bulk and put into tanks.

Line Number	A. Dangerous Waste No.				B. Estimated Annual Quantity of Waste	C. Unit of Measure	D. Processes									
							(1) Process Codes									(2) Process Description [If a code is not entered in D (1)]
X 1	**D**	**0**	**0**	**2**	**400**	**P**	**S**	**0**	**1**	**T**	**0**	**1**				
X 2	**D**	**0**	**0**	**1**	**100**	**P**	**S**	**0**	**2**	**T**	**0**	**1**				
X 3	**D**	**0**	**0**	**2**												**Included with above**
1	D	0	0	1	30	T	S	0	1							Includes debris
2	D	0	0	2		T	S	0	1							Includes debris
3	D	0	0	3		T	S	0	1							Includes debris
4	W	S	C	2		T	S	0	1							Includes debris
5																
6																
7																
8																
9																
10																
11																
12																
13																
14																
15																
16																
17																
18																
19																
20																
21																
22																
23																
24																
25																

XV. Map

Attach to this application a topographic map of the area extending to at least one (1) mile beyond property boundaries. The map must show the outline of the facility; the location of each of its existing and proposed intake and discharge structures; each of its dangerous waste treatment, storage, recycling, or disposal units; and each well where fluids are injected underground. Include all springs, rivers, and other surface water bodies in this map area, plus drinking water wells listed in public records or otherwise known to the applicant within ¼ mile of the facility property boundary. The instructions provide additional information on meeting these requirements.

Topographic map is located in the Ecology Library

XVI. Facility Drawing

All existing facilities must include a scale drawing of the facility (refer to Instructions for more detail).

XVII. Photographs

All existing facilities must include photographs (aerial or ground-level) that clearly delineate all existing structures; existing storage, treatment, recycling, and disposal areas; and sites of future storage, treatment, recycling, or disposal areas (refer to Instructions for more detail).

XVIII. Certifications

I certify under penalty of law that this document and all attachments were prepared under my direction or supervision in accordance with a system designed to assure that qualified personnel properly gather and evaluate the information submitted. Based on my inquiry of the person or persons who manage the system, or those persons directly responsible for gathering the information, the information submitted is, to the best of my knowledge and belief, true, accurate, and complete. I am aware that there are significant penalties for submitting false information, including the possibility of fine and imprisonment for knowing violations.

Operator Name and Official Title (type or print)	**Signature**	**Date Signed**
David A. Brockman, Manager U.S. Department of Energy Richland Operations Office	Doug A. Shoop Jr	9/19/08
Co-Operator* Name and Official Title (type or print)	**Signature**	**Date Signed**
John G. Lehew, III President and Chief Executive Officer CH2M HILL Plateau Remediation Company		9/2/08
Co-Operator – Address and Telephone Number* P.O. Box 1600 Richland, WA 99352 (509) 376-0556		
Facility-Property Owner Name and Official Title (type or print)	**Signature**	**Date Signed**
David A. Brockman, Manager U.S. Department of Energy Richland Operations Office	Doug A. Shoop Jr	9/19/08

Comments

Fuel Storage Facility (FSF) 8-2006
Building 403

Interim Storage Area (ISA) 8-2006
Building 4718

400 Area Waste Management Unit
400 Area Interim Storage Area
Fuel Storage Facility
499-S0-8
499-S0-7
499-S1-6J
66200702hlb
66200701hlb
400 Area Waste Management Unit
Prepared for:
US DEPARTMENT OF ENERGY
RICHLAND OPERATIONS OFFICE
Created and Published by:
Central Mapping Services
Fluor Hanford, Richland, WA
(509) 373-9076
Intended Use: REFERENCE ONLY
Topographic Data:
1996, Bechtel Hanford, Inc.
Hanford Site
Unit Location
TSD Unit Boundary
DOE Operating Areas
Hanford Facility
Injection and Withdrawal Wells
Contours at 1 Meter Intervals
Depression Contours
SWMUs and Known Releases
Linear SWMUs and Known Releases
Spot SWMUs and Known Releases
Buildings
Structures
Concrete
Major Roads
Service Roads
Railroads
Fences
Meters
0 50 100 150 200
Feet
0 200 400 600
O:\Projects\2005\RCRA_TSD\050614_2ndPriorityFacilityTopos2005_Thompson\Maps\060906_400Area_LineDwg_85x11_Rev3.mxd - 7/18/2006 @ 11:23:39 AM

This page intentionally left blank.

Addendum B **Waste Analysis Plan**

B. WASTE ANALYSIS PLAN B.1
B.1 UNIT DESCRIPTION B.1
B.1.1 Description of Unit Processes and Activities B.1
B.2 CONFIRMATION PROCESS B.1
B.2.1 Pre-Transfer Review B.2
B.2.2 Verification of Waste B.2
B.2.3 Waste Acceptance B.2
B.2.4 Conformance Issue Resolution B.2
B.3 SELECTING WASTE ANALYSIS PARAMETERS B.3
B.4 SELECTING SAMPLING PROCESSES B.3
B.5 SELECTING A LABORATORY, LABORATORY TESTING, AND ANALYTICAL METHODS B.3
B.6 SELECTING WASTE RE-EVALUATION FREQUENCIES B.3
B.7 SPECIAL PROCEDURAL REQUIREMENTS B.3
B.8 RECORDKEEPING B.3

This page intentionally left blank.

B. WASTE ANALYSIS PLAN

The purpose of this Waste Analysis Plan (WAP) is to document waste analysis activities associated with the 400 Area WMU to comply with WAC 173-303-300(1), (2), (4), and (5). WAC 173-303-300(3) and (6) are not applicable, as the 400 Area WMU will not receive waste from any offsite facilities. Mixed waste managed in the 400 Area WMU is limited to waste generated in the 400 Area. Descriptions required by WAC 173-303-300(5) are contained in the following sections.

B.1 UNIT DESCRIPTION

The 400 Area WMU is a non-land based unit located in the 400 Area of the Hanford Facility and contains two container storage dangerous waste management units. The 400 Area WMU is operated in accordance with requirements in the Hanford Dangerous Waste permit established pursuant to the provision of WAC 173-303-630. The mission of the 400 Area WMU is to store mixed waste until it is treated. Treatment is not currently provided for mixed waste stored at the 400 Area WMU.

B.1.1 Description of Unit Processes and Activities

The 400 Area WMU includes the FSF (Building 403) and the ISA. The locations and boundaries of these two container storage units is documented in Figures C.1 and C.2 of Addendum C, and the topographic map in Addendum A.

Addendum A, Part A Form identifies waste quantities and the process design capacity for the 400 Area WMU. Sodium (Na) and sodium potassium (NaK) contamination is associated with the Na and NaK used as coolant in the FFTF reactor. The 400 Area WMU will continue to receive Na and NaK -contaminated waste and debris from decommissioning of the FFTF. In addition, Na -contaminated waste, and NaK containing components, generated in association with former FFTF operations and currently in storage at other Hanford Facility locations, could be transferred to the 400 Area WMU for consolidation with other 400 Area-generated waste. Transfers of mixed waste to the 400 Area WMU will be conducted under Permit Condition II.Q.

B.1.2 Identification and Classification of Waste

Waste types not specifically identified in this Waste Analysis Plan are prohibited from storage in the 400 Area WMU dangerous waste management units. The waste can only exhibit the characteristics of ignitability, reactivity, and/or corrosivity.

Waste is designated using manufacturers' product information, Material Safety Data Sheets (MSDSs), laboratory analysis provided by the generator, and/or reference material such as Registry of Toxic Effects of Chemical Substances (published by the National Institutes for Occupational Safety and Health). Addendum A, Part A Form identifies dangerous waste numbers for waste types stored at the 400 Area WMU. These dangerous waste numbers and corresponding references are as follows:

Dangerous Waste Number (Characteristic)	Reference
D001 (ignitable)	WAC 173-303-090(5)
D002 (corrosive liquid)	WAC 173-303-090(6)
D003 (reactive)	WAC 173-303-090(7)
WSC2 (corrosive solid)	WAC 173-303-090(6)/104

B.2 CONFIRMATION PROCESS

The confirmation process is the process by which the 400 Area WMU staff will confirm their knowledge about a waste before it is placed into storage to ensure the waste is managed properly. The confirmation process includes completing appropriate pre-transfer reviews and verification steps as described in this section.

B.2.1 Pre-Transfer Review

Pre-transfer review takes place before waste can be placed in the 400 Area WMU. The review focuses on whether the analysis information (e.g., waste profile documentation) is sufficient to determine that the waste can be safely stored and that the waste was generated at the 400 Area. The pre-transfer review will be documented on a waste profile and maintained in the Hanford Facility Operating Record, 400 Area WMU File. The analysis must include data obtained by testing the waste and/or 'knowledge' of the waste (i.e., sufficient information about a waste to substitute reliably for direct testing of the waste). 'Knowledge' consists of existing published or documented analysis data on the waste or data from waste generated in similar processes, including but not limited to the following:

- MSDSs on chemical products
- Analytical data on the waste or a waste from a similar process
- Interview information
- Logbooks
- Procurement records
- Qualified analytical data
- Procedures and/or methods
- Process flow charts
- Inventory sheets
- Vendor information

B.2.2 Verification of Waste

Verification is an assessment performed at waste receipt to substantiate that the waste stream received at the 400 Area WMU is the same as represented by the analysis information and/or supporting documentation. Verification includes a container receipt inspection. Documentation to be reviewed as part of verification activities may include the container inventory documentation, a container listing report, and the waste profile documentation. Before acceptance into the ISA, each container or group of containers is inspected by waste operations personnel for damage, proper closure, marking, and proper accompanying documentation.

B.2.3 Waste Acceptance

Acceptance of waste into the 400 Area WMU occurs only after the confirmation process (pre-transfer review and verification) is complete. Conformance issues identified during the confirmation process are documented and managed in accordance with Section B.2.4. Conformance issues that must be corrected before waste acceptance include:

- Waste that does not match approved waste profile documentation
- Designation discrepancy
- Packaging discrepancy

B.2.4 Conformance Issue Resolution

A conformance issue is any discrepancy identified during the confirmation process with waste profile documentation, a waste package, or a waste shipment. Discrepancies can be identified during pre-transfer review of a waste stream or during the verification process. If a possible conformance issue is identified, the following actions are taken by the 400 Area WMU staff to resolve the issue:

- Compile all information concerning the possible conformance issue(s).
- Gather additional knowledge that may assist in the resolution of the concern(s).
- Determine and implement the appropriate course of action to resolve the issue.

B.3 SELECTING WASTE ANALYSIS PARAMETERS

Na and NaK is the material of interest to support safe storage of the waste (including contaminated piping, appurtenances, and debris) at the 400 Area WMU. Na and NaK consists of un-reacted elements (either Na or a mixture of Na and K, respectively) (i.e., no other chemical contamination) as it was contained in closed-loop cooling systems throughout FFTF reactor operation. In addition, the ignitable and reactive properties of sodium and potassium metal are well known and documented (MSDSs and FFTF operating history), and the Na and NaK waste to be stored in the 400 Area WMU storage units is consistent with these properties. Analytical data exist for the Na and NaK contained in the FFTF cooling system, therefore, no further sampling and analyses of the sodium waste are planned.

Based on known chemical properties of sodium and a mixture of sodium and potassium metal, small amounts of concentrated sodium hydroxide or potassium hydroxide and trace amounts of hydrogen may be generated if the sodium comes in contact with water vapor in the air during storage. Due to the potential formation of sodium or potassium hydroxide having a pH greater than 12.5, debris contaminated with Na or NaK metal is designated as a corrosive (D002 and WSC2, corrosive liquid and solid, respectively). In the event that liquid is identified in Na or NaK waste secondary containment, the liquid will be managed under the generator provisions of WAC 173-303-200 and is beyond the scope of this WAP.

B.4 SELECTING SAMPLING PROCESSES

Additional analytical data are not required to store safely the Na or NaK-contaminated waste at the 400 Area WMU. Therefore, no additional waste sampling is planned.

B.5 SELECTING A LABORATORY, LABORATORY TESTING, AND ANALYTICAL METHODS

Additional analytical data are not required to store safely the sodium-contaminated waste at the 400 Area WMU. Therefore, there is no need to select a laboratory, laboratory testing methods, or analytical methods.

B.6 SELECTING WASTE RE-EVALUATION FREQUENCIES

Additional analytical data are not required to store safely the Na and NaK-contaminated waste at the 400 Area WMU. Therefore, there is no need to select a waste re-evaluation frequency.

B.7 SPECIAL PROCEDURAL REQUIREMENTS

Provisions of WAC 173-303-300(5)(f) are not applicable. Additional analytical data are not required to store safely the sodium-contaminated waste at the 400 Area WMU. Therefore, no special procedural requirements for sampling and analysis apply.

The 400 Area WMU will not conduct any land disposal restrictions (LDR) treatment of waste in storage. Therefore, the LDR requirements applicable to the 400 Area WMU are limited to the record keeping requirements in WAC 173-303-380(1)(o) and LDR reporting requirements under the Hanford Federal Facility Agreement and Consent Order. Mixed waste stored in the 400 Area WMU will be treated in accordance with Permit Condition II.S.

B.8 RECORDKEEPING

Confirmation process records, will be maintained in accordance with Permit Condition II.I.1. These records will be maintained in the Hanford Facility Operating Record, 400 Area WMU File from the time the waste is received until a period of ten years following certification of closure.

This page intentionally left blank.

Addendum C Process Information

C. PROCESS INFORMATION C.1

C.1 CONTAINERS C.1
C.1.1 Description of Containers C.1
C.1.1.1 Description of Containers in the FSF (Building 403) C.1
C.1.1.2 Description of Containers in the ISA C.2
C.1.2 Container Management Practices C.2
C.1.2.1 Container Management Practices for the FSF C.2
C.1.2.2 Container Management Practices for the ISA C.3
C.1.2.3 Container Labeling C.4
C.1.3 Secondary Containment Requirements for Storing Containers C.4
C.1.3.1 Secondary Containment System Design and Operation C.4
C.1.3.2 Secondary Containment System Capacity C.4
C.1.3.3 Control of Run-On C.4
C.1.4 Removal of Liquids from Secondary Containment System C.5

C.2 PREVENTION OF REACTION OF IGNITABLE, REACTIVE, AND INCOMPATIBLE WASTE IN CONTAINERS C.5
C.2.1 Management of Reactive Waste in Containers C.5
C.2.2 Management of Ignitable and Reactive Waste in Containers C.5
C.2.3 Design of Areas to Manage Incompatible Wastes C.5

C.3 AIR EMISSIONS CONTROL C.6

Figures

Figure C.1. Fuel Storage Facility C.7
Figure C.2. Container Management Area C.8

This page intentionally left blank.

C. PROCESS INFORMATION

This Addendum discusses the processes used to store sodium (Na) and sodium potassium (NaK)-contaminated waste at the 400 Area WMU. It includes a description of the containers used to store mixed waste at the two waste storage areas, the container management practices, the use of secondary containment systems, and special procedures related to ignitable, reactive, and incompatible wastes.

C.1 CONTAINERS

The following sections provide a description of 400 Area WMU waste containers, their management, their secondary containment, and removal of liquids from secondary containment systems.

C.1.1 Description of Containers

All mixed waste stored at the 400 Area WMU is packaged in containers. The specific size and type of container is dictated by the size, shape, or form of the waste. Containers generally consist of:

- Standard metal containers [e.g., 208-liter (55-gallon) drums]
- Large metal boxes [e.g., 1.2 meters by 1.2 meters by 2.4 meters (4 feet by 4 feet by 8 feet), 2.7 meters by 2.7 meters by 3.7 meters (9 feet by 9 feet by 12 feet)] fabricated to accommodate the size and shape of a particular component or piece of debris
- Unique components removed from FFTF that, when closed in accordance with WAC 173-303-630(5)(a), can serve as a primary container (e.g., large pumps, valves, tube bundles, cold traps).

Specific debris or components removed from FFTF may require the design and fabrication of additional boxes and, in some cases, containers smaller than 208-liter (55-gallon) may be appropriate for the waste type. The remainder of this Addendum describes storage of Na and NaK-contaminated waste in standard metal containers [e.g., 208-liter (55-gallon) drums], large metal boxes, and unique components. Metallic containers (either carbon steel or stainless steel) are compatible with Na and NaK for storage.

Na and NaK-contaminated waste stored at the 400 Area WMU is designated ignitable (D001) and reactive (D003) per WAC 173-303-090(7). In addition to D003, this waste may also exhibit the characteristics of corrosivity from generation of small quantities of sodium hydroxide or potassium hydroxide due to the reaction of waste residuals with atmospheric moisture. Therefore, waste managed in the FSF and the ISA are also designated as D002 (corrosive liquids) and WSC2 (corrosive solid).

The 400 Area WMU consists of two container storage dangerous waste management units: the FSF (Building 403) and the ISA. The ISA is an outdoor storage area with a concrete pad and a gravel-surface pad. Refer to the map in Addendum A, Part A Form, and Figures C.1 and C.2 in this Addendum for locations of these storage sites within the FFTF PPA. A combined maximum of 75,686 liters (20,000 gallons, 1,000 gallons in the FSF and 19,000 gallons in the ISA) of the Na or NaK contaminant could potentially be stored in the two 400 Area WMU container storage units.

C.1.1.1 Description of Containers in the FSF (Building 403)

The Core Component Pots (CPPs), cylindrical containers previously used to hold assemblies and other components are stored in FSF (Building 403) in two large metal boxes. Each box measures 1.78 meters by 2.29 meters by 3.56 meters (5.84 feet by 7.51 feet by 11.68 feet). The box serves as the primary container for the residual sodium inside the CCPs. Each CCP has been emptied of sodium to the extent practicable, but a maximum of 14 liters (3.7 gallons) of radiologically contaminated sodium remains in each CCP.

The volume of actual sodium in each box is estimated to be less than 757 liters (200 gallons). Each box lid is closed with an elastomer gasket and bolted flange closures. An inert gas (argon or nitrogen) cover is maintained on storage of each box to prevent contact of the metallic sodium with the water vapor in the

air. Shielding is provided for worker protection and to meet as low as reasonably achievable (ALARA) requirements.

C.1.1.2 Description of Containers in the ISA

The ISA is an outdoor storage area, which includes a concrete pad and an additional area of open level ground. The three types of containers anticipated to be stored in the ISA are the standard metal containers, large metal boxes, and unique components described in Sections C.1.1.2.1 through C.1.1.2.3 respectively.

C.1.1.2.1 Storage of Standard Metal Containers in the ISA

The standard metal containers stored in the ISA are contained in container storage modules, specifically configured for the storage of reactive, ignitable, and corrosive waste. Each module is totally enclosed to protect the containers from the weather. The modules are placed directly onto the gravel pad and anchored by conventional methods (e.g., screw anchor or conventional dead man).

C.1.1.2.2 Storage of Large Metal Boxes in the ISA

Large metal boxes can be stored in the ISA. Waste placed in the large metal boxes will not be amenable for storage in standard metal containers, but does not require development of a unique package. Large metal boxes are commercially available and will be placed within secondary containment in the ISA.

C.1.1.2.3 Storage of Unique Components in the ISA

Unique components can be stored in the ISA. Unique components are anticipated to be removed as intact units, except for severed inlet and outlet piping. The inlets and outlets are closed as part of the removal process to prevent any residual Na or NaK inside the component from reacting with water vapor in the air to form sodium hydroxide or potassium hydroxide, respectively. Each component, once closed, serves as the primary container for the sodium waste residue on the interior surfaces of the component.

C.1.2 Container Management Practices

During the container receipt inspection, any discrepancies that have been noted are resolved in accordance with Addendum B, Waste Analysis Plan. Appropriate labels are applied to the containers before acceptance at any of the two waste storage locations in the 400 Area WMU to meet the requirements of WAC 173-303-630(3) and WAC 173-303-395(6). The container packaging and container handling are designed to maintain containment of the waste, maintain damage-free and contamination-free containers, limit storage intrusion, and limit human exposure to mixed waste.

The subsections below describe the container management practices for the FSF and the ISA.

C.1.2.1 Container Management Practices for the FSF

The FSF is a steel-framed, metal-sided, one-story building that is erected on a reinforced concrete substructure. It has no electrical service, lighting, ventilation, and water services. The reinforced concrete floor has a load rating of approximately 0.49 kilograms per square centimeter (1,000 pounds per square foot). The loaded weight of each storage container is approximately 8,256 kilograms (18,200 pounds), which provides a floor load factor of safety of approximately four (Figure C.1).

The drip pan is placed on the floor and the large metal box is placed onto the drip pan. A forklift/rigging packet is provided as an integral part of the base of each metal box. Lifting slings are also available on each box and the overhead bridge crane can be used to lift and position the box.

Sodium is stored at room temperature under an inert gas blanket to protect sodium from reaction with air.

Shielding is provided for worker protection and to meet ALARA requirements. Containers are inspected in accordance with Addendum I, Inspections Requirements for deterioration and leakage using a mirror to view the outer surfaces (sides and top) of the waste boxes. The aisle space requirements of WAC 173-303-630(5)(c) do not apply because there are only two containers. The waste is stored in a

manner equivalent to WAC 173-303-630(5)(c) and the International Fire Code as interpreted by the Hanford Fire Department.

C.1.2.2 Container Management Practices for the ISA

The three types of containers identified in Section C.1.1 can be stored at the ISA. This dangerous waste management unit will be in compliance prior to use (Figure C.2). Management practices for these three container types are described in Sections C.1.2.2.1, C.1.2.2.2, and C.1.2.2.3.

C.1.2.2.1 Management of Standard Metal Containers in the ISA

The waste is stored in standard metal containers [e.g., 208-liter (55-gallon) drums], as described in Section C.1.1.2.1. Standard metal containers are placed into the container storage modules by means of a forklift or by manual placement depending on weight of the container and storage configuration.

Container storage modules in the ISA will be placed in a manner equivalent to the International Fire Code as interpreted by the Hanford Fire Department.

Standard metal containers placed into a container module can be stored four to a pallet, and multiple pallets will constitute a row of containers. Since only one row of pallets can be placed within the container storage modules, there are no aisles between rows, and therefore, the 30-inch aisle spacing requirement of WAC 173-303-630(5)(c) does not apply. Spacing between the pallets and the walls of the container storage module will be maintained to facilitate inspection and emergency response. Standard metal containers can be stacked two high within the container storage modules.

Standard metal containers managed in container storage modules are positioned so labels are visible for inspection. Receipt inspections of the containers are preformed at the time the containers are loaded into the module according to Addendum B, Waste Analysis Plan. Standard metal containers in storage are visually inspected in accordance with Addendum I, Inspection Requirements.

C.1.2.2.2 Management of Large Metal Boxes in the ISA

The waste is stored in large metal boxes as described in Section C.1.1.2.2. Large metal boxes in the ISA are placed in a manner equivalent to the International Fire Code as interpreted by the Hanford Fire Department. Prior to placement of a large metal box in the ISA, a drip pan described in Section C.1.3.2 will be placed at the storage location. The large metal box serves as the primary container. The drip pan used for secondary containment of the large metal box is placed on the ground; the large metal box is placed in the drip pan, and elevated from the base of the drip pan. Each large metal box is handled and positioned in a manner to prevent rupture and container leakage.

Container receipt inspections of large metal boxes are performed at the storage location within the ISA. The large metal boxes in storage are visually inspected in accordance with Addendum I, Inspection Requirements.

C.1.2.2.3 Management of Unique Components in the ISA

Waste is stored as unique components as described in Section C.1.1.2.3. Unique components in the ISA will be placed in a manner equivalent to the International Fire Code as interpreted by the Hanford Fire Department.

Prior to placement of a unique component in the ISA, a drip pan described in Section C.1.3.2 will be placed at the storage location. The unique component serves as the primary container.

The drip pan used for secondary containment of the unique component is placed on the ground. The unique components are placed in the drip pans and elevated from the base of the drip pans. Each unique component is handled and positioned in a manner to prevent rupture and container leakage.

Container receipt inspections of unique components are performed at the storage location within the ISA. The unique components are visually inspected at least weekly while in storage (refer to Addendum I, Inspection Requirements).

C.1.2.3 Container Labeling

Containers are labeled and marked to meet the requirements of WAC 173-303-630(3) and WAC 173-303-395(6).

C.1.3 Secondary Containment Requirements for Storing Containers

The following sections describe secondary containment systems for the 400 Area WMU.

C.1.3.1 Secondary Containment System Design and Operation

The design of secondary containment systems varies depending on the particular dangerous waste management unit and the container type. Design, placement, and operation of each type of secondary containment system are discussed in Sections C.1.3.1.1 and C.1.3.1.2.

C.1.3.1.1 Secondary Containment System Design and Operations for the FSF

Secondary containment requirements in WAC 173-303-630(7) are met for the large metal boxes by placing the waste containers in drip pans. A forklift/rigging packet is provided as an integral part of the base of each metal box and results in elevation of the base of the box approximately 10.2 cm (four inches) above the drip pan keeping the base of the container from contacting any waste that could accumulate in the drip pan. The depth of the drip pan is approximately 8.9 centimeters (3.5 inches).

C.1.3.1.2 Secondary Containment System Design and Operations for the ISA

For each type of container stored within the ISA, secondary containment is provided compliant with WAC 173-303-630(7). The design can include provisions for indoor or outdoor storage. Indoor storage is provided for small metal containers managed in container storage modules. The container storage modules will be procured to be compliant with WAC 173-303-630(7). Outdoor storage is provided for large metal containers and unique components. A forklift/rigging packet is provided as an integral part of each secondary containment drip pan for outdoor storage. Outdoor containers are elevated in the drip pan keeping the base of the container from contacting any waste or liquids that could accumulate in the drip pan. Capacity will be designed on a case-by-case basis in accordance with Section C.1.3.2.

C.1.3.2 Secondary Containment System Capacity

Each secondary containment system is designed to provide a base underlying the boxes, containers, or components that is free of cracks or gaps and is sufficiently impervious (WAC 173-303-630(7)(a)(i)). For outdoor storage, the capacity of the containment (e.g., drip pan) will also meet the 25-year 24-hour storm value of 3.35 centimeters (1.32 inches) (WAC 173-303-630(7)(a)). In rare cases, when a container can contain free liquids, the drip pan will also be designed to meet the requirements of WAC 173-303-630(7)(a)(iii). Since sodium melts at 98 degrees C, an event causing liquid sodium to be released into the secondary containment is extremely unlikely. Although, NaK is typically liquid at ambient conditions, most if not all NaK will have been drained from contaminated debris and components. Spills or leaks of liquid NaK into secondary containment will be negligible and unlikely to pose any human health or environment threats. Since run-on is prevented as described in Section C.1.3.3, additional capacity is not required for run-on.

C.1.3.3 Control of Run-On

There is not a credible pathway, through which run-on can come into contact with the sodium-contaminated waste or enter the secondary containment for the waste containers. The contour of the ground and the 400 Area storm water drainage systems around the FSF and the ISA prevents run-on. Waste containers stored at the ISA are stored either on covered drip pans or in weather-tight storage modules. Run-on is prevented in either case.

Refer to Section C.1.4 for a discussion of response to accumulation of water from a known source (e.g., rainwater or snowmelt) in secondary containment.

C.1.4 Removal of Liquids from Secondary Containment System

In the unlikely event of liquid intrusion into the secondary containment system, the following is performed:

- Liquid in the secondary containment system is visually inspected for signs of other materials (e.g., dust, etc.).
- Containers affected are inspected for signs of damage. Damaged containers are repackaged and identified in the 400 Area WMU operating logbook.
- Previous inspection checklists are reviewed to identify any waste releases in the waste storage areas for which remedial actions have not been completed.
- Liquid removed from secondary containment is removed and characterized under the generator provisions of WAC 173-303-200 and is outside the scope of TSD unit operations.
- The 400 Area WMU supervisor signs the operating logbook indicating that the previous steps have been completed and that the secondary containment and/or storage structure(s) are clean.

Records of spills and releases of mixed waste are maintained as part of the 400 Area WMU operating record. For related records maintained elsewhere, both a description and the location of such records are entered into the operating record. These records include, but are not limited to, electronic and/or paper records. These records will be retained in accordance with Permit Condition I.E.10.c. These records will eventually be utilized during closure activities at the 400 Area WMU, as noted in Addendum H, Closure Plan. Additional actions taken in response to a spill or discharge are detailed in the Addendum J, Contingency Plan.

C.2 PREVENTION OF REACTION OF IGNITABLE, REACTIVE, AND INCOMPATIBLE WASTE IN CONTAINERS

Ignitable and reactive waste stored in containers is packaged and managed in the manner described in Sections C.1.1 and C.1.2. The waste stored in the 400 Area WMU is not incompatible with storage container materials of construction or other waste in the storage unit based on the waste codes and generating source documented in Addendum A, Part A Form.

C.2.1 Management of Reactive Waste in Containers

Wastes managed at the FSF and the ISA are designated as reactive solely with respect to the requirements of WAC 173-303-090(7)(a)(ii) and (iii). Management of these wastes as documented in this Addendum provide appropriate protection from contact with liquid water and the risk of generation of potentially explosive hydrogen gas. The reactive designation for waste identified in the Addendum A, Part A Form, is not based on WAC 173-303-090(7)(a)(vi), (vii) or (viii), which address explosives and materials that can be detonated. Therefore, no specific management requirements are necessary with respect to the potential for explosion or detonation.

C.2.2 Management of Ignitable and Reactive Waste in Containers

Waste storage limits and spacing requirements are equivalent to those specified in the International Fire Code as interpreted by the Hanford Fire Department demonstrating compliance with the requirements of WAC 173-303-395(1).

A qualified staff member will inspect the areas storing mixed waste annually as specified in WAC 173-303-395(1)(d). This inspection will be performed in the presence of a professional person who is familiar with the International Fire Code.

C.2.3 Design of Areas to Manage Incompatible Wastes

Only waste as documented in Addendum B Waste Analysis Plan will be stored in the 400 Area WMU.

C.3 AIR EMISSIONS CONTROL

Air emission requirements of WAC 173-303-690 through WAC 173-303-691 do not apply to mixed waste stored at the 400 Area WMU. The air emission standards of WAC 173-303-692 (Subpart CC) apply to tank, surface impoundment, and container storage units. However, since containers that are used solely for management of mixed waste are exempt, all containers in the FSF and the ISA are exempt from the requirements of WAC 173-303-692.

.

Figure C.1. Fuel Storage Facility

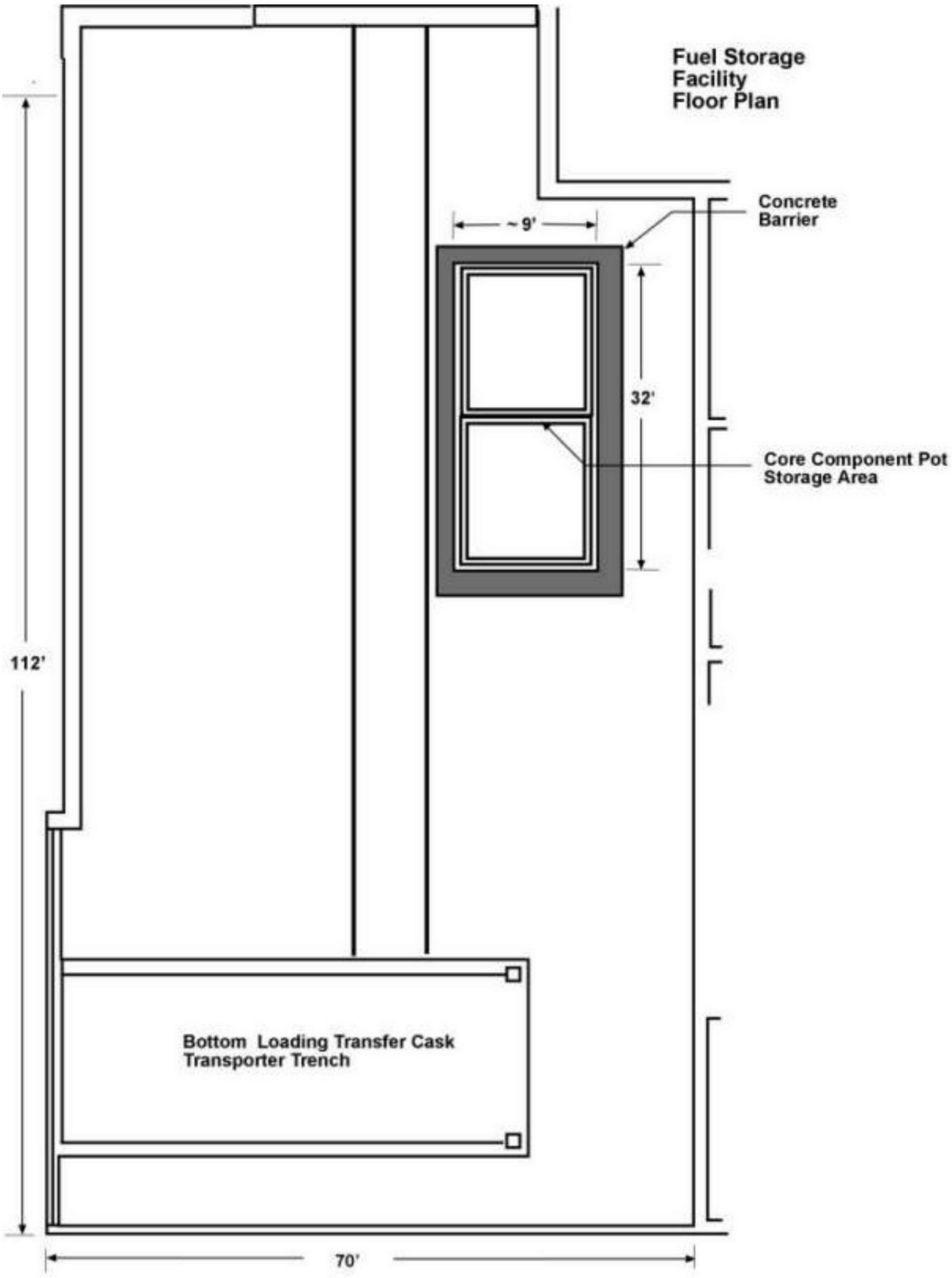

Figure C.2. Container Management Area

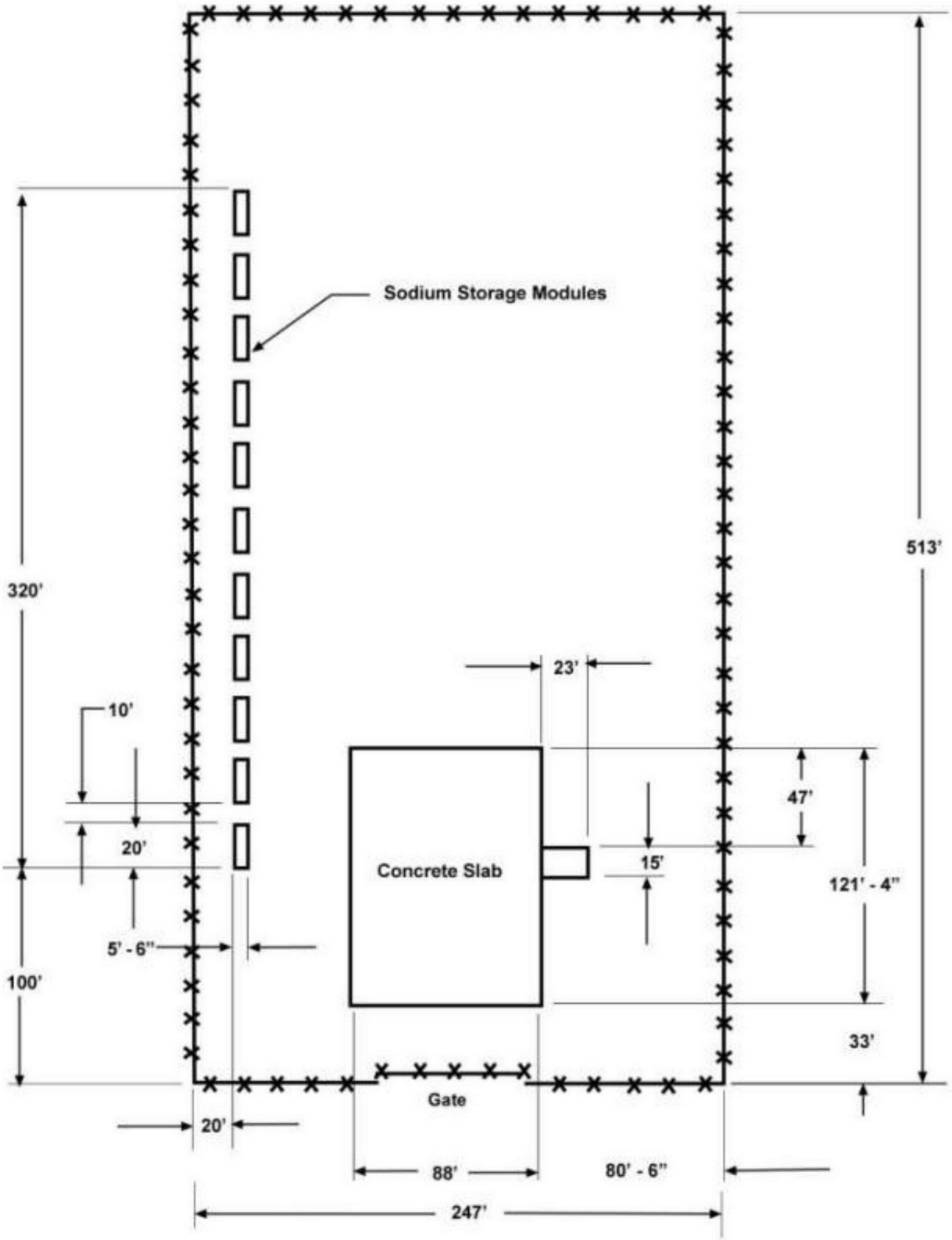

This page intentionally left blank.

Hanford Facility RCRA Permit Modification Notification Forms

Part III, Operating Unit 3

Liquid Effluent Treatment Facility & 200 Area Effluent Treatment Facility

Index

Page 2 of 7	Hanford Facility RCRA Permit III.3
Page 3 of 7	Addendum C, Section C.2.3
Page 4 of 7	Addendum C, Section C.3.4.1
Page 5 of 7	Addendum C, Section C.4.3.1.1
Page 6 of 7	Addendum C, Section C.4.3.1.2
Page 7 of 7	Addendum J, Section J.3.2.5

Submitted by Co-Operator:

C Simpuls for LTB 12/15/11

L. T. Blackford Date

Reviewed by RL Program Office:

J Dowell 12/16/11

J. A. Dowell Date

Hanford Facility RCRA Permit Modification Notification Form	
Unit: **LERF and 200 Area ETF**	Permit Part **Part III, Operating Unit 3**

Description of Modification:
Hanford Facility RCRA Permit III.3

PART III, OPERATING UNIT GROUP 3 PERMIT CONDITIONS
Liquid Effluent Retention Facility & 200 Area Effluent Treatment Facility

Unit Description:

The Liquid Effluent Retention Facility (LERF) and 200 Area Effluent Treatment Facility(200 Area ETF) consists of an aqueous waste treatment system that provides treatment, storage integral to the treatment process, and storage of secondary wastes from the treatment process for a variety of aqueous mixed waste. The 200 Area ETF is located in the 200 East Area. Aqueous wastes managed by the 200 Area ETF include process condensate from the LERF and 200 Area ETF and other aqueous waste generated from onsite remediation and waste management activities.

The LERF consists of three lined surface impoundments, or basins. Aqueous waste from LERF is pumped to the 200 Area ETF for treatment in a series of process units, or systems, that remove or destroy essentially all of the dangerous waste constituents. The treated effluent is discharged to a State-Approved Land Disposal Site (SALDS) north of the 200 West Area, under the authority of a Washington State Waste Discharge Permit (Ecology 2000) and 200 Area ETF Delisting (40 CFR 261, Appendix IX, Table 2). Construction of the LERF began in 1990. Waste management operations began at LERF in April 1994. Construction of the 200 Area ETF began in 1992. Waste management operations began at 200 Area ETF in November of 1995.

This Chapter provides unit-specific Permit conditions applicable to the dangerous waste management units for LERF and 200 Area ETF.

List of Addenda Specific to Operating Unit Group 3

Addendum A	Part A Form, dated June 30, 2011
Addendum B	Waste Analysis Plan, dated June 30, 2011
Addendum C	Process Information, dated December 31, 2011~~June 30, 2011~~
Chapter 5.0	Groundwater Monitoring (PNNL-11620 & WHC-SD-EN-AP-024), dated June 30, 2008
Addendum E	Security Requirements, dated, June 30, 2011
Addendum F	Preparedness and Prevention, dated June 30, 2011
Addendum G	Personnel Training, dated June 30, 2011
Addendum H	Closure Plan, dated June 30, 2011
Addendum I	Inspection Requirements, dated June 30, 2011
Addendum J	Contingency Plan, dated December 31, 2011~~June 30, 2011~~

WAC 173-303-830 Modification Class [1] [2]	Class 1	Class 1	Class 2	Class 3
Please mark the Modification Class:	X			

Enter relevant WAC 173-303-830, Appendix I Modification citation number: A.1
Enter wording of WAC 173-303-830, Appendix I Modification citation:
Administrative and information change

Modification Approved: [✓] Yes [ ] No (state reason for denial)
Reason for denial:

Reviewed by Ecology:
12/15/11
Date

[1] Class 1 modifications requiring prior Agency approval.

[2] If the proposed modification does not match any modification listed in WAC 173-303-830 Appendix I, then the proposed modification should automatically be given a Class 3 status. This status may be maintained by the Department of Ecology, or down graded to a Class 1, if appropriate.

Hanford Facility RCRA Permit Modification Notification Form	
Unit: **LERF and 200 Area ETF**	Permit Part **Part III, Operating Unit 3**

Description of Modification:
Addendum C, Section C.2.3:

.....**Hydrogen Peroxide Decomposition.** Typically, hydrogen peroxide added into the UV/OX system is not consumed completely by the system. Because hydrogen peroxide is a strong oxidizer, the residual hydrogen peroxide from the UV/OX system is removed to protect the downstream equipment. The hydrogen peroxide decomposer uses a catalyst ~~(activated carbon)~~ to break down the hydrogen peroxide that is not consumed completely in the process of organic destruction. The aqueous waste is sent through a column ~~of fluidized activated carbon~~ that breaks down the hydrogen peroxide into water and oxygen. The gas generated by the decomposition of the hydrogen peroxide is vented to the vessel off gas system. .....

WAC 173-303-830 Modification Class [1,2]	Class 1	Class '1	Class 2	Class 3
Please mark the Modification Class:	X			

Enter relevant WAC 173-303-830, Appendix I Modification citation number: A.1
Enter wording of WAC 173-303-830, Appendix I Modification citation:
Administrative and Informational changes, and based on condition II.R.1. AHP

Modification Approved: ☑ Yes ☐ No (state reason for denial)
Reason for denial:

Reviewed by Ecology:
Frederick Bond
12/15/11
Date

[1] Class 1 modifications requiring prior Agency approval.

[2] If the proposed modification does not match any modification listed in WAC 173-303-830 Appendix I, then the proposed modification should automatically be given a Class 3 status. This status may be maintained by the Department of Ecology, or down graded to a Class '1, if appropriate.

Hanford Facility RCRA Permit Modification Notification Form	
Unit: **LERF and 200 Area ETF**	Permit Part **Part III, Operating Unit 3**

Description of Modification:
Addendum C, Section C.3.4.1, second paragraph

.....The floor is composed of cast-in-place, pre-formed concrete slabs, and has a minimum thickness of 15.2 centimeters. All slab joints and floor and wall joints have water stops installed at the mid-depth of the slab. In addition, filler was applied to each joint. The floor and berms are coated with a chemically resistant; high-solids epoxy coating system consisting of primer~~, filler,~~ and top coating. This coating material is compatible with the waste managed in containers and is an integral part of the secondary containment system for containers.....

WAC 173-303-830 Modification Class [1] [2]	Class 1	Class [1]1	Class 2	Class 3
Please mark the Modification Class:		X		

Enter relevant WAC 173-303-830, Appendix I Modification citation number: -830(4)(d)
Enter wording of WAC 173-303-830, Appendix I Modification citation:
Request that the modification be reviewed and approved as a Class [1]1

Modification Approved: ☑ Yes ☐ No (state reason for denial)
Reason for denial:

Reviewed by Ecology:
12/15/11
Date

[1] Class 1 modifications requiring prior Agency approval.

[2] If the proposed modification does not match any modification listed in WAC 173-303-830 Appendix I, then the proposed modification should automatically be given a Class 3 status. This status may be maintained by the Department of Ecology, or down graded to a Class [1]1, if appropriate.

Hanford Facility RCRA Permit Modification Notification Form	
Unit: **LERF and 200 Area ETF**	Permit Part **Part III, Operating Unit 3**

Description of Modification:
Addendum C, Section C.4.3.1.1

-……**Containment Materials**. The concrete floor consists of cast-in-place and preformed concrete slabs. All slab joints and floor and wall joints have water stops installed at the mid-depth of the slab. In addition, filler was applied to each joint.

Except for the sump tank vaults, all of the concrete surfaces in the secondary containment system, including berms, trenches, and pits, are coated with a chemical-resistant, high-solids, epoxy coating that consists of a primer, ~~filler,~~ and a top coating. This coating material is compatible with the waste being treated, and with the sulfuric acid, sodium hydroxide, and hydrogen peroxide additives to the process. The coating protects the concrete from contact with any chemical materials that might be harmful to concrete and prevents the concrete from being in contact with waste material. Table C.8 summarizes the specifi~~ces~~ types of ~~filler,~~ primer~~,~~ ~~second,~~ and ~~finish~~ top coats specified for the concrete and masonry surfaces in the ETF. The epoxy coating is considered integral to the secondary containment system for the tanks and ancillary equipment. …….

WAC 173-303-830 Modification Class [1] [2]	Class 1	Class '1	Class 2	Class 3
Please mark the Modification Class:		X		

Enter relevant WAC 173-303-830, Appendix I Modification citation number: -830(4)(d)
Enter wording of WAC 173-303-830, Appendix I Modification citation:
Request that the modification be reviewed and approved as a Class '1

Modification Approved: ☑ Yes ☐ No (state reason for denial)
Reason for denial:

Reviewed by Ecology:

12/15/11
Date

[1] Class 1 modifications requiring prior Agency approval.

[2] If the proposed modification does not match any modification listed in WAC 173-303-830 Appendix I, then the proposed modification should automatically be given a Class 3 status. This status may be maintained by the Department of Ecology, or down graded to a Class '1, if appropriate.

Hanford Facility RCRA Permit Modification Notification Form	
Unit: **LERF and 200 Area ETF**	Permit Part **Part III, Operating Unit 3**

Description of Modification:
Addendum C, Section C.4.3.1.2

..... **Verification Tank Secondary Containment.** The three verification tanks are each mounted on ringwalls with high-density polyethylene liners similar to the surge tank. The secondary containment for the three tanks is reinforced concrete with a 15.2-centimeter thick floor and a 20.3-centimeter thick dike. The dike extends up 2.6 meters to provide a containment of 110 percent of the capacity of a single tank (Table C.5~~i.e., 2,800,000 liters~~).
.....

WAC 173-303-830 Modification Class [1] [2]	Class 1	Class [1]1	Class 2	Class 3
Please mark the Modification Class:	X			

Enter relevant WAC 173-303-830, Appendix I Modification citation number: A.1
Enter wording of WAC 173-303-830, Appendix I Modification citation:
Administrative and Informational changes.

Modification Approved: ☑ Yes ☐ No (state reason for denial)
Reason for denial:

Reviewed by Ecology:
12/15/11
Date

[1] Class 1 modifications requiring prior Agency approval.

[2] If the proposed modification does not match any modification listed in WAC 173-303-830 Appendix I, then the proposed modification should automatically be given a Class 3 status. This status may be maintained by the Department of Ecology, or down graded to a Class [1], if appropriate.

Hanford Facility RCRA Permit Modification Notification Form	
Unit: **LERF and 200 Area ETF**	Permit Part **Part III, Operating Unit 3**

Description of Modification:
Addendum J, Section J.3.2.5

J.3.2.5 Hazardous Material, Dangerous and/or Mixed Waste Spill

Spills can result from many sources including process leaks, container spills or leaks, damaged packages or shipments, or personnel error. Spills of mixed waste are complicated by the need to deal with the extra hazards posed by the presence of Atomic Energy Act materials. These controls include containment berms, dedicated spill control sumps, remote gauges, and level indicators as well as spray shields on chemical pipe flanges. LPCS procedures provide alarm response and maintenance actions for leak detection equipment, surveillance of possible leak locations, and response actions for detected spills.

- The discoverer notifies BED and initiates SWIMS response:

  Stops work
  Warns others in the vicinity
  Isolates the area
  Minimizes the exposure to the hazards~~spill if possible~~
  Requests the BED Secure ventilation

WAC 173-303-830 Modification Class [1] [2]	Class 1	Class 1	Class 2	Class 3
Please mark the Modification Class:		X		

Enter relevant WAC 173-303-830, Appendix I Modification citation number: -830(4)(d)
Enter wording of WAC 173-303-830, Appendix I Modification citation:
Request that the modification be reviewed and approved as a Class 1.

Modification Approved: ☑ Yes ☐ No (state reason for denial)
Reason for denial:

Reviewed by Ecology:
12/15/11
Date

[1] Class 1 modifications requiring prior Agency approval.

[2] If the proposed modification does not match any modification listed in WAC 173-303-830 Appendix I, then the proposed modification should automatically be given a Class 3 status. This status may be maintained by the Department of Ecology, or down graded to a Class 1, if appropriate.

Remove and Replace the Following Sections:

Remove Part III Permit Conditions, dated June 30, 201, and replace with Permit Conditions dated December 31, 2011.

Remove Addendum C, dated June 30, 2011, and replace with Addendum C, dated December 31, 2011.

PART III, OPERATING UNIT GROUP 3 PERMIT CONDITIONS

Liquid Effluent Retention Facility & 200 Area Effluent Treatment Facility

Unit Description:

The Liquid Effluent Retention Facility (LERF) and 200 Area Effluent Treatment Facility(200 Area ETF) consists of an aqueous waste treatment system that provides treatment, storage integral to the treatment process, and storage of secondary wastes from the treatment process for a variety of aqueous mixed waste. The 200 Area ETF is located in the 200 East Area. Aqueous wastes managed by the 200 Area ETF include process condensate from the LERF and 200 Area ETF and other aqueous waste generated from onsite remediation and waste management activities.

The LERF consists of three lined surface impoundments, or basins. Aqueous waste from LERF is pumped to the 200 Area ETF for treatment in a series of process units, or systems, that remove or destroy essentially all of the dangerous waste constituents. The treated effluent is discharged to a State-Approved Land Disposal Site (SALDS) north of the 200 West Area, under the authority of a Washington State Waste Discharge Permit (Ecology 2000) and 200 Area ETF Delisting (40 CFR 261, Appendix IX, Table 2). Construction of the LERF began in 1990. Waste management operations began at LERF in April 1994. Construction of the 200 Area ETF began in 1992. Waste management operations began at 200 Area ETF in November of 1995.

This Chapter provides unit-specific Permit conditions applicable to the dangerous waste management units for LERF and 200 Area ETF.

List of Addenda Specific to Operating Unit Group 3

Addendum A	Part A Form, dated June 30, 2011
Addendum B	Waste Analysis Plan, dated June 30, 2011
Addendum C	Process Information, dated December 31, 2011
Chapter 5.0	Groundwater Monitoring (PNNL-11620 & WHC-SD-EN-AP-024), dated June 30, 2008
Addendum E	Security Requirements, dated, June 30, 2011
Addendum F	Preparedness and Prevention, dated June 30, 2011
Addendum G	Personnel Training, dated June 30, 2011
Addendum H	Closure Plan, dated June 30, 2011
Addendum I	Inspection Requirements, dated June 30, 2011
Addendum J	Contingency Plan, dated December 31, 2011

Definitions

State and federal delisting actions: The state delisting action pursuant to WAC 173-303-910(3), August 8, 2005, and the federal delisting action appearing in 40 CFR 261, Appendix IX, Table 2 applicable to the United States, Department of Energy, Richland, Washington.

Acronyms

LERF and 200 Area ETF 200-Area Liquids Processing Facility

III.3.A COMPLIANCE WITH UNIT-SPECIFIC PERMIT CONDITIONS

III.3.A.1 The Permittees will comply with all Permit Conditions in this Chapter and its Addendums and Chapters with respect to dangerous waste management and dangerous waste management units in LERF and 200 Area ETF, in addition to requirements in Permit Part I and Part II.

III.3.B GENERAL WASTE MANAGEMENT

III.3.B.1 The Permittees are authorized to accept dangerous and/or mixed waste for treatment in dangerous waste management units that satisfies the waste acceptance criteria in Permit Addendum B according to the waste acceptance procedures in Permit Addendum B. [WAC 173-303-300]

III.3.B.2 The Permittees are authorized to manage dangerous and/or mixed wastes physically present in the dangerous waste management units in LERF and 200 Area ETF as of the effective date of this Permit according to the requirements of Permit Condition III.15.B.1.

III.3.B.3 The Permittees are authorized to treat and/or store dangerous/mixed waste in the dangerous waste management units in LERF and 200 Area ETF according to the following requirements:

III.3.B.3.a The Permittees are authorized to treat, and store as necessary in support of treatment, dangerous waste in the 200 Area ETF tank systems identified in Permit Addendum C, Section C.2, and Section C.4 according to the Permit Conditions of this Chapter.

III.3.B.3.b The Permittees are authorized to store and treat those dangerous and/or mixed waste identified in Permit Addendum C, Section C.3, in containers according to the requirements of this Chapter. All container management activities pursuant to this Permit Condition will take place within the container storage area or within the 200 Area ETF process area identified in Permit Addendum C, Figure C.3.

III.3.B.3.c Treatment in containers authorized by Permit Condition III.3.B.3.b is limited to decanting of free liquids, and addition of sorbents to free liquids. The Permittees will ensure that sorbents are compatible with wastes and the containers. Sorbents will be compliant with the requirements of WAC 173-303-140(4)(b)(iv), incorporated by reference.

III.3.B.3.d The Permittees are authorized to treat aqueous waste in LERF Basins (Basins 42, 43 and 44) subject to the following requirements:

III.3.B.3.d.1 Following treatment in a LERF basin, aqueous wastes must be treated in 200 Area ETF according to Permit Conditions III.3.B.3.a through c.; [40 CFR 268.4(2)(iii), incorporated by reference by WAC 173-303-140]

III.3.B.3.d.2 The Permittees must ensure that for each basin, either supernatant is removed on a flow-through basis, to meet the requirement of 40 CFR 268.4(a)(2)(ii) incorporated by reference by WAC 173-303-140, or incoming waste is shown to not contain solids by either: (1) sampling results showing the waste does not contain detectable solids, or (2) filtering through a 10 micron filter;[WAC 173-303-815(2)(b)(ii)]

III.3.B.4 The Permittees will maintain the physical structure of the LERF and 200 Area ETF as documented in the applicable sections of Permit Addendum C, Section C.2. [WAC 173-303-630(7), WAC 173-303-640(3), WAC 173-303-640(4)]

III.3.B.5 The Permittees are authorized to use treated effluent for recycle/makeup water purposes at the 200 Area ETF as outlined in Permit Addendum C, Section C.2.5.5, and the letters dated August 19, 2005, EPA Region 10 to Keith A. Klein; and August 8, 2005, Department of Ecology to Keith A. Klein. [WAC 173-303-815 (2)(b)(ii)]

III.3.B.6 The Permittees will maintain and operate systems for the 200 Area ETF documented in Permit Addendum C, Section C.2.5 as necessary for proper operation of the 200 Area ETF, compliance with the conditions of this Permit, and protection of human health and the environment. For purposes of this Permit Condition, the Monitor and Control System documented in Permit Addendum C, Section C.2.5.1, is considered to include all indicators, sensors, transducers, actuators and other control devices connected to but remote from the centralized monitor and control system (MCS) computer.

III.3.B.7 The Permittees must complete the following requirements prior to acceptance for treatment in 200 Area ETF aqueous waste streams with listed waste numbers subject to the requirements of the State and Federal delisting: [WAC 173-303-815(2)(b)(ii)]

III.3.B.7.a The Permittees will prepare a written waste processing strategy according to the requirements of the State and Federal Delisting Actions Conditions (1)(a)(ii) and (1)(b), incorporated by reference, and Permit Addendum B, Section B.2.2.2.

III.3.B.7.b The waste processing strategy required by Permit Condition III.3.B.7.a, must document the proposed processing configuration for the 200 Area ETF, operating conditions for each processing unit, and the expected treated effluent characteristics based on the process model and treatability envelope data required by State and Federal Delisting Conditions (1)(a)(ii) and (1)(b).

III.3.B.7.c The written waste processing strategy required by Permit Condition III.3.B.7.a must demonstrate that the projected treated effluent characteristics satisfy the delisting exclusion limits in State and Federal Delisting Condition (5) of the state and federal delisting actions, and the discharge limits of the State Discharge Permit ST-4500.

III.3.B.7.d The Permittees will place a copy of the written waste processing strategy required by Permit Condition III.3.B.7.a in the Hanford Facility Operating Record, LERF and 200 Area ETF file as part of the documentation of waste streams accepted for management at the 200 Area ETF.

III.3.B.8 Treatment of aqueous waste streams in the 200 Area ETF with listed waste numbers that are subject to the requirements of the state and federal delisting actions must comply with the requirements of State and Federal Delisting Condition (1)(c), incorporated by reference. [WAC 173-303-815 (2)(b)(ii)]

III.3.B.9 The Permittees will manage treated effluent in the final verification tanks according to the requirements of the State and Federal Delisting Conditions (3) and (5), incorporated by reference. [WAC 173-303-815 (2)(b)(ii)]

III.3.B.10 The Permittees will manage treated effluent from the 200 Area ETF according to the requirements of the State Waste Discharge Permit ST 4500 and State and Federal Delisting Condition (7). [WAC 173-303-815(2)(b)(ii)]

III.3.B.11 The Permittees will ensure compliance with treatment standards (40 CFR 268, incorporated by reference by WAC 173-303-140) applicable to treated effluent prior to discharge to the State Authorized Land Disposal Site (SALDS), the delisting criteria at 40 CFR 261, Appendix IX, Table 2, and the corresponding state-approved delisting (dated August 8, 2005, all incorporated by reference). Sampling and analysis necessary for these demonstrations must meet the corresponding requirements in Permit Addendum B. [WAC 173-303-140, WAC 173-303-815 (2)(b)(ii)]

III.3.C WASTE ANALYSIS

III.3.C.1 The Permittees will comply with requirements in Permit Addendum B for sampling and analysis of all dangerous and/or mixed waste required by conditions in this Chapter. [WAC 173-303-300]

III.3.C.2 The Permittees will have an accurate and complete waste profile as described in Permit Addendum B, Section B.2.1.2, for every waste stream accepted for management in LERF and 200 Area ETF dangerous waste management units. [WAC 173-303-380 (1)(a), (b)]

III.3.C.3 The Permittees will place a copy of each waste profile required by Permit Condition III.15.C.2 in the Hanford Facility Operating Record, LERF and 200 Area ETF file required by Permit Condition II.I.2. [WAC 173-303-380 (1)(a), (b)]

III.3.C.4		The Permittees will make a copy of the waste profile required by Permit Condition III.15.C.2 available upon request. [WAC 173-303-380 (1)(a), (b)]
III.3.C.5		Records and results of waste analysis described in this Permit will be maintained in the Hanford Facility Operating Record, LERF and 200 Area ETF file required by Permit Condition II.I.2. [WAC 173-303-380 (1)(a), (b)]
III.3.D	**RECORDKEEPING AND REPORTING**	
III.3.D.1		The Permittees will place the following into the Hanford Facility Operating Record, LERF and 200 Area ETF file required by Permit Condition II.I.2:
III.3.D.1.a		Records required by WAC 173-303-380 (1)(k), and -(o) incorporated by reference.
III.3.D.1.b		Records and results of waste analysis, waste determinations (as required by Subpart CC) and trial tests required by WAC 173-303-300, General waste analysis, and by 40 CFR §264.1034,§264.1063, §264.1083, §265.1034, §265.1063, §265.1084, §268.4(a), and §268.7; [WAC 173-303-310(2)]
III.3.D.1.c		An inspection log, summarizing inspections conducted pursuant to Permit Condition III.3.H.1; [WAC 173-303-380(1)(e)]
III.3.D.1.d		Records required by the State and Federal Delisting Condition (6), incorporated by reference; [WAC 173-303-815 (2)(b)(ii)]
III.3.E	**SECURITY**	
III.3.E.1		The Permittees comply with the Security requirements specific to the LERF and 200 Area ETF in Addendum E and Permit Attachment 3 as required by Permit Condition II.L. [WAC 173-303-310(2)]
III.3.F	**PREPAREDNESS AND PREVENTION**	
III.3.F.1		The Permittees will comply with the Preparedness and Prevention requirements specific to LERF and 200 Area ETF in Addendum F. [WAC 173-303-340]
III.3.G	**CONTINGENCY PLAN**	
III.3.G.1		The Permittees will comply with Addendum J, Contingency Plan, in addition to the requirements of Permit Condition II.A when applicable. [WAC 173-303-350]
III.3.H	**INSPECTIONS**	
III.3.H.1		The Permittees will comply with Addendum I in addition to the requirements of Permit Condition II.X. [WAC 173-303-320]
III.3.I	**TRAINING PLAN**	
III.3.I.1		The Permittees will include the training requirements described in Addendum G of this Chapter specific to the dangerous waste management units and waste management activities at LERF and 200 Area ETF into the written training plan required by Permit Condition II.C.
III.3.J	**GENERAL REQUIREMENTS**	
III.3.J.1		The Permittees will comply with the requirements of WAC 173-303-395(1), incorporated by reference, for prevention of reaction of ignitable, reactive, or incompatible wastes.
III.3.K	CLOSURE	
III.3.K.1		The Permittees will close dangerous waste management units in the LERF and 200 Area ETF in accordance with Addendum H, Closure Plan, and Permit Condition II.J. [WAC 173-303-610(3)(a)]

III.3.L POST CLOSURE – RESERVED

III.3.M CRITICAL SYSTEMS – RESERVED

III.3.N RESERVED

III.3.O CONTAINERS

III.3.O.1 Container Storage and Treatment Unit Standards

III.3.O.1.a As part of or in addition to the requirements of Permit Condition III.3.B.2, the Permittees will ensure the integrity of container storage secondary containment and the chemically resistant coating described in Addendum C, Section C.3.4.1 as necessary to ensure any spills or releases to secondary containment do not migrate to the underlying concrete or soils.

III.3.O.1.a.1 Include documentation of any damage and subsequent repairs in the Hanford Facility Operating Record, LERF and 200 Area ETF file required by Permit Condition II.I.2.

III.3.O.2 Container Management Standards

III.3.O.2.a The Permittees will maintain and manage wastes in accordance with the requirements of Addendum C, Section 4.3.2, and Section 4.3.2. [WAC 173-303-630(2)]

III.3.O.2.b The Permittees will label containers in accordance with the requirements of Addendum C, Section C.3.2, and Section C.3.3. [WAC 173-303-630(3)]

III.3.O.2.c The Permittees will comply with the requirements for managing wastes in containers in WAC 173-303-630(5), incorporated by reference.

III.3.O.2.d The Permittees will ensure wastes are compatible with containers and with other wastes stored or treated in containers within the 200 Area ETF according to the requirements of Addendum C, Section C.3.4.3. [WAC 173-303-630(4), WAC 173-303-630(9)]

III.3.O.2.e The Permittees may treat wastes in containers via decanting of free liquids and addition of sorbents. The Permittees may not use addition of sorbents for purposes of changing the treatability group of a waste with respect to the land disposal restriction standards of 40 CFR 268, incorporated by reference by WAC 173-303-140.

III.3.O.2.f The Permittees will remove any accumulated liquids from container storage areas in 200 Area ETF according to the requirements of Addendum C, Section C.3.4.2, to ensure containers are not in contact with free liquids and to prevent overflow of the container storage area secondary containment.

III.3.O.2.g The Permittees will comply with the requirements for air emissions from containers in Addendum C, Section C.6.3.2. [WAC 173-303-692]

III.3.P TANK SYSTEMS

III.3.P.1 Tank System Requirements

III.3.P.1.a The Permittees will develop a schedule for conducting integrity assessments (IA). The schedule will meet the requirements of Addendum C, Section C.4.2, and consideration of the factors in WAC 173-303-640(2)(e) or WAC 173-303-640(3)(b) as applicable:

III.3.P.1.b The Permittees will maintain a copy of the schedule required by Permit Condition III.3.P.1.a, in the Hanford Facility Operating Record, LERF and 200 Area ETF file, and conduct periodic integrity assessments according to the schedule. The Permittees will document results of integrity assessments conducted according to the IA in the Hanford Facility Operating Record, LERF and 200 Area ETF file.

III.3.P.1.c	For existing tank systems, if a tank system is found to be leaking, or is unfit for use, the Permittees must follow the requirements of WAC 173-303-640(7), incorporated by reference. [WAC 173-303-640(3)(b)]
III.3.P.2	Tank System Operating Requirements
III.3.P.2.a	The Permittees will comply with the requirements of WAC 173-303-640(5)(a), incorporated by reference.
III.3.P.2.b	The Permittees will comply with the requirements of Addendum C, Section C.4.5.2. [WAC 173-303-640(5)(b)]
III.3.P.2.c	The Permittees will comply with the requirements of Addendum C, Section C.4.6. [WAC 173-303-640(5)(d)]
III.3.P.2.d	The Permittees will comply with the requirements of WAC 173-303-640(7), incorporated by reference, in response to spills or leaks from tanks systems at 200 Area ETF. [WAC 173-303-640(5)(c)]
III.3.P.2.e	The Permittees will ensure that the Waste Processing Strategy required by Permit Condition III.3.B.7.a, provides for the immediate treatment or blending of waste accepted for management at the 200 Area ETF such that the resulting waste or mixture is no longer reactive or ignitable when further managed in 200 Area ETF tank systems. [WAC 173-303-640(9)]
III.3.P.2.f	The Permittees will comply with the requirements of WAC 173-303-640(10), incorporated by reference.
III.3.Q	**SURFACE IMPOUNDMENTS**
III.3.Q.1	The Permittees will maintain the three LERF basins according to the requirements of WAC 173-303-650 (2)(f), incorporated by reference.
III.3.Q.2	The Permittees will operate the LERF basins according to the requirements of Addendum C, Section C.5.3, and Addendum I, Section I.2.2.3.1 to prevent over-topping. [WAC 173-303-650 (2)(c)]
III.3.Q.3	The Permittees will develop and maintain, and operate the LERF basins to ensure that any flow of waste into the impoundment can be immediately shut off in the event of overtopping or liner failure. [WAC 173-303-650 (2)(d)]
III.3.Q.4	The Permittees will comply with the requirements of WAC 173-303-650 (2)(g), incorporated by reference.
III.3.Q.5	The Permittees will comply with the requirements of WAC 173-303-650 (4)(b), incorporated by reference.
III.3.Q.6	The Permittees will comply with the requirements of WAC 173-303-650 (4)(c), incorporated by reference. The certification required by this Permit Condition must be provided to Ecology no later than seven calendar days after the date of the certification. A copy of the certification will be placed in the Hanford Facility Operating Record, LERF and 200 Area ETF file required by Permit Condition II.I.2. [WAC 173-303-650 (4)(c)]
III.3.Q.7	The Permittees will comply with the requirements of WAC 173-303-650(5)(b), incorporated by reference, in response to events in WAC 173-303-650(5)(a), incorporated by reference.
III.3.Q.8	The Permittees will comply with the requirements of WAC 173-303-650(5)(d) for any LERF basin that has been removed from service in accordance with Permit Condition III.3.Q.7 that the Permittees will restore to service. [WAC 173-303-650(5)(d)]

III.3.Q.9	The Permittees will close any LERF basin removed from service in accordance with the requirements of Permit Condition III.3.Q.7 or a basin that cannot be repaired or that the Permittees will not to return to service. [WAC 173-303-650(5)(e)]
III.3.Q.10	The Permittees will comply with the requirements of Addendum C, Section C.5.10 with respect to management of ignitable or reactive wastes in the LERF basins. [WAC 173-303-650(7)]
III.3.Q.11	The Permittees can place incompatible wastes and materials in the same LERF basin only if in compliance with the requirements of WAC 173-303-395(1)(b), (c). [WAC 173-303-650(8)]
III.3.Q.12	The Permittees will use the action leakage rate in Addendum C, Section C.5.8, for operation of LERF basins, and comply with the requirements of WAC 173-303-650(10)(b). [WAC 173-303-650(10)]
III.3.Q.13	The Permittees will comply with the requirements of WAC 173-303-650(11), incorporated by reference.
III.3.Q.14	The Permittees will comply with the requirements of 40 CFR 264, Subpart CC, incorporated by reference by WAC 173-303-692.
III.3.Q.15	Groundwater Monitoring
III.3.Q.15.a	The Permittees will comply with the requirements of Chapter 5.0. [WAC 173-303-645]

This page intentionally left blank.

Addendum C **Process Information**

C. PROCESS INFORMATION C.1
C.1 LIQUID EFFLUENT RETENTION FACILITY PROCESS DESCRIPTION C.1
C.2 EFFLUENT TREATMENT FACILITY PROCESS DESCRIPTION C.2
C.2.1 Load-In Station C.2
C.2.2 Effluent Treatment Facility Operating Configuration C.3
C.2.3 Primary Treatment Train C.3
C.2.4 Secondary Treatment Train C.5
C.2.5 Other Effluent Treatment Facility Systems C.7
C.3 CONTAINERS C.9
C.3.1 Description of Containers C.9
C.3.2 Container Management Practices C.10
C.3.3 Container Labeling C.10
C.3.4 Containment Requirements for Managing Containers C.10
C.4 TANK SYSTEMS C.12
C.4.1 Design Requirements C.12
C.4.2 Additional Requirements for New Tanks C.16
C.4.3 Secondary Containment and Release Detection for Tank Systems C.17
C.4.4 Tank Management Practices C.21
C.4.5 Labels or Signs C.23
C.4.6 Air Emissions C.24
C.4.7 Management of Ignitable or Reactive Wastes in Tanks Systems C.24
C.4.8 Management of Incompatible Wastes in Tanks Systems C.24
C.5 SURFACE IMPOUNDMENTS C.24
C.5.1 List of Dangerous Waste C.24
C.5.2 Construction, Operation, and Maintenance of Liner System C.25
C.5.3 Prevention of Overtopping C.32
C.5.4 Structural Integrity of Dikes C.32
C.5.5 Piping Systems C.34
C.5.6 Double Liner and Leak Detection, Collection, and Removal System C.35
C.5.7 Construction Quality Assurance C.36
C.5.8 Proposed Action Leakage Rate and Response Action Plan C.36
C.5.9 Dike Structural Integrity Engineering Certification C.36
C.5.10 Management of Ignitable, Reactive, or Incompatible Wastes C.37
C.6 AIR EMISSIONS CONTROL C.37
C.6.1 Applicability of Subpart AA Standards C.37
C.6.2 Process Vents - Demonstrating Compliance C.37
C.6.3 Applicability of Subpart CC Standards C.38
C.7 ENGINEERING DRAWINGS C.39
C.7.1 Liquid Effluent Retention Facility C.39
C.7.2 200 Area Effluent Treatment Facility C.40

Figures

Figure C.1. Liquid Effluent Retention Facility Layout C.47
Figure C.2. Plan View of the 200 Area Effluent Treatment Facility C.48
Figure C.3. 200 Area Effluent Treatment Facility Layout C.49
Figure C.4. 200 Area Effluent Treatment Facility C.50
Figure C.5. Example - 200 Area Effluent Treatment Facility Configuration 1 ..... C.51
Figure C.6. Example - 200 Area Effluent Treatment Facility Configuration 2 ..... C.52
Figure C.7. Surge Tank C.53
Figure C.8. Ultraviolet Light/Oxidation Unit C.54
Figure C.9. Reverse Osmosis Unit C.55
Figure C.10. Ion Exchange Unit C.56
Figure C.11. Verification Tanks C.57
Figure C.12. Effluent Treatment Facility Evaporator C.58
Figure C.13. Thin Film Dryer C.59
Figure C.14. Container Handling System C.60
Figure C.15. Effluent Treatment Facility Sump Tanks C.61
Figure C.16. Liner Anchor Wall and Cover Tension System C.62
Figure C.17. Liner System Schematic C.63
Figure C.18. Detail of Leachate Collection Sump C.64

Tables

Table C.1. Liquid Effluent Retention Facility Containment System C.40
Table C.2. Liquid Effluent Retention Facility Piping and Instrumentation C.40
Table C.3. Effluent Treatment Facility and Load-In Station Secondary Containment Systems C.40
Table C.4. Major Process Units and Tanks at the Effluent Treatment Facility and Load-In Station C.41
Table C.5. 200 Area Effluent Treatment Facility Tank Systems Information C.42
Table C.6. 200 Area Effluent Treatment Facility Additional Tank System Information C.43
Table C.7. Ancillary Equipment and Material Data C.44
Table C.8. Concrete and Masonary Coatings C.45
Table C.9. Geomembrane Material Specifications C.45
Table C.10. Drainage Gravel Specifications C.46

C. PROCESS INFORMATION

This addendum provides a detailed discussion of the LERF and 200 Area ETF processes and equipment. The LERF and 200 Area ETF comprise an aqueous waste treatment system located in the 200 East Area that provides storage and treatment for a variety of aqueous mixed waste. This aqueous waste includes process condensate from the 242-A Evaporator and other aqueous waste generated from onsite remediation and waste management activities.

The LERF consists of three lined surface impoundments, or basins. Aqueous waste from LERF is pumped to the200 Area ETF for treatment in a series of process units, or systems, that remove or destroy essentially all of the dangerous waste constituents. The treated effluent is discharged to a State-Approved Land Disposal Site (SALDS) north of the 200 West Area, under the authority of a Washington State Waste Discharge Permit (Ecology 2000) and the Final Delisting (40 CFR 261, Appendix IX, Table 2).

C.1 LIQUID EFFLUENT RETENTION FACILITY PROCESS DESCRIPTION

Each of the three LERF basins has an operating capacity of 29.5-million liters. The LERF receives aqueous waste through several inlets including the following:

- A pipeline that connects LERF with the 242-A Evaporator
- A pipeline from the 200 West Area
- A pipeline that connects LERF to the Load-In Station at the 200 Area ETF
- A series of sample ports located at each basin.

Figure C.1 presents a general layout of LERF and associated pipelines. Aqueous waste from LERF is pumped to the 200 Area ETF through one of two double-walled fiberglass transfer pipelines. Effluent from the 200 Area ETF also can be transferred back to the LERF through one of these transfer pipelines. These pipelines are equipped with leak detection located in the annulus between the inner and outer pipes. In the event that these leak detectors are not in service, the pipelines are visually inspected during transfers for leakage by opening the secondary containment drain lines located at the 200 Area ETF end of the transfer pipelines.

Each basin is equipped with six available sample risers constructed of 6-inch perforated pipe. A seventh sample riser in each basin is dedicated to influent aqueous waste receipt piping (except for aqueous waste received from the 242-A Evaporator), and an eighth riser in each basin contains liquid level instrumentation. Each riser extends along the sides of each basin from the top to the bottom of the basin and allows samples to be collected from any depth. Personnel access to these sample ports is from the perimeter area of the basins.

A catch basin is provided at the northwest corner of each LERF basin for aboveground piping and manifolds for transfer pumps. Aqueous waste from the 242-A Evaporator is transferred through piping which ties into piping at the catch basins. Under routine operations, a submersible pump is used to transfer aqueous waste from a LERF basin to the 200 Area ETF for processing or for basin-to-basin transfers. This pump is connected to a fixed manifold on one of four available risers.

Each basin consists of a multilayer liner system supported by a concrete anchor wall around the basin perimeter and a soil-bentonite clay underlayment. The multilayer liner system consists of a primary liner in contact with the aqueous waste, a layer of bentonite carpet, a geonet, a geotextile, a gravel layer, and a secondary liner that rests on the bentonite underlayment. Any aqueous waste leakage through the primary liner flows through the geonet and gravel to a leachate collection system. The leachate flows to a sump at the northwest corner of each basin, where the leachate is pumped up the side slope and back into the basin above the primary liner. Each liner is constructed of high-density polyethylene. A floating cover made of very low-density polyethylene is stretched over each basin above the primary liner. These covers serve to keep unwanted material from entering the basins, and to minimize evaporation of the liquid contents.

C.2 EFFLUENT TREATMENT FACILITY PROCESS DESCRIPTION

The 200 Area ETF is designed as a flexible treatment system that provides treatment for contaminants anticipated in process condensate and other onsite aqueous waste. The design influent flow rate into the 200 Area ETF is approximately 570 liters per minute, with planned outages for activities such as maintenance on the 200 Area ETF systems. Maintenance outages typically are scheduled between treating a batch of aqueous waste, referred to as treatment campaigns. The effluent flow (or volume) is equivalent to the influent flow (or volume).

The 200 Area ETF generally receives aqueous waste directly from the LERF. However, aqueous waste also can be transferred from tanker trucks at the Load-In Station to the 200 Area ETF and from containers (e.g., carboys, drums) directly to ETF. Aqueous waste is treated and stored in the 200 Area ETF process areas in a series of tank systems, referred to as process units. Within the ETF, waste also is managed in containers through treatment and/or storage. Figure C.2 provides the relative locations of the process and container storage areas within the ETF.

The process units are grouped in either the primary or the secondary treatment train. The primary treatment train provides for the removal or destruction of contaminants. Typically, the secondary treatment train processes the waste by-products from the primary treatment train by reducing the volume of waste. In the secondary treatment train, contaminants are concentrated and dried to a powder. The liquid fraction is routed to the primary treatment train. Figure C.3 provides an overview of the layout of the ETF, 2025E Building). Figure C.4 presents the 200 Area ETF floor plan, the relative locations of the individual process units and associated tanks within the ETF, and the location of the Load-In Station.

The dry powder waste and maintenance and operations waste are containerized and stored or treated in the container storage areas or in collection or treatment areas within the Process Area. Secondary containment is provided for all containers and tank systems (including ancillary equipment) housed within the ETF. The trenches and floor of the 200 Area ETF comprise the secondary containment system. The floor includes approximately a 15.2-centimeter rise (berm) along the containing walls of the process and container storage areas. Any spilled or leaked material from within the process area or container storage area is collected into trenches that feed into either sump tank 1 or sump tank 2. From these sump tanks, the spilled or leaked material (i.e., waste) is fed to either the surge tank and processed in the primary treatment train or the secondary waste receiving tanks and processed in the secondary treatment train. All tank systems outside of the 200 Area ETF are provided with a secondary containment system.

In the following sections, several figures are provided that present general illustrations of the treatment units and the relation to the process.

C.2.1 Load-In Station

The 200 Area ETF receives aqueous waste from LERF or the Load-In Station. The 200 Area ETF Load-In Station, located due east of the surge tank and outside of the perimeter fence (Figure C.4), was designed and constructed to provide the capability to unload, store, and transfer aqueous waste to the LERF or 200 Area ETF from tanker trucks and other containers (such as drums). The Load-In Station consists of two truck bays equipped with load-in tanks, transfer pumps, filtration system, level instrumentation for tanker trucks, leak detection capabilities for the containment basin and transfer line, and an underground transfer line that connects to lines in the surge tank berm, allowing transfers to either the 200 Area ETF surge tank or LERF. The Load-In Station is covered with a steel building for weather protection. Tanker trucks and other containers are used to unload aqueous waste at the Load-In Station. To perform unloading, the tanker truck is positioned on a truck pad, a 'load-in' transfer line is connected to the truck, and the tanker contents are pumped into one of the Load-In Station tanks, the surge tank, or directly to the LERF. For container unloading, the container is placed on the truck pad and the container contents are pumped into one of the Load-In Station tanks, the surge tank, or directly to the LERF.

During unloading operations, solids may be removed from the waste by pumping the contents of the tanker truck or container through a filtration system. If solids removal is not needed, the filtration system is not used and the solution is transferred directly to the Load-In Station tanks, surge tank, or to LERF.

Any leaks at the Load-In Station drain to the sump. A leak detector in the sump alarms locally and in the 200 Area ETF control room. Alternatively, leaks can be visually detected.

C.2.2 Effluent Treatment Facility Operating Configuration

Because the operating configuration of the 200 Area ETF can be adjusted or modified, most aqueous waste streams can be effectively treated to below Delisting and Discharge Permit limits. The operating configuration of the 200 Area ETF depends on the unique chemistry of an aqueous waste stream(s). Before an aqueous waste stream is accepted for treatment, the waste is characterized and evaluated. Information from the characterization is used to adjust the treatment process or change the configuration of the 200 Area ETF process units, as necessary, to optimize the treatment process for a particular aqueous waste stream.

Typically, an aqueous waste is processed first in the primary treatment train, where the 200 Area ETF is configured to process an aqueous waste through the UV/OX unit first, followed by the RO unit. However, under an alternate configuration, an aqueous waste could be processed in the RO unit first. For example, high concentrations of nitrates in an aqueous waste might interfere with the performance of the UV/OX. In this case, the 200 Area ETF could be configured to process the waste in the RO unit before the UV/OX unit.

The flexibility of the 200 Area ETF also allows some aqueous waste to be processed in the secondary treatment train first. For example, for small volume aqueous waste with high concentrations of some anions and metals, the approach could be to first process the waste stream in the secondary treatment train. This approach would prevent premature fouling or scaling of the RO unit. The liquid portion (i.e., untreated overheads from the 200 Area ETF evaporator and thin film dryer) would be sent to the primary treatment train.

Figure C.5 and Figure C.6 provide example process flow diagrams for two different operating configurations.

C.2.3 Primary Treatment Train

The primary treatment train consists of the following processes:

- Influent Receipt/Surge tank - inlet, surge capacity
- Filtration - for suspended solids removal
- UV/OX - organic destruction
- pH adjustment - waste neutralization
- Hydrogen peroxide decomposition - removal of excess hydrogen peroxide
- Degasification - removal of carbon dioxide
- RO - removal of dissolved solids
- IX - removal of dissolved solids
- Verification - holding tanks during verification

Influent Receipt/Surge Tank. Depending on the configuration of the ETF, the surge tank is one inlet used to feed an aqueous waste into the 200 Area ETF for treatment. In Configuration 1 (Figure C.5), the surge tank is the first component downstream of the LERF. The surge tank provides a storage/surge volume for chemical pretreatment and controls feed flow rates from the LERF to the 200 Area ETF. However, in Configuration 2 (Figure C.6), aqueous waste from LERF is fed directly into the treatment units. In this configuration, the surge tank receives aqueous waste, which has been processed in the RO units, and provides the feed stream to the remaining downstream process units. In yet another configuration, some small volume aqueous waste could be received into the secondary treatment train first for processing. In this case, the aqueous waste would be received directly into the secondary waste

receiving tanks. Finally, the surge tank also receives waste extracted from various systems within the primary and secondary treatment train while in operation.

The surge tank is located outside the 200 Area ETF on the south side. In the surge tank (Figure C.7), the pH of an aqueous waste is adjusted using the metered addition of sulfuric acid and sodium hydroxide, as necessary, to prepare the waste for treatment in downstream processes. In addition, hydrogen peroxide or biocides could be added to control biological growth in the surge tank. A pump recirculates the contents in the surge tank, mixing the chemical reagents with the waste to a uniform pH.

Filtration. Two primary filter systems remove suspended particles in an aqueous waste: a rough filter removes the larger particulates, while a fine filter removes the smaller particulates. The location of these filters depends on the configuration of the primary treatment train. However, the filters normally are located upstream of the RO units.

The solids accumulating on these filter elements are backwashed to the secondary waste receiving tanks with pulses of compressed air and water, forcing water back through the filter. The backwash operation is initiated either automatically by a rise in differential pressure across the filter or manually by an operator. The filters are cleaned chemically when the backwashing process does not facilitate acceptable filter performance.

Auxiliary fine and rough filters (e.g., disposable filters) have been installed to provide additional filtration capabilities. Depending on the configuration of the ETF, the auxiliary filters are operated either in series with the primary filters to provide additional filtration or in parallel, instead of the primary fine and rough filters, to allow cleaning/maintenance of the primary fine and rough filters while the primary treatment train is in operation.

Ultraviolet Light/Oxidation. Organic compounds contained in an aqueous waste stream are destroyed in the UV/OX system (Figure C.8). Hydrogen peroxide is mixed with the waste. The UV/OX system uses the photochemical reaction of UV light on hydrogen peroxide to form hydroxyl radicals and other reactive species that oxidize the organic compounds. The final products of the complete reaction are carbon dioxide, water, and inorganic ions.

Organic destruction is accomplished in two UV/OX units operating in parallel. During the UV/OX process, the aqueous waste passes through reaction chambers where hydrogen peroxide is added. While in the UV/OX system, the temperature of an aqueous waste is monitored. Heat exchangers are used to reduce the temperature of the waste should the temperature of the waste approach the upper limits for the UV/OX or RO systems.

pH Adjustment. The pH of a waste stream is monitored and controlled at different points throughout the treatment process. Within the primary treatment train, the pH of a waste can be adjusted with sulfuric acid or sodium hydroxide to optimize operation of downstream treatment processes or adjusted before final discharge. For example, the pH of an aqueous waste would be adjusted in the pH adjustment tank after the UV/OX process and before the RO process. In this example, pH is adjusted to cause certain chemical species such as ammonia to form ammonium sulfate, thereby increasing the rejection rate of the RO.

Hydrogen Peroxide Decomposition. Typically, hydrogen peroxide added into the UV/OX system is not consumed completely by the system. Because hydrogen peroxide is a strong oxidizer, the residual hydrogen peroxide from the UV/OX system is removed to protect the downstream equipment. The hydrogen peroxide decomposer uses a catalyst to break down the hydrogen peroxide that is not consumed completely in the process of organic destruction. The aqueous waste is sent through a column that breaks down the hydrogen peroxide into water and oxygen. The gas generated by the decomposition of the hydrogen peroxide is vented to the vessel off gas system.

Degasification. The degasification column is used to purge dissolved carbon dioxide from the aqueous waste to reduce the carbonate loading to downstream dissolved solids removal processes within the 200 Area ETF primary treatment train. The purged carbon dioxide is vented to the vessel off gas system.

Reverse Osmosis. The RO system (Figure C.9) uses pressure to force clean water molecules through semi-permeable membranes while keeping the larger molecule contaminants, such as dissolved solids, and large molecular weight organic materials, in the membrane. The RO process uses a staged configuration to maximize water recovery. The process produces two separate streams, including a clean 'permeate' and a concentrate (or retentate), which are concentrated as much as possible to minimize the amount of secondary waste produced.

The RO process is divided into first and second stages. Aqueous waste is fed to the first RO stage from the RO feed tank. The secondary waste receiving tanks of the secondary treatment train receive the retentate removed from the first RO stage, while the second RO stage receives the permeate (i.e., 'treated' aqueous waste from the first RO stage). In the second RO stage, the retentate is sent to the first stage RO feed tank while the permeate is sent to the IX system or to the surge tank, depending on the configuration of the ETF.

Two support systems facilitate this process. An anti-scale system injects scale inhibitors as needed into the feed waste to prevent scale from forming on the membrane surface. A clean-in-place system using cleaning agents, such as descalants and surfactants, cleans the membrane pores of surface and subsurface deposits that have fouled the membranes.

Ion Exchange. Because the RO process removes most of the dissolved solids in an aqueous waste, the IX process (Figure C.10) acts as a polishing unit. The IX system consists of three columns containing beds of cation and/or anion resins. This system is designed to allow for regeneration of resins and maintenance of one column while the other two are in operation. Though the two columns generally are operated in series, the two columns also can be operated in parallel or individually.

Typically, the two columns in operation are arranged in a primary/secondary (lead/lag) configuration, and the third (regenerated) column is maintained in standby. When dissolved solids breakthrough the first IX column and are detected by a conductivity sensor, this column is removed from service for regeneration, and the second column replaces the first column and the third column is placed into service. The column normally is regenerated using sulfuric acid and sodium hydroxide. The resulting regeneration waste is collected in the secondary waste receiving tanks.

Spent resins are transferred into a disposal container should regeneration of the IX resins become inefficient Free water is removed from the container and returned to the surge tank. Dewatered resins are transferred to a final storage/disposal point.

Verification. The three verification tanks (Figure C.11) are used to hold the treated effluent while a determination is made that the effluent meets discharge limits. The effluent can be returned to the primary treatment train for additional treatment, or to the LERF, should a treated effluent not meet Discharge Permit or Final Delisting requirements.

The three verification tanks alternate between three operating modes: receiving treated effluent, holding treated effluent during laboratory analysis and verification, or discharging verified effluent. Treated effluent may also be returned to the 200 Area ETF to provide 'clean' service water for operational and maintenance functions, e.g., for boiler water and for backwashing the filters. This recycling keeps the quantity of fresh water used to a minimum.

C.2.4 Secondary Treatment Train

The secondary treatment system typically receives and processes the following by-products generated from the primary treatment train: concentrate from the first RO stage, filter backwash, regeneration waste from the ion exchange system, and spillage or overflow received into the process sumps. Depending on the operating configuration, however, some aqueous waste could be processed in the secondary treatment train before the primary treatment train (refer to Figure C.5 and Figure C.6 for example operating configurations).

The secondary treatment train provides the following processes:

- Secondary waste receiving - tank receiving and chemical addition
- Evaporation - concentrates secondary waste streams
- Concentrate staging - concentrate receipt, pH adjustment, and chemical addition
- Thin film drying - dewatering of secondary waste streams
- Container handling - packaging of dewatered secondary waste

Secondary Waste Receiving. Waste to be processed in the secondary treatment train is received into two secondary waste receiving tanks, where the pH can be adjusted with sulfuric acid or sodium hydroxide for optimum evaporator performance. Chemicals, such as reducing agents, may be added to waste in the secondary waste receiving tanks to reduce the toxicity or mobility of constituents in the powder.

Evaporation. The 200 Area ETF evaporator is fed alternately by the two secondary waste receiving tanks. One tank serves as a waste receiver while the other tank is operated as the feed tank. The 200 Area ETF evaporator vessel (also referred to as the vapor body) is the principal component of the evaporation process (Figure C.12).

Feed from the secondary waste receiving tanks is pumped through a heater to the recirculation loop of the 200 Area ETF evaporator. In this loop, concentrated waste is recirculated from the 200 Area ETF evaporator, to a heater, and back into the evaporator where vaporization occurs. As water leaves the evaporator system in the vapor phase, the concentration of the waste in the evaporator increases. When the concentration of the waste reaches the appropriate density, a portion of the concentrate is pumped to one of the concentrate tanks.

The vapor that is released from the 200 Area ETF evaporator is routed to the entrainment separator, where water droplets and/or particulates are separated from the vapor. The 'cleaned' vapor is routed to the vapor compressor and converted to steam. The steam from the vapor compressor is sent to the heater (reboiler) and used to heat the recirculating concentrate in the 200 Area ETF evaporator. From the heater, the steam is condensed and fed to the distillate flash tank, where the saturated condensate received from the heater drops to atmospheric pressure and cools to the normal boiling point through partial flashing (rapid vaporization caused by a pressure reduction). The resulting distillate is routed to the surge tank. The non-condensable vapors, such as air, are vented through a vent gas cooler to the vessel off gas system.

Concentrate Staging. The concentrate tanks make up the head end of the thin film drying process. From the 200 Area ETF evaporator, concentrate is pumped into two concentrate tanks, and pH adjusted chemicals, such as reducing agents, may be added to reduce the toxicity or mobility of constituents when converted to powder. Waste is transferred from the concentrate tanks to the thin film dryer for conversion to a powder. The concentrate tanks function alternately between concentrate receiver and feed tank for the thin film dryer. However, one tank may serve as both concentrate receiver and feed tank.

Because low solubility solids (i.e., calcium and magnesium sulfate) tend to settle in the concentrate tanks, these solids must be removed to prevent fouling and to protect the thin film dryer, and to maintain concentrate tank capacity.

Thin Film Drying. From the concentrate tanks, feed is pumped to the thin film dryer (Figure C.13) that is heated by steam. As the concentrated waste flows down the length of the dryer, the waste is dried. The dried film, or powder, is scraped off the dryer cylinder by blades attached to a rotating shaft. The powder is funneled through a cone-shaped powder hopper at the bottom of the dryer and into the Container Handling System.

Overhead vapor released by the drying of the concentrate is condensed in the distillate condenser. Excess heat is removed from the distillate by a water-cooled heat exchanger. Part of the distillate is circulated back to the condenser spray nozzles. The remaining distillate is pumped to the surge tank. Any noncondensible vapors and particulates from the spray condenser are exhausted to the vessel off gas system.

Container Handling. Before an empty container is moved into the Container Handling System (Figure C.14), the lid is removed and the container is placed on a conveyor. The containers are moved

into the container filling area after passing through an air lock. The empty container is located under the thin film dryer, and raised into position. The container is sealed to the thin film dryer and a rotary valve begins the transfer of powder to the empty container. Air displaced from the container is vented to the distillate condenser attached to the 200 Area ETF evaporator that exhausts to the vessel off gas system.

The container is filled to a predetermined level, then lowered from the thin film dryer and moved along a conveyor. The filled container is manually recapped, and moved along the conveyor to the airlock. At the airlock, the container is moved onto the conveyor by remote control. The airlock is opened, the smear sample (surface wipe) is taken, and the contamination level counted. A 'C' ring is installed to secure the container lid. If the container has contaminated material on the outside, the container is wiped down and retested. Filled containers that pass the smear test are labeled, placed on pallets, and moved by forklift to the filled container storage area. Section C.3 provides a more detailed discussion of container handling.

C.2.5 Other Effluent Treatment Facility Systems

The 200 Area ETF is provided with support systems that facilitate treatment in the primary and secondary treatment trains and that provide for worker safety and environmental protection. An overview of the following systems is provided:

- Monitor and control system
- Vessel off gas system
- Sump collection system
- Chemical injection feed system
- Verification tank recycle system
- Utilities

C.2.5.1 Monitor and Control System

The operation of the 200 Area ETF is monitored and controlled by a centralized computer system (i.e., monitor and control system or MCS). The MCS continuously monitors data from various field indicators, such as pH, flow, tank level, temperature, pressure, conductivity, alarm status, and valve switch positions. Data gathered by the MCS enable operations and engineering personnel to document and adjust the operation of the ETF.

C.2.5.2 Vessel Off gas System

Ventilation for various tanks and vessels is provided through the vessel off gas system. The system includes a moisture separator, duct heater, pre-filter, high-efficiency particulate air filters, carbon absorber (when required to reduce organic emissions), exhaust fans, and ductwork. Gasses ventilated from the tanks and vessels enter the exhaust system through the connected ductwork. The vessel off gas system draws vapors and gasses off the following tanks and treatment systems:

- Surge tank
- Vent gas cooler (off the ETF evaporator/distillate flash tank)
- pH adjustment tank
- Concentrate tanks
- Degasification system
- First and second RO stages
- Dry powder hopper
- Effluent pH adjustment tank
- Drum capping station
- Secondary waste receiving tanks
- Distillate condenser (off the thin film dryer)
- Sump tanks 1 and 2

The vessel off gas system maintains a negative pressure with respect to the atmosphere, which produces a slight vacuum within tanks, vessels, and ancillary equipment for the containment of gas vapor. This system also provides for the collection, monitoring, and treatment of confined airborne in-vessel

contaminants to preclude over-pressurization. The high-efficiency particulate air filters remove particulates and condensate from the air stream before these are discharged to the heating, ventilation, and air conditioning system.

C.2.5.3 Sump Collection System

Sump tanks 1 and 2 compose the sump collection system that provides containment of waste streams and liquid overflow associated with the 200 Area ETF processes. The process area floor is sloped to two separate trenches that each drain to a sump tank located under the floor of the 200 Area ETF (Figure C.15). One trench runs the length of the primary treatment train and drains to Sump Tank 2, located underneath the verification tank pump floor. The second trench collects spillage primarily from the secondary treatment train and flows to Sump Tank 1, located near the 200 Area ETF evaporator. Sump tanks 1 and 2 are located below floor level (Figure C.15). An eductor in these tanks prevents sludge from accumulating.

C.2.5.4 Chemical Injection Feed System

At several points within the primary and secondary treatment trains, sulfuric acid and sodium hydroxide (or dilute solutions of these reagents) are metered into specific process units to adjust the pH. For example, a dilute solution of 4 percent sulfuric acid and 4 percent sodium hydroxide could be added to the secondary waste receiving tanks to optimize the evaporation process.

C.2.5.5 Verification Tank Recycle System

To reduce the amount of water added to the process, verification tank water (i.e., verified effluent) is recycled throughout the 200 Area ETF process. Tanks and ancillary equipment that use verification tank water include:

- 4 percent H_2SO4 solution tank and ancillary equipment
- 4 percent NaOH solution tank and ancillary equipment
- Clean-in-place tank and ancillary equipment
- IX columns (during resin regeneration)
- 200 Area ETF evaporator boiler and ancillary equipment
- Thin film dryer boiler and ancillary equipment
- Seal water system.In addition, verification tank water is used extensively during maintenance activities. For example, it may be used to flush piping systems or to confirm the integrity of piping, a process tank or tank truck.

C.2.5.6 Utilities

The 200 Area ETF maintains the following utility supply systems required for the operation of the ETF:

- Cooling water system - removes heat from process water via heat exchangers and a cooling tower
- Compressed air system - provides air to process equipment and instrumentation
- Seal water system - provides cool, clean, pressurized water to process equipment for pump seal cooling and pump seal lubrication, and provides protection against failure and fluid leakage
- Demineralized water system - removes solids from raw water system to produce high quality, low ion-content, water for steam boilers, and for the hydrogen peroxide feed system.
- Heating, ventilation, and air conditioning system - provides continuous heating, cooling, and air humidity control throughout the ETF.

The following utilities support 200 Area ETF activities:

- Electrical power
- Sanitary water
- Communication systems
- Raw water

C.3 CONTAINERS

This section provides specific information on container storage and treatment operations at the 200 Area ETF, including descriptions of containers, labeling, and secondary containment structures.

A list of dangerous and/or mixed waste managed in containers at the 200 Area ETF is presented in Addendum A. The types of dangerous and/or mixed waste managed in containers in the 200 Area ETF could include:

- Secondary waste powder generated from the treatment process
- Aqueous waste received from other Hanford site sources awaiting treatment
- Miscellaneous waste generated by operations and maintenance activities.

The secondary treatment train processes the waste by-products from the primary treatment train, which are concentrated and dried into a powder. Containers are filled with dry powder waste from the thin film dryer via a remotely controlled system. Containers of aqueous waste received from other Hanford site sources are stored at 200 Area ETF until their contents can be transferred to the process for treatment. The waste is usually transferred to the secondary waste receiving or concentration tanks. Miscellaneous waste generated from maintenance and operations activities are stored at the ETF. The waste could include process waste, such as used filter elements; spent RO membranes; damaged equipment, and decontamination and maintenance waste, such as contaminated rags, gloves, and other personal protective equipment. Containers of miscellaneous waste which have free liquids generally are packaged with absorbents.

Several container collection areas could be located within the 200 Area ETF process and container handling areas. These collection areas are used only to accumulate waste in containers. Once a container is filled, the container is transferred to a container storage area (Figure C.3 and Figure C.4), to another TSD unit, or to a less-than-90-day storage pad. Containers stored in the additional storage area (Figure C.4) are elevated or otherwise protected from contact with accumulated liquids. The container storage area within 200 Area ETF is a 22.9 x 8.5-meter room located adjacent to the 200 Area ETF process areas. The containers within the container storage area are clearly labeled, and access to these containers is limited by barriers and by administrative controls. The 200 Area ETF floor provides secondary containment, and the 200 Area ETF roof and walls protects all containers from exposure to the elements.

Waste also could be placed in containers for treatment as indicated in Addendum A. For example, sludge that accumulates in the bottoms of the process tanks is removed periodically and placed into containers. In this example, the waste is solidified by decanting the supernate from the container and the remainder of the waste is allowed to evaporate, or absorbents are added, as necessary, to address remaining liquids. Following treatment, this waste either is stored at the 200 Area ETF or transferred to another TSD unit.

C.3.1 Description of Containers

The containers used to collect and store dry powder waste are 208-liter steel containers. Most of the aqueous waste received at 200 Area ETF, and maintenance and operation waste generated, are stored in 208-liter steel or plastic containers; however, in a few cases, the size of the container could vary to accommodate the size of a particular waste. For example, some process waste, such as spent filters, might not fit into a 208-liter container. In the case of spent resin from the IX columns, the resin is dewatered, and could be packaged in a special disposal container. In these few cases, specially sized containers could be required. In all cases, however, only approved containers are used and are compatible with the associated waste. Typically, 208-liter containers are used for treatment.

Current operating practices indicate the use of new 208-liter containers that have either a polyethylene liner or a protective coating. Any reused or reconditioned container is inspected for container integrity before use. Overpack containers are available for use with damaged containers. Overpack containers typically are unlined steel or polyethylene.

Per Addendum A, a maximum of 147,630 liters of dangerous and/or mixed waste could be stored in containers in the 200 Area ETF.

C.3.2 Container Management Practices

Before use, each container is checked for signs of damage such as dents, distortion, corrosion, or scratched coating. For dry powder loading, empty containers on pallets are raised by a forklift and manually placed on the conveyor that transports the containers to the automatic filling station in the container handling room (Figure C.14). The container lids are removed and replaced manually following the filling sequence. After filling, containers exit the container handling room via the filled drum conveyor. Locking rings are installed, the container label is affixed, and the container is moved by dolly or forklift to the container storage area.

Before receipt at 200 Area ETF, each container from other Hanford site sources is inspected for leaks, signs of damage, and a loose lid. The identification number on each container is checked to ensure the proper container is received. The containers are typically placed on pallets and moved by dolly or forklift to the container storage area. These containers are later moved to the process area and the contents transferred to the process for treatment.

Containers used for storing maintenance and operations secondary waste are labeled before being placed in the container storage area or in a collection area. Lids are secured on these containers when not being filled. When the containers in a collection area are full, the containers are transferred by dolly or forklift to the container storage area or to an appropriate TSD unit. Containers used for treating waste also are labeled. The lids on these containers are removed as required to allow for treatment. During treatment, access to these containers is controlled through physical barriers and/or administrative controls.

The filled containers in the container storage area are inventoried, checked for proper labeling, and placed on pallets or in a separate containment device as necessary. Each pallet is moved by forklift. Within the container storage area, palletized containers are stacked no more than three pallets high and in rows no more than two containers wide. Unobstructed aisles with a minimum of 76-centimeter aisle space separate rows.

C.3.3 Container Labeling

Labels are affixed on containers used to store dry powder when the containers leave the container handling room. Labels are affixed on other waste containers before use. Every container is labeled with the date that the container was filled. Appropriate major risk labels, such as "corrosive", "toxic", or "F-listed", also are added. Each container also has a label with an identification number for tracking purposes.

C.3.4 Containment Requirements for Managing Containers

Secondary containment is provided in the container management areas within the ETF. The secondary containment provided for tank systems also serves the container management areas. This section describes the design and operation of the secondary containment structure for these areas.

C.3.4.1 Secondary Containment System Design

For the container management areas, the reinforced concrete floor and a 15.2-centimeter rise (berm) along the walls of the container storage area of the 200 Area ETF provides secondary containment. The engineering assessment required for tanks (Mausshardt 1995) also describes the design and construction of the secondary containment provided for the 200 Area ETF container management areas. All systems were designed to national codes and standards (e.g., American Society for Testing Materials, American Concrete Institute standards).

The floor is composed of cast-in-place, pre-formed concrete slabs, and has a minimum thickness of 15.2 centimeters. All slab joints and floor and wall joints have water stops installed at the mid-depth of the slab. In addition, filler was applied to each joint. The floor and berms are coated with a chemically resistant; high-solids epoxy coating system consisting of primer and top coating. This coating material is

compatible with the waste managed in containers and is an integral part of the secondary containment system for containers.

The floor is sloped to drain any solution in the container storage area to floor drains along the west wall. Each floor drain consists of a grating over a 20.3-centimeter diameter drain port connected to a 4-inch polyvinyl chloride transfer pipe. The pipe passes under this wall and connects to a trench running along the east wall of the adjacent process area. This trench drains solution to sump tank 1.

The container storage area is separated from the process area by a common wall and a door for access to the two areas (Figure C.3). These two areas also share a common floor and trenches that, with the 15.2-centimeter rise of the containing walls, form the secondary containment system for the process area and the container storage area.

C.3.4.2 Structural Integrity of Base

Engineering calculations were performed showing the floor of the container storage area is capable of supporting the weight of containers. These calculations were reviewed and certified by a professional engineer (Mausshardt 1995). The concrete was inspected for damage during construction. Cracks were identified and repaired to the satisfaction of the professional engineer. Documentation of these certifications is included in the engineering assessment (Mausshardt 1995).

C.3.4.3 Containment System Capacity

The container storage area is primarily used to store dry powder, aqueous waste awaiting treatment, and maintenance and operation waste. Where appropriate, absorbents are added to fix any trace liquids present. Large volumes of liquid are not stored in the container storage area. However, liquids might be present in those containers that are in the treatment process. The maximum volume of waste that can be stored in containers in the container storage area is 147,630 liters.

Because they are interconnected by floor drains, both the process area and the container storage area are considered in the containment system capacity. The volume available for secondary containment in the process area is approximately 68,000 liters, as discussed in the engineering assessment (Mausshardt 1995). Using the dimensions of the container storage area (22.9 by 8.5 by 0.15 meters), and assuming that 50 percent of the floor area is occupied by containers, the volume of the container storage area is 14,900 liters. The combined volume of both the container storage and process areas available for secondary containment, therefore, is 82,900 liters. This volume is greater than 10 percent of the maximum total volume of containers allowed for storage in the ETF, as discussed previously.

C.3.4.4 Control of Run-on

The container management areas are located within the ETF, which serves to prevent run-on of precipitation.

C.3.4.5 Removal of Liquids from Containment Systems

The container storage area is equipped with drains that route solution to a trench in the process area, which drains to sump tank 1. The sump tanks are equipped with alarms that notify operating personnel that a leak is occurring. The sump tanks also are equipped with pumps to transfer waste to the surge tank or the secondary treatment train.

C.3.4.6 Prevention of Ignitable, Reactive, and Incompatible Wastes in Containers

Individual waste types (i.e., ignitable, corrosive, and reactive) are stored in separate containers. A waste that could be incompatible with other wastes is separated and protected from the incompatible waste. Incompatible wastes are evaluated using the methodology documented in 40 CFR 264, Appendix V. For example, acidic and caustic wastes are stored in separate containers. Free liquids are absorbed in miscellaneous waste containers that hold incompatible waste. Additionally, ETF-specific packaging requirements for these types of waste provide extra containment with each individual container. For example, each item of acidic waste is individually bagged and sealed within a lined container.

C.4 TANK SYSTEMS

This section provides specific information on tank systems and process units. This section also includes a discussion on the types of waste to be managed in the tanks, tank design information, integrity assessments, and additional information on the 200 Area ETF tanks that treat and store dangerous and/or mixed waste. The 200 Area ETF dangerous waste tanks are identified in Section 4C.4.1.1, and the relative locations of the tanks and process units in the 200 Area ETF are presented in Figure C.3.

C.4.1 Design Requirements

The following sections provide an overview of the design specifications for the tanks within the ETF. A separate discussion on the design of the process units also is provided. In accordance with the new tank system requirements of WAC 173-303-640(3), the following tank components and specifications were assessed:

- Dimensions, capacities, wall thicknesses, and pipe connections
- Materials of construction and linings and compatibility of materials with the waste being processed
- Materials of construction of foundations and structural supports
- Review of design codes and standards used in construction
- Review of structural design calculations, including seismic design basis
- Waste characteristics and the effects of waste on corrosion

This assessment was documented in the *Final RCRA Information Needs Report* (Mausshardt 1995; the engineering assessment performed for the 200 Area ETF tank systems by an independent professional engineer. A similar assessment of design requirements was performed for Load-in tanks 59A-TK-109 and -117 and is documented in *200 Area Effluent BAT/AKART Implementation, ETF Truck Load-in Facility, Project W-291H Integrity Assessment Report* (KEH 1994). An assessment was also performed when Load-in tank 59A-TK-1 was placed into service for receipt of dangerous and mixed wastes. The assessment is documented in *200 Area ETF Purgewater Unloading Facility Tank System Integrity Assessment* (HNF 2009a).

The specifications for the preparation, design, and construction of the tank systems at the 200 Area ETF are documented in the *Design Construction Specification, Project C-018H, 242-A Evaporator/PUREX Plant Process Condensate Treatment Facility* (WHC 1992a). The preparation, design, and construction of Load-in tanks 59A-TK-109 and -117 are provided in the construction specifications in *Project W-291, 200 Area Effluent BAT/AKART Implementation ETF Truck Load-in Facility* (KEH 1994). The preparation, design and construction of Load-in 59A-TK-1 are documented in *Purgewater Unloading Facility Project Documentation* (HNF 2009b).

Most of the tanks in the 200 Area ETF are constructed of stainless steel. According to the design of the ETF, it was determined stainless steel would provide adequate corrosion protection for these tanks. Exceptions include Load-in tank 59A-TK-1, which is constructed of fiberglass-reinforced plastic and the verification tanks, which are constructed of carbon steel with an epoxy coating.The 200 Area ETF evaporator/vapor body (and the internal surfaces of the thin film dryer) is constructed of a corrosion resistant alloy, known as alloy 625, to address the specific corrosion concerns in the secondary treatment train. Finally, the hydrogen peroxide decomposer vessels are constructed of carbon steel and coated with a vinyl ester lining.

The shell thicknesses of the tanks identified in Table C.5 represent a nominal thickness of a new tank when placed into operation. The tank capacities identified in this table represent the maximum volumes. Nominal tank volumes discussed below represent the maximum volume in a tank unit during normal operations.

C.4.1.1 Codes and Standards for Tank System Construction

Specific standards for the manufacture of tanks and process systems installed in the 200 Area ETF are briefly discussed in the following sections. In addition to these codes and industrial standards, a seismic analysis for each tank and process system is required [WAC 173-303-806(4)(a)(xi)]. The seismic

analysis was performed in accordance with UCRL-15910 *Design and Evaluation Guidelines for Department of Energy Facilities Subjected to Natural Phenomena Hazards*, Section 4 (UCRL 1987). The results of the seismic analyses are summarized in the engineering assessment of the 200 Area ETF tank systems (Mausshardt 1995).

Storage and Treatment Tanks. The following tanks store and/or treat dangerous waste at the ETF.

Tank name	Tank number
Surge tank	2025E-60A-TK-1
pH adjustment tank	2025E-60C-TK-1
Effluent pH adjustment tank	2025E-60C-TK-2
First RO feed tank	2025E-60F-TK-1
Second RO feed tank	2025E-60F-TK-2
Verification tanks (three)	2025E-60H-TK-1A/1B/1C
Secondary waste receiving tanks (two)	2025E-60I-TK-1A/1B
Evaporator (vapor body)	2025E-601-EV-1
Concentrate tanks (two)	2025E-60J-TK-1A/1B
Sump tanks (two)	2025E-20B-TK-1/2
Distillate flash tank	2025E-60I-TK-2
Load-in tanks	2025ED-59A-TK-1/109/117

The relative location of these tanks is presented in Figure C.3. These tanks are maintained at or near atmospheric pressure. The codes and standards applicable to the design, construction, and testing of the above tanks and ancillary piping systems are as follows:

ASME - B31.3 Chemical Plant and Petroleum Refinery Piping (ASME 1990)

ASME Sect. VIII, Division I Pressure Vessels (ASME 1992a)

AWS - D1.1 Structural Welding Code - Steel (AWS 1992)

ANSI - B16.5 Pipe Flanges and Flanged Fittings (ANSI 1992)

ASME Sect. IX Welding and Brazing Qualifications (ASME 1992b)

API 620 Design and Construction of Large Welded Low Pressure Storage Tanks (API 1990)

AWWA - D100 Welded Steel Tanks for Water Storage (AWWA 1989)

AWWA - D103 Factory-Coated Bolted Steel Tanks for Water Storage (AWWA 1987)

AWWA - D120 Thermosetting Fiberglass-Reinforced Plastic Tanks (AWWA 1984)

ASTM-D3299 Filament Wound Glass-Fiber-Reinforced Thermoset Resin Corrosion Resistant Tanks.

The application of these standards to the construction of 200 Area ETF tanks and independent verification of completed systems ensured that the tank and tank supports had sufficient structural strength and that seams and connections were adequate to ensure tank integrity. In addition, each tank met strict quality assurance requirements. Each tank constructed offsite was tested for integrity and leak tightness before shipment to the Hanford Facility. Following installation, the systems were inspected for damage to ensure against leakage and to verify proper operation. If a tank was damaged during shipment or installation, leak tightness testing was repeated onsite.

C.4.1.2 Design Information for Tanks Located Outside of Effluent Treatment Facility

The load-in tanks, surge tank, and verification tanks are located outside the ETF. These tanks are located within concrete structures that provide secondary containment.

Load-In Tanks and Ancillary Equipment. The load-in tanks 59A-TK-109 and -117are heated and constructed of stainless steel, and have a nominal capacity of 31,000 liters. Load-in tank 59A-TK-1 is

heated and constructed of fiberglass reinforced plastic and has a nominal capacity of 24,200 liters. Load-in tanks 59A-TK-109 and -117 are located outside of the metal building while Load-in tank 59A-TK-1 is located inside the building. Ancillary equipment includes transfer pumps, filtration systems, a double encased, fiberglass transfer pipeline, level instruments for tanker trucks, and leak detection equipment. From the Load-In Station, aqueous waste can be routed to the surge tank or to the LERF through a double-encased line. The load-in tanks, sump, pumps, and truck pad are all provided with secondary containment.

Surge Tank and Ancillary Equipment. The surge tank is constructed of stainless steel and has a nominal capacity of 379,000 liters. Ancillary equipment to the surge tank includes two underground double encased (i.e., pipe-within-a-pipe) transfer lines connecting to LERF and three pumps for transferring aqueous waste to the primary treatment train. The surge tank is located at the south end of the ETF. The surge tank is insulated and the contents heated to prevent freezing. Eductors in the tank provide mixing.

Verification Tanks and Ancillary Equipment. The verification tanks are located north of the ETF. The verification tanks have a nominal capacity of 2,740,000 liters each. For support, the tanks have a center post with a webbing of beams that extend from the center post to the sides of the tank. The roof is constructed of epoxy covered carbon steel that is attached to the cross beams of the webbing. The tank floor also is constructed of epoxy covered carbon steel and is sloped. Eductors are installed in each tank to provide mixing.

Ancillary equipment includes a return pump that provides circulation of treated effluent through the eductors. The return pump also recycles effluent back to the 200 Area ETF for retreatment and can provide service water for 200 Area ETF functions. Two transfer pumps are used to discharge treated effluent to SALDS or back to the LERF.

C.4.1.3 Design Information for Tanks Located Inside the Effluent Treatment Facility Building

Most of the 200 Area ETF tanks and ancillary equipment that store or treat dangerous and/or mixed waste are located within the ETF. The structure serves as secondary containment for the tank systems.

pH Adjustment Tank and Ancillary Equipment. The pH adjustment tank has a nominal capacity of 13,200 liters. Ancillary equipment for this tank includes overflow lines to a sump tank and pumps to transfer waste to other units in the main treatment train.

Effluent pH Adjustment Tank and Ancillary Equipment. The effluent pH adjustment tank has a nominal capacity of 11,100 liters. Ancillary equipment includes overflow lines to a sump tank and pumps to transfer waste to the verification tanks.

First and Second Reverse Osmosis Feed Tanks and Ancillary Equipment. The first RO feed tank is a vertical, stainless steel tank with a round bottom and has a nominal capacity of 16,100 liters. Conversely, the second RO feed tank is a rectangular vessel with the bottom of the tank sloping sharply to a single outlet in the bottom center. The second RO feed tank has a nominal capacity of 7,600 liters. Each RO tank has a pump to transfer waste to the RO arrays. Overflow lines are routed to a sump tank.

Secondary Waste Receiving Tanks and Ancillary Equipment. Two nominal 69,000-liter secondary waste receiving tanks collect waste from the units in the main treatment train, such as concentrate solution (retentate) from the RO units and regeneration solution from the IX columns. These are vertical, cylindrical tanks with a semi-elliptical bottom and a flat top. Ancillary equipment includes overflow lines to a sump tank and pumps to transfer aqueous waste to the 200 Area ETF evaporator.**Effluent Treatment Facility Evaporator and Ancillary Equipment.** The 200 Area ETF evaporator, the principal component of the evaporation process, is a cylindrical pressure vessel with a conical bottom. Aqueous waste is fed into the lower portion of the vessel. The top of the vessel is domed and the vapor outlet is configured to prevent carryover of liquid during the foaming or bumping (violent boiling) at the liquid surface. The 200 Area ETF evaporator has a nominal operating capacity of approximately 16,000 liters.

The 200 Area ETF evaporator includes the following ancillary equipment:

- Preheater
- Recirculation pump
- Waste heater with steam level control tank
- Concentrate transfer pump
- Entrainment separator
- Vapor compressor with silencers
- Silencer drain pump.

Distillate Flash Tank and Ancillary Equipment. The distillate flash tank is a horizontal tank that has a nominal operating capacity of 730 liters. Ancillary equipment includes a pump to transfer the distillate to the surge tank for reprocessing.

Concentrate Tanks and Ancillary Equipment. Each of the two concentrate tanks has an approximate nominal capacity of 22,700 liters. Ancillary equipment includes overflow lines to a sump tank and pumps for recirculation and transfer.

Sump Tanks. Sump tanks 1 and 2 are located below floor level. Both sump tanks are double-walled, rectangular tanks, placed inside concrete vaults. Both tanks have a working volume of 4,000 liters each. The sump tanks are located in pits below grade to allow gravity drain of solutions to the tanks. Each sump tank has two vertical pumps for transfer of waste to the secondary waste receiving tanks or to the surge tank for reprocessing.

C.4.1.4 Design Information for Effluent Treatment Facility Process Units

As with the 200 Area ETF tanks, process units that treat and/or store dangerous and/or mixed waste are maintained at or near atmospheric pressure. These units were constructed to meet a series of design standards, as discussed in the following sections. Table C.6 presents the materials of construction and the ancillary equipment associated with these process units. All piping systems are designed to withstand the effects of internal pressure, weight, thermal expansion and contraction, and any pulsating flow. The design and integrity of these units are presented in the engineering assessment (Mausshardt 1995).

Filters. The load-in fine and rough filter vessels (including the influent and auxiliary filters) are designed to comply with the ASME Section VIII, Division I, Pressure Vessels (ASME 1992a). The application of these standards to the construction of the 200 Area ETF filter system and independent inspection ensure that the filter and filter supports have sufficient structural strength and that the seams and connections are adequate to ensure the integrity of the filter vessels.

Ultraviolet Oxidation System. The UV/OX reaction chamber is designed to comply with manufacturers standards.

Degasification System. The codes and standards applicable to the design, fabrication, and testing of the degasification column are identified as follows:

- ASME - B31.3, Chemical Plant and Petroleum Refinery Piping (ASME 1990)
- AWS - D1.1, Structural Welding Code - Steel (AWS 1992)
- ANSI - B16.5, Pipe Flanges and Flanged Fittings (ANSI 1992)

Reverse Osmosis System. The pressure vessels in the RO unit are designed to comply with ASME Section VIII, Division I, Pressure Vessels (ASME 1992a), and applicable codes and standards.

Ion Exchange (Polishers). The IX columns are designed in accordance with ASME Section VIII, Division I, Pressure Vessels (ASME 1992a), and applicable codes and standards. Polisher piping is fabricated of type 304 stainless steel or polyvinyl chloride (PVC) and meets the requirements of ASME B31.3, Chemical Plant and Petroleum Refinery Piping (ASME 1990).

Effluent Treatment Facility Evaporator. The 200 Area ETF evaporator is designed to meet the requirements of ASME Section VIII, Division I, Pressure Vessels (ASME 1992a), and applicable codes

and standards. The 200 Area ETF evaporator piping meets the requirements of ASME B31.3, Chemical Plant and Petroleum Refinery Piping (ASME 1990).

Thin Film Dryer System. The thin film dryer is designed to meet the requirements of ASME Section VIII, Division I, Pressure Vessels (ASME 1992a), and applicable codes and standards. The piping meets the requirements of ASME - B31.3, Chemical Plant and Petroleum Refinery Piping (ASME 1990).

C.4.1.5 Integrity Assessments.

The integrity assessment for 200 Area ETF (Mausshardt 1995) attests to the adequacy of design and integrity of the tanks and ancillary equipment to ensure that the tanks and ancillary equipment will not collapse, rupture, or fail over the intended life considering intended uses. For the load-in tanks, a similar integrity assessment was performed (KEH 1995 and HNF 2009a). Specifically, the assessment documents the following considerations:

- Adequacy of the standards used during design and construction of the facility
- Characteristics of the solution in each tank
- Adequacy of the materials of construction to provide corrosion protection from the solution in each tank
- Results of the leak tests and visual inspections

The results of these assessments demonstrate that tanks and ancillary equipment have sufficient structural integrity and are acceptable for storing and treating dangerous and/or mixed waste. The assessments also state that the tanks and building were designed and constructed to withstand a design-basis earthquake. Independent, qualified registered professional engineers certified these tank assessments.

The scope of the 200 Area ETF tank integrity assessment was based on characterization data from process condensate. To assess the effect that other aqueous waste might have on the integrity of the 200 Area ETF tanks, the chemistry of an aqueous waste will be evaluated for its potential to corrode a tank (e.g., chloride concentrations will be evaluated). The tank integrity assessment for the load-in tanks was based on characterization data from several aqueous waste streams. The chemistry of an aqueous waste stream not considered in the load-in tank integrity assessment also will be evaluated for the potential to corrode a load-in tank.

Consistent with the recommendations of the integrity assessment, a corrosion inspection program was developed. Periodic integrity assessments are scheduled for those tanks predicted to have the highest potential for corrosion. These inspections are scheduled annually or longer, based on age of the tank system, materials of construction, characteristics of the waste, operating experience, and recommendations of the initial integrity assessment. These ‘indicator tanks’ include the concentrate tanks, secondary waste receiving tanks, and verification tanks. One of each of these tanks will be inspected yearly to determine if corrosion or coating failure has occurred. Should significant corrosion or coating failure be found, an additional tank of the same type would be inspected during the same year. In the case of the verification tanks, if corrosion or coating failure is found in the second tank, the third tank also will be inspected. If significant corrosion were observed in all three sets of tanks, the balance of the 200 Area ETF tanks would be considered for inspection. For tanks predicted to have lower potential for corrosion, inspections also are performed nonroutinely as part of the corrective maintenance program.

C.4.2 Additional Requirements for New Tanks

Procedures for proper installation of tanks, tank supports, piping, concrete, etc., are included in *Construction Specification, Project C-018H, 242-A Evaporator/PUREX Plant Process Condensate Treatment Facility* (WHC 1992a). For the load-in tanks, procedures are included in the construction specifications in *Project W-291, 200 Area Effluent BAT/AKART Implementation ETF Truck Load-in Facility* (KEH 1994) and Purgewater Unloading Facility Project Documentation (HNF 2009b). Following installation, an independent, qualified, registered professional engineer inspected the tanks and

secondary containment. Deficiencies identified included damage to the surge tank, damage to the verification tank liners, and 200 Area ETF secondary containment concrete surface cracking. All deficiencies were repaired to the satisfaction of the engineer. The tanks and ancillary equipment were leak tested as part of acceptance of the system from the construction contractor. Information on the inspections and leak tests are included in the engineering assessment (Mausshardt 1995). No deficiencies were identified during installation of the load-in tanks and ancillary equipment.

C.4.3 Secondary Containment and Release Detection for Tank Systems

This section describes the design and operation of secondary containment and leak detection systems at the ETF.

C.4.3.1 Secondary Containment Requirements for All Tank Systems

The specifications for the preparation, design, and construction of the secondary containment systems at the 200 Area ETF are documented (WHC 1992a). The preparation, design, and construction of the secondary containment for the load-in tanks are provided in the construction specifications (KEH 1994 and HNF 2009b). All systems were designed to national codes and standards. Constructing the 200 Area ETF per these specifications ensured that foundations are capable of supporting tank and secondary containment systems and that uneven settling and failures from pressure gradients should not occur.

C.4.3.1.1 Common Elements

The following text describes elements of secondary containment that are common to all 200 Area ETF tank systems. Details on the secondary containment for specific tanks, including leak detection systems and liquids removal, are provided in Section 4C.4.4.1.2.

Foundation and Construction. For the tanks within the ETF, except for the sump tanks, secondary containment is provided by a coated concrete floor and a 15.2-centimeter rise (berm) along the containing walls. The double-wall construction of the sump tanks provides secondary containment. Additionally, trenches are provided in the floor that also provides containment and drainage of any liquid to a sump pit. For tanks outside the ETF, secondary containment also is provided with coated concrete floors in a containment pit (load-in tanks) or surrounded by concrete dikes (the surge and verification tanks).

The transfer piping that carries aqueous waste into the 200 Area ETF is pipe-within-a-pipe construction, and is buried approximately 1.2 meters below ground surface. The pipes between the verification tanks and the verification tank pumps within the 200 Area ETF are located in a concrete pipe trench.

For this discussion, there are five discrete secondary containment systems associated with the following tanks and ancillary equipment that treat or store dangerous waste:

- Load-in tanks
- Surge tank
- Process area (including sump tanks)
- Verification tanks
- Transfer piping and pipe trenches

All of the secondary containment systems are designed with reinforcing steel and base and berm thickness to minimize failure caused by pressure gradients, physical contact with the waste, and climatic conditions. Classical theories of structural analysis, soil mechanics, and concrete and structural steel design were used in the design calculations for the foundations and structures. These calculations are maintained at the ETF. In each of the analyses, the major design criteria from the following documents were included:

V-C018HC1-001	Design Construction Specification, Project C-018H, 242A Evaporator/PUREX Plant Process Condensate Treatment Facility (WHC 1992a)
DOE Order 6430.1A	General Design Criteria
SDC-4.1	Standard Architectural-Civil Design Criteria, Design Loads for Facilities (DOE-RL 1988)
UCRL-15910	Design and Evaluation Guidelines for Department of Energy Facilities Subjected to

	Natural Phenomena Hazards (UCRL 1987)
UBC-91	Uniform Building Code, 1991 Edition (ICBO 1991)
UBC-97	Uniform Building Code, 1997 Edition (ICC 1997, for Load-in tank 59A-TK-1)

The design and structural analysis calculations substantiate the structural designs in the referenced drawings. The conclusions drawn from these calculations indicate that the designs are sound and that the specified structural design criteria were met. This conclusion is verified in the independent design review that was part of the engineering assessment (Mausshardt 1995, KEH 1994, and HNF 2009a).

Containment Materials. The concrete floor consists of cast-in-place and preformed concrete slabs. All slab joints and floor and wall joints have water stops installed at the mid-depth of the slab. In addition, filler was applied to each joint.

Except for the sump tank vaults, all of the concrete surfaces in the secondary containment system, including berms, trenches, and pits, are coated with a chemical-resistant, high-solids, epoxy coating that consists of a primer and a top coating. This coating material is compatible with the waste being treated, and with the sulfuric acid, sodium hydroxide, and hydrogen peroxide additives to the process. The coating protects the concrete from contact with any chemical materials that might be harmful to concrete and prevents the concrete from being in contact with waste material. Table C.8 summarizes the specific types of primer and top coats specified for the concrete and masonry surfaces in the ETF. The epoxy coating is considered integral to the secondary containment system for the tanks and ancillary equipment.

The concrete containment systems are maintained such that any cracks, gaps, holes, and other imperfections are repaired in a timely manner. Thus, the concrete containment systems do not allow spilled liquid to reach soil or groundwater. There are a number of personnel doorways and vehicle access points into the 200 Area ETF process areas. Releases of any spilled or leaked material to the environment from these access points are prevented by 15.2-centimeter concrete curbs, sloped areas of the floor (e.g., truck ramp), or trenches.

Containment Capacity and Maintenance. Each of these containment areas is designed to contain more than 100 percent of the volume of the largest tank in each respective system. Secondary containment systems for the surge tank, and the verification tanks, which are outside the ETF, also are large enough to include the additional volume from a 100-year, 24-hour storm event; i.e., 5.3 centimeters of precipitation.

Sprinkler System. The sprinkler system within the 200 Area ETF supplies firewater protection to the process area and the container storage area. This system is connected to a site wide water supply system and has the capacity to supply sufficient water to suppress a fire at the ETF. However, in the event of failure, the sprinkler system can be hooked up to another water source (e.g., tanker truck).

C.4.3.1.2 Specific Containment Systems

The following discussion presents a description of the individual containment systems associated with specific tank systems.

Load-In Tank Secondary Containment. The load-in tanks 59A-TK-109 and -117 are mounted on a 46-centimeter-thick reinforced concrete slab (Drawing H-2-817970). Secondary containment is provided by a pit with 30.5-centimeter-thick walls and a floor constructed of reinforced concrete. The load-in tank pit is sloped to drain solution to a sump. The depth of the pit varies with the slope of the floor, with an average thickness of about 1.1 meters. The volume of the secondary containment is about 79,000 liters, which is capable of containing the volume of at least one load-in tank (i.e., 34,200 liters). Leaks are detected by a leak detector that alarms locally, in the 200 Area ETF control room, and by visual inspection of the secondary containment.

Adjacent to the pit is a 25.4-centimeter-thick reinforced concrete pad that serves as secondary containment for the load-in tanker trucks, containers, transfer pumps, and filter system that serve as the first tanker truck unloading bay. The pad is inside the metal Load-in building and is 15.2 centimeters

below grade with north and south walls gently sloped to allow truck access. The pad has a 3-inch drain pipe to route waste solution to the adjacent load-in tank pit. The pad does not have protective coating because it would experience excessive wear from the vehicle traffic.

Load-in tank 59A-TK-1 is located on a 25.4-centimeter-thick reinforced concrete slab (Drawing H-2-817970) inside the metal Load-in building. The tank has a flat bottom which sits on a concrete slab in the secondary containment. Secondary containment for the tank, filter system, and truck unloading piping is provided by an epoxy coated catch basin with a capacity of about 3,500 liters. The catch basin is sloped to route solution from the catch basin through a 15.2-centimeter-wide by 14.3-centimeter-deep trench to the adjacent truck unloading pad. This pad drains to the Load-in tank pit discussed above. The volume of the combined secondary containment of these two systems is greater than 82,000 liters, which is capable of holding the volume of tank 59A-TK-1 (i.e., 26,000 liters).

Adjacent to tank 59A-TK-1 catch basin is a 25.4-centimeter-thick reinforced concrete pad that serves as the second tanker truck unloading bay. The pad is inside the metal Load-in building and has a 2.4-meter by 4.0-meter shallow, sloping pit to catch leaks during tanker truck unloading. The pit has a maximum depth of 6.0 centimeters and a 15.2-centimeter-wide by 6.0-centimeter-deep trench to route leaks to the adjacent tank 59A-TK-1 catch basin. The pad does not have protective coating because it would experience excessive wear from the vehicle traffic.

Surge Tank Secondary Containment. The surge tank is mounted on a reinforced concrete ringwall. Inside the ringwall, the flat-bottomed tank is supported by a bed of compacted sand and gravel with a high-density polyethylene liner bonded to the ringwall. The liner prevents galvanic corrosion between the soil and the tank. The secondary containment is reinforced concrete with a 15.2-centimeter thick floor and a 20.3-centimeter thick dike. The secondary containment area shares part of the southern wall of the main process area. The dike extends up 2.9 meters to provide a containment volume of 740,000 liters for the 452,000-liter surge tank.

The floor of the secondary containment slopes to a sump in the northwest corner of the containment area. Leaks into the secondary containment are detected by level instrumentation in the sump, which alarms in the 200 Area ETF control room, and/or by routine visual inspections. A sump pump is used to transfer solution in the secondary containment to a sump tank.

Process Area Secondary Containment. The process area contains the tanks and ancillary equipment of the primary and secondary treatment trains, and has a jointed, reinforced concrete slab floor. The concrete floor of the process area provides the secondary containment. This floor is a minimum of 15.2 centimeters thick. With doorsills 15.2 centimeter high, the process area has a containment volume of over 200,000 liters. The largest tanks in the process area are the secondary waste receiving tanks, which each have a maximum capacity of 73,800 liters.

The floor of the process area is sloped to drain liquids to two trenches that drain to a sump. Each trench is approximately 38.1 centimeters wide with a sloped trough varying from 39.4 to 76.2 centimeters deep. Leaks into the secondary containment are detected by routine visual inspections of the floor area near the tanks, ancillary equipment, and in the trenches.

A small dam was placed in the trench that comes from the thin film dryer room to contain minor liquid spills originating in the dryer room to minimize the spread of contamination into the process area. The dryer room is inspected for leaks in accordance with the inspection schedule in Addendum I. Operators clean up these minor spills by removing the liquid waste and decontaminating the spill area.

A small dam was also placed in the trench adjacent to the chemical feed skid when the chemical berm area was expanded to accommodate acid and caustic pumps, which were moved indoors from the top of the surge tank to resolve a safety concern. This dam was designed to contain minor spills originating in the chemical berm area and prevent them from entering the process sump.

The northwest corner of the process area consists of a pump pit containing the pumps and piping for transferring treated effluent from the verification tanks to SALDS. The pit is built 1.37 meters below the

process area floor level and is sloped to drain to a trench built along its north wall that routes liquid to sump tank 1. Leaks into the secondary containment of the pump pit are detected by routine visual inspections.

Sump Tanks. The sump tanks support the secondary containment system, and collect waste from several sources, including:

- Process area drain trenches
- Tank overflows and drains
- Container washing water
- Resin dewatering solution
- Steam boiler blow down
- Sampler system drains.

These double-contained tanks are located within unlined, concrete vaults. The sump tank levels are monitored by remote level indicators or through visual inspections from the sump covers. These indicators are connected to high- and low-level alarms that are monitored in the control room. When a high-level alarm is activated, a pump is activated and the sump tank contents usually are routed to the secondary treatment train for processing. The contents also could be routed to the surge tank for treatment in the primary treatment train. In the event of an abnormally high inflow rate, a second sump pump is initiated automatically.

Verification Tank Secondary Containment. The three verification tanks are each mounted on ringwalls with high-density polyethylene liners similar to the surge tank. The secondary containment for the three tanks is reinforced concrete with a 15.2-centimeter thick floor and a 20.3-centimeter thick dike. The dike extends up 2.6 meters to provide a containment of 110 percent of the capacity of a single tank (Table C.5).

The floor of the secondary containment slopes to a sump along the southern wall of the dike. Leaks into the secondary containment are detected by level instrumentation in the sump that alarms in the control room and/or by routine visual inspections. A sump pump is used to transfer solution in the secondary containment to a sump tank.

C.4.3.2 Additional Requirements for Specific Types of Systems

This section addresses additional requirements in WAC 173-303-640 for double-walled tanks like the sump tanks and secondary containment for ancillary equipment and piping associated with the tank systems.

C.4.3.2.1 Double-Walled Tanks

The sump tanks are the only tanks in the 200 Area ETF classified as 'double-walled' tanks. These tanks are located in unlined concrete vaults and support the secondary containment system for the process area. The sump tanks are equipped with a leak detector between the walls of the tanks that provide continuous monitoring for leaks. The leak detector provides immediate notification through an alarm in the control room. The inner tanks are contained completely within the outer shells. The tanks are contained completely within the concrete structure of the 200 Area ETF so corrosion protection from external galvanic corrosion is not necessary.

C.4.3.2.2 Ancillary Equipment

The secondary containment provided for the tanks and process systems also serves as secondary containment for the ancillary equipment associated with these systems.

Ancillary Equipment. Section D.4.3.1.2 describes the secondary containment systems that also serve most of the ancillary equipment within the 200 Area ETF. Between the 200 Area ETF and the verification tanks, a pipeline trench provides secondary containment for four pipelines connecting the transfer pumps (i.e., discharge and return pumps) in the 200 Area ETF with the verification tanks (Figure C.2). This concrete trench crosses under the road and extends from the verification tank pumps to

the verification tanks. Treated effluent flows through these pipelines from the verification tank pumps to the verification tanks. The return pump is used to return effluent to the 200 Area ETF for use as service water or for reprocessing.

For all of the ancillary equipment housed within the ETF, the concrete floor, trenches, and berms form the secondary containment system. For the ancillary equipment of the surge tank and the verification tanks, secondary containment is provided by the concrete floors and dikes associated with these tanks. The concrete floor and pit provide secondary containment for the ancillary equipment of the load-in tanks.

Transfer Piping and Pipe Trenches. The two buried transfer lines between LERF and the surge tank have secondary containment in a pipe-within-a-pipe arrangement. The 4-inch transfer line has an 8-inch outer pipe, while the 3-inch transfer, line has a 6-inch outer pipe. The pipes are fiberglass and are sloped towards the surge tank. The outer piping ends with a drain valve in the surge tank secondary containment.

These pipelines are equipped with leak detection located in the annulus between the inner and outer pipes; the leak detection equipment can continuously 'inspect' the pipelines during aqueous waste transfers. The alarms on the leak detection system are monitored in the control room. A low-volume air purge of the annulus is provided to prevent condensation buildup and minimize false alarms by the leak detection system. In the event that these leak detectors are not in service, the pipelines are inspected during transfers by opening a drain valve to check for solution in the annular space between the inner and outer pipe.

The 3-inch transfer line between the load-in tanks and the surge tank has a 6-inch outer pipe in a pipe-within-a-pipe arrangement. The piping is made of fiberglass-reinforced plastic and slopes towards the load-in tank secondary containment pit. The drain valve and leak detection system for the load-in tank pipelines are operated similarly to the leak detection system for the LERF to 200 Area ETF pipelines.

As previously indicated, a reinforced concrete pipe trench provides secondary containment for piping under the roadway between the 200 Area ETF and the verification tanks. Three 15.2 centimeter thick reinforced concrete partitions divide the trench into four portions and support metal gratings over the trench. Each portion of the trench is 1.2 meters wide, 0.76 meter deep, and slopes To route any solution present to 4-inch drain lines through the north wall of the ETF building. These drain lines route solution to sump tank 2 in ETF. The floor of the pipe trench is 30.5 centimeters thick and the sides are 15.2 centimeters thick. The concrete trenches are coated with water sealant and covered with metal gratings at ground level to allow vehicle traffic on the roadway.

C.4.4 Tank Management Practices

When an aqueous waste stream is identified for treatment or storage at 200 Area ETF, the generating unit is required to characterize the waste. Based on characterization data, the waste stream is evaluated to determine if the stream is acceptable for treatment or storage. Specific tank management practices are discussed in the following sections.

C.4.4.1 Rupture, Leakage, Corrosion Prevention

Most aqueous waste streams can be managed such that corrosion would not be a concern. For example, an aqueous waste stream with high concentrations of chloride might cause corrosion problems when concentrated in the secondary treatment train. One approach is to adjust the corrosion control measures in the secondary treatment train. An alternative might be to blend this aqueous waste in a LERF basin with another aqueous waste that has sufficient dissolved solids, such that the concentration of the chlorides in the secondary treatment train would not pose a corrosion concern.

Additionally, the materials of construction used in the tanks systems (Table C.5) make it unlikely that an aqueous waste would corrode a tank. For more information on corrosion prevention, refer to Addendum B, Waste Analysis Plan.

If operating experience suggests that most aqueous waste streams can be managed such that corrosion would not be a concern, operating practices and integrity assessment schedules and requirements will be reviewed and modified as appropriate.

When a leak in a tank system is discovered, the leak is immediately contained or stopped by isolating the leaking component. Following containment, the requirements of WAC 173-303-640(7), incorporated by reference, are followed. These requirements include repair or closure of the tank/tank system component, and certification of any major repairs.

C.4.4.2 Overfilling Prevention

Operating practices and administrative controls used at the 200 Area ETF to prevent overfilling a tank are discussed in the following paragraphs. The 200 Area ETF process is controlled by the MCS. The MCS monitors liquid levels in the 200 Area ETF tanks and has alarms that annunciate on high-liquid level to notify operators that actions must be taken to prevent overfilling of these vessels. As an additional precaution to prevent spills, many tanks are equipped with overflow lines that route solutions to sump tanks 1 and 2. These tanks include the pH adjustment tank; RO feed tanks, effluent pH adjustment tank, secondary waste receiving tanks, and concentrate tanks.

The following section discusses feed systems, safety cutoff devices, bypass systems, and pressure controls for specific tanks and process systems.

Tanks. All tanks are equipped with liquid level sensors that give a reading of the tank liquid volume. All of the tanks are equipped further with liquid level alarms that are actuated if the liquid volume is near the tank overflow capacity. In the actuation of the surge tank alarm, a liquid level switch trips, sending a signal to the valve actuator on the tank influent lines, and causing the influent valves to close.

The operating mode for each verification tank, i.e., receiving, holding, or discharging, can be designated through the MCS; modes also switch automatically. When the high-level set point on the receiving verification tank is reached, the flow to this tank is diverted and another tank becomes the receiver. The full tank is switched into verification mode. The third tank is reserved for discharge mode.

The liquid levels in the pH adjustment, first and second RO feed, and effluent pH adjustment tanks are maintained within predetermined operating ranges. Should any of these tanks overflow, the excess waste is piped along with any leakage from the feed pumps to a sump tank.

When waste in a secondary waste-receiving tank reaches the high-level set point, the influent flow of waste is redirected to the second tank. In a similar fashion, the concentrate tanks switch receipt modes when the high-level set point of one tank is reached. **Filter Systems.** All filters at 200 Area ETF (i.e., the Load-In Station, rough, fine, and auxiliary filter systems) are in leak-tight steel casings. For the rough and fine filters, a high differential pressure, which could damage the filter element, activates a valve that shuts off liquid flow to protect the filter element from possible damage. To prevent a high-pressure situation, the filters are cleaned routinely with pulses of compressed air that force water back through the filter. Cleaning is terminated automatically by shutting off the compressed air supply if high pressure develops. The differential pressure across the auxiliary filters also is monitored. A high differential pressure in these filters would result in a system shutdown to allow the filters to be changed out.

The Load-In Station filtration system has pressure gauges for monitoring the differential pressure across each filter. A high differential pressure would result in discontinuing filter operation until the filter is replaced.

Ultraviolet Light/Oxidation System and Decomposers. A rupture disk on the inlet piping to each of the UV/OX reaction vessels relieves to the pH adjustment tank in the event of excessive pressure developing in the piping system. Should the rupture disk fail, the aqueous waste would trip the moisture sensor, shut down the UV lamps, and close the surge tank feed valve. Also provided is a level sensor to protect UV lamps against the risk of exposure to air. Should those sensors be actuated, the UV lamps would be shut down immediately.

The piping and valving for the hydrogen peroxide decomposers are configured to split the waste flow: half flows to one decomposer and half flows to the other decomposer. Alternatively, the total flow of waste can be treated in one decomposer or both decomposers can be bypassed. A safety relief valve on each decomposer vessel can relieve excess system pressure to a sump tank.

Degasification System. The degasification column is typically supplied aqueous waste feed by the pH adjustment tank feed pump. This pump transfers waste solution through the hydrogen peroxide decomposer, the fine filter, and the degasification column to the first RO feed tank.

The degasification column is designed for operation at a partial vacuum. A pressure sensor in the outlet of the column detects the column pressure. The vacuum in the degasification column is maintained by a blower connected to the vessel off gas system. The column is protected from extremely low pressure developed by the column blower by the use of an intake vent that is maintained in the open position during operation. The column liquid level is regulated by a flow control system with a high- and low-level alarm. Plate-type heat exchanger cools the waste solution fed to the degasification column.

Reverse Osmosis System. The flow through the first and second RO stages is controlled to maintain constant liquid levels in the first and second stage RO feed tanks.

Polisher. Typically, two of the three columns are in operation (lead/lag) and the third (regenerated) column is in standby. When the capacity of the resin in the first column is exceeded, as detected by an increase in the conductivity of the column effluent, the third column, containing freshly regenerated IX resin, is brought online. The first column is taken offline, and the waste is rerouted to the second column, and to the third. Liquid level instrumentation and automatically operated valves are provided in the IX system to prevent overfilling.

Effluent Treatment Facility Evaporator. Liquid level instrumentation in the secondary waste receiving tanks is designed to preclude a tank overflow. A liquid level switch actuated by a high-tank liquid level causes the valves to reposition, closing off flow to the secondary waste receiving tanks. Secondary containment for these tanks routes liquids to a sump tank.

Valves in the 200 Area ETF evaporator feed line can be positioned to bypass the secondary waste around the 200 Area ETF evaporator and to transfer the secondary waste to the concentrate tanks.

Thin Film Dryer. The two concentrate tanks alternately feed the thin film dryer. Typically, one tank serves as a concentrate waste receiver while the other tank serves as the dryer feed tank. One tank may serve as both concentrate waste receiver and dryer feed tank. Liquid level instrumentation prevents tank overflow by diverting the concentrate flow from the full concentrate tank to the other concentrate tank. Secondary containment for these tanks routes liquids to a sump tank.

An alternate route is provided from the concentrate receiver tank to the secondary waste receiving tanks. Dilute concentrate in the concentrate receiver tank can be reprocessed through the 200 Area ETF evaporator by transferring the concentrate back to a secondary waste-receiving tank.

C.4.5 Labels or Signs

Each tank or process unit in the 200 Area ETF is identified by a nameplate attached in a readily visible location. Included on the nameplate are the equipment number and the equipment title. Those tanks that store or treat dangerous waste at the 200 Area ETF (Section 4C.4.1.1) are identified with a label, which reads *PROCESS WATER/WASTE*. The labels are legible at a distance of at least fifty feet or as appropriate for legibility within the ETF. Additionally, these tanks bear a legend that identifies the waste in a manner, which adequately warns employees, emergency personnel, and the public of the major risk(s) associated with the waste being stored or treated in the tank system(s).

Caution plates are used to show possible hazards and warn that precautions are necessary. Caution signs have a yellow background and black panel with yellow letters and bear the word *CAUTION*. Danger signs show immediate danger and signify that special precautions are necessary. These signs are red, black, and white and bear the word *DANGER*.

Tanks and vessels containing corrosive chemicals are posted with black and white signs bearing the word *CORROSIVE*. *DANGER - UNAUTHORIZED PERSONNEL KEEP OUT* signs are posted on all exterior doors of the ETF, and on each interior door leading into the process area. Tank ancillary piping is also labeled *PROCESS WATER* or *PROCESS LIQUID* to alert personnel which pipes in the process area contains dangerous and/or mixed waste.

All tank systems holding dangerous waste are marked with labels or signs to identify the waste contained in the tanks. The labels or signs are legible at a distance of at least 50-feet and bear a legend that identifies the waste in a manner that adequately warns employees, emergency response personnel, and the public, of the major risk(s) associated with the waste being stored or treated in the tank system(s).

C.4.6 Air Emissions

Tank systems that contain extremely hazardous waste that is acutely toxic by inhalation must be designed to prevent the escape of such vapors. To date, no extremely hazardous waste has been managed in 200 Area ETF tanks and is not anticipated. However, the 200 Area ETF tanks have forced ventilation that draws air from the tank vapor spaces to prevent exposure of operating personnel to any toxic vapors that might be present. The vapor passes through a charcoal filter and two sets of high-efficiency particulate air filters before discharge to the environment. The Load-in tanks and verification tanks are vented to the atmosphere.

C.4.7 Management of Ignitable or Reactive Wastes in Tanks Systems

Although the 200 Area ETF is permitted to accept waste that is designated ignitable or reactive, such waste would be treated or blended immediately after placement in the tank system so that the resulting waste mixture is no longer ignitable or reactive. Aqueous waste received does not meet the definition of a combustible or flammable liquid given in National Fire Protection Association (NFPA) code number 30 (NFPA 1996). The buffer zone requirements in NFPA-30, which require tanks containing combustible or flammable solutions be a safe distance from each other and from public way, are not applicable.

C.4.8 Management of Incompatible Wastes in Tanks Systems

The 200 Area ETF manages dilute solutions that can be mixed without compatibility issues. The 200 Area ETF is equipped with several systems that can adjust the pH of the waste for treatment activities. Sulfuric acid and sodium hydroxide are added to the process through the MCS for pH adjustment to ensure there will be no large pH fluctuations and adverse reactions in the tank systems.

C.5 SURFACE IMPOUNDMENTS

This section provides specific information on surface impoundment operations at the LERF, including descriptions of the liners and secondary containment structures, as required by WAC 173-303-650 and WAC 173-303-806(4)(d).

The LERF consists of three lined surface impoundments (basins) with a design operating capacity of 29.5 million liters each. The maximum capacity of each basin is 34 million liters. The dimensions of each basin at the anchor wall are approximately 103 meters by 85 meters. The typical top dimensions of the wetted area are approximately 89 meters by 71 meters, while the bottom dimensions are approximately 57 by 38 meters. Total depth from the top of the dike to the bottom of the basin is approximately 7 meters. The typical finished basin bottoms lie at about 4 meters below the initial grade and 175 meters above sea level. The dikes separating the basins have a typical height of 3 meters and typical top width of 11.6 meters around the perimeter of the impoundments.

C.5.1 List of Dangerous Waste

A list of dangerous and/or mixed aqueous waste that can be stored in LERF is presented in Addendum A. Addendum B, Waste Analysis Plan also provides a discussion of the types of waste that are managed in the LERF.

C.5.2 Construction, Operation, and Maintenance of Liner System

General information concerning the liner system is presented in the following sections. Information regarding loads on the liner, liner coverage, UV light exposure prevention, and location relative to the water table are discussed.

C.5.2.1 Liner Construction Materials

The LERF employs a double-composite liner system with a leachate detection, collection, and removal system between the primary and secondary liners. Each basin is constructed with an upper or primary liner consisting of a high-density polyethylene geomembrane laid over a bentonite carpet liner. The lower or secondary liner in each basin is a composite of a geomembrane laid over a layer of soil/bentonite admixture with a hydraulic conductivity less than 10^{-7} centimeters per second. The synthetic liners extend up the dike wall to a concrete anchor wall that surrounds the basin at the top of the dike. A batten system bolts the layers in place to the anchor wall (Figure C.16).

Figure C.17 is a schematic cross-section of the liner system. The liner components, listed from the top to the bottom of the liner system, are the following:

- Primary 1.5-millimeter high-density polyethylene geomembrane
- Bentonite carpet liner
- Geotextile
- Drainage gravel (bottom) and geonet (sides)
- Geotextile
- Secondary 1.5-millimeter high-density polyethylene geomembrane
- Soil/bentonite admixture (91 centimeters on the bottom, 107 centimeters on the sides)
- Geotextile

The primary geomembrane, made of 1.5-millimeter high-density polyethylene, forms the basin surface that holds the aqueous waste. The secondary geomembrane, also 1.5-millimeter high-density polyethylene, forms a barrier surface for leachate that might penetrate the primary liner. The high-density polyethylene chemically is resistant to constituents in the aqueous waste and has a relatively high strength compared to other lining materials. The high-density polyethylene resin specified for the LERF contains carbon black, antioxidants, and heat stabilizers to enhance its resistance to the degrading effects of UV light. The approach to ensuring the compatibility of aqueous waste streams with the LERF liner materials and piping is discussed in Addendum B, Waste Analysis Plan.

Three geotextile layers are used in the LERF liner system. The layers are thin, nonwoven polypropylene fabric that chemically is resistant, highly permeable, and resistant to microbiological growth. The first two layers prevent fine soil particles from infiltrating and clogging the drainage layer. The second geotextile also provides limited protection for the secondary geomembrane from the drainage rock. The third geotextile layer prevents the mixing of the soil/bentonite admixture with the much more porous and granular foundation material.

A 30.5-centimeters-thick gravel drainage layer on the bottom of the basins between the primary and secondary liners provides a flow path for liquid to the leachate detection, collection, and removal system. A geonet (or drainage net) is located immediately above the secondary geomembrane on the basin sidewalls. The geonet functions as a preferential flow path for liquid between the liners, carrying liquid down to the gravel drainage layer and subsequently to the leachate sump. The geonet is a mesh made of high-density polyethylene, with approximately 13-millimeter openings.

The soil/bentonite layer is 91 centimeters thick on the bottom of the basins and 107 centimeters thick on the basin sidewalls; its permeability is less than 10^{-7} centimeters per second. This composite liner design, consisting of a geomembrane laid over essentially impermeable soil/bentonite, is considered best available technology for solid waste landfills and surface impoundments. The combination of synthetic and clay liners is reported in the literature to provide the maximum protection from waste migration (Forseth and Kmet 1983).

A number of laboratory tests were conducted to measure the engineering properties of the soil/bentonite admixture, in addition to extensive field tests performed on three test fills constructed near the LERF site. For establishing an optimum ratio of bentonite to soil for the soil/bentonite admixture, mixtures of various ratios were tested to determine permeability and shear strength. A mixture of 12 percent bentonite was selected for the soil/bentonite liner and tests described in the following paragraphs demonstrated that the admixture meets the desired permeability of less than 10-7 centimeters per second. Detailed discussion of test procedures and results is provided in Report of Geotechnical Investigation, 242-A Evaporation and PUREX Interim Storage Basins (Chen-Northern 1990).

Direct shear tests were performed according to ASTM D3080 test procedures (ASTM 1990) on soil/bentonite samples of various ratios. Based on these results, the conservative minimum Mohr-Coulomb shear strength value of 30 degrees was estimated for a soil/bentonite admixture containing 12 percent bentonite.

The high degree of compaction of the soil/bentonite layer [92 percent per ASTM D1557 (ASTM 1991)] was expected to maximize the bonding forces between the clay particles, thereby minimizing moisture transport through the liner. With respect to particle movement ('piping'), estimated fluid velocities in this low-permeability material are too low to move the soil particles. Therefore, piping is not considered a problem.

For the soil/bentonite layer, three test fills were constructed to demonstrate that materials, methods, and procedures used would produce a soil/bentonite liner that meets the EPA permeability requirement of less than 10^{-7} centimeters per second. All test fills met the EPA requirements. A thorough discussion of construction procedures, testing, and results is provided in *Report of Permeability Testing, Soil-bentonite Test Fill* (Chen-Northern 1991a).

The aqueous waste stored in the LERF is typically a dilute mixture of organic and inorganic constituents. Though isolated instances of soil liner incompatibility have been documented in the literature (Forseth and Kmet 1983), these instances have occurred with concentrated solutions that were incompatible with the geomembrane liners in which the solutions were contained. Considering the dilute nature of the aqueous waste that is and will be stored in LERF and the moderate pH, and test results demonstrating the compatibility of the high-density polyethylene liners with the aqueous waste [9090 Test Results (WHC 1991)], gross failure of the soil/bentonite layer is not probable.

Each basin also is equipped with a floating very low-density polyethylene cover. The cover is anchored and tensioned at the concrete wall at the top of the dikes, using a patented mechanical tensioning system. Figure C.16 depict the tension mechanism and the anchor wall at the perimeter of each basin. Additional information on the cover system is provided in Section C.5.2.5.

C.5.2.1.1 Material Specifications

Material specifications for the liner system and leachate collection system, including liners, drainage gravel, and drainage net are discussed in the following sections. Material specifications are documented in the *Final Specifications 242-A Evaporator and PUREX Interim Retention Basins* (KEH 1990a) and *Construction Specifications for 242-A Evaporator and PUREX Interim Retention Basins* (KEH 1990b).

Geomembrane Liners. The high-density polyethylene resin for geomembranes for the LERF meets the material specifications listed in Table C.9. Key physical properties include thickness (1.5 millimeters [60 mil]) and impermeability (hydrostatic resistance of over 360,000 kilogram per square meter). Physical properties meet National Sanitation Foundation Standard 54 (NSF 1985). Testing to determine if the liner material is compatible with typical dilute waste solutions was performed and documented in *9090 Test Results* (WHC 1991).

Soil/Bentonite Liner. The soil/bentonite admixture consists of 11.5 to 14.5 percent bentonite mixed into well-graded silty sand with a maximum particle size of 4.75 millimeters (No. 4 sieve). Test fills were performed to confirm the soil/bentonite admixture applied at LERF has hydraulic conductivity less than 10^{-7} centimeters per second, as required by WAC 173-303-650(2)(j) for new surface impoundments.

Bentonite Carpet Liner. The bentonite carpet liner consists of bentonite (90 percent sodium montmorillonite clay) in a primary backing of woven polypropylene with nylon filler fiber, and a cover fabric of open weave spunlace polyester. The montmorillonite is anticipated to retard migration of solution through the liner, exhibiting a favorable cation exchange for adsorption of some constituents (such as ammonium). Based on composition of the bentonite carpet and of the type of aqueous waste stored at LERF, no chemical attack, dissolution, or degradation of the bentonite carpet liner is anticipated.

Geotextile. The nonwoven geotextile layers consist of long-chain polypropylene polymers containing stabilizers and inhibitors to make the filaments resistant to deterioration from UV light and heat exposure. The geotextile layers consist of continuous geotextile sheets held together by needle punching. Edges of the fabric are sealed or otherwise finished to prevent outer material from pulling away from the fabric or raveling.

Drainage Gravel. The drainage layer consists of thoroughly washed and screened, naturally occurring rock meeting the size specifications for Grading Number 5 in Washington State Department of Transportation construction specifications (WSDOT 1988). The specifications for the drainage layer are given in Table C.10. Hydraulic conductivity tests (Chen-Northern 1992a, 1992b, 1992c) showed the drainage rock used at LERF met the sieve requirements and had a hydraulic conductivity of at least 1 centimeter per second, which exceeded the minimum of at least 0.1 centimeters per second required by WAC 173-303-650(2)(j) for new surface impoundments.

Geonet. The geonet is fabricated from two sets of parallel high-density polyethylene strands, spaced 1.3 centimeters center-to-center maximum to form a mesh with minimum two strands per 2.54 centimeter in each direction. The geonet is located between the liners on the sloping sidewalls to provide a preferential flow path for leachate to the drainage gravel and subsequently to the leachate sump.

Leachate Collection Sump. Materials used to line the 3.0-meter by 1.8-meter by 0.30-meter-deep leachate sump, at the bottom of each basin in the northwest corner, include [from top to bottom (Figure C.18)]:

- 25 millimeter high-density polyethylene flat stock (supporting the leachate riser pipe)
- Geotextile
- 1.5-millimeter high-density polyethylene rub sheet
- Secondary composite liner:
  - 1.5-millimeter high-density polyethylene geomembrane
  - 91 centimeters of soil/bentonite admixture
  - Geotextile

Specifications for these materials are identical to those discussed previously.

Leachate System Risers. Risers for the leachate system consist of 10-inch and 4-inch pipes from the leachate collection sump to the catch basin northwest of each basin (Figure C.18). The risers lay below the primary liner in a gravel-filled trench that also extends from the sump to the concrete catch basin (Figure C.19).

The risers are high-density polyethylene pipes fabricated to meet the requirements in ASTM D1248 (ASTM 1989). The 10-inch riser is perforated every 20.3 centimeters with 1.3-centimeter holes around the diameter. Level sensors and leachate pump are inserted in the 10-inch riser to monitor and remove leachate from the sump. To prevent clogging of the pump and piping with fine particulate, the end of the riser is encased in a gravel-filled box constructed of high-density polyethylene geonet and wrapped in geotextile. The 4-inch riser is perforated every 10.2 centimeters with 0.64-centimeter holes around the diameter. A level detector is inserted in the 4-inch riser.

Leachate Pump. A deep-well submersible pump, designed to deliver approximately 110 liters per minute, is installed in the 10-inch leachate riser in each basin. Wetted parts of the leachate pump are made of 316L stainless steel, providing both corrosion resistance and durability.

C.5.2.1.2 Loads on Liner System

The LERF liner system is subjected to the following types of stresses.

Stresses from Installation or Construction Operations. Contractors were required to submit construction quality control plans that included procedures, techniques, tools, and equipment used for the construction and care of liner and leachate system. Methods for installation of all components were screened to ensure that the stresses on the liner system were kept to a minimum.

Calculations were performed to estimate the risk of damage to the secondary high-density polyethylene liner during construction (*Calculations for LERF Part B Permit Application* [HNF 1997]). The greatest risk expected was from spreading the gravel layer over the geotextile layer and secondary geomembrane. The results of the calculations show that the strength of the geotextile was sufficiently high to withstand the stress of a small gravel spreader driving on a minimum of 15 centimeters of gravel over the geotextile and geomembrane. The likelihood of damage to the geomembrane lying under the geotextile was considered low.

To avoid driving heavy machinery directly on the secondary liner, a 28-meter conveyer was used to deliver the drainage gravel into the basins. The gravel was spread and consolidated by hand tools and a bulldozer. The bulldozer traveled on a minimum thickness of 30.5 centimeters of gravel. Where the conveyer assembly was placed on top of the liner, cribbing was placed to distribute the conveyer weight. No heavy equipment was allowed for use directly in contact with the geomembranes.

Additional calculations were performed to estimate the ability of the leachate riser pipe to withstand the static and dynamic loading imposed by lightweight construction equipment riding on the gravel layer (HNF 1997). Those calculations demonstrated that the pipe could buckle under the dynamic loading of small construction equipment; therefore, the pipe was avoided by equipment during spreading of the drainage gravel.

Installation of synthetic lining materials proceeded only when winds were less than 24 kilometers per hour, and not during precipitation. The minimum ambient air temperature for unfolding or unrolling the high-density polyethylene sheets was -10 C, and a minimum temperature of 0 C was required for seaming the high-density polyethylene sheets. Between shifts, geomembranes and geotextile were anchored with sandbags to prevent lifting by wind. Calculations were performed to determine the appropriate spacing of sandbags on the geomembrane to resist lifting caused by 130 kilometer per hour winds (HNF 1997). All of the synthetic components contain UV light inhibitors and no impairment of performance is anticipated from the short-term UV light exposure during construction. Section C.5.2.4 provides further detail on exposure prevention.

During the laying of the soil/bentonite layer and the overlying geomembrane, moisture content of the admixture was monitored and adjusted to ensure optimum compaction and to avoid development of cracks.

C.5.2.1.3 Static and Dynamic Loads and Stresses from the Maximum Quantity of Waste

When a LERF basin is full, liquid depth is approximately 6.4 meters. Static load on the primary liner is roughly 6,400 kilograms per square meter. Load on the secondary liner is slightly higher because of the weight of the gravel drainage layer. Assuming a density of 805 kilograms per square meter for the drainage gravel [conservative estimate based on specific gravity of 2.65 (Ambrose 1988)], the secondary high-density polyethylene liner carries approximately 7,200 kilograms per square meter when a basin is full.

Side slope liner stresses were calculated for each of the layers in the basin sidewalls and for the pipe trench on the northwest corner of each basin (HNF 1997). Results of these calculations indicate factors of safety against shear were 1.5 or greater for the primary geomembrane, geotextile, geonet, and secondary geomembrane.

Because the LERF is not located in an area of seismic concern, as identified in Appendix VI of 40 CFR 264 and WAC 173-303-282(6)(a)(I), discussion and calculation of potential seismic events are not required.

C.5.2.1.4 Stresses Resulting from Settlement, Subsidence, or Uplift

Uplift stresses from natural sources are expected to have negligible impact on the liner. Groundwater lies approximately 62 meters below the LERF, average annual precipitation is only 16 centimeters, and the average unsaturated permeability of the soils near the basin bottoms is high, ranging from about 5.5×10^4 centimeters per second to about 1 centimeter per second (Chen-Northern 1991b). Therefore, no hydrostatic uplift forces are expected to develop in the soil underneath the basins. In addition, the soil under the basins consists primarily of gravel and sand, and contains few or no organic constituents. Therefore, uplift caused by gas production from organic degradation is not anticipated.

Based on the design of the soil-bentonite liner, no structural uplift stresses are present within the lining system (Chen-Northern 1991b).

Regional subsidence is not anticipated because neither petroleum nor extractable economic minerals are present in the strata underlying the LERF basins, nor is karst (erosive limestone) topography present.

Dike soils and soil/bentonite layers were compacted thoroughly and proof-rolled during construction. Calculation of settlement potential showed that combined settlement for the foundation and soil/bentonite layer is expected to be about 2.7 centimeters. Settlement impact on the liner and basin stability is expected to be minimal (Chen-Northern 1991b).

C.5.2.1.5 Internal and External Pressure Gradients

Pressure gradients across the liner system from groundwater are anticipated to be negligible. The LERF is about 62 meters above the seasonal high water table, which prevents buildup of water pressure below the liner. The native gravel foundation materials of the LERF are relatively permeable and free draining. The 2 percent slope of the secondary liner prevents the pooling of liquids on top of the secondary liner. Finally, the fill rate of the basins is slow enough (average 190 liters per minute) that the load of the liquid waste on the primary liner is gradually and evenly distributed.

To prevent the buildup of gas between the liners, each basin is equipped with 21 vents in the primary geomembrane located above the maximum water level that allow the reduction of any excess gas pressure. Gas passing through these vents exit through a single pipe that penetrates the anchor wall into a carbon adsorption filter. This filter extracts nearly all of the organic compounds, ensuring that emissions to the air from the basins are not toxic.

C.5.2.2 Liner System Location Relative to High-Water Table

The lowest point of each LERF basin is the northwest corner of the sump, where the typical subgrade elevation is 175 meters above mean sea level. Based on data collected from the groundwater monitoring wells at the LERF site, the seasonal high-water table is located approximately 62 meters or more below the lowest point of the basins. This substantial thickness of unsaturated strata beneath the LERF provides ample protection to the liner from hydrostatic pressure because of groundwater intrusion into the soil/bentonite layer. Further discussion of the unsaturated zone and site hydrogeology is provided in Addendum D, Groundwater Monitoring Plan.

C.5.2.3 Liner System Foundation

Foundation materials are primarily gravels and cobbles with some sand and silt. The native soils onsite are derived from unconsolidated Holocene sediments. These sediments are fluvial and glaciofluvial sands and gravels deposited during the most recent glacial and postglacial event. Grain-size distributions and shape analyses of the sediments indicate that deposition occurred in a high-energy environment (Chen-Northern 1990).

Analysis of five soil borings from the LERF site was conducted to characterize the natural foundation materials and to determine the suitability of onsite soils for construction of the impoundment dikes and determine optimal design factors. Well-graded gravel containing varying amounts of silt, sand, and cobbles comprises the layer in which the basins were excavated. This gravel layer extends to depths of 10 to 11 meters below land surface (Chen-Northern 1990). The basins are constructed directly on the subgrade. Excavated soils were screened to remove oversize cobbles (greater than 15 centimeters in the largest dimension) and used to construct the dikes.

Settlement potential of the foundation material and soil/bentonite layer was found to be low. The foundation is comprised of undisturbed native soils. The bottom of the basin excavation lies within the well-graded gravel layer, and is dense to very dense. Below the gravel is a layer of dense to very dense poorly graded and well-graded sand. Settlement was calculated for the gravel foundation soils and for the soil/bentonite layer, under the condition of hydrostatic loading from 6.4 meters of fluid depth. The combined settlement for the soils and the soil/bentonite layer is estimated to be about 2.7 centimeters. This amount of settlement is expected to have minimal impact on overall liner or basin stability (Chen-Northern 1991b). Settlement calculations are provided in *Calculations for Liquid Effluent Retention Facility Part B Permit Application* (HNF 1997).

The load bearing capacity of the foundation material, based on the soil analysis discussed previously, is estimated at about 48,800 kilograms per square meter [maximum advisable presumptive bearing capacity (Hough 1969)]. Anticipated static and dynamic loading from a full basin is estimated to be less than 9,000 kilograms per square meter (Section C.5.2.1.3), which provides an ample factor of safety.

When the basins are empty, excess hydrostatic pressure in the foundation materials under the liner system theoretically could result in uplift and damage. However, because the native soil forming the foundations is unsaturated and relatively permeable, and because the water table is located at a considerable depth beneath the basins, any infiltration of surface water at the edge of the basin is expected to travel predominantly downward and away from the basins, rather than collecting under the excavation itself. No gas is expected in the foundation because gas-generating organic materials are not present.

Subsidence of undisturbed foundation materials is generally the result of fluid extraction (water or petroleum), mining, or karst topography. Neither petroleum, mineral resources, nor karst are believed to be present in the sediments overlying the Columbia River basalts. Potential groundwater resources do exist below the LERF. Even if these sediments were to consolidate from fluid withdrawal, their depth most likely would produce a broad, gently sloping area of subsidence that would not cause significant strains in the LERF liner system. Consequently, the potential for subsidence related failures are expected to be negligible.

Borings at the LERF site, and extensive additional borings in the 200 East Area, have not identified any significant quantities of soluble materials in the foundation soil or underlying sediments (Last et al. 1989). Consequently, the potential for sinkholes is considered negligible.

C.5.2.4 Liner System Exposure Prevention

Both primary and secondary geomembranes and the floating cover are stabilized with carbon black to prevent degradation from UV light. Furthermore, none of the liner layers experience long-term exposure to the elements. During construction, thin polyethylene sheeting was used to maintain optimum moisture content and provide protection from the wind for the soil/bentonite layer until the secondary geomembrane was laid in place. The secondary geomembrane was covered by the geonet and geotextile as soon as quality control testing was complete. Once the geotextile layer was completed, drainage material immediately was placed over the geotextile. The final (upper) geotextile layer was placed over the drainage gravel and immediately covered by the bentonite carpet liner. This was covered immediately, in turn, by the primary high-density polyethylene liner.

Both high-density polyethylene liners, geotextile layers, and geonet are anchored permanently to a concrete wall at the top of the basin berm. During construction, liners were held in place with many

sandbags on both the basin bottoms and side slopes to prevent wind from lifting and damaging the materials. Calculations were performed to determine the amount of fluid needed in a basin to prevent wind lift damage to the primary geomembrane. Approximately 15 to 20 centimeters of solution are kept in each basin to minimize the potential for uplifting the primary liner (HNF 1997).

The entire lining system is covered by a very low-density polyethylene floating cover that is bolted to the concrete anchor wall. The floating cover prevents evaporation and intrusion from dust, precipitation, vegetation, animals, and birds. A patented tensioning system is employed to prevent wind from lifting the cover and automatically accommodate changes in liquid level in the basins. The cover tension mechanism consists of a cable running from the flexible geosynthetic cover over a pulley on the tension tower (located on the concrete anchor wall) to a dead man anchor. These anchors (blocks) simply hang from the cables on the exterior side of the tension towers. The anchor wall also provides for solid attachment of the liner layers and the cover, using a 6.4-millimeter batten and neoprene gasket to bolt the layers to the concrete wall, effectively sealing the basin from the intrusion of light, precipitation, and airborne dust (Figure C.16).

The floating cover, made of very low-density polyethylene with UV light inhibitors, is not anticipated to experience unacceptable degradation during the service life of the LERF. The very low-density polyethylene material contains carbon black for UV light protection, anti-oxidants to prevent heat degradation, and seaming enhancers to improve its ability to be welded. A typical manufacturer's limited warranty for weathering of very low-density polyethylene products is 20 years (Poly America, undated). This provides a margin of safety for the anticipated medium-term use of the LERF for aqueous waste storage.

The upper 3.4 to 4.6 meters of the sidewall liner also could experience stresses in response to temperature changes. Accommodation of thermal influences for the LERF geosynthetic layers is affected by inclusion of sufficient slack as the liners were installed. Calculations demonstrate that approximately 67 centimeters of slack is required in the long basin bottom dimension, 46 centimeters across the basin, and 34 centimeters from the bottom of the basin to the top of the basin wall (HNF 1997).

Thermal stresses also are experienced by the floating cover. As with the geomembranes, sufficient slack was included in the design to accommodate thermal contraction and expansion.

C.5.2.4.1 Liner Repairs During Operations

Should repair of a basin liner be required while the basin is in operation, the basin contents will be transferred to the 200 Area ETF or another available basin. After the liner around the leaking section is cleaned, repairs to the geomembrane will be made by the application of a piece of high-density polyethylene sheeting, sufficient in size to extend approximately 8 to 15 centimeters beyond the damaged area, or as recommended by the vendor. A round or oval patch will be installed using the same type of equipment and criteria used for the initial field installations.

C.5.2.4.2 Control of Air Emissions

The floating covers limit evaporation of aqueous waste and releases of volatile organic compounds into the atmosphere. To accommodate volumetric changes in the air between the fluid in the basin and the cover, and to avoid problems related to 'sealing' the basins too tightly, each basin is equipped with a carbon filter breather vent system. Any air escaping from the basins must pass through this vent, consisting of a pipe that penetrates the anchor wall and extends into a carbon adsorption filter unit.

C.5.2.5 Liner Coverage

The liner system covers the entire ground surface that underlies the retention basins. The primary liner extends up the side slopes to a concrete anchor wall at the top of the dike encircling the entire basin (Figure C.16).

C.5.3 Prevention of Overtopping

Overtopping prevention is accomplished through administrative controls and liquid-level instrumentation installed in each basin. The instrumentation includes local liquid-level indication as well as remote indication at the ETF. Before an aqueous waste is transferred into a basin, administrative controls are implemented to ensure overtopping will not occur during the transfer. The volume of feed to be transferred is compared to the available volume in the receiving basin. The transfer is not initiated unless there is sufficient volume available in the receiving basin or a cut-off level is established. The transfer into the basin would be stopped when this cut-off level is reached.

In the event of a 100-year, 24-hour storm event, precipitation would accumulate on the basin covers. Through the self-tensioning design of the basin covers and maintenance of adequate freeboard, all accumulated precipitation would be contained on the covers and none would flow over the dikes or anchor walls. The 100-year, 24-hour storm is expected to deliver 5.3 centimeters of rain or approximately 61 centimeters of snow. Cover specifications include the requirement that the covers be able to withstand the load from this amount of precipitation. Because the cover floats on the surface of the fluid in the basin, the fluid itself provides the primary support for the weight of the accumulated precipitation. Through the cover self-tensioning mechanism, there is ample 'give' to accommodate the overlying load without overstressing the anchor and attachment points.

Rainwater and snow evaporate readily from the cover, particularly in the arid Hanford Facility climate, where evaporation rates exceed precipitation rates for most months of the year. The black color of the cover further enhances evaporation. Thus, the floating cover prevents the intrusion of precipitation into the basin and provides for evaporation of accumulated rain or snow.

C.5.3.1 Freeboard

Under current operating conditions, 0.61 meter of freeboard is maintained at each LERF basin, which corresponds to an operating level of 6.8 meters, or 29.5 million liters.

C.5.3.2 Immediate Flow Shutoff

The mechanism for transferring aqueous waste is either through pump transfers with on/off switches or through gravity transfers with isolation valves. These methods provide positive ability to shut off transfers immediately in the event of overtopping. Overtopping a basin during a transfer is very unlikely because the low flow rate into the basin provides long response times. At a flow rate of 284 liters per minute, approximately 11 days would be required to fill a LERF basin from the 6.8-meter operating level (i.e., 0.61 meter of freeboard) to maximum capacity of 34 million liters (i.e., the 7.4-meter level).

C.5.3.3 Outflow Destination

Aqueous waste in the LERF is transferred routinely to 200 Area ETF for treatment. However, should it be necessary to immediately empty a basin, the aqueous waste either would be transferred to the 200 Area ETF for treatment or transferred to another basin (or basins), whichever is faster. If necessary a temporary pumping system may be installed to increase the transfer rate.

C.5.4 Structural Integrity of Dikes

The structural integrity of the dikes was certified attesting to the structural integrity of the dikes, signed by a qualified, registered professional engineer.

C.5.4.1 Dike Design, Construction, and Maintenance

The dikes of the LERF are constructed of onsite native soils, generally consisting of cobbles and gravels. Well-graded mixtures were specified, with cobbles up to 15 centimeters in the largest dimension, but not constituting more than 20 percent of the volume of the fill. The dikes are designed with a 3:1 (3 units horizontal to 1 unit vertical) slope on the basin side, and 2.25:1 on the exterior side. The dikes are approximately 8.2 meters high from the bottom of the basin, and 3 meters above grade.

Calculations were performed to verify the structural integrity of the dikes (HNF 1997). The calculations demonstrate that the structural strength of the dikes is such that, without dependence on any lining system, the sides of the basins can withstand the pressure exerted by the maximum allowable quantity of fluid in the impoundment. The dikes have a factor of safety greater than 2.5 against failure by sliding.

C.5.4.2 Dike Stability and Protection

In the following paragraphs, various aspects of stability for the LERF dikes and the concrete anchor wall are presented, including slope failure, hydrostatic pressure, and protection from the environment.

Failure in Dike/Impoundment Cut Slopes. A slope stability analysis was performed to determine the factor of safety against slope failure. The computer program 'PCSTABL5' from Purdue University, using the modified Janbu Method, was employed to evaluate slope stability under both static and seismic loading cases. One hundred surfaces per run were generated and analyzed. The assumptions used were as follows (Chen-Northern 1991b):

- Weight of gravel: 2,160 kilograms per cubic meter
- Maximum dry density of gravel: 2,315 kilograms per cubic meter
- Mohr-Coulomb shear strength angle for gravel: minimum 33 degrees
- Weight of soil/bentonite: 1,600 kilograms per cubic meter
- Mohr-Coulomb shear strength angle for soil/bentonite: minimum 30 degrees
- Slope: 3 horizontal: 1 vertical
- No fluid in impoundment (worst case for stability)
- Soils at in-place moisture (not saturated conditions)

Results of the static stability analysis showed that the dike slopes were stable with a minimum factor of safety of 1.77 (Chen-Northern 1991b).

The standard horizontal acceleration required in the *Hanford Plant Standards*, "Standard Architectural-Civil Design Criteria, Design Loads for Facilities" (DOE-RL 1988), for structures on the Hanford Site is 0.12 g. Adequate factors of safety for cut slopes in units of this type generally are considered 1.5 for static conditions and 1.1 for dynamic stability (Golder 1989). Results of the stability analysis showed that the LERF basin slopes were stable under horizontal accelerations of 0.10 and 0.15 g, with minimum factors of safety of 1.32 and 1.17, respectively (Chen-Northern 1991b). Printouts from the PCSTABL5 program are provided in *Calculations for Liquid Effluent Retention Facility Part B Permit Application* (HNF 1997).

Hydrostatic Pressure. Failure of the dikes due to buildup of hydrostatic pressure, caused by failure of the leachate system or liners, is very unlikely. The liner system is constructed with two essentially impermeable layers consisting of a synthetic layer overlying a soil layer with low-hydraulic conductivity. It would require a catastrophic failure of both liners to cause hydrostatic pressures that could endanger dike integrity. Routine inspections of the leachate detection system, indicating quantities of leachate removed from the basins, provide an early warning of leakage or operational problems that could lead to excessive hydrostatic pressure. A significant precipitation event (e.g., a 100-year, 24-hour storm) will not create a hydrostatic problem because the interior sidewalls of the basins are covered completely by the liners. The covers can accommodate this volume of precipitation without overtopping the dike (Section C.5.3), and the coarse nature of the dike and foundation materials on the exterior walls provides for rapid drainage of precipitation away from the basins.

Protection from Root Systems. Risk to structural integrity of the dikes because of penetrating root systems is minimal. Excavation and construction removed all vegetation on and around the impoundments, and native plants (such as sagebrush) grow very slowly. The large grain size of the cobbles and gravel used as dike construction material do not provide an advantageous germination medium for native plants. Should plants with extending roots become apparent on the dike walls, the plants will be controlled with appropriate herbicide application.

Protection from Burrowing Mammals. The cobble size materials that make up the dike construction material and the exposed nature of the dike sidewalls do not offer an advantageous habitat for burrowing mammals. Lack of vegetation on the LERF site discourages foraging. The risk to structural integrity of the dikes from burrowing mammals is therefore minimal. Periodic visual inspections of the dikes provide observations of any animals present. Should burrowing mammals be noted onsite, appropriate pest control methods such as trapping or application of rodenticides will be employed.

Protective Cover. Approximately 7.6 centimeters of crushed gravel serve as the cover of the exterior dike walls. This coarse material is inherently resistant to the effect of wind because of its large grain size. Total annual precipitation is low (16 centimeters) and a significant storm event (e.g., a 100-year, 24-hour storm) could result in about 5.3 centimeters of precipitation in a 24-hour period. The absorbent capacity of the soil exceeds this precipitation rate; therefore, the impact of wind and precipitation run-on to the exterior dike walls will be minimal.

C.5.5 Piping Systems

Aqueous waste from the 242-A Evaporator is transferred to the LERF using a pump located in the 242-A Evaporator and approximately 1,500 meters of pipe, consisting of a 3-inch carrier pipe within a 6-inch outer containment pipeline. Flow through the pump is controlled through a valve at flow rates from 150 to 300 liters per minute. The pipeline exits the 242-A Evaporator below grade and remains below grade at a minimum 1.2 meter depth for freeze protection, until the pipeline emerges at the LERF catch basin, at the corner of each basin. All piping at the catch basin that is less than 1.2 meters below grade is wrapped with electric heat tracing tape and insulated for protection from freezing.

The transfer line from the 242-A Evaporator is centrifugally cast, fiberglass-reinforced epoxy thermoset resin pressure pipe fabricated to meet the requirements of ASME D2997 (ASME 1984). The 3-inch carrier piping is centered and supported within 6-inch containment piping. Pipe supports are fabricated of the same material as the pipe, and meet the strength requirements of ANSI B31.3 (ANSI 1987) for dead weight, thermal, and seismic loads.A catch basin is provided at the northwest corner of each basin where piping extends from the basin to allow for basin-to-basin and basin-to-200 Area ETF liquid transfers. Drawing H-2-88766, Sheets 1 through 4, provide schematic diagrams of the piping system at LERF. Drawing H-2-79604 provides details of the piping from the 242-A Evaporator to LERF.

C.5.5.1 Secondary Containment System for Piping

The 6-inch containment piping encases the 3-inch carrier pipe from the 242-A Evaporator to the LERF. All of the piping and fittings that are not directly over a catch basin or a basin liner are of this pipe-within-a-pipe construction. A catch basin is provided at the northwest corner of each basin where the inlet pipes, leachate risers, and transfer pipe risers emerge from the basin. The catch basin consists of a 20-centimeter-thick concrete pad at the top of the dike. The perimeter of the catch basin has a 20-centimeter-high curb, and the concrete is coated with a chemical resistant epoxy sealant. The concrete pad is sloped so that any leaks or spills from the piping or pipe connections will drain into the basin. The catch basin provides an access point for inspecting, servicing, and operating various systems such as transfer valving, leachate level instrumentation and leachate pump. Drawing H-2-79593 provides a schematic diagram of the catch basins.

C.5.5.2 Leak Detection System

Single-point electronic leak detection elements are installed along the transfer line at 305-meter intervals. The leak detection elements are located in the bottom of specially designed test risers. Each sensor element employs a conductivity sensor, which is connected to a cable leading back to the 242-A Evaporator control room. If a leak develops in the carrier pipe, fluid will travel down the exterior surface of the carrier pipe or the interior of the containment pipe. As moisture contacts a sensor unit, a general alarm sounds in the 242-A Evaporator and 200 Area ETF control rooms and the zone of the Sensor unit causing the general alarm can be determined using the 242-A Evaporator leak detection monitoring panel. Upon verification of a leak, the pump located in the 242-A Evaporator is shut down, stopping the flow of aqueous waste through the transfer line. A low-volume air purge of the annulus between the carrier pipe and the containment pipe is provided to prevent condensation buildup and minimize false alarms by the leak detection elements.

The catch basins have conductivity leak detectors that alarm in the 242-A Evaporator and 200 Area ETF control rooms. Leaks into the catch basins drain back to the basin through a 5.1-centimeter drain on the floor of the catch basin.

C.5.5.3 Certification

Although an integrity assessment is not required for piping associated with surface impoundments, an assessment of the transfer liner was performed, including a hydrostatic leak/pressure test at 10.5 kilograms per square centimeter gauge. A statement by an independent, qualified, registered professional engineer attesting to the integrity of the piping system is included in *Integrity Assessment Report for the 242-A Evaporator/LERF Waste Transfer Piping, Project W105* (WHC 1993), along with the results of the leak/pressure test.

C.5.6 Double Liner and Leak Detection, Collection, and Removal System

The double-liner system for LERF is discussed in Section C.5.2. The leachate detection, collection, and removal system (Figure C.18 and Figure C.19) was designed and constructed to remove leachate that might permeate the primary liner. System components for each basin include:

- 30.5-centimeter layer of drainage gravel below the primary liner at the bottom of the basin
- Geonet below the primary liner on the sidewalls to direct leachate to the gravel layer
- 3.0-meter by 1.8-meter by 0.30-meter-deep leachate collection sump consisting of a 25 millimeter high-density polyethylene flat stock, geotextile to trap large particles in the leachate, and 1.5-millimeter high-density polyethylene rub sheet set on the secondary liner
- 10-inch and 4-inch perforated leachate high-density polyethylene riser pipes from the leachate collection sump to the catch basin northwest of the basin
- Leachate collection sump level instrumentation installed in the 4-inch riser
- Level sensors, submersible leachate pump, and 1.5-inch fiberglass-reinforced epoxy thermoset resin pressure piping installed in the 10-inch riser
- Piping at the catch basin to route the leachate through 1.5-inch high-density polyethylene pipe back to the basins

The bottom of the basins has a two percent slope to allow gravity flow of leachate to the leachate collection sump. This exceeds the minimum of 1 percent slope required by WAC 173-303-650(j) for new surface impoundments. Material specifications for the leachate collection system are given in Section C.5.2.1.1.

Calculations demonstrate that fluid from a small hole (2 millimeter) (EPA 1989, p. 122) at the furthest end of the basin, under a low head situation, would travel to the sump in less than 24 hours (HNF 1997).

Additional calculations indicate the capacity of the pump to remove leachate is sufficient to allow time to readily identify a leak and activate emergency procedures (HNF 1997).

Automated controls maintain the fluid level in each leachate sump below 33 centimeters to prevent significant liquid backup into the drainage layer. The leachate pump is activated when the liquid level in the sump reaches about 28 centimeters, and is shut off when the sump liquid level reaches about 18 centimeters. This operation prevents the leachate pump from cycling with no fluid, which could damage the pump. Liquid level control is accomplished with conductivity probes that trigger relays selected specifically for application to submersible pumps and leachate fluids. A flow meter/totalizer on the leachate return pipe measures fluid volumes pumped and pumping rate from the leachate collection sumps, and indicates volume and flow rate on local readouts. Other instrumentation provided is real-time continuous level monitoring with readout at the catch basin and the 242-A Evaporator control room. A sampling port is provided in the leachate piping system at the catch basin. Leak detection is provided through inspections of the leachate flow totalizer readings. For more information on inspections, refer to Addendum I.

The stainless steel leachate pump is designed to deliver 110 liters per minute. The leachate pump returns draw liquid from the sump via 1.5-inch pipe and discharges into the basin through 1.5-inch high-density polyethylene pipe.

C.5.7 Construction Quality Assurance

The construction quality assurance plan and complete report of construction quality assurance inspection and testing results are provided in *242-A Evaporator Interim Retention Basin Construction Quality Assurance Plan* (KEH 1991). A general description of construction quality assurance procedures is outlined in the following paragraphs.

For excavation of the basins and construction of the dikes, regular inspections were conducted to ensure compliance with procedures and drawings, and compaction tests were performed on the dike soils.

For the soil/bentonite layer, test fills were first conducted in accordance with EPA guidance to demonstrate compaction procedures and to confirm compaction and permeability requirements can be met. The ratio of bentonite to soil and moisture content was monitored; lifts did not exceed 15 centimeters before compaction, and specific compaction procedures were followed. Laboratory and field tests of soil properties were performed for each lift and for the completed test fill. The same suite of tests was conducted for each lift during the laying of the soil/bentonite admixture in the basins.

Geotextiles and geomembranes were laid in accordance with detailed procedures and quality assurance programs provided by the manufacturers and installers. These included destructive and nondestructive tests on the geomembrane seams, and documentation of field test results and repairs.

C.5.8 Proposed Action Leakage Rate and Response Action Plan

An action leakage rate limit is established where action must be taken due to excessive leakage from the primary liner. The action leak rate is based on the maximum design flow rate the leak detection system can remove without the fluid head on the bottom liner exceeding 30 centimeters. The limiting factor in the leachate removal rate is the hydraulic conductivity of the drainage gravel. An action leakage rate (also called the rapid or large leak rate) of 20,000 liters per hectare per day was calculated for each basin (WHC 1992b).

When it is determined that the action leakage rate has been exceeded, the response action plan will follow the actions in WAC 173-303-650(11)(b) and (c), which includes notification of Ecology in writing within 7 days, assessing possible causes of the leak, and determining whether waste receipt should be curtailed and/or the basin emptied.

C.5.9 Dike Structural Integrity Engineering Certification

The structural integrity of the dikes was certified attesting to the structural integrity of the dikes, signed by a qualified, registered professional engineer.

C.5.10 Management of Ignitable, Reactive, or Incompatible Wastes

Although ignitable or reactive aqueous waste might be received in small quantities at LERF, such aqueous waste is mixed with dilute solutions in the basins, removing the ignitable or reactive characteristics. For compatibility requirements with the LERF liner, refer to Addendum B, Waste Analysis Plan.

C.6 AIR EMISSIONS CONTROL

This section addresses the 200 Area ETF requirements of Air Emission Standards for Process Vents, under 40 CFR 264, Subpart AA (WAC 173-303-690 incorporated by reference) and Subpart CC. The requirements of 40 CFR 264, Subpart BB (WAC 173-303-691) is not applicable because aqueous waste with 10 percent or greater organic concentration would not be acceptable for processing at the ETF.

C.6.1 Applicability of Subpart AA Standards

The 200 Area ETF evaporator and thin film dryer perform operations that specifically require evaluation for applicability of WAC 173-303-690. Aqueous waste in these units routinely contains greater than 10 parts per million concentrations of organic compounds and are, therefore, subject to air emission requirements under WAC 173-303-690. Organic emissions from all affected process vents on the Hanford Facility must be less than 1.4 kilograms per hour and 2.8 mega grams per year, or control devices must be installed to reduce organic emissions by 95 percent.

The vessel off gas system provides a process vent system. This system provides a slight vacuum on the 200 Area ETF process vessels and tanks (refer to Section C.2.5.2). Two vessel vent header pipes combine and enter the vessel off gas system filter unit consisting of a demister, electric heater, prefilter, high-efficiency particulate air filters, activated carbon absorber, and two exhaust fans (one fan in service while the other is backup). The vessel off gas system filter unit is located in the high-efficiency particulate air filter room west of the process area. The vessel off gas system exhaust discharges into the larger building ventilation system, with the exhaust fans and stack located outside and immediately west of the ETF. The exhaust stack discharge point is 15.5 meters above ground level.

The annual average flow rate for the 200 Area ETF stack (which is the combined vessel off gas and building exhaust flow rates) is 1600 cubic meters per minute with a total annual flow of approximately 8.4 E+08 cubic meters. During waste processing, the airflow through just the vessel off gas system is about 23 standard cubic meters per minute.

Organic emissions occur during waste processing, which occurs less than 310 days each year (i.e., 85 percent operating efficiency). This operating efficiency represents the maximum annual operating time for the ETF, as shutdowns are required during the year for planned maintenance outages and for reconfiguring the 200 Area ETF to accommodate different aqueous waste.

C.6.2 Process Vents - Demonstrating Compliance

This section outlines how the 200 Area ETF complies with the requirements and includes a discussion of the basis for meeting the organic emissions limits, calculations demonstrating compliance, and conditions for reevaluation.

C.6.2.1 Basis for Meeting Limits/Reductions

The 242-A Evaporator and the 200 Area ETF are currently the only operating TSD units that contribute to the Hanford Facility volatile organic emissions under 40 CFR 264, Subpart AA. The combined release rate is currently well below the threshold of 1.4 kilograms per hour or 2,800 kilograms per year of volatile organic compounds. As a result, the 200 Area ETF meets these standards without the use of air pollution control devices.

The amount of organic emissions could change as waste streams are changed, or TSD units are brought online or are deactivated. The organic air emissions summation will be re-evaluated periodically as condition warrants. Operations of the TSD units operating under 40 CFR 264, Subpart AA, will be

controlled to maintain Hanford Facility emissions below the threshold limits or pollution control device(s) will be added, as necessary, to achieve the reduction standards specified under 40 CFR 264, Subpart AA.

C.6.2.2 Demonstrating Compliance

Calculations to determine organic emissions are performed using the following assumptions:

- Maximum flow rate from LERF to 200 Area ETF is 568 liters per minute.
- Emissions of organics from tanks and vessels upstream of the UV/OX process are determined from flow and transfer rates given in *Clean Air Act Requirements, WAC 173-400, As-built Documentation, Project C-018H, 242-A Evaporator/PUREX Plant Process Condensate Treatment Facility* (Adtechs 1995).
- UV/OX reaction rate constants and residence times are used to determine the amount of organics, which are destroyed in the UV/OX process. These constants are given in *200 Area Effluent Treatment Facility Delisting Petition* (DOE/RL 1992).
- All organic compounds that are not destroyed in the UV/OX process are assumed to be emitted from the tanks and vessels into the vessel off gas system.
- No credit for removal of organic compounds in the vessel off gas system carbon absorber unit is taken. The activated carbon absorbers are used if required to reduce organic emissions.

The calculation to determine organic emissions consists of the following steps:

1. Determine the quantity of organics emitted from the tanks or vessels upstream of the UV/OX process, using transfer rate values
2. Determine the concentration of organics in the waste after the UV/OX process using UV/OX reaction rates and residence times. If the 200 Area ETF is configured such that the UV/OX process is not used, a residence time of zero is used in the calculations (i.e., none of the organics are destroyed)
3. Assuming all the remaining organics are emitted, determine the rate which the organics are emitted using the feed flow rate and the concentrations of organics after the UV/OX process
4. The amount of organics emitted from the vessel off gas system is the sum of the amount calculated in steps 1 and 3.

The organic emission rates and quantity of organics emitted during processing are determined using these calculations and are included in the Hanford Facility Operating Record, LERF and 200 Area ETF file.

C.6.2.3 Reevaluating Compliance with Subpart AA Standards

Calculations to determine compliance with Subpart AA will be reviewed when any of the following conditions occur at the 200 Area ETF:

- Changes in the maximum feed rate to the 200 Area ETF (i.e., greater than the 568 liters per minute flow rate)
- Changes in the configuration or operation of the 200 Area ETF that would modify the assumptions given in Section C.6.2.2 (e.g., taking credit for the carbon absorbers as a control device)
- Annual operating time exceeds 310 days.

C.6.3 Applicability of Subpart CC Standards

The air emission standards of 40 CFR 264, Subpart CC apply to tank, surface impoundment, and container storage units that manage wastes with average volatile organic concentrations equal to or exceeding 500 parts per million by weight, based on the hazardous waste composition at the point of origination (61 FR 59972). However, TSD units that are used solely for management of mixed waste are exempt. Mixed waste is managed at the LERF and 200 Area ETF and dangerous waste could be treated and stored at these TSD units.

TSD owner/operators are not required to determine the concentration of volatile organic compounds in a hazardous waste if the wastes are placed in waste management units that employ air emission controls that comply with the Subpart CC standards. Therefore, the approach to Subpart CC compliance at the LERF and 200 Area ETF is to demonstrate that the LERF and 200 Area ETF meet the Subpart CC control standards (40 CFR 264.1084 – 40 CFR 264.1086).

C.6.3.1 Demonstrating Compliance with Subpart CC for Tanks

Since the 200 Area ETF tanks already have process vents regulated under 40 CFR 264, Subpart AA (WAC 173-303-690), they are exempt from Subpart CC [40 CFR 264.1080(b)(8)].

C.6.3.2 Demonstrating Compliance with Subpart CC for Containers

Container Level 1 and Level 2 standards are met at the 200 Area ETF by managing all dangerous and/or mixed wastes in U.S. Department of Transportation containers [40 CFR 264.1086(f)]. Level 1 containers are those that store more than 0.1 cubic meters and less than or equal to 0.46 cubic meters. Level 2 containers are used to store more than 0.46 cubic meters of waste, which are in 'light material service'. Light material service is defined where a waste in the container has one or more organic constituents with a vapor pressure greater than 0.3 kilopascals at 20 C, and the total concentration of such constituents is greater than or equal to 20 percent by weight.

The monitoring requirements for Level 1 and Level 2 containers include a visual inspection when the container is received at the 200 Area ETF and when the waste is initially placed in the container. Additionally, at least once every 12 months when stored onsite for 1 year or more, these containers must be inspected.

If compliant containers are not used at the 200 Area ETF, alternate container management practices are used that comply with the Level 1 standards. Specifically, the Level 1 standards allow for a "container equipped with a cover and closure devices that form a continuous barrier over the container openings such that when the cover and closure devices are secured in the closed position there are no visible holes, gaps, or other open spaces into the interior of the container. The cover may be a separate cover installed on the container...or may be an integral part of the container structural design…" [40 CFR 264.1086(c)(1)(ii)]. An organic-vapor-suppressing barrier, such as foam, may also be used [40 CFR 264.1086(c)(1)(iii)]. Section C.3 provides detail on container management practices at the 200 Area ETF.

Container Level 3 standards apply when a container is used for the "treatment of a hazardous waste by a waste stabilization process" [40 CFR 264.1086(2)]. Because treatment in containers using the stabilization process is not provided at the 200 Area ETF, these standards do not apply.

C.6.3.3 Demonstrating Compliance with Subpart CC for Surface Impoundments

The Subpart CC emission standards are met at LERF using a floating membrane cover that is constructed of very-low-density polyethylene that forms a continuous barrier over the entire surface area [40 CFR 264.1085(c)]. This membrane has both organic permeability properties equivalent to a high-density polyethylene cover and chemical/physical properties that maintain the material integrity for the intended service life of the material. The additional requirements for the floating cover at the LERF have been met (Section C.5.2.4).

C.7 ENGINEERING DRAWINGS

C.7.1 Liquid Effluent Retention Facility

Drawings of the containment systems at the LERF are summarized in Table C.1. Because the failure of these containment systems at LERF could lead to the release of dangerous waste into the environment, modifications that affect these containment systems will be submitted to the Washington State Department of Ecology, as a Class 1, 2, or 3 Permit modification, as required by WAC 173-303-830.

Table C.1. Liquid Effluent Retention Facility Containment System

LERF System	Drawing Number	Drawing Title
Bottom Liner	H-2-79590, Sheet 1	Civil Plan, Sections and Details; Cell Basin Bottom Liner
Top Liner	H-2-79591, Sheet 1	Civil Plan, Sections and Details; Cell Basin Bottom Liner
Catch Basin	H-2-79593, Sheet 1	Civil Plan, Section and Details; Catch Basin

The drawings identified in Table C.2 illustrate the piping and instrumentation configuration within LERF, and of the transfer piping systems between the LERF and the 242-A Evaporator. These drawings are provided for general information and to demonstrate the adequacy of the design of the LERF as a surface impoundment.

Table C.2. Liquid Effluent Retention Facility Piping and Instrumentation

LERF System	Drawing Number	Drawing Title
Transfer Piping to 242-A Evaporator	H-2-79604, Sheet 1	Piping Plot and Key Plans; 242-A Evaporator Condensate Stream
LERF Piping and Instrumentation	H-2-88766, Sheet 1	P&ID; LERF Basin and ETF Influent
	H-2-88766, Sheet 2	P&ID; LERF Basin and ETF Influent
	H-2-88766, Sheet 3	P&ID; LERF Basin and ETF Influent
	H-2-88766, Sheet 4	P&ID; LERF Basin and ETF Influent
Legend	H-2-89351, Sheet 1	Piping & Instrumentation Diagram - Legend

C.7.2 200 Area Effluent Treatment Facility

Drawings of the secondary containment systems for the 200 Area ETF containers, and tanks and process units, and for the Load-In Tanks are summarized in Table C.3. Because the failure of the secondary containment systems could lead to the release of dangerous waste into the environment, modifications, which affect the secondary containment systems, will be submitted to the Washington State Department of Ecology, as a Class 1, 2, or 3 Permit modification, as required by WAC 173-303-830.

Table C.3. Effluent Treatment Facility and Load-In Station Secondary Containment Systems

200 Area ETF Process Unit	Drawing Number	Drawing Title
Surge Tank, Process/ Container Storage Areas and Trenches - Foundation and Containment	H-2-89063, Sheet 1	Architectural/structural – Foundation and Grade Beam Plan
Sump Tank Containment	H-2-89065, Sheet 1	Architectural/structural – Foundation, Sections and Detail
Verification Tank Foundation and Containment	H-2-89068, Sheet 1	Architectural/structural – Verification Tank Foundation
Load-In Facility Foundation and Containment	H-2-817970, Sheet 1	Structural – ETF Truck Load-in Facility Plans and Sections
Load-In Facility Foundation and Containment	H-2-817970, Sheet 2	Structural – ETF Truck Load-in Facility Sections and Details

The drawings identified in Table C.4 provide an illustration of the piping and instrumentation configuration for the major process units and tanks at the ETF, and the Load-In Tanks. Drawings of the transfer piping systems between the LERF and200 Area ETF, and between the Load-In Station and the 200 Area ETF also are presented in this table. These drawings are provided for general information and to demonstrate the adequacy of the design of the tank systems.

Table C.4. Major Process Units and Tanks at the Effluent Treatment Facility and Load-In Station

200 Area ETF Process Unit	Drawing Number	Drawing Title
Load-In Facility	H-2-817974, Sheet 1	P&ID – ETF Truck Load-In Facility
Load-In Facility	H-2-817974, Sheet 2	P&ID – ETF Truck Load-In Facility
Surge Tank	H-2-89337, Sheet 1	P&ID – Surge Tank System
UV/Oxidation	H-2-88976, Sheet 1	P&ID – UV Oxidizer Part 1
UV/Oxidation	H-2-89342, Sheet 1	P&ID – UV Oxidizer Part 2
Reverse Osmosis	H-2-88980, Sheet 1	P&ID – 1st RO Stage
Reverse Osmosis	H-2-88982, Sheet 1	P&ID – 2nd RO Stage
IX/Polishers	H-2-88983, Sheet 1	P&ID – Polisher
Verification Tanks	H-2-88985, Sheet 1	P&ID – Verification Tank System
ETF Evaporator	H-2-89335, Sheet 1	P&ID – Evaporator
Thin Film Dryer	H-2-88989, Sheet 1	P&ID – Thin Film Dryer
Transfer Piping from LERF to ETF	H-2-88768, Sheet 1	Piping Plan/Profile 4"– 60M-002-M17 and 3"-60M-001-M17
Transfer Piping from Load-In Facility to ETF	H-2-817969, Sheet 1	Civil – ETF Truck Load-In Facility Site Plan

Table C.5. 200 Area Effluent Treatment Facility Tank Systems Information

Tank Description	Material of Construction	Maximum Tank Capacity[1] liters	Inner diameter meters	Height meters	Shell Thickness[2] centimeters	Corrosion Protection[3]
Load-in tanks 59A-TK-109/-117 (2)	304 SS	34,200	3.6	4.7	0.64	Type 304 SS
Load-in tank 59A-TK-1	FRP	26,000	3.0	3.8	0.48 (dome) 0.63 (walls & bottom)	FRP
Surge tank	304 SS	452,000	7.9	9.2	0.48	Type 304 SS
pH adjustment tank	304 SS	16,700	3.0	2.5	0.64	Type 304 SS
First RO feed tank	304 SS	20,600	3.0	3.2	0.64	Type 304 SS
Second RO feed tank	304 SS	9,000	Nonround tank 3.0 m x 1.5 m	1.5	0.48 w/rib stiffeners	Type 304 SS
Effluent pH adjustment tank	304 SS	14,400	2.4	3.6	0.64	Type 304 SS
Verification tanks (3)	Carbon steel with epoxy lining	2,940,000	18.3	11.4	0.79	epoxy coating
Secondary waste receiving tanks (2)	304 SS	73,800	4.3	5.7	0.64	Type 304 SS
Concentrate tanks (2)	316L SS	24,200	3.0	3.8	0.64	Type 316 SS
ETF evaporator (Vapor Body)	Alloy 625	20,000	2.4	6.8	variable	Alloy 625
Distillate flash tank	304 SS	910	Horizontal tank 0.76	Length 2.2	0.7	304 SS
Sump tank 1	304 SS	4,400	1.5 x 1.5	3.4	0.48	304 SS
Sump tank 2	304 SS	4,400	1.5 x 1.5	3.4	0.48	304 SS

[1] The maximum operating volume of the tanks is identified.
[2] The nominal thickness of ETF tanks is represented.
[3] Type 304 SS, 304L, 316 SS and alloy 625 provide corrosion protection.
304 SS = stainless steel type 304 or 304L.
316L SS = stainless steel type 316L
FRP = Fiberglass-reinforced plastic.

Table C.6. 200 Area Effluent Treatment Facility Additional Tank System Information

Tank Description	Liner Materials	Pressure Controls	Foundation Materials	Structural Support	Seams	Connections
Load-in tanks 59A-TK-109/-117 (2)	None	vent to atmosphere	concrete slab	SS skirt bolted to concrete	welded	flanged
Load-in tank 59A-TK-1	None	vent to atmosphere	concrete slab	bolted to concrete	none	flanged
Surge tank	None	vacuum breaker valve/vent to VOG	reinforced concrete ring plus concrete slab	structural steel on concrete base	welded	flanged
pH adjustment tank	None	vent to VOG	concrete slab	carbon steel skirt	welded	flanged
First RO feed tank	None	vent to VOG	concrete slab	carbon steel skirt	welded	flanged
Second RO feed tank	None	vent to VOG	concrete slab	carbon steel frame	welded	flanged
Effluent pH adjustment tank	None	vent to VOG	concrete slab	carbon steel skirt	welded	flanged
Verification tanks (3)	Epoxy	filtered vent to atmosphere	reinforced concrete ring plus concrete slab	structural steel on concrete base	welded	flanged
Secondary waste receiving tanks (2)	None	vent to VOG	concrete slab	carbon steel skirt	welded	flanged
Concentrate tanks (2)	None	vent to VOG	concrete slab	carbon steel skirt	welded	flanged
ETF evaporator (vapor body)	None	pressure indicator/pressure relief valve vapor vent to DFT/VOG	concrete slab	carbon steel frame	welded	flanged
Distillate flash tank	None	Pressure relief valve/vent to vent gas cooler/VOG	concrete slab	carbon steel I-beam and cradle	welded	flanged
Sump tank 1	None	vent to VOG	concrete containment	reinforced concrete containment basin	welded	flanged
Sump tank 2	None	vent to VOG	concrete containment	reinforced concrete containment basin	welded	flanged

DFT = distillate flash tank
VOG = vessel off gas system

Table C.7. Ancillary Equipment and Material Data

System	Ancillary Equipment	Number	Material
Load-in tanks	Load-in/transfer pumps (2)	2025ED-P-103A/-103B	316 SS
		2025ED-P-001A/-001B	Cast iron
	Load-in filters (6)	59A-FL-001/-002/-003/ -004/-005/-006	304 SS
Surge tank	Surge tank pumps (3)	2025E-60A-P-1A/-1B/-1C	304 SS
Rough filter	Rough filter	2025E-60B-FL-1	304 SS
UV/OX	UV oxidation inlet cooler	2025E-60B-E-1	316 SS
	UV oxidizers (4)	2025E-60D-UV-1A/-1B/-2A/-2B	316 SS
pH adjustment	pH adjustment pumps (2)	2025E-60C-P-1A/-1B	304 SS
Peroxide decomposer	H2O2 decomposers (2)	2025E-60D-CO-1A/-1B	CS with epoxy coating
Fine filter	Fine filter	2025E-60B-FL-2	304 SS
Degasification	Degasification column inlet cooler	2025E-60E-E-1	316 SS
	Degasification column	2025E-60E-CO-1	FRP
	Degasification pumps (2)	2025E-60E-P-1A/-1B	316 SS
RO	Feed/booster pumps (6)	2025E-60F-P-1A/-1B/-2A/-2B/-3A/-3B	304 SS
	Reverse osmosis arrays (21)	2025E-60F-RO-01 through -21	Membranes: polyamide Outer piping: 304 SS
IX/Polishers	Polishers (3)	2025E-60G-IX-1A/-1B-1C	CS with epoxy coating
	Resins strainers (3)	2025E-60G-S-1A/-1B/-1C	304 SS
Effluent pH adjustment	Recirculation/transfer pumps (2)	2025E-60C-P-2A/-2B	304 SS/PVC
Verification tanks	Return pump	2025E-60H-P-1	304 SS
	Transfer pumps (2)	2025E-60H-P-2A/-2B	
Secondary waste receiving tanks	Secondary waste feed pumps (2)	2025E-60I-P-1A/-1B	304 SS
ETF evaporator system	Feed/distillate heat exchanger	2025E-60I-E-02	Tubes: 316 SS Shell: 304 SS
	Heater (reboiler)	2025E-60I-E-01	Tubes: alloy 625 Shell: 304 SS
	Recirculation pump	2025E-60I-P-02	316 SS
	Concentrate transfer pump	2025E-60I-P-04	316 SS
	Entrainment separator	2025E-60I-DE-01	Top section: 316 SS Bottom section: alloy 625
	Vapor compressor (incl. silencers)	2025E-60I-C-01	304 SS
	Silencer drain pump	2025E-60I-P-06	316 SS
	Level control tank	2025E-60I-TK-5	304 SS
	Distillate flash tank pump	2025E-60I-P-03	316 SS
Concentrate tanks	Concentrate circulation pumps (2)	2025E-60J-P-1A/-1B	316 SS
Thin film dryer	Concentrate feed pump	2025E-60J-P-2	316 SS
	Thin film dryer	2025E-60J-D-1	Interior surfaces: alloy 625 Rotor and blades: 316 SS
	Powder hopper	2025E-60J-H-1	316 SS
	Spray condenser	2025E-60J-DE-01	316 SS
	Distillate condenser	2025E-60J-CND-01	Tubes: 304 SS Shell: CS
	Dryer distillate pump	2025E-60J-P-3	316 SS
Resin dewatering	Dewatering pump	2025E-80E-P-1	

Table C.8. Concrete and Masonary Coatings

Location	Product Name	Applied Film Thickness, Estimated
ETF Process and Container Storage Areas		
Floor: Topcoat	Steelcote Floor-Nu Finish[1]	2 coats at 10-12 mils
Floor: Primer	Steelcote Monomid Hi-Build[1]	2.0 mils
Walls to 7 feet, Doors & Jambs	Chemproof PermaCoat 4000 Vertical[2]	2 coats at 12-16 mils
Load-in Station Tank Pit		
Floor and Walls	Ameron Amercoat 351[3]	2 coats at 8.0-12 mils
Surge Tank and Verification Tank Berms		
Floors (and Walls at Surge Tank): Topcoat	KCC Corrosion Control Elasti-Liner I[4]	80 mils
Floors (and Walls at Surge Tank): Primer	KCC Corrosion Control Techni-Plus E3[4]	5.0-7.0 mils

[1]Floor-Nu Finish and Monomid Hi-Build are trademarks of Steelcote Manufacturing, Incorporated
[2]PermaCoat is a trademark of Chemproof Polymers, Incorporated
[3]Amercoat is a trademark of Ameron International, Incorporated
[4]Elasti-Liner and Techni-Plus are trademarks of KCC Corrosion Control, Incorporated

Table C.9. Geomembrane Material Specifications

Property	Value
Specific gravity	0.932 to 0.950
Melt flow index	1.0 g/10 min., maximum
Thickness (thickness of flow marks shall not exceed 200% of the nominal liner thickness)	60 mil ∓10% (1.5 mm ∓ 10%)
Carbon black content	1.8 to 3%, bottom liner 2 to 3% top liner
Tensile properties (each direction)	
Tensile strength at yield	21.5 kgf/cm width, minimum
Tensile strength at break	32.2 kgf/cm width, minimum
Elongation at yield	10%, minimum
Elongation at break	500%, minimum
Tear resistance	13.6 kgf, minimum
Puncture resistance	31.3 kgf, minimum
Low temperature/brittleness	-40° C, maximum
Dimensional (%change each direction)	∓2%, maximum
Environmental stress crack	750 h, minimum
Water absorption	0.1 maximum and weight change
Hydrostatic resistance	316,000 kgf/m^2
Oxidation induction time (200 C/l atm. O_2)	90 minutes

Reference: Construction Specifications (KEH 1990b). Format uses NSF 54 table for high-density polyethylene as a guide (NSF 1985). However, RCRA values for dimensional stability and environmental stress crack have been added.

%	=	percent	max	=	maximum
g	=	gram	kgf	=	kilograms force
min	=	minute	m	=	meters
h	=	hour	mm	=	millimeters

Table C.10. Drainage Gravel Specifications

Property	Value
Sieve size	
25 millimeters	100 wt% passing
19 millimeters	80 – 100 wt% passing
9.5 millimeters	10 – 40 wt% passing
4.75 millimeters	0 – 4 wt% passing
Permeability	0.1 cm/sec, minimum

Reference: Sieve size is from WSDOT M41-10-88, Section 9.03.1(3)C for Grading No. 5 (WSDOT 1988).
Permeability requirement is from WAC 173-303-650(2)(j) for new surface impoundments.

Figure C.1. Liquid Effluent Retention Facility Layout

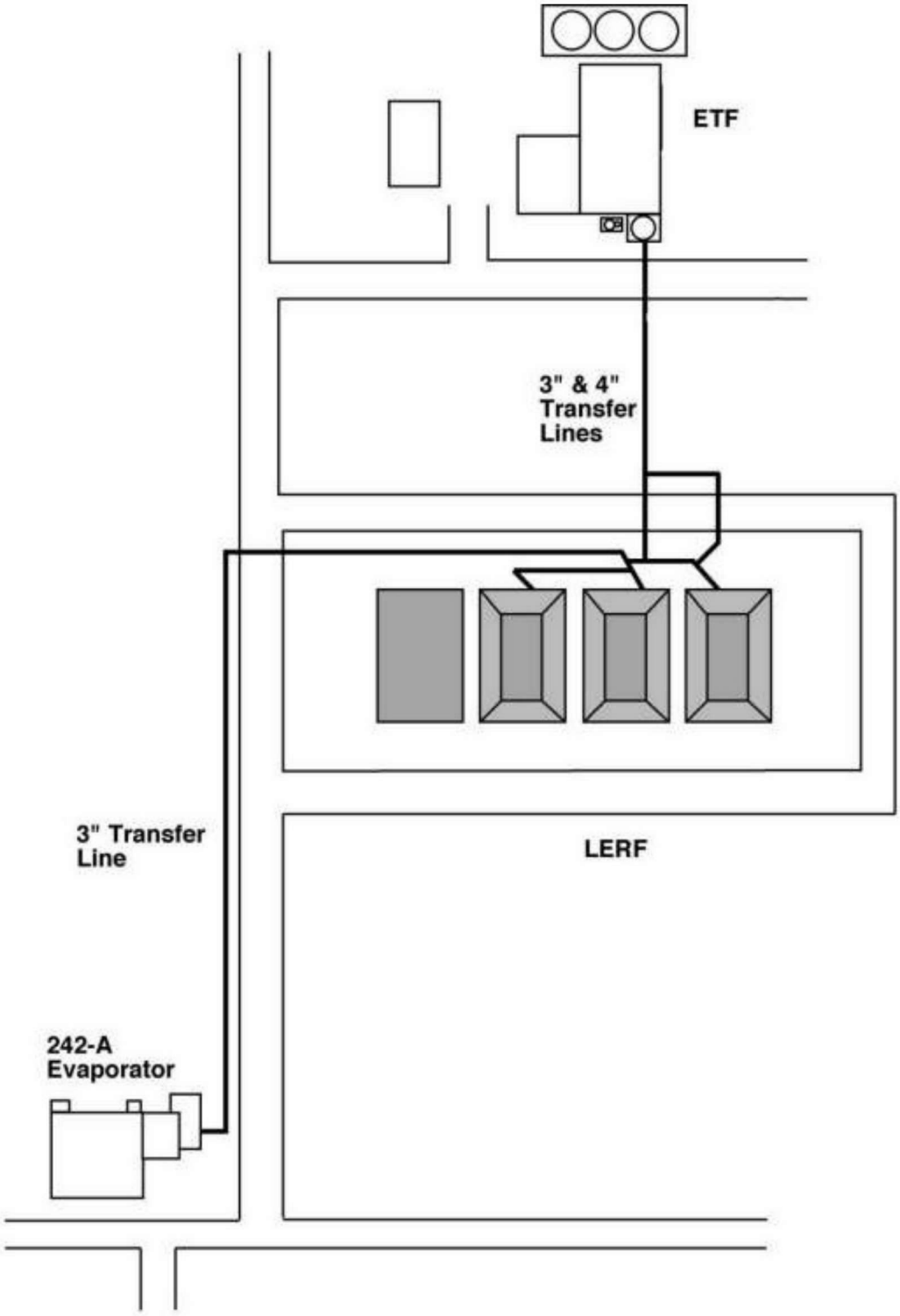

ETF = Effluent Treatment Facility
LERF = Liquid Effluent Retention Facility

M0704-3.5
4-21-07

Figure C.2. Plan View of the 200 Area Effluent Treatment Facility

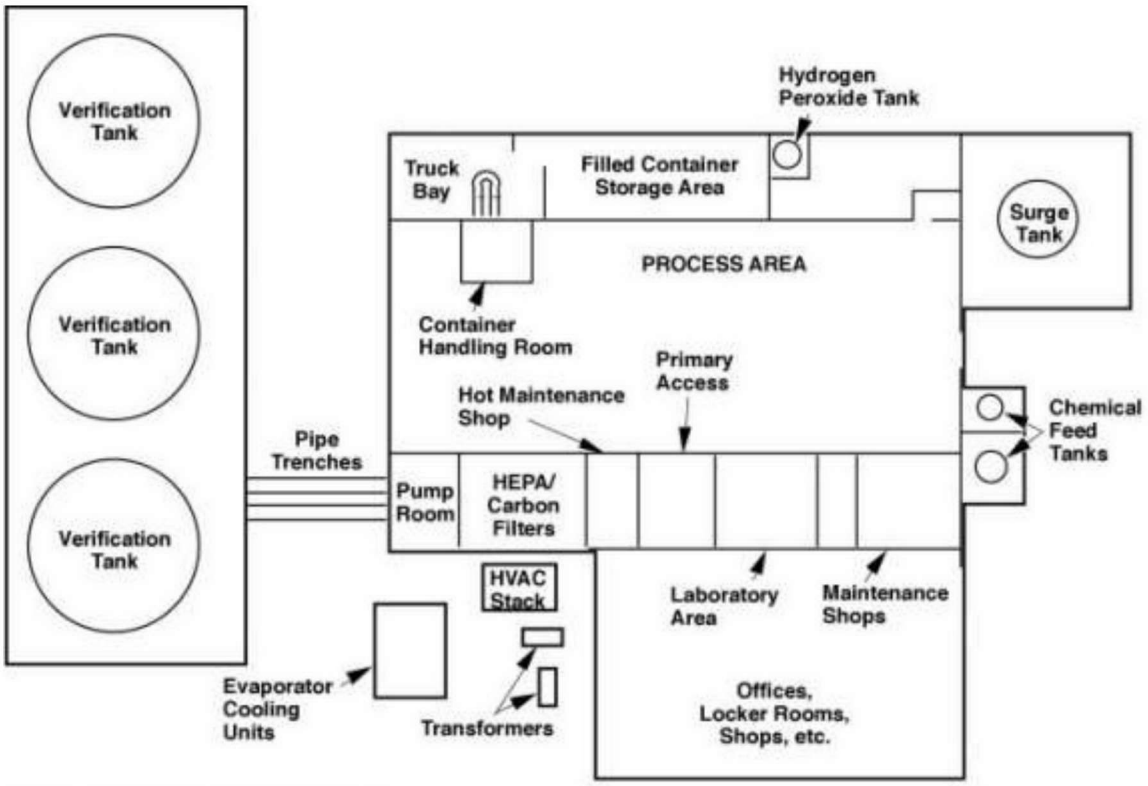

Figure C.3. 200 Area Effluent Treatment Facility Layout

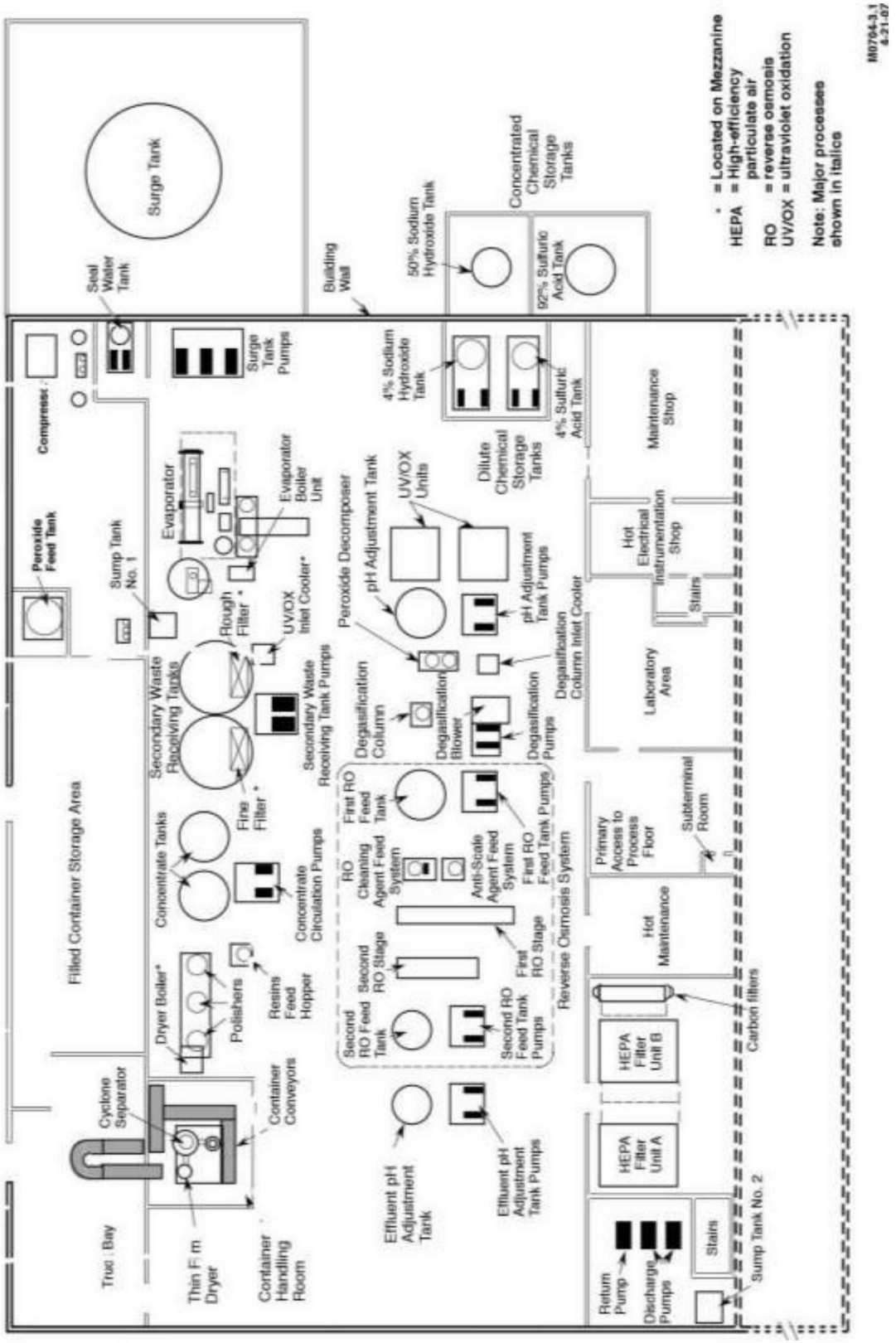

Figure C.4. 200 Area Effluent Treatment Facility

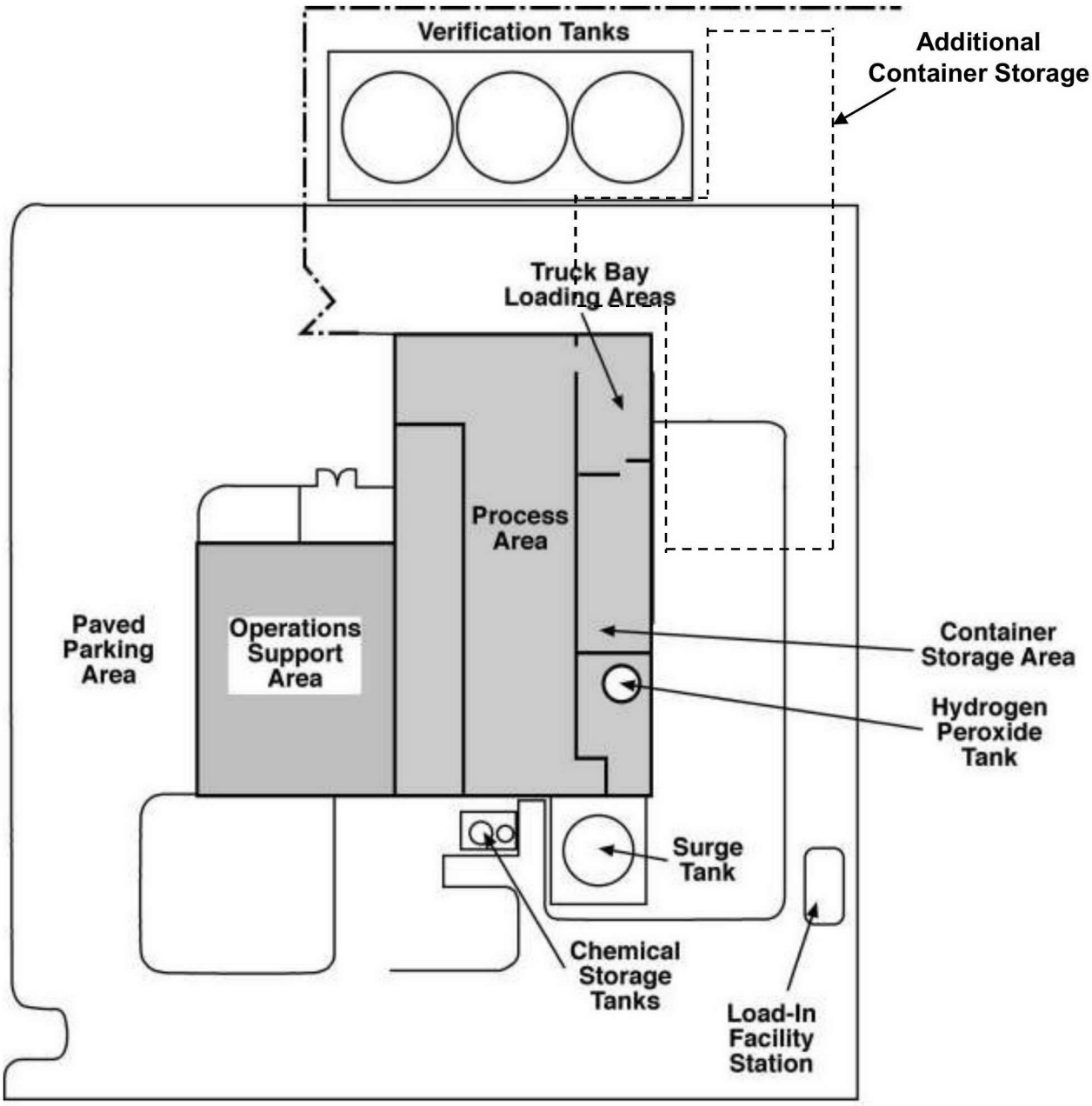

Figure C.5. Example - 200 Area Effluent Treatment Facility Configuration 1

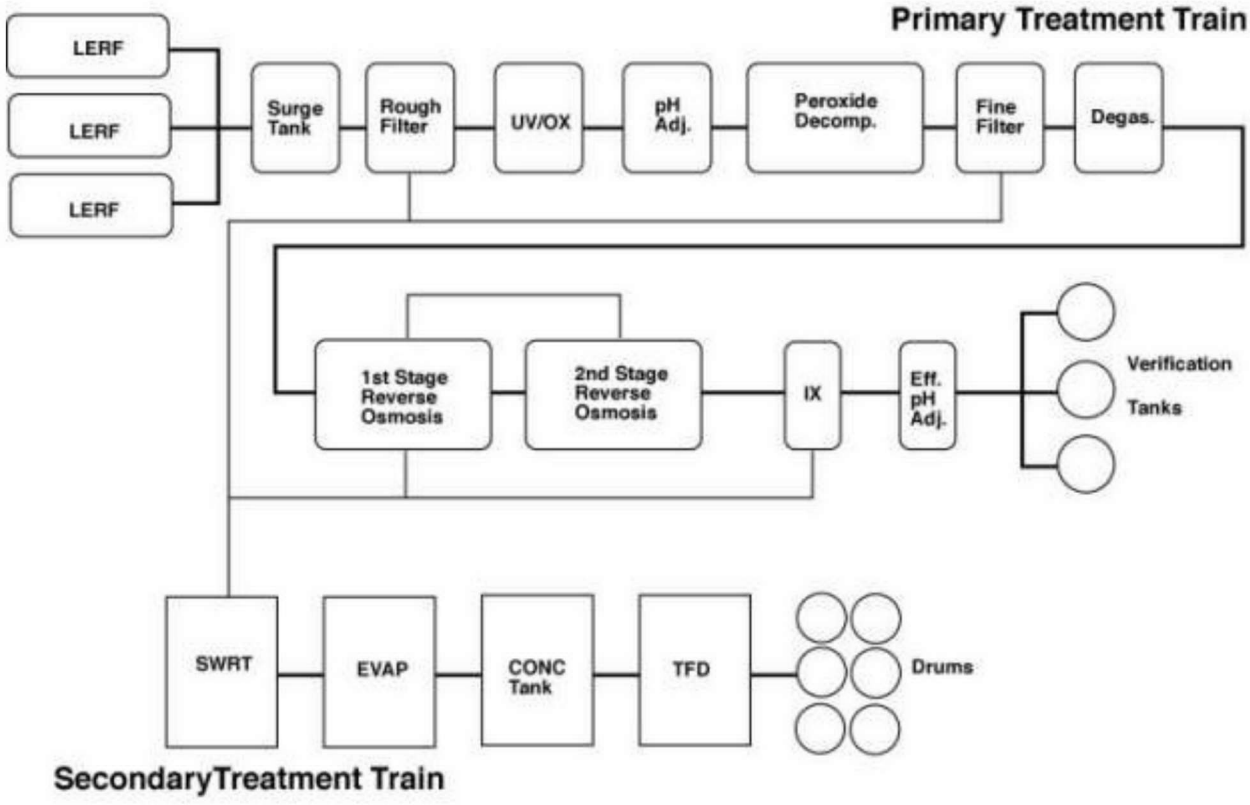

CONC Tank = Concentrate tank
Degas. = Degasification column
Eff. pH Adj. = Effluent pH adjustment tank
EVAP = Evaporator
IX = Ion Exchange
LERF = Liquid Effluent Retention Facility
pH Adj. = pH adjustment tank
SWRT = Secondary waste receiving tank
TFD = Thin film dryer
UV/OX = Ultraviolet Oxidation

M0704-3.8
4-21-07

Figure C.6. Example - 200 Area Effluent Treatment Facility Configuration 2

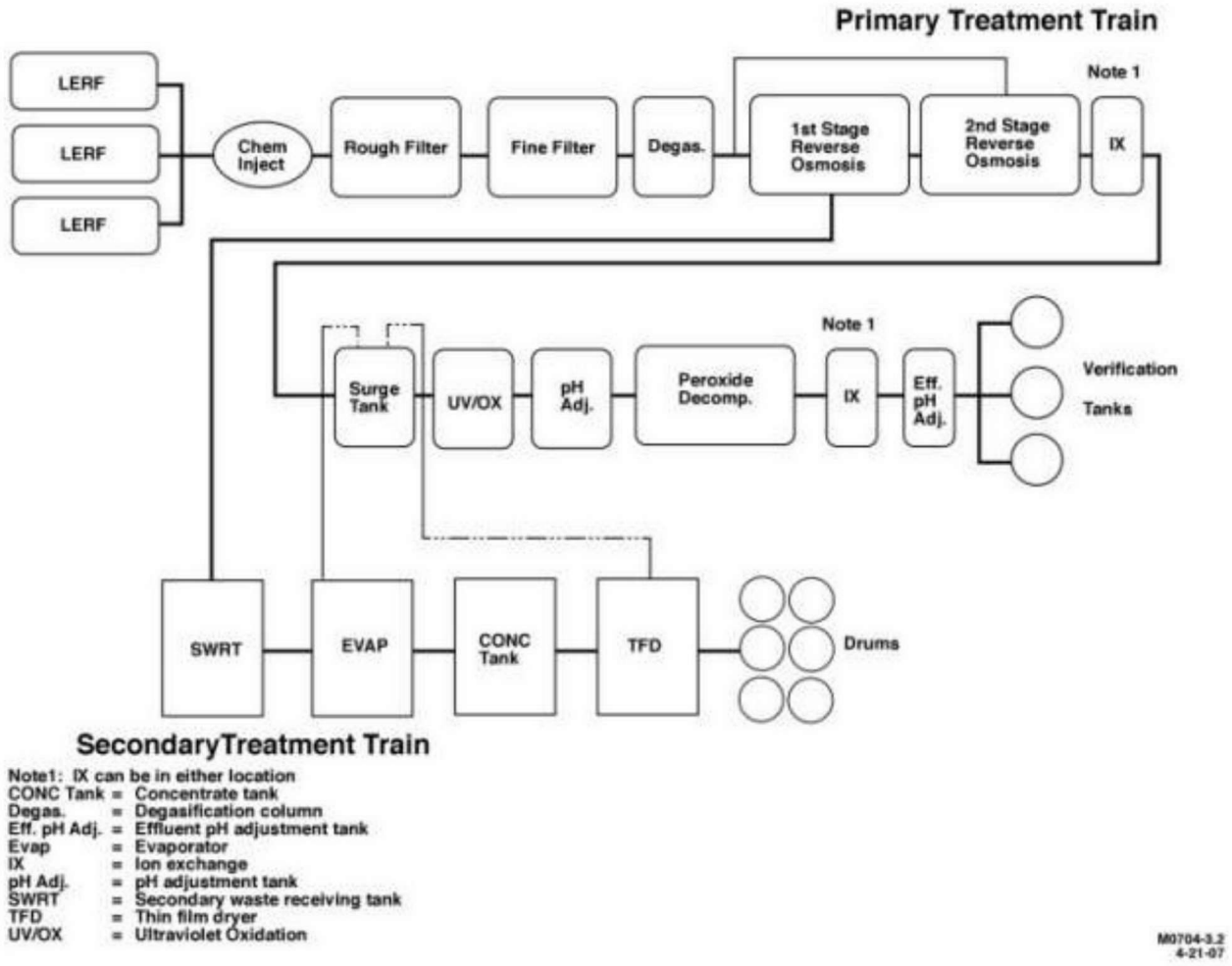

Figure C.7. Surge Tank

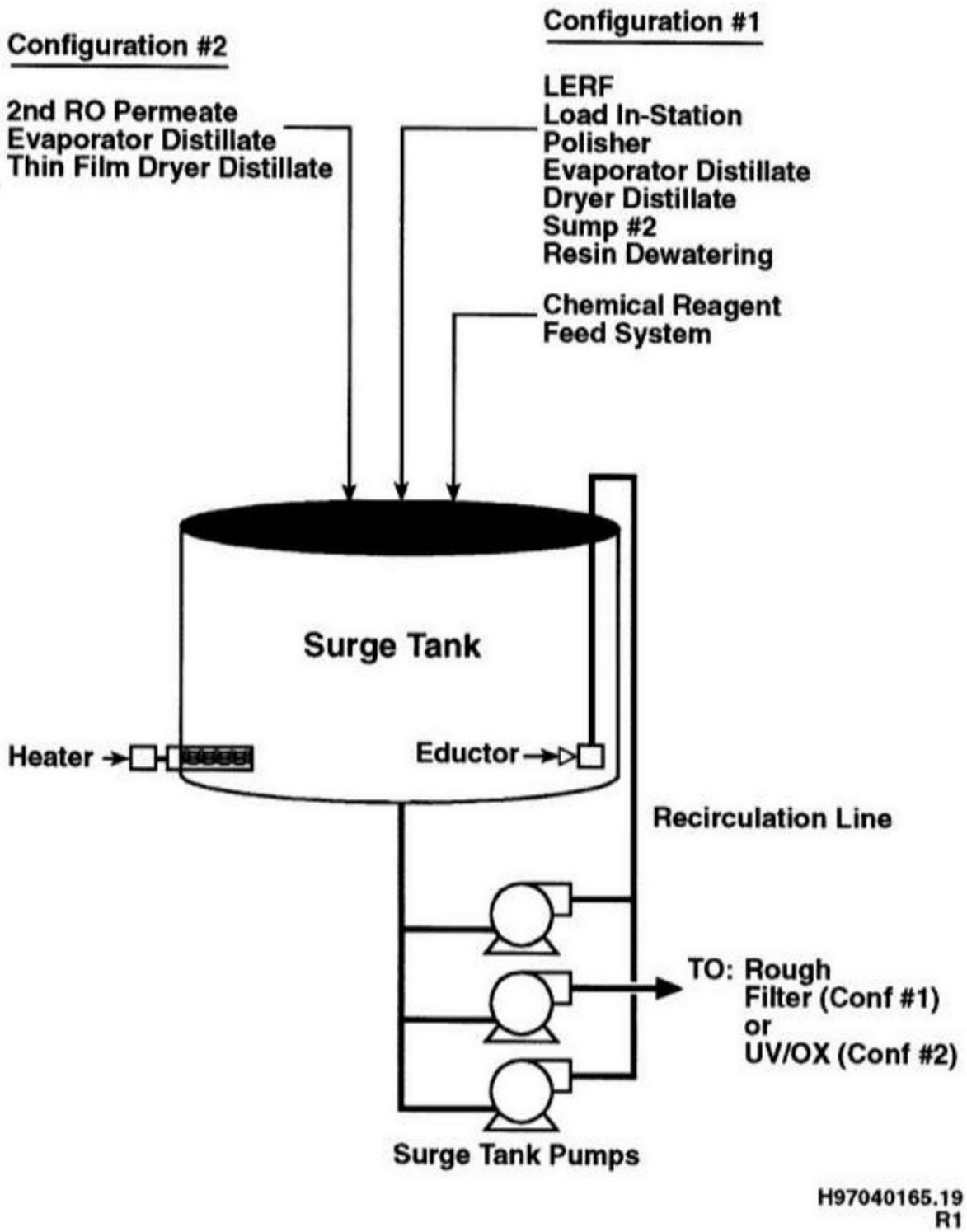

Figure C.8. Ultraviolet Light/Oxidation Unit

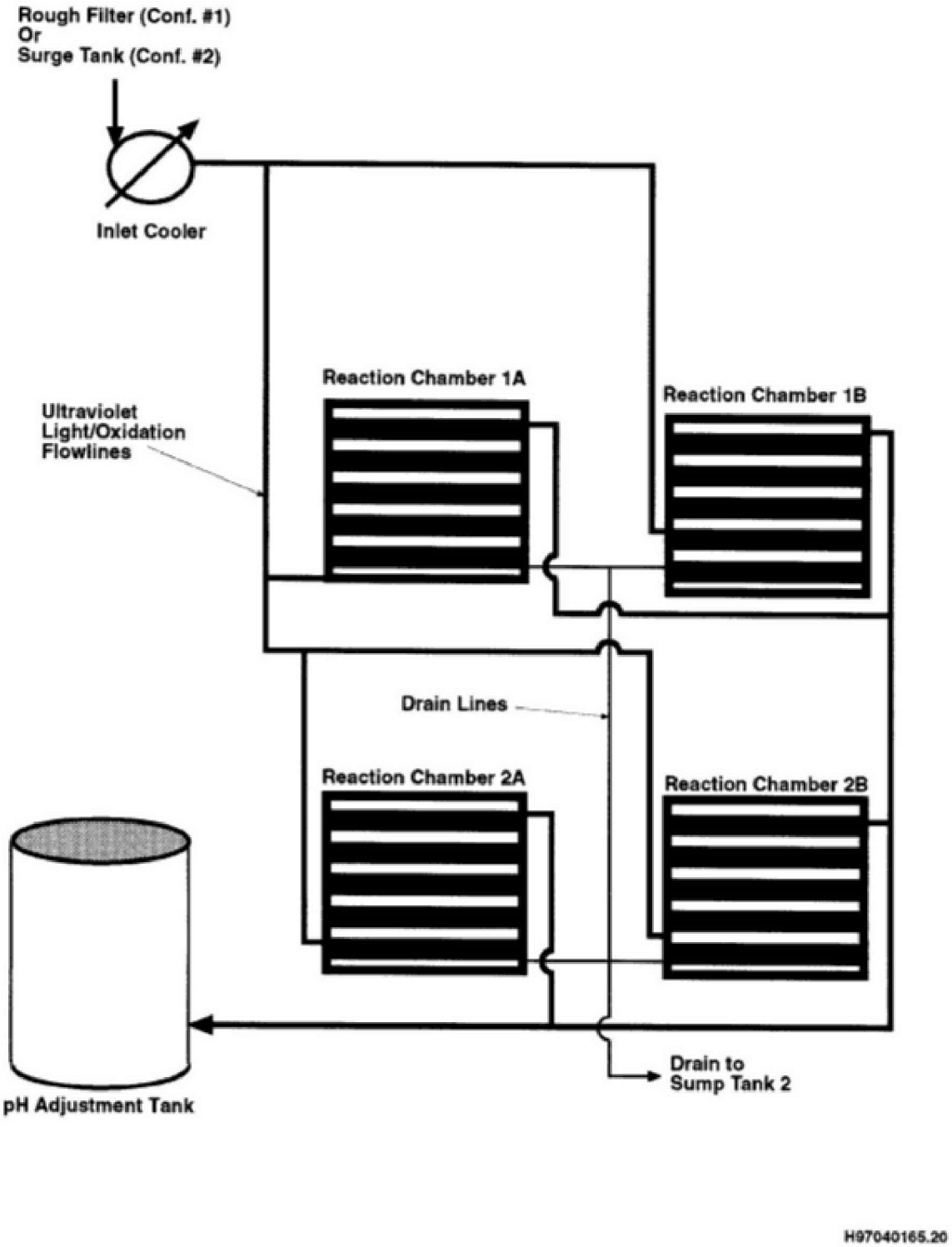

Figure C.9. Reverse Osmosis Unit

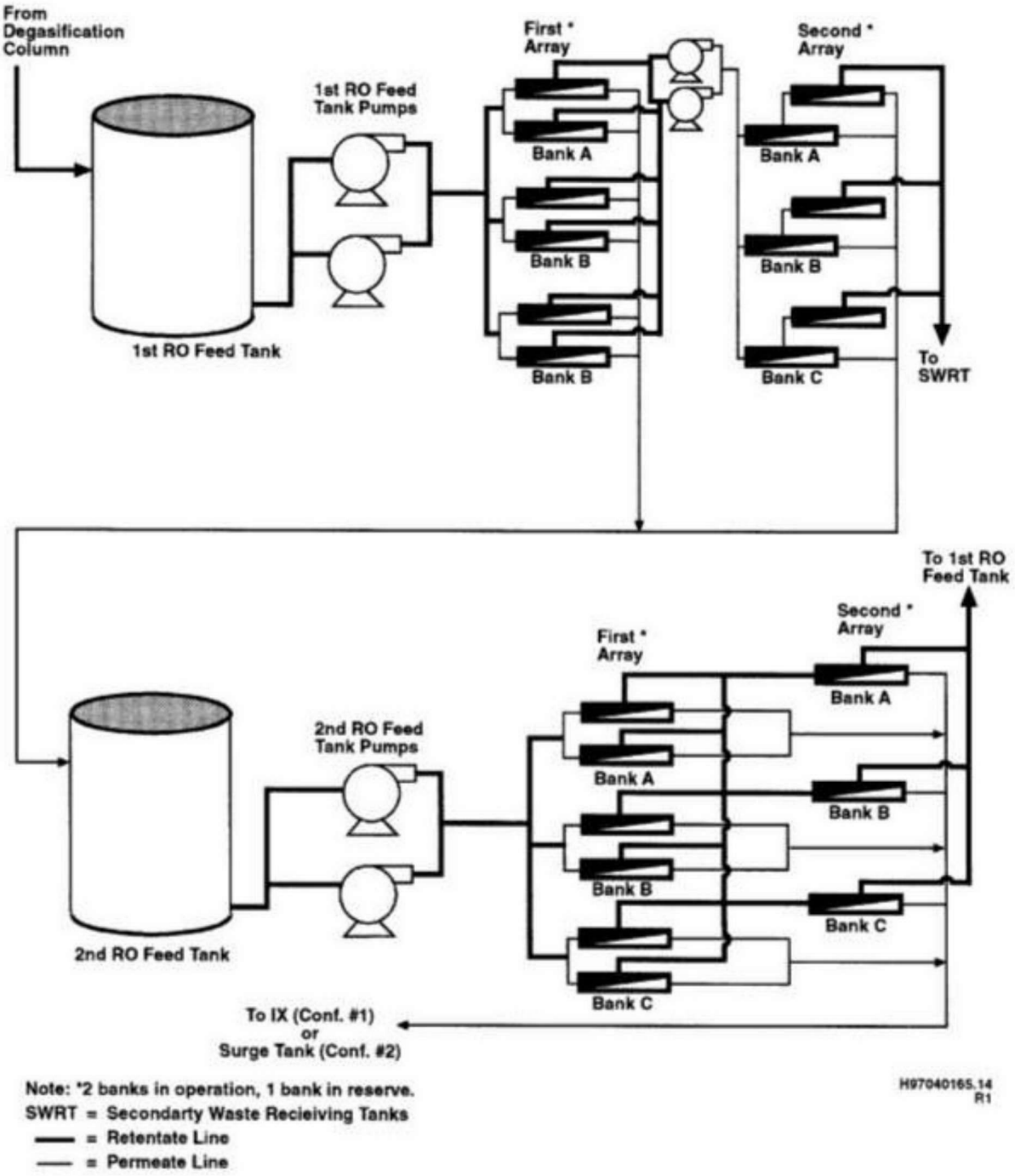

Figure C.10. Ion Exchange Unit

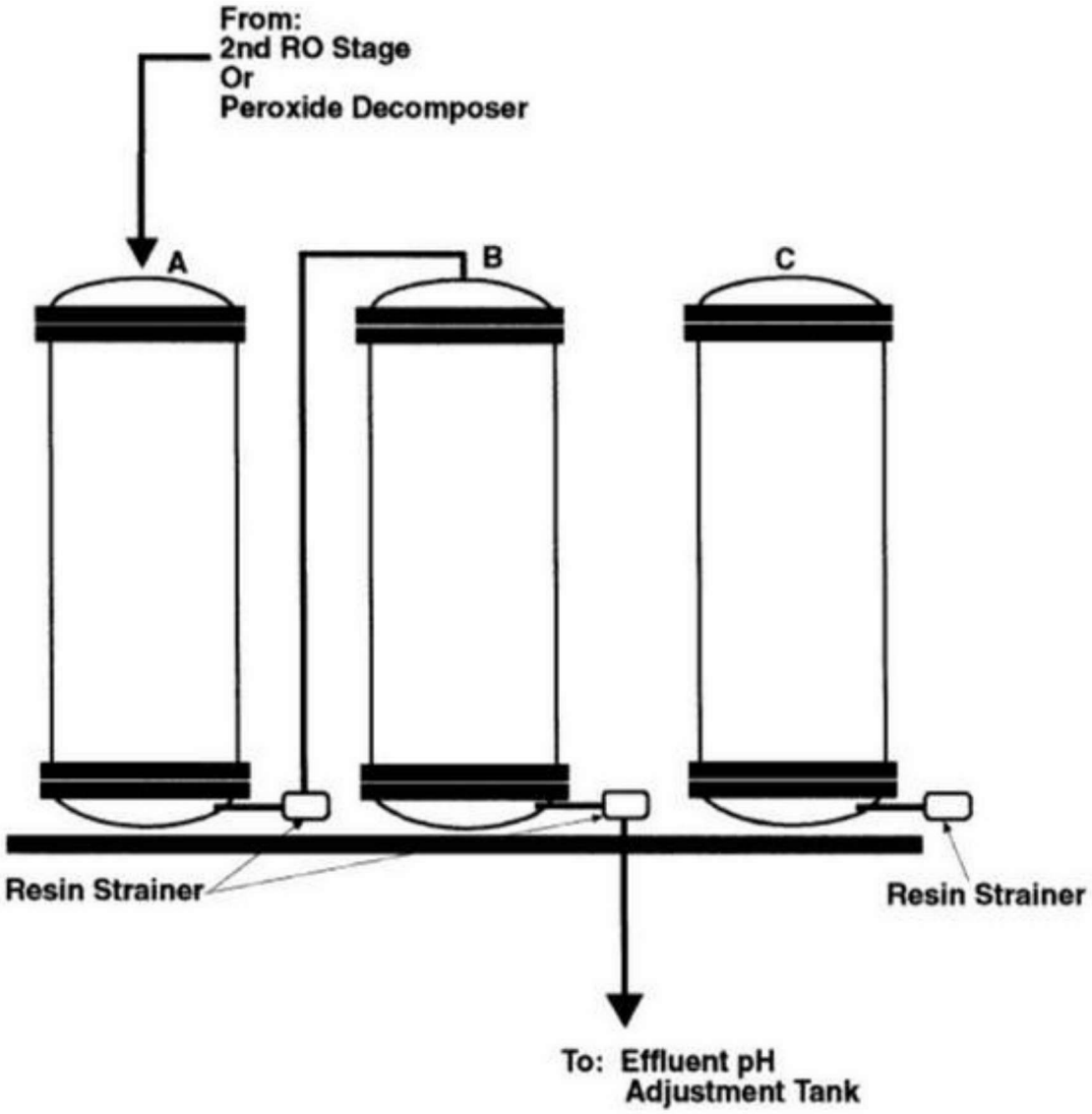

NOTE: Example Configuration- Column A and B in Operation, Column C in Standby Mode

H97040165.18

Figure C.11. Verification Tanks

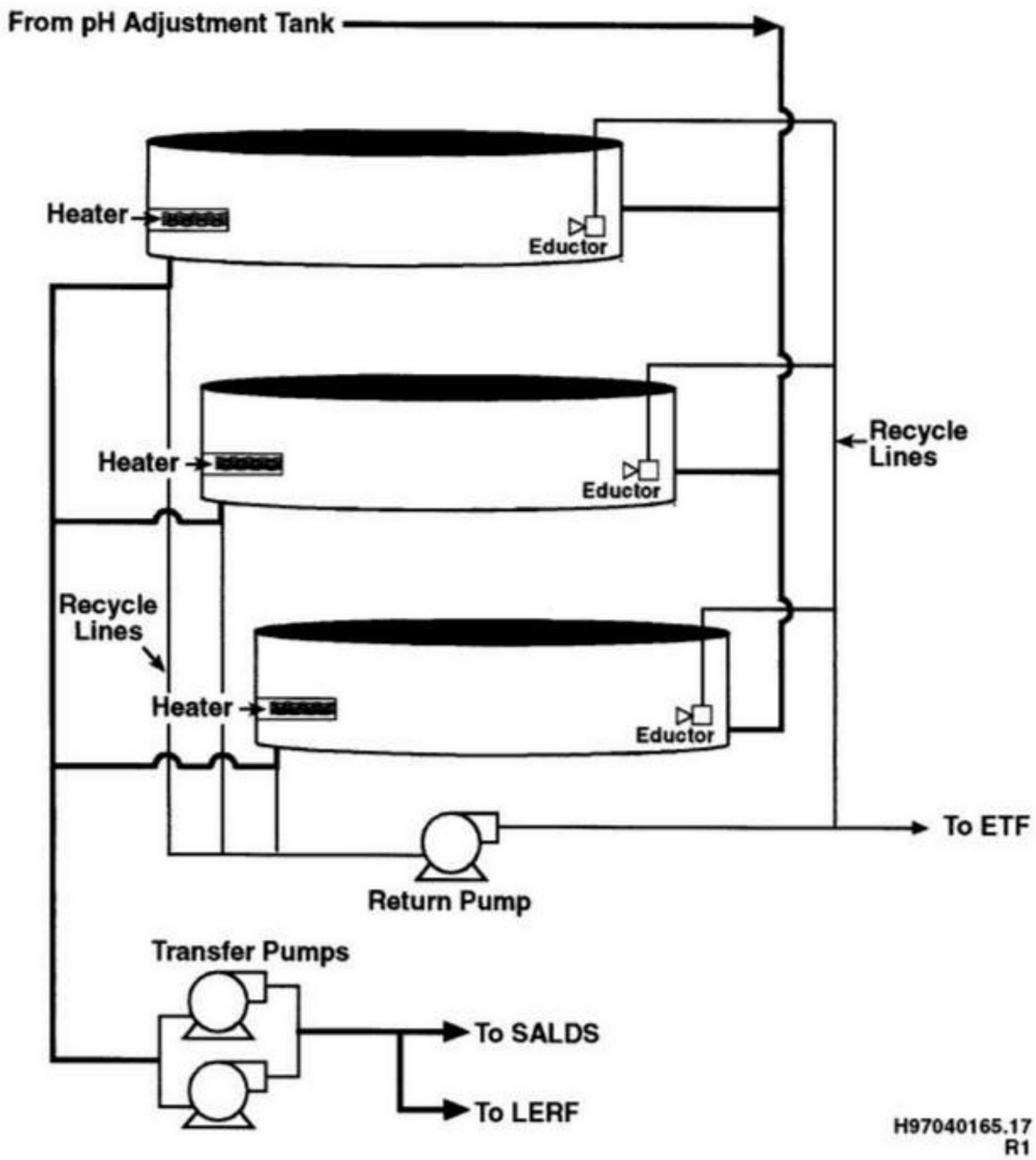

Figure C.12. Effluent Treatment Facility Evaporator

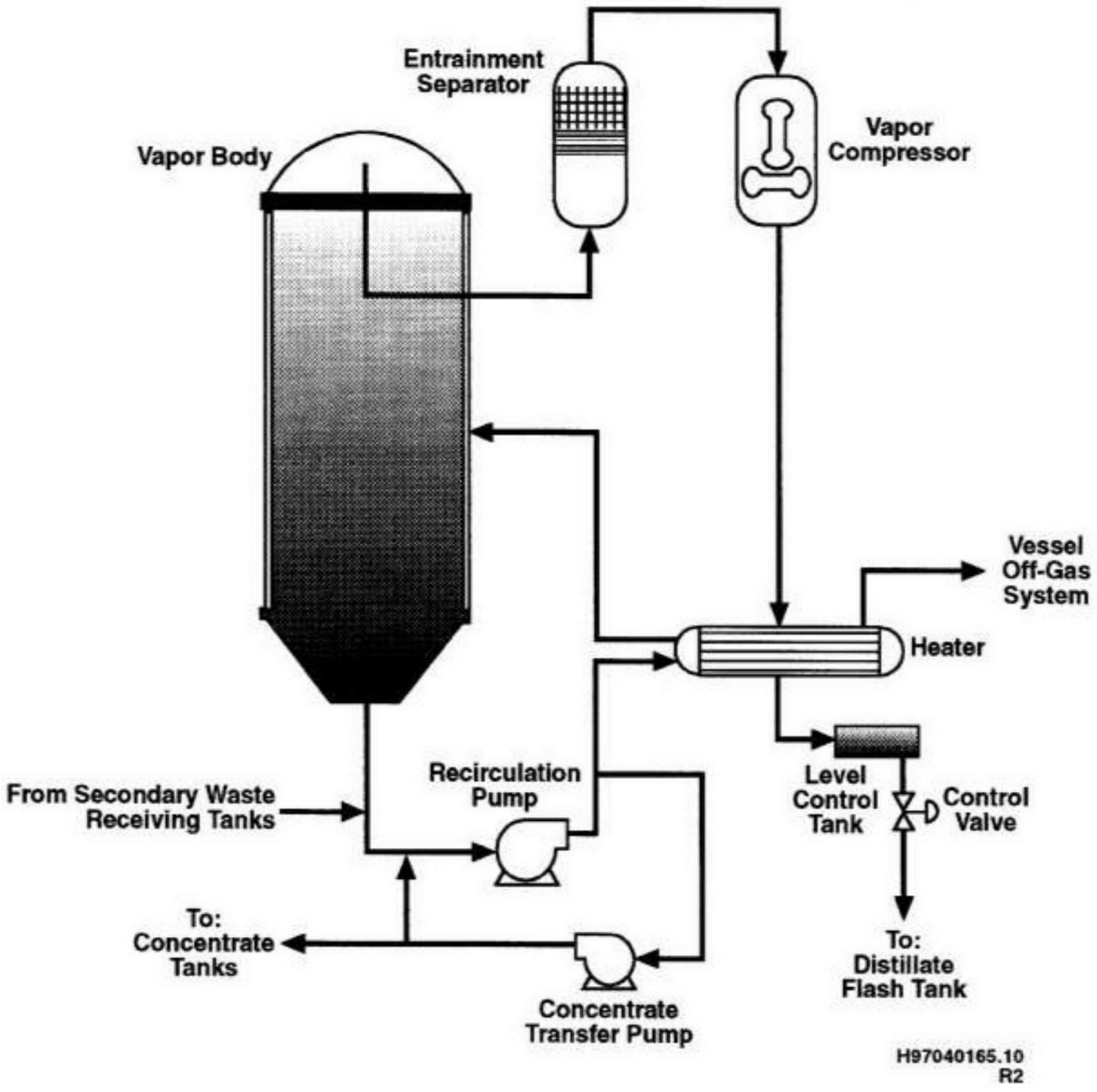

Figure C.13. Thin Film Dryer

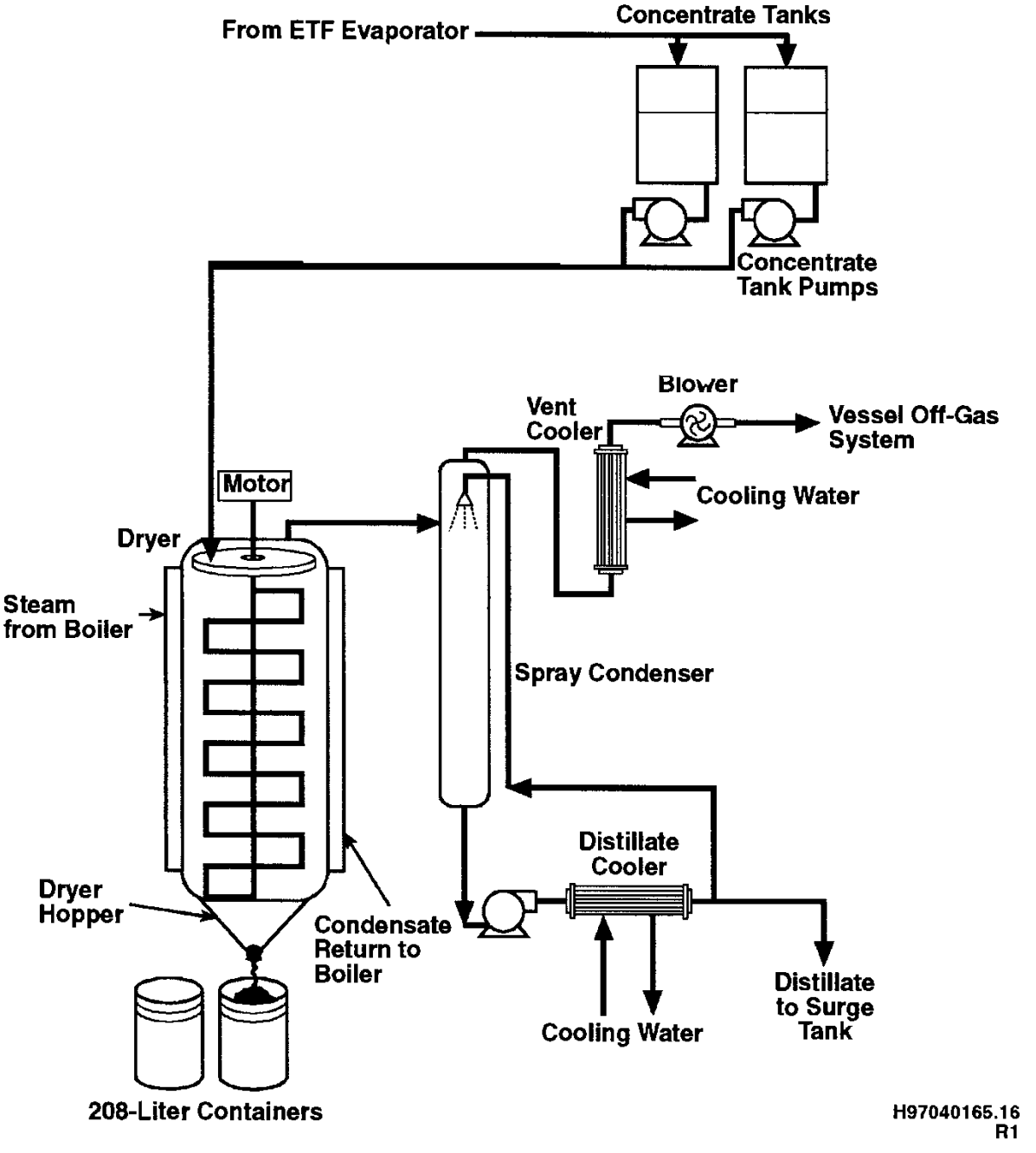

Figure C.14. Container Handling System

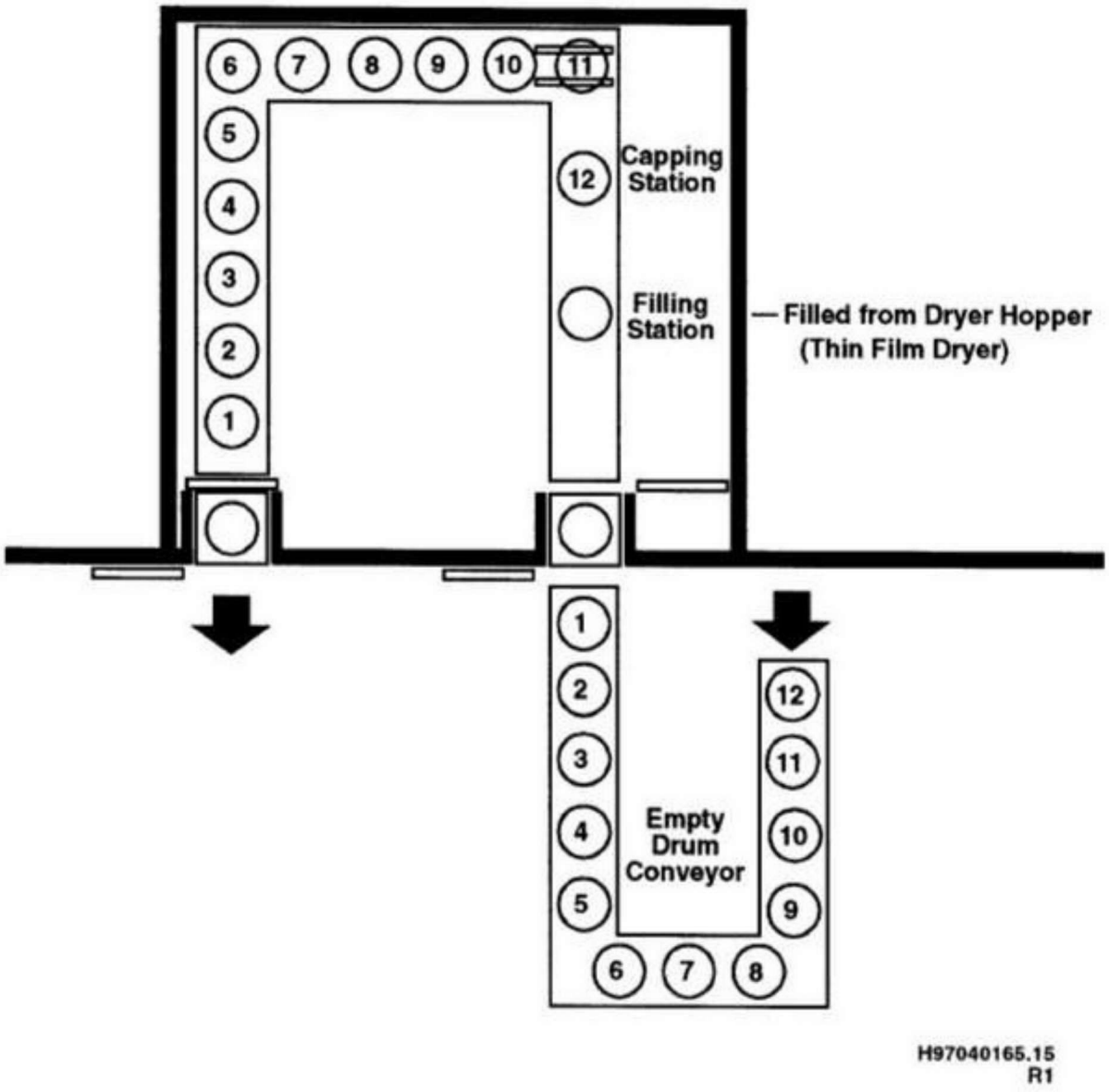

Figure C.15. Effluent Treatment Facility Sump Tanks

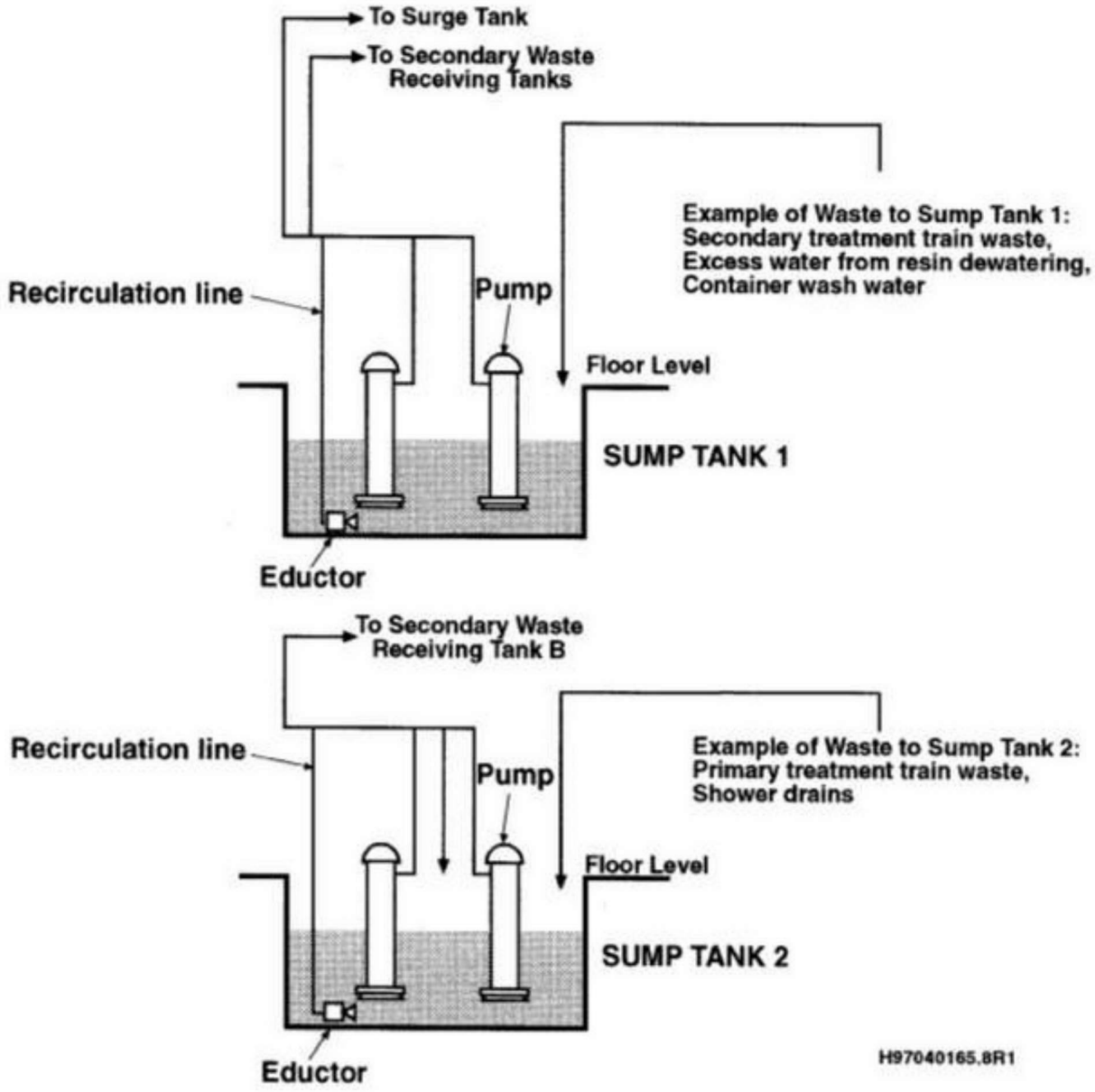

Figure C.16. Liner Anchor Wall and Cover Tension System

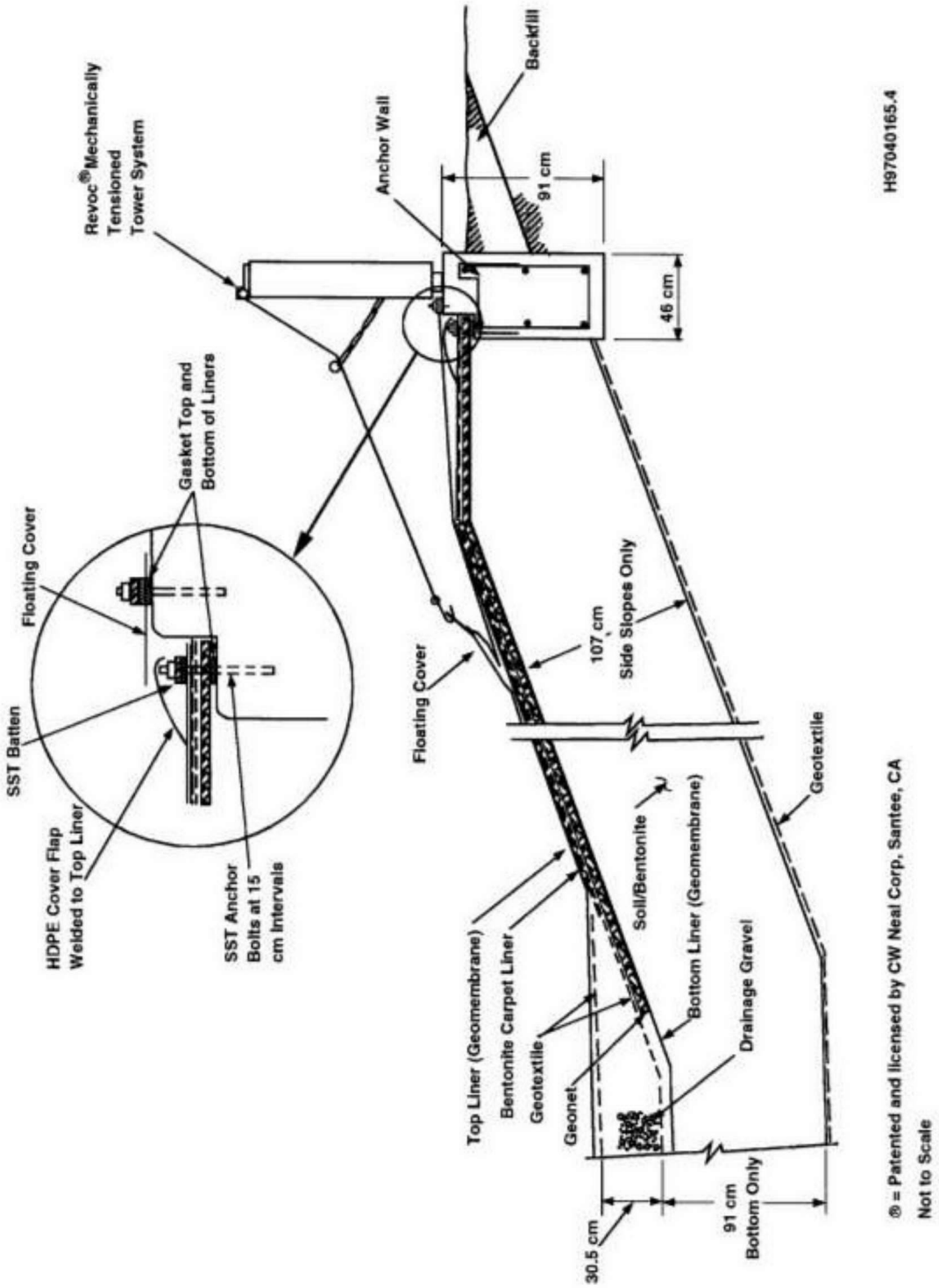

Figure C.17. Liner System Schematic

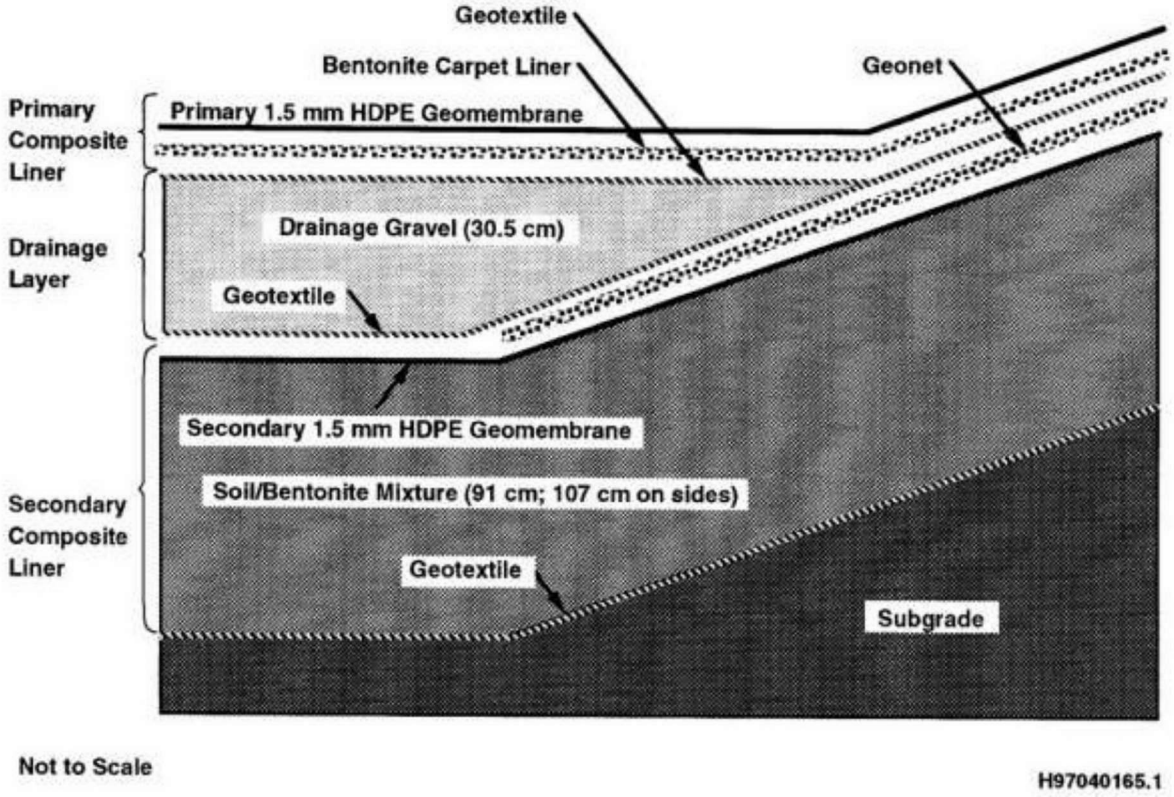

Figure C.18. Detail of Leachate Collection Sump

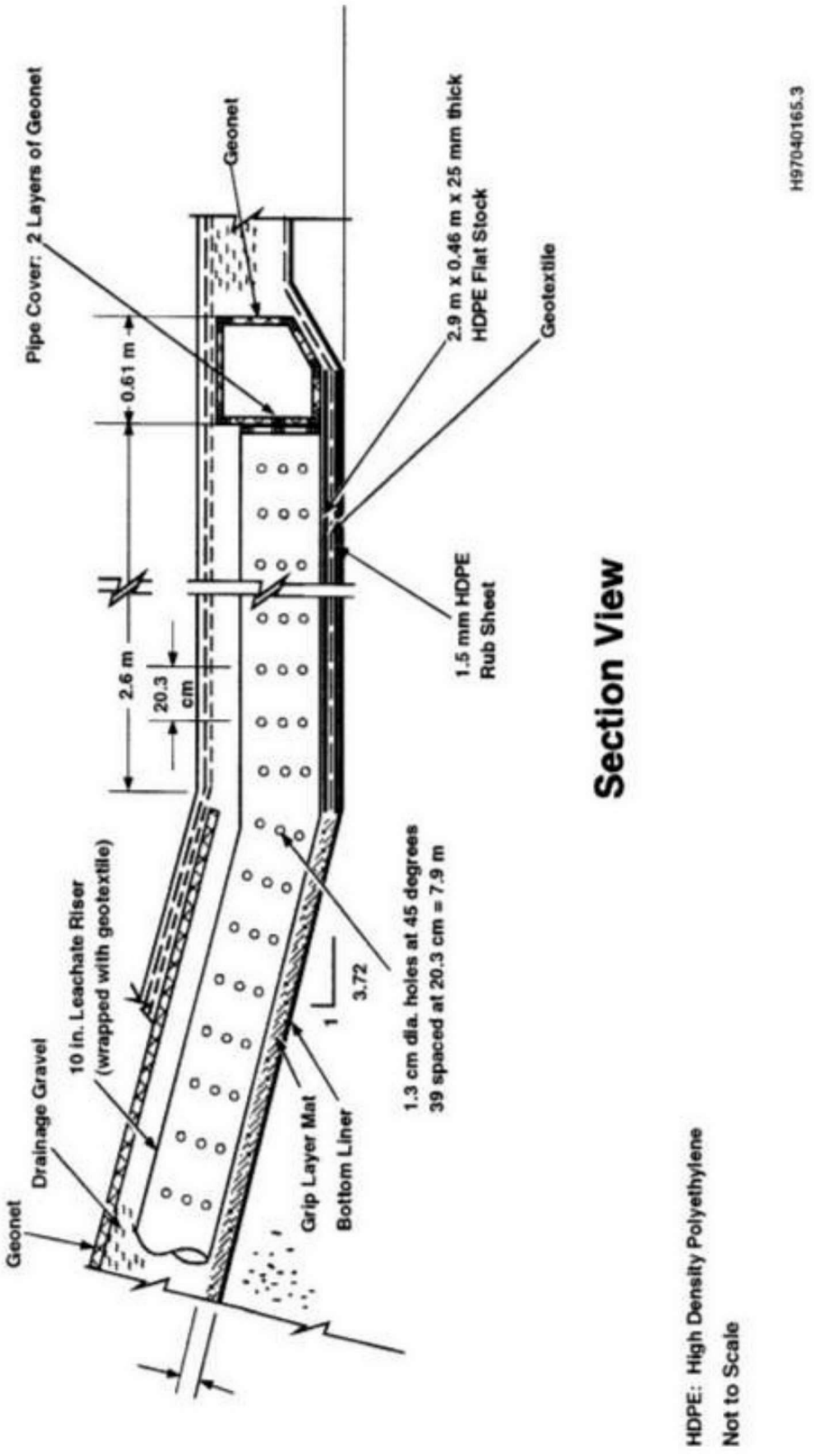

Hanford Facility RCRA Permit Modification Notification Forms

Part III, Operating Unit 11

Integrated Disposal Facility

Index

Page 2 of 7 Hanford Facility RCRA Permit, III.11

Page 3 of 7 Permit Condition, III.11.I.2.a.3.

Page 4 of 7 Addendum J.1, Section J.3.2.5

Page 5 of 7 Addendum J.2, Section ~~J.3.2.5~~ J.3.5.1

Page 6 of 7 Addendum J.1, Section J.7.1

Page 7 of 7 Addendum J.2, Section J.7.1

Submitted by Co-Operator:

L. T. Blackford

12/12/11
Date

Reviewed by RL Program Office:

J. A. Dowell

12/13/11
Date

Hanford Facility RCRA Permit Modification Notification Form	
Unit: **Integrated Disposal Facility**	Permit Part **Part III, Operating Unit 11**

Description of Modification:
Hanford Facility RCRA Permit III.11.A,

PART III, OPERATING UNIT 11 UNIT-SPECIFIC CONDITIONS INTEGRATED DISPOSAL FACILITY

This document sets forth the operating conditions for the Integrated Disposal Facility (IDF).

III.11.A COMPLIANCE WITH APPROVED PERMIT

The Permittees shall comply with all requirements set forth in the Integrated Disposal Facility (IDF) Permit conditions, the Appendices specified in Permit Condition III.11.A and the Amendments specified in Permit Conditions III.11.B through III.11.I. All subsections, figures, and tables included in these portions are enforceable unless stated otherwise:

OPERATING UNIT 11:

Chapter 1.0	Part A Form, dated October 1, 2008
Chapter 3.0	Waste Analysis Plan, dated April 9, 2006
Chapter 4.0	Process Information, dated December 31, 2008
Appendix 4A	Design Report (as applicable to critical systems), dated March 31, 2008
Appendix 4B	Construction Quality Assurance Plan, dated April 9, 2006
Appendix 4C	Response Action Plan, dated April 9, 2006
Appendix 4D	Technical specifications document (RPP-18-489 Rev 0), dated December 31, 2006
Chapter 5.0	Ground Water Monitoring, dated June 30, 2010
Chapter 6.0	Procedure to Prevent Hazards dated December 31, 2008
Addendum J.1	Contingency Plan – Pre-Active Life, dated December 31, 2011~~2008~~
Addendum J.2	Contingency Plan – Active Life, dated December 31, 2011~~2008~~
Chapter 8.0	Personnel Training, dated November 21, 2007
Chapter 11.0	Closure and Post Closure Requirements, dated December 31, 2008

General and Standard Hanford Facility RCRA Permit, WA7 89000 8967 (Permit) conditions (Part I and Part II Conditions) applicable to the IDF are identified in Permit Attachment 3 (Permit Applicability Matrix).

WAC 173-303-830 Modification Class [1] [2]	Class 1	Class 1[1]	Class 2	Class 3
Please mark the Modification Class:	X			

Enter relevant WAC 173-303-830, Appendix I Modification citation number: A.1

Enter wording of WAC 173-303-830, Appendix I Modification citation:
Administrative and information change

Modification Approved: ☒ Yes ☐ No (state reason for denial)

Reason for denial:

Reviewed by Ecology:

12.6.11
Date

[1] Class 1 modifications requiring prior Agency approval.

[2] If the proposed modification does not match any modification listed in WAC 173-303-830 Appendix I, then the proposed modification should automatically be given a Class 3 status. This status may be maintained by the Department of Ecology, or down graded to a Class 1, if appropriate.

Hanford Facility RCRA Permit Modification Notification Form

Unit:	Permit Part
Integrated Disposal Facility	**Part III, Operating Unit 11**

Description of Modification:
Hanford Facility RCRA Permit III.11.I.2.a.3:

III.11.I.2.a.3 A description of production processes including management controls and quality assurance/quality control requirements that assure that glass produced for each formulation will perform in a reasonably similar manner to the waste form assumed in the performance assessment for that formulation.

The Permittees shall update the IWTRD consistent with the above requirements for review by Ecology consistent with their respective roles and authority as provided under the TPA. Ecology comments shall be dispositioned through the Review Comment Record (RCR) process and will be reflected in further modeling to modify the IDF ILAW ~~waste acceptance criteria (~~Chapter 3.0, Waste Analysis Plan~~)~~ as appropriate.

The initial IWTRD ~~shall~~ contained glass formulation data as required by Permit Condition III.11.I.2.a.1~~i~~, and was ~~shall be~~ submitted on December 18, 2006 (AR Accession # 0906020182) ~~no later than January 2007, or if later than this date, as agreed to by Ecology~~. The performance assessment required by Permit Condition III.11.I.2.a.2~~ii~~, and the quality assurance/quality control requirements process required by Permit Condition III.11.I.2.a.3~~iii~~ shall be submitted for Ecology review as soon as possible after issuance of the Final Tank Closure and Waste Management EIS and receipt of underlying codes and data packages, and at least 180 days prior to the date DOE expects to receive waste at IDF. At a minimum, the Permittees shall submit updates to the IWTRD to Ecology every five years or more frequently, with the next one due December 31, 2012, if any ~~either~~ of the following conditions exists~~:~~

- The Permittees submits a permit modification request allowing additional waste forms to be disposed of at IDF,
- The WTP or other vitrification facility change their glass formulations from those previously included in the IWTRD
- An unanticipated event or condition occurs that Ecology determines would warrant an update to the IWTRD.

WAC 173-303-830 Modification Class [1] [2]	Class 1	Class '1	Class 2	Class 3
Please mark the Modification Class:		X		

Enter relevant WAC 173-303-830, Appendix I Modification citation number: WAC 173-303-830(4)(d)
Enter wording of WAC 173-303-830, Appendix I Modification citation:
Request that the modification be reviewed and approved as a Class '1.

Modification Approved: [X] Yes [ ] No (state reason for denial)
Reason for denial:

Reviewed by Ecology:

12.6.11
Date

[1] Class 1 modifications requiring prior Agency approval.

[2] If the proposed modification does not match any modification listed in WAC 173-303-830 Appendix I, then the proposed modification should automatically be given a Class 3 status. This status may be maintained by the Department of Ecology, or down graded to a Class '1, if appropriate.

Hanford Facility RCRA Permit Modification Notification Form	
Unit: **Integrated Disposal Facility**	Permit Part **Part III, Operating Unit 11**

Description of Modification:
Addendum J.1, Section J.3.2.5

J.3.2.5 Hazardous Material, Dangerous and/or Mixed Waste Spill

Spills can result from many sources including process leaks, container spills or leaks, damaged packages or shipments, or personnel error. Spills of mixed waste are complicated by the need to deal with the extra hazards posed by the presence of Atomic Energy Act materials.

- The discoverer notifies the BED/BW and initiates SWIMS response:
  - Stops work
  - Warns others in the vicinity
  - Isolates the area
  - Minimizes the exposure to the hazards~~spill if possible~~
  - Requests the BED/BW Secure ventilation.

WAC 173-303-830 Modification Class [1] [2]	Class 1	Class 1	Class 2	Class 3
Please mark the Modification Class:		X		

Enter relevant WAC 173-303-830, Appendix I Modification citation number: WAC 173-303-830(4)(d)
Enter wording of WAC 173-303-830, Appendix I Modification citation:
Request that the modification be reviewed and approved as a Class 1.

Modification Approved: [X] Yes [ ] No (state reason for denial)
Reason for denial:

Reviewed by Ecology:
12-6-11
Date

[1] Class 1 modifications requiring prior Agency approval.

[2] If the proposed modification does not match any modification listed in WAC 173-303-830 Appendix I, then the proposed modification should automatically be given a Class 3 status. This status may be maintained by the Department of Ecology, or down graded to a Class 1, if appropriate.

Hanford Facility RCRA Permit Modification Notification Form	
Unit: **Integrated Disposal Facility**	Permit Part **Part III, Operating Unit 11**

Description of Modification:
Addendum J.2, Section J.3.5.1

J.3.5.1 Hazardous Material, Dangerous and/or Mixed Waste Spill

Spills can result from many sources including process leaks, container spills or leaks, damaged packages or shipments, or personnel error. Spills of mixed waste are complicated by the need to deal with the extra hazards posed by the presence of Atomic Energy Act materials.

- The discoverer notifies the BED/BW and initiates SWIMS response:
  - Stops work
  - Warns others in the vicinity
  - Isolates the area
  - Minimizes the exposure to the hazards~~spill if possible~~
  - Requests the BED/BW Secure ventilation.

WAC 173-303-830 Modification Class [1] [2]	Class 1	Class '1	Class 2	Class 3
Please mark the Modification Class:		X		

Enter relevant WAC 173-303-830, Appendix I Modification citation number: WAC 173-303-830(4)(d)
Enter wording of WAC 173-303-830, Appendix I Modification citation:
Request that the modification be reviewed and approved as a Class '1.

Modification Approved: [X] Yes [ ] No (state reason for denial)
Reason for denial:

Reviewed by Ecology:
for Dan McDonald 12-16-11
J. D. McDonald Date

[1] Class 1 modifications requiring prior Agency approval.

[2] If the proposed modification does not match any modification listed in WAC 173-303-830 Appendix I, then the proposed modification should automatically be given a Class 3 status. This status may be maintained by the Department of Ecology, or down graded to a Class '1, if appropriate.

Hanford Facility RCRA Permit Modification Notification Form

Unit:	Permit Part
Integrated Disposal Facility	**Part III, Operating Unit 11**

Description of Modification:
Addendum J.1, Section J.7.1

J.7.1Building Emergency Director/Building Warden

TITLE	WORK LOCATION	WORK PHONE
IDF Management	MO-720	373-~~3113~~1068

Names and home telephone numbers of the BED/BWs are available from the POC (373-3800) in accordance with Permit Condition II.A.4.

WAC 173-303-830 Modification Class [1] [2]	Class 1	Class '1	Class 2	Class 3
Please mark the Modification Class:	X			

Enter relevant WAC 173-303-830, Appendix I Modification citation number: B.6.d
Enter wording of WAC 173-303-830, Appendix I Modification citation:
Changes in .... Phone number....

Modification Approved: [X] Yes [ ] No (state reason for denial)
Reason for denial:

Reviewed by Ecology:
J McDonald 12.6.11
Date

[1] Class 1 modifications requiring prior Agency approval.

[2] If the proposed modification does not match any modification listed in WAC 173-303-830 Appendix I, then the proposed modification should automatically be given a Class 3 status. This status may be maintained by the Department of Ecology, or down graded to a Class '1, if appropriate.

Hanford Facility RCRA Permit Modification Notification Form

Unit:	Permit Part
Integrated Disposal Facility	**Part III, Operating Unit 11**

Description of Modification:
Addendum J.2, Section J.7.1

J.7.1Building Emergency Director/Building Warden

TITLE	WORK LOCATION	WORK PHONE
IDF Management	MO-720	373-~~3113~~1068

Names and home telephone numbers of the BED/BWs are available from the POC (373-3800) in accordance with Permit Condition II.A.4.

WAC 173-303-830 Modification Class [1] [2]	Class 1	Class 1	Class 2	Class 3
Please mark the Modification Class:	X			

Enter relevant WAC 173-303-830, Appendix I Modification citation number: B.6.d
Enter wording of WAC 173-303-830, Appendix I Modification citation:
Changes in .... Phone number....

Modification Approved: [X] Yes [ ] No (state reason for denial)
Reason for denial:

Reviewed by Ecology:

12-6-11
Date

[1] Class 1 modifications requiring prior Agency approval.

[2] If the proposed modification does not match any modification listed in WAC 173-303-830 Appendix I, then the proposed modification should automatically be given a Class 3 status. This status may be maintained by the Department of Ecology, or down graded to a Class 1, if appropriate.

Remove and Replace the Following Sections:

Remove Part III Permit Conditions, dated June 30, 2010, and replace with Permit Conditions, dated December 31, 2011.

PART III, OPERATING UNIT 11 UNIT-SPECIFIC CONDITIONS
INTEGRATED DISPOSAL FACILITY

This document sets forth the operating conditions for the Integrated Disposal Facility (IDF).

III.11.A COMPLIANCE WITH APPROVED PERMIT

The Permittees shall comply with all requirements set forth in the Integrated Disposal Facility (IDF) Permit conditions, the Appendices specified in Permit Condition III.11.A and the Amendments specified in Permit Conditions III.11.B through III.11.I. All subsections, figures, and tables included in these portions are enforceable unless stated otherwise:

OPERATING UNIT 11:

Chapter 1.0	Part A Form, dated October 1, 2008
Chapter 3.0	Waste Analysis Plan, dated April 9, 2006
Chapter 4.0	Process Information, dated December 31, 2008
Appendix 4A	Design Report (as applicable to critical systems), dated March 31, 2008
Appendix 4B	Construction Quality Assurance Plan, dated April 9, 2006
Appendix 4C	Response Action Plan, dated April 9, 2006
Appendix 4D	Technical specifications document (RPP-18-489 Rev 0), dated December 31, 2006
Chapter 5.0	Ground Water Monitoring, dated June 30, 2010
Chapter 6.0	Procedure to Prevent Hazards dated December 31, 2008
Addendum J.1	Contingency Plan – Pre-Active Life, dated December 31, 2011
Addendum J.2	Contingency Plan – Active Life, dated December 31, 2011
Chapter 8.0	Personnel Training, dated November 21, 2007
Chapter 11.0	Closure and Post Closure Requirements, dated December 31, 2008

General and Standard Hanford Facility RCRA Permit, WA7 89000 8967 (Permit) conditions (Part I and Part II Conditions) applicable to the IDF are identified in Permit Attachment 3 (Permit Applicability Matrix).

III.11.B AMENDMENTS TO THE APPROVED PERMIT

III.11.B.1 Portions of Permit Attachment 4, *Hanford Emergency Management Plan* that are not made enforceable by inclusion in the applicability matrix for that document, are not made enforceable by reference in this document.

III.11.B.2 Permittees must comply with all applicable portions of the Permit. The facility and unit-specific recordkeeping requirements are distinguished in the General Information Portion of the Permit, and are tied to the Permit conditions.

III.11.B.3 The scope of this Permit is restricted to the landfill construction and operation as necessary to dispose of: 1) immobilized low activity waste from the WTP, and 2) the Demonstration Bulk Vitrification System and IDF operational waste as identified in Chapter 4.0. Future expansion of the RCRA trench, or disposal of other wastes not specified in this Permit, is prohibited unless authorized via modification of this Permit.

III.11.B.4	In accordance with WAC 173-303-806(11)(d), this Permit shall be reviewed every five (5) years after the effective date and modified, as necessary, in accordance with WAC 173-303-830(3).
III.11.B.5	Inspection Requirements – Pre-Active Life Period and Active Life Period
III.11.B.5.a	The Permittees will conduct inspections of the IDF according to the following requirements:
III.11.B.5.a.1	Prior to the start of the active life of the IDF as defined in WAC 173-303-040, according to Chapter 6.0, Table 6.2.
III.11.B.5.a.2	Following the start of the active life of the IDF as defined in WAC 173-303-040, according to Chapter 6.0, Table 6.2A.
III.11.B.5.b	The Permittees will remedy any problems revealed by inspections conducted pursuant to Permit Condition III.11.B.5.a on a schedule, which prevents hazards to the public health and the environment and as agreed to in writing, by Ecology. Where a hazard is imminent or has already occurred, remedial action must be taken immediately.
III.11.B.5.c	Reserved
III.11.B.5.d	Rainwater Management
III.11.B.5.e	Prior to the start of the active life of the IDF, the Permittees will manage the discharge of such water in accordance with the pollution prevention and best management practices required by State Waste Discharge Permit Number ST 4511.
III.11.B.5.e.1	Management of Liquids Collected in the Leachate Collection and Removal System (LCRS), Leak Detection System (LDS), and Secondary Leak Detection System (SLDS) prior to the start of the active life of the IDF.
III.11.B.5.e.2	Permittees shall manage the liquid in the LCRS system in a manner that does not allow the fluid head to exceed 30.5 cm above the flat 50-foot by 50-foot LCRS sump HDPE bottom liner, and the LCRS sump trough, except for storms that exceed the 25-year, 24-hour storm event [(WAC 173-303-665(2)(h)(ii)(B). Liquid with a depth greater than 30.5 cm above the LCRS liner will be removed at the earliest practicable time after detection (not to exceed 5 working days).
III.11.B.5.e.3	Accumulated liquid of pumpable quantities in the LDS and SLDS will be managed in a manner that does not allow the fluid head to exceed 30.5 cm above the LDS liner or SLDS liner [WAC 173-303-665(2)(h)(i)(C)(iii)]. Liquid with a depth greater than 30.5 cm above a liner will be removed at the earliest practicable time after detection (not to exceed 5 working days).
III.11.B.5.e.4	The Permittees will use a flow meter to check if the amount of actual liquid pumped corresponds to the amount accumulated in the leachate collection tank to verify the proper function of the leachate collection and removal sump pumps with each use. The Permittees will document in the IDF portion of the facility operating record appropriate quality assurance/quality control requirements for selection and operation of the flow meter based on the required verification. In addition, the Permittees will evaluate the leachate transfer lines for freeze and thaw damage when ambient conditions may cause such damage to occur. The Permittees will document the methods and criteria used for purposes of this evaluation, along with an appropriate justification.
III.11.B.5.e.5	The Permittee will inspect for liquids after significant rainfall events.
III.11.B.5.e.6	The Permittee will annually verify monitoring gauges and instruments are in current calibration; calibration will be performed annually or more frequently at intervals suggested by the manufacturer (refer to Chapter 4.0, §4.3.7.4)

III.11.B.5.f The Permittees will monitor liquids in the Leachate Collection and Removal System and Leak Detection System to ensure the action leakage rate (Chapter 4.0, Appendix 4A) is not exceeded. The Leachate Collection and Removal System will be inspected per Permit Condition III.11.B.5.c.

III.11.B.5.g Soil Stabilization

Prior to the first placement of waste in the IDF, the Permittee will apply soil stabilization materials as needed to prevent soil erosion in and around the landfill.

III.11.C DESIGN REQUIREMENTS

III.11.C.1 IDF is designed in accordance with WAC 173-303-665 and WAC 173-303-640 as described in Chapter 4.0. Design changes impacting IDF critical systems shall be performed in accordance with Permit Conditions III.11.D.1.d.i and III.11.D.1.d.ii.

III.11.C.1.a IDF Critical Systems include the following: The leachate collection and removal system (LCRS), leachate collection tank (LCT), leak detection system (LDS), liner system (LS), and closure cap. H-2 Drawings for the LCRS, LCT, LDS, and LS are identified in Appendix 4A, Section 3 of this Permit. Drawings for the closure cap will be provided pursuant to Permit Condition III.11.C.1.b.

The Permittees shall construct and operate the IDF in accordance with all specifications contained in RPP-18489 Rev 0. Critical systems, as defined in the definitions section of the Site-Wide RCRA Permit, are identified in Appendix 4A, Section 1 of this Permit.

III.11.C.1.b Landfill Cap

At final closure of the landfill, the Permittees shall cover the landfill with a final cover (closure cap) designed and constructed [WAC 173-303-665(6), WAC 173-303-806(4)(h)] to: Provide long-term minimization of migration of liquids through the closed landfill; Function with minimum maintenance; Promote drainage and minimize erosion or abrasion of the cover; Accommodate settling and subsidence so that the cover's integrity is maintained; and have a permeability less than or equal to the permeability of any bottom liner system or natural sub soils present.

III.11.C.1.c Compliance Schedule

Proposed conceptualized final cover design is presented in Chapter 11, Closure and Financial Assurance. Six months prior to start of construction of IDF landfill final cover (but no later than 6 months prior to acceptance of the last shipment of waste at the IDF), the Permittees shall submit IDF landfill final cover design, specifications and CQA plan to Ecology for review and approval. No construction of the final cover may proceed until Ecology approval of the final design is given, through a permit modification.

III.11.C.1.d The Permittees shall notify Ecology at least sixty (60) calendar days prior to the date it expects to begin closure of the IDF landfill in accordance with WAC 173-303-610(c).

III.11.C.2 Design Reports

III.11.C.2.a New Tank Design Assessment Report

Permittees shall generate a written report in accordance with WAC 173-303-640(3)(a), providing the results of the leachate collection tank system design assessment. The report shall be reviewed and certified by an Independent Qualified Registered Professional Engineer (IQRPE)[1] in accordance with WAC-173-303-810(13)(a).

[1] "Independent qualified registered professional engineer," as used here and elsewhere with respect to Operating Unit 11, means a person who is licensed by the state of Washington, or a state which has reciprocity with the state of Washington as defined in RCW 18.43.100, and who is not an employee of the owner or operator of the facility for which construction or modification certification is required. A qualified professional engineer is an engineer with expertise in the specific area for which a certification is given.

III.11.C.2.b Compliance Schedule

Permittees shall submit the leachate collection tank design assessment report to Ecology along with the IQRPE certification, prior to construction of any part of the tank system including ancillary equipment.

III.11.D CONSTRUCTION REQUIREMENTS

III.11.D.1 Construction Quality Assurance

III.11.D.1.a Ecology shall provide field oversight during construction of critical systems. In cases where an Engineering Change Notice (ECN) and/or Non Conformance Report (NCR) are required, Ecology and the Permittees shall follow steps for processing changes to the approved design per Permit Conditions III.11.D.1.d.i and III.11.D.1.d.ii.

III.11.D.1.b Permittees shall implement the Construction Quality Assurance Plan (CQA plan) (Appendix 4B of the permit) during construction of IDF.

III.11.D.1.b.1 The Permittees will not receive waste in the IDF until the owner or operator has submitted to Ecology by certified mail or hand delivery a certification signed by the CQA officer that the approved CQA plan has been successfully carried out and that the unit meets the requirements of WAC 173-303-665(2)(h) or (j); and the procedure in WAC 173-303-810(14)(a) has been completed. Documentation supporting the CQA officer's certification shall be furnished to Ecology upon request.

III.11.D.1.c Construction inspection reports

Permittees shall submit a report documenting the results of the leachate tank installation inspection. This report must be prepared by an independent, qualified installation inspector or a professional independent, qualified, registered, professional engineer either of whom is trained and experienced in the proper installation of tank systems or components. The Permittees will remedy all discrepancies before the tank system is placed in use. This report shall be submitted to Ecology 90 days prior to IDF operation and be included in the IDF Operating Record. [WAC 173-303-640(3)(h)].

III.11.D.1.d ECN/NCR Process for Critical Systems

Portions of the following conditions for processing engineering change notices and non-conformance reporting were extracted from and supersede Site Wide General Permit Condition II.L.

III.11.D.1.d.1 Engineering Change Notice for Critical Systems

During construction of the IDF, the Permittees shall formally document changes to the approved designs, plans, and specifications, identified in Appendices 4A, 4B, 4C, and 4D of this permit, with an Engineering Change Notice (ECN). The Permittees shall maintain all ECNs in the IDF unit-specific Operating Record and shall make them available to Ecology upon request or during the course of an inspection. The Permittees shall provide to Ecology copies of proposed ECNs affecting any critical system within five (5) working days of initiating the ECN. Identification of critical systems is included in Permit Condition III.11.C.1 and Appendix 4A of this permit. Within five (5) working days,

Ecology will review a proposed ECN modifying a critical system and inform the Permittees whether the proposed ECN, when issued, will require a Class 1, 2, or 3 Permit modification.

III.11.D.1.d.2 Non-conformance Reporting for Critical Systems

III.11.D.1.d.2.a During construction of the IDF, the Permittees shall formally document with a Nonconformance Report (NCR), any work completed which does not meet or exceed the standards of the approved design, plans and specifications, identified in Appendices 4A, 4B, 4C and 4D of this Permit. The Permittees shall maintain all NCRs in the IDF unit-specific Operating Record and shall make them available to Ecology upon request, or during the course of an inspection.

III.11.D.1.d.2.b The Permittees shall provide copies of NCRs affecting any critical or regulated system to Ecology within five (5) working days after identification of the nonconformance. Identification of critical systems is included in Permit Condition III.11.C.1 and Appendix 4A of this permit. Ecology will review a NCR affecting a critical system and notify the Permittees within five (5) working days, in writing, whether a Permit modification is required for any nonconformance, and whether prior approval is required from Ecology before work proceeds, which affects the nonconforming item.

III.11.D.1.d.2.c As-Built Drawings

Upon completing construction of IDF, the Permittees shall produce as-built drawings of the project, which incorporate the design and construction modifications resulting from all project ECNs and NCRs, as well as modifications made pursuant to WAC 173-303-830. The Permittees shall place the drawings into the Operating Record within twelve (12) months of completing construction.

III.11.D.2 The Permittees shall not reduce the minimum frequency of destructive testing less than one test per 500 feet of seam, without prior approval in writing from Ecology

III.11.E GROUND WATER AND GROUND WATER MONITORING

Ground water shall be monitored in accordance with WAC 173-303 and the provisions contained in the Ecology-approved facility ground water monitoring plan (Chapter 5.0). All wells used to monitor the ground water beneath the unit shall be constructed in accordance with the provisions of WAC 173-160.

III.11.E.1 Ground Water Monitoring Program

III.11.E.1.a Prior to initial waste placement in the IDF landfill, the Permittees shall sample all ground water monitoring wells in the IDF network twice quarterly for one first year to determine baseline conditions. For the first sampling event (and only the first), samples for each well will include all constituents in 40 CFR 264 Appendix IX. Thereafter, sampling will include only those constituents as specified in Chapter 5.0, Table 5-2: chromium (filtered and unfiltered the first year to compare results), specific conductance, TOC, TOX, and pH. Other constituents to be monitored but not statistically compared include alkalinity, anions, ICP metals, and turbidity. These will provide important information on hydrogeologic characteristics of the aquifer and may provide indications of encroaching contaminants from other facilities not associated with IDF.

III.11.E.1.b After the baseline monitoring is completed, and data is analyzed, the Permittees and Ecology shall assess revisions to Chapter 5.0, Table 5-2. Subsequent samples will be collected annually and will include constituents listed in Table 5-2 as approved by Ecology. All data analysis will employ Ecology approved statistical methods pursuant to WAC 173-303-645. Changes to Chapter 5.0 will be subject to the permit modification procedures under WAC 173-303-830.

III.11.E.1.c All constituents used as tracers to assess performance of the facility through computer modeling should be sampled at least annually to validate modeling results. Groundwater monitoring data and analytes to be monitored will be reviewed periodically as defined in Chapter 5.0 of this Permit.

III.11.E.1.d Upon Ecology approval of the leachate monitoring plan, leachate monitoring and groundwater monitoring activities should be coordinated as approved by Ecology to form an effective and efficient means of monitoring the performance of the IDF facility.

III.11.E.1.e Groundwater monitoring data shall be reported to Ecology annually by July 30.

III.11.F LEACHATE COLLECTION COMPONENT MANAGEMENT

Permittees shall design, construct, and operate all leachate collection systems to minimize clogging during the active life and post closure period

III.11.F.1 Leachate Collection and Removal System (LCRS)

III.11.F.1.a At least 120 days prior to initial waste placement in the IDF, the Permittees shall submit a Leachate monitoring plan to Ecology for review, approval, and incorporation into the permit. Upon approval by Ecology, this plan will be incorporated into the Permit as a class 1' modification. The Permittees shall not accept waste into the IDF until the requirements of the leachate monitoring plan have been incorporated into this permit.

III.11.F.1.b Leachate in the LCRS (primary sump) shall be sampled and analyzed monthly for the first year of operation of the facility and quarterly thereafter (pursuant to WAC 173-303-200). Additionally, leachate shall be sampled and analyzed to meet waste acceptance criteria at the receiving treatment storage and disposal facility.

III.11.F.1.c Permittees shall manage the leachate in the LCRS system in a manner that does not allow the fluid head to exceed 30.5 cm above the flat 50-foot by 50-foot LCRS sump HDPE bottom liner except for rare storm events as discussed in Chapter 4.0, §4.3.6.1 and the LCRS sump trough [(WAC 173-303-665(2)(h)(ii)(B). Liquid with a depth greater than 30.5 cm above the SLDS liner will be removed at the earliest practicable time after detection (not to exceed 5 working days).

III.11.F.1.d After initial waste placement, Permittees shall manage all leachate from the permitted cell as dangerous waste (designated with Dangerous Waste Number F039) in accordance with WAC 173-303.

III.11.F.2 Monitoring and Management of Leak Detection System (LDS/ secondary sump)

III.11.F.2.a Permittees shall manage the leachate in the LDS system in a manner that does not allow the fluid head to exceed 30.5 cm above the LDS liner (WAC 173-303-665(2)(h)(ii)(B).

III.11.F.2.b Permittees shall monitor and record leachate removal for comparison to the Action Leakage Rate (ALR) as described in Appendix 4C, Response Action Plan. If the leachate flow rate in the LDS exceeds the ALR, the Permittees shall implement the Ecology approved response action plan (Appendix 4C).

III.11.F.2.c Leachate from the LDS (secondary sump) shall be sampled semi-annually if a pumpable quantity of leachate is available for sampling.

III.11.F.2.d Accumulated liquid of pumpable quantities in the LDS will be managed in a manner that does not allow the fluid head to exceed 30.5 cm above the LDS liner [WAC 173-303-665(2)(h)(i)(C)(iii)]. Liquid with a depth greater than 30.5 cm above the LDS liner will be removed at the earliest practicable time after detection (not to exceed 5 working days).

III.11.F.3 Monitoring and Management of the Secondary Leak Detection System (SLDS)

III.11.F.3.a At least 180 days prior to initial waste placement, the, the Permittees shall submit to Ecology for approval a sub-surface liquids monitoring and operations plan (SLMOP) for the SLDS to include the following: monitoring frequency, pressure transducer configuration, liquid collection and storage processes, sampling and analysis and response actions. The SLMOP shall be approved by Ecology prior to placement of waste in the IDF, and incorporated into the Permit as a Class 1' modification.

III.11.F.3.b Permittees shall monitor and manage the SLDS (tertiary sump) pursuant to the approved sub-surface liquids monitoring and operations plan.

III.11.F.3.c Accumulated liquid of pumpable quantities in the SLDS will be managed in a manner that does not allow the fluid head to exceed 30.5 cm above the SLDS liner [WAC 173-303-665(2)(h)(i)(C)(iii)]. Liquid with a depth greater than 30.5 cm above the SLDS liner will be removed at the earliest practicable time after detection (not to exceed 5 working days).

III.11.F.3.d After initial waste placement, Permittees shall manage all leachate from the permitted cell as dangerous waste in accordance with WAC 173-303.

III.11.G CONSTRUCTION WATER MANAGEMENT

III.11.G.1 During construction, it is anticipated that liquids will accumulate on top of all liners and sumps. Permittees shall manage the construction wastewater in accordance with State Waste Discharge Permit ST 4511.

III.11.G.2 Liquid accumulation within the LCRS, LDS, and SLDS prior to initial waste placement will be considered construction wastewater (i.e., not leachate).

III.11.H LANDFILL LINER INTEGRITY MANAGEMENT & LANDFILL OPERATIONS

III.11.H.1 Permittees shall design, construct, and operate the landfill in a manner to protect the liners from becoming damaged. Temperature: Waste packages with elevated temperatures shall be evaluated and managed in a manner to maintain the primary (upper) liner below the design basis temperature for the liner (e.g.,160 F). Weight: Waste, fill material and closure cover shall be placed in a manner that does not exceed the allowable load bearing capacity of the liner (weight per area 13,000 lb/ft^2). Puncture: At least 3 feet of clean backfill material shall be placed as an operations layer over the leachate collection and removal system to protect the system from puncture damage.

III.11.H.1.a All equipment used for construction and operations inside of the IDF shall meet the weight limitation as specified in Permit Condition III.H.1. Only equipment that can be adequately supported by the operations layer as specified in Permit Condition III.H.1 (e.g., will not have the potential to puncture the liner) shall be used inside of the IDF. All equipment used for construction and operations outside of the IDF shall not damage the berms. Changes to any equipment will follow the process established by condition II.R of the site wide permit. Within 120 days from the effective date for the permit, a process for demonstrating compliance with this condition shall be submitted for review by Ecology. This process will be incorporated into appropriate IDF operating procedures prior to IDF operations.

III.11.H.2 The Permittees shall construct berms and ditches to prevent run-on and run-off in accordance with the requirements of Section 4.3.8 of this permit. Before the first placement of waste in the IDF, the Permittees shall submit to Ecology a final grading and topographical map on a scale sufficient to identify berms and ditches used to control run-on and run-off. Upon approval, Ecology will incorporate these maps into the permit as a Class 1' modification.

III.11.H.3 The Permittees shall operate the RCRA IDF Cell (Cell1) in accordance with WAC 173-303-665(2) and the operating practices described in Chapters 3.0, 4.0, 6.0, 7.0, 8.0 and Appendix 4A, §1, subsection 7, except as otherwise specified in this Permit.

III.11.H.4 The Permittees shall maintain a permanent and accurate record of the three-dimensional location of each waste type, based on grid coordinates, within the RCRA IDF Cell (Cell1) in accordance with WAC 173-303-665(5).

III.11.I WASTE ACCEPTANCE CRITERIA

The only acceptable waste form approved for disposal at the RCRA cell of IDF are IDF operational waste, Immobilized Low Activity Waste (ILAW) in glass form from the Waste Treatment Plant (WTP) Low Activity Waste (LAW) Vitrification facility and ILAW from the Bulk Vitrification Research Demonstration and Development facility (up to 50 boxes). Specifics about waste acceptance criteria for each of these wastes are detailed below.

No other waste forms may be disposed at the RCRA cell of IDF unless authorized via a Final Permit modification decision. Requests for Permit modifications must be accompanied by an analysis adequate for Ecology to comply with SEPA, as well as by a risk assessment and groundwater modeling to show the environmental impact. Permit Condition III.11.I.5 outlines the process by which waste sources in the IDF are modeled in an ongoing risk budget and a ground water impact analysis.

III.11.I.1 Six months prior to IDF operations Permittees shall submit to Ecology for review, approval, and incorporation into the permit, all waste acceptance criteria to address, at a minimum, the following: physical/chemical criteria, liquids and liquid containing waste, land disposal restriction treatment standards and prohibitions, compatibility of waste with liner, gas generation, packaging, handling of packages, minimization of subsidence.

III.11.I.1.a All containers/packages shall meet void space requirements pursuant to WAC 173-303-665(12).

III.11.I.1.b Compliance Schedule

III.11.I.1.b.1 Six months prior to IDF operations, the Permittees shall submit to Ecology for review, approval, and incorporation into the permit any necessary modifications to the IDF Waste Acceptance Plan (Appendix 3A of the permit application, DOE/RL-2003-12, Rev 1).

III.11.I.2 ILAW Waste Acceptance Criteria

The only ILAW forms acceptable for disposal at IDF are: (1) approved glass canisters that are produced in accordance with the terms, conditions, and requirements of the WTP portion of the Permit, and (2) the 50 bulk vitrification test boxes as specified in the DBVS test plans.

To assure protection of human health and the environment, it is necessary that the appropriate quality of glass be disposed at IDF. The LDR Treatment Standard for eight metals (arsenic, barium, cadmium, chromium, lead, mercury, selenium and silver), when associated with High Level Waste, is HLVIT (40 CFR 268). Because these metals are constituents in the Hanford Tanks Waste, the LDR standard for ILAW disposed to IDF is HLVIT.

For any ILAW glass form(s) that DOE intends to dispose of in IDF, DOE will provide to Ecology for review, an ILAW Waste Form Technical Requirements Document (IWTRD). The IWTRD will contain:

III.11.I.2.a WTP ILAW Waste Acceptance Criteria

III.11.I.2.a.1 A description of each specific glass formulation that DOE intends to use including a basis for why each specific formulation is proposed for use, which specific tank wastes the glass formulation is proposed for use with, the characteristics of the glass that are key to satisfactory performance (e.g., VHT, PCT, and TCLP and/or other approved performance testing methodologies that the parties agree are appropriate and necessary), the range in key characteristics anticipated if the specific glass formulation is produced on a production basis with tank waste, and the factors that DOE must protect against in producing the glass to ensure the intended glass characteristics will exist in the actual ILAW.

III.11.I.2.a.2 A performance assessment that provides a reasonable basis for assurance that each glass formulation will, once disposed of in IDF in combination with the other waste volumes and waste forms planned for disposal at the entire Integrated Disposal Facility, be adequately protective of human health and the environment; and will not violate or be projected to violate all applicable state and federal laws, regulations and environmental standards.

Within 60 days of a request by Ecology, the Permittees shall provide a separate model run using Ecology's assumptions and model input.

III.11.I.2.a.3 A description of production processes including management controls and quality assurance/quality control requirements that assure that glass produced for each formulation will perform in a reasonably similar manner to the waste form assumed in the performance assessment for that formulation.

The Permittees shall update the IWTRD consistent with the above requirements for review by Ecology consistent with their respective roles and authority as provided under the TPA. Ecology comments shall be dispositioned through the Review Comment Record (RCR) process and will be reflected in further modeling to modify the IDF ILAW Chapter 3.0, Waste Analysis Plan as appropriate.

The initial IWTRD contained glass formulation data as required by Permit Condition III.11.I.2.a.1, and was submitted on December 18, 2006 (AR Accession # 0906020182). The performance assessment required by Permit Condition III.11.I.2.a.2, and the quality assurance/quality control requirements process required by Permit Condition III.11.I.2.a.3 shall be submitted for Ecology review as soon as possible after issuance of the Final Tank Closure and Waste Management EIS and receipt of underlying codes and data packages, and at least 180 days prior to the date DOE expects to receive waste at IDF. At a minimum, the Permittees shall submit updates to the IWTRD to Ecology every five years or more frequently with the next one due December 31, 2012, if any of the following conditions exist:

- The Permittees submits a permit modification request allowing additional waste forms to be disposed of at IDF,
- The WTP or other vitrification facility change their glass formulations from those previously included in the IWTRD
- An unanticipated event or condition occurs that Ecology determines would warrant an update to the IWTRD.

III.11.I.2.a.4	The Permittees shall not dispose of any WTP ILAW not described and evaluated in the IWTRD.
III.11.I.3	ILAW Waste Acceptance Criteria Verification
III.11.I.3.a	Six months prior to disposing of ILAW in the IDF, the Permittees will submit an ILAW verification plan to Ecology for review and approval. This plan will be coordinated with WTP, Ecology, and the Permittees personnel. This plan will outline the specifics of verifying ILAW waste acceptance through WTP operating parameters, and/or glass sampling. The Plan will include physical sampling requirements for batches, glass formulations, and/or feed envelopes.
III.11.I.4	Demonstration Bulk Vitrification System (DBVS) Bulk Vitrification Waste Acceptance Criteria
III.11.I.4.a	Bulk Vitrification waste forms that are acceptable to be disposed of at IDF are up to 50 boxes of vitrified glass produced pursuant to the DBVS RD&D Permit from processing Hanford Tank S-109 tank waste.
III.11.I.4.b	If Bulk Vitrification is selected as a technology to supplement the Waste Treatment Plant, the IDF portion of the Permit will need to be modified to accept Bulk Vitrification Full Scale production waste forms. This modification will need to be accompanied by appropriate TPA changes (per M-062 requirements) and adequate risk assessment information sufficient for the Department of Ecology to meet its SEPA obligations.
III.11.I.4.c	DBVS Waste Acceptance Verification will occur on 100% of the waste packages. Pursuant to the DBVS RD&D Permit, a detailed campaign test report will be produced and submitted to Ecology detailing results of all testing performed on each waste package that is produced. IDF personnel shall review these reports to verify that the waste packages meet IDF Waste Acceptance Criteria.
III.11.I.4.d	The Permittees shall not dispose of any waste forms that do not comply with all appropriate and applicable treatment standards, including all applicable Land Disposal Restrictions (LDR).
III.11.I.5	Modeling – Risk Budget Tool
III.11.I.5.a	The Permittees must create and maintain a modeling - risk budget tool, which models the future impacts of the planned IDF waste forms (including input from analyses performed as specified in Permit Conditions III.11.I.2.a through III.11.I.2.a.ii) and their impact to underlying vadose and ground water. This software tool will be submitted for Ecology review as soon as possible after issuance of Final Tank Closure and Waste Management EIS and receipt of underlying codes and data packages, and at least 180 days prior to the date DOE expects to receive waste at IDF. The risk budget tool shall be updated at least every 5 years. The model will be updated more frequently if needed, to support permit modifications or SEPA Threshold Determinations whenever a new waste stream or significant expansion is being proposed for the IDF. This risk budget tool shall be conducted in manner that is consistent with state and federal requirements, and represents a risk analysis of all waste previously disposed of in the entire IDF (both cell 1 and cell 2) and those wastes expected to be disposed of in the future for the entire IDF to determine cumulative impacts. The groundwater impact should be modeled to evaluate fate and transport in the groundwater aquifer(s) and should be compared against various performance standards including but not limited to drinking water standards (40 CFR 141 and 40 CFR 143). Ecology will review modeling assumptions, input parameters, and results and will provide comments to the Permittees. Ecology comments shall be dispositioned through the Review Comment Record (RCR) process and will be reflected in further modeling to modify the IDF ILAW waste acceptance criteria as appropriate.

III.11.I.5.a.1 The modeling-risk budget tool will include a sensitivity analysis reflecting parameters and changes to parameters as requested by Ecology.

III.11.I.5.a.2 If these modeling efforts indicate results within 75% of a performance standard [including but not limited to federal drinking water standards (40 CFR 141 and 40 CFR 143)], Ecology and the Permittees will meet to discuss mitigation measures or modified waste acceptance criteria for specific waste forms.

III.11.I.5.a.3 When considering all the waste forms to be disposed of in IDF, the Permittees shall not dispose of any waste that will result (through forward looking modeling or in real groundwater concentrations data) in a violation of any state or federal regulatory limit, specifically including but not limited to drinking water standards for any constituent as defined in 40 CFR 141 and 40 CFR 143.

III.11.I.6 The Permittees shall not dispose of any waste that is not in compliance with state and federal requirements as identified in Chapter 13.0.

III.11.I.6.a In accordance with DOE's authority under the Atomic Energy Act of 1954, as amended and other applicable law, prior to disposing of any mixed immobilized low-activity waste (ILAW) in the IDF, DOE will certify to the State of Washington that it has determined that such ILAW is not high-level waste and meets the criteria and requirements outlined in DOE's consultation with the U.S. Nuclear Regulatory Commission beginning in 1993 (Letter from R.M. Bernero, USNRC to J. Lytle, USDOE, dated March 2, 1993; Letter from J. Kinzer, USDOE, to C. J. Paperiello, USNRC, Classification of Hanford Low-Activity Tank Waste Fraction, dated March 7, 1996; and Letter from C.J. Paperiello, USNRC, to J. Kinzer, USDOE, Classification of Hanford Low-Activity Tank Waste Fraction, dated June 9, 1997). While the requirement to provide such certification is an enforceable obligation of this permit, the provision of such certification does not convey, or purport to convey, authority to Ecology to regulate the radioactive hazards of the waste under this permit.

III.11.I.7 IDF Operational Waste Acceptance Criteria

III.11.I.7.a IDF operational activities (including decontamination, cleanup, and maintenance) will generate a small amount of waste. Waste that can meet IDF waste acceptance without treatment will be disposed of at the IDF. All other IDF operational waste will be managed pursuant to WAC 173-303-200.

1
2
3
4
5 This page intentionally left bank.

R11443581

Quarter Ending 09/30/2011 24590-HLW-PCN-ENV-10-005

Hanford Facility RCRA Permit Modification Notification Form

Part III, Operating Unit 10

Waste Treatment and Immobilization Plant

ISSUED BY
RPP-WTP PDC

Index

Page 2 of 3: Hanford Facility RCRA Permit, Part III, Operating Unit 10, Waste Treatment and Immobilization Plant
Replace Mechanical System Data Sheets 24590-HLW-MVD-HDH-P0006 and 24590-HLW-MVD-HDH-P0012 in Appendix 10.6 of the Dangerous Waste Permit (DWP).

Submitted by Co-Operator:

Donna Busche 9/20/11
D. M. Busche Date

Reviewed by ORP Program Office:

D. L. Noyes 10/4/2011
D. L. Noyes Date

Quarter Ending 09/30/2011 24590-HLW-PCN-ENV-10-005

Hanford Facility RCRA Permit Modification Notification Form

Unit:	Permit Part:
Waste Treatment and Immobilization Plant	**Part III, Operating Unit 10**

Description of Modification:

For Canister Decon Vessels 1 and 2, the purpose of this Class 1 prime modification is to replace the Mechanical Data Sheets in Appendix 10.6 with an updated Mechanical Data Sheet.

Appendix 10.6			
Replace:	24590-HLW-MVD-HDH-P0006, Rev. 2	With:	24590-HLW-MVD-HDH-00006, Rev. 5
	24590-HLW-MVD-HDH-P0012, Rev. 1		

This modification replaces two Mechanical Data Sheets for Canister Decon Vessels 1 and 2 currently in the DWP with a single Mechanical Data Sheet because the two vessels are identical. Some changes and clarifications were made to the Mechanical Data Sheet.

The significant changes are summarized below:

Mechanical Data Sheet 24590-HLW-MVD-HDH-00006:

- Materials of construction added for vessel hinge block and lock pin
- Materials of construction revised for pipe/elbow
- Miscellaneous data revised for internal finish to require breaking sharp corners and smooth finish on canister guides
- Component Function and Life Cycle Description was updated
- Added references for Corrosion/Erosion Allowance for Canister Decon Vessels
- Renamed Remarks to Cyclic Notes for clarification
- Added requirement for consideration of impact loading of a full canister
- Revised Vessel Contents including Design Pressure, Operating Pressure, Operating Temperature, and number of cycles
- In Notes and Additional Information, revised heating and cooling design pressure and temperature
- Added notes that the coil serves for both heating and cooling
- Identified vessel has passive waste acceptance impacting (WAI) attributes
- Provided specification reference for nozzle loads

The following is a list of outstanding change documents for Mechanical Data Sheet 24590-HLW-MVD-HDH-00006 that have not been incorporated into this modification:

- None

Quarter Ending 09/30/2011 24590-HLW-PCN-ENV-10-005

WAC 173-303-830 Modification Class:	Class 1	Class 1	Class 2	Class 3
Please mark the Modification Class:		X		

Enter relevant WAC 173-303-830, Appendix I Modification citation number: NA

Enter wording of WAC 173-303-830, Appendix I Modification citation:

In accordance with WAC 173-303-830(4)(d)(i), this modification notification is requested to be reviewed and approved as a Class 1 modification. WAC 173-303-830(4)(d)(ii)(A) states, "Class 1 modifications apply to minor changes that keep the permit current with routine changes to facility or its operation. These changes do not substantially alter the permit conditions or reduce the capacity of the facility to protect human health or the environment. In the case of Class 1 modifications, the director may require prior approval."

Modification Approved/Concur: ☑ Yes ☐ Denied (state reason below)

Reason for denial:

Reviewed by Ecology:

D. McDonald 11-16-11 Date

ISSUED BY
RPP-WTP PDC

MECHANICAL DATA SHEET: VESSEL

PLANT ITEM No.
24590-HLW-MV-HDH-VSL-00002
24590-HLW-MV-HDH-VSL-00004

R11186358

Project:	***RPP-WTP***	P&ID:	***24590-HLW-M6-HDH-00001 and 24590-HLW-M6-HDH-20001***
Project No:	***24590***	Calculations:	***See Attachment 1***
Project Site:	***Hanford***	Vessel Drawing:	***24590-HLW-MV-HDH-00010001, 00010002, 00010003, and 24590-HLW-MV-HDH-00011001, 00011002, 00011003***
Description:	***Canister Decon Vessel 1, 24590-HLW-MV-HDH-VSL-00002. Canister Decon Vessel 2, 24590-HLW-MV-HDH-VSL-00004.***	Reports:	***24590-HLW-N1D-HDH-00003, 24590-HLW-WSF-ENG-07-002***

Reference Data

Charge Vessels (Tag Numbers)	***Not Required***
Pulsejet Mixers / Agitators (Tag Numbers)	***Not Required***
RFDs/Pumps (Tag Numbers)	***Not Required***

Design Data

Quality Level		***CM (Note 6)***			Fabrication Specs	***24590-WTP-3PS-MV00-T0001***	
Seismic Category		***SC-III***			Design Code	***Per ASME VIII Div 1***	
Service/Contents		***Nitric Acid, Water, Ceric Nitrate***			Code Stamp	***No***	
Design Specific Gravity		***1.25***			NB Registration	***No***	
Maximum Operating Volume	gal	***214 with Canister in Vessel***			Weights (lbs)	Empty	Operating	Test
Total Volume	gal	***630 (Note 2)***			Estimated	***3400***	***21,200***	***21,200***
Environmental Qualification		***N/A***						

Inside Diameter	inch	***30***			Wind Design	***None***	
Length/Height (TL-TL)	inch	***220 (OAL)***			Snow Design	***None***	
		Vessel Operating	Vessel Design	Coil/Jacket Design	Seismic Design	***24590-WTP-3PS-MV00-T0002 24590-WTP-3PS-FB01-T0001***	
Internal Pressure	psig	***Atm***	***15***	***Note 1***			
External Pressure	psig	***1.5***	***Atm***	***Note 1***	Postweld Heat Treat	***None***	
Temperature	°F	***149***	***225***	***Note 1***	Corrosion Allowance (Vessel)	Inch	***0.04***
Min. Design Metal Temp.	°F	***40***			Corrosion Allowance (Coil)	Inch	***0.00***

Materials of Construction

Component	Material	Minimum Thickness / Size	Containment
Lid Assembly / Hinge Block, & Lock Pin	***B-265 2 / SA-479-304***	***See Drawing***	***N/A***
Shell	***B-265 2***	***See Drawing***	***N/A***
Bottom Head	***B-265 2***	***See Drawing***	***N/A***
Support	***B-265 2***	***See Drawing***	***N/A***
Shaft	***N/A***	***N/A***	***N/A***
Bearings	***N/A***	***N/A***	***N/A***
Pipe/Elbow	***B-861 2 Seamless/B-363 2***	***See Drawing***	***N/A***
Tubing (Coil)	***B-338 2W***	***See Drawing***	***N/A***
Forgings / Bar stock	***B-381 F2 / SB348-2 Note 5***	***See Drawing***	***N/A***
Gaskets	***Note 3***	***N/A***	***N/A***
Bolting	***A-193 B8 / A-194 8***	***N/A***	***N/A***

Miscellaneous Data

Orientation	***Vertical***	Support Type	***Collar***
Insulation Function	***Not Applicable***	Insulation Material	***Not Applicable***
Insulation Thickness (inch)	***Not Applicable***	Internal Finish	***Welds Descaled as Laid. Break sharp corners and smooth finish on canister guides.***
External Finish	***Welds Descaled as Laid***		

	MECHANICAL DATA SHEET: VESSEL	PLANT ITEM No. *24590-HLW-MV-HDH-VSL-00002* *24590-HLW-MV-HDH-VSL-00004*

Equipment Cyclic Data Sheet

Component Plant Item Number:	***24590-HLW-MV-HDH-VSL-00002 and 24590-HLW-MV-HDH-VSL-00004***
Component Description	***Canister Decon Vessels 1 & 2***

The information below is provisional and envelopes operational duty for fatigue assessment. It is not to be used as operational data.

Materials of Construction	***SB-265 2***
Design Life	***40 Years***
Component Function and Life Cycle Description	***A cycle consists of the following: (24590-HLW-3YD-HDH-00002)*** ***Acid Etch:*** • ***A 10,000 lb canister is loaded into the vessel and the lid closed.*** • ***The vessel will fill to the overflow with one-molar nitric acid and Cerium +4 solution.*** • ***The coil will be used to raise the temperature of the liquid from 73°F to 149°F. Coil hot water conditions: 180 °F inlet, 151 °F outlet, 29 psig pressure drop.*** (5) • ***The coil will maintain the temperature of the liquid at 149 °F (+/- 5°F) for 6 hours.*** • ***After the 6-hour decontamination period the liquid in the vessel is cooled to 104 °F. Coil cooling water conditions: 83 °F inlet, 119 °F outlet, 37 psig pressure drop.*** (5) • ***The nitric acid solution is then drained from the vessel.*** ***Acid Rinse:*** • ***The upper and lower spray rings will rinse the top of the canister with nitric acid (10 seconds).*** • ***Flow to the spray rings will stop, the lid will open, and the canister will be slowly removed from the vessel while the lower spray ring is utilized to rinse the canister.*** • ***The canister is raised until it is above the top spray ring. Total rinse volume is approximately 200 gallons.*** • ***The acid rinse is drained from vessel and the canister is lowered back into the vessel.*** ***Demineralized Water Rinse:*** • ***Repeat the steps for the Acid Rinse using demineralized water.*** • ***Water rinse volume is approximately 200 gallons.*** • ***The demineralized water rinse is drained from vessel, and the canister is lowered back into the vessel for drying.***

Vessel Contents

Load Type		Min	Max	Number of Cycles	Comment
Design Pressure	psig	***FV***	***15***	***10***	
Operating Pressure	psig	***-1.44***	***0***	***23,000***	
Operating Temperature	°F	***73*** ***149***	***149*** ***104***	***23,000*** ***23,000***	***Hot water heating process (24590-HLW-MEC-HDH-00001)*** ***Cooling water process (24590-HLW-MEC-HDH-00001)***
Contents Specific Gravity		***1.00***	***1.25***	***23,000***	
Contents Level	inch	***Empty***	***Full***	***69,000***	***Vessel is filled 3 times for each process cycle - see above description***
Localized Features					
Vessel and Supports		***Empty / Full Canister***		***69,000***	***Canister is lifted out of the vessel 3 times for each process cycle - see above description***

Cyclic Notes

- Cycle increase: The Seller must increase the numbers of operational cycles given above by 10% to account for commissioning duty unless otherwise noted.

- The Seller is to consider impact loading due to a full canister being loaded in the vessel with crane hoist slow speed of 5 feet per minute. (5)

- Hot water outlet temp and cooling water outlet temp represent initial conditions which are the worst case thermal differential condition. (5)

	MECHANICAL DATA SHEET: VESSEL	PLANT ITEM No. *24590-HLW-MV-HDH-VSL-00002* *24590-HLW-MV-HDH-VSL-00004*

Notes and Additional Information

Note 1: Heating and Cooling Coil design pressure = 180 psig, design temperature = 210°F. Coil serves for either heating or cooling.

Note 2: Vessel volumes are approximate and do not account for manufacturing tolerances, nozzles, and displacement of internals.

Note 3: Body flange gasket shall be Garlock Helicoflex HN 208A seal configuration with titanium jacket.

Note 4: Contents of this document are Dangerous Waste Permit affecting.

Note 5: Bar SB348-2 is used for Spray Nozzles (Full Jet - Size 10) P/N 08D & 09D, Rollers and Roller Pins P/N 18C & 18D, Thermowells P/N 38A & 38C, Stabilizer bars P/N 19B, Lid Hold Downs P/N 28B & 31K. (See vendor dwgs for P/N).

Note 6: This vessel has passive WAI attributes. Quality level remains CM.

Note 7: Added DOE Radioactive Materials Disclaimer and Safety Screening statement. Renamed Remarks to, Notes and Additional Information and moved section. Added Note 6 (above). Revised Note 1 and equipment cyclic data. Equipment Qualification Datasheet (EQD) is not required for APC/SC-III equipment. Renamed Notes to "Cyclic Notes" for clarification of section. Clarified corrosion allowance for coil. Added reference calculations & report numbers. Added Attachment 1 for BNI use only. Included plant item number 24590-HLW-MV-HDH-VSL-00004, thus superseding previous data sheet.

Note 8: This document contains information pertinent to an accident analysis calculation and receives a screening from E&NS, in accordance with procedures, anytime the document is modified. *(Internal - For BNI Use Only)*

Note 9: Nozzle Loads are in accordance with 24590-WTP-3PS-MV00-T0001, Appendix A, Table A2, *Engineering Specification for Pressure Vessel Design and Fabrication.*

DOE Radioactive Materials Disclaimer: Please note that source, special nuclear and byproduct materials, as defined in the Atomic Energy Act of 1954 (AEA), are regulated at the US Department of Energy (DOE) facilities exclusively by DOE acting pursuant to its AEA authority. DOE asserts, that pursuant to the AEA, it has sole and exclusive responsibility and authority to regulate source, special nuclear, and byproduct materials at DOE-owned nuclear facilities. Information contained herein on radionuclides is provided for process description purposes only.

Screening / Evaluation Required? If yes per 24590-WTP-GPP-SREG-002, E&NS signature required below	X	Yes		No

Approval

Rev	Description	System Engineer	Vessel Engineer	Checked	MET	E&NS	Approved	Date
0	Issue for Purchase	D. Choi	R. Simmons	M. Staley C. Slater	M. Wright	N/A	M. Hoffmann	06/16/03
1	Revised as Indicated	G. Fenton	R. Simmons	T. Galioto C. Slater	D Yarbrough	N/A	M. Hoffmann	10/29/03
2	Issued to Incorporate 24590-WTP-SDDR-PROC-04-01079	R. Tometczak	Paul Polani	Steve Crow	Jeff Pullen	N/A	M. Hoffmann	1/21/05
3	Revised per Note 3 on sheet 1 of 2.	Ronda Russell	Bart Makadia	P Polani A.P. Pinto	Debbie Adler Cliff Slater	N/A	J Julyk	11/28/05
4	Revised per Note 7. This document Supersedes 24590-HLW-MVD-HDH-00012, Rev 3; 24590-HLW-MVD-HDH-P0006, Rev 3, and 24590-HLW-MVD-HDH-P0012, Rev 2. Incorporated and resolved the following: 24590-HLW-MVN-HDH-00009, 24590-WT6P-M6N-M80T-00002, and 24590-WTP-SDDR-MS-07-00046.	M. Kufahl	Bart Makadia	Mike Seed	Debbie Adler	Barb Dubiel	John Julyk	4/24/09
5	Add impact loading requirements and crane travel speed. Added note for hot water temp and cooling water temp initial conditions. Added reference for crane speed. revised hot water heating and cooling water conditions	M. Kufahl	Bart Makadia	Mike Seed	Debbie Adler	Matt Culp	John Julyk	3/26/10

ATTACHMENT 1
REFERENCES for Data Sheet: 24590-HLW-MVD-HDH-00006, Rev 5 (For BNI Use only)
Vessel Tag Numbers: HDH-VSL-00002 and HDH-VSL-00004

Data	Document #	Rev	Document Title
Quality Level	24590-HLW-M6-HDH-00001	4	*P&ID HLW Canister Handling Decontamination System*
Seismic Category	24590-HLW-M6-HDH-00001	4	*P&ID HLW Canister Handling Decontamination System*
Design Specific Gravity	24590-HLW-MVC-HDH-00005	A	*HDH Vessel and Tank Process Data Calculation*
Max Operating Volume	24590-HLW-M6C-HDH-00008	C	*HLW HDH Canister Decontamination Vessel (HDH-VSL-00002 and HDH-VSL-00004)*
Total Volume	24590-HLW-M6C-HDH-00008	C	*HLW HDH Canister Decontamination Vessel (HDH-VSL-00002 and HDH-VSL-00004)*
Inside Diameter	24590-HLW-M6C-HDH-00008	C	*HLW HDH Canister Decontamination Vessel (HDH-VSL-00002 and HDH-VSL-00004)*
Length TL-TL	24590-HLW-M6C-HDH-00008	C	*HLW HDH Canister Decontamination Vessel (HDH-VSL-00002 and HDH-VSL-00004)*
Operating Pressure (external)	24590-HLW-MVC-HDH-00005	A	*HDH Vessel and Tank Process Data Calculation*
Operating Pressure (internal)	24590-HLW-MVC-HDH-00005	A	*HDH Vessel and Tank Process Data Calculation*
Design Pressure (internal)	24590-HLW-MVC-HDH-00005	A	*HDH Vessel and Tank Process Data Calculation*
Design Pressure (external)	24590-HLW-MVC-HDH-00005	A	*HDH Vessel and Tank Process Data Calculation*
Design Pressure Internal (Coil) 5	24590-HLW-M6C-HDH-00015 24590-HLW-M6E-HDH-00020	A N/A	*Design Pressure and Temperature Calculation for HLW Canister Decontamination Handling (HDH) System* *Amend HDH System Pressure and Temperature Calculation for Defined Set Pressure in Head Vessels*
Design Pressure External (Coil) 5	24590-HLW-M6C-HDH-00015 24590-HLW-M6E-HDH-00020	A N/A	*Design Pressure and Temperature Calculation for HLW Canister Decontamination Handling (HDH) System* *Amend HDH System Pressure and Temperature Calculation for Defined Set Pressure in Head Vessels*
Design Temperature (Coil) 5	24590-HLW-M6C-HDH-00015 24590-HLW-M6E-HDH-00020	A N/A	*Design Pressure and Temperature Calculation for HLW Canister Decontamination Handling (HDH) System* *Amend HDH System Pressure and Temperature Calculation for Defined Set Pressure in Head Vessels*
Operating Temp	24590-HLW-MVC-HDH-00005	A	*HDH Vessel and Tank Process Data Calculation*
Design Temp	24590-HLW-MVC-HDH-00005	A	*HDH Vessel and Tank Process Data Calculation*
Corrosion Allowance, Erosion allowance	24590-HLW-N1D-HDH-00003	6	*Corrosion Evaluation HDH-VSL-00002/4*
Materials of Construction	24590-HLW-N1D-HDH-00003	6	*Corrosion Evaluation HDH-VSL-00002/4*
Cyclic Data (Vessel)	24590-HLW-MVC-HDH-00006 24590-HLW-MVC-30-00001 24590-HLW-MEC-HDH-00001 24590-HLW-M6N-HDH-00021	0 B B N/A	*Heating and Cooling Cycles for HDH-VSL-00002/4* *HLW Vessel Cyclic Datasheet Inputs* *HDH-VSL-00002/4 Cooling and Heating Coils Process Information* / coil operating conditions, vessel operating conditions *HDH System Changes for Replacement of Steam heating with Hot water Heating System* / coil design pressure and temperature
Nozzle Loads	24590-WTP-3PS-MV00-T0001	3	Pressure Vessel Design and Fabrication Specification
Crane/Canister Travel Speed 5	24590-HLW-M0D-HDH-00021	4	*Mechanical Handling Data Sheet, Decontamination Swabbing and Monitoring Crane* - use crane hoist slow speed of 5 ft/min

ISSUED BY
RPP-PWP PMO

Quarter Ending 09/30/2011

24590-HLW-PCN-ENV-10-014

Hanford Facility RCRA Permit Modification Notification Form

Part III, Operating Unit 10

Waste Treatment and Immobilization Plant

Index

Page 2 of 2: Hanford Facility RCRA Permit, Part III, Operating Unit 10, Waste Treatment and Immobilization Plant

Replace HLW Facility Plant Item Material Selection Data Sheet 24590-HLW-N1D-HOP-P0003 with Updated Corrosion Evaluation 24590-HLW-N1D-HOP-00003 in Appendix 10.9 of the Dangerous Waste Permit (DWP).

Submitted by Co-Operator:

D. M. Busche Grant W. Ryan for — 9/7/2011 Date

Reviewed by ORP Program Office:

D. L. Noyes — 9/30/11 Date

Quarter Ending 09/30/2011 24590-HLW-PCN-ENV-10-014

Hanford Facility RCRA Permit Modification Notification Form

Unit:	Permit Part:
Waste Treatment and Immobilization Plant	**Part III, Operating Unit 10**

Description of Modification:

The purpose of this Class 1 modification is to replace the following Material Selection Data Sheet with an updated Corrosion Evaluation in Appendix 10.9 of the DWP:

Appendix 10.9			
Replace:		With:	
	24590-HLW-N1D-HOP-P0003, Rev. 0		24590-HLW-N1D-HOP-00003, Rev. 1

This modification requests Ecology approval and incorporation into the permit the specific changes that are identified below that have been issued since the last revision of the permitted version. The revisions are the result of ongoing design review. The following identifies the changes:

- Reduced Design Temperature to align with Mechanical Data Sheet
- Revised the Materials Considered Table
- Revised Operating Modes Considered
- Incorporated Recommended Corrosion Allowance
- Updated References and Bibliography
- Updated Process Corrosion Data Sheet

There are no outstanding change documents associated with this modification.

WAC 173-303-830 Modification Class:	Class 1	Class 1	Class 2	Class 3
Please mark the Modification Class:	X			

Enter relevant WAC 173-303-830, Appendix I Modification citation number: A.1 and A.3

Enter wording of WAC 173-303-830, Appendix I Modification citation:

A.1. Administrative and informational changes

A.3. Equipment replacement or upgrading with functionally equivalent components (e.g., pipes, valves, pumps, conveyors, controls)

Modification Approved/Concur: [X] Yes [ ] Denied (state reason below)

Reason for denial:

Reviewed by Ecology:

D. McDonald 11-8-11 Date

CORROSION EVALUATION

R11387010

HOP-ADBR-00001A/B & 2A/B (HLW)
Activated Carbon Adsorber

- Design Temperature (°F): 250
- Design Pressure (in-WG): -82
- Location: Room H-A123; outcell

ISSUED BY
RPP-WTP PDC

Contents of this document are Dangerous Waste Permit affecting

Operating conditions are as stated on attached Process Corrosion Data Sheet

Operating Modes Considered:

- Equipment is maintainable.
- The moisture during operation is 15% by volume.
- Design to include a cool down mode that will prevent condensation of acid gasses
- A preheater will be used to prevent condensation from forming in the activated carbon media during start-up or after replacement.

Materials Considered:

Material (UNS No.)	Acceptable Material	Unacceptable Material
Type 304L (S30403)		X
Type 316L (S31603)	X	
6% Mo (N08367/N08926)	X	
Hastelloy® C-22® (N06022)	X	

Recommended Material: Type 316 (max 0.030% C; dual certified)

Recommended Corrosion Allowance: 0.010 inch (includes 0.00 inch erosion allowance)

Process & Operations Limitations:

- None

Concurrence NA
Operations

REV	DATE	REASON FOR REVISION	PREPARER	CHECKER	MET	APPROVER
1	7/18/11	Incorporate revised PCDS Incorporate revised design temp Revise corrosion allowance Add "AEA" notice Format and editorial changes	DLAdler	RBDavis	NA	SWVail
0	6/24/04	Initial Issue	DLAdler	JRDivine	APR	APRangus

CORROSION EVALUATION

Please note that source, special nuclear and byproduct materials, as defined in the Atomic Energy Act of 1954 (AEA), are regulated at the U.S. Department of Energy (DOE) facilities exclusively by DOE acting pursuant to its AEA authority. DOE asserts, that pursuant to the AEA, it has sole and exclusive responsibility and authority to regulate source, special nuclear, and byproduct materials at DOE-owned nuclear facilities. Information contained herein on radionuclides is provided for process description purposes only.

This bound document contains a total of 7 sheets.

CORROSION EVALUATION

Corrosion Considerations:

The sulfur-impregnated activated carbon column removes volatile mercury compounds from the offgas at a mildly elevated temperature, 197 to 239 °F. During normal operation air atomized demineralized water is injected into the inlet piping to cool the offgas to operating temperature. Temperatures are not high enough to have concern for oxidation.

a General Corrosion
The anticipated dry-air conditions are not conductive to general corrosion and none is expected.

Conclusion
Either Type 304L or 316L would be satisfactory.

b Pitting Corrosion
Pitting corrosion will only be a concern if moisture is present. It is assumed that there will be no condensation in the unit. For safety, Type 316L is recommended.

Conclusion
At the stated operating conditions, pitting corrosion is not a significant concern. Type 316L is recommended.

c End Grain Corrosion
End grain corrosion only occurs in high acid conditions and is not a concern.

Conclusion:
Not a concern

d Stress Corrosion Cracking
At operations at the stated temperatures, stress corrosion cracking will only be a concern in the presence of moisture. It is assumed that there will be no condensation in the unit. Also see Pitting.

Conclusion
At the stated operating conditions, stress corrosion cracking is not a concern.

e Crevice Corrosion
Crevice corrosion will only be a concern if moisture is present. The offgas humidity is controlled so that there will be no condensation.

Conclusion
At the stated operating conditions, crevice corrosion is not a concern.

f Corrosion at Welds
Assuming dry air and proper welding procedures, corrosion at welds is not anticipated.

Conclusion
At the stated operating conditions, weld corrosion is not a concern.

g Microbiologically Induced Corrosion (MIC)
The stated operating conditions are not suitable for microbial growth.

Conclusion
At the stated operating conditions, MIC is not a concern.

h Fatigue/Corrosion Fatigue
Extreme temperature cycling or fluctuations are not expected.

Conclusion
At the expected operating conditions, corrosion fatigue is not a concern.

CORROSION EVALUATION

i Vapor Phase Corrosion
Components essential consist entirely of vapor space so general corrosion comments apply.

Conclusion:
See comments under general corrosion.

j Erosion
The velocity and solids content are sufficiently low that erosion is not a concern.

Conclusion
Erosion is not a concern.

k Galling of Moving Surfaces
There are no unlubricated moving surfaces present.

Conclusion:
Galling is not a concern.

l Fretting/Wear
No metal/metal contacting surfaces are expected.

Conclusion:
Fretting is not a concern.

m Galvanic Corrosion
No significantly dissimilar metals are present, and it is assumed that condensation is controlled by design.

Conclusion:
Galvanic corrosion is not a concern because no fluids are present.

n Cavitation
Cavitation is not expected in an off-gas system

Conclusion:
Cavitation is not a concern.

o Creep
Stated operating temperatures are too low for creep to occur.

Conclusion
Creep is not a concern.

p. Inadvertent Addition of Nitric Acid
Addition of nitric acid to the offgas lines is not a plausible scenario.

Conclusion
Not applicable

CORROSION EVALUATION

References:

1. 24590-WTP-RPT-PR-04-0001, Rev. 0CD, *WTP Process Corrosion Data*

Bibliography

1. 24590-HLW-MVD-HOP-00015, *Mechanical Data Sheet for 24590-HLW-MV-HOP-ADBR-00001A, 24590-HLW-MV-HOP-ADBR-00001B - Activated Carbon Adsorber For Mercury Abatement*

CORROSION EVALUATION

PROCESS CORROSION DATA SHEET

Component(s) (Name/ID #) Activated carbon adsorber (HOP-ADBR-00001A/B, HOP-ADBR-00002A/B)

Facility HLW

In Black Cell? No

Chemicals	Unit[1]	Contract Maximum[2]		Non-Routine		Notes
		Leach	No leach	Leach	No Leach	
Aluminum	g/m^3	5.16E-15	9.07E-15			
HCl	g/m^3	1.7E-03	1.7E-03			Note 4
HF	g/m^3	1.1E-03	1.1E-03			Note 4
Iron	g/m^3	3.21E-14	2.20E-14			
NO	g/m^3	6.28E-01	6.52E-01			
NO_2	g/m^3	1.71E-01	1.84E-01			
Phosphate	g/m^3	6.92E-16	2.20E-15			
SO_2	g/m^3	1.8E-03	1.8E-03			Note 4
Mercury	g/m^3	3.3E-02	3.3E-02			Note 4
Carbonate	g/m^3	6.41E-16	8.34E-16			
Particulate	g/m^3	0	0			
Pb	g/m^3	1.19E-16	8.27E-16			
HNO_3	g/m^3	5.0E-03	5.0E-03			Assumption 1
HNO_2	g/m^3	9.1E-03	9.1E-03			Assumption 1
Humidity	%	41%	41%			
Temperature	°F					Note 3

List of Organic Species:

References

System Description: 24590-HLW-3YD-HOP-00001
Mass Balance Document: 24590-WTP-M4C-V11T-00005, Rev A
Normally Associated Streams: HOP22, HOP33
Off Normal Streams (e.g., overflow from other vessels): N/A
P&ID: N/A
PFD: 24590-HLW-M5-V17T-00004; 24590-HLW-M5-V17T-20004
Technical Reports: N/A

Notes:

1. Deleted
2. Data developed from a mass balance model which has constituents in the plant feed which are important to corrosion, adjusted to contract maximum values, except as noted.
3. The normal operating temperature is 197 °F at the inlet, and 197 °F at the outlet (page A-6, 24590-HLW-M4C-HOP-00011, Rev 1)
   The maximum operating temperature is 230 °F at the inlet, and 239 °F at the outlet (page A-10, 24590-HLW-M4C-HOP-00011, Rev 1)
4. Source: 24590-HLW-M4C-HOP-00011, Rev 1, pages A-10 through A-13

Assumptions

1. Based on empirical data from testing per Attachment 28 of 24590-HLW-M4E-HOP-00005, pages 3 and 4.

5.3.2 Activated Carbon Adsorber (HOP-ADBR-00001A/B, HOP-ADBR-00002A/B)

Routine Operations

The activated carbon (AC) adsorber removes volatile mercury from the offgas at a mildly elevated temperature. The AC column consists of two sulfur-impregnated activated charcoal beds. Each bed is contained inside a vessel that is insulated. The piping and valving are arranged to operate the beds in series (normal), in parallel, or individually. Connections are provided on each vessel to load the AC through isolation valves from multiple lines using a manual gravity feed chute supplied from a feed hopper located above the vessel(s). Spent AC is removed from a bed by gravity draining through multiple line isolation valves and using a screw conveyor system to route the AC to a vessel for packaging. The second bed can continue operation during bed changeout. A manual water deluge (by manual hose connection) of the vessel containing carbon filtration material is activated by operators based on vessel temperature and CO indications. CO monitors before and after the pressure vessel containing carbon filtration material, actuate an interlock to close the isolation valves and open the offgas bypass valve on high CO differential. The vessel inlet isolation valve provides a seal intended to be adequate to starve the fire of oxygen and limits the amount of offgas that can enter the pressure vessel. The system is activated based on differential inlet to exit CO concentration. The offgas inlet isolation valve is automatically closed on system activation. A water overflow valve is automatically activated in each vessel in case of fire to prevent overfilling with water. A water drain system is also provided.

Non-Routine Operations that Could Affect Corrosion or Erosion

None identified.

RCRA Operating Record Cover Sheet

Document Number: 24590-HLW-PCN-ENV-10-014

Waste Management Records:

- ☐ **R101** List of Waste Management Areas
- ☐ **R102** Waste Analysis Records
- ☐ **R103** Waste Designation Information
- ☐ **R104** Waste Transfer Records
- ☐ **R105** Movement of Containerized Waste Onsite
- ☐ **R106** Release/Spill Records
- ☐ **R114** Field Change Request/Field Change Notice
- ☐ **R116** Field Monitoring / Surveillance Checklists
- ☐ **R119** Reserved
- ☐ **R120** Reserved
- ☐ **R126** Satellite and 90-Day Accumulation Area

Compliance Schedule Submittals:

- ☐ **R401** Pretreatment Facility
- ☐ **R402** LAW Facility
- ☐ **R403** HLW Facility
- ☐ **R404** Laboratory
- ☐ **R405** Balance of Facility
- ☐ **R406** WTP All Facilities
- ☐ **R407** Human Health & Ecological Risk Assessment

Other Operating Record Documents:

- ☐ **R601** Outgoing Correspondence (RCRA Permit Relating)
- ☐ **R602** Contingency Plan Implementation
- ☐ **R603** Closure Plan Deviation
- ☐ **R604** Permit Equivalency Notice (PEN)
- ☒ **R605** Permit Change Notice (PCN)
- ☐ **R606** Annual RCRA Permit Closure and Post-Closure Cost Adjustment Report
- ☐ **R607** Permit Modification
- ☐ **R608** Incoming Correspondence (RCRA Permit Relating)

Non-Operating Record Documents:

- ☐ **N101** Meeting Minutes
- ☐ **N102** Memoranda

Special Instructions to PDC:

Link CCNs:

237271

240011

241826

ISSUED BY
RPP-WTP PDC

Quarter Ending 09/31/2011

24590-HLW-PCN-ENV-11-001

Hanford Facility RCRA Permit Modification Notification Form

Part III, Operating Unit 10

Waste Treatment and Immobilization Plant

Index

Page 2 of 3: Hanford Facility RCRA Permit, Part III, Operating Unit 10, Waste Treatment and Immobilization Plant

Replace mechanical data sheet for RLD-VSL-00007 and equipment assembly drawings for vessels RLD-VSL-00007 and RLD-VSL-00008 in Appendix 10.6 of the Dangerous Waste Permit (DWP).

Submitted by Co-Operator:

D. M. Busche — Date: 6/20/11

Reviewed by ORP Program Office:

D. L. Noyes — Date: 9/6/11

Quarter Ending 09/31/2011 24590-HLW-PCN-ENV-11-001

Hanford Facility RCRA Permit Modification Notification Form

Unit:	Permit Part:
Waste Treatment and Immobilization Plant	**Part III, Operating Unit 10**

Description of Modification:

The purpose of this class 1 prime modification is to replace the mechanical data sheet for RLD-VSL-00007 and equipment assembly drawings for vessels RLD-VSL-00007 and RLD-VSL-00008 in Appendix 10.6 of the DWP.

The following permitted documents are submitted to replace the documents currently in Appendix 10.6:

Appendix 10.6			
Replace:	24590-HLW-MVD-RLD-00005, Rev 7	With:	24590-HLW-MVD-RLD-00005, Rev 9
	24590-HLW-MV-RLD-P0003, Rev 0		24590-HLW-MV-RLD-00025001, Rev 0
			24590-HLW-MV-RLD-00025002, Rev 0
			24590-HLW-MV-RLD-00025003, Rev 0
			24590-HLW-MV-RLD-00025004, Rev 0
	24590-HLW-MV-RLD-P0004, Rev 0		24590-HLW-MV-RLD-00004, Rev 1
			24590-HLW-MV-RLD-00019, Rev 0
			24590-HLW-MV-RLD-00020, Rev 0
			24590-HLW-MV-RLD-00021, Rev 0
			24590-HLW-MV-RLD-00022, Rev 0
			24590-HLW-MV-RLD-00024, Rev 0

This modification requests Ecology approval and incorporation into the permit the specific changes to the mechanical data sheet and equipment assembly drawings that are identified by clouds, triangles, and revision notes. The referenced documents include changes provided in applicable document change forms (e.g., DCN, SCN, SDDR, FCN, FCR, etc.) that were submitted to Ecology in accordance with Condition III.10.C.9.h. The updated drawings have been split and/or expanded from the previously approved permit drawings to provide more clarity and additional design details. The following identifies the major changes:

Mechanical data sheet 24590-HLW-MVD-RLD-00005, Rev 9:

- Updated P&ID, calculation, and vessel drawing numbers
- Added clarification regarding Materials of Construction for Internals, Pipe Seamless and Forging/Bar stock
- Updated Seismic reference
- Modified, added, and deleted Notes
- Revised Hydrodynamic Loading, PJM Overblow Loads, design pressures/temperatures for nozzles and nozzle loads
- Updated Equipment Cycling Data Sheet for Parent Vessel, PJMs, and Charge Vessels
- Added section Design Consideration for Loads Induced by Pulse Jet Mixers (PJMs)
- Revised Equipment Qualification data to new datasheet form and renumbered Notes for clarity
- Added Attachment 1, References for Datasheet

The source equipment assembly drawing for vessel RLD-VSL-00007 (24590-HLW-MV-RLD-00003, now superseded) was split/expanded into 4 drawings (24590-HLW-MV-RLD-00025001 through 00025004) to provide more clarity and section details.

The source equipment assembly drawing for vessel RLD-VSL-00008 (24590-HLW-MV-RLD-00004) was expanded from one to 6 drawings (24590-HLW-MV-RLD-00004, 00019 through 00022 and 00024) to show additional details regarding seismic guide/supports inside the vessel.

Quarter Ending 09/31/2011

24590-HLW-PCN-ENV-11-001

This modification requests Ecology approval and incorporation of the following outstanding change document(s) into the permit. Although not yet incorporated into the revised documents included in this PCN, the listed outstanding change document(s) are intended to be incorporated into the permit. These changes have been provided to Ecology in accordance with Condition III.10.C.9.h.

- Change documents for drawing 24590-HLW-MV-RLD-00004: 24590-HLW-MVN-RLD-00013, 24590-HLW-MVN-RLD-00014, 24590-HLW-MVN-RLD-00018, 24590-HLW-MVN-RLD-00021, 24590-HLW-MVN-RLD-00025, 24590-HLW-MVN-RLD-00028, 24590-QL-MRG-MVA0-00002-T0006 (Technical Change Notice, TCN)
- Change document for 24590-HLW-MV-RLD-00019: 24590-HLW-MVN-RLD-00027, 24590-QL-MRG-MVA0-00002-T0009
- Change document for 24590-HLW-MV-RLD-00022: 24590-HLW-MVN-RLD-00026
- Change documents for 24590-HLW-MV-RLD-00025001: 24590-HLW-MVN-RLD-00030, 24590-QL-MRA-MVA0-00027-T0002 (TCN)
- Change document for 24590-HLW-MV-RLD-00025004: 24590-HLW-MVN-RLD-00031, 24590-QL-MRA-MVA0-00027-T0002 (TCN)
- Change document for 24590-HLW-MVD-RLD-00005: 24590-QL-MRA-MVA0-00027-T0001 (TCN)

WAC 173-303-830 Modification Class:	Class 1	Class 1	Class 2	Class 3
Please mark the Modification Class:		X		

Enter relevant WAC 173-303-830, Appendix I Modification citation number: NA

Enter wording of WAC 173-303-830, Appendix I Modification citation:

In accordance with WAC 173-303-830(4)(d)(i), this modification notification is requested to be reviewed and approved as a Class 1 modification. WAC 173-303-830(4)(d)(ii)(A) states, "Class 1 modifications apply to minor changes that keep the permit current with routine changes to the facility or its operation. These changes do not substantially alter the permit conditions or reduce the capacity of the facility to protect human health or the environment. In the case of Class 1 modifications, the director may require prior approval."

Modification Approved/Concur: ☑ Yes ☐ Denied (state reason below)

Reason for denial:

Reviewed by Ecology:

J. J. Wallace

11-16-11

Date

R11308236

MECHANICAL SYSTEMS DATA SHEET: VESSEL

PLANT ITEM No.
24590-HLW-MV-RLD-VSL-00007

ISSUED BY RPP-WTP PDC

Project:	***RPP-WTP***	P&IDs:	***24590-HLW-M6-RLD-00001 and 00006***
Project No:	***24590***	Calculation:	***Attachment 1***
Project Site:	***Hanford***	Vessel Drawing	***24590-HLW-MV-RLD-00025001/-00025002/ -00025003/-00025004*** 9
Description:	***Acidic Waste Vessel RLD-VSL-00007***	Reports/Other Documents	***Attachment 1***

Reference Data

Charge Vessels (Tag Numbers)	***RLD-VSL-00015A, RLD-VSL-00015B***
Pulsejet Mixers / Agitators (Tag Numbers)	***RLD-PJM-00005, RLD-PJM-00006, RLD-PJM-00007, RLD-PJM-00008***
RFDs/Pumps (Tag Numbers)	***RLD-RFD-00162A, RLD-RFD-00162B***

Design Data

Quality Level		***Q (Note 15)***	Fabrication Specs	***24590-WTP-3PS-MV00-T0001***		
Seismic Category		***SC-2***	Design Code	***ASME VIII Div 1***		
Service/Contents		***Radioactive Liquid***	Code Stamp	***Yes***		
Design Specific Gravity		***1.0***	NB Registration	***Yes***		
Maximum Operating Volume	gal	***15,758 (Note 3)***	Weights (lbs)	Empty	Operating	Test
Total Volume	gal	***18,145 (Note 3)***	Estimated	***43,000***	***186,000***	***194,000***
Environmental Qualification		***See EQ Sections***				

Inside Diameter	inch	***156***			Wind Design	***Not Required***	
Length/Height (TL-TL)	inch	***186***			Snow Design	***Not Required***	
		Vessel Operating	Vessel Design	Coil/Jacket Design	Seismic Design	***24590-WTP-3PS-MV00-T0002 24590-WTP-3PS-SS90-T0001***	
Internal Pressure	psig	***Atm***	***15***	***None***			
External Pressure	psig	***0.83***	***FV***	***None***	Postweld Heat Treat	***Not Required***	
Temperature	°F	***195***	***220 (Note 21)***	***None***	Corrosion Allowance	Inch	***0.04 (Note 10 & 11)***
Min. Design Metal Temp.	°F	***40***					

Materials of Construction

Component	Material	Minimum Thickness / Size	Containment
Top Head	***SB 688 N08367***	***See Drawing***	***Auxiliary (Note 4)***
Shell	***SB 688 N08367***	***See Drawing***	***Primary (Note 4)***
Bottom Head	***SB 688 N08367***	***See Drawing***	***Primary (Note 4)***
Support	***SA 240 304 (Note 2)***	***See Drawing***	***N/A***
Jacket/Coils/Half-Pipe Jacket	***N/A***	***N/A***	***N/A***
Internals 9	***SB 688 N08367 (for pulse jet mixers, charge vessels, & internal supports)***	***See Drawings & Note 22.***	***N/A***
Pipe Seamless 9	***SB 690 N08367(for thermal sleeves & bubbler piping for N40A/B/C & N42A/B/C) / SB 622 N06022 (for all other internal piping, thermowells, and nozzles)***	***See Drawings & Note 22***	***Notes 1 and 4 ; thermowells are primary***
Forgings/ Bar stock 9	***SB 564 N08367; SB 564 N06022 (for thermal nozzles, nozzles, & thermowells)***	***See Drawings & Note 22.***	***Thermal nozzles & thermowells are primary***
Gaskets	***N/A***	***N/A***	***N/A***
Bolting	***N/A***	***N/A***	***N/A***

Miscellaneous Data

Orientation	***Vertical***	Support Type	***Skirt***
Insulation Function	***Not Applicable***	Insulation Material	***Not Applicable***
Insulation Thickness (inch)	***Not Applicable***	Internal Finish	***Descaled as laid***
		External Finish	***Descaled as laid***

Please note that source, special nuclear, and byproduct materials, as defined in the Atomic Energy Act of 1954 (AEA) are regulated at the U. S. Department of Energy (DOE) facilities exclusively by DOE acting pursuant to its AEA authority. DOE asserts that pursuant to AEA, it has sole and exclusive responsibility and authority to regulate source, special nuclear, and byproduct materials at DOE-owned nuclear facilities. Information contained herein on radionuclides is provided for process description purposes only.

Notes/Remarks

* To be determined by the vendor.

Note 1: ***Nozzle necks below the high operating liquid level are Primary, others Auxiliary.***

Note 2: ***Material shall have Carbon Content of 0.030% Max. Non-welded specialty items are excluded from this requirement.***

Note 3: ***Vessel volumes are approximate and do not account for manufacturing tolerances, nozzles, and displacement of internals.***

Note 4: ***All welds forming part of the primary and auxiliary containment including nozzle attachment welds shall be subjected to 100% volumetric examination.***

Note 5: ***This vessel is located in a Black Cell.***

Note 6: ***Contents of this document are Dangerous Waste Permit affecting.***

Note 7: ***As a minimum, all welds on internal components and supports shall be dye-penetrant tested.***

Note 8: △9 ***Deleted.***

Note 9: ***Deleted as per Report No. 24590-WTP-RPT-M-04-0007 Rev. 0 dated 29 Oct 2004.***

Note 10: ***Seller shall ensure that an additional 0.10" is available for erosion in the bottom head and shall report the minimum thickness required for all specified loading conditions, exclusive of erosion and corrosion allowances.***

Note 11: ***Seller shall ensure that an additional 0.05" is available for erosion in the interior conical surface of the pulse jet mixers.***

Note 12: ***Deleted.***

Note 13: ***This revision of the data sheet incorporates SDDR No. 24590-WTP-SDDR-PROC-04-00670 by reference.***

Note 14: ***Required data for thermal stress analysis for the nozzle exposed to higher temperatures:***

- ***Hot ejector transfers from vessel (Ejectors RLD-EJCTR-00008, -00050, -00056, & -00059):***
  - ***a. Only one of the hot ejectors will be used at a time during transfers.***
  - ***b. Transfer frequency = 1 transfer/24 hrs for 5.4 hrs; steam mass flow rate = 1423 lb/hr.***

Note 15: ***Vessel to be designed, fabricated, tested to L-2 requirements defined in 24590-WTP-3PS-MV00-T0001.***

Note 16: ***All hydrodynamic and overblow loads shall be included with the seismic analysis as per this data sheet.***

Note 17: ***Please note that source, special nuclear and byproduct materials, as defined in the Atomic Energy Act of 1954 (AEA), are regulated at the U.S. Department of Energy (DOE) facilities exclusively by DOE acting pursuant to its AEA authority. DOE asserts, that pursuant to the AEA it has sole and exclusive responsibility and authority to regulate source, special nuclear, and byproduct materials at DOE-owned nuclear facilities. Information contained herein on radionuclides is provided for process description purposes only.***

Note 18: ***The vessel design shall account for buoyancy effects due to the room flood height of 22 ft. assuming the vessel is empty (worst case).***

Note 19: ***Revision 7 revises quality level, design specific gravity, operating & design temperature, operating external pressure, deleted weld overlay around ejector nozzles, added Notes 15 - 19, revised cyclic data, cyclic notes for parent vessel, hydrodynamic info, E&NS Safety Screen box, and added E&NS signature box. Added sections for MOB, revised Nozzle Loads, DOE Radioactive Materials Disclaimer (Note 17), Table of Nozzle Connections, and Equipment Qualification Datasheet.***

Note 20: ***Revised Equipment Qualification data to new datasheet form and renumbered Equipment Qualification Notes for clarity. Revised Hydrodynamic Loading, PJM Overblow Loads, design pressures/temperatures for nozzles and Nozzle Loads.***

Note 21: ***Design Guide 24590-WTP-GPG-M-050 states that design temperature shall be 25°F over maximum operating temperature.***

Note 22: ***Materials are consistent with Calc. No. 24590-HLW-MVC-RLD-00009, Section 2.2.*** △9

Seismic

Seismic Response Spectra curves: Figures 549, 550, and 552 from calculation 24590-HLW-S0C-S15T-00057 (See CCN 185273). Seismic analysis to be combined with operating conditions, single overblow, and any sloshing loads imposed. Sloshing loads on vessel internals are considered per ASCE 4-98. Analysis to consider worst case seismic loads on the vessel proper and on the vessel internals. The response curves and sloshing loads will be provided via the Material Requisition.

Equipment Cyclic Data Sheet - Parent Vessel

Component Plant Item Number:	*24590-HLW-MV-RLD-VSL-00007*
Component Description	*Parent Vessel*

The information below is provisional and envelopes operational duty for fatigue assessment. It is not to be used as operational data.

Materials of Construction	*SB 688 N08367*
Design Life	*40 years*
Component Function and Life Cycle Description	*See Calculation 24590-HLW-MVC-11-00002.*

Load Type		Min	Max	Number of Cycles	Comment
Design Pressure	psig	*FV*	*15*	*10*	*Nominal assumption*
Operating Pressure	psig	*-6.0*	*0*	*3.8E7*	*Equipment Cyclic Data Sheet Note 3 (Parent Vessel)*
Operating Temperature	°F	*59*	*195*	*14,600*	*Equipment Cyclic Data Sheet Note 4 (Parent Vessel)*
Contents Specific Gravity		*1.0*	*1.0*	*N/A*	
Contents Level	inch	*Empty*	*Flooded*	*14,600*	*One cycle per day.*
Localized Features					
Nozzles		*Within 50°F of operating temperature range except as noted below*		*Normal operations will cause Superheated Steam at 358 °F design temperature to enter the vessel through the transfer ejectors (Nozzles N31, N32, N33 N39) once per day and through the emptying ejectors (Nozzles N13, N34, N35, N38) once per month.*	
Air Inlet					
Delivery					
Supports					

Equipment Cyclic Data Sheet Notes - Parent Vessel

Note 1: *Cycle increase: The Seller must increase the numbers of operational cycles given above by 10% to account for commissioning duty unless otherwise noted.*

Note 2: *Perform fatigue assessment/analysis for the following nozzles and associated piping over 40 years from 0 psig at 59 °F to the pressure and temperature indicated in the Table of Nozzle Connections for the pressure/temperature cycles indicated (pressure cycles shall coincide with temperature cycles):*

a) *N27, N28, N31, N32, N33, N39 - 14,600 cycles*

b) *N13, N17, N18, N19, N34, N35, N38 - 480 cycles*

Note 3: *Values are bounding from Case 1 (-6.0 to 0.0 psig for 14,600 cycles) and Case 2 (-0.83 to -0.18 psig for 3.8E7 cycles) per 24590-HLW-MVC-30-00001, Appendix A, Sheet A-8.*

Note 4: *195°F value is conservative and used to provide design margin on 149°F minimum required value found in Reference 24590-HLW-MVC-30-00001, Rev B (24590-HLW-MVE-30-00001).*

Equipment Cyclic Data Sheet - PJMs

Component Plant Item Number:	*RLD-PJM-00005, RLD-PJM-00006, RLD-PJM-00007 & RLD-PJM-00008*
Component Description	*Pulse Jet Mixers*

The information below is provisional and envelopes operational duty for fatigue assessment. It is not to be used as operational data.

Materials of Construction		*SB 688 N08367*			
Design Life		*40 years*			
Component Function and Life Cycle Description		*This component is part of a mixing system. It repeatedly floods and empties. The action is caused by vacuum or air pressure being presented to the top nozzle. The surrounding parent vessel may contain any level of the fluid between the maximum operating level and the heel level. The PJM is subjected to buoyancy forces when immersed in the parent vessel contents. The internal vessel is in cyclic duty.*			
Load Type		Min	Max	Number of Cycles	Comment
Design Pressure	psig	*FV*	*135*	*100*	*Nominal assumption*
Operating Pressure	psig	*F V*	*14*	*3.8E7*	*Max. Operating*
Operating Temperature	°F	*59*	*195*	*NA*	*Same as parent vessel*
Contents Specific Gravity		*1.0*	*1.0*	*NA*	*Same as parent vessel*
Contents Level	inch	*Empty*	*Flooded*	*3.8E7*	*Coincident with pressure cycles*
Thrust	lbf	*-262*	*262*	*3.8E7*	*See Note below*
Localized Features					
Nozzles					
Air Inlet					
Delivery					
Supports		*As above*		*As above with contents level changing coincident with pressure cycles.*	

Equipment Cyclic Data Sheet Notes - PJMs

- ***Cycle increase: The Seller must increase the numbers of operational cycles given above by 10% to account for commissioning duty unless otherwise noted.***
- ***PJMs inside parent vessels shall have buoyancy effects considered. PJMs shall consider the liquid thrust effect. The PJM supports shall be designed to cycle between fully buoyant (PJM empty and parent vessel full) and fully loaded (PJM full and parent vessel empty) states. Thrust load shall be applied only to the fully buoyant state. Assume the parent vessel is full for 50% of the number of PJM cycles.***

Equipment Cyclic Data Sheet - Charge Vessels

Component Plant Item Number:	*RLD-VSL-00015A, RLD-VSL-00015B*
Component Description	*Charge Vessels*

The information below is provisional and envelopes operational duty for fatigue assessment. It is not to be used as operational data.

Materials of Construction	*SB 688 N08367*
Design Life	*40 years*
Component Function and Life Cycle Description	*This component is part of a pumping system. It repeatedly floods and empties. The action is caused by vacuum or air pressure being presented to the top nozzle. The surrounding parent vessel may contain any level of the fluid between the maximum operating level and the heel level. The charge vessel is subjected to buoyancy forces when immersed in the parent vessel contents. The vessel is in cyclic duty.*

Load Type		Min	Max	Number of Cycles	Comment
Design Pressure	psig	*FV*	*135*	*100*	*Nominal assumption*
Operating Pressure	psig	*FV*	*60*	*14,600*	
Operating Temperature	°F	*59*	*195*	*14,600*	*Same as parent vessel*
Contents Specific Gravity		*1.0*	*1.0*	*14,600*	*Same as parent vessel*
Contents Level	inch	*Empty*	*Flooded*	*14,600*	*Coincident with pressure cycles*
Localized Features					
Nozzles					
Air Inlet					
Delivery					
Supports		*buoyant to loaded*		*14,600 cycles*	

Equipment Cyclic Data Sheet Notes - Charge Vessels

- ***Cycle increase: The Seller must increase the numbers of operational cycles given above by 10% to account for commissioning duty unless otherwise noted.***
- ***CVs inside parent vessels shall have buoyancy effects considered.***

Design Considerations for Loads Induced by Pulse Jet Mixers (PJMs)

Pulse Jet Mixers (PJMs) are designed to mix the vessel contents using a liquid jet discharge. PJMs are driven by compressed air. The mixing is required to enhance heat transfer, to break up hydrogen-containing particles, and to homogenize the solution. Normally, the PJMs are operated simultaneously within the parent vessel.

The PJMs operate in the following three cycles: Suction, Drive and Vent. During the suction cycle a vacuum is created in the PJM headspace and the level within the PJM rises to fill the PJM. During the drive cycle the PJM is pressurized and liquid is discharged. During the vent cycle, the pressure in the headspace approaches atmospheric and the level within the PJM is allowed to reach equilibrium.

Vessel components shall be designed to withstand loading induced by PJM operations as described herein.

Normal Operations: Liquid flows around internal structures within the parent vessel producing hydrodynamic loads such as drag and vortex shedding.

To mitigate the dynamic effects, the following pipe sizes dipped internal to the vessel are required to have a minimum first natural frequency that is double the vortex shedding frequency:

Nominal Pipe Size	Minimum First Natural Frequency
1 inch	13.2 Hz*
2 inch	7.4 Hz*
3 inch	5.0 Hz**

* See 24590-WTP-MVC-50-00001, Section 8.1.2.2 for vortex shedding frequency (4 PJM Class)

** By extrapolation from 1 inch and 2 inch

Overblow Condition: Occasionally the drive cycle lasts too long and compressed air is discharged from the PJM. Overblows can also occur during system calibration. One or multiple PJMs may overblow at any time. These conditions induce acoustic and bubble rise loads on structures.

All internal components shall be designed for the combination of normal operational hydrodynamic loads and overblow loads. Single overblows (SOB) are assumed to act concurrently with the seismic event, however multiple overblows (MOB) are not assumed to act concurrently with the seismic event. Figure 1 (below) provides the acoustic load intensity that encompasses both SOB and MOB.

Hydrodynamic Loads Due to Normal PJM Operations

Normal operation imposes a cyclical load as described in the following table:

	Radial Direction		Axial Direction	
4 PJM Class	Peak Positive (psi)	Peak Negative (psi)	Peak Positive (psi)	Peak Negative (psi)
Targets between vessel Center and PJM	0.3	-0.2	0.25	-0.2
Targets between PJM and vessel outer wall	0.8	-0.8	0.4	-0.8

The hydrodynamic pressure applies across the projected area of the component. Positive hydrodynamic forces act in the radial, outward direction and the vertical, upward direction. Seller shall apply the radial load simultaneously in the radial direction and normal to the radial direction in the horizontal plane.

PJM Overblow Loads

Discussion: During normal operation, pulse jet mixers (PJMs) mix the fluid by pulling in (suction) and pushing out (drive) fluid. During an upset condition, designated as an 'overblow', air is discharged following the drive cycle of one or more PJMs. The load consists of acoustic pressure (2Hz to 200Hz) developed in the first 200ms of the event and a load due to the bubble rising through the fluid.

The acoustic load and the bubble load are design loads as defined by ASME B&PVC, Section 8, Division 1, UG-22, applied statically. The acoustic load is not added to the bubble rise load because they occur at different times during the overblow event.

Acoustic Load

- ***The acoustic design load in Figure 1 is applied to the visible (as viewed from the overblow origin) surface of cylindrical targets such as pipes, charge vessels, and PJMs. The load is applied in the direction normal to the principal axis of the target as illustrated in Figure 2. Note: The intended net effective load on the target is equal to the projected (i.e. cross-sectional) area of the object times the acoustic design load (psi) indicated in Figure 1.***
- ***Each target is considered independent of the surrounding targets: e.g. the surrounding targets do not impede the acoustic wave by casting a shadow, as illustrated in Figure 2.***
- ***The load is not applied to small supports such as gussets, brackets, tabs, clamps, and bolts because they are rigid and the pressure drop across the target is negligible.***
- ***When the vessel contains multiple PJMs, the load from one PJM is independent of the load from other PJMs. The loads are not additive for multiple overblows.***
- ***No internal components shall be placed within 5 PJM nozzle diameters (5 * 4 in = 20 in) of a spherical zone centered at any overblowing PJM nozzle.***

Figure 1: Acoustic Design Load

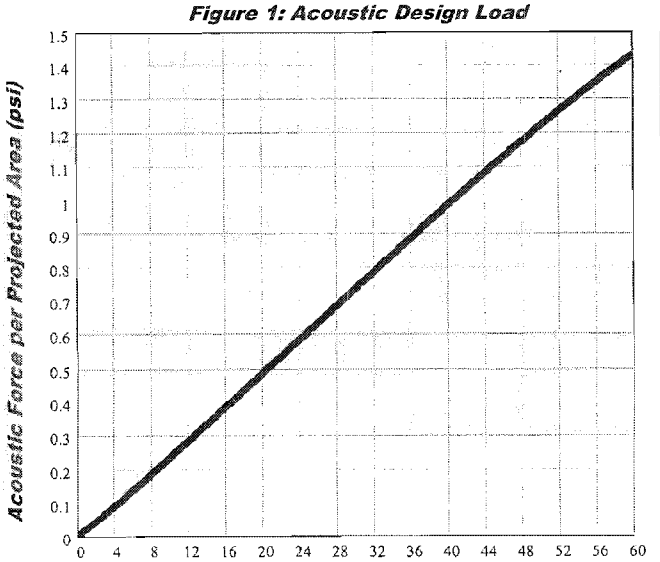

Figure 2: Load Application

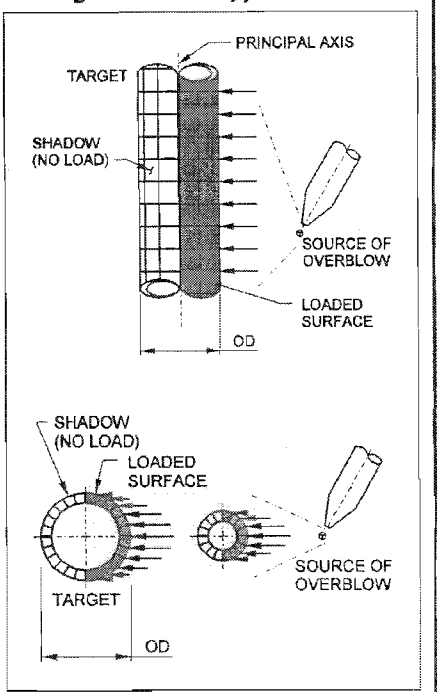

The following data is required to determine the load:

- ***Target Diameter***
- ***Target Principal Axis***

Overblow Source Coordinates

Number of Acoustic Cycles	***1000 events X 40 cycles/event for a total of 40,000 acoustic cycles.***
Bubble Rise Load	***A vertical force per projected area of 1.7 psi is applied to the surfaces in the 36-inch diameter cylindrical zone centered at the overblowing PJM(s). The bubble can be at any elevation above the overblowing PJM and only affects one zone (36-inch diameter region) at a time. When there are multiple PJMs in a vessel (MOB), each PJM has it's own bubble. To simplify analysis the bubble can be applied in a continuous cylindrical zone above each PJM top head.***
Number Bubble Rise Cycles	***1000 events X 1 cycle/event***

Nozzle Loads

Nozzle Number	Nozzle Size (in)	Orientation (V* / H**)	Load Case	Design Loads (Force in lbs, Moment in ft-lb)					
				Fx	Fy	Fz	Mx	My	Mz
N02	2	V	Weight	34	70	34	46	29	29
			Seismic	244	162	244	398	597	597
			Thermal	46	130	62	240	150	150
N03	2	V	Weight	34	56	34	46	29	29
			Seismic	244	162	244	398	597	597
			Thermal	46	41	62	75	150	150
N04	2	V	Weight	34	56	34	46	29	29
			Seismic	244	162	244	398	597	597
			Thermal	46	130	62	250	150	150
N05	2OD	V	Weight	34	56	34	46	29	29
			Seismic	244	162	244	398	597	597
			Thermal	46	41	62	75	150	150
N06	2OD	V	Weight	34	56	34	46	29	29
			Seismic	244	162	244	398	597	597
			Thermal	46	41	62	75	150	150
N07	1.5	V	Weight	20	32	20	26	16	16
			Seismic	138	92	138	228	342	342
			Thermal	80	170	130	200	86	160
N08	1.5	V	Weight	20	32	20	26	16	16
			Seismic	138	92	138	228	342	342
			Thermal	26	50	50	43	86	86
N09	2OD	V	Weight	34	56	34	46	29	29
			Seismic	244	162	244	398	597	597
			Thermal	46	220	62	100	150	150
N10	2	V	Weight	34	90	34	46	29	29
			Seismic	244	162	244	398	597	597
			Thermal	46	120	62	110	150	240
N11	2	V	Weight	34	56	34	46	29	29
			Seismic	244	162	244	398	597	597
			Thermal	120	70	62	110	150	290
N12	2	V	Weight	34	56	34	46	29	29
			Seismic	244	162	244	398	597	597
			Thermal	90	41	62	75	150	200
N13	2	V	Weight	34	100	34	46	29	29
			Seismic	244	162	244	398	597	597
			Thermal	90	520	150	270	150	240
N15	2	V	Weight	34	56	34	46	29	29
			Seismic	244	162	244	398	597	597
			Thermal	46	60	62	75	150	150
N16	2	V	Weight	34	56	34	46	29	29
			Seismic	244	162	244	398	597	597
			Thermal	70	41	62	75	150	210

Nozzle Number	Nozzle Size (in)	Orientation (V* / H**)	Load Case	Design Loads (Force in lbs, Moment in ft-lb)					
				Fx	Fy	Fz	Mx	My	Mz
N17	3	V	Weight	70	130	70	140	180	110
			Seismic	245	163	245	783	523	790
			Thermal	210	185	250	1080	222	665
N18	3	V	Weight	70	130	70	115	115	115
			Seismic	245	163	245	783	523	783
			Thermal	210	640	330	1270	222	665
N19	4	V	Weight	120	192	120	342	214	214
			Seismic	834	557	834	2960	4440	4440
			Thermal	159	550	212	563	1125	1125
N20	2OD	V	Weight	34	56	34	46	29	29
			Seismic	244	162	244	398	597	597
			Thermal	46	80	62	75	150	150
N21	2OD	V	Weight	34	56	34	46	29	29
			Seismic	244	162	244	398	597	597
			Thermal	46	41	62	100	150	150
N22	2	V	Weight	34	56	34	46	29	29
			Seismic	244	162	244	398	597	597
			Thermal	46	41	62	75	150	150
N23	2	V	Weight	34	100	34	46	29	29
			Seismic	244	162	244	398	597	597
			Thermal	46	41	62	150	150	150
N26	2	V	Weight	34	56	34	46	29	29
			Seismic	244	162	244	398	597	597
			Thermal	46	41	110	470	150	150
N27	2	V	Weight	34	80	34	46	29	29
			Seismic	244	162	244	398	597	597
			Thermal	46	170	160	550	150	150
N28	2	V	Weight	34	90	34	46	29	50
			Seismic	244	162	244	398	597	597
			Thermal	46	100	130	430	150	150
N31	2	V	Weight	34	80	34	46	29	29
			Seismic	244	162	244	398	597	597
			Thermal	46	310	200	780	150	150
N32	2	V	Weight	34	56	34	46	29	29
			Seismic	244	162	244	398	597	597
			Thermal	46	90	110	410	150	150
N33	2	V	Weight	34	56	34	46	29	29
			Seismic	244	162	244	398	597	597
			Thermal	46	280	170	600	150	150
N34	2	V	Weight	34	56	34	46	29	29
			Seismic	244	162	244	398	597	597
			Thermal	80	320	170	590	150	150

Nozzle Number	Nozzle Size (in)	Orientation (V* / H**)	Load Case	Design Loads (Force in lbs, Moment in ft-lb)					
				Fx	Fy	Fz	Mx	My	Mz
N35	2	V	Weight	34	56	34	46	29	29
			Seismic	244	162	244	398	597	597
			Thermal	46	310	190	710	150	150
N37	1.5	V	Weight	20	32	20	26	16	16
			Seismic	138	92	138	228	342	342
			Thermal	26	40	35	43	86	86
N38	2	V	Weight	34	110	34	46	29	29
			Seismic	244	162	244	398	597	597
			Thermal	46	210	62	180	150	150
N39	2	V	Weight	34	80	34	46	29	29
			Seismic	244	162	244	398	597	597
			Thermal	46	240	160	590	150	150
N41	8	H	Weight	310	500	310	490	615	615
			Seismic	325	325	325	786	1180	1180
			Thermal	1050	530	595	2070	2320	1920
N43	2	V	Weight	34	90	34	46	29	29
			Seismic	244	162	244	398	597	597
			Thermal	46	170	62	170	150	260
N48	1.5	V	Weight	20	60	20	26	16	16
			Seismic	138	92	138	228	342	342
			Thermal	26	140	90	190	86	86

Notes for Nozzle Loads

A. V = vertical head nozzle - values are x = North/South, y = vertical, z = East/West (global coordinates), Vessel defined as North.

B. H = horizontal shell nozzle - values are per axes shown in 24590-WTP-3PS-MV00-T0001, Appendix A (local coordinates).

C. Nozzle loads shown in the above table (CCN 177071) are to be used in place of those specified in 24590-WTP-3PS-MV00-T0001, Appendix A, – do not apply any thermal reduction factors.

D. Nozzle loads not listed in the above table are listed in 24590-WTP-3PS-MV00-T0001, Appendix A.

Table of Nozzle Connections

Internal vessel piping and nozzle design shall be compatible with the following **external** connection pipe size and pressure/temperature conditions outside the vessel:

Nozzle	Connecting Pipe Size	Design Pressure (psig)	Design Temperature (°F)
N01	2" - 40S	135	113
N02	2" - 40S	135	113
N03	2" - 40S	135	113
N04	2" - 40S	135	113
N05	1" - 40S	135	113
N06	1" - 40S	135	113
N07	1-1/2" - 40S	15	165
N08	1-1/2" - 40S	15	165
N09	1" - 40S	110	200
N10	2" - 40S	110	200

Nozzle	Connecting Pipe Size	Design Pressure (psig)	Design Temperature (°F)
N11	2" - 40S	109	358
N12	2" - 40S	109	358
N13	2" - 40S	109	358
N14	CAPPED	N/A	N/A
N15	2" - 40S	109	358
N16	2" - 40S	109	358
N17	3" - 40S	50	225
N18	3" - 40S	50	225
N19	4" - 40S	50	225
N20	1" - 40S	15	113
N21	1" - 40S	15	113
N22	2" - 40S	135	113
N23	2" - 40S	135	113
N24	DELETED	N/A	N/A
N25	DELETED	N/A	N/A
N26	2" - 40S	-14.7	200
N27	2" - 40S	109	358
N28	2" - 40S	109	358
N29	DELETED	N/A	N/A
N30	DELETED	N/A	N/A
N31	2" - 40S	109	358
N32	2" - 40S	135	358
N33	2" - 40S	135	358
N34	2" - 40S	135	358
N35	2" - 40S	135	358
N36	1-1/2" - 40S	15	165
N37	1-1/2" - 40S	15	165
N38	2" - 40S	109	358
N39	2" - 40S	109	358
N40	6" - 40S	Parent (Pressure and temperature is same as design (15 psig and 220°F)	
N40A	1/2" - 40S	15	113
N40B	1/2" - 40S	135	113
N40C	1/2" - 40S	135	113
N41	8" - 10S	50	200
N42	6" - 40S	Parent (Pressure and temperature is same as design (15 psig and 220°F)	
N42A	1/2" - 40S	15	113
N42B	1/2" - 40S	135	113
N42C	1/2" - 40S	135	113
N43	2" - 40S	110	200
N44	1" - 40S	110	200
N45	DELETED	N/A	N/A
N46	DELETED	N/A	N/A
N47	1/2" - 80S	-14.7	113
N48	1-1/2" - 80S	109	358

Equipment Identification		
Full Component Tag Number or BNI Stock Code Number	24590-HLW-MV-RLD-VSL-00007	Safety Classification ☐ SC ☒ SS ☐ APC-PAM
Equipment Datasheet Number	24590-HLW-MVD-RLD-00005	
Description	Radioactive Liquid Waste Disposal System (RLD) Acidic Waste Vessel.	Seismic Category ☐ SC-I ☒ SC-II ☐ SC-III ☐ SC-IV ☐ SC-III Seismic Interaction only
Location (Facility / Building and Room No.)	HLW Building; located in Room H-B014, Elev. (-) 21'-00", Column lines J/11.5.	
Safety Function(s)	The vessel provides primary confinement of the HLW process waste streams. Reference: 24590-WTP-PSAR-ESH-01-002-04, Section 4.4.16.2, Preliminary Documented Safety Analysis to Support Construction Authorization; HLW Facility Specific Information.	
Equipment Safety Function Type	☒ Passive Mechanical ☐ Active Mechanical ☐ Electrical	
Seismic Safety Function ☒ Yes ☐ No	Seismic Operability Requirements ☐ During Seismic Event ☐ After Seismic Event ☒ None	

Equipment Environmental Qualification (EEQ)

(Parameter values stated in this section do not include process conditions or operation induced conditions)

Classification of Environment ☒ Mild ☐ Harsh

Qualified Life (years) ☒ 40 ☐ Other

Parameter Type/Units	Parameter Value	Parameter Duration (number)	Duration Units	WTP Source Document Number
Normal Ambients				
High Temperature (°F)	113	Note a	Years	24590-HLW-U0D-W16T-00001, E-Note 1
Low Temperature (°F)	59	Note b	N/A	24590-HLW-U0D-W16T-00001, E-Note 1
High Relative Humidity (%RH)	100	Note c	N/A	24590-HLW-U0D-W16T-00001, E-Note 1
Low Relative Humidity (%RH)	5	Note c	N/A	24590-HLW-U0D-W16T-00001, E-Note 1
High Pressure (in.-w.g.)	0 (E-Note 2)	Note d	N/A	24590-HLW-U0D-W16T-00001, E-Note 1
Low Pressure (in.-w.g.)	(-) 1.1 (E-Note 2)	Note d	N/A	24590-HLW-U0D-W16T-00001, E-Note 1
Radiation Dose Rate (mRad/hr)	105000 (E-Note 4)	40 (E-Note 3)	Years (Note e-1)	24590-HLW-U0D-W16T-00001, E-Note 1
Plant/Process Induced Vibration	☐ Yes ☒ No			
Additional Normal Ambient Information:	N/A			

Equipment Environmental Qualification (EEQ) *(continued)*

Parameter Type/Units	Parameter Value	Parameter Duration (number)	Duration Units	WTP Source Document Number
Abnormal Ambients				
High Temperature (°F)	113	8	hours / year	24590-HLW-U0D-W16T-00001, E-Note 1
Low Temperature (°F)	40	Note b	N/A	24590-HLW-U0D-W16T-00001, E-Note 1
High Relative Humidity (%RH)	100c	Note c	N/A	24590-HLW-U0D-W16T-00001, E-Note 1
Low Relative Humidity (%RH)	10	Note c	N/A	24590-HLW-U0D-W16T-00001, E-Note 1
High Pressure (in.-w.g)	4 (E-Note 2)	Note d	N/A	24590-HLW-U0D-W16T-00001, E-Note 1
Low Pressure (in.-w.g)	(-) 6.7 (E-Note 2)	Note d	N/A	24590-HLW-U0D-W16T-00001, E-Note 1
Radiation Dose Rate (mR/hr)	105000 (E-Note 4)	0 (E-Note 3)	Years (Note e-1)	24590-HLW-U0D-W16T-00001, E-Note 1
Exposure to Wet Sprinkler System	☐ Yes ☒ No	N/A	hours	24590-HLW-U0D-W16T-00001, E-Note 1
Additional Abnormal Ambient Information	N/A			
Design Basis Events (DBE) Ambients				
High Temperature (°F)	123	1000	hours	24590-HLW-U0D-W16T-00001, E-Note 1
Low Temperature (°F)	40	Note b	N/A	24590-HLW-U0D-W16T-00001, E-Note 1
High Relative Humidity (%RH)	100c	40	hours	24590-HLW-U0D-W16T-00001, E-Note 1
Low Relative Humidity (%RH)	8	1000	hours	24590-HLW-U0D-W16T-00001, E-Note 1
High Pressure (in.-w.g)	4	8	hours	24590-HLW-U0D-W16T-00001, E-Note 1
Low Pressure (in.-w.g)	(-) 6.7 (E-Note 2)	1000	hours	24590-HLW-U0D-W16T-00001, E-Note 1
Radiation Dose Rate (mR/hr)	105000 (E-Note 4)	0 (E-Note 3)	hours	24590-HLW-U0D-W16T-00001, E-Note 1
Submergence	☐ Yes ☒ No	N/A	hours	24590-HLW-U0D-W16T-00001, E-Note 5
Chemical/Spray Exposure	☒ Yes ☐ No	12.5	hours	24590-HLW-U0D-W16T-00001, E-Note 1
Additional DBE Information	N/A			

DBE Chemical Exposure Details	
DBE Chemical Types / Concentrations	Nitric Acid 1M Sodium Hydroxide 5M

Electrical Interfaces Supporting the Safety Function	
Power Supply Voltage (VAC, VDC)	N/A
Power Supply Frequency (Hz)	N/A
Power Connection Method	N/A
I/O Signals to/from Equipment	N/A
I/O Connection Method	N/A

Mechanical Interfaces	
Mounting Configuration (orientation)	Vertically Mounted , Skirt
Mounting Method (bolts, welds, etc.)	Bolted Anchor Chairs
Auxiliary Devices	Charge Vessels RLD-VSL-00015A, RLD-VSL-00015B, Pulse Jet Mixers RLD-PJM-00005, RLD-PJM-00006, RLD-PJM-00007, RLD-PJM-00008, Reverse Flow Diverters RLD-RFD-00162A, RLD-RFD-00162B; all devices are internal to the parent vessel.

Equipment Seismic Qualification (ESQ)

Parameter	Title	Reference/Document Number	Version / Revision	Remarks
WTP Seismic Design Specification	Engineering Specification for Seismic Qualification of Seismic Category I/II Equipment and Tanks Engineering Specification for Seismic Qualification Criteria for Pressure Vessels	24590-WTP-3PS-SS90-T0001 24590-WTP-3PS-MV00-T0002	2 2	N/A
Specified Seismic Load Parameters	HLW Vitrification Building Seismic Analysis - WSGM In-Structure Response Spectre (ISRS)	24590-HLW-S0C-S15T-00057	A	CCN: 185273; WSGM ISRS Curves: Figures 549, 550, and 552

Equipment Qualification Notes and Additional Information

Note a) For thermal aging, the high normal temperature shall be assumed to subsist for 40 years less the duration of the high abnormal temperature. For any lesser qualified life, the normal and abnormal condition durations shall be assigned proportionally. The abnormal temperature is stated to subsist for a certain number of hours per year. It shall be taken to subsist for this number of hours for each year of the qualified life.

Note b) The ability to provide the safety function at the low normal temperature, the low abnormal temperature or the low DBE temperature (whichever be the lowest) shall be established by test, analysis, or operating experience. The thermal aging at these respective low temperatures will be conservatively covered by the thermal aging per item a) above. Therefore, no duration is assigned for the low temperatures.

Note c) The ability to provide the safety function at the extremes of the normal and abnormal humidity conditions, taking into consideration the high and the low normal and high and low abnormal, shall be established by test, analysis, or operating experience. No duration is assigned for the normal and abnormal humidity conditions.

Note d) If the performance of the safety function of the equipment is affected by ambient pressure, the ability to provide the safety function at the extremes of the normal and abnormal pressure conditions, taking into consideration the high and the low normal and the high and low abnormal pressures, shall be established by test, analysis, or operating experience. No duration is assigned to the normal and abnormal pressure conditions.

Note e) (1) If the abnormal radiation dose rate is the same as the normal radiation dose rate, the normal radiation dose rate shall be assumed to subsist for 40 years, or any lesser qualified life, and the duration of the abnormal radiation dose rate is "0."

(2) If the abnormal radiation dose rate is higher than the normal radiation dose rate, the abnormal radiation dose rate shall be assumed to subsist for 40 years, or any lesser qualified life, and the duration of the normal radiation dose rate is "0."

Note f) The DBE conditions shall be taken to subsist for the stated number of hours following the qualified life of the equipment.

Note g) Spray due to fire sprinkler actuation shall be taken to occur once over the entire qualified life duration for a period of 2 hours, even if the qualified life is a period less than 40 years. If spray qualification is provided for DBE conditions (whether for water or chemical spray), then separate qualification for the fire sprinkler spray need not be provided.

Note h) The values stated in this EQD are the ambients and do not include the thermodynamic and radiation conditions imposed by the process fluids, self-

Equipment Qualification Notes and Additional Information

heating, etc. The data pertaining to process fluid and service induced parameters are to be taken into account where significant, such as in thermal aging analyses. These data can be obtained from the equipment data sheets or the Equipment Specification.

Note i) Equipment that is to be installed in inaccessible locations must be qualified to a 40-year life without the need for maintenance or replacement.

E-Note 1: BNI (BUYER) shall perform Equipment Environmental Qualification in accordance with 24590-WTP-DC-ENG-06-001, Design Criteria for Equipment Seismic and Environmental Qualification.

E-Note 2: Where pressure is given in inches of water column (in-w.c.) in the source document, it is generally assumed that this is in reference to atmospheric pressure and is therefore equivalent to inches of water gage (in-w.g.).

E-Note 3: Normal, Abnormal, and DBE dose rates are the same, therefore, abnormal and DBE doses do not add to total integrated dose based on normal dose rates over 40 years.

E-Note 4: Radiation Dose Rates are for determining shielding requirements only for the black cell and are not at the source (vessel). Since the vessel is all metallic and the source has no neutron components for material embrittlement, the dose rates are of no concern on the vessel or its subcomponents.

E-Note 5: Flood height for room is 22 ft above the cell floor (cell floor is at -21' elevation), a buoyancy evaluation has to be performed where vessel is treated as fully submerged to verify anchorage is adequate for vessel retention.

Screening / Evaluation Required? If yes per 24590-WTP-GPP-SREG-002, E&NS signature required below	X	Yes		No

Approval

Rev	Description	System Engineer	Vessel Engineer	Checked	Reviewed/ MET	E&NS	Approved	Date
0	Issued for Purchase	R Rao	S.L. Lee	M Wright/ C Slater	N/A	N/A	M Hoffmann	09/03/03
1	Added black cell requirement	M Grindel	M Bala	C Slater/ M. Wright	N/A	N/A	C. Morley	02/05/04
2	Revised as Noted, Re-Issued for Purchase	M Grindel	S.L. Lee	T Galioto/ S Atri/ C Slater	N/A	N/A	M Hoffmann	06/03/04
3	Revised as Noted & added notes 9 - 13	T Galioto	S.L. Lee	D Adler/ C Slater	S Cross / E Isern	N/A	M Hoffmann	09/23/04
4	Revised to delete note 9	T Galioto	S.L. Lee	C Slater	S Cross / E Isern	N/A	M Hoffmann	11/18/04
5	Revised as Noted & added note 14	S Cross	S.L. Lee	C Slater / R Peters	E Isern / D Adler	N/A	M Hoffmann	04/18/05
6	Revised per Note 15 on sheet 2	R Peters	S.L. Lee	R Peters P Polani	D Adler / C Slater	N/A	J Julyk	10/28/05
7	Revised per Note 19 on sheet 2	R Gibbs	R Peters	M. Seed	C Figley	C Meng	J Julyk	08/13/08
8	Incorporated 24590-QL-MRG-MVA0-00002-T0001. Revised per Note 20 on page 2, and as noted by revision triangles.	R Gibbs	R Peters	W Wilcox	D Adler	C Meng	J Julyk	10/4/10
9	Revised Materials of Construction for vessel internals and piping	John Bennett R. PETERS FOR JOHN	R Peters RPP MS PETERS	B Dunlap	D Adler	C Meng C Meng	J Julyk	1/14/11

BENNETT PER EDR 24590-HLW-EDR-MS-10-0053 REV.0

INCORPORATES 24590-HLW-MVN-RLD-00029 RP 1/14/11

ATTACHMENT 1: Page 1 of 3
REFERENCES for Datasheet: 24590-HLW-MVD-RLD-00005, Rev 9
Vessel Tag: RLD-VSL-00007

Data	Document #	Rev	Document Title	Comments
Quality Level	24590-HLW-M6-RLD-00001	3	P&ID HLW - Radioactive Liquid Waste Disposal System Active Effluent Collection	See Note 12 on P&ID
Seismic Category	24590-HLW-M6-RLD-00001	3	P&ID HLW - Radioactive Liquid Waste Disposal System Active Effluent Collection	See Note 12 on P&ID
Design Specific Gravity	24590-HLW-MVC-11-00002	0	Process Information for Vessels, HOP-VSL-00903, HOP-VSL-00904 and RLD-VSL-00007	0.995 SG. See Input 18 of Calc. 24590-HLW-MVC-11-00002 Rev. 0.
Min./Max. Specific Gravity	24590-HLW-MVC-11-00002	0	Process Information for Vessels, HOP-VSL-00903, HOP-VSL-00904 and RLD-VSL-00007	0.994/0.995 SG. See Input 18 of Calc. 24590-HLW-MVC-11-00002 Rev. 0.
Max Operating Volume	24590-HLW-M6C-RLD-00002	C	HLW Acidic Waste Vessel RLD-VSL-00007 Sizing Calculation	Section 8
Total Volume	24590-HLW-M6C-RLD-00002	C	HLW Acidic Waste Vessel RLD-VSL-00007 Sizing Calculation	Section 8
Inside Diameter	24590-HLW-M6C-RLD-00002	C	HLW Acidic Waste Vessel RLD-VSL-00007 Sizing Calculation	Section 8
Length TL-TL	24590-HLW-M6C-RLD-00002	C	HLW Acidic Waste Vessel RLD-VSL-00007 Sizing Calculation	Section 8
Case 1: Operating Pressure (Min.)	24590-HLW-MVC-11-00002	0	Process Information for Vessels, HOP-VSL-00903, HOP-VSL-00904 and RLD-VSL-00007	-167 in WG (-6 psig). See Assumption 86 of Calc. 24590-HLW-MVC-30-00001 Rev. B. Values used in datasheet are bounding from Case 1 and Case 2 per 24590-HLW-MVC-30-00001, Appendix A, Sheet A-8.
Case 2: Operating Pressure (Min./Max.)	24590-HLW-MVC-11-00002	0	Process Information for Vessels, HOP-VSL-00903, HOP-VSL-00904 and RLD-VSL-00007	-23 in WG/-5 in WG (-0.83 psig/-0.18 psig). See Input 4 of Calc. 24590-HLW-MVC-11-00002 Rev. 0. Values used in datasheet are bounding from Case 1 and Case 2 per 24590-HLW-MVC-30-00001, Appendix A, Sheet A-8.
Operating Pressure (external)	24590-HLW-MVC-11-00002	0	Process Information for Vessels, HOP-VSL-00903, HOP-VSL-00904 and RLD-VSL-00007	-0.83 psig. See Input 14 of Calc. 24590-HLW-MVC-11-00002 Rev. 0.
Operating Pressure (internal)	24590-HLW-MVC-11-00002	0	Process Information for Vessels, HOP-VSL-00903, HOP-VSL-00904 and RLD-VSL-00007	0.0 in WG
Design Pressure (internal)	24590-WTP-DB-ENG-01-001	1P	Basis of Design	15 psig value is provided in Section 16
Design Pressure (external)	24590-WTP-GPG-M-050	2	Pressure Vessel and Heat Exchanger Design Guide	FV if appropriate
Jacket Design Pressure (internal)	N/A			N/A
Operating Temp (Min./Max.)	24590-HLW-MVC-11-00002	0	Process Information for Vessels, HOP-VSL-00903, HOP-VSL-00904 and RLD-VSL-00007	59 F/149 F 195°F value is conservative and used to provide design margin on 149°F maximum operating value found in Reference 24590-HLW-MVC-11-00002 (per 24590-HLW-MVE-11-00005).
Design Temp	24590-WTP-GPG-M-050	2	Pressure Vessel and Heat Exchanger Design	Design Guide states adding 25F to max operating.

Data	Document #	Rev	Document Title	Comments
			Guide	220 F is used to account for any future changes and is conservative.
Jacket Design Temp	N/A			N/A
Corrosion Allowance	24590-HLW-N1D-RLD-00001	6	RLD-VSL-00007 (HLW) Acidic Waste Vessel, Corrosion Evaluation	
Materials of Construction	24590- HLW-N1D-RLD-00001 24590-HLW-MV-RLD-00003	6 1	RLD-VSL-00007 (HLW) Acidic Waste Vessel, Corrosion Evaluation Equipment Assembly Acidic Waste Vessel RLD-VSL-00007	
Design Pressure (PJM) - Min./Max.	24590-HLW-MVC-30-00001	B	HLW Vessel Cyclic Datasheet Inputs	FV/135 psig. Worst case air loading to PJMs if plugged
Operating Pressure (PJM) - Min./Max.	24590-HLW-MVC-30-00001	B	HLW Vessel Cyclic Datasheet Inputs	FV/14 psig.
Operating Temperature (PJM) - Min./Max.	24590-HLW-MVC-11-00002	0	Process Information for Vessels, HOP-VSL-00903, HOP-VSL-00904 and RLD-VSL-00007	Same value as the parent vessel
Specific Gravity (PJM)	24590-HLW-MVC-11-00002	0	Process Information for Vessels, HOP-VSL-00903, HOP-VSL-00904 and RLD-VSL-00007	Same as parent vessel.
Design Pressure (Charge Vessels) - Min./Max.	24590-HLW-MVC-30-00001	B	HLW Vessel Cyclic Datasheet Inputs	FV/135 psig. worst case air loading to charge vessels if RFD plugged
Operating Pressure (Charge Vessels) - Min./Max.	24590-HLW-MVC-30-00001	B	HLW Vessel Cyclic Datasheet Inputs	FV/60 psig.
Operating Temperature (Charge Vessels) - Min./Max.	24590-HLW-MVC-11-00002	0	Process Information for Vessels, HOP-VSL-00903, HOP-VSL-00904 and RLD-VSL-00007	Same values as parent vessel.
Specific Gravity (Charge Vessels)	24590-HLW-MVC-11-00002	0	Process Information for Vessels, HOP-VSL-00903, HOP-VSL-00904 and RLD-VSL-00007	Same as parent vessel.
Steam Ejector Mass Flow Rate	24590-HLW-M6C-RLD-00008	D	RLD Steam Ejector Sizing Calculation	
Cyclic Data (Vessel)	24590-HLW-MVC-30-00001	B	HLW Vessel Cyclic Datasheet Inputs	
Cyclic Data (PJM)	24590-HLW-MVC-30-00001	B	HLW Vessel Cyclic Datasheet Inputs	
Cyclic Data (Charge Vessels)	24590-HLW-MVC-30-00001	B	HLW Vessel Cyclic Datasheet Inputs	
Hydrodynamic Loads	24590-WTP-MVC-50-00001	A	Hydrodynamic Loads for Normal PJM Operation in Vessels with Newtonian Fluids	Section 8.2.1, Table 8 for 4 PJM class vessels
Single PJM Overblow Loads	24590-WTP-MVC-50-00001	A	Hydrodynamic Loads for Normal PJM Operation in Vessels with Newtonian Fluids	
Single Overblow Cycles	24590-HLW-MVC-30-00001	B	HLW Vessel Cyclic Datasheet Inputs	1000 cycles for single PJM Overblow, see 24590-HLW-MVE-30-00002
Multiple Overblow	24590-HLW-MVC-30-00001	B	HLW Vessel Cyclic Datasheet Inputs	24590-HLW-MVE-30-00001 (24590-HLW-MVE-30-00002)
Multiple Overblow Cycles	24590-HLW-MVC-30-00001	B	HLW Vessel Cyclic Datasheet Inputs	24590-HLW-MVE-30-00001 (24590-HLW-MVE-30-00002)

ATTACHMENT 1: Page 3 of 3
REFERENCES for Datasheet: 24590-HLW-MVD-RLD-00005, Rev 9
Vessel Tag: RLD-VSL-00007

Data	Document #	Rev	Document Title	Comments
Nozzle Loads	24590-WTP-3PS-MV00-T0001 177071	3 N/A	Pressure Vessel Design Specification Supplement Nozzle Design Loads for RLD-VSL-00007 & 00008 (Supersedes CCN 166594)	
Nozzle Design Pressure and Temperature	24590-HLW-M6X-RLD-00003 24590-HLW-M6X-RLD-00016	3 4	Line List for 24590-HLW-M6-RLD-00001, Rev 3 Line List for 24590-HLW-M6-RLD-00006, Rev 4	N19 (24590-HLW-M6N-RLD-00227). N40A, N40B, N40C, N42A, N42B, and N42C (24590-HLW-M6N-30-00026).
Connecting Pipe Size	24590-HLW-M6X-RLD-00003 24590-HLW-M6X-RLD-00016	3 4	Line List for 24590-HLW-M6-RLD-00001, Rev 3 Line List for 24590-HLW-M6-RLD-00006, Rev 4	N19 (24590-HLW-M6N-RLD-00227). N40A, N40B, N40C, N42A, N42B, and N42C (24590-HLW-M6N-30-00026).
Connecting Pipe Material Class	24590-WTP-3PB-P000-TN11E 24590-WTP-3PB-P000-TN11K 24590-WTP-3PB-P000-TS11B 24590-WTP-3PB-P000-TS11F 24590-WTP-3PB-P000-TS11P 24590-WTP-3PB-P000-TS11Y 24590-WTP-3PB-P000-TS14E	10 2 31 11 18 13 6	Piping Material classification Pipe Class N11E Piping Material classification Pipe Class N11K Piping Material classification Pipe Class S11B Piping Material classification Pipe Class S11F Piping Material classification Pipe Class S11P Piping Material classification Pipe Class S11Y Piping Material classification Pipe Class S14E	

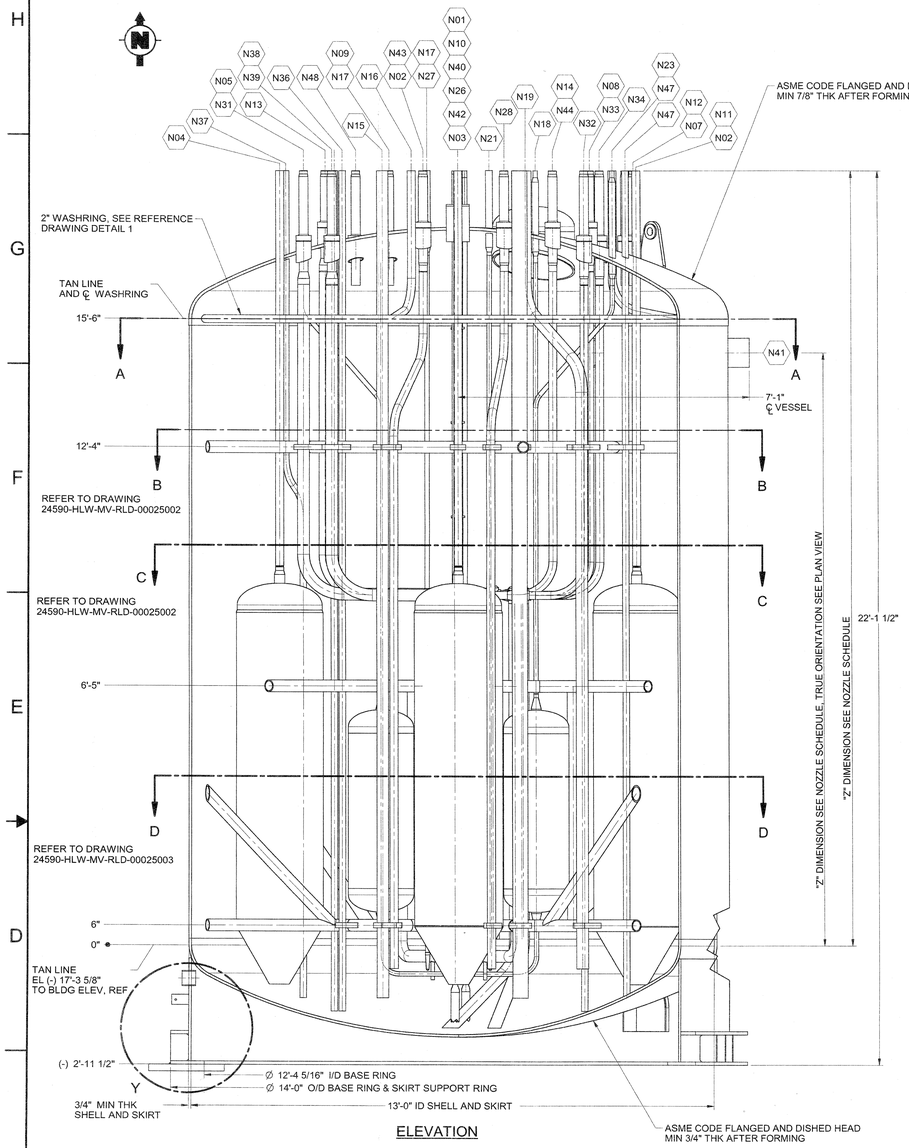

ELEVATION

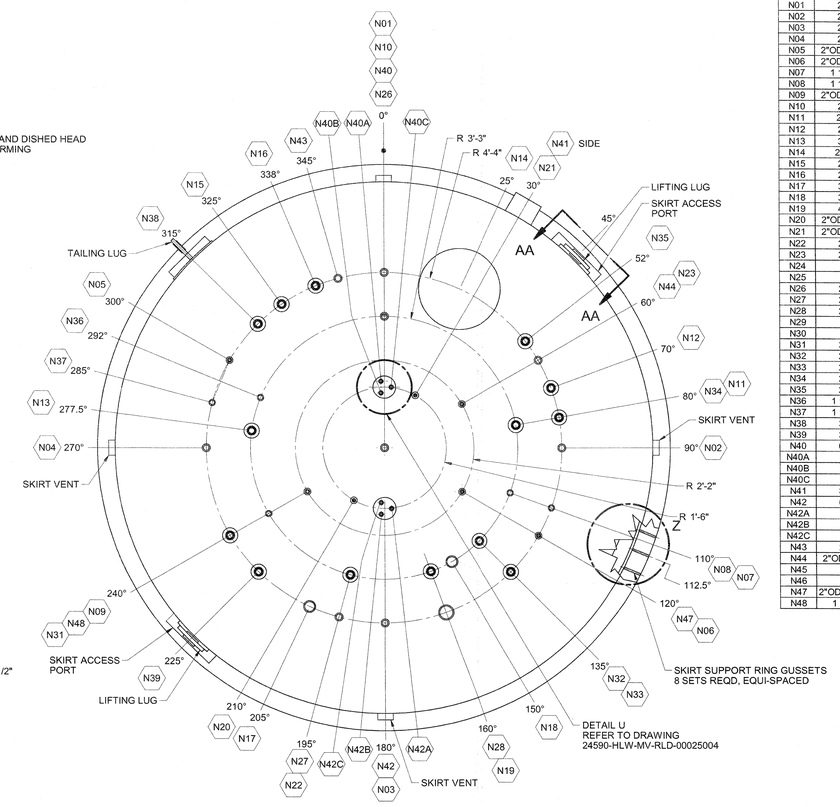

PLAN

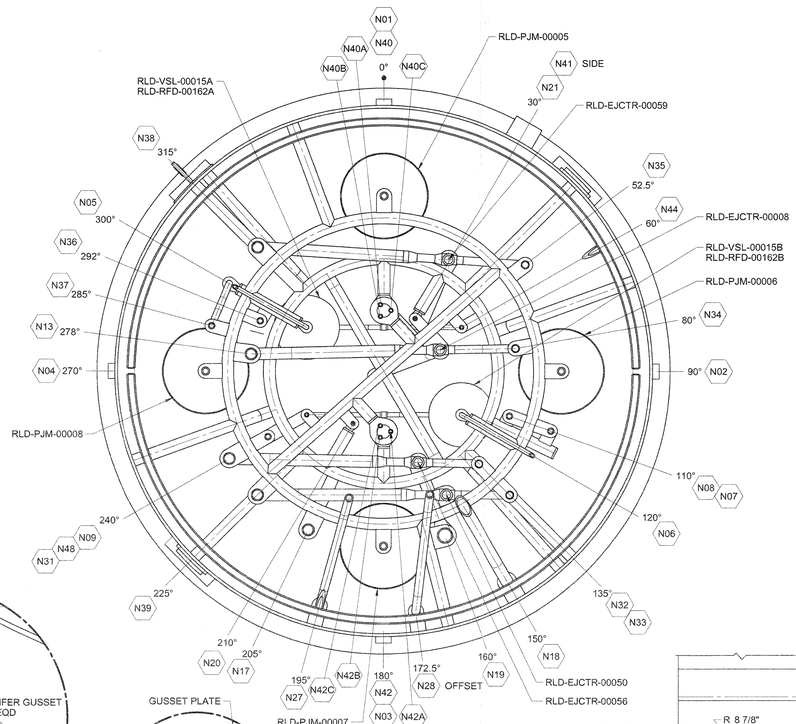

SECTION A-A

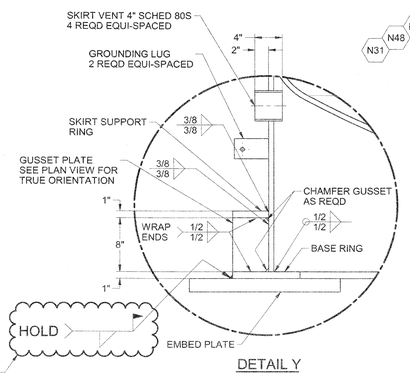

DETAIL Y

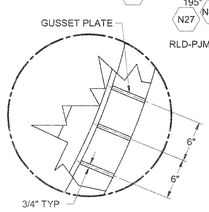

DETAIL Z

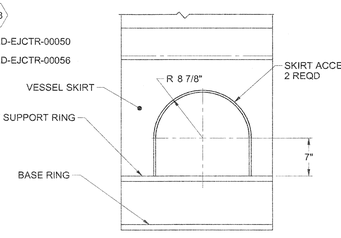

VIEW AA-AA

NOZZLE	SIZE	SCHED/WALL	SERVICE/REMARKS	"Z" DIM	REF DWG/DET	CONN PIPE SIZE/SCHED
N01	2"	160S	AIR/VAC TO RLD-PJM-00005	19'-2"	24590-WTP-MV-M59T-00016001 DET 3	2"-40S
N02	2"	160S	AIR/VAC TO RLD-PJM-00006	19'-2"	24590-WTP-MV-M59T-00016001 DET 3	2"-40S
N03	2"	160S	AIR/VAC TO RLD-PJM-00007	19'-2"	24590-WTP-MV-M59T-00016001 DET 3	2"-40S
N04	2"	160S	AIR/VAC TO RLD-PJM-00008	19'-2"	24590-WTP-MV-M59T-00016001 DET 3	2"-40S
N05	2"OD X 1"	SEE DETAIL	AIR/VAC TO RLD-VSL-00015A	19'-2"	24590-WTP-MV-M59T-00016001 DET 7	1"-40S
N06	2"OD X 1"	SEE DETAIL	AIR/VAC TO RLD-VSL-00015B	19'-2"	24590-WTP-MV-M59T-00016001 DET 7	1"-40S
N07	1 1/2"	160S	INLET FROM HOP-EJCTR-00053A	19'-2"	24590-WTP-MV-M59T-00016001 DET 4	1 1/2"-40S
N08	1 1/2"	160S	INLET FROM HOP-EJCTR-00053B	19'-2"	24590-WTP-MV-M59T-00016001 DET 4	1 1/2"-40S
N09	2"OD X 1"	SEE DETAIL	OUTLET FROM RLD-RFD-00162B	19'-2"	24590-WTP-MV-M59T-00016001 DET 7	1"-40S
N10	2"	160S	AUTOSAMPLER RETURN	19'-2"	24590-WTP-MV-M59T-00016001 DET 2	2"-40S
N11	2"	160S	OUTLET FROM HOP-EJCTR-3A	19'-2"	24590-HLW-MV-RLD-00025004 DET T	2"-40S
N12	2"	160S	OUTLET FROM HOP-EJCTR-3B	19'-2"	24590-HLW-MV-RLD-00025004 DET T	2"-40S
N13	3"	80S	OUTLET FROM RLD-EJCTR-00008	19'-2"	24590-HLW-MV-RLD-00025004 DET T	2"-40S
N14	24"	PLATE	MANWAY	17'-8"	24590-WTP-MV-M59T-00017 DET 1	CAPPED
N15	2"	160S	OUTLET FROM HOP-EJCTR-00929A	19'-2"	24590-HLW-MV-RLD-00025004 DET T	2"-40S
N16	2"	160S	OUTLET FROM HOP-EJCTR-00929B	19'-2"	24590-HLW-MV-RLD-00025004 DET T	2"-40S
N17	3"	80S	OVERFLOW FROM RLD-BRKPT-00007	19'-2"	24590-WTP-MV-M59T-00016001 DET 4	3"-40S
N18	3"	80S	OVERFLOW FROM RLD-BRKPT-00009	19'-2"	24590-WTP-MV-M59T-00016001 DET 4	3"-40S
N19	4"	80S	OVERFLOW FROM HEADER	19'-2"	24590-WTP-MV-M59T-00016001 DET 4	4"-40S
N20	2"OD X 1"	SEE DETAIL	TEMPERATURE	19'-2"	24590-WTP-MV-M59T-00007 ASSY 1, DET 5	1"-10S
N21	2"OD X 1"	SEE DETAIL	TEMPERATURE (SPARE)	19'-2"	24590-WTP-MV-M59T-00007 ASSY 1, DET 5	1"-10S
N22	2"	160S	INLET TO WASH RING	19'-2"	24590-WTP-MV-M59T-00016001 DET 3	2"-40S
N23	2"	160S	INLET TO WASH RING	19'-2"	24590-WTP-MV-M59T-00016001 DET 3	2"-40S
N24			NOT USED			
N25			NOT USED			
N26	2"	160S	VENT	19'-2"	24590-WTP-MV-M59T-00016001 DET 1	2"-40S
N27	2"	160S	INLET FROM HDH-EJCTR-00002B	19'-2"	24590-HLW-MV-RLD-00025004 DET T	2"-40S
N28	2"	160S	INLET FROM HDH-EJCTR-00002A	19'-2"	24590-HLW-MV-RLD-00025004 DET T	2"-40S
N29			NOT USED			
N30			NOT USED			
N31	3"	SEE DETAIL	OUTLET FROM RLD-EJCTR-00056	19'-2"	24590-HLW-MV-RLD-00025004 DET T	2"-40S
N32	2"	SEE DETAIL	STEAM TO RLD-EJCTR-00056	19'-2"	24590-HLW-MV-RLD-00025004 DET T	2"-40S
N33	2"	SEE DETAIL	STEAM TO RLD-EJCTR-00050	19'-2"	24590-HLW-MV-RLD-00025004 DET T	2"-40S
N34	2"	SEE DETAIL	STEAM TO RLD-EJCTR-00008	19'-2"	24590-HLW-MV-RLD-00025004 DET T	2"-40S
N35	2"	160S	STEAM TO RLD-EJCTR-00059	19'-2"	24590-HLW-MV-RLD-00025004 DET T	2"-40S
N36	1 1/2"	160S	OUTLET FROM HOP-EJCTR-00918A	19'-2"	24590-WTP-MV-M59T-00016001 DET 4	1 1/2"-40S
N37	1 1/2"	160S	OUTLET FROM HOP-EJCTR-00918B	19'-2"	24590-WTP-MV-M59T-00016001 DET 4	1 1/2"-40S
N38	3"	80S	OUTLET FROM RLD-EJCTR-00059	19'-2"	24590-HLW-MV-RLD-00025004 DET T	2"-40S
N39	3"	80S	OUTLET FROM RLD-EJCTR-00050	19'-2"	24590-HLW-MV-RLD-00025004 DET T	2"-40S
N40	6"	40S	INSTRUMENTATION	18'-2"	24590-HLW-MV-RLD-00025004	N/A
N40A	1"	160S	BALANCE	19'-0"	24590-HLW-MV-RLD-00025004	1"-40S
N40B	1"	160S	DENSITY	19'-1"	24590-HLW-MV-RLD-00025004	1"-40S
N40C	1"	160S	LEVEL	19'-2"	24590-HLW-MV-RLD-00025004	1"-40S
N41	8"	80S	OVERFLOW	14'-8"	24590-WTP-MV-M59T-00016001 DET 1	8"-10S
N42	6"	40S	INSTRUMENTATION	18'-2"	24590-HLW-MV-RLD-00025004	N/A
N42A	1"	160S	BALANCE	19'-0"	24590-HLW-MV-RLD-00025004	1"-40S
N42B	1"	160S	DENSITY	19'-1"	24590-HLW-MV-RLD-00025004	1"-40S
N42C	1"	160S	LEVEL	19'-2"	24590-HLW-MV-RLD-00025004	1"-40S
N43	2"	160S	AUTO SAMPLE RETURN	19'-2"	24590-WTP-MV-M59T-00016001 DET 2	2"-40S
N44	2"OD X 1"	SEE DETAIL	OUTLET FROM RLD-RFD-00162A	19'-2"	24590-WTP-MV-M59T-00016001 DET 7	1"-40S
N45			NOT USED			
N46			NOT USED			
N47	2"OD X 1/2"	SEE DETAIL	PRESSURE	19'-2"	24590-WTP-MV-M59T-00016001 DET 5	1/2"-40S
N48	1 1/2"	SEE DETAIL	INLET FROM RLD-EJCTR-00049A	19'-2"	24590-HLW-MV-RLD-00025004 DET T	1 1/2"-40S

GENERAL AND FLAG NOTES:

1. ALL 'Z' DIMENSIONS MEASURED FROM BOTTOM TANGENT LINE UNLESS OTHERWISE NOTED. FOR SHELL NOZZLE 'Z' DIMENSIONS MEASURED TO CENTER LINE OF NOZZLE FACE.
2. SELLER SHALL PROVIDE 8 SHIM PACKS COMPRISING OF THE FOLLOWING 10" SQUARE STAINLESS STEEL PLATES:
   2 PCS-1/4" THICK PLATES
   1 PCS-1/8" THICK PLATES
   2 PCS-1/16" THICK PLATES
3. FOR BASE SUPPORT, SEE REFERENCE DRAWING 24590-HLW-DD-S13T-00002007.
4. FOR TEMPERATURE NOZZLE (N20 & N21), THE DISTANCE OF THE DIP PIPE (LEGS) USE 1'-6" CLEARANCE.
5. CONTENTS OF THIS DOCUMENT ARE DANGEROUS WASTE PERMIT AFFECTING.
6. HOLE BORES SHALL MAINTAIN 1/16" DIAMETRICAL CLEARANCE AROUND THE NOMINAL SIZE OF PIPE BEING SUPPORTED.
7. PROVIDE MIN 1/8" CHAMFER TO HOLE BORE EDGES FOR ALL THRU-HOLES SUPPORTING PROCESS PIPES.
8. PIPE TEES OR WYES MAY BE USED FOR LATERAL AND VERTICAL PIPE TO RING CONNECTIONS, AND FOR RADIAL KNEE BRACES IN LIEU OF MITERED JOINTS.
9. THIS DRAWING SUPERSEDES 24590-HLW-MV-RLD-00003, REV 2.
10. TAILING LUG BY SELLER.
11. REFER TO DRAWING 24590-QL-POA-MVA0-00012-03-00006 REV.00B FOR PJM & CHARGE VESSEL SUPPORT CONFIGURATION.
12. PROVIDE A 3/8" DIAMETER ANTI-SIPHON HOLE, 8" ABOVE THE OVERFLOW LINE FOR NOZZLE N48.
13. WELD SIZES DEPICTED ARE MINIMUM UNLESS OTHERWISE NOTED.

HOLD NOTES:

1. WELD SIZE ON HOLD PENDING ISSUANCE OF ECCN.

DRAWING INDEX	
DWG NO	TITLE
24590-HLW-MV-RLD-00025001	EQUIPMENT ASSEMBLY ACIDIC WASTE VESSEL RLD-VSL-00007
24590-HLW-MV-RLD-00025002	EQUIPMENT ASSEMBLY ACIDIC WASTE VESSEL RLD-VSL-00007
	SECTIONS AND DETAILS
24590-HLW-MV-RLD-00025003	EQUIPMENT ASSEMBLY ACIDIC WASTE VESSEL RLD-VSL-00007
	SECTIONS AND DETAILS
24590-HLW-MV-RLD-00025004	EQUIPMENT ASSEMBLY ACIDIC WASTE VESSEL RLD-VSL-00007
	SECTIONS AND DETAILS

REFERENCE DRAWINGS	
DWG NO	TITLE
24590-HLW-M6-RLD-00001	P & ID
24590-HLW-M6-RLD-00006	P & ID
24590-WTP-MV-M59T-00001	PRESSURE VESSEL TOLERANCES STANDARD DETAILS
24590-WTP-MV-M59T-00004	PULSE JET MIXERS STANDARD DETAILS
24590-WTP-MV-M59T-00007	THERMOWELL CONNECTION STANDARD DETAILS
24590-WTP-MV-M59T-00009	LIFTING LUG STANDARD DETAILS
24590-WTP-MV-M59T-00011	WASH RINGS STANDARD DETAILS
24590-WTP-MV-M59T-00012	GROUNDING LUG STANDARD DETAILS
24590-WTP-MV-M59T-00013	CHARGE VESSEL STANDARD DETAILS
24590-WTP-MV-M59T-00014	RFD PUMPS DETAIL
24590-WTP-MV-M59T-00016001	VESSEL CONNECTIONS STANDARD DETAILS SHT 1 OF 3
24590-WTP-MV-M59T-00017	VESSEL INSPECTION MANWAY STANDARD DETAILS
24590-WTP-MV-M59T-00018	VESSEL NAME PLATE STANDARD DETAILS
24590-HLW-DD-S13T-00002007	HLW VITRIFICATION BLDG CONCRETE EQUIP SUPPORT DET EL (-) 21'-0"
24590-WTP-PW-P30T-00001	WTP END PREP DETAIL FOR FIELD BUTT WELDS
24590-QL-POA-MVA0-00012-03-00006	PJM & CV SUPPORT CONFIGURATION
	ACIDIC WASTE VESSEL

THIS DRAWING TO BE READ IN CONJUNCTION WITH THE MECHANICAL DATA SHEET NO 24590-HLW-MVD-RLD-00005

PLEASE NOTE THAT SOURCE, SPECIAL NUCLEAR AND BYPRODUCT MATERIALS, AS DEFINED IN THE ATOMIC ENERGY ACT OF 1954 (AEA), ARE REGULATED AT THE U.S. DEPARTMENT OF ENERGY (DOE) FACILITIES EXCLUSIVELY BY DOE ACTING PURSUANT TO ITS AEA AUTHORITY. DOE ASSERTS, THAT PURSUANT TO THE AEA, IT HAS SOLE AND EXCLUSIVE RESPONSIBILITY AND AUTHORITY TO REGULATE SOURCE, SPECIAL NUCLEAR, AND BYPRODUCT MATERIALS AT DOE-OWNED NUCLEAR FACILITIES. INFORMATION CONTAINED HERE IN ON RADIONUCLIDES IS PROVIDED FOR PROCESS DESCRIPTION PURPOSES ONLY.

Please note that source, special nuclear, and byproduct materials, as defined in the Atomic Energy Act of 1954 (AEA) are regulated at the U.S. Department of Energy (DOE) facilities exclusively by DOE acting pursuant to its AEA authority. DOE asserts that pursuant to AEA, it has sole and exclusive responsibility and authority to regulate source, special nuclear, and byproduct materials at DOE-owned nuclear facilities. Information contained herein on radionuclides is provided for process description purposes only.

Q

REV	DESCRIPTION	ORG	CHKD	RVWD	APVD	DATE
0	ISSUED FOR PURCHASE, SEE NOTE 9	RPP		MP	MP	11/5/10

REVISION HISTORY

ISSUED BY DFP-WTP PDC

ISSUE STAMP

PROJECT No:	24590	
SITE	HANFORD	
AREA	200E	
BUILDING No:	30	

	BY	DATE
ORIGINATOR	Roy Rogers	11/5/10
CHECKER		5-Nov-10
APPROVER		11/5/10
REVIEWER		11/5/10

CONTENT APPLICABLE TO ALARA? [X] YES [ ] NO

ADR NO. 24590-WTP-ADR-M-03-008 REV: 2

S&NS SCREENING REQUIRED [X] YES [ ] NO S&NS INITIAL IF YES

SCREENING IS REQUIRED FOR DRAWING TYPES IDENTIFIED IN 24590-WTP-GPP-SREG-002

COMPUTER GENERATED MANUAL DESIGN CHANGES NOT PERMITTED

RIVER PROTECTION PROJECT
WASTE TREATMENT PLANT
2435 STEVENS CENTER PLACE
RICHLAND, WA 99354

CONTRACT No: DE-AC27-01RV14136

EQUIPMENT ASSEMBLY
ACIDIC WASTE VESSEL
RLD-VSL-00007

SCALE: NONE

24590-HLW-MV-RLD-00025001

REV 0

"E" SIZE - 44x34

R11297460

FORM E_MASTER 03/2003

BILL OF MATERIALS			
ITEM	THICK/SIZE	DESCRIPTION	QTY
1	3" SCHED 80S	STRUCTURAL SUPPORT	A/R
2	2" SCHED 80S	STRUCTURAL SUPPORT	A/R
3	1" THK PLATE	PIPE SUPPORT	A/R
4	1 1/2" THK PLATE	PIPE SUPPORT	A/R
5	1/2" THK PLATE	END CAP	A/R

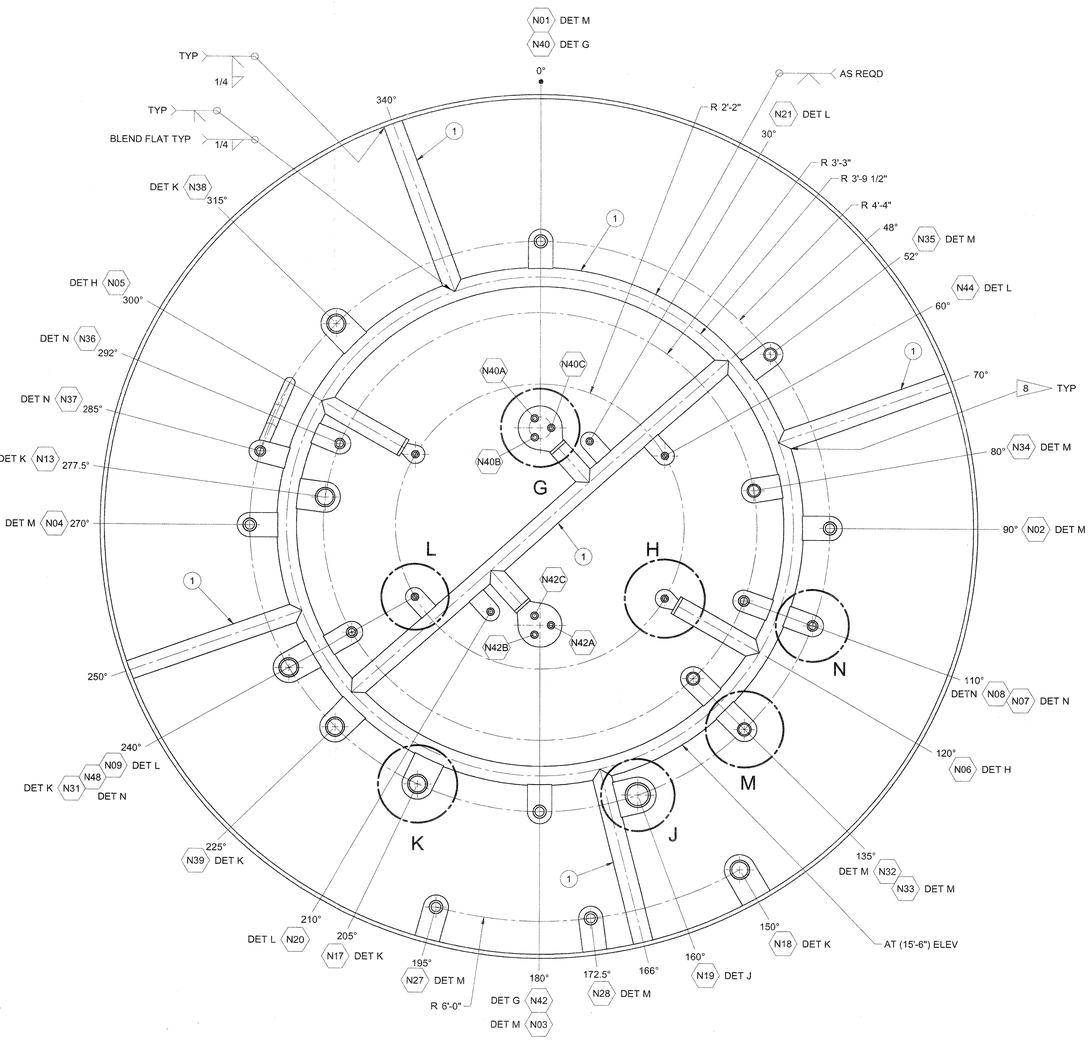

SECTION B-B
FROM 24590-HLW-MV-RLD-00025001

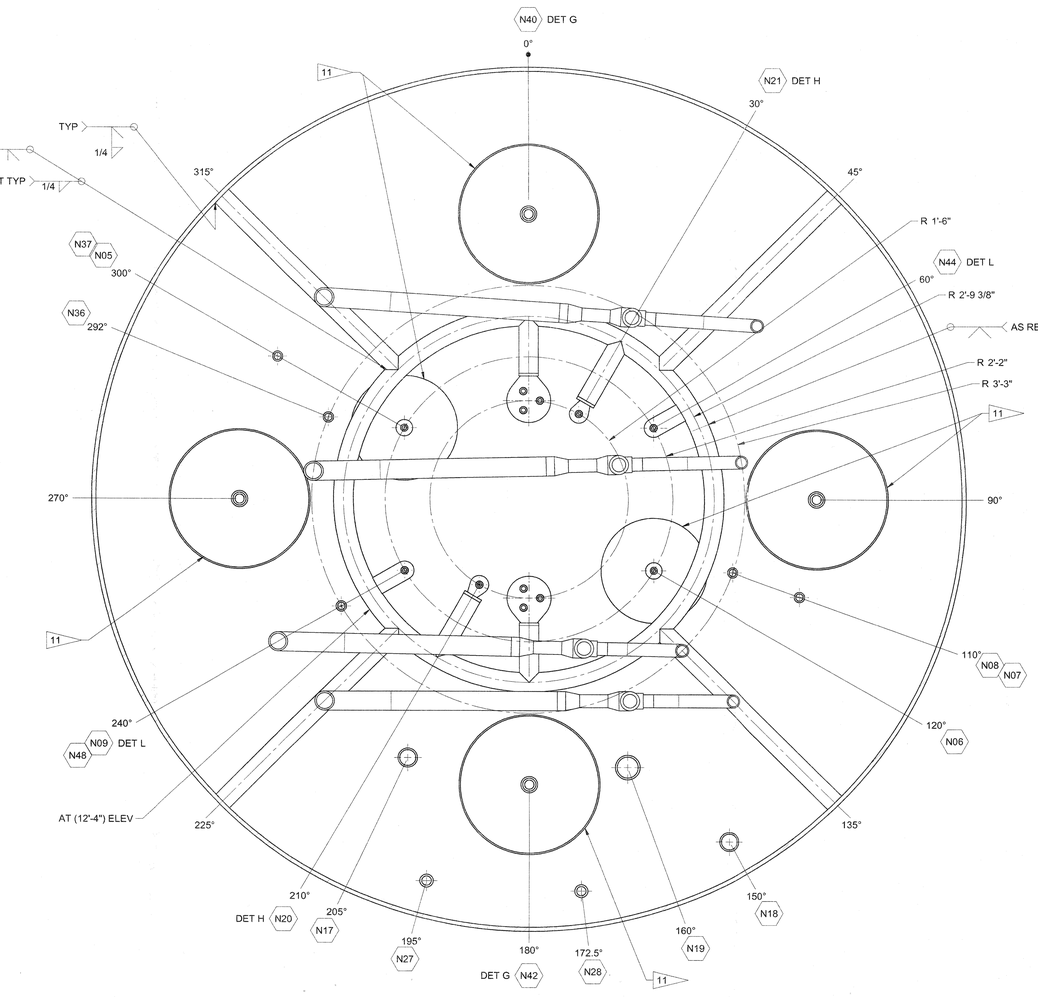

SECTION C-C
FROM 24590-HLW-MV-RLD-00025001

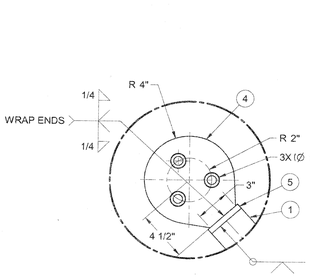

DETAIL G

NOTE: TYP FOR INSTRUMENT SUPPORTS. ADJUST HOLE ORIENTATIONS AS INDICATED AT OTHER LOCATIONS

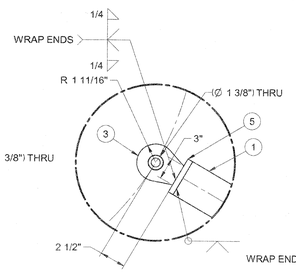

DETAIL H

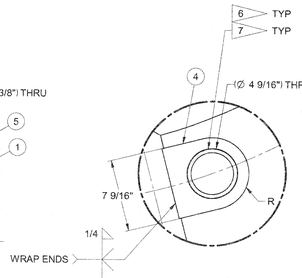

DETAIL J

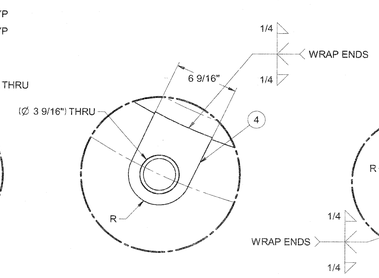

DETAIL K

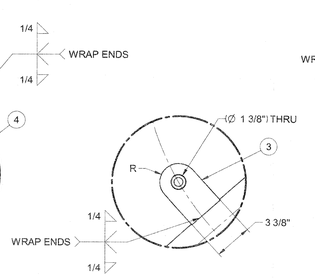

DETAIL L

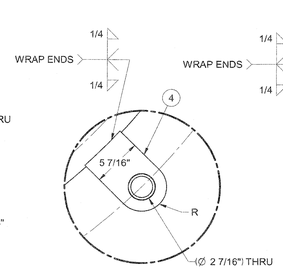

DETAIL M

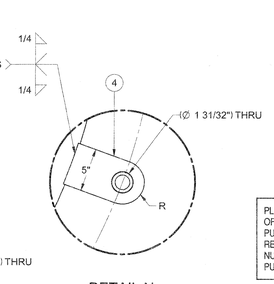

DETAIL N

DRAWING INDEX	
DWG NO	TITLE
24590-HLW-MV-RLD-00025001	EQUIPMENT ASSEMBLY ACIDIC WASTE VESSEL RLD-VSL-00007
24590-HLW-MV-RLD-00025002	EQUIPMENT ASSEMBLY ACIDIC WASTE VESSEL RLD-VSL-00007 SECTIONS AND DETAILS
24590-HLW-MV-RLD-00025003	EQUIPMENT ASSEMBLY ACIDIC WASTE VESSEL RLD-VSL-00007 SECTIONS AND DETAILS
24590-HLW-MV-RLD-00025004	EQUIPMENT ASSEMBLY ACIDIC WASTE VESSEL RLD-VSL-00007 SECTIONS AND DETAILS

PLEASE NOTE THAT SOURCE, SPECIAL NUCLEAR AND BYPRODUCT MATERIALS, AS DEFINED IN THE ATOMIC ENERGY ACT OF 1954 (AEA), ARE REGULATED AT THE U.S. DEPARTMENT OF ENERGY (DOE) FACILITIES EXCLUSIVELY BY DOE ACTING PURSUANT TO ITS AEA AUTHORITY. DOE ASSERTS, THAT PURSUANT TO THE AEA, IT HAS SOLE AND EXCLUSIVE RESPONSIBILITY AND AUTHORITY TO REGULATE SOURCE, SPECIAL NUCLEAR, AND BYPRODUCT MATERIALS AT DOE-OWNED NUCLEAR FACILITIES. INFORMATION CONTAINED HERE IN ON RADIONUCLIDES IS PROVIDED FOR PROCESS DESCRIPTION PURPOSES ONLY.

Please note that source, special nuclear, and byproduct materials, as defined in the Atomic Energy Act of 1954 (AEA) are regulated at the U.S. Department of Energy (DOE) facilities exclusively by DOE acting pursuant to its AEA authority. DOE asserts that pursuant to AEA, it has sole and exclusive responsibility and authority to regulate source, special nuclear, and byproduct materials at DOE-owned nuclear facilities. Information contained herein on radionuclides is provided for process description purposes only.

Q

REV	DESCRIPTION	ORG	CHKD	RWD	APVD	DATE
			RP 11/5/10			
0	ISSUED FOR PURCHASE, ~~SEE NOTE 9~~	RP		MD	JH	11/5/10

REVISION HISTORY

ISSUED BY WTP-WTP PDC

ISSUE STAMP

PROJECT No.	24590	
SITE	HANFORD	
AREA	200E	
BUILDING No.	30	

	BY	DATE
ORIGINATOR	RP Powers	11/5/10
CHECKER		5-Nov-10
APPROVER		11/5/10
REVIEWER		11/5/10

CONTENT APPLICABLE TO ALARA? [X] YES [ ] NO

ADR NO. 24590-WTP-ADR-M-03-008 REV: 2

E&NS SCREENING REQUIRED [X] YES [ ] NO E&NS INITIAL IF YES

BECHTEL

RIVER PROTECTION PROJECT
WASTE TREATMENT PLANT
2435 STEVENS CENTER PLACE
RICHLAND, WA 99354

CONTRACT No: DE-AC27-01RV14136

EQUIPMENT ASSEMBLY ACIDIC WASTE VESSEL RLD-VSL-00007 SECTIONS AND DETAILS

SCALE: NONE

24590-HLW-MV-RLD-00025002 REV 0

FORM E_MASTER 03/2003

BILL OF MATERIALS			
ITEM	THICK/SIZE	DESCRIPTION	QTY
1	3" SCHED 80S	STRUCTURAL SUPPORT	A/R
2	2" SCHED 80S	STRUCTURAL SUPPORT	A/R
3	1" THK PLATE	PIPE SUPPORT	A/R
4	1 1/2" THK PLATE	PIPE SUPPORT	A/R
5	1/2" THK PLATE	END CAP	A/R
6	3" SCHED 80S	LONG RADIUS ELBOW, BUTT WELD	2

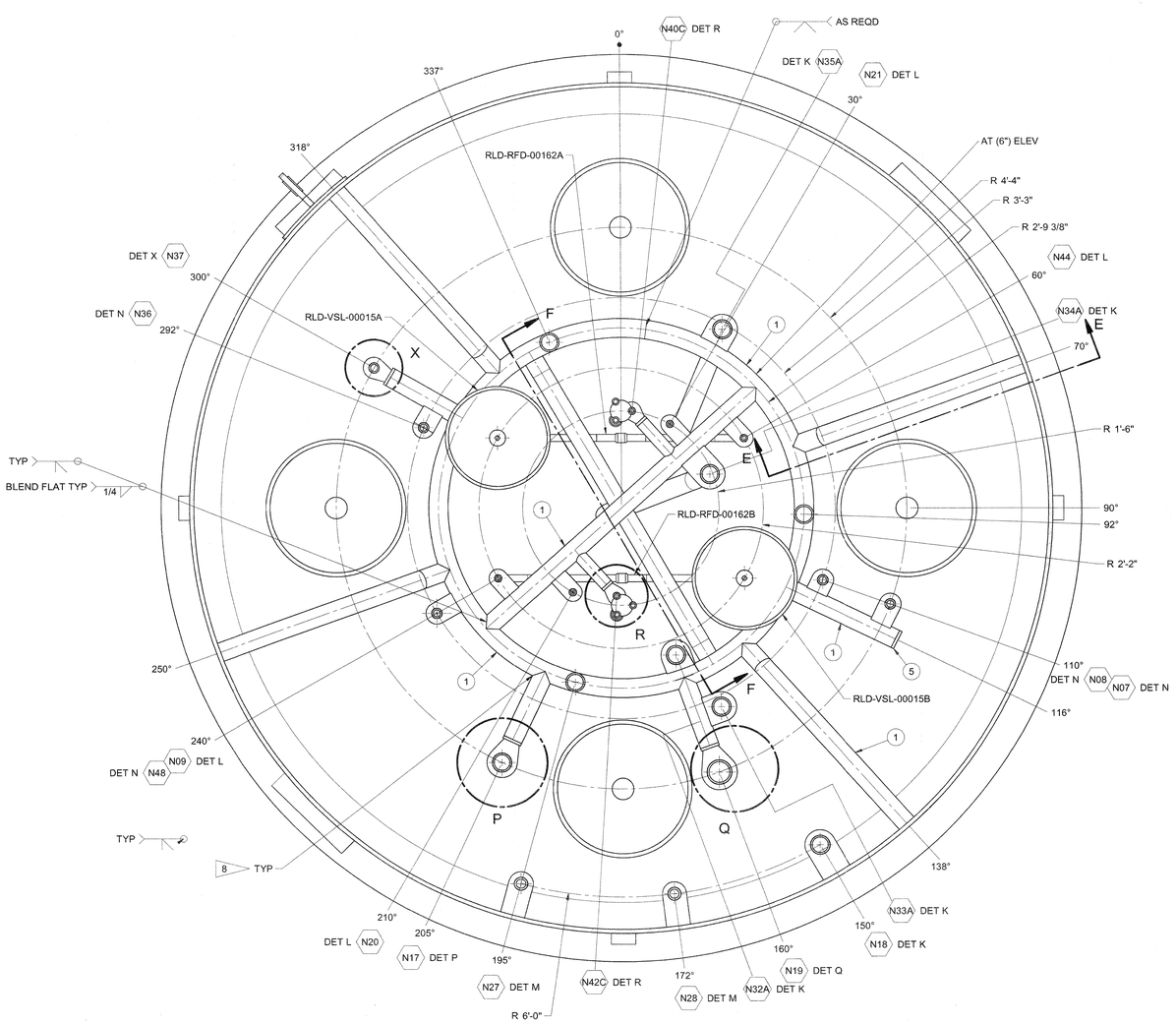

SECTION D-D

FROM 24590-HLW-MV-RLD-00025001

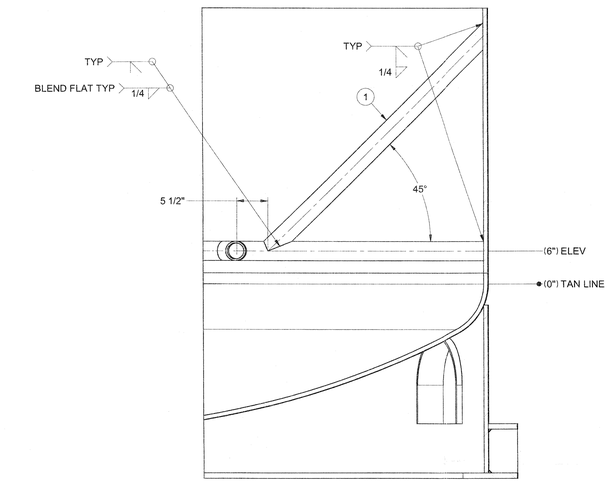

SECTION E-E

TYP 4 LOCATIONS 70°, 138°, 250° & 318°
SOME ITEMS OMITTED FOR CLARITY

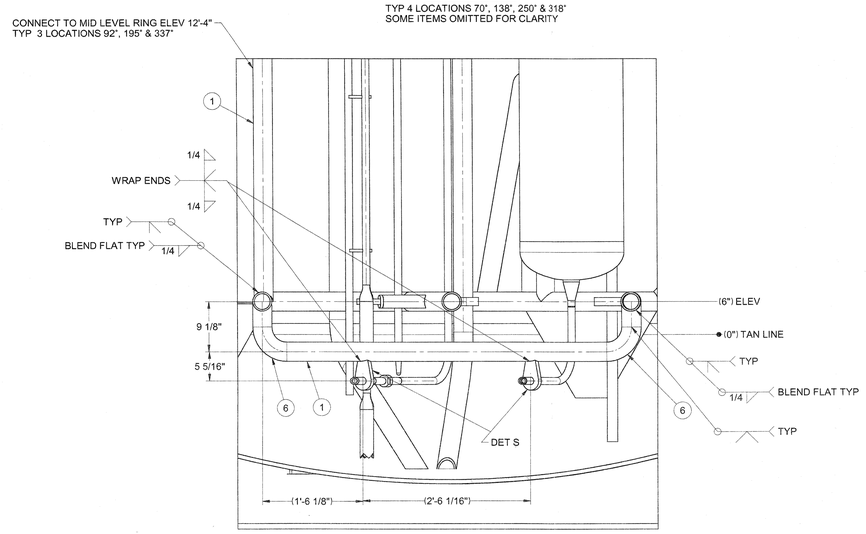

SECTION F-F

DRAWING INDEX	
DWG NO	TITLE
24590-HLW-MV-RLD-00025001	EQUIPMENT ASSEMBLY ACIDIC WASTE VESSEL RLD-VSL-00007
24590-HLW-MV-RLD-00025002	EQUIPMENT ASSEMBLY ACIDIC WASTE VESSEL RLD-VSL-00007
	SECTIONS AND DETAILS
24590-HLW-MV-RLD-00025003	EQUIPMENT ASSEMBLY ACIDIC WASTE VESSEL RLD-VSL-00007
	SECTIONS AND DETAILS
24590-HLW-MV-RLD-00025004	EQUIPMENT ASSEMBLY ACIDIC WASTE VESSEL RLD-VSL-00007
	SECTIONS AND DETAILS

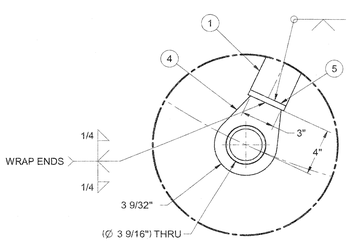

DETAIL P

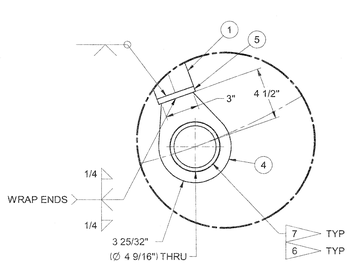

DETAIL Q

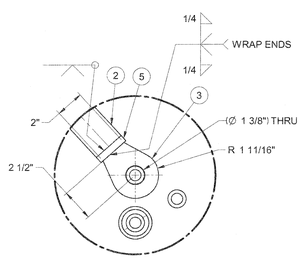

DETAIL R

INNER PIPE BRACE SUPPORT
NOT SHOWN FOR CLARITY

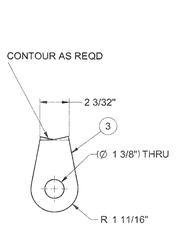

DETAIL S

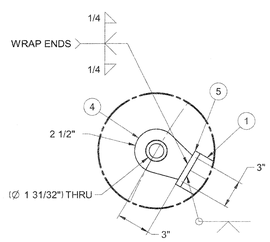

DETAIL X

PLEASE NOTE THAT SOURCE, SPECIAL NUCLEAR AND BYPRODUCT MATERIALS, AS DEFINED IN THE ATOMIC ENERGY ACT OF 1954 (AEA), ARE REGULATED AT THE U.S. DEPARTMENT OF ENERGY (DOE) FACILITIES EXCLUSIVELY BY DOE ACTING PURSUANT TO ITS AEA AUTHORITY. DOE ASSERTS, THAT PURSUANT TO THE AEA, IT HAS SOLE AND EXCLUSIVE RESPONSIBILITY AND AUTHORITY TO REGULATE SOURCE, SPECIAL NUCLEAR, AND BYPRODUCT MATERIALS AT DOE-OWNED NUCLEAR FACILITIES. INFORMATION CONTAINED HERE IN ON RADIONUCLIDES IS PROVIDED FOR PROCESS DESCRIPTION PURPOSES ONLY.

Please note that source, special nuclear, and byproduct materials, as defined in the Atomic Energy Act of 1954 (AEA) are regulated at the U.S. Department of Energy (DOE) facilities exclusively by DOE acting pursuant to its AEA authority. DOE asserts that pursuant to AEA, it has sole and exclusive responsibility and authority to regulate source, special nuclear, and byproduct materials at DOE-owned nuclear facilities. Information contained herein on radionuclides is provided for process description purposes only.

Q

REV	DESCRIPTION	ORG	CHKD	RVWD	APVD	DATE
0	ISSUED FOR PURCHASE. ~~SEE NOTE 9~~	RP		MP		11/5/10

REVISION HISTORY

ISSUED BY RPP-WTP PDC

ISSUE STAMP

PROJECT No.	24590	
SITE	HANFORD	
AREA	200E	
BUILDING No.	30	

	BY	DATE
ORIGINATOR	R Powers	11/5/10
CHECKER		5-Nov-10
APPROVER		11/6/10
REVIEWER		11/5/10

CONTENT APPLICABLE TO ALARA? [X] YES [ ] NO

ADR NO. 24590-WTP-ADR-M-03-009 REV 2

ESHS SCREENING REQUIRED [X] YES [ ] NO ESHS INITIAL IF YES

SCREENING IS REQUIRED FOR

BECHTEL

RIVER PROTECTION PROJECT
WASTE TREATMENT PLANT
2435 STEVENS CENTER PLACE
RICHLAND, WA 99354

CONTRACT No: DE-AC27-01RV14136

EQUIPMENT ASSEMBLY ACIDIC WASTE VESSEL RLD-VSL-00007 SECTIONS AND DETAILS

SCALE: NONE

24590-HLW-MV-RLD-00025003

REV 0

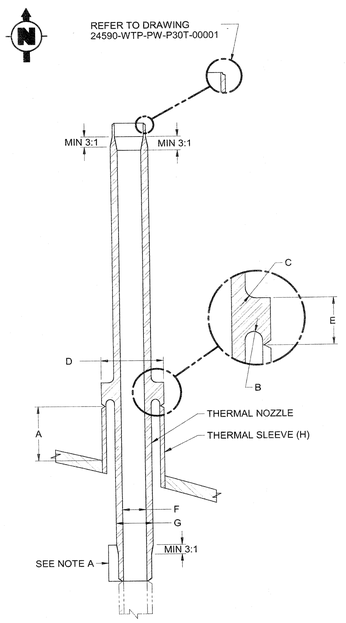

DETAIL T
FROM 24590-HLW-MV-RLD-00025001

THERMAL NOZZLE AND SLEEVE

DIMENSION		1 - 1/2"	2"	3"
A	SLEEVE	6" MINIMUM	6" MINIMUM	6" MINIMUM
B	NOZZLE	0.419" R	0.285" R	0.503" R
C	NOZZLE	0.375" R	0.375" R	0.375" R
D	NOZZLE	4.500"	4.500"	6.625"
E	NOZZLE	1.75"	1.75"	1.75"
F	NOZZLE	1.338"	1.687"	2.900"
G	NOZZLE	2.150"	2.687"	3.750"
H	SLEEVE	4" - 80S	4" - 80S	6" - 80S
EXTERNAL VESSEL PIPE CONNECTION		REFER TO NOZZLE SCHEDULE		
INTERNAL PIPE CONNECTION	1-1/2" - 40S	N48		
	2" - 160S		N11, N12, N15, N16, N27, N28, N32, N34, N33 & N35,	
	3" - 80S		N13, N31, N38, & N39 NOTE A	N10, N54

NOTE A: THE THERMAL NOZZLE IS MACHINED TO ACCOMODATE THE 3" TO 2" TRANSITION.

NOTE B: FOR UNDIPPED THERMAL NOZZLES N11, N12, N15 & N16 SEE TYPICAL UNDIPPED NOZZLE DETAIL.

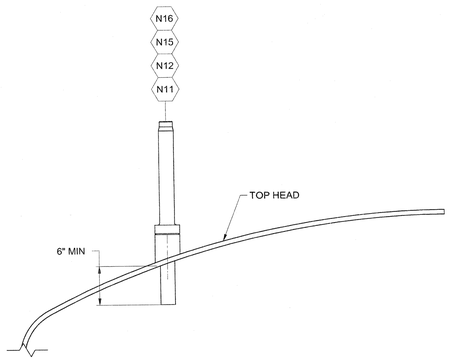

TYPICAL UNDIPPED NOZZLE DETAIL
N11, N12, N15 & N16

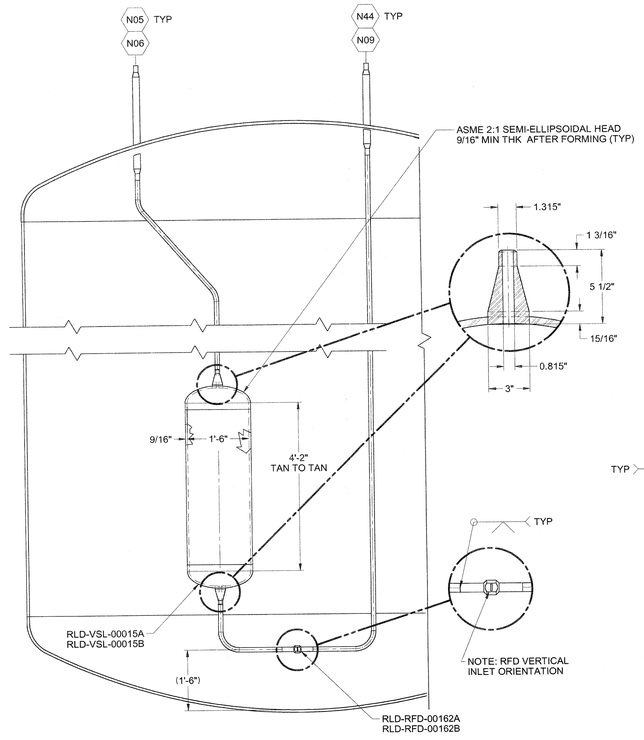

CHARGE VESSEL & RFD ASSEMBLY

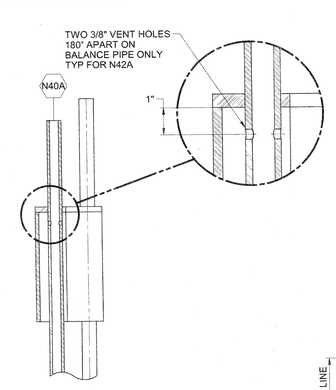

SECTION V-V

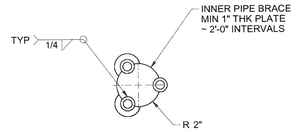

SECTION W-W

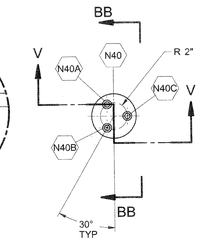

DETAIL U
FROM 24590-HLW-MV-RLD-00025001

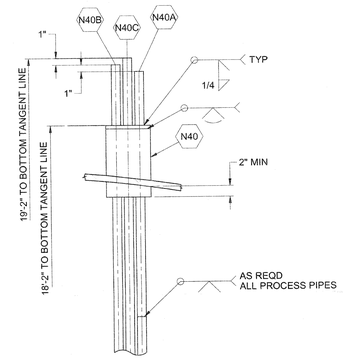

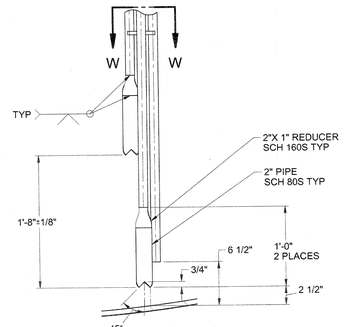

VIEW BB-BB
TYP FOR NOZZLE N42

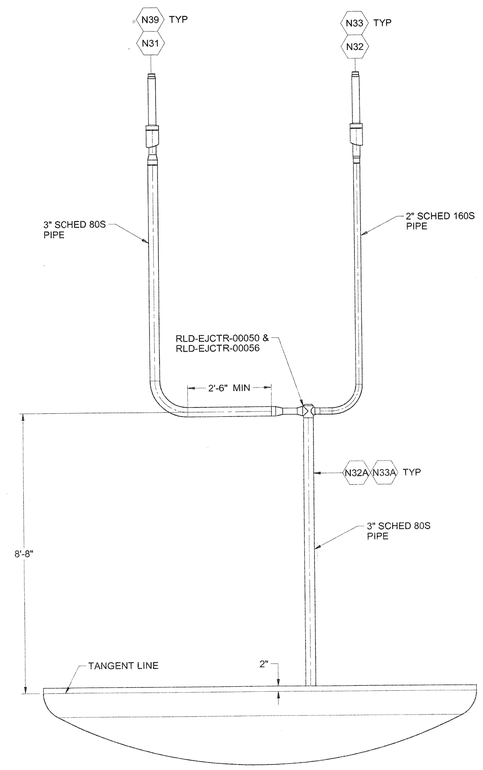

N33/N39 RLD-EJCTR-00050
N32/N31 RLD-EJCTR-00056

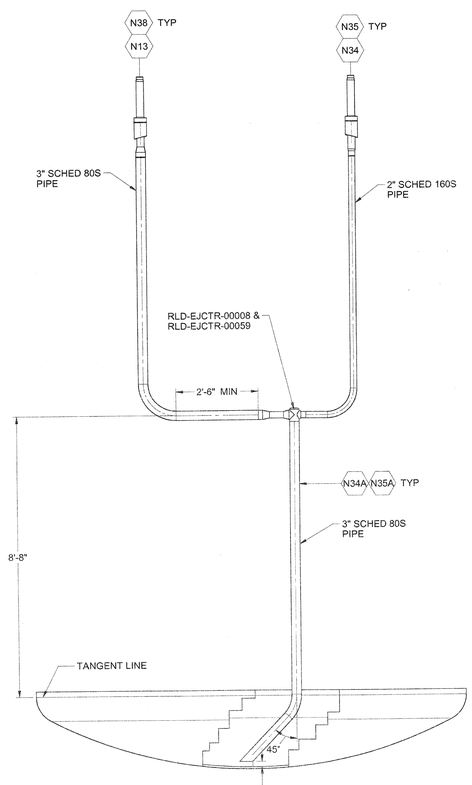

N34/N13 RLD-EJCTR-00008
N35/N38 RLD-EJCTR-00059

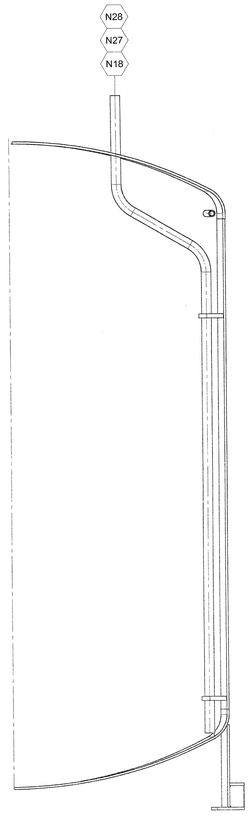

TYPICAL OFFSET NOZZLE DETAIL
N18, N27 & N28

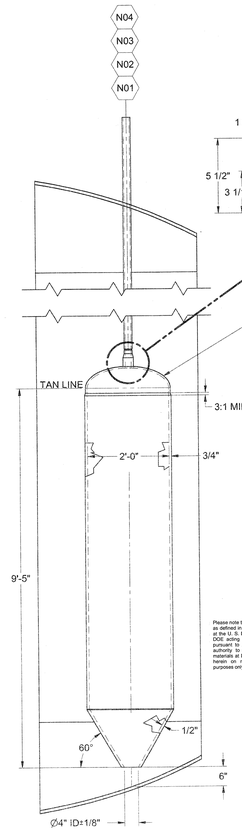

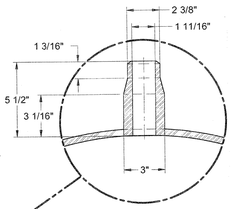

PULSE JET MIXER ASSEMBLY

DRAWING INDEX

DWG NO	TITLE
24590-HLW-MV-RLD-00025001	EQUIPMENT ASSEMBLY ACIDIC WASTE VESSEL RLD-VSL-00007
24590-HLW-MV-RLD-00025002	EQUIPMENT ASSEMBLY ACIDIC WASTE VESSEL RLD-VSL-00007 SECTIONS AND DETAILS
24590-HLW-MV-RLD-00025003	EQUIPMENT ASSEMBLY ACIDIC WASTE VESSEL RLD-VSL-00007 SECTIONS AND DETAILS
24590-HLW-MV-RLD-00025004	EQUIPMENT ASSEMBLY ACIDIC WASTE VESSEL RLD-VSL-00007 SECTIONS AND DETAILS

PLEASE NOTE THAT SOURCE, SPECIAL NUCLEAR AND BYPRODUCT MATERIALS, AS DEFINED IN THE ATOMIC ENERGY ACT OF 1954 (AEA), ARE REGULATED AT THE U.S. DEPARTMENT OF ENERGY (DOE) FACILITIES EXCLUSIVELY BY DOE ACTING PURSUANT TO ITS AEA AUTHORITY. DOE ASSERTS, THAT PURSUANT TO THE AEA, IT HAS SOLE AND EXCLUSIVE RESPONSIBILITY AND AUTHORITY TO REGULATE SOURCE, SPECIAL NUCLEAR, AND BYPRODUCT MATERIALS AT DOE-OWNED NUCLEAR FACILITIES. INFORMATION CONTAINED HERE IN ON RADIONUCLIDES IS PROVIDED FOR PROCESS DESCRIPTION PURPOSES ONLY.

Please note that source, special nuclear, and byproduct materials, as defined in the Atomic Energy Act of 1954 (AEA) are regulated at the U. S. Department of Energy (DOE) facilities exclusively by DOE acting pursuant to its AEA authority. DOE asserts, that pursuant to AEA, it has sole and exclusive responsibility and authority to regulate source, special nuclear, and byproduct materials at DOE-owned nuclear facilities. Information contained herein on radionuclides is provided for process description purposes only.

Q

REVISION HISTORY

REV	DESCRIPTION	ORG	CHKD	RVWD	APVD	DATE
0	ISSUED FOR PURCHASE ~~SEE NOTE 0~~	RP	MD	MD		11/5/10

ISSUED BY RPP-WTP PDC

ISSUE STAMP

PROJECT No.	24590
SITE	HANFORD
AREA	200E
BUILDING No.	30

	BY	DATE
ORIGINATOR	Rob Peppers	11/5/10
CHECKER		5-4w-10
APPROVER		11/5/10
REVIEWER		11/5/10

CONTENT APPLICABLE TO ALARA? [X] YES [ ] NO
ADR NO. 24590-WTP-ADR-M-03-008 REV. 2
E&NS SCREENING REQUIRED [X] YES [ ] NO E&NS INITIAL IF YES

SCREENING IS REQUIRED FOR DRAWING TYPES IDENTIFIED IN 24590-WTP-GPP-SREG-002

RIVER PROTECTION PROJECT
WASTE TREATMENT PLANT
2435 STEVENS CENTER PLACE
RICHLAND, WA 99354

CONTRACT No: DE-AC27-01RV14136

EQUIPMENT ASSEMBLY
ACIDIC WASTE VESSEL
RLD-VSL-00007
SECTIONS AND DETAILS

SCALE: NONE

24590-HLW-MV-RLD-00025004

REV 0

"E" SIZE - 44x34

R11297483

COMPUTER GENERATED - MANUAL DESIGN CHANGES NOT PERMITTED

FORM E_MASTER 03/2003

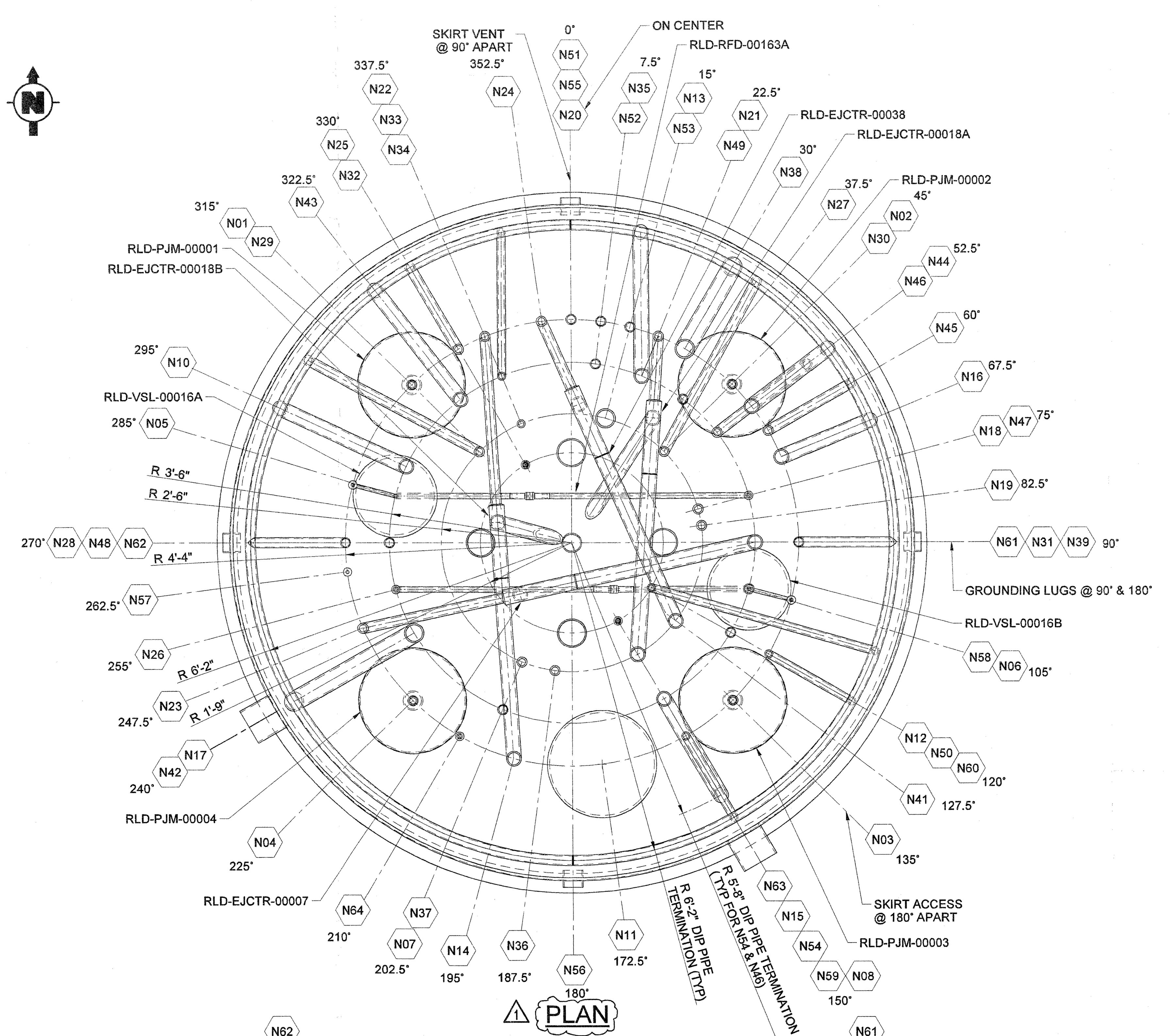

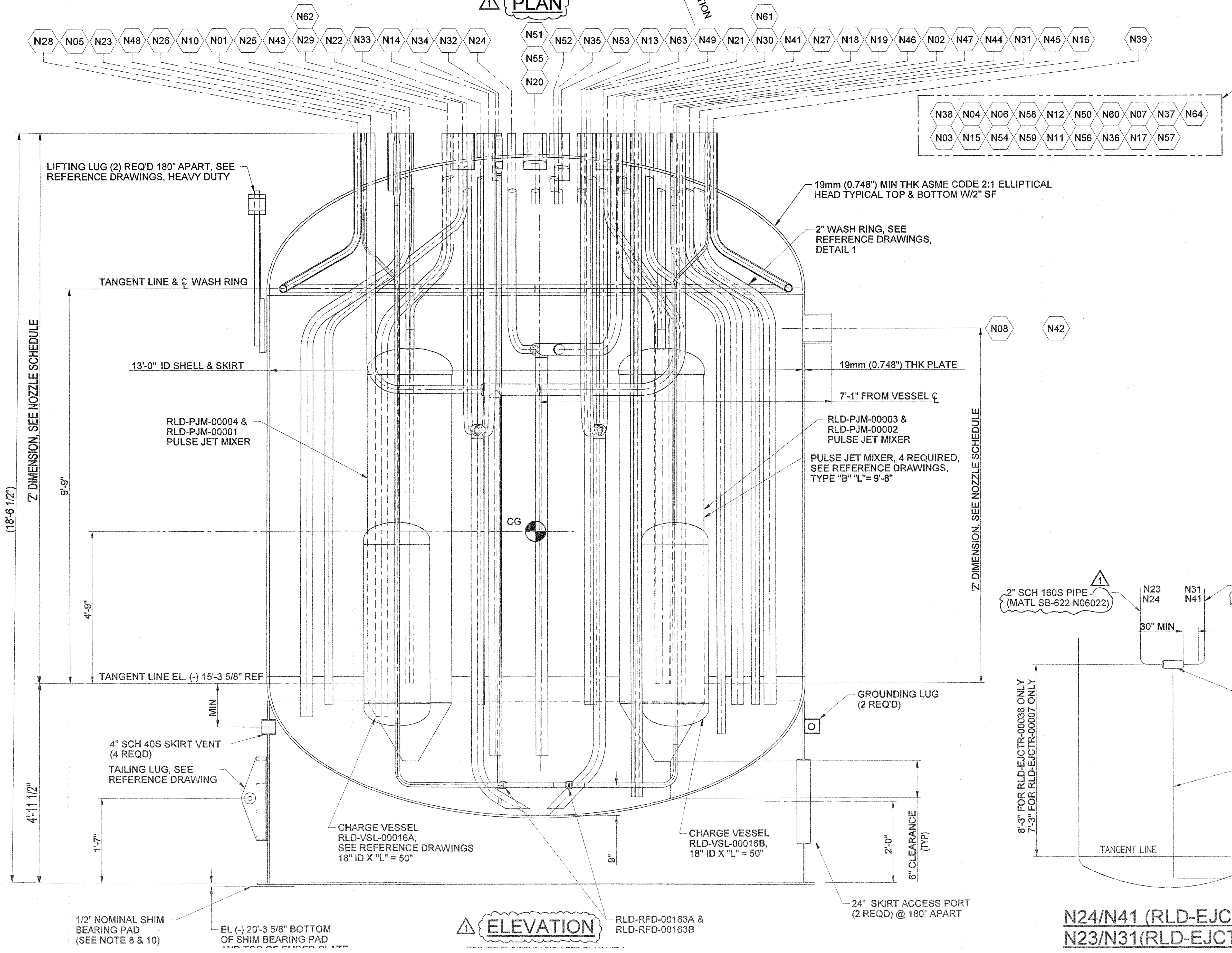

GENERAL NOTES:

1. ALL ANCHOR BOLT HOLES SHALL STRADDLE NORMAL VESSEL CENTER LINE.
2. ALL 'Z' DIMENSIONS MEASURED FROM BOTTOM TANGENT LINE UNLESS OTHERWISE NOTED. FOR SHELL NOZZLE 'Z' DIMENSIONS MEASURED FROM CENTER LINE OF NOZZLE FACE.
3. FOR DISTANCE OF DIP PIPES (LEGS) TO BOTTOM HEAD USE 2" CLEARANCE, UNLESS OTHERWISE SPECIFIED.
4. ALL VESSEL THICKNESSES, SCHEDULE/WALL THICKNESS SHOWN ON NOZZLE TABLE ARE MINIMUM, SELLER TO CONFIRM THE ACTUAL SCHEDULE/WALL THICKNESS TO BE USED FOR NOZZLE CONNECTION.
5. SELLER TO PROVIDE NECESSARY SUPPORT/GUIDE FOR INTERNAL PIPING, CHARGE VESSELS, PULSE JET MIXERS.
6. RFD PUMPS AND EJECTORS SHALL BE PROVIDED BY BUYER FOR SELLER TO INSTALL, ALL OTHER INTERNALS SHALL BE DESIGNED, PROVIDED AND INSTALLED BY SELLER.
7. FOR NOZZLE N18 & N19, END OF DIP TUBE ROUTED TOWARD THE SUCTION AREA OF THE EJECTOR RLD-EJCTR-00018A & RLD-EJCTR-00018B.
8. SELLER SHALL PROVIDE 8 SHIM PACKS COMPRISING OF THE FOLLOWING 10" SQUARE STAINLESS STEEL PLATES:
   - 2 PCS-1/4" THICK PLATES
   - 1 PCS-1/8" THICK PLATES
   - 2 PCS-1/16" THICK PLATES
9. SELLER TO FURNISH 10 PIPE DIAMETERS OF STRAIGHT RUN PIPE ON THE DISCHARGE LINE OF THE EJECTOR BEFORE MAKING ANY BENDS.
10. FOR BASE SUPPORT AND ANCHORAGE REQUIREMENTS, SEE REFERENCE DRAWING 24590-HLW-DD-S13T-00002007.
11. FOR TEMPERATURE NOZZLE (N32 & N63), THE DISTANCE OF DIP PIPE (LEGS) TO BOTTOM HEAD USED 9" CLEARANCE.
12. NOZZLE MATERIAL FOR N08 SHALL BE UNS N08367.
13. NOZZLE N14, N15, N21, N22, N23, N24, N31 & N41 SHALL BE SB-622 N06022 MATERIAL.
14. REVISED:
   a) NOZZLE TABLE BASED ON P & ID REVISION.
   b) REFERENCE DRAWINGS REVISION.
   c) ADDED/REVISED 60° OFFSET DIP PIPES TO NOZZLES N10, N12, N16, N17, N25, N29, N30, N33, N38, N43, N44, N45, N46, N49, N54, N59 & N60.
   d) REVISED THE MATERIAL FOR EJECTOR PIPING AND NOZZLES AS SHOWN TO SB-622 N06022.
   e) ADD DETAIL FOR NOZZLE N21, N22, N23 & N24.

HOLDS

1. FINAL NOZZLE LOCATIONS, SIZE AND 'Z' DIMENSIONS PENDING CONFIRMATION BY PLANT DESIGN.
2. LOCATION FOR NAMEPLATE & BRACKET, ANCHOR BOLT CHAIR BASE PLATE DETAILS, SKIRT VENT AND SKIRT OPENING PENDING PIPING LOCATION BY PLANT DESIGN.
3. LOCATION FOR LIFTING LUGS & TAILING LUG PENDING REVIEW BY CONSTRUCTION.
4. INTERNALS PENDING CONFIRMATION BY FLUIDIC GROUP.

NOZZLE	SIZE	SCH/WALL	SERVICE/REMARKS	"Z" DIM	REF DWG/DET	CONN PIPE SIZE/SCHED
N 01	2"	160S	AIR/VACUUM TO RLD-PJM-00001	13' 7"	24590-WTP-MV-M59T-00016001 DET 3	2"-40S
N 02	2"	160S	AIR/VACUUM TO RLD-PJM-00002	13' 7"	24590-WTP-MV-M59T-00016001 DET 3	2"-40S
N 03	2"	160S	AIR/VACUUM TO RLD-PJM-00003	13' 7"	24590-WTP-MV-M59T-00016001 DET 3	2"-40S
N 04	2"	160S	AIR/VACUUM TO RLD-PJM-00004	13' 7"	24590-WTP-MV-M59T-00016001 DET 3	2"-40S
N 05	2"OD x 1/2"	SEE DETAIL	AIR/VACUUM TO RLD-VSL-00016A	13' 7"	24590-WTP-MV-M59T-00016001 DET 7	1/2"-40S
N 06	2"OD x 1/2"	SEE DETAIL	AIR/VACUUM TO RLD-VSL-00016B	13' 7"	24590-WTP-MV-M59T-00016001 DET 7	1/2"-40S
N 07	2"	80S	INLET FROM HSH-SUMP-00006	13' 7"	24590-WTP-MV-M59T-00016001 DET 2	2"-40S
N 08	8"	80S	INLET FROM RLD-VSL-00007 (NOTE 12)	8' 11"	24590-WTP-MV-M59T-00016001 DET 1	8"-10S
N 09			DELETED			
N 10	3"	80S	INLET	13' 7"	24590-WTP-MV-M59T-00016001 DET 4	3"-40S
N 11	24"	PLATE	MANWAY	12'-11"	24590-WTP-MV-M59T-00017 DET 1	CAPPED
N 12	1 1/2"	160S	OUTLET FROM RLD-EJCTR-00178	13' 7"	24590-WTP-MV-M59T-00016001 DET 4	1 1/2"-40S
N 13	2"	80S	SPARE	13' 7"	24590-WTP-MV-M59T-00016001 DET 2	CAPPED
N 14	3"	80S	OUTLET FROM RLD-EJCTR-00018B	13' 7"	24590-WTP-MV-M59T-00016001 DET 3	3"-80S
N 15	3"	80S	OUTLET FROM RLD-EJCTR-00018A	13' 7"	24590-WTP-MV-M59T-00016001 DET 3	3"-80S
N 16	3"	80S	INLET	13' 7"	24590-WTP-MV-M59T-00016001 DET 4	3"-40S
N 17	4"	80S	INLET	13' 7"	24590-WTP-MV-M59T-00016001 DET 4	4"-40S
N 18	2"	160S	INLET WASH LINES (DIP LEG)	13' 7"	24590-WTP-MV-M59T-00016001 DET 4	2"-40S
N 19	2"	160S	INLET WASH LINES (DIP LEG)	13' 7"	24590-WTP-MV-M59T-00016001 DET 4	2"-40S
N 20	4"	80S	VENT (SPARE)	13' 7"	24590-WTP-MV-M59T-00016001 DET 1	CAPPED
N 21	2"	160S	STEAM TO RLD-EJCTR-00018A	13' 7"	24590-WTP-MV-M59T-00016001 DET 3	2"-40S
N 22	2"	160S	STEAM TO RLD-EJCTR-00018B	13' 7"	24590-WTP-MV-M59T-00016001 DET 3	2"-40S
N 23	2"	160S	STEAM TO RLD-EJCTR-00007	13' 7"	24590-WTP-MV-M59T-00016001 DET 3	2"-40S
N 24	2"	160S	STEAM TO RLD-EJCTR-00038	13' 7"	24590-WTP-MV-M59T-00016001 DET 3	2"-40S
N 25	2"	160S	INLET FROM DRUM TRANSFER TUNNEL SUMPS	13' 7"	24590-WTP-MV-M59T-00016001 DET 4	2"-40S
N 26	2"OD x 1"	SEE DETAIL	OUTLET TO AUTOSAMPLER	13' 7"	24590-WTP-MV-M59T-00016001 DET 7	1"-40S
N 27	2"	160S	AUTOSAMPLER RETURN	13' 7"	24590-WTP-MV-M59T-00016001 DET 2	2"-40S
N 28	2"	160S	INLET WASH RING	13' 7"	24590-WTP-MV-M59T-00016001 DET 3	2"-40S
N 29	2"	160S	SPARE DIP LEG	13' 7"	24590-WTP-MV-M59T-00016001 DET 4	2"-40S
N 30	2"	160S	SPARE DIP LEG	13' 7"	24590-WTP-MV-M59T-00016001 DET 4	2"-40S
N 31	3"	80S	OUTLET FROM RLD-EJCTR-00007	13' 7"	24590-WTP-MV-M59T-00016001 DET 3	3"-40S
N 32	2"OD	SEE DETAIL	TEMPERATURE	13' 7"	24590-WTP-MV-M59T-00007 ASSY 1 DET 5	1"-40S
N 33	1 1/2"	160S	FROM HFP-SUMP-00002	13' 7"	24590-WTP-MV-M59T-00016001 DET 4	1 1/2"-40S
N 34	1 1/2"	160S	FROM HSH-SUMP-00003	13' 7"	24590-WTP-MV-M59T-00016001 DET 4	1 1/2"-40S
N 35	2"	80S	CRANE MAINTENANCE SUMP	13' 7"	24590-WTP-MV-M59T-00016001 DET 2	2"-40S
N 36	2"	80S	RLD-WBOX-00077	13' 7"	24590-WTP-MV-M59T-00016001 DET 2	2"-80S
N 37	2"	80S	RLD-WBOX-00077	13' 7"	24590-WTP-MV-M59T-00016001 DET 2	2"-80S
N 38	4"	80S	HFP-SUMP-00001	13' 7"	24590-WTP-MV-M59T-00016001 DET 4	4"-40S
N 39	2"	160S	INLET WASH RING	13' 7"	24590-WTP-MV-M59T-00016001 DET 3	2"-40S
N 40			DELETED			
N 41	3"	80S	OUTLET FROM RLD-EJCTR-00038	13' 7"	24590-WTP-MV-M59T-00016001 DET 3	3"-40S
N 42	8"	40S	OVERFLOW	8' 11"	24590-WTP-MV-M59T-00016001 DET 1	8"-10S
N 43	3"	80S	HEADER	13' 7"	24590-WTP-MV-M59T-00016001 DET 4	3"-40S
N 44	3"	80S	OVERFLOW FROM RLD-BRKPT-00004	13' 7"	24590-WTP-MV-M59T-00016001 DET 4	3"-40S
N 45	2"	160S	INLET	13' 7"	24590-WTP-MV-M59T-00016001 DET 4	2"-40S
N 46	2"	160S	INLET	13' 7"	24590-WTP-MV-M59T-00016001 DET 4	2"-40S
N 47	2"OD x 1"	SEE DETAIL	OUTLET TO AUTOSAMPLER	13'-7"	24590-WTP-MV-M59T-00016001 DET 7	1"-40S
N 48	2"	80S	AUTOSAMPLER RETURN	13'-7"	24590-WTP-MV-M59T-00016001 DET 2	2"-40S
N 49	3"	80S	INLET	13'-7"	24590-WTP-MV-M59T-00016001 DET 4	3"-40S
N 50	2"	80S	INLET FROM HFP-EJCTR-00001	13'-7"	24590-WTP-MV-M59T-00016001 DET 2	2"-80S
N 51	2"	80S	INLET FROM HFP-EJCTR-00002	13'-7"	24590-WTP-MV-M59T-00016001 DET 2	2"-80S
N 52	2"	80S	INLET FROM PCW-VSL-00007	13'-7"	24590-WTP-MV-M59T-00016001 DET 2	2"-40S
N 53	4"	80S	DRAIN HEADER	13'-7"	24590-WTP-MV-M59T-00016001 DET 2	4"-40S
N 54	3"	80S	INLET	13'-7"	24590-WTP-MV-M59T-00016001 DET 4	3"-40S
N 55	6"	40S	RADAR LEVEL INSTRUMENT	13'-7"	24590-WTP-MV-M59T-00016003 DET 24	1-1/2"-40S
N 56	6"	40S	RADAR LEVEL INSTRUMENT	13'-7"	24590-WTP-MV-M59T-00016003 DET 24	1-1/2"-40S
N 57	2"OD	SEE DETAIL	AIR INLET	13'-7"	24590-WTP-MV-M59T-00016001 DET 6	1/2"-40S
N 58	2"	80S	INLET FROM NLD-TK-00006	13'-7"	24590-WTP-MV-M59T-00016001 DET 2	2"-40S
N 59	1 1/2"	160S	INLET FROM RLD-EJCTR-00052A	13'-7"	24590-WTP-MV-M59T-00016001 DET 4	1 1/2"-40S
N 60	1 1/2"	160S	INLET FROM RLD-EJCTR-00052B	13'-7"	24590-WTP-MV-M59T-00016001 DET 4	1 1/2"-40S
N61	6"	40S	RADAR LEVEL INSTRUMENT	13'-7"	24590-WTP-MV-M59T-00016003 DET 24	1-1/2"-40S
N62	6"	40S	SPARE RADAR LEVEL INSTRUMENT	13'-7"	24590-WTP-MV-M59T-00016003 DET 24	1-1/2"-40S
N63	2"OD x 1"	SEE DETAIL	TEMPERATURE (SPARE)	13'-7"	24590-WTP-MV-M59T-00007 ASSY 1 DET 5	1"-40S
N64	2"OD	SEE DETAIL	PRESSURE	13'-7"	24590-WTP-MV-M59T-00016001 DET 5	1/2"-40S

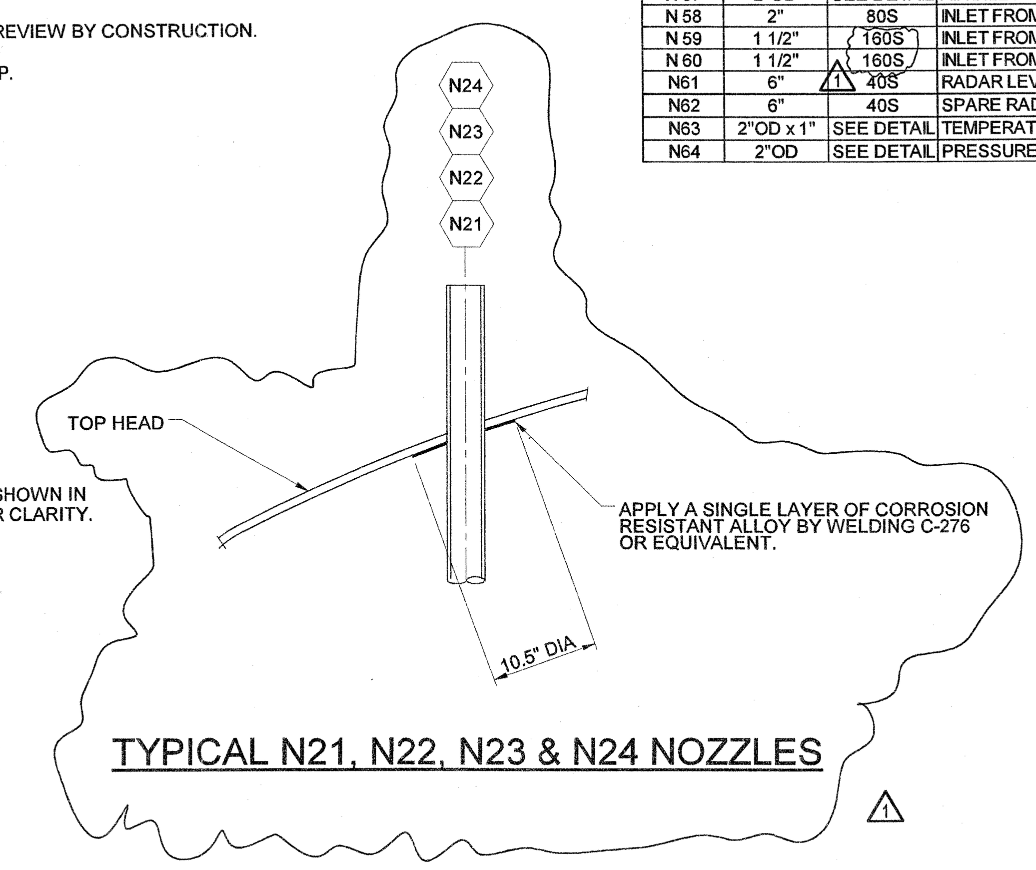

TYPICAL N21, N22, N23 & N24 NOZZLES

VESSEL COMPONENT QUALITY LEVELS	
COMPONENTS	QUALITY LEVEL
MAIN VESSEL AND NOZZLES	QL-I
SKIRT	QL-I
PULSE JET MIXERS AND ASSOCIATED PIPING	QL-I
CHARGE VESSEL AND ASSOCIATED PIPING	QL-I
EJECTORS & WASH RING ASSOCIATED PIPING	QL-2
RFD'S AND ASSOCIATED PIPING	QL-I
EJECTORS (BY OTHERS)	CM

THIS DRAWING TO BE READ IN CONJUNCTION WITH THE MECHANICAL DATA SHEET NO 24590-HLW-MVD-RLD-00007

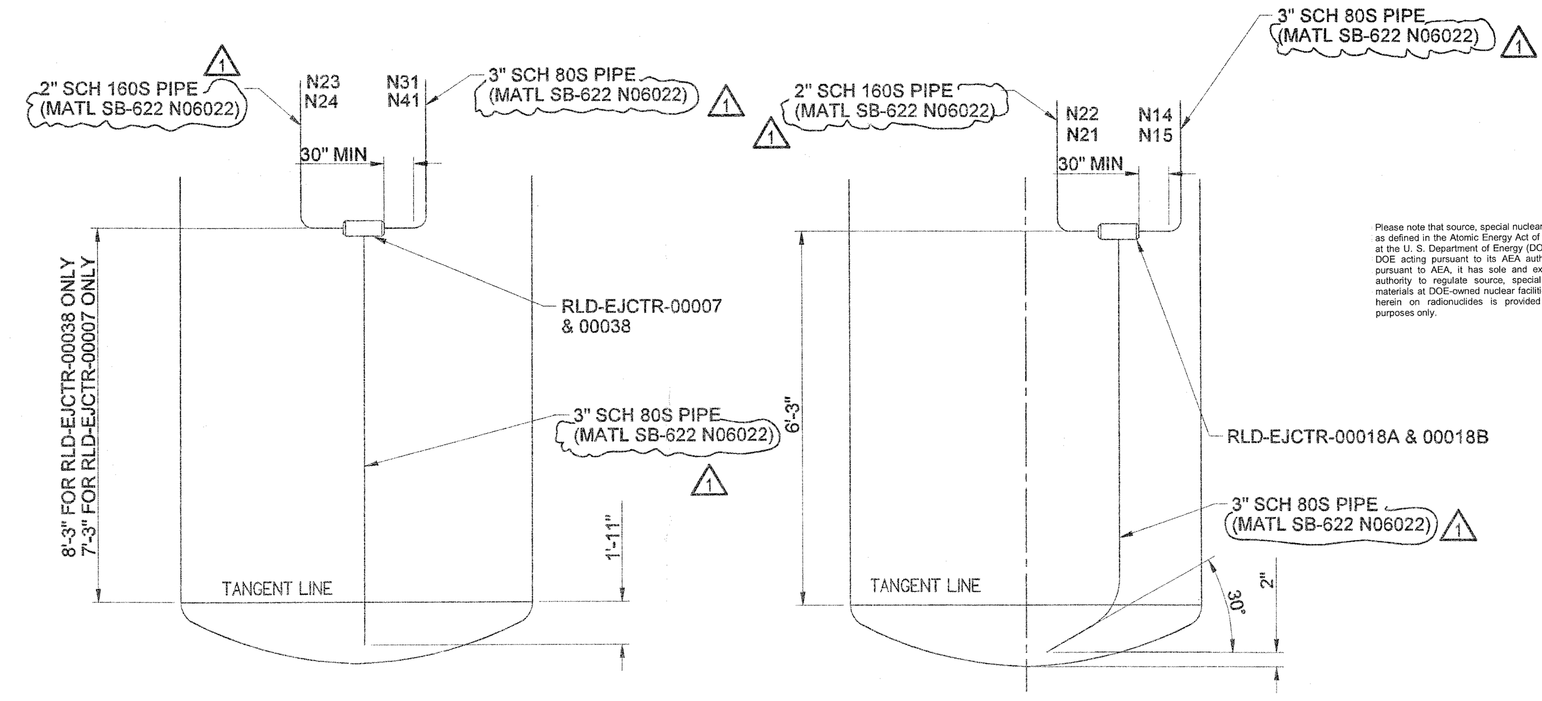

N24/N41 (RLD-EJCTR-00038)
N23/N31(RLD-EJCTR-00007)

N21/N15 (RLD-EJCTR-00018A)
N22/N14(RLD-EJCTR-00018B)

REFERENCE DRAWINGS		
DWG NO	REV	TITLE
24590-HLW-M6-RLD-00002	1	P & ID
24590-HLW-M6-RLD-00007	1	P & ID
24590-WTP-MV-M59T-00001	3	PRESSURE VESSEL TOLERANCES STANDARD DETAILS
24590-WTP-MV-M59T-00004	1	PULSE JET MIXERS STANDARD DETAILS
24590-WTP-MV-M59T-00007	3	THERMOWELL CONNECTION STANDARD DETAILS
24590-WTP-MV-M59T-00009	2	LIFTING LUG STANDARD DETAILS
24590-WTP-MV-M59T-00010	2	TAILING LUG STANDARD DETAILS
24590-WTP-MV-M59T-00011	2	WASH RINGS STANDARD DETAILS
24590-WTP-MV-M59T-00012	1	GROUNDING LUG STANDARD DETAILS
24590-WTP-MV-M59T-00013	1	CHARGE VESSEL STANDARD DETAILS
24590-WTP-MV-M59T-00014	1	RFD PUMPS DETAIL
24590-WTP-MV-M59T-00016001	3	VESSEL CONNECTIONS STANDARD DETAILS SHT 1 OF 3
24590-WTP-MV-M59T-00016002	2	VESSEL CONNECTIONS STANDARD DETAILS SHT 2 OF 3
24590-WTP-MV-M59T-00016003	1	VESSEL CONNECTIONS STANDARD DETAILS SHT 3 OF 3
24590-WTP-MV-M59T-00017	1	VESSEL INSPECTION MANWAY STANDARD DETAILS
24590-WTP-MV-M59T-00018	2	VESSEL NAME PLATE STANDARD DETAILS
24590-HLW-DD-S13T-00002007	4	HLW VITRIFICATION BLDG CONCRETE EQUIP SUPPORT DET EL (-) 21'-0"
24590-WTP-PW-P30T-00001	0	WTP END PREP DETAIL FOR FIELD BUTT WELDS

REV	DESCRIPTION	ORG	CHKD	RVWD	APVD	DATE
1	REVISED AS NOTED, SEE NOTE 14	[signature]	[signature]	[signature]	[signature]	6/3/04
0	REVISED AS NOTED, SEE NOTE 13 & ISSUED FOR PURCHASE	RR/SL	CS	MW	MH	09/03/03

REVISION HISTORY

Q

ISSUED BY RPP-WTP PDC — INIT DATE — ISSUE STAMP

PROJECT No.	24590
SITE	HANFORD
AREA	200E
BUILDING No.	30

	BY	DATE
ORIGINATOR	R. RAVULA / S. LEE	09/02/03
CHECKER	C. SLATER	09/02/03
APPROVER	M. HOFFMANN	09/03/03
REVIEWER	M. WRIGHT	09/03/03

CONTENT APPLICABLE TO ALARA? [XX] YES [ ] NO

ADR NO. 24590-HLW-ADR-M-02-016 REV: 0

BECHTEL

RIVER PROTECTION PROJECT
WASTE TREATMENT PLANT
2435 STEVENS CENTER PLACE
RICHLAND, WA 99352

CONTRACT No: DE-AC27-01RV14136

EQUIPMENT ASSEMBLY
PLANT WASH & DRAINS
VESSEL
RLD-VSL-00008

SCALE: NONE — 24590-HLW-MV-RLD-00004 — REV 1

R10316858

ITEM	QTY	MATERIAL	DESCRIPTION
1	AR	SEE NOTE 7	1/2 (MIN) WALL X 1 1/2 LONG, ROUND BAR, GUIDE RING (NOTE 5)
2	AR	SEE NOTE 7	3/4 (MIN) X 3 (MIN) BAR, SPACER
3	AR	SEE NOTE 7	3/4 (MIN) X 2 (MIN) BAR, SPACER
4	AR	SEE NOTE 7	1/4 (MIN) PLATE, CAP
5	AR	SEE NOTE 7	1 1/2 (MIN) PLATE, GUIDE RING (NOTE 5) WIDTH AS REQUIRED
6	AR	SEE NOTE 7	3" NPS SCHEDULE 80 SEAMLESS PIPE
7	2	SEE NOTE 7	3" NPS SCHEDULE 80 LONG RADIUS ELBOW (BUTT WELD)

PLEASE NOTE THAT SOURCE AND/OR SPECIAL NUCLEAR AND BYPRODUCT MATERIALS, AS DEFINED IN THE ATOMIC ENERGY ACT OF 1954 (AEA), ARE REGULATED AT THE U.S. DEPARTMENT OF ENERGY (DOE) FACILITIES EXCLUSIVELY BY THE DOE ACTING PURSUANT TO ITS AEA AUTHORITY. THE DOE ASSERTS THAT PURSUANT TO THE AEA, IT HAS SOLE AND EXCLUSIVE RESPONSIBILITY AND AUTHORITY TO REGULATE SOURCE, SPECIAL NUCLEAR, AND BYPRODUCT MATERIALS AT DOE-OWNED NUCLEAR FACILITIES. INFORMATION CONTAINED HEREIN ON RADIONUCLIDES IS PROVIDED FOR PROCESS DESCRIPTION PURPOSES ONLY.

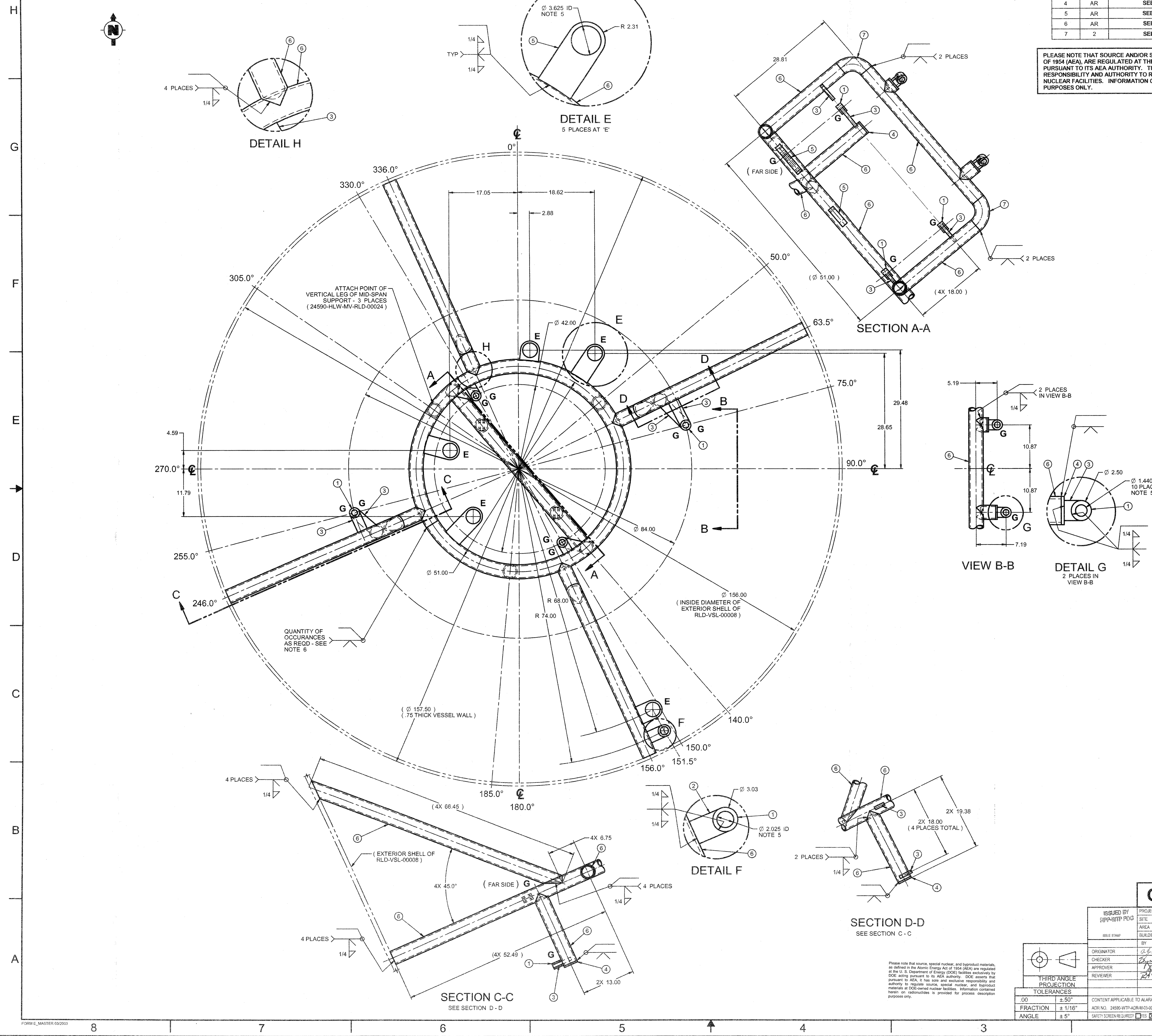

Please note that source, special nuclear, and byproduct materials, as defined in the Atomic Energy Act of 1954 (AEA) are regulated at the U. S. Department of Energy (DOE) facilities exclusively by DOE acting pursuant to its AEA authority. DOE asserts that pursuant to AEA, it has sole and exclusive responsibility and authority to regulate source, special nuclear, and byproduct materials at DOE-owned nuclear facilities. Information contained herein on radionuclides is provided for process description purposes only.

GENERAL NOTES

1. DIMENSIONING AND TOLERANCING PER ASME Y14.5
2. THIS DRAWING PROVIDES INFORMATION TO PLACE ADDITIONAL SEISMIC GUIDE/SUPPORT STRUCTURE INSIDE OF HLW VESSEL RLD-VSL-00008 FOR ADDED INTERNAL STRUCTURAL SUPPORT.
3. WELDING AND NDE SHALL BE IN ACCORDANCE WITH VESSEL SPECIFICATION 24590-WTP-3PS-MV00-T0001.
4. CONTENTS OF THIS DOCUMENT ARE DANGEROUS WASTE PERMIT AFFECTING.
5. GUIDE RINGS ARE BORED TO MAINTAIN 1/16" (.063") MAXIMUM GAP ON A SIDE FOR 1/8" (.125") MAXIMUM DIAMETRAL CLEARANCE WITH PIPE.
6. CENTER SUPPORT RING MAY BE FABRICATED IN AS MANY SECTIONS AS NEEDED.
7. MATERIALS ARE PER THE FOLLOWING MECHANICAL SYSTEMS DATA SHEET: 24590-HLW-MVD-RLD-00007, AND ADDITIONALLY, BAR STOCK IS PER SA 479 TYPE 316 (.03% CARBON MAX).

REFERENCE DRAWINGS	
DWG NO	TITLE
24590-HLW-MV-RLD-00004	EQUIPMENT ASSEMBLY PLANT WASH & DRAINS VESSEL RLD-VSL-00008
24590-HLW-MV-RLD-00020	RLD-VSL-00008 LOW SIDE WALL MTD SEISMIC GUIDE/SPRTS, 0'-6" ABOVE TAN LINE OF BOT HEAD
24590-HLW-MV-RLD-00021	RLD-VSL-00008 UPPER GUIDE/SUPPORT 9'-3" ABOVE TAN LINE OF BOTTOM HEAD
24590-HLW-MV-RLD-00022	RLD-VSL-00008 UP SIDE WALL MTD SEISMIC GUIDE/SPRTS, 7'-8" ABOVE TAN LINE OF BOT HEAD
24590-HLW-MV-RLD-00024	RLD-VSL-00008 MID-SPAN SEISMIC GUIDE/SPRT 4'-10" ABOVE TAN LINE OF BOT HEAD

REV	DESCRIPTION	ORG	CHKD	RVWD	APVD	DATE
0	ISSUED FOR PURCHASE	AJP	BEA	RP	[signature]	9/17/09

REVISION HISTORY

Q

ISSUED BY RPP-WTP PDC
ISSUE STAMP

PROJECT No.	24590
SITE	HANFORD
AREA	200E
BUILDING No.	30

RIVER PROTECTION PROJECT
WASTE TREATMENT PLANT
2435 STEVENS CENTER PLACE
RICHLAND, WA 99354

CONTRACT No: DE-AC27-01RV14136

	BY	DATE
ORIGINATOR	A. J. Palombo	9-8-2009
CHECKER	[signature]	9-9-2009
APPROVER	[signature]	9/17/09
REVIEWER	RAY PETERS	9/9/09

THIRD ANGLE PROJECTION

TOLERANCES	
.00	±.50"
FRACTION	± 1/16"
ANGLE	± 5°

CONTENT APPLICABLE TO ALARA? [X] YES [ ] NO
ADR NO. 24590-WTP-ADR-M-03-008 REV: 2
SAFETY SCREEN REQUIRED? [ ] YES [X] NO E&NS INITIAL IF YES ____

RLD-VSL-00008
LOWER SEISMIC GUIDE/SUPPORT
0'-6" ABOVE TANGENT LINE OF BOTTOM HEAD

SCALE: NONE
24590-HLW-MV-RLD-00019
REV 0

'E' SIZE - 44x34
COMPUTER GENERATED - MANUAL DESIGN CHANGES NOT PERMITTED
WHEN REFERENCING DRAWING AND DIM NUMBERS IN DOCUMENTS, BE SURE TO INCLUDE DASHES BETWEEN ELEMENTS
03/04/2003 7:23 AM
FORM E_MASTER 03/2003

R11121795

ITEM	QTY	MATERIAL	DESCRIPTION
1	AR	SEE NOTE 6	1/2 (MIN) WALL X 1 1/2 LONG, ROUND BAR, GUIDE RING (NOTE 5)
2	AR	SEE NOTE 6	3/4 (MIN) X 3 (MIN) BAR, SPACER
3	AR	SEE NOTE 6	1/4 (MIN) PLATE, CAP
4	AR	SEE NOTE 6	1 1/2 (MIN) PLATE, GUIDE RING (NOTE 5)
5	AR	SEE NOTE 6	2" NPS SCHEDULE 160 SEAMLESS PIPE

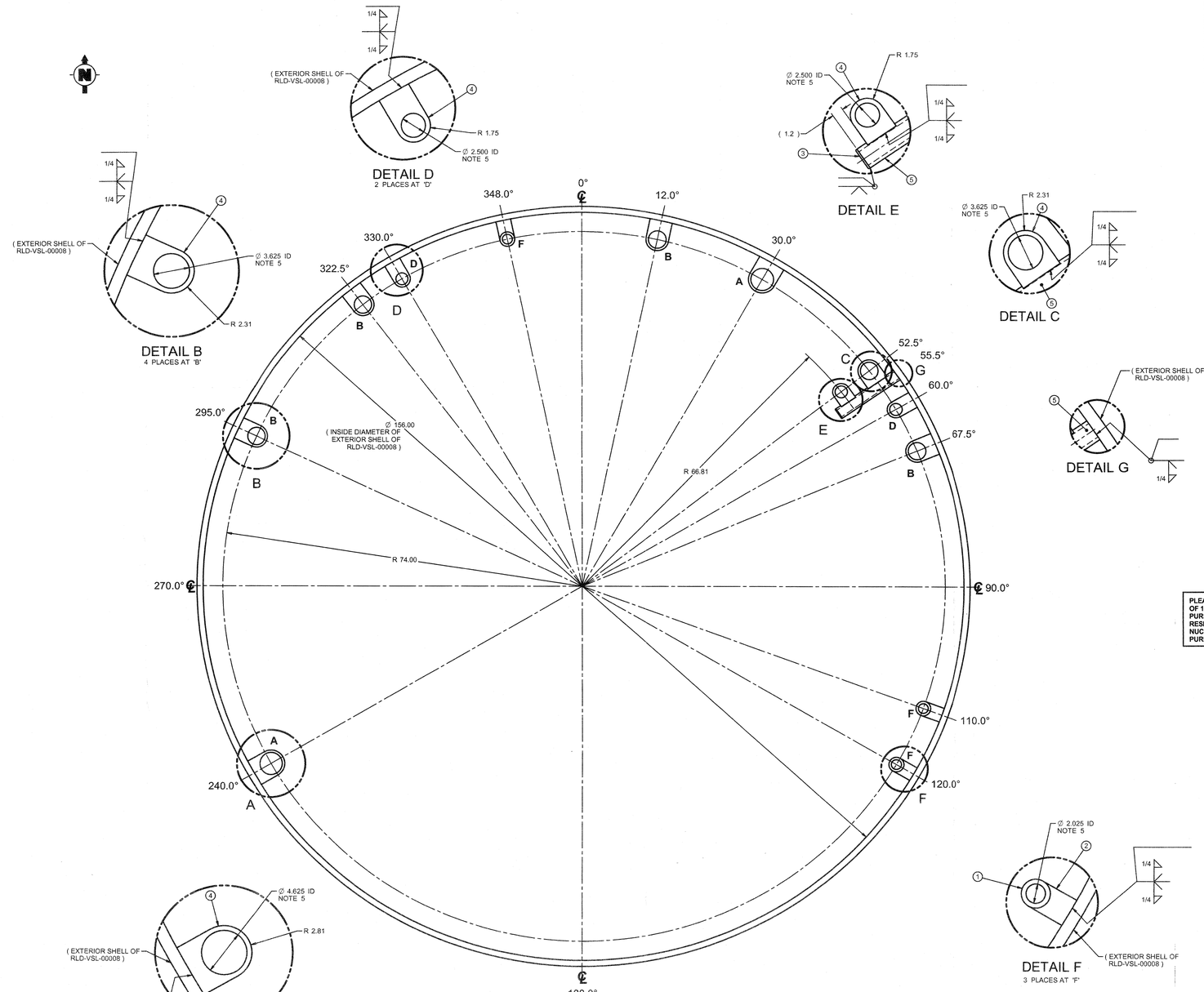

DETAIL B
4 PLACES AT 'B'

DETAIL D
2 PLACES AT 'D'

DETAIL E

DETAIL C

DETAIL G

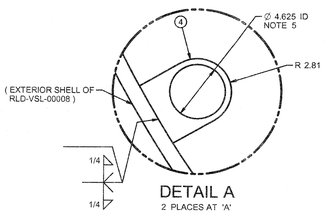

DETAIL A
2 PLACES AT 'A'

DETAIL F
3 PLACES AT 'F'

PLEASE NOTE THAT SOURCE AND/OR SPECIAL NUCLEAR AND BYPRODUCT MATERIALS, AS DEFINED IN THE ATOMIC ENERGY ACT OF 1954 (AEA), ARE REGULATED AT THE U.S. DEPARTMENT OF ENERGY (DOE) FACILITIES EXCLUSIVELY BY THE DOE ACTING PURSUANT TO ITS AEA AUTHORITY. THE DOE ASSERTS THAT PURSUANT TO THE AEA, IT HAS SOLE AND EXCLUSIVE RESPONSIBILITY AND AUTHORITY TO REGULATE SOURCE, SPECIAL NUCLEAR, AND BYPRODUCT MATERIALS AT DOE-OWNED NUCLEAR FACILITIES. INFORMATION CONTAINED HEREIN ON RADIONUCLIDES IS PROVIDED FOR PROCESS DESCRIPTION PURPOSES ONLY.

GENERAL NOTES

1. DIMENSIONING AND TOLERANCING PER ASME Y14.5
2. THIS DRAWING PROVIDES INFORMATION TO PLACE ADDITIONAL SEISMIC GUIDE/SUPPORT STRUCTURE INSIDE OF HLW VESSEL RLD-VSL-00008 FOR ADDED INTERNAL STRUCTURAL SUPPORT.
3. WELDING AND NDE SHALL BE IN ACCORDANCE WITH VESSEL SPECIFICATION 24590-WTP-3PS-MV00-T0001.
4. CONTENTS OF THIS DOCUMENT ARE DANGEROUS WASTE PERMIT AFFECTING.
5. GUIDE RINGS ARE BORED TO MAINTAIN 1/16" (.063") MAX GAP ON A SIDE FOR 1/8" (.125") MAXIMUM DIAMETRAL CLEARANCE WITH PIPE.
6. MATERIALS ARE PER THE FOLLOWING MECHANICAL SYSTEMS DATA SHEET: 24590-HLW-MVD-RLD-00007, AND ADDITIONALLY, BAR STOCK IS PER SA 479 TYPE 316 (.03% CARBON MAX).

REFERENCE DRAWINGS	
DWG NO	TITLE
24590-HLW-MV-RLD-00004	EQUIPMENT ASSEMBLY PLANT WASH & DRAINS VESSEL RLD-VSL-00008
24590-HLW-MV-RLD-00019	RLD-VSL-00008 LOW SEISMIC GUIDE/SUPPORT 0'-0" ABOVE TAN LINE OF BOT HEAD
24590-HLW-MV-RLD-00021	RLD-VSL-00008 UPPER GUIDE/SUPPORT 9'-3" ABOVE TAN LINE OF BOTTOM HEAD
24590-HLW-MV-RLD-00022	RLD-VSL-00008 UP SIDE WALL MTD SEISMIC GUIDE/SPRTS, 7'-5" ABOVE TAN LINE OF BOT HEAD
24590-HLW-MV-RLD-00024	RLD-VSL-00008 MID-SPAN SEISMIC GUIDE/SPRT 4'-10" ABOVE TAN LINE OF BOT HEAD

REVISION HISTORY							
REV	DESCRIPTION	ORG	CHKD	RVWD	APVD	DATE
0	ISSUED FOR PURCHASE	AJF	BED	RE	[illegible]	9/17/09

Please note that source, special nuclear, and byproduct materials, as defined in the Atomic Energy Act of 1954 (AEA), are regulated at the U. S. Department of Energy (DOE) facilities exclusively by DOE acting pursuant to its AEA authority. DOE asserts that pursuant to AEA, it has sole and exclusive responsibility and authority to regulate source, special nuclear, and byproduct materials at DOE-owned nuclear facilities. Information contained herein on radionuclides is provided for process description purposes only.

Q

ISSUED BY 24590-WTP PDC

ISSUE STAMP

	PROJECT No.	24590
	SITE	HANFORD
	AREA	200E
	BUILDING No.	33

	BY:	DATE:
ORGINATOR	[illegible]	9-8-2009
CHECKER	[illegible]	9-9-2009
APPROVER	[illegible]	9/17/09
REVIEWER	[illegible]	9/9/09

THIRD ANGLE PROJECTION

TOLERANCES	
.00	± 50"
FRACTION	± 1/16"
ANGLE	± 5"

CONTENT APPLICABLE TO ALARA? [X] YES [ ] NO

ADR NO. 24590-WTP-ADR-M-03-008 REV: 2

SAFETY SCREEN REQUIRED? [ ] YES [X] NO E&NS INITIAL IF YES

RIVER PROTECTION PROJECT
WASTE TREATMENT PLANT
2435 STEVENS CENTER PLACE
RICHLAND, WA 99354

CONTRACT No: DE-AC27-01RV14136

RLD-VSL-00008
LOWER SIDE WALL MOUNTED SEISMIC GUIDE/SUPPORTS, 0'-6" ABOVE TANGENT LINE OF BOTTOM HEAD

SCALE:	24590-HLW-MV-RLD-00020	REV:
NONE		0

"E" SIZE - 44x34 COMPUTER GENERATED-MANUAL DESIGN CHANGES NOT PERMITTED

WHEN REFERENCING DRAWING AND DIM NUMBERS IN DOCUMENTS, BE SURE TO INCLUDE DASHES BETWEEN ELEMENTS

03/04/2003 7:23 AM

FORM E_MASTER 03/2003

R11121796

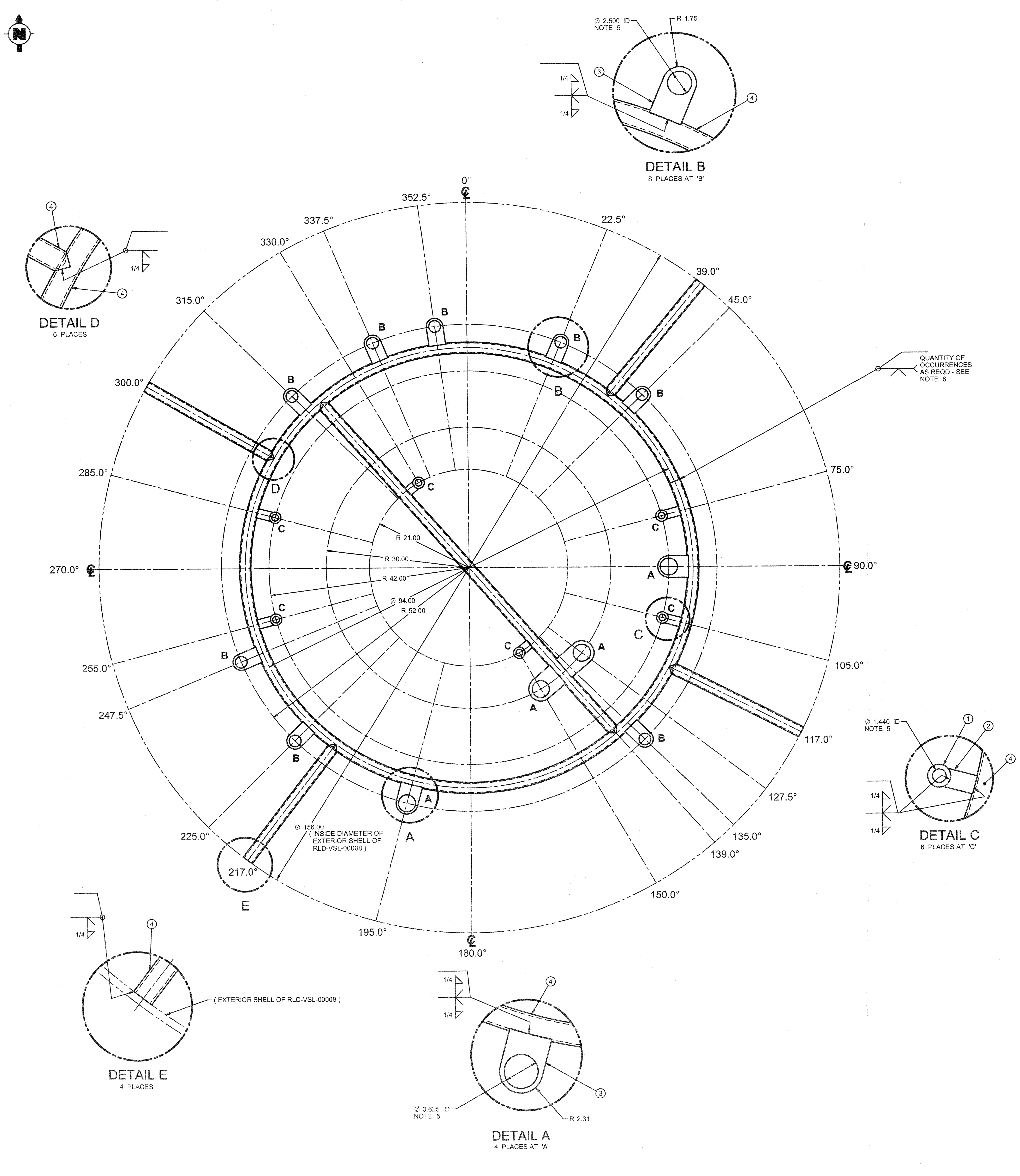

ITEM	QTY	MATERIAL	DESCRIPTION
1	AR	**SEE NOTE 7**	1/2 (MIN) WALL X 1 1/2 LONG, ROUND BAR, GUIDE RING (NOTE 5)
2	AR	**SEE NOTE 7**	3/4 (MIN) X 3 (MIN) BAR, BACKING PLATE
3	AR	**SEE NOTE 7**	1 1/2 (MIN) PLATE, GUIDE RING (NOTE 5)
4	AR	**SEE NOTE 7**	2" NPS SCHEDULE 160 SEAMLESS PIPE

PLEASE NOTE THAT SOURCE AND/OR SPECIAL NUCLEAR AND BYPRODUCT MATERIALS, AS DEFINED IN THE ATOMIC ENERGY ACT OF 1954 (AEA), ARE REGULATED AT THE U.S. DEPARTMENT OF ENERGY (DOE) FACILITIES EXCLUSIVELY BY THE DOE ACTING PURSUANT TO ITS AEA AUTHORITY. THE DOE ASSERTS THAT PURSUANT TO THE AEA, IT HAS SOLE AND EXCLUSIVE RESPONSIBILITY AND AUTHORITY TO REGULATE SOURCE, SPECIAL NUCLEAR, AND BYPRODUCT MATERIALS AT DOE-OWNED NUCLEAR FACILITIES. INFORMATION CONTAINED HEREIN ON RADIONUCLIDES IS PROVIDED FOR PROCESS DESCRIPTION PURPOSES ONLY.

GENERAL NOTES

1. DIMENSIONING AND TOLERANCING PER ASME Y14.5
2. THIS DRAWING PROVIDES INFORMATION TO PLACE ADDITIONAL SEISMIC GUIDE/SUPPORT STRUCTURE INSIDE OF HLW VESSEL RLD-VSL-00008 FOR ADDED INTERNAL STRUCTURAL SUPPORT.
3. WELDING AND NDE SHALL BE IN ACCORDANCE WITH VESSEL SPECIFICATION 24590-WTP-3PS-MV00-T0001.
4. CONTENTS OF THIS DOCUMENT ARE DANGEROUS WASTE PERMIT AFFECTING.
5. GUIDE RINGS ARE BORED TO MAINTAIN 1/16" (.063") MAX GAP ON A SIDE FOR 1/8" (.125") MAXIMUM DIAMETRAL CLEARANCE WITH PIPE.
6. CENTER SUPPORT RING MAY BE FABRICATED IN AS MANY SECTIONS AS NEEDED.
7. MATERIALS ARE PER THE FOLLOWING MECHANICAL SYSTEMS DATA SHEET: 24590-HLW-MVD-RLD-00007, AND ADDITIONALLY, BAR STOCK IS PER SA 479 TYPE 316 (.03% CARBON MAX).

REFERENCE DRAWINGS	
DWG NO	TITLE
24590-HLW-MV-RLD-00004	EQUIPMENT ASSEMBLY PLANT WASH & DRAINS VESSEL RLD-VSL-00008
24590-HLW-MV-RLD-00019	RLD-VSL-00008 LOW SEISMIC GUIDE/SUPPORT 0'-6" ABOVE TAN LINE OF BOT HEAD
24590-HLW-MV-RLD-00020	RLD-VSL-00008 LOW SIDE WALL MTD SEISMIC GUIDE/SPRTS, 0'-6" ABOVE TAN LINE OF BOT HEAD
24590-HLW-MV-RLD-00022	RLD-VSL-00008 UP SIDE WALL MTD SEISMIC GUIDE/SPRTS, 7'-8" ABOVE TAN LINE OF BOT HEAD
24590-HLW-MV-RLD-00024	RLD-VSL-00008 MID-SPAN SEISMIC GUIDE/SPRT 4'-10" ABOVE TAN LINE OF BOT HEAD

Please note that source, special nuclear, and byproduct materials, as defined in the Atomic Energy Act of 1954 (AEA) are regulated at the U. S. Department of Energy (DOE) facilities exclusively by DOE acting pursuant to its AEA authority. DOE asserts that pursuant to AEA, it has sole and exclusive responsibility and authority to regulate source, special nuclear, and byproduct materials at DOE-owned nuclear facilities. Information contained herein on radionuclides is provided for process description purposes only.

REV	DESCRIPTION	ORG	CHKD	RVWD	APVD	DATE
0	ISSUED FOR PURCHASE	AJP	BED	RP	JJ	9/17/09

REVISION HISTORY

Q

ISSUED BY RPP-WTP PDC

ISSUE STAMP

PROJECT No.	24590
SITE	HANFORD
AREA	200E
BUILDING No.	30

RIVER PROTECTION PROJECT
WASTE TREATMENT PLANT
2435 STEVENS CENTER PLACE
RICHLAND, WA 99354

CONTRACT No: DE-AC27-01RV14136

	BY	DATE
ORIGINATOR	A. J. Palumbo	9-8-2009
CHECKER	[signature]	9-9-2009
APPROVER	[signature]	9/17/09
REVIEWER	Ray Peters	9/9/09

THIRD ANGLE PROJECTION

TOLERANCES	
.00	±.50"
FRACTION	± 1/16"
ANGLE	± 5°

CONTENT APPLICABLE TO ALARA? [X] YES [ ] NO

ADR NO. 24590-WTP-ADR-M-03-008 REV: 2

SAFETY SCREEN REQUIRED? [ ] YES [X] NO E&NS INITIAL IF YES ____

RLD-VSL-00008
UPPER SEISMIC GUIDE/SUPPORT
9'-3" ABOVE TANGENT LINE OF BOTTOM HEAD

SCALE: NONE

24590-HLW-MV-RLD-00021

REV 0

'E' SIZE - 44x34

COMPUTER GENERATED - MANUAL DESIGN CHANGES NOT PERMITTED

WHEN REFERENCING DRAWING AND DIM NUMBERS IN DOCUMENTS, BE SURE TO INCLUDE DASHES BETWEEN ELEMENTS

03/04/2003 7:23 AM

R11121797

FORM E_MASTER 03/2003

ITEM	QTY	MATERIAL	DESCRIPTION
1	AR	**SEE NOTE 6**	1/2 (MIN) WALL X 1 1/2 LONG, ROUND BAR, GUIDE RING (NOTE 5)
2	AR	**SEE NOTE 6**	3/4 (MIN) X 3 (MIN) BAR, SPACER PLATE
3	AR	**SEE NOTE 6**	1/4 (MIN) PLATE, CAP
4	AR	**SEE NOTE 6**	1 1/2 (MIN) PLATE, GUIDE RING (NOTE 5)
5	AR	**SEE NOTE 6**	2" NPS SCHEDULE 160 SEAMLESS PIPE

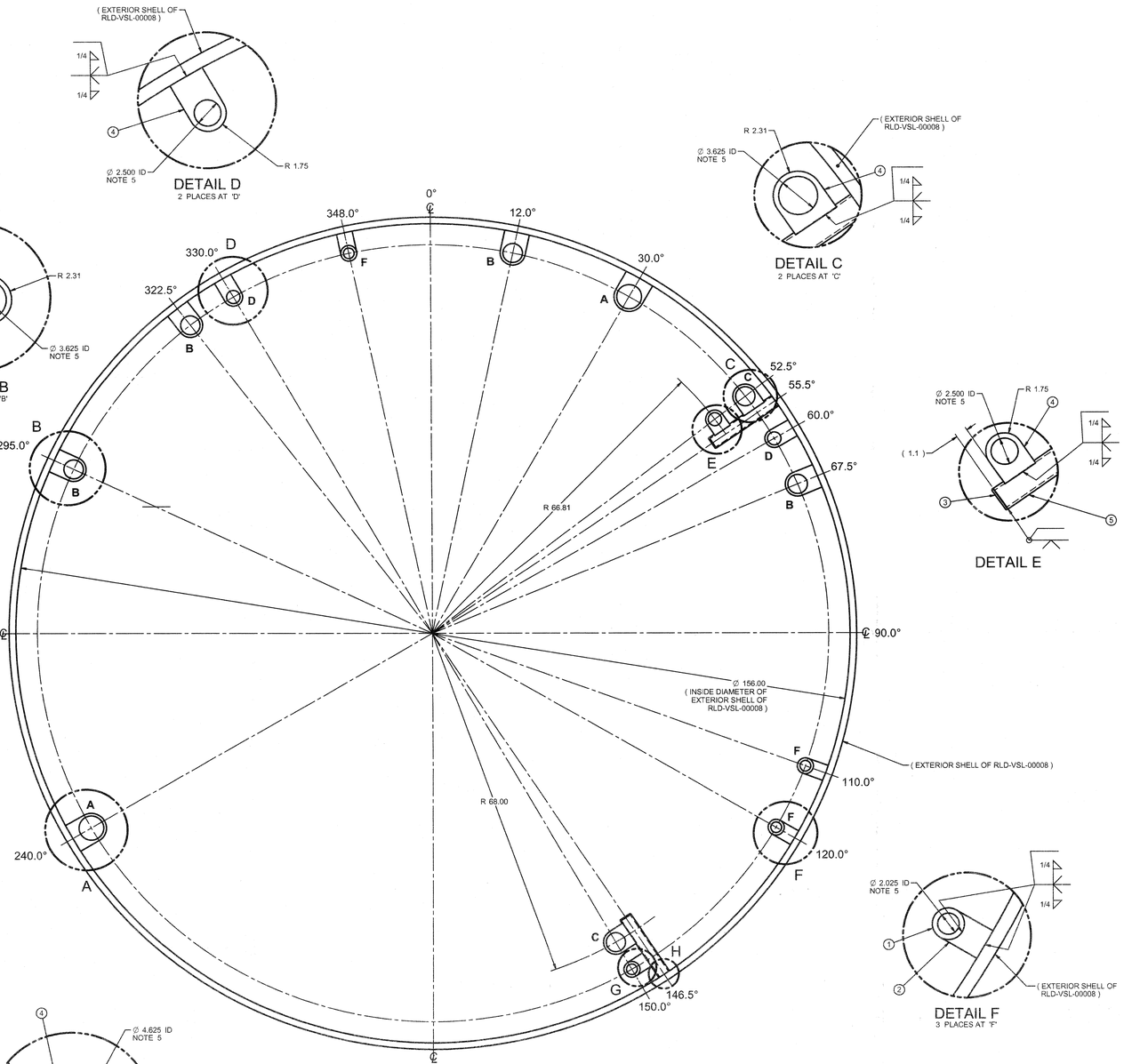

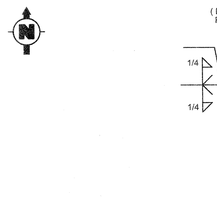

DETAIL D
2 PLACES AT 'D'

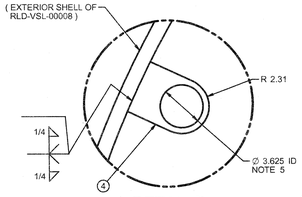

DETAIL B
4 PLACES AT 'B'

DETAIL C
2 PLACES AT 'C'

DETAIL E

DETAIL F
3 PLACES AT 'F'

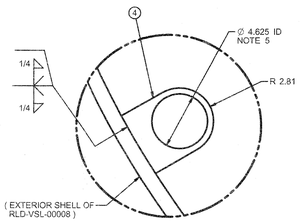

DETAIL A
2 PLACES AT 'A'

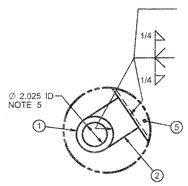

DETAIL G

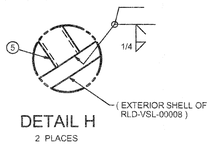

DETAIL H
2 PLACES

PLEASE NOTE THAT SOURCE AND/OR SPECIAL NUCLEAR AND BYPRODUCT MATERIALS, AS DEFINED IN THE ATOMIC ENERGY ACT OF 1954 (AEA), ARE REGULATED AT THE U.S. DEPARTMENT OF ENERGY (DOE) FACILITIES EXCLUSIVELY BY THE DOE ACTING PURSUANT TO ITS AEA AUTHORITY. THE DOE ASSERTS THAT PURSUANT TO THE AEA, IT HAS SOLE AND EXCLUSIVE RESPONSIBILITY AND AUTHORITY TO REGULATE SOURCE, SPECIAL NUCLEAR, AND BYPRODUCT MATERIALS AT DOE-OWNED NUCLEAR FACILITIES. INFORMATION CONTAINED HEREIN ON RADIONUCLIDES IS PROVIDED FOR PROCESS DESCRIPTION PURPOSES ONLY.

GENERAL NOTES

1. DIMENSIONING AND TOLERANCING PER ASME Y14.5
2. THIS DRAWING PROVIDES INFORMATION TO PLACE ADDITIONAL SEISMIC GUIDE/SUPPORT STRUCTURE INSIDE OF HLW VESSEL RLD-VSL-00008 FOR ADDED INTERNAL STRUCTURAL SUPPORT.
3. WELDING AND NDE SHALL BE IN ACCORDANCE WITH VESSEL SPECIFICATION 24590-WTP-3PS-MV00-T0001.
4. CONTENTS OF THIS DOCUMENT ARE DANGEROUS WASTE PERMIT AFFECTING.
5. GUIDE RINGS ARE BORED TO MAINTAIN 1/16" (.063") MAX GAP ON A SIDE FOR 1/8" (.125") MAXIMUM DIAMETRAL CLEARANCE WITH PIPE.
6. MATERIALS ARE PER THE FOLLOWING MECHANICAL SYSTEMS DATA SHEET: 24590-HLW-MVD-RLD-00007, AND ADDITIONALLY, BAR STOCK IS PER SA 479 TYPE 316 (.03% CARBON MAX).

REFERENCE DRAWINGS	
DWG NO	TITLE
24590-HLW-MV-RLD-00004	EQUIPMENT ASSEMBLY ACIDIC WASTE VESSEL RLD-VSL-00008
24590-HLW-MV-RLD-00019	RLD-VSL-00008 LOW SEISMIC GUIDE/SUPPORT 0'-6" ABOVE TAN LINE OF BOT HEAD
24590-HLW-MV-RLD-00020	RLD-VSL-00008 LOW SIDE WALL MTD SEISMIC GUIDE/SPRTS, 0'-6" ABOVE TAN LINE OF BOT HEAD
24590-HLW-MV-RLD-00021	RLD-VSL-00008 UPPER GUIDE/SUPPORT 9'-3" ABOVE TAN LINE OF BOTTOM HEAD
24590-HLW-MV-RLD-00024	RLD-VSL-00008 MID-SPAN SEISMIC GUIDE/SPRT, 4'-10" ABOVE TAN LINE OF BOT HEAD

Please note that source, special nuclear, and byproduct materials, as defined in the Atomic Energy Act of 1954 (AEA), are regulated at the U. S. Department of Energy (DOE) facilities exclusively by DOE acting pursuant to its AEA authority. DOE asserts that pursuant to AEA, it has sole and exclusive responsibility and authority to regulate source, special nuclear, and byproduct materials at DOE-owned nuclear facilities. Information contained herein on radionuclides is provided for process description purposes only.

REV	DESCRIPTION	ORG	CHKD	RVWD	APVD	DATE
0	ISSUED FOR PURCHASE	MJP	[illegible]	[illegible]	[illegible]	9/17/09

REVISION HISTORY

Q

ISSUED BY RPP-WTP PDC

		BY	DATE
	ORIGINATOR	[illegible]	9-8-2009
	CHECKER	[illegible]	9-9-2009
	APPROVER	[illegible]	9/17/09
	REVIEWER	[illegible]	9/8/09

TOLERANCES	
.00	± .50°
FRACTION	± 1/16"
ANGLE	± 5°

THIRD ANGLE PROJECTION

CONTENT APPLICABLE TO ALARA? [X] YES [ ] NO

ADR NO.: 24590-WTP-ADRA-03-008 REV: 2

SAFETY SCREEN REQUIRED? [ ] YES [X] NO EA/S INITIAL IF YES ____

BECHTEL

RIVER PROTECTION PROJECT
WASTE TREATMENT PLANT
2435 STEVENS CENTER PLACE
RICHLAND, WA 99354

CONTRACT No: DE-AC27-01RV14136

RLD-VSL-00008
UPPER SIDE WALL MOUNTED SEISMIC GUIDE/SUPPORTS, 7'-8" ABOVE TANGENT LINE OF BOTTOM HEAD

SCALE:	24590-HLW-MV-RLD-00022	REV
NONE		0

SIZE - 44x34

COMPUTER GENERATED - MANUAL DESIGN CHANGES NOT PERMITTED

WHEN REFERENCING DRAWING AND DAM NUMBERS IN DOCUMENTS, BE SURE TO INCLUDE DASHES BETWEEN ELEMENTS

09/04/2009 7:23 AM

FORM E_MASTER 03/2003

R11121798

ITEM	QTY	MATERIAL	DESCRIPTION
1	AR	SEE NOTE 7	1/2 (MIN) WALL X 1 1/2 LONG, ROUND BAR, GUIDE RING (NOTE 5)
2	AR	SEE NOTE 7	3/4 (MIN) X 3 (MIN) BAR, SPACER PLATE
3	AR	SEE NOTE 7	3" NPS SCHEDULE 80 SEAMLESS PIPE

PLEASE NOTE THAT SOURCE AND/OR SPECIAL NUCLEAR AND BYPRODUCT MATERIALS, AS DEFINED IN THE ATOMIC ENERGY ACT OF 1954 (AEA), ARE REGULATED AT THE U.S. DEPARTMENT OF ENERGY (DOE) FACILITIES EXCLUSIVELY BY THE DOE ACTING PURSUANT TO ITS AEA AUTHORITY. THE DOE ASSERTS THAT PURSUANT TO THE AEA, IT HAS SOLE AND EXCLUSIVE RESPONSIBILITY AND AUTHORITY TO REGULATE SOURCE, SPECIAL NUCLEAR, AND BYPRODUCT MATERIALS AT DOE-OWNED NUCLEAR FACILITIES. INFORMATION CONTAINED HEREIN ON RADIONUCLIDES IS PROVIDED FOR PROCESS DESCRIPTION PURPOSES ONLY.

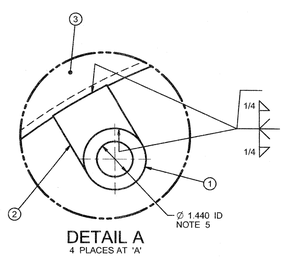

DETAIL A
4 PLACES AT 'A'

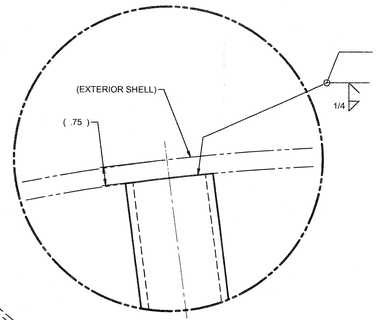

DETAIL D
4 PLACES

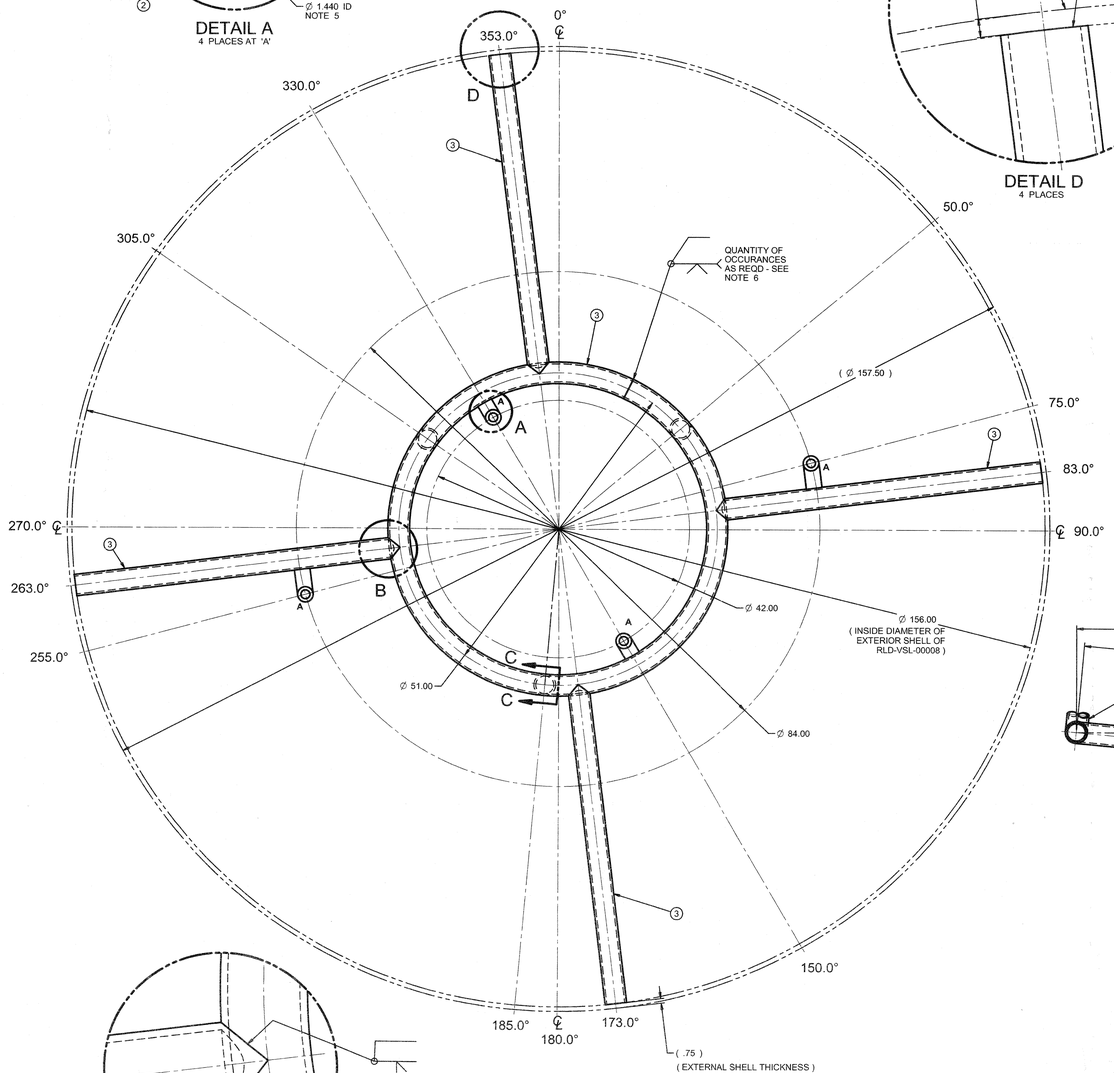

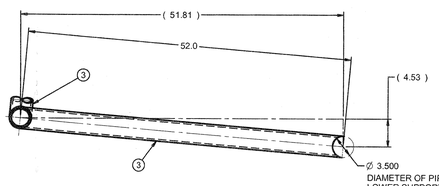

SECTION C-C
3 PLACES

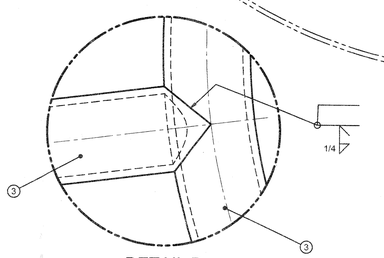

DETAIL B
7 PLACES

GENERAL NOTES

1. DIMENSIONING AND TOLERANCING PER ASME Y14.5
2. THIS DRAWING PROVIDES INFORMATION TO PLACE ADDITIONAL SEISMIC GUIDE/SUPPORT STRUCTURE INSIDE OF HLW VESSEL RLD-VSL-00008 FOR ADDED INTERNAL STRUCTURAL SUPPORT.
3. WELDING AND NDE SHALL BE IN ACCORDANCE WITH VESSEL SPECIFICATION 24590-WTP-3PS-MV00-T0001.
4. CONTENTS OF THIS DOCUMENT ARE DANGEROUS WASTE PERMIT AFFECTING.
5. GUIDE RINGS ARE BORED TO MAINTAIN 1/16" (.063") MAX GAP ON A SIDE FOR 1/8" (.125") MAXIMUM DIAMETRAL CLEARANCE WITH PIPE.
6. CENTER SUPPORT RING MAY BE FABRICATED IN AS MANY SECTIONS AS NEEDED.
7. MATERIALS ARE PER THE FOLLOWING MECHANICAL SYSTEMS DATA SHEET: 24590-HLW-MVD-RLD-00007, AND ADDITIONALLY, BAR STOCK IS PER SA 479 TYPE 316 (.03% CARBON MAX)

REFERENCE DRAWINGS	
DWG NO.	TITLE
24590-HLW-HV-RLD-00004	EQUIPMENT ASSEMBLY PLANT WASH & DRAINS VESSEL RLD-VSL-00008
24590-HLW-MV-RLD-00019	RLD-VSL-00008 LOWER SEISMIC GUIDE/SUPPORT 0'-6" ABOVE TANGENT LINE OF BOTTOM HEAD
24590-HLW-MV-RLD-00020	RLD-VSL-00008 LOW SIDE WALL MTD SEISMIC GUIDE/SPRTS 0'-6" ABOVE TAN LINE OF BOT HEAD
24590-HLW-MV-RLD-00021	RLD-VSL-00008 UPPER GUIDE/SUPPORT 9'-3" ABOVE TAN LINE OF BOTTOM HEAD
24590-HLW-MV-RLD-00022	RLD-VSL-00008 UP SIDE WALL MTD SEISMIC GUIDE/SPRTS 7'-6" ABOVE TAN LINE OF BOT HEAD

Please note that source, special nuclear, and byproduct materials, as defined in the Atomic Energy Act of 1954 (AEA) are regulated at the U. S. Department of Energy (DOE) facilities exclusively by the DOE acting pursuant to its AEA authority. DOE asserts that pursuant to AEA, it has sole and exclusive responsibility and authority to regulate source, special nuclear, and byproduct materials at DOE-owned nuclear facilities. Information contained herein on radionuclides is provided for process description purposes only.

Q

REVISION HISTORY						
REV	DESCRIPTION	ORG	CHKD	RVWD	APVD	DATE
0	ISSUED FOR PURCHASE	NJP	BAD	AEP		9/17/09

ISSUED BY RPP-WTP PDC
ISSUE STAMP

PROJECT No.	24590	
SITE	HANFORD	
AREA	200E	
BUILDING No.	30	
BY		DATE:
ORIGINATOR	N.J. Pottorff	9.8.2009
CHECKER	Bryan Bradford	9-9-2009
APPROVER	A.E. Pierson	9/17/09
REVIEWER	BM Peterson	9/9/09

THIRD ANGLE PROJECTION

TOLERANCES	
.00	± .50"
FRACTION	± 1/16"
ANGLE	± 5°

CONTENT APPLICABLE TO ALARA? [X] YES [ ] NO
ADR NO. 24590-WTP-ADR-M-03-008 REV: 2
SAFETY SCREEN REQUIRED? [ ] YES [X] NO E&NS INITIAL IF YES

BECHTEL
RIVER PROTECTION PROJECT
WASTE TREATMENT PLANT
2435 STEVENS CENTER PLACE
RICHLAND, WA 99354

CONTRACT No: DE-AC27-01RV14136

RLD-VSL-00008
MID-SPAN SEISMIC GUIDE/SUPPORT
4'-10" ABOVE TANGENT LINE OF BOTTOM HEAD

SCALE: NONE
24590-HLW-MV-RLD-00024
REV: 0

'E' SIZE - 44x34
COMPUTER GENERATED MANUAL DESIGN CHANGES NOT PERMITTED
WHEN REFERENCING DRAWING AND DM NUMBERS IN DOCUMENTS, BE SURE TO INCLUDE DASHES BETWEEN ELEMENTS
03/04/2003 7:23 AM

FORM E_MASTER 03/2003

R1112179

RCRA Operating Record Cover Sheet

Document Number: 24590-HLW-PCN-ENV-11-001

Waste Management Records:

- ☐ **R101** List of Waste Management Areas
- ☐ **R102** Waste Analysis Records
- ☐ **R103** Waste Designation Information
- ☐ **R104** Waste Transfer Records
- ☐ **R105** Movement of Containerized Waste Onsite
- ☐ **R106** Release/Spill Records
- ☐ **R114** Field Change Request/Field Change Notice
- ☐ **R116** Field Monitoring / Surveillance Checklists
- ☐ **R119** Reserved
- ☐ **R120** Reserved
- ☐ **R126** Satellite and 90-Day Accumulation Area

Compliance Schedule Submittals:

- ☐ **R401** Pretreatment Facility
- ☐ **R402** LAW Facility
- ☐ **R403** HLW Facility
- ☐ **R404** Laboratory
- ☐ **R405** Balance of Facility
- ☐ **R406** WTP All Facilities
- ☐ **R407** Human Health & Ecological Risk Assessment

Other Operating Record Documents:

- ☐ **R601** Outgoing Correspondence (RCRA Permit Relating)
- ☐ **R602** Contingency Plan Implementation
- ☐ **R603** Closure Plan Deviation
- ☐ **R604** Permit Equivalency Notice (PEN)
- ☒ **R605** Permit Change Notice (PCN)
- ☐ **R606** Annual RCRA Permit Closure and Post-Closure Cost Adjustment Report
- ☐ **R607** Permit Modification
- ☐ **R608** Incoming Correspondence (RCRA Permit Relating)

Non-Operating Record Documents:

- ☐ **N101** Meeting Minutes
- ☐ **N102** Memoranda

Special Instructions to PDC:

Link CCNs:

234657

237223

240918

ISSUED BY
RPP-WTP PDC

Quarter Ending 09/30/2011

24590-HLW-PCN-ENV-11-003

Hanford Facility RCRA Permit Modification Notification Form

Part III, Operating Unit 10

Waste Treatment and Immobilization Plant

Index

Page 2 of 3: Hanford Facility RCRA Permit, Part III, Operating Unit 10, Waste Treatment and Immobilization Plant

Replace Mechanical Systems Data Sheets for HLW Melters 1 and 2 (HMP-MLTR-00001 and HMP-MLTR-00002) in Appendix 10.6 of the Dangerous Waste Permit (DWP).

Replace Engineering Specification for HLW Melters in Appendix 10.7 of the DWP.

Submitted by Co-Operator:

D. M. Busche — Date 7/28/11

Reviewed by ORP Program Office:

D. L. Noyes — Date 8/17/11

Quarter Ending 09/30/2011 24590-HLW-PCN-ENV-11-003

Hanford Facility RCRA Permit Modification Notification Form

Unit:	Permit Part:
Waste Treatment and Immobilization Plant	**Part III, Operating Unit 10**

Description of Modification:

The purpose of this Class 1 modification is to update and replace the following Mechanical System Data Sheets and Engineering Specification in Appendices 10.6 and 10.7 of the DWP:

Appendix 10.6			
Replace:	24590-HLW-M0D-HMP-P0001, Rev. 1	With:	24590-HLW-M0D-HMP-00001, Rev. 2
	24590-HLW-M0D-HMP-P0002, Rev. 0		24590-HLW-M0D-HMP-00002, Rev. 2
Appendix 10.7			
Replace:	24590-HLW-3PS-AE00-TP001, Rev. 0	With:	24590-HLW-3PS-AE00-T0001, Rev. 5

This modification requests Ecology approval and incorporation into the permit the specific changes to the above documents that are identified by notes and revision bars indicating changes since the last revision of the source documents. Changes to earlier revisions of source documents not captured by revision bars are identified in the revision history summary. Revisions are the result of ongoing design. Significant changes are summarized below:

Mechanical System Data Sheets (24590-HLW-M0D-HMP-00001, Rev. 2 and 24590-HLW-M0D-HMP-00002, Rev. 2)

- Added Quality Level, Seismic Class, and Environmental Qualification information
- Provided additional reference documents
- Revised design glass production and melter cooling water flow rate and difference in temperature (delta T) under the Process Category
- Revised maximum electrode power under the Electrical Category
- Provided reference documents under the Controls and Instrumentation Category
- Updated the number of bubblers under the Replaceable Components Category
- Added and changed notes

Engineering Specification (24590-HLW-3PS-AE00-T0001, Rev. 5)

- Revised the design production capacity of the melters, number of bubblers, and design power requirement
- Updated Sections 2.2 (Other References Documents/Drawings), 3.1 (General Functional Requirements), 3.4 (Mechanical Requirements), 3.5 (Structural Requirements), and 3.8 (Maintenance Requirements)
- Incorporated Specification Change Notices 24590-HLW-3PN-AE00-00003, -00004, -00008, and 00011
- Added notes to Appendices A and B cover pages

This modification requests Ecology approval and incorporation of the following list of outstanding change documents into the permit. Although not yet incorporated into the revised documents attached to this PCN, this list of outstanding change notices are intended to be incorporated into this modification.

- 24590-HLW-3PN-AE00-00012

Quarter Ending 09/30/2011

24590-HLW-PCN-ENV-11-003

WAC 173-303-830 Modification Class:	Class 1	Class 1	Class 2	Class 3
Please mark the Modification Class:	X			

Enter relevant WAC 173-303-830, Appendix I Modification citation number: A.1 and A.3

Enter wording of WAC 173-303-830, Appendix I Modification citation:

A.1. Administrative and informational changes

A.3. Equipment replacement or upgrading with functionally equivalent components (e.g., pipes, valves, pumps, conveyors, controls)

Modification Approved/Concur: ☑ Yes ☐ Denied (state reason below)

Reason for denial:

Reviewed by Ecology:

J. J. Wallace for 10-19-11

J. J. Wallace Date

ISSUED BY
RPP-WTP PDC
INIT DATE

Please note that source, special nuclear, and byproduct materials, as defined in the Atomic Energy Act of 1954 (AEA) are regulated at the U. S. Department of Energy (DOE) facilities exclusively by DOE acting pursuant to its AEA authority. DOE asserts that pursuant to AEA, it has sole and exclusive responsibility and authority to regulate source, special nuclear, and byproduct materials at DOE-owned nuclear facilities. Information contained herein on radionuclides is provided for process description purposes only.

R11045787

RPP-WTP	DATA SHEET HIGH LEVEL WASTE MELTER 1	Data Sheet Number:	24590-HLW-M0D-HMP-00001
		Plant Item Number:	24590-HLW-ME-HMP-MLTR-00001
		Page:	1 of 1

System: HMP
Project: RPP-WTP
Project No: 24590
Site: Hanford
Function: Convert blended HLW slurry and glass formers into glass and deliver the glass to canisters
Quality Level: Q (see note 1)
Seismic Class: SCII
Environmental Qualification: ~~N/A~~ Yes - See Note 3
KFC 3/5/09

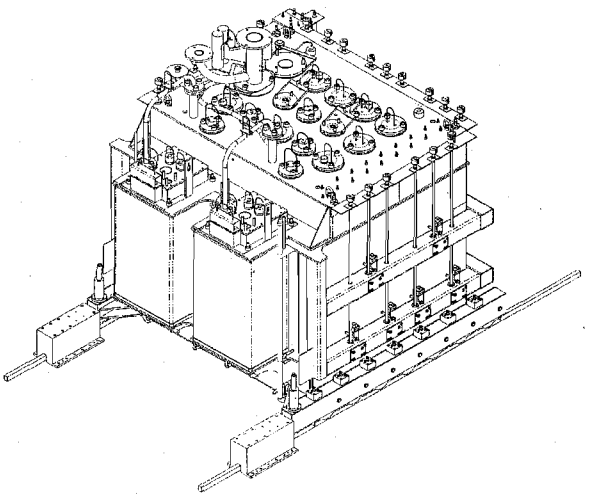

Reference Documents:
1. 24590-HLW-3PS-AE00-T0001 Rev 4, Engineering Specification for High Level Waste Melters
2. 24590-101-TSA-W000-0010-407-582, HLW Refractory Validation Model, CAL-WTP-21112 Rev 0
3. 24590-QL-HC4-W000-00011-04-00005 Rev 00A, HLW Melter Center of Gravity Calculation (CAL-WTP-2100 Rev 3)
4. 24590-HLW-RPT-E-03-001 Rev 0, Electrode Power Requirements for HLW Melter
5. 24590-HLW-RPT-E-03-002 Rev 1, Electrical Requirements for Startup and Discharge Heaters
6. 24590-HLW-RPT-PE-07-001 Rev 0, High Level Waste Vitrification Plant Capacity Enhancement Study
7. 24590-HLW-M6C-HMP-00017 Rev 0, Temperature Rise and Final Temperature for HLW melter Cooling Water Loops

MECHANICAL

	Units			Units	
Melter Design Life	years	5	Melter Base, Rail Center to Center Distance	inches	148.00
Maximum Outside Dimensions (L x W x H)	inches	172 x 164 x 146	Maximum Assembled Weight, Empty	pounds	174,000
Plant Elevation, top of rail	ft-in	2 - 11	Maximum Assembled Weight with Glass	pounds	198,000

PROCESS

	Units			Units	
Design Glass Production	MT/D	3.75	Thermal load to cave from melter (idle and feed modes)	kW	35 max
Glass Tank Volume	ft^3	144	Melter Cooling Water	GPM	45 (nominal)
Glass Tank Surface Dimensions (L x W)	inches	60 x 96	Melter Cooling Water	Delta T (°F)	25 (nominal)
Max Operating Glass Depth	inches	44			
Design Glass Operating Temperature (max)	°F	2200			

ELECTRICAL

	Units	
Electrode Power	kW	800 max
Start-up Heater Power	kW	183 total max
Discharge Chamber Heater Power	kW	56 max per chamber

CONTROLS AND INSTRUMENTATION

Engineering Specification for Melter Systems C&I Work Specification, 24590-WTP-3PS-J000-T0001, Rev 1
Software Functional Specification for HLW Melter Process (HMP) System, 24590-HLW-3PS-HMP-T0001, Rev A

MAJOR COMPONENTS - Materials

Melter Shell and Base	A500, A36, 304L, C276	Cooling Panels	C276, 316L
Melter and Discharge Chamber Lids	304L, Alloy 690	Discharge Chamber Trough and Dam	Alloy 690
Electrodes	Alloy 690	Film Cooler	Alloy 690

REPLACEABLE COMPONENTS

	Quantity	Design Life (months)		Quantity	Design Life (months)
Feed Nozzle	2	60	Discharge Chamber Lid Assembly	2	30
Film Cooler	1	60	Discharge Chamber Vent Line	2	60
Air Lift Lance	2	60	Discharge Chamber Vent Insert	2	60
Level Probe	1	12	Discharge Chamber Thermowell	4	60
Plenum/Glass Pool Thermocouple	2	4	Discharge Chamber Thermocouple	4	12
Plenum/Glass Pool Thermowell	2	9	Electrode Thermocouple Assembly	3	12
Refractory Thermocouple Assembly	2	12	Plenum View Camera	1	12
Bubblers	7	2	Start-up Heaters	5	3

NOTES
1. Replaceable components with the exception of the film cooler are CM.
2. The contents of this document are Dangerous Waste Permit Affecting.
3. See Equipment Qualification Data Sheet.
KFC 3/5/09

Date	Rev	Reason for Revision	Originator	Checker	E&NS	Reviewer	Approver
3/9/09	2	Added "Environmental Qualification" and "Quality Level/Seismic Classification" blocks, re-formatted data sheet, corrected process data Implemented Melter's scope of work for the HLW Capacity Enhancement Trend (BCP-24590-06-02470) and contract modification M083 (4/2007), incorporated 24590--WTP-M6N-M80T-00005	K. Clarke	L.Donovan	M. Hulp	~~J. Julyk~~ KFC 3/5/09 Aaron Bronner	~~Janet Roth~~ KFC 3/5/09 John Julyk
10/13/2004	1	Design Evolution	M. Hall	L. Curtis	n/a	n/a	Will Eaton
10/9/2002	0	Issued for Design	M. Hall	M. Seed	n/a	n/a	Will Eaton

Please note that source, special nuclear, and byproduct materials, as defined in the Atomic Energy Act of 1954 (AEA) are regulated at the U. S. Department of Energy (DOE) facilities exclusively by DOE acting pursuant to its AEA authority. DOE asserts that pursuant to AEA, it has sole and exclusive responsibility and authority to regulate source, special nuclear, and byproduct materials at DOE-owned nuclear facilities. Information contained herein on radionuclides is provided for process description purposes only.

ISSUED BY
RPP-WTP PDC
INIT DATE

R11045799

RPP-WTP	DATA SHEET HIGH LEVEL WASTE MELTER 2	Data Sheet Number:	24590-HLW-M0D-HMP-00002
		Plant Item Number:	24590-HLW-ME-HMP-MLTR-00002
		Page:	1 of 1

System: HMP
Project: RPP-WTP
Project No: 24590
Site: Hanford
Function: Convert blended HLW slurry and glass formers into glass and deliver the glass to canisters
Quality Level: Q (see note 1)
Seismic Class: SCII
Environmental Qualification: ~~NA~~ Yes - See Note 3
KFC 3/5/09

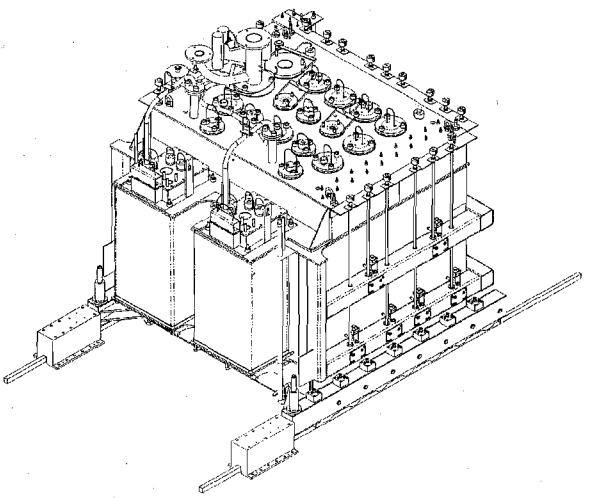

Reference Documents:
1. 24590-HLW-3PS-AE00-T0001 Rev 4, Engineering Specification for High Level Waste Melters
2. 24590-101-TSA-W000-0010-407-582, HLW Refractory Validation Model, CAL-WTP-21112 Rev 0
3. 24590-QL-HC4-W000-00011-04-00005 Rev 00A, HLW Melter Center of Gravity Calculation (CAL-WTP-2100 Rev 3)
4. 24590-HLW-RPT-E-03-001 Rev 0, Electrode Power Requirements for HLW Melter
5. 24590-HLW-RPT-E-03-002 Rev 1, Electrical Requirements for Startup and Discharge Heaters
6. 24590-HLW-RPT-PE-07-001 Rev 0, High Level Waste Vitrification Plant Capacity Enhancement Study
7. 24590-HLW-M6C-HMP-00017 Rev 0, Temperature Rise and Final Temperature for HLW melter Cooling Water Loops

MECHANICAL

	Units			Units	
Melter Design Life	years	5	Melter Base, Rail Center to Center Distance	inches	148.00
Maximum Outside Dimensions (L x W x H)	inches	172 x 164 x 146	Maximum Assembled Weight, Empty	pounds	174,000
Plant Elevation, top of rail	ft-in	2 - 11	Maximum Assembled Weight with Glass	pounds	198,000

PROCESS

	Units			Units	
Design Glass Production	MT/D	3.75	Thermal load to cave from melter (idle and feed modes)	kW	35 max
Glass Tank Volume	ft^3	144	Melter Cooling Water	GPM	45 (nominal)
Glass Tank Surface Dimensions (L x W)	inches	60 x 96	Melter Cooling Water	Delta T (°F)	25 (nominal)
Max Operating Glass Depth	inches	44			
Design Glass Operating Temperature (max)	°F	2200			

ELECTRICAL

	Units	
Electrode Power	kW	800 max
Start-up Heater Power	kW	183 total max
Discharge Chamber Heater Power	kW	56 max per chamber

CONTROLS AND INSTRUMENTATION

Engineering Specification for Melter Systems C&I Work Specification, 24590-WTP-3PS-J000-T0001, Rev 1
Software Functional Specification for HLW Melter Process (HMP) System, 24590-HLW-3PS-HMP-T0001, Rev A

MAJOR COMPONENTS - Materials

Melter Shell and Base	A500, A36, 304L, C276	Cooling Panels	C276, 316L
Melter and Discharge Chamber Lids	304L, Alloy 690	Discharge Chamber Trough and Dam	Alloy 690
Electrodes	Alloy 690	Film Cooler	Alloy 690

REPLACEABLE COMPONENTS

	Quantity	Design Life (months)		Quantity	Design Life (months)
Feed Nozzle	2	60	Discharge Chamber Lid Assembly	2	30
Film Cooler	1	60	Discharge Chamber Vent Line	2	60
Air Lift Lance	2	60	Discharge Chamber Vent Insert	2	60
Level Probe	1	12	Discharge Chamber Thermowell	4	60
Plenum/Glass Pool Thermocouple	2	4	Discharge Chamber Thermocouple	4	12
Plenum/Glass Pool Thermowell	2	9	Electrode Thermocouple Assembly	3	12
Refractory Thermocouple Assembly	2	12	Plenum View Camera	1	12
Bubblers	7	2	Start-up Heaters	5	3

NOTES

1. Replaceable components with the exception of the film cooler are CM.
2. The contents of this document are Dangerous Waste Permit Affecting.
3. See Equipment Qualification Data Sheet.
KFC 3/5/09

Date	Rev	Reason for Revision	Originator	Checker	E&NS	Reviewer	Approver
2/9/09	2	Added "Environmental Qualification" and "Quality Level/Seismic Classification" blocks, re-formatted data sheet, corrected process data Implemented Melter's scope of work for the HLW Capacity Enhancement Trend (BCP-24590-06-02470) and contract modification M083 (4/2007), incorporated 24590-WTP-M6N-M80T-00005	K. Clarke	L.Donovan		~~J. Julyk~~ KFC 3/5/09 Aaron Bronner	~~Janet Roth~~ KFC JOHN 3/5/09 JULYK
10/13/2004	1	Design Evolution	M. Hall	L. Curtis	n/a	n/a	Will Eaton
10/9/2002	0	Issued for Design	M. Hall	M. Seed	n/a	n/a	Will Eaton

RIVER PROTECTION PROJECT – WASTE TREATMENT PLANT

ENGINEERING SPECIFICATION

ISSUED BY
RPP-WTP PDC

FOR

High Level Waste Melters

Content applicable to ALARA? ☒ Yes ☐ No

ADR No.
24590--HLW-ADR-M-02-0031

Rev
3

Specification changes retroactive? ☒ Yes ☐ No
☐ N/A (alpha revision or revision 0)

Quality Level
Q

DOE Contract No.
DE-AC27-01RV14136

REV	DATE	BY	CHECK	REVIEW	E&NS	DPEM/EM
5	12/16/09	L. Curtis	for K. Clarke	A. Bronner	D. Carlstrom	T. Hughes
4	02/23/09	K. Clarke	L. Donovan	R. D. Peters	D. Carlstrom	T. Hughes
3	12/04/04	R. P. Casassa	M. Hall	R. D. Peters	N/A	J. Schneider
2	04/28/03	K.Clarke	J. Pullen	D. Carl	N/A	W. Eaton
1	05/07/02	K.Clarke	W. Eaton	N/A	N/A	G. Duncan
0	11/02/01	K.Clarke	W. Eaton	N/A	N/A	G. Duncan

SPECIFICATION No.
24590-HLW-3PS-AE00-T0001

Rev
5

Revision History

Revision	Reason for Revision
0	Initial Issue - supersedes SP-W375HV-M00002, Rev. D
1	Reissued with Technical Requirement Changes and Clarifications
2	Reissued for multiple melters, with general editing, minor changes to reflect current design and design interface details
3	Reissued to incorporated SCNs 24590-HLW-3PN-AE-0001 & 24590-HLW-3PN-AE-0002
4	In accordance with contract modification M083 (04/2007), increased design production capacity of the melters from 3 MT/day to 3.75 MT/day (the number of bubblers increased from 5 to 7, and the design power requirement increased from 600kW to 800 kW). Incorporated 24590-HLW-3PN-AE00-00003, 00004 and 00008. Adjusted melter wieghts and heat loss values in Appendix B.
5	Incorporated SCN 24590-HLW-3PN-AE00-00011, Revised for editing to align with the Basis of Design.

Notice

Please note that source, special nuclear, and by product materials, as defined in the Atomic Energy Act of 1954 (AEA), are regulated at the US Department of Energy (DOE) facilities exclusively by DOE acting pursuant to its AEA authority. DOE asserts, that pursuant to the AEA, it has sole and exclusive responsibility and authority to regulate source, special nuclear, and byproduct materials at DOE-owned nuclear facilities. Information contained herein on radionuclides is provided for process description purposes only.

Contents

Notice iii
1 General 1
1.1 Scope 1
1.2 Definitions 1
1.3 Acronyms 2
2 Applicable Documents 2
2.1 Referenced Codes and Industry Standards 2
2.2 Other Reference Documents/Drawings 3
3 Design Requirements 4
3.1 General Functional Requirements 4
3.2 Performance Requirements 6
3.3 Design Conditions 7
3.4 Mechanical Requirements 8
3.5 Structural Requirements 10
3.6 Electrical Requirements 12
3.7 Controls and Instrumentation Requirements 13
3.8 Maintenance Requirements 14
4 Quality Assurance 15
4.1 General 15
5 Documentation and Submittals 15
5.1 General 15
5.2 Submittals 15

Appendices

Appendix A Melter Services and Connections Interface Details (4 pages total) ..... A-i
Appendix B Melter Design Interface Details (10 pages total) ..... B-i

1 General

1.1 Scope

A. This Specification provides performance requirements for the design of High Level Waste (HLW) vitrification melters for the River Protection Project - Waste Treatment Plant (RPP-WTP) at the Hanford, Washington Site of the Department of Energy (DOE). The performance requirements cover all phases of melter life, including assembly, transport, startup, commissioning, operation and maintenance, decommissioning, and disposal.

B. This Specification has been written for Contract No. 24590-101-TSA-W000-0010 and is supported by Ref 2.2D. Controls and instrumentation requirements for melter design have been incorporated into Ref 2.2B.

C. The melters include, but are not limited to, the following major structures, systems, and components (SSCs): glass containment, glass and glass discharge heating, refractory cooling, instrumentation, offgas cooling and collection, waste and glass feed, glass frit addition for startup, glass discharge, and seismic restraint.

D. The subcontractor shall base the design on the information provided in this Specification, the referenced documents herein and the current contract documents.

E. See Ref 2.2D for melter design scope of work.

F. Additional research and technology testing by the subcontractor, to aid in the design, shall be in accordance with the contract documents.

1.2 Definitions

A. Base - Structural platform that supports the melter during transport and operation. Base includes structural steel and bracing, and cooling water panel structures. Base also includes plates that provide a portion of the gas barrier. The base has elements that restrain the melter during operation.

B. Contractor - Bechtel National, Inc.

C. Design Life - The baseline time, based on calculation, analysis, experience or testing, over which the SSC will safely maintain its original function.

D. Transportation System - Melter components that aid in the transport and positioning of the melter during transportation, installation, operation, decommissioning and disposal.

E. Lid - Structural cover over the top of the melter plenum space that supports lid plenum refractory and all components mounted through it. Lid also includes plates that provide a portion of the gas barrier.

F. Normal Operation - constitutes all regular and scheduled melter activities geared towards production of glass product at or near design throughput, i.e., feeding, pouring, idling, and scheduled SSC changeout.

G. Walls - Melter and discharge chamber exterior structural steel.

H. Overpack - Portable structural enclosure mounted on rail wheels that will be used for transporting new melters and disposing of failed or spent melters. Overpack will provide restraint, containment, contamination control, and radiation shielding during melter transport and disposal activities.

I. Subcontractor - Duratek, Inc.

J. Vendor - A manufacturer or supplier providing materials and/or services to the subcontractor.

K. Gas Barrier - Structural steel plate consisting of the walls and the internal surfaces of the lid and base. The gas barrier serves to support the offgas-related function of the shell, while providing controlled air in-leakage to the melter plenum.
L. Frit - Glass particulate of a size and geometry suitable for direct feed into the melter.
M. Shell - Structural elements of the melter that ensure confinement of bulk molten glass, should it migrate through the refractory. Also supports the offgas system by providing a confinement boundary to direct offgas into the melter offgas system. The shell is comprised of the base, walls, and lid.

1.3 Acronyms

Acronyms used in this Specification include:

CCTV	Closed Circuit Television
DOE	Department of Energy
ICD	Interface Control Document
HLW	High Level Waste
RPP-WTP	River Protection Project-Waste Treatment Plant
SC	Seismic Category
SSC	Systems, Structures, and Components
wg	Water Gage (pressure measurement)

2 Applicable Documents

2.1 Referenced Codes and Industry Standards

Unless otherwise noted, all codes and standards referenced herein, and in the documents referenced in Section 2.2, shall be to the latest editions, addenda, and supplements at the time of award.

A. Deleted
B. Deleted
C. American National Standards Institute/Institute of Electrical and Electronics Engineers (ANSI/IEEE)
   1. IEEE Std 141, *Recommended Practice for Electric Power Distribution for Industrial Plants* (1986)
   2. IEEE Std 260.1, *American National Standard Letter Symbols for Units of Measurement* (1993)
   3. IEEE Std 315, *Graphic Symbols for Electrical and Electronics Diagrams* (reaffirmed 1993)
   4. IEEE Std 399, *Recommended Practice for Industrial and Commercial Power Systems Analysis* (1997)
   5. IEEE Std 1202, *Standard for Flame Testing of Cables for Use in Cable Tray in Industrial and Commercial Occupancies* (1991)

D. American National Standards Institute/American Society of Mechanical Engineers (ANSI/ASME)
   1. ASME B31.3, Process Piping (1996)
   2. ASME Section III, Division I, Subsection NC, Rules for Construction of Nuclear Facility Components (2001)
   3. ASME Section VIII, Division I, Rules for Construction of Pressure Vessels (2001)
   4. ASME NQA-1, Quality Assurance Program Requirements for Nuclear Facilities(1989)
   5. ASME NQA-2a, Part 2.7, Quality Assurance Requirements of Computer Software for Nuclear Facility Applications (1990)
   6. ASME Section II, Material Specifications (2001)

E. Code of Federal Regulations (CFR) - 29 CFR 1910, Subpart S, *Occupational Safety and Health Administration, Electrical* (most current revision)

F. National Electrical Manufacturers Association (NEMA):
   1. NEMA WC, *Wire and Cable Standards* (1999)
   2. NEMA/ICEA (Insulated Cable Engineers Association), *Power Cable Ampacities* (1999)

G. National Fire Protection Association (NFPA)
   1. NFPA 70, *National Electrical Code* (1999)
   2. NFPA 497, *Recommended Practice for Classification of Hazardous Locations for Electrical Installations in Chemical Process Areas* (1997)

H. Underwriters Laboratories Inc (UL) - UL 508, *Standard for Safety Electric Industrial Control Equipment* (1999)

I. American Welding Society (AWS)
   1. AWS D1.1, *Structural Welding Code - Steel* (2000)
   2. AWS D1.6, *Structural Welding Code - Stainless Steel* (1999)

J. American National Standards Institute/American Institute of Steel Construction (ANSI/AISC)
   1. AISC N690, Specification for the Design, Fabrication, and Erection of Steel Safety-Related Structures for Nuclear Facilities (1994)

K. American Institute of Steel Construction (AISC) -AISC M016-89, Manual of Steel Construction - Allowable Stress Design, Ninth Edition (as tailored in Appendix C of Ref. N)

2.2 Other Reference Documents/Drawings

A. Deleted

B. Document No. 24590-WTP-3PS-J000-T0001, Rev 1, *Engineering Specification for Melter Systems C&I Work Specification*

C. Deleted

D. Statement of Work for Subcontract No. 24590-CM-SRA-HM00-00001-01-01, *Basis of Estimate For Detailed Design*

E. Deleted

F. Deleted

G. Contractor Correspondence No. 025802, *Contract No. DE-AC27-01RV14136 - Letter Subcontract Number 24590-101-TSA-W000-0010-01, Purchase Requisition for Continuation of LAW and HLW Melter Design Work*

H. Document No. 24590-HLW-S0C-S15T-00009, Rev 0D, *HLW Vitrification Building Seismic Analysis-In-Structure Response Spectra (ISRS)*

I. Document No. 24590-WTP-3PS-SS90-T0001, Rev. 2, *Engineering Specification for Seismic Qualification of Seismic Category I/II Equipment and Tanks*

J. Document No. 24590-WTP-DC-ST-04-001, Rev. 3, *Seismic Analysis and Design Criteria*

K. Drawing No. 24590-HLW-DD-S13T-00071, Rev. 6, *HLW Vitrification Building Structural Melter Seismic Restraint Embed Sections and Details*

L. Calculations No. 24590-HLW-DDC-S13T-00034, Rev. C, *Melter Seismic Restraint Embeds*
M. Document No. 24590-WTP-3PS-FB01-T0001, Rev. 4, *Engineering Specification for Structural Design Loads for Seismic Category III & IV Equipment and Tanks*
N. Document No. 24590-WTP-SRD-ESH-01-001-02, Rev 31, *Safety Requirements Document, Volume II*
O. Document No. 24590-HLW-RPT-PE-07-001, Rev. 0, *High Level Waste Vitrification Plant Capacity Enhancement Study*
P. Document No. 24590-HLW-3PS-AE00-T0002, Rev., 0, *Engineering Specification for Seismic Qualification of High Level Waste Melters* (Used for Revised Ground Motion Seismic Analysis, 01/2008)
Q. Document No. 24590-HLW-Z0C-80-00003, *Shielding Assessment for The HLW Melter.*

3 Design Requirements

The body of this specification identifies the functional design requirements for melter design. Appendices A and B, "Melter Services and Connections Interface Details" and "Melter Design Interface Details" respectively, identify detailed design requirements and interfaces that have evolved from the functional design requirements for achieving the specified melter operating life and availability. The detailed design requirements and interfaces also provide a basis for designing the services and facilities that will support melter handling and operations.

3.1 General Functional Requirements

A. Other Functional Requirements - Other design requirements are defined in the melter design work performed in accordance with Contract No. 24590-101-TSA-W-000-0010 and submitted as the 30 percent design package, and contractor comments to the 30 percent design package (Ref. 2.2G). The package is referred to as the baseline design in this Specification. See also Ref 2.2D.

B. Containment System: The containment system will serve to support the credited safety functions of the melter shell, which are to ensure bulk confinement of radioactive materials during normal, abnormal and accident conditions, and to prevent exposures that may result in consequences to the co-located worker and facility worker above radiation exposure standards in the SRD. The containment system includes the melter shell and other elements: the refractory (and refractory thermocouples), cooling panels, jack bolts, and offgas ventilation. **The external metal walls and lid covers of the melter are designated as gas and glass confinement boundaries.**

1. Coordinate with contractor to include design features for simplifying remote disassembly of a failed melter.
2. The melter shell shall provide bulk confinement of glass in the event of refractory failure. The melter is not required to operate after a seismic event exceeding certain lateral acceleration limits, as defined in section 3.5; however, the shell shall maintain structural integrity and remain in place in accordance with the structural requirements outlined herein.
3. Jack bolts: Design jack bolt system to prevent formation of significant gaps between refractory bricks. Bolt adjustment shall allow for:

a. Remote operation in the melter cave.
b. Support and adjustment of cooling panels and refractory during assembly, installation, startup, and operation.

4. Melter Lid: Design shall include, but not be limited to, the following functions:
   a. Support all melter components mounted on and through it.

b. Support refractory overhanging melter plenum, and thermal expansion of refractory during operation.
c. Provide a continuous gas barrier in conjunction with wall and base gas barrier plates.
d. Provide refractory cooling.

5. Deleted.
6. Melter Base: Base will perform the following functions:
   a. Support melter during transport, operation and maintenance, decommissioning, and disposal phases.
   b. Accommodate integrated transportation system.
   c. Provide contractor-coordinated interfaces with overpack and facility restraints.
   d. Provide flatness tolerances for refractory installation.
   e. Provide refractory cooling.
   f. Provide support for refractory during melter assembly, transport, installation, and operation.
   g. House melter services including drains and refractory water-cooling panels.
7. Confinement of offgas is provided by the gas barrier portions of the shell, with engineered in-bleeds. In-bleed openings shall be limited so that bulk flow of glass will be controlled should it leak from the refractory.

C. Heating System
1. Heating system includes the electrodes (including extensions), startup heaters, discharge chamber heaters, and thermocouples.
2. After melter startup, glass shall be direct joule-heated.
3. Thermocouples shall provide continuous temperature monitoring while the melter is in service.

D. Feed System
1. Feed system includes temporary configuration for frit addition at startup, feed nozzles, associated feed lines (internal to melter only) for operation, and plenum thermocouples.
2. Subcontractor shall use best available information for locating feed nozzles over the glass pool to optimize processing rates.

E. Glass Pour System
1. Glass pour system includes glass pool level detectors, risers and airlift lances, troughs, dams, and discharge chamber structures.
2. Metallic Membrane (dam): Dam between the glass pool and discharge chamber shall prevent leakage of glass from the melt pool to the discharge chamber. Dam shall also limit leakage of air directly into the melter plenum through refractory seams over the melter lifetime.
3. Discharge Trough: Design trough to aid in maintaining glass temperature during pouring. Optimize trough slope and cross section for pouring and reduction of glass fiber formation.

F. Melter Disposal and Decommissioning: Coordinate with contractor to define general design requirements for melter disposal and decommissioning. Contractor will define specific disposal and decommissioning criteria after design is complete.

G. Melter Controls and Instrumentation: See Ref 2.2B for specific melter-related functional requirements for controls and instrumentation.

H. Transportation System: System will perform the following functions:
1. Support roller/wheel assemblies for melter transport on facility and overpack rails.
2. Guide and position melter on facility and overpack rails.
3. Interface with contractor-supplied drive systems that conform to subcontractor-defined melter movement criteria (see Appendix B).

4. Remain functional after an operational earthquake event as defined in Section 3.5A5: roller/wheel bearings shall remain functional and the rollers/wheels shall remain on the rails.
5. Allow for replacement by an identical melter after end-of-life or failure.

I. General Melter Component Design
1. Components requiring replacement during the design life of the melter shall be designed for ease of remote replacement and disposal. Where required, provide installed spare capacity.
2. Use of commercially available components and equipment without modifications will be optimized to the extent practical, except for components requiring optimization/value engineering studies per Ref 2.2D.
3. Subcontractor shall coordinate with contractor to determine applicability of modular design to minimize assembly and replacement times.
4. A power manipulator and an overhead maintenance crane will accommodate remote removal/replacement of modular components and equipment during startup and operation. Subcontractor shall coordinate with contractor to determine individual handling, routing, and access requirements so as not to exceed the operating parameters of the handling equipment.
5. Conductive individual components and equipment in contact with the molten glass shall be electrically isolated from the melter structure, base and lid, and from SSCs physically connecting the melter to the rest of the facility.
6. All components shall be designed to withstand thermal expansion during normal operations and function within established design parameters (e.g., interface locations and positioning features).
7. Deleted.

J. Agitation System
1. Agitation system includes bubblers and glass pool viewing system.
2. Arrangement and configuration of bubblers shall aid in optimizing melter throughput.
3. Each bubbler assembly, in coordination with the contractor, shall be designed for individual removal and replacement.

K. Restraint System
1. Subcontractor shall design an anchor system, per the structural requirements below, to lock melter in place during operation, including pin, restraint, and interface to building embedments as shown in Ref. 2.2 K.
2. In order to fully account for construction tolerances, interfacing dimensions shall be placed on hold for fabrication until after placement of the embedments in the field. As-built dimension will be provided by the project when available.

3.2 Performance Requirements

A. Design Life
1. The facility is expected to operate for approximately 40 years.
2. The melter, excluding consumable SSCs specified by the subcontractor, shall have a minimum 5-year design life.
3. Refer to Appendix B for predicted subcontractor-defined design lives of selected SSCs to support target availability.
4. Deleted.
5. Subcontractor shall document bases for declaring the design lives of the melter and all associated SSCs.

B. Melter Throughput and Availability

1. Baseline throughput shall be 1.5 metric tons of glass/day, per melter. The melter shall be designed to allow production rates of 3.75 metric tons of glass/day (Ref. 2.2.O) with an increase in agitation/bubbling rate.
2. Melter shall transform a slurry mixture of pretreated high level waste (HLW) and blended glass formers into a homogeneous glass melt. See Appendix B for waste and test feeds and glass composition data. Contractor will be responsible for controlling the feed chemistry composition within referenced boundary limits.
3. Target baseline availability for the melter is 83%. Subcontractor shall interface with contractor to ensure that melter design supports goal.

3.3 Design Conditions

A. Site Data (Applicable to Melter Transport in Overpack)
1. Elevation: 662 to 684 feet above mean sea level.
2. Site Climatological Data:

Ambient Air Temperature	Minimum: - 23 °F, Maximum: 113 °F
Rate of Increase	Maximum: 26 °F per 20 min
Rate of Decrease	Maximum: 24 °F per hour
Relative Humidity	Maximum: 100 %, Minimum 5 %

B. Facility Data
1. Building layouts and equipment general arrangements are predicated on the melter and melter component dimensions shown in Appendix B. Subcontractor shall notify contractor of any changes to dimensions and/or equipment maintenance envelope requirements.
2. Melter Ventilation:
   a. Melter will be operated as part of a cascaded ventilation system.
   b. Melter cave will be a primary confinement zone, held at a nominal 1 to 1.4-in. wg negative pressure with respect to surrounding secondary confinement zones.
   c. Melter plenum pressure will be maintained at a nominal 5-in wg negative pressure with respect to the cave.
3. Indoor Temperatures: See Appendix B for melter cave temperature range.
4. Radiation Dosages: See Appendix B for radiation design interface requirements impacting melter design.
5. Melter Utility Services:
   a. Contractor is currently providing the following services to the melters: electrical power, cooling water, process water, demineralized water, purge air, instrument air, and argon.
   b. Pressure, flow, conditioning, and other control requirements will be adjusted by contractor to suit application at the delivery point.
   c. Subcontractor shall identify any other liquids or gases required over the melter lifetime.
   d. Subcontractor shall coordinate with contractor to define utilities that require normal service or backup services.

e. Subcontractor shall identify critical melter services where stoppage would result in rapid failure of associated component or melter system (see Appendix B). Include estimates of time to failure.

f. Subcontractor shall specify required service operating parameters at contract boundary, with contractor input on selected design operating criteria.

6. Deleted

3.4 Mechanical Requirements

See Appendix A for melter service and connection interface details and Appendix B for the balance of melter design interface details.

A. Discharge Chamber

1. For baseline discharge chamber operation, glass discharge will alternate between the two chambers for every other canister. The switch between chambers will not occur until a canister has been filled.
2. Each discharge chamber shall be designed for a throughput of 3.75 metric tons of glass per day.
3. **Discharge Cambers can be enclosed in refractory.**

B. Feed Nozzles

1. Feed nozzles shall be designed for a throughput of 3.75 metric tons of glass per day, with all nozzles operating.
2. Contractor will provide the following to each feed nozzle:

a. A dedicated feed line and pump.
b. Cooling water.
c. Air and water purge.

3. Subcontractor shall coordinate with contractor to design glass frit addition system, for use during melter startup. Subcontractor shall be responsible for design of frit discharge "nozzle" that will penetrate the melter lid.

C. Viewing Systems

1. Design one (1) closed circuit television (CCTV) and associated system for viewing plenum area and cold cap.
2. CCTV will be used on an intermittent basis, as operation and maintenance requirements dictate. It will be removed from the melter when not in use. Design CCTV to be removable and replaceable with remote handling equipment.
3. Coordinate with contractor for design and incorporation of glass discharge viewing equipment, to be supplied by contractor.
4. Viewing ports shall be purged to prevent buildup of solids and other contaminants.
5. Cool CCTV ports as required.

D. Refractory Expansion Control System

1. Design jack bolts to actively control refractory expansion without operator intervention. Remote operation of, and access to, the bolts shall be maintained.
2. Coordinate with Contractor to provide a means of locally monitoring cooling panel and refractory movement with visual indicators.

E. Melter Cooling Water System

1. Contractor will be responsible for water supply to the panels.
2. Cooling panels shall be designed in accordance with Ref 2.1D3.
3. Cooling panel design shall be such that internal pressure and/or temperature induced distortions will not place undue stress against the melter refractory.
4. Design cooling panels to be emptied at melter changeout or decommissioning.

5. Coordinate with contractor for overall cooling water system design, including instrumentation and controls, external to the melter.

F. Melter Offgas System

1. See Appendix A for sizes of primary and standby offgas pipes.
2. Each pipe shall accommodate anticipated melter in-leakage and purge streams. In-leakage streams include, but are not limited to, room air inflow from lid-mounted component removal/replacement operations, and inflow from the discharge chambers. Purges include gas inflows from the film coolers, feed nozzles, bubblers, and airlift lance.
3. Offgas pipe routing from the melter to the submerged bed scrubbers will be defined by the contractor.
4. Primary offgas film cooler **design and configuration will reduce the offgas temperature and minimize solids deposition during the various modes of operation to support downstream offgas system operation.** See Appendix B for additional requirements affecting film cooler design.
5. Film cooler design shall incorporate a means for internal cleaning. This operation may be assisted with remote handling equipment in the melter cave.
6. Provide redundant pressure measurement for the melter plenum.

G. Piping

1. All cooling water piping, feed piping and pour flanges shall be per Ref 2.1D1. Piping seismic design shall be in accordance with Ref 2.1D2, Appendices N and F. See Appendix A for piping fluid service categories. Subcontractor shall provide documentation for justification of service class selected where different than what is shown.
2. Joints: Use of all joints other than butt-welded shall be submitted for contractor review and approval.
3. Piping Nozzle Slopes: See Appendix B for slopes of selected utility and service lines.
4. Disconnects: Coordinate with contractor to define remote disconnect requirements at the melter-facility boundaries.
5. Drains: Provide low-point "floor" drains between the gas barrier and the refractory for the maximum credible leak from a complete break of one cooling water panel pipe. Coordinate with contractor to provide leak detection equipment at the drains. Design drains to prevent clogging from particle waste and to minimize inflow of air due to the melter operating at a vacuum.

H. Material Requirements

1. Subcontractor shall define all melter SSC material requirements in accordance with this Specification and applicable codes and standards. Where deviations are required, subcontractor shall notify contractor before proceeding with design.
2. **Materials of construction shall be able to withstand the radioactive, thermal, and corrosive environment caused by the melter feed, glass, and offgases as required by sound engineering principles to ensure adequate performance and lifetime. Corrosion and/or erosion allowances are included in the design as required by sound engineering principles to ensure adequate performance and lifetimes** given in Section 3.2A2 and Appendix B. **Refractory corrosion rates, based on rigorous engineering evaluation of available pilot melter and/or lab scale testing are documented to meet established performance requirements for the melter designs.** Combustible materials shall not be used without prior approval from contractor.
3. Subcontractor shall consider environmental, durability, corrosion and erosion factors during material selection. At a minimum, subcontractor shall evaluate the following characteristics:
   a. Surface finish

b. Chemical resistance
c. Radiation resistance
d. Pressure effects (cyclical)
e. Temperature effects
f. Hardness (possibility of galling and fretting)
g. Fatigue (cyclic stresses both with and without the presence of aggressive chemicals).

4. Corrosion monitoring capability during operations is not required.

I. Bubblers

1. Bubbler assemblies shall be isolated from the melter lid and lid jumpers to prevent electrical short-circuiting.
2. Coordinate with contractor to define air/gas supply requirements.

3.5 Structural Requirements

See Appendix A for melter service and connection details and Appendix B for the balance of melter design interface details.

Seismic Analysis shall be in accordance with 24590-WTP-DC-ST-04-001, *Seismic Analysis and Design Criteria*.

For Revised Ground Motion (RGM) Seismic Analysis Requirements (Current Melter Design), Load Combinations, Response Curves... etc. (01/2008), See Ref. 2.2.P. Prerevised Ground Motion seismic requirements as noted in the specification A thru E shown below, are being retained in the specification for historical reference.

A. General

1. In order to perform its credited safety function, the melter shell must maintain structural integrity and remain in place to preclude potential impacts to SC-I items during and after a seismic event. Thus the melter shell and restraints are SC-II, and shall be seismically qualified in accordance with Ref. 2.2.I.
   a. The "appropriate in-structure response spectra" cited by Ref. 2.2.I for dynamic analysis shall envelope the 3 % damped ISRS at building lines 10 & C and 11 & M from reference 2.2.H.
   b. Subcontractor shall submit a Seismic Qualification Report consistent with the requirements of Ref. 2.2.I.
2. Maintaining structural integrity as required above does not preclude limited yielding of the gas barrier portion of the melter shell during a seismic event, providing the following general and safety requirements are met:
   a. Permanent effects resulting from SC-II loading shall not prevent the melter from being removed from the facility and placed in its overpack.
   b. Permanent effects resulting from SC-II loading shall not allow for the bulk flow of molten glass.
   c. In order to maintain the integrity of the offgas system, which is an SC-III system, the shell shall maintain an appropriate factor of safety against yield when subjected to appropriately combined SC-III loadings.
3. During transport and normal operating conditions, the deflection under load shall be limited to allow for proper refractory performance.
4. Subcontractor shall design an anchor system, per SC-II, to lock melter in place, including pin, restraint, and interface to building embeds.

5. Subcontractor shall verify through analysis that the melter will remain capable of normal operation after a lateral seismic acceleration at the base of the melter of 0.061g in any horizontal direction.
6. For melter transport into the facility, subcontractor shall conduct analyses and provide documentation to ensure that refractory arrangement and integrity is maintained. Notify contractor if additional or temporary means of refractory restraint are advantageous.
7. The design of the electrodes and the melter dam shall address creep over the life of the component.

B. Melter Base
1. See Appendix B for additional structural related interface details.

C. Transportation System
1. Rollers/Wheels:
   a. Subcontractor shall consider worst potential load type combination in determining roller/wheel load capacity.
   b. Provide vertical adjustment capability (passive and/or active) to accommodate slight differences in transport rail elevation.
2. Fasteners, Anchors, and Positioning Devices: Coordinate with contractor to establish design and interface requirements for all phases of melter life.
3. See Appendix B for transportation system interface details.

D. Loadings
1. Dead Loads: Design shall consider the combined weight of all melter SSCs. Other static loads to be considered include:
   a. Temporary rigging equipment during transport.
   b. Weight corresponding to maximum glass volume during operations.
   c. Circulated cooling fluids during operations.
   d. Encasement of all voids with grout during decommissioning.
2. Live Loads: Subcontractor shall coordinate with contractor to develop loading requirements and limits related to transport, maintenance, decommissioning, and jumper attachment.
3. **Deleted (Ref SCN - 00011)**
4. Pressure Gradients: The gas barrier walls shall be evaluated to withstand the operating pressure range of the offgas lines identified in Appendix A.
5. Other Loads:
   a. Thermal induced loads to be experienced during startup, normal operations, and idling.
   b. Piping reaction loads during normal operation.
   c. Impact wrench load. Maximum design load is 450 ft-lbs.
6. See Appendix B for melter static and live load detail requirements.
7. **Deleted (Ref SCN - 00011)**
8. **Deleted (Ref SCN - 00011)**
9. **Deleted (Ref SCN - 00011)**
10. **Deleted (Ref SCN - 00011)**

E. Other
1. Buckling
   a. To ensure that elements in the load path maintain their structural integrity, appropriate methods of analysis shall be employed to analyze elements subject to buckling and other failure modes that are not predictable by FEA
      i. To preclude buckling due to shear loads, plate elements shall be stiffened as required in the Code

ii. The allowable stress of elements subject to buckling due to compressive loads shall be reduced appropriately as required by the Code.

b. Highly localized areas of stress determined by FEA to be above the allowable stress, are to be considered according to the Code commentary (Reference 2.1.J.1, section CQ1.5), providing that engineering judgments are documented and justified where used.

2. Structural welding shall be per Refs. 2.1.I.1 and 2.1.I.2
3. Material properties for structural analysis shall be per Ref. 2.1.D.6

3.6 Electrical Requirements

See Appendix A for melter service and connection details and Appendix B for the balance of melter design interface details.

A. General
1. The following code references apply to this section: Refs 2.1C1 through 2.1C5, 2.1E, 2.1F1, 2.1F2, 2.1G1, 2.1G2, and 2.1H.
2. Subcontractor shall specify the following:
   a. Minimum and maximum values of the following electrical parameters associated with the Joule heating process for HLW glass envelopes: AC/DC power, voltage, current, waveform, and frequency.
   b. Melter protective interlocks required on the power source to the melter electrodes.
   c. Electrode firing configuration.
   d. Instrumentation and control requirements for the power source to the electrodes, discharge heaters, and startup heaters.

B. Electrode Power
1. Electrodes and extension buses shall be capable of carrying the current at the voltage required for all modes of melter operation.
2. Minimize connection resistance if the extension bus and electrode are two separate components.
3. Connector for making external connections to the extension buses shall allow for expansion and contraction of the extension bus.
4. Magnetic Coupling: Extension buses shall not cause magnetic coupling with the materials through which they pass.
5. Electromagnetic Interference: To the extent practical, the configuration of the extension buses shall maximize magnetic field cancellation.

C. Discharge Heater Power
1. Discharge heaters shall be matched to the extent practical with respect to resistance, operating current, and voltage.
2. Each discharge heater assembly shall be designed with a plug-type connector integral to the heater assembly.
3. The discharge heaters shall be electrically isolated from each other and from the melter structure.

D. Startup Heater Power
1. Startup heaters shall be matched to the extent practical with respect to resistance, operating current, and voltage.
2. Design power connectors to each heater assembly, with coordination from Contractor.
3. The startup heaters shall be electrically isolated from each other and from the melter structure.

E. Cable
1. Refer to Ref 2.1F1 for general cable design standards.
2. Cables routed within the melter envelope shall be rated for the maximum ambient temperature encountered.
3. Cable insulation and jacket material shall be of the low flammability type, per Ref 2.1C5.
4. Cable insulation and jacket material shall be resistant to heat, moisture, impact, radiation, and ozone as required for the expected operating environment.
5. Cables shall be supported or routed in raceway within the melter structure.
6. Power cables of size # 2/0 and larger will be single conductor or triplexed.
7. Instrument cables shall be single-pair, triad-twisted and shielded, or multi-pair with shielded pair and overall shield and drain wire.
8. Control cables shall be multi-conductor and color coded in accordance with Ref 2.1F1, Standard Method. Coordinate with contractor to determine requirements for spare conductors that shall be included in multi-conductor control and instrumentation cables.
9. Instrument and thermocouple cables will be single pair twisted and shielded, or multi-pair cable with individual pair shielded and overall shield.
10. Minimum Conductor Sizes:
    a. #12 AWG for power circuits.
    b. #14 AWG for control circuits (120 VAC, 125 VDC) and instrument power circuits.
    c. #18 AWG for instrumentation - single pair cable.
    d. #20 AWG for instrumentation - multi pair cable.

    Note: Instrumentation conductors include low-level voltage, current, or digital electrical signal connections to sensing and actuating devices.
11. See Appendix A on conductors for normal and instrument power circuits, control circuits, and instrumentation (both single pair cable and multi pair cable). Instrumentation conductors include low level voltage, current, or digital electrical signal connections to sensing and actuating devices.
12. Cables shall be physically separated in accordance with the function and voltage class as follows:
    a. Low-voltage power AC and DC cables.
    b. High-level signal and control or discrete on/off control cables (120 VAC, 125 VDC).
    c. Controls with critical safety requirements as determined by contractor.
    d. Cables for general instrumentation (i.e., low-level analog and digital signals and data communication).

F. Deleted

G. Grounding
1. Metal sections of melter lid, base, structure, and containment system shall be electrically interconnected.
2. The HLW melters are grounded via contact between the facility rails and the wheels of the melter base.
3. Deleted
4. Deleted.

3.7 Controls and Instrumentation Requirements

A. Controls Requirements: For melter design requirements, related to control logic, sequence of operations, and control software and hardware, see Ref 2.2B. Controls system design is in contractor's scope of work unless stated otherwise in Ref 2.2B.

B. Instrumentation Requirements
   1. For melter design requirements related to instrumentation see Ref 2.2B.
   2. Appendix A contains instrumentation connection interface details related to specific melter SSCs.

3.8 Maintenance Requirements

A. General
   1. **All nonstructural SSCs are designed for safe and effective maintenance per 24590-WTP-RPT-OP-01-001, *Operations Requirements Document.*** To the extent practical, the design will utilize techniques for minimizing maintenance labor to reduce the time, number and type of crafts required to perform work:
      a. Minimize downtime, and impacts to overall operation of the facility.
      b. Keep maintenance activities simple and straightforward, suitable for a power manipulator and an overhead maintenance crane.
      c. Minimize requirement for special tools and equipment for maintenance.
      d. Modularize SSCs for remote maintenance, access, and replacement.
      e. Demonstrate best possible access to controls, protective interlocks, and SSCs for maintenance.
      f. Minimize impact on interfacing SSCs while performing maintenance on targeted SSCs.
      g. Allow for the gathering of diagnostic information where possible to determine melter life.
      h. Incorporate features to aid in replacement of SSCs that do not meet the melter design life requirement of five years.
   2. Subcontractor shall perform failure modes and effects analyses on the critical SSCs identified in Ref 2.2D:
      a. Specify what critical SSCs need to be maintained and inspected, specify maintenance and inspection requirements, and provide data on predicted availability.
      b. Identify potential failures for critical SSCs, and recovery sequences.
      c. Identify and implement sufficient redundancy requirements to minimize impact on glass production.
   3. Subcontractor shall interface with contractor to ensure that access around melters is sufficient for inspection of all external melter surfaces, per Appendix B.
   4. Subcontractor shall identify all special tools and equipment for maintenance.
   5. All removable or replaceable components and equipment shall have lifting bails designed to interface with the overhead maintenance crane or power manipulator. See Appendix B for maintenance handling criteria.
   6. Subcontractor shall coordinate with contractor to optimize melter maintenance access, taking into account facility layout and maintenance support equipment and services outside of the subcontractor's scope of work.

B. Baseline Component Design Lives: See Appendix B for melter component design lives. Subcontractor shall advise contractor of changes, including component additions and deletions as well as improvements in baseline lifetimes.

4 Quality Assurance

4.1 General

A. Subcontractor and sub-tier vendors shall perform all design work in accordance with a contractor-approved quality assurance plan which meets the applicable requirements of Ref 2.1D4, and in accordance with Ref. 2.1D5.

B. Subcontractor shall be responsible for all sub-tier vendor quality assurance requirements during design.

C. See Ref 2.2D for quality assurance requirements pertaining to specific melter SSCs.

D. The contractor reserves the right to review design work in progress to assess the effectiveness of the subcontractor's quality system at any time during the design process. Assessments performed by the contractor shall in no way relieve the subcontractor of any contractual responsibilities.

5 Documentation and Submittals

5.1 General

A. See Ref 2.2D for submittal format, transmission, and review requirements.

5.2 Submittals

A. See Ref 2.2D for specific melter system submittal requirements not specified herein.

Appendix A

Melter Services and Connections Interface Details (4 pages total)

Melter Engineering Specification Appendix Note:

The details given in this appendix were needed early in the project when the melters and the surrounding plant were being designed concurrently and remain in this specification for historical purposes only. The detailed design documents that have subsequently been produced contain the current, verified/approved design interface information Since design of the surrounding plant continues to develop, and the melter designs are being updated as fabrication continues, details from the following table should not be used. Refer to issued design drawings and any associated change documents.

A review of the included details has been conducted, and updates have been incorporated where practical; however, the following data should not be relied upon as it may no longer reflect current requirements or interfaces.

ITEM IDENTIFIER	DESCRIPTION	CONNEC-TION NUMBER	LINE SIZE, INCH	OPS MODE	SERVICE TYPE	NOMINAL FLOW / AMPS	NOMINAL PRESSURE / VOLTS AT POINT OF USE	NOMINAL TEMPER-ATURE, F	DESIGN LIMIT FLOW / AMPS ~~(NOTE 59)~~	DESIGN LIMIT PRESSURE / VOLTS ~~(NOTE 59)~~	DESIGN LIMIT TEMPER-ATURE, F	CRITICAL SERVICE	FLUID SERVICE CATEGORY (NOTE 59)	CONNEC-TION TYPE	NOTES
por18	AIR SUPPLY - AIR LIFT/RISER PURGE GAS (TYPICAL OF 2)	N12, N13	3/8	INTERMITTENT	IA-2	3 SCFM	3 PSIG	113	N/A	<15 PSIG	240	NO	D	STAUBLI	14, 53, 24
agi13	AIR SUPPLY - BUBBLER (TYPICAL OF 5)	N05, 6, 7, 8, 9	1/2	CONTINUOUS	IA-2	3 SCFM	10 PSIG	113	N/A	<15 PSIG	240	YES	D	STAUBLI	29
agi08	AIR SUPPLY - BUBBLER OR STARTUP HEATER, SPARE	N11	1/2	SPARE	IA-2	3 SCFM	10 PSIG	113	N/A	<15 PSIG	240	NO	D	STAUBLI	29
htm18	AIR SUPPLY - ELECTRODE COOLING (TYPICAL OF 2)	N/A	1	CONTINUOUS	IA-2	50 SCFM	N/A	113	N/A	25 PSIG	113	NO	D	STAUBLI	
htm19	AIR SUPPLY - ELECTRODE EXTENSION COOLING (TYPICAL OF 2)	N/A	1	CONTINUOUS	IA-2	10 SCFM	N/A	113	N/A	25 PSIG	113	YES	D	STAUBLI	
ogp12	AIR SUPPLY - FUTURE STANDBY FILM COOLER	N03B	2	SPARE	IA-1	N/A	N/A	113	N/A	<15 PSIG	240	YES	D	SPECIAL	
ogp13	AIR SUPPLY - ITS PLENUM PRESSURE TAP	N10A	1/2	CONTINUOUS	IA-1	0.2 SCFH	5 PSIG	113	N/A	5 PSIG	240	YES	D	STAUBLI	
ogs03	AIR SUPPLY - LINE PURGE, STANDBY OFFGAS	N/A	2	CONTINUOUS	IA-1	30 - 160 SCFM	5 PSIG	113	N/A	<15 PSIG	240	NO	D	SPECIAL	
ogp09	AIR SUPPLY - PLENUM (STAND BY OFF GAS) VACUUM MEASUREMENT	N56	3/8	CONTINUOUS	IA-2	0.2 SCFH	0 PSIG	113	N/A	<15 PSIG	240	NO	D	STAUBLI	34
vew01	AIR SUPPLY - PLENUM CCTV COOLING (IF INSTALLED) OR BUBBLER	N36	1/2	CONTINUOUS (IF CCTV INSTALLED)	IA-1	15 SCFM OR 3 SCFM	10 PSIG	113	N/A	<15 PSIG	240	YES	D	STAUBLI	28
ogp03	AIR SUPPLY - FILM COOLER	N03A	2	CONTINUOUS	IA-1	309 SCFM	0 PSIG	113	N/A	<15 PSIG	240	NO	D	SPECIAL	35
lkd01	AIR SUPPLY - SHELL LEAK DETECTOR (REDUNDANT PLENUM VACUUM)	N33	3/8	CONTINUOUS	IA-1	0.2 SCFH	1	113	N/A	<15 PSIG	240	NO	D	STAUBLI	
por19	ARGON SUPPLY - AIR LIFT/RISER PURGE GAS (TYPICAL OF 2)	N12, N13	3/8	CONTINUOUS	IA-2	0.2 SCFH	0 PSIG	113	N/A	<15 PSIG	240	YES	D	STAUBLI	14
lvl01	ARGON SUPPLY - LEVEL DETECTOR, DENSITY LEG	N34B	3/8	CONTINUOUS	Ar	1 SCFH	2 PSIG	113	N/A	<15 PSIG	240	YES	D	STAUBLI	
lvl02	ARGON SUPPLY - LEVEL DETECTOR, LEVEL LEG	N34A	3/8	CONTINUOUS	Ar	1 SCFH	3 PSIG	113	N/A	<15 PSIG	240	YES	D	STAUBLI	
drn01	DRAIN - MELTER SHELL	N32	1	RARE (ONLY IF LEAK OCCURS)	N/A	N/A	0 PSIG	113	N/A	N/A	113	NO	N/A	N/A	40
fed16	FEED SUPPLY - FEED NOZZLE (TYPICAL OF 2)	P01, P02	3/4	CONTINUOUS	N/A	1 GPM	35 PSIG	113	N/A	166 PSIG	360	NO	D	STAUBLI	64
fed07	FRIT ADDITION FUNNEL	P02	3	STARTUP ONLY	N/A	N/A	N/A	N/A	N/A	N/A	N/A	NO	N/A	3-BOLT FLANGE	6, 30
htd21	POWER - DISCHARGE CHAMBER HEATER (TYPICAL OF 8 FOR EAST & WEST, PAIRED CONNECTIONS)		N/A	CONTINUOUS	ELEC-TRICAL	30-50 A	0 - 202 V	N/A	50 A	600 V	500	NO	N/A	MULTI-CONTACT	
htd22	POWER - DISCHARGE CHAMBER HEATER, AUXILIARY, TYPICAL OF 2		N/A	RARE	ELEC-TRICAL	20 A	208 V	N/A	35 A	600 V	500	NO	N/A	MULTI-CONTACT	11

ITEM IDENTIFIER	DESCRIPTION	CONNEC-TION NUMBER	LINE SIZE, INCH	OPS MODE	SERVICE TYPE	NOMINAL FLOW / AMPS	NOMINAL PRESSURE / VOLTS AT POINT OF USE	NOMINAL TEMPER-ATURE, F	DESIGN LIMIT FLOW / AMPS ~~(NOTE 59)~~	DESIGN LIMIT PRESSURE / VOLTS ~~(NOTE 59)~~	DESIGN LIMIT TEMPER-ATURE, F	CRITICAL SERVICE	FLUID SERVICE CATEGORY (NOTE 59)	CONNEC-TION TYPE	NOTES
hts06	POWER - STARTUP HEATER (TYPICAL OF 5)	P05, 6, 7, 8, 9	N/A	STARTUP ONLY	ELEC-TRICAL	115 A	320 V	N/A	150 A	600 V	113	NO	N/A	NONE	6, 29
ogp11	OFFGAS - MAIN PORT	P03	8	CONTINUOUS	N/A	N/A	-5 IN W.G.	400 - 1000	N/A	-100 IN. W.G.	1000	NO	M	3-BOLT FLANGE	37
ogs02	OFFGAS - STANDBY PORT	P04	8	RARE	N/A	N/A	-5 IN W.G.	400 -1000	N/A	-100 IN. W.G.	1000	NO	M	3-BOLT FLANGE	37
ogp10	POWER - FILM COOLER CLEANER	N58	N/A	RARE	ELEC-TRICAL	5 A	480 VAC	N/A	N/A	N/A	N/A	NO	N/A	LEMO	
vew02	POWER - CCTV, PLENUM	N59	N/A	CONTINUOUS (IF CCTV INSTALLED)	ELEC-TRICAL	3 A	120 VAC	N/A	N/A	N/A	N/A	NO	N/A	LEMO	
htm20	POWER - ELECTRODE (TYPICAL OF 2)	N/A	N/A	CONTINUOUS	ELEC-TRICAL	1500 - 6100 A	75 - 200 VAC	N/A	6500	300 VAC	N/A	YES	N/A	SPECIAL	65
vew05	SIGNAL - CCTV, PLENUM	N60	N/A	CONTINUOUS (IF CCTV INSTALLED)	ELEC-TRICAL	N/A	1 V	N/A	N/A	N/A	N/A	NO	N/A	LEMO	
ogp01	SIGNAL - FILM COOLER CLEANER LIMIT SWITCH, DOWN	N59	N/A	RARE	SIGNAL	2 A	120 VAC	N/A	N/A	10 PSIG	N/A	NO	N/A	LEMO	
ogp02	SIGNAL - FILM COOLER CLEANER LIMIT SWITCH, UP	N59	N/A	RARE	SIGNAL	2 A	120 VAC	N/A	N/A	25 PSIG	N/A	NO	N/A	LEMO	
ogs07	SPARE SERVICE - CONNECTION TO STANDBY OFFGAS	N57	3/8	RARE	IA-2	N/A	-5 IN W.G.	113	N/A	N/A	150	NO	D	STAUBLI	
agi14	SPARE SERVICE - PORT (TYPICAL OF 4)	N/A	1/2	N/A	N/A	N/A	N/A	N/A	N/A	N/A	150	NO	N/A	STAUBLI	
tmp49	TC - EAST DISCHARGE CHAMBER, THERMOWELL #1 (TYPICAL OF 2 VIA COMMON CONNECTION)	N/A	N/A	CONTINUOUS	THERMO-COUPLE SIGNAL	N/A	N/A	N/A	N/A	N/A	N/A	NO	N/A	LEMO	
tmp50	TC - EAST DISCHARGE CHAMBER, THERMOWELL #2 (TYPICAL OF 2 VIA COMMON CONNECTION)	N/A	N/A	CONTINUOUS	THERMO-COUPLE SIGNAL	N/A	N/A	N/A	N/A	N/A	N/A	NO	N/A	LEMO	
tmp45	TC - EAST ELECTRODE, (3 FOR ELECTRODE, 2 FOR COOLING AIR EXHAUST ALL VIA COMMON CONNECTION)	N/A	N/A	CONTINUOUS	THERMO-COUPLE SIGNAL	N/A	N/A	N/A	N/A	N/A	N/A	NO	N/A	LEMO	
tmp53	TC - EAST REFRACTORY THERMOWELL (TYPICAL OF 5 VIA COMMON CONNECTION)	N/A	N/A	CONTINUOUS	THERMO-COUPLE SIGNAL	N/A	N/A	N/A	N/A	N/A	N/A	NO	N/A	LEMO	
tmp47	TC - GLASS POOL & PLENUM, EAST THERMOWELL (TYPICAL OF 5 VIA COMMON CONNECTION)	N/A	N/A	CONTINUOUS	THERMO-COUPLE SIGNAL	N/A	N/A	N/A	N/A	N/A	N/A	NO	N/A	LEMO	
tmp48	TC - GLASS POOL & PLENUM, WEST THERMOWELL (TYPICAL OF 5 VIA COMMON CONNECTION)	N/A	N/A	CONTINUOUS	THERMO-COUPLE SIGNAL	N/A	N/A	N/A	N/A	N/A	N/A	NO	N/A	LEMO	
tmp51	TC - WEST DISCHARGE CHAMBER, THERMOWELL #1 (TYPICAL OF 2 VIA COMMON CONNECTION)	N/A	N/A	CONTINUOUS	THERMO-COUPLE SIGNAL	N/A	N/A	N/A	N/A	N/A	N/A	NO	N/A	LEMO	

ITEM IDENTIFIER	DESCRIPTION	CONNEC-TION NUMBER	LINE SIZE, INCH	OPS MODE	SERVICE TYPE	NOMINAL FLOW / AMPS	NOMINAL PRESSURE / VOLTS AT POINT OF USE	NOMINAL TEMPER-ATURE, F	DESIGN LIMIT FLOW / AMPS (~~NOTE 59~~)	DESIGN LIMIT PRESSURE / VOLTS (~~NOTE 59~~)	DESIGN LIMIT TEMPER-ATURE, F	CRITICAL SERVICE	FLUID SERVICE CATEGORY (NOTE 59)	CONNEC-TION TYPE	NOTES
tmp52	TC - WEST DISCHARGE CHAMBER, THERMOWELL #2 (TYPICAL OF 2 VIA COMMON CONNECTION)	N/A	N/A	CONTINUOUS	THERMO-COUPLE SIGNAL	N/A	N/A	N/A	N/A	N/A	N/A	NO	N/A	LEMO	
tmp46	TC - WEST ELECTRODE (3 FOR ELECTRODE, 2 FOR COOLING AIR EXHAUST, ALL VIA COMMON CONNECTION)	N/A	N/A	CONTINUOUS	THERMO-COUPLE SIGNAL	N/A	N/A	N/A	N/A	N/A	N/A	NO	N/A	LEMO	
tmp54	TC - WEST REFRACTORY THERMOWELL (TYPICAL OF 5 VIA COMMON CONNECTION)	N/A	N/A	CONTINUOUS	THERMO-COUPLE SIGNAL	N/A	N/A	N/A	N/A	N/A	N/A	NO	N/A	LEMO	
por06	VENT - EAST DISCHARGE CHAMBER	N47A	2	CONTINUOUS	N/A	17 SCFM	N/A	907	17 SCFM	-5 PSIG	1000	NO	N/A	3 BOLT FLANGE	-
por14	VENT - WEST DISCHARGE CHAMBER	N46A	2	CONTINUOUS	N/A	17 SCFM	N/A	907	17 SCFM	-5 PSIG	1000	NO	N/A	3 BOLT FLANGE	-
clg32	WATER RETURN - COOLING PANEL TOTAL BASED ON 95 F SUPPLY	N/A	N/A	N/A	CW	45 GPM	N/A	120	45 GPM	150 PSIG	366	YES	NS		
clg01	WATER RETURN - COOLING BASE	N21	1	CONTINUOUS	CW	10 GPM	60 PSIG	120	10 GPM	150 PSIG	366	YES	NS		
clg24	WATER RETURN - COOLING, EAST WALL	N25	1	CONTINUOUS	CW	10 GPM	50 PSIG	120	10 GPM	150 PSIG	366	YES	NS		
clg26	WATER RETURN - COOLING, NORTH WALL	N24	1	CONTINUOUS	CW	10 GPM	50 PSIG	120	10 GPM	150 PSIG	366	YES	NS		
clg28	WATER RETURN - COOLING, SOUTH WALL	N23	1	CONTINUOUS	CW	5 GPM	50 PSIG	120	5 GPM	150 PSIG	366	YES	NS		
clg30	WATER RETURN - COOLING, WEST WALL	N22	1	CONTINUOUS	CW	10 GPM	50 PSIG	120	10 GPM	150 PSIG	366	YES	NS		
clg02	WATER SUPPLY - COOLING, BASE	N16	1	CONTINUOUS	CW	10 GPM	50 PSIG	95	10 GPM	150 PSIG	366	YES	NS	STAUBLI	
clg25	WATER SUPPLY - COOLING, EAST WALL	N20	1	CONTINUOUS	CW	10 GPM	50 PSIG	95	10 GPM	150 PSIG	366	YES	NS	STAUBLI	
clg27	WATER SUPPLY - COOLING, NORTH WALL	N19	1	CONTINUOUS	CW	10 GPM	50 PSIG	95	10 GPM	150 PSIG	366	YES	NS	STAUBLI	
clg29	WATER SUPPLY - COOLING, SOUTH WALL	N18	1	CONTINUOUS	CW	5 GPM	50 PSIG	95	5 GPM	150 PSIG	366	YES	NS	STAUBLI	
clg31	WATER SUPPLY - COOLING, WEST WALL	N17	1	CONTINUOUS	CW	10 GPM	50 PSIG	95	10 GPM	150 PSIG	366	YES	NS	STAUBLI	
fed14	WATER SUPPLY - FEED NOZZLE FLUSH TYPICAL OF 2	N/A	N/A	INTERMITTENT	DIW	2 GPM	35 PSIG	95	2 GPM	150 PSIG	366	NO	N/A	N/A	
ogp04	WATER SUPPLY - FILM COOLER WASH (INJECTED VIA FILM COOLER AIR LINE)	N/A	N/A	INTERMITTENT	DIW	1 GPM	25 PSIG	95	1 GPM	135 PSIG	366	NO	N/A	N/A	
fed06	WATER SUPPLY -PREFEED PLENUM COOLING WATER, EAST FEED	N01B	3/4	INTERMITTENT	DIW	1 GPM	25 PSIG	95	1 GPM	135 PSIG	366	NO	N/A	STAUBLI	

ITEM IDENTIFIER	DESCRIPTION	CONNEC-TION NUMBER	LINE SIZE, INCH	OPS MODE	SERVICE TYPE	NOMINAL FLOW / AMPS	NOMINAL PRESSURE / VOLTS AT POINT OF USE	NOMINAL TEMPER-ATURE, F	DESIGN LIMIT FLOW / AMPS ~~(NOTE 59)~~	DESIGN LIMIT PRESSURE / VOLTS ~~(NOTE 59)~~	DESIGN LIMIT TEMPER-ATURE, F	CRITICAL SERVICE	FLUID SERVICE CATEGORY (NOTE 59)	CONNEC-TION TYPE	NOTES
fed09	WATER SUPPLY -PREFEED PLENUM COOLING WATER, WEST FEED	N02B	3/5	INTERMITTENT	DIW	1 GPM	25 PSIG	95	1 GPM	135 PSIG	366	NO	N/A	STAUBLI	
ogs01	WATER SUPPLY - STANDBY OFFGAS PIPE SPRAY, SAME CONNECTION AS ogs03	N/A	N/A	INTERMITTENT	DIW	1 GPM	25 PSIG	95	1 GPM	135 PSIG	366	NO	NS	STAUBLI	

SERVICE TYPE

Ar	WELDING GRADE ARGON
CW	COOLING WATER, DEMINERALIZED, FILTERED TO <2 MICRON, NO CORROSION INHIBITORS, CL < 40 PPM, SULFATE <100 PPM, TDS <340 PPM, TOTAL SUSPENDED SOLIDS, <300 PPM, TOTAL HARDNESS < 170 PPM
IA-1	INSTRUMENT AIR PER ANSI/ISA-S7.0.01-1996
IA-2	INSTRUMENT AIR WITH EXTRA FILTRATION FOR PARTICULATE, WATER, AND HYDROCARBONS
DIW	DEMINERALIZED WATER

1 COOLING WATER SUPPLY TEMPERATURE IS TO BE GREATER THAN MELTER GALLERY AIR TEMP TO PREVENT CONDENSATION

6 INSTALLED DURING MELTER STARTUP

11 DISCHARGE CHAMBER AUX HEATERS NOT NORMALLY CONNECTED. HEATER TO BE USED FOR POUR FLANGE GLASS BLOCKAGE RECOVERY

14 AIR LIFT DISCHARGES ARE OPERATED INTERMITTENTLY ONE AT A TIME. ARGON IS PURGED THROUGH THE AIR LIFT AT 0.2 SCFH WHEN GLASS IS NOT BEING DISCHARGED

24 N/A = NOT APPLICABLE

28 CCTV COOLING AIR WILL BE EXHAUSTED INTO MELTER CAVE

29 BUBBLER AND STARTUP HEATERS FIT THE SAME LID NOZZLES

30 FRIT ADDITION AND FEED NOZZLES FIT SAME LID NOZZLES

34 LEVEL DETECTOR REFERENCE LEG AND MELTER PLENUM PRESSURE COMBINED MEASUREMENT FROM STANDBY OFGFGAS PORT

35 MAY INCLUDE WATER FLUSH FOR FILM COOLER

37 TEMP MAY BE HIGHER IF FILM COOLER AND AIR INJECTION STOPS DURING PRESSURE TRIP

40 SEAL POT OR TRAP REQUIRED

50 ONCE PER 4 HOURS THE FEED LINES ARE FLUSHED. THIS OCCURS FOR EACH OF THE 6 ADS PUMPS/FEEDLINES, OR 1.5 GPH PER MELTER. APPROX ONCE PER MONTH, FLUSH EACH FEED NOZZLE FOR APPROX 30 MIN.

53 AIR FLOWS DURING POURS ONLY, APPROX. 30 MIN EVERY 3 HR. ARGON USED AS A CONTINUOUS PURGE, EVEN DURING POURS (ABOUT 1 SCFH)

54 WATER USED TO COOL PLENUM AFTER IDLE. FLOW FROM ONLY 1 NOZZLE IS SUFFICIENT, DURATION APPROX 30 MIN.

59 DELETED

64 PROCESS VALUES ARE BASED ON PILOT MELTER DATA AND DESIGN DEVELOPMENT. ACTUAL MELTER OPERATING/DESIGN CRITERIA MAY VARY DEPENDING ON FINAL SYSTEM DESIGN BY RPP-WTP

65 WITH DESIGN LIMIT OF 7,000 AMPS NOT TO EXCEED 3% OF TOTAL OPERATING TIME

Appendix B

Melter Design Interface Details (10 pages total)

Melter Engineering Specification Appendix Note:

The details given in this appendix were needed early in the project when the melters and the surrounding plant were being designed concurrently and remain in this specification for historical purposes only. The detailed design documents that have subsequently been produced contain the current, verified/approved design interface information Since design of the surrounding plant continues to develop, and the melter designs are being updated as fabrication continues, details from the following table should not be used. Refer to issued design drawings and any associated change documents.

A review of the included details has been conducted, and updates have been incorporated where practical; however, the following data should not be relied upon as it may no longer reflect current requirements or interfaces.

Tag	Component (2, 3)	Interface Detail (2, 3)	Interface Criteria	System/ Area Locators	Comments
agi07	bubbler	component weight	290.31 lb.	HSH	
agi08	bubbler	intermediate in-facility storage criteria	consumable template has storage positions for 8 consumables with 11 in dia. bases	HSH	note 5
agi02	bubbler	operating life	MTTF - 2 mos	HSH	
agi03	bubbler	remote handling requirements	3 inch across flats for captive fasteners, 1-1/4 inch ACME thread, nut retainer, standard lifting bail for 5 ton and 17 ton crane hook	HSH	
vew09	cctv - for melter plenum	component weight	250 lb. max	HSH	
vew07	cctv - for melter plenum	dimensions - envelope	16.75" dia. X 34.31" tall	HSH	
vew14	cctv - for melter plenum	intermediate in-facility storage criteria	consumable template has storage positions for 8 consumables with 11 in dia. bases	HSH	note 5
vew02	cctv - for melter plenum	operating life	MTTF - 12 mos	HSH	
vew05	cctv - for melter plenum	remote handling requirements	2 inch across flats for captive fasteners, 1-1/4 inch ACME thread, nut retainer, standard lifting bail for 5 ton and 17 ton crane hook	HSH	
enc49	cooling panel expansion indicators	adjustment interface/connection	adjustments to indicators not necessary	HSH	
enc46	cooling panel expansion indicators	quantity	21 total - 6 on east wall, 9 on north wall, 6 on west wall	HSH	
enc48	cooling panel expansion indicators	viewing criteria	need to view a 4" diameter wheel at a steep viewing angle. Approximately 60-90 degrees	HSH	jumper placement by project may affect view
enc17	datum point - facility reference	coordinates of melter datum in plant coordinate system	melter 1: N. 3806' - 7 1/4" E. 10149' - 1" Elev. 2' - 11" melter 2: N. 3806' - 7 1/4" E. 10042' - 1" Elev. 2' - 11"	30	note 5.
enc18	datum point - facility reference	description of physical location	located 7.75 inches to south of pour spouts center line on west rail center line at elev. 2'-11"	30	
enc38	datum point - facility reference	dimensional tolerance for locating datum point in melter cave	to be determined by project after completion of melter design	HSH	note 5
enc21	datum point - melter reference	description of physical location (x,y,z location from which all melter dimensions originate from)	point on top center of west rail, on centerline of seismic restraint pin. See enc18 and res04	30	
enc41	datum point - melter reference	fabrication/ assembly dimensional tolerances	+/- 0.031" (0.0156" for the hole on the end truck and 0.0156" for the holes(s) in the restraint	30	
por24	discharge chamber lid	component weight	1642 lb.	HSH	
por23	discharge chamber lid	dimensions - envelope	33.125" x 40.0" plan, 19.125" high from bottom of refractory to top of cover, 34.25" high from bottom of refractory to top of lifting lugs	HSH	
por06	discharge chamber lid	operating life	MTTF - 30 mos	HSH	
por05	discharge chamber lid	remote handling requirements	5 inch across flats for captive fasteners, 1-1/4 inch ACME thread, nut retainer, standard lifting bail for 5 ton and 17 ton crane hook; alignment device will protect heater elements from damage during installation (see maintenance tools)	HSH	
enc26	drain - for annulus spaces	drain configuration	elbow directed downward with "flapper valve" on end, drains onto pour cave cover	HMP	

Tag	Component (2, 3)	Interface Detail (2, 3)	Interface Criteria	System/ Area Locators	Comments
enc36	drain - for annulus spaces	leak detection configuration for drain	shell leak detector level probe will be located with its tip roughly in elbow of drain. If leak develops, water will build up to about 5" wc, then any additional water will drip out of flapper valve.	HMP	
enc51	drain - for annulus spaces	physical location	lower northwest corner of melter	HMP	
enc52	drain - for annulus spaces - leak detection equipment	operating life	MTTF - life of melter	HSH	
env32	facility rails	configuration	rectangular, 2.5" wide, flat, top of rail elevation 2'-11", east/west rail stops 11-3/4"/11-3/4" north of building grid K	HMH	
env33	facility rails	load limits - horizontal	Design anchorage of rail for 10% of vertical load on wheel	HMH	conforms to wheel vendor design recommendations and Crane Manufacturers Association of America (CMAA)
env67	facility rails	load limits - vertical	Assume 2 times wheel rating in env52 for occasional overload	HMH	
env36	facility rails	material/finish/coating/heat treating	17-4PH stainless, condition H900, yield stress = 183ksi, RMS 63 to 125, no coating.	HMH	
env39	facility rails	maximum rail gap	8 inches	HMH	Subcontractor comfortable crossing any rail gap smaller than 20.5 inches (wheel spacing), less 2 inches (load distribution per CMAA 70, 3.3.2.3), less any rail tapers used. A 7.5 inch rail gap between the HLW melter overpack and the HLW vitrification facility rails will be acceptable.
env40	facility rails	size/configuration	2.5" wide, must be flat, no more than a 1/32" chamfer (or radius) on edges, at least 1" tall for rail flange clearance. Top of rail elevation 2'-11", rails stop 11-3/4" north of building grid K.	HMH	
env41	facility rails	tolerances - horizontal lateral /parallel	horizontal lateral deviation +/- 0.04" over a 6 foot rail span, parallelism of rails in horizontal plane +/- 0.04" for each 16 foot span (non-cumulative)	HMH	
env34	facility rails	vertical/levelness tolerance	0.060"	HSH/HMH	Requirement driven by facility rail flatness tolerance
fed14	feed nozzle	component weight	108 lb.	HSH	
fed11	feed nozzle	dimensions - envelope	13" dia. flange X 23.88" long	HSH	
fed21	feed nozzle	intermediate in-facility storage criteria	consumable template has storage positions for 8 consumables with 11 in dia. bases	HSH	note 5. Feed nozzle to be stored in Consumable Template
fed03	feed nozzle	operating life	MTTF - life of melter	HSH	
fed07	feed nozzle	remote handling requirements	5 inch across flats for captive fasteners, 1-1/4 inch ACME thread, nut retainer, standard lifting bail for 5 ton and 17 ton crane hook	HSH	

Tag	Component (2, 3)	Interface Detail (2, 3)	Interface Criteria	System/ Area Locators	Comments
fed19	feed nozzle - glass frit addition	component weight	132 lb.	HSH	
fed16	feed nozzle - glass frit addition	configuration	project design requirement. Will be configured to interface with subcontractor port design.	HSH	shall interface with consumable bucket with gate valve on bottom to accept bulk charge of frit w/o metering
fed20	feed nozzle - glass frit addition	intermediate in-facility storage criteria	consumable template has storage positions for 8 consumables with 11 in dia. bases	HSH	note 5. Storage location will be determined by project operations
fed05	feed nozzle - glass frit addition	remote handling requirements	4 inch across flats for captive fasteners, 1 1/4 inch ACME thread, nut retainer, standard lifting bail for 5 ton and 17 ton crane hook	HSH	
ogs13	film cooler	component weight	251 lb.	HSH	
ogs11	film cooler	dimensions - envelope	22" dia. flange x 23.5" long, from bottom to top of flange	HSH	
ogs36	film cooler	intermediate in-facility storage criteria	consumable template has storage positions for 8 consumables with 11 in dia. bases	HSH	note 5
ogs03	film cooler	operating life	MTTF - 60 mos	HSH	
ogs05	film cooler	remote handling requirements	2 inch across flats for captive fasteners, 1-1/4 inch ACME thread, nut retainer, standard lifting bail for 5 ton and 17 ton crane hook	HSH	
ogs17	film cooler cleaner	component weight	1000 lb. max	HSH	
ogs16	film cooler cleaner	dimensions - envelope	to be verified after melter design is complete	HSH	
ogs37	film cooler cleaner	intermediate in-facility storage criteria	consumable template has storage positions for 8 consumables with 11 in dia. bases	HSH	note 5. On hold
ogs06	film cooler cleaner	operating life	MTTF - 12 mos	HSH	
ogs08	film cooler cleaner	remote handling requirements	3 inch across flats for captive fasteners, 1-1/4 inch ACME thread, nut retainer, standard lifting bail for 5 ton and 17 ton crane hook	HSH	
plv05	glass pool level detector	component weight	102 lb.	HSH	
plv07	glass pool level detector	dimensions - envelope	76.2" long to bottom of flange, 87.22" long to top of fixed lifting bail, 13" dia flange, total width is 13.94"	HSH	
plv09	glass pool level detector	intermediate in-facility storage criteria	consumable template has storage positions for 8 consumables with 11 in dia. bases	HSH	note 5
plv02	glass pool level detector	operating life	MTTF - 12 mos	HSH	
plv04	glass pool level detector	remote handling requirements	4 inch across flats for captive fasteners, 1-1/4 inch ACME thread, nut retainer, standard lifting bail for 5 ton and 17 ton crane hook	HSH	
por28	glass riser airlift lance	component weight	81 lb.	HSH	
por27	glass riser airlift lance	dimensions - envelope	87.75" long to top of plug, 8 IN. MINIMUM LIFTING BAIL HOOK CLEARANCE	HSH	
por31	glass riser airlift lance	intermediate in-facility storage criteria	consumable template has storage positions for 8 consumables with 11 in dia. bases	HSH	note 5

Tag	Component (2, 3)	Interface Detail (2, 3)	Interface Criteria	System/ Area Locators	Comments
por10	glass riser airlift lance	operating life	MTTF - life of melter	HSH	
por12	glass riser airlift lance	remote handling requirements	6 inch across flats for captive fasteners, 1-1/4 inch ACME thread, nut retainer, standard lifting bail for 5 ton and 17 ton crane hook	HSH	
enc45	jackbolt	adjustment interface/connection	PaR 3000 with parallel grip hand interfaces directly with adjuster. Max torque 185 in-lb.	HSH	
enc27	jackbolt	monitoring plan during startup and for general maintenance	final plan to be determined. May only need periodic (monthly basis) monitoring using in-cave cctv's	HSH	
enc44	jackbolt	quantity	21 total - 6 on east wall, 9 on north wall, 6 on west wall	HSH	
enc28	jackbolt	viewing criteria	direct visual with in-cave camera	HSH	Direct visibility or visibility with melter cave CCTV
enc03	melter - castable refractory	allowable sit times before bakeout	12 months+	BOF	Subcontractor design objective
enc54	melter - general	bolt torque limit for use of remote impact wrench	450 ft-lb. max	HSH	
env08	melter - general	clearance criteria for maintenance and equipment access	limited or no access at sides or under jumpers to east. Items on east side requiring visual monitoring to be angled to north or south.	HSH	Cable attachment points front and rear. Accessible with 300-750 ft-lb. variable torque impact wrench at jackbolt sites and jumper sites
env61	melter - general	clearance criteria for services under melter	no services or obstructions to exist between top of rails up to bottom of melter base (cross beams), except for tailhooks.	HSH	
env55	melter - general	component/consumable lifting design criteria	lifting bales/devices designed to 3 times yield	HSH	
enc10	melter - general	design for remote breakdown of melter in event of catastrophic failure	lid designed to be removed for decontamination and for access to pool for glass removal using remote operated in-cave equipment. Actual process for lid removal to be defined by project after melter design is complete.	HSH	Open Issue for alternate molten glass removal; drawings cited do not include cradle concept
enc31	melter - general	dimensions - envelope	172" N-S x 164" E-W x 146" high (installed component height from top of rail). 157" high to top of extended lifting bails, 134" high to top of melter shell.	HMH	
env13	melter - general	electrical grounding connections - location and connection details	use off-gas jumper, standby off-gas jumper, and two feed jumpers, requires that the submerged bed scrubber and feed tank be grounded.	GRE	
env14	melter - general	guard rails and safety barriers - configuration and loads for startup	guard rails and safety barriers are not a project requirement	HSH	note 5
enc16	melter - general	lifting bail design for consumables/ replaceable equipment	listed separately for each component - see remote handling criteria	HSH	
env05	melter - general	maintenance tool needs	discharge heater assembly handling stands, spreader bar and installation alignment/ guide tool; cover plates; melter wheel power package; electrode thermocouple installation and guide tool; commissioning glass pool sampler	HSH	
env68	melter - general	Radiation dose rate - external	sides: 39.6 rem/hr, front/back: 65.3 rem/hr, bottom: 12.5 rem/hr, top (no decon): 84.0 rem/hr, top (w/ decon) 4.50 rem/hr	HSH	Combined dose for 0" shielding. For other cases, see reference 2.2.P, p. 33 of 36.

Tag	Component (2, 3)	Interface Detail (2, 3)	Interface Criteria	System/ Area Locators	Comments
enc39	melter - general	thermal movement (maximum) of any nozzle, from centroid of melter	0.156"	HSH	
enc42	melter - general	tolerances - fabrication/assembly dimensional tolerances for flexible connections from melter datum point	+/- 0.078" (includes melter datum point location tolerance, +/- 0.032" for positioning lid wrt melter datum, 0.015" for position tolerance for each hole from machining)	HMH/HMP	specific tolerances defined on Subcontractor melter assembly drawings
enc43	melter - general	tolerances - fabrication/assembly dimensional tolerances for hard connections from melter datum point	+/- 0.078" (includes melter datum point location tolerance, +/- 0.032" for positioning lid wrt melter datum, 0.015" for position tolerance for each hole from machining)	HMH/HMP	specific tolerances defined on Subcontractor melter assembly drawings
enc15	melter - general	use of common ports between operating modes	bubblers and startup heaters are the only consumables that utilize a common port	HMP	
enc01	melter - general	weight - empty and operating	174,000 lb. without glass, 198,000 lb. with glass	HMH	approximate - tolerances not included
env58	melter - lid	handling cradle configuration	handling cradle will be attached to melter lid for flipping and shipping. Lifting/ transportation devices to bolt to cradle.	BOF	
env62	melter - lid	handling cradle requirements for assembly/transport	accommodates flipping of melter lid 180 degrees; does not interfere with castable refractory installation; protects lid studs, lid and refractory during bake-out and transportation; supports discharge chamber top surface to prevent buckling of lid side walls	BOF	
env63	melter - lid	handling cradle requirements for decommissioning	imported into cave via overpack; interfaces with in-cave embeds; is handled in cave with 12' lifting beam and remote tooling (impact wrench, etc.); able to be decontaminated; designed for high-cycle vibration from jackhammer during refractory breakout	HSH	
env57	melter - lid	handling criteria	melter lid must be safely flipped during assembly, transportation, and decommissioning (see env62 and env63 for specific requirements)	BOF	
env59	melter - lid	lifting/flipping loads	total lifted weight not to exceed 17 tons (capacity of in-cave crane)	HSH	
ogs18	melter - operation	annular space in-leakage air quality	unfiltered cave air	HOP	
gls01	melter - operation	glass composition - forming chemicals by waste envelope	reference composition for envelope D tank AZ101 is glass 98-31	HMP	
gls07	melter - operation	glass electrical conductivity	0.1 – 0.7 S/cm @ 1100 – 1200°C	HMP	
gls13	melter - operation	glass frit composition	Al2O3 - 13.57%, CaO - 0.40%, K2O - 2.01%, MgO - 2.11%, P2O5 - 3.42%, ZnO - 3.12%, B2O3 - 17.29%, Fe2O3 - 0.70%, Li2O - 2.51%, Na2O - 15.88%, SiO2 - 38.99%; Viscosity ~ 50 poise @ 1125°C, Conductivity ~0.35 S/cm @ 1125C, Liquidus < 900°C	HMP	**Composition subject to change based on long term idling requirements during commissioning.**
por26	melter - operation	glass pool level range during operation	43" - 43.8"	HMP	
gls09	melter - operation	glass pool liquidus temperature, range	<950°C	HMP	
htg13	melter - operation	glass pool temperature range	1100 - 1200° C w/ setpoint at 1150° C	HMP	
gls11	melter - operation	glass viscosity @ operating temp, range	10 to 150 Poise at 1100°C	HMP	
vnt04	melter - operation	heat loss through melter shell to cave, feed mode	35 kW max, excludes removal of lid components	C5V	

Tag	Component (2, 3)	Interface Detail (2, 3)	Interface Criteria	System/ Area Locators	Comments
vnt05	melter - operation	heat loss through melter shell to cave, idle mode	35 kW max, excludes removal of lid components	C5V	
env60	melter - operation	maximum/minimum ambient temperatures in melter cave	113F / 59F	C5V	
ogs24	melter - operation	offgas temperature downstream of film cooler - during feed - normal and design ranges	207 - 249 C	HOP	
ogs25	melter - operation	offgas temperature downstream of film cooler - during idle - normal and design ranges	313 C	HOP	
ogs20	melter - operation	offgas temperature in plenum - during feed - normal and design ranges	300 - 600 C	HOP	
ogs21	melter - operation	offgas temperature in plenum - during idle - normal and design ranges	1000 C	HOP	
wst06	melter - operation	waste feed characteristics - normal waste	per simulated waste used in pilot melter tests. will depend on actual composition of tank waste delivered to project. Tank AZ101 with 98-31 glass adequately defines waste composition for melter design purposes	HMP	
wst07	melter - operation	waste feed characteristics - range of feed variation	will depend on actual composition of tank waste delivered to project. Tank AZ101 with 98-31 glass adequately defines waste composition for melter design purposes	HMP	
fed12	melter - operation	waste feed distribution through feed nozzles with respect to operating modes	two nozzles are required for proper plenum pool cold cap distribution, regardless of operating mode	HMP	
env54	melter - seismic	in-structure seismic response spectra	Ref. 2.2.H, Plots 106, 107, 108 @ 0' elevation, Joint J-12-1, Node 5423	30	"Seismic Qualification of Seismic Category I/II Equipment and Tanks"
env66	melter - seismic	remote handling requirements for seismic restraints	hex head bolt, 2" across flats for engaging seismic pin with remote impact wrench.	HSH	pins are provided with each melter
res03	melter - seismic	restraint loads	west pin 180,317 lb. east/west, 109,012 lb. north/south, 210,708 lb. resultant. East pin 0 lb. east/west, 109,012 lb. north/south, 109,012 lb. resultant applied at 1'-5 1/2" above top of embedded plate (elev. 4'-2"). Vertical load at each tailhook restraint: 56,870 lb. upward	HSH	
res04	melter - seismic	restraint location	pins: 7.75" South of Col. Line K, on centerlines of rails; Tailhooks: pin centerlines 8.25" inboard of rail centerlines at elev. 2'-11.395" (0.395" above rail), south face mounts at 136.23" north of melter datum. North face of facility pin receiver plate to be 135.5" north of melter datum.	HSH	
res05	melter - seismic	restraint quantity	four restraints, including two "tailhooks" for overturning	HSH	

Tag	Component (2, 3)	Interface Detail (2, 3)	Interface Criteria	System/ Area Locators	Comments
env56	melter - seismic	seismic restraint bracket envelope	pins: east embed horiz mounting surface - 1'-8" x 4'-6" at elev. 2'-8 1/2"; West horiz - 1'-8" x 4'-6" at elev. 2'-8 1/2", vertical surface 1'-6" high x 4'-6" at 7'-2" from melter centerline.North edge of east/west embed at 10 3/4" / 4 1/4" south of building grid K. Tailhook: 6" wide bracket with pin hangs below melter 2.605" below top of rail just inside of wheels. Tailhook receiver dimension: 7.5" wide bracket w/ 3"dia. hole and 3.75" edge distance (including at clipped corners). Mat'l: 1.5" thk. 304L SS.	HSH	
env69	melter - seismic	seismic restraint embedment tolerances for manufacture	East embed: top of plate at flat to within 0.015"; West embed: top of plate east of vertical plate flat to within 0.015"; perpendicularity and flatness of east face if vertical plate: +/- 1/16" of 90 degree plane. Excluded from above areas of horizontal and vertical surfaces: A 45 degree dianonal 3/8" fillet plane at the intersection corner of the two plates. Fillet weld build-up shall not penetrate this plane. Plate length dimensions not listed above +/- 1/8".	CS&A	tolerances are needed to ensure that no additional modification of seismic lug assemblies is required in field.
env 70	melter - seismic	seismic restraint embedment tolerances for placement in field	East embed: location of north and west edges of plate +/- 1/8". Top of plate elevation +0", -1/8" and level within 1/16"; West embed: location of north and east edges of plate +/- 1/8". Top of plate at lug base area (east of vertical plate): elevation +0", -1/8" and level within 1/16", location of east foace of vertical plate +1/8", -0" of indicated distance from melter centerline and parallel to melter centerline within 1/16"	CS&A	
res06	melter - seismic	seismic restraint installation requirements	Restraint lug base north edge to be installed 5.5" south of melter datum; center of tongue to align with rail centerline. Hole in lug is marked with melter moved into position, then removed from base for machining hole. Lug base is welded in place and lug is realigned horizontally using shims on sides; belleville spring washers are used to lock in final vertical position. Lug base welds are bevel welds along pour cave walls and at top edge of west base, fillets elsewhere.	HSH	one-time set up required for first melter in cave will not apply to subsequent melters
res02	melter - seismic	seismic restraint interface configuration	Subcontractor designed pin attachment (WTP-M-21730) welds to embed in melter cave. Tailhook for uplift on north end: 2.5" dia. 3" long pins facing south and fitting into 3" dia. receiving holes. See env56	HSH	
env51	melter - transport	guidance system - criteria for locating and setting melter in facility	guidance and location tolerances of flanged wheels on west rail and seismic pins	HMH	
env28	melter - transport	loads and moments transferred to melter	Towing lug on north side of melter designed for 0.23 times melter weight	HMH	load is to drag full melter with some, but not all wheels seized up.

Tag	Component (2, 3)	Interface Detail (2, 3)	Interface Criteria	System/ Area Locators	Comments
env65	melter - transport	loads and moments transferred to melter	Towing lug on south side of melter designed for 0.5 times melter weight	HSH	load is to drag full melter from overpack with all of the wheels seized. Must overcome static friction of wheels on overpack rails. Lubrication will be applied to overpack rails prior to insertion of spent melter.
env19	melter - transport	max acceleration/deceleration x/y/z during transport (new melter only)	0.1 g	HMH	
env27	melter - transport	remote handling requirements for cave import	use PaR installed "shepherds hook" with capacity to drag melter from overpack.	HSH	
env31	melter - transport	stop/deceleration mechanism for melter import (into cave)	proximity switch/stop switch mounted on in-cave wall	HSH	
clg02	piping - cooling water	slope of cooling water piping	no slope required for operational purposes	PCW	must have the ability to blow out dry with air
enc40	piping - offgas nozzle	thermal movement	0.076"	HMP	
ogs38	piping - standby offgas	operating life	MTTF - life of melter	HSH	
prm05	plenum pressure sensor	component weight	170 lb., about the same as a blank plug	HSH	
prm07	plenum pressure sensor	dimensions - envelope	26" dia. x 64" tall	HSH	
prm09	plenum pressure sensor	intermediate in-facility storage criteria	consumable template has storage positions for 16 consumables with 7 in dia. bases	HSH	note 5
prm02	plenum pressure sensor	operating life	MTTF - life of melter	HSH	
prm04	plenum pressure sensor	remote handling requirements	7 inch across flats for captive fasteners, 1-1/4 inch ACME thread, nut retainer, standard lifting bail for 5 ton and 17 ton crane hook	HSH	
enc53	plugs - lid spares	operating life	MTTF - life of melter	HSH	
htg18	startup heater	component weight	1074 lb. for 5 heaters, 215 lb. each	HSH	
htg14	startup heater	dimensions - envelope	16.75" dia. flange x 64.0" to top of cable enclosure	HSH	
htg19	startup heater	intermediate in-facility storage criteria	consumable bucket and template to be devised by project	HSH	note 5
htg02	startup heater	operating life	MTTF - 3 mos	HSH	operating life is for heater elements. Rest of heater should last life of melter
htg04	startup heater	remote handling requirements	6 inch across flats for captive fasteners, 1-1/4 inch ACME thread, nut retainer, standard lifting bail for 5 ton and 17 ton crane hook	HSH	
htg21	thermocouple - discharge chamber	component weight	16 lb.	HSH	
htg24	thermocouple - discharge chamber	intermediate in-facility storage criteria	consumable template has storage positions for 16 consumables with 7 in dia. bases	HSH	note 5
tmp29	thermocouple - discharge chamber	operating life	MTTF - 12 mos	HSH	
htg25	thermocouple - discharge chamber	remote handling requirements	use standard lifting bail for 5 ton and 17 ton crane hook	HSH	

Tag	Component (2, 3)	Interface Detail (2, 3)	Interface Criteria	System/ Area Locators	Comments
htg22	thermocouple - discharge chamber thermowell	dimensions - envelope	5.25" dia plug x 58.19" from bottom of thermocouple to top of lifting bail	HSH	
tmp31	thermocouple - electrode extensions	component weight	16 lb.	HSH	
tmp32	thermocouple - electrode extensions	dimensions - envelope	5.25" dia plug x 61.69" from bottom of thermocouple to top of lifting bail	HSH	
tmp33	thermocouple - electrode extensions	intermediate in-facility storage criteria	consumable template has storage positions for 16 consumables with 7 in dia. bases	HSH	note 5
tmp34	thermocouple - electrode extensions	operating life	MTTF - 12 mos	HSH	
tmp35	thermocouple - electrode extensions	remote handling requirements	horizontal insertion	HSH	
tmp17	thermocouple - plenum/pool	component weight	16 lb.	HSH	
tmp26	thermocouple - plenum/pool	intermediate in-facility storage criteria	consumable template has storage positions for 16 consumables with 7 in dia. bases	HSH	note 5
tmp37	thermocouple - plenum/pool	operating life	MTTF - 4 mos	HSH	
tmp06	thermocouple - plenum/pool	remote handling requirements	use standard lifting bail for 5 ton and 17 ton crane hook	HSH	
tmp19	thermocouple - refractory	component weight	16 lb.	HSH	
tmp27	thermocouple - refractory	intermediate in-facility storage criteria	consumable template has storage positions for 16 consumables with 7 in dia. bases	HSH	note 5
tmp07	thermocouple - refractory	operating life	MTTF - greater than 12 mos	HSH	
tmp09	thermocouple - refractory	remote handling requirements	use standard lifting bail for 5 ton and 17 ton crane hook	HSH	
tmp30	thermowell - discharge chamber	operating life	MTTF - 60 mos	HSH	
tmp39	thermowell - plenum/pool	component weight	99 lb.	HSH	
tmp15	thermowell - plenum/pool	dimensions - envelope	13" dia flange x 94.52" long from bottom to top of fixed lifting bail	HSH	
tmp38	thermowell - plenum/pool	operating life	MTTF - 9 mos	HSH	
tmp18	thermowell - refractory	dimensions - envelope	7.0" dia x 113.84" long	HSH	
vnt07	vent insert - discharge chamber	operating life	MTTF - 60 mos	HSH	

Tag	Component (2, 3)	Interface Detail (2, 3)	Interface Criteria	System/ Area Locators	Comments
vnt06	vent line - discharge chamber	operating life	MTTF - 60 mos	HSH	
env42	wheels	friction coefficient between melter and facility melter rails	0.23	HMH	estimated value
env11	wheels	remote handling requirements	no remote adjustments required	HSH	
env47	wheels	type/materials	Demag Model DRS315, cast iron	HMH	
env52	wheels	wheel load capacity	48,500 lb. for Demag Model DRS315.	HMH	
env43	wheels	wheel load distribution - over all wheels	Max - 26,800 lb.	HMH	
env44	wheels	wheel location and spacing	outside, 148" rail span (c-c), east/west side: south wheel centerline 22.5"/24.5" from seismic pin respectively	HMH	
env45	wheels	wheel quantity	7 wheels per side, spaced approximately 20.55" center-to-center	HMH	

Notes

1 Column Descriptions
"Tag" - Detail identifier. Not to be reused.
"Component" - Description of specific melter SSC for which the interface detail is associated, use as a sorting column.
"Interface Detail" - Description of interface/design detail in question. Use "Component" column for complete detail description.
"Interface Criteria" - Interface/design data, based on requirements in the specification.
"System/Area Locators" - developed in accordance with project procedures, identifies impacted discipline.
"Comments" - For providing status and/or additional clarification.
2 Write key words first, followed by secondary description if necessary.
3 Use these columns together to fully define interface detail.
4 N/A - not applicable
5 Interproject interface detail, not a subcontractor/project interface detail.

RCRA Operating Record Cover Sheet

Document Number: 24590-HLW-PCN-ENV-11-003

Waste Management Records:

- ☐ **R101** List of Waste Management Areas
- ☐ **R102** Waste Analysis Records
- ☐ **R103** Waste Designation Information
- ☐ **R104** Waste Transfer Records
- ☐ **R105** Movement of Containerized Waste Onsite
- ☐ **R106** Release/Spill Records
- ☐ **R114** Field Change Request/Field Change Notice
- ☐ **R116** Field Monitoring / Surveillance Checklists
- ☐ **R119** Reserved
- ☐ **R120** Reserved
- ☐ **R126** Satellite and 90-Day Accumulation Area

Compliance Schedule Submittals:

- ☐ **R401** Pretreatment Facility
- ☐ **R402** LAW Facility
- ☐ **R403** HLW Facility
- ☐ **R404** Laboratory
- ☐ **R405** Balance of Facility
- ☐ **R406** WTP All Facilities
- ☐ **R407** Human Health & Ecological Risk Assessment

Other Operating Record Documents:

- ☐ **R601** Outgoing Correspondence (RCRA Permit Relating)
- ☐ **R602** Contingency Plan Implementation
- ☐ **R603** Closure Plan Deviation
- ☐ **R604** Permit Equivalency Notice (PEN)
- ☒ **R605** Permit Change Notice (PCN)
- ☐ **R606** Annual RCRA Permit Closure and Post-Closure Cost Adjustment Report
- ☐ **R607** Permit Modification
- ☐ **R608** Incoming Correspondence (RCRA Permit Relating)

Non-Operating Record Documents:

- ☐ **N101** Meeting Minutes
- ☐ **N102** Memoranda

Special Instructions to PDC:

Link CCNs:

237267

238624

240757

ISSUED BY
RPP-WTP PDC

R11434155

Quarter Ending 09/30/2011

24590-HLW-PCN-ENV-11-005

Hanford Facility RCRA Permit Modification Notification Form

Part III, Operating Unit 10

Waste Treatment and Immobilization Plant

Index

Page 2 of 2: Hanford Facility RCRA Permit, Part III, Operating Unit 10, Waste Treatment and Immobilization Plant

Hanford Facility RCRA Permit, Part III, Operating Unit 10, Waste Treatment and Immobilization Plant, Update Piping and Instrumentation Diagrams (P&ID) for the HLW Canister Decontamination Handling System (HDH) in Appendix 10.2.

Submitted by Co-Operator:

Donna Busche 7/25/11

D. M. Busche Date

Reviewed by ORP Program Office:

D. L. Noyes 8/17/11

Date

Quarter Ending 09/30/2011 24590-HLW-PCN-ENV-11-005

Hanford Facility RCRA Permit Modification Notification Form

Unit:	Permit Part:
Waste Treatment and Immobilization Plant	**Part III, Operating Unit 10**

Description of Modification:

The purpose of this Class 1 modification is to update the P&IDs for the HDH in Appendix 10.2 of the Dangerous Waste Permit (DWP). This PCN will replace 3 permit P&IDs incorporated into the DWP with 6 source P&IDs as indicated in the Table below. The additional drawings are the result of converting source drawings into multiple sheets (i.e., split/expanded) in an effort to provide clearer representation of the HDH system, including additional details for instrumentation.

The following source P&IDs are submitted to replace the permit P&IDs currently in Appendix 10.2:

Appendix 10.2			
Replace:	24590-HLW-M6-HDH-P0001, Rev 2	With:	24590-HLW-M6-HDH-00001001, Rev 0
	24590-HLW-M6-HDH-P0002, Rev 2		24590-HLW-M6-HDH-00002001, Rev 0
			24590-HLW-M6-HDH-00002002, Rev 0
			24590-HLW-M6-HDH-00002003, Rev 0
	24590-HLW-M6-HDH-P20001, Rev 2		24590-HLW-M6-HDH-20001001, Rev 0
			24590-HLW-M6-HDH-20001002, Rev 0

This modification requests Ecology approval and incorporation into the permit the specific changes to these P&IDs that are indicated by revision notes and clouds. The referenced P&IDs incorporate changes provided in applicable document change forms (e.g., DCN, SCN, SDDR, FCN, FCR, etc.) since the issuance of the last revision of the permitted drawing. All change documents were provided to Ecology in accordance with Condition III.10.C.9.h.

The following types of changes apply to the HDH P&IDs:

- Drawing converted from a single sheet to multi-sheet drawings
- Modified, deleted, and added notes and references
- Expanded instruments and logic controls information
- Incorporated change notices as specified in Revision History

This modification requests Ecology approval and incorporation of the following outstanding change document(s) into the permit. Although not yet incorporated into the revised documents included in this PCN, the listed outstanding change document(s) are intended to be incorporated into the permit.

None

WAC 173-303-830 Modification Class:	Class 1	Class 1	Class 2	Class 3
Please mark the Modification Class:	X			

Enter relevant WAC 173-303-830, Appendix I Modification citation number: A1 and A3

Enter wording of WAC 173-303-830, Appendix I Modification citation:

A.1. Administrative and informational changes

A.3. Equipment replacement or upgrading with functionally equivalent components (e.g., pipes, valves, pumps, conveyors, controls)

Modification Approved/Concur: [✓] Yes [ ] Denied (state reason below)

Reason for denial:

Reviewed by Ecology:

for 10·21·11

J. J. Wallace Date

24590-HLW-M6-HDH-00001001

HDH-VSL-00002 CANISTER DECON VESSEL 1 — 612 GALLONS 2FT 6IN ID x 16FT 9IN T-T

HDH-EJCTR-00003A CANISTER DECONTAMINATION VESSEL EJECTOR — 63 GPM 1365 LB/HR

HDH-EJCTR-00003B CANISTER DECONTAMINATION VESSEL EJECTOR — 63 GPM 1365 LB/HR

TSHH-0413 HLW-M6-HDH-00004002 F2

NITRIC ACID HLW-M6-HDH-00001002 B2 — HDH-HN-00004-T11A-02

HDH-TK-00002 CERIUM 4+ ADDITION HLW-M6-HDH-00001002 B2 — HDH-HC-00001-T11A-02

HOT/COLD WATER SUPPLY HLW-M6-HDH-00004002 E2 — HDH-WS-05131-S11C-011/2 — NOTE 19 — HDH-WS-05131-S11C-01 — NOTE 12 S11C OUT CAVE / T11A IN CAVE — HDH-WS-00009-T11A-01

HDH-HN-00003-T11A-02 — HDH-HN-00003-T11A-01

HDH-HN-00004-T11A-01

HDH-PJOG-00018

1" SPARE N10

HDH-PJOG-00016

HDH-PJOG-00017

1" SPARE N12

HDH-PJOG-00020

HDH-PJOG-00022

HDH-PJOG-00047

HDH-PJOG-00030

HDH-PJOG-00026

HDH-PJOG-00029

HDH-PJOG-00023

HDH-PJOG-00024

HDH-PJOG-00025

HDH-PJOG-00056

HDH-PJOG-00055

HDH-PJOG-00054

HDH-PJOG-00053

HDH-PJOG-00052

HDH-PJOG-00051

HDH-PJOG-00050

HDH-PJOG-00049

HDH-PJOG-00048

HDH-PJOG-00046

HDH-PJOG-00045

HDH-PJOG-00044

HDH-PJOG-00043

HDH-PJOG-00042

HDH-PJOG-00041

HDH-PJOG-00040

HDH-PJOG-00039

HDH-PJOG-00038

HDH-PJOG-00037

HDH-PJOG-00036

HDH-PJOG-00035

HDH-PJOG-00034

HDH-PJOG-00033

HDH-PJOG-00032

HDH-PJOG-00031

HDH-PJOG-00030

HDH-PJOG-00029

HDH-PJOG-00028

HDH-PJOG-00027

HDH-PJOG-00026

HDH-PJOG-00025

HDH-PJOG-00024

HDH-PJOG-00023

HDH-PJOG-00022

HDH-PJOG-00021

HDH-PJOG-00020

HDH-PJOG-00019

HDH-PJOG-00018

HDH-PJOG-00017

HDH-PJOG-00016

HDH-PJOG-00015

HDH-PJOG-00014

HDH-PJOG-00013

HDH-PJOG-00012

HDH-PJOG-00011

HDH-PJOG-00010

HDH-PJOG-00009

HDH-PJOG-00008

HDH-PJOG-00007

HDH-PJOG-00006

HDH-PJOG-00005

HDH-PJOG-00004

HDH-PJOG-00003

HDH-PJOG-00002

HDH-PJOG-00001

T11A S11P NOTES 12, 15, 17 IN CAVE / OUT CAVE

HDH-ZT-00010-S1P-01 — TE 0146 — TT 0146 FF — TI 0146

HDH-ZT-00008-S1P-01 — TE 0119 — TT 0119 FF — TI 0119 — HS 0119 — TI 0119B — TSHH 0119B — TC 0119B

YC-0404 HLW-M6-HDH-00004001 C8

TV-0119B HLW-M6-HDH-00004001 F8

OVERFLOW TO WASTE NEUTRALIZATION VESSEL HDH-VSL-00003

HDH-PA-00003-T11A-03 1:50 — HLW-M6-HDH-00002001 C8

HDH-PW-00001-T11A-03 1:50 — HDH-DMST-00001 VENT HLW-M6-HDH-00002001 F8

YC-0110/0178 HLW-M6-HDH-00001002 E8

YC-0111, -0178 HLW-M6-HDH-00001002 D8

LSH 0118B — LY — f(x) — LY — f(x) — LI 0118A HHH HH — LI 0118 — LI 0118B — PI 0129 — LY — DI 0117 — PT 0129 FF — LT 0118 FF — DT 0117 FF — LSHHH 0118A — LSLL 0118A

TYPE 1 — 4-1/4 — NOTE 10 JPSS-1 S11Y

HDH-V-00075 — HDH-V-00076 — HDH-V-00077

HDH-ZG-00013-S11C-001/2 — HDH-ZG-00014-S11C-001/2 — HDH-ZG-00015-S11C-001/2

NOTE 12 S11Y OUT CAVE / T11A IN CAVE

1:50 HDH-ZG-00015-T11A-001/2

1:50 HDH-ZG-00014-T11A-001/2

1:50 HDH-ZG-00013-T11A-001/2

NOTES 12, 13 IN CAVE T11A / OUT CAVE S11C

HDH-WS-05162-T11A-01 — HDH-WS-05120-S11C-01 — HDH-WS-05120-S11C-011/2 — HOT/COLD WATER RETURN HLW-M6-HDH-00004001 D8

EXHAUSTER HEADER ISOLATION VALVE — YC 0177 HS — O/C WITH DETENT LOCK — OPEN / CLOSE

PI 0150 — PT 0150 NOTE 5 FF — HDH-V-00183 — 001/2-803

ZI — ZSL 0177 — ZSH 0177 — VENT — YY 0177 — ISA-V-70275 3/8" TUBING ISA

FT 0152 L — FT 0152 FF

PCV 0149 — SET @ 25 PSIG — INSTRUMENT SERVICE AIR HLW-M6-ISA-00005 A6 — ISA-GL-38079-C12A-01 — ISA HDH

HDH-GQ-00049-C12A-01 — HDH-GQ-00049-C12A-001/2 — HDH-V-00142 — HDH-V-00128 FL — YV 0177

001/2-801 HDH-V-00183 — 001/2-801 (DSI) HDH-V-00055

001/2-802 (DSI) HDH-V-00056

NOTE 11 C12A T11A — HDH-V-00090 NOTE 8 — HDH-GQ-00048-T11A-001/2 — HDH-GQ-00020-T11A-001/2 — CMCM IVIII — OUT CAVE IN CAVE — HDH-GQ-00022

HDH-VSL-00002 NOTE 16

CANISTER DECON VESSEL HDH-VSL-00004 HLW-M6-HDH-20001001 D8 — HDH-GQ-00051-C12A-001/2 — HDH-V-00143

YC-0136 HLW-M6-HDH-00002001 H8

HPS-YC-3119 & ISA-YC-3058 HLW-M6-HDH-00003001 H8

VSL 2 WATER XFR HS 0198 — VSL 2 ACID XFR HS 0197

EJCTR 3A S/S HS 0173A — YC 0173 ZI HS O/C A/M — NOTE 18

EJCTR 3B S/S HS 0172A — YC 0172 ZI HS O/C A/M — NOTE 18

HDH-RK-00009 — VENDOR PACKAGE

UY — FF — ZSL 0172 — ZSH 0172 — S — YY 0172 — 3/8" TUBING ISA — ISA-V-70038 — VENT — NOTES 9, 14

STEAM HPS-DB-35100-S11C-02 C4 — 1:100 — HDH-DB-00027-S11C-02 — HDH-V-00271 NOTE 8 — FC HPS HDH — YV 0172

UY — FF — ZSL 0173 — ZSH 0173 — S — YY 0173 — 3/8" TUBING ISA — ISA-V-70039 — VENT — NOTES 9, 14

STEAM HPS-DB-35102-S11C-02 C3 — 1:100 — HDH-DB-00028-S11C-02 — HDH-V-00272 NOTE 8 — FC HPS HDH — YV 0173

Q OUT CAVE / CM III IN CAVE — S11C / T11A NOTES 12, 13

HDH-PA-00005-T11A-02 1:50 — HDH-PA-00031-T11A-02 1:50

HDH-DB-00016-T11A-02 — HDH-DB-00017-T11A-02 1:100 — HDH-DB-00018-T11A-02 — HDH-DB-00019-T11A-02 1:100

N03 N02 1:50 N01 NOTES 6, 7 — HDH-EJCTR-00003B

N03 N02 1:50 N01 NOTES 6, 7 — HDH-EJCTR-00003A

WASTE NEUTRALIZATION VESSEL HDH-VSL-00003 HLW-M6-HDH-00002001 C8 — HDH-PA-00032-T11A-02

WASTE NEUTRALIZATION VESSEL HDH-VSL-00003 HLW-M6-HDH-00002001 D8 — HDH-PA-00002-T11A-02

NOTES:

1. SEE DRAWINGS 24590-WTP-M6-50-00001 THROUGH 24590-WTP-M6-50-00008 FOR GENERAL NOTES, SYMBOLS AND LEGEND AND GENERAL SLOPE REQUIREMENTS.
2. CONTENTS OF THIS DOCUMENT ARE DANGEROUS WASTE PERMIT AFFECTING.
3. THE PRESSURE BOUNDARY FOR ALL COMPONENTS ON THIS DRAWING IS QUALITY LEVEL CM AND SEISMIC CATEGORY SC-III, UNLESS OTHERWISE NOTED.
4. ALL LINES SHOWN ON THIS DRAWING SHALL BE FREE DRAINING, UNLESS OTHERWISE NOTED.
5. LOCATE PRESSURE TRANSMITTER (PT-0150) CLOSE TO PRESSURE REGULATING VALVE (PCV-0149).
6. THE HIGHEST SECTION OF THE EJECTOR DISCHARGE LINES TO BE ABOVE OVERFLOW NOZZLE ELEVATION OF HDH-VSL-00002.
7. EJECTOR DISCHARGE PIPING TO HAVE A MINIMUM LENGTH OF STRAIGHT PIPE EQUIVALENT TO 10 TIMES THE PIPE OUTSIDE DIAMETER BEFORE THE FIRST BEND.
8. LOCATE VALVE WITHIN 3 FEET OF IN-CAVE BOUNDARY.
9. THE VALVE SHALL BE A SLOW OPENING VALVE TO PREVENT STEAM CONDENSATE HAMMER.
10. JPSS-1 SPECIFICATION AS DEFINED IN INSTRUMENT PIPING MATERIAL CLASS, SEE REFERENCE 3. SPECIFICATION CHANGE ALSO DEFINES AREA OF C&I RESPONSIBILITY.
11. A FLANGE KIT IS REQUIRED BETWEEN CARBON STEEL AND TITANIUM FLANGES TO PREVENT GALVANIC CORROSION.
12. A HELICOFLEX GASKET IS TO BE UTILIZED AT THE FLANGE INTERFACE BETWEEN STAINLESS STEEL AND TITANIUM.
13. LINES REQUIRE 34FT OF BAROMETRIC HEAD ABOVE THE OVERFLOW. THE BAROMETRIC HEAD REQUIREMENT SHALL BE FULLY CONTAINED IN R5 AREA.
14. ACTUATED STEAM SUPPLY VALVE TO BE LOCATED AT HIGH POINT IN THE LINE.
15. LID DESIGN REQUIRES AIR GAP FOR HPAV.
16. THIS IS A CANISTER DECON VESSEL SYMBOL.
17. USE REDUCING FLANGE FOR CONNECTION TO NOZZLES N15 AND N16.
18. ICN INTERLOCK CLOSES HDH-YV-0172, -0173 AND STOPS HDH-PMP-00001 ON HDH-TSHH-0126 OR HDH-LSHH-0125A.
19. MAIN HEADER REQUIRES 34 FT OF BAROMETRIC HEAD ABOVE THE MAXIMUM LIQUID LEVEL IN THE VESSEL.
20. THIS DRAWING IS CONVERTED FROM A SINGLE SHEET TO MULTI-SHEET DRAWINGS AND, IN PART, SUPERSEDES 24590-HLW-M6-HDH-00001 REV 5. THIS DRAWING INCLUDES INFORMATION FROM 24590-HLW-M6N-HDH-00021, -00039, -00040, -00055, 24590-HLW-M6PR-HDH-00002, 24590-HLW-M6LN-30-00001, AND 24590-WTP-SDDR-MS-07-00046.

HOLD/OPEN ITEMS:

NONE

REFERENCES:

1. 24590-HLW-3YD-HDH-00002, SYSTEM DESCRIPTION FOR THE HLW SYSTEM HDH CANISTER DECONTAMINATION HANDLING SYSTEM.
2. 24590-HLW-M5-V17T-00006, PROCESS FLOW DIAGRAM HLW VITRIFICATION HLW CANISTER DECON (SYSTEM HDH).
3. 24590-WTP-3PS-JXF0-T0001, ENGINEERING SPECIFICATION FOR INSTRUMENT PIPING MATERIAL CLASSES.

Please note that source, special nuclear, and byproduct materials, as defined in the Atomic Energy Act of 1954 (AEA) are regulated at the U.S. Department of Energy (DOE) facilities. Consequently by DOE acting pursuant to its AEA authority, DOE assumes, pursuant to AEA, it has sole and exclusive responsibility and authority to regulate source, special nuclear, and byproduct materials at DOE-owned nuclear facilities. Information contained herein on radionuclides is provided for process description purposes only.

DRAWING INDEX	
DWG NO	TITLE
24590-HLW-M6-HDH-00001001	HDH SYSTEM HDH-VSL-00002
24590-HLW-M6-HDH-00001002	HDH SYSTEM

REV	DESCRIPTION	ORG	CHKD	RVWD	APVD	DATE
0	ISSUED FOR CONSTRUCTION, SEE NOTE 20	ZC	VTD	GDC	TGB	5/26/11

REVISION HISTORY

Q QUALITY DESIGNATOR

ISSUED BY RPP-WTP PDC — ISSUE STATUS: ISSUED FOR CONSTRUCTION

	BY	DATE
ORIGINATOR	Zachary Cecil	5/26/11
CHECKER	Tina Johnson	5/26/11
APPROVER	T.G. Bond	5/26/11
REVIEWER	Richard Price	5-26-11 9:24 PM

CONTENT APPLICABLE TO ALARA? [X] YES [ ] NO
ADR NO. 24590-HLW-ADR-M-02-021 REV: 4
EMS SCREENING REQUIRED? [ ] YES [X] NO EMS INITIAL IF YES:

SCREENING IS REQUIRED FOR DRAWING TYPES IDENTIFIED IN 24590-WTP-GPP-SREG-002

E-SIZE - 44x34 COMPUTER GENERATED - MANUAL DESIGN CHANGES NOT PERMITTED

RIVER PROTECTION PROJECT
WASTE TREATMENT PLANT
2435 STEVENS CENTER PLACE
RICHLAND, WA 99354

CONTRACT No: DE-AC27-01RV14136

P&ID - HLW
HLW CANISTER DECONTAMINATION HANDLING SYSTEM
HDH-VSL-00002

SCALE: NONE

24590-HLW-M6-HDH-00001001 REV 0

R1178404

5/26/2011 9:02:16 AM

PLOTTED BY: gbrokes C:\Work\gbrokes\amd\26539\HLWM6HDH00001001.dgn

FORM E_SDN.DGN 02/2009

24590-HLW-M6-HDH-00002001

HDH-VSL-00003
WASTE NEUTRALIZATION VESSEL
—
4550 GAL (MOV)
7 FT ID x 17 FT T-T

TABLE "A"

INSTRUMENT TAG	DRAWING NUMBER	ZONE
YV-0172	24590-HLW-M6-HDH-00001001	B7
YV-0173	24590-HLW-M6-HDH-00001001	B7
YV-0179	24590-HLW-M6-HDH-00002001	F7
YV-0180	24590-HLW-M6-HDH-00002001	E7
YV-0272	24590-HLW-M6-HDH-20001001	B7
YV-0273	24590-HLW-M6-HDH-20001001	B7
HDH-PMP-00001 (YC-0163)	24590-HLW-M6-HDH-00002003	B3

TABLE "B"

INSTRUMENT TAG	DRAWING NUMBER	ZONE
YV-0172	24590-HLW-M6-HDH-00001001	B7
YV-0173	24590-HLW-M6-HDH-00001001	B7
YV-0272	24590-HLW-M6-HDH-20001001	B7
YV-0273	24590-HLW-M6-HDH-20001001	B7

NOTES:

1. SEE DRAWINGS 24590-WTP-M6-50-00001 THROUGH 24590-WTP-M6-50-00008 FOR GENERAL NOTES, SYMBOLS AND LEGEND, AND GENERAL SLOPE REQUIREMENTS.
2. CONTENTS OF THIS DOCUMENT ARE DANGEROUS WASTE PERMIT AFFECTING.
3. THE PRESSURE BOUNDARY FOR ALL COMPONENTS ON THIS DRAWING IS QUALITY LEVEL CM AND SEISMIC CATEGORY SC-III, UNLESS OTHERWISE NOTED.
4. ALL LINES SHOWN ON THIS DRAWING SHALL BE FREE DRAINING, UNLESS OTHERWISE NOTED.
5. HYDROGEN PEROXIDE ADDITION POINT. THE VERTICAL FOUR-INCH DIAMETER PIPE SECTION IS 18 INCHES LONG. LOCATE BLIND FLANGE APPROXIMATELY 42 INCHES FROM FLOOR.
6. DRILL NOMINAL 3/8 INCH HOLE IN EACH OF THE PIPES WHERE INDICATED. THIS HOLE SHALL BE LOCATED IN THE VESSEL HEAD SPACE ABOVE THE OVERFLOW LEVEL OF THE VESSEL. THE HOLE IS TO PREVENT BACK SIPHON.
7. LOCATE VALVE WITHIN 3 FEET OF THE CAVE BOUNDARY.
8. PROVIDE A HANDLE ON THE 4 INCH STAINLESS STEEL BLIND FLANGE FOR EASY ROTATION. BLIND IS TO HAVE ONE STUD BOLT HAND TIGHTENED TO HOLD THE FLANGE IN PLACE WHILE ALLOWING THE BLIND TO SWING OPEN AS NEEDED.
9. LEVEL TRANSMITTER HAS INTEGRAL LEVEL INDICATOR. MOUNT SO INDICATOR IS VISIBLE TO OPERATOR WHEN FILLING STANDPIPE.
10. INLET ELEVATION OF OVERFLOW LINE SHALL BE 4 INCHES LOWER THAN THAT OF EJECTOR SUCTION FOR HDH-EJCTR-00002A/B.
11. ICN INTERLOCK CLOSES YV-0172/0173/0179/0180/0272/0273 AND STOPS HDH-PMP-00001 ON HDH-VSL-00003 HI HI LEVEL. SEE TABLE "A".
12. ICN INTERLOCK CLOSES YV-0172/0173/0272/0273 ON HDH-VSL-00003 HI HI TEMP. SEE TABLE "B".
13. THIS DRAWING IS CONVERTED FROM A SINGLE SHEET TO MULTI -SHEET DRAWINGS AND, IN PART, SUPERSEDES 24590-HLW-M6-HDH -00002 REV 5. THIS DRAWING INCLUDES 24590-HLW-M6LN-HDH-00003, -00005, 24590-HLW-M6N-30-00007, -00008, -00011, 24590-HLW-M6N-HDH-00021, -00034, -00041, -00054, -00055, AND 24590-HLW-M6PR-HDH-00002.

HOLD/OPEN ITEMS:

NONE

REFERENCES:

1. 24590-HLW-3YD-HDH-00002, SYSTEM DESCRIPTION FOR THE HLW SYSTEM HDH CANISTER DECONTAMINATION HANDLING.

DRAWING INDEX

DWG NO	TITLE
24590-HLW-M6-HDH-00002001	HDH SYSTEM HDH-VSL-00003
24590-HLW-M6-HDH-00002002	HDH SYSTEM TRANSFER EJECTORS
24590-HLW-M6-HDH-00002003	HDH SYSTEM HDH-TRLY-00003

Please note that source, special nuclear, and byproduct materials, as defined in the Atomic Energy Act of 1954 (AEA) are regulated by DOE acting pursuant to its AEA authority. DOE asserts that pursuant to AEA, it has sole and exclusive responsibility and authority to regulate source, special nuclear, and byproduct materials at DOE-owned nuclear facilities. Information contained herein on radionuclides is provided for process description purposes only.

Q
QUALITY DESIGNATOR

REV	DESCRIPTION	ORG	CHKD	RVWD	APVD	DATE
0	ISSUED FOR CONSTRUCTION, SEE NOTE 13	ZSC	JJK	[illegible]	[illegible]	5/26/11

REVISION HISTORY

ISSUED BY RPP-WTP PDC
DATE
ISSUE STAMP

	BY	DATE
ORIGINATOR	Zachary Cearce	5/26/11
CHECKER	[illegible]	5/26/11
APPROVER	[illegible]	5/26/11
REVIEWER	[illegible]	5-26-11
		5/26/11

CONTENT APPLICABLE TO ALARA? [X] YES [ ] NO
ADR NO. 24590-HLW-ADR-M-02-021 REV: 4
EMS SCREENING REQUIRED? [ ] YES [ ] NO | EMS INITIAL IF YES: [illegible]

SCREENING IS REQUIRED FOR DRAWING TYPES IDENTIFIED IN 24590-WTP-GPP-SREQ-002

PROJECT No.	24590
SITE	HANFORD
AREA	200E
BUILDING No.	30

RIVER PROTECTION PROJECT
WASTE TREATMENT PLANT
2435 STEVENS CENTER PLACE
RICHLAND, WA 99354

CONTRACT No: DE-AC27-01RV14136

P&ID - HLW HLW CANISTER DECONTAMINATION HANDLING SYSTEM HDH-VSL-00003

SCALE: NONE
24590-HLW-M6-HDH-00002001
REV 0

"E" SIZE - 44 x 34
COMPUTER GENERATED - MANUAL DESIGN CHANGES NOT PERMITTED

R1137902

5/26/2011 8:42:53 AM

PLOTTED BY: gpickett
C:\Work\gpickett\dms03539\HLW\M6\HDH00002001.dgn

FORM E_SDN.DGN 02/2009

HDH-EJCTR-00057
WASTE NEUTRALIZATION
VESSEL EMPTYING EJECTOR
=
35 GPM
750 LB/HR

HDH-EJCTR-00002A
WASTE NEUTRALIZATION
VESSEL EJECTOR
=
58 GPM
1365 LB/HR

HDH-EJCTR-00002B
WASTE NEUTRALIZATION
VESSEL EJECTOR
=
58 GPM
1365 LB/HR

RLD-LSHH-3240 HLW-M6-RLD-00002003 G2
RLD-TSHH-3421 HLW-M6-RLD-00016001 D2
HS 0176A
YC ZI HS 0176 O/C A/M
HPS-YC-3119/ISA-YC-3058 HLW-M6-HDH-00003001 H8

LSLLL-0125A HLW-M6-HDH-00002001 F2
RLD-LSHH-3152A HLW-M6-RLD-00001002 F2
RLD-TSHH-3115 HLW-M6-RLD-00001002 E2
HS 0175A
YC ZI HS 0175 O/C A/M
HPS-YC-3119/ISA-YC-3058 HLW-M6-HDH-00003001 H8

LSLLL-0125A HLW-M6-HDH-00002001 E2
RLD-LSHH-3152A HLW-M6-RLD-00001002 E2
RLD-TSHH-3115 HLW-M6-RLD-00001002 E2
HS 0174A
YC ZI HS 0174 O/C A/M
HPS-YC-3119/ISA-YC-3058 HLW-M6-HDH-00003001 H8

O CM I III
S11C OUT CAVE
S11F CANISTER STORAGE

HDH-RK-00009
VENDOR PACKAGE

UY FF
S YY 0174 3/8" TUBING ISA
ISA-V-70088
VENT
ZSL 0174 ZSH 0174 YV 0174
HIGH PRESSURE STEAM HLW-M6-HDH-00003001 C4
HPS-DB-35101-S11C-02 1:100
HDH-DB-00029-S11C-02
HDH-V-00199 NOTE 7
HPS HDH FC
NO7 NO1 NO2 HDH-DB-00009-S11F-02
HDH-PJOG-00006 NOTE 6
HDH-DB-00009-S11F-011/2 1:100 NO1 NO2 HDH-DB-00024-S11F-011/2 1:100
CANISTER STORAGE CANISTER DECON
HDH-PJOG-00001
HDH-EJCTR-00002B
NO1 1:50 HDH-PA-00010-S11F-02 NOTE 5

UY FF
S YY 0175 3/8" TUBING ISA
ISA-V-70089
VENT
ZSL 0175 ZSH 0175 YV 0175
HIGH PRESSURE STEAM HLW-M6-HDH-00003001 C3
HPS-DB-35103-S11C-02 1:100
HDH-DB-00030-S11C-02
HDH-V-00200 NOTE 7
HPS HDH FC
NO1 NO2 HDH-DB-00010-S11F-02
HDH-PJOG-00007 NOTE 6
HDH-DB-00010-S11F-011/2 1:100 NO1 NO2 HDH-DB-00025-S11F-011/2 1:100
HDH-PJOG-00002
HDH-EJCTR-00002A
NO3 NO2 NOTE 5 NO1
1:50 HDH-PA-00009-S11F-02

UY FF
S YY 0176 3/8" TUBING ISA
ISA-V-70090
VENT
ZSL 0176 ZSH 0176 YV 0176
HIGH PRESSURE STEAM HLW-M6-HDH-00003001 C4
HPS-DB-35099-S11C-011/2 1:100
HDH-DB-00031-S11C-011/2
HDH-V-00201 NOTE 7
HPS HDH FC
NO9 NO1 NO2 HDH-DB-00011-S11F-011/2
HDH-PJOG-00008 NOTE 6
HDH-DB-00011-S11F-011/2 1:100 NO1 NO2 HDH-DB-00026-S11F-011/2
CANISTER STORAGE CANISTER DECON
HDH-PJOG-00003
HDH-EJCTR-00057
NO3 NO2 NOTE 5 NO1
1:50 HDH-PA-00054-S11F-011/2
CANISTER DECON C3 RINSE TUNNEL C5
HDH-PA-00054-S11F-011/2
RLD MANIFOLD FOR RLD-VSL-00008
HLW-M6-RLD-00016001 D8

S11F W31A
C5 C3
1:50 HDH-PA-00033-W31A-02 RLD-VSL-00007 HLW-M6-RLD-00001002 C8
HDH-PJOG-00014 NOTE 8
1:50 HDH-PA-00041-W31A-02 RLD-VSL-00007 HLW-M6-RLD-00001002 C8
HDH-PJOG-00015 NOTE 8

HDH-VSL-00003 HLW-M6-HDH-00002001 A3
HDH-PA-00053-S11F-011/2 1:50
HDH-PA-00007-S11F-02 1:50
HDH-PA-00008-S11F-02 1:50

NOTES:

1. SEE DRAWINGS 24590-WTP-M6-50-00001 THROUGH 24590-WTP-M6-50-00008 FOR GENERAL NOTES, SYMBOLS AND LEGEND, AND GENERAL SLOPE REQUIREMENTS.
2. CONTENTS OF THIS DOCUMENT ARE DANGEROUS WASTE PERMIT AFFECTING.
3. THE PRESSURE BOUNDARY FOR ALL COMPONENTS ON THIS DRAWING IS QUALITY LEVEL CM AND SEISMIC CATEGORY SC-III, UNLESS OTHERWISE NOTED.
4. ALL LINES SHOWN ON THIS DRAWING SHALL BE FREE DRAINING, UNLESS OTHERWISE NOTED.
5. EJECTOR DISCHARGE PIPING TO HAVE A MINIMUM LENGTH OF STRAIGHT PIPE EQUIVALENT TO 10 TIMES OF PIPE OUTSIDE DIAMETER BEFORE THE FIRST BEND.
6. STEAM SUPPLY LINES REQUIRE 34 FT OF BAROMETRIC HEAD ABOVE OVERFLOW. THE BAROMETRIC HEAD REQUIREMENT SHALL BE FULLY CONTAINED IN INCAVE/INCELL AREAS.
7. LOCATE VALVE WITHIN 3 FT OF THE CAVE BOUNDARY.
8. USE STAINLESS STEEL JACKET. CARBON STEEL PROHIBITED.
9. THIS DRAWING IS CONVERTED FROM A SINGLE SHEET TO MULTI -SHEET DRAWINGS AND IN PART, SUPERSEDES 24590-HLW-M6-HDH-00002 REV 5. THIS DRAWING INCLUDES 24590-HLW-M6LN-30-00004, 24590-HLW-M6N-30-00014, AND 24590-HLW-M6N-HDH-00041.

HOLD/OPEN ITEMS:

NONE

REFERENCES:

1. 24590-HLW-3YD-HDH-00002, SYSTEM DESCRIPTION FOR THE HLW SYSTEM HDH CANISTER DECONTAMINATION HANDLING.

Please note that source, special nuclear, and byproduct materials, as defined in the Atomic Energy Act of 1954 (AEA) are regulated at the U. S. Department of Energy (DOE) facilities exclusively by the DOE pursuant to its AEA authority. DOE asserts that pursuant to AEA, it has sole and exclusive responsibility and authority to regulate source, special nuclear, and byproduct materials at DOE-owned nuclear facilities. Information contained herein on radionuclides is provided for process description purposes only.

Q QUALITY DESIGNATOR

REVISION HISTORY

REV	DESCRIPTION	ORG	CHKD	RVWD/APVD	DATE
0	ISSUED FOR CONSTRUCTION, SEE NOTE 9	ZC	JK	CDR [illegible]	5/26/11

ISSUED BY RPP-WTP PDC
DATE
ISSUE STAMP

	PROJECT No.	24590
	SITE	HANFORD
	AREA	200E
	BUILDING No.	30

	BY	DATE
ORIGINATOR	Zachary Crow	5/23/11
CHECKER	J. Krammerman	5/23/11
APPROVER	[illegible]	5/24/11
REVIEWER	Richard Peterson	5-24-11
		5-25-11

CONTENT APPLICABLE TO ALARA? [X] YES [ ] NO
ADR NO. 24590-HLW-ADR-M-02-021 REV: 4
EM& SCREENING REQUIRED? [X] YES [ ] NO | EM& INITIAL IF YES [illegible]
SCREENING IS REQUIRED FOR DRAWING TYPES IDENTIFIED IN 24590-WTP-GPP-SREG-002

BECHTEL NATIONAL, INC.
RIVER PROTECTION PROJECT
WASTE TREATMENT PLANT
2435 STEVENS CENTER PLACE
RICHLAND, WA 99354

CONTRACT No: DE-AC27-01RV14136

P&ID - HLW HLW CANISTER DECONTAMINATION HANDLING SYSTEM TRANSFER EJECTORS

SCALE: NONE
24590-HLW-M6-HDH-00002002
REV 0

E1 SIZE - 44 x 34
COMPUTER GENERATED - MANUAL DESIGN CHANGES NOT PERMITTED
R1137608
5/20/2011 3:43:20 PM

FORM E_SDN.DGN 02/2009

PLOTTED BY: eidorn C:\Work\eidorn\atms\38339\hlw_M6\rl\24590-2002-sh1.dgn

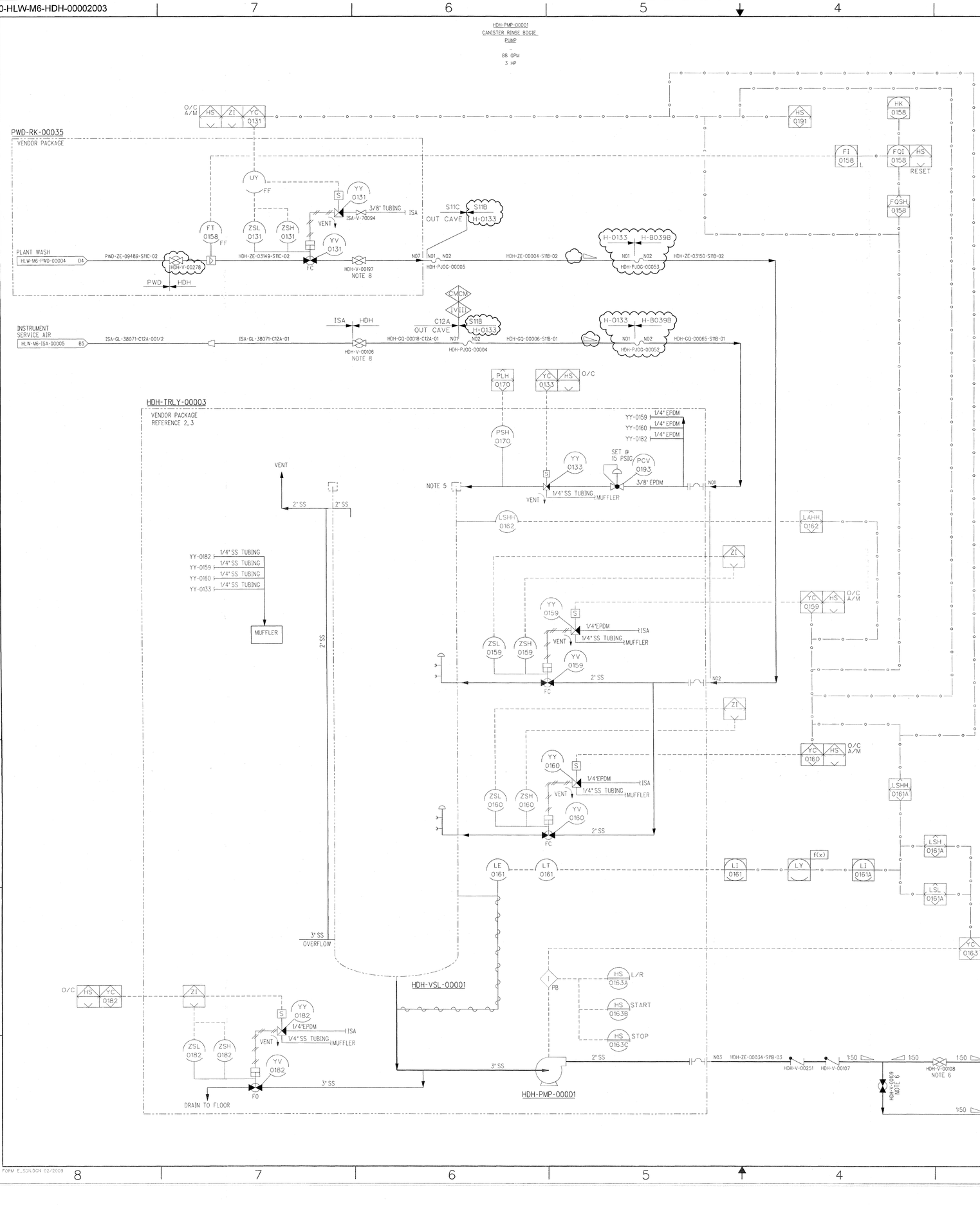

NOTES:

1. SEE DRAWINGS 24590-WTP-M6-50-00001 THROUGH 24590-WTP-M6-50-00008 FOR GENERAL NOTES, SYMBOLS AND LEGEND, AND GENERAL SLOPE REQUIREMENTS.
2. CONTENTS OF THIS DOCUMENT ARE DANGEROUS WASTE PERMIT AFFECTING.
3. THE PRESSURE BOUNDARY FOR ALL COMPONENTS ON THIS DRAWING IS QUALITY LEVEL CM AND SEISMIC CATEGORY SC-III, UNLESS OTHERWISE NOTED.
4. ALL LINES SHOWN ON THIS DRAWING SHALL BE FREE DRAINING, UNLESS OTHERWISE NOTED.
5. AN INFLATABLE SEAL IS INSTALLED AT THE TOP OF THE CONTAINER.
6. VALVE TO BE LOCATED NEAR THE SHIELD DOOR TO ALLOW FOR OPERATOR'S MANUAL OPERATION AT THE SHIELD DOOR OPENING.
7. ICN INTERLOCK CLOSES YV-0172/0173/0179/0180/0272/0273 AND STOPS HDH-PMP-00001 ON HDH-VSL-00003 HI HI LEVEL.
8. LOCATE VALVE WITHIN 3 FEET OF CAVE BOUNDARY.
9. THIS DRAWING IS CONVERTED FROM A SINGLE SHEET TO MULTI-SHEET DRAWINGS AND, IN PART, SUPERSEDES 24590-HLW-M6-HDH-00002 REV 5. THIS DRAWING INCLUDES INFORMATION FROM 24590-HLW-M6LN-30-00004, 24590-HLW-M6LN-HDH-00001, 24590-HLW-M6N-HDH-00032, AND -00041.

HOLD/OPEN ITEMS:

NONE

REFERENCES:

1. 24590-HLW-3YD-HDH-00002, SYSTEM DESCRIPTION FOR THE HLW SYSTEM HDH CANISTER DECONTAMINATION HANDLING.
2. 24590-QL-POA-MQTS-00002-01-127, DRAWING-DECONTAMINATION VESSEL ASSEMBLY.
3. 24590-QL-POA-MQTS-00002-01-00222, DRAWING-CANISTER RINSE BOGIE PNEUMATIC SYSTEM SCHEMATIC.

Please note that source, special nuclear, and byproduct materials, as defined in the Atomic Energy Act of 1954 (AEA), as related to U.S. Department of Energy (DOE) facilities exclusively by DOE acting pursuant to its AEA authorities, and not by DOE acting pursuant to AEA, it has not and exclusive responsibility and authority, regulatory or otherwise, for source, special nuclear, and byproduct materials at DOE-owned nuclear facilities. Information contained on radionuclides is provided for process description purposes only.

REV	DESCRIPTION	ORG	CHKD	RVWD	APVD	DATE
0	ISSUED FOR CONSTRUCTION, SEE NOTE 9	ZC	JK	EJP	Mary	5/24/11

QUALITY DESIGNATOR: Q

REVISION HISTORY

ISSUED BY RPP-WTP PDC — DATE

	BY	DATE
ORIGINATOR	Zachary Cross	5/23/11
CHECKER	J. Krumholz	5/23/11
APPROVER		5/24/11
REVIEWER		5-24-11
		5-25-11

CONTENT APPLICABLE TO ALARA? [X] YES [ ] NO
ADR NO. 24590-HLW-ADR-M-02-027 REV: 1
EMS SCREENING REQUIRED? [ ] YES [X] NO | EMS INITIAL IF YES ///

PROJECT No.	24590
SITE	HANFORD
AREA	200E
BUILDING No.	30

BECHTEL

RIVER PROTECTION PROJECT
WASTE TREATMENT PLANT
2435 STEVENS CENTER PLACE
RICHLAND, WA 99354

CONTRACT No: DE-AC27-01RV14136

P&ID - HLW HLW CANISTER DECONTAMINATION HANDLING SYSTEM HDH-TRLY-00003

SCALE: NONE

24590-HLW-M6-HDH-00002003

REV 0

R5137809

SCREENING IS REQUIRED FOR DRAWING TYPES IDENTIFIED IN 24590-WTP-GPP-SREG-002

E SIZE - 44x34
COMPUTER GENERATED - MANUAL DESIGN CHANGES NOT PERMITTED

FORM E_SCNDGN 02/2009

PLOTTED BY: eldorn

C:\Work\eldorn\dms\2835\HLW\M6\HDH00002003.dgn

5/20/2011 3:46:11 PM

24590-HLW-M6-HDH-20001001

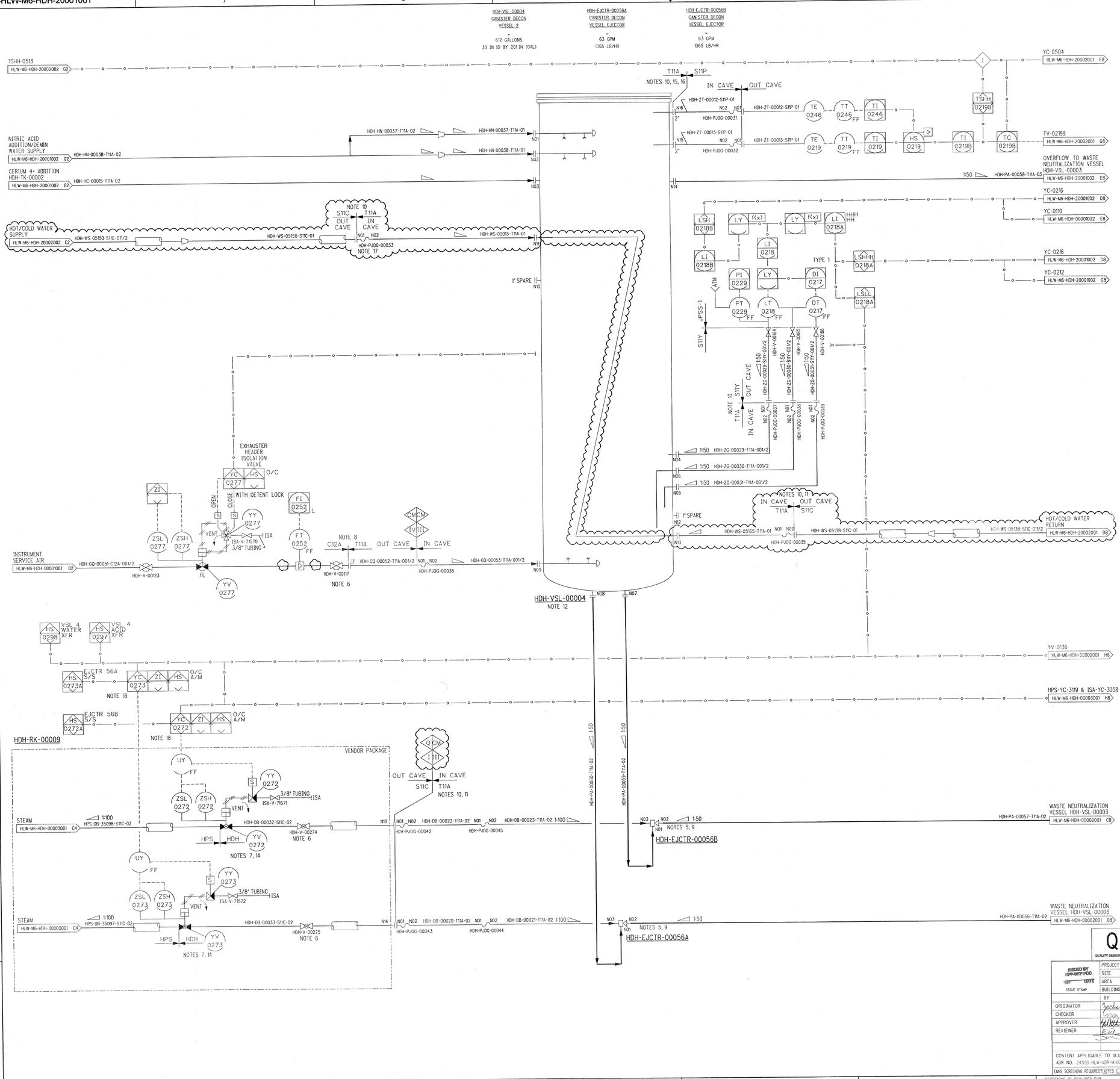

NOTES:

1. SEE DRAWINGS 24590-WTP-M6-50-00001 THROUGH 24590-WTP-M6-50-00008 FOR GENERAL NOTES, SYMBOLS AND LEGEND, AND GENERAL SLOPE REQUIREMENTS.
2. CONTENTS OF THIS DOCUMENT ARE DANGEROUS WASTE PERMIT AFFECTING.
3. THE PRESSURE BOUNDARY FOR ALL COMPONENTS ON THIS DRAWING IS QUALITY LEVEL CM AND SEISMIC CATEGORY SC-III, UNLESS OTHERWISE NOTED.
4. ALL LINES SHOWN ON THIS DRAWING ARE FREE DRAINING, UNLESS OTHERWISE NOTED.
5. EJECTOR DISCHARGE PIPING TO HAVE A MINIMUM LENGTH OF STRAIGHT PIPE EQUIVALENT TO 10 TIMES THE PIPE OUTSIDE DIAMETER BEFORE FIRST BEND.
6. LOCATE VALVE WITHIN 3 FEET OF THE IN-CAVE BOUNDARY.
7. THE VALVE SHALL BE A SLOW OPENING VALVE TO PREVENT STEAM CONDENSATE HAMMER.
8. A FLANGE KIT IS REQUIRED BETWEEN CARBON STEEL AND TITANIUM FLANGES TO PREVENT GALVANIC CORROSION.
9. THE HIGHEST SECTION OF THE EJECTOR DISCHARGE LINES TO BE ABOVE OVERFLOW NOZZLE ELEVATION OF HDH-VSL-00004.
10. A HELICOFLEX GASKET IS TO BE UTILIZED AT THE FLANGE INTERFACE BETWEEN STAINLESS STEEL AND TITANIUM.
11. LINES REQUIRE 34FT OF BAROMETRIC HEAD ABOVE THE OVERFLOW. THE BAROMETRIC HEAD REQUIREMENT SHALL BE FULLY CONTAINED IN R5 AREA.
12. THIS IS A CANISTER DECON VESSEL SYMBOL.
13. INSTRUMENTS ARE QUALITY LEVEL CM. INSTRUMENT, ROOT VALVE, AND TUBING CONFINEMENT REQUIREMENTS ARE THE SAME AS THE CONNECTING PIPING.
14. ACTUATED STEAM SUPPLY VALVE TO BE LOCATED AT HIGH POINT IN THE LINE.
15. LID DESIGN REQUIRES AIR GAP FOR HPAV.
16. USE REDUCING FLANGE FOR CONNECTIONS TO NOZZLES N15 AND N16.
17. MAIN HEADER REQUIRES 34 FT OF BAROMETRIC HEAD ABOVE THE MAXIMUM LIQUID LEVEL IN THE VESSEL.
18. ICN INTERLOCK CLOSES YC-0272/0273 ON HDH-TSHH-0126 OR HDH-LSHH-0125A.
19. THIS DRAWING IS CONVERTED FROM A SINGLE SHEET TO MULTI-SHEET DRAWINGS AND, IN PART, SUPERSEDES 24590-HLW-M6-HDH-20001 REV 4. THIS DRAWING INCLUDES INFORMATION FROM 24590-HLW-M6N-HDH-00021, -00039, -00043, -00055, 24590-HLW-M6PR-HDH-00002, AND 24590-HLW-M6LN-30-00001.

HOLD/OPEN ITEMS:

NONE

REFERENCES:

1. 24590-HLW-3YD-HDH-00002, SYSTEM DESCRIPTION FOR HLW SYSTEM HDH CANISTER DECONTAMINATION HANDLING SYSTEM.
2. 24590-HLW-M5-V17T-00006, PROCESS FLOW DIAGRAM HLW VITRIFICATION HLW CANISTER DECON (SYSTEM HDH).
3. 24590-WTP-3PS-JXF0-T0001, ENGINEERING SPECIFICATION FOR INSTRUMENT PIPING MATERIAL CLASSES.

Please note that source, special nuclear, and byproduct materials, as defined in the Atomic Energy Act of 1954 (AEA) are regulated at the U. S. Department of Energy (DOE) facilities exclusively by the DOE pursuant to its AEA authority. DOE asserts that pursuant to AEA, it has sole and exclusive responsibility and authority to regulate source, special nuclear, and byproduct materials at DOE-owned nuclear facilities. Information contained herein on radionuclides is provided for process description purposes only.

DRAWING INDEX	
DWG NO	TITLE
24590-HLW-M6-HDH-20001001	HDH SYSTEM HDH-VSL-00004
24590-HLW-M6-HDH-20001002	HDH SYTEM HDH-DMST-00001

REVISION HISTORY						
REV	DESCRIPTION	ORG	CHKD	RVWD	APVD	DATE
0	ISSUED FOR CONSTRUCTION, SEE NOTE 19	RC	MR	RSS	[illegible]	5/26/11

Q QUALITY DESIGNATOR

ISSUED BY ORP-WTP PDC	PROJECT No.	24590
DATE	SITE	HANFORD
ISSUE STAMP	AREA	200E
	BUILDING No.	30

	BY	DATE
ORIGINATOR	Zachary Crane	5/26/11
CHECKER	[illegible]	5/26/11
APPROVER	[illegible]	5/26/11
REVIEWER	[illegible]	5-26-11

CONTENT APPLICABLE TO ALARA? [X] YES [ ] NO
ADR NO. 24590-HLW-ADR-M-02-021 REV: 4
EMAIL SCREENING REQUIRED? [X] YES [ ] NO EMAIL INITIAL IF YES

SCREENING IS REQUIRED FOR DRAWING TYPES IDENTIFIED IN 24590-WTP-GPP-SREG-002

"E" SIZE - 44 x 34
COMPUTER GENERATED - MANUAL DESIGN CHANGES NOT PERMITTED

RIVER PROTECTION PROJECT
WASTE TREATMENT PLANT
2435 STEVENS CENTER PLACE
RICHLAND, WA 99354

CONTRACT No: DE-AC27-01RV14136

P&ID - HLW HLW CANISTER DECONTAMINATION HANDLING SYSTEM HDH-VSL-00004

SCALE: NONE

24590-HLW-M6-HDH-20001001

REV 0

R1132415

5/26/2011 9:23:32 AM

C:\Work\pjacobes\dms\0359\HLW\M6\HDH\20001001.dgn

PLOTTED BY: pjacobes

FORM E_SIZ.DGN 02/2009

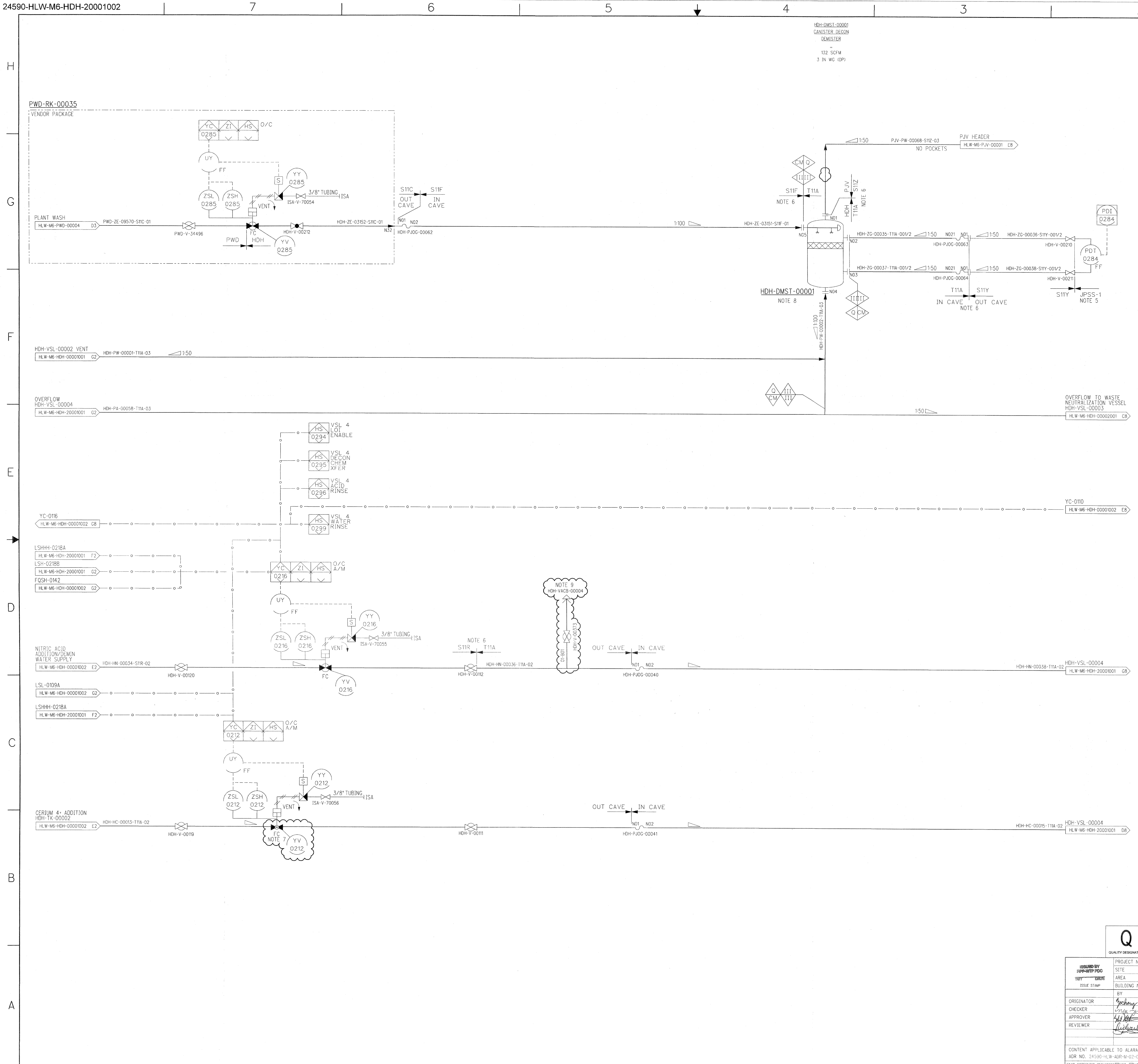

NOTES:

1. SEE DRAWINGS 24590-WTP-M6-50-00001 THROUGH 24590-WTP-M6-50-00008 FOR GENERAL NOTES, SYMBOLS AND LEGEND, AND GENERAL SLOPE REQUIREMENTS.
2. CONTENTS OF THIS DOCUMENT ARE DANGEROUS WASTE PERMIT AFFECTING.
3. THE PRESSURE BOUNDARY FOR ALL COMPONENTS ON THIS DRAWING IS QUALITY LEVEL CM AND SEISMIC CATEGORY, SC-III, UNLESS OTHERWISE NOTED.
4. ALL LINES SHOWN ON THIS DRAWING ARE FREE DRAINING, UNLESS OTHERWISE NOTED.
5. JPSS-1 SPECIFICATION DEFINED IN INSTRUMENT PIPING MATERIAL CLASSES, SEE REFERENCE 3. SPECIFICATION CHANGE ALSO DEFINES AREA OF C&I RESPONSIBILITY.
6. A HELICOFLEX GASKET IS TO BE UTILIZED AT THE FLANGE INTERFACE BETWEEN STAINLESS STEEL AND TITANIUM.
7. MINIMIZE LENGTH OF PIPING BETWEEN HDH-TK-00002 SHOWN ON 24590-HLW-M6-HDH-00001002 AND YC-0212.
8. THIS IS A DEMISTER SYMBOL.
9. LOCATE VACUUM BREAKER AT HIGH POINT OF LINE.
10. THIS DRAWING IS CONVERTED FROM A SINGLE SHEET TO MULTI-SHEET DRAWINGS AND, IN PART, SUPERSEDES 24590-HLW-M6-HDH-20001 REV 4. THIS DRAWING INCLUDES INFORMATION FROM 24590-HLW-M6N-HDH-00043, -00046, AND -00055.

HOLD/OPEN ITEMS:

NOTE

REFERENCES:

1. 24590-HLW-3YD-HDH-00002, SYSTEM DESCRIPTION FOR THE HLW SYSTEM HDH CANISTER DECONTAMINATION HANDLING SYSTEM.
2. 24590-HLW-M5-V17T-00006, PROCESS FLOW DIAGRAM HLW VITRIFICATION HLW CANISTER DECON (SYSTEM HDH).
3. 24590-WTP-3PS-JXF0-T0001, ENGINEERING SPECIFICATION FOR INSTRUMENT PIPING MATERIAL CLASSES.

Please note that source, special nuclear, and byproduct materials, as defined in the Atomic Energy Act of 1954 (AEA) are regulated at the U. S. Department of Energy (DOE) facilities exclusively by DOE acting pursuant to its AEA authority. DOE asserts that pursuant to AEA, it has sole and exclusive responsibility and authority to regulate source, special nuclear, and byproduct materials at DOE-owned nuclear facilities. Information contained herein on radionuclides is provided for process description purposes only.

Q
QUALITY DESIGNATOR

REV	DESCRIPTION	ORG	CHKD	RVWD	APVD	DATE
0	ISSUED FOR CONSTRUCTION, SEE NOTE 10	ZC	[signature]	RDB	[signature]	5/26/11

REVISION HISTORY

ISSUED BY RPP-WTP PDC
INIT DATE
ISSUE STAMP

PROJECT No.	24590
SITE	HANFORD
AREA	200E
BUILDING No.	30

RIVER PROTECTION PROJECT
WASTE TREATMENT PLANT
2435 STEVENS CENTER PLACE
RICHLAND, WA 99354

	BY	DATE
ORIGINATOR	Zachary Cross	5-19-11
CHECKER	[signature]	5-19-11
APPROVER	[signature]	5-26-11
REVIEWER	Richard Peters	5-24-11
	[signature]	5-25-11

CONTRACT No: DE-AC27-01RV14136

P&ID - HLW CANISTER DECONTAMINATION HANDLING SYSTEM HDH-DMST-00001

CONTENT APPLICABLE TO ALARA? [X] YES [ ] NO
ADR NO. 24590-HLW-ADR-M-02-021 REV: 4
E&NS SCREENING REQUIRED? [X] YES [ ] NO E&NS INITIAL IF YES [initials]

SCALE: NONE

24590-HLW-M6-HDH-20001002 REV 0

RCRA Operating Record Cover Sheet

Document Number: 24590-HLW-PCN-ENV-11-005

ISSUED BY
RPP-WTP PDC

Waste Management Records:

- ☐ **R101** List of Waste Management Areas
- ☐ **R102** Waste Analysis Records
- ☐ **R103** Waste Designation Information
- ☐ **R104** Waste Transfer Records
- ☐ **R105** Movement of Containerized Waste Onsite
- ☐ **R106** Release/Spill Records
- ☐ **R114** Field Change Request/Field Change Notice
- ☐ **R116** Field Monitoring / Surveillance Checklists
- ☐ **R119** Reserved
- ☐ **R120** Reserved
- ☐ **R126** Satellite and 90-Day Accumulation Area

Compliance Schedule Submittals:

- ☐ **R401** Pretreatment Facility
- ☐ **R402** LAW Facility
- ☐ **R403** HLW Facility
- ☐ **R404** Laboratory
- ☐ **R405** Balance of Facility
- ☐ **R406** WTP All Facilities
- ☐ **R407** Human Health & Ecological Risk Assessment

Other Operating Record Documents:

- ☐ **R601** Outgoing Correspondence (RCRA Permit Relating)
- ☐ **R602** Contingency Plan Implementation
- ☐ **R603** Closure Plan Deviation
- ☐ **R604** Permit Equivalency Notice (PEN)
- ☒ **R605** Permit Change Notice (PCN)
- ☐ **R606** Annual RCRA Permit Closure and Post-Closure Cost Adjustment Report
- ☐ **R607** Permit Modification
- ☐ **R608** Incoming Correspondence (RCRA Permit Relating)

Non-Operating Record Documents:

- ☐ **N101** Meeting Minutes
- ☐ **N102** Memoranda

Special Instructions to PDC:

Link CCNs:

237290

238626

240917

Quarter Ending 12/31/2011 24590-LAB-PCN-ENV-11-001

Hanford Facility RCRA Permit Modification Notification Form
Part III, Operating Unit 10
Waste Treatment and Immobilization Plant

Index

Page 2 of 4: Hanford Facility RCRA Permit, Part III, Operating Unit 10, Waste Treatment and Immobilization Plant
Replace Piping and Instrumentation Diagrams (P&ID) for the LAB Radioactive Liquid Waste Disposal System in Appendix 11.2 of the Dangerous Waste Permit (DWP).

Submitted by Co-Operator:

Donna Busche 9/26/11
D. M. Busche Date

Reviewed by ORP Program Office:

Thomas M. Brown for 10/19/2011
D. L. Noyes Date

Quarter Ending 12/31/2011

24590-LAB-PCN-ENV-11-001

Hanford Facility RCRA Permit Modification Notification Form

Unit:	Permit Part:
Waste Treatment and Immobilization Plant	**Part III, Operating Unit 10**

Description of Modification:

The purpose of this Class 1 prime modification is to update the P&IDs for the LAB RLD System in Appendix 11.2 of the DWP. The five permit P&IDs incorporated into the DWP are being replaced with 13 source P&IDs as indicated in the table below. The increase in the number of drawings submitted results from converting the source drawings into two or more drawings to provide a clearer representation of the RLD system, including additional details on instrumentation and logic controls.

Appendix 11.2			
Replace:	24590-LAB-M6-RLD-P0001, Rev. 2	With:	24590-LAB-M6-RLD-00001001, Rev. 1
			24590-LAB-M6-RLD-00001002, Rev. 0
			24590-LAB-M6-RLD-00001003, Rev. 0
			24590-LAB-M6-RLD-00001004, Rev. 0
	24590-LAB-M6-RLD-P0002, Rev. 1		24590-LAB-M6-RLD-00002001, Rev. 1
			24590-LAB-M6-RLD-00002003, Rev. 0
	24590-LAB-M6-RLD-P0006, Rev. 1		24590-LAB-M6-RLD-00006001, Rev. 0
			24590-LAB-M6-RLD-00006002, Rev. 0
			24590-LAB-M6-RLD-00006003, Rev. 0
	24590-LAB-M6-RLD-P0007, Rev. 1		24590-LAB-M6-RLD-00007001, Rev. 0
			24590-LAB-M6-RLD-00007002, Rev. 0
	24590-LAB-M6-RLD-P0008, Rev. 1		24590-LAB-M6-RLD-00008001, Rev. 0
			24590-LAB-M6-RLD-00008002, Rev. 0

This modification requests Ecology approval and incorporation into the permit the specific changes to these P&IDs that are indicated by revision notes and clouds. The referenced P&IDs include changes provided in applicable document change forms (e.g., DCN, SCN, SDDR, FCN, FCR, etc.) that were submitted to Ecology in accordance with Condition III.10.C.9.h. In addition, the P&IDs include changes associated with the resolution to comments on change documents since the issuance of the last revision of the permitted drawings.

The following identifies the significant changes to the drawings:

- Drawing converted from a single sheet to multi-sheet drawings
- Expanded instruments and logic controls information
- Modified, deleted, and added notes, holds, and references
- Incorporated changes from change documentation identified in the final note on each drawing

This modification requests Ecology approval and incorporation of the following list of outstanding Document Change Notices (DCN) into the permit. Although not yet incorporated into the revised documents attached to this PCN, this list of outstanding DCNs is intended to be incorporated into this modification.

24590-LAB-M6-RLD-00001001, Rev. 1:

- 24590-LAB-M6LN-RLD-00009

24590-LAB-M6-RLD-00001002, Rev. 0:

- 24590-LAB-M6LN-RLD-00004
- 24590-LAB-M6LN-RLD-00009
- 24590-LAB-M6N-RLD-00075

Quarter Ending 12/31/2011

24590-LAB-PCN-ENV-11-001

24590-LAB-M6-RLD-00001003, Rev. 0:
- 24590-LAB-M6LN-RLD-00009
- 24590-LAB-M6N-RLD-00075

24590-LAB-M6-RLD-00001004, Rev. 0:
- 24590-LAB-M6LN-RLD-00009
- 24590-LAB-M6N-RLD-00075

24590-LAB-M6-RLD-00002001, Rev. 1:
- 24590-LAB-M6LN-RLD-00009

24590-LAB-M6-RLD-00002003, Rev. 0:
- 24590-LAB-M6N-RLD-00075

24590-LAB-M6-RLD-00006001, Rev. 0:
- 24590-LAB-M6LN-RLD-00007
- 24590-LAB-M6N-RLD-00079

24590-LAB-M6-RLD-00006002, Rev. 0:
- 24590-LAB-M6LN-RLD-00007

24590-LAB-M6-RLD-00006003, Rev. 0:
- 24590-LAB-M6LN-RLD-00007

24590-LAB-M6-RLD-00007001, Rev. 0:
- 24590-LAB-M6LN-RLD-00004

24590-LAB-M6-RLD-00007002, Rev. 0:
- 24590-LAB-M6LN-RLD-00007

24590-LAB-M6-RLD-00008001, Rev. 0:
- 24590-LAB-M6LN-RLD-00009

24590-LAB-M6-RLD-00008002, Rev. 0:
- None

Quarter Ending 12/31/2011 24590-LAB-PCN-ENV-11-001

WAC 173-303-830 Modification Class:	Class 1	Class 1[1]	Class 2	Class 3
Please mark the Modification Class:		X		

Enter relevant WAC 173-303-830, Appendix I Modification citation number: NA

Enter wording of WAC 173-303-830, Appendix I Modification citation:

In accordance with WAC 173-303-830(4)(d)(i), this modification notification is requested to be reviewed and approved as a Class 1 modification. WAC 173-303-830(4)(d)(ii)(A) states, "Class 1 modifications apply to minor changes that keep the permit current with routine changes to the facility or its operation. These changes do not substantially alter the permit conditions or reduce the capacity of the facility to protect human health or the environment. In the case of Class 1 modifications, the director may require prior approval."

Modification Approved/Concur:	Reviewed by Ecology:
[√] Yes [ ] Denied (state reason below)	
Reason for denial:	D. McDonald — Date: 11-22-11

24590-LAB-M6-RLD-00001001

RLD-EDUC-00003A C5 DRAINS COLLECTION VESSEL MIXING EDUCTOR 23 GPM PENBERTHY MODEL CTE 1/2

RLD-EDUC-00003B C5 DRAINS COLLECTION VESSEL MIXING EDUCTOR 23 GPM PENBERTHY MODEL CTE 1/2

RLD-EDUC-00003C C5 DRAINS COLLECTION VESSEL MIXING EDUCTOR 23 GPM PENBERTHY MODEL CTE 1/2

RLD-EDUC-00003D C5 DRAINS COLLECTION VESSEL MIXING EDUCTOR 23 GPM PENBERTHY MODEL CTE 1/2

RLD-EDUC-00003E C5 DRAINS COLLECTION VESSEL MIXING EDUCTOR 23 GPM PENBERTHY MODEL CTE 1/2

RLD-EDUC-00003F C5 DRAINS COLLECTION VESSEL MIXING EDUCTOR 23 GPM PENBERTHY MODEL CTE 1/2

RLD-EDUC-00003G C5 DRAINS COLLECTION VESSEL MIXING EDUCTOR 23 GPM PENBERTHY MODEL CTE 1/2

RLD-EDUC-00003H C5 DRAINS COLLECTION VESSEL MIXING EDUCTOR 23 GPM PENBERTHY MODEL CTE 1/2

RLD-VSL-00165 HOTCELL DRAIN COLLECTION VESSEL (RLD C5 VESSEL) 6615 GAL 95 FT DIA X 27 IN T-T

RLD-SUMP-00042 C5 VESSEL CELL SUMP SUMP CAP. - 30 GAL 30 IN DIA X 13 IN DEEP

RLD-SUMP-00044 LAB-M6-RLD-00001004 A3 → RLD-ZN-03394-S1E-04 1:50

RLD-SUMP-00043A LAB-M6-RLD-00001002 C2 → RLD-ZN-02203-S1E-04 1:50

RLD-SUMP-00043B LAB-M6-RLD-00001003 C2 → RLD-ZN-03393-S1E-04 1:50

RLD-PMP-00183A DISCHARGE LAB-M6-RLD-00001004 C2 → RLD-ZN-03445-S1E-03

RLD-PMP-00183B DISCHARGE LAB-M6-RLD-00001004 C2 → RLD-ZN-00020-S1E-03

RLD-VSL-00164 LAB-M6-RLD-00001004 E2 → RLD-WU-02225-S1E-03

GLOVEBOX DRAIN HEADER LAB-M6-RLD-00008002 D2 → RLD-ZN-03432-S1E-03 NOTE 9

DEMIN WATER BLEED LINE LAB-M6-RLD-00008003 E2 → RLD-ZN-03388-S1B-003/4

RLD-PMP-00183A/B DRAIN LAB-M6-RLD-00001002 D2 → RLD-ZN-03383-S1E-003/4

DEMIN WATER LAB-M6-RLD-00008003 D2 → RLD-WE-03402-S1B-02

DEMIN WATER LAB-M6-RLD-00008003 D2 → RLD-WE-03314-S1B-02

DEMIN WATER LAB-M6-RLD-00008003 D2 → RLD-WE-03315-S1B-02

RLD-VSL-00163 LAB-M6-RLD-00005002 G2 → RLD-WT-22008-S1E-011/2

HOTCELL DRAIN COLLECTION HEADER LAB-M6-RLD-00008002 E2 → RLD-ZN-03413-N1E-04 NOTE 9

DEMIN WATER LAB-M6-RLD-00008003 D2 → RLD-WE-03317-S1B-02

DEMIN WATER LAB-M6-RLD-00008003 E2 → RLD-WE-03418-S1B-02

LDB DRAIN LINE LAB-M6-RLD-00008001 D2 → RLD-ZN-03397-S1E-01

C5 VESSEL CELL WASH RING

1:100

C5 EFFLUENT VESSEL CELL (ROOM A-B004)

NOTE 8

RLD-EDUC-00003A RLD-EDUC-00003B RLD-EDUC-00003C RLD-EDUC-00003D RLD-EDUC-00003E RLD-EDUC-00003F RLD-EDUC-00003G RLD-EDUC-00003H

RLD-VSL-00165

24" MANWAY

6" SPARE 6" SPARE 2" SPARE 6" SPARE

RLD-ZN-03429-S1E-08 RLD-ZN-03429-S1E-06

C5 PUMP MAINT. ROOM NOTE 5

N01 N02 N03 N04 N05 N06 N07 N08 N08 N09 N10 N11 N12 N13 N14 N15A N15B N16 N17 N18 N19 N20A N20B N21

SIPHON BREAKER 20 GPM

NOTE 6

RLD-ZN-02204-S1E-06 OVERFLOW

RLD-GR-00043-S1IP-011/2

RLD-GR-00044-S1IP-011/2

RLD-V-12062

RLD-V-12063

LE 6104 6"

RLD-SUMP-00042

NOTE 10 NOTE 12

RLD-ZN-00017-S1E-03 → RLD-PMP-00183B LAB-M6-RLD-00001004 E8

RLD-ZN-00005-S1E-03 → RLD-PMP-00183A LAB-M6-RLD-00001004 B8

NOTE 7

LI 6104A HH H L

LSHH 6104A

YC-6511 LAB-M6-RLD-00005002 H8

YC-6802 LAB-M6-RLD-00008003 F8

YC-6102 LAB-M6-RLD-00002003 G8

LY f(x)

LI 6104

LT 6104 FF

LX 6104C LX 6104A LX 6104B

LI 6115 HHH H

LKY 6115 H LEAK DETECTION

LT 6115 FF

LX 6115C LX 6115A LX 6115B

RLD-ZN-00022-S1E-03 → RLD-PMP-00183A LAB-M6-RLD-00001004 B8

RLD-GV-02201-S1B-06 → C5 VENT EXHAUST DUCT REFER TO NOTE 4 ON LAB-M8-C5V-00001003

RLD-GV-02202-S1B-12 → C5 VENT EXHAUST DUCT REFER TO NOTE 4 ON LAB-M8-C5V-00001003

INCELL OUTCELL RLD C5V

NOTES:

1. SEE DRAWINGS 24590-WTP-M6-50-00001 THROUGH 24590-WTP-M6-50-00008 FOR GENERAL NOTES, SYMBOLS AND LEGEND, AND GENERAL SLOPE REQUIREMENTS.
2. CONTENTS OF THIS DOCUMENT ARE DANGEROUS WASTE PERMIT AFFECTING.
3. THE PRESSURE BOUNDARY FOR ALL COMPONENTS ON THIS DRAWING IS QUALITY LEVEL CM AND SEISMIC CATEGORY SC-IV, UNLESS OTHERWISE NOTED. VESSEL IS QUALITY LEVEL CM AND SEISMIC CATEGORY SC-III. COLLARS OR SLEEVES FOR PIPING ENTERING THE CELL OR PIT CONFINEMENT BOUNDARY IS QUALITY LEVEL Q AND SEISMIC CATEGORY SC-III. THE PIT SHIELD PLATES ARE QUALITY LEVEL Q AND SEISMIC CATEGORY SC-III.
4. ALL LINES SHOWN ON THIS DRAWING SHALL BE FREE DRAINING, UNLESS OTHERWISE NOTED.
5. PROVISION FOR FUTURE USE. FLOOR SHIELD PLUG TO BE PROVIDED BY CS&A. SEE DETAIL 24590-LAB-MX-RLD-00005.
6. THE MAXIMUM ELEVATION DIFFERENCE BETWEEN THE INSIDE BOTTOM OF THE VESSEL AND THE INSIDE BOTTOM OF OVERFLOW LINE AT ITS HIGHEST POINT SHALL BE LESS THAN OR EQUAL TO 7.19 FT TO YIELD A MAXIMUM OPERATING VOLUME (MOV) OF 2740 GAL.
7. CLOSES VALVES RLD-YV-6102, RLD-YV-6511, AND RLD-YV-6802 TO ISOLATE VESSEL.
8. THE DIP TUBE FOR NOZZLE NO3 CONTAINS SIX ROWS OF 0.5 INCH DIAMETER WEEP HOLES OVER ITS FULL LENGTH, SEE DRAWING 24590-LAB-MV-RLD-00003.
9. SLOPE C5 COLLECTION HEADERS 1/8 INCH PER FOOT AS PRACTICAL WITH A MINIMUM OF 1/16 INCH PER FOOT (1:192 SLOPE).
10. SUMP RADAR WAVE GUIDE LINE DESIGNED PER 24590-WTP-J8-50-00004.
11. THIS DRAWING IS CONVERTED FROM A SINGLE SHEET TO MULTI-SHEET DRAWINGS AND, IN PART, SUPERSEDES 24590-LAB-M6-RLD-00001 REV 2. THIS DRAWING INCLUDES INFORMATION FROM 24590-LAB-M6N-60-00001, 24590-LAB-M6N-M8OT-00001, 24590-LAB-M6N-RLD-00051, -00054, -00058, -00065, AND 24590-LAB-M6PN-RLD-00001.
12. EXTEND END OF PIPE TO 1/2 INCH ABOVE THE BOTTOM CENTER OF THE SUMP.
13. REVISION 1: INCORPORATED 24590-LAB-M6LN-RLD-00004 AND 24590-LAB-M6N-RLD-00075. ADDED NOTE 12.

HOLD/OPEN ITEMS:

NONE

REFERENCES:

1 24590-LAB-3YD-RLD-00001, SYSTEM DESCRIPTION FOR THE ANALYTICAL LABORATORY RADIOACTIVE LIQUID WASTE DISPOSAL SYSTEM.

Please note that source, special nuclear, and byproduct materials, as defined in the Atomic Energy Act of 1954 (AEA) are regulated at the U. S. Department of Energy (DOE) facilities by DOE acting pursuant to its AEA authority. DOE asserts that pursuant to AEA, it has sole and exclusive responsibility and authority to regulate source, special nuclear, and byproduct materials at DOE-owned nuclear facilities. Information contained in this drawing/utilities is provided for process description purposes only.

DRAWING INDEX

DWG NO	TITLE
24590-LAB-M6-00001001	RLD DISPOSAL SYSTEM RLD-VSL-00165
24590-LAB-M6-00001002	RLD DISPOSAL SYSTEM RLD-PMP-00183A
24590-LAB-M6-00001003	RLD DISPOSAL SYSTEM RLD-PMP-00183B
24590-LAB-M6-00001004	RLD DISPOSAL SYSTEM VALVE PIT

REVISION HISTORY

REV	DESCRIPTION	ORG	CHKD	RVWD	APVD	DATE
1	REVISED PER NOTE 13	PH	JB	MS/MS	DM	6.13.11
0	ISSUED FOR CONSTRUCTION, SEE NOTE 11	RJG	SMT	SS/SK	RS/JS	07/22/2010

Q QUALITY DESIGNATOR

ISSUED BY RPP-WTP PDC — INIT — DATE — ISSUE STAMP

	BY	DATE
ORIGINATOR	GIBBS, ROBERT	06/22/2010
CHECKER	THAKKAR, SURENDRA	06/22/2010
APPROVER	STEVENS, ROBERT	7/22/2010
REVIEWER	KRETZSCHMAR, STUART	6/30/2010

PROJECT No. 24590 | SITE HANFORD | AREA 200E | BUILDING No. 60

CONTENT APPLICABLE TO ALARA? [X] YES [ ] NO

ADR NO. 24590-LAB-ADR-M-03-013 REV: 4

EMS SCREENING REQUIRED? [X] YES [ ] NO EMS INITIAL IF YES

SCREENING IS REQUIRED FOR DRAWING TYPES IDENTIFIED IN 24590-WTP-GPP-SREG-002

"E" SIZE - 44x34 COMPUTER GENERATED - MANUAL DESIGN CHANGES NOT PERMITTED

BECHTEL

RIVER PROTECTION PROJECT
WASTE TREATMENT PLANT
2435 STEVENS CENTER PLACE
RICHLAND, WA 99354

CONTRACT No: DE-AC27-01RV14136

P&ID - LAB RADIOACTIVE LIQUID WASTE DISPOSAL SYSTEM C5 COLLECTION AND TRANSFER RLD-VSL-00165

SCALE: NONE

24590-LAB-M6-RLD-00001001 REV 1

R11378830

6/10/2011 7:09:15 AM

PLOTTED BY: gsookes C:\Work\gsookes\cms04-238\LAB\M6RLD00001001.dgn

FORM E_SDN.DGN 02/2009

RLD-SUMP-00043A
C5 PUMP PIT SUMP
C&J ASSEMBLY
–
1.6 GAL
3FT L x 1FT W x 0.5 IN H

RLD-TWDVC-00002A
REMOVABLE WEIR FOR
RLD-SUMP-00043A
MECH ASSEMBLY
6.3B IN DIA X 6FT8 IN L
–

RLD-SHLD-00001A
C5 PUMP PIT COVER
ASSEMBLY
CIVIL/STRUCTURAL ASSEMBLY
7FT2IN Lx7 FT2 IN Wx3IN D
–

RLD-PMP-00183A
HOTCELL DRAIN
COLLECTION VESSEL PUMP
(WITH BOWL DRAIN)
88 GPM / 108 FT TDH
10.0 HP

PSHH-6109
LAB-M6-RLD-00001004 F8

PSLL-6106
LAB-M6-RLD-00001004 F2

YC 6105 Y1 HS R/M S/S

HS 6105A L/R | HS 6105B START | HS 6105C STOP | HS 6105E E-STOP

YC-6108
LAB-M6-RLD-00001003 F8

1 P8

RLD-SHLD-00001A NOTE 6

DEMIN WATER
LAB-M6-RLD-00008003 E2
RLD-WE-03313-S1B-01

DEMIN WATER
LAB-M6-RLD-00008003 E2
RLD-WE-03417-S1B-01

PUMP PIT
WASH RING

RLD-HEPA-00015
LAB-M6-RLD-00001003 G2
RLD-GV-02196-S1B-08

NO
RLD-V-10562

RLD-VSL-00165
LAB-M6-RLD-00001004 B2
RLD-ZN-00005-S1E-03

LI 6116 H
LKY 6116 H LEAK DETECTION

LX 6116C
LT 6116 FF
LX 6116A
LX 6116B

RLD-GR-00040-S1IP-011/2
RLD-V-12059

CM III CM IV

RLD-GR-00040-S1IP-011/2
NOTE 9

NOTE 5 SP RLD-SP-00011 | NOTE 8 >> | NOTE 5 SP RLD-SP-00037

1 1/2 (NOTE 11) RLD-PMP-00183A

RLD-ZN-03383-S1E-001/2

NOTE 5 SP RLD-SP-00036 | NOTE 5 SP RLD-SP-00010

RLD-ZN-02205-S1E-03
PTF-PWD-VSL-00044
RLD-VSL-00165 EDUCTORS
LAB-M6-RLD-00001004 D8

NOTE 5 SP RLD-SP-00038 | NOTE 5 SP RLD-SP-00012

RLD-ZN-03383-S1E-003/4
RLD-VSL-00165
LAB-M6-RLD-00001004 E8

NO
RLD-V-10552

NOTE 10
III V
Q CM

RLD-GV-02197-S1B-08
TO ATM OF
C5 EFFLUENT VESSEL CELL
(ROOM A-B004)

1-100
C5 PUMP PIT (ROOM A-B007)

RLD-TWDVC-00002A
NOTE 7

RLD-SUMP-00043A

1-50

RLD-ZN-02203-S1E-04
RLD-VSL-00165
LAB-M6-RLD-00001001 F8

NOTES:

1. SEE DRAWINGS 24590-WTP-M6-50-00001 THROUGH 24590-WTP-M6-50-00008 FOR GENERAL NOTES, SYMBOLS AND LEGEND, AND GENERAL SLOPE REQUIREMENTS.
2. CONTENTS OF THIS DOCUMENT ARE DANGEROUS WASTE PERMIT AFFECTING.
3. THE PRESSURE BOUNDARY FOR ALL COMPONENTS ON THIS DRAWING IS QUALITY LEVEL CM AND SEISMIC CATEGORY SC-IV, UNLESS OTHERWISE NOTED. COLLARS OR SLEEVES FOR PIPING ENTERING THE CELL OR PIT CONFINEMENT BOUNDARY SHALL BE QUALITY LEVEL Q AND SEISMIC CATEGORY SC-III. THE PIT SHIELD PLATES SHALL BE QUALITY LEVEL Q AND SEISMIC CATEGORY SC-III.
4. ALL LINES SHOWN ON THIS DRAWING SHALL BE FREE DRAINING, UNLESS OTHERWISE NOTED.
5. PROVIDE GRAYLOCK TYPE CONNECTORS OR EQUAL FOR PUMP SUCTION, DISCHARGE, AND DRAIN LINES.
6. ALL PRESSURE INSTRUMENTS, ACTUATOR VALVES, AND REMOVABLE WEIR PENETRATE PIT FROM TOP THROUGH THE SHIELD.
7. FOR REMOTELY OPERATED REMOVABLE WEIR DESIGN (RLD-TWDVC-00002A), SEE DRAWING 24590-LAB-MX-RLD-00006.
8. PROVIDE REMOVABLE PIPING SPOOL FOR START-UP STRAINER.
9. SUMP RADAR WAVE GUIDE LINE DESIGNED PER 24590-WTP-J8-50-00004.
10. MESH SCREEN CAP ON VENT INTAKE IS QUALITY LEVEL CM.
11. DISCHARGE PIPE AT CONNECTION TO PUMP MUST HAVE A MINIMUM THREE FOOT (5 FOOT PREFERRED) VERTICAL RISE BETWEEN FLANGE AND PIPE INVERT BEFORE FIRST HORIZONTAL RUN WHICH SLOPES AWAY FROM PUMP TO PROVIDE FOR RETENTION OF PRIMING LIQUID. IF INTERFERENCES PREVENT USE OF A SINGLE VERTICAL PIPE RUN, USE OF 45 DEGREE ELBOWS WITH OR WITHOUT INTERVENING STRAIGHT PIPE ARE PERMITTED WITHIN THIS PIPE SECTION.
12. THIS DRAWING IS CONVERTED FROM A SINGLE SHEET TO MULTI-SHEET DRAWINGS AND, IN PART, SUPERSEDES 24590-LAB-M6-RLD-00001 REV 2. THIS DRAWING INCLUDES INFORMATION FROM 24590-LAB-M6N-60-00001, 24590-LAB-M6N-M60T-00001, 24590-LAB-M6N-RLD-00054, -00065, -00071 AND 24590-WTP-SDDR-PL-06-00018.

HOLD/OPEN ITEMS:

NONE

REFERENCES:

1. 24590-LAB-3YD-RLD-00001, SYSTEM DESCRIPTION FOR THE ANALYTICAL LABORATORY RADIOACTIVE LIQUID WASTE DISPOSAL SYSTEM.

Please note that source, special nuclear, and byproduct materials, as defined in the Atomic Energy Act of 1954 (AEA) are regulated at the U. S. Department of Energy (DOE) facilities solely by the DOE acting pursuant to its AEA authority. DOE asserts that pursuant to AEA, it has sole and exclusive responsibility and authority regarding source, special nuclear, and byproduct materials at DOE-owned nuclear facilities. Information contained herein on radionuclides is provided for process description purposes only.

REV	DESCRIPTION	ORG	CHKD	RVWD	APVD	DATE
0	ISSUED FOR CONSTRUCTION, SEE NOTE 12	RLS	ST	LPK	RJB	7/22/10

Q QUALITY DESIGNATOR

REVISION HISTORY

ISSUED BY RPP-WTP PDC

ISSUE STAMP

	BY	DATE
ORIGINATOR	R. S. Stahl	6/29/10
CHECKER	S. Thakkar	6/29/10
APPROVER	R. J. Bilyard	7/22/10
REVIEWER	L. P. Kuhn	6/29/10
	[illegible]	6/30/10

CONTENT APPLICABLE TO ALARA? [X] YES [ ] NO
ADR NO. 24590-LAB-ADR-M-03-013 REV: 4
ENVS SCREENING REQUIRED? [X] YES [ ] NO ENVS INITIAL IF YES

SCREENING IS REQUIRED FOR DRAWING TYPES IDENTIFIED IN 24590-WTP-GPP-SREG-002

PROJECT No.	24590
SITE	HANFORD
AREA	200E
BUILDING No.	60

RIVER PROTECTION PROJECT
WASTE TREATMENT PLANT
2435 STEVENS CENTER PLACE
RICHLAND, WA 99354

CONTRACT No: DE-AC27-01RV14136

P&ID - LAB
RADIOACTIVE LIQUID WASTE DISPOSAL SYSTEM
C5 COLLECTION AND TRANSFER
RLD-PMP-00183A

SCALE: NONE

24590-LAB-M6-RLD-00001002 REV 0

"E" SIZE - 44x34
COMPUTER GENERATED - MANUAL DESIGN CHANGES NOT PERMITTED

R1253487

$DATE$ $TIME$

PLOTTED BY: $USERNAME$ $FILE$

FORM E_SDN.DGN 02/2009

24590-LAB-M6-RLD-00001003

RLD-HEPA-00015	RLD-SUMP-00043B	RLD-TWDVC-00002B	RLD-SHLD-00001B	RLD-PMP-00183B
C5 PUMP PIT INBLEED HEPA FILTER HOUSING	C5 PUMP PIT SUMP C&I ASSEMBLY	REMOVABLE WEIR FOR RLD-SUMP-00043B MECH ASSEMBLY	C5 PUMP PIT COVER ASSEMBLY	HOTCELL DRAIN COLLECTION VESSEL PUMP (WITH BOWL DRAIN)
CIVIL/STRUCTURAL ASSEMBLY	CIVIL/STRUCTURAL ASSEMBLY		CIVIL/STRUCTURAL ASSEMBLY	
1250 SCFM/1.3 IN WC (MAX)	1.6 GAL	6.38 IN DIA X 6FT8 IN L	7FT2IN Lx7 FT2 IN Wx3IN H	88 GPM / 108 FT TDH
–	2FT6IN Lx 2 FT Wx 0.5IN H	–	–	10.0 HP

NOTES:

1. SEE DRAWINGS 24590-WTP-M6-50-00001 THROUGH 24590-WTP-M6-50-00008 FOR GENERAL NOTES, SYMBOLS AND LEGEND, AND GENERAL SLOPE REQUIREMENTS.
2. CONTENTS OF THIS DOCUMENT ARE DANGEROUS WASTE PERMIT AFFECTING.
3. THE PRESSURE BOUNDARY FOR ALL COMPONENTS ON THIS DRAWING IS QUALITY LEVEL CM AND SEISMIC CATEGORY SC-IV, UNLESS OTHERWISE NOTED. COLLARS OR SLEEVES FOR PIPING ENTERING THE CELL OR PIT CONFINEMENT BOUNDARY SHALL BE QUALITY LEVEL Q AND SEISMIC CATEGORY SC-III. THE PIT SHIELD PLATES SHALL BE QUALITY LEVEL Q AND SEISMIC CATEGORY SC-III.
4. ALL LINES SHOWN ON THIS DRAWING SHALL BE FREE DRAINING, UNLESS OTHERWISE NOTED.
5. PROVIDE GRAYLOCK TYPE CONNECTORS OR EQUAL FOR PUMP SUCTION, DISCHARGE, AND DRAIN LINES.
6. ALL PRESSURE INSTRUMENTS, ACTUATOR VALVES, AND REMOVABLE WEIR PENETRATE PIT FROM TOP THROUGH THE SHIELD.
7. FOR REMOTELY OPERATED REMOVABLE WEIR DESIGN (RLD-TWDVC-00002B), SEE DRAWING 24590-LAB-MX-RLD-00006.
8. PROVIDE REMOVABLE PIPING SPOOL FOR START-UP STRAINER.
9. SUMP RADAR WAVE GUIDE LINE DESIGNED PER 24590-WTP-J8-50-00004.
10. MESH SCREEN CAP ON VENT INTAKE IS QUALITY LEVEL CM.
11. DISCHARGE PIPE AT CONNECTION TO PUMP MUST HAVE A MINIMUM THREE FOOT (5 FOOT PREFERRED) VERTICAL RISE BETWEEN FLANGE AND PIPE INVERT BEFORE FIRST HORIZONTAL RUN WHICH SLOPES AWAY FROM PUMP TO PROVIDE FOR RETENTION OF PRIMING LIQUID. IF INTERFERENCES PREVENT USE OF A SINGLE VERTICAL PIPE RUN, USE OF 45 DEGREE ELBOWS WITH OR WITHOUT INTERVENING STRAIGHT PIPE ARE PERMITTED WITHIN THIS PIPE SECTION.
12. THIS DRAWING IS CONVERTED FROM A SINGLE SHEET TO MULTI-SHEET DRAWINGS AND, IN PART, SUPERSEDES 24590-LAB-M6-RLD-00001 REV 2. THIS DRAWING INCLUDES INFORMATION FROM 24590-LAB-M6N-60-00001, 24590-LAB-M6N-M8OT-00001, 24590-LAB-M6N-RLD-00054, -00065, -00071, AND 24590-WTP-SDDR-PL-06-00018.

HOLD/OPEN ITEMS:

NONE

REFERENCES:

1. 24590-LAB-3YD-RLD-00001, SYSTEM DESCRIPTION FOR THE ANALYTICAL LABORATORY RADIOACTIVE LIQUID WASTE DISPOSAL SYSTEM.

Please note that source, special nuclear, and byproduct materials, as defined in the Atomic Energy Act of 1954 (AEA) are regulated by the U.S. Nuclear Regulatory Commission (USNRC) facilities and activity by DOE acting pursuant to its AEA authority. DOE assumes that pursuant to AEA, it has sole and exclusive responsibility and authority to regulate source, special nuclear, and byproduct materials at DOE-owned nuclear facilities. Information contained herein on radionuclides is provided for process description purposes only.

QUALITY DESIGNATOR	REV	DESCRIPTION	ORG	CHKD	RVWD	APVD	DATE
Q	0	ISSUED FOR CONSTRUCTION, SEE NOTE 12	R.T.	S.T.	365	GJH	7/22/10

REVISION HISTORY

ISSUED BY RPP-WTP PDC

ISSUE STAMP

PROJECT No.	24590
SITE	HANFORD
AREA	200E
BUILDING No.	60

	BY	DATE
ORIGINATOR	R.T.	6/21/10
CHECKER	S.T.	6/24/10
APPROVER	G.J.H.	7/22/10
REVIEWER		6/14/10
		6/30/10

CONTENT APPLICABLE TO ALARA? [X] YES [ ] NO
ADR NO. 24590-LAB-ADR-M-03-013 REV: 4

EMS SCREENING REQUIRED? [X] YES [ ] NO EMS INITIAL IF YES D.C.C.

SCREENING IS REQUIRED FOR DRAWING TYPES IDENTIFIED IN 24590-WTP-GPP-SREG-002

BECHTEL

RIVER PROTECTION PROJECT
WASTE TREATMENT PLANT
2435 STEVENS CENTER PLACE
RICHLAND, WA 99354

CONTRACT No: DE-AC27-01RV14136

P&ID - LAB
RADIOACTIVE LIQUID WASTE DISPOSAL SYSTEM
C5 COLLECTION AND TRANSFER
RLD-PMP-00183B

E SIZE - 44x34
COMPUTER GENERATED - MANUAL DESIGN CHANGES NOT PERMITTED

SCALE: NONE

24590-LAB-M6-RLD-00001003

REV 0

6/24/2010 10:41:24 AM

PLOTTED BY: gpookes

C:\Work\gpookes\dms0423\LAB\M6\RLD00001003.dgn

FORM E_SDN.DGN 02/2009

RLD-TWDVC-00001
REMOVABLE WEIR FOR
RLD-SUMP-00044
MECH ASSEMBLY
6.38 IN DIA X 7 FT L

RLD-SHLD-00002
C5 PIPING PIT COVER
ASSEMBLY
–
6FT9 IN Wx14 FT L x3 IN H
–

RLD-SUMP-00044
C5 PIPING PIT SUMP
–
–
1.6 GAL
3FT L x1FT6 IN Wx 0.5IN H

YC-6105 LAB-M6-RLD-00001002 G8
YC-6108 LAB-M6-RLD-00001003 F8

PWD-LSHH-0202A PTF-M6-PWD-00002001 D5

NOTE 11 HS Z1 YC 6113 UY FF
YY 6113 S 3/8" TUBING IPSA PSA-V-84190 VENT
ZSL 6113 ZSH 6113
NOTE 12 HS YC 6114 Z1
NOTE 11 OC HS YC 6131 Z1
YY 6131 S 3/8" TUBING IPSA PSA-V-84187 VENT
UY FF
ZSL 6131 ZSH 6131
YY 6114 S 3/8" TUBING IPSA PSA-V-84186 VENT
ZSL 6114 ZSH 6114
NOTE 13 HS YC 6130 Z1
TI 6129 TI 6112
TT 6129 FF TT 6112 FF
YY 6130 S 3/8" TUBING IPSA PSA-V-84185 VENT
ZSL 6130 ZSH 6130

PSLL 6127 PSHH 6127
PI 6127 HH L LL PT 6127 FF
PSLL 6128 PSHH 6128
PI 6128 L LL PT 6128 FF
PSLL 6109 PSHH 6109
PI 6109 HH L LL PT 6109 FF
PT 6106 FF PI 6106 L LL PSLL 6106

YC-6105 LAB-M6-RLD-00001002 F8

PLUG NOTE 16 PLUG NOTE 16 PLUG NOTE 16
NOTE 9 RLD-SHLD-00002

DEMIN WATER LAB-M6-RLD-00008003 D2 RLD-WE-03368-S11B-011/2
PIPE PIT WASH RING
DEMIN WATER LAB-M6-RLD-00008003 D2 RLD-WE-03415-S11B-011/2
RLD-VSL-00165 LAB-M6-RLD-00001001 F2 RLD-ZN-00017-S11E-03
NOTE 10 NOTE 7 RLD-V-10554
RLD-VSL-00164 LAB-M6-RLD-00008002 C2 RLD-WU-02225-S11E-03
NOTE 14 Q III NO RLD-V-10994
RLD-HEPA-00015 LAB-M6-RLD-00001003 F2 RLD-GV-02200-S11B-08
DEMIN WATER LAB-M6-RLD-00008003 E2 RLD-WE-03436-S11B-03

RLD-PMP-00183A LAB-M6-RLD-00001002 E2 RLD-ZN-02205-S11E-03
(V) RLD-V-34987 NOTE 7
(V) RLD-V-34990 NOTE 7
003/4-801
NOTE 10 NOTE 7 RLD-V-11218
YY 6113 FC
(V) RLD-V-34988 NOTE 7
(V) RLD-V-10559 NOTE 7
003/4-801
NOTE 10 NOTE 7 RLD-V-11217
YY 6131 FC
RLD-ZN-03445-S11E-03
TE 6112
YY 6114 FC
RLD-ZN-03445-S11E-04
TE 6129
YY 6130 FC
RLD-ZN-00020-S11E-03 RLD-ZN-00020-S11E-04

RLD-PMP-00183B LAB-M6-RLD-00001003 E2 RLD-ZN-02206-S11E-03

RLD-PMP-00183B LAB-M6-RLD-00001003 D2 RLD-ZN-03382-S11E-003/4
RLD-PMP-00183A LAB-M6-RLD-00001002 D2 RLD-ZN-03383-S11E-003/4
RLD-VSL-00165 LAB-M6-RLD-00001001 F2 RLD-ZN-00005-S11E-03
TO ATM OF C5 EFFLUENT VESSEL CELL (ROOM A-B004)
RLD-GV-02203-S11B-08 NO RLD-V-11044 NOTE 21 III O
RLD-SUMP-00042 LAB-M6-RLD-00001001 D2 RLD-ZN-00022-S11E-03
NOTE 7 RLD-V-10568
NOTE 7 RLD-V-10567
NOTE 7 RLD-V-10551
NOTE 7 RLD-V-10556
RLD-ZN-00022-S11E-03
NOTE 10
NOTE 7 RLD-V-10555
1:100

RLD-SUMP-00044
C5 PIPING PIT (ROOM A-B006)
RLD-TWDVC-00001
NOTE 15
1:50

RLD-PMP-00183B LAB-M6-RLD-00001003 E8
RLD-VSL-00165 LAB-M6-RLD-00001001 E8
S11B S11E RLD-V-11074
(V) RLD-V-34985 NOTE 7
(V) RLD-V-34994 NOTE 7
003/4-801
CM Q IV III S11E W31A
RLD-ZN-03409-S11E-003/4 RLD-V-11057
INCELL OUTCELL
RLD-ZN-03409-S11E-003/4 RLD-V-11058
NOTE 20 RLD-ZN-03389-W31A-03 PWD-VSL-00044 PTF-M6-PWD-00058 D8
NOTES 7, 8, 14 NOTE 7 RLD-V-11239
RLD-V-11012 1 1/2"
NOTE 6
CM Q IV III S11E S32B
NOTE 19
NOTE 18 INSIDE OUTSIDE UG
RLD-ZN-03384-S32B-03 RLD-ZN-03395-S11E-03 NOTE 6
NOTE 7 NOTE 6 RLD-V-10548
RLD-ZN-03446-S11E-03
RLD-ZN-03384-S32B-03
OPEN END NOTE 6
RLD-ZN-03431-S11E-003/4
NOTE 18 INSIDE OUTSIDE S32B S11E AG
INCELL OUTCELL
PORTABLE SECONDARY CONTAINMENT SUMP NOTE 5
RLD-ZN-03445-S11E-03 RLD-VSL-00165 LAB-M6-RLD-00001001 F8
RLD-ZN-00020-S11E-03 RLD-VSL-00165 LAB-M6-RLD-00001001 E8
RLD-VSL-00165 LAB-M6-RLD-00001001 E8
RLD-PMP-00183A LAB-M6-RLD-00001002 E8
LI 612.3 H LKY 612.3 H LEAK DETECTION
LT 612.3 FF LX 612.3C LX 612.3A LX 612.3B
CM IV III
RLD-GR-00041-S11P-011/2 NOTE 17 RLD-V-12060 RLD-GR-00041-S11P-011/2
RLD-ZN-03394-S11E-04 RLD-VSL-00165 LAB-M6-RLD-00001001 F8

NOTES:

1. SEE DRAWINGS 24590-WTP-M6-50-00001 THROUGH 24590-WTP-M6-50-00008 FOR GENERAL NOTES, SYMBOLS AND LEGEND, AND GENERAL SLOPE REQUIREMENTS.
2. CONTENTS OF THIS DOCUMENT ARE DANGEROUS WASTE PERMIT AFFECTING.
3. THE PRESSURE BOUNDARY FOR ALL COMPONENTS ON THIS DRAWING IS QUALITY LEVEL CM AND SEISMIC CATEGORY SC-IV, UNLESS OTHERWISE NOTED. COLLARS OR SLEEVES FOR PIPING ENTERING THE CELL OR PIT CONFINEMENT BOUNDARY SHALL BE QUALITY LEVEL Q AND SEISMIC CATEGORY SC-III. THE PIT SHIELD PLATES SHALL BE QUALITY LEVEL Q AND SEISMIC CATEGORY SC-III.
4. ALL LINES SHOWN ON THIS DRAWING SHALL BE FREE DRAINING, UNLESS OTHERWISE NOTED.
5. PROVIDE EMERGENCY MANUAL PUMP SHUTOFF SWITCH (HS-6105E) IN AREA.
6. TRANSFER LINE FOR TANKER TRUCK CONNECTION IS PROVIDED FOR USE DURING COLD COMMISSIONING. AFTER COLD COMMISSIONING, THE PIPE SPOOL IS REMOVED AND WELDED CAPS ARE PLACED ON THE END OF THE CONNECTING PIPES AND THE DRAIN LINE FOR THE COAXIAL PIPE.
7. PLUG VALVE TO HAVE SQUARE NUT OPERATOR FOR REMOVABLE TEE HANDLE OPERATION. TEE HANDLE TO BE STORED NEARBY.
8. VALVE SHALL BE SUITABLE FOR THROTTLING SERVICE.
9. ALL PRESSURE INSTRUMENTS, ACTUATOR VALVES, AND REMOVABLE WEIR PENETRATE PIT FROM TOP THROUGH THE SHIELD.
10. THE LOWER HOUSING OF THE PRESSURE TRANSMITTER SEAL IS IN-LINE, SADDLE WELDED TO THE PIPE. AFTER WELDING THE LOWER SECTION TO THE PIPE, THE UPPER SECTION (WHICH HAS THE DIAPHRAGM WELDED TO IT) IS THEN BOLTED TO THE LOWER SECTION.
11. YV-6113 AND YV-6131 CAN NOT BE OPENED SIMULTANEOUSLY. ON PTF-PWD-VSL-00044 LVL HI HI YV-6113 AND YV-6131 ARE OVERRIDE CLOSED. WHEN PUMP RLD-PMP-00183B IS NOT RUNNING YV-6131 CLOSES. WHEN PUMP RLD-PMP-00183A IS NOT RUNNING YV-6113 CLOSES.
12. WHEN PUMP RLD-PMP-00183A IS NOT RUNNING YV-6114 CLOSES.
13. WHEN PUMP RLD-PMP-00183B IS NOT RUNNING YV-6130 CLOSES.
14. A BYPASS SPOOL MAY BE INSTALLED WITHIN THE VALVE PIT IN THE FUTURE, IF NECESSARY, TO ALLOW EFFLUENT FROM RLD-VSL-00164 TO BYPASS RLD-VSL-00165 AND BE TRANSFERRED DIRECTLY TO THE PT FACILITY. THIS SPOOL WOULD PROVIDE ALARA PROTECTION SHOULD SOLIDS BECOME TRAPPED IN THE ELBOWS OF THE PUMP DISCHARGE LINES FOR RLD-PMP-00182A/B AND RLD-PMP-00183A/B. THE SPOOL WOULD CONNECT LINES RLD-WU-02225-S11E-03 AND RLD-ZN-02205-S11E-03. THE SPOOL WOULD TIE-IN TO RLD-ZN-02205-S11E-03 BETWEEN RLD-V-11012 AND RLD-WE-03436-S11B-03. SPECTACLE BLINDS WOULD BE INCLUDED ON THE SPOOL AND ON RLD-WU-02225-S11E-03 DOWNSTREAM OF THE SPOOL CONNECTION.
15. FOR REMOTELY OPERATED REMOVABLE WEIR DESIGN (RLD-TWDVC-00001), SEE DRAWING 24590-LAB-MX-RLD-00006.
16. CSA TO DESIGN SHIELDING PLUG FOR PRESSURE TRANSMITTER CAPILLARY LINE PENETRATION IN SHIELD.
17. SUMP RADAR WAVE GUIDE LINE DESIGNED PER 24590-WTP-J8-50-00004.
18. TRANSFER PIPING SHOWN SHALL BE DOUBLE-WALLED UNLESS PROVIDED WITH ANOTHER FORM OF SECONDARY CONTAINMENT AND LEAK DETECTION. EXTERIOR SURFACE MATERIALS OF DOUBLE-WALL PIPE ENDCAPS AND CONTAINMENTS PIPING EXPOSED TO PUMP AND VALVE PIT ATMOSPHERES SHALL BE THE SAME AS THE PIT LINER MATERIAL. DOUBLE WALLED PORTION SHALL HAVE A MINIMUM SLOPE OF 1:192.
19. DOUBLE-WALL PIPE DRAINS TO PIPE PIT FOR INTERSTITIAL LEAKAGE COLLECTION AND MONITORING.
20. REFER TO INTERFACING DRAWING FOR MINIMUM SLOPE REQUIREMENTS.
21. MESH SCREEN CAP ON VENT INTAKE IS QUALITY LEVEL CM.
22. THIS DRAWING IS CONVERTED FROM A SINGLE SHEET TO MULTI-SHEET DRAWINGS AND, IN PART, SUPERSEDES 24590-LAB-M6-RLD-00001 REV 2. THIS DRAWING INCLUDES INFORMATION FROM 24590-LAB-M6N-60-00001, 24590-LAB-M6N-M80T-00001, 24590-LAB-M6N-RLD-000054, -00056, -00065, -00071, 24590-LAB-M6PR-RLD-00001, -00002, AND 24590-WTP-SDDR-PL-06-00018.

HOLD/OPEN ITEMS:

NONE

REFERENCES:

1. 24590-LAB-3YD-RLD-00001, SYSTEM DESCRIPTION FOR THE ANALYTICAL LABORATORY RADIOACTIVE LIQUID WASTE DISPOSAL SYSTEM.

Please note that source, special nuclear, and byproduct materials, as defined in the Atomic Energy Act of 1954 (AEA) are regulated by the U.S. Department of Energy (DOE). Consistent with DOE acting pursuant to its AEA authority, DOE asserts that pursuant to AEA, it has sole and exclusive responsibility and authority to regulate source, special nuclear, and byproduct materials at DOE-owned nuclear facilities. Information contained herein on radionuclides is provided for process description purposes only.

Q	0	ISSUED FOR CONSTRUCTION, SEE NOTE 22	RJB	ST	LPK	7/22/10
QUALITY DESIGNATOR	REV	DESCRIPTION	ORG	CHKD	RVWD	APVD	DATE

REVISION HISTORY

ISSUED BY RPP-WTP PDC ISSUE STAMP

PROJECT No.	24590	
SITE	HANFORD	
AREA	200E	
BUILDING No.	60	
	BY	DATE
ORIGINATOR	Robert Ballou	6/22/10
CHECKER	S Thakkar	6/22/10
APPROVER	R Bamberger	7/22/10
REVIEWER		6/24/10
		6/30/10

CONTENT APPLICABLE TO ALARA? [X] YES [ ] NO
ADR NO. 24590-LAB-ADR-M-03-013 REV: 4
EMS SCREENING REQUIRED? [X] YES [ ] NO EMS INITIAL IF YES GLK

BECHTEL

RIVER PROTECTION PROJECT
WASTE TREATMENT PLANT
2435 STEVENS CENTER PLACE
RICHLAND, WA 99354

CONTRACT No: DE-AC27-01RV14136

P&ID - LAB RADIOACTIVE LIQUID WASTE DISPOSAL SYSTEM C5 COLLECTION AND TRANSFER VALVE PIT

SCALE: NONE
24590-LAB-M6-RLD-00001004
REV 0

"E" SIZE - 44 x 34

SCREENING IS REQUIRED FOR DRAWING TYPES IDENTIFIED IN 24590-WTP-GPP-SREG-002

COMPUTER GENERATED - MANUAL DESIGN CHANGES NOT PERMITTED

6/22/2010 1:30:18 PM

C:\Work\mgritter\dms\04238\LAB\M6RLD00001004.dgn

PLOTTED BY: mgritter

FORM E_SDN.DGN 02/2009

24590-LAB-M6-RLD-00002001

RLD-EDUC-00002A
C3 DRAINS COLLECTION VESSEL MIXING EDUCTOR
EST CORP MODEL 468
3/4 IN

RLD-EDUC-00002B
C3 DRAINS COLLECTION VESSEL MIXING EDUCTOR
EST CORP MODEL 468
3/4 IN

RLD-EDUC-00002C
C3 DRAINS COLLECTION VESSEL MIXING EDUCTOR
EST CORP MODEL 468
3/8 IN

RLD-VSL-00164
LAB AREA SINK DRAIN COLLECTION VESSEL
(RLD C3 VESSEL)
2740 GAL
8.5 FT ID X 69 IN T-T

RLD-SUMP-00041
C3 VESSEL CELL SUMP
-
SUMP CAP 30 GAL
30 IN DIA X 13 IN DEEP

RLD-SUMP-00045
LAB-M6-RLD-00002003 B2
RLD-WU-02207-S1E-04
1:50

RLD-PMP-00182A/B DRAIN
LAB-M6-RLD-00002003 B2
RLD-WU-02221-S1E-003/4

PROCESS VACUUM DRAINS HEADER
LAB-M6-RLD-00007002 G2
RLD-WU-02303-S1E-011/2
NOTE 10

RLD-PMP-00182A/B RECIRC
LAB-M6-RLD-00002003 E2
RLD-WU-02208-S1E-03

C3 RAD LAB SINK DRAINS HEADER
LAB-M6-RLD-00006001 C2
RLD-WU-02219-N1E-03
NOTE 10

SAMPLE RECEIVING/SHIPPING AND HOTCELL ACCESS DRAINS HEADER
LAB-M6-RLD-00007002 C2
RLD-WU-02290-N1E-04
NOTE 10

C3 MAINT. SHOP AREA DRAINS HEADER
LAB-M6-RLD-00007002 E2
RLD-WU-02213-S1E-08
NOTE 10

ASX EQUIPMENT DRAINS HEADER
LAB-M6-RLD-00007002 D2
RLD-WU-02305-S1E-02
NOTE 10

C5 PUMP MAINTENANCE ROOM DRAIN HEADER
LAB-M6-RLD-00002002 F2
RLD-WU-02259-S1E-08
NOTE 10

RLD-VSL-00163
LAB-M6-RLD-00005002 G2
RLD-WT-02198-S1E-011/2

BLOCK VALVE BLEED
LAB-M6-RLD-00005002 F2
RLD-WT-22000-S1E-003/4
1:50

DIW VALVE RACK
LAB-M6-RLD-00002002 C2
RLD-WE-03431-S1B-01

DIW VALVE RACK
LAB-M6-RLD-00002002 D2
RLD-WE-03412-S1B-02

DIW VALVE RACK
LAB-M6-RLD-00002002 D2
RLD-WE-03311-S1B-02

DIW VALVE RACK
LAB-M6-RLD-00002002 D2
RLD-WE-03414-S1B-02

DIW VALVE RACK
LAB-M6-RLD-00002002 D2
RLD-WE-03309-S1B-02

LEAK DETECTION BOX DRAIN LINE
LAB-M6-RLD-00007001 C5
RLD-WU-02253-S1E-01

OUTCELL
C3 EFFLUENT VESSEL CELL (ROOM A-B003) BOUNDARY

FILTER/FAN
RM A-0160
NOTE 8

2 RLD-WU-22922-S1E-08
1 RLD-WU-22922-S1E-06

24" MANWAY
3" SPARE

LE 6202

RLD-DR-00044-S1P-01/2

NOTE 6
NOTE 6
NOTE 6
NOTE 7

RLD-EDUC-00002C
RLD-EDUC-00002B
RLD-EDUC-00002A

RLD-VSL-00164

C3 CELL WASH RING

1:100

C3 EFFLUENT VESSEL CELL (ROOM A-B003)

LI 6202A HH H L
LSHH 6202A
YV-6210
LAB-M6-RLD-00002003 F8
YV-6216
LAB-M6-RLD-00002002 F8

LY f(x)
LI 6202
LT 6202 FF
LX 6202C
LX 6202A
LX 6202B

RLD-V-02066

RLD-WU-02205-S1E-03
RLD-PMP-00182A/B
LAB-M6-RLD-00002003 B8

INCELL OUTCELL AG UG
UG AG
RLD C3V
RLD-GV-02225-S1E-08
C3 VENT EXHAUST DUCT REFER TO NOTE 4 ON 24590-LAB-M8-C3V-00004

LKY 6211 H
LEAK DETECTION
LI 6211 HHH H
LT 6211 FF
LX 6211C
LX 6211A
LX 6211B

RLD-V-02064

SIPHON BREAKER
RLD-BD-00001

NOTE 5

RLD-WU-02215-S1E-03
RLD-PMP-00182A/B
LAB-M6-RLD-00002003 C8

RLD-WU-02224-S1E-08
RLD-DR-00045-S1P-01/2
OVERFLOW
150

RLD C3V
RLD-GV-02207-S1B-10
C3 VENT EXHAUST DUCT REFER TO NOTE 4 ON 24590-LAB-M8-C3V-00004

INCELL OUTCELL

NOTE 9
NOTE 12

RLD-SUMP-00041

NOTES:

1. SEE DRAWINGS 24590-WTP-M6-50-00001 THROUGH 24590-WTP-M6-50-00008 FOR GENERAL NOTES, SYMBOLS AND LEGEND AND GENERAL SLOPE REQUIREMENTS.
2. CONTENTS OF THIS DOCUMENT ARE DANGEROUS WASTE PERMIT AFFECTING.
3. THE PRESSURE BOUNDARY FOR ALL COMPONENTS ON THIS DRAWING IS QUALITY LEVEL CM AND SEISMIC CATEGORY SC-IV, UNLESS OTHERWISE NOTED.
4. ALL LINES SHOWN ON THIS DRAWING SHALL BE SELF DRAINING, UNLESS OTHERWISE NOTED.
5. THE MAXIMUM ELEVATION DIFFERENCE BETWEEN THE INSIDE BOTTOM OF THE VESSEL AND THE INSIDE BOTTOM OF OVERFLOW LINE (AT ITS HIGHEST POINT) SHALL BE 7.19 FT TO YIELD MAXIMUM OPERATING VOLUME (MOV) OF 2740 GAL.
6. THE DIP TUBE ON NOZZLES N04, N05, N06, AND N21 EACH HAVE FOUR WEEP HOLES LOCATED ABOVE THE OVERFLOW LEVEL. THE DIAMETER OF THE FOUR HOLES ARE 0.5 INCH (N21), 1 INCH (N06), AND 2 INCHES (N04 AND N05). THE WEEP HOLES PROVIDE IN-LEAKAGE FOR THE C3V VENT SYSTEM, SEE DRAWING 24590-LAB-MV-RLD-00001.
7. THE DIP TUBE FOR N07 HAS TWO ROWS OF 0.5 INCH DIAMETER HOLES OVER THE ENTIRE LENGTH OF PIPE, SEE DRAWING 24590-CM-POA-MVA0-00010-01-00008.
8. PROVISION FOR FUTURE USE. FLOOR SHIELD PLUG TO BE PROVIDED BY CS&A. SEE DETAIL 24590-LAB-MX-RLD-00005.
9. SUMP RADAR WAVE GUIDE LINE DESIGNED PER 24590-WTP-J8-50-00004.
10. SLOPE C3 COLLECTION HEADERS 1/8 INCH PER FOOT AS PRACTICAL WITH A MINIMUM OF 1/16 INCH PER FOOT (1:192 SLOPE).
11. THIS DRAWING IS CONVERTED FROM A SINGLE SHEET TO MULTI-SHEET DRAWINGS AND, IN PART, SUPERSEDES 24590-LAB-M6-RLD-00002 REV 2. THIS DRAWING INCLUDES INFORMATION FROM 24590-LAB-M6N-60-00001, 24590-LAB-M6N-M8OT-00001, 24590-LAB-M6N-RLD-00052, -00054, -00058, AND -00066.
12. EXTEND END OF PIPE TO 1/2 INCH ABOVE THE BOTTOM CENTER OF THE SUMP.
13. REVISION 1: INCORPORATED 24590-LAB-M6N-RLD-00075 AND ADDED NOTE 12.

HOLD/OPEN ITEMS:

NONE

REFERENCES:

1. 24590-LAB-3YD-RLD-00001, SYSTEM DESCRIPTION FOR THE ANALYTICAL LABORATORY RADIOACTIVE LIQUID WASTE DISPOSAL SYSTEM.

Please note that source, special nuclear, and byproduct materials, as defined in the Atomic Energy Act of 1954 (AEA) are regulated at the U. S. Department of Energy (DOE) facilities exclusively by the provisions of the AEA. DOE asserts that pursuant to AEA, it has sole and exclusive responsibility and authority to regulate source, special nuclear, and byproduct materials at DOE-owned nuclear facilities. Information contained herein on radionuclides is provided for process description purposes only.

DRAWING INDEX

DWG NO	TITLE
24590-LAB-M6-RLD-00002001	RLD DISPOSAL SYSTEM RLD-VSL-00164
24590-LAB-M6-RLD-00002002	RLD DISPOSAL SYSTEM C3 COLLECTION & TRANSFER
24590-LAB-M6-RLD-00002003	RLD DISPOSAL SYSTEM RLD-PMP-00182A/B

REVISION HISTORY

REV	DESCRIPTION	ORG	CHKD	RVWD	APVD	DATE
1	REVISED PER NOTE 13	PH	JB	MS/NS	MS	6/13/11
0	ISSUED FOR CONSTRUCTION, SEE NOTE 11	RJG	SMT	SS/SK	RS/JS	07/22/2010

Q QUALITY DESIGNATOR

ISSUED BY RPP-WTP PDC INIT DATE ISSUE STAMP

PROJECT No.	24590
SITE	HANFORD
AREA	200E
BUILDING No.	60

	BY	DATE
ORIGINATOR	GIBBS, ROBERT	06/22/2010
CHECKER	THAKKAR, SURENDRA	06/22/2010
APPROVER	STEVENS, ROBERT	07/22/2010
REVIEWER	KRETZSCHMAR, STUART	06/30/2010

CONTENT APPLICABLE TO ALARA? [X] YES [ ] NO
ADR NO. 24590-LAB-ADR-M-03-013 REV: 4
EMS SCREENING REQUIRED? [X] YES [ ] NO EMS INITIAL IF YES

SCREENING IS REQUIRED FOR DRAWING TYPES IDENTIFIED IN 24590-WTP-GPP-SEE-G-022

"E" SIZE - 44x34
COMPUTER GENERATED - MANUAL DESIGN CHANGES NOT PERMITTED

BECHTEL
RIVER PROTECTION PROJECT
WASTE TREATMENT PLANT
2435 STEVENS CENTER PLACE
RICHLAND, WA 99354

CONTRACT No: DE-AC27-01RV14136

P&ID - LAB
RADIOACTIVE LIQUID WASTE DISPOSAL SYSTEM
C3 COLLECTION & TRANSFER
RLD-VSL-00164

SCALE: NONE

24590-LAB-M6-RLD-00002001

REV 1

R11378831

6/10/2011 7:10:39 AM

C:\Work\gookes\dms042435\LAB\M6RLD00002001.dgn

PLOTTED BY: gookes

FORM E_SDN.DGN 02/2009

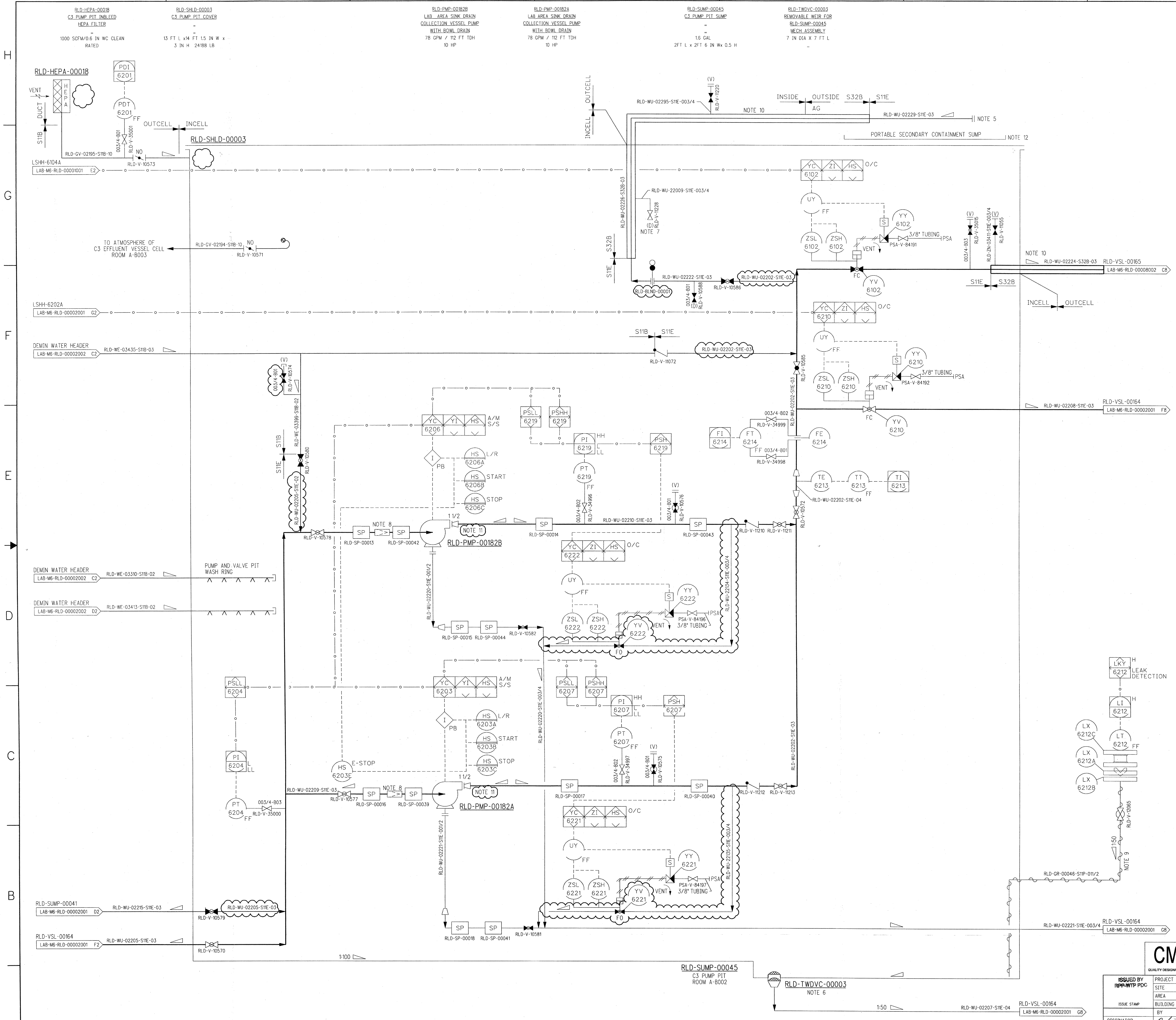

NOTES:

1. SEE DRAWINGS 24590-WTP-M6-50-00001 THROUGH 24590-WTP-M6-50-00008 FOR GENERAL NOTES, SYMBOLS AND LEGEND, AND GENERAL SLOPE REQUIREMENTS.
2. CONTENTS OF THIS DOCUMENT ARE DANGEROUS WASTE PERMIT AFFECTING.
3. THE PRESSURE BOUNDARY FOR ALL COMPONENTS ON THIS DRAWING IS QUALITY LEVEL CM AND SEISMIC CATEGORY SC-IV, UNLESS OTHERWISE NOTED.
4. ALL LINES SHOWN ON THIS DRAWING SHALL BE SELF DRAINING, UNLESS OTHERWISE NOTED.
5. TRANSFER LINE FOR TANKER TRUCK CONNECTION IS PROVIDED FOR USE DURING COLD COMMISSIONING.
6. FOR REMOTELY OPERATED REMOVABLE WEIR DESIGN (RLD-TWDVC-00003), SEE DRAWING 24590-LAB-MX-RLD-00006.
7. ENCASEMENT PIPE GRAVITY DRAINS TO RLD-SUMP-00045 FOR INTERSTITIAL LEAK COLLECTION AND MONITORING. DRAIN VALVE IS TO REMAIN IN OPEN POSITION.
8. PROVIDE REMOVABLE PIPING SPOOL FOR START-UP STRAINER.
9. SUMP RADAR WAVE GUIDE LINE DESIGNED PER 24590-WTP-J8-50-00002.
10. TRANSFER PIPING SHALL BE DOUBLE-WALL UNLESS PROVIDED WITH ANOTHER FORM OF SECONDARY CONTAINMENT AND LEAK DETECTION. EXTERIOR SURFACE MATERIALS OF DOUBLE-WALL PIPE ENDCAPS AND CONTAINMENT PIPING EXPOSED TO PUMP AND VALVE PIT ATMOSPHERES SHALL BE THE SAME AS THE PIT LINER MATERIAL. DOUBLE-WALL PORTIONS SHALL HAVE A MINIMUM SLOPE OF 1:192.
11. DISCHARGE PIPE AT CONNECTION TO PUMP MUST HAVE A MINIMUM THREE FOOT (5 FOOT PREFERRED) VERTICAL RISE BETWEEN FLANGE AND PIPE INVERT BEFORE FIRST HORIZONTAL RUN WHICH SLOPES AWAY FROM PUMP TO PROVIDE FOR RETENTION OF PRIMING LIQUID. IF INTERFERENCES PREVENT USE OF A SINGLE VERTICAL PIPE RUN, USE OF 45 DEGREE ELBOWS WITH OR WITHOUT INTERVENING STRAIGHT PIPE ARE PERMITTED WITHIN THIS PIPE SECTION.
12. PROVIDE EMERGENCY MANUAL PUMP SHUTOFF, SWITCH (HS-6203E) IN AREA.
13. THIS DRAWING IS CONVERTED FROM A SINGLE SHEET TO MULTI-SHEET DRAWINGS AND, IN PART, SUPERSEDES 24590-LAB-M6-RLD-00002, REV 2. THIS DRAWING INCLUDES INFORMATION FROM 24590-LAB-M6N-RLD-00054, -00066, -00070, -00072, 24590-LAB-M6PR-RLD-00003, 24590-WTP-SDDR-PL-06-00018, 24590-LAB-M6N-60-00001, AND 24590-LAB-M6N-M80T-00001.

HOLD/OPEN ITEMS:

NONE

REFERENCES:

1. 24590-LAB-3YD-RLD-00001, SYSTEM DESCRIPTION FOR THE ANALYTICAL LABORATORY RADIOACTIVE LIQUID WASTE DISPOSAL SYSTEM.

Please note that source, special nuclear, and byproduct materials, as defined in the Atomic Energy Act of 1954 (AEA) are regulated at the U. S. Department of Energy (DOE) facilities exclusively by DOE acting pursuant to its AEA authority. DOE asserts that pursuant to AEA, it has sole and exclusive responsibility and authority to regulate source, special nuclear, and byproduct materials at DOE-owned nuclear facilities. Information contained herein on radionuclides is provided for process description purposes only.

CM
QUALITY DESIGNATOR

REV	DESCRIPTION	ORG	CHKD	RVWD	APVD	DATE
0	ISSUED FOR CONSTRUCTION, SEE NOTE 13	[signature]	[signature]	[signature]	[signature]	7/22/10

REVISION HISTORY

ISSUED BY RPP-WTP PDC

ISSUE STAMP

PROJECT No.	24590
SITE	HANFORD
AREA	200E
BUILDING No.	60

RIVER PROTECTION PROJECT
WASTE TREATMENT PLANT
2435 STEVENS CENTER PLACE
RICHLAND, WA 99354

CONTRACT No: DE-AC27-01RV14136

	BY	DATE
ORIGINATOR	[signature]	6/24/10
CHECKER	S Thakkar / [signature]	6/24/10
APPROVER	[signature]	7/22/10
REVIEWER	[signature]	6/28/10
	[signature]	6/30/10

CONTENT APPLICABLE TO ALARA? [X] YES [ ] NO
ADR NO. 24590-LAB-ADR-M-03-013 REV: 4
E&NS SCREENING REQUIRED? [X] YES [ ] NO E&NS INITIAL IF YES DEK

P&ID - LAB
RADIOACTIVE LIQUID WASTE DISPOSAL SYSTEM
C3 COLLECTION & TRANSFER
RLD-PMP-00182A/B

SCALE: NONE

24590-LAB-M6-RLD-00002003 REV 0

SCREENING IS REQUIRED FOR DRAWING TYPES IDENTIFIED IN 24590-WTP-GPP-SREG-002

'E' SIZE - 44x34
COMPUTER GENERATED - MANUAL DESIGN CHANGES NOT PERMITTED

R11253472

6/24/2010 10:41:21 AM

C:\Work\gaoakes\dms04238\LABM6RLD00002003.dgn

PLOTTED BY: gaoakes

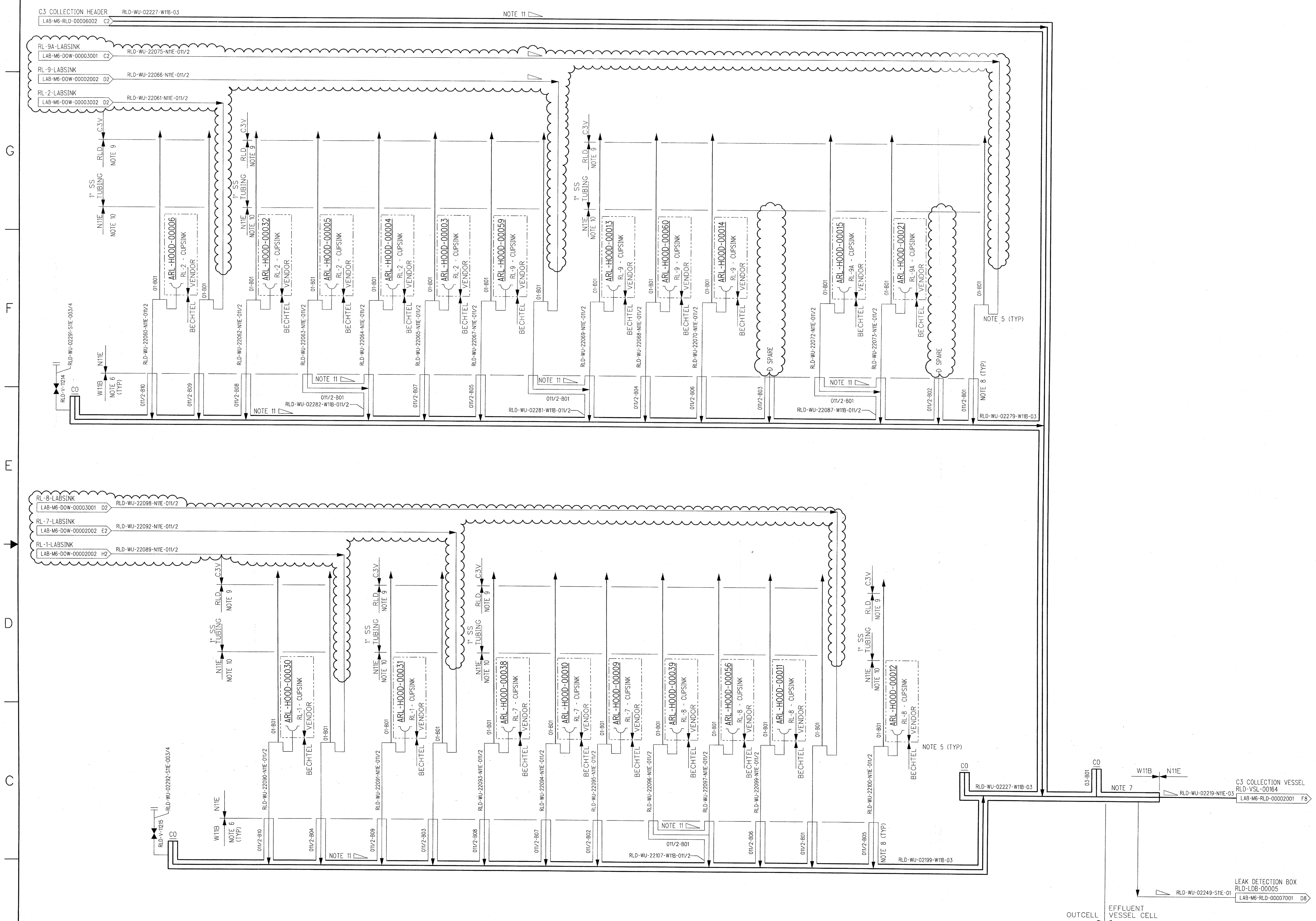

NOTES:

1. SEE DRAWINGS 24590-WTP-M6-50-00001 THROUGH 24590-WTP-M6-50-00008 FOR GENERAL NOTES, SYMBOLS AND LEGEND, AND GENERAL SLOPE REQUIREMENTS.
2. CONTENTS OF THIS DOCUMENT ARE DANGEROUS WASTE PERMIT AFFECTING
3. THE PRESSURE BOUNDARY FOR ALL COMPONENTS ON THIS DRAWING IS QUALITY LEVEL CM AND SEISMIC CATEGORY SC-IV, UNLESS OTHERWISE NOTED.
4. ALL LINES SHOWN ON THIS DRAWING SHALL BE FREE DRAINING, UNLESS OTHERWISE NOTED.
5. ALL P-TRAPS AND LOOP SEALS SHOWN ON THIS DRAWING SHALL BE ACCESSIBLE AND MAINTAINABLE (I.E., CAPABLE OF REPLACEMENT). LOOP PRIMING SHALL BE DONE ADMINISTRATIVELY. LINES CONTAINING THESE FEATURES ARE NOT FREE DRAINING.
6. AN UNDER SINK SECONDARY CONTAINMENT PAN WILL DIRECT POTENTIAL LEAKAGE TO THE ANNULAR SPACE OF THE DOUBLE-WALL PIPE FOR LEAK COLLECTION AND DETECTION. DRAIN PAN CONNECTION SHALL ALLOW FOR PERIODIC PNEUMATIC TESTING OF THE PIPE JACKET AND ALLOW FOR FLUSHING OF THE ANNULAR SPACE IN THE EVENT OF A LEAK.
7. ALL PROCESS DRAIN COLLECTION PIPING SHOWN SHALL BE DOUBLE-WALLED UNLESS PROVIDED WITH ANOTHER FORM OF SECONDARY CONTAINMENT AND LEAK DETECTION. CARBON STEEL PORTIONS OF CONTAINMENT PIPING LOCATED ABOVE THE STAINLESS STEEL LINER AND EXPOSED TO EFFLUENT VESSEL CELL ATMOSPHERE SHALL BE COATED IN ACCORDANCE WITH SPECIFICATION 24590-WTP-3PS-AFPS-T0001, APPENDIX D, COATING SCHEDULE ITEM 3.90, SYSTEM CODE D.
8. COAT EXPOSED CARBON STEEL JACKET PER SPECIFICATION 24590-WTP-3PS-AFPS-T0001, APPENDIX D, COATING SCHEDULE ITEM 3.90, SYSTEM CODE D.
9. TUBING IS CONNECTED TO C3V DUCTWORK. SEE NOTE 3 ON 24590-LAB-M8-C3V-00002 FOR 1 1/2" NPT TAP PROVIDED BY HVAC SUBCONTRACTOR.
10. FOR CONNECTION OF TUBING TO DRAIN LINE, SEE DETAIL 1 ON DRAWING 24590-LAB-MX-RLD-00002.
11. SLOPE C3 COLLECTION HEADERS 1/8 INCH PER FOOT AS PRACTICAL WITH A MINIMUM OF 1/16 INCH PER FOOT (1:192 SLOPE).
12. THIS DRAWING IS CONVERTED FROM A SINGLE SHEET TO MULTI-SHEET DRAWINGS AND, IN PART, SUPERSEDES 24590-LAB-M6-RLD-00006 REV 3. THIS DRAWING INCLUDES INFORMATION FROM 24590-LAB-M6N-M80T-00001, 24590-LAB-M6N-RLD-00049, -00054, AND -00059.

HOLD/OPEN ITEMS:

NONE

REFERENCES:

1. 24590-LAB-3YD-RLD-00001, SYSTEM DESCRIPTION FOR THE ANALYTICAL LABORATORY RADIOACTIVE LIQUID WASTE DISPOSAL SYSTEM.

Please note that source, special nuclear, and byproduct materials, as defined in the Atomic Energy Act of 1954 (AEA) are regulated at the U. S. Department of Energy (DOE) facilities exclusively by DOE acting pursuant to its AEA authority. DOE asserts that pursuant to AEA, it has sole and exclusive responsibility and authority to regulate source, special nuclear, and byproduct materials at DOE-owned nuclear facilities. Information contained herein on radionuclides is provided for process description purposes only.

DRAWING INDEX

DWG NO	TITLE
24590-LAB-M6-RLD-00006001	RLD C3 RAD LAB COLLECTION
24590-LAB-M6-RLD-00006002	RLD C3 RAD LAB COLLECTION
24590-LAB-M6-RLD-00006003	RLD C3 RAD LAB COLLECTION

CM
QUALITY DESIGNATOR

REV	DESCRIPTION	ORG	CHKD	RVWD	APVD	DATE
0	ISSUED FOR CONSTRUCTION, SEE NOTE 12					7/22/10

REVISION HISTORY

ISSUED BY RPP-WTP PDC
ISSUE STAMP

PROJECT No.	24590
SITE	HANFORD
AREA	200E
BUILDING No.	60

	BY	DATE
ORIGINATOR		6/22/10
CHECKER		6/22/10
APPROVER		7/22/10
REVIEWER		6/28/10
		6/30/10

RIVER PROTECTION PROJECT
WASTE TREATMENT PLANT
2435 STEVENS CENTER PLACE
RICHLAND, WA 99354

CONTRACT No: DE-AC27-01RV14136

P&ID - LAB RADIOACTIVE LIQUID WASTE DISPOSAL SYSTEM C3 RAD LAB COLLECTION

CONTENT APPLICABLE TO ALARA? [X] YES [ ] NO
ADR NO. 24590-LAB-ADR-M-03-013 REV: 4
E&NS SCREENING REQUIRED? [X] YES [ ] NO E&NS INITIAL IF YES DEK

SCALE: NONE
24590-LAB-M6-RLD-00006001
REV 0

SCREENING IS REQUIRED FOR DRAWING TYPES IDENTIFIED IN 24590-WTP-GPP-SREG-002
'E' SIZE - 44x34
COMPUTER GENERATED - MANUAL DESIGN CHANGES NOT PERMITTED
R11253479
6/22/2010 2:03:28 PM

PLOTTED BY: mdritter C:\Work\mdritter\dms04238\LABM6RLD00006001.dgn

24590-LAB-M6-RLD-00006002

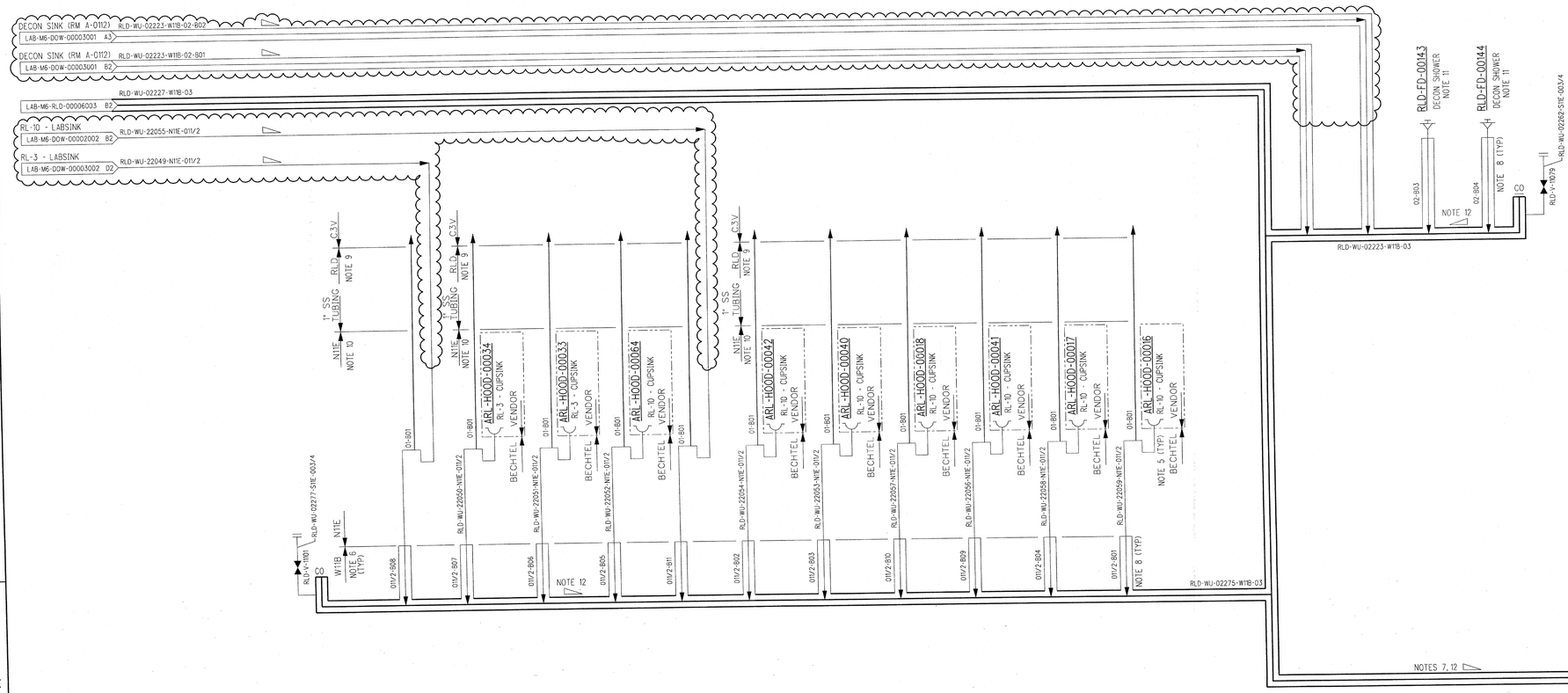

NOTES:

1. SEE DRAWINGS 24590-WTP-M6-50-00001 THROUGH 24590-WTP-M6-50-00008 FOR GENERAL NOTES, SYMBOLS AND LEGEND, AND GENERAL SLOPE REQUIREMENTS.
2. CONTENTS OF THIS DOCUMENT ARE DANGEROUS WASTE PERMIT AFFECTING.
3. THE PRESSURE BOUNDARY FOR ALL COMPONENTS ON THIS DRAWING IS QUALITY LEVEL CM AND SEISMIC CATEGORY SC-IV, UNLESS OTHERWISE NOTED.
4. ALL LINES SHOWN ON THIS DRAWING SHALL BE FREE DRAINING, UNLESS OTHERWISE NOTED.
5. ALL P-TRAPS AND LOOP SEALS SHOWN ON THIS DRAWING SHALL BE ACCESSIBLE AND MAINTAINABLE (I.E., CAPABLE OF REPLACEMENT). LOOP PRIMING SHALL BE DONE ADMINISTRATIVELY. LINES CONTAINING THESE FEATURES ARE NOT FREE DRAINING.
6. AN UNDER SINK SECONDARY CONTAINMENT PAN WILL DIRECT POTENTIAL LEAKAGE TO THE ANNULAR SPACE OF THE DOUBLE-WALL PIPE FOR LEAK COLLECTION AND DETECTION. DRAIN PAN CONNECTION SHALL ALLOW FOR PERIODIC PNEUMATIC TESTING OF THE PIPE JACKET AND ALLOW FOR FLUSHING OF THE ANNULAR SPACE IN THE EVENT OF A LEAK.
7. ALL PROCESS DRAIN COLLECTION PIPING SHOWN SHALL BE DOUBLE-WALLED UNLESS PROVIDED WITH ANOTHER FORM OF SECONDARY CONTAINMENT AND LEAK DETECTION. CARBON STEEL PORTIONS OF CONTAINMENT PIPING LOCATED ABOVE THE STAINLESS STEEL LINER AND EXPOSED TO EFFLUENT VESSEL CELL ATMOSPHERE SHALL BE COATED IN ACCORDANCE WITH SPECIFICATION 24590-WTP-3PS-AFPS-T0001, APPENDIX D, COATING SCHEDULE ITEM 3.90, SYSTEM CODE D.
8. COAT EXPOSED CARBON STEEL JACKET PER SPECIFICATION 24590-WTP-3PS-AFPS-T0001, APPENDIX D, COATING SCHEDULE ITEM 3.90, SYSTEM CODE D.
9. TUBING IS CONNECTED TO C3V DUCTWORK. SEE NOTE 3 ON 24590-LAB-M8-C3V-00002 FOR 1 1/2" NPT TAP PROVIDED BY HVAC SUBCONTRACTOR.
10. FOR CONNECTION OF TUBING TO DRAIN LINE, SEE DETAIL 1 ON DRAWING 24590-LAB-MX-RLD-00002.
11. DRAIN LINE IS PLUGGED WHEN NOT IN USE TO MINIMIZE CASCADE OF AIRFLOW AND SATISFY DRAIN TRAP REQUIREMENTS OF NFPA 801-1998, SECTION 3-10.3. SEE DETAIL 2 OF 24590-LAB-MX-RLD-00002 FOR DRAIN PLUG DESIGN.
12. SLOPE C3 COLLECTION HEADERS 1/8 INCH PER FOOT AS PRACTICAL WITH A MINIMUM OF 1/16 INCH PER FOOT (1:192 SLOPE).
13. THIS DRAWING IS CONVERTED FROM A SINGLE SHEET TO MULTI-SHEET DRAWINGS AND IN PART SUPERSEDES 24590-LAB-M6-RLD-00006 REV 3. THIS DRAWING INCLUDES INFORMATION FROM 24590-LAB-M6N-M6OT-00001, 24590-LAB-M6N-RLD-00054, AND -00059.

HOLD/OPEN ITEMS:

NONE

REFERENCES:

1. 24590-LAB-3YD-RLD-00001, SYSTEM DESCRIPTION FOR THE ANALYTICAL LABORATORY RADIOACTIVE LIQUID WASTE DISPOSAL SYSTEM.

Please note that source, special nuclear, and byproduct materials, as defined in the Atomic Energy Act of 1954 (AEA) are regulated by the U.S. Nuclear Regulatory Commission (NRC) exclusively by DOE acting pursuant to its AEA authority. DOE asserts that pursuant to AEA, it has sole and exclusive responsibility and authority to regulate source, special nuclear, and byproduct materials at DOE-owned nuclear facilities. Information contained herein on radionuclides is provided for process description purposes only.

REV	DESCRIPTION	ORG	CHKD	RVWD	APVD	DATE
0	ISSUED FOR CONSTRUCTION, SEE NOTE 13	RJP	[illegible]	SDS	[illegible]	7/22/10

CM QUALITY DESIGNATOR

REVISION HISTORY

ISSUED BY RPP-WTP PDC

ISSUE STAMP

	BY	DATE
ORIGINATOR	[signature]	6/22/10
CHECKER	S Thakkar	6/22/10
APPROVER	[signature]	7/22/10
REVIEWER	[signature]	6/22/10
	[signature]	6/30/10

PROJECT No.	24590
SITE	HANFORD
AREA	200E
BUILDING No.	60

CONTENT APPLICABLE TO ALARA? [X] YES [ ] NO
ADR NO. 24590-LAB-ADR-M-03-013 REV: 4
EMAS SCREENING REQUIRED? [X] YES [ ] NO EMAS INITIAL IF YES DEK

SCREENING IS REQUIRED FOR DRAWING TYPES IDENTIFIED IN 24590-WTP-GPP-SREG-002

COMPUTER GENERATED - MANUAL DESIGN CHANGES NOT PERMITTED

RIVER PROTECTION PROJECT
WASTE TREATMENT PLANT
2435 STEVENS CENTER PLACE
RICHLAND, WA 99354

CONTRACT No: DE-AC27-01RV14136

P&ID - LAB
RADIOACTIVE LIQUID WASTE DISPOSAL SYSTEM
C3 RAD LAB COLLECTION

SCALE: NONE

24590-LAB-M6-RLD-00006002 REV 0

"E" SIZE - 44x34

6/22/2010 2:12:56 PM

PLOTTED BY: mpitter C:\Work\mpitter\dms04238\LABMGR\D0006002.dgn

FORM E_SDN.DGN 02/2009

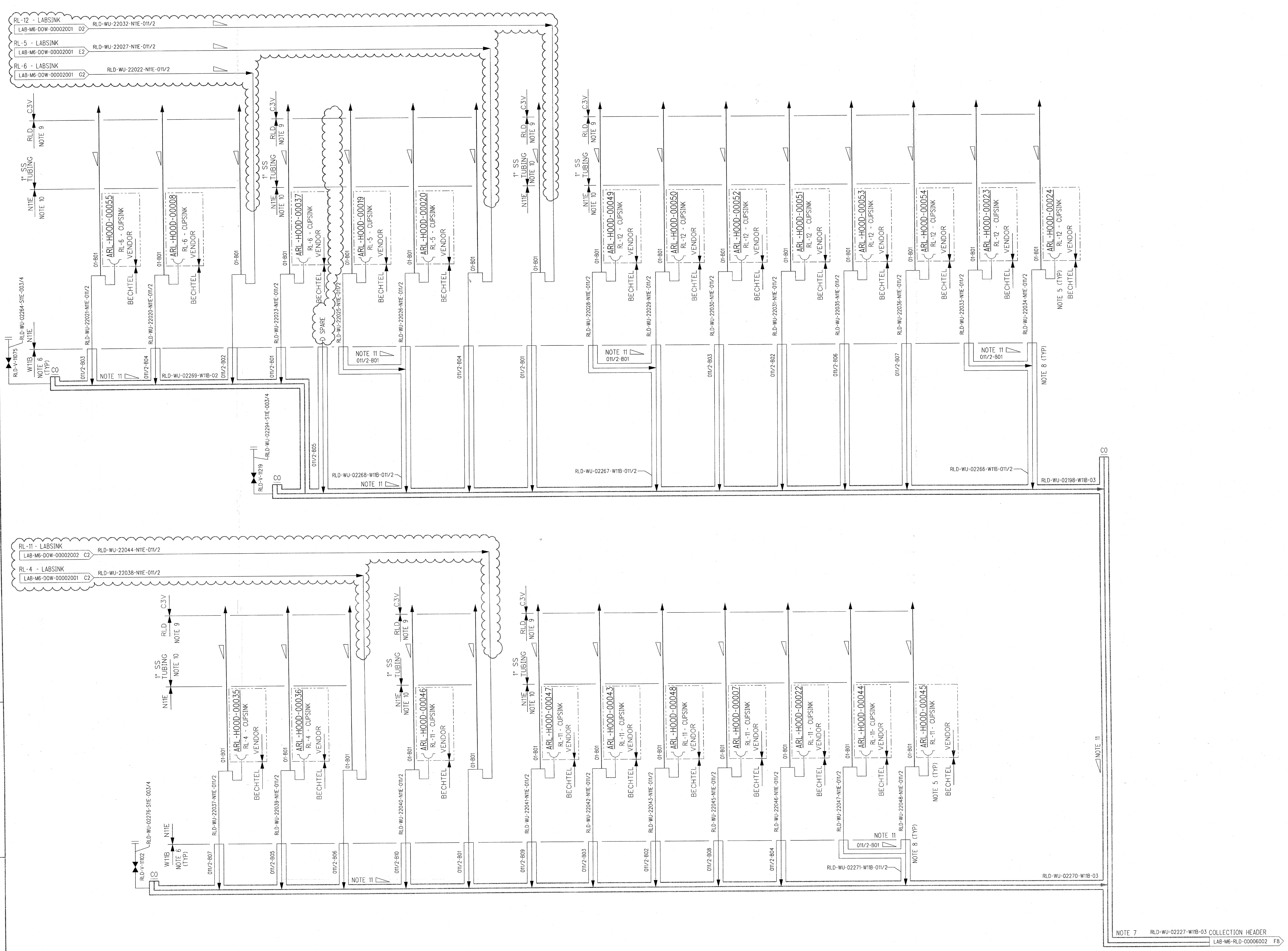

NOTES:

1. SEE DRAWINGS 24590-WTP-M6-50-00001 THROUGH 24590-WTP-M6-50-00008 FOR GENERAL NOTES, SYMBOLS AND LEGEND, AND GENERAL SLOPE REQUIREMENTS.
2. CONTENTS OF THIS DOCUMENT ARE DANGEROUS WASTE PERMIT AFFECTING.
3. THE PRESSURE BOUNDARY FOR ALL COMPONENTS ON THIS DRAWING IS QUALITY LEVEL CM AND SEISMIC CATEGORY SC-IV, UNLESS OTHERWISE NOTED.
4. ALL LINES SHOWN ON THIS DRAWING SHALL BE FREE DRAINING UNLESS OTHERWISE NOTED.
5. ALL P-TRAPS AND LOOP SEALS SHOWN ON THIS DRAWING SHALL BE ACCESSIBLE AND MAINTAINABLE (I.E., CAPABLE OF REPLACEMENT). LOOP PRIMING SHALL BE DONE ADMINISTRATIVELY. LINES CONTAINING THESE FEATURES ARE NOT FREE DRAINING.
6. AN UNDER SINK SECONDARY CONTAINMENT PAN WILL DIRECT POTENTIAL LEAKAGE TO THE ANNULAR SPACE OF THE DOUBLE-WALL PIPE FOR LEAK COLLECTION AND DETECTION. DRAIN PAN CONNECTION SHALL ALLOW FOR PERIODIC PNEUMATIC TESTING OF THE PIPE JACKET AND ALLOW FOR FLUSHING OF THE ANNULAR SPACE IN THE EVENT OF A LEAK.
7. ALL PROCESS DRAIN COLLECTION PIPING SHOWN SHALL BE DOUBLE-WALLED UNLESS PROVIDED WITH ANOTHER FORM OF SECONDARY CONTAINMENT AND LEAK DETECTION. CARBON STEEL PORTIONS OF CONTAINMENT PIPING LOCATED ABOVE THE STAINLESS STEEL LINER AND EXPOSED TO EFFLUENT VESSEL CELL ATMOSPHERE SHALL BE COATED IN ACCORDANCE WITH SPECIFICATION 24590-WTP-3PS-AFPS-T0001, APPENDIX D, COATING SCHEDULE ITEM 3.90, SYSTEM CODE D.
8. COAT EXPOSED CARBON STEEL JACKET PER SPECIFICATION 24590-WTP-3PS-AFPS-T0001, APPENDIX D, COATING SCHEDULE ITEM 3.90, SYSTEM CODE D.
9. TUBING IS CONNECTED TO C3V DUCTWORK. SEE NOTE 3 ON 24590-LAB-M8-C3V-00002 FOR 1 1/2" NPT TAP PROVIDED BY HVAC SUBCONTRACTOR.
10. FOR CONNECTION OF TUBING TO DRAIN LINE, SEE DETAIL 1 ON DRAWING 24590-LAB-MX-RLD-00002.
11. SLOPE C3 COLLECTION HEADERS 1/8 INCH PER FOOT AS PRACTICAL WITH A MINIMUM OF 1/16 INCH PER FOOT (1:192 SLOPE).
12. THIS DRAWING IS CONVERTED FROM A SINGLE SHEET TO MULTI-SHEET DRAWINGS AND, IN PART, SUPERSEDES 24590-LAB-M6-RLD-00006 REV 3. THIS DRAWING INCLUDES INFORMATION FROM 24590-LAB-M6N-M80T-00001, 24590-LAB-M6N-RLD-00049, -00054, AND -00059.

HOLD/OPEN ITEMS:

NONE

REFERENCES:

1. 24590-LAB-3YD-RLD-00001, SYSTEM DESCRIPTION FOR THE ANALYTICAL LABORATORY RADIOACTIVE LIQUID WASTE DISPOSAL SYSTEM.

Please note that source, special nuclear, and byproduct materials, as defined in the Atomic Energy Act of 1954 (AEA) are regulated at the U. S. Department of Energy (DOE) facilities exclusively by DOE acting pursuant to its AEA authority. DOE asserts that pursuant to AEA, it has sole and exclusive responsibility and authority to regulate source, special nuclear, and byproduct materials at DOE-owned nuclear facilities. Information contained herein on radionuclides is provided for process description purposes only.

CM
QUALITY DESIGNATOR

REVISION HISTORY

REV	DESCRIPTION	ORG	CHKD	RVWD	APVD	DATE
0	ISSUED FOR CONSTRUCTION, SEE NOTE 12	R 6	ST/[illegible]	SPK SOS	J.7.A. RC4	7/22/10

ISSUED BY RPP-WTP PDC
ISSUE STAMP

PROJECT No.	24590
SITE	HANFORD
AREA	200E
BUILDING No.	60

RIVER PROTECTION PROJECT
WASTE TREATMENT PLANT
2435 STEVENS CENTER PLACE
RICHLAND, WA 99354

CONTRACT No: DE-AC27-01RV14136

	BY	DATE
ORIGINATOR	[signature]	6/18/10
CHECKER	S Thakkar / [illegible]	6/22/10
APPROVER	RC Stevens / J.7. [signature]	7/22/10
REVIEWER	[signature]	6/28/10
	[signature]	6/30/10

CONTENT APPLICABLE TO ALARA? [X] YES [ ] NO
ADR NO. 24590-LAB-ADR-M-03-013 REV: 4
E&NS SCREENING REQUIRED? [X] YES [ ] NO E&NS INITIAL IF YES DEK

P&ID - LAB RADIOACTIVE LIQUID WASTE DISPOSAL SYSTEM C3 RAD LAB COLLECTION

SCALE: NONE
24590-LAB-M6-RLD-00006003
REV 0

SCREENING IS REQUIRED FOR DRAWING TYPES IDENTIFIED IN 24590-WTP-GPP-SREG-002
'E' SIZE - 44x34
COMPUTER GENERATED - MANUAL DESIGN CHANGES NOT PERMITTED
R11253481
$DATE$ $TIME$
PLOTTED BY: $USERNAME$ $FILE$
FORM E_SDN.DGN 02/2009

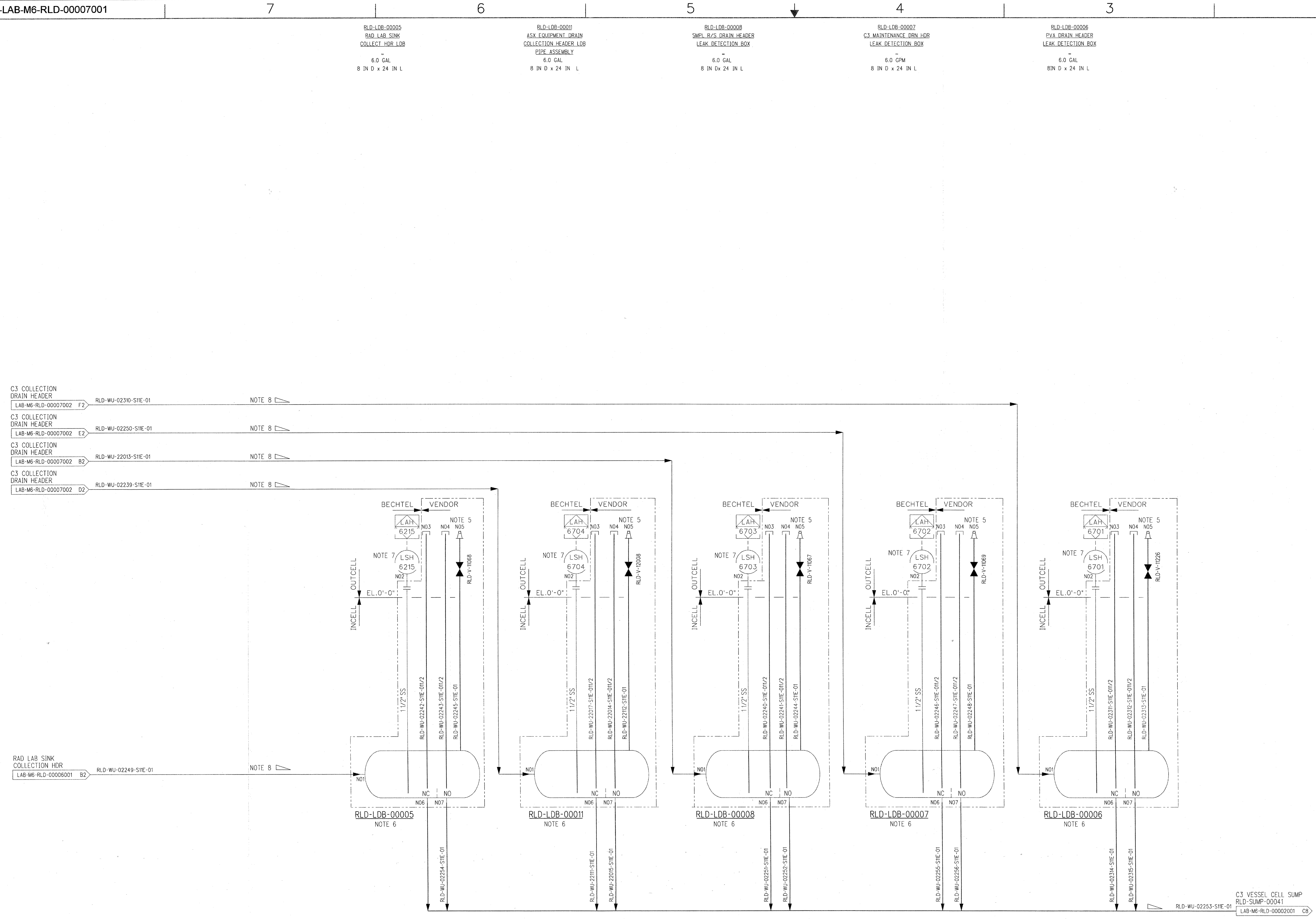

NOTES:

1. SEE DRAWINGS 24590-WTP-M6-50-00001 THROUGH 24590-WTP-M6-50-00008 FOR GENERAL NOTES, SYMBOLS AND LEGEND, AND GENERAL SLOPE REQUIREMENTS.
2. CONTENTS OF THIS DOCUMENT ARE DANGEROUS WASTE PERMIT AFFECTING.
3. THE PRESSURE BOUNDARY FOR ALL COMPONENTS ON THIS DRAWING IS QUALITY LEVEL CM AND SEISMIC CATEGORY SC-IV, UNLESS OTHERWISE NOTED.
4. ALL LINES SHOWN ON THIS DRAWING SHALL BE SELF DRAINING, UNLESS OTHERWISE NOTED.
5. QUICK CONNECTION IS PROVIDED FOR PNEUMATIC TESTING OF THE LEAK DETECTION BOX AND THE PIPE JACKET.
6. OVERFLOW (N04 AND N07) AND DRAIN PLUGS (N03 AND N06) OPERATED REMOTELY VIA RODS THAT EXTEND UP TO GRADE ELEVATION (0'-0"). DRAIN PLUG INSTALLED IN THE CLOSED POSITION TO CREATE A DETECTABLE LEVEL. UPON LEVEL DETECTION, THE PLUG IS LIFTED TO DRAIN THE LEAK DETECTION BOX. THE OVERFLOW PLUG IS NORMALLY OPEN FOR OVERFLOW PROTECTION. BOTH PLUGS WILL BE CLOSED FOR PNEUMATIC TESTING. SEE 24590-LAB-MX-RLD-00001 FOR DETAILS.
7. LEVEL SENSOR TO BE MOUNTED DIRECTLY TO THE VENDOR FLANGE.
8. SLOPE C3 COLLECTION HEADERS AND ENCASEMENT PIPE DRAIN LINES 1/8 INCH PER FOOT AS PRACTICAL WITH A MINIMUM OF 1/16 INCH PER FOOT (1:192 SLOPE).
9. THIS DRAWING IS CONVERTED FROM A SINGLE SHEET TO MULTI-SHEET DRAWINGS AND IN PART SUPERSEDES 24590-LAB-M6-RLD-00007 REV 2. THIS DRAWING INCLUDES INFORMATION FROM 24590-LAB-M6N-M80T-00001 AND 24590-LAB-M6N-RLD-00050.

HOLDS/OPEN ITEMS:

NONE

REFERENCES:

1. 24590-LAB-3YD-RLD-00001, SYSTEM DESCRIPTION FOR THE ANALYTICAL LABORATORY RADIOACTIVE LIQUID WASTE DISPOSAL SYSTEM.

Please note that source, special nuclear, and byproduct materials, as defined in the Atomic Energy Act of 1954 (AEA) are regulated at the U. S. Department of Energy (DOE) facilities exclusively by DOE acting pursuant to its AEA authority. DOE asserts that pursuant to AEA, it has sole and exclusive responsibility and authority to regulate source, special nuclear, and byproduct materials at DOE-owned nuclear facilities. Information contained herein on radionuclides is provided for process description purposes only.

DRAWING INDEX	
DWG NO	TITLE
24590-LAB-M6-RLD-00007001	RLD C3 LEAK DETECTION BOXES
24590-LAB-M6-RLD-00007002	RLD C3 COLLECTION DRAIN HEADER

CM
QUALITY DESIGNATOR

REV	DESCRIPTION	ORG	CHKD	RVWD	APVD	DATE
0	ISSUED FOR CONSTRUCTION, SEE NOTE 9	RG	ST	SOS	RG	7/22/10

REVISION HISTORY

ISSUED BY RPP-WTP PDC
ISSUE STAMP

PROJECT No.	24590
SITE	HANFORD
AREA	200E
BUILDING No.	60

RIVER PROTECTION PROJECT
WASTE TREATMENT PLANT
2435 STEVENS CENTER PLACE
RICHLAND, WA 99354

CONTRACT No: DE-AC27-01RV14136

	BY	DATE
ORIGINATOR	[signature]	6/18/10
CHECKER	S Thakkar	6/21/10
APPROVER	R E Stevens / J.J. [signature]	7/22/10
REVIEWER	[signature]	6/28/10
	[signature]	6/30/10

CONTENT APPLICABLE TO ALARA? [X] YES [ ] NO
ADR NO. 24590-LAB-ADR-M-03-013 REV: 4
E&NS SCREENING REQUIRED? [X] YES [ ] NO E&NS INITIAL IF YES DEK

P&ID - LAB RADIOACTIVE LIQUID WASTE DISPOSAL SYSTEM C3 LEAK DETECTION BOXES

SCALE: NONE
24590-LAB-M6-RLD-00007001
REV 0

SCREENING IS REQUIRED FOR DRAWING TYPES IDENTIFIED IN 24590-WTP-GPP-SREG-002

'E' SIZE - 44x34
COMPUTER GENERATED - MANUAL DESIGN CHANGES NOT PERMITTED

R11253482

$DATE$ $TIME$

PLOTTED BY: $USERNAME$ $FILE$

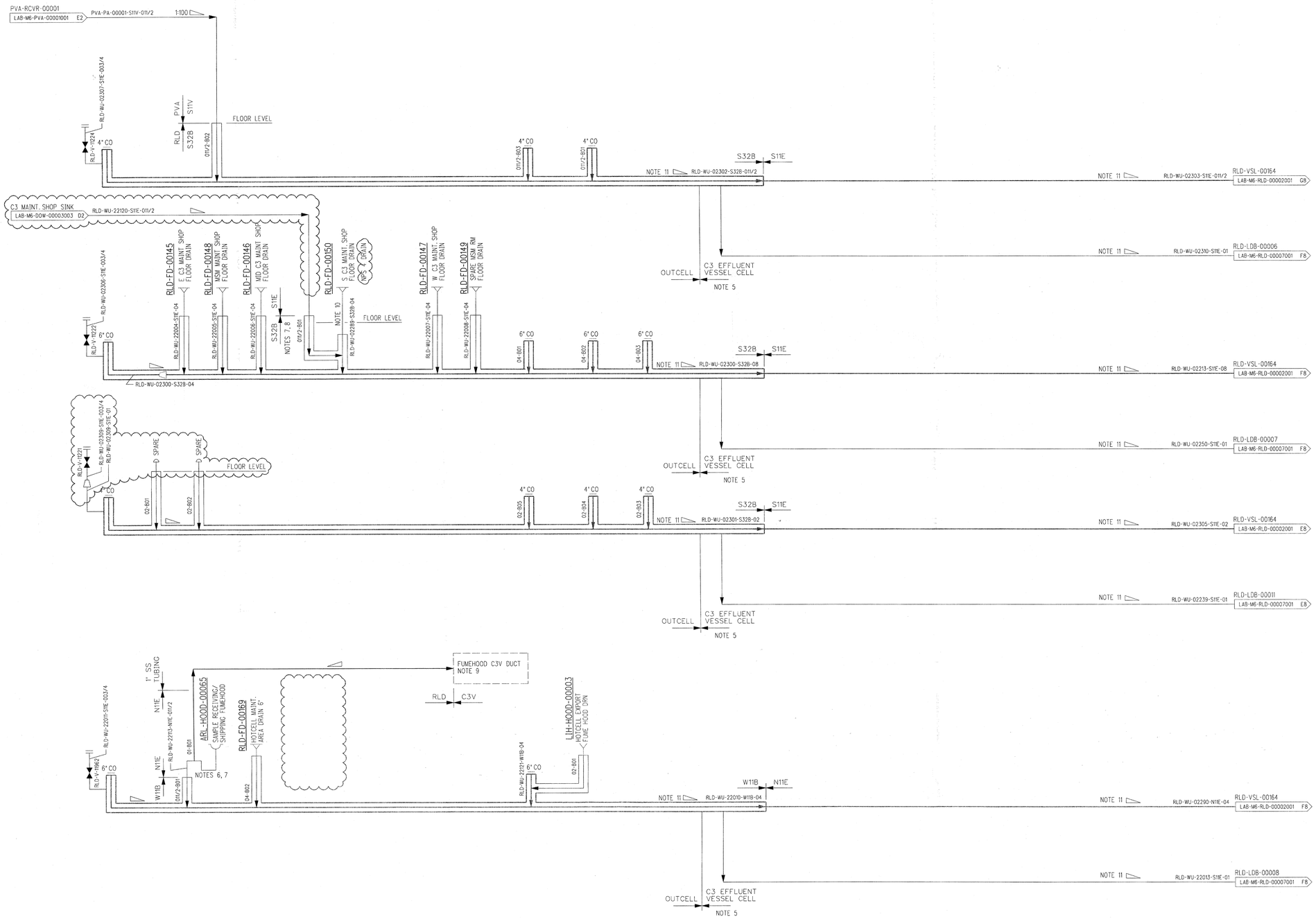

NOTES:

1. SEE DRAWINGS 24590-WTP-M6-50-00001 THROUGH 24590-WTP-M6-50-00008 FOR GENERAL NOTES, SYMBOLS AND LEGEND, AND GENERAL SLOPE REQUIREMENTS.
2. CONTENTS OF THIS DOCUMENT ARE DANGEROUS WASTE PERMIT AFFECTING.
3. THE PRESSURE BOUNDARY FOR ALL COMPONENTS ON THIS DRAWING IS QUALITY LEVEL CM AND SEISMIC CATEGORY SC-IV, UNLESS OTHERWISE NOTED.
4. ALL LINES SHOWN ON THIS DRAWING SHALL BE SELF DRAINING, UNLESS OTHERWISE NOTED.
5. DRAIN COLLECTION PIPING SHOWN SHALL BE DOUBLE-WALL UNLESS PROVIDED WITH ANOTHER FORM OF SECONDARY CONTAINMENT AND LEAK DETECTION. CARBON STEEL PORTIONS OF CONTAINMENT PIPING LOCATED ABOVE THE STAINLESS STEEL LINER AND EXPOSED TO EFFLUENT VESSEL CELL OR BUILDING ATMOSPHERE SHALL BE COATED IN ACCORDANCE WITH SPECIFICATION 24590-WTP-3PS-AFPS-T0001, APPENDIX D, COATING SCHEDULE ITEM 3.90, SYSTEM CODE D".
6. P-TRAPS SHALL BE ACCESSIBLE AND MAINTAINABLE (I.E., CAPABLE OF REPLACEMENT). LOOP PRIMING SHALL BE DONE ADMINISTRATIVELY. LINES WITH THESE FEATURES ARE NOT SELF DRAINING.
7. AN UNDER SINK DRAIN PAN WILL DIRECT POTENTIAL LEAKAGE TO ANNULAR REGION OF DOUBLE-WALL PIPE FOR LEAKAGE COLLECTION AND MONITORING. DRAIN PAN CONNECTION SHALL PERMIT PERIODIC PNEUMATIC TESTING OF THE CONTAINMENT PIPING AND THE FLUSHING OF THE ANNULAR REGION IN THE EVENT OF LEAKAGE.
8. PROVIDE A RECESSED PLUG-PLATE AT DOUBLE-/SINGLE-WALL TRANSITION FOR PERIODIC PNEUMATIC TESTING OF THE PIPE JACKET AND ALLOW FOR FLUSHING OF THE ANNULAR SPACE IN THE EVENT OF A LEAK.
9. TUBING CONNECTS TO C3V DUCTWORK. SEE NOTE 3 ON 24590-LAB-M8-C3V-00002 FOR 1 1/2" NPT TAP PROVIDED BY HVAC SUB-CONTRACTOR.
10. THE PIPELINE SHOWN IS AN EXTENSION OF THE CORE PIPE TO THE FLOOR DRAIN.
11. SLOPE C3 COLLECTION HEADERS 1/8 INCH PER FOOT AS PRACTICAL WITH A MINIMUM OF 1/16 INCH PER FOOT (1:192).
12. THIS DRAWING IS CONVERTED FROM A SINGLE SHEET TO MULTI-SHEET DRAWINGS AND IN PART SUPERSEDES 24590-LAB-M6-RLD-00007 REV. 2. THIS DRAWING INCLUDES INFORMATION FROM 24590-LAB-M6N-M8OT-00001, 24590-LAB-M6N-RLD-00030, -00050, -00063, AND 24590-WTP-FC-P-05-0012.

HOLDS/OPEN ITEMS:

NONE

REFERENCES:

1. 24590-LAB-3YD-RLD-00001, SYSTEM DESCRIPTION FOR THE ANALYTICAL LABORATORY RADIOACTIVE LIQUID WASTE DISPOSAL SYSTEM.

Please note that source, special nuclear, and byproduct materials, as defined in the Atomic Energy Act of 1954 (AEA) are regulated at the U. S. Department of Energy (DOE) facilities exclusively by the DOE pursuant to the AEA. The Nuclear Regulatory Commission, pursuant to AEA, it has sole and exclusive responsibility and authority to regulate source, special nuclear, and byproduct materials at DOE-owned nuclear facilities. Information contained herein on radionuclides is provided for process description purposes only.

REV	DESCRIPTION	ORG	CHKD	RVWD	APVD	DATE
0	ISSUED FOR CONSTRUCTION, SEE NOTE 12	RL	[illegible]	[illegible]	[illegible]	7/22/10

REVISION HISTORY

CM
QUALITY DESIGNATOR

ISSUED BY RPP-WTP PDC
ISSUE STAMP

	BY	DATE
ORIGINATOR	[illegible]	6/9/10
CHECKER	[illegible]	6/21/10
APPROVER	[illegible]	7/22/10
REVIEWER	[illegible]	6/30/10
	[illegible]	6/30/10

PROJECT No.	24590
SITE	HANFORD
AREA	200E
BUILDING No.	60

CONTENT APPLICABLE TO ALARA? [X] YES [ ] NO
ADR NO. 24590-LAB-ADR-M-03-013 REV: 4
E&MS SCREENING REQUIRED? [X] YES [ ] NO E&MS INITIAL IF YES D.E.K.
SCREENING IS REQUIRED FOR DRAWING TYPES IDENTIFIED IN 24590-WTP-GPP-SREQ-002

BECHTEL

RIVER PROTECTION PROJECT
WASTE TREATMENT PLANT
2435 STEVENS CENTER PLACE
RICHLAND, WA 99354

CONTRACT No: DE-AC27-01RV14136

P&ID - LAB RADIOACTIVE LIQUID WASTE DISPOSAL SYSTEM C3 COLLECTION DRAIN HEADER

SCALE:		REV
NONE	24590-LAB-M6-RLD-00007002	0

E-SIZE - 44x34
COMPUTER GENERATED - MANUAL DESIGN CHANGES NOT PERMITTED

R1125483

$DATE$ $TIME$

PLOTTED BY: $USERNAME$ $FILE$

FORM E_SDN.DGN 02/2009

24590-LAB-M6-RLD-00008001

RLD-LDB-00004
C3 TRANSFER
LEAK DETECTION BOX
PIPE ASSEMBLY
6.0 GAL
8 IN D x 24 IN L

RLD-LDB-00009
GLOVEBOX HEADER
LEAK DETECTION BOX
PIPE ASSEMBLY
6.0 GAL
8 IN D x 24 IN L

RLD-LDB-00002
HOTCELL COLLECT HEADER
LEAK DETECTION BOX
PIPE ASSEMBLY
6.0 GAL
8 IN D x 24 IN L

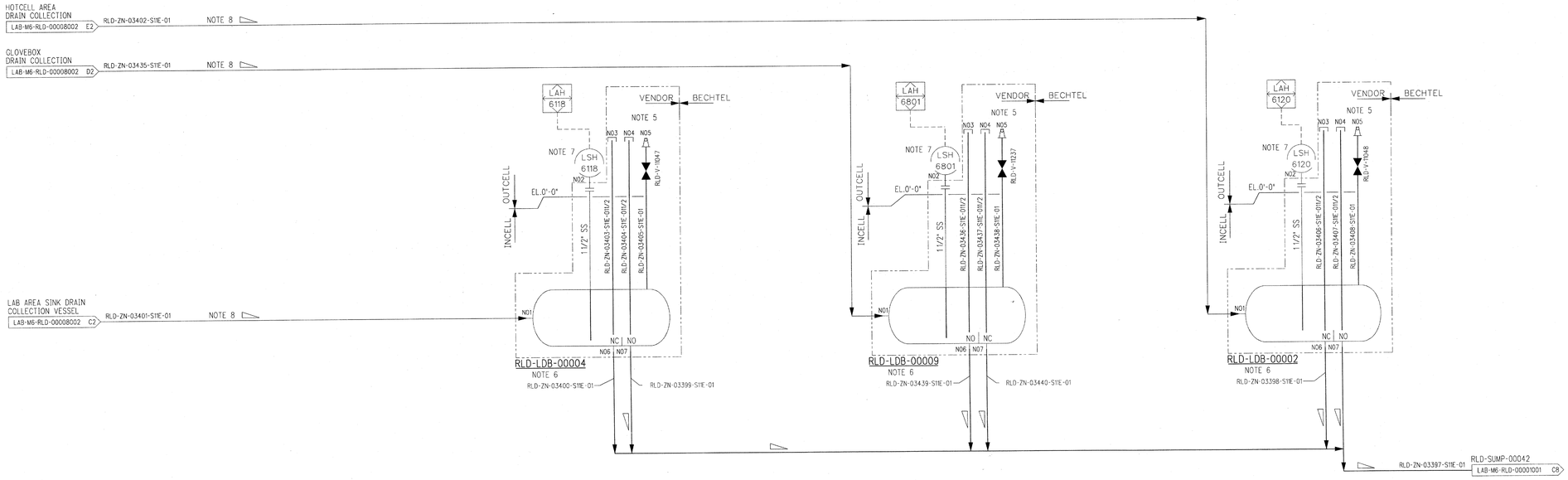

NOTES:

1. SEE DRAWINGS 24590-WTP-M6-50-00001 THROUGH 24590-WTP-M6-50-00008 FOR GENERAL NOTES, SYMBOLS AND LEGEND, AND GENERAL SLOPE REQUIREMENTS.
2. CONTENTS OF THIS DOCUMENT ARE DANGEROUS WASTE PERMIT AFFECTING.
3. THE PRESSURE BOUNDARY FOR ALL COMPONENTS SHOWN ON THIS DRAWING IS QUALITY LEVEL CM AND SEISMIC CATEGORY SC-IV, UNLESS OTHERWISE NOTED.
4. ALL LINES SHOWN ON THIS DRAWING SHALL BE SELF DRAINING, UNLESS OTHERWISE NOTED.
5. QUICK CONNECTION IS PROVIDED FOR PNEUMATIC TESTING OF THE LEAK DETECTION BOX AND THE PIPE JACKET.
6. OVERFLOW AND DRAIN PLUGS OPERATED REMOTELY VIA RODS THAT EXTEND UP TO GRADE ELEVATION (0'-0") THROUGH PIPE SLEEVES. DRAIN PLUG INSTALLED IN THE CLOSED POSITION TO CREATE A DETECTABLE LEVEL UPON LEVEL DETECTION, THE PLUG IS LIFTED TO DRAIN THE LEAK DETECTION BOX. THE OVERFLOW PLUG IS NORMALLY OPEN FOR OVERFLOW PROTECTION. BOTH PLUGS WILL BE CLOSED FOR PNEUMATIC TESTING.
7. LEVEL SENSOR TO BE MOUNTED DIRECTLY TO THE VENDOR FLANGE.
8. SLOPE C3 COLLECTION HEADER 1/8 INCH PER FOOT AS PRACTICAL WITH A MINIMUM OF 1/16 INCH PER FOOT (1:192 SLOPE).
9. THIS DRAWING IS CONVERTED FROM A SINGLE SHEET TO MULTI-SHEET DRAWINGS AND, IN PART, SUPERSEDES 24590-LAB-M6-RLD-00008 REV 2. THIS DRAWING INCLUDES INFORMATION FROM 24590-LAB-M6N-M80T-00001 AND 24590-LAB-M6N-RLD-00054.

HOLD/OPEN ITEMS:

NONE

REFERENCES:

1. 24590-LAB-3YD-RLD-00001, SYSTEM DESCRIPTION FOR THE ANALYTICAL LABORATORY LIQUID WASTE DISPOSAL SYSTEM.

Please note that source, special nuclear, and byproduct materials, as defined in the Atomic Energy Act of 1954 (AEA) are regulated at the U. S. Department of Energy (DOE) facilities exclusively by DOE acting pursuant to its AEA authority. DOE asserts that regulation of DOE's AEA activities pursuant to any other authority to regulate source, special nuclear, and byproduct materials at DOE-owned nuclear facilities. Information contained herein on radionuclides is provided for process description purposes only.

DRAWING INDEX	
DWG NO	TITLE
24590-LAB-M6-RLD-00008001	RLD LEAK DETECTION BOXES
24590-LAB-M6-RLD-00008002	RLD C5 DRAIN COLLECTION HEADERS
24590-LAB-M6-RLD-00008003	RLD C5 TRANSFER LINES

CM
QUALITY DESIGNATOR

REVISION HISTORY

REV	DESCRIPTION	ORG	CHKD	RVWD	APVD	DATE
0	ISSUED FOR CONSTRUCTION, SEE NOTE 9	RG	ST	JGK	DTB	7/22/10

ISSUED BY RPP-WTP PDC
ISSUE STAMP

PROJECT No.	24590
SITE	HANFORD
AREA	200E
BUILDING No.	60

	BY	DATE
ORIGINATOR	R. Gotcher	6/15/10
CHECKER	S. Thakkar	6/16/10
APPROVER	R. Gotcher	7/22/10
REVIEWER		6/30/10
		6/30/10

CONTENT APPLICABLE TO ALARA? [X] YES [ ] NO
ADR NO. 24590-LAB-ADR-M-03-013 REV: 4
E&HS SCREENING REQUIRED? [X] YES [ ] NO E&HS INITIAL IF YES DSK

BECHTEL NATIONAL, INC.
RIVER PROTECTION PROJECT
WASTE TREATMENT PLANT
2435 STEVENS CENTER PLACE
RICHLAND, WA 99354

CONTRACT No: DE-AC27-01RV14136

P&ID - LAB RADIOACTIVE LIQUID WASTE DISPOSAL SYSTEM - C5 LEAK DETECTION BOXES

SCALE: NONE
24590-LAB-M6-RLD-00008001
REV 0

E SIZE - 44x34
COMPUTER GENERATED - MANUAL DESIGN CHANGES NOT PERMITTED

SCREENING IS REQUIRED FOR DRAWING TYPES IDENTIFIED IN 24590-WTP-GPP-SREG-002

R1125464

$DATE$ $TIME$

PLOTTED BY: $USERNAME$ $FILE$

FORM E_SDN.DGN 02/2009

NOTES:

1. SEE DRAWINGS 24590-WTP-M6-50-00001 THROUGH 24590-WTP-M6-50-00008 FOR GENERAL NOTES, SYMBOLS AND LEGEND, AND GENERAL SLOPE REQUIREMENTS.
2. CONTENTS OF THIS DOCUMENT ARE DANGEROUS WASTE PERMIT AFFECTING.
3. THE PRESSURE BOUNDARY FOR ALL COMPONENTS SHOWN ON THIS DRAWING IS QUALITY LEVEL CM AND SEISMIC CATEGORY SC-IV, UNLESS OTHERWISE NOTED.
4. ALL LINES SHOWN ON THIS DRAWING SHALL BE SELF DRAINING, UNLESS OTHERWISE NOTED.
5. ALL PROCESS DRAIN COLLECTION AND TRANSFER PIPING SHOWN SHALL BE DOUBLE-WALL UNLESS PROVIDED WITH ANOTHER FORM OF SECONDARY CONTAINMENT AND LEAK DETECTION. CARBON STEEL PORTIONS OF CONTAINMENT PIPING LOCATED ABOVE THE STAINLESS STEEL LINER AND EXPOSED TO EFFLUENT VESSEL CELL OR BUILDING ATMOSPHERE SHALL BE COATED IN ACCORDANCE WITH SPECIFICATION 24590-WTP-3PS-AFPS-T0001, APPENDIX D, COATING SCHEDULE ITEM 3.90, SYSTEM CODE D.
6. SLOPE C3 COLLECTION HEADERS 1/8 INCH PER FOOT AS PRACTICAL WITH A MINIMUM OF 1/16 INCH PER FOOT (1:192).
7. THIS DRAWING IS CONVERTED FROM A SINGLE SHEET TO MULTI-SHEET DRAWINGS AND, IN PART, SUPERSEDES 24590-LAB-M6-RLD-00008 REV 2. THIS DRAWING INCLUDES INFORMATION FROM 24590-LAB-M6N-M80T-00001 AND 24590-LAB-M6N-RLD-00054.

HOLD/OPEN ITEMS:

NONE

REFERENCES:

1. 24590-LAB-3YD-RLD-00001, SYSTEM DESCRIPTION FOR THE ANALYTICAL LABORATORY LIQUID WASTE DISPOSAL SYSTEM.

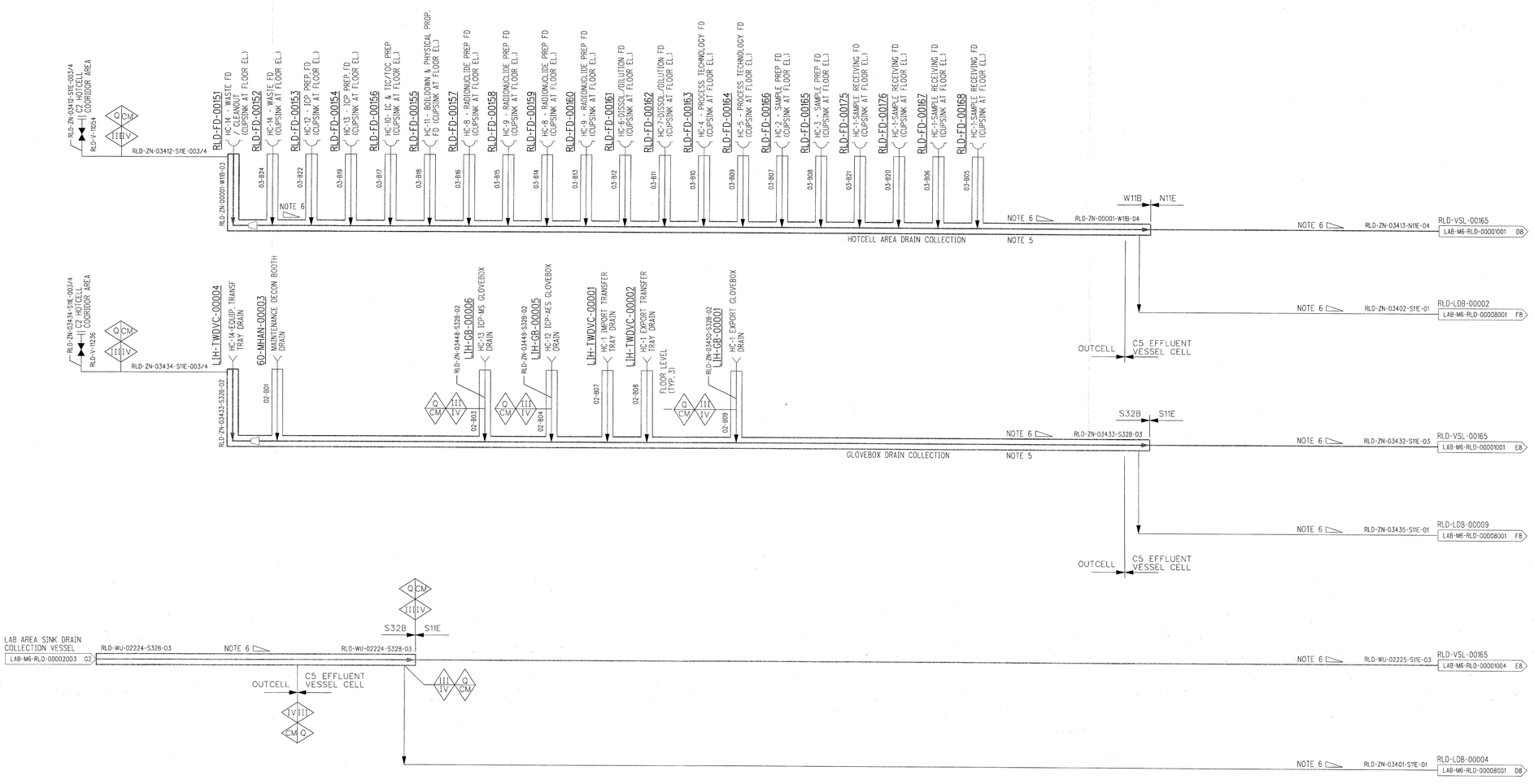

Please note that source, special nuclear, and byproduct materials, as defined in the Atomic Energy Act of 1954 (AEA) are regulated by the U.S. Nuclear Regulatory Commission at facilities exclusively by DOE acting pursuant to its AEA authorities. DOE asserts that pursuant to AEA, it has sole and exclusive regulatory authority to regulate source, special nuclear, and byproduct materials at DOE-owned nuclear facilities. Information contained herein on radionuclides is provided for process description purposes only.

REV	DESCRIPTION	ORG	CHKD	RVWD	APVD	DATE
0	ISSUED FOR CONSTRUCTION, SEE NOTE 7	RG	ST	[illegible]	[illegible]	7/22/10

REVISION HISTORY

Q — QUALITY DESIGNATOR

ISSUED BY RPP-WTP PDC

ISSUE STAMP

	PROJECT No.	24590
	SITE	HANFORD
	AREA	200E
	BUILDING No.	60

	BY	DATE
ORIGINATOR	[signature]	6/15/10
CHECKER	[signature]	6/11/10
APPROVER	[signature]	7/22/10
REVIEWER	[signature]	6/29/10
	[signature]	6/30/10

CONTENT APPLICABLE TO ALARA? [X] YES [ ] NO
ADR NO. 24590-LAB-ADR-M-03-013 REV: 4
EMS SCREENING REQUIRED? [X] YES [ ] NO EMS INITIAL IF YES DEK

BECHTEL

RIVER PROTECTION PROJECT
WASTE TREATMENT PLANT
2435 STEVENS CENTER PLACE
RICHLAND, WA 99354

CONTRACT No: DE-AC27-01RV14136

P&ID - LAB RADIOACTIVE LIQUID WASTE DISPOSAL SYSTEM C5 DRAIN COLLECTION HEADERS

SCALE: NONE

24590-LAB-M6-RLD-00008002 REV 0

R1125485

$DATE$ $TIME$

PLOTTED BY $USERNAME$ $FILE$

SCREENING IS REQUIRED FOR DRAWING TYPES IDENTIFIED IN 24590-WTP-GPP-SREG-002

"E" SIZE - 44x34
COMPUTER GENERATED - MANUAL DESIGN CHANGES NOT PERMITTED

FORM E_SDN.DGN 02/2009

ISSUED BY
RPP-WTP PDC

R11379084

Quarter Ending 09/30/2011

24590-LAW-PCN-ENV-11-002

Hanford Facility RCRA Permit Modification Notification Form

Part III, Operating Unit 10

Waste Treatment and Immobilization Plant

Index

Page 2 of 5: Hanford Facility RCRA Permit, Part III, Operating Unit 10, Waste Treatment and Immobilization Plant
Replace Piping and Instrumentation Diagram (P&ID) drawings for LAW Primary Offgas Process System (LOP) in Appendix 9.2 of the Dangerous Waste Permit (DWP).

Submitted by Co-Operator:

Donna Busche 08/16/11

D. M. Busche Date

Reviewed by ORP Program Office:

D L Noyes 08/16/11

D. L. Noyes Date

Quarter Ending 09/30/2011

Hanford Facility RCRA Permit Modification Notification Form

Unit:	Permit Part:
Waste Treatment and Immobilization Plant	**Part III, Operating Unit 10**

Description of Modification:

The purpose of this Class 1 prime modification is to update the P&ID drawings for the LAW LOP System in Appendix 9.2 of the DWP.

The following P&IDs are being submitted to replace the P&IDs currently in Appendix 9.2. The increase in the number of drawings submitted results from converting the source drawings into two or more drawings to provide a clearer representation of the LOP system, including additional details on instrumentation and logic controls.

Appendix 9.2			
Replace:	24590-LAW-M6-LOP-P0001, Rev. 2	With:	24590-LAW-M6-LOP-00001001, Rev. 0
			24590-LAW-M6-LOP-00001002, Rev. 0
			24590-LAW-M6-LOP-00001003, Rev. 0
			24590-LAW-M6-LOP-00001004, Rev. 0
			24590-LAW-M6-LOP-00001005, Rev. 0
			24590-LAW-M6-LOP-00001006, Rev. 0
	24590-LAW-M6-LOP-P0002, Rev. 2		24590-LAW-M6-LOP-00002001, Rev. 0
			24590-LAW-M6-LOP-00002002, Rev. 0
			24590-LAW-M6-LOP-00002003, Rev. 0
			24590-LAW-M6-LOP-00002004, Rev. 0
			24590-LAW-M6-LOP-00002005, Rev. 0
			24590-LAW-M6-LOP-00002006, Rev. 0
	24590-LAW-M6-LOP-00004, Rev. 4		24590-LAW-M6-LOP-00004001, Rev. 0
			24590-LAW-M6-LOP-00004002, Rev. 0
	24590-LAW-M6-LOP-00005, Rev. 4		24590-LAW-M6-LOP-00005001, Rev. 0
			24590-LAW-M6-LOP-00005002, Rev. 0

This modification requests Ecology approval and incorporation into the permit the specific changes to these P&IDs that are indicated by revision notes and clouds. The referenced P&IDs include changes provided in applicable document change forms (e.g., DCN, SCN, SDDR, FCN, FCR, etc.) that were submitted to Ecology in accordance with Condition III.10.C.9.h. In addition, the P&IDs include changes associated with the resolution to comments on change documents since the issuance of the last revision of the permitted drawing.

The following types of changes apply to the LOP P&IDs:

- Drawing converted from a single sheet to multi-sheet drawings
- Modified, deleted, and added notes and references
- Expanded instruments and logic controls information
- Incorporated change notices as specified in Revision Notes

LAW Primary Offgas P&IDs (24590-LAW-M6-LOP-00001001, 24590-LAW-M6-LOP-00001002, 24590-LAW-M6-LOP-00001003, 24590-LAW-M6-LOP-00001004, 24590-LAW-M6-LOP-00001005, and 24590-LAW-M6-LOP-00001006):

- Converted from single sheet to multi-sheet format with each sheet documenting one of the following LOP equipment items or piping:
  - LOP-SCB-00001
  - LOP-VSL-00001
  - LOP-BULGE-00001
  - LOP-WESP-00001

- Melter 1 Film Cooler Offgas
- LOP-PMP-00003A/B

LAW Primary Offgas P&IDs (24590-LAW-M6-LOP-00002001, 24590-LAW-M6-LOP-00002002, 24590-LAW-M6-LOP-00002003, 24590-LAW-M6-LOP-00002004, 24590-LAW-M6-LOP-00002005, and 24590-LAW-M6-LOP-00002006):

- Converted from single sheet to multi-sheet format with each sheet documenting one of the following LOP equipment items or piping:
  - LOP-SCB-00002
  - LOP-VSL-00002
  - LOP-BULGE-00002
  - LOP-WESP-00002
  - Melter 2 Film Cooler Offgas
  - LOP-PMP-00006A/B
- See DCNL 24590-LAW-M6LN-LOP-00005 for correction of title block error on 24590-LAW-M6-LOP-00002003 and change equipment tag from LOP-PMP-00003B to LOP-PMP-00006B in two places at Grid H-5 and F-5 on 24590-LAW-M6-LOP-00002006.

LAW Primary Offgas P&IDs (24590-LAW-M6-LOP-00004001 and 24590-LAW-M6-LOP-00004002):

- Converted from single sheet to multi-sheet format with each sheet documenting one of the following LOP equipment items:
  - LOP-FCLR-00002
  - LOP-FCLR-00001
- Deleted HEPA filters

LAW Primary Offgas P&IDs (24590-LAW-M6-LOP-00005001 and 24590-LAW-M6-LOP-00005002):

- Converted from single sheet to multi-sheet format with each sheet documenting one of the following LOP equipment items:
  - LOP-FCLR-00004
  - LOP-FCLR-00003
- Deleted HEPA filters

This modification requests Ecology approval and incorporation of the following list of outstanding change documents into the permit. Although not yet incorporated into the revised documents attached to this PCN, this list of outstanding DCNs are intended to be incorporated into this modification:

Applicable to P&ID: 24590-LAW-M6-LOP-00001001

- DCNL: 24590-LAW-M6LN-LOP-00002
- DCN: 24590-LAW-M6N-LOP-00013
- DCN: 24590-LAW-M6N-LOP-00066

Applicable to P&ID: 24590-LAW-M6-LOP-00001002

- DCN: 24590-LAW-M6N-LOP-00065

Applicable to P&ID: 24590-LAW-M6-LOP-00001003

- DCNL: 24590-LAW-M6LN-LOP-00003
- DCNL: 24590-LAW-M6LN-LOP-00013
- DCN: 24590-LAW-M6N-LOP-00014

Applicable to P&ID: 24590-LAW-M6-LOP-00001004
- DCNL: 24590-LAW-M6LN-LOP-00005
- DCN: 24590-LAW-M6N-LOP-00013
- DCN: 24590-LAW-M6N-LOP-00063
- DCN: 24590-LAW-M6N-LOP-00066

Applicable to P&ID: 24590-LAW-M6-LOP-00001005
- DCN: 24590-LAW-M6N-LOP-00063
- DCN: 24590-LAW-M6N-LOP-00065

Applicable to P&ID: 24590-LAW-M6-LOP-00002001
- DCNL: 24590-LAW-M6LN-LOP-00002
- DCN: 24590-LAW-M6N-LOP-00013
- DCN: 24590-LAW-M6N-LOP-00066

Applicable to P&ID: 24590-LAW-M6-LOP-00002002
- DCN: 24590-LAW-M6N-LOP-00065

Applicable to P&ID: 24590-LAW-M6-LOP-00002003
- DCNL: 24590-LAW-M6LN-LOP-00003
- DCNL: 24590-LAW-M6LN-LOP-00005
- DCNL: 24590-LAW-M6LN-LOP-00013
- DCN: 24590-LAW-M6N-LOP-00014

Applicable to P&ID: 24590-LAW-M6-LOP-00002004
- DCNL: 24590-LAW-M6LN-LOP-00005
- DCN: 24590-LAW-M6N-LOP-00013
- DCN: 24590-LAW-M6N-LOP-00063
- DCN: 24590-LAW-M6N-LOP-00066

Applicable to P&ID: 24590-LAW-M6-LOP-00002005
- DCN: 24590-LAW-M6N-LOP-00065

Applicable to P&ID: 24590-LAW-M6-LOP-00002006
- DCNL: 24590-LAW-M6LN-LOP-00005

Applicable to P&ID: 24590-LAW-M6-LOP-00004001
- DCNL: 24590-LAW-M6LN-LOP-00011
- DCN: 24590-LAW-M6N-LOP-00066

Applicable to P&ID: 24590-LAW-M6-LOP-00004002
- DCN: 24590-LAW-M6N-LOP-00063

Applicable to P&ID: 24590-LAW-M6-LOP-00005001
- DCNL: 24590-LAW-M6LN-LOP-00011
- DCN: 24590-LAW-M6N-LOP-00066

Applicable to P&ID: 24590-LAW-M6-LOP-00005002
- DCN: 24590-LAW-M6N-LOP-00063

Quarter Ending 09/30/2011

24590-LAW-PCN-ENV-11-002

WAC 173-303-830 Modification Class:	Class 1	Class [1]1	Class 2	Class 3
Please mark the Modification Class:		X		

Enter relevant WAC 173-303-830, Appendix I Modification citation number: A.1

Enter wording of WAC 173-303-830, Appendix I Modification citation:

In accordance with WAC 173-303-830(4)(d)(i), this modification notification is requested to be reviewed and approved as a Class [1]1 modification. WAC 173-303-830(4)(d)(ii)(A) states, "Class 1 modifications apply to minor changes that keep the permit current with routine changes to the facility or its operation. These changes do not substantially alter the permit conditions or reduce the capacity of the facility to protect human health or the environment. In the case of Class 1 modifications, the director may require prior approval."

Modification Approved/Concur: [✓] Yes [ ] Denied (state reason below)

Reason for denial:

Reviewed by Ecology:

D. McDonald — Date: 10-05-11

LOP-SCB-00001
MELTER 1
SUBMERGED
BED SCRUBBER (SBS)
1.2 MMBTU/HR
10'0" ID x 6'6" T-T

LSHH-1018A
LAW-M6-LOP-00001002 E2

ZI 1056 YC HS O/C

UY FF

YY 1056 S

3/8" TUBING ISA
ISA-V-68959
VENT

ZSL 1056 ZSH 1056 YV 1056

CHILLED WATER SUPPLY MANIFOLD
LAW-M6-CHW-00002 C6

LOP-WS-00070-S1B-03

FC

003/4-801 (V) LOP-V-12026

CMCM VIII IV

OUT CELL IN CELL

LOP-WS-00070-S1B-03

STAND BY FILM COOLER
LAW-M6-LOP-00001005 D2

LOP-SPOOL-00004

10" INCONEL 625

1:50

NOTE 6

LSHH-1018A
LAW-M6-LOP-00001002 E2

PI-1039
LAW-M6-LOP-00001004 B7

PDI 1039A H PDY PI 1065 H

PT 1065 FF ATM

ISA P W

3/4" 003/4-3450 LOP-V-34050
NOTE 9

PRIMARY FILM COOLER
LAW-M6-LOP-00001005 C2

LOP-SPOOL-00002

10" INCONEL 625

1:50

NOTE 6

PI 1072

PT 1072 FF ATM

003/4-801 LOP-V-34049

LOP-VSL-G0001 VENT
LAW-M6-LOP-00001002 D2

LOP-PW-01499-N13A-02

1:50

DEMIN WATER SUPPLY MANIFOLD
LAW-M6-DIW-00002001 E2

DIW LOP

003/4-801 (V) LOP-V-34037

LOP-V-09494

LOP-ZE-01497-S1B-02

NOTE 12

LOP-BULGE-00001
LAW-M6-LOP-00001003 C2

LOP-ZS-00004-N13A-02

LT 1063 LX 1063C LX 1063A LX 1063B

LOP-VY-1095 NOTE 7

LT 1011 NOTE 8 LX 1011C LX 1011A LX 1011B

LOP-VY-1094 NOTE 7

LOP-GR-00003-S1P-03

LOP-GR-00003-S1P-03

4" SPARE 2" SPARE 4" SPARE 2" SPARE 6" SPARE 4" SPARE

N01 N02 N03 N04 N05 N06 N07 N08 N09 N10 N10A N11 N12 N13 N14 N14A N15 N16 N17 N18 N19 N20 N21 N22 N23 N24 N25 N26

LOP-SCB-00001

NOTE 5

NOTE 10

LOP-ZS-01587-N13A-02

CHILLED WATER SUPPLY MANIFOLD
LAW-M6-CHW-00002 C4

LOP-WS-00038-S1B-03

003/4-801 LOP-V-10229

TI 1038 H

TT 1038 FF

TE 1038

LVE-PSUP-20201
LAW-M6-LOP-00001004 H8

TDY-1092
LAW-M6-LOP-00001004 F8

1:50

LOP-WESP-00001
LAW-M6-LOP-00001004 B8

LOP-PW-01224-N11V-10

LOP-PMP-00003B
LAW-M6-LOP-00001006 F8

LOP-ZS-00044-N13A-02

LOP-PMP-00003A
LAW-M6-LOP-00001006 D8

LOP-ZS-01541-N13A-02

YC-1029
LAW-M6-LOP-00001003 F8

YC-2119/2120
LAW-M6-DIW-00001001 H8

YC-1148
LAW-M6-LOP-00001003 H8

YC-1019A/B/1020A/B
LAW-M6-LOP-00001002 E8

YC-1208A/B/1207A/B
LAW-M6-LFP-00002 H7

YC-1012A/B/1069A/B
LAW-M6-LOP-00001006 F8

I Z

ACTIVE RESET

HS 9021 Z HS 9022 Z

HS 9041 Z HS 9042 Z

LSHH 1011 Z LAHH 1011

LSLL 1011 Z LALL 1011

LSHH 1063

YC-1019A/1020A
LAW-M6-LOP-00001002 E8

LY Z LI 1011 H L

LI 1063 HH H L LL

LSLL 1063

YC-1012A/1069A
LAW-M6-LOP-00001006 G8

MELTER 1 FEEDING NORMAL SHUTDOWN
LAW-M6-LFP-00002 H7

TC 1013A

O/C HS YC 2005

CHW YY 2005 CHW 3/8" TUBING ISA
ISA-V-68950
VENT

ZI

ZSL 2005 CHW ZSH 2005 CHW YV 2005 CHW

FC

CHILLED WATER RETURN MANIFOLD
LAW-M6-CHW-00002 C6

CHW-WS-03766-S1C-03

CMCM IV III V

IN CELL OUT CELL

LOP-WS-00071-S1B-03

003/4-803 (V) LOP-V-12027

3/8" TUBING ISA
ISA-V-69750

TV 1013A FF FO

CHW-V-10550

LOP-V-10550

003/4-805 (D) LOP-V-12020

LOP-WS-00071-S1B-03

LOP-V-05304

LOP CHW

003-801

CM Q Q CM IV III III IV

SET @ 125 PSIG

PSV 1084 Z PSV 1149 Z

LOP-WS-00073-S1B-02 LOP-WS-00072-S1B-02 LOP-WS-00071-S1B-02 LOP-WS-00070-S1B-02

TI 1013 H

TT 1013 FF

TE 1013

LOP-WS-03832-S1B-01 LOP-WS-03835-S1B-003/4

LOP-WS-03836-S1B-01 LOP-WS-03837-S1B-003/4

L-101A NLD FLOOR DRAIN

003/4-801 (D) LOP-V-34100

LOP-V-34118

003/4-801 (D) LOP-V-34107

L-101A NLD FLOOR DRAIN

LOP-WS-03835-S1B-003/4

TC 1013B

LOP-ZS-03293-N13A-04

WESP DRAIN LINE
LAW-M6-LOP-00001004 A8

NOTE 11

1:50

LOP-ZS-01595-N13A-04

LOP-VSL-00001 OVERFLOW
LAW-M6-LOP-00001002 B8

LOP-VSL-00001 OVERFLOW
LAW-M6-LOP-00001002 B8

1:50

LOP-ZS-00035-N13A-04

003/4-803 (V) LOP-V-12026

3/8" TUBING ISA
ISA-V-69751

TV 1013B FF FO

CHW-V-10546

LOP-V-10574

003/4-805 (D) LOP-V-12019

CHILLED WATER RETURN MANIFOLD
LAW-M6-CHW-00002 C7

LOP-WS-00068-S1B-03

LOP-V-00187

LOP CHW

003-801

LOP-WS-03828-S1B-01 LOP-WS-03829-S1B-003/4

LOP-WS-03840-S1B-01 LOP-WS-03839-S1B-003/4

L-101A NLD FLOOR DRAIN

003/4-801 (D) LOP-V-34108

LOP-V-34119

003/4-801 (D) LOP-V-34101

L-101A NLD FLOOR DRAIN

NOTES:

1. SEE DRAWINGS 24590-WTP-M6-50-00001 THROUGH 24590-WTP-M6-50-00008 FOR GENERAL NOTES, SYMBOLS AND LEGEND, AND GENERAL SLOPE REQUIREMENTS.
2. CONTENTS OF THIS DOCUMENT ARE DANGEROUS WASTE PERMIT AFFECTING.
3. THE PRESSURE BOUNDARY FOR ALL COMPONENTS ON THIS DRAWING IS QUALITY LEVEL Q AND SEISMIC CATEGORY SC-III, UNLESS OTHERWISE NOTED.
4. ALL LINES SHOWN ON THIS DRAWING SHALL BE FREE DRAINING, UNLESS OTHERWISE NOTED.
5. HALF PIPE JACKET.
6. INSULATION BY VENDOR.
7. RADAR GUIDE TUBE TO BE ROUTED TO TRANSMITTER LOCATED ON THE FLOOR ABOVE.
8. INSTRUMENT PERFORMS AN AIR PERMIT FUNCTION. INDICATION DISPLAYED AT PCJ.
9. LOCATE TAP FOR PT-1065 AS CLOSE TO LOP-SCB-00001 AS POSSIBLE. PT-1065 IS BY VENDOR.
10. LINE INSIDE VESSEL SHALL HAVE A MINIMUM OF 3/8 INCH HOLE ABOVE THE TOP OF THE OVERFLOW PORT NOZZLES N04 AND N05 TO PREVENT BACK SIPHON.
11. EMERGENCY OVERFLOW PIPE SHALL ATTACH TO TOP SIDE OF SBS OVERFLOW LINE APEX NOT TO EXCEED 10 INCHES ABOVE OVERFLOW LINE CENTER-TO-CENTER AFTER APEX. LINE SHALL SLOPE TO WESP DRAIN LINE.
12. REMOVABLE SPOOL PIECE REMOVED WHEN MELTER IS PROCESSING WASTE.
13. THIS DRAWING IS CONVERTED FROM A SINGLE SHEET TO MULTI-SHEET DRAWINGS AND, IN PART, SUPERSEDES 24590-LAW-M6-LOP-00001 REV 5. CLOUDS DEPICT MAJOR CHANGES MADE FROM SUPERSEDED DRAWING. THIS DRAWING INCLUDES INFORMATION FROM 24590-LAW-M6N-20-00001, 24590-LAW-M6N-LOP-00034, -00035, -00037, -00040, -00043, -00052, -00060, AND 24590-LAW-M6PR-LOP-00014.

HOLD/OPEN ITEMS:

NONE

REFERENCES:

1. 24590-LAW-3YD-LOP-00001, SYSTEM DESCRIPTION FOR THE LAW PRIMARY OFF GAS (LOP) AND SECONDARY OFFGAS/VESSEL VENT (LVP) SYSTEMS.

Please note that source, special nuclear, and byproduct materials, as defined in the Atomic Energy Act of 1954 (AEA) are regulated at the U. S. Department of Energy (DOE) facilities exclusively by DOE acting pursuant to its AEA authority. DOE asserts that regulation of DOE's AEA activities by any other regulatory authority to regulate source, special nuclear, and byproduct materials at DOE-owned nuclear facilities. Information contained herein on radionuclides is provided for process description purposes only.

DRAWING INDEX

DWG NO	TITLE
24590-LAW-M6-LOP-00001001	PRIMARY OFFGAS MELTER 1 LOP-SCB-00001
24590-LAW-M6-LOP-00001002	PRIMARY OFFGAS MELTER 1 LOP-VSL-00001
24590-LAW-M6-LOP-00001003	PRIMARY OFFGAS MELTER 1 LOP-BULGE-00001
24590-LAW-M6-LOP-00001004	PRIMARY OFFGAS MELTER 1 LOP-WESP-00001
24590-LAW-M6-LOP-00001005	PRIMARY OFFGAS MELTER 1 FILM COOLERS
24590-LAW-M6-LOP-00001006	PRIMARY OFFGAS MELTER 1 LOP-PMP-00003A/B

ISSUED BY RPP-WTP PDC

Q QUALITY DESIGNATOR

REV	DESCRIPTION	ORG	CHKD	RVWD	APVD	DATE
0	ISSUED FOR CONSTRUCTION, SEE NOTE 13	mao	SJ	SGS SPK	RPL	03/04/10

REVISION HISTORY

	BY	DATE
ORIGINATOR	ma.olw	2/25/10
CHECKER	SATISH JAIN	2/24/10
APPROVER		03/04/10
REVIEWER		2/26/10
		3/4/10

ISSUE STAMP

PROJECT No. 24590
SITE HANFORD
AREA 200E
BUILDING No. 20

CONTENT APPLICABLE TO ALARA? [X] YES [ ] NO
ADR NO. 24590-LAW-ADR-M-02-022 REV: 1
EMS SCREENING REQUIRED? [X] YES [ ] NO EMS INITIAL IF YES O.K.

SCREENING IS REQUIRED FOR DRAWING TYPES IDENTIFIED IN 24590-WTP-GPP-SREQ-002

"E" SIZE 44x34
COMPUTER GENERATED - MANUAL DESIGN CHANGES NOT PERMITTED

BECHTEL

RIVER PROTECTION PROJECT
WASTE TREATMENT PLANT
2435 STEVENS CENTER PLACE
RICHLAND, WA 99354

CONTRACT No: DE-AC27-01RV14136

P&ID - LAW
LAW PRIMARY OFFGAS PROCESS SYSTEM MELTER 1 LOP-SCB-00001

SCALE: NONE

24590-LAW-M6-LOP-00001001

REV 0

02/25/2010 04:38:01 PM

C:\Work\gpockes\dms\0383838\LAWM6LOP00001001.dgn

PLOTTED BY: gpockes

FORM E_SDN.DGN 02/2009

LOP-EDUC-00001
MELTER 1
SBS CONDENSATE
MIXING EDUCTOR
44 GPM MOTIVE

LOP-PMP-00002
MELTER 1
SBS CONDENSATE
PURGE PUMP
124 GPM @ 117 FT TDH
20 HP

LOP-VSL-00001
MELTER 1
SBS
CONDENSATE VESSEL
MAX. OPER. VOL. 7400 GAL.
12'-0" ID x 8'-2" T-T

LOP-PMP-00001
MELTER 1
SBS CONDENSATE
PURGE PUMP
124 GPM @ 117 FT TDH
20 HP

NOTES:

1. SEE DRAWINGS 24590-WTP-M6-50-00001 THROUGH 24590-WTP-M6-50-00008 FOR GENERAL NOTES, SYMBOLS AND LEGEND, AND GENERAL SLOPE REQUIREMENTS.
2. CONTENTS OF THIS DOCUMENT ARE DANGEROUS WASTE PERMIT AFFECTING.
3. THE PRESSURE BOUNDARY FOR ALL COMPONENTS ON THIS DRAWING IS QUALITY LEVEL Q AND SEISMIC CATEGORY SC-III, UNLESS OTHERWISE NOTED.
4. ALL LINES SHOWN ON THIS DRAWING SHALL BE FREE DRAINING, UNLESS OTHERWISE NOTED.
5. EQUIPMENT COMPONENTS INSIDE VESSEL ARE QUALITY LEVEL CM AND SEISMIC CATEGORY SC-III.
6. REMOVABLE SPOOL PIECE REMOVED WHEN MELTERS ARE PROCESSING WASTE.
7. HALF PIPE JACKET.
8. RADAR GUIDE TUBE TO BE ROUTED TO TRANSMITTER LOCATED ON THE FLOOR ABOVE.
9. VESSEL INTERNAL PUMP PRIMING AND DISCHARGE PIPING SUPPLIED WITH PUMP BY VENDOR.
10. FUNCTION CONVERTS TANK LEVEL IN INCHES TO GALLONS.
11. REMOVABLE SPOOL PIECE REMOVED WHEN MELTER IS PROCESSING WASTE.
12. THIS DRAWING IS CONVERTED FROM A SINGLE SHEET TO MULTI-SHEET DRAWINGS AND, IN PART, SUPERSEDES 24590-LAW-M6-LOP-00001 REV 5. CLOUDS DEPICT MAJOR CHANGES MADE FROM SUPERSEDED DRAWING. THIS DRAWING INCLUDES INFORMATION FROM 24590-LAW-M6N-20-00001, 24590-LAW-M6N-LOP-00015, -00035, -00037, -00040, -00047, -00052, AND 24590-LAW-M6PR-LOP-00013.

HOLD/OPEN ITEMS:

NONE

REFERENCES:

1. 24590-LAW-3YD-LOP-00001 SYSTEM DESCRIPTION FOR THE LAW PRIMARY OFF GAS (LOP) AND SECONDARY OFFGAS/VESSEL VENT (LVP) SYSTEMS.

Please note that source, special nuclear, and byproduct materials, as defined by the Atomic Energy Act of 1954 (AEA) are regulated at the U. S. Department of Energy (DOE) facilities exclusively by DOE acting pursuant to its AEA authority. DOE asserts that pursuant to AEA, it has sole and exclusive responsibility and authority to regulate source, special nuclear, and byproduct materials at DOE-owned nuclear facilities. Information contained herein on radionuclides is provided for process description purposes only.

REV	DESCRIPTION	ORG	CHKD	RVWD	APVD	DATE
0	ISSUED FOR CONSTRUCTION, SEE NOTE 12	mao	SJ	SPK	JPA	03/04/10

ISSUED BY RPP-WTP PDC

QUALITY DESIGNATOR: Q

REVISION HISTORY

	PROJECT No.	24590
ISSUE STAMP	SITE	HANFORD
	AREA	200E
	BUILDING No.	20

	BY	DATE
ORIGINATOR	mao	3/1/10
CHECKER	SATISH SHAH	3/1/10
APPROVER		03/04/10
REVIEWER		3/1/10
		3/4/10

CONTENT APPLICABLE TO ALARA? [X] YES [ ] NO
ADR NO. 24590-LAW-ADR-M-02-022 REV: 1
ENGS SCREENING REQUIRED? [X] YES [ ] NO ENGS INITIAL IF YES DCE
SCREENING IS REQUIRED FOR DRAWING TYPES IDENTIFIED IN 24590-WTP-GPP-SREQ-002

BECHTEL

RIVER PROTECTION PROJECT
WASTE TREATMENT PLANT
2435 STEVENS CENTER PLACE
RICHLAND, WA 99354

CONTRACT No: DE-AC27-01RV14136

P&ID - LAW
LAW PRIMARY OFFGAS PROCESS SYSTEM MELTER 1 LOP-VSL-00001

SCALE: NONE
TC SIZE - 44x34
COMPUTER GENERATED - MANUAL DESIGN CHANGES NOT PERMITTED

24590-LAW-M6-LOP-00001002 REV 0

03/01/2010 03:07:22 PM
PLOTTED BY: mmmcmill
C:\Work\mmmcmill\cmsp\338351\LAWRELOP0001002.dgn

FORM E_SDNDGN 02/2009

24590-LAW-M6-LOP-00001003

LOP-BULGE-00001
MELTER 1
VALVE BULGE
11'10"L x 4'2"W x 2'11"H

LOP-HEPA-00001
MELTER 1
VALVE BULGE HEPA
FILTER
150 ACFM @ 0.3 IN WG

NOTES:

1. SEE DRAWINGS 24590-WTP-M6-50-00001 THROUGH 24590-WTP-M6-50-00008 FOR GENERAL NOTES, SYMBOLS AND LEGEND, AND GENERAL SLOPE REQUIREMENTS.
2. CONTENTS OF THIS DOCUMENT ARE DANGEROUS WASTE PERMIT AFFECTING.
3. THE PRESSURE BOUNDARY FOR ALL COMPONENTS ON THIS DRAWING IS QUALITY LEVEL CM AND SEISMIC CATEGORY SC-III, UNLESS OTHERWISE NOTED.
4. ALL LINES SHOWN ON THIS DRAWING SHALL BE FREE DRAINING, UNLESS OTHERWISE NOTED.
5. TO BE SEALED AFTER COLD STARTUP.
6. THIS DRAWING IS CONVERTED FROM A SINGLE SHEET TO MULTI-SHEET DRAWINGS AND, IN PART, SUPERSEDES 24590-LAW-M6-LOP-00001 REV 5. CLOUDS DEPICT MAJOR CHANGES MADE FROM SUPERSEDED DRAWING. THIS DRAWING INCLUDES INFORMATION FROM 24590-LAW-M6N-LOP-00040, AND -00052.

HOLD/OPEN ITEMS:

NONE

REFERENCES:

1. 24590-LAW-3YD-LOP-00001, SYSTEM DESCRIPTION FOR THE LAW PRIMARY OFF GAS (LOP) AND SECONDARY OFFGAS/VESSEL VENT (LVP) SYSTEMS.

Please note that source, special nuclear, and byproduct materials, as defined in the Atomic Energy Act of 1954 (AEA) are regulated at the U. S. Department of Energy (DOE) facilities exclusively by DOE pursuant to the AEA. Therefore, at DOE facilities operated pursuant to AEA, it has sole and exclusive responsibility and authority to regulate source, special nuclear, and byproduct materials at DOE-owned nuclear facilities. Information contained herein on radionuclides is provided for process description purposes only.

Q	0	ISSUED FOR CONSTRUCTION, SEE NOTE 6	mao	SJ	SPK 3/24/10	03/04/10
QUALITY DESIGNATOR	REV	DESCRIPTION	ORG	CHKD	RVWD	APVD	DATE

REVISION HISTORY

ISSUED BY RPP-WTP PDC
ISSUE STAMP

	BY	DATE
ORIGINATOR	mao Shuler	3/4/10
CHECKER	SATISH JAIN	3/4/10
APPROVER	[illegible]	03/04/10
REVIEWER	[illegible]	3/4/10
	[illegible]	3/4/10

CONTENT APPLICABLE TO ALARA? [X] YES [ ] NO
ADR NO. 24590-LAW-ADR-M-02-022 REV: 1
EMS SCREENING REQUIRED? [X] YES [ ] NO | EMS INITIAL IF YES DEK

PROJECT No.	24590
SITE	HANFORD
AREA	200E
BUILDING No.	20

CONTRACT No: DE-AC27-01RV14136

RIVER PROTECTION PROJECT
WASTE TREATMENT PLANT
2435 STEVENS CENTER PLACE
RICHLAND, WA 99354

P&ID - LAW
LAW PRIMARY OFFGAS PROCESS SYSTEM MELTER 1 LOP-BULGE-00001

SCALE: NONE

24590-LAW-M6-LOP-00001003

REV 0

SCREENING IS REQUIRED FOR DRAWING TYPES IDENTIFIED IN 24590-WTP-GPP-SREG-002

"E" SIZE - 44x34
COMPUTER GENERATED - MANUAL DESIGN CHANGES NOT PERMITTED

03/04/2010 07:42:59 AM

PLOTTED BY: gpockes

C:\Work\gpockes\dms0383815\LAW66LOP00001003.dgn

FORM E_SDNDGN 02/2009

LOP-HTR-00001
MELTER 1
WESP PURGE AIR HEATER
∞
1468 LB/HR
30 KW

LOP-WESP-00001
MELTER 1
WET ELECTROSTATIC PRECIPITATOR (WESP)
2000 ACFM
8'-0" ID x 14'-6 1/2" T-T

F1-1140
LAW-M6-LOP-00004002 G2

TI-1038
LAW-M6-LOP-00001001 H2

EI 1075A | II 1074A | SI 1095A | HS 1071B | HA 1096A | JI 1076A | II 1077A | EI 1078A | UA 1079 — FAULT INDICATION

HS 1070 NOTE 7

HS 1096 E-STOP

VENDOR BECHTEL

LVE-PSUP-20201
NOTE 6

A/M O/C HS ZI YC 1080

UY FF

YY 1080 S 3/8" TUBING ISA ISA-V-68968 VENT

ZSL 1080 ZSH 1080

YV 1080 FC LOP-V-34060

PDSHH-1528/1529
LAW-M6-LMP-00002 D5

TI-1038
LAW-M6-LOP-00001001 H2

TDY TDI 1092 TDC 1092

TI 1050 FI 1050 L LL FSLL 1050 FC 1050 LOSS OF POWER

PI 1081 PT 1081 00J/4-B08 LOP-V-34046

FT 1050 FF FV 1050 FF 3/8" TUBING ISA ISA-V-40187 FO

LOP-V-10556 LOP-V-10557 LOP-V-00370 03-B01

PSA LOP
PLANT SERVICE AIR
PSA-GQ-32281-S1IC-03 LOP-GQ-33446-S1IB-03 8" W03 8" W04
LOP-RO-00001 00J/4-B01 LOP-V-34024
LOP-HTR-00001

LOP-GQ-01415-S1IB-03

ZI ZSL 1098 ZSH 1098 YY 1098 Z S 3/8" TUBING ISA ISA-V-68969 VENT YV 1098 Z

TC 1098 Z LOSS OF POWER

PI 1082 H PT 1082 FF 00J/4-B06 LOP-V-34047

02-B02 N28
02-B03 N29
02-B04 N30
02-B05 N31
LOP-GQ-01415-S1IB-02 N23

CM Q IV VIII — 6" N07A N07 — 02-B02 — 6" N08A N08 — 02-B01 — 6" N09A N09

PI 1049 H FI 1049 FT 1049 FF 3/8" TUBING ISA FY 1140A I/P YC 1140 Z S ZE 1140 VENT FY 1140B Z FC 1140 LOSS OF POWER

TT 1047 FF TI 1047 H TE 1047

FE 1049 NO LOP-V-10052 N02 FO FV 1140 Z NOTE 8 1:50 LOP-PW-00004-N1TV-10

SECONDARY OFFGAS
LVP-HTR-00001A/B
LAW-M6-LVP-00001 F8

1 2 3 I Z

LAHH 1059 LSHH 1059 Z LSHH 1060 HS 9001 Z ACTIVE HS 9002 Z RESET

LI 1059 H LY 1059 Z LI 1060 H

LX 1059C Z LT 1059 Z LT 1060 LX 1060C
LX 1059A Z LX 1060A
LX 1059B Z LX 1060B

NOTE 5 LOP-V-34014 1:50
NOTE 5 LOP-V-34015 1:50

3 YC 1061 Z S YY 1061 Z 3/8" TUBING ISA ISA-V-68970 VENT ZI ZSL 1061 ZSH 1061 YV 1061 Z

DEMIN WATER SUPPLY MANIFOLD
DIW-WE-03629-S1IC-02
LAW-M6-DIW-00001002 F2

LOP-WE-00004-S1IB-02 LOP-V-10837 FC DIW LOP

SET @ 40 PSIG PCV 1093 PI 1099 00J/4-B04 LOP-V-34105

LOP-WE-00003-S1IB-02

FI 1052 00J/4-B03 LOP-V-34099 LOP-V-10760 LOP-WE-00004-S1IB-02

LOP-WE-00004-S1IB-01 FOB 01-B02 N04A N04 6" N05A N05 6" 01-B01 N06A N06 6"

3" 02-B01 N18

LOP-GR-00006-S1P-03 LOP-GR-00006-S1P-02 N16

LOP-WE-03546-S1IB-02

1 PDY PDI 10.39 H PI 10.39 H PDI-1039A LAW-M6-LOP-00001001 E8

PT 10.39 FF ATM 00J/4-B01 LOP-V-34045

N14 24" MANWAY

LOP-GR-00006-S1P-01 N15

LOP-GR-00007-S1P-01 N17

N01 N03 LOP-WESP-00001

LOP-GR-00006-S1P-03 LOP-WE-03547-S1IB-02 LOP-V-34016 LOP-GR-00007-S1P-03 LOP-WE-03548-S1IB-02 LOP-V-34083

LOP-SCB-00001
LAW-M6-LOP-00001001 G2
LOP-PW-01224-N1TV-10 NO/LO LOP-V-10560 1:50

N11F W11A
LOP-ZS-01598-W1A-03 RLD-VSL-00004 LAW-M6-RLD-00002 H7
LOP-ZS-01545-N1F-03 LOP-V-09495

LOP-SCB-00001 OVERFLOW
LAW-M6-LOP-00001001 C2
LOP-ZS-03293-N13A-04

NOTES:

1. SEE DRAWINGS 24590-WTP-M6-50-00001 THROUGH 24590-WTP-M6-50-00008 FOR GENERAL NOTES, SYMBOLS AND LEGEND, AND GENERAL SLOPE REQUIREMENTS.
2. CONTENTS OF THIS DOCUMENT ARE DANGEROUS WASTE PERMIT AFFECTING.
3. THE PRESSURE BOUNDARY FOR ALL COMPONENTS ON THIS DRAWING IS QUALITY LEVEL Q AND SEISMIC CATEGORY SC-III, UNLESS OTHERWISE NOTED.
4. ALL LINES SHOWN ON THIS DRAWING SHALL BE FREE DRAINING, UNLESS OTHERWISE NOTED.
5. RADAR GUIDE TUBE TO BE ROUTED TO TRANSMITTER LOCATED ON THE FLOOR ABOVE.
6. INSTRUMENT PERFORMS AN AIR PERMIT FUNCTION INDICATION DISPLAYED AT PCJ.
7. LOP-WESP-00001 WASH SEQUENCE HAND SWITCH.
8. TO BE SUPPLIED WITH A STOP AT 70% CLOSURE.
9. THIS DRAWING IS CONVERTED FROM A SINGLE SHEET TO MULTI-SHEET DRAWINGS AND, IN PART, SUPERSEDES 24590-LAW-M6-LOP-00001 REV 5. CLOUDS DEPICT MAJOR CHANGES MADE FROM SUPERSEDED DRAWING. THIS DRAWING INCLUDES INFORMATION FROM 24590-LAW-M6N-20-00001, 24590-LAW-M6N-LOP-00008, -00033, -00037, -00040, -00051, -00052, -00060, 24590-LAW-M6PN-00004, -00013, -00015, 24590-LAW-M6PR-LOP-00003, AND -00009. PCV-1093 SET PRESSURE HAS BEEN REVISED FROM 60 PSIG TO 40 PSIG.

HOLD/OPEN ITEMS:

NONE

REFERENCES:

1. 24590-LAW-3YD-LOP-00001, SYSTEM DESCRIPTION FOR THE LAW PRIMARY OFF GAS (LOP) AND SECONDARY OFFGAS/VESSEL VENT (LVP) SYSTEMS.

Please note that source, special nuclear, and byproduct materials, as defined in the Atomic Energy Act of 1954 (AEA) are regulated at the U. S. Department of Energy (DOE) owned nuclear facilities by the DOE acting pursuant to its AEA authority. DOE asserts that DOE acting pursuant to its AEA authority. DOE asserts that DOE acting pursuant to its AEA authority has sole and exclusive responsibility and authority to regulate source, special nuclear, and byproduct materials at DOE-owned nuclear facilities. Information contained herein on radionuclides is provided for process description purposes only.

REV	DESCRIPTION	ORG	CHKD	RVWD	APVD	DATE
0	ISSUED FOR CONSTRUCTION, SEE NOTE 9	mao	SS	MK	4PK	03/04/10

REVISION HISTORY

Q QUALITY DESIGNATOR

ISSUED BY RPP-WTP PDC ISSUE STAMP

PROJECT No.	24590
SITE	HANFORD
AREA	200E
BUILDING No.	20

	BY	DATE
ORIGINATOR	m.o'dea	3/1/10
CHECKER	SATISH DAN	3/4/10
APPROVER		03/04/10
REVIEWER		3/4/10
		3/4/10

CONTENT APPLICABLE TO ALARA? [X] YES [ ] NO
ADR NO. 24590-LAW-ADR-M-02-022 REV: 1
EMS SCREENING REQUIRED? [X] YES [ ] NO EMS INITIAL IF YES DEN

SCREENING IS REQUIRED FOR DRAWING TYPES IDENTIFIED IN 24590-WTP-GPP-SREG-002

"E" SIZE - 44x34
COMPUTER GENERATED - MANUAL DESIGN CHANGES NOT PERMITTED

BECHTEL

RIVER PROTECTION PROJECT
WASTE TREATMENT PLANT
2435 STEVENS CENTER PLACE
RICHLAND, WA 99354

CONTRACT No: DE-AC27-01RV14136

P&ID - LAW
LAW PRIMARY OFFGAS PROCESS SYSTEM
MELTER 1
LOP-WESP-00001

SCALE: NONE

24590-LAW-M6-LOP-00001004

REV 0

03/04/2010 07:44:31 AM

PLOTTED BY: spookes C:\Work\spookes\dms0358\LAW\M6LOP0001004.dgn

FORM E_SDN.DGN 02/2009

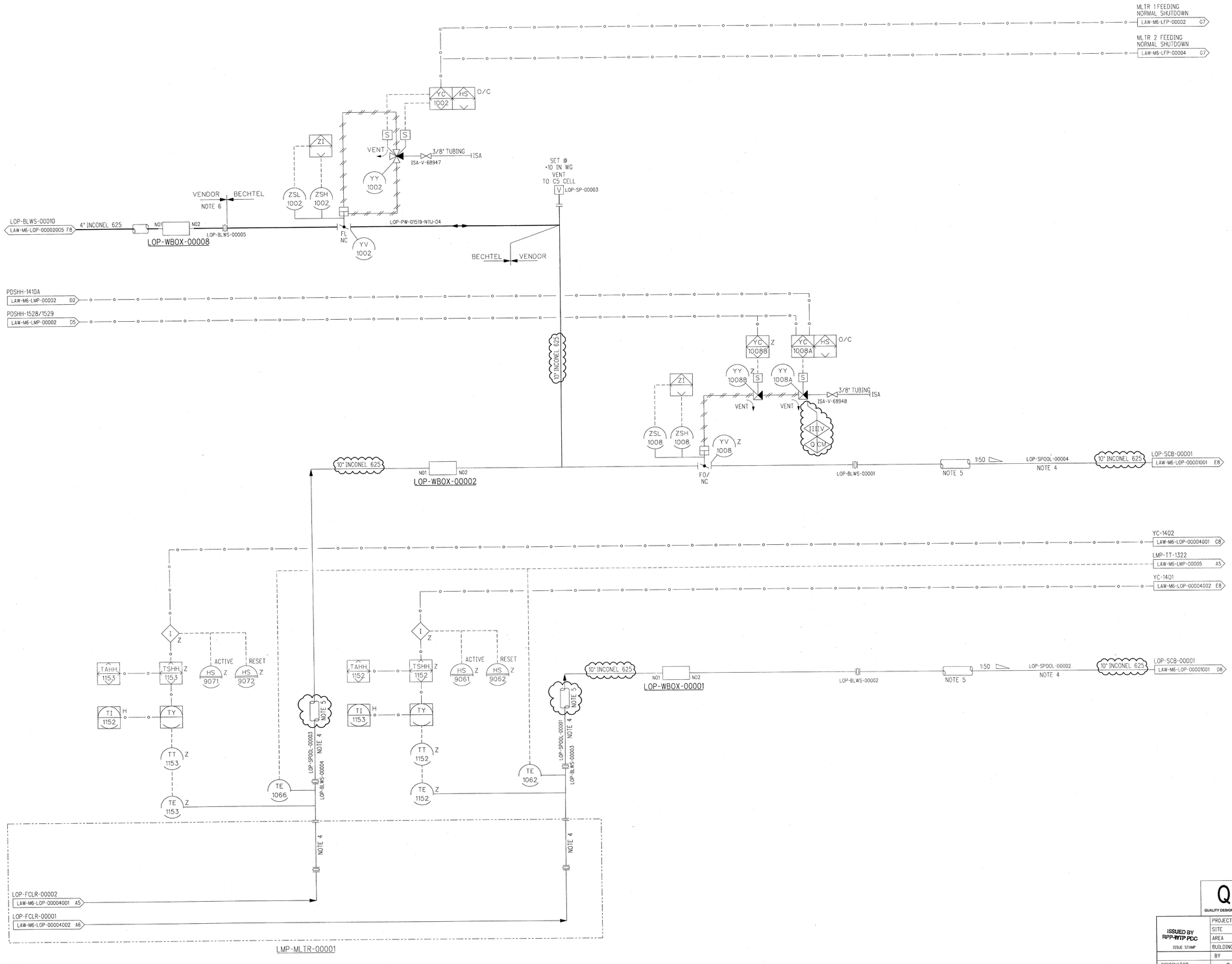

NOTES:

1. SEE DRAWINGS 24590-WTP-M6-50-00001 THROUGH 24590-WTP-M6-50-00008 FOR GENERAL NOTES, SYMBOLS AND LEGEND, AND GENERAL SLOPE REQUIREMENTS.
2. CONTENTS OF THIS DOCUMENT ARE DANGEROUS WASTE PERMIT AFFECTING.
3. THE PRESSURE BOUNDARY FOR ALL COMPONENTS ON THIS DRAWING IS QUALITY LEVEL Q AND SEISMIC CATEGORY SC-III, UNLESS OTHERWISE NOTED.
4. SPECIALLY ENGINEERED PIPING SPOOL WITH HILTAP COUPLING.
5. INSULATION BY VENDOR.
6. FOR VENDOR COMPONENT DETAILS SEE 24590-LAW-M61-P23T-00001.
7. THIS DRAWING IS CONVERTED FROM A SINGLE SHEET TO MULTI-SHEET DRAWINGS AND, IN PART, SUPERSEDES 24590-LAW-M6-LOP-00001 REV 5. CLOUDS DEPICT MAJOR CHANGES MADE FROM SUPERSEDED DRAWING. THIS DRAWING INCLUDES INFORMATION FROM 24590-LAW-M6N-LOP-00015, -00040, AND -00052.

HOLD/OPEN ITEMS:

NONE

REFERENCES:

1. 24590-LAW-3YD-LOP-00001, SYSTEM DESCRIPTION FOR THE LAW PRIMARY OFF GAS (LOP) AND SECONDARY OFFGAS/VESSEL VENT (LVP) SYSTEMS.

Please note that source, special nuclear, and byproduct materials, as defined in the Atomic Energy Act of 1954 (AEA) are regulated at the U. S. Department of Energy (DOE) facilities solely by DOE acting pursuant to its AEA authority. DOE asserts that pursuant to AEA, it has sole and exclusive responsibility and authority to regulate source, special nuclear, and byproduct materials at DOE-owned nuclear facilities. Information contained herein on radionuclides is provided for process description purposes only.

REV	DESCRIPTION	ORG	CHKD	RVWD	APVD	DATE
0	ISSUED FOR CONSTRUCTION, SEE NOTE 7	mao	SJ	SDS SPK	JJH	03/04/10

REVISION HISTORY

Q — QUALITY DESIGNATOR

ISSUED BY RPP-WTP PDC — ISSUE STAMP

PROJECT No.	24590
SITE	HANFORD
AREA	200E
BUILDING No.	20

	BY	DATE
ORIGINATOR	mao	3/2/10
CHECKER	SATISH TAN	3/2/10
APPROVER		03/04/10
REVIEWER		3/5/10
		3/5/10

CONTENT APPLICABLE TO ALARA? [X] YES [ ] NO
ADR NO. 24590-LAW-ADR-M-02-022 REV:1
E&NS SCREENING REQUIRED? [X] YES [ ] NO E&NS INITIAL IF YES: DEK

SCREENING IS REQUIRED FOR DRAWING TYPES IDENTIFIED IN 24590-WTP-GPP-SREQ-002

"E" SIZE - 44 x 34
COMPUTER GENERATED - MANUAL DESIGN CHANGES NOT PERMITTED

BECHTEL NATIONAL, INC.
RIVER PROTECTION PROJECT
WASTE TREATMENT PLANT
2435 STEVENS CENTER PLACE
RICHLAND, WA 99354

CONTRACT No: DE-AC27-01RV14136

P&ID - LAW
LAW PRIMARY OFFGAS PROCESS SYSTEM MELTER 1 FILM COOLER OFFGAS

SCALE: NONE

24590-LAW-M6-LOP-00001005 — REV 0

FORM E_SDN.DGN 02/2009

03/02/2010 12:49:44 PM PLOTTED BY: gpockes

C:\Work\gpockes\vms038.38\LAW\M6\LOP00001005.dgn

LOP-PMP-00003B
MELTER 1
SBS WATER
PURGE PUMP - STANDBY
48 GPM @ 49 FT TDH
5 HP

LOP-PMP-00003A
MELTER 1
SBS WATER
PURGE PUMP - PRIMARY
48 GPM @ 49 FT TDH
5 HP

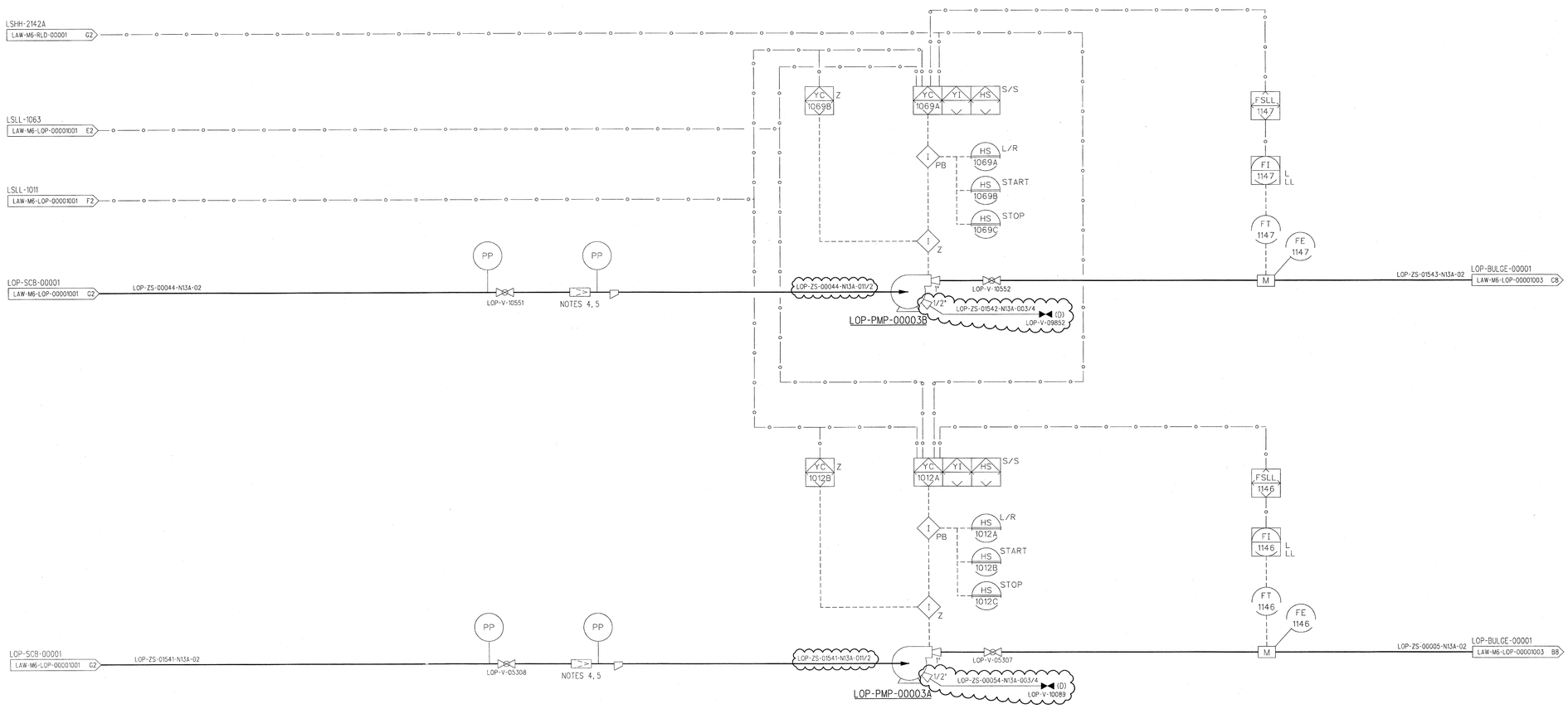

NOTES:

1. SEE DRAWINGS 24590-WTP-M6-50-00001 THROUGH 24590-WTP-M6-50-00008 FOR GENERAL NOTES, SYMBOLS AND LEGEND, AND GENERAL SLOPE REQUIREMENTS.
2. CONTENTS OF THIS DOCUMENT ARE DANGEROUS WASTE PERMIT AFFECTING.
3. THE PRESSURE BOUNDARY FOR ALL COMPONENTS ON THIS DRAWING IS QUALITY LEVEL CM AND SEISMIC CATEGORY SC-III, UNLESS OTHERWISE NOTED.
4. CONNECTIONS FOR PP IS 1/2 INCH THREADED. THESE CONNECTIONS FOR TEMPORARY INSTRUMENTS WILL BE PLUGGED AFTER TESTING.
5. PROVIDE REMOVABLE PIPING SPOOL FOR START-UP STRAINER.
6. THIS DRAWING IS CONVERTED FROM A SINGLE SHEET TO MULTI-SHEET DRAWINGS AND, IN PART, SUPERSEDES 24590-LAW-M6-LOP-00001 REV 5. CLOUDS DEPICT MAJOR CHANGES MADE FROM SUPERSEDED DRAWING. THIS DRAWING INCLUDES INFORMATION FROM 24590-LAW-M6N-LOP-00038, -00044, AND -00052.

HOLD/OPEN ITEMS:

NONE

REFERENCES:

1. 24590-LAW-3YD-LOP-00001, SYSTEM DESCRIPTION FOR THE LAW PRIMARY OFF GAS (LOP) AND SECONDARY OFFGAS/VESSEL VENT (LVP) SYSTEMS.

Please note that source, special nuclear, and byproduct materials, as defined in the Atomic Energy Act of 1954 (AEA) are regulated at the U. S. Department of Energy (DOE) facilities exclusively by DOE acting pursuant to its AEA authority. DOE asserts that regulation of the AEA materials is the exclusive responsibility and authority to regulate source, special nuclear, and byproduct materials at DOE-owned nuclear facilities. Information contained herein on radionuclides is provided for process description purposes only.

REV	DESCRIPTION	ORG	CHKD	RVWD	APVD	DATE
0	ISSUED FOR CONSTRUCTION, SEE NOTE 6	mao	SJ	SPK SCS	GJH	03/04/10

REVISION HISTORY

Q
QUALITY DESIGNATOR

ISSUED BY RFP-WTP PDC
ISSUE STAMP

PROJECT No.	24590
SITE	HANFORD
AREA	200E
BUILDING No.	20

	BY	DATE
ORIGINATOR	mA. Chin	2/25/10
CHECKER	S ATTSN JTW	2/26/10
APPROVER		03/04/10
REVIEWER		3/26/10
		3/4/10

CONTENT APPLICABLE TO ALARA? [X] YES [ ] NO
ADR NO. 24590-LAW-ADR-M-02-022 REV: 1
EM&S SCREENING REQUIRED? [X] YES [ ] NO | EM&S INITIAL IF YES D.K.

BECHTEL

RIVER PROTECTION PROJECT
WASTE TREATMENT PLANT
2435 STEVENS CENTER PLACE
RICHLAND, WA 99354

CONTRACT No: DE-AC27-01RV14136

P&ID - LAW
LAW PRIMARY OFFGAS PROCESS SYSTEM MELTER 1
LOP-PMP-00003A/B

SCALE: NONE

24590-LAW-M6-LOP-00001006

REV 0

SCREENING IS REQUIRED FOR DRAWING TYPES IDENTIFIED IN 24590-WTP-GPP-SREQ-002

"E" SIZE - 44x34
COMPUTER GENERATED - MANUAL DESIGN CHANGES NOT PERMITTED

FORM: E_SDNDGN 02/2009

02/25/2010 09:50:59 AM

PLOTTED BY: spockers C:\Work\spockers\mao\24590_LAWMELOP00001006.dgn

LOP-SCB-00002
MELTER 2
SUBMERGED
BED SCRUBBER (SBS)
1.2 MMBTU/HR
10' 0" ID x 6' 6" T-T

LSHH-2018A
LAW-M6-LOP-00002002 E2

ZI YC HS 2056 O/C

UY FF

YY 2056 S

3/8" TUBING ISA

ISA-V-69421

VENT

ZSL 2056 ZSH 2056 YV 2056

CHILLED WATER SUPPLY MANIFOLD
LAW-M6-CHW-00002 C4

LOP-WS-00050-S1B-03

FC

003/4-801 (V) LOP-V-10037

CMCM IVIII OUT CELL IN CELL

LOP-WS-00050-S1B-03

STAND BY FILM COOLER
LAW-M6-LOP-00002005 D2

LOP-SPOOL-00008 10" INCONEL 625 1:50

NOTE 6

LSHH-2018A
LAW-M6-LOP-00002002 E2

PI-2039
LAW-M6-LOP-00002004 B7

PDI 2039A H PDY PI 2065 H

PT 2065 FF ATM

ISA P W

3/4" LOP-V-10051 NOTE 9

PRIMARY FILM COOLER
LAW-M6-LOP-00002005 C2

LOP-SPOOL-00006 10" INCONEL 625 1:50

NOTE 6

PI 2072

PT 2072 FF ATM

003/4-801 LOP-V-34052

LOP-VSL-00002 VENT
LAW-M6-LOP-00002002 D2

LOP-PW-01503-N13A-02 1:50

DEMIN WATER SUPPLY MANIFOLD
LAW-M6-DIW-00002002 E2

DIW LOP

003/4-801 (V) LOP-V-34036

LOP-V-10583

LOP-ZE-03355-S1B-02

NOTE 12

LOP-BULGE-00002
LAW-M6-LOP-00002003 C2

LOP-ZS-00013-N13A-02

LT 2063 LX 2063C LX 2063A LX 2063B

LOP-LT-2039 NOTE 7

LOP-GR-00001-S1B-03

LT 2011 LX 2011C LX 2011A LX 2011B

LOP-V-10040 NOTE 7

LOP-GR-00002-S1B-03

NOTE 8

LOP-WS-00053-S1B-02
LOP-WS-00052-S1B-02
LOP-WS-00051-S1B-02
LOP-WS-00050-S1B-02

F06

TI 2013 H
TT 2013 FF
TE 2013

3/4"

4" SPARE
2" SPARE
6" SPARE

N01 N02 N03 N04A N04 N05 N06 N07 N08 N09 N10 N11 N12 N13 N14 N15 N16 N17 N18 N19 N20 N21 N23 N24 N25 N26

LOP-SCB-00002

NOTE 5

NOTE 10

LOP-ZS-01589-N13A-02

003/4-801 (V) LOP-V-12033

CHILLED WATER SUPPLY MANIFOLD
LAW-M6-CHW-00002 C4

LOP-WS-00040-S1B-03

1:50

LVE-PSUP-20202
LAW-M6-LOP-00002004 H8

TDY-2092
LAW-M6-LOP-00002004 F8

LOP-PW-01510-N11V-10
LOP-WESP-00002
LAW-M6-LOP-00002004 B8

LOP-ZS-00045-N13A-02
LOP-PMP-00006B
LAW-M6-LOP-00002006 F8

LOP-ZS-01544-N13A-02
LOP-PMP-00006A
LAW-M6-LOP-00002006 D8

YC-2029
LAW-M6-LOP-00002003 F8

YC-2119/2120
LAW-M6-DIW-00001001 H8

YC-2148
LAW-M6-LOP-00002003 H8

YC-2019A/B/2020A/B
LAW-M6-LOP-00002002 E8

YC-2208A/B/2207A/B
LAW-M6-LFP-00004 H7

YC-2012A/B/2069A/B
LAW-M6-LOP-00002006 E8

I Z ACTIVE RESET
HS 9031 Z HS 9032 Z

I Z ACTIVE RESET
HS 9051 Z HS 9052 Z

LSHH 2063
LSHH Z 2011
LAHH 2011
LSLL Z 2011
LALL 2011

LI 2063 HH H L LL
LSLL 2063
LY Z
LI 2011 H L

YC-2019A/2020A
LAW-M6-LOP-00002002 E8

YC-2012A/2069A
LAW-M6-LOP-00002006 E8

MELTER 2 FEEDING NORMAL SHUTDOWN
LAW-M5-LFP-00004 H7

TC 2013A

O/C HS YC 2006

CHW YY 2006 CHW

S 2006 CHW 3/8" TUBING ISA

ISA-V-69422

ZI

VENT

ZSL 2006 CHW ZSH 2006 CHW YV 2006 CHW

FC

CHILLED WATER RETURN MANIFOLD
LAW-M6-CHW-00002 C6

CHW-WS-03802-S1C-03

CMCM IIIIV IN CELL OUT CELL

LOP-WS-00051-S1B-03

003/4-803 (V) LOP-V-12036

3/8" TUBING ISA

ISA-V-69757

TV 2013A FF

ZSL 2006 CHW ZSH 2006 CHW

CHW-V-05389

FO

003/4-805 (D) LOP-V-12022

LOP-V-09483

LOP-WS-00051-S1B-03

LOP-V-09484

LOP CHW

003/4-801

CM Q IVIII SET @ 125 PSIG Q CM IIIIV

PSV 2084 Z

PSV 2149 Z

Q CM III IV

CM Q IVIII Q CM IIIIV

LOP-WS-03834-S1B-003/4

LOP-WS-03842-S1B-003/4

LOP-WS-03843-S1B-01

LOP-WS-03834-S1B-003/4

LOP-WS-03830-S1B-01

LOP-V-34105

LOP-V-34121

L-0101 NLD FLOOR DRAIN

TI 2013 H

TT 2013 FF

TE 2013

TC 2013B

LOP-ZS-03294-N13A-04

WESP DRAIN LINE
LAW-M5-LOP-00002004 A8

NOTE 11

1:50 LOP-ZS-00033-N13A-04

LOP-VSL-00002 OVERFLOW
LAW-M6-LOP-00002002 B8

1:50 LOP-ZS-01601-N13A-04

LOP-VSL-00002 OVERFLOW
LAW-M6-LOP-00002002 B8

CHILLED WATER RETURN MANIFOLD
LAW-M6-CHW-00002 C6

CHW-WS-03804-S1C-03

003/4-803 (V) LOP-V-12035

3/8" TUBING ISA

ISA-V-69758

TV 2013B FF

CHW-V-05388

FO

003/4-805 (D) LOP-V-12023

LOP-WS-00049-S1B-03

LOP-V-09481

LOP-V-09482

LOP CHW

003/4-801

CM Q IVIII SET @ 125 PSIG Q CM IIIIV

PSV 2086 Z

PSV 2150 Z

Q CM III IV CM Q IVIII Q CM IIIIV

LOP-WS-03803-S1B-01

LOP-WS-03814-S1B-003/4

LOP-WS-03844-S1B-003/4

LOP-WS-03848-S1B-01

LOP-WS-03814-S1B-003/4

L-0101 NLD FLOOR DRAIN

LOP-V-34101

LOP-V-34122

L-0101 NLD FLOOR DRAIN

NOTES:

1. SEE DRAWINGS 24590-WTP-M6-50-00001 THROUGH 24590-WTP-M6-50-00008 FOR GENERAL NOTES, SYMBOLS AND LEGEND, AND GENERAL SLOPE REQUIREMENTS.
2. CONTENTS OF THIS DOCUMENT ARE DANGEROUS WASTE PERMIT AFFECTING.
3. THE PRESSURE BOUNDARY FOR ALL COMPONENTS ON THIS DRAWING IS QUALITY LEVEL Q AND SEISMIC CATEGORY SC-III, UNLESS OTHERWISE NOTED.
4. ALL LINES SHOWN ON THIS DRAWING SHALL BE FREE DRAINING, UNLESS OTHERWISE NOTED.
5. HALF PIPE JACKET.
6. INSULATION BY VENDOR.
7. RADAR GUIDE TUBE TO BE ROUTED TO TRANSMITTER LOCATED ON THE FLOOR ABOVE.
8. INSTRUMENT PERFORMS AN AIR PERMIT FUNCTION. INDICATION DISPLAYED AT PCJ.
9. LOCATE TAP FOR PT-2065 AS CLOSE TO LOP-SCB-00002 AS POSSIBLE. PT-2065 IS BY VENDOR.
10. LINE INSIDE VESSEL SHALL HAVE A MINIMUM OF 3/8 INCH HOLE ABOVE THE TOP OF THE OVERFLOW PORT NOZZLES N04 AND N05 TO PREVENT BACK SIPHON.
11. EMERGENCY OVERFLOW PIPE SHALL ATTACH TO TOP SIDE OF SBS OVERFLOW LINE APEX NOT TO EXCEED 10 INCHES ABOVE OVERFLOW LINE CENTER-TO-CENTER AFTER APEX. LINE SHALL SLOPE TO WESP DRAIN LINE.
12. REMOVABLE SPOOL PIECE REMOVED WHEN MELTER IS PROCESSING WASTE.
13. THIS DRAWING IS CONVERTED FROM A SINGLE SHEET TO MULTI-SHEET DRAWINGS AND, IN PART, SUPERSEDES 24590-LAW-M6-LOP-00002 REV 5. CLOUDS DEPICT MAJOR CHANGES MADE FROM SUPERSEDED DRAWING. THIS DRAWING INCLUDES INFORMATION FROM 24590-LAW-M6N-20-00001, 24590-LAW-M6N-LOP-00034, -00035, -00043, AND -00053.

HOLD/OPEN ITEMS:

NONE

REFERENCES:

1. 24590-LAW-3YD-LOP-00001, SYSTEM DESCRIPTION FOR THE LAW PRIMARY OFF GAS (LOP) AND SECONDARY OFFGAS/VESSEL VENT (LVP) SYSTEMS.

Please note that source, special nuclear, and byproduct materials, as defined in the Atomic Energy Act of 1954 (AEA) are regulated at the U. S. Department of Energy (DOE) facilities solely by DOE acting pursuant to its AEA authority. DOE asserts that pursuant to AEA, it has sole and exclusive responsibility and authority to regulate source, special nuclear, and byproduct materials at DOE-owned nuclear facilities. Information contained herein on radionuclides is provided for process description purposes only.

DRAWING INDEX

DWG NO	TITLE
24590-LAW-M6-LOP-00002001	PRIMARY OFFGAS MELTER 2 LOP-SCB-00002
24590-LAW-M6-LOP-00002002	PRIMARY OFFGAS MELTER 2 LOP-VSL-00002
24590-LAW-M6-LOP-00002003	PRIMARY OFFGAS MELTER 2 LOP-BULGE-00002
24590-LAW-M6-LOP-00002004	PRIMARY OFFGAS MELTER 2 LOP-WESP-00002
24590-LAW-M6-LOP-00002005	PRIMARY OFFGAS MELTER 2 FILM COOLERS
24590-LAW-M6-LOP-00002006	PRIMARY OFFGAS MELTER 2 LOP-PMP-00006A/B

REV	DESCRIPTION	ORG	CHKD	RVWD	APVD	DATE
0	ISSUED FOR CONSTRUCTION, SEE NOTE 13	mao	SJ	JBS	dpk	03/04/10

Q QUALITY DESIGNATOR

REVISION HISTORY

ISSUED BY RPP-WRP PDC ISSUE STAMP

	PROJECT No.	24590
	SITE	HANFORD
	AREA	200E
	BUILDING No.	20

	BY	DATE
ORIGINATOR	mao	2/25/10
CHECKER	SATISH JAIN	2/26/10
APPROVER	[signature]	03/04/10
REVIEWER	[signature]	2/26/10
	[signature]	3/4/10

CONTENT APPLICABLE TO ALARA? [X] YES [ ] NO
ADR NO. 24590-LAW-ADR-M-02-022 REV: 1
EMS SCREENING REQUIRED? [X] YES [ ] NO EMS INITIAL IF YES BEK

SCREENING IS REQUIRED FOR DRAWING TYPES IDENTIFIED IN 24590-WTP-GPP-SREG-002

"E" SIZE - 44x34
COMPUTER GENERATED - MANUAL DESIGN CHANGES NOT PERMITTED

BECHTEL
RIVER PROTECTION PROJECT
WASTE TREATMENT PLANT
2435 STEVENS CENTER PLACE
RICHLAND, WA 99354

CONTRACT No: DE-AC27-01RV14136

P&ID - LAW
LAW PRIMARY OFFGAS PROCESS SYSTEM
MELTER 2
LOP-SCB-00002

SCALE: NONE

24590-LAW-M6-LOP-00002001

REV 0

02/25/2010 04:35:05 PM

PLOTTED BY: gpickles

C:\Work\gpickles\dms\03838\LAW\M6\OP00002001.dgn

FORM E_SDNDGN 02/2009

24590-LAW-M6-LOP-00002002

LOP-EDUC-00002
MELTER 2
SBS CONDENSATE
MIXING EDUCTOR
44 GPM MOTIVE

LOP-PMP-00004
MELTER 2
SBS CONDENSATE
PURGE PUMP
124 GPM @ 117 FT TDH
20 HP

LOP-VSL-00002
MELTER 2
SBS
CONDENSATE VESSEL
MAX. OPER. VOL. 7400 GAL.
12'-0" ID x 8'-2" T-T

LOP-PMP-00005
MELTER 2
SBS CONDENSATE
PURGE PUMP
124 GPM @ 117 FT TDH
20 HP

NOTES:

1. SEE DRAWINGS 24590-WTP-M6-50-00001 THROUGH 24590-WTP-M6-50-00008 FOR GENERAL NOTES, SYMBOLS AND LEGEND, AND GENERAL SLOPE REQUIREMENTS.
2. CONTENTS OF THIS DOCUMENT ARE DANGEROUS WASTE PERMIT AFFECTING.
3. THE PRESSURE BOUNDARY FOR ALL COMPONENTS ON THIS DRAWING IS QUALITY LEVEL Q AND SEISMIC CATEGORY SC-III, UNLESS OTHERWISE NOTED.
4. ALL LINES SHOWN ON THIS DRAWING SHALL BE FREE DRAINING, UNLESS OTHERWISE NOTED.
5. EQUIPMENT COMPONENTS INSIDE VESSEL ARE QUALITY LEVEL CM AND SEISMIC CATEGORY SC-III.
6. REMOVABLE SPOOL PIECE REMOVED WHEN MELTER IS PROCESSING WASTE.
7. HALF PIPE JACKET.
8. RADAR GUIDE TUBE TO BE ROUTED TO TRANSMITTER LOCATED ON THE FLOOR ABOVE.
9. VESSEL INTERNAL PUMP PRIMING AND DISCHARGE PIPING SUPPLIED WITH PUMP BY VENDOR.
10. FUNCTION CONVERTS TANK LEVEL IN INCHES TO GALLONS.
11. REMOVABLE PIPING SPOOL TO FACILITATE PUMP MIXING EDUCTOR, OR SPRAY NOZZLE REMOVAL.
12. THIS DRAWING IS CONVERTED FROM A SINGLE SHEET TO MULTI-SHEET DRAWINGS AND, IN PART, SUPERSEDES 24590-LAW-M6-LOP-00002 REV 5. CLOUDS DEPICT MAJOR CHANGES MADE FROM SUPERSEDED DRAWING. THIS DRAWING INCLUDES INFORMATION FROM 24590-LAW-M6N-20-00001, 24590-LAW-M6N-LOP-00015, -00034, -00035, -00047, -00053, AND 24590-LAW-M6PR-LOP-00013.

HOLD/OPEN ITEMS:

NONE

REFERENCES:

1. 24590-LAW-3YD-LOP-00001, SYSTEM DESCRIPTION FOR THE LAW PRIMARY OFFGAS (LOP) AND SECONDARY OFFGAS/VESSEL VENT (LVP) SYSTEMS.

Please note that source, special nuclear, and byproduct materials, as defined in the Atomic Energy Act of 1954 (AEA) are regulated at the U. S. Department of Energy (DOE) facilities pursuant to the DOE acting pursuant to its AEA authority. Only DOE acting pursuant to its AEA authority has responsibility and authority to regulate source, special nuclear, and byproduct materials at DOE-owned nuclear facilities. Information contained herein on radionuclides is provided for process description purposes only.

REV	DESCRIPTION	ORG	CHKD	RVWD	APVD	DATE
0	ISSUED FOR CONSTRUCTION, SEE NOTE 12	mro.	SJ	SBS	GPK	03/04/10

REVISION HISTORY

Q QUALITY DESIGNATOR

ISSUED BY RPP-WRP PDC ISSUE STAMP

PROJECT No.	24590
SITE	HANFORD
AREA	200E
BUILDING No.	20

	BY	DATE
ORIGINATOR	mro. Orrick	3/1/10
CHECKER	SATISH JAIN	3/1/10
APPROVER	[signature]	03/04/10
REVIEWER	[signature]	3/1/10
	[signature]	3/9/10

CONTENT APPLICABLE TO ALARA? [X] YES [ ] NO
ADR NO. 24590-LAW-ADR-M-02-022 REV: 1
EMS SCREENING REQUIRED? [X] YES [ ] NO EMS INITIAL IF YES DEK

SCREENING IS REQUIRED FOR DRAWING TYPES IDENTIFIED IN 24590-WTP-GPP-SEC-002

E SIZE - 44x34
COMPUTER GENERATED - MANUAL DESIGN CHANGES NOT PERMITTED

BECHTEL

RIVER PROTECTION PROJECT
WASTE TREATMENT PLANT
2435 STEVENS CENTER PLACE
RICHLAND, WA 99354

CONTRACT No: DE-AC27-01RV14136

P&ID - LAW
LAW PRIMARY OFFGAS PROCESS SYSTEM MELTER 2 LOP-VSL-00002

SCALE: NONE

24590-LAW-M6-LOP-00002002

REV 0

03/01/2010 03:10:35 PM

PLOTTED BY: mmmcmill

C:\Work\mmmcmill\Users\83835\LAWM6LOP00002002.dgn

FORM E_SDN.DGN 02/2009

24590-LAW-M6-LOP-00002003

LOP-BULGE-00002
MELTER 2
VALVE BULGE
FILTER
11'10"L x 4'2"W x 2'11"H

LOP-HEPA-00002
MELTER 2
VALVE BULGE HEPA
FILTER
150 ACFM @ 0.5 IN WG

NOTES:

1. SEE DRAWINGS 24590-WTP-M6-50-00001 THROUGH 24590-WTP-M6-50-00008 FOR GENERAL NOTES, SYMBOLS AND LEGEND, AND GENERAL SLOPE REQUIREMENTS.
2. CONTENTS OF THIS DOCUMENT ARE DANGEROUS WASTE PERMIT AFFECTING.
3. THE PRESSURE BOUNDARY FOR ALL COMPONENTS ON THIS DRAWING IS QUALITY LEVEL CM AND SEISMIC CATEGORY SC-III, UNLESS OTHERWISE NOTED.
4. ALL LINES SHOWN ON THIS DRAWING SHALL BE FREE DRAINING, UNLESS OTHERWISE NOTED.
5. TO BE SEALED AFTER COLD STARTUP.
6. THIS DRAWING IS CONVERTED FROM A SINGLE SHEET TO MULTI-SHEET DRAWINGS AND, IN PART, SUPERSEDES 24590-LAW-M6-LOP-00002 REV 5. CLOUDS DEPICT MAJOR CHANGES MADE FROM SUPERSEDED DRAWING. THIS DRAWING INCLUDES INFORMATION FROM 24590-LAW-M6N-LOP-00040, AND -00053.

HOLD/OPEN ITEMS:

NONE

REFERENCES:

1. 24590-LAW-3YD-LOP-00001, SYSTEM DESCRIPTION FOR THE LAW PRIMARY OFFGAS (LOP) AND SECONDARY OFFGAS/VESSEL VENT (LVP) SYSTEM.

Please note that source, special nuclear, and byproduct materials, as defined in the Atomic Energy Act of 1954, as amended, are present at the U. S. Department of Energy (DOE) facilities exclusively by DOE acting pursuant to its AEA authority. DOE asserts that pursuant to AEA, it has sole and exclusive responsibility and authority to regulate source, special nuclear, and byproduct materials at DOE facilities. Any other regulatory information contained herein on radionuclides is provided for process description purposes only.

REV	DESCRIPTION	ORG	CHKD	RVWD	APVD	DATE
0	ISSUED FOR CONSTRUCTION, SEE NOTE 6	JRD	SJ	SPK	[illegible]	03/04/10

REVISION HISTORY

Q QUALITY DESIGNATOR

ISSUED BY RPP-WRP PDC — ISSUE STAMP

	PROJECT No.	24590
	SITE	HANFORD
	AREA	200E
	BUILDING No.	20

	BY	DATE
ORIGINATOR	[illegible]	3/4/10
CHECKER	SATISH JAIN	3/4/10
APPROVER	[illegible]	03/04/10
REVIEWER	[illegible]	3/4/10
	[illegible]	3/4/10

CONTENT APPLICABLE TO ALARA? [X] YES [ ] NO
ADR NO. 24590-LAW-ADR-M-02-022 REV: 1
EMS SCREENING REQUIRED? [X] YES [ ] NO EMS INITIAL IF YES DEK

SCREENING IS REQUIRED FOR DRAWING TYPES IDENTIFIED IN 24590-WTP-GPP-SREG-002

"E" SIZE - 44x34
COMPUTER GENERATED - MANUAL DESIGN CHANGES NOT PERMITTED

RIVER PROTECTION PROJECT
WASTE TREATMENT PLANT
2435 STEVENS CENTER PLACE
RICHLAND, WA 99354

CONTRACT No: DE-AC27-01RV14136

P&ID - LAW
LAW PRIMARY OFFGAS PROCESS SYSTEM MELTER 1
LOP-BULGE-00001

SCALE: NONE

24590-LAW-M6-LOP-00002003

REV 0

03/04/2010 07:37:19 AM

C:\Work\spooken\dms03835\LAWM6LOP00002003.dgn

PLOTTED BY: spooken

FORM E_SDN.DGN 02/2009

24590-LAW-M6-LOP-00002004

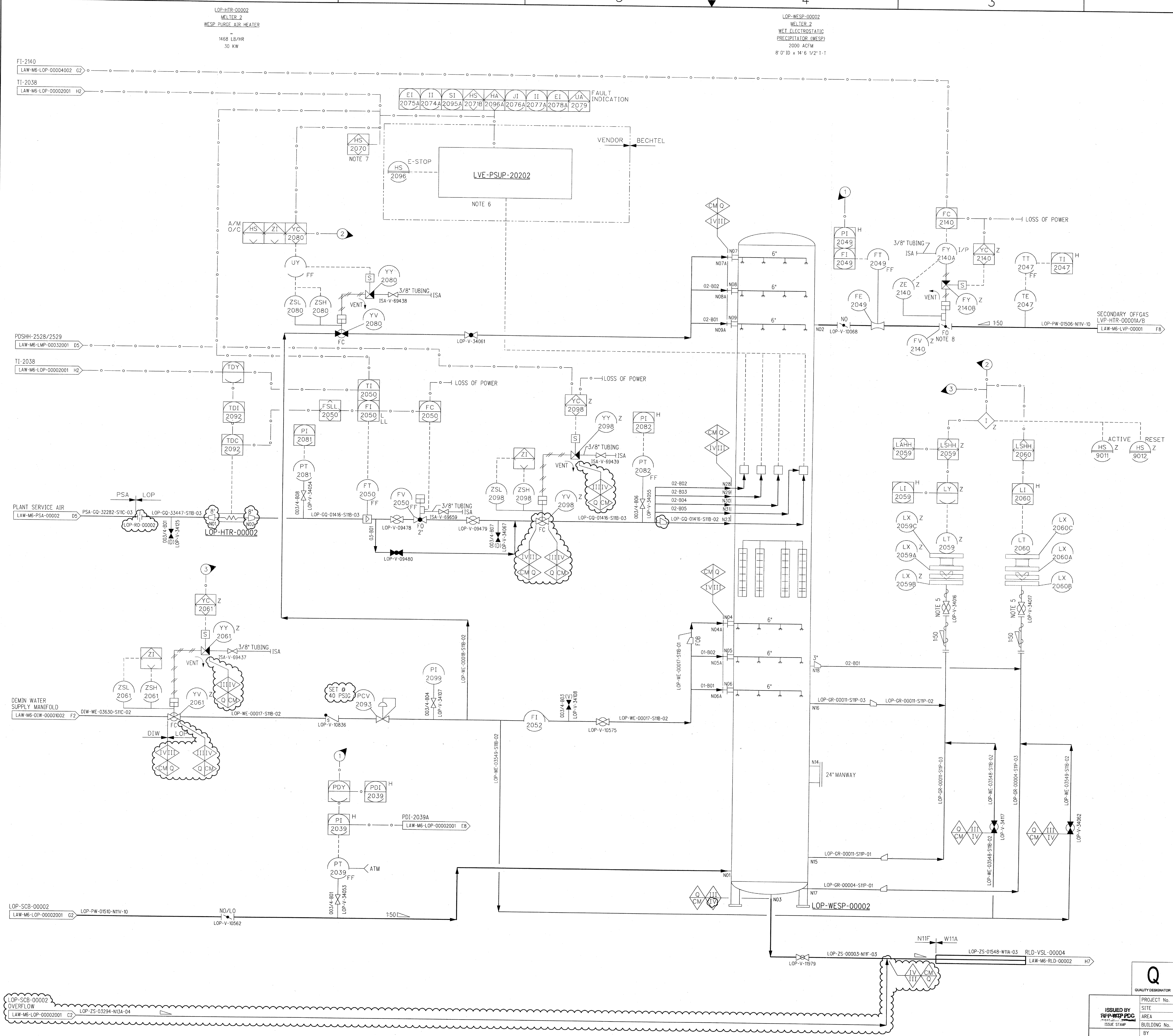

NOTES:

1. SEE DRAWINGS 24590-WTP-M6-50-00001 THROUGH 24590-WTP-M6-50-00008 FOR GENERAL NOTES, SYMBOLS AND LEGEND, AND GENERAL SLOPE REQUIREMENTS.
2. CONTENTS OF THIS DOCUMENT ARE DANGEROUS WASTE PERMIT AFFECTING.
3. THE PRESSURE BOUNDARY FOR ALL COMPONENTS ON THIS DRAWING IS QUALITY LEVEL Q AND SEISMIC CATEGORY SC-III, UNLESS OTHERWISE NOTED.
4. ALL LINES SHOWN ON THIS DRAWING SHALL BE FREE DRAINING, UNLESS OTHERWISE NOTED.
5. RADAR GUIDE TUBE TO BE ROUTED TO TRANSMITTER LOCATED ON THE FLOOR ABOVE.
6. INSTRUMENT PERFORMS AN AIR PERMIT FUNCTION. INDICATION DISPLAYED AT PCJ.
7. LOP-WESP-00002 WASH SEQUENCE HAND SWITCH.
8. TO BE SUPPLIED WITH A STOP AT 70% CLOSURE.
9. THIS DRAWING IS CONVERTED FROM A SINGLE SHEET TO MULTI-SHEET DRAWINGS AND, IN PART, SUPERSEDES 24590-LAW-M6-LOP-00002 REV 5. CLOUDS DEPICT MAJOR CHANGES MADE FROM SUPERSEDED DRAWING. THIS DRAWING INCLUDES INFORMATION FROM 24590-LAW-M6N-20-00001, 24590-LAW-M6N-LOP-00008, -00033, -00037, -00040, -00051, -00053, -00060, 24590-LAW-M6PR-LOP-00004, -00009, 24590-LAW-M6PN-LOP-00005, -00013, AND -00015. PCV-2093 SET PRESSURE HAS BEEN REVISED FROM 60 PSIG TO 40 PSIG.

HOLD/OPEN ITEMS:

NONE

REFERENCES:

1. 24590-LAW-3YD-LOP-00001, SYSTEM DESCRIPTION FOR THE LAW PRIMARY OFF GAS (LOP) AND SECONDARY OFFGAS/VESSEL VENT (LVP) SYSTEMS.

Please note that source, special nuclear, and byproduct materials, as defined in the Atomic Energy Act of 1954 (AEA) are regulated at the U. S. Department of Energy (DOE) facilities exclusively by DOE acting pursuant to its AEA authority. DOE asserts that pursuant to AEA, it has sole and exclusive responsibility and authority to regulate source, special nuclear, and byproduct materials at DOE-owned nuclear facilities. Information contained herein on radionuclides is provided for process description purposes only.

Q
QUALITY DESIGNATOR

REV	DESCRIPTION	ORG	CHKD	RVWD	APVD	DATE
0	ISSUED FOR CONSTRUCTION, SEE NOTE 9	MRO	SJ	SPK	JJA / RCS	03/04/10

REVISION HISTORY

ISSUED BY RPP-WTP PDC
ISSUE STAMP

PROJECT No.	24590
SITE	HANFORD
AREA	200E
BUILDING No.	20

RIVER PROTECTION PROJECT
WASTE TREATMENT PLANT
2435 STEVENS CENTER PLACE
RICHLAND, WA 99354

CONTRACT No: DE-AC27-01RV14136

	BY	DATE
ORIGINATOR	M.R. O'Neill	3/4/10
CHECKER	SATISH JAIN	3/4/10
APPROVER	[signatures]	03/04/10
REVIEWER	[signatures]	3/4/10
		3/4/10

CONTENT APPLICABLE TO ALARA? [X] YES [ ] NO
ADR NO. 24590-LAW-ADR-M-02-022 REV: 1
E&NS SCREENING REQUIRED? [X] YES [ ] NO E&NS INITIAL IF YES DEK

P&ID - LAW
LAW PRIMARY OFFGAS PROCESS SYSTEM
MELTER 2
LOP-WESP-00002

SCALE: NONE
24590-LAW-M6-LOP-00002004
REV 0

R11169175

SCREENING IS REQUIRED FOR DRAWING TYPES IDENTIFIED IN 24590-WTP-GPP-SREG-002
'E' SIZE - 44x34
COMPUTER GENERATED - MANUAL DESIGN CHANGES NOT PERMITTED

03/04/2010 07:41:22 AM

FORM E_SDN.DGN 02/2009

PLOTTED BY: gaoakes C:\Work\gaoakes\dms03838\LAWM6LOP00002004.dgn

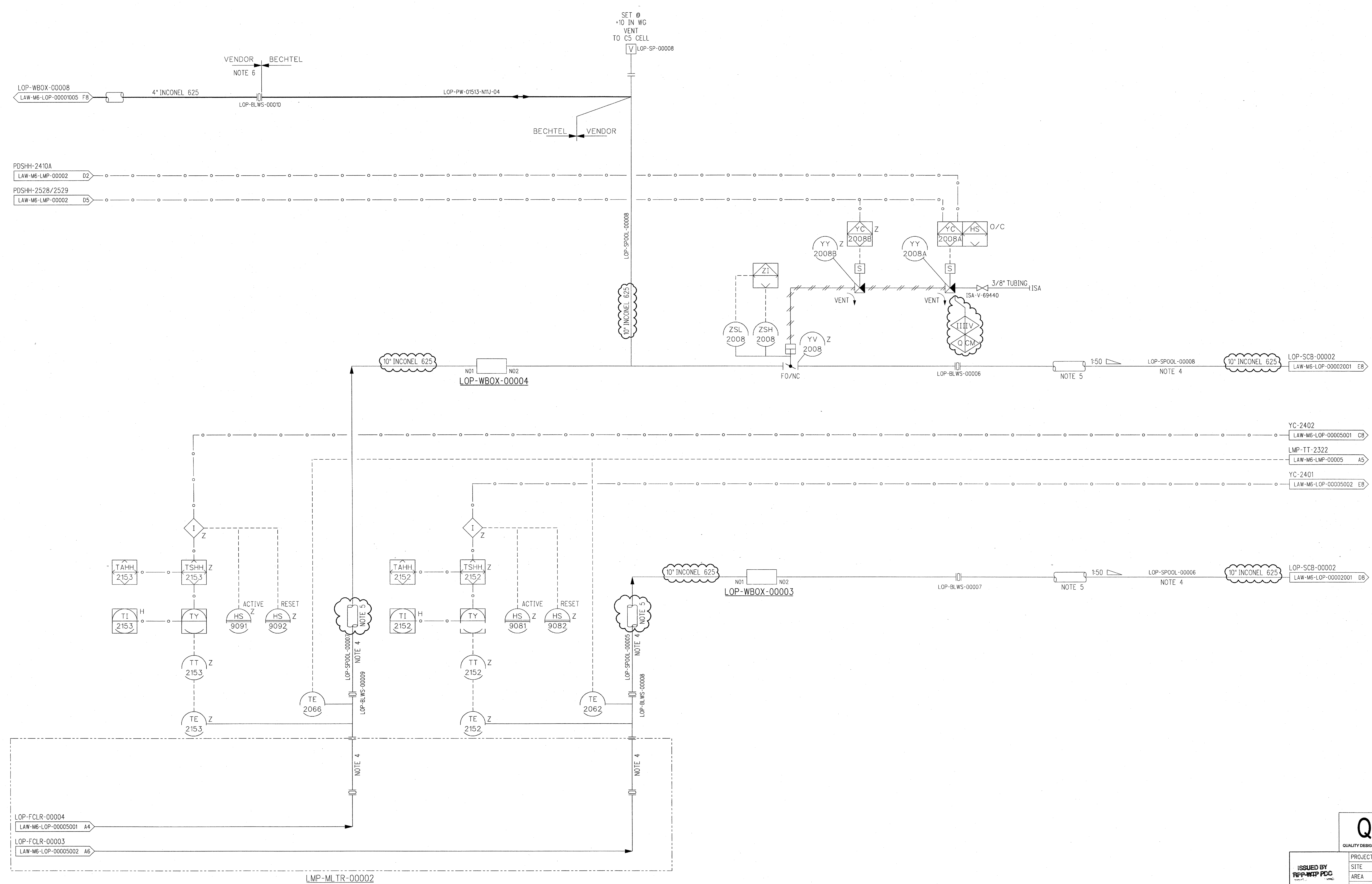

NOTES:

1. SEE DRAWINGS 24590-WTP-M6-50-00001 THROUGH 24590-WTP-M6-50-00008 FOR GENERAL NOTES, SYMBOLS AND LEGEND, AND GENERAL SLOPE REQUIREMENTS.
2. CONTENTS OF THIS DOCUMENT ARE DANGEROUS WASTE PERMIT AFFECTING.
3. THE PRESSURE BOUNDARY FOR ALL COMPONENTS ON THIS DRAWING IS QUALITY LEVEL Q AND SEISMIC CATEGORY SC-III, UNLESS OTHERWISE NOTED.
4. SPECIALLY ENGINEERED PIPING SPOOL WITH HILTAP COUPLING.
5. INSULATION BY VENDOR.
6. FOR VENDOR COMPONENT DETAILS SEE 24590-LAW-M61-P23T-00001.
7. THIS DRAWING IS CONVERTED FROM A SINGLE SHEET TO MULTI-SHEET DRAWINGS AND, IN PART, SUPERSEDES 24590-LAW-M6-LOP-00002 REV 5. CLOUDS DEPICT MAJOR CHANGES MADE FROM SUPERSEDED DRAWING. THIS DRAWING INCLUDES INFORMATION FROM 24590-LAW-M6N-LOP-00015, -00040, AND -00053.

HOLD/OPEN ITEMS:

NONE

REFERENCES:

1. 24590-LAW-3YD-LOP-00001, SYSTEM DESCRIPTION FOR THE LAW PRIMARY OFF GAS (LOP) AND SECONDARY OFFGAS/VESSEL VENT (LVP) SYSTEMS.

Please note that source, special nuclear, and byproduct materials, as defined in the Atomic Energy Act of 1954 (AEA) are regulated at the U. S. Department of Energy (DOE) facilities exclusively by DOE acting pursuant to its AEA authority. DOE asserts that pursuant to AEA, it has sole and exclusive responsibility and authority to regulate source, special nuclear, and byproduct materials at DOE-owned nuclear facilities. Information contained herein on radionuclides is provided for process description purposes only.

Q — QUALITY DESIGNATOR

REV	DESCRIPTION	ORG	CHKD	RVWD	APVD	DATE
0	ISSUED FOR CONSTRUCTION, SEE NOTE 7	MAO	SJ	SGS / SPK	RC / JJA	03/04/10

REVISION HISTORY

ISSUED BY RPP-WTP PDC — ISSUE STAMP

PROJECT No.	24590
SITE	HANFORD
AREA	200E
BUILDING No.	20

RIVER PROTECTION PROJECT
WASTE TREATMENT PLANT
2435 STEVENS CENTER PLACE
RICHLAND, WA 99354

CONTRACT No: DE-AC27-01RV14136

	BY	DATE
ORIGINATOR	M.R. O'Neil	3/2/10
CHECKER	SATISH JAIN	3/2/10
APPROVER	[signature]	03/04/10
REVIEWER	[signature]	3/2/10
	[signature]	3/4/10

CONTENT APPLICABLE TO ALARA? [X] YES [ ] NO
ADR NO. 24590-LAW-ADR-M-02-022 REV: 1
E&NS SCREENING REQUIRED? [X] YES [ ] NO E&NS INITIAL IF YES DEK

P&ID - LAW
LAW PRIMARY OFFGAS PROCESS SYSTEM MELTER 2 FILM COOLER OFFGAS

SCALE: NONE

24590-LAW-M6-LOP-00002005 REV 0

SCREENING IS REQUIRED FOR DRAWING TYPES IDENTIFIED IN 24590-WTP-GPP-SREG-002

'E' SIZE - 44x34
COMPUTER GENERATED - MANUAL DESIGN CHANGES NOT PERMITTED

R11169176

03/02/2010 12:57:33 PM

PLOTTED BY: gaoakes C:\Work\gaoakes\dms03838\LAWM6LOP00002005.dgn

FORM E_SON.DGN 02/2009

LOP-PMP-00003B
MELTER 2
SBS WATER
PURGE PUMP - STANDBY
48 GPM @ 49 FT TDH
3 HP

LOP-PMP-00006A
MELTER 2
SBS WATER
PURGE PUMP - PRIMARY
48 GPM @ 49 FT TDH
3 HP

NOTES:

1. SEE DRAWINGS 24590-WTP-M6-50-00001 THROUGH 24590-WTP-M6-50-00008 FOR GENERAL NOTES, SYMBOLS AND LEGEND, AND GENERAL SLOPE REQUIREMENTS.
2. CONTENTS OF THIS DOCUMENT ARE DANGEROUS WASTE PERMIT AFFECTING.
3. THE PRESSURE BOUNDARY FOR ALL COMPONENTS ON THIS DRAWING IS QUALITY LEVEL CM AND SEISMIC CATEGORY SC-III, UNLESS OTHERWISE NOTED.
4. CONNECTIONS FOR PP IS 1/2 INCH THREADED. THESE CONNECTIONS FOR TEMPORARY INSTRUMENTS WILL BE PLUGGED AFTER TESTING.
5. PROVIDE REMOVABLE PIPING SPOOL FOR START-UP STRAINER. STRAINER WILL BE REMOVED PRIOR TO START-UP.
6. THIS DRAWING IS CONVERTED FROM A SINGLE SHEET TO MULTI-SHEET DRAWINGS AND, IN PART, SUPERSEDES 24590-LAW-M6-LOP-00002 REV 5. CLOUDS DEPICT MAJOR CHANGES MADE FROM SUPERSEDED DRAWING. THIS DRAWING INCLUDES INFORMATION FROM 24590-LAW-M6N-LOP-00038, -00044, AND -00053.

HOLD/OPEN ITEMS:

NONE

REFERENCES:

1. 24590-LAW-3YD-LOP-00001, SYSTEM DESCRIPTION FOR THE LAW PRIMARY OFFGAS (LOP) AND SECONDARY OFFGAS/VESSEL VENT (LVP) SYSTEM.

LSHH-2142A
LAW-M6-RLD-00001 D3

YC 2069B Z
YC 2069A Y1 HS S/S
I PB HS 2069A L/R
HS 2069B START
I Z HS 2069C STOP
FSLL 2147
FI 2147 L LL
FT 2147
FE 2147
PP
LOP-V-09844
NOTES 4, 5
LOP-SCB-00002
LAW-M6-LOP-00002001 G2
LOP-ZS-00045-N13A-02
LOP-ZS-00045-N13A-011/2
1"
LOP-V-09842
1 1/2"
LOP-ZS-01532-N13A-003/4
(D)
LOP-V-09843
LOP-PMP-00003B
M
LOP-ZS-01531-N13A-02
LOP-BULGE-00002
LAW-M6-LOP-00002003 C8

LSLL-2063
LAW-M6-LOP-00002001 E2

LSLL-2011
LAW-M6-LOP-00002001 F2

YC 2012B Z
YC 2012A Y1 HS S/S
I PB HS 2012A L/R
HS 2012B START
I Z HS 2012C STOP
FSLL 2146
FI 2146 L LL
FT 2146
FE 2146
PP
LOP-V-09841
NOTES 4, 5
LOP-SCB-00002
LAW-M6-LOP-00002001 G2
LOP-ZS-01544-N13A-02
LOP-ZS-01544-N13A-011/2
1"
LOP-V-03927
1 1/2"
LOP-ZS-01530-N13A-003/4
(D)
LOP-V-09840
LOP-PMP-00006A
M
LOP-ZS-00019-N13A-02
LOP-BULGE-00002
LAW-M6-LOP-00002003 B8

Please note that source, special nuclear, and byproduct materials, as defined in the Atomic Energy Act of 1954 (AEA) are regulated at the U. S. Department of Energy (DOE) facilities exclusively by DOE acting pursuant to its AEA authority. DOE asserts that pursuant to AEA, it has sole and exclusive responsibility and authority to regulate source, special nuclear, and byproduct materials at DOE-owned nuclear facilities. Information contained in this drawing/boundaries is provided for process description purposes only.

REV	DESCRIPTION	ORG	CHKD	RVWD	APVD	DATE
0	ISSUED FOR CONSTRUCTION, SEE NOTE 6	MRO	SJ	SE	JJH	03/04/10

REVISION HISTORY

Q QUALITY DESIGNATOR

ISSUED BY RPP-WTP PDC ISSUE STAMP

	PROJECT No.	24590
	SITE	HANFORD
	AREA	200E
	BUILDING No.	20

	BY	DATE
ORIGINATOR	M.R. O'Neill	2/25/10
CHECKER	SATISH JAIN	2/26/10
APPROVER	J.J. Hill	03/04/10
REVIEWER		2/26/10
		3/9/10

CONTENT APPLICABLE TO ALARA? [X] YES [ ] NO
ADR NO. 24590-LAW-ADR-M-02-022 REV: 1
EMS SCREENING REQUIRED? [X] YES [ ] NO EMS INITIAL IF YES DCE

BECHTEL
RIVER PROTECTION PROJECT
WASTE TREATMENT PLANT
2435 STEVENS CENTER PLACE
RICHLAND, WA 99354

CONTRACT No: DE-AC27-01RV14136

P&ID - LAW
LAW PRIMARY OFFGAS PROCESS SYSTEM
MELTER 2
LOP-PMP-00006A/B

SCALE: NONE

24590-LAW-M6-LOP-00002006

REV 0

SCREENING IS REQUIRED FOR DRAWING TYPES IDENTIFIED IN 24590-WTP-GPP-SREQ-002

'E' SIZE - 44x34
COMPUTER GENERATED - MANUAL DESIGN CHANGES NOT PERMITTED

FORM E_SDN.DGN 02/2009

02/25/2010 09:50:55 AM

PLOTTED BY: gpoakes

C:\Work\gpoakes\tamis\24590_LAW\M6_OPO00002006.dgn

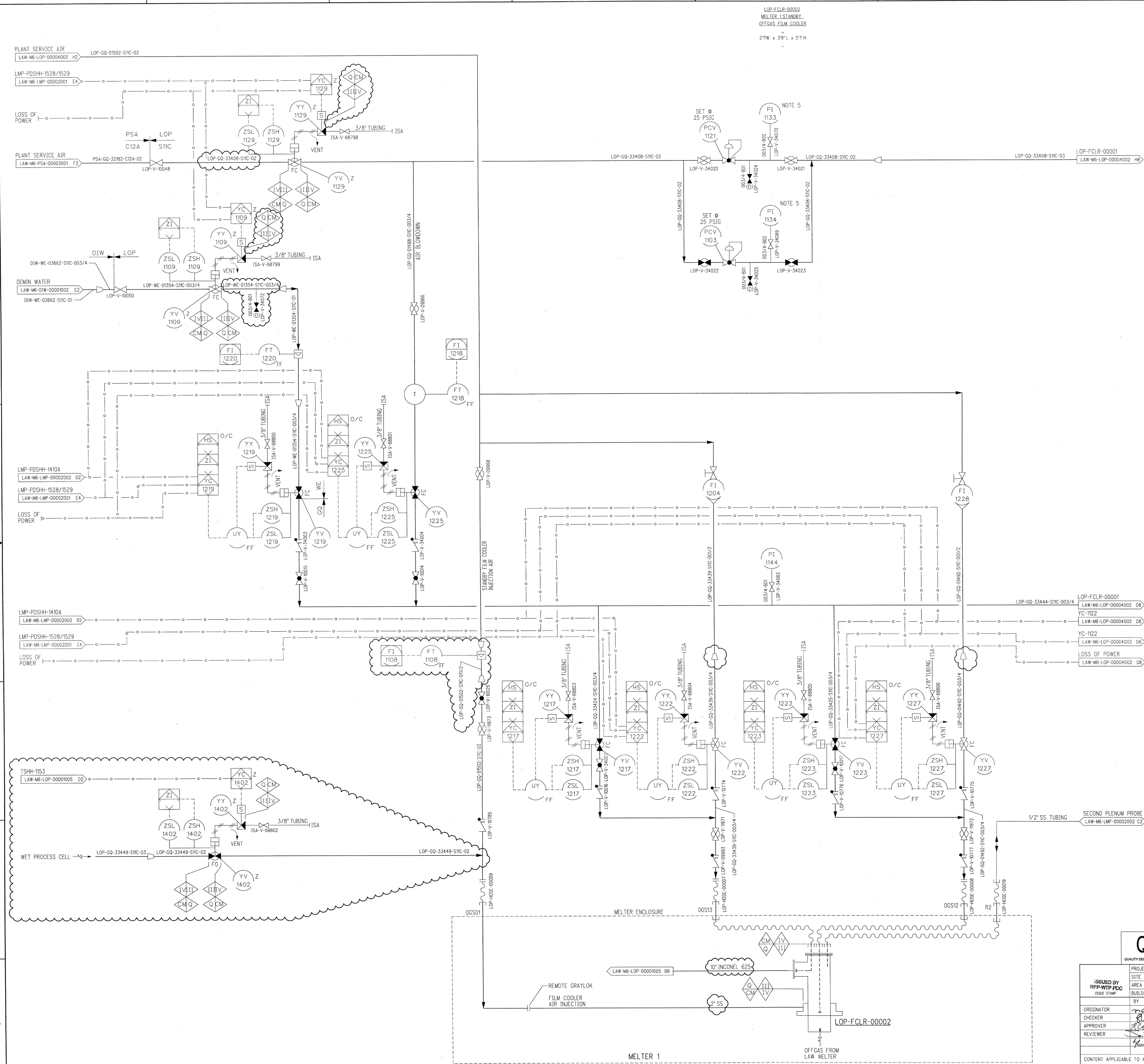

NOTES:

1. SEE DRAWINGS 24590-WTP-M6-50-00001 THROUGH 24590-WTP-M6-50-00008 FOR GENERAL NOTES, SYMBOLS AND LEGEND, AND GENERAL SLOPE REQUIREMENTS.
2. CONTENTS OF THIS DOCUMENT ARE DANGEROUS WASTE PERMIT AFFECTING.
3. THE PRESSURE BOUNDARY FOR ALL COMPONENTS ON THIS DRAWING IS QUALITY LEVEL CM AND SEISMIC CATEGORY SC-IV, UNLESS OTHERWISE NOTED.
4. ALL LINES SHOWN ON THIS DRAWING SHALL BE FREE DRAINING, UNLESS OTHERWISE NOTED.
5. PI TO BE VISIBLE FROM ASSOCIATED PRESSURE REGULATOR.
6. THIS DRAWING IS CONVERTED FROM A SINGLE SHEET TO MULTI-SHEET DRAWINGS AND, IN PART, SUPERSEDES 24590-LAW-M6-LOP-00004 REV 5. CLOUDS DEPICT MAJOR CHANGES MADE FROM SUPERSEDED DRAWING. THIS DRAWING INCLUDES INFORMATION FROM 24590-LAW-M6N-LOP-00009, -00015, -00023, -00032, -00036, -00039, -00041, -00042, -00054, -00056, -00058, 24590-LAW-M6N-M80T-00001, AND 24590-LAW-M6PN-LOP-00016

HOLD/OPEN ITEMS:

NONE

REFERENCES:

1. 24590-LAW-3YD-LOP-00001, SYSTEM DESCRIPTION FOR THE LAW PRIMARY OFFGAS (LOP) AND SECONDARY OFFGAS/VESSEL VENT (LVP) SYSTEM.

Please note that source, special nuclear, and byproduct materials, as defined in the Atomic Energy Act of 1954 (AEA) are regulated at the U. S. Department of Energy (DOE) facilities exclusively by DOE acting pursuant to its AEA authority. DOE asserts that pursuant to AEA, it has sole and exclusive responsibility and authority to regulate source, special nuclear, and byproduct materials at DOE-owned nuclear facilities. Information contained herein on radionuclides is provided for process description purposes only.

DRAWING INDEX

DWG NO	TITLE
24590-LAW-M6-LOP-00004001	PRIM OFFGAS PROC SYS MELTER 1 LOP-FCLR-00002
24590-LAW-M6-LOP-00004002	PRIM OFFGAS PROC SYS MELTER 1 LOP-FCLR-00001

REVISION HISTORY

REV	DESCRIPTION	ORG	CHKD	RVWD	APVD	DATE
0	ISSUED FOR CONSTRUCTION, SEE NOTE 6	MRO	[signature]	SGS / SPK	[signature]	03/04/10

Q
QUALITY DESIGNATOR

ISSUED BY RPP-WTP PDC
ISSUE STAMP

PROJECT No.	24590
SITE	HANFORD
AREA	200E
BUILDING No.	20

RIVER PROTECTION PROJECT
WASTE TREATMENT PLANT
2435 STEVENS CENTER PLACE
RICHLAND, WA 99354

CONTRACT No: DE-AC27-01RV14136

	BY	DATE
ORIGINATOR	M.R. O'Neil	2/25/10
CHECKER	[signature]	2/26/10
APPROVER	[signature]	03/04/10
REVIEWER	[signature]	2/26/10
	[signature]	3/4/10

CONTENT APPLICABLE TO ALARA? [X] YES [ ] NO
ADR NO. 24590-LAW-ADR-M-02-022 REV: 1
E&NS SCREENING REQUIRED? [X] YES [ ] NO E&NS INITIAL IF YES DEK

P&ID - LAW
LAW PRIMARY OFFGAS PROCESS SYSTEM MELTER 1 LOP-FCLR-00002

SCALE: NONE
24590-LAW-M6-LOP-00004001
REV 0

SCREENING IS REQUIRED FOR DRAWING TYPES IDENTIFIED IN 24590-WTP-GPP-SREG-002

'E' SIZE - 44x34
COMPUTER GENERATED - MANUAL DESIGN CHANGES NOT PERMITTED

24590-LAW-M6-LOP-00004002

LOP-FCLR-00001
MELTER 1 PRIMARY
OFFGAS FILM COOLER
2'3"W x 3'8"L x 4'11"H

PLANT SERVICE AIR
LAW-M6-LOP-00004001 G2
LOP-GQ-33408-S11C-03

PT 1403
PI 1403
00314-B06
LOP-V-14106

LOP-GQ-01502-S11C-02
LOP-FCLR-00002
LAW-M6-LOP-00004001 H8

LOP-GQ-33419-S11C-03
CONTROL AIR
LOP-V-10834
LOP-V-09983

FT 1140 FF
TI 1140
FI 1140
FC-1140
LAW-M6-LOP-00001004 H8

00314-B03
LOP-V-10832

FT 1113 FF
TI 1113
FI 1113
FC 1113
3/8" TUBING ISA
ISA-V-69700
FV 1113 FF

00314-B05
LOP-V-10822

LOP-GQ-33408-S11C-02

LOP-GQ-01502-S11C-02

PDSHH-1410A
LAW-M6-LMP-00002002 D3

PDSHH-1528/1529
LAW-M6-LMP-00002001 E4

LOSS OF POWER

PC 1105
NOTE 5
3/8" TUBING ISA
ISA-V-69699
PV 1105 FF

LOP-GQ-33419-S11C-02

LOP-GQ-01497-S11C-00V2

FI 1104
FI 1128

LOP-GQ-33419-S11C-03

LOP-GQ-01502-S11C-00V2

LOP-V-10781
LOP-V-09657

LOP-GQ-33408-S11C-03

LOP-V-10787
LOP-V-09659
LOP-V-11959

TSHH-1152
LAW-M6-LOP-00001005 D2

YC-1227
LAW-M6-LOP-00004001 D2

YC-1227
LAW-M6-LOP-00004001 D2

LOSS OF POWER
LAW-M6-LOP-00004001 D2

DEMIN WATER
LAW-M6-LOP-00004001 D2
LOP-GQ-33444-S11C-003/4

HS Z1 YC 1117 O/C
YY 1117 3/8" TUBING ISA ISA-V-68793
VENT
ZSH 1117
ZSL 1117
YV 1117
UY FF
LOP-GQ-33426-S11C-003/4
FC
LOP-V-10020
LOP-V-10778

HS Z1 YC 1122 O/C
YY 1122 3/8" TUBING ISA ISA-V-68794
VENT
ZSH 1122
ZSL 1122
YV 1122
UY FF
LOP-GQ-01497-S11C-003/4
FC
LOP-V-10779
LOP-V-09997
LOP-V-11974

HS Z1 YC 1123 O/C
YY 1123 3/8" TUBING ISA ISA-V-68795
VENT
ZSH 1123
ZSL 1123
YV 1123
UY FF
FC
LOP-V-10023
LOP-V-10783

HS Z1 YC 1127 O/C
YY 1127 3/8" TUBING ISA ISA-V-68796
VENT
ZSH 1127
ZSL 1127
YV 1127
UY FF
LOP-GQ-33440-S11C-003/4
FC
LOP-V-10782
LOP-V-11973
LOP-GQ-33440-S11C-003/4
LOP-V-10784
LOP-V-11975

YC Z 1401
Z1
Q CM IIIIV
YY Z 1401 S 3/8" TUBING ISA ISA-V-68797
VENT
ZSL 1401
ZSH 1401
WET PROCESS CELL
LOP-GQ-33448-S11C-04
LOP-GQ-33448-S11C-03
LOP-GQ-33448-S11C-03
F0
YV Z 1401
IVIII CM Q
IIIIV Q CM

00P05
LOP-HOSE-00010
00P11
LOP-HOSE-00011
00P01
LOP-HOSE-00022

MELTER ENCLOSURE

CM IV O III
III
Q CM IIIIV

LOP-SPOOL-00001
LAW-M6-LOP-00001005 A8
10" INCONEL 625
REMOTE GRAYLOK
3" SS
FILM COOLER AIR INJECTION
LOP-FCLR-00001

OFFGAS FROM LAW MELTER

MELTER 1

NOTES:

1. SEE DRAWINGS 24590-WTP-M6-50-00001 THROUGH 24590-WTP-M6-50-00008 FOR GENERAL NOTES, SYMBOLS AND LEGEND, AND GENERAL SLOPE REQUIREMENTS.
2. CONTENTS OF THIS DOCUMENT ARE DANGEROUS WASTE PERMIT AFFECTING.
3. THE PRESSURE BOUNDARY FOR ALL COMPONENTS ON THIS DRAWING IS QUALITY LEVEL CM AND SEISMIC CATEGORY SC-IV, UNLESS OTHERWISE NOTED.
4. ALL LINES SHOWN ON THIS DRAWING SHALL BE FREE DRAINING, UNLESS OTHERWISE NOTED.
5. MELTER PRESSURE CONTROL AIR LOOP IS BASED ON INPUT FROM LMP-PDI-1410A AS SHOWN ON P&ID 24590-LAW-M6-LMP-00002.
6. THIS DRAWING IS CONVERTED FROM A SINGLE SHEET TO MULTI SHEET DRAWINGS AND, IN PART, SUPERSEDES 24590-LAW-M6-LOP-00004 REV. 5. CLOUDS DEPICT MAJOR CHANGES MADE FROM SUPERSEDED DRAWING. THIS DRAWING INCLUDES INFORMATION FROM 24590-LAW-M6N-LOP-00009, -00015, -00023, -00032, -00036, -00039, -00041, -00054, -00056, -00058, 24590-LAW-M6N-M80T-00001, AND 24590-LAW-M6PN-00009.

HOLD/OPEN ITEMS:

NONE

REFERENCES:

1. 24590-LAW-3DY-LOP-00001, SYSTEM DESCRIPTION FOR THE LAW PRIMARY OFFGAS (LOP) AND SECONDARY OFFGAS/VESSEL VENT (LVP) SYSTEMS.

Please note that source, special nuclear, and byproduct materials, as defined in the Atomic Energy Act of 1954 (AEA) are regulated at the U. S. Department of Energy (DOE) facilities exclusively by DOE acting pursuant to its AEA authority. DOE asserts that regulation of the DOE AEA activities is within the exclusive AEA authority to regulate source, special nuclear, and byproduct materials at DOE-owned nuclear facilities. Information contained herein on radionuclides is provided for process description purposes only.

REV	DESCRIPTION	ORG	CHKD	RVWD	APVD	DATE
0	ISSUED FOR CONSTRUCTION, SEE NOTE 6	mao	BW	SEK	JJH	03/04/10

REVISION HISTORY

Q QUALITY DESIGNATOR

ISSUED BY RPP-WTP PCC — ISSUE STAMP

	BY	DATE
ORIGINATOR	mg Gix'ie	2/25/10
CHECKER	BGill	2/26/10
APPROVER	K Calder	03/04/10
REVIEWER		3/2/10
		3/4/10

CONTENT APPLICABLE TO ALARA? [X] YES [ ] NO
ADR NO. 24590-LAW-ADR-M-02-022 REV.: 1
EMS SCREENING REQUIRED? [X] YES [ ] NO EMS INITIAL IF YES SEK

PROJECT No. 24590
SITE HANFORD
AREA 200E
BUILDING No. 20

BECHTEL
RIVER PROTECTION PROJECT
WASTE TREATMENT PLANT
2435 STEVENS CENTER PLACE
RICHLAND, WA 99354

CONTRACT No: DE-AC27-01RV14136

P&ID - LAW
LAW PRIMARY OFFGAS PROCESS SYSTEM
MELTER 1
LOP-FCLR-00001

SCALE: NONE

24590-LAW-M6-LOP-00004002 REV 0

SCREENING IS REQUIRED FOR DRAWING TYPES IDENTIFIED IN 24590-WTP-GPR-SREQ-002

"E" SIZE - 44x34
COMPUTER GENERATED - MANUAL DESIGN CHANGES NOT PERMITTED

02/25/2010 09:50:53 AM

C:\Work\gpookes\dms03838\LAWM6LOP00004002.dgn
PLOTTED BY: gpookes
C:\Work\gpookes\dms03838\LAWM6LOP00004002.dgn

FORM E_SDN.DGN 02/2009

LOP-FCLR-00004
MELTER 2 STANDBY
OFFGAS FILM COOLER
2'-1"W x 3'-8"L x 5'-1"H

PLANT SERVICE AIR
LAW-M6-LOP-00005002 H2
LOP-GQ-33421-S11C-02
LMP-PDSHH-2528/2529
LAW-M6-LMP-00032001 D2
LOSS OF POWER
PSA C12A
LOP S11C
PLANT SERVICE AIR
LAW-M6-PSA-00003 F2
PSA-GQ-32183-C12A-02
LOP-V-10054
LOP-GQ-03316-S11C-02
YC 2129
ZSL 2129
ZSH 2129
YY 2129
3/8" TUBING ISA
ISA-V-68784
VENT
YC 2109
YY 2109
ISA-V-68785
DIW LOP
DIW-WE-03663-S11C-003/4
ZSL 2109
ZSH 2109
DEMIN WATER
LAW-M6-DIW-00001002 B2
DIW-WE-03663-S11C-01
LOP-V-10056
LOP-WE-02354-S11C-003/4
LOP-GQ-02488-S11C-003/4
AIR BLOWDOWN
LOP-V-10047
LOP-WE-02354-S11C-01
FI 2220
FT 2220
FF
FI 2218
FT 2218
T
LOP-V-11954
LMP-PDSHH-2410A
LAW-M6-LMP-00032002 D2
LMP-PDSHH-2528/2529
LAW-M6-LMP-00032001 D2
LOSS OF POWER
HS O/C
YY 2219
ISA-V-68786
YY 2225
ISA-V-68787
ZSH 2219
ZSL 2219
ZSH 2225
ZSL 2225
UY FF
LOP-V-10059
LOP-V-10062
WE
GQ
LOP-GQ-33442-S11C-001/2
LOP-GQ-02492-S11C-001/2
PI 2144
0034-801
LOP-V-34084
LOP-GQ-33443-S11C-003/4
YC-2122
LOP-GQ-33421-S11C-01/2
LOP-V-09394
LOP-V-11967
LOP-GQ-33427-S11C-003/4
LOP-GQ-33442-S11C-003/4
LOP-GQ-02490-S11C-003/4
LOP-GQ-02492-S11C-003/4
HS O/C
YY 2217
ISA-V-68789
YY 2222
ISA-V-68790
YY 2223
ISA-V-68791
YY 2227
ISA-V-68792
ZSH 2217
ZSL 2217
ZSH 2222
ZSL 2222
ZSH 2223
ZSL 2223
ZSH 2227
ZSL 2227
LOP-V-09731
LOP-V-10059
LOP-V-10788
LOP-V-10066
LOP-V-10790
LOP-V-10789
LOP-V-11965
LOP-V-09732
LOP-GQ-33442-S11C-001/4
LOP-GQ-02492-S11C-003/4
1/2" S.S. TUBING
SECOND PLENUM PROBE
LAW-M6-LMP-00032002 C2
TSHH-2153
LAW-M6-LOP-00002005 D2
YC 2402
YY 2402
ISA-V-68788
ZSL 2402
ZSH 2402
WET PROCESS CELL
LOP-GQ-33451-S11C-03
LOP-GQ-33451-S11C-02
FO
LOP-V-10797
LOP-HOSE-00015
OGS01
OGS13
OGS12
R2
LOP-HOSE-00024
LOP-HOSE-00020
MELTER ENCLOSURE
LOP-SPOOL-00007
LAW-M6-LOP-00002005 B8
10" INCONEL 625
2"SS
REMOTE GRAYLOK
FILM COOLER
AIR INJECTION
LOP-FCLR-00004
OFFGAS FROM
LAW MELTER
MELTER 2
SET @ 25 PSIG
PCV 2121
PI 2133
NOTE 5
LOP-V-34089
LOP-V-34026
LOP-V-34027
LOP-V-34030
LOP-GQ-03316-S11C-03
LOP-FCLR-00003
LAW-M6-LOP-00005002 H8
PCV 2103
PI 2134
LOP-V-34090
LOP-V-34028
LOP-V-34029
LOP-V-34031

NOTES:

1. SEE DRAWINGS 24590-WTP-M6-50-00001 THROUGH 24590-WTP-M6-50-00008 FOR GENERAL NOTES, SYMBOLS AND LEGEND, AND GENERAL SLOPE REQUIREMENTS.
2. CONTENTS OF THIS DOCUMENT ARE DANGEROUS WASTE PERMIT AFFECTING.
3. THE PRESSURE BOUNDARY FOR ALL COMPONENTS ON THIS DRAWING IS QUALITY LEVEL CM AND SEISMIC CATEGORY SC-IV, UNLESS OTHERWISE NOTED.
4. ALL LINES SHOWN ON THIS DRAWING SHALL BE FREE DRAINING, UNLESS OTHERWISE NOTED.
5. PI TO BE VISIBLE FROM ASSOCIATED PRESSURE REGULATOR.
6. THIS DRAWING IS CONVERTED FROM A SINGLE SHEET TO MULTI-SHEET DRAWINGS AND, IN PART, SUPERSEDES 24590-LAW-M6-LOP-00005 REV 5. CLOUDS DEPICT MAJOR CHANGES MADE FROM SUPERSEDED DRAWING. THIS DRAWING INCLUDES INFORMATION FROM 24590-LAW-M6N-LOP-00010, -00015, -00024, -00032, -00036, -00039, -00041, -00042, -00055, -00056, -00058, 24590-LAW-M6N-M80T-00001, AND 24590-LAW-M6PN-LOP-00016

HOLD/OPEN ITEMS:

NONE

REFERENCES:

1. 24590-LAW-3YD-LOP-00001, SYSTEM DESCRIPTION FOR THE LAW PRIMARY OFFGAS (LOP) AND SECONDARY OFFGAS/VESSEL VENT (LVP) SYSTEM.

Please note that source, special nuclear, and byproduct materials, as defined in the Atomic Energy Act of 1954 (AEA) are regulated at the U. S. Department of Energy (DOE) facilities exclusively by DOE acting pursuant to its AEA authority. DOE asserts that the Nuclear Waste Policy Act does not provide any regulatory authority to regulate source, special nuclear, and byproduct materials at DOE-owned nuclear facilities. Information contained herein on radionuclides is provided for process description purposes only.

DRAWING INDEX

DWG NO	TITLE
24590-LAW-M6-LOP-00005001	PRIM OFFGAS PROC SYS MELTER 2 LOP-FCLR-00004
24590-LAW-M6-LOP-00005002	PRIM OFFGAS PROC SYS MELTER 2 LOP-FCLR-00003

Q QUALITY DESIGNATOR

REVISION HISTORY

REV	DESCRIPTION	ORG	CHKD	RVWD	APVD	DATE
0	ISSUED FOR CONSTRUCTION, SEE NOTE 6	mrg	GPL	[illegible]	[illegible]	03/04/10

ISSUED BY RPP-WTP PDC

PROJECT No.	24590
SITE	HANFORD
AREA	200E
BUILDING No.	20

	BY	DATE
ORIGINATOR	mrg O'Neil	2/25/10
CHECKER	[illegible]	2/26/10
APPROVER	[illegible]	03/04/10
REVIEWER	[illegible]	2/26/10
	[illegible]	3/4/10

CONTENT APPLICABLE TO ALARA? [X] YES [ ] NO
ADR NO. 24590-LAW-ADR-M-02-022 REV: 1
ENMS SCREENING REQUIRED? [X] YES [ ] NO ENMS INITIAL IF YES PEJC

BECHTEL
RIVER PROTECTION PROJECT
WASTE TREATMENT PLANT
2435 STEVENS CENTER PLACE
RICHLAND, WA 99354

CONTRACT No: DE-AC27-01RV14136

P&ID - LAW
LAW PRIMARY OFFGAS PROCESS SYSTEM MELTER 2 LOP-FCLR-00004

SCALE: NONE
24590-LAW-M6-LOP-00005001
REV 0

E SIZE - 44x34
COMPUTER GENERATED - MANUAL DESIGN CHANGES NOT PERMITTED

SCREENING IS REQUIRED FOR DRAWING TYPES IDENTIFIED IN 24590-WTP-GPP-SREG-002

FORM E_SDN.DGN 02/2009

02/25/2010 09:50:52 AM PLOTTED BY: gpolukett C:\Work\gpolukett\mod338\LAW\M6LOP00005001.dgn
C:\Work\gpolukett\mod338\LAW\M6LOP00005001.dgn

24590-LAW-M6-LOP-00005002

LOP-FCLR-00003
MELTER 2 PRIMARY
OFFGAS FILM COOLER
2'3"W x 3'8"L x 4'11"H

PLANT SERVICE AIR
LAW-M6-LOP-00005001 G2

LOP-GQ-33316-S11C-03

PT 2403 — PI 2403

003/4-B07 LOP-V-34137

LOP-GQ-33433-S11C-02

LOP-GQ-33421-S11C-02 → LOP-FCLR-00004 LAW-M6-LOP-00005001 H8

LOP-GQ-33432-S11C-03
CONTROL AIR

LOP-V-10833

LOP-V-10004

TI 2140 / FI 2140 — FT 2140 FF

FC-2140 LAW-M6-LOP-00002004 F2

FT 2113 FF

003/4-B04 LOP-V-10823

LMP-PDSHH-2410A
LAW-M6-LMP-00032002 D3

LMP-PDSHH-2528/2529
LAW-M6-LMP-00032001 D2

LOSS OF POWER

003/4-B01 LOP-V-34824

TI 2113 / FI 2113

LOP-GQ-33316-S11C-02

3/8" TUBING ISA

ISA-V-69476

FC 2113

FV 2113 FF

FI 2104

FI 2128

PC 2105 NOTE 5

PV 2105 FF

3/8" TUBING ISA

ISA-V-69477

LOP-GQ-02497-S11C-001/2

LOP-GQ-33421-S11C-001/2

LOP-GQ-33432-S11C-02

LOP-GQ-33316-S11C-03

LOP-V-10013

LOP-V-10694

LOP-V-10793

LOP-V-10031

TSHH-2152
LAW-M6-LOP-00002005 D2

YC-2227
LAW-M6-LOP-00005001 D2

YC-2227
LAW-M6-LOP-00005001 D2

LOSS OF POWER
LAW-M6-LOP-00005001 D2

DEMIN WATER
LAW-M6-LOP-00005001 D2

LOP-GQ-33443-S11C-003/4

3/8" TUBING ISA

ISA-V-68783 — YY 2117 — VENT — FC — LOP-V-10034 — HS O/C Z1 YC 2117 UY FF ZSH 2117 ZSL 2117

ISA-V-68779 — YY 2122 — VENT — FC — HS O/C Z1 YC 2122 UY FF ZSH 2122 ZSL 2122

ISA-V-68780 — YY 2123 — VENT — FC — LOP-V-10029 — HS O/C Z1 YC 2123 UY FF ZSH 2123 ZSL 2123

ISA-V-68781 — YY 2127 — VENT — FC — HS O/C Z1 YC 2127 UY FF ZSH 2127 ZSL 2127

LOP-GQ-02497-S11C-003/4

LOP-GQ-33441-S11C-003/4

LOP-V-10798

LOP-V-10799

LOP-V-10869

LOP-V-10868

LOP-V-10795

LOP-V-10783

LOP-V-10794

LOP-V-10866

LOP-HOSE-00016

LOP-HOSE-00017

LOP-V-10861

LOP-HOSE-00021

WET PROCESS CELL

LOP-GQ-33450-S11C-04

LOP-GQ-33450-S11C-03

LOP-GQ-33450-S11C-03

FO

YC 2401 Z — Q CM — I II III IV

YY 2401 Z — S

ZI — ZSL 2401 — ZSH 2401

3/8" TUBING ISA

ISA-V-68782

VENT

YV 2401 Z

I V II — CM Q

III IV — Q CM

MELTER ENCLOSURE

0GP15 — 0GP11 — 0GP01

LOP-SPOOL-00008
LAW-M6-LOP-00002005 A8

10" INCONEL 625

CM Q — I V II

III IV — Q CM

REMOTE GRAYLOK

FILM COOLER AIR INJECTION 3" SS

LOP-FCLR-00003

OFFGAS FROM LAW MELTER

MELTER 2

NOTES:

1. SEE DRAWINGS 24590-WTP-M6-50-00001 THROUGH 24590-WTP-M6-50-00008 FOR GENERAL NOTES, SYMBOLS AND LEGEND, AND GENERAL SLOPE REQUIREMENTS.
2. CONTENTS OF THIS DOCUMENT ARE DANGEROUS WASTE PERMIT AFFECTING.
3. THE PRESSURE BOUNDARY FOR ALL COMPONENTS ON THIS DRAWING IS QUALITY LEVEL CM AND SEISMIC CATEGORY SC-IV, UNLESS OTHERWISE NOTED.
4. ALL LINES SHOWN ON THIS DRAWING SHALL BE FREE DRAINING, UNLESS OTHERWISE NOTED.
5. MELTER PRESSURE CONTROL AIR LOOP IS BASED ON INPUT FROM LMP-PDI-2410A AS SHOWN ON P&ID 24590-LAW-M6-00032.
6. THIS DRAWING IS CONVERTED FROM A SINGLE SHEET TO MULTI-SHEET DRAWINGS AND, IN PART, SUPERSEDES 24590-LAW-M6-LOP-00005 REV 5. CLOUDS DEPICT MAJOR CHANGES MADE FROM SUPERSEDED DRAWING. THIS DRAWING INCLUDES INFORMATION FROM 24590-LAW-M6N-LOP-00010, -00015, -00024, -00032, -00036, -00039, -00041, -00055, -00056, -00058 24590-LAW-M6N-M80T-00001, AND 24590-LAW-M6PN-LOP-00008.

HOLD/OPEN ITEMS:

NONE

REFERENCES:

1. 24590-LAW-3YD-LOP-00001, SYSTEM DESCRIPTION FOR THE LAW PRIMARY OFFGAS (LOP) AND SECONDARY OFFGAS/VESSEL VENT (LVP) SYSTEM.

Please note that source, special nuclear, and byproduct materials, as defined in the Atomic Energy Act of 1954 (AEA) are regulated at the U. S. Department of Energy (DOE) facilities exclusively by the DOE pursuant to its AEA authority. DOE asserts that pursuant to the AEA, it has sole and exclusive responsibility and authority to regulate nuclear safety and radioactive source materials at DOE-owned nuclear facilities. Information contained herein on radionuclides is provided for process description purposes only.

REV	DESCRIPTION	ORG	CHKD	RVWD	APVD	DATE
0	ISSUED FOR CONSTRUCTION, SEE NOTE 6	mag	QW	SGS	GPK	03/04/10

REVISION HISTORY

QUALITY DESIGNATOR: Q

ISSUED BY RPP-WTP PDC — ISSUE STAMP

PROJECT No.	24590
SITE	HANFORD
AREA	200E
BUILDING No.	20

	BY	DATE
ORIGINATOR	mag. Crawl	2/25/10
CHECKER	QWilson	2/26/10
APPROVER	Gordon Kirkbride	03/04/10
REVIEWER	Steve Schaus	2/26/10
	Gordon Kirkbride	3/4/10
	GPK 2/4/10	

CONTENT APPLICABLE TO ALARA? [X] YES [ ] NO
ADR NO. 24590-LAW-ADR-M-02-022 REV: 1
EMS SCREENING REQUIRED? [X] YES [ ] NO EMS INITIAL IF YES D.E.K.

SCREENING IS REQUIRED FOR DRAWING TYPES IDENTIFIED IN 24590-WTP-GPP-SREG-002

BECHTEL

RIVER PROTECTION PROJECT
WASTE TREATMENT PLANT
2435 STEVENS CENTER PLACE
RICHLAND, WA 99354

CONTRACT No: DE-AC27-01RV14136

P&ID - LAW
LAW PRIMARY OFFGAS PROCESS SYSTEM
MELTER 2
LOP-FCLR-00003

SCALE: NONE

24590-LAW-M6-LOP-00005002 REV 0

E SIZE - 44x34
COMPUTER GENERATED - MANUAL
DESIGN CHANGES NOT PERMITTED

02/25/2010 09:50:52 AM

PLOTTED BY: gpeaslee C:\Work\gpeaslee\dms03838\LAWM6LOP00005002.dgn

FORM E_SDN.DGN 02/2009

RCRA Operating Record Cover Sheet

Document Number: 24590-LAW-PCN-ENV-11-002

Waste Management Records:

- ☐ **R101** List of Waste Management Areas
- ☐ **R102** Waste Analysis Records
- ☐ **R103** Waste Designation Information
- ☐ **R104** Waste Transfer Records
- ☐ **R105** Movement of Containerized Waste Onsite
- ☐ **R106** Release/Spill Records
- ☐ **R114** Field Change Request/Field Change Notice
- ☐ **R116** Field Monitoring / Surveillance Checklists
- ☐ **R119** Reserved
- ☐ **R120** Reserved
- ☐ **R126** Satellite and 90-Day Accumulation Area

Compliance Schedule Submittals:

- ☐ **R401** Pretreatment Facility
- ☐ **R402** LAW Facility
- ☐ **R403** HLW Facility
- ☐ **R404** Laboratory
- ☐ **R405** Balance of Facility
- ☐ **R406** WTP All Facilities
- ☐ **R407** Human Health & Ecological Risk Assessment

Other Operating Record Documents:

- ☐ **R601** Outgoing Correspondence (RCRA Permit Relating)
- ☐ **R602** Contingency Plan Implementation
- ☐ **R603** Closure Plan Deviation
- ☐ **R604** Permit Equivalency Notice (PEN)
- ☒ **R605** Permit Change Notice (PCN)
- ☐ **R606** Annual RCRA Permit Closure and Post-Closure Cost Adjustment Report
- ☐ **R607** Permit Modification
- ☐ **R608** Incoming Correspondence (RCRA Permit Relating)

Non-Operating Record Documents:

- ☐ **N101** Meeting Minutes
- ☐ **N102** Memoranda

Special Instructions to PDC:

Link CCNs:

237273

239241

240222

ISSUED BY
RPP-WTP PDC

Quarter Ending June 30, 2011

24590-PTF-PCN-ENV-08-006

Hanford Facility RCRA Permit Modification Notification Form

Part III, Operating Unit 10

Waste Treatment and Immobilization Plant

Index

Page 2 of 3: Hanford Facility RCRA Permit, Part III, Operating Unit 10, Waste Treatment and Immobilization Plant

Replace Permit Mechanical Data Sheets 24590-PTF-MVD-HLP-P0006 (HLW Feed Receipt Vessel), 24590-PTF-MVD-HLP-P0007 (HLW Lag Storage Vessel), 24590-PTF-MVD-HLP-P0008 (HLW Lag Storage Vessel) and 24590-PTF-MVD-HLP-P0009 (HLW Feed Blend Vessel) in Appendix 8.6 of the Dangerous Waste Permit (DWP).

Submitted by Co-Operator:

D. M. Busche — Date: 5/18/11

Reviewed by ORP Program Office:

D. L. Noyes — Date: 8/10/11

Quarter Ending June 30, 2011 24590-PTF-PCN-ENV-08-006

Hanford Facility RCRA Permit Modification Notification Form	
Unit: **Waste Treatment and Immobilization Plant**	~~Permit Part:~~ **Part III, Operating Unit 10**

Description of Modification:

The purpose of this Class 1 modification is to update PTF Mechanical Data Sheets for the HLW Feed Receipt Vessel (HLP-VSL-00022), HLW Lag Storage Vessels (HLP-VSL-00027A and HLP-VSL-00027B), and HLW Feed Blend Vessel (HLP-VSL-00028). The following data sheets are submitted to replace the permitted data sheets currently in Appendix 8.6. Note that associated calculations and vessel drawings have also been updated or revised since the last issue of the permit document. Equipment assembly drawings associated with these vessels are included in 24590-PTF-PCN-ENV-10-032, 24590-PTF-PCN-ENV-10-033, and 24590-PTF-PCN-ENV-10-034.

Appendix 8.6			
Replace:	24590-PTF-MVD-HLP-P0006, Rev. 1	With:	24590-PTF-MVD-HLP-00006, Rev. 8
	24590-PTF-MVD-HLP-P0007, Rev. 1		24590-PTF-MVD-HLP-00007, Rev. 8
	24590-PTF-MVD-HLP-P0008, Rev. 1		24590-PTF-MVD-HLP-00008, Rev. 9
	24590-PTF-MVD-HLP-P0009, Rev. 1		24590-PTF-MVD-HLP-00009, Rev. 8

This modification requests Ecology approval and incorporation into the permit the specific changes to these data sheets that are identified by revision notes and revision triangles shown on the data sheets that have been issued since the last revision of the permitted version. Revisions are the result of ongoing design (changes from vendor preliminary data to vendor detailed design). The following is a summary of the significant changes on the attached data sheets:

24590-PTF-MVD-HLP-00006:

- Added black cell requirements
- Added materials of construction for wear plate and PJM components and updated Materials of Construction section
- Revised external design pressure rating under jacket to account for ventilation fan pressures
- Added six PJMs to both the Reference Data (sheet 1) and to the Equipment Cyclic Data Sheet (sheet 3); added two camera ports
- Clarified vessel operating temperature in Design Data
- Updated Notes
- Revised Design Data section for max operating volume, total volume, estimated empty, operating, and test weights
- Revised Cyclic Data, Hydrodynamic Loading, PJM Overblow Loads, and Nozzle Load
- Added Equipment Qualification Data Sheet

24590-PTF-MVD-HLP-00007:

- Added black cell requirements
- Added Non-Newtonian mixing requirements
- Revised external design pressure rating under jacket to account for ventilation fan pressures
- Updated Notes
- Revised Design Data section for max operating volume, total volume, estimated empty, operating, and test weights
- Updated Materials of Construction section
- Revised Cyclic Data, Hydrodynamic Loads, Nozzle Loads, and PJM Overblow Loads; added Cluster Overblow Loads

Quarter Ending June 30, 2011 24590-PTF-PCN-ENV-08-006

- Added Equipment Qualification Data Sheet

24590-PTF-MVD-HLP-00008:

- Added black cell requirements
- Added Non-Newtonian mixing requirements
- Clarified design pressures and operating temperature in Design Data
- Updated Notes
- Revised Design Data section for max operating volume, total volume, estimated empty, operating, and test weights
- Updated Materials of Construction section
- Revised Cyclic Data, Hydrodynamic Loads, Nozzle Loads, and PJM Overblow Loads; added Cluster Overblow Loads
- Added Equipment Qualification Data Sheet

24590-PTF-MVD-HLP-00009:

- Added black cell requirements
- Added Non-Newtonian mixing requirements
- Clarified design pressures and operating temperature in Design Data
- Updated Notes
- Revised Design Data section for max operating volume, total volume, estimated empty, operating, and test weights
- Updated Materials of Construction section
- Revised Cyclic Data, Hydrodynamic Loads, Nozzle Loads, and PJM Overblow Loads; added Cluster Overblow Loads
- Added Equipment Qualification Data Sheet

This modification requests Ecology approval and incorporation of the following outstanding change document(s) into the permit. Although not yet incorporated into the revised documents included in this PCN, the listed outstanding change document(s) are intended to be incorporated into the permit:

- No outstanding change documents.

WAC 173-303-830 Modification Class:	Class 1	Class 1	Class 2	Class 3
Please mark the Modification Class:		X		

Enter relevant WAC 173-303-830, Appendix I Modification citation number: NA

Enter wording of WAC 173-303-830, Appendix I Modification citation:

In accordance with WAC 173-303-830(4)(d)(i), this modification notification is requested to be reviewed and approved as a Class 1 modification. WAC 173-303-830(4)(d)(ii)(A) states, "Class 1 modifications apply to minor changes that keep the permit current with routine changes to the facility or its operation. These changes do not substantially alter the permit conditions or reduce the capacity of the facility to protect human health or the environment. In the case of Class 1 modifications, the director may require prior approval."

Modification Approved/Concur: [✓] Yes [ ] Denied (state reason below)

Reason for denial:

Reviewed by Ecology:

J. J. Wallace 10.14.11 Date

MECHANICAL DATA SHEET: VESSEL

PLANT ITEM No.
24590-PTF-MV-HLP-VSL-00022

Project:	***RPP-WTP***	P&ID: △8	***24590-PTF-M6-HLP-00002001, 24590-PTF-M6-HLP-00007007, 24590-PTF-M6-PWD-00033, 24590-PTF-M6-HLP-00027006***
Project No:	***24590***	Calculations:	***Attachment 1***
Project Site:	***Hanford***	Vessel Drawing	***24590-PTF-MV-HLP-00003***
Description:	***HLW Feed Receipt Vessel***	Reports △8	***Attachment 1***

ISSUED BY RPP-WTP PDC

Reference Data

Charge Vessels (Tag Numbers)	***Deleted***
Pulsejet Mixers / Agitators (Tag Numbers) △8	***HLP-PJM-00056, HLP-PJM-00057, HLP-PJM-00084, HLP-PJM-00085, HLP-PJM-00086, HLP-PJM-00087, HLP-PJM-00088, HLP-PJM-00089, HLP-PJM-00090, HLP-PJM-00091, HLP-PJM-00092, HLP-PJM-00093, HLP-PJM-00095, HLP-PJM-00096, HLP-PJM-00097, HLP-PJM-00098, HLP-PJM-00099, HLP-PJM-00100***
RFDs/Pumps (Tag Numbers)	***Deleted***

Design Data

Quality Level	***Q (See Note 12)***	Fabrication Specs	***24590-WTP-3PS-MV00-T0001***		
Seismic Category	***SC-I***	Design Code	***ASME Section VIII Div 1***		
Service/Contents	***Radioactive Liquid***	Code Stamp	***Yes***		
Design Specific Gravity	***1.50***	NB Registration	***Yes***		
Maximum Operating Volume gal	***235,400 (Note 5)***	Weights (lbs)	Empty	Operating	Test
Total Volume gal	***268,800 (Note 5)***	Estimated	***399,000***	***3,357,400***	***2,725,500***
Equipment Qualification	***See EQ Sections***				

Inside Diameter	inch	***456***			Wind Design	***Not Required***	
Length/Height (TL-TL)	inch	***290***			Snow Design	***Not Required***	
		Vessel Operating	Vessel Design	Coil/Jacket Design	Seismic Design	***24590-WTP-3PS-MV00-T0002 24590-WTP-3PS-SS90-T0001***	
Internal Pressure	psig	***0***	***15***	***35***			
External Pressure	psig	***1.5***	***2.0 (Note 4)***	***15***	Postweld Heat Treat	***Not Required***	
Temperature	°F	***150 △8 (Note 15)***	***240 △8***	***240 △8***	Corrosion Allowance	Inch	***0.04 (Note 7)***
Min. Design Metal Temp.	°F	***40***					

Materials of Construction

Component	Material	Minimum Thickness / Size	Containment
Top Head	***SA-240 316 (Note 3)***	***See Drawing***	***Auxiliary (Note 1)***
Shell	***SA-240 316 (Note 3)***	***See Drawing***	***Primary (Note 1)***
Bottom Head	***SA-240 316 (Note 3)***	***See Drawing***	***Primary (Note 1)***
Wear Plate	***SA 240 316 (Note 3)***	***See Drawing***	***N/A***
Support	***SA-240 304 (Note 3)***	***See Drawing***	***N/A***
Jacket/Coils/Half-Pipe Jacket	***SA-240 316 (Note 3)***	***See Drawing***	***N/A***
Internals	***SA-240 316 (Note 3)***	***See Drawing***	***Thermowells Primary (Note 1)***
Pipe	***SA-312 TP316 Smls (Note 3)***	***See Drawing***	***Note 1***
Pulse Jet Mixer Nozzles	***Cast Stellite 12***	***See Drawing***	***N/A***
Forgings/ Bar stock	***SA-182 F316 (Note 3)***	***See Drawing***	***Note 1***
Wash Ring Pipe	***SA-312 TP316 Smls (Note 3)***	***See Drawing***	***N/A***
Bolting/ Gaskets	***N/A***	***N/A***	***N/A***

Miscellaneous Data

Orientation	***Vertical***	Support Type	***Skirt***
Insulation Function	***Not Applicable***	Insulation Material	***Not Applicable***
Insulation Thickness (inch)	***Not Applicable***	Weld Surface Finish	***Welds Descaled as Laid (Note 2)***

R11342783

Notes/Remarks

Note 1: ***All welds forming part of the primary and auxiliary containments, including the nozzle attachment welds shall be subjected to 100% volumetric examination.***

Note 2: ***Grind smooth shell welds at shell-jacket welds.***

Note 3: ***Maximum carbon content of 0.030% for all welded components.***

Note 4: ***External design pressure under the jacket shall be rated for the jacket internal design pressure plus vessel external design pressure to account for ventilation fan pressures.***

Note 5: ***Vessel volumes are approximate and do not account for manufacturing tolerances, nozzles, and displacement of internals.***

Note 6: ***Contents of this document are Dangerous Waste Permit affecting.***

8 ***Note 7:*** ***Corrosion allowance for jacket shall be 0.04 inch. 24590-WTP-M0C-50-00004, Table 10-5, requires an additional wear allowance of 0.499" for the PJM nozzles and 0.903" for the vessel bottom head under the PJM nozzles. Wear Plates are added under the PJMs and stellite cone is provided for the PJM cones to account for the additional erosion allowance. Wear rate for the stellite cones are 0.110". Vendor is not required to account for this additional allowance.***

Note 8: ***The vessel design external pressure is estimated only and shall be confirmed by the Seller's calculations.***

Note 9: ***This vessel is located in a Black Cell.***

Note 10: ***Deleted.*** 8

Note 11: ***Deleted.*** 8

8 ***Note 12:*** ***Vessel to be designed, fabricated, tested to design level L-1 and black cell requirements defined in 24590-WTP-3PS-MV00-T0001.***

Note 13: ***Change to quality level, maximum operating volume, total volume, operating external pressure, added Data Reference, revised Note 4, added Note 12 and Note 13, change to parent vessel cyclic data, change to hydrodynamic loads for normal operations, change to PJM cyclic data, added E&NS table and signature. Revised/added P&IDs, Calculations, and Reports. Revised Design data. Added Functional Safety Requirements. Added Seismic section. Revised Equipment Cyclic Data Parent Vessel and PJMs. Revised Hydrodynamic Loads Criteria. Added nozzle loads table. Added EQ sections. Added Attachment 1.***

8 ***Note 14:*** ***Added six PJMs to Reference Data (Page 1) and to the Equipment Cyclic Data Sheet - PJMs section, (page 3). Added two camera ports identified as N42 and N43. Added N44 pump suction line per M3. Revised Equipment Qualification data to new datasheet form and renumbered Equipment Qualification Notes for clarity. Revised Cyclic Data, Hydrodyanamic Loading, PJM Overblow Loads, and Nozzle Loads. Deleted the Functional/Safety Requirements section as this is discussed in the EQ section of this datasheet. Deleted the Seismic section.***

8 ***Note 15:*** ***Values of 113°F and 150°F are given per 24590-WTP-RPT-ENG-07-007 and 24590-PTF-MVC-10-00003 respectively. 150°F is being specified by this MDS as it bounds both references.***

Equipment Cyclic Data Sheet - Parent Vessel 8

Component Plant Item Number	*PTF-MV-HLP-VSL-00022*
Component Description	*Parent Vessel*

The information below is provisional and envelopes operational duty for fatigue assessment. It is not to be used as operational data.

Materials of Construction		*SA-240 316 with maximum carbon content of 0.030%*			
Design Life		*40 Years*			
Component Function and Life Cycle Description		*This vessel receives and stores waste in a batch transfer from off-site tanks. It shall be designed to be filled to the maximum content level over a period of one day and emptied to complete a 92 day cycle. Additionally, this vessel will be subjected to fluid dynamic forces from the operation of the pulse jet mixers during the process of suspending the solids in the waste feed. This vessel is washed down not more than once per year. The process fluid enters the vessel at 150°F and is cooled to 113°F and maintained at that setting until transferred.*			
Load Type		Min	Max	Number of Cycles	Comment
Design Pressure	psig	*-2.0*	*15*	*10*	*Nominal assumption for testing- not to be used in conjunction with any other load conditions applied with 35 psig in cooling jacket.*
Operating Pressure	psig	*-1.5* *-1.5*	*0* *2.8*	*7.0E6* *40*	*Maximum Operating* *Loss of Power*
Operating Temperature	°F	*59*	*150*	*664*	*The process fluid enters the vessel at a maximum of 150°F and is cooled to 113°F and maintained at that setting until transferred. (Min temp per 24590-PTF-MVE-10-00012).*
Contents Specific Gravity		*1.00*	*1.50*	*664*	*Assume vessel empty at start of cycle (batch feeding).*
Contents Level	inch	*24*	*363*	*664*	*Liquid level measured from crown of bottom head.*
Localized Features					
Nozzles (N29)		*50°F*	*150°F*	*664*	*Transfer of Waste Feed from Tank Farms. (Max temp is per 24590-PTF-MVE-10-00008).*
Cooling Jacket (operating conditions)		*50°F chilled water inlet temp*	*N/A*	*664*	*Fluid entering the vessel is at a maximum of 150°F, chilled water input to cooling jacket at 50°F maximum to cool the vessel fluid contents to 113°F and maintain at 113°F until transferred. Maximum differential temperature is not to exceed 100°F (BNI Use Only).*

Equipment Cyclic Data Sheet Notes - Parent Vessel

- ***Cycle increase: The Seller must increase the numbers of operational cycles given above by 10% to account for commissioning duty unless otherwise noted.***

	MECHANICAL DATA SHEET: VESSEL	PLANT ITEM No. *24590-PTF-MV-HLP-VSL-00022*

Equipment Cyclic Data Sheet - PJMs 8

Component Plant Item Number	*HLP-PJM-00056, HLP-PJM-00057, HLP-PJM-00084, HLP-PJM-00085, HLP-PJM-00086, HLP-PJM-00087, HLP-PJM-00088, HLP-PJM-00089, HLP-PJM-00090, HLP-PJM-00091, HLP-PJM-00092, HLP-PJM-00093, HLP-PJM-00095, HLP-PJM-00096, HLP-PJM-00097, HLP-PJM-00098, HLP-PJM-00099, HLP-PJM-00100*
Component Description	*Pulse Jet Mixers*

The information below is provisional and envelopes operational duty for fatigue assessment. It is not to be used as operational data.

Materials of Construction		*SA-240 316 with maximum carbon content of 0.030%*			
Design Life		*40 Years*			
Component Function and Life Cycle Description		*These pulse jet mixers (PJMs) are cyclically loaded using vacuum to fully fill the PJM with process liquid and compressed air to fully empty the PJM. The PJMs are contained within a parent vessel with varying liquid level. Cyclic loading shall be between the maximum operating pressure and the minimum operating pressure plus the external static head imposed by the parent vessel. The PJM supports shall cycle between fully buoyant (PJM empty and parent vessel full) and fully loaded (PJM full and parent vessel empty) states. Thrust load shall be applied only to the fully buoyant state.*			
Load Type		Min	Max	Number of Cycles	Comment
Design Pressure	psig	*FV*	*80*	*100*	*24590-PTF-M6-HLP-00007001 through 00007006 - nominal assumption for testing*
Operating Pressure	psig	*FV*	*40*	*4.0E6*	
Operating Temperature	°F	*59*	*150*	*664*	*The process fluid enters the vessel at 150°F and is cooled to 113°F and maintained at that setting until transferred. (Operating Temp is same as parent)*
Contents Specific Gravity		*1.00*	*1.50*	*664*	*Assume PJM is empty (air) at beginning of cycle.*
Contents Level	inch	*Empty*	*Flooded*	*4.0E6*	
Thrust	lbf	*-444*	*444*	*4.0E6*	
Localized Features					
Supports		*buoyant to loaded*		*4.0E6*	

Equipment Cyclic Data Sheet Notes - PJMs

- ***Cycle increase: The Seller must increase the numbers of operational cycles given above by 10% to account for commissioning duty unless otherwise noted.***

Design Considerations for Loads Induced by Pulse Jet Mixers (PJMs) 8

Pulse Jet Mixers (PJMs) are designed to mix the vessel contents using a liquid jet discharge. PJMs are driven by compressed air. The mixing is required to enhance heat transfer, to break up hydrogen-containing particles, and to homogenize the solution. Normally, the PJMs are operated simultaneously within the parent vessel.

The PJMs operate in the following three cycles: Suction, Drive and Vent. During the suction cycle a vacuum is created in the PJM headspace and the level within the PJM rises to fill the PJM. During the drive cycle the PJM is pressurized and liquid is discharged. During the vent cycle, the pressure in the headspace approaches atmospheric and the level within the PJM is allowed to reach equilibrium.

Vessel components shall be designed to withstand loading induced by PJM operations as described herein.

Normal Operations: Liquid flows around internal structures within the parent vessel producing hydrodynamic loads such as drag and vortex shedding.

To mitigate the dynamic effects, the following pipe sizes dipped internal to the vessel are required to have a minimum first natural frequency that is double the vortex shedding frequency:

Nominal Pipe Size	Minimum First Natural Frequency
1 inch	14 Hz*
2 inch	8.0 Hz*
3 inch	5.0 Hz

* See 24590-WTP-MVC-50-00001, Section 8.1.5.2

Overblow Condition: Occasionally the drive cycle lasts too long and compressed air is discharged from the PJM. Overblows can also occur during system calibration. One or multiple PJMs may overblow at any time. These conditions induce acoustic and bubble rise loads on structures.

All internal components shall be designed for the combination of normal operational hydrodynamic loads and overblow loads. Single overblows (SOB) are assumed to act concurrently with the seismic event, however multiple overblows (MOB) are not assumed to act concurrently with the seismic event. Figure 1 (below) provides the acoustic load intensity that encompasses both SOB and MOB.

Hydrodynamic Loads Due to Normal PJM Operations 8

Normal operation imposes a cyclical load ranging between -0.06 and 0.12 psi in the radial direction and -0.03 to 0.10 psi in the vertical direction for 4.0E6 cycles. The hydrodynamic pressure applies across the projected area of the component. Positive hydrodynamic forces act in the radial, outward direction and the axial direction. Seller shall apply the radial load simultaneously in the radial direction and normal to the radial direction in the horizontal plane.

PJM Overblow Loads ⚠8

	Discussion: *During normal operation, pulse jet mixers (PJMs) mix the fluid by pulling in (suction) and pushing out (drive) fluid. During an upset condition, designated as an 'overblow', air is discharged following the drive cycle of one or more PJMs. The load consists of acoustic pressure (2Hz to 200Hz) developed in the first 200ms of the event and a load due to the bubble rising through the fluid.* *The acoustic load and the bubble load are design loads as defined by ASME B&PVC, Section VIII, Division 1, UG-22, applied statically. The acoustic load is not added to the bubble rise load because they occur at different times during the overblow event.*
Acoustic Load	• ***The acoustic design load in Figure 1 is applied to the visible (as viewed from the overblow origin) surface of cylindrical targets such as pipes, charge vessels, and PJMs. The load is applied in the direction normal to the principal axis of the target as illustrated in Figure 2. Note: The intended net effective load on the target is equal to the projected (i.e. cross-sectional) area of the object times the acoustic design load (psi) indicated in Figure 1.*** • ***Each target is considered independent of the surrounding targets: e.g. the surrounding targets do not impede the acoustic wave by casting a shadow, as illustrated in Figure 2.*** • ***The load is <u>not</u> applied to small supports such as gussets, brackets, tabs, clamps, and bolts because they are rigid and the pressure drop across the target is negligible.*** • ***When the vessel contains multiple PJMs, the load from one PJM is independent of the load from other PJMs. The loads are not additive for multiple overblows.*** • ***No internal components shall be placed within 5 PJM nozzle diameters (5 * 4 in = 20 in) of a spherical zone centered at any overblowing PJM nozzle.***
Number of Acoustic Cycles	***1000 events X 40 cycles/event for a total of 40,000 acoustic cycles.***
Bubble Rise Load	***A vertical force per projected area of 1.7 psi is applied to the surfaces in the 36-inch diameter cylindrical zone centered at the overblowing PJM(s). The bubble can be at any elevation above the overblowing PJM and only affects one zone (36-inch diameter region) at a time. When there are multiple PJMs in a vessel (MOB), each PJM has it's own bubble. To simplify analysis the bubble can be applied in a continuous cylindrical zone above each PJM top head.***
Number Bubble Rise Cycles	***1000 events X 1 cycle/event***

Figure 1: Acoustic Design Load

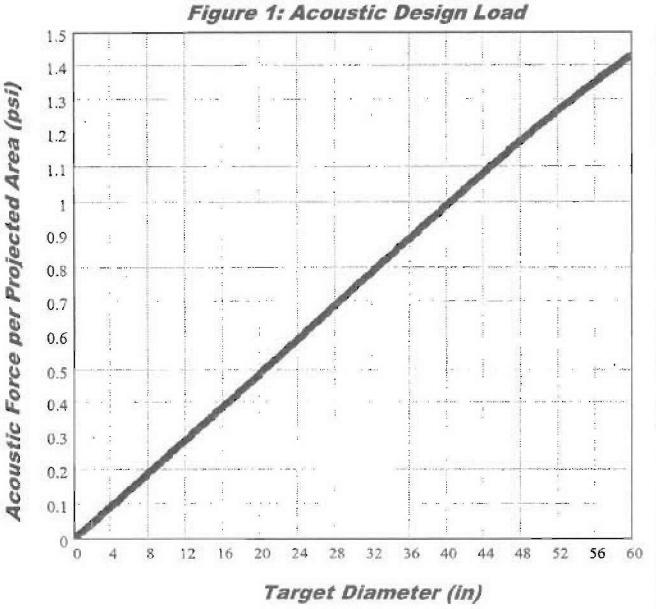

Figure 2: Load Application

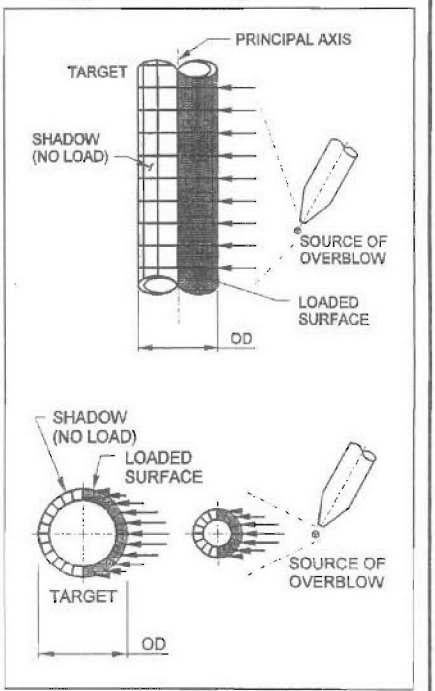

The following data is required to determine the load:

- ***Target Diameter***
- ***Target Principal Axis***

Overblow Source Coordinates

NOZZLE LOADS (8)

Nozzle	Design Nozzle Press (psig) (Note E)	Design Nozzle Temp (°F) (Note E)	Size	Load Type	Loads - lbs			Moments - ft-lbs		
					Fx	Fy	Fz	Mx	My	Mz
N01	15	240	24"	Weight / Seismic / Thermal	Manway					
N02	15	240	8"	Weight	234	752	234	1120	696	464
				Seismic	1433	2074	1780	5159	9961	8992
				Thermal	893	795	1193	3600	7193	7193
N04	15	240	6"	Weight	210	335	210	598	374	374
				Seismic	1160	775	1160	4240	6367	6367
				Thermal	735	654	983	2685	5370	5370
N05	15	240	8"	Weight	234	373	234	741	464	464
				Seismic	1285	858	1285	5159	7732	7732
				Thermal	893	795	1193	3600	7193	7193
N07	15	240	2"	Weight	50	60	50	75	75	75
				Seismic	186	123	186	277	415	415
				Thermal	114	100	152	169	337	337
N08	15	240	6	Weight / Seismic / Thermal	N08 is a parent nozzle, nozzle loads are applied via N08A, N08B, and N08C					
N08A (Note D)	100	240	1"	Weight	15	20	15	20	20	20
				Seismic	56	35	53	72	96	186
				Thermal	30	26	40	38	77	77
N08B (Note D)	100	240	1"	Weight	15	20	15	20	20	20
				Seismic	53	35	53	65	96	163
				Thermal	30	26	40	38	77	77
N08C (Note D)	100	240	1"	Weight	15	20	15	20	20	20
				Seismic	53	35	53	65	96	158
				Thermal	30	26	40	38	77	77
N10	125	240	2"	Weight	50	155	50	75	75	75
				Seismic	186	313	186	350	175	700
				Thermal	114	100	152	150	75	75
N11	125	240	2"	Weight	50	71	50	75	75	75
				Seismic	186	590	354	277	495	415
				Thermal	114	100	152	169	337	337
N12	125	240	2"	Weight	50	127	50	100	75	75
				Seismic	186	469	308	350	263	438
				Thermal	114	100	152	150	75	75
N13	125	240	2"	Weight	50	112	50	75	75	75
				Seismic	186	303	186	432	415	443
				Thermal	114	100	152	169	337	337
N14	125	240	2"	Weight	50	60	50	75	75	75
				Seismic	186	1113	774	961	415	415
				Thermal	114	100	152	169	337	337

Nozzle	Design Nozzle Press (psig) (Note E)	Design Nozzle Temp (°F) (Note E)	Size	Load Type	Loads - lbs			Moments - ft-lbs		
					Fx	Fy	Fz	Mx	My	Mz
N15	125	240	2"	Weight	50	80	50	75	75	75
				Seismic	208	158	270	719	485	522
				Thermal	114	202	152	169	337	337
N16	150	240	2"	Weight	50	60	50	75	75	75
				Seismic	217	123	186	350	131	525
				Thermal	114	100	152	100	75	150
N17	150	240	2"	Weight	50	60	50	75	75	75
				Seismic	186	123	186	322	415	466
				Thermal	114	100	152	169	337	337
N18	150	240	2"	Weight	50	64	50	75	75	85
				Seismic	186	123	186	277	415	478
				Thermal	114	100	152	169	337	337
N19	150	240	2"	Weight	50	60	50	75	75	75
				Seismic	186	123	186	277	415	415
				Thermal	114	100	152	169	337	337
N20	150	240	2"	Weight	50	60	50	75	75	75
				Seismic	186	123	186	277	415	424
				Thermal	114	100	152	169	337	337
N21	150	240	2"	Weight	50	60	50	75	75	75
				Seismic	186	123	186	277	415	415
				Thermal	114	110	152	197	337	337
N22	150	240	2"	Weight	50	60	50	75	75	75
				Seismic	186	123	212	933	415	415
				Thermal	114	100	152	169	337	337
N23	150	240	2"	Weight	50	60	50	75	75	75
				Seismic	186	123	186	511	438	674
				Thermal	114	100	152	169	337	337
N24	150	240	2"	Weight	50	60	50	75	75	75
				Seismic	247	123	203	588	488	595
				Thermal	114	100	152	169	337	337
N25	150	240	2"	Weight	50	60	50	75	75	75
				Seismic	313	187	329	788	525	438
				Thermal	260	215	152	75	75	150
N29	400	240	3"	Weight	52	173	52	100	100	250
				Seismic	452	354	429	438	1488	875
				Thermal	171	153	229	150	350	150
N30	195	240	2"	Weight	50	73	50	75	75	75
				Seismic	186	123	186	277	415	560
				Thermal	114	100	152	203	337	337
N31	195	240	3"	Weight	52	197	52	100	100	100
				Seismic	550	333	313	613	350	1400
				Thermal	171	216	229	400	200	150
N33	170	240	3"	Weight	52	150	52	100	100	200
				Seismic	284	263	284	525	263	1138
				Thermal	283	153	229	650	1700	250

Nozzle	Design Nozzle Press (psig) (Note E)	Design Nozzle Temp (°F) (Note E)	Size	Load Type	Loads - lbs			Moments - ft-lbs		
					Fx	Fy	Fz	Mx	My	Mz
N34	170	240	3"	Weight	52	281	111	290	75	104
				Seismic	306	541	361	1001	1227	1227
				Thermal	171	153	229	498	998	998
N35	35	240	6"	Weight	210	437	210	797	498	1400
				Seismic	1160	775	1160	2538	1838	1750
				Thermal	735	654	983	1000	1000	1000
N36	35	240	6"	Weight	210	445	210	797	498	650
				Seismic	1160	775	1160	1750	1750	1750
				Thermal	735	654	983	1000	1000	1000
N37	170	240	3"	Weight	52	133	52	119	75	108
				Seismic	284	189	460	973	1386	1227
				Thermal	171	186	229	498	998	998
N38	15	240	1.5"	Weight	35	35	35	40	40	40
				Seismic	105	70	105	159	240	240
				Thermal	64	56	86	96	192	192
N39	150	240	2"	Weight	50	60	50	75	75	75
				Seismic	186	123	264	887	700	415
				Thermal	114	100	152	169	337	337
N40	150	240	2"	Weight	50	60	50	75	75	75
				Seismic	186	131	292	910	415	415
				Thermal	114	100	152	169	337	337
N41	15	240	6"	Weight	N41 is a parent nozzle, nozzle loads are applied via N41A, N41B, and N41C					
				Seismic						
				Thermal						
N41A (Note D)	100	240	1"	Weight	15	20	15	20	20	20
				Seismic	56	35	53	72	96	186
				Thermal	30	26	40	38	77	77
N41B (Note D)	100	240	1"	Weight	15	20	15	20	20	20
				Seismic	56	35	53	72	96	186
				Thermal	30	26	40	38	77	77
N41C (Note D)	100	240	1"	Weight	15	20	15	20	20	20
				Seismic	56	35	53	72	96	186
				Thermal	30	26	40	38	77	77
N42	15	240	8"	Weight	475	750	475	1500	950	950
				Seismic	1313	875	1313	5163	7744	7744
				Thermal	600	550	800	2400	4800	4800
N43	15	240	8"	Weight	475	750	475	1500	950	950
				Seismic	1313	875	1313	5163	7744	7744
				Thermal	600	550	800	2400	4800	4800
N44	15	240	3"	Weight	52	281	111	290	75	104
				Seismic	306	541	361	1001	1227	1227
				Thermal	171	153	229	498	998	998
N51	15	240	2"	Weight	50	60	50	75	75	75
				Seismic	186	1113	774	961	415	415
				Thermal	114	100	152	169	337	337

Nozzle	Design Nozzle Press (psig) (Note E)	Design Nozzle Temp (°F) (Note E)	Size	Load Type	Loads - lbs			Moments - ft-lbs		
					Fx	Fy	Fz	Mx	My	Mz
N52	15	240	2"	Weight	50	60	50	75	75	75
				Seismic	186	1113	774	961	415	415
				Thermal	114	100	152	169	337	337
N53	15	240	2"	Weight	50	60	50	75	75	75
				Seismic	186	1113	774	961	415	415
				Thermal	114	100	152	169	337	337
N54	15	240	2"	Weight	50	60	50	75	75	75
				Seismic	186	1113	774	961	415	415
				Thermal	114	100	152	169	337	337
N55	15	240	2"	Weight	50	60	50	75	75	75
				Seismic	186	1113	774	961	415	415
				Thermal	114	100	152	169	337	337
N56	15	240	2"	Weight	50	60	50	75	75	75
				Seismic	186	1113	774	961	415	415
				Thermal	114	100	152	169	337	337

Notes for Nozzle Loads

A. Direction of load application is per diagrams in 24590-WTP-3PS-MV00-T0001, Appendix A.

B. For nozzles in head: x = North/South, y = Vertical, and z = East/West - Vessel 0° defined as north.

C. Nozzle loads shown are to be used in place of those specified in 24590-WTP-3PS-MV00-T0001 – do not apply any thermal reduction factor.

D. Values provided at plate on top of parent nozzle.

E. Design nozzle pressures and temperatures to be used for nozzle qualification only. △8

F. All Pretreatment RGM Seismic Piping Nozzle loads from Plant Design have a 1.75 load factor applied to all seismic loads to address coupling effects between the flexible vessels and piping in accordance with the Seismic Classification and Evaluation for the Pretreatment Facility Piping and Vessels 24590-WTP-RPT-ENG-09-040. (BNI use only, see CCN 229865 for nozzle load management). △8

EQUIPMENT QUALIFICATION DATASHEET (EQD) 8

Equipment Identification		
Full Component Tag Number or BNI Stock Code Number	24590-PTF-MV-HLP-VSL-00022	Safety Classification ☒ SC ☐ SS ☐ APC-PAM
Equipment Datasheet Number	24590-PTF-MVD-HLP-00006	
Description	HLW Feed Receipt Vessel for the HLW Lag Storage and Feed Blending Process System (HLP).	Seismic Category ☒ SC-I ☐ SC-II ☐ SC-III ☐ SC-IV ☐ SC-III Seismic Interaction only
Location (Facility / Building and Room No.)	Pretreatment Building; located in Room P-0102A, Elev. 0'-00", column lines K/18.5	
Safety Function(s)	HLP-VSL-00022 (parent vessel) is considered a high active process vessel credited to prevent spills of large quantities of high activity process liquid and provide primary confinement for radioactive releases. Pulse Jet Mixers (PJMs) provide a mixing function in the vessel to prevent hydrogen accumulation. Refcrence 24590-WTP-PSAR-ESH-01-002-02, Preliminary Documented Safety Analysis to Support Construction Authorization; PT Facility Specific Information, Table 4A-1.	
Equipment Safety Function Type	☒ Passive Mechanical	☐ Active Mechanical ☐ Electrical
Seismic Safety Function ☒ Yes ☐ No	Seismic Operability Requirements ☒ During Seismic Event	☒ After Seismic Event ☐ None

Equipment Environmental Qualification (EEQ)

(Parameter values stated in this section do not include process conditions or operation induced conditions)

Classification of Environment ☒ Mild ☐ Harsh

Qualified Life (years) ☒ 40 ☐ Other

Parameter Type/Units	Parameter Value	Parameter Duration (number)	Duration Units	WTP Source Document Number
Normal Ambients				
High Temperature (°F)	113	Note a	Years	24590-PTF-U0D-W16T-00001, E-Note 1
Low Temperature (°F)	59	Note b	N/A	24590-PTF-U0D-W16T-00001, E-Note 1
High Relative Humidity (%RH)	90	Note c	N/A	24590-PTF-U0D-W16T-00001, E-Note 1
Low Relative Humidity (%RH)	5	Note c	N/A	24590-PTF-U0D-W16T-00001, E-Note 1
High Pressure (in.-w.g.)	0 (E-Note 2)	Note d	N/A	24590-PTF-U0D-W16T-00001, E-Note 1
Low Pressure (in.-w.g.)	(-) 1.4 (E-Note 2)	Note d	N/A	24590-PTF-U0D-W16T-00001, E-Note 1
Radiation Dose Rate (mRad/hr)	991000	40 (E-Note 4)	Years (Note e-1)	24590-PTF-U0D-W16T-00001, E-Note 1
Plant/Process Induced Vibration	☐ Yes ☒ No			

Equipment Environmental Qualification (EEQ) *(continued)*

Parameter Type/Units	Parameter Value	Parameter Duration (number)	Duration Units	WTP Source Document Number
Normal Ambients				
Additional Normal Ambient Information:	N/A			
Abnormal Ambients				
High Temperature (°F)	127	8	hours / year	24590-PTF-U0D-W16T-00001, E-Note 1
Low Temperature (°F)	40	Note b	N/A	24590-PTF-U0D-W16T-00001, E-Note 1
High Relative Humidity (%RH)	100c	Note c	N/A	24590-PTF-U0D-W16T-00001, E-Note 1
Low Relative Humidity (%RH)	6	Note c	N/A	24590-PTF-U0D-W16T-00001, E-Note 1
High Pressure (in.-w.g)	4 (E-Note 2)	Note d	N/A	24590-PTF-U0D-W16T-00001, E-Note 1
Low Pressure (in.-w.g)	(-) 7.3 (E-Note 2)	Note d	N/A	24590-PTF-U0D-W16T-00001, E-Note 1
Radiation Dose Rate (mR/hr)	991000	0 (E-Note 4)	Years (Note e-1)	24590-PTF-U0D-W16T-00001, E-Note 1
Exposure to Wet Sprinkler System	☐ Yes ☒ No	N/A	hours	24590-PTF-U0D-W16T-00001, E-Note 1
Additional Abnormal Ambient Information	N/A			
Design Basis Events (DBE) Ambients				
High Temperature (°F)	138	1000	hours	24590-PTF-U0D-W16T-00001, E-Note 1
Low Temperature (°F)	40	Note b	N/A	24590-PTF-U0D-W16T-00001, E-Note 1
High Relative Humidity (%RH)	100c	40	hours	24590-PTF-U0D-W16T-00001, E-Note 1
Low Relative Humidity (%RH)	4	1000	hours	24590-PTF-U0D-W16T-00001, E-Note 1
High Pressure (in.-w.g)	4 (E-Note 2)	8	hours	24590-PTF-U0D-W16T-00001, E-Note 1
Low Pressure (in.-w.g)	(-) 7.3 (E-Note 2)	1000	hours	24590-PTF-U0D-W16T-00001, E-Note 1
Radiation Dose Rate (mR/hr)	991000	0 (E-Note 4)	hours	24590-PTF-U0D-W16T-00001, E-Note 1
Submergence	☐ Yes ☒ No	N/A	hours	24590-PTF-U0D-W16T-00001, E-Note 5
Chemical/Spray Exposure	☒ Yes ☐ No	12.5	hours	24590-PTF-U0D-W16T-00001, E-Note 1
Additional DBE Information	N/A			

DBE Chemical Exposure Details

DBE Chemical Exposure Details				
DBE Chemical Types / Concentrations	Process Rad Condensate			
	Sodium Hydroxide (2M)			
	Water			
	Nitric Acid	CNP12	212 °F	-0.5 pH
	Sodium Hydroxide	FEP19	121 °F	15.5 pH
	Sodium Hydroxide	FRP14	191 °F	15.5 pH
	Sodium Hydroxide	HLP09	113 °F	13.5 pH
	Sodium Hydroxide	HLP11	113 °F	14.5 pH
	Sodium Hydroxide	HLP12	113 °F	15.5 pH
	Sodium Hydroxide	HLP13	113 °F	15.5 pH
	Sodium Hydroxide	PVP06	79 °F	12.5 pH
	Sodium Hydroxide	RLD03	101 °F	11.5 pH
	Sodium Hydroxide	UFP01	77 °F	15.5 pH

Electrical Interfaces Supporting the Safety Function	
Power Supply Voltage (VAC, VDC)	N/A
Power Supply Frequency (Hz)	N/A
Power Connection Method	N/A
I/O Signals to/from Equipment	N/A
I/O Connection Method	N/A

Mechanical Interfaces	
Mounting Configuration (orientation)	Vertical Mounted , Skirt
Mounting Method (bolts, welds, etc.)	Welded skirt to ring beam welded to embedment plates. Embedment plate details per 24590-PTF-DD-S13T-00039, 24590-PTF-DD-S13T-00036, 24590-PTF-DD-S13T-00042, and 24590-PTF-DD-S13T-00045
Auxiliary Devices	Pulse Jet Mixers - HLP-PJM-00056, HLP-PJM-00057, HLP-PJM-00084, HLP-PJM-00085, HLP-PJM-00086, HLP-PJM-00087, HLP PJM-00088, HLP-PJM-00089, HLP-PJM-00090, HLP-PJM-00091, HLP-PJM-00092, HLP-PJM-00093. Auxiliary Devices are located within the vessel.

Equipment Seismic Qualification (ESQ)				
Parameter	**Title**	**Reference/Document Number**	**Version / Revision**	**Remarks**
WTP Seismic Design Specification	Engineering Specification for Seismic Qualification of Seismic Category I/II Equipment and Tanks Engineering Specification for Seismic Qualification Criteria for Pressure Vessels	24590-WTP-3PS-SS90-T0001 24590-WTP-3PS-MV00-T0002	2 3	N/A
Specified Seismic Load Parameters	Seismic Analysis of Pretreatment Building - WSGM In-Structure Response Spectra (ISRS)	24590-PTF-S0C-S15T-00057	A	CCN: 185271; WSGM ISRS Curves: Figures 21E, 22E and 24E

Equipment Qualification Notes and Additional Information

Note a) For thermal aging, the high normal temperature shall be assumed to subsist for 40 years less the duration of the high abnormal temperature. For any lesser qualified life, the normal and abnormal condition durations shall be assigned proportionally. The abnormal temperature is stated to subsist for a certain number of hours per year. It shall be taken to subsist for this number of hours for each year of the qualified life.

Note b) The ability to provide the safety function at the low normal temperature, the low abnormal temperature or the low DBE temperature (whichever be the lowest) shall be established by test, analysis, or operating experience. The thermal aging at these respective low temperatures will be conservatively covered by the thermal aging per item a) above. Therefore, no duration is assigned for the low temperatures.

Note c) The ability to provide the safety function at the extremes of the normal and abnormal humidity conditions, taking into consideration the high and the low normal and high and low abnormal, shall be established by test, analysis, or operating experience. No duration is assigned for the normal and abnormal humidity conditions.

Note d) If the performance of the safety function of the equipment is affected by ambient pressure, the ability to provide the safety function at the extremes of the normal and abnormal pressure conditions, taking into consideration the high and the low normal and the high and low abnormal pressures, shall be established by test, analysis, or operating experience. No duration is assigned to the normal and abnormal pressure conditions.

Note e) (1) If the abnormal radiation dose rate is the same as the normal radiation dose rate, the normal radiation dose rate shall be assumed to subsist for 40 years, or any lesser qualified life, and the duration of the abnormal radiation dose rate is "0."

(2) If the abnormal radiation dose rate is higher than the normal radiation dose rate, the abnormal radiation dose rate shall be assumed to subsist for 40 years, or any lesser qualified life, and the duration of the normal radiation dose rate is "0."

Note f) The DBE conditions shall be taken to subsist for the stated number of hours following the qualified life of the equipment.

Note g) Spray due to fire sprinkler actuation shall be taken to occur once over the entire qualified life duration for a period of 2 hours, even if the qualified life is a period less than 40 years. If spray qualification is provided for DBE conditions (whether for water or chemical spray), then separate qualification for the fire sprinkler spray need not be provided.

Note h) The values stated in this EQD are the ambients and do not include the thermodynamic and radiation conditions imposed by the process fluids, self-heating, etc. The data pertaining to process fluid and service induced parameters are to be taken into account where significant, such as in thermal aging analyses. These data can be obtained from the equipment data sheets or the Equipment Specification.

Note i) Equipment that is to be installed in inaccessible locations must be qualified to a 40-year life without the need for maintenance or replacement.

E-Note 1: BNI (BUYER) shall perform Equipment Environmental Qualification in accordance with listed parameters and applicable specification requirements.

E-Note 2: Where pressure is given in inches of water column (in-w.c.) in the source document, it is generally assumed that this is in reference to atmospheric pressure and is therefore equivalent to inches of water gage (in-w.g.).

E-Note 3: BNI (BUYER) shall perform Equipment Seismic Qualification in accordance with the listed parameters and the applicable specification requirements.

E-Note 4: Normal, Abnormal, and DBE dose rates are the same, therefore, abnormal and DBE doses do not add to total integrated dose based on normal dose rates over 40 years.

E-Note 5: Flood height is 2.08 ft above the floor, bottom of vessel is above this level therefore, no submergence evaluation is required.

DOE Radioactive Materials Disclaimer:
Please note that source, special nuclear and byproduct materials, as defined in the Atomic Energy Act of 1954 (AEA), are regulated at the US Department of Energy (DOE) facilities exclusively by DOE acting pursuant to its AEA authority. DOE asserts, that pursuant to the AEA, it has sole and exclusive responsibility and authority to regulate source, special nuclear, and byproduct materials at DOE-owned nuclear facilities. Information contained herein on radionuclides is provided for process description purposes only.

Screening / Evaluation Required? If yes per 24590-WTP-GPP-SREG-002, E&NS signature required below	X	Yes		No

Approval

Rev	Description	Vessel Engineer	Checked	System Engineer	Reviewed/ MET	E&NS	Approved	Date
0	Issued for Purchase	S.Suharto	C Slater / P Aviguetero	R.Rider	N/A	N/A	S.Kirk	09/06/02
1	Revised as Marked, Delete Charge Vessel and RFD Per Rev. 0 P&ID, Add 2 PJM's Per DCA No.24590-PTF-DCA-M-02-017 Rev. 0	S. Suharto	C. Slater / S. Arora	R. Rider	N/A	N/A	M. Hoffmann	07/10/03
2	Revised Jacket External Design Pressure and Design Temperature, Vessel Internal Operating Pressure. Other Revisions are for Clarity and Consistency.	R. Simmons	Y. Hovanski / C. Slater	R. Rider	R. Stevens	N/A	M. Hoffmann	11/14/03
3	Added Black Cell Requirements	R. Simmons	Y. Hovanski / C. Slater	R. Rider	N/A	N/A	M. Hoffmann	02/04/04
4	Added Erosion Protection, Revised Load Types	R. Simmons	Y. Hovanski / C. Slater	R. Rider	J. Julyk	N/A	M. Hoffmann	05/12/04
5	Revised Hydrodynamic Loading, Deleted Note 10	R. Simmons	S. V. / C. Slater	R. Rider	J. Julyk	N/A	M. Hoffmann	11/22/04
6	Revised per note 11 on sheet 2 of 5	M Arulumpalam	J. Polani / M. Seed	R. Rider	C. Slater / D. Adler	N/A	J. Julyk	10/28/05
7	Revised per Note 13 on page 2 of 12, and as noted by revision triangles. Supersedes 24590-PTF-MVD-HLP-P0006, Rev 2.	M Seed	S Jain	M Dingeldein	D Adler	J Hinckley	J Julyk	05/11/09
8	Revised per Note 14 and as noted by revision triangles.	M Arulumpalam	M Seed	D Evans	D Adler	J Hinckley	J Julyk	3/21/11

ATTACHMENT 1: Page 1 of 2
REFERENCES for Data Sheet: 24590-PTF-MVD-HLP-00006, Rev 8 *(For BNI Use only)*
Vessel Tag Number: HLP-VSL-00022

Data	Document #	Rev	Document Title
Quality Level	24590-PTF-M6-HLP-00002001	0	*P&ID PTF-HLP System HLW Feed Receipt Vessel HLP-VSL-00022*
Seismic Category	24590-PTF-M6-HLP-00002001	0	*P&ID PTF-HLP System HLW Feed Receipt Vessel HLP-VSL-00022*
Design Specific Gravity	24590-WTP-RPT-ENG-07-007	0A 8	*Process Stream Properties*
Max Operating Volume	24590-PTF-M6C-HLP-00006	C	*Vessel Sizing Calculation for HLW Feed Receipt Vessel (HLP-VSL-00022)* / Section 8
Total Volume	24590-PTF-M6C-HLP-00006	C	*Vessel Sizing Calculation for HLW Feed Receipt Vessel (HLP-VSL-00022)* / Sheet A-1
Inside Diameter	24590-PTF-M6C-HLP-00006	C	*Vessel Sizing Calculation for HLW Feed Receipt Vessel (HLP-VSL-00022)*
Length TL-TL	24590-PTF-M6C-HLP-00006	C	*Vessel Sizing Calculation for HLW Feed Receipt Vessel (HLP-VSL-00022)*
Operating Pressure (external)	24590-PTF-M6C-PVP-00017	A	*HADCRT Analysis of PTF PVP System at various Operating Scenarios / (see sheet 14 - the PVP scrubber inlet is controlled to 35 in-wg)* External pressure of 1.5 psig is based on a normal operating pressure of -35 in WG (1.26 psig) with an additional margin. (24590-PTF-M5-V17T-00021001 & 00021004 indicate the process flow diagrams)
Operating Pressure (internal)			Maximum value possible, assuming fans off, is atmospheric pressure
Design Pressure (internal)	24590-WTP-DB-ENG-01-001	01P 8	*Basis of Design* 8
Design Pressure (external)	24590-PTF-M6C-PVP-00017	A	*HADCRT Analysis of PTF PVP System at various Operating Scenarios /* External design pressure of 2.0 psig is based on a normal operating pressure of -35 in WG (1.26 psig) with an additional margin
Jacket Design Pressure (internal)	24590-PTF-MVC-10-00003	8 C	*PTF Vessel Cyclic Datasheet Inputs/* Sheet A-3,use 35 psig
Operating Temp 8	24590-WTP-RPT-ENG-07-007 24590-PTF-MVC-10-00003	0A C	*Process Stream Properties* *PTF Vessel cyclic Datasheet Inputs*
Design Temp	24590-WTP-RPT-ENG-07-007	0A	*Process Stream Properties* / maximum operating plus margin - use 240 F for maximum off-normal 8
Jacket Design Temp 8	24590-PTF-MVC-HLP-00006	D	*Design of Cooling Jacket for HLW Feed Receipt Vessel HLP-VSL-00022* *Design temp of 240 is same as parent vessel.*
Corrosion Allowance, Erosion Allowance 8	24590-PTF-N1D-HLP-00003 24590-WTP-M0C-50-00004	5 E	*Corrosion Evaluation HLP-VSL-00022* *Wear Allowance for WTP Waste Slurry Systems*
Materials of Construction	24590-PTF-N1D-HLP-00003 24590-PTF-MV-HLP-00003	5 2	*Corrosion Evaluation HLP-VSL-00022* *Equipment Assembly HLW Feed Receipt Vessel HLP-VSL-00022*
Design Pressure (PJM) 8	24590-PTF-MVC-10-00003	C	*PTF Vessel Cyclic Datasheet Inputs (24590-PTF-MVE-10-00012)*
Operating Pressure (PJM) 8	24590-PTF-MVC-10-00003	C	*PTF Vessel Cyclic Datasheet Inputs (24590-PTF-MVE-10-00012)*
Operating Temperature (PJM)			same as parent vessel
Cyclic Data (Vessel) 8	24590-PTF-MVC-10-00003 24590-PTF-MVC-HLP-00006	C D	*PTF Vessel Cyclic Datasheet Inputs /* (24590-PTF-MVE-10-00008 and 24590-PTF-MVE-10-00012) *Design of Cooling Jacket for HLW Feed Receipt Vessel HLP-VSL-00022 /* chilled water inlet temp is 50 F and the temperature rise is 23.2 F (section 7.8 of calc).

REFERENCES for Data Sheet: 24590-PTF-MVD-HLP-00006, Rev 8
Vessel Tag Number: HLP-VSL-00022

(For BNI Use only)

Data	Document #	Rev	Document Title
Cyclic Data (PJM)	24590-PTF-MVC-10-00003	8 C	*PTF Vessel Cyclic Datasheet Inputs*
Hydrodynamic Loads	24590-WTP-MVC-50-00001	A	*Hydrodynamic Loads for Normal PJM Operation in Vessels with Newtonian Fluids*
PJM Overblow Loads 8	24590-WTP-MVC-50-00011	A	*Pulse Jet Mixer Overblow Vessel Loads* / Section 8
PJM Overblow Cycles 8	24590-PTF-MVC-10-00003	C	*PTF Vessel Cyclic Datasheet Inputs* (24590-PTF-MVE-10-00004)
Nozzle Loads 8	CCN 124017 CCN 230849	N/A N/A	*Nozzle Loads for HLP-VSL-00022* *Supplemental Nozzle Design Loads for HLP-VSL-00022*
Nozzle Design Pressure and Temperature	24590-PTF-M6X-HLP-00095 24590-PTF-M6X-HLP-00195 24590-PTF-M6X-PWD-00131	0 0 2	*MS Line List for 24590-PTF-M6-HLP-00002001, Rev 0* *MS Line List for 24590-PTF-M6-HLP-00007007, Rev 0* *MS Line List for 24590-PTF-M6-PWD-00033, Rev 2*

MECHANICAL DATA SHEET: VESSEL
EQUIPMENT QUALIFICATION

PLANT ITEM No.
24590-PTF-MV-HLP-VSL-00027A

ISSUED BY
RPP-WTP PDC

R1125624

Project:	***RPP-WTP***	P&ID: 8	***24590-PTF-M6-HLP-00001001***
Project No:	***24590***	Calculations: 8	***Attachment 1***
Project Site:	***Hanford***	Vessel Drawing:	***24590-PTF-MV-HLP-00006, 24590-PTF-MV-HLP-00009, 24590-PTF-MV-HLP-00011***
Description:	***HLW Lag Storage Vessel***	Reports 8	***Attachment 1***

Reference Data

Charge Vessels (Tag Numbers)	***Deleted***
Pulsejet Mixers / Agitators (Tag Numbers)	***HLP-PJM-00060, HLP-PJM-00061, HLP-PJM-00062, HLP-PJM-00063, HLP-PJM-00064, HLP-PJM-00065, HLP-PJM-00066, HLP-PJM-00067***
RFDs/Pumps (Tag Numbers)	***Deleted***

Design Data

Quality Level		***Q (Note13)***		Fabrication Specs	***24590-WTP-3PS-MV00-T0001***		
Seismic Category		***SC-I***		Design Code	***ASME VIII Div 1***		
Service/Contents		***Radioactive Slurry***		Code Stamp	***Yes***		
Design Specific Gravity		***1.5***		NB Registration	***Yes***		
Maximum Operating Volume	gal	***112,900 (Note 4)*** 8		Weights (lbs)	Empty	Operating	Test
Total Volume	gal	***127,260 (Note 4)*** 8		Estimated	***360,000***	***1,710,000***	***1,480,000***

Inside Diameter	inch	***300***			Wind Design	***Not Required***	
Length/Height (TL-TL)	inch	***354***			Snow Design	***Not Required***	
		Vessel Operating	Vessel Design	Coil/Jacket Design	Seismic Design	***24590-WTP-3PS-SS90-T0001 24590-WTP-3PS-MV00-T0002***	
Internal Pressure	psig	***0***	***15***	***35***			
External Pressure 8	psig	***1.5***	***2.0 (Note 2)***	***0***	Postweld Heat Treat	***Not Required***	
Temperature 8	°F	***140***	***237***	***237***	Corrosion Allowance	Inch	***0.04 (Note 3)***
Min. Design Metal Temp.	°F	***40***					

Materials of Construction

Component	Material	Minimum Thickness / Size	Containment
Top Head	***SA 240 316 (Note 7)***	***See Drawing***	***Auxiliary (Note 1)***
Shell	***SA 240 316 (Note 7)***	***See Drawing***	***Primary (Note 1)***
Bottom Head	***SA 240 316 (Note 7)***	***See Drawing***	***Primary (Note 1)***
Wear Plate	***SA 240 316 (Note 7)***	***See Drawing***	***N/A***
Support	***SA 240 304 (Note 7)***	***See Drawing***	***N/A***
Jacket/Coils/Half-Pipe Jacket	***SA 240 316 (Note 7)***	***See Drawing***	***N/A***
Internals	***SA 240 316 (Note 7)***	***See Drawing***	***Thermowells Primary (Note 1)***
Pipe 8	***SA 312 TP316 Smls (Note 7 and Note 17)***	***See Drawing***	***Note 1***
Forgings/ Bar stock	***SA 182 F316 (Note 7)***	***See Drawing***	***Note 1 for Nozzle Necks***
Wash Ring Pipe	***SA 312 TP316 Smls (Note 7)***	***See Drawing***	***N/A***
Bolting/ Gaskets	***N/A***	***N/A***	***N/A***
Pulse Jet Mixer Nozzles 8	***Cast Stellite 12, with SA-240-316 (Note 7) Shroud***	***See Drawing***	***N/A***
Recirculation Nozzles	***Cast Stellite 12***	***See Drawing***	***N/A***
PJM Cluster Fill / PJM Nozzle Fill 8	***Concrete (Note 11)***	***See Drawing***	***N/A***

Miscellaneous Data

Orientation	***Vertical***	Support Type	***Skirt***
Insulation Function	***Not Applicable***	Insulation Material	***Not Applicable***
Insulation Thickness (inch)	***Not Applicable***	Weld Surface Finish	***De-scaled as Laid (Note 6)***

Notes/Remarks

Note 1: *All welds forming part of the primary and auxiliary containments, including the nozzle attachment welds shall be subjected to 100% volumetric examination.*

Note 2: *External design pressure for shell areas under the jacket shall be rated for the jacket internal design pressure plus 2.0 PSIG (negative) vessel external design pressure to account for ventilation fan pressures.* 8

Note 3: *- Corrosion allowance for jacket shall be 0.04 inch.*

8 *- Vessel bottom head - additional erosion allowance from reference 24590-WTP-M0E-50-00014 Attachment 10-11 provides a vessel erosion allowance of 0.768" (max) for HLP-VSL-000027A/B. This erosion allowance is accounted for via the 1" thick wear plates installed in the vessel bottom head directly under the PJM outlet nozzle.*

8 *- PJM additional erosion allowance from reference 24590-WTP-M0C-50-00004 Rev E, Table 10-5, provides an erosion allowance of 0.093" (HLP-27A/B) for the stellite 12 material used in the PJM cones. The minimum thickness requirement for the PJM stellite cone material is 0.4375".*

Note 4: *Vessel volumes are approximate and do not account for manufacturing tolerances, nozzles, and displacement of all internals, supports and cluster.* 8

Note 5: *Contents of this document are Dangerous Waste Permit affecting.*

Note 6: *Grind smooth shell welds at shell-jacket welds.*

Note 7: *Maximum carbon content of 0.030% for all welded components.*

Note 8: *Deleted.* 8

Note 9: *This vessel is located in a Black Cell.*

Note 10: *Deleted per report N0. 24590-WTP-RPT-M-04-00007 dated Nov. 01, 2004*

Note 11:

8 *(a) The intent is to provide a concrete mix with low chlorides, low moisture, low porosity and inhibits corrosion. The concrete formulation and blending should follow the relevant paragraphs in ASTM C 94 Option B. The Portland cement should be Type I/II conforming to ASTM C 150. Coarse aggregates shall be no larger than 3/4" diameter. The coarse and fine aggregates should be tested for chloride content using ASTM C 1152 and requiring less than 0.01% (100 ppm) acid-soluble chloride, and by limiting the water chloride content to less than 200 ppm. The concrete mix shall include chemical admixtures, follow ASTM C494 for control over admixtures. A final report, see ASTM C494 Section 19, shall be submitted, the report is required to have a precision statement.*

Additional WTP requirements:

- *Do not use blast furnace slag in the concrete.*
- *To reduce the permeability, the water-to-cement ratio shall be low, lower than 0.40%, using a Type F admixture in quantities that have no adverse effects on fresh and hardened properties.*
- *To reduce the corrosion, an admixture shall be used, calcium nitrate is to be added at a concentration no more than 32 lb/yd^3.*
- *Use Type F fly ash and silica fume, to reduce porosity, add in quantities to minimize porosity with no adverse effects on fresh and hardened properties.*

The concrete is to fill the entire cluster volume up to the bottom of the fill nozzle. Concrete shall be poured in a manner that allows for the even distribution of aggregate and mechanically vibrated to assure no major pockets or voids. Concrete is to be poured through more than one nozzle, in lifts. The seam between lifts is not important.

- *Because of the unique geometry and inability to rework or repair the concrete, assurance that the fill is complete and 100% filled via in-process observance, boroscope or other methods. Fill report shall be provided.*
- *Curing: The concrete shall be thoroughly cured (at least 30 days) before the shroud is closed.*
- *The seller shall submit mix design and complete procedure for concreting for buyer's approval.*
- *The concrete fill can be purchased commercial*

8 *(b). Fill gap completely between PJM shroud and stellite nozzles with Aremco 646-N Ceramacast (or equal), see CCN 156345 for procedure.*

Note 12: *Deleted.* 8 8

Note 13: *Vessel to be designed, fabricated, tested to L-1 and black cell requirements defined in 24590-WTP-3PS-MV00-T0001.*

NOTES / REMARKS CONTINUED:

Note 14: ***Clarification to quality level, revised specific gravity, operating external pressure, revised vessel external design pressure, revised jacket external design pressure, revised operating temperature, added Data Reference, revised Note 2, added Note 13 and Note 14, added functional/safety requirements, added Seismic section, change to parent vessel cyclic data, change to hydrodynamic loads for normal operations, increased cycles for PJM single overblow, change to PJM cyclic data, added E&NS table and signature, added section for "Hydrodynamic Loads -Pulse Jet Mixers", added section for "Multiple Overblow Loading - PJMs", added section for HPAV Load Conditions. Added Section for Nozzle Loads, included environmental qualification data, added DOE disclaimer. If any Sections contain a revision triangle △# next to the Section heading means the entire section has been revised or is new - the entire section must be reviewed for changes/additions.***

Note 15: ***Per CCN 193847, replaced ISRS curves with WSGM curves which provide for a lower acceleration value. Removed HPAV loads and Functional/Safety Requirements. Revised entire Equipment Qualification Sections. Revise PJM Overblow Loads and added Cluster Overblow Loads. Renumbered Equipment Qualification Notes and numbered/revised Nozzle Load Notes.*** △8

Hydrodynamic Loading - Pulse Jet Mixers (PJMs) 8

Pulse Jet Mixers (PJMs) are designed to mix the vessel content using a liquid jet discharge. PJM's are driven by compressed air. The mixing is required to enhance the heat transfer from the fluid to the cooling jackets, to homogenize the solution and to release hydrogen from the fluid.
The PJMs operate in the following three cycles: Suction, Drive and Vent. During the suction cycle a vacuum is created in the PJM headspace and the level within the PJM rises to fill the PJM. During the drive cycle the PJM is pressurized and liquid is discharged. During the vent cycle, the pressure in the headspace approaches atmospheric and the level within the PJM is allowed to reach equilibrium.
Vessel components shall be designed to withstand loading induced by PJM operations as described here-in.

Normal Operations : Liquid flows around internal structures within the parent vessel producing hydrodynamic loads such as drag and vortex shedding. Reference the section below for "Normal Operating" loads and "Vortex Shedding" frequencies.

Overblow Condition: Occasionally the drive cycle lasts too long and compressed air is discharged from the PJM. Overblows can also occur during system calibration. One or more multiple PJM's may overblow at any time. These conditions induce acoustic and bubble rise loads on structures and components. Overblow loading conditions are provided in the tables and charts below.

All internal components shall be designed for the combination of normal operations hydrodynamic loads and overblow loads. Single overblows (SOB) act concurrently with the seismic event and other operational loads. Multiple Overblows (MOB) do not act concurrently with the seismic event but are combined with other operational loadings. Figures 1, 2, and 3 below in the "PJM Overblow Loads" section provides the acoustic load intensity and application that encompasses both SOB and MOB.

Normal Operations Loading - PJMs

Description	***Pulse jet mixers (PJM) impose a cyclical hydrodynamic load on all internal components. The components shall be designed and supported against these hydrodynamic loads due to normal operations. The following table indicates the hydrodynamic pressure for normal conditions at ranges of elevations in the vessel and the number of design cycles for this condition. The hydrodynamic forces cycle between the indicated pressure ranges applied across the projected area of the component. Positive hydrodynamic forces act in the radial, outward direction and the vertical, upward direction. Seller shall apply the radial load simultaneously in the radial direction and normal to the radial direction in the horizontal plane. This load combination acts concurrently with seismic loads for normal PJM operations.***	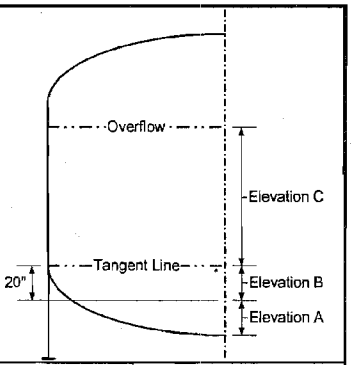

Condition	Hydrodynamic Pressure Range, psi						Number of Cycles
	Elevation A		Elevation B		Elevation C		
	Radial	Vertical	Radial	Vertical	Radial	Vertical	
Normal Operation	***-0.030 to 0.020***	***-0.030 to 0.020***	***-0.030 to 0.020***	***-0.030 to 0.020***	***-0.025 to 0.057***	***-0.028 to 0.032***	***3.7E6*** 8

8 *Vortex Shedding*

To mitigate the dynamic effects, the following pipe sizes dipped internal to the vessel are required to have a minimum first natural frequency that is double the vortex shedding frequency:

Nominal Pipe Size	*Minimum First Natural Frequency*
1 inch nominal	*4.8 Hz**
2 inch nominal	*2.6 Hz**
3 inch nominal	*1.0 Hz***

* *See 24590-WTP-MVC-50-00006, Section 8.2.2*
** *By extrapolation from 1 inch and 2 inch*

PJM Overblow Loads 8

Discussion: *During normal operation, pulse jet mixers (PJMs) mix the fluid by pulling in (suction) and pushing out (drive) fluid. During an upset condition, designated as an 'overblow', air is discharged following the drive cycle of one or more PJMs. The load consists of acoustic pressure (2Hz to 200Hz) developed in the first 200ms of the event and a load due to the bubble rising through the fluid.*

The acoustic load and the bubble load are design loads as defined by ASME B&PVC, Section 8, Division 1, UG-22, applied statically. The acoustic load is not added to the bubble rise load because they occur at different times during the overblow event.

Acoustic Load	• ***The acoustic design load in Figure 1 is applied to the visible (as viewed from the overblow origin) surface of cylindrical targets such as pipes, charge vessels, and PJMs. The load is applied in the direction normal to the principal axis of the target as illustrated in Figure 2. Note: The intended net effective load on the target is equal to the projected (i.e. cross-sectional) area of the object times the acoustic design load (psi) indicated in Figure 1.*** • ***Each target is considered independent of the surrounding targets: e.g. the surrounding targets do not impede the acoustic wave by casting a shadow, as illustrated in Figure 2.*** • ***The load is <u>not</u> applied to small supports such as gussets, brackets, tabs, clamps, and bolts because they are rigid and the pressure drop across the target is negligible.*** • ***When the vessel contains multiple PJMs, the load from one PJM is independent of the load from other PJMs. The loads are not additive for multiple overblows.*** • ***No internal components shall be placed within 5 PJM nozzle diameters (5 * 4 in = 20 in) of a spherical zone centered at any overblowing PJM nozzle.***
Number of Acoustic Cycles	***1000 events X 40 cycles/event for a total of 40,000 cycles***
Bubble Rise Load	***A vertical force per projected area of 1.7 psi is applied to the surfaces in the 36-inch diameter cylindrical zone centered at the overblowing PJM(s). The bubble can be at any elevation above the overblowing PJM and only affects one zone (36-inch diameter region) at a time. When there are multiple PJMs in a vessel (MOB), each PJM has it's own bubble. To simplify analysis the bubble can be applied in a continuous cylindrical zone above each PJM.***
Number Bubble Rise Cycles	***1000 events X 1 cycle/event for a total of 1,000 cycles***

Figure 1: Acoustic Design Load

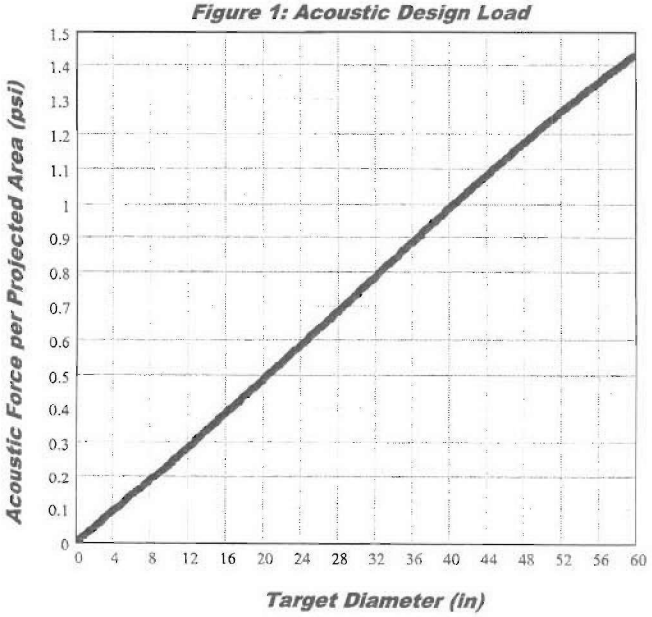

Figure 2: Load Application

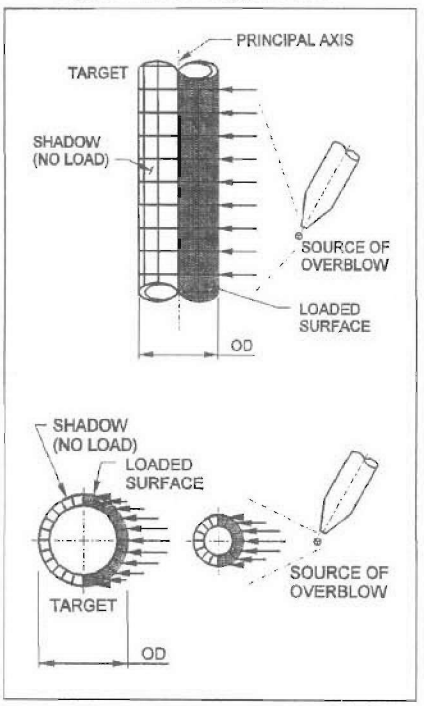

The following data is required to determine the load:

- ***Target Diameter***
- ***Target Principal Axis***
- ***Overblow Source Coordinates***

PJM Cluster Overblow Load 8

Discussion: *The acoustic design pressure on the PJM cluster is determined from equation 5-8 in 24590-WTP-MVC-50-00011, Rev B. The worst-case orientation of the load needs to be determined by the user.*

Acoustic Load	***The following is the load magnitude for the PJM Cluster in HLP-VSL-00027A/B/28 with an outer radius of 89.5 inches measured to the outer most radii of the cluster. Follow the steps described below:*** ***1. Isolate the PJM Cluster and supports from parent vessel*** ***2. Run a modal analysis and determine the first frequency*** ***3. Use Figure 3 (below) to find the acoustic force per projected area*** ***4. Apply the static load in the same orientation as indicated in Figure 2 (above)***
Number of Acoustic Cycles	***1000 events X 40 cycles/event, 40,000 cycles total***

Figure 3: Acoustic Design Pressure on Cluster

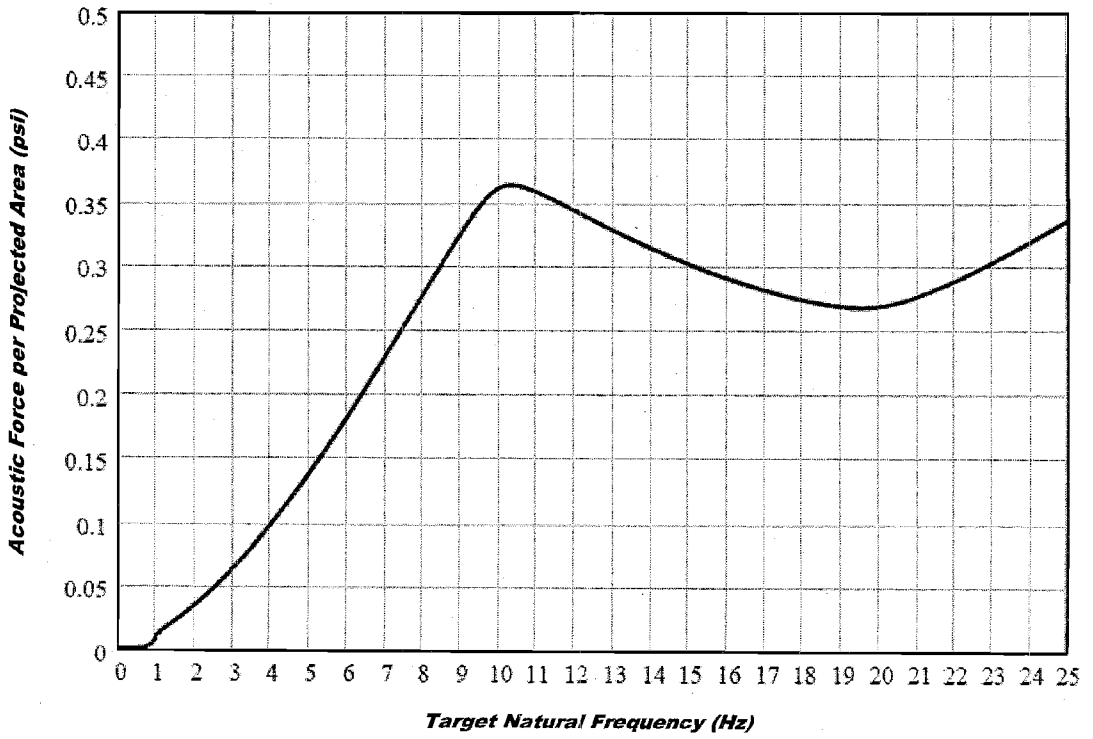

BECHTEL	**MECHANICAL DATA SHEET: VESSEL** **EQUIPMENT QUALIFICATION**	PLANT ITEM No. ***24590-PTF-MV-HLP-VSL-00027A***

Equipment Cyclic Data Sheet-Parent Vessel

Plant Item Number	*24590-PTF-MV-HLP-VSL-00027A*
Component Description	*Parent Vessel*

The information below is provisional and envelopes operational duty for fatigue assessment. It is not to be used as operational data.

Materials of Construction		*SA 240 316 with maximum carbon of 0.030 %*			
Design Life		*40 years*			
Component Function and Life Cycle Description △8		*This vessel is filled over a period of 22 days, resulting in 660 cycles over a 40 year life. Contents transferred as a batch to HLP-VSL-00028 (i.e., could be drained in one day). The vessel is drained and the internals are washed yearly. The temperature is maintained normally at or below 140°F.*			
Load Type		Min	Max	Number of Cycles	Comment
Design Pressure	psig	*-8*	*15*	*10*	*Nominal assumption for testing*
Operating Pressure	psig	*-1.5* *-1.5*	*0* *2.8*	*7.0E6* *40*	*Maximum Operating* *Loss of Power*
Operating Temperature △8	°F	*59*	*140*	*660*	*Uniform material temperature range, not between two points. Temperature cycling is not required by design.*
Contents Specific Gravity		*1.00*	*1.5*	*660*	*Nominal assumption. Coincident with contents level cycles*
Contents Level	inch	*38*	*389*	*660*	*Contents level measured from center of bottom head*
Localized Features					
Nozzles		△8		*As above*	
Cooling Jacket △8					*Cooling Water inlet temperature is 50° F (max)*

Notes

- ***Cycle increase: The Seller must increase the numbers of operational cycles given above by 10% to account for commissioning duty unless otherwise noted.***

Equipment Cyclic Data Sheet-Pulse Jet Mixers △8

Component Plant Item Number	*HLP-PJM-00060, HLP-PJM-00061, HLP-PJM-00062, HLP-PJM-00063, HLP-PJM-00064, HLP-PJM-00065, HLP-PJM-00066, HLP-PJM-00067*
Component Description	*Pulse Jet Mixers*

The information below is provisional and envelopes operational duty for fatigue assessment. It is not to be used as operational data.

Materials of Construction		*SA 240 316 with maximum carbon of 0.030 %*			
Design Life		*40 Years*			
Component Function and Life Cycle Description		*These pulse jet mixers (PJMs) are cyclically loaded using vacuum to fully fill the PJM with process liquid and compressed air to empty the PJM. The PJMs are contained within a parent vessel with varying liquid level. They shall be designed to cycle between the maximum design pressure and the minimum design pressure plus the external static head imposed by the parent vessel. The PJM supports shall be designed to cycle between fully buoyant (PJM empty and parent vessel full) and fully loaded (PJM full and parent vessel empty) states. Thrust load shall be applied only to the fully buoyant state. Assume the parent vessel is full for 50% of the number of PJM cycles.*			
Load Type		Min	Max	Number of Cycles	Comment
Design Pressure	psig	*FV*	*80*	*100*	*Nominal assumption*
Operating Pressure	psig	*FV*	*50*	*3.7E6*	*Pressure cycles to be at 140° F and non-coincident with temperature cycles*
Operating Temperature	°F	*59*	*140*	*660*	*Parent vessel will be operated normally at or below 140°F*
Contents Specific Gravity		*1.0*	*1.5*	*660*	
Contents Level	inch	*Empty*	*Flooded*	*3.7E6*	
Thrust	lbf	*-394*	*394*	*3.7E6*	
Localized Features					
Supports		*buoyant to loaded*		*3.7E6*	

Notes

- ***Cycle increase: The Seller must increase the numbers of operational cycles given above by 10% to account for commissioning duty unless otherwise noted.***

Nozzle Loads (8)

Nozzle	Size	Load Type	Loads - lbs			Moments - ft-lbs		
			Fx	Fy	Fz	Mx	My	Mz
N01	24"	Weight	Manway (No loads applied)					
		Seismic						
		Thermal						
N02	8"	Weight	234	543	234	741	464	1065
		Seismic	3539	2429	2980	5159	9728	15468
		Thermal	893	1152	1193	5268	7193	10243
N04	4" Spare	Weight	87	140	87	216	135	135
		Seismic	480	320	480	1537	2310	2310
		Thermal	295	263	393	945	1890	1890
N05	10"	Weight	264	421	264	1410	885	885
		Seismic	1432	956	1432	9634	14438	14438
		Thermal	1187	848	1268	6375	12750	12750
N06	6"	Weight	N06 is parent nozzle, nozzle loads are applied via N06A, N06B, N06C					
		Seismic						
		Thermal						
N06A (Note C)	1"	Weight	15	20	15	20	20	20
		Seismic	53	35	53	65	96	96
		Thermal	30	26	40	38	77	77
N06B (Note C)	1"	Weight	15	20	15	20	20	20
		Seismic	53	35	53	65	96	96
		Thermal	30	26	40	38	77	77
N06C (Note C)	1"	Weight	15	20	15	20	20	20
		Seismic	53	35	53	65	96	96
		Thermal	30	26	40	38	77	77
N07	2 x 1"	Weight	15	20	15	20	20	20
		Seismic	53	35	53	65	96	96
		Thermal	30	29	40	38	77	77
N08	6"	Weight	N08 is parent nozzle, nozzle loads are applied via N08A, N08B, N08C					
		Seismic						
		Thermal						
N08A (Note C)	1"	Weight	15	20	15	20	20	20
		Seismic	53	35	53	67	96	102
		Thermal	30	26	40	38	77	77
N08B (Note C)	1"	Weight	15	20	15	20	20	20
		Seismic	53	35	53	95	96	124
		Thermal	30	26	40	38	77	77
N08C (Note C)	1"	Weight	15	20	15	20	20	20
		Seismic	53	35	53	74	96	96
		Thermal	30	26	40	38	77	77
N09	6"	Weight	N09 is parent nozzle, nozzle loads are applied via N09A, N09B, N09C					
		Seismic						
		Thermal						
N09A (Note C)	1"	Weight	15	20	15	20	20	20
		Seismic	53	35	53	65	96	96
		Thermal	30	26	40	38	77	77

Nozzle	Size	Load Type	Loads - lbs			Moments - ft-lbs		
			Fx	Fy	Fz	Mx	My	Mz
N09B (Note C)	1"	Weight	15	20	15	20	20	20
		Seismic	53	35	53	65	96	96
		Thermal	30	28	40	39	77	77
N09C (Note C)	1"	Weight	15	20	15	20	20	20
		Seismic	53	35	53	65	96	96
		Thermal	30	26	40	41	77	77
N10	2"	Weight	50	128	50	75	75	90
		Seismic	186	278	186	277	415	614
		Thermal	114	100	152	169	337	337
N11	2"	Weight	50	69	50	75	75	75
		Seismic	222	270	186	317	415	415
		Thermal	114	100	152	169	337	337
N12	2"	Weight	50	120	50	75	75	75
		Seismic	186	287	186	488	415	564
		Thermal	114	100	152	169	337	337
N13	2"	Weight	50	104	50	75	75	75
		Seismic	186	656	186	627	415	415
		Thermal	114	100	152	169	337	337
N14	2"	Weight	50	60	50	75	75	75
		Seismic	186	123	186	277	415	415
		Thermal	114	119	152	176	337	337
N15	2"	Weight	50	60	50	75	75	75
		Seismic	186	123	186	277	415	415
		Thermal	114	100	152	169	337	337
N16	2"	Weight	50	60	50	75	75	75
		Seismic	186	123	186	277	415	415
		Thermal	114	100	152	169	337	337
N17	2"	Weight	50	98	50	75	75	75
		Seismic	186	170	186	277	415	415
		Thermal	114	100	152	169	337	337
N18	2"	Weight	50	81	50	75	75	75
		Seismic	186	123	186	277	415	415
		Thermal	114	100	152	169	337	337
N19	2"	Weight	50	69	50	75	75	75
		Seismic	186	123	186	277	415	415
		Thermal	114	100	152	214	337	337
N20	2"	Weight	50	77	50	75	75	75
		Seismic	186	123	186	277	415	415
		Thermal	114	100	152	169	337	337
N21	2"	Weight	50	65	50	75	75	75
		Seismic	186	123	186	361	415	415
		Thermal	114	100	152	169	337	337
N25	2" Spare	Weight	50	60	50	75	75	75
		Seismic	186	123	186	277	415	415
		Thermal	114	100	152	169	337	337

Nozzle	Size	Load Type	Loads - lbs			Moments - ft-lbs		
			Fx	Fy	Fz	Mx	My	Mz
N27	3"	Weight	52	95	52	119	75	75
		Seismic	401	189	284	819	1227	1227
		Thermal	186	273	229	498	998	998
N28	2"	Weight	50	60	50	75	75	75
		Seismic	186	123	186	277	415	415
		Thermal	114	100	152	169	337	337
N29	2"	Weight	50	81	50	75	75	75
		Seismic	520	240	186	263	131	1225
		Thermal	114	100	152	75	75	75
N30	3"	Weight	52	175	52	119	75	303
		Seismic	726	511	408	263	263	700
		Thermal	171	153	229	100	100	100
N31	3"	Weight	52	84	52	119	75	75
		Seismic	284	189	284	819	1227	1227
		Thermal	171	153	229	498	998	998
N32	4"	Weight	87	167	87	216	135	501
		Seismic	480	320	480	1537	2310	2310
		Thermal	315	263	393	945	1890	1890
N33	3"	Weight	52	156	52	119	75	128
		Seismic	1178	530	376	438	350	1400
		Thermal	171	153	229	100	100	100
N34	3"	Weight	52	146	52	119	75	141
		Seismic	504	404	301	700	1050	1663
		Thermal	171	153	229	100	100	100
N35	4"	Weight	87	140	102	258	548	207
		Seismic	480	320	480	1537	2310	2310
		Thermal	351	263	393	945	1890	1890
N36	4"	Weight	87	180	87	216	135	260
		Seismic	480	320	480	1537	2310	2310
		Thermal	295	263	393	945	1890	1890
N37	3"	Weight	52	129	52	124	75	75
		Seismic	347	226	840	1225	1488	963
		Thermal	171	153	383	500	100	100
N39	2"	Weight	50	60	50	75	75	75
		Seismic	186	123	186	277	415	415
		Thermal	114	100	152	169	337	337
N40	2"	Weight	50	60	50	75	75	75
		Seismic	186	123	186	277	415	415
		Thermal	114	100	152	169	337	337
N41	2"	Weight	50	60	50	75	75	75
		Seismic	186	123	186	277	415	415
		Thermal	114	100	152	169	337	337
N42	2"	Weight	50	60	50	75	75	75
		Seismic	186	123	186	277	415	415
		Thermal	114	100	152	169	337	337

Nozzle	Size	Load Type	Loads - lbs			Moments - ft-lbs		
			Fx	Fy	Fz	Mx	My	Mz
N43	2"	Weight	50	60	50	75	75	75
		Seismic	186	123	186	277	415	415
		Thermal	114	100	152	169	337	337
N44	2"	Weight	50	60	50	75	75	75
		Seismic	186	123	186	277	415	415
		Thermal	114	100	152	169	337	337
N45	2"	Weight	50	60	50	75	75	75
		Seismic	186	123	186	277	415	415
		Thermal	114	100	152	169	337	337
N46	2"	Weight	50	60	50	75	75	75
		Seismic	186	123	186	277	415	415
		Thermal	114	100	152	169	337	337
N47	2"	Weight	50	60	50	75	75	75
		Seismic	186	123	186	277	415	415
		Thermal	114	100	152	169	337	337
N48	2"	Weight	50	60	50	75	75	75
		Seismic	186	123	186	277	415	415
		Thermal	114	100	152	169	337	337
N49	2"	Weight	50	60	50	75	75	75
		Seismic	186	123	186	277	415	415
		Thermal	114	100	152	169	337	337
N50	2"	Weight	50	60	50	75	75	75
		Seismic	186	123	186	277	415	415
		Thermal	114	100	152	169	337	337
N51	2"	Weight	50	60	50	75	75	75
		Seismic	186	123	186	277	415	415
		Thermal	114	100	152	169	337	337
N52	2"	Weight	50	60	50	75	75	75
		Seismic	186	123	186	277	415	415
		Thermal	114	100	152	169	337	337
N53	2"	Weight	50	60	50	75	75	75
		Seismic	186	123	186	277	415	415
		Thermal	114	100	152	169	337	337
N54	2"	Weight	50	60	50	75	75	75
		Seismic	186	123	186	277	415	415
		Thermal	114	100	152	169	337	337
N55	2"	Weight	50	60	50	75	75	75
		Seismic	186	123	186	277	415	415
		Thermal	114	100	152	169	337	337
N56	2"	Weight	50	60	50	75	75	75
		Seismic	186	123	186	277	415	415
		Thermal	114	100	152	169	337	337
N57	2"	Weight	50	60	50	75	75	75
		Seismic	186	123	186	277	415	415
		Thermal	114	100	152	169	337	337

Nozzle	Size	Load Type	Loads - lbs			Moments - ft-lbs		
			Fx	Fy	Fz	Mx	My	Mz
N58	2"	Weight	50	60	50	75	75	75
		Seismic	186	123	186	277	415	415
		Thermal	114	100	152	169	337	337
N59	2"	Weight	50	60	50	75	75	75
		Seismic	186	123	186	277	415	415
		Thermal	114	100	152	169	337	337
N60	2"	Weight	50	60	50	75	75	75
		Seismic	186	123	186	277	415	415
		Thermal	114	100	152	169	337	337
N61	2"	Weight	50	60	50	75	75	75
		Seismic	186	123	186	277	415	415
		Thermal	114	100	152	169	337	337
N62	2"	Weight	50	60	50	75	75	75
		Seismic	186	123	186	277	415	415
		Thermal	114	100	152	169	337	337
N63	2"	Weight	50	60	50	75	75	75
		Seismic	186	123	186	277	415	415
		Thermal	114	100	152	169	337	337
N64	2"	Weight	50	60	50	75	75	75
		Seismic	186	123	186	277	415	415
		Thermal	114	100	152	169	337	337
N65	2"	Weight	50	60	50	75	75	75
		Seismic	186	123	186	277	415	415
		Thermal	114	100	152	169	337	337
N66	2"	Weight	50	60	50	75	75	75
		Seismic	186	123	186	277	415	415
		Thermal	114	100	152	169	337	337
N67	2"	Weight	50	60	50	75	75	75
		Seismic	186	123	186	277	415	415
		Thermal	114	100	152	169	337	337
N68	2"	Weight	50	60	50	75	75	75
		Seismic	186	123	186	277	415	415
		Thermal	114	100	152	169	337	337
N69	2"	Weight	50	60	50	75	75	75
		Seismic	186	123	186	277	415	415
		Thermal	114	100	152	169	337	337
N70	2"	Weight	50	60	50	75	75	75
		Seismic	186	123	186	277	415	415
		Thermal	114	100	152	169	337	337
N71	2"	Weight	50	60	50	75	75	75
		Seismic	186	123	186	277	415	415
		Thermal	114	100	152	169	337	337
N72	2"	Weight	50	60	50	75	75	75
		Seismic	186	123	186	277	415	415
		Thermal	114	100	152	169	337	337

Nozzle	Size	Load Type	Loads - lbs			Moments - ft-lbs		
			Fx	Fy	Fz	Mx	My	Mz
N73	2"	Weight	50	60	50	75	75	75
		Seismic	186	123	186	277	415	415
		Thermal	114	100	152	169	337	337
N74	2"	Weight	50	60	50	75	75	75
		Seismic	186	123	186	277	415	415
		Thermal	114	100	152	169	337	337
N76	8"	Weight	475	475	475	475	475	475
		Seismic	1313	1313	1313	1313	1313	1313
		Thermal	600	600	600	600	600	600
N77	8"	Weight	475	475	475	475	475	475
		Seismic	1313	1313	1313	1313	1313	1313
		Thermal	600	600	600	600	600	600

Notes for Nozzle Loads (8)

A. Direction of load application is per diagrams in 24590-WTP-3PS-MV00-T0001 Appendix A.

B. *For nozzles in head: x = North/South, y = Vertical, and z = East/West - Vessel 0° defined as north.*

C. *Values provided at plate on top of parent nozzle. Loads for 6" instrument nozzles are summed from 1" - A, B and C loads.*

D. *Nozzle loads shown are to be used in place of those specified in 24590-WTP-3PS-MV00-T0001 – do not apply any thermal reduction factors.*

E. *All Pretreatment RGM Seismic Piping Nozzle loads from Plant Design have a 1.75 load factor applied to all seismic loads to address coupling effects between the flexible vessels and piping in accordance with the Seismic Classification and Evaluation for the Pretreatment Facility Piping and Vessels 24590-WTP-RPT-ENG-09-040. (BNI use only, see CCN 229865 for nozzle load management).*

EQUIPMENT QUALIFICATION DATASHEET (EQD)

Equipment Identification

Component Tag Number	24590-PTF-MV-HLP-VSL-00027A	Safety Classification	☒ SC ☐ SS ☐ APC ☐ SDC ☐ SDS ☐ RRC
Manufacturer / Supplier	Harris Thermal		
Requisition Number	24590-QL-MRB-MVA0-00001		
Model	Custom	Seismic Category	☒ SC-I ☐ SC-II ☐ SC-III ☐ SC-IV
Description (Include descriptive text [e.g., location, elevation])	HLW Lag Storage Vessel. Elevation 0'-0", Column Lines K and 24.		
Safety Function(s)	HLP-VSL-00027A (parent vessel) is considered a high active process vessel credited to prevent spills of large quantities of high activity process liquid and provide primary confinement for radioactive releases. Pulse Jet Mixers (PJMs) provide a mixing function in the vessel to prevent hydrogen accumulation. Air sparger piping provides air to mix solids and dilute hydrogen to prevent hydrogen accumulation. Vessel level instrumentation, provides level monitoring to prevent overflows of non-Newtonian fluids into Newtonian overflow vessels and ensure proper headspace volumes are maintained for hydrogen dilution. 24590-WTP-PSAR-ESH-01-002-02 Rev 4q, Section 4.3.4, 4.3.5, and Table 4A-1 (A)		

Seismic Safety Function	☒ Yes ☐ No	Room Number(s):	P-0102
Maintenance Accessible	☐ Yes ☒ No	Method of Maintenance Access:	☐ Remote ☐ Hands On ☒ None
Seismic Operability Requirements:	☒ During Seismic Event	☒ After Seismic Event	
ITS Equipment Type:	☒ Passive Mechanical	☐ Active Mechanical	☐ Electrical

Equipment Environmental Qualification (EEQ)

Environment ☒ Mild ☐ Harsh Contamination Class: C5 Radiation Class: R5	Hi Rad Service ☒ Yes ☐ No	Design Life (yrs) ☒ 40 ☐ Other ____

Parameter Type/Units	Parameter Value	Time Duration (number)	Time Units	WTP Document Number (BUYER)	Submittal Number (SELLER)
Normal					
Normal High Temperature (°F)	113	40	yrs	24590-PTF-U0D-W16T-00001	E-Note 1
Normal Low Temperature (°F)	59	40	yrs	24590-PTF-U0D-W16T-00001	E-Note 1
Normal High Relative Humidity (%RH)	90	40	yrs	24590-PTF-U0D-W16T-00001	E-Note 1
Normal Low Relative Humidity (%RH)	5	40	yrs	24590-PTF-U0D-W16T-00001	E-Note 1
Normal High Pressure (in.-w.g.)	0 (E-Note 2)	40	yrs	24590-PTF-U0D-W16T-00001	E-Note 1
Normal Low Pressure (in.-w.g.)	(-) 1.4	40	yrs	24590-PTF-U0D-W16T-00001	E-Note 1
Normal Radiation Dose Rate (mR/hr)	991000 (E-Note 2)	40 (E-Note 5)	yrs	24590-PTF-U0D-W16T-00001	E-Note 1
Vibration Magnitude (g)	N/A	N/A	N/A	N/A	N/A
Vibration Frequency (Hz)	N/A	N/A	N/A	N/A	N/A
Additional Normal Information:	N/A				

Equipment Environmental Qualification (EEQ) *(continued)*

Parameter Type/Units	Parameter Value	Time Duration (number)	Time units	WTP Document Number (BUYER)	Submittal Number (SELLER)
Abnormal					
Abnormal High Temperature (°F)	115	8	hrs/yr	24590-PTF-U0D-W16T-00001	E-Note 1
Abnormal Low Temperature (°F)	40	8	hrs/yr	24590-PTF-U0D-W16T-00001	E-Note 1
Abnormal High Relative Humidity (%RH)	100c	1	hrs/yr	24590-PTF-U0D-W16T-00001	E-Note 1
Abnormal Low Relative Humidity (%RH)	10	24	hrs/yr	24590-PTF-U0D-W16T-00001	E-Note 1
Abnormal High Pressure (in.-w.g.)	4 (E-Note 2)	8	hrs/yr	24590-PTF-U0D-W16T-00001	E-Note 1
Abnormal Low Pressure (in.-w.g.)	(-) 7.3 (E-Note 2)	8	hrs/yr	24590-PTF-U0D-W16T-00001	E-Note 1
Abnormal Radiation Dose Rate (mR/hr)	991000 (E-Note 4)	0 (E-Note 5)	yrs	24590-PTF-U0D-W16T-00001	E-Note 1
Wet Sprinkler System Present	No	N/A	N/A	24590-PTF-U0D-W16T-00001	E-Note 1
Additional Abnormal Information	100c = 100% RH condensing				
Design Basis Events (DBE)					
DBE High Temperature (°F)	135	1000	hrs	24590-PTF-U0D-W16T-00001	E-Note 1
DBE Low Temperature (°F)	40	1000	hrs	24590-PTF-U0D-W16T-00001	E-Note 1
DBE High Relative Humidity (%RH)	100c	40	hrs	24590-PTF-U0D-W16T-00001	E-Note 1
DBE Low Relative Humidity (%RH)	6	1000	hrs	24590-PTF-U0D-W16T-00001	E-Note 1
DBE High Pressure (in.-w.g.)	4 (E-Note 2)	1000	hrs	24590-PTF-U0D-W16T-00001	E-Note 1
DBE Low Pressure (in.-w.g.)	(-) 7.3 (E-Note 2)	1000	hrs	24590-PTF-U0D-W16T-00001	E-Note 1
DBE Radiation Dose Rate (mR/hr)	991000 (E-Note 4)	0 (E-Note 5)	yrs	24590-PTF-U0D-W16T-00001	E-Note 1
Flood Height (ft)	2.08	1000	hrs	24590-PTF-U0D-W16T-00001	E-Note 1
Submergence (ft)	N/A	N/A	N/A	N/A	E-Note 6
Chemical/Spray Exposure	Yes	N/A	N/A	24590-PTF-U0D-W16T-00001	E-Note 1
Additional DBE Information	100c = 100% RH condensing				

DBE Chemical Exposure Details	
DBE Chemical Types/Concentrations	Process Rad Condensate Nitric Acid 2M Sodium Hydroxide 2M, 5M 8 Neutral Solution Water (Ref - 24590-PTF-U0N-W16T-00006)

Interfaces (Electrical)	
Power Supply Voltage (VAC, VDC)	N/A
Power Supply Frequency (Hz)	N/A
Power Connection Method	N/A
I/O Signals to/from Equipment	N/A
I/O Connection Method	N/A

Interfaces (Mechanical)	
Mounting Configuration (orientation)	Vertical Mounted , Skirt 8
Mounting Method (bolts, welds, etc.)	Welded skirt to ring beam welded to cmbedment plates. Embedment plate details per 24590-PTF-DD-S13T-00039, 24590-PTF-DD-S13T-00036, 24590-PTF-DD-S13T-00042, and 24590-PTF-DD-S13T-00045 provided to the vendor in the material requisition
Auxiliary Devices	Pulse Jet Mixers - HLP-PJM-00060, HLP-PJM-00061, HLP-PJM-00062, HLP-PJM-00063, HLP-PJM-00064, HLP-PJM-00065, HLP PJM-00066, HLP-PJM-00067. Auxiliary Devices are located within the vessel.

Equipment Seismic Qualification (ESQ)

Parameter	Title	Reference/Document Number	Version / Revision	Remarks
WTP Seismic Design Specification (BUYER)	Engincering Specification for Seismic Qualification of Seismic Category I/II Equipment and Tanks Engineering Specification for Seismic Qualification Criteria for Pressure Vessels	24590-WTP-3PS-SS90-T0001 24590-WTP-3PS-MV00-T0002	2 8 3	N/A
Specified Seismic Load (BUYER) 8	Seismic Analysis of Pretreatment Building - WSGM In-Structure Response Spectra (ISRS)	24590-PTF-S0C-S15T-00057	A	CCN 185271: WSGM ISRS Curves; Figures 21E, 22E, and 24E
Design Seismic Load (SELLER	TBD	TBD	TBD	E-Note 3
Qualification Method (SELLER)	TBD	TBD	TBD	Dynamic Analysis utilizing response spectra curves
Qualification Report Number (SELLER)	TBD	TBD	TBD	E-Note 3
Submittal Number (BUYER)	TBD	TBD	TBD	N/A

EQUIPMENT QUALIFICATION DATASHEET (EQD)

Equipment Qualification Notes and Additional Information

E-Note 1: BNI (BUYER) shall perform Equipment Environmental Qualification .

E-Note 2: Where pressure is given in inches of water column (in-w.c.) in the source document, it is generally assumed that this is in reference to atmospheric pressure and is therefore equivalent to inches of water gage (in-w.g.).

E-Note 3: SELLER shall perform Equipment Seismic Qualification.

E-Note 4: Radiation Dose Rates are for determining shielding requirements only for the black cell and are not at the source (vessel). Since the vessel is all metallic and the source has no neutron components for material embrittlement, the dose rates are of no concern on the vessel or its subcomponents.

E-Note 5: Normal, Abnormal, and DBE dose rates are the same, therefore, abnormal & DBE doses do not add to total integrated dose based on normal dose rates over 40 years.

E-Note 6: Flood height is 2.08 ft above the floor, bottom of vessel is above this level, therefore, no submergence evaluation is required.

DOE Radioactive Materials Disclaimer:

Please note that source, special nuclear and byproduct materials, as defined in the Atomic Energy Act of 1954 (AEA), are regulated at the US Department of Energy (DOE) facilities exclusively by DOE acting pursuant to its AEA authority. DOE asserts, that pursuant to the AEA, it has sole and exclusive responsibility and authority to regulate source, special nuclear, and byproduct materials at DOE-owned nuclear facilities. Information contained herein on radionuclides is provided for process description purposes only.

Screening / Evaluation Required? If yes per 24590-WTP-GPP-SREG-002, E&NS signature required below	X	Yes		No

Approval

Rev	Description	System Engineer	Vessel Engineer	Checked	Reviewed/ MET	E&NS	Approved	Date
0	Issued for Purchase	R. Rider	Suharto	U. Sen C. Slater	N/A	N/A	S. Kirk	10/03/02
1	Revised as Marked, Delete Charge Vessel and RFD per Rev. 0 P&ID	R. Rider	Suharto	S. Arora C. Slater	N/A	N/A	M. Hoffmann	07/10/03
2	Revised Parent Vessel Component Function and Life Cycle Description, Vessel Operating and Design Temperatures, Jacket Design Temperature, and Content Cyclic Data. Other Revisions are for Clarity and Consistency.	R. Rider	R. Simmons	Y. Hovanski C. Slater	R. Stevens	N/A	M. Hoffmann	11/14/03
3	Added Black Cell Requirements	R. Rider	R. Simmons	Y. Hovanski C. Slater	N/A	N/A	M. Hoffmann	02/04/04
4	Added Non-Newtonian Mixing Requirements	R. Rider	R. Simmons	Y. Hovanski C. Slater	J. Julyk	N/A	M. Hoffmann	04/28/04
5	Revised concrete for cluster fill per note 11. Deleted note 10. Revised overblow condition loads. Number of overblow cycles revised to 1000 from 100.	R. Rider	H. Khurana	M. Arulampalam	R. Stevens	N/A	S.V./ M. Hoffmann	06/30/05
6	Revised per note 12 on sheet 2 of 5	R. Rider	M. Arulampalam	J. Polani	C. Slater/ D. Adler	N/A	J. Julyk	10/28/05
7	Revised per Note 14 on sheet 2.	R. Rider	B. Makadia	R. Peters/ M. Seed	D. Adler	G. Hendricks for J. Hinckley	J. Julyk	02/13/08
8	Incorporated 24590-QL-MRB-MVA0-00001-T0001, 24590-QL-MRB-MVA0-00001-T0007. Revised per Note 15.	D. Evans	B. Makadia	M Seed	D. Adler	J. Hinckley	J. Julyk	3/14/11

ATTACHMENT 1: Page 1 of 3
REFERENCES for Data Sheets: 24590-PTF-MVD-HLP-00007, 00008, 00009
Vessel Tags: HLP-VSL-00027A/27B and 28

(For BNI Use only)

Data	Document #	Rev	Document Title/ Comments
Quality Level	24590-PTF-M6-HLP-00001001	0	*P&ID - PTF HLW LAG Storage and Feed Blending Process System Vessel HLP-VSL-00027A*
	24590-PTF-M6-HLP-00001002	0	*P&ID - PTF HLW LAG Storage and Feed Blending Process System Vessel HLP-VSL-00027B*
	24590-PTF-M6-HLP-00003001	0	*P&ID - PTF HLW LAG Storage and Feed Blending Process System Vessel HLP-VSL-00028*
Seismic Category	24590-PTF-M6-HLP-00001001	0	*P&ID - PTF HLW LAG Storage and Feed Blending Process System Vessel HLP-VSL-00027A*
	24590-PTF-M6-HLP-00001002	0	*P&ID - PTF HLW LAG Storage and Feed Blending Process System Vessel HLP-VSL-00027B*
	24590-PTF-M6-HLP-00003001	0	*P&ID - PTF HLW LAG Storage and Feed Blending Process System Vessel HLP-VSL-00028*
Design Specific Gravity	24590-WTP-RPT-ENG-07-007	0	*Process Stream Properties,* Table 4.20
Max Operating Volume	24590-PTF-M6C-HLP-00003	F	*Vessel Sizing Calculation for HLW LAG Storage Vessels (HLP-VSL-00027A/B)*
	24590-PTF-M6C-HLP-00004	F	*Vessel Sizing Calculation for HLW Feed Blending Process Vessel (HLP-VSL-00028)*
Total Volume	24590-PTF-M6C-HLP-00003	F	*Vessel Sizing Calculation for HLW LAG Storage Vessels (HLP-VSL-00027A/B)*
	24590-PTF-M6C-HLP-00004	F	*Vessel Sizing Calculation for HLW Feed Blending Process Vessel (HLP-VSL-00028)*
Inside Diameter	24590-PTF-M6C-HLP-00003	F	*Vessel Sizing Calculation for HLW LAG Storage Vessels (HLP-VSL-00027A/B)*
	24590-PTF-M6C-HLP-00004	F	*Vessel Sizing Calculation for HLW Feed Blending Process Vessel (HLP-VSL-00028)*
Length TL-TL	24590-PTF-M6C-HLP-00003	F	*Vessel Sizing Calculation for HLW LAG Storage Vessels (HLP-VSL-00027A/B)*
	24590-PTF-M6C-HLP-00004	F	*Vessel Sizing Calculation for HLW Feed Blending Process Vessel (HLP-VSL-00028)*
Operating Pressure (external)	24590-PTF-M6C-PVP-00017	A	*HADCRT Analysis of PTF PVP System at Various Operating Scenarios,* Scrubber controlled at -35 in wg (1.3 psig) with an additional margin.
Operating Pressure (internal)	24590-PTF-MVC-10-00003	C	*PTF Vessel Cyclic Datasheet Inputs*
Design Pressure (external)	24590-PTF-M6C-PVP-00017	A	*HADCRT Analysis of PTF PVP System at Various Operating Scenarios,* Scrubber controlled at -35 in wg (1.3 psig) with an additional margin.
Design Pressure (internal)	24590-WTP-DB-ENG-01-001	1O	*Basis of Design*
Jacket Design Pressure (internal)	24590-PTF-MVC-10-00003	C	*PTF Vessel Cyclic Datasheet Inputs*
Operating Temp	24590-PTF-MVC-10-00003	C	*PTF Vessel Cyclic Datasheet Inputs*
	24590-PTF-MVC-HLP-00010	E	*Design of Cooling Jacket for HLW LAG Storage Vessels (HLP-VSL-00027A/B), Section 7.3*
	24590-PTF-MVE-HLP-00009	N/A	*Transient Cool-down Calculation of HLP-VSL-00027B for Different Levels (applies to HLP-27A & 27B)*
	24590-PTF-MVC-HLP-00011	E	*Design of Cooling Jacket for HLW Feed Blending Vessel (HLP-VSL-00028), Section 7.3*
	24590-PTF-MVE-HLP-00011	N/A	*Transient Cool-down Calculation of HLP-VSL-00028 for Different Levels*
Design Temp	24590-WTP-GPG-M-050	2	*Pressure Vessel and Heat Exchanger Design*

REFERENCES for Data Sheets: 24590-PTF-MVD-HLP-00007, 00008, 00009
Vessel Tags: HLP-VSL-00027A/27B and 28

(For BNI Use only)

Data	Document #	Rev	Document Title/ Comments
Jacket Design Temp	24590-WTP-GPG-M-050	2	*Pressure Vessel and Heat Exchanger Design*
Corrosion Allowance, Erosion Allowance (Note 1 and Note 2)	24590-PTF-N1D-HLP-00007 24590-PTF-N1D-HLP-00010	6 6	*HLP-VSL-00027A&B (PTF) HLW LAG Storage Vessel* *HLP-VSL-00028 (PTF) HLW Feed Blending Vessel*
Materials of Construction	24590-PTF-N1D-HLP-00007 24590-PTF-MV-HLP-00006 24590-PTF-MV-HLP-00005 24590-PTF-N1D-HLP-00010 24590-PTF-MV-HLP-00004	6 2 2 6 2	*HLP-VSL-00027A&B (PTF) HLW LAG Storage Vessel* *Equipment Assembly HLW LAG Storage Vessel HLP-VSL-00027A* *Equipment Assembly HLW LAG Storage Vessel HLP-VSL-00027B* *HLP-VSL-00028 (PTF) HLW Feed Blending Vessel* *Equipment Assembly HLW Feed Blend vessel HLP-VSL-00028*
Design Pressure (PJM)	24590-BOF-M6C-PSA-00001 24590-PTF-MVE-10-00012	B N/A	*Plant Service Air System Sizing* *Update PJM Cyclic Data and supporting assumptions*
Operating Pressure (PJM)	24590-PTF-MVC-10-00003 24590-PTF-MVE-10-00012	C N/A	*PTF Vessel Cyclic Datasheet Inputs* *Update PJM Cyclic Data and supporting assumptions*
Operating Temperature (PJM)	24590-PTF-M6C-HLP-00003 24590-PTF-M6C-HLP-00004	F F	*Vessel Sizing Calculation for HLW LAG Storage Vessels (HLP-VSL-00027A/B)* *Vessel Sizing Calculation for HLW Feed Blending Process Vessel (HLP-VSL-00028)*
Cyclic Data (Vessel)	24590-PTF-MVC-10-00003 24590-PTF-MVE-10-00006	C N/A	*PTF Vessel Cyclic Datasheet Inputs* *Change assumed number of cycles for HLP-VSL-00027B and HLP-VSL-00028*
Cyclic Data (PJM)	24590-PTF-MVC-10-00003 24590-PTF-MVE-10-00012 24590-WTP-M6C-50-00011	C N/A A	*PTF Vessel Cyclic Datasheet Inputs* *Update PJM Cyclic Data and supporting assumptions* *Pulse Jet Mixer Internal Pressures and Thrust*
Hydrodynamic Loads Vortex Shedding	24590-WTP-MVC-50-00006 24590-WTP-MVC-50-00006	A A	*Hydrodynamic Loads for Normal PJM Operation in Vessels With Non-Newtonian Fluids* *Hydrodynamic Loads for Normal PJM Operation in Vessels With Non-Newtonian Fluids*
Hydrodynamic Loads (Cycles)	24590-PTF-MVE-10-00012	N/A	*DCN to 24590-PTF-MVC-10-00003, Update PJM Cyclic Data and supporting assumptions,* hydrodynamic load cycles are based on PJM operating cycles.
Single PJM Overblow Loads	24590-WTP-MVC-50-00008	C	*Hydrodynamic Loads for PJM Overblow in Vessels With Non-Newtonian Fluids*
PJM Overblow Loads	24590-WTP-MVC-50-00011	B	*Pulse Jet Mixer Overblow Vessel Loads*
Single Overblow Cycles	24590-PTF-MVC-10-00003 24590-PTF-MVE-10-00004	C N/A	*PTF Vessel Cyclic Datasheet Inputs* *Add PJM Overblow Frequency Assumption*

REFERENCES for Data Sheets: 24590-PTF-MVD-HLP-00007, 00008, 00009 *(For BNI Use only)*
Vessel Tags: HLP-VSL-00027A/27B and 28

Data	Document #	Rev	Document Title/ Comments
Multiple Overblow Cycles	24590-PTF-MVC-10-00003	C	*PTF Vessel Cyclic Datasheet Inputs*
	24590-PTF-MVE-10-00004	N/A	*Add PJM Overblow Frequency Assumption*
Nozzle Loads	CCN 124018 (HLP-27A)	N/A	*Nozzle Design Loads for HLP-VSL-00027A*
	CCN 204141 (HLP-27A)	N/A	*Supplemental Nozzle Loads for HLP-VSL-00027A N29, N30, N33, N34, N37*
	CCN 230850 (HLP-27A)	N/A	*Supplemental Nozzle Loads for HLP-VSL-00027A Camera Port Nozzles (N76, N77)*
	CCN 151556 (HLP-27B)	N/A	*Nozzle Design Loads for HLP-VSL-00027B*
	CCN 204151 (HLP-27B)	N/A	*Supplemental Nozzle Loads for HLP-VSL-00027B N29 and N30 revised*
	CCN 229174 (HLP-27B	N/A	*Supplemental Nozzle Loads for HLP-VSL-00027B Nozzle N02*
	CCN 229176 (HLP-27B)	N/A	*Supplemental Nozzle Loads for HLP-VSL-00027B N32, N38, N41*
	CCN 230851 (HLP-27B)	N/A	*Supplemental Nozzle Loads for HLP-VSL-00027B Camera Port Nozzles (N80, N81)*
	CCN 126208 (HLP-28)	N/A	*Nozzle Design Loads for HLP-VSL-00028*
	CCN 191682 (HLP-28)	N/A	*Supplemental Nozzle Loads for HLP-VSL-00028 N29 and N30 revised*
	CCN 230852 (HLP-28)	N/A	*Supplemental Nozzle Loads for HLP-VSL-00028 Camera Port Nozzles (N80, N81)*
	24590-WTP-RPT-ENG-09-040	0	*Seismic Classification and Evaluation for the PTF Facility Piping and Vessels* / Section 3.2 page 19, for 1.75 seismic factor to RGM nozzle loads

Notes:
1. Vessel bottom head - additional erosion allowance from reference 24590-WTP-M0C-50-00004 Rev E, Table 10-7 (24590-WTP-M0E-50-00014 Attachment 10-11) shows a vessel erosion allowance of 0.768" (max) for HLP-VSL-000027A/B and 0.903" (max) for HLP-VSL-00028. This erosion allowance is accounted for via the 1" thick wear plates installed in the vessel bottom head directly under the PJM outlet nozzle.
2. PJM additional erosion allowance from reference 24590-WTP-M0C-50-00004 Rev E, Table 10-5, show an erosion allowance of 0.093" (HLP-27A/B) and 0.117" (HLP-28) for the stellite 12 material used in the PJM cones. The minimum thickness requirement for the PJM stellite cone material is 0.4375".

MECHANICAL DATA SHEET: VESSEL
EQUIPMENT QUALIFICATION

PLANT ITEM No.
24590-PTF-MV-HLP-VSL-00027B

ISSUED BY
RPP-WTP PDC

R11256242

Project:	***RPP-WTP***	P&ID: 9	***24590-PTF-M6-HLP-00001002***
Project No:	***24590***	Calculations: 9	***Attachment 1***
Project Site:	***Hanford***	Vessel Drawing	***24590-PTF-MV-HLP-00005, 24590-PTF-MV-HLP-00010, 24590-PTF-MV-HLP-00011***
Description:	***HLW Lag Storage Vessel***	Reports 9	***Attachment 1***

Reference Data

Charge Vessels (Tag Numbers)	***Deleted***
Pulsejet Mixers / Agitators (Tag Numbers)	***HLP-PJM-00068, HLP-PJM-00069, HLP-PJM-00070, HLP-PJM-00071, HLP-PJM-00072, HLP-PJM-00073, HLP-PJM-00074, HLP-PJM-00075***
RFDs/Pumps (Tag Numbers)	***Deleted***

Design Data

Quality Level		***Q (Note 14)***		Fabrication Specs	***24590-WTP-3PS-MV00-T0001***		
Seismic Category		***SC-I***		Design Code	***ASME VIII Div 1***		
Service/Contents		***Radioactive Slurry***		Code Stamp	***Yes***		
Design Specific Gravity		***1.5***		NB Registration	***Yes***		
Maximum Operating Volume	gal	***112,900 (Note 4)*** 9		Weights (lbs)	Empty	Operating	Test
Total Volume	gal	***127,260 (Note 4)*** 9		Estimated	***360,000***	***1,710,000***	***1,480,000***

Inside Diameter	inch	***300***			Wind Design	***Not Required***	
Length/Height (TL-TL)	inch	***354***			Snow Design	***Not Required***	
		Vessel Operating	Vessel Design	Coil/Jacket Design	Seismic Design	***24590-WTP-3PS-SS90-T0001 24590-WTP-3PS-MV00-T0002***	
Internal Pressure	psig	***0***	***15***	***35***			
External Pressure 9	psig	***1.5***	***2.0 (Note 2)***	***0***	Postweld Heat Treat	***Not Required***	
Temperature 9	°F	***140***	***237***	***237***	Corrosion Allowance	Inch	***0.04 (Note 3)***
Min. Design Metal Temp.	°F	***40***					

Materials of Construction

Component	Material	Minimum Thickness / Size	Containment
Top Head	***SA 240 316 (Note 8)***	***See Drawing***	***Auxiliary (Note 1)***
Shell	***SA 240 316 (Note 8)***	***See Drawing***	***Primary (Note 1)***
Bottom Head	***SA 240 316 (Note 8)***	***See Drawing***	***Primary (Note 1)***
Wear Plate	***SA 240 316 (Note 8)***	***See Drawing***	***N/A***
Support	***SA 240 304 (Note 8)***	***See Drawing***	***N/A***
Jacket/Coils/Half-Pipe Jacket	***SA 240 316 (Note 8)***	***See Drawing***	***N/A***
Internals	***SA 240 316 (Note 8)***	***See Drawing***	***Thermowells Primary (Note 1)***
Pipe 9	***SA 312 TP316 Smls (Note 8 and Note 17)***	***See Drawing***	***See Note 1***
Forgings/ Bar stock	***SA 182 F316 (Note 8)***	***See Drawing***	***Note1 for Nozzle Necks***
Wash Ring Pipe	***SA 312 TP316 Smls (Note 8)***	***See Drawing***	***N/A***
Bolting/ Gaskets	***N/A***	***N/A***	***N/A***
Pulse Jet Mixer Nozzles 9	***Cast Stellite 12, with SA-240-316 (Note 8) Shroud***	***See Drawing***	***N/A***
Recirculation Nozzles	***Cast Stellite 12***	***See Drawing***	***N/A***
PJM Cluster Fill / PJM Nozzle Fill 9	***Concrete (Note 12)***	***See Drawing***	***N/A***

Miscellaneous Data

Orientation	***Vertical***	Support Type	***Skirt***
Insulation Function	***Not Applicable***	Insulation Material	***Not Applicable***
Insulation Thickness (inch)	***Not Applicable***	Weld Surface Finish	***De-scaled as Laid (Note 7)***

Notes

Note 1: All welds forming part of the primary and auxiliary containments, including the nozzle attachment welds shall be subjected to 100% volumetric examination.

Note 2: External design pressure for shell areas under the jacket shall be rated for the jacket internal design pressure plus 2.0 PSIG (negative) vessel external design pressure to account for ventilation fan pressures. 9

Note 3: - Corrosion allowance for jacket shall be 0.04 inch.

9 - Vessel bottom head - reference 24590-WTP-M0E-50-00014 Attachment 10-11 provides additional vessel erosion allowance of 0.768" (max) for HLP-VSL-000027A/B. This erosion allowance is accounted for via the 1" thick wear plates installed in the vessel bottom head directly under the PJM outlet nozzle.
- PJM additional erosion allowance from reference 24590-WTP-M0C-50-00004 Rev E, Table 10-5, provides an erosion allowance of 0.093" (HLP-27A/B) for the stellite 12 material used in the PJM cones. The minimum thickness requirement for the PJM stellite cone material is 0.4375".

Note 4: Vessel volumes are approximate and do not account for manufacturing tolerances, nozzles, and displacement of all internals, supports and cluster. 9

Note 5: Contents of this document are Dangerous Waste Permit affecting.

Note 6: Deleted

Note 7: Grind smooth shell welds at shell-jacket welds.

Note 8: Maximum carbon content of 0.030% for all welded components.

Note 9: Deleted 9

Note 10: This vessel is located in a Black Cell.

Note 11: Deleted per report N0. 24590-WTP-RPT-M-04-00007 dated Nov. 01, 2004

Note 12: (a) The intent is to provide a concrete mix with low chlorides, low moisture, low porosity and inhibits corrosion. The concrete formulation and blending should follow the relevant paragraphs in ASTM C 94, Option B. The Portland cement should be Type I/II conforming to ASTM C 150. Coarse aggregates shall be no larger than 3/4" diameter. The coarse and fine aggregates should be tested for chloride content using ASTM C 1152 and requiring less than 0.01% (100 ppm) acid-soluble chloride, and by limiting the water chloride content to less than 200 ppm. The concrete mix shall include chemical admixtures, follow ASTM C494 for control over admixtures. A final report, see ASTM C494 Section 19, shall be submitted, the report is required to have a precision statement. 9

Additional WTP requirements:

- Do not use blast furnace slag in the concrete.
- To reduce the permeability, the water-to-cement ratio shall be low, lower than 0.40%, using a Type F admixture in quantities that have no adverse effects on fresh and hardened properties.
- To reduce the corrosion, an admixture shall be used, calcium nitrate is to be added at a concentration no more than 32 lb/yd^3.
- Use Type F fly ash and silica fume, to reduce porosity, add in quantities to minimize porosity with no adverse effects on fresh and hardened properties.

The concrete is to fill the entire cluster volume up to the bottom of the fill nozzle. Concrete shall be poured in a manner that allows for the even distribution of aggregate and mechanically vibrated to assure no major pockets or voids. Concrete is to be poured through more than one nozzle, in lifts. The seam between lifts is not important.

- Because of the unique geometry and inability to rework or repair the concrete, assurance that the fill is complete and 100% filled via in-process observance, boroscope or other methods. Fill report shall be provided.
- Curing: The concrete shall be thoroughly cured (at least 30 days) before the shroud is closed.
- The seller shall submit mix design and complete procedure for concreting for buyer's approval.
- The concrete fill can be purchased commercial.

9 (b). Fill gap completely between PJM shroud and stellite nozzles with Aremco 646-N Ceramacast (or equal), see CCN 156345 for procedure.

Note 13: Deleted. 9

Note 14: Vessel to be designed, fabricated, tested to L-1, and black cell requirements defined in 24590-WTP-3PS-MV00-T0001.

Notes CONTINUED:

Note 15: *Clarification to quality level, revised specific gravity, operating external pressure, revised vessel external design pressure, revised jacket external design pressure, revised operating temperature, added Data Reference, revised Note 2, added Note 14 and Note 15, added functional/safety requirements, added section on Seismic, change to parent vessel cyclic data, change to hydrodynamic loads for normal operations, change to PJM cyclic data, added E&NS table and signature, added section for "Hydrodynamic Loads -Pulse Jet Mixers", added section for "Multiple Overblow PJMs", added section for HPAV Load Conditions, added section for nozzle loads. Included environmental qualifications data, added DOE disclaimer. If any Sections contain a revision triangle △# next to the Section heading the entire section must be reviewed for changes/additions.*

Note 16: △9 *Per CCN 193847, replaced ISRS curves with WSGM curves which provide for a lower acceleration value. Removed HPAV loads and Functional/Safety Requirements. Revised entire Equipment Qualification Sections. Replaced PJM Overblow Loads and added Cluster Overblow Loads. Renumbered Equipment Qualification Notes and numbered/revised Nozzle Load Notes. If any Sections contain a revision triangle △# next to the Section heading the entire section must be reviewed for changes/additions.*

Note 17: *Nozzle material for (4" diameter) N29A and N30A shall be SB622 (N06022) seamless Hastelloy C-22. Nozzles N29 and N30 (both 6" diameter) act as sleeve (material SA-312-TP-316 smls) for N29A and N30A.* △9

Hydrodynamic Loading - Pulse Jet Mixers (PJMs) 9

Pulse Jet Mixers (PJMs) are designed to mix the vessel content using a liquid jet discharge. PJM's are driven by compressed air. The mixing is required to enhance the heat transfer from the fluid to the cooling jackets, to homogenize the solution and to release hydrogen from the fluid.
The PJMs operate in the following three cycles: Suction, Drive and Vent. During the suction cycle a vacuum is created in the PJM headspace and the level within the PJM rises to fill the PJM. During the drive cycle the PJM is pressurized and liquid is discharged. During the vent cycle, the pressure in the headspace approaches atmospheric and the level within the PJM is allowed to reach equilibrium.
Vessel components shall be designed to withstand loading induced by PJM operations as described here-in.

Normal Operations : Liquid flows around internal structures within the parent vessel producing hydrodynamic loads such as drag and vortex shedding. Reference the section below for "Normal Operating" loads and "Vortex Shedding" frequencies.

Overblow Condition: Occasionally the drive cycle lasts too long and compressed air is discharged from the PJM. Overblows can also occur during system calibration. One or more multiple PJM's may overblow at any time. These conditions induce acoustic and bubble rise loads on structures and components. Overblow loading conditions are provided in the tables and charts below.

All internal components shall be designed for the combination of normal operations hydrodynamic loads and overblow loads. Single overblows (SOB) act concurrently with the seismic event and other operational loads. Multiple Overblows (MOB) do not act concurrently with the seismic event but are combined with other operational loadings. Figures 1, 2, and 3 below in the "PJM Overblow Loads" section provides the acoustic load intensity and application that encompasses both SOB and MOB.

Normal Operations Loading - PJMs

Description	*Pulse jet mixers (PJM) impose a cyclical hydrodynamic load on all internal components. The components shall be designed and supported against these hydrodynamic loads due to normal operations. The following table indicates the hydrodynamic pressure for normal conditions at ranges of elevations in the vessel and the number of design cycles for this condition. The hydrodynamic forces cycle between the indicated pressure ranges applied across the projected area of the component. Positive hydrodynamic forces act in the radial, outward direction and the vertical, upward direction. Seller shall apply the radial load simultaneously in the radial direction and normal to the radial direction in the horizontal plane. This load combination acts concurrently with seismic loads for normal PJM operations.*	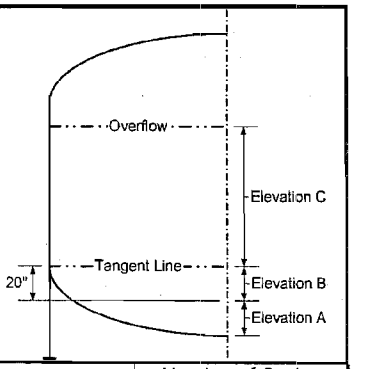

Condition	Hydrodynamic Pressure Range, psi						Number of Cycles
	Elevation A		Elevation B		Elevation C		
	Radial	Vertical	Radial	Vertical	Radial	Vertical	
Normal Operation	*-0.030 to 0.020*	*-0.030 to 0.020*	*-0.030 to 0.020*	*-0.030 to 0.020*	*-0.025 to 0.057*	*-0.028 to 0.032*	*3.7E6* 9

9 Vortex Shedding

To mitigate the dynamic effects, the following pipe sizes dipped internal to the vessel are required to have a minimum first natural frequency that is double the vortex shedding frequency:

Nominal Pipe Size	*Minimum First Natural Frequency*
1 inch nominal	*4.8 Hz**
2 inch nominal	*2.6 Hz**
3 inch nominal	*1.0 Hz***

** See 24590-WTP-MVC-50-00006, Section 8.2.2*
*** By extrapolation from 1 inch and 2 inch*

PJM Overblow Loads 9

Discussion: *During normal operation, pulse jet mixers (PJMs) mix the fluid by pulling in (suction) and pushing out (drive) fluid. During an upset condition, designated as an 'overblow', air is discharged following the drive cycle of one or more PJMs. The load consists of acoustic pressure (2Hz to 200Hz) developed in the first 200ms of the event and a load due to the bubble rising through the fluid.*

The acoustic load and the bubble load are design loads as defined by ASME B&PVC, Section 8, Division 1, UG-22, applied statically. The acoustic load is not added to the bubble rise load because they occur at different times during the overblow event.

Acoustic Load

- ***The acoustic design load in Figure 1 is applied to the visible (as viewed from the overblow origin) surface of cylindrical targets such as pipes, charge vessels, and PJMs. The load is applied in the direction normal to the principal axis of the target as illustrated in Figure 2. Note: The intended net effective load on the target is equal to the projected (i.e. cross-sectional) area of the object times the acoustic design load (psi) indicated in Figure 1.***
- ***Each target is considered independent of the surrounding targets: e.g. the surrounding targets do not impede the acoustic wave by casting a shadow, as illustrated in Figure 2.***
- ***The load is <u>not</u> applied to small supports such as gussets, brackets, tabs, clamps, and bolts because they are rigid and the pressure drop across the target is negligible.***
- ***When the vessel contains multiple PJMs, the load from one PJM is independent of the load from other PJMs. The loads are not additive for multiple overblows.***
- ***No internal components shall be placed within 5 PJM nozzle diameters (5 * 4 in = 20 in) of a spherical zone centered at any overblowing PJM nozzle.***

Figure 1: Acoustic Design Load

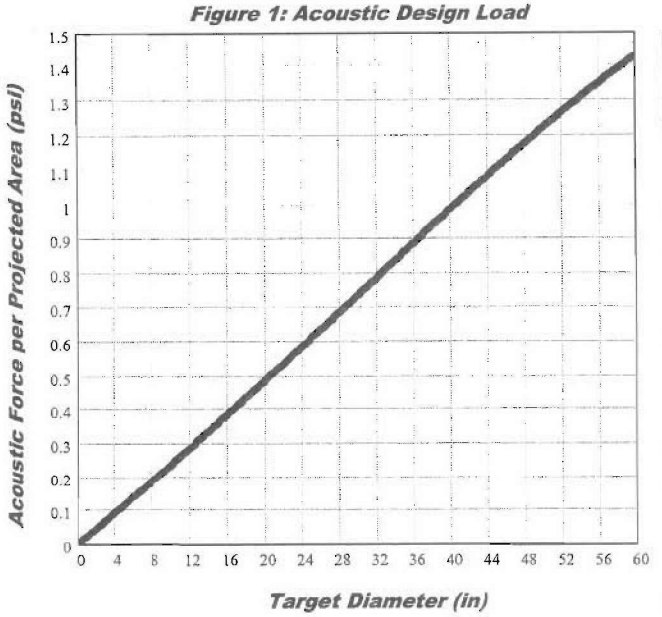

Figure 2: Load Application

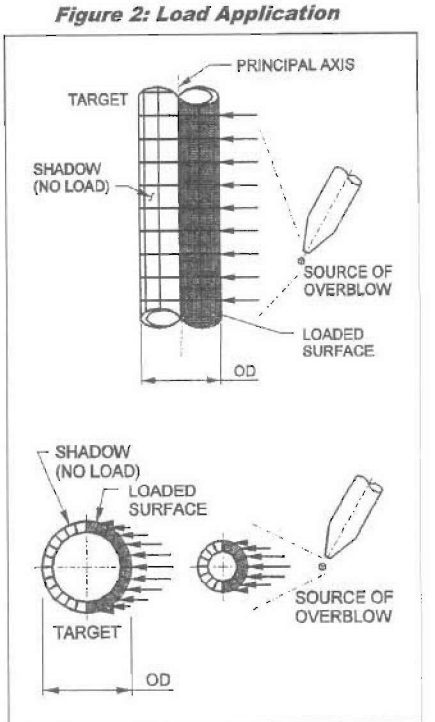

The following data is required to determine the load:

- ***Target Diameter***
- ***Target Principal Axis***
- ***Overblow Source Coordinates***

Number of Acoustic Cycles	***1000 events X 40 cycles/event for a total of 40,000 cycles***
Bubble Rise Load	***A vertical force per projected area of 1.7 psi is applied to the surfaces in the 36-inch diameter cylindrical zone centered at the overblowing PJM(s). The bubble can be at any elevation above the overblowing PJM and only affects one zone (36-inch diameter region) at a time. When there are multiple PJMs in a vessel (MOB), each PJM has it's own bubble. To simplify analysis the bubble can be applied in a continuous cylindrical zone above each PJM.***
Number Bubble Rise Cycles	***1000 events X 1 cycle/event for a total of 1,000 cycles***

PJM Cluster Overblow Load 9

Discussion: *The acoustic design pressure on the cluster is determined from equation 5-8 in 24590-WTP-MVC-50-00011, Rev B. The worst-case orientation of the load needs to be determined by the user.*

Acoustic Load

The following is the load magnitude for the PJM Cluster in HLP-VSL-00027A/B/28 with an outer radius of 89.5 inches measured to the outer most radii of the cluster. Follow the steps described below:

1. ***Isolate the PJM Cluster and supports from parent vessel***
2. ***Run a modal analysis and determine the first frequency***
3. ***Use Figure 3 (below) to find the acoustic force per projected area***
4. ***Apply the static load in the same orientation as indicated in Figure 2 (above)***

Figure 3: Acoustic Design Pressure on Cluster

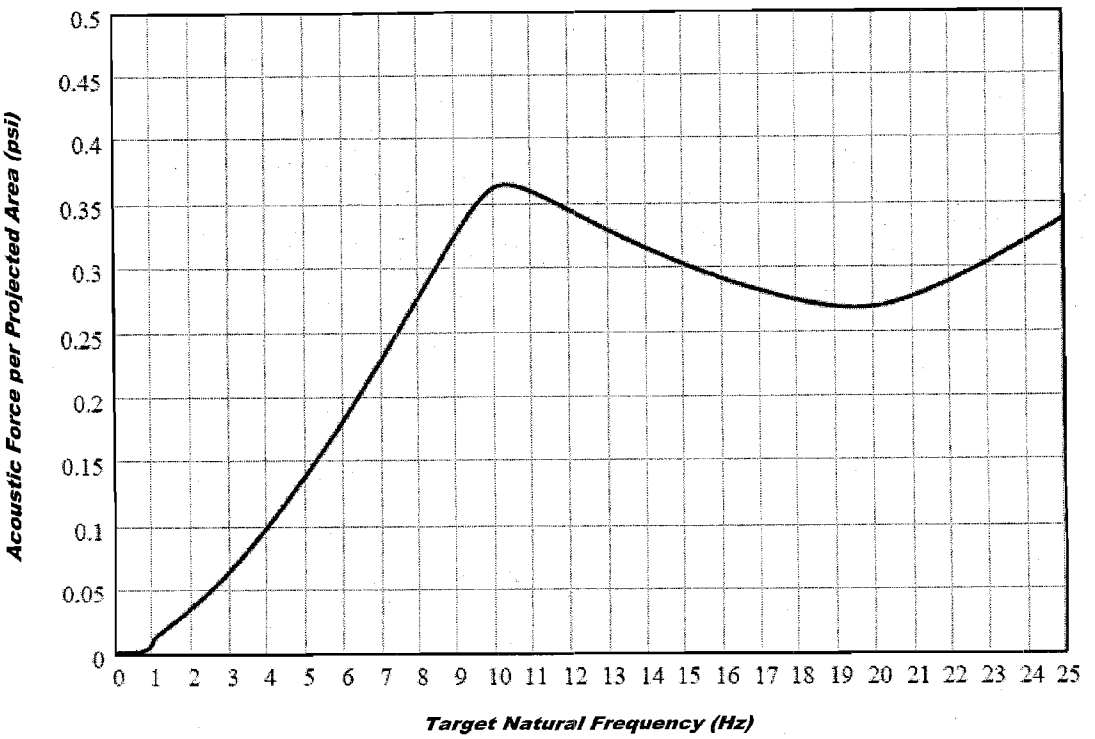

Number of Acoustic Cycles

1000 events X 40 cycles/event, total cycles is 40,000

Equipment Cyclic Data Sheet - Parent Vessel 9

Plant Item Number	*24590-PTF-MV-HLP-VSL-00027B*
Component Description	*Parent Vessel*

The information below is provisional and envelopes operational duty for fatigue assessment. It is not to be used as operational data.

Materials of Construction	*SA 240 316 with max. Carbon of 0.030 %*
Design Life	*40 years*
Component Function and Life Cycle Description	*This vessel is filled and drained over a period of 7 days, resulting in 2000 cycles over a 40 year life. Contents transferred as a batch to HLP-VSL-00028 (i.e., could be drained in one day). The vessel is drained and the internals are washed yearly. The temperature is maintained normally at or below 140°F.*

Load Type		Min	Max	Number of Cycles	Comment
Design Pressure	psig	*-8*	*15*	*10*	*Nominal assumption for testing*
Operating Pressure	psig	*-1.5* *-1.5*	*0* *2.8*	*7.0E6* *40*	*Maximum Operating*
Operating Temperature	°F	*59*	*140*	*2000*	*Uniform material temperature range, not between two points. Temperature cycling is not required by design.*
Contents Specific Gravity		*1.00*	*1.5*	*2000*	*Nominal assumption. Coincident with contents level cycles*
Contents Level	inch	*38*	*389*	*2000*	*Contents level measured from center of bottom head*
Localized Features					
Nozzles **N29A** and **N30A**	°F	*59*	*212*	*2000*	*Localized affect for Nozzles N29A and N30A*
Cooling Jacket 9	°F				*Cooling Water inlet temperature is 50° F (max)*

Notes

- ***Cycle increase: The Seller must increase the numbers of operational cycles given above by 10% to account for commissioning duty unless otherwise noted.***

Equipment Cyclic Data Sheet - PJMs 9

Component Plant Item Number	*HLP-PJM-00068, HLP-PJM-00069, HLP-PJM-00070, HLP-PJM-00071, HLP-PJM-00072, HLP-PJM-00073, HLP-PJM-00074, HLP-PJM-00075*
Component Description	*Pulse Jet Mixers*

The information below is provisional and envelopes operational duty for fatigue assessment. It is not to be used as operational data.

Materials of Construction	*SA 240 316 with max. Carbon of 0.030 %*
Design Life	*40 Years*
Component Function and Life Cycle Description	*These pulse jet mixers (PJMs) are cyclically loaded using vacuum to fully fill the PJM with process liquid and compressed air to fully empty the PJM. The PJMs are contained within a parent vessel with varying liquid level. They shall be designed to cycle between the maximum design pressure and the minimum design pressure plus the external static head imposed by the parent vessel. The PJM supports shall be designed to cycle between fully buoyant (PJM empty and parent vessel full) and fully loaded (PJM full and parent vessel empty) states. Thrust load shall be applied only to the fully buoyant state. Assume the parent vessel is full for 50% of the number of PJM cycles.*

Load Type		Min	Max	Number of Cycles	Comment
Design Pressure	psig	*FV*	*80*	*100*	*Nominal assumption*
Operating Pressure	psig	*FV*	*50*	*3.7E6*	*Pressure cycles to be at 140° F and non-coincident with temperature cycles*
Operating Temperature	°F	*59*	*140*	*2000*	*Parent Vessel will be operated normally at or below 140°F*
Contents Specific Gravity		*1.00*	*1.5*	*2000*	*Nominal assumption*
Contents Level	inch	*Empty*	*Flooded*	*3.7E6*	
Thrust	lbf	*-394*	*394*	*3.7E6*	
Localized Features					
Supports		*As above buoyant to loaded*		*3.7E6*	

Notes

- ***Cycle increase: The Seller must increase the number of operational cycles given above by 10% to account for commissioning duty unless otherwise noted.***

Nozzle Loads 9

Nozzle Loads (9)

Nozzle	Size	Load Type	Loads - lbs			Moments - ft-lbs		
			Fx	Fy	Fz	Mx	My	Mz
N01	24"	Weight	Manway (No loads applied)					
		Seismic						
		Thermal						
N02	8"	Weight	234	543	234	741	464	1065
		Seismic	3539	2429	2980	5159	11375	15468
		Thermal	893	1152	1193	5268	6500	10243
N04	4" Spare	Weight	87	140	87	216	135	135
		Seismic	480	320	480	1537	2310	2310
		Thermal	295	263	393	945	1890	1890
N05	10"	Weight	264	421	264	1410	885	885
		Seismic	1643	956	1432	9634	14438	14438
		Thermal	1412	848	1943	6375	15533	12750
N06	6"	Weight	N06 is parent nozzle, nozzle loads are applied via N06A, N06B, N06C					
		Seismic						
		Thermal						
N06A (Note C)	1"	Weight	15	20	15	20	20	20
		Seismic	53	35	53	65	96	96
		Thermal	30	26	40	38	77	77
N06B (Note C)	1"	Weight	15	20	15	20	20	20
		Seismic	53	35	53	65	96	96
		Thermal	30	26	40	38	77	77
N06C (Note C)	1"	Weight	15	20	15	20	20	20
		Seismic	53	35	53	65	96	96
		Thermal	30	26	40	38	77	77
N07	2"x1"	Weight	50	60	50	75	75	75
		Seismic	186	123	186	277	415	415
		Thermal	114	100	152	169	337	337
N08	6"	Weight	N08 is parent nozzle, nozzle loads are applied via N08A, N08B, N08C					
		Seismic						
		Thermal						
N08A (Note C)	1"	Weight	15	20	15	20	20	20
		Seismic	53	35	53	65	96	96
		Thermal	30	26	40	38	77	77
N08B (Note C)	1"	Weight	15	20	15	20	20	20
		Seismic	53	35	53	65	96	96
		Thermal	30	26	40	38	77	77
N08C (Note C)	1"	Weight	15	20	15	20	20	20
		Seismic	53	35	53	65	96	96
		Thermal	30	26	40	38	77	77
N09	6"	Weight	N09 is parent nozzle, nozzle loads are applied via N09A, N09B, N09C					
		Seismic						
		Thermal						
N09A (Note C)	1"	Weight	15	20	15	20	20	20
		Seismic	53	35	53	65	96	96
		Thermal	30	28	40	54	77	77

Nozzle	Size	Load Type	Loads - lbs			Moments - ft-lbs		
			Fx	Fy	Fz	Mx	My	Mz
N09B (Note C)	1"	Weight	15	20	15	20	20	20
		Seismic	53	35	53	65	96	96
		Thermal	30	26	40	38	77	77
N09C (Note C)	1"	Weight	15	20	15	20	20	20
		Seismic	53	35	53	65	96	96
		Thermal	30	26	40	38	77	77
N10	2"	Weight	50	60	50	75	75	75
		Seismic	186	123	186	277	415	415
		Thermal	114	158	152	254	337	337
N11	2"	Weight	50	110	50	75	75	75
		Seismic	186	240	186	277	415	415
		Thermal	114	100	152	169	337	337
N12	2"	Weight	50	94	50	75	75	75
		Seismic	186	205	186	504	415	415
		Thermal	114	100	152	169	337	337
N13	2"	Weight	50	91	50	75	75	75
		Seismic	186	215	186	368	415	415
		Thermal	114	138	152	169	337	337
N14	2"	Weight	50	64	50	75	75	75
		Seismic	186	124	186	310	415	415
		Thermal	114	100	152	169	337	337
N15	2"	Weight	50	65	50	75	75	75
		Seismic	186	123	186	277	415	415
		Thermal	114	100	152	169	337	337
N16	2"	Weight	50	60	50	75	75	75
		Seismic	186	123	186	277	415	415
		Thermal	114	100	152	169	337	337
N17	2"	Weight	50	60	50	75	75	75
		Seismic	186	123	186	277	415	415
		Thermal	114	100	152	169	337	337
N18	2"	Weight	50	60	50	75	75	75
		Seismic	186	123	186	348	415	415
		Thermal	114	100	152	169	337	337
N19	2"	Weight	50	71	50	88	75	75
		Seismic	186	156	186	469	415	415
		Thermal	114	100	152	169	337	337
N20	2"	Weight	50	76	50	75	75	75
		Seismic	268	278	186	322	415	415
		Thermal	114	100	152	169	337	337
N21	2"	Weight	50	67	50	75	75	75
		Seismic	186	180	186	375	415	415
		Thermal	114	100	152	169	337	337
N25	2"	Weight	50	60	50	75	75	75
		Seismic	186	123	186	277	415	415
		Thermal	114	100	152	169	337	337

Nozzle	Size	Load Type	Loads - lbs			Moments - ft-lbs		
			Fx	Fy	Fz	Mx	My	Mz
N27	3"	Weight	52	134	52	119	75	197
		Seismic	287	208	284	819	1227	1227
		Thermal	171	153	229	498	998	998
N28	2" Spare	Weight	50	60	50	75	75	75
		Seismic	186	123	186	277	415	415
		Thermal	114	100	152	169	337	337
N29 / N29A (Note F)	6" / 4"	Weight	50	225	50	250	250	250
		Seismic	350	263	350	1750	1750	1750
		Thermal	200	200	200	1000	1000	1000
N30 / N30A (Note F)	6" / 4"	Weight	50	225	50	250	250	250
		Seismic	350	263	350	1750	1750	1750
		Thermal	200	200	200	1000	1000	1000
N31	3" Spare	Weight	52	84	52	119	75	75
		Seismic	284	189	284	819	1227	1227
		Thermal	171	153	229	498	998	998
N32	3"	Weight	52	189	52	119	75	75
		Seismic	394	370	284	263	175	875
		Thermal	171	175	229	150	200	700
N33	2"	Weight	50	84	50	75	75	75
		Seismic	212	254	217	572	415	910
		Thermal	114	100	152	169	337	337
N34	3"	Weight	52	84	52	119	75	76
		Seismic	284	226	284	819	1227	1227
		Thermal	171	153	229	498	998	998
N36	4"	Weight	87	140	87	216	135	166
		Seismic	480	320	480	1537	2310	2310
		Thermal	549	263	440	945	1890	1890
N37	3"	Weight	52	119	52	119	75	75
		Seismic	284	189	284	819	1227	1227
		Thermal	171	153	229	498	998	998
N38	3"	Weight	52	99	52	119	75	75
		Seismic	284	196	541	788	175	350
		Thermal	171	211	229	650	100	100
N39	4"	Weight	87	140	87	216	135	234
		Seismic	480	320	480	1537	2310	2310
		Thermal	295	263	393	945	1890	1890
N40	4"	Weight	87	155	87	216	135	302
		Seismic	480	564	480	1537	2310	2310
		Thermal	295	263	393	1133	1890	1890
N41	3"	Weight	52	93	52	119	75	153
		Seismic	284	189	635	700	525	1225
		Thermal	171	153	345	450	500	750
N43	2"	Weight	50	60	50	75	75	75
		Seismic	186	123	186	277	415	415
		Thermal	114	100	152	169	337	337

Nozzle	Size	Load Type	Loads - lbs			Moments - ft-lbs		
			Fx	Fy	Fz	Mx	My	Mz
N44	2"	Weight	50	60	50	75	75	75
		Seismic	186	123	186	277	415	415
		Thermal	114	100	152	169	337	337
N45	2"	Weight	50	60	50	75	75	75
		Seismic	186	123	186	277	415	415
		Thermal	114	100	152	169	337	337
N46	2"	Weight	50	60	50	75	75	75
		Seismic	186	123	186	277	415	415
		Thermal	114	100	152	169	337	337
N47	2"	Weight	50	60	50	75	75	75
		Seismic	186	123	186	277	415	415
		Thermal	114	100	152	169	337	337
N48	2"	Weight	50	60	50	75	75	75
		Seismic	186	123	186	277	415	415
		Thermal	114	100	152	169	337	337
N49	2"	Weight	50	60	50	75	75	75
		Seismic	186	123	186	277	415	415
		Thermal	114	100	152	169	337	337
N50	2"	Weight	50	60	50	75	75	75
		Seismic	186	123	186	277	415	415
		Thermal	114	100	152	169	337	337
N51	2"	Weight	50	60	50	75	75	75
		Seismic	186	123	186	277	415	415
		Thermal	114	100	152	169	337	337
N52	2"	Weight	50	60	50	75	75	75
		Seismic	186	123	186	277	415	415
		Thermal	114	100	152	169	337	337
N53	2"	Weight	50	60	50	75	75	75
		Seismic	186	123	186	277	415	415
		Thermal	114	100	152	169	337	337
N54	2"	Weight	50	60	50	75	75	75
		Seismic	186	123	186	277	415	415
		Thermal	114	100	152	169	337	337
N55	2"	Weight	50	60	50	75	75	75
		Seismic	186	123	186	277	415	415
		Thermal	114	100	152	169	337	337
N56	2"	Weight	50	60	50	75	75	75
		Seismic	186	123	186	277	415	415
		Thermal	114	100	152	169	337	337
N57	2"	Weight	50	60	50	75	75	75
		Seismic	186	123	186	277	415	415
		Thermal	114	100	152	169	337	337
N58	2"	Weight	50	60	50	75	75	75
		Seismic	186	123	186	277	415	415
		Thermal	114	100	152	169	337	337

	MECHANICAL DATA SHEET: VESSEL **EQUIPMENT QUALIFICATION**	**PLANT ITEM No.** ***24590-PTF-MV-HLP-VSL-00027B***

Nozzle	Size	Load Type	Loads - lbs			Moments - ft-lbs		
			Fx	Fy	Fz	Mx	My	Mz
N59	2"	Weight	50	60	50	75	75	75
		Seismic	186	123	186	277	415	415
		Thermal	114	100	152	169	337	337
N60	2"	Weight	50	60	50	75	75	75
		Seismic	186	123	186	277	415	415
		Thermal	114	100	152	169	337	337
N61	2"	Weight	50	60	50	75	75	75
		Seismic	186	123	186	277	415	415
		Thermal	114	100	152	169	337	337
N62	2"	Weight	50	60	50	75	75	75
		Seismic	186	123	186	277	415	415
		Thermal	114	100	152	169	337	337
N63	2"	Weight	50	60	50	75	75	75
		Seismic	186	123	186	277	415	415
		Thermal	114	100	152	169	337	337
N64	2"	Weight	50	60	50	75	75	75
		Seismic	186	123	186	277	415	415
		Thermal	114	100	152	169	337	337
N65	2"	Weight	50	60	50	75	75	75
		Seismic	186	123	186	277	415	415
		Thermal	114	100	152	169	337	337
N66	2"	Weight	50	60	50	75	75	75
		Seismic	186	123	186	277	415	415
		Thermal	114	100	152	169	337	337
N67	2"	Weight	50	60	50	75	75	75
		Seismic	186	123	186	277	415	415
		Thermal	114	100	152	169	337	337
N68	2"	Weight	50	60	50	75	75	75
		Seismic	186	123	186	277	415	415
		Thermal	114	100	152	169	337	337
N69	2"	Weight	50	60	50	75	75	75
		Seismic	186	123	186	277	415	415
		Thermal	114	100	152	169	337	337
N70	2"	Weight	50	60	50	75	75	75
		Seismic	186	123	186	277	415	415
		Thermal	114	100	152	169	337	337
N71	2"	Weight	50	60	50	75	75	75
		Seismic	186	123	186	277	415	415
		Thermal	114	100	152	169	337	337
N72	2"	Weight	50	60	50	75	75	75
		Seismic	186	123	186	277	415	415
		Thermal	114	100	152	169	337	337
N73	2"	Weight	50	60	50	75	75	75
		Seismic	186	123	186	277	415	415
		Thermal	114	100	152	169	337	337

Nozzle	Size	Load Type	Loads - lbs			Moments - ft-lbs		
			Fx	Fy	Fz	Mx	My	Mz
N74	2"	Weight	50	60	50	75	75	75
		Seismic	186	123	186	277	415	415
		Thermal	114	100	152	169	337	337
N75	2"	Weight	50	60	50	75	75	75
		Seismic	186	123	186	277	415	415
		Thermal	114	100	152	169	337	337
N76	2"	Weight	50	60	50	75	75	75
		Seismic	186	123	186	277	415	415
		Thermal	114	100	152	169	337	337
N77	2"	Weight	50	60	50	75	75	75
		Seismic	186	123	186	277	415	415
		Thermal	114	100	152	169	337	337
N78	2"	Weight	50	60	50	75	75	75
		Seismic	186	123	186	277	415	415
		Thermal	114	100	152	169	337	337
N80	8"	Weight	475	475	475	475	475	475
		Seismic	1313	1313	1313	1313	1313	1313
		Thermal	600	600	600	600	600	600
N81	8"	Weight	475	475	475	475	475	475
		Seismic	1313	1313	1313	1313	1313	1313
		Thermal	600	600	600	600	600	600

Notes for Nozzle Loads 9

A. Direction of load application is per diagrams in 24590-WTP-3PS-MV00-T0001 Appendix A.

B. *For nozzles in head: x = North/South, y = Vertical, and z = East/West - Vessel 0° defined as north.*

C. *Values provided at plate on top of parent nozzle. Loads for 6" instrument nozzles are summed from 1" - A, B and C loads.*

D. *Nozzle loads shown are to be used in place of those specified in 24590-WTP-3PS-MV00-T0001 – do not apply any thermal reduction factors.*

E. *All Pretreatment RGM Seismic Piping Nozzle loads from Plant Design have a 1.75 load factor applied to all seismic loads to address coupling effects between the flexible vessels and piping in accordance with the Seismic Classification and Evaluation for the Pretreatment Facility Piping and Vessels 24590-WTP-RPT-ENG-09-040. (BNI use only, see CCN 229865 for nozzle load management).*

F. *Apply loads at the vessel head to 6" nozzle junction.*

EQUIPMENT QUALIFICATION DATASHEET (EQD)

Equipment Identification

Component Tag Number	24590-PTF-MV-HLP-VSL-00027B	Safety Classification	☒ SC ☐ SS ☐ APC ☐ SDC ☐ SDS ☐ RRC
Manufacturer / Supplier	Harris Thermal		
Requisition Number	24590-QL-MRB-MVA0-00001		
Model	Custom	Seismic Category	☒ SC-I ☐ SC-II ☐ SC-III ☐ SC-IV
Description (Include descriptive text [e.g., location, elevation])	HLW Lag Storage Vessel. Elevation 0'-0", Column Lines J and 22.5. 9		
Safety Function(s)	HLP-VSL-00027B (parent vessel) is considered a high active process vessel credited to prevent spills of large quantities of high activity process liquid and provide primary confinement for radioactive releases. Pulse Jet Mixers (PJMs) provide a mixing function in the vessel to prevent hydrogen accumulation. Air sparger piping provides air to mix solids and dilute hydrogen to prevent hydrogen accumulation. Vessel level instrumentation provides level monitoring to prevent overflows of non-Newtonian fluids into Newtonian overflow vessels and ensure proper headspace volumes are maintained for hydrogen dilution. (24590-WTP-PSAR-ESH-01-002-02 Rev 4q, Section 4.3.4, 4.3.5, and Table 4A-1) 9		

Seismic Safety Function	☒ Yes ☐ No	Room Number(s):	P-0102
Maintenance Accessible	☐ Yes ☒ No	Method of Maintenance Access:	☐ Remote ☐ Hands On ☒ None
Seismic Operability Requirements:	☒ During Seismic Event	☒ After Seismic Event	
ITS Equipment Type:	☒ Passive Mechanical	☐ Active Mechanical	☐ Electrical

Equipment Environmental Qualification (EEQ)

Environment ☒ Mild ☐ Harsh Contamination Class: C5 Radiation Class: R5	Hi Rad Service ☒ Yes ☐ No	Design Life (yrs) ☒ 40 ☐ Other ____

Parameter Type/Units	Parameter Value	Time Duration (number)	Time Units	WTP Document Number (BUYER)	Submittal Number (SELLER)
Normal					
Normal High Temperature (°F)	113	40	yrs	24590-PTF-U0D-W16T-00001	E-Note 1
Normal Low Temperature (°F)	59	40	yrs	24590-PTF-U0D-W16T-00001	E-Note 1
Normal High Relative Humidity (%RH)	90	40	yrs	24590-PTF-U0D-W16T-00001	E-Note 1
Normal Low Relative Humidity (%RH)	5	40	yrs	24590-PTF-U0D-W16T-00001	E-Note 1
Normal High Pressure (in.-w.g.)	0 (E-Note 2)	40	yrs	24590-PTF-U0D-W16T-00001	E-Note 1
Normal Low Pressure (in.-w.g.)	(-) 1.4	40	yrs	24590-PTF-U0D-W16T-00001	E-Note 1
Normal Radiation Dose Rate (mR/hr)	991000 (E-Note 2)	40 (E-Note 5)	yrs	24590-PTF-U0D-W16T-00001	E-Note 1
Vibration Magnitude (g)	N/A	N/A	N/A	N/A	N/A
Vibration Frequency (Hz)	N/A	N/A	N/A	N/A	N/A
Additional Normal Information:	N/A				

Equipment Environmental Qualification (EEQ) *(continued)*

Parameter Type/Units	Parameter Value	Time Duration (number)	Time units	WTP Document Number (BUYER)	Submittal Number (SELLER)
Abnormal					
Abnormal High Temperature (°F)	115	8	hrs/yr	24590-PTF-U0D-W16T-00001	E-Note 1
Abnormal Low Temperature (°F)	40	8	hrs/yr	24590-PTF-U0D-W16T-00001	E-Note 1
Abnormal High Relative Humidity (%RH)	100c	1	hrs/yr	24590-PTF-U0D-W16T-00001	E-Note 1
Abnormal Low Relative Humidity (%RH)	10	24	hrs/yr	24590-PTF-U0D-W16T-00001	E-Note 1
Abnormal High Pressure (in.-w.g.)	4 (E-Note 2)	8	hrs/yr	24590-PTF-U0D-W16T-00001	E-Note 1
Abnormal Low Pressure (in.-w.g.)	(-) 7.3 (E-Note 2)	8	hrs/yr	24590-PTF-U0D-W16T-00001	E-Note 1
Abnormal Radiation Dose Rate (mR/hr)	991000 (E-Note 4)	0 (E-Note 5)	yrs	24590-PTF-U0D-W16T-00001	E-Note 1
Wet Sprinkler System Present	No	N/A	N/A	24590-PTF-U0D-W16T-00001	E-Note 1
Additional Abnormal Information	100c = 100% RH condensing				
Design Basis Events (DBE)					
DBE High Temperature (°F)	135	1000	hrs	24590-PTF-U0D-W16T-00001	E-Note 1
DBE Low Temperature (°F)	40	1000	hrs	24590-PTF-U0D-W16T-00001	E-Note 1
DBE High Relative Humidity (%RH)	100c	40	hrs	24590-PTF-U0D-W16T-00001	E-Note 1
DBE Low Relative Humidity (%RH)	6	1000	hrs	24590-PTF-U0D-W16T-00001	E-Note 1
DBE High Pressure (in.-w.g.)	4 (E-Note 2)	1000	hrs	24590-PTF-U0D-W16T-00001	E-Note 1
DBE Low Pressure (in.-w.g.)	(-) 7.3 (E-Note 2)	1000	hrs	24590-PTF-U0D-W16T-00001	E-Note 1
DBE Radiation Dose Rate (mR/hr)	991000 (E-Note 4)	0 (E-Note 5)	yrs	24590-PTF-U0D-W16T-00001	E-Note 1
Flood Height (ft)	2.08	1000	hrs	24590-PTF-U0D-W16T-00001	E-Note 6
Submergence (ft)	N/A	N/A	N/A	N/A	N/A
Chemical/Spray Exposure 9	Yes	N/A	N/A	24590-PTF-U0D-W16T-00001	E-Note 1
Additional DBE Information	100c = 100% RH condensing				

DBE Chemical Exposure Details (9)	
DBE Chemical Types/Concentrations	Process Rad Condensate Nitric Acid (2M) Sodium Hydroxide (2M) (5M) Water - neutral solution

Interfaces (Electrical)	
Power Supply Voltage (VAC, VDC)	N/A
Power Supply Frequency (Hz)	N/A
Power Connection Method	N/A
I/O Signals to/from Equipment	N/A
I/O Connection Method	N/A

Interfaces (Mechanical)	
Mounting Configuration (orientation)	Vertical Mounted , Skirt (9)
Mounting Method (bolts, welds, etc.)	Welded skirt to ring beam welded to embedment plates. Embedment plate details per 24590-PTF-DD-S13T-00039, 24590-PTF-DD-S13T-00036, 24590-PTF-DD-S13T-00042 and 24590-PTF-DD-S13T-00045 provided to the vendor in the material requisition
Auxiliary Devices	Pulse Jet Mixers - HLP-PJM-00068, HLP-PJM-00069, HLP-PJM-00070, HLP-PJM-00071, HLP-PJM-00072, HLP-PJM-00073, HLP PJM-00074, HLP-PJM-00075. Auxiliary Devices are located within the vessel.

Equipment Seismic Qualification (ESQ)

Parameter	Title	Reference/Document Number	Version / Revision	Remarks
WTP Seismic Design Specification (BUYER)	Engineering Specification for Seismic Qualification of Seismic Category I/II Equipment and Tanks Engineering Specification for Seismic Qualification Criteria for Pressure Vessels	24590-WTP-3PS-SS90-T0001 24590-WTP-3PS-MV00-T0002	2 , (9) 3	N/A
Specified Seismic Load (BUYER)	Seismic Analysis of Pretreatment Building - WSGM In-Structure Response Spectra (ISRS)	24590-PTF-S0C-S15T-00057 (9)	A	CCN 185271: WSGM ISRS Curves; Figures 21E, 22E, and 24E
Design Seismic Load (SELLER	TBD	TBD	TBD	E-Note 3
Qualification Method (SELLER)	TBD	TBD	TBD	Dynamic Analysis utilizing response spectra curves
Qualification Report Number (SELLER)	TBD	TBD	TBD	E-Note 3
Submittal Number (BUYER)	TBD	TBD	TBD	N/A

EQUIPMENT QUALIFICATION DATASHEET (EQD)

Equipment Qualification Notes and Additional Information

E-Note 1: BNI (BUYER) shall perform Equipment Environmental Qualification.

E-Note 2: Where pressure is given in inches of water column (in-w.c.) in the source document, it is generally assumed that this is in reference to atmospheric pressure and is therefore equivalent to inches of water gage (in-w.g.).

E-Note 3: SELLER shall perform Equipment Seismic Qualification.

E-Note 4: Radiation Dose Rates are for determining shielding requirements only for the black cell and are not at the source (vessel). Since the vessel is all metallic and the source has no neutron components for material embrittlement, the dose rates are of no concern on the vessel or its subcomponents.

E-Note 5: Normal, Abnormal, and DBE dose rates are the same, therefore, abnormal & DBE doses do not add to total integrated dose based on normal dose rates over 40 years.

E-Note 6: Flood height is 2.08 ft above the floor, bottom of vessel is above this level, therefore, no submergence evaluation is required.

DOE Radioactive Materials Disclaimer:

Please note that source, special nuclear and byproduct materials, as defined in the Atomic Energy Act of 1954 (AEA), are regulated at the US Department of Energy (DOE) facilities exclusively by DOE acting pursuant to its AEA authority. DOE asserts, that pursuant to the AEA, it has sole and exclusive responsibility and authority to regulate source, special nuclear, and byproduct materials at DOE-owned nuclear facilities. Information contained herein on radionuclides is provided for process description purposes only.

Screening / Evaluation Required? If yes per 24590-WTP-GPP-SREG-002, E&NS signature required below	X	Yes		No

Approval

Rev	Description	System Engineer	Vessel Engineer	Checked	Reviewed/ MET	E&NS	Approved	Date
0	Issued for Purchase	R. Rider	Suharto	U. Sen C. Slater	N/A	N/A	S. Kirk	10/03/02
1	Revised as Marked, Delete Charge Vessel and RFD per Rev. 0 P&ID	R. Rider	Suharto	S. Arora C. Slater	N/A	N/A	M. Hoffmann	07/10/03
2	Revised Parent Vessel Component Function	R. Rider	R. Simmons	S. Cook C. Slater	J. Julyk	N/A	M. Hoffmann	10/03/03
3	Revised Vessel Operating and Design Temperatures, Jacket Design Temperature, Content Cyclic Data and Deleted Note 6. Other Revisions are for Clarity and Consistency.	R. Rider	R. Simmons	Y. Hovanski C. Slater	R. Stevens	N/A	M. Hoffmann	11/14/03
4	Added Black Cell Requirements	R. Rider	R. Simmons	Y. Hovanski C. Slater	N/A	N/A	M. Hoffmann	02/04/04
5	Added Non-Newtonian Mixing Requirements	R. Rider	R. Simmons	Y. Hovanski C. Slater	J. Julyk	N/A	M. Hoffmann	04/28/04
6	Revised concrete for cluster fill per note 12. Deleted note 11. Revised overblow condition loads. Number of overblow cycles revised to 1000 from 100.	R. Rider	H. Khurana	M. Arulampalam	R. Stevens	N/A	S.V./ M. Hoffmann	06/30/05
7	Revised per note 13 on sheet 2 of 5	R. Rider	M. Arulampalam	J. Polani	C. Slater D. Adler	N/a	J. Julyk	10/28/05
8	Revised per Note 15 on sheet 2.	R. Rider	B. Makadia	R. Peters/ M.Seed	D. Adler	G Hendricks for J. Hinckley	J. Julyk	02/13/08
9	Incorporated 24590-QL-MRB-MVA0-00001-T0001. Revised per Note 16 & 17. Incorporate 24590-QL-MRB-MVAO-00001-T0007	D. Evans	B. Makadia	M. Seed	D. Adler	J. Hinckley	J. Julyk	3/14/11

ATTACHMENT 1: Page 1 of 3
REFERENCES for Data Sheets: 24590-PTF-MVD-HLP-00007, 00008, 00009 *(For BNI Use only)*
Vessel Tags: HLP-VSL-00027A/27B and 28

Data	Document #	Rev	Document Title/ Comments
Quality Level	24590-PTF-M6-HLP-00001001	0	*P&ID - PTF HLW LAG Storage and Feed Blending Process System Vessel HLP-VSL-00027A*
	24590-PTF-M6-HLP-00001002	0	*P&ID - PTF HLW LAG Storage and Feed Blending Process System Vessel HLP-VSL-00027B*
	24590-PTF-M6-HLP-00003001	0	*P&ID - PTF HLW LAG Storage and Feed Blending Process System Vessel HLP-VSL-00028*
Seismic Category	24590-PTF-M6-HLP-00001001	0	*P&ID - PTF HLW LAG Storage and Feed Blending Process System Vessel HLP-VSL-00027A*
	24590-PTF-M6-HLP-00001002	0	*P&ID - PTF HLW LAG Storage and Feed Blending Process System Vessel HLP-VSL-00027B*
	24590-PTF-M6-HLP-00003001	0	*P&ID - PTF HLW LAG Storage and Feed Blending Process System Vessel HLP-VSL-00028*
Design Specific Gravity	24590-WTP-RPT-ENG-07-007	0	*Process Stream Properties*, Table 4.20
Max Operating Volume	24590-PTF-M6C-HLP-00003	F	*Vessel Sizing Calculation for HLW LAG Storage Vessels (HLP-VSL-00027A/B)*
	24590-PTF-M6C-HLP-00004	F	*Vessel Sizing Calculation for HLW Feed Blending Process Vessel (HLP-VSL-00028)*
Total Volume	24590-PTF-M6C-HLP-00003	F	*Vessel Sizing Calculation for HLW LAG Storage Vessels (HLP-VSL-00027A/B)*
	24590-PTF-M6C-HLP-00004	F	*Vessel Sizing Calculation for HLW Feed Blending Process Vessel (HLP-VSL-00028)*
Inside Diameter	24590-PTF-M6C-HLP-00003	F	*Vessel Sizing Calculation for HLW LAG Storage Vessels (HLP-VSL-00027A/B)*
	24590-PTF-M6C-HLP-00004	F	*Vessel Sizing Calculation for HLW Feed Blending Process Vessel (HLP-VSL-00028)*
Length TL-TL	24590-PTF-M6C-HLP-00003	F	*Vessel Sizing Calculation for HLW LAG Storage Vessels (HLP-VSL-00027A/B)*
	24590-PTF-M6C-HLP-00004	F	*Vessel Sizing Calculation for HLW Feed Blending Process Vessel (HLP-VSL-00028)*
Operating Pressure (external)	24590-PTF-M6C-PVP-00017	A	*HADCRT Analysis of PTF PVP System at Various Operating Scenarios*, Scrubber controlled at -35 in wg (1.3 psig) with an additional margin.
Operating Pressure (internal)	24590-PTF-MVC-10-00003	C	*PTF Vessel Cyclic Datasheet Inputs*
Design Pressure (external)	24590-PTF-M6C-PVP-00017	A	*HADCRT Analysis of PTF PVP System at Various Operating Scenarios*, Scrubber controlled at -35 in wg (1.3 psig) with an additional margin.
Design Pressure (internal)	24590-WTP-DB-ENG-01-001	1O	*Basis of Design*
Jacket Design Pressure (internal)	24590-PTF-MVC-10-00003	C	*PTF Vessel Cyclic Datasheet Inputs*
Operating Temp	24590-PTF-MVC-10-00003	C	*PTF Vessel Cyclic Datasheet Inputs*
	24590-PTF-MVC-HLP-00010	E	*Design of Cooling Jacket for HLW LAG Storage Vessels (HLP-VSL-00027A/B), Section 7.3*
	24590-PTF-MVE-HLP-00009	N/A	*Transient Cool-down Calculation of HLP-VSL-00027B for Different Levels (applies to HLP-27A & 27B)*
	24590-PTF-MVC-HLP-00011	E	*Design of Cooling Jacket for HLW Feed Blending Vessel (HLP-VSL-00028), Section 7.3*
	24590-PTF-MVE-HLP-00011	N/A	*Transient Cool-down Calculation of HLP-VSL-00028 for Different Levels*
Design Temp	24590-WTP-GPG-M-050	2	*Pressure Vessel and Heat Exchanger Design*

ATTACHMENT 1: Page 2 of 3
REFERENCES for Data Sheets: 24590-PTF-MVD-HLP-00007, 00008, 00009
Vessel Tags: HLP-VSL-00027A/27B and 28

(For BNI Use only)

Data	Document #	Rev	Document Title/ Comments
Jacket Design Temp	24590-WTP-GPG-M-050	2	*Pressure Vessel and Heat Exchanger Design*
Corrosion Allowance, Erosion Allowance (Note 1 and Note 2)	24590-PTF-N1D-HLP-00007 24590-PTF-N1D-HLP-00010	6 6	*HLP-VSL-00027A&B (PTF) HLW LAG Storage Vessel* *HLP-VSL-00028 (PTF) HLW Feed Blending Vessel*
Materials of Construction	24590-PTF-N1D-HLP-00007 24590-PTF-MV-HLP-00006 24590-PTF-MV-HLP-00005 24590-PTF-N1D-HLP-00010 24590-PTF-MV-HLP-00004	6 2 2 6 2	*HLP-VSL-00027A&B (PTF) HLW LAG Storage Vessel* *Equipment Assembly HLW LAG Storage Vessel HLP-VSL-00027A* *Equipment Assembly HLW LAG Storage Vessel HLP-VSL-00027B* *HLP-VSL-00028 (PTF) HLW Feed Blending Vessel* *Equipment Assembly HLW Feed Blend vessel HLP-VSL-00028*
Design Pressure (PJM)	24590-BOF-M6C-PSA-00001 24590-PTF-MVE-10-00012	B N/A	*Plant Service Air System Sizing* *Update PJM Cyclic Data and supporting assumptions*
Operating Pressure (PJM)	24590-PTF-MVC-10-00003 24590-PTF-MVE-10-00012	C N/A	*PTF Vessel Cyclic Datasheet Inputs* *Update PJM Cyclic Data and supporting assumptions*
Operating Temperature (PJM)	24590-PTF-M6C-HLP-00003 24590-PTF-M6C-HLP-00004	F F	*Vessel Sizing Calculation for HLW LAG Storage Vessels (HLP-VSL-00027A/B)* *Vessel Sizing Calculation for HLW Feed Blending Process Vessel (HLP-VSL-00028)*
Cyclic Data (Vessel)	24590-PTF-MVC-10-00003 24590-PTF-MVE-10-00006	C N/A	*PTF Vessel Cyclic Datasheet Inputs* *Change assumed number of cycles for HLP-VSL-00027B and HLP-VSL-00028*
Cyclic Data (PJM)	24590-PTF-MVC-10-00003 24590-PTF-MVE-10-00012 24590-WTP-M6C-50-00011	C N/A A	*PTF Vessel Cyclic Datasheet Inputs* *Update PJM Cyclic Data and supporting assumptions* *Pulse Jet Mixer Internal Pressures and Thrust*
Hydrodynamic Loads Vortex Shedding	24590-WTP-MVC-50-00006 24590-WTP-MVC-50-00006	A A	*Hydrodynamic Loads for Normal PJM Operation in Vessels With Non-Newtonian Fluids* *Hydrodynamic Loads for Normal PJM Operation in Vessels With Non-Newtonian Fluids*
Hydrodynamic Loads (Cycles)	24590-PTF-MVE-10-00012	N/A	*DCN to 24590-PTF-MVC-10-00003, Update PJM Cyclic Data and supporting assumptions,* hydrodynamic load cycles are based on PJM operating cycles.
Single PJM Overblow Loads	24590-WTP-MVC-50-00008	C	*Hydrodynamic Loads for PJM Overblow in Vessels With Non-Newtonian Fluids*
PJM Overblow Loads	24590-WTP-MVC-50-00011	B	*Pulse Jet Mixer Overblow Vessel Loads*
Single Overblow Cycles	24590-PTF-MVC-10-00003 24590-PTF-MVE-10-00004	C N/A	*PTF Vessel Cyclic Datasheet Inputs* *Add PJM Overblow Frequency Assumption*

REFERENCES for Data Sheets: 24590-PTF-MVD-HLP-00007, 00008, 00009 *(For BNI Use only)*
Vessel Tags: HLP-VSL-00027A/27B and 28

Data	Document #	Rev	Document Title/ Comments
Multiple Overblow Cycles	24590-PTF-MVC-10-00003	C	*PTF Vessel Cyclic Datasheet Inputs*
	24590-PTF-MVE-10-00004	N/A	*Add PJM Overblow Frequency Assumption*
Nozzle Loads	CCN 124018 (HLP-27A)	N/A	*Nozzle Design Loads for HLP-VSL-00027A*
	CCN 204141 (HLP-27A)	N/A	*Supplemental Nozzle Loads for HLP-VSL-00027A N29, N30, N33, N34, N37*
	CCN 230850 (HLP-27A)	N/A	*Supplemental Nozzle Loads for HLP-VSL-00027A Camera Port Nozzles (N76, N77)*
	CCN 151556 (HLP-27B)	N/A	*Nozzle Design Loads for HLP-VSL-00027B*
	CCN 204151 (HLP-27B)	N/A	*Supplemental Nozzle Loads for HLP-VSL-00027B N29 and N30 revised*
	CCN 229174 (HLP-27B	N/A	*Supplemental Nozzle Loads for HLP-VSL-00027B Nozzle N02*
	CCN 229176 (HLP-27B)	N/A	*Supplemental Nozzle Loads for HLP-VSL-00027B N32, N38, N41*
	CCN 230851 (HLP-27B)	N/A	*Supplemental Nozzle Loads for HLP-VSL-00027B Camera Port Nozzles (N80, N81)*
	CCN 126208 (HLP-28)	N/A	*Nozzle Design Loads for HLP-VSL-00028*
	CCN 191682 (HLP-28)	N/A	*Supplemental Nozzle Loads for HLP-VSL-00028 N29 and N30 revised*
	CCN 230852 (HLP-28)	N/A	*Supplemental Nozzle Loads for HLP-VSL-00028 Camera Port Nozzles (N80, N81)*
	24590-WTP-RPT-ENG-09-040	0	*Seismic Classification and Evaluation for the PTF Facility Piping and Vessels* / Section 3.2 page 19, for 1.75 seismic factor to RGM nozzle loads

Notes:
1. Vessel bottom head - additional erosion allowance from reference 24590-WTP-M0C-50-00004 Rev E, Table 10-7 (24590-WTP-M0E-50-00014 Attachment 10-11) shows a vessel erosion allowance of 0.768" (max) for HLP-VSL-000027A/B and 0.903" (max) for HLP-VSL-00028. This erosion allowance is accounted for via the 1" thick wear plates installed in the vessel bottom head directly under the PJM outlet nozzle.
2. PJM additional erosion allowance from reference 24590-WTP-M0C-50-00004 Rev E, Table 10-5, show an erosion allowance of 0.093" (HLP-27A/B) and 0.117" (HLP-28) for the stellite 12 material used in the PJM cones. The minimum thickness requirement for the PJM stellite cone material is 0.4375".

MECHANICAL DATA SHEET: VESSEL
EQUIPMENT QUALIFICATION

PLANT ITEM No.
24590-PTF-MV-HLP-VSL-00028
ISSUED BY
RPP-WTP PDC

R11256243

Project:	***RPP-WTP***	P&ID: 8	***24590-PTF-M6-HLP-00003001***
Project No:	***24590***	Calculations: 8	***See Attachment 1***
Project Site:	***Hanford***	Vessel Drawing	***24590-PTF-MV-HLP-00004, 24590-PTF-MV-HLP-00012,***
Description:	***HLW Feed Blend Vessel***	Reports 8	***See Attachment 1***

Reference Data

Charge Vessels (Tag Numbers)	***Deleted***
Pulsejet Mixers / Agitators (Tag Numbers)	***HLP-PJM-00076, HLP-PJM-00077, HLP-PJM-00078, HLP-PJM-00079, HLP-PJM-00080, HLP-PJM-00081, HLP-PJM-00082, HLP-PJM-00083***
RFDs/Pumps (Tag Numbers)	***Deleted***

Design Data

Quality Level		***Q (Note 14)***	Fabrication Specs	***24590-WTP-3PS-MV00-T0001***		
Seismic Category		***SC-I***	Design Code	***ASME VIII Div 1***		
Service/Contents		***Radioactive Slurry***	Code Stamp	***Yes***		
Design Specific Gravity		***1.5***	NB Registration	***Yes***		
Maximum Operating Volume	gal	***125,430 (Note 4)*** 8	Weights (lbs)	Empty	Operating	Test
Total Volume	gal	***142,200 (Note 4)*** 8	Estimated	***375,000***	***2,153,000***	***1,666,000***

Inside Diameter	inch	***318***			Wind Design	***Not Required***	
Length/Height (TL-TL)	inch	***348***			Snow Design	***Not Required***	
		Vessel Operating	Vessel Design	Coil/Jacket Design	Seismic Design	***24590-WTP-3PS-SS90-T0001 24590-WTP-3PS-MV00-T0002***	
Internal Pressure	psig	***0***	***15***	***35***			
External Pressure 8	psig	***1.5***	***2.0 (Note 2)***	***0***	Postweld Heat Treat	***Not Required***	
Temperature 8	°F	***140***	***237***	***237***	Corrosion Allowance	Inch	***0.04 (Note 3)***
Min. Design Metal Temp.	°F	***40***					

Materials of Construction

Component	Material	Minimum Thickness / Size	Containment
Top Head	***SA 240 316 (Note 8)***	***See Drawing***	***Auxiliary (Note 1)***
Shell	***SA 240 316 (Note 8)***	***See Drawing***	***Primary (Note 1)***
Bottom Head	***SA 240 316 (Note 8)***	***See Drawing***	***Primary (Note 1)***
Wear Plate	***SA 240 316 (Note 8)***	***See Drawing***	***N/A***
Support	***SA 240 304 (Note 8)***	***See Drawing***	***N/A***
Jacket/Coils/Half-Pipe Jacket	***SA 240 316 (Note 8)***	***See Drawing***	***N/A***
Internals	***SA 240 316 (Note 8), except as noted***	***See Drawing***	***Thermowells Primary (Note 1)***
Pipe 8	***SA312 TP316 Smls (Note 8 and Note 17)***	***See Drawing***	***See Note 1***
Forgings/ Bar stock	***SA 182 F316 (Note 8)***	***See Drawing***	***Note 1 for Nozzle Necks***
Wash Ring Pipe	***SA 312 TP316 Smls (Note 8)***	***See Drawing***	***N/A***
Bolting/ Gaskets	***N/A***	***N/A***	***N/A***
Pulse Jet Mixer Nozzles	***Cast Stellite 12,with SA 240 316 (Note 8) Shroud***	***N/A***	***N/A***
Recirculation Nozzles	***SA 240 316 (Note 8)***	***See Drawing***	***N/A***
PJM Cluster Fill / PJM Nozzle Fill 8	***Concrete (Note 12)***	***See Drawing***	***N/A***

Miscellaneous Data

Orientation	***Vertical***	Support Type	***Skirt***
Insulation Function	***Not Applicable***	Insulation Material	***Not Applicable***
Insulation Thickness (inch)	***Not Applicable***	Weld Surface Finish	***De-scaled as laid (Note 7)***

Notes/Remarks

Note 1: ***All welds forming part of the primary and auxiliary containments, including the nozzle attachment welds shall be subjected to 100% volumetric examination.***

Note 2: ***External design pressure for the shell areas under the jacket shall be rated for the jacket internal design pressure plus 2.0 PSIG (negative) vessel external design pressure to account for ventilation fan pressures.*** △8

Note 3: ***- Corrosion allowance for jacket shall be 0.04 inch.***

△8 ***- Vessel bottom head - reference 24590-WTP-M0E-50-00014 Attachment 10-11 provides additional vessel erosion allowance of 0.903" (max) for HLP-VSL-00028. This erosion allowance is accounted for via the 1" thick wear plates installed in the vessel bottom head directly under the PJM outlet nozzle.***
- PJM additional erosion allowance from reference 24590-WTP-M0C-50-00004 Rev E, Table 10-5, provides an erosion allowance of 0.117" (HLP-28) for the stellite 12 material used in the PJM cones. The minimum thickness requirement for the PJM stellite cone material is 0.4375".

Note 4: ***Vessel volumes are approximate and do not account for manufacturing tolerances, nozzles, and displacement of all internals, supports and cluster.*** △8

Note 5: ***Contents of this document are Dangerous Waste Permit affecting.***

Note 6: ***Deleted.***

Note 7: ***Grind smooth shell welds at shell-jacket welds.***

Note 8: ***Maximum carbon content of 0.030% for all welded components.***

Note 9: ***Deleted.*** △8

Note 10: ***This vessel is located in a Black Cell.***

Note 11: ***Deleted per report N0. 24590-WTP-RPT-M-04-00007 dated Nov. 01, 2004***

Note 12: △8 ***(a) The intent is to provide a concrete mix with low chlorides, low moisture, low porosity and inhibits corrosion. The concrete formulation and blending should follow the relevant paragraphs in ASTM C 94, Option B. The Portland cement should be Type I/II conforming to ASTM C 150. Coarse aggregates shall be no larger than 3/4" diameter. The coarse and fine aggregates should be tested for chloride content using ASTM C 1152 and requiring less than 0.01% (100 ppm) acid-soluble chloride, and by limiting the water chloride content to less than 200 ppm. The concrete mix shall include chemical admixtures, follow ASTM C494 for control over admixtures. A final report, see ASTM C494 Section 19, shall be submitted, the report is required to have a precision statement.***

Additional WTP requirements:

- ***Do not use blast furnace slag in the concrete.***
- ***To reduce the permeability, the water-to-cement ratio shall be low, lower than 0.40%, using a Type F admixture in quantities that have no adverse effects on fresh and hardened properties.***
- ***To reduce the corrosion, an admixture shall be used, calcium nitrate is to be added at a concentration no more than 32 lb/yd^3.***
- ***Use Type F fly ash and silica fume, to reduce porosity, add in quantities to minimize porosity with no adverse effects on fresh and hardened properties.***

The concrete is to fill the entire cluster volume up to the bottom of the fill nozzle. Concrete shall be poured in a manner that allows for the even distribution of aggregate and mechanically vibrated to assure no major pockets or voids. Concrete is to be poured through more than one nozzle, in lifts. The seam between lifts is not important.

- ***Because of the unique geometry and inability to rework or repair the concrete, assurance that the fill is complete and 100% filled via in-process observance, boroscope or other methods. Fill report shall be provided.***
- ***Curing: The concrete shall be thoroughly cured (at least 30 days) before the shroud is closed.***
- ***The seller shall submit mix design and complete procedure for concreting for buyer's approval.***
- ***The concrete fill can be purchased commercial***

△8 ***(b). Fill gap completely between PJM shroud and stellite nozzles with Aremco 646-N Ceramacast (or equal), see CCN 156345 for procedure.***

Note 13: ***Deleted.*** △8

Note 14: ***Vessel to be designed, fabricated, tested to L-1 and black cell requirements defined in 24590-WTP-3PS-MV00-T0001.***

REMARKS CONTINUED:

Note 15: ***Clarification to quality level, revised specific gravity, operating external pressure, revised vessel external design pressure, revised jacket external pressure, revised operating temperature, added Data Reference, revised Note 2, added Note 14 and Note 15, added functional/safety requirements, added section on Seismic, change to parent vessel cyclic data, change to hydrodynamic loads for normal operations, change to PJM cyclic data, added E&NS table and signature, added section for "Hydrodynamic Loads -Pulse Jet Mixers", added section for "Multiple Overblow PJMs" added section for HPAV Load Conditions, added section for nozzle loads, included environmental qualifications data, added DOE disclaimer. If any Sections contain a revision triangle △# next to the Section heading the entire section must be reviewed for changes/additions.***

Note 16: △8 ***Per CCN 193847, replaced ISRS curves with WSGM curves which provide for a lower acceleration value. Removed HPAV loads and Functional/Safety Requirements. Revised entire Equipment Qualification Sections. Replaced PJM Overblow Loads and added Cluster Overblow Loads. Renumbered Equipment Qualification Notes and numbered/revised Nozzle Load Notes. If any Sections contain a revision triangle △# next to the Section heading the entire section must be reviewed for changes/additions.***

Note 17: ***Nozzle material for (4" diameter) N29A and N30A shall be SB622 (N06022) seamless Hastelloy C-22. Nozzles N29 and N30 (both 6" diameter) act as sleeve (material SA-312-TP-316 smls) for N29A and N30A.*** △8

	MECHANICAL DATA SHEET: VESSEL EQUIPMENT QUALIFICATION	PLANT ITEM No. *24590-PTF-MV-HLP-VSL-00028*

Hydrodynamic Loading - Pulse Jet Mixers (PJMs) 8

Pulse Jet Mixers (PJMs) are designed to mix the vessel content using a liquid jet discharge. PJM's are driven by compressed air. The mixing is required to enhance the heat transfer from the fluid to the cooling jackets, to homogenize the solution and to release hydrogen from the fluid.
The PJMs operate in the following three cycles: Suction, Drive and Vent. During the suction cycle a vacuum is created in the PJM headspace and the level within the PJM rises to fill the PJM. During the drive cycle the PJM is pressurized and liquid is discharged. During the vent cycle, the pressure in the headspace approaches atmospheric and the level within the PJM is allowed to reach equilibrium.
Vessel components shall be designed to withstand loading induced by PJM operations as described here-in.

Normal Operations : Liquid flows around internal structures within the parent vessel producing hydrodynamic loads such as drag and vortex shedding. Reference the section below for "Normal Operating" loads and "Vortex Shedding" frequencies.

Overblow Condition: Occasionally the drive cycle lasts too long and compressed air is discharged from the PJM. Overblows can also occur during system calibration. One or more multiple PJM's may overblow at any time. These conditions induce acoustic and bubble rise loads on structures and components. Overblow loading conditions are provided in the tables and charts below.

All internal components shall be designed for the combination of normal operations hydrodynamic loads and overblow loads. Single overblows (SOB) act concurrently with the seismic event and other operational loads. Multiple Overblows (MOB) do not act concurrently with the seismic event but are combined with other operational loadings. Figures 1, 2, and 3 below in the "PJM Overblow Loads" section provides the acoustic load intensity and application that encompasses both SOB and MOB.

Normal Operations Loading - PJMs

Description	*Pulse jet mixers (PJM) impose a cyclical hydrodynamic load on all internal components. The components shall be designed and supported against these hydrodynamic loads due to normal operations. The following table indicates the hydrodynamic pressure for normal conditions at ranges of elevations in the vessel and the number of design cycles for this condition. The hydrodynamic forces cycle between the indicated pressure ranges applied across the projected area of the component. Positive hydrodynamic forces act in the radial, outward direction and the vertical, upward direction. Seller shall apply the radial load simultaneously in the radial direction and normal to the radial direction in the horizontal plane. This load combination acts concurrently with seismic loads for normal PJM operations.*	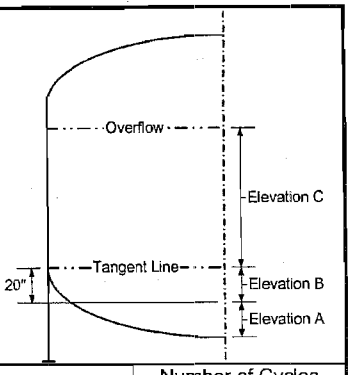

Condition	Hydrodynamic Pressure Range, psi						Number of Cycles
	Elevation A		Elevation B		Elevation C		
	Radial	Vertical	Radial	Vertical	Radial	Vertical	
Normal Operation	*-0.030 to 0.020*	*-0.030 to 0.020*	*-0.030 to 0.020*	*-0.030 to 0.020*	*-0.025 to 0.057*	*-0.028 to 0.032*	*3.7E6* 8

8 Vortex Shedding

To mitigate the dynamic effects, the following pipe sizes dipped internal to the vessel are required to have a minimum first natural frequency that is double the vortex shedding frequency:

Nominal Pipe Size	*Minimum First Natural Frequency*
1 inch nominal	*4.8 Hz**
2 inch nominal	*2.6 Hz**
3 inch nominal	*1.0 Hz***

* *See 24590-WTP-MVC-50-00006, Section 8.2.2*
** *By extrapolation from 1 inch and 2 inch*

PJM Overblow Loads 8

Discussion: *During normal operation, pulse jet mixers (PJMs) mix the fluid by pulling in (suction) and pushing out (drive) fluid. During an upset condition, designated as an 'overblow', air is discharged following the drive cycle of one or more PJMs. The load consists of acoustic pressure (2Hz to 200Hz) developed in the first 200ms of the event and a load due to the bubble rising through the fluid.*

The acoustic load and the bubble load are design loads as defined by ASME B&PVC, Section 8, Division 1, UG-22, applied statically. The acoustic load is not added to the bubble rise load because they occur at different times during the overblow event.

Acoustic Load

- ***The acoustic design load in Figure 1 is applied to the visible (as viewed from the overblow origin) surface of cylindrical targets such as pipes, charge vessels, and PJMs. The load is applied in the direction normal to the principal axis of the target as illustrated in Figure 2. Note: The intended net effective load on the target is equal to the projected (i.e. cross-sectional) area of the object times the acoustic design load (psi) indicated in Figure 1.***
- ***Each target is considered independent of the surrounding targets: e.g. the surrounding targets do not impede the acoustic wave by casting a shadow, as illustrated in Figure 2.***
- ***The load is <u>not</u> applied to small supports such as gussets, brackets, tabs, clamps, and bolts because they are rigid and the pressure drop across the target is negligible.***
- ***When the vessel contains multiple PJMs, the load from one PJM is independent of the load from other PJMs. The loads are not additive for multiple overblows.***
- ***No internal components shall be placed within 5 PJM nozzle diameters (5 * 4 in = 20 in) of a spherical zone centered at any overblowing PJM nozzle.***

Figure 1: Acoustic Design Load

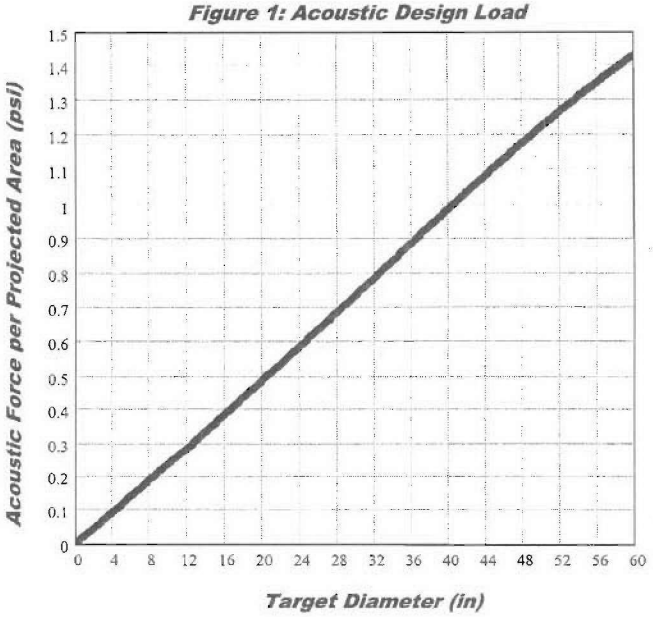

Figure 2: Load Application

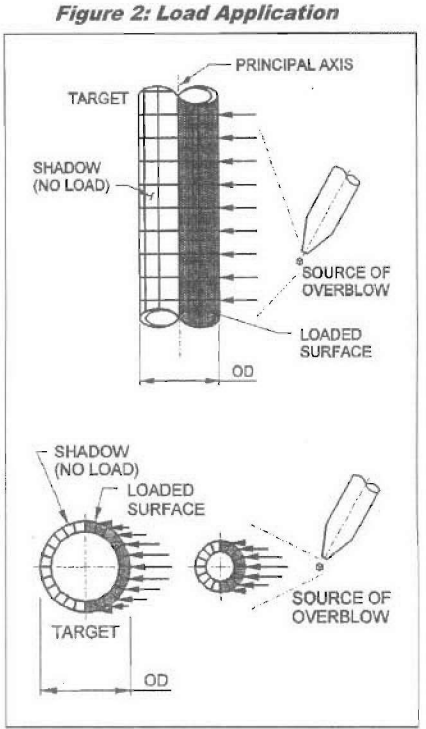

The following data is required to determine the load:

- ***Target Diameter***
- ***Target Principal Axis***
- ***Overblow Source Coordinates***

Number of Acoustic Cycles	***1000 events X 40 cycles/event for a total of 40,000 cycles***
Bubble Rise Load	***A vertical force per projected area of 1.7 psi is applied to the surfaces in the 36-inch diameter cylindrical zone centered at the overblowing PJM(s). The bubble can be at any elevation above the overblowing PJM and only affects one zone (36-inch diameter region) at a time. When there are multiple PJMs in a vessel (MOB), each PJM has it's own bubble. To simplify analysis the bubble can be applied in a continuous cylindrical zone above each PJM.***
Number Bubble Rise Cycles	***1000 events X 1 cycle/event for a total of 1,000 cycles***

PJM Cluster Overblow Load 8

Discussion: The acoustic design pressure on the cluster is determined from equation 5-8 in 24590-WTP-MVC-50-00011, Rev B. The worst-case orientation of the load needs to be determined by the user.

Acoustic Load	***The following is the load magnitude for the PJM Cluster in HLP-VSL-00027A/B/28 with an outer radius of 89.5 inches measured to the outer most radii of the cluster. Follow the steps described below:*** ***1. Isolate the PJM Cluster and supports from parent vessel*** ***2. Run a modal analysis and determine the first frequency*** ***3. Use Figure 3 (below) to find the acoustic force per projected area*** ***4. Apply the static load in the same orientation as Indicated in Figure 2 (above)*** Figure 3: Acoustic Design Pressure on Cluster 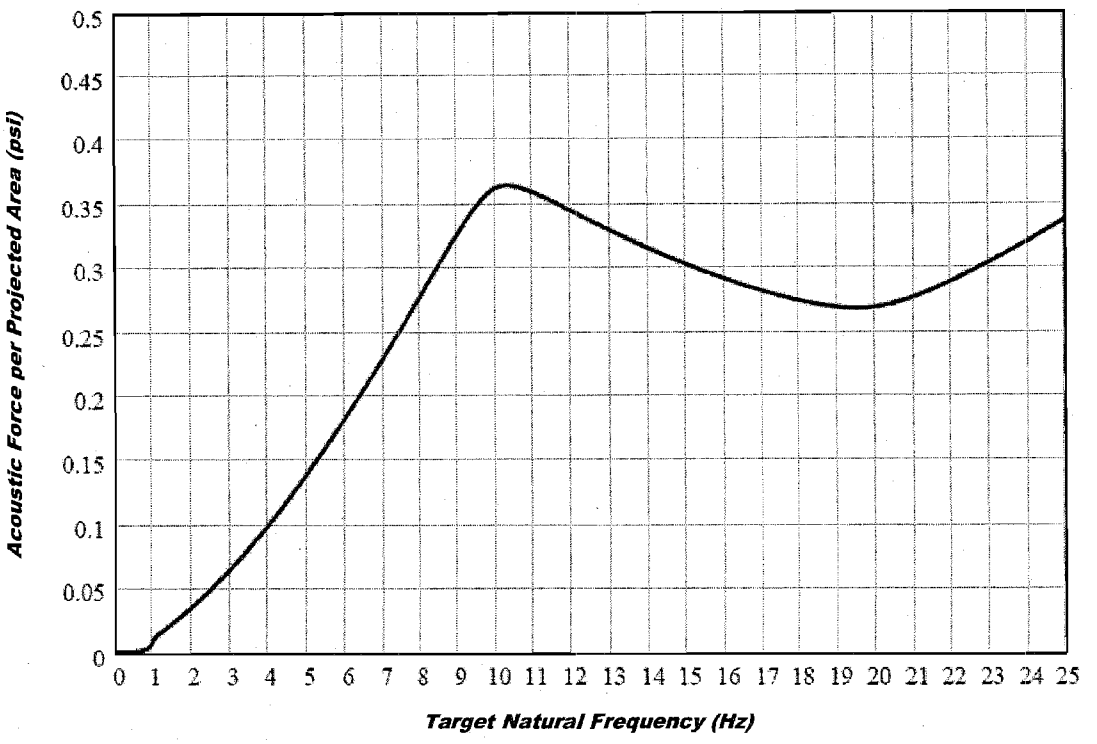
Number of Acoustic Cycles	***1000 events X 40 cycles/event***

BECHTEL	**MECHANICAL DATA SHEET: VESSEL** **EQUIPMENT QUALIFICATION**	PLANT ITEM No. ***24590-PTF-MV-HLP-VSL-00028***

Equipment Cyclic Data Sheet - Parent Vessel 8

Plant Item Number	***24590-PTF-MV-HLP-VSL-00028***
Component Description	***Parent Vessel***

The information below is provisional and envelopes operational duty for fatigue assessment. It is not to be used as operational data.

Materials of Construction		***SA 240 316 with max. Carbon of 0.030 %***			
Design Life		***40 years***			
Component Function and Life Cycle Description		**This vessel is filled and drained over a period of 8 days, resulting in 2000 cycles over a 40 year life. The vessel is drained and the internals are washed yearly. The temperature is maintained normally at or below 140°F.**			
Load Type		Min	Max	Number of Cycles	Comment
Design Pressure	psig	***-8***	***15***	***10***	***Nominal assumption for testing***
Operating Pressure	psig	***-1.5*** ***-1.5***	***0*** ***2.8***	***7.0E6*** ***40***	***Maximum Operating*** ***Loss of Power***
Operating Temperature	°F	***59***	***140***	***2000***	***Uniform material temperature range, not between two points. Temperature cycling is not required by design.***
Contents Specific Gravity		***1.00***	***1.5***	***2000***	***Nominal assumption. Coincident with contents level cycles***
Contents Level	inch	***24***	***392***	***2000***	***Content level measured from center of bottom head***
Localized Features					
Nozzles **N29A** and **N30A**	°F	***59***	***212***	***2000***	***Localized affect for Nozzles N29A and N30A***
Cooling Jacket 8	°F				***Cooling Water inlet temperature is 50° F (max)***

Notes

- ***Cycle increase: The Seller must increase the numbers of operational cycles given above by 10% to account for commissioning duty unless otherwise noted.***

Equipment Cyclic Data Sheet - PJMs 8

Component Plant Item Number	***HLP-PJM-00076, HLP-PJM-00077, HLP-PJM-00078, HLP-PJM-00079, HLP-PJM-00080, HLP-PJM-00081, HLP-PJM-00082, HLP-PJM-00083***
Component Description	***Pulse Jet Mixers***

The information below is provisional and envelopes operational duty for fatigue assessment. It is not to be used as operational data.

Materials of Construction	***SA 240 316 with max. Carbon of 0.030 %***
Design Life	***40 Years***
Component Function and Life Cycle Description	***These pulse jet mixers (PJMs) are cyclically loaded using vacuum to fully fill the PJM with process liquid and compressed air to fully empty the PJM. The PJMs are contained within a parent vessel with varying liquid level. They shall be designed to cycle between the maximum design pressure and the minimum design pressure plus the external static head imposed by the parent vessel. The PJM supports shall be designed to cycle between fully buoyant (PJM empty and parent vessel full) and fully loaded (PJM full and parent vessel empty) states. Thrust load shall be applied only to the fully buoyant state. Assume the parent vessel is full for 50% of the number of PJM cycles.***

Load Type		Min	Max	Number of Cycles	Comment
Design Pressure	psig	***FV***	***80***	***100***	***Nominal assumption***
Operating Pressure	psig	***FV***	***49***	***3.7E6***	***Pressure cycles to be at 140° F and non-coincident with temperature cycles***
Operating Temperature	°F	***59***	***140***	***2000***	***Parent Vessel will be operated normally at or below 140°F***
Contents Specific Gravity		***1.00***	***1.5***	***2000***	
Contents Level	inch	***Empty***	***Flooded***	***3.7E6***	
Thrust	lbf	***-394***	***394***	***3.7E6***	
Localized Features					
Supports		***buoyant to loaded***		***3.7E6***	

Notes

- ***Cycle increase: The Seller must increase the numbers of operational cycles given above by 10% to account for commissioning duty unless otherwise noted.***

Nozzle Loads 8

Nozzle	Size	Load Type	Loads - lbs	Moments - ft-lbs

Nozzle Loads 8

Nozzle	Size	Load Type	Loads - lbs			Moments - ft-lbs		
			Fx	Fy	Fz	Mx	My	Mz
N01	24"	Weight	Manway (No loads applied)					
		Seismic						
		Thermal						
N02	8"	Weight	234	373	234	741	464	464
		Seismic	2189	2121	4090	5159	27300	11165
		Thermal	893	1480	1193	3600	7193	14537
N04	6"	Weight	N04 is parent nozzle, nozzle loads are applied via N04A, N04B, N04C					
		Seismic						
		Thermal						
N04A (Note C)	1"	Weight	15	20	15	20	20	20
		Seismic	53	35	53	65	96	96
		Thermal	30	29	40	38	77	77
N04B (Note C)	1"	Weight	15	20	15	20	20	20
		Seismic	53	35	53	65	96	96
		Thermal	30	32	40	38	77	77
N04C (Note C)	1"	Weight	15	20	15	20	20	20
		Seismic	53	35	53	65	96	96
		Thermal	30	26	40	38	77	77
N05	10"	Weight	264	421	264	1410	885	885
		Seismic	2048	956	1432	9634	14438	14438
		Thermal	953	848	1286	6375	12750	12750
N06	4" Spare	Weight	87	140	87	216	135	135
		Seismic	480	320	480	1537	2310	2310
		Thermal	295	263	393	945	1890	1890
N07	2"X1"	Weight	50	60	50	75	75	75
		Seismic	186	123	186	277	415	415
		Thermal	114	100	152	169	337	337
N08	6"	Weight	N08 is parent nozzle, nozzle loads are applied via N08A, N08B, N08C					
		Seismic						
		Thermal						
N08A (Note C)	1"	Weight	15	20	15	20	20	20
		Seismic	53	35	53	72	96	102
		Thermal	30	26	40	38	77	77
N08B (Note C)	1"	Weight	15	20	15	20	20	20
		Seismic	53	35	53	65	96	96
		Thermal	30	26	40	38	77	77
N08C (Note C)	1"	Weight	15	20	15	20	20	20
		Seismic	53	35	53	68	96	96
		Thermal	30	26	40	38	77	77
N09	6"	Weight	N09 parent nozzle, nozzle loads are applied via N09A, N09B, N09C					
		Seismic						
		Thermal						
N09A (Note C)	1"	Weight	15	20	15	20	20	20
		Seismic	53	35	53	65	96	96
		Thermal	30	26	40	38	77	77

Nozzle	Size	Load Type	Loads - lbs			Moments - ft-lbs		
			Fx	Fy	Fz	Mx	My	Mz
N09B (Note C)	1"	Weight	15	20	15	20	20	20
		Seismic	53	35	53	65	96	96
		Thermal	30	26	40	38	77	77
N09C (Note C)	1"	Weight	15	20	15	20	20	20
		Seismic	53	35	53	65	96	96
		Thermal	30	26	40	38	77	77
N10	2"	Weight	50	97	50	75	75	75
		Seismic	194	210	186	277	842	966
		Thermal	114	100	152	169	337	337
N11	2"	Weight	50	60	50	75	75	75
		Seismic	186	123	205	277	415	415
		Thermal	114	134	254	292	337	337
N12	2"	Weight	50	111	50	81	75	75
		Seismic	186	443	186	833	415	415
		Thermal	114	100	152	169	337	337
N13	2"	Weight	50	71	50	75	75	75
		Seismic	186	149	186	378	415	499
		Thermal	114	142	152	175	337	337
N14	2"	Weight	50	60	50	75	75	75
		Seismic	186	123	186	277	415	415
		Thermal	114	100	152	169	337	337
N15	2"	Weight	50	60	50	75	75	75
		Seismic	186	180	186	277	415	415
		Thermal	114	100	152	193	337	337
N16	2"	Weight	50	60	50	75	75	75
		Seismic	186	163	186	277	415	415
		Thermal	114	100	152	195	337	337
N17	2"	Weight	50	63	50	75	75	75
		Seismic	235	154	208	921	415	929
		Thermal	114	100	152	169	337	337
N18	2"	Weight	50	60	50	75	75	75
		Seismic	186	123	186	756	415	749
		Thermal	114	100	152	169	337	337
N19	2"	Weight	59	60	50	75	75	75
		Seismic	186	123	186	277	415	415
		Thermal	114	100	152	169	337	337
N20	2"	Weight	50	67	50	75	75	75
		Seismic	186	326	186	406	415	415
		Thermal	114	100	152	169	337	337
N21	2"	Weight	50	60	50	75	75	75
		Seismic	186	159	186	277	415	438
		Thermal	114	100	152	169	337	337
N25	2" Spare	Weight	50	60	50	75	75	75
		Seismic	186	123	186	277	415	415
		Thermal	114	100	152	169	337	337

Nozzle	Size	Load Type	Loads - lbs			Moments - ft-lbs		
			Fx	Fy	Fz	Mx	My	Mz
N27	3"	Weight	52	193	52	332	75	75
		Seismic	621	634	635	1509	1808	1474
		Thermal	171	153	229	498	998	998
N28	2" Spare	Weight	50	60	50	75	75	75
		Seismic	186	123	186	277	415	415
		Thermal	114	100	152	169	337	337
N29 / N29A	6" / 4"	Weight	20	200	20	100	100	300
		Seismic	175	175	175	438	438	438
		Thermal	650	500	475	750	1200	1200
N30 / N30A	6" / 4"	Weight	20	200	20	100	100	300
		Seismic	175	175	175	438	438	438
		Thermal	650	500	475	750	1200	1200
N31	3" Spare	Weight	52	84	52	119	75	75
		Seismic	284	189	284	819	1227	1227
		Thermal	171	153	229	498	998	998
N32	3"	Weight	52	158	52	129	75	75
		Seismic	445	329	319	845	1227	1227
		Thermal	171	234	229	498	998	998
N33	2"	Weight	50	155	50	75	75	81
		Seismic	186	173	186	497	415	415
		Thermal	114	100	152	169	337	337
N34	3"	Weight	52	127	52	150	75	75
		Seismic	523	415	284	819	1227	1227
		Thermal	171	153	229	498	998	998
N36	4"	Weight	87	160	87	216	135	428
		Seismic	480	320	480	1537	2310	2310
		Thermal	295	263	393	945	1890	1890
N37	3"	Weight	52	107	52	119	75	75
		Seismic	375	249	284	847	1227	1227
		Thermal	171	167	229	498	998	998
N38	3"	Weight	52	84	52	119	75	75
		Seismic	284	189	299	1141	1227	1398
		Thermal	171	153	229	498	998	998
N39	4"	Weight	87	140	87	216	135	350
		Seismic	480	326	781	1537	2503	2310
		Thermal	295	263	393	945	1890	1890
N40	4"	Weight	87	228	87	271	135	593
		Seismic	704	320	480	1537	6069	2310
		Thermal	295	263	393	945	1890	1890
N41	3"	Weight	80	84	52	119	102	75
		Seismic	284	231	347	819	1227	1227
		Thermal	410	457	229	987	998	998
N43	2"	Weight	50	60	50	75	75	75
		Seismic	186	123	186	277	415	415
		Thermal	114	100	152	169	337	337

Nozzle	Size	Load Type	Loads - lbs			Moments - ft-lbs		
			Fx	Fy	Fz	Mx	My	Mz
N44	2"	Weight	50	60	50	75	75	75
		Seismic	186	123	186	277	415	415
		Thermal	114	100	152	169	337	337
N45	2"	Weight	50	60	50	75	75	75
		Seismic	186	123	186	277	415	415
		Thermal	114	100	152	169	337	337
N46	2"	Weight	50	60	50	75	75	75
		Seismic	186	123	186	277	415	415
		Thermal	114	100	152	169	337	337
N47	2"	Weight	50	60	50	75	75	75
		Seismic	186	123	186	277	415	415
		Thermal	114	100	152	169	337	337
N48	2"	Weight	50	60	50	75	75	75
		Seismic	186	123	186	277	415	415
		Thermal	114	100	152	169	337	337
N49	2"	Weight	50	60	50	75	75	75
		Seismic	186	123	186	277	415	415
		Thermal	114	100	152	169	337	337
N50	2"	Weight	50	60	50	75	75	75
		Seismic	186	123	186	277	415	415
		Thermal	114	100	152	169	337	337
N51	2"	Weight	50	60	50	75	75	75
		Seismic	186	123	186	277	415	415
		Thermal	114	100	152	169	337	337
N52	2"	Weight	50	60	50	75	75	75
		Seismic	186	123	186	277	415	415
		Thermal	114	100	152	169	337	337
N53	2"	Weight	50	60	50	75	75	75
		Seismic	186	123	186	277	415	415
		Thermal	114	100	152	169	337	337
N54	2"	Weight	50	60	50	75	75	75
		Seismic	186	123	186	277	415	415
		Thermal	114	100	152	169	337	337
N55	2"	Weight	50	60	50	75	75	75
		Seismic	186	123	186	277	415	415
		Thermal	114	100	152	169	337	337
N56	2"	Weight	50	60	50	75	75	75
		Seismic	186	123	186	277	415	415
		Thermal	114	100	152	169	337	337
N57	2"	Weight	50	60	50	75	75	75
		Seismic	186	123	186	277	415	415
		Thermal	114	100	152	169	337	337
N58	2"	Weight	50	60	50	75	75	75
		Seismic	186	123	186	277	415	415
		Thermal	114	100	152	169	337	337

Nozzle	Size	Load Type	Loads - lbs			Moments - ft-lbs		
			Fx	Fy	Fz	Mx	My	Mz
N59	2"	Weight	50	60	50	75	75	75
		Seismic	186	123	186	277	415	415
		Thermal	114	100	152	169	337	337
N60	2"	Weight	50	60	50	75	75	75
		Seismic	186	123	186	277	415	415
		Thermal	114	100	152	169	337	337
N61	2"	Weight	50	60	50	75	75	75
		Seismic	186	123	186	277	415	415
		Thermal	114	100	152	169	337	337
N62	2"	Weight	50	60	50	75	75	75
		Seismic	186	123	186	277	415	415
		Thermal	114	100	152	169	337	337
N63	2"	Weight	50	60	50	75	75	75
		Seismic	186	123	186	277	415	415
		Thermal	114	100	152	169	337	337
N64	2"	Weight	50	60	50	75	75	75
		Seismic	186	123	186	277	415	415
		Thermal	114	100	152	169	337	337
N65	2"	Weight	50	60	50	75	75	75
		Seismic	186	123	186	277	415	415
		Thermal	114	100	152	169	337	337
N66	2"	Weight	50	60	50	75	75	75
		Seismic	186	123	186	277	415	415
		Thermal	114	100	152	169	337	337
N67	2"	Weight	50	60	50	75	75	75
		Seismic	186	123	186	277	415	415
		Thermal	114	100	152	169	337	337
N68	2"	Weight	50	60	50	75	75	75
		Seismic	186	123	186	277	415	415
		Thermal	114	100	152	169	337	337
N69	2"	Weight	50	60	50	75	75	75
		Seismic	186	123	186	277	415	415
		Thermal	114	100	152	169	337	337
N70	2"	Weight	50	60	50	75	75	75
		Seismic	186	123	186	277	415	415
		Thermal	114	100	152	169	337	337
N71	2"	Weight	50	60	50	75	75	75
		Seismic	186	123	186	277	415	415
		Thermal	114	100	152	169	337	337
N72	2"	Weight	50	60	50	75	75	75
		Seismic	186	123	186	277	415	415
		Thermal	114	100	152	169	337	337
N73	2"	Weight	50	60	50	75	75	75
		Seismic	186	123	186	277	415	415
		Thermal	114	100	152	169	337	337

Nozzle	Size	Load Type	Loads - lbs			Moments - ft-lbs		
			Fx	Fy	Fz	Mx	My	Mz
N74	2"	Weight	50	60	50	75	75	75
		Seismic	186	123	186	277	415	415
		Thermal	114	100	152	169	337	337
N75	2"	Weight	50	60	50	75	75	75
		Seismic	186	123	186	277	415	415
		Thermal	114	100	152	169	337	337
N76	2"	Weight	50	60	50	75	75	75
		Seismic	186	123	186	277	415	415
		Thermal	114	100	152	169	337	337
N77	2"	Weight	50	60	50	75	75	75
		Seismic	186	123	186	277	415	415
		Thermal	114	100	152	169	337	337
N78	2"	Weight	50	60	50	75	75	75
		Seismic	186	123	186	277	415	415
		Thermal	114	100	152	169	337	337
N80	8"	Weight	475	475	475	475	475	475
		Seismic	1313	1313	1313	1313	1313	1313
		Thermal	600	600	600	600	600	600
N81	8"	Weight	475	475	475	475	475	475
		Seismic	1313	1313	1313	1313	1313	1313
		Thermal	600	600	600	600	600	600

Notes for Nozzle Loads △8

A. Direction of load application is per diagrams in 24590-WTP-3PS-MV00-T0001 Appendix A.

B. *For nozzles in head: x = North/South, y = Vertical, and z = East/West - Vessel 0° defined as north.*

C. *Values provided at plate on top of parent nozzle. Loads for 6" instrument nozzles are summed from 1" - A, B and C loads.*

D. *Nozzle loads shown are to be used in place of those specified in 24590-WTP-3PS-MV00-T0001 -- do not apply any thermal reduction factors.*

E. *All Pretreatment RGM Seismic Piping Nozzle loads from Plant Design have a 1.75 load factor applied to all seismic loads to address coupling effects between the flexible vessels and piping in accordance with the Seismic Classification and Evaluation for the Pretreatment Facility Piping and Vessels 24590-WTP-RPT-ENG-09-040. (BNI use only, see CCN 229865 for nozzle load management).*

F. *Apply loads at the vessel head to 6" nozzle junction*

EQUIPMENT QUALIFICATION DATASHEET (EQD)

Equipment Identification

Component Tag Number	24590-PTF-MV-HLP-VSL-00028	Safety Classification	☒ SC ☐ SS ☐ APC ☐ SDC ☐ SDS ☐ RRC
Manufacturer / Supplier	Harris Thermal		
Requisition Number	24590-QL-MRB-MVA0-00001		
Model	Custom	Seismic Category	☒ SC-I ☐ SC-II ☐ SC-III ☐ SC-IV
Description (Include descriptive text [e.g., location, elevation])	HLW Lag Storage Vessel. Elevation 0'-0", Column Lines J and 20. 8		
Safety Function(s)	HLP-VSL-00028 (parent vessel) is considered a high active process vessel credited to prevent spills of large quantities of high activity process liquid and provide primary confinement for radioactive releases. Pulse Jet Mixers (PJMs) provide a mixing function in the vessel to prevent hydrogen accumulation. Air sparger piping provides air to mix solids and dilute hydrogen to prevent hydrogen accumulation. Vessel level instrumentation provides level monitoring to prevent overflows of non-Newtonian fluids into Newtonian overflow vessels and ensure proper headspace volumes are maintained for hydrogen dilution. (24590-WTP-PSAR-ESH-01-002-02 Rev 4q, Section 4.3.4, 4.3.5, and Table 4A-1) 8		

Seismic Safety Function	☒ Yes ☐ No	Room Number(s):	P-0102A
Maintenance Accessible	☐ Yes ☒ No	Method of Maintenance Access:	☐ Remote ☐ Hands On ☒ None
Seismic Operability Requirements:	☒ During Seismic Event	☒ After Seismic Event	
ITS Equipment Type:	☒ Passive Mechanical	☐ Active Mechanical	☐ Electrical

Equipment Environmental Qualification (EEQ)

Environment ☒ Mild ☐ Harsh Contamination Class: C5 Radiation Class: R5	Hi Rad Service ☒ Yes ☐ No	Design Life (yrs) ☒ 40 ☐ Other ____

Parameter Type/Units	Parameter Value	Time Duration (number)	Time Units	WTP Document Number (BUYER)	Submittal Number (SELLER)
Normal					
Normal High Temperature (°F)	113	40	yrs	24590-PTF-U0D-W16T-00001	E-Note 1
Normal Low Temperature (°F)	59	40	yrs	24590-PTF-U0D-W16T-00001	E-Note 1
Normal High Relative Humidity (%RH)	90	40	yrs	24590-PTF-U0D-W16T-00001	E-Note 1
Normal Low Relative Humidity (%RH)	5	40	yrs	24590-PTF-U0D-W16T-00001	E-Note 1
Normal High Pressure (in.-w.g.)	0 (E-Note 2)	40	yrs	24590-PTF-U0D-W16T-00001	E-Note 1
Normal Low Pressure (in.-w.g.)	(-) 1.4	40	yrs	24590-PTF-U0D-W16T-00001	E-Note 1
Normal Radiation Dose Rate (mR/hr)	991000 (E-Note 2)	40 (E-Note 5)	yrs	24590-PTF-U0D-W16T-00001	E-Note 1
Vibration Magnitude (g)	N/A	N/A	N/A	N/A	N/A
Vibration Frequency (Hz)	N/A	N/A	N/A	N/A	N/A
Additional Normal Information:	N/A				

Equipment Environmental Qualification (EEQ) *(continued)*

Parameter Type/Units	Parameter Value	Time Duration (number)	Time units	WTP Document Number (BUYER)	Submittal Number (SELLER)
Abnormal					
Abnormal High Temperature (°F)	127	8	hrs/yr	24590-PTF-U0D-W16T-00001	E-Note 1
Abnormal Low Temperature (°F)	40	8	hrs/yr	24590-PTF-U0D-W16T-00001	E-Note 1
Abnormal High Relative Humidity (%RH)	100c	1	hrs/yr	24590-PTF-U0D-W16T-00001	E-Note 1
Abnormal Low Relative Humidity (%RH)	6	24	hrs/yr	24590-PTF-U0D-W16T-00001	E-Note 1
Abnormal High Pressure (in.-w.g.)	4 (E-Note 2)	8	hrs/yr	24590-PTF-U0D-W16T-00001	E-Note 1
Abnormal Low Pressure (in.-w.g.)	(-) 7.3 (E-Note 2)	8	hrs/yr	24590-PTF-U0D-W16T-00001	E-Note 1
Abnormal Radiation Dose Rate (mR/hr)	991000 (E-Note 4)	0 (E-Note 5)	yrs	24590-PTF-U0D-W16T-00001	E-Note 1
Wet Sprinkler System Present	No	N/A	N/A	24590-PTF-U0D-W16T-00001	E-Note 1
Additional Abnormal Information	100c = 100% RH condensing				
Design Basis Events (DBE)					
DBE High Temperature (°F)	138	1000	hrs	24590-PTF-U0D-W16T-00001	E-Note 1
DBE Low Temperature (°F)	40	1000	hrs	24590-PTF-U0D-W16T-00001	E-Note 1
DBE High Relative Humidity (%RH)	100c	40	hrs	24590-PTF-U0D-W16T-00001	E-Note 1
DBE Low Relative Humidity (%RH)	4	1000	hrs	24590-PTF-U0D-W16T-00001	E-Note 1
DBE High Pressure (in.-w.g.)	4 (E-Note 2)	1000	hrs	24590-PTF-U0D-W16T-00001	E-Note 1
DBE Low Pressure (in.-w.g.)	(-) 7.3 (E-Note 2)	1000	hrs	24590-PTF-U0D-W16T-00001	E-Note 1
DBE Radiation Dose Rate (mR/hr)	991000 (E-Note 4)	0 (E-Note 5)	yrs	24590-PTF-U0D-W16T-00001	E-Note 1
Flood Height (ft)	2.08	1000	hrs	24590-PTF-U0D-W16T-00001	E-Note 1
Submergence (ft)	N/A	N/A	N/A	N/A	E-Note 6
Chemical/Spray Exposure	Yes	12.5	hrs	24590-PTF-U0D-W16T-00001	E-Note 1
Additional DBE Information	100c = 100% RH condensing				

DBE Chemical Exposure Details	
DBE Chemical Types/Concentrations	Process Rad Condensate Nitric Acid 2M Sodium Hydroxide 2M Water

Interfaces (Electrical)	
Power Supply Voltage (VAC, VDC)	N/A
Power Supply Frequency (Hz)	N/A
Power Connection Method	N/A
I/O Signals to/from Equipment	N/A
I/O Connection Method	N/A

Interfaces (Mechanical)	
Mounting Configuration (orientation)	Vertical Mounted , Skirt
Mounting Method (bolts, welds, etc.)	Welded skirt to ring beams welded to embedment plates. Embedment plate details per 24590-PTF-DD-S13T-00039, 24590-PTF-DD-S13T-00036, 24590-PTF-DD-S13T-00042 and 24590-PTF-DD-S13T-00045 provided to the vendor in the material requisition
Auxiliary Devices	Pulse Jet Mixers - HLP-PJM-00076, HLP-PJM-00077, HLP-PJM-00078, HLP-PJM-00079, HLP-PJM-00080, HLP-PJM-00081, HLP PJM-00082, HLP-PJM-00083. Auxiliary Devices are located within the vessel.

Equipment Seismic Qualification (ESQ)

Parameter	Title	Reference/Document Number	Version / Revision	Remarks
WTP Seismic Design Specification (BUYER)	Engineering Specification for Seismic Qualification of Seismic Category I/II Equipment and Tanks Engineering Specification for Seismic Qualification Criteria for Pressure Vessels	24590-WTP-3PS-SS90-T0001 24590-WTP-3PS-MV00-T0002	2 3	N/A
Specified Seismic Load (BUYER)	Seismic Analysis of Pretreatment Building - WSGM In-Structure Response Spectra (ISRS)	24590-PTF-S0C-S15T-00057	A	CCN 185271: WSGM ISRS Curves; Figures 21E, 22E, and 24E
Design Seismic Load (SELLER	TBD	TBD	TBD	E-Note 3
Qualification Method (SELLER)	TBD	TBD	TBD	Dynamic Analysis utilizing response spectra curves
Qualification Report Number (SELLER)	TBD	TBD	TBD	E-Note 3
Submittal Number (BUYER)	TBD	TBD	TBD	N/A

EQUIPMENT QUALIFICATION DATASHEET (EQD)

Equipment Qualification Notes and Additional Information 8

E-Note 1: BNI (BUYER) shall perform Equipment Environmental Qualification.

E-Note 2: Where pressure is given in inches of water column (in-w.c.) in the source document, it is generally assumed that this is in reference to atmospheric pressure and is therefore equivalent to inches of water gage (in-w.g.).

E-Note 3: SELLER shall perform Equipment Seismic Qualification.

E-Note 4: Radiation Dose Rates are for determining shielding requirements only for the black cell and are not at the source (vessel). Since the vessel is all metallic and the source has no neutron components for material embrittlement, the dose rates are of no concern on the vessel or its subcomponents.

E-Note 5: Normal, Abnormal, and DBE dose rates are the same, therefore, abnormal & DBE doses do not add to total integrated dose based on normal dose rates over 40 years.

E-Note 6: Flood height is 2.08 ft above the floor, bottom of vessel is above this level, therefore, no submergence evaluation is required.

DOE Radioactive Materials Disclaimer:

Please note that source, special nuclear and byproduct materials, as defined in the Atomic Energy Act of 1954 (AEA), are regulated at the US Department of Energy (DOE) facilities exclusively by DOE acting pursuant to its AEA authority. DOE asserts, that pursuant to the AEA, it has sole and exclusive responsibility and authority to regulate source, special nuclear, and byproduct materials at DOE-owned nuclear facilities. Information contained herein on radionuclides is provided for process description purposes only.

Screening / Evaluation Required? If yes per 24590-WTP-GPP-SREG-002, E&NS signature required below	X	Yes		No

Approval

Rev	Description	System Engineer	Vessel Engineer	Checked	Reviewed/ MET	E&NS	Approved	Date
0	Issued for Purchase	R. Rider	Suharto	U. Sen C. Slater	N/A	N/A	S. Kirk	10/03/02
1	Revised as Marked, Delete Charge Vessel and RFD per Rev. 0 P&ID	R. Rider	Suharto	S. Arora/ C. Slater	N/A	N/A	M. Hoffmann	07/10/03
2	Revised Parent Vessel Component Function and Life Cycle Description, Vessel Operating and Design Temperatures, Jacket Design Temperature and Content Cyclic Data. Other Revisions are for Clarity and Consistency.	R. Rider	R. Simmons	Y. Hovanski C. Slater	R. Stevens	N/A	M. Hoffmann	11/14/03
3	Added Black Cell Requirements	R. Rider	R. Simmons	Y. Hovanski C. Slater	N/A	N/A	M. Hoffmann	02/04/04
4	Added Non-Newtonian Mixing Requirements	R. Rider	R. Simmons	Y. Hovanski C. Slater	J. Julyk	N/A	M. Hoffmann	04/28/04
5	Revised concrete for cluster fill per note 12. Deleted note 11. Revised overblow condition loads. Number of overblow cycles revised to 1000 from 100.	R. Rider	R. Simmons	M. Arulampalam	R. Stevens	N/A	S.V./ M. Hoffmann	06/30/05
6	Revised per note 13 on sheet 2 of 5	R. Rider	H. Khurana	J. Polani	C. Slater/ D. Adler	N/A	J. Julyk	10/28/05
7	Revised per Note 15 and as noted.	R. Rider	M. Arulampalam	R. Peters/ M. Seed	D. Adler	G Hendricks for J. Hinckley	J. Julyk	02/13/08
8	Incorporated 24590-QL-MRB-MVA0-00001-T0001 and T0002. Revised per Note 16 & 17. Incorporate 24590-QL-MRB-MVA0-00001-T0007 MAS 3/15/11	D. Evans	B. Makadia	M. Seed	D. Adler	J. Hinckley	J. Julyk	3/14/11

REFERENCES for Data Sheets: 24590-PTF-MVD-HLP-00007, 00008, 00009 *(For BNI Use only)*
Vessel Tags: HLP-VSL-00027A/27B and 28

Data	Document #	Rev	Document Title/ Comments
Quality Level	24590-PTF-M6-HLP-00001001	0	*P&ID - PTF HLW LAG Storage and Feed Blending Process System Vessel HLP-VSL-00027A*
	24590-PTF-M6-HLP-00001002	0	*P&ID - PTF HLW LAG Storage and Feed Blending Process System Vessel HLP-VSL-00027B*
	24590-PTF-M6-HLP-00003001	0	*P&ID - PTF HLW LAG Storage and Feed Blending Process System Vessel HLP-VSL-00028*
Seismic Category	24590-PTF-M6-HLP-00001001	0	*P&ID - PTF HLW LAG Storage and Feed Blending Process System Vessel HLP-VSL-00027A*
	24590-PTF-M6-HLP-00001002	0	*P&ID - PTF HLW LAG Storage and Feed Blending Process System Vessel HLP-VSL-00027B*
	24590-PTF-M6-HLP-00003001	0	*P&ID - PTF HLW LAG Storage and Feed Blending Process System Vessel HLP-VSL-00028*
Design Specific Gravity	24590-WTP-RPT-ENG-07-007	0	*Process Stream Properties,* Table 4.20
Max Operating Volume	24590-PTF-M6C-HLP-00003	F	*Vessel Sizing Calculation for HLW LAG Storage Vessels (HLP-VSL-00027A/B)*
	24590-PTF-M6C-HLP-00004	F	*Vessel Sizing Calculation for HLW Feed Blending Process Vessel (HLP-VSL-00028)*
Total Volume	24590-PTF-M6C-HLP-00003	F	*Vessel Sizing Calculation for HLW LAG Storage Vessels (HLP-VSL-00027A/B)*
	24590-PTF-M6C-HLP-00004	F	*Vessel Sizing Calculation for HLW Feed Blending Process Vessel (HLP-VSL-00028)*
Inside Diameter	24590-PTF-M6C-HLP-00003	F	*Vessel Sizing Calculation for HLW LAG Storage Vessels (HLP-VSL-00027A/B)*
	24590-PTF-M6C-HLP-00004	F	*Vessel Sizing Calculation for HLW Feed Blending Process Vessel (HLP-VSL-00028)*
Length TL-TL	24590-PTF-M6C-HLP-00003	F	*Vessel Sizing Calculation for HLW LAG Storage Vessels (HLP-VSL-00027A/B)*
	24590-PTF-M6C-HLP-00004	F	*Vessel Sizing Calculation for HLW Feed Blending Process Vessel (HLP-VSL-00028)*
Operating Pressure (external)	24590-PTF-M6C-PVP-00017	A	*HADCRT Analysis of PTF PVP System at Various Operating Scenarios,* Scrubber controlled at -35 in wg (1.3 psig) with an additional margin.
Operating Pressure (internal)	24590-PTF-MVC-10-00003	C	*PTF Vessel Cyclic Datasheet Inputs*
Design Pressure (external)	24590-PTF-M6C-PVP-00017	A	*HADCRT Analysis of PTF PVP System at Various Operating Scenarios,* Scrubber controlled at -35 in wg (1.3 psig) with an additional margin.
Design Pressure (internal)	24590-WTP-DB-ENG-01-001	1O	*Basis of Design*
Jacket Design Pressure (internal)	24590-PTF-MVC-10-00003	C	*PTF Vessel Cyclic Datasheet Inputs*
Operating Temp	24590-PTF-MVC-10-00003	C	*PTF Vessel Cyclic Datasheet Inputs*
	24590-PTF-MVC-HLP-00010	E	*Design of Cooling Jacket for HLW LAG Storage Vessels (HLP-VSL-00027A/B), Section 7.3*
	24590-PTF-MVE-HLP-00009	N/A	*Transient Cool-down Calculation of HLP-VSL-00027B for Different Levels (applies to HLP-27A & 27B)*
	24590-PTF-MVC-HLP-00011	E	*Design of Cooling Jacket for HLW Feed Blending Vessel (HLP-VSL-00028), Section 7.3*
	24590-PTF-MVE-HLP-00011	N/A	*Transient Cool-down Calculation of HLP-VSL-00028 for Different Levels*
Design Temp	24590-WTP-GPG-M-050	2	*Pressure Vessel and Heat Exchanger Design*

REFERENCES for Data Sheets: 24590-PTF-MVD-HLP-00007, 00008, 00009 *(For BNI Use only)*
Vessel Tags: HLP-VSL-00027A/27B and 28

Data	Document #	Rev	Document Title/ Comments
Jacket Design Temp	24590-WTP-GPG-M-050	2	*Pressure Vessel and Heat Exchanger Design*
Corrosion Allowance, Erosion Allowance (Note 1 and Note 2)	24590-PTF-N1D-HLP-00007 24590-PTF-N1D-HLP-00010	6 6	*HLP-VSL-00027A&B (PTF) HLW LAG Storage Vessel* *HLP-VSL-00028 (PTF) HLW Feed Blending Vessel*
Materials of Construction	24590-PTF-N1D-HLP-00007 24590-PTF-MV-HLP-00006 24590-PTF-MV-HLP-00005 24590-PTF-N1D-HLP-00010 24590-PTF-MV-HLP-00004	6 2 2 6 2	*HLP-VSL-00027A&B (PTF) HLW LAG Storage Vessel* *Equipment Assembly HLW LAG Storage Vessel HLP-VSL-00027A* *Equipment Assembly HLW LAG Storage Vessel HLP-VSL-00027B* *HLP-VSL-00028 (PTF) HLW Feed Blending Vessel* *Equipment Assembly HLW Feed Blend vessel HLP-VSL-00028*
Design Pressure (PJM)	24590-BOF-M6C-PSA-00001 24590-PTF-MVE-10-00012	B N/A	*Plant Service Air System Sizing* *Update PJM Cyclic Data and supporting assumptions*
Operating Pressure (PJM)	24590-PTF-MVC-10-00003 24590-PTF-MVE-10-00012	C N/A	*PTF Vessel Cyclic Datasheet Inputs* *Update PJM Cyclic Data and supporting assumptions*
Operating Temperature (PJM)	24590-PTF-M6C-HLP-00003 24590-PTF-M6C-HLP-00004	F F	*Vessel Sizing Calculation for HLW LAG Storage Vessels (HLP-VSL-00027A/B)* *Vessel Sizing Calculation for HLW Feed Blending Process Vessel (HLP-VSL-00028)*
Cyclic Data (Vessel)	24590-PTF-MVC-10-00003 24590-PTF-MVE-10-00006	C N/A	*PTF Vessel Cyclic Datasheet Inputs* *Change assumed number of cycles for HLP-VSL-00027B and HLP-VSL-00028*
Cyclic Data (PJM)	24590-PTF-MVC-10-00003 24590-PTF-MVE-10-00012 24590-WTP-M6C-50-00011	C N/A A	*PTF Vessel Cyclic Datasheet Inputs* *Update PJM Cyclic Data and supporting assumptions* *Pulse Jet Mixer Internal Pressures and Thrust*
Hydrodynamic Loads Vortex Shedding	24590-WTP-MVC-50-00006 24590-WTP-MVC-50-00006	A A	*Hydrodynamic Loads for Normal PJM Operation in Vessels With Non-Newtonian Fluids* *Hydrodynamic Loads for Normal PJM Operation in Vessels With Non-Newtonian Fluids*
Hydrodynamic Loads (Cycles)	24590-PTF-MVE-10-00012	N/A	*DCN to 24590-PTF-MVC-10-00003, Update PJM Cyclic Data and supporting assumptions,* hydrodynamic load cycles are based on PJM operating cycles.
Single PJM Overblow Loads	24590-WTP-MVC-50-00008	C	*Hydrodynamic Loads for PJM Overblow in Vessels With Non-Newtonian Fluids*
PJM Overblow Loads	24590-WTP-MVC-50-00011	B	*Pulse Jet Mixer Overblow Vessel Loads*
Single Overblow Cycles	24590-PTF-MVC-10-00003 24590-PTF-MVE-10-00004	C N/A	*PTF Vessel Cyclic Datasheet Inputs* *Add PJM Overblow Frequency Assumption*

REFERENCES for Data Sheets: 24590-PTF-MVD-HLP-00007, 00008, 00009 *(For BNI Use only)*
Vessel Tags: HLP-VSL-00027A/27B and 28

Data	Document #	Rev	Document Title/ Comments
Multiple Overblow Cycles	24590-PTF-MVC-10-00003	C	*PTF Vessel Cyclic Datasheet Inputs*
	24590-PTF-MVE-10-00004	N/A	*Add PJM Overblow Frequency Assumption*
Nozzle Loads	CCN 124018 (HLP-27A)	N/A	*Nozzle Design Loads for HLP-VSL-00027A*
	CCN 204141 (HLP-27A)	N/A	*Supplemental Nozzle Loads for HLP-VSL-00027A N29, N30, N33, N34, N37*
	CCN 230850 (HLP-27A)	N/A	*Supplemental Nozzle Loads for HLP-VSL-00027A Camera Port Nozzles (N76, N77)*
	CCN 151556 (HLP-27B)	N/A	*Nozzle Design Loads for HLP-VSL-00027B*
	CCN 204151 (HLP-27B)	N/A	*Supplemental Nozzle Loads for HLP-VSL-00027B N29 and N30 revised*
	CCN 229174 (HLP-27B	N/A	*Supplemental Nozzle Loads for HLP-VSL-00027B Nozzle N02*
	CCN 229176 (HLP-27B)	N/A	*Supplemental Nozzle Loads for HLP-VSL-00027B N32, N38, N41*
	CCN 230851 (HLP-27B)	N/A	*Supplemental Nozzle Loads for HLP-VSL-00027B Camera Port Nozzles (N80, N81)*
	CCN 126208 (HLP-28)	N/A	*Nozzle Design Loads for HLP-VSL-00028*
	CCN 191682 (HLP-28)	N/A	*Supplemental Nozzle Loads for HLP-VSL-00028 N29 and N30 revised*
	CCN 230852 (HLP-28)	N/A	*Supplemental Nozzle Loads for HLP-VSL-00028 Camera Port Nozzles (N80, N81)*
	24590-WTP-RPT-ENG-09-040	0	*Seismic Classification and Evaluation for the PTF Facility Piping and Vessels* / Section 3.2 page 19, for 1.75 seismic factor to RGM nozzle loads

Notes:
1. Vessel bottom head - additional erosion allowance from reference 24590-WTP-M0C-50-00004 Rev E, Table 10-7 (24590-WTP-M0E-50-00014 Attachment 10-11) shows a vessel erosion allowance of 0.768" (max) for HLP-VSL-000027A/B and 0.903" (max) for HLP-VSL-00028. This erosion allowance is accounted for via the 1" thick wear plates installed in the vessel bottom head directly under the PJM outlet nozzle.
2. PJM additional erosion allowance from reference 24590-WTP-M0C-50-00004 Rev E, Table 10-5, show an erosion allowance of 0.093" (HLP-27A/B) and 0.117" (HLP-28) for the stellite 12 material used in the PJM cones. The minimum thickness requirement for the PJM stellite cone material is 0.4375".

RCRA Operating Record Cover Sheet

Document Number: 24590-PTF-PCN-ENV-08-006

Waste Management Records:

- ☐ **R101** List of Waste Management Areas
- ☐ **R102** Waste Analysis Records
- ☐ **R103** Waste Designation Information
- ☐ **R104** Waste Transfer Records
- ☐ **R105** Movement of Containerized Waste Onsite
- ☐ **R106** Release/Spill Records
- ☐ **R114** Field Change Request/Field Change Notice
- ☐ **R116** Field Monitoring / Surveillance Checklists
- ☐ **R119** Reserved
- ☐ **R120** Reserved
- ☐ **R126** Satellite and 90-Day Accumulation Area

Compliance Schedule Submittals:

- ☐ **R401** Pretreatment Facility
- ☐ **R402** LAW Facility
- ☐ **R403** HLW Facility
- ☐ **R404** Laboratory
- ☐ **R405** Balance of Facility
- ☐ **R406** WTP All Facilities
- ☐ **R407** Human Health & Ecological Risk Assessment

Other Operating Record Documents:

- ☐ **R601** Outgoing Correspondence (RCRA Permit Relating)
- ☐ **R602** Contingency Plan Implementation
- ☐ **R603** Closure Plan Deviation
- ☐ **R604** Permit Equivalency Notice (PEN)
- ☒ **R605** Permit Change Notice (PCN)
- ☐ **R606** Annual RCRA Permit Closure and Post-Closure Cost Adjustment Report
- ☐ **R607** Permit Modification
- ☐ **R608** Incoming Correspondence (RCRA Permit Relating)

Non-Operating Record Documents:

- ☐ **N101** Meeting Minutes
- ☐ **N102** Memoranda

Special Instructions to PDC:

Link CCNs:

234642

238435

240488

ISSUED BY
RPP-WTP PDC

R11432289

Quarter Ending 09/30/2011 24590-PTF-PCN-ENV-11-001

Hanford Facility RCRA Permit Modification Notification Form

Part III, Operating Unit 10

Waste Treatment and Immobilization Plant

Index

Page 2 of 3: Hanford Facility RCRA Permit, Part III, Operating Unit 10, Waste Treatment and Immobilization Plant

Replace Mechanical Data Sheet 24590-PTF-MVD-FEP-00003 (Waste Feed Evaporator Condensate Vessel FEP-VSL-00005) in Appendix 8.6 of the Dangerous Waste Permit (DWP) and Permit Specification 24590-PTF-3PS-MEVV-T0001 (Engineering Specification for Forced Circulation Vacuum Evaporator System) in Appendix 8.7 of the DWP.

Submitted by Co-Operator:

BTAllen for DBusche 7/6/11

D. M. Busche Date

Reviewed by ORP Program Office:

8/15/11

D. L. Noyes Date

Quarter Ending 09/30/2011 24590-PTF-PCN-ENV-11-001

Hanford Facility RCRA Permit Modification Notification Form	
Unit: **Waste Treatment and Immobilization Plant**	Permit Part: **Part III, Operating Unit 10**

Description of Modification:

The purpose of this Class 1 prime modification is to update 24590-PTF-3PS-MEVV-T0001, *Engineering Specification for Forced Circulation Vacuum Evaporator System* and the Mechanical Data Sheet 24590-PTF-MVD-FEP-00003, *Waste Feed Evaporator Condensate Vessel FEP-VSL-00005.*

The following documents are being submitted to replace those currently in Appendices 8.6 and 8.7.

Appendix 8.6			
Replace:	24590-PTF-MVD-FEP-P0003, Rev. 1	With:	24590-PTF-MVD-FEP-00003, Rev. 1
Appendix 8.7			
Replace:	24590-PTF-3PS-MEVV-T0001, Rev. 2	With:	24590-PTF-3PS-MEVV-T0001, Rev. 3

This modification requests Ecology approval and incorporation into the permit the changes to this specification that are identified in the document's Revision History and by revision bars shown on the specification. Revisions are the result of ongoing design. This modification also requests Ecology approval and incorporation into the permit the changes to the mechanical data sheet identified by revision triangles. These changes are editorial in nature.

24590-PTF-3PS-MEVV-T0001, Rev. 3 (Engineering Specification for Forced Circulation Vacuum Evaporator System)

- Revised Section 4.2.12 to clarify use of alternate materials applicable only to FEP-VSL-00005 as allowed in 24590-WTP-SDDR-PROC-04-01273 and other materials specifications
- Multiple updates, clarifications, revisions, and editorial changes that are identified in the document's Revision History and by revision bars shown on the specification

24590-PTF-MVD-FEP-00003, Rev. 1 (Mechanical Data Sheet for Waste Feed Evaporator Condensate Vessel FEP-VSL-00005)

- Editorial corrections, including materials of construction from SA-240 T316L to SA-240 T316 and A193 GR B7 to A193 B8M
- Fabrication Specification references were updated from permit document numbers to source document numbers

This modification requests Ecology approval and incorporation of the following outstanding change document(s) into the permit. Although not yet incorporated into revised documents included in this PCN, the listed change document(s) are intended to be incorporated into the permit.

Changes to specification 24590-PTF-3PS-MEVV-T0001:

- 24590-QL-MRA-MEVV-00001-T0003
- 24590-WTP-SDDR-M-05-00377
- 24590-WTP-SDDR-M-05-00777
- 24590-WTP-SDDR-MS-09-00077
- 24590-WTP-SDDR-MS-09-00081
- 24590-WTP-SDDR-MS-10-00040
- 24590-WTP-SDDR-MS-10-00078

Quarter Ending 09/30/2011 24590-PTF-PCN-ENV-11-001

- 24590-WTP-SDDR-MS-10-00088
- 24590-WTP-SDDR-MS-10-00097
- 24590-WTP-SDDR-MS-10-00103
- 24590-WTP-SDDR-MS-10-00104
- 24590-WTP-SDDR-MS-10-00124

Changes to the mechanical data sheet 24590-PTF-MVD-FEP-00003

- 24590-PTF-MVN-FEP-00005
- 24590-WTP-M6N-M80T-00005

WAC 173-303-830 Modification Class:	Class 1	Class 1[1]	Class 2	Class 3
Please mark the Modification Class:		X		

Enter relevant WAC 173-303-830, Appendix I Modification citation number: NA

Enter wording of WAC 173-303-830, Appendix I Modification citation:

In accordance with WAC 173-303-830(4)(d)(i), this modification notification is requested to be reviewed and approved as a Class 1 modification. WAC 173-303-830(4)(d)(ii)(A) states, "Class 1 modifications apply to minor changes that keep the permit current with routine changes to the facility or its operation. These changes do not substantially alter the permit conditions or reduce the capacity of the facility to protect human health or the environment. In the case of Class 1 modifications, the director may require prior approval."

Modification Approved/Concur: [X] Yes [ ] Denied (state reason below)

Reason for denial:

Reviewed by Ecology:

J. J. Wallace 10·05·11 Date

R10158650

Mechanical Data Sheet: Vessel

Plant Item No.	Data Sheet No.
24590-PTF-MV-FEP-VSL-00005	24590-PTF-MVD-FEP-00003

Project:	RPP-WTP	P&IDs	24590-PTF-M6-FEP-00003
Project No:	24590	Process Calculation 1	24590-PTF-MEC-FEP-00001
Project Site:	DOE Hanford		
System No.	FEP	Vessel Drawings	N/A
Building:	PTF		
Description:	Waste Feed Evaporator Condensate Vessel FEP-VSL-00005		

ISSUED BY RPP-WTP PDC INIT DATE

Reference Data

Charge Vessels (Tag Numbers)	N/A
Pulse Jet Mixers / Agitators (Tag Numbers)	N/A
RFDs/Pumps (Tag Numbers)	N/A

Service Data

Quality Level	CM	Fabrication Specification	24590-WTP-3PS-MV00-T0001
Seismic Category	SC-III	Design Code	ASME Section VIII Division 1
Service/Contents	Process Condensate	Code Stamp	Yes
Design Specific Gravity	1.0	NB Registration	Yes
Max Operating Volume gal	4144**	Wind Design	None
Total Volume gal	5022**	Snow/Ash Design	None
Postweld Heat Treat	Not Required	Seismic Design	24590-WTP-3PS-MV00-T0002 24590-WTP-3PS-SS90-T0001
Seismic Base Moment* ft*lb			

Design Data

Inside Diameter	inch	96**		Corrosion Allowance	inch	0.04
Length/Height (TL-TL)	inch	128**				
		Vessel Operating	Vessel Design	Coil/Jacket Design	Notes	
Internal Pressure	PSIG	-0.07	15	N/A		
External Pressure	PSIG	0	14.7	N/A		
Temperature	°F	110	150	N/A		
Min Design Metal Temp	°F	49		Hydrostatic Test Pressure	PSIG	22

Materials of Construction

Component	Material	Containment	Notes
Top Head	SA-240 T316 1	Auxiliary	1/4" thickness; maximum carbon content of 0.030% for welded components
Shell	SA-240 T316 1	Primary	1/4" thickness; maximum carbon content of 0.030% for welded components
Bottom Head	SA-240 T316 1	Primary	1/4" thickness; maximum carbon content of 0.030% for welded components
Vessel Support	Stainless Steel	N/A	Maximum carbon content of 0.030% for welded components
Jacket/Coils/Half-Pipe Jacket	N/A	N/A	
Internals	N/A	N/A	
Pipe	SA-312 TP316	Note 1	Maximum carbon content of 0.030% for welded components
Forgings/ Bar stock	SA-182 F316	Note 1	Maximum carbon content of 0.030% for welded components
Gaskets	Flex Spiral Wound		Flexitallic spiral wound
Bolting	A193 B8M 1		
Other			

Miscellaneous Data

Orientation	Vertical
Support Type	Skirt
Insulation Function	None
Insulation Thickness inch	None
Insulation Material	None
External Finish	Welds descaled as laid
Internal Finish	Welds ground smooth

Please note that source, special nuclear, and byproduct materials, as defined in the Atomic Energy Act of 1954 (AEA) are regulated at the U. S. Department of Energy (DOE) facilities exclusively by DOE acting pursuant to its AEA authority. DOE asserts that pursuant to AEA, it has sole and exclusive responsibility and authority to regulate source, special nuclear, and byproduct materials at DOE-owned nuclear facilities. Information contained herein on radionuclides is provided for process description purposes only.

Notes

* To be determined by Seller.
** To be verified bySeller.
Notes: (1) Nozzles located below the top of the overflow nozzle are primary containment. See 24590-WTP-3PS-MV00-T0001 for NDE requirements.
(2) Nozzle tolerance +/- 1/4"
(3) Support pads shall be high to align vessel overflow nozzle centerline at 15'-5 3/8"
(4) 40 years design life
(5) NDE for this vessel must meet requirements per para. 6.4.2 of specification 24590-WTP-3PS-MV00-T0001

Revision History

Rev	Description	By	Checked	Reviewed	Approved	Date
1	Changed as noted	E. Le	R. Nowak	G. Butt	J. Julyk	1/31/04
0	Issued for Procurement	E. Le	A. Donnelly	J. Julyk	M. Hoffmann	4/30/2003

RIVER PROTECTION PROJECT – WASTE TREATMENT PLANT

R11042813

ENGINEERING SPECIFICATION

FOR

Forced Circulation Vacuum Evaporator System

ISSUED BY
RPP-WTP PDC

G2, SKETCH I2, PGS I6, I7, I8, I9, I10,
J5, J9, J10, J11

Some information on page(s) _____ may appear to be illegible,
however, the information necessary for assuring
Adequate design is legible
Signature:

Date: 23FEB09

Please note that source, special nuclear, and byproduct materials, as defined in the Atomic Energy Act of 1954 (AEA) are regulated at the U. S. Department of Energy (DOE) facilities exclusively by DOE acting pursuant to its AEA authority. DOE asserts that pursuant to AEA, it has sole and exclusive responsibility and authority to regulate source, special nuclear, and byproduct materials at DOE-owned nuclear facilities. Information contained herein on radionuclides is provided for process description purposes only.

Content applicable to ALARA? ☒ **Yes** ☐ **No**

Quality Level
Q
DOE Contract No. DE-AC27-01RV14136

ADR No.
24590-PTF-ADR-M-03-003

Rev
1

NOTE: Contents of this document are Dangerous Waste Permit affecting.

REV	DATE	BY	CHECK	REVIEW	E&NS	DPEM/EM
3	2/18/09	E. Le	W. Wilcox	A. Gorham / ~~J. Julyk~~ 2/18/09	B. Hall	~~J. Rohlfs~~ 2/18/09 John Julyk
2	02/21/07	E. Le	L. Donovan	B. Makadia / J. Julyk	K. Gibson	R. Voke
1	03/24/05	E. Le	S. Crow	J. Julyk	N/A	R. Smith
0	04/24/03	E. Le	G. Butt	J. Julyk	N/A	S. Grabowski

SPECIFICATION No.
24590-PTF-3PS-MEVV-T0001

Rev
3

Revision History

Revision	Reason for Revision
0	Issued for Procurement
1	Incorporated Design Changes: 24590-PTF-3PN-MEVV-00001 24590-PTF-3PN-MEVV-00004 (which incorporated 24590-WTP-SDDR-PROC-04-00104) 24590-PTF-3PN-MEVV-00005 24590-PTF-3PN-MEVV-00006 with the following revisions: 1. Revised section 1.2.1 to delete duplicate information regarding internal deentrainment separation system for FEP & TLP separator vessels. 2. Revised section 1.2.1 to group support structure with their associated separator vessels. 3. Revised section 1.2.1 to provide more descriptive steam conditioning assembly of FEP & TLP evaporators for clarification. 4. Revised section 1.2.1 to add reboiler steam condensate transfer stations for FEP & TLP evaporators for Seller's additional scope of supply. 5. Revised section 1.2.1 to change "mechanical seal" to "pump seal" 6. Revised section 3.19.5 to delete "following by vertical up-ending" at the end of the 1st sentence 7. Revised section 3.20.3.5 to delete "assemblies" in the 1st sentence 24590-PTF-3PN-MEVV-00007 24590-PTF-3PN-MEVV-00009 1. Incorporated 24590-WTP-SDDR-PROC-04-00994, 24590-WTP-SDDR-PROC-04-00995, 24590-WTP-SDDR-PROC-04-01193, 24590-WTP-SDDR-PROC-04-01194, 24590-WTP-SDDR-PROC-04-01270, 24590-WTP-SDDR-PROC-04-01271, 24590-WTP-SDDR-PROC-04-01272, 24590-WTP-SDDR-PROC-04-01273 and 24590-WTP-SDDR-PROC-05-00181 2. Revised section 2.1.2 for clarifications 3. Revised wording in section 4.2.12 for clarification 4. Revised section 8.18 to delete "for off-gas piping pieces" from the 1st sentence 24590-WTP-SDDR-PROC-05-00208. Revised Appendix E to include reboiler steam condensate transfer stations. Revised Appendix P to add drawings for reboiler nozzle locations. Added Appendix T to provide design evaluation inputs
2	Incorporated Design Changes: 24590-PTF-3PN-MEVV-00012 with revision of section 3.4.3.3 for clarification 24590-PTF-3PN-MEVV-00014 with the following revisions 1. Revised section V8b of appendix V to remove digitized data verification requirement that is no longer applicable 2. Revised section V5.2 of appendix V to add "or greater" at the end of the sentence for clarification. 24590-PTF-3PN-MEVV-00019

Revision	Reason for Revision
	24590-WTP-SDDR-M-05-00438
	24590-WTP-SDDR-MS-07-00029
	Deleted Appendix R – outdated In-Structure Response Spectra (ISRS) curves
	Revised section 3.19.**5** to add "follow**ed** by vertical up-ending" from 24590-PTF-3PN-MEVV-00006 which was erroneously deleted in revision 1 of this specification
	Revised section 3.20.3.5 to add "assemblies" to the 1st sentence from 24590-PTF-3PN-MEVV-00006 which was erroneously deleted in revision 1 of this specification
	Revised section 4.2.12 to correct typos
	Revised section 8.1.8 to add "off-gas piping pieces" from 4590-PTF-3PN-MEVV-00009 which was erroneously deleted in revision 1 of this specification
	Revised sections 1.2.6, 3.4.3.2, and 3.9.13 to remove low-pressure steam information which is no longer applicable
	Revised section 1.2.12 to indicate that seismic information is provided in Appendix V.
	Revised section 1.2.14 to correct steam supply information
	Deleted section 1.3.29 to correct Buyer's scope of work
	Revised section 1.4.9 to delete outdated acceleration values
	Revised sections 1.4.11, 1.4.13, 1.4.15, 1.4.16, 1.4.18, 1.4.25, 1.4.26, 1.4.29, 1.4.30, and 1.4.32 to correct definitions
	Revised sections 2.2.6, 2.2.15, and 2.2.16 to be consistent with SRD
	Add sections 2.2.34, 2.2.35, and 2.2.36 for references.
	Revised section 3.1.17 to add "gpm" at the end of 2nd bullet.
	Added section 3.14.20 to incorporate 2" drain nozzle inlet to reboiler steam condensate vessel from desuperheater.
	Revised Appendix L to provide the location of 2" inlet drain nozzle.
	Revised section 3.16.3 to provide seismic analysis requirements in the Appendix V.
	Revised section 4.2.8 to clarify that threaded flanges and fittings are not allowed only in the black cells.
	Revised section 6.6.3 to clarify the weld acceptance criteria
	Revised section 7.2 to clarify the stimulant test using non-radioactive cesium is not required.
	Revised section 11.2 to clarify design stress/seismic report submittal requirements.
	Revised sections 3.1.9, 3.9.2, 3.10.2, 3.11.4, 3.12.3 to clarify nozzle loading requirements
	Revised sections 2.4.60 and 2.4.61 to correct typos
	Revised Appendices A, B, and C to remove outdated references.
	Revised Appendix D to correct steam supply conditions.
	Revised Appendix E to add a note for clarification regarding QL-1 and QL-2 used by Seller.

Revision	Reason for Revision
3	Incorporated Design Changes: 24590-PTF-3PN-MEVV-00022 24590-PTF-3PN-MEVV-00023 with revision to incorporate new operating temperature and add a note to provide clarification on operating and abnormal temperature values and punctuation correction. 24590-PTF-3PN-MEVV-00025 with addition note to clarify electrical and process connectors that are not provided by Buyer shall be procured as commercial material and correct spelling. 24590-WTP-SDDR-M-06-00395 Rev. 1 by reference. 24590-WTP-SDDR-MS-07-00030 Rev. 1 by reference. Global typo correction: Change "section" to "Section" and change "flow meter" to "flowmeter" Revised Section 1.2.1 to (1) clarify that exceptions in section 1.3, (2) correct vendor scope of supply for steam conditioning system components, and delete "or plastic" from note 1. Revised Section 1.2.2 to clarify minimum separator Cesium decontamination factor requirement. Revised Section 1.2.11 to remove below-the-hook lifting device of the demister pads assembly for clarify. The below-the-hook lifting device including the lifting crane was removed from Seller scope of supply as the contract was negotiated in 2003. Revised Section 1.2.12 to delete the last sentence regarding response spectra and damping values since they are no longer valid. Revised Section 1.2.20 to delete thermal expansion upward requirement since it is no longer valid. Revised Section 1.2.22 to change Appendix P to Appendix V for reboiler nozzle locations. Revised Sections 1.2.23, 3.20.2.2, and 7.15 to change a recorded video. Deleted Section 1.2.29 since it is no longer applicable. Added Section 1.2.34 to clarify Seller's division of responsibility regarding reboilers. Added Section 1.2.35 to clarify Seller's division of responsibility regarding separator vessels. Added Sections 1.2.36 through 1.2.39 to clarify Seller's division of responsibility. Added Section 1.2.40 to include Seller's responsibility of equipment environmental qualification for Q-components. Added Section 1.2.41 to include Seller's responsibility for providing CMTR for each staubli connector components. Added Section 1.2.42 to include Seller's responsibility for coordinating with Buyer to finalize all reboiler nozzle locations. Revised Section 1.3.16 to clarify PEP is replaced by a rigid concrete-filled steel frame. Revised Section 1.3.18 to delete reboiler and support frame assemblies since they are no longer valid. Revised Section 1.3.31 to clarify steam conditioning components and desuperheater vessels are Seller's supply. Added Section 1.3.33 to clarify Buyer's division of responsibility regarding reboilers. Added Section 1.3.34 to clarify Seller's division of responsibility regarding separator vessels. Revised Section 1.4.15 to delete QL-1 and QL-2 designations which are no longer used. Revised Section 1.4.32 to add acronyms "EQD", "PTFE", and change "QL" to "Q". Revised Section 1.5 for clarity. Revised Section 1.6.1 to correct "QL" to "Q".

Revision	Reason for Revision
	Revised Section 2.2.6 to remove "1995 or later".
	Revised Section 2.2.11 to add "specification" which was inadvertently omitted.
	Revised Section 2.2.15 to delete the year of standard.
	Revised Section 2.2.27 to add "FED STD" which was inadvertently omitted.
	Revised Section 2.2.28 to add "ASTM" which was inadvertently omitted.
	Delete Sections 2.2.33 and 2.2.34 since they are duplicate of Sections 2.2.24 and 2.2.25.
	Revised Section 2.3.1 to provide additional applicable specifications.
	Revised Section 2.4 to provide additional applicable drawings and datasheets.
	Added Sections 2.5 and 2.6 to incorporate design changes incorporated by SDDRs.
	Revised Section 3.1.11 to clarify the sound level requirements.
	Revised Section 3.1.25 to clarify preliminary jumper connection in Appendix V and final locations are to be coordinated with the Buyer.
	Revised Section 3.1.26 to change Appendix P to Appendix V.
	Revised Section 3.1.27 to correct Appendix V instead of Appendix P.
	Revised Section 3.1.28 to clarify that hydro test connections for axial pumps to be provided by Seller.
	Revised Section 3.1.29 to clarify reboiler nozzle loads and support loads provided in Appendix V.
	Revised Section 3.1.33 to delete steam conditioning skid and correct condenser skid assembly.
	Added Section 3.1.34 to include equipment environmental qualification in Seller's scope of work.
	Added Section 3.1.35 to clarify that condenser skids shall be designed with cast-in-anchors.
	Added Section 3.1.36 to clarify the application of inelastic energy absorption coefficient.
	Added Section 3.1.37 to add supplier design analysis requirement specification.
	Revised Section 3.3.4 to correct process DF to separator DF.
	Revise Section 3.4.2.2 to delete last sentence which refers to Appendix P.
	Revise Section 3.4.3.4 to reflect cooling water supply conditions.
	Revised Section 3.5 to provide new equipment environmental qualification data references.
	Revised Section 3.7.2 to delete recirculation pump structural support requirements which are no longer valid.
	Revised Section 3.7.3 to clarify that recirculation pump motor qualified to total integrated rad as specified in MDS.
	Revised 3.9.2 for clarity.
	Added Section 3.9.18 to clarify Seller's division of responsibility regarding reboilers.
	Added Section 3.9.19 to clarify Buyer's division of responsibility regarding reboilers.
	Revised 3.10.2 for clarity.
	Revised Section 3.10.7 to correct typo.
	Revised Section 3.10.9 to clarify that a 2 inch purge air inlet nozzle applicable for FEP separator vessels only as indicated on associated P&IDs.
	Added Section 3.10.17 to clarify division of responsibility regarding separator vessel external spray ring piping assembly for demister pad.
	Added Section 3.10.18 to provide boundary condition for separator vessel lower frame.

Revision	Reason for Revision
	Revised Section 3.11.4 for clarity.
	Revised Section 3.12.3 for clarity.
	Added Section 3.12.13 to provide new operating cycle value for after-condensers.
	Revised Section 3.14 to revise title.
	Revised Section 3.14.13 to add the word "approximately".
	Revised Section 3.14.19 to add the word "or better".
	Added Sections 3.14.21 through 3.14.25 to provide specification requirements for steam conditioning system components.
	Revised Section 3.15.5 to add the word "position" for clarity and delete the nozzle tolerance measurement device requirement.
	Revised Sections 3.16.3, 3.16.4, and 3.16.6 to change "seismically analyzed and qualified" to "analyzed and designed" for clarity.
	Revised Section 3.16.5 to remove the last sentence for clarity.
	Deleted Section 3.16.7 for clarity.
	Revised Section 3.16.9 to clarify PEP is replaced by a rigid concrete-filled steel frame and delete seismic qualification for SC-III flowmeters since they are no longer applicable.
	Revised Section 3.19.4 to delete "or five (5), based on the material ultimate strength, whichever is more conservative" to be consistent with specification 24590-WTP-3PS-MJJ0-T0001.
	Revised Section 4.2.3 to clarify the requirements of fabrication materials for vessels and skids/structural frames.
	Revised Section 4.2.4 to clarify the nut material requirement is for skids/structural frames.
	Revised Section 4.2.8 to clarify that the use of bolts on separator vessel body flanges and upper lateral support frames are acceptable.
	Revised section 4.2.12 to (1) clarify that the use of alternate materials ASTM A403-99 and ASTM A182-98 are only applicable to vessel FEP-VSL-00005 as allowed in 24590-WTP-SDDR-PROC-04-01273; (2) to correct typo "AMT" to "ASTM"; and (3) to remove ASTM materials from ASME Section II in specified material column for correction.
	Revised Section 4.5.5 to clarify the use of PTFE and its requirements.
	Revised Sections 5.1.1 and 5.1.2 to add the word "engineering" which was inadvertently omitted.
	Add section 5.1.5 to clarify structural welding requirements.
	Revised Section 6.5.1 to correct "QL" to "Q".
	Deleted Section 7.2 since it is no longer applicable.
	Revise Section 8.2.14 to remove steam conditioning skids since they are no longer valid and replace P04 with High Build Epoxy for clarity.
	Revise Section 8.2.15 to replace P02 with Organic Zinc Epoxy Primer and P06 with Epoxy Novolac.
	Revised Section 9.2 to correct "QL" to "Q".
	Revised Section 11.2 to incorporate supplier design analyses spec.
	Added Section 11.5.10 to indicate vendor calculations can be submitted as applicable.
	Added Section 11.7.13 to request vendor to submit calculations as applicable.
	Revised Section 11.8.24 to clarify that integrated acceptance test using non-radioactive cesium is not required.

Revision	Reason for Revision
	Revised Appendix E for clarity on design levels and correct quality and seismic category designation for evaporator steam conditioning system components. Revised Appendix P to delete sketches P-1, P-2 and large bore connector loads which are no longer valid. Add a note to require Seller needs to coordinate nozzle. Revised Appendix T to add Section T.14 to provide design inputs for steam conditioning components Revised Appendix V to incorporate new design inputs: (1) Modify Sections V2 to change RGM ISRS curves to WSGM ISRS curves. Delete critical damping determination since it is no longer valid. (2) Modify Sections V6 to change RGM ISRS curves to WSGM ISRS curves. (3) Revise V7 to include category 7.0 of G321-E. (4) Modify Sections V8b and delete attachment #1 to change RGM ISRS curves to WSGM ISRS curves. (5) Revise Section V8e and attachment #4 to provide new separator vessel nozzle N13 loads in tables 1, 2, 3 of attachment #4. Correct typo. (6) Revise Section V8f to correct typo. (7) Revise Section V8g and add attachment #9 to provide new reboiler nozzle loads, support loads, small bore piping locations in attachment #9. Correct typo. (8) Revise Section V8h to correct typo. (9) Add Section V8m and attachment #7 to require Seller to perform analyses in accordance with the analytical methodology as described in attachment # 7. (10) Add Section V8n to provide piping penetration clearance. (11) Add Section V8o to provide ceiling steel stiffness calculation guideline for FEP/TLP separator frame interfaces. (12) Add Section V8p to provide design inputs for separator vessel base interfaces. (13) Add Section V8q to provide design inputs for evaporator system hydro. (14) Add Section V8r and attachment #8 to provide maximum allowable skid foot print for FEP/TLP condensers. (15) Add Section V8s and attachment #10 to provide pressure and temperature inputs for vessel internal piping and utility piping inlet nozzles. (16) Add Section V8t to provide insulation information. (17) Add Section V8u and attachment #11 to provide modification requirements to TLP reboiler frame and sole plates. (18) Add Section V8v and attachment #12 to provide primary condenser cooling water isometrics for coupling analysis. (19) Revise attachment #5 to add a sketch to show typical member sizes for FEP and TLP pump support frames as design concept.

Contents

1 Scope 5
1.1 Project Description and Location 5
1.2 Equipment, Material, and Services Required 5
1.3 Work by Others 14
1.4 Definitions 16
1.5 Mechanical Data Sheets 20
1.6 Safety/Quality/Seismic Classifications 20
2 Applicable Documents 20
2.1 General 20
2.2 Codes and Industry Standards 21
2.3 Reference Documents 22
2.4 Reference Drawings / Data Sheets 25
2.5 Design Changes Incorporated by Design 31
2.6 Design Changes Incorporated by Reference 31
3 Design Requirements 31
3.1 General 31
3.2 Basic Function 35
3.3 Performance 36
3.4 Design Conditions 37
3.5 Environmental Conditions 39
3.6 Feed Pumps 39
3.7 Recirculation Pumps 41
3.8 Concentrate Pumps 43
3.9 Reboilers 44
3.10 Evaporator Separator Vessels 45
3.11 Primary Condensers 47
3.12 Secondary Condenser System 47
3.13 Evaporator Process Condensate Vessels & Pumps 48
3.14 Antifoam Skid, Reboiler Condensate Transfer Stations, and Steam Conditioning Components 50
3.15 Mechanical Handling Requirements 52
3.16 Loadings 52
3.17 Electrical Requirements 53
3.18 Instrumentation and Control Requirements 54

Contents

3.19 Lifting Requirements 55
3.20 Accessibility and Maintenance 56
4 Materials 58
4.1 Positive Material Identification 58
4.2 Construction 58
4.3 Vessels 60
4.4 Pipework 60
4.5 Prohibited Materials 60
4.6 Storage of Special Materials (e.g., stainless steel) prior to work 60
5 Fabrication 61
5.1 General 61
5.2 Welding 61
6 Inspections and Examinations 62
6.1 Nondestructive Examinations 62
6.2 Dimensional Inspections 62
6.3 Visual Weld Inspections 63
6.4 Liquid Penetrant Test 63
6.5 Radiography 64
6.6 Magnetic Particle Examination 64
6.7 Final Inspection 65
6.8 Inspection and Test Status 65
6.9 Control of Nonconforming Items 65
7 Testing 65
7.1 Shop Tests 65
7.2 Deleted. 66
8 Preparation for Shipment 66
8.1 General Requirements 66
8.2 Painting 67
8.3 Tagging 69
9 Quality Assurance 70
9.1 General Commercial Designation (CM) Requirements 70
9.2 Quality Level (Q) Requirements 70
10 Configuration Management 71

Contents

11 Documentation and Submittals 71
11.1 General 71
11.2 Calculations 72
11.2.1 ANSI/AISC N690 Steel Frame / Support Designs 72
11.2.2 ASME VIII, Div 2, Appendix 4, Vessel including internal supports/components 72
11.2.3 ASME B31.3 Piping Design 72
11.3 As-Built Drawings 72
11.4 Dimensional Record Drawings 73
11.5 Project Start 73
11.6 30 % Design Review 73
11.7 60 % Design Review 74
11.8 90 % Design Review 74
11.9 Final Design Review 80

Appendices

A	Waste Feed Evaporator Stream Data	A-1
B	Treated LAW Evaporator Stream Data	B-1
C	Predicted Maximum Radionuclide	C-1
D	Evaporator Process Data	D-1
E	Quality Level and Seismic Category for Evaporator Equipment	E-1
F	Separator Vessel Skid Support Layout	F-1
G	Hot Cell Remote Impact Wrench	G-1
H	Deleted	H-1
I	FEP Evaporator Equipment Skids Location and Layout Sketches	I-1
J	TLP Evaporator Equipment Skids Location and Layout Sketches	J-1
K	Antifoam Equipment Skid Location and Layout Sketches	K-1
L	Reboiler Steam Condensate Transfer Station Location and Layout Sketches	L-1
M	Deleted	M-1
N	Deleted	N-1
O	Nondestructive Examination (NDE) of Fabricated Pipe Welds	O-1
P	Reboiler Skids and Preliminary Nozzle Loads at Grayloc Connections	P-1
Q	Reboilers and Recirculation Pumps Layout	Q-1
R	Deleted	R-1
S	Manufacturers Standard Coating Data Sheet	S-1
T	Design Evolution Inputs	T-1
U	Deleted	U-1
V	FEP/TLP Evaporator Systems Composite Analyses	V-1

1 Scope

1.1 Project Description and Location

The Hanford Tank Waste Treatment and Immobilization Plant (WTP) is a complex of waste treatment facilities where the US Department of Energy (DOE) Hanford Site tank waste will be pretreated and immobilized into stable glass form via vitrification. The WTP Contractor will design, build, and startup the WTP pretreatment and vitrification facilities for the DOE Office of River Protection (ORP). The waste treatment facilities will pretreat and immobilize the low-activity waste (LAW) and high-level waste (HLW) currently stored in underground storage tanks at the Hanford Site.

The Hanford Site occupies an area of about 560 square miles and is located along the Columbia River, north of Richland, WA in the U.S.A. The WTP Facility will be constructed at the east end of the 200 East Area of the Hanford Site. The counties of Benton, Franklin, and Grant surround the Hanford Site.

1.2 Equipment, Material, and Services Required

This specification provides the requirements for the design, analysis, fabrication, quality assurance, inspection, testing, qualification, and labeling of three (3) forced circulation vacuum evaporator systems for use in the WTP Pretreatment Facility. This specification also provides the requirements for the supply of services, manuals, instructions, procedures, and other associated documentation.

The scope of work for the Seller includes all work defined in this specification and its addenda and attachments. Work shall include, but is not limited to, the following:

1.2.1 Provide fully detailed designs, drawings, diagrams, supporting calculations, supporting analyses, procedures, installation instructions, and all labor, materials, equipment, and services necessary to manufacture, test, inspect, label and package for shipment three (3) sets of the forced circulation vacuum evaporator system hardware, including handling and servicing equipment, all fabricated to appropriate NQA-1 requirements in accordance with all specification requirements, with the deliverables being reports, calculations, procedures, data sheets, drawings and diagrams as outlined in this specification and the Material Requisition (MR). **See exceptions in Section 1.3.** Refer to tables below for what shall be included as part of evaporator systems to be provided.

Waste Feed Evaporator (FEP) Systems

Equipment	Tag
Two (2) FEP Separator Vessels. Each vessel with support structure, three layers of de-entrainment trays, two layers of mesh pads and sprays.	FEP-SEP-00001A FEP-SEP-00001B
Two (2) FEP Reboilers with Graylocs and PUREX nozzles installed in accordance with this specification and stainless steel structural support frames.	FEP-RBLR-00001A FEP-RBLR-00001B
Two (2) FEP Recirculation Pumps. Each pump includes motor, pump seals, adjustable speed drive, **all remote electrical connectors, and process connectors that are identified by Seller.** The pump inlet and outlet pipe ends prepared for butt welding.	FEP-PMP-00009A FEP-PMP-00009B
Two (2) FEP Condenser skid. Each skid consisting of Primary Condenser, 1st stage steam ejector, Intercondenser, 2nd stage steam ejector, Aftercondenser and interconnecting piping.	FEP-COND-00001A FEP-COND-00002A FEP-COND-00003A FEP-EJCTR-00040 FEP-EJCTR-00041 FEP-COND-00001B FEP-COND-00002B FEP-COND-00003B FEP-EJCTR-00042 FEP-EJCTR-00043
One (1) FEP Condensate Vessel for both FEP systems. Vessel includes skirt and support ring.	FEP-VSL-00005
Two (2) FEP Condensate Pumps include base plate, motor, variable speed drive, and mechanical seal mounted on common skid.	FEP-PMP-00006A FEP-PMP-00006B
One (1) Antifoam Vessel serves the FEP and TLP separators. Vessel includes skirt.	AFR-TK-00001
Three (3) Antifoam Pumps (common for FEP and TLP systems) with base plate and motor mounted on common skid.	AFR-PMP-00006 AFR-PMP-00007 AFR-PMP-00008
Two (2) sets of FEP offgas piping 30" diameter from separator to Primary condenser. Piping includes pipe hangers.	"Note 1"
Two (2) sets of FEP Steam Conditioning System components. Each set consists of two (2) control valves, two (2) flowmeters, and one (1) absorption desuperheater.	**FEP-PV-0267** **FEP-TV-0202** **FEP-FT-0201** **FEP-FT-0252** **FEP-DHTR-00001** **FEP-PV-0467** **FEP-TV-0402** **FEP-FT-0401** **FEP-FT-0452** **FEP-DHTR-00002**
Four (4) lifting yokes. One lifting yoke for three (3) separator vessels, two lifting yokes for three (3) reboiler and support frame assemblies, and one lifting yoke for three (3) recirculation pumps	"Note 1"
Two (2) FEP Reboiler Steam Condensate Transfer Stations including level tank, transfer pump and condensate recycle pump.	FEP-VSL-00021 FEP-PMP-00010A FEP-PMP-00010B FEP-VSL-00022 FEP-PMP-00011A FEP-PMP-00011B

Note 1: Stainless steel tags (foil strip is not acceptable) shall be firmly attached by stainless steel wire or stainless steel screws to each separate item. Each tag shall be stamped with, as a minimum: (1) Purchase Order Number, (2) Purchase Order item number, and (3) Equipment/Instrument Tag number.

Treated LAW Evaporator (TLP) System

Equipment	Tag
One (1) TLP Separator Vessel with support structure, three layers of de-entrainment trays, two layers of mesh pads and sprays.	TLP-SEP-00001
One (1) TLP Reboiler with Graylocs and PUREX nozzles installed in accordance with this specification and stainless steel structural support frame.	TLP-RBLR-00001
One (1) TLP Recirculation Pump including motor, pump seals, adjustable speed drive, **all remote electrical connectors, and process connectors that are identified by Seller.** The pump inlet and outlet pipe ends prepared for butt welding.	TLP-PMP-00001
Two (2) LAW SBS Feed Pumps with base plate, motor, pump seals, and adjustable speed drive.	TLP-PMP-00005A TLP-PMP-00005B
Two (2) TLP Concentrate Pumps with base plate, motor, pump seals, and adjustable speed drive.	TLP-PMP-00011A TLP-PMP-00011B
One (1) TLP Condenser skid consisting of Primary Condenser, 1st stage steam ejector, Intercondenser, 2nd stage steam ejector, Aftercondenser and interconnecting piping.	TLP-COND-00001 TLP-COND-00002 TLP-COND-00003 TLP-EJCTR-00064 TLP-EJCTR-00067
One (1) TLP Condensate Vessel with support.	TLP-VSL-00002
Two (2) Condensate Pumps include base plate, motor, variable speed drive, and mechanical seal mounted on common skid.	TLP-PMP-00002A TLP-PMP-00002B
One (1) set of offgas piping 30" diameter from Separator to Primary Condenser with pipe hangers.	"Note 1"
One (1) set of TLP Steam Conditioning System components which consist of two (2) control valves, two (2) flowmeters, and one (1) absorption desuperheater.	**TLP-PV-0355** **TLP-TV-0302** **TLP-FT-0301** **TLP-FT-0350** **TLP-DHTR-00001**
One (1) TLP Reboiler Steam Condensate Transfer Station including level tank, transfer pump and condensate recycle pump.	TLP-VSL-00047 TLP-PMP-00012A TLP-PMP-00012B

Note 1: Stainless steel tags (foil strip is not acceptable) shall be firmly attached by stainless steel wire or stainless steel screws to each separate item. Each tag shall be stamped with, as a minimum: (1) Purchase Order Number, (2) Purchase Order item number, and (3) Equipment/Instrument Tag number.

1.2.2 Provide a guarantee that all equipment listed in Section 1.2.1 will perform in accordance with the requirements of this specification and all referenced codes, standards, and documentation in section 2 of this specification. Process warranty shall include **obtaining minimum separator Cesium decontamination factor of 6.0E+07 per Section 3.3.4.** The process warranty is provided with the following conditions: (1) the evaporator systems are operated per Seller's instructions within mutually agreed parameters and chemical analytes that are representative of waste and process conditions, and (2) mutual agreement that foaming within the Separator Vessel is adequately controlled by the Buyer-supplied antifoaming reagent.

1.2.3 Perform sizing calculations and process performance modeling to ensure that each component of the evaporator systems is properly specified to ensure desired performance.

1.2.4 Provide the following nonreplaceable components/equipment which shall attain a 40-year life:

- Separator vessels and all their internal parts (exception made for demister pad life).
- Section of separator offgas pipework located inside the R5/C5 black cells.

1.2.5 Deleted.

1.2.6 **Provide three (3) sets of steam conditioning system components for FEP and TLP evaporators to reduce high pressure steam to produce Seller's specified saturated pressure steam for optimal reboiler condition. Each set consists of two (2) control valves, two (2) swirl flowmeters, and one (1) absorption desuperheater.**

1.2.7 Provide specifications and data sheets during contract performance for Buyer to procure the following equipment/components.

- FEP feed pumps (FEP-PMP-00007A/B)
- FEP concentrate pumps (FEP-PMP-00008A/B)

1.2.8 Provide evaporator skids, equipment, components, and structural supports with the materials of construction as specified per this specification and on the attached data sheets in Section 2 of the MR. The structural supports for evaporator equipment shall match with Buyer's provided embed layout.

1.2.9 Provide evaporator systems that accommodate the wall penetrations, piping layout, equipment dimension envelopes, and equipment locations as specified in Appendices H, I, and J.

1.2.10 Provide stainless steel skid framing to match Buyer embed plates for all three separator vessels. The vessel skid shall conform to the proposed skid layout dimensions shown in the Appendix F.

1.2.11 Provide below-the-hook lifting devices for installation, commissioning, and operation/maintenance of reboiler and recirculation pump. These will include lifting yokes, beams, fixtures, etc., according to Buyer design constraints for remote handling, which will be provided in 30 % design review stage. Seller is also to provide all special lifting equipment required for installation and maintenance of the evaporator systems.

1.2.12 Provide seismic analysis for evaporator structures, systems, and components. Seismic analysis shall also be performed for reboiler and support frame assemblies. Seismic model shall include: (1) vessel/equipment, (2) skid frames, and (3) supporting posts. For post/embeds locations and details, see drawings 24590-PTF-DD-S13T-00023 thru -0030, 24590-PTF-DD-S13T-00049, 24590-

PTF-SS-S15T-00311 thru -00318, 24590-PTF-SS-S15T-00352, and 24590-PTF-SS-S15T-00354.

1.2.13 Provide the thermal and static stress analyses for the evaporator structures, systems, and components. Seller shall also provide fatigue analysis to support a 40 year design life for the evaporator system. The fatigue analysis shall include all calculations and all supporting data. Buyer will provide the necessary cyclic data for Seller to perform an assessment regarding the fatigue life of the equipment. However, Seller will be responsible for confirmation that the cyclic data has been accurately interpreted before proceeding with the component fatigue analysis.

1.2.14 Identify all interfaces and requirements for external connections with equipment and services supplied by the Buyer. The interface system data parameters for use in each of the evaporator systems shall include, as a minimum, the following:

Inlet Conditions:

- Feed (flow rate @ 77 °F)
- High pressure steam (see Section 3.4.3.3)
- Service Water (flow rate)
- Antifoam (flow rate)
- Instrument air (flow rate @ pressure)
- Cooling water (flow rate @ 75 °F)
- Operating electrical (kW)
- Installed electrical (kW)

Outlet Conditions:

- Steam Condensate (volumetric flow rate & temperature)
- Process Condensate (volumetric flow rate & temperature)
- Vent System (mass flow rate & temperature)
- Concentrate waste (volumetric flow rate & temperature)

1.2.15 Provide completed Instrument and Mechanical data sheets for all instruments and equipment in the 60 % design review package, utilizing Buyer's supplied instrument data sheet samples attached in the Section 2 of the MR as templates. Buyer will procure the required instruments as detailed by the Seller's control philosophy documents (data sheets) for installation by others. Instrumentation shall conform to 24590-WTP-3PS-JQ07-T0001.

1.2.16 Provide the following for instrumentation and controls of Seller's supplied evaporator systems, equipment, and components to support Seller's software development. Any effect that the evaporator control strategy has on equipment operating parameters (i.e., pump flow rates, line flushes, feed and concentrate takeoff strategies, temperature, or pressure) will be mutually agreed upon prior to being implemented into the design.

- P&IDs
- Instrument data sheets
- Instrument loop diagrams
- Instrument location diagrams

- Control philosophies
- Functional descriptions
- Installation details
- Instrument index which includes functional test and operational set points
- Control and sequencing requirements
- Instrumentation and controls for the FEP evaporator feed and concentrate systems.

1.2.17 Provide a reliability analysis and documentation for each of the three (3) evaporator systems in accordance with the following:

1.2.17.1 A complete Failure Modes and Effects Analysis (FMEA) shall be performed on all the equipment that falls within Seller's scope of supply. This shall include associated components such as vessels, remote handling equipment, pumps have associated valves, (for isolation, for maintenance, for cross-ties, etc.) that have electronic control system which are used for process variability (e.g., flow rate). All support systems (e.g., power, air, water, steam, etc.) will be assumed to be 100 % reliable and will not be considered in the FMEA. Structural failure modes will be limited to seismic events, based on whatever seismic analyses have been performed to support the design. The FMEA shall follow in MIL-STD-1629A as close as possible. The equivalent standard actually used to perform the FMEA shall be provided as a reference (including version and year) at the 60 % design review. Also, an explanation shall be included to demonstrate how the standard has been applied. Failure modes for a reboiler are at least as follows: (1) pin hole, (2) crack, and (3) tube rupture. In addition, Seller shall indicate the possibility of the reboiler tube rupture without precursor of pin hole or crack. Determination of the possibility of reboiler tube rupture without a precursor of a pin hole or crack can be made with a qualitative argument based on fracture mechanics. No stress analysis or fracture mechanics calculations will be required to support the qualitative assessment. Failure modes for the remaining components covered by the FMEA shall be as determined by the Seller; however, the basis for the failure mode shall be specified.

1.2.17.2 Failure rate data for the purposes of an availability assessment (performed by Seller) will be derived using the following hierarchy:

- Supplier In-Service Data
- In-Service Data of similar equipment, preferably in similar applications
- Generic Documented Failure Rate Data – data taken from recognized data sources, e.g., Dexter & Perkins, NPRD 1995, etc.

The specific data source shall be provided at the 60 % design review

1.2.17.3 A maintainability analysis will be undertaken in concert with the Buyer. The analysis will address preventative and corrective

maintenance activities and estimate the required maintenance for the reboiler and appurtenances.

1.2.17.4 A recommended spare parts list, operations manuals, and maintenance manuals shall be provided.

1.2.17.5 Assume operations are 8,760 operating hours per year.

1.2.18 Provide an analysis of operating life for separator vessel, including its internal demister pads, separation trays, and feed distribution, reboiler, and recirculation pump. Justify all assumptions and references.

1.2.19 Provide structural support requirements and recommended support locations for recirculation pumps (i.e., load points, weight distribution, and maximum weight, geometry of equipment, and location of center gravity). In addition, identify areas that cannot be used as load points. Equipment support locations shall be mutually agreed with the Buyer due to remote handling requirements in the hot cell.

1.2.20 Provide design and fabrication of three support frames for reboilers. The support frame shall be welded to the reboiler. The structural supports for reboiler shall meet BNI remoteability requirements such as weight, remotely removable, airlock sizing, crane and impact wrench specified in this document.

1.2.21 Nozzles shall be located to ± 1/4 inch diametric tolerance by the hole in support frame as relative to the master dowel of the reboiler and support frame assembly. Nozzles shall be perpendicular / parallel within 0.5 degree or 1/4 inch whichever is smaller relative to the datum formed by the lower base plate of the reboiler and support frame assembly.

1.2.22 For reboiler nozzle locations, see Appendix **V**. Nozzles shall be located in accordance with 1.2.21.

1.2.23 Provide demonstration and recorded video for demister pad removal and replacement in Seller shop test. Buyer shall be notified prior to demonstration.

1.2.24 Provide radiographic film with technique and reader sheets. Exposed film must be sent, along with a copy of the technique and reader sheets in accordance with Section 3 of the MR. Film must be suitably packaged to preclude moisture and handling damage.

1.2.25 Provide any necessary special remote repair tools for the reboiler and support frame assemblies and recirculation pumps. Special tools shall not include tools readily available in the commercial market. Also, provide a list of commercially available tools needed.

1.2.26 Provide final inspection of completed vessels. Buyer will not be designating a representative to carry out final inspections of the vessels as described per Buyer specification 24590-WTP-3PS-MV00-T0001, *Pressure Vessel Design and Fabrication.*

1.2.27 Provide personnel to perform dimensional measurements for reboiler and support frame assembly, and recirculation pumps at the Seller's shop.

1.2.28 Provide certified reports for all components subject to any heat treatment during manufacture.

1.2.29 **Deleted.**

1.2.30 Provide design documents in progressively complete package form. Design reviews at 30 %, 60 %, 90 % and Final Design to resolve all outstanding issues are planned to include face-to-face discussions between Buyer's personnel and Seller's personnel at Buyer's location. Future meetings will be arranged after Design Review Package Materials have been reviewed and meeting agenda have been established. The discussions are intended to help establish/clarify interface points in system requirements, review design/design progress, design documents, exchange ideas/information, provide design direction. See G-321-E Form for document submittal requirements.

1.2.31 Perform a coupled seismic response spectra dynamic analysis that will qualify the recirculation piping, offgas piping, and provide vessel nozzle loads & nozzle loads at the Grayloc connection on each jumper. See Appendix V for requirement details on coupled dynamic analysis.

1.2.32 Perform detailed FEA uncoupled seismic response spectra dynamic analysis of all SC-I/SC-II evaporator components (including the individual components' internals and frames). See Appendix V for requirement details on FEA uncoupled analysis. Equipment static method is not permitted.

1.2.33 **Design and qualification by analysis of the remote fastener assembly.**

1.2.33.1 **WTP remote fastener drawing no. 24590-WTP-M0-50-00016 shall be used as the starting point for design.**

1.2.33.2 **Design and qualify for fabrication the captive nut retainer for required torques (400 ft-lbs ±25% tightening torque and 700 ft-lbs ±25% loosening torque. Tightening and loosening torques are not adjustable or variable over time). The methodology and acceptance criteria will be per AISC N690.**

1.2.33.3 **Design and qualify the bolts and nuts for fabrication, including the captive bolt retainer and spring for their functional requirements (e.g. vibration, seismic, operation, spring constant, and clearance for compression through captive bolt retainer). The bolts and nuts shall also be qualified in conjunction with specified tightening torque and considering friction without lubrication.**

1.2.33.4 **The remote impact wrench interface requires the bolt head to be hexagonal with 2" across flats and 2.75" high, including a 45 degree conical top.**

1.2.33.5 The torque capability of the remote tooling to install or remove bolts is as given in Section 1.2.33.2. It is acceptable to design a special bolt that is sized to take the seismic load, but it must have a head with dimensions specified in Section 1.2.33.4.

1.2.33.6 Environmental equipment qualification data:

Operating Temperature (To): 59 °F to 131 °F
Abnormal Temperature (Ta): 40 °F to 148 °F (not to be combined with seismic loads)
Gamma dose rate: 2.0 E+06 mRad/hr
Beta dose rate: 2.2 E+08 mRad/hr

Note: The values for the Normal Operating Temperature(To) and Abnormal Condition Temperature (Ta) listed above are actually corresponding to the Abnormal Temperature and the Design Basis Event temperature, respectively in Hot Cell room P-0123. The Abnormal Condition Temperature (Ta) listed above will not be used with seismic loads.

1.2.34 Provide all piping from the reboiler to the all remote connectors (i.e PUREX, Grayloc, etc..). Seller is responsible to qualify the recirculation piping. However, Buyer is responsible to qualify reboiler steam line and all other reboiler small bore piping/jumpers.

1.2.35 Provide external spray ring piping for separator vessel demister pads. The Buyer is responsible to qualify separator vessel external spray ring piping.

1.2.36 Assume complete responsibility for the design, fabrication, testing, inspection, and documentation detailed in the purchase order. Responsibility includes process design of the vessel/equipment for performance and capacity.

1.2.37 Identify any necessary changes to the MDS, Drawings, specifications and purchase order and obtain approval from the Buyer.

1.2.38 Identify any conflicts between this specification and other drawings or specifications in purchase order or Seller's documentation and request an interpretation from the Buyer prior to proceeding with the work. Use the RFI or SDDR process as appropriate.

1.2.39 Buyer's review of the Seller's documentation (G-321E and G-321V document submittals) or release of the vessel/equipment/components for shipment by the Buyer's representative, shall in no way relieve the Seller of the responsibility for complying with all the requirements of this specification and the purchase order.

1.2.40 Ensure equipment environmental qualification for all Q-components as specified in equipment MDS.

1.2.41 Provide all Staubli connectors and provide a Certified Material Test Report (CMTR) for each Staubli connector component less the shrink tubing.

1.2.42 Responsible to coordinate with the Buyer to finalize all reboiler nozzle locations. See Appendix V for preliminary reboiler nozzle locations.

1.3 Work by Others

Any item not specifically listed as being supplied by the Buyer shall be provided by the Seller.

1.3.1 Provide installation labor.

1.3.2 Provide equipment shipment, unloading and storage at Buyer's site.

1.3.3 Provide Instrumentation and controls (including installation). Provide Buyer internal standards for digital control system equipment and will specify and procure the control system equipment based on the necessary I/O requirements detailed by Seller.

1.3.4 Instrument location information for instrument location drawings.

1.3.5 Generate control logic in Buyer standard format using the final control loop definitions, system interlocks and alarms, system control philosophies, and control and sequencing requirements provided by Seller.

1.3.6 Procure the digital control system components. Buyer will provide the "Device" and "I/O" address of the serial communications link for each instrument for inclusion in the Instrument Index.

1.3.7 Perform the inspection of dimensional measurement activities for separator vessels, reboilers, and recirculation pumps.

1.3.8 Perform remote handling verification test for reboilers and support frame assemblies, recirculation pumps, and recirculation pipework jumper functionality at Buyer site. Lift tests shall be performed per Section 3.19.8 by Seller prior to shipment.

1.3.9 Provide the appropriate seismic response spectra and damping values for Seller to perform the evaporator equipment skid (including reboiler and support frame assemblies) seismic analyses.

1.3.10 Provide video/camera systems for the Seller's provided demister pad removal systems.

1.3.11 Provide heat tracing, seismic review, and any necessary uninterruptible power supplies.

1.3.12 Provide all the piping, instrumentation and controls for the antifoam systems per Seller design and specification.

1.3.13 Provide all valves (including control valves) located in the jumpers for remote maintenance in the R5/C5 hot cell.

1.3.14 Provide the recirculation pipework. This includes the piping connecting the separator vessel to the recirculation pump, the recirculation pump to the reboiler **jumper connection,** and the reboiler **jumper connection** to the separator vessel for two FEP evaporator systems and the TLP evaporator system. **Buyer will also provide design and fabrication of Grayloc connectors. However, Seller will be responsible for qualification of the recirculation pipework.**

1.3.15 Provide structural supports per Seller's structural support requirements for three recirculation pumps (FEP-PMP-00009A/B and TLP-PMP-00001) and recirculation piping/jumpers.

1.3.16 Provide **rigid (>33hz)** hot cell **concrete-filled steel frame** for all reboiler and support frame assemblies and recirculation pumps.

1.3.17 Provide the necessary cyclic data for Seller to perform an assessment regarding the fatigue life of the equipment. However, Seller will be responsible for confirmation that the cyclic data has been accurately interpreted before proceeding with the component fatigue analysis.

1.3.18 Provide remote handling verification test for recirculation pumps and recirculation pipework jumper functionality.

1.3.19 Provide all jumpers, jumper mounted equipment, and pipework connections to the separator vessel (excluding the separator offgas pipework) within the black cell.

1.3.20 Provide all pipework between Seller's provided skids (excluding the evaporator separator offgas pipework and piping connecting condenser skids and steam ejectors).

1.3.21 Provide specification of process and utility piping jumper interfaces and their locations.

1.3.22 Provide Jumper stack-up tolerance study.

1.3.23 Provide shielding for penetrations through the walls and floors.

1.3.24 Provide hot cell remote handling equipment (including impact wrenches and standard lifting equipment).

1.3.25 Provide specification for antifoam reagents.

1.3.26 Provide feed vessels (FEP-VSL-00017A/B and TLP-VSL-00009A/B).

1.3.27 Provide concentrate receipt vessels (UFP-VSL-00001A/B and TCP-VSL-00001).

1.3.28 Provide Vessel Vent system.

1.3.29 Deleted

1.3.30 Provide FEP feed pumps (FEP-PMP-00007A/B) and concentrate pumps (FEP-PMP-00008A/B) (refer to 1.2.7).

1.3.31 Provide utility (i.e., air, steam, cooling water) supply systems. However, Seller is responsible to provide steam **conditioning components and desuperheater vessels** for reboiler operation.

1.3.32 Interface drawings for evaporator equipment skids.

1.3.33 **Qualify reboiler small bore piping/jumpers (NPS 4-inch or less).**

1.3.34 **Qualify separator vessel external spray ring piping.**

1.4 Definitions

1.4.1 *Skid:* A skid is a group of components that can be manufactured and installed as a unit. These skid units are structurally self-supporting, allowing the skid to be handled by crane. Whenever practical, skids will contain all the equipment associated with the process, including vessels, piping, and supports.

1.4.2 *ALARA:* As Low As Reasonably Achievable (ALARA) documentation requirements apply to systems, structures, and components (SSCs) that have the potential to affect radiation doses, contamination levels, or releases to the environment.

1.4.3 *Buyer's Representative(s)*: The Buyer's designee(s), who shall witness onsite operations at the Seller and sub-seller sites and perform onsite inspections and surveillances.

1.4.4 *Black Cell (R5/C5)*: is a sealed concrete structure containing very high radiation and contamination where human access is prohibited during the normal operating lifetime of the cell and maintenance is not performed in the cell.

1.4.5 *C1:* Uncontrolled Area.

1.4.6 C2: Controlled area. Personnel must be verified free of contamination prior to exit.

1.4.7 *C3:* Contamination classification for plant areas that are ordinarily free of contamination, but have the potential of being contaminated.

1.4.8 *C5:* Contamination classification for plant areas that are considered high contamination areas. Access to C5 areas is not permitted.

1.4.9 *Design Basis Earthquake (DBE):* A specification of the ground motion at the site.

1.4.10 *Hot Cell (R5/C5):* A room that is restricted from personnel due to high radiation. A hot cell is constructed with thick concrete walls usually lined internally with stainless steel sheet. Process equipment located in the hot cell is connected to wall nozzles using jumpers. Process equipment in the hot cell is skid mounted

and designed for either remote maintenance using crane-mounted services or, preferably, no maintenance over the 40 year design life of the WTP.

1.4.11 *Important to Safety (ITS):* SSCs that serve to provide reasonable assurance that the facility can be operated without undue risk to the health and safety of the workers and the public. ITS encompasses the broad class of facility features addressed (not necessarily explicitly) in the top-level radiological, nuclear, and process safety standards and principles that contribute to the safe operation and protection of workers and the public during all phases and aspects of facility operations (i.e., normal operation as well as accident mitigation). ITS includes SSCs designated as Safety Class (SC), Safety Significant (SS), and additional protection class (APC).

1.4.12 *Jumper:* A remotely removable section of pipework usually incorporating connector heads and some items of process equipment (i.e., valves, instruments, etc.).

1.4.13 *Commercial Material (CM)*: **SSC** items and associated services (those that are not designated as **Safety Class** or **Safety Significant**) that are manufactured using standard commercial practices.

1.4.14 *Paragraph*: When a paragraph of this specification, referenced documents, referenced codes, or referenced standards is referenced in this specification, the paragraph referenced and all subparagraphs and sub-subparagraphs of the paragraph referenced shall be considered inclusive.

1.4.15 *Quality (Q):* **Safety Class** and **Safety Significant** items. NQA-1 (1989) compliance is required.

1.4.16 *Deleted*

1.4.17 *Rad*: A unit of energy absorbed from ionizing radiation, equal to 100 ergs per gram or 0.01 joules per kilogram of irradiated material.

1.4.18 *Additional Protection Class*: APC are ITS SSCs that are neither **Safety Class** nor **Safety Significant**.

1.4.19 *R1*: Unrestricted area.

1.4.20 *R2*: Radiation controlled area.

1.4.21 *R3:* Radiation classification for plant areas considered average. Contamination area requiring anti-contamination clothing for entry. At early design stages, when insufficient information is available regarding worker occupancy, an initial target radiation level of 2.5 mRad/hr is to be used for the R3 classification.

1.4.22 *R4:* Radiation area (maximum).

1.4.23 *R5:* Radiation classification for areas considered to be high or very high radiation areas.

1.4.24 Reboiler and support frame assembly: Reboiler and pipe work up to and including PUREX nozzles, remote clamp connector hubs, and all permanently attached frame work.

1.4.25 *Safety Class:* SSCs that, by performing their specified safety function, prevent workers or the maximally exposed member of the public from receiving a radiological exposure that exceeds the accident exposure standards defined in the Safety Requirements Document (SRD). **Safety Class** also applies to those features that, by functioning, prevent the worker or maximally exposed member of the public from receiving a chemical exposure that exceeds the ERPG-2 (AIHA 1988) chemical release standard. Those features credited for the prevention of a criticality event are also designated as **Safety Class**.

1.4.26 *Safety Significant (SS)*: SSCs needed to achieve compliance with the radiological or chemical exposure standards for the public and workers during normal operation; and **SSCs** that can, if they fail or malfunction, place frequent demands on or adversely affect the function of **Safety Class** SSCs.

1.4.27 *Seismic Category I (SC-I):* Equipment/tanks important to safety, which have a seismic safety function. For the design of Seismic Category I equipment/tanks, no credit for inelastic energy absorption is allowed. Seismic Category I equipment/tanks shall be functional during and after a Design Basis Earthquake (DBE).

1.4.28 *Seismic Category II (SC-II):* Equipment/tanks important to safety whose failure during a seismic event could prevent a Seismic Category I structure, system, or component (SSC) from performing its seismic safety function. For the design of Seismic Category II equipment/tanks, credit for inelastic energy absorption is allowed. Seismic Category II equipment/tanks shall maintain control and confinement of hazardous materials during and after a Design Basis Earthquake (DBE), but do not need to be functional.

1.4.29 *Seismic Category III Equipment (SC-III):* (a) **Safety Class** and **Safety Significant** SSCs that do not have a natural phenomena hazard (NPH) safety function. (b) **SSCs** that have a seismic safety function solely because they protect workers and members of the public from exposure to chemical hazards. (c) APC SSCs that provide primary confinement of significant inventories of radioactive materials, but in amounts less than quantities that require an **Safety Class** or **Safety Significant** designation.

1.4.30 *Seismic Category IV (SC-IV)*: APC SSCs that have been designated as APC do not provide primary confinement of significant inventories of radioactive materials.

1.4.31 *Special Tools:* Any tooling which is not commercially available required to perform maintenance on the evaporator system.

1.4.32 *Acronyms*

- AISC American Institute of Steel Construction
- ALARA As Low As Reasonably Achievable

- ANSI American National Standards Institute
- APC Additional Protection Class
- ASD Adjustable Speed Drive
-
- ASME American Society of Mechanical Engineers
- ASNT American Society of Nondestructive Testing
- ASTM American Society for Testing and Materials
- AWS American Welding Society
- CFR Code of Federal Regulations
- CM Commercial grade
- DBE Design Basis Earthquake
- DOE US Department of Energy
- DOT Department of Transportation
- **EQD** **Equipment Qualification Datasheet**
- FEA Finite Element Analysis
- FEP Waste Feed Evaporator Process System
- GPM Gallons per minute
- ITS Important to Safety
- LAW Low-Activity Waste
- M Molarity
- MDS Material Data Sheet
- MR Material Requisition
- MSDS Material Safety Data Sheet
- NDE Nondestructive Evaluation/Examination
- NPS Nominal Pipe Size
- NQA Nuclear Quality Assurance
- OBE Operating Basis Earthquake
- ORP DOE Office of River Protection
- PEP Process Equipment Platform
- PMI Positive Material Identification
- PTF Pretreatment Facility
- **PTFE** **Polytetrafluoroethylene**
- P&ID Piping and Instrumentation Diagram
- QA Quality Assurance
- QAP Quality Assurance Program
- QAM Quality Assurance Manual
- Q Quality Level
- **RFI** **Request for Information**
- RPP-WTP River Protection Project-Waste Treatment Plant
- SBS Submerged Bed Scrubber
-
-
- SC Seismic Category
- SDDR Supplier Deviation Disposition Request
- SG Specific Gravity
- SS Safety Significant
- SSCs Structures, Systems, and Components
- SSPC The Society for Protective Coating

- TID Total Integrated Dose
- TLP Treated LAW Evaporator Process System
- UBC Uniform Building Code
- WT % Weight percent
- WTP Hanford Tank Waste Treatment and Immobilization Plant

1.5 Mechanical Data Sheets

Specific design parameters and **equipment qualification** requirements for evaporator components will be shown on the individual Mechanical Data Sheet (MDS) **or Equipment Qualification Datasheet (EQD)** in Section 2 of the MR. Seller shall verify thermal, hydraulic, mechanical and process designs. Where necessary, the Seller shall change the data in order to furnish complete thermal, hydraulic, mechanical, and process guarantees. Any difference between Seller's final design and Buyer's **data specified in MDS or EQD** shall be **identified to the Buyer** for resolution and approval. Seller shall supply **and qualify** evaporator components that meet specified materials of construction, quality level, and seismic category as described on the MDS. The nominal feed chemistries used for the design should be based on Appendix A and B of this specification. Process design of the evaporator system is given in Appendix D of this specification.

1.6 Safety/Quality/Seismic Classifications

1.6.1 The quality level (Q) and seismic category (SC) of the major components of the evaporator system are specified on the data sheets in Section 2 of the MR and Appendix E of this specification.

1.6.2 Seismic category (SC) classification requirements are specified in 24590-WTP-3PS-SS90-T0001, Specification for Seismic Qualification of Seismic Category I/II Equipment and Tanks and 24590-WTP-3PS-FB01-T0001, Specification for Seismic Qualification for Seismic Category III/IV Equipment and Tanks.

2 Applicable Documents

2.1 General

2.1.1 Work shall be done in accordance with the referenced codes, standards, and documents listed below, which are an integral part of this specification.

2.1.2 When specific chapters, sections, parts, or paragraphs are listed following a code, industry standard, or reference document, only those chapters, sections, parts, or paragraphs of the document are applicable and shall be applied. If a date or revision is not listed, the latest issue, including addenda, at the time of award shall apply. Pre-approved acceptable alternate editions are listed in Section 4.2.12. For codes and standards listed below, the specific revision or effective date of codes and standards that they incorporate by reference (daughter codes and standards), shall be followed. When more than one code, standard, or referenced document covers the same topic, the requirements for all must be met with the most stringent governing. For commercial grade quality items, Seller may use any year of the ASME or ASTM standards for materials.

2.2 Codes and Industry Standards

2.2.1 ASME B31.3-1996, Process Piping

2.2.2 ASME B16.5-1988, Pipe Flanges and Flanged Fittings NPS 1/2 Through NPS 24 Addend A

2.2.3 ASME B16.47-1990, Large Diameter Steel Flanges NPS 26 through NPS 60 Addenda A

2.2.4 ASME B18.15-1985, Forged Eye Bolts

2.2.5 ASME Boiler and Pressure Vessel Code, Section VIII, Div. 1, Rules for Construction of Pressure Vessel

2.2.6 ASME Boiler and Pressure Vessel Code, Section IX , Welding and Brazing Qualifications

2.2.7 ASME NQA-1-1989, Quality Assurance Program Requirements for Nuclear Facility Applications

2.2.8 ASME Y14.100, Engineering Drawing Practices

2.2.9 AISC ASD, 9th Edition, Manual of Steel Construction, Allowable Stress Design

2.2.10 AISC N690-1994, Specification for the Design, Fabrication, and Erection of Steel Safety-Related Structures for Nuclear Facilities

2.2.11 ANSI N14.6, **Specification f**or Radioactive Materials-Special Lifting Devices for Shipping Containers Weighing 10,000 Pounds (4500 kg) or More

2.2.12 ASTM F593, Standard Specification for Stainless Steel Bolts, Hex Cap Screws, and Studs

2.2.13 ASTM F594, Standard Specification for Stainless Steel Nuts

2.2.14 AWS D1.6, Structural Welding Code-Stainless Steel

2.2.15 AWS D9.1, Sheet Metal Welding Code

2.2.16 IEEE Std 1023-1988, IEEE Guide for the Application of Human Factors Engineering to Systems, Equipment, and Facilities of Nuclear Power Generating Stations

2.2.17 MIL-STD-1629A, Military Standard, Procedures for Performing A Failure Mode, Effects and Criticality Analysis

2.2.18 UBC-1997, Uniform Building Code

2.2.19 10 CFR 835, Occupational Radiation Protection

2.2.20 49 CFR 173, General Requirements for Shipments and Packaging. Code of Federal Regulations. U.S. Department of Transportation, Washington, D.C.

2.2.21 29 CFR 1910, Occupational Safety and Health Standards

2.2.22 NFPA 101, Code for Safety to Life from Fire in Buildings and Structures

2.2.23 NFPA 70 -1999, National Electric Code

2.2.24 SSPC-SP10, Near White Metal Blast Cleaning

2.2.25 SSPC-SP11, Power Tool Cleaning to Bare Metal

2.2.26 WAC 296-24, General Safety and Health Standards

2.2.27 **FED STD** 595, Colors Used in Government Procurement

2.2.28 **ASTM** E 709, Standard Test Method for Magnetic Particle Examination

2.2.29 ASCE 4-98, Seismic Analysis of Safety-Related Nuclear Structures and Commentary.

2.2.30 ASTM A193 Editions 1991 through 2005 Standard Specification for Alloy-Steel and Stainless Steel Bolting Materials for High-Temperature Service

2.2.31 ASTM A194 Edition 1991 through 2005a, Standard Specification for Carbon and Alloy Steel Nuts for Bolts for High Pressure or High Temperature Service

2.2.32 ASTM A582, Standard Specification for Free-Machining Stainless and Heat-Resisting Steel Bars, Hot-Rolled and Cold Finished.

2.2.33 ASTM A564 Editions 1988b, 1989, 1991, 1992, 1992a, 1994, 1995, 1997, 1999, 2001, 2002, 2002a, 2004, Standard Specification for Hot Rolled and Cold-Finished Age-Hardening Stainless Steel Bars and Shapes

2.2.34 **Deleted.**

2.2.35 **Deleted.**

2.2.36 API 610-1995 Centrifugal Pumps for General Refinery Service

2.3 Reference Documents

2.3.1 Interfacing References

2.3.1.1 24590-WTP-3PS-G000-T0001,General Specification for Supplier Quality Assurance Program Requirements

2.3.1.2 24590-WTP-3PS-G000-T0002, Specification for Positive Material Identification (PMI)

2.3.1.3	24590-WTP-3PS-G000-T0003, General Specification for Packaging, Shipping, Handling, and Storage Requirements
2.3.1.4	24590-WTP-3PS-NWP0-T0001, Engineering Specification for General Welding and NDE Requirements for Supplier Fabricated Piping
2.3.1.5	24590-WTP-3PS-P000-T0001, Engineering Specification for Piping Material Classes General Description and Summary
2.3.1.6	24590-WTP-3PS-SS00-T0002, Engineering Specification for Welding of Structural Stainless Steel and Welding of Structural Carbon Steel to Structural Stainless Steel
2.3.1.7	24590-WTP-3PS-SS90-T0001, Specification for Seismic Qualification of Seismic Category I/II Equipment and Tanks
2.3.1.8	24590-WTP-3PS-FB01-T0001, Engineering Specification for Structural Design Loads for Seismic Category III & IV Equipment and Tanks
2.3.1.9	24590-WTP-3PS-EVV1-T0001, Specification for Low Voltage Adjustable Speed Drives
2.3.1.10	24590-WTP-3PS-MUMI-T0002, Specification for Low Voltage Induction Motors
2.3.1.11	24590-WTP-3PS-MPC0-T0002, Engineering Specification for General Centrifugal Pumps to Meet Requirements of ASME B73.1M-1991 and ASME B73.2M-1991 for Commercial (CM) Components
2.3.1.12	24590-WTP-3PS-M000-T0002, General Specification for Mechanical Handling Equipment Design and Manufacture
2.3.1.13	24590-WTP-3PS-MJJ0-T0001, Engineering Specification for Lifting Beams for Mechanical Handling Equipment Important to Safety Quality Level II
2.3.1.14	24590-WTP-3PS-MV00-T0001, Engineering Specification for Pressure Vessel Design and Fabrication
2.3.1.15	24590-WTP-3PS-MV00-T0002, Engineering Specification for Seismic Qualification Criteria for Pressure Vessels
2.3.1.16	24590-WTP-3PS-MES0-T0001, Engineering Specification for Shell and Tube Heat Exchangers
2.3.1.17	24590-WTP-3PS-MVB2-T0001, Engineering Specification for Welding of Pressure Vessels, Heat Exchangers, and Boilers

2.3.1.18 24590-WTP-3PS-JQ07-T0001, Engineering Specification for Instrumentation for Package Systems

2.3.1.19 24590-WTP-3PS-PS02-T0001, Engineering Specification for Shop Fabrication of Piping

2.3.1.20 24590-WTP-3PS-SS00-T0001, Engineering Specification for Welding of Carbon Structural Steel.

2.3.1.21 24590-WTP-3PS-EKP0-T0001, Engineering Specification for Electrical Requirements for Packaged Equipment

2.3.1.22 24590-WTP-3PS-PP00-T0002, Engineering Specification for Dimensional Record Program.

2.3.1.23 **24590-WTP-3PS-PF00-T0008, Engineering Specification for Pneumatic/Process Connectors (Non-ITS)**

2.3.1.24 24590-WTP-3PS-FA02-T0003, Engineering Specification for Design of Post Installed Concrete Anchors for Non-Important to Safety (Non-ITS) Applications

2.3.1.25 **24590-WTP-3PS-FA02-T0005, Engineering Specification for Design of Post Installed Concrete Anchors for Q Applications**

2.3.1.26 **24590-WTP-3PS-FA02-T0004, Engineering Specification for Installation and Testing of Post Installed Concrete Anchors and Drilling/Coring of Concrete**

2.3.1.27 24590-WTP-3PS-G000-T0014, Engineering Specification for Supplier Design Analyses

2.3.1.28 24590-WTP-3PS-JQ06-T0005, Engineering Specification for Environmental Qualification of Control and Electrical Systems and Components

2.3.1.29 24590-WTP-3PS-G000-T0015, Engineering Specification for Environmental Qualification of Mechanical Equipment

2.3.1.30 24590-WTP-DC-PS-01-001, Pipe Stress Design Criteria including "Pipe Stress Criteria" and "Span Method Criteria"

2.3.2 Developmental References

2.3.2.1 24590-PTF-3YD-FEP-00001, System Description for Waste Feed Evaporation Process (FEP)

2.3.2.2 24590-PTF-3YD-TLP-00001, System Description for Treated LAW Evaporation Process (TLP)

2.3.2.3 24590-WTP-3PS-MV00-T0003, Engineering Specification for Pressure Vessel Fatigue Analysis

2.4 Reference Drawings / Data Sheets

2.4.1 24590-WTP-MV-M59T-00001, Pressure Vessel Tolerances Standard Details

2.4.2 24590-WTP-MV-M59T-00007, Thermowell Connection Standard Details

2.4.3 24590-WTP-MV-M59T-00009, Lifting Lugs Standard Details

2.4.4 24590-WTP-MV-M59T-00010, Tailing Lug Standard Details

2.4.5 24590-WTP-MV-M59T-00011, Wash Rings Standard Details

2.4.6 24590-WTP-MV-M59T-00012, Grounding Lug Standard Details

2.4.7 24590-WTP-MV-M59T-00016001, Vessel Connections Standard Details Sheet 1 of 3

2.4.8 24590-WTP-MV-M59T-00016002, Vessel Connections Standard Details Sheet 2 of 3

2.4.9 24590-WTP-MV-M59T-00016003, Vessel Connections Standard Details Sheet 3 of 3

2.4.10 24590-WTP-MV-M59T-00017, Vessel Inspection Manway Standard Details

2.4.11 24590-WTP-MV-M59T-00018, Vessel Name Plate Standard Details

2.4.12 24590-WTP-MV-M59T-00026, Anchor Bolt Chair Details for Vertical Vessels

2.4.13 24590-WTP-M0-M10T-00004, HLW & PTF Vitrification Systems HSH, RWH, PFH, PIH Design Proposal Drawing 3 Ton Capacity Lifting Hook

2.4.14 24590-WTP-M6-50-00001, P&ID Symbols and Legend Sheet 1 of **8**

2.4.15 24590-WTP -M6-50-00002, P&ID Symbols and Legend Sheet 2 of **8**

2.4.16 24590-WTP -M6-50-00003, P&ID Symbols and Legend Sheet 3 of **8**

2.4.17 24590-WTP -M6-50-00004, P&ID Symbols and Legend Sheet 4 of **8**

2.4.18 24590-WTP -M6-50-00005, P&ID Symbols and Legend Sheet 5 of **8**

2.4.19 24590-WTP -M6-50-00006, P&ID Symbols and Legend Sheet 6 of **8**

2.4.20 24590-PTF-P1-P01T-00001, Pretreatment Building General Arrangement Plan at El. 0'-0"

2.4.21 24590-PTF-P1-P01T-00002, Pretreatment Building General Arrangement Plan at El. 28'-0"

2.4.22 24590-PTF-P1-P01T-00007, Pretreatment Building General Arrangement Section A-A

2.4.23 24590-PTF-P1-P01T-00008, Pretreatment Building General Arrangement Section B-B

2.4.24 24590-PTF-P1-P01T-00009, Pretreatment Building General Arrangement Section C-C

2.4.25 24590-PTF-P1-P01T-00010, Pretreatment Building General Arrangement Section D-D

2.4.26 24590-PTF-P1-P01T-00011, Pretreatment Building General Arrangement Section E-E

2.4.27 24590-PTF-P1-P01T-00012, Pretreatment Building General Arrangement Sect. F-F and Sect. G-G

2.4.28 24590-PTF-P1-P01T-00013, Pretreatment Building General Arrangement Sect. H-H and Sect. J-J

2.4.29 24590-PTF-P1-P01T-00014, Pretreatment Building General Arrangement Sect. K-K and Sect. L-L

2.4.30 24590-PTF-P1-P01T-00015, Pretreatment Building General Arrangement Sect. M-M and Sect. N-N

2.4.31 24590-PTF-P1-P01T-00016, Pretreatment Building General Arrangement Sect. P-P and Sect. Q-Q

2.4.32 24590-PTF-P1-P01T-00017, Pretreatment Building General Arrangement Sect. R-R

2.4.33 24590-PTF-DD-S13T-00022, Pretreatment Facility Structural Concrete Embedments Key Plan Elevation 0 ft – 0 in

2.4.34 24590-PTF-DD-S13T-00023, Pretreatment Facility Structural Concrete Embedments Key Plan Elevation 0 ft – 0 in Sh 1

2.4.35 24590-PTF-DD-S13T-00025, Pretreatment Facility Structural Concrete Embedments Plan El 0 ft – 0 in Sh 3

2.4.36 24590-PTF-DD-S13T-00026, Pretreatment Facility Structural Concrete Embedments Plan El 0 ft – 0 in Sh 4

2.4.37 24590-PTF-DD-S13T-00027, Pretreatment Facility Structural Concrete Embedments Plan Elevation 0 ft – 0 in Sh 5

2.4.38 24590-PTF-DD-S13T-00028, Pretreatment Facility Structural Concrete Embedments Plan Elevation 0 ft – 0 in Sh 6

2.4.39 224590-PTF-DD-S13T-00029, Pretreatment Facility Structural Concrete Embedments Plan El. 0'-0" Sh 7

2.4.40 24590-PTF-DD-S13T-00030, Pretreatment Facility Structural Concrete Embedments Plan El. 0'-0" Sh 8

2.4.41 24590-PTF-DD-S13T-00031, Pretreatment Facility Structural Concrete Embedments Plan El. 0'-0" Sh 9

2.4.42 24590-PTF-DD-S13T-00036, Pretreatment Facility Structural Concrete Embedments EL 0 ft – 0 in Vessels Sh 1

2.4.43 24590-PTF-DD-S13T-00039, Pretreatment Facility Structural Concrete Embedments EL 0 ft – 0 in Vessels Sh 2

2.4.44 24590-PTF-DD-S13T-00042, Pretreatment Facility Structural Concrete Embedment Details EL 0 ft – 0 in Vessels Sh 1

2.4.45 24590-PTF-DD-S13T-00043, Pretreatment Facility Structural Concrete Embedment Details EL 0 ft – 0 in Vessels Sh 2

2.4.46 24590-PTF-DD-S13T-00044, Pretreatment Facility Structural Concrete Embedment Details EL 0 ft – 0 in Vessels Sh 3

2.4.47 24590-PTF-DD-S13T-00047, Pretreatment Facility Structural Concrete Embedment EL 0 ft – 0 in Misc Sh1

2.4.48 24590-PTF-DD-S13T-00049, Pretreatment Facility Structural Concrete Embedment EL 0 ft – 0 in Misc Sh 3

2.4.49 24590-PTF-MJD-PIH-00001, Mechanical Handling Data Sheet for Overhead Mast Power Manipulator

2.4.50 24590-PTF-M0-PIH-00008, Pretreatment System PIH Design Proposal Drawing 30 Ton Capacity Lifting Hook

2.4.51 24590-WTP-M61-P23T-00056, WTP Details Lower Holder Bottom Outlet Electrical Connector 2"

2.4.52 24590-PTF-SS-S15T-00311, Pretreatment Facility Structural Misc Support Steel El. 0'-0" Plan Sh 1

2.4.53 24590-PTF-SS-S15T-00312, Pretreatment Facility Structural Misc Support Steel El. 0'-0" Plan Sh 2

2.4.54 24590-PTF-SS-S15T-00313, Pretreatment Facility Structural Misc Support Steel El. 0'-0" Plan Sh 3

2.4.55 24590-PTF-SS-S15T-00314, Pretreatment Facility Structural Misc Support Steel El. 0'-0" Plan Sh 4

2.4.56 24590-PTF-SS-S15T-00315, Pretreatment Facility Structural Misc Support Steel El. 0'-0" Plan Sh 5

2.4.57 24590-PTF-SS-S15T-00316, Pretreatment Facility Structural Misc Support Steel El. 0'-0" Plan Sh 6

2.4.58 24590-PTF-SS-S15T-00317, Pretreatment Facility Structural Misc Support Steel El. 0'-0" Plan Sh 7

2.4.59 24590-PTF-SS-S15T-00318, Pretreatment Facility Structural Misc Support Steel El. 0'-0" Plan Sh 8

2.4.60 24590-PTF-SS-S15T-00352, Pretreatment Facility Structural Misc Support Steel Details Sh 3

2.4.61 24590-PTF-SS-S15T-00354, Pretreatment Facility Structural Misc Support Steel Details Sh 5

2.4.62 24590-WTP-M61-P23T-00056, WTP Details Lower Holder Bottom Outlet Electrical Connector 2".

2.4.63 24590-WTP-M61-P23T-00057, WTP Assembly Lower Holder Electrical Connector 2 Inch.

2.4.64 24590-WTP-M61-P23T-00005, WTP Details - Nozzles PUREX Male Connector 1", 2", 3", 4"

2.4.65 24590-WTP-M61N-P23T-00006, Nozzles PUREX Connector 1", 2", 3", 4"

2.4.66 24590-WTP-M61-P23T-00040, WTP Details - Kickoff Plates PUREX Connector 1", 2", 3", 4"

2.4.67 24590-WTP-M61-P23T-00057, WTP Assembly Lower Holder Electrical Connector 2 Inch.

2.4.68 24590-WTP-P61-P27T-00001, WTP Standard Jumper Details

2.4.69 24590-PTF-M6-FEP-00001**001**, P&ID - PTF Waste Feed Evaporation Process System Evaporator Feed Vessel FEP-VSL-00017A.

2.4.70 24590-PTF-M6-FEP-00002**001**, P&ID - PTF Waste Feed Evaporation Process System Separator FEP-SEP-00001A.

2.4.71 24590-PTF-M6-FEP-00003**001**, P&ID - PTF Waste Feed Evaporation Process System Condensate Collection FEP-VSL-00005.

2.4.72 24590-PTF-M6-FEP-00004**001**, P&ID - PTF Waste Feed Evaporation Process System Separator FEP-SEP-00001B.

2.4.73 24590-PTF-M6-FEP-00005**001**, P&ID - PTF Waste Feed Evaporation Process System Condensers **FEP-COND-00001B/2B/3B.**

2.4.74 24590-PTF-M6-TLP-00001, P&ID - PTF Treated LAW Evaporation Process System LAW SBS Condensate Receipt TLP-VSL-00009A & 9B.

2.4.75 24590-PTF-M6-TLP-00002, P&ID - PTF Treated LAW Evaporation Process System Condensate Collection TLP-VSL-00002.

2.4.76 24590-PTF-M6-TLP-00003, P&ID - PTF Treated LAW Evaporation Process System Separator TLP-SEP-00001.

2.4.77 24590-PTF-M6-STR-00001, P&ID - PTF Strontium Nitrate, Sodium Permanganate, and Anti-foam Reagent Distribution (CM).

2.4.78 24590-PTF-DD-S13T-00045, Pretreatment Facility Structural Concrete Embedment Details Vessel Support Ring Beam Installation

2.4.79 24590-PTF-DB-S13T-00048, Pretreatment Facility Structural Concrete Embedments Partial Plan EL 56'0" - SH 3

2.4.80 24590-PTF-DB-S13T-00050, Pretreatment Facility Structural Concrete Embedments Partial Plan EL 56'0" - SH 5

2.4.81 24590-PTF-DB-S13T-00051, Pretreatment Facility Structural Concrete Embedments Partial Plan EL 56'0" - SH 6

2.4.82 24590-PTF-DB-S13T-00159, Pretreatment Facility Structural Concrete Walls, Section DN - SH 3

2.4.83 24590-PTF-DB-S13T-00165, Pretreatment Facility Structural Concrete Walls, Section EN - SH 1

2.4.84 24590-PTF-DB-S13T-00166, Pretreatment Facility Structural Concrete Walls, Section EN - SH 2

2.4.85 24590-PTF-DB-S13T-00171, Pretreatment Facility Structural Concrete Walls, Section ES - SH 3

2.4.86 24590-PTF-DB-S13T-00172, Pretreatment Facility Structural Concrete Walls, Section ES - SH 4

2.4.87 24590-PTF-DB-S13T-00205, Pretreatment Facility Structural Concrete Walls, Layout Details SH 5

2.4.88 24590-PTF-DB-S13T-00214, Pretreatment Facility Structural Concrete Walls, Layout Details SH 14

2.4.89 24590-PTF-DB-S13T-00227, Pretreatment Facility Structural Concrete Walls, Layout Details SH 27

2.4.90 24590-PTF-SS-S15T-00034, Pretreatment Facility Structural Steel Framing Floor Plan EL 56'-0" SH 3

2.4.91 24590-PTF-SS-S15T-00037, Pretreatment Facility Structural Steel Framing Floor Plan EL 56'-0" SH 6

2.4.92 24590-WTP-MV-M59T-00002, Tank Insulation Standard Details

2.4.93 24590-WTP-MV-M59T-00003, Tie Down Swivel Lug Mounting Studs Standard Details

2.4.94 24590-WTP-M6-50-00007, P&ID Symbols and Legend Sheet 7 of 8

2.4.95 24590-WTP-M6-50-00008, P&ID Symbols and Legend Sheet 8 of 8

2.4.96 24590-PTF-M6-FEP-00001002, P&ID - PTF Waste Feed Evaporation Process System Evaporator Feed Vessel FEP-VSL-00017B.

2.4.97 24590-PTF-M6-FEP-00002002, P&ID - PTF Waste Feed Evaporation Process System Reboiler FEP-RBLR-00001A.

2.4.98 24590-PTF-M6-FEP-00002003, P&ID - PTF Waste Feed Evaporation Process System Pump FEP-PMP-00008A.

2.4.99 24590-PTF-M6-FEP-00003002, P&ID - PTF Waste Feed Evaporation Process System Condensers FEP-COND-00001A/2A/3A.

2.4.100 24590-PTF-M6-FEP-00004002, P&ID - PTF Waste Feed Evaporation Process System Reboiler FEP-RBLR-00001B.

2.4.101 24590-PTF-M6-FEP-00004003, P&ID - PTF Waste Feed Evaporation Process System Pump FEP-PMP-00008B.

2.4.102 24590-PTF-M6-FEP-00010001, P&ID - PTF Waste Feed Evaporation Process System Reboiler Condensate Collection and Transfer.

2.4.103 24590-PTF-M6-FEP-00010002, P&ID - PTF Waste Feed Evaporation Process System Reboiler Condensate Collection and Transfer.

2.4.104 24590-PTF-M6-TLP-00009, P&ID - PTF Treated LAW Feed Evaporation Process System Reboiler Condensate and Collection

2.4.105 24590-PTF-JFQ-FEP-00001, Equipment Qualification Datasheet for FEP Vortex / Swirl Meter FEP-TF-0201

2.4.106 24590-PTF-JFQ-FEP-00002, Equipment Qualification Datasheet for FEP Vortex / Swirl Meter FEP-TF-0401

2.4.107 24590-PTF-JVQ-FEP-00001, Equipment Qualification Datasheet for FEP Pressure Control Valve FEP-PV-0267

2.4.108 24590-PTF-JVQ-FEP-00002, Equipment Qualification Datasheet for FEP Pressure Control Valve FEP-PV-0467

2.4.109 24590-PTF-JFQ-TLP-00001, Equipment Qualification Datasheet for TLP Vortex / Swirl Meter TLP-TF-0301

2.4.110 24590-PTF-JVQ-TLP-00001, Equipment Qualification Datasheet for TLP Pressure Control Valve TLP-PV-0355

2.5 Design Changes Incorporated by Design

- 24590-WTP-SDDR-PROC-04-00104
- 24590-WTP-SDDR-PROC-04-01194
- 24590-WTP-SDDR-PROC-05-00181
- 24590-WTP-SDDR-PROC-05-00208
- 24590-WTP-SDDR-M-05-00438
- 24590-WTP-SDDR-MS-07-00029

2.6 Design Changes Incorporated by Reference

- 24590-WTP-SDDR-PROC-04-00994
- 24590-WTP-SDDR-PROC-04-00995
- 24590-WTP-SDDR-PROC-04-01193
- 24590-WTP-SDDR-PROC-04-01270
- 24590-WTP-SDDR-PROC-04-~~01271~~ 01271 ALG 23FEB09
- 24590-WTP-SDDR-PROC-04-01272
- 24590-WTP-SDDR-PROC-04-01273
- 24590-WTP-SDDR-PROC-05-00208
- 24590-WTP-SDDR-M-06-00395 } THESE TWO SDDRS ARE NEW TO REV. 3
- 24590-WTP-SDDR-MS-07-00030 }

3 Design Requirements

ALG 23FEB09

3.1 General

3.1.1 As Low As Reasonably Achievable (ALARA) principles shall be factored into the design and maintenance of the evaporator systems per 10 CFR 835, *Occupational Radiation Protection*.

3.1.2 Unless otherwise specified, the evaporator systems shall be designed and fabricated per applicable documents listed in Section 2.0 of this specification, and the data sheets in Section 2 of the MR. No changes, substitutions, or deviations shall be made without Buyer's concurrence.

3.1.3 The evaporator system design shall comply with the requirements stipulated in this specification. Seller shall conform with Buyer's requirements for hot cell wall penetrations, recirculation piping/jumper configuration, layout, dimension, location as shown in the Appendices I, J, and K. Seller shall confirm locations for all evaporator equipment are adequate for system functionality. Seller shall submit any variances to these requirements during design review stage for concurrence.

3.1.4 The evaporator piping and instrumentation sketches provided in the Appendix L of this specification illustrate the conceptual piping and instrument control of the evaporator systems. All evaporator systems or components shall have adequate control features to bring evaporator operations to a safe and stable 'shutdown' condition during an abnormal event. Seller's control design philosophy can

differ from Buyer's conceptual control; however, the Seller's control system design shall conform to Buyer's specification 24590-WTP-3PS-JQ07-T0001.

3.1.5 General Arrangement drawings should be used to convey approximate equipment locations for skids. Equipment locations shown in the Appendices I, J, and K shall be maintained unless the design dictates an alternate location.

3.1.6 The Seller shall be responsible for the evaporator system design including component specification such as design parameters, sizing, pipe support loads, pipe hangers, anchors, pipe slopes and environmental protection (temperature, humidity, etc.) as required.

3.1.7 A means shall be provided to avoid accumulation of settled solids (e.g., sparging or removal of separator contents) in event of recirculation pump failure.

3.1.8 All heat exchangers including reboilers and condensers shall comply with ASME Section VIII and TEMA standard, Class B. "Code Stamp" shall be provided for all Seller's provided heat exchangers.

3.1.9 Seller shall comply with nozzle loading requirements specified in Appendix V for SC-I and SC-II vessels/equipment.

3.1.10 Gusset plates cannot be utilized to accommodate the required nozzle loading on safety class vessels and heat exchangers.

3.1.11 **Except for flowmeters,** the equipment shall be designed such that personnel sound level exposure outside of R5/C5 area shall not exceed 85 dBA. Seller shall clearly state how the specified sound level limit will be met. **Noise level is not required for flowmeters since they will have the same noise as the piping system and should not amplify or attenuate that noise to a measurable level.**

3.1.12 All calculations, modeling, analyses, drawings, and documentation shall utilize U.S. customary units.

3.1.13 Design of the evaporator systems shall incorporate the latest and best proven technology, components, and materials for the required service conditions and performance.

3.1.14 The evaporator system model analysis, thermal analysis, design analysis, and seismic analysis shall be verified such that the final system, equipment and component design meet the requirements of this specification as well as its addenda and attachments.

3.1.15 Evaporator system equipment shall be furnished as discrete skid mounted units that are ready to integrate with the Buyer's structures, systems, and components.

3.1.16 The evaporator systems shall be identical in component count, capacity, and mode of operation and shall utilize common component types and equipment manufacturers.

3.1.17 The FEP and TLP Evaporator systems shall be designed in accordance with following feed conditions:

- Design FEP feed flow of 50 gpm
- Design TLP feed flow of 38 gpm
- Design feed temperature of 77 °F
- Waste feed pH of 11 – 14
- LAW SBS pH of 6.8

3.1.18 Normal design cooling water temperature of 75 °F with a peak summer maximum of 83 °F shall be used for designing/sizing all condensers. The cooling water temperature of 75 °F is valid for 85 % of the time through a year. During 15 % of the time when cooling water temperature is above 75 °F, the TLP evaporator system can be operated at a higher temperatures (i.e., 1.2 psia, 127 °F – 131 °F). This operating strategy is for short term operation and is to minimize cooling water flow.

3.1.19 Evaporator systems and components should be designed to prevent the migration of contamination into the utility / reagent systems.

3.1.20 Human factors and ergonomics shall be designed into all evaporator equipment requiring manual operations per IEEE Std 1023, *IEEE Guide for the Application of Human Factors Engineering to Systems, Equipment, and Facilities of Nuclear Power Generating Stations*.

3.1.21 Quality level, seismic category, materials of construction, design pressure, and design temperature shall be in accordance with the data sheets in Section 2 of the MR and Appendix E of this specification. If a change to the requirements for materials and/or the equipment types to be used during the execution of the contract is dictated because of design analyses, then the Seller is required to provide Buyer its recommendation for review and concurrence prior to incorporation into the design of the evaporator systems.

3.1.22 All equipment in evaporator systems requiring maintenance or removal shall have flushing and draining capability to facilitate decontamination. Design features shall minimize the need for decontamination by including sloping features, replacing sharp bends with gradual bends, etc. where practical, consistent with ALARA practices.

3.1.23 Provision for temperature instrumentation shall be jumper nozzles incorporating the required thermowell details.

3.1.24 Nozzle and flange alignment shall be within ± 0.5 degrees of design specifications.

3.1.25 Jumper nozzle connections shall be included in the evaporator systems to interface with the Buyer supplied jumpers. **Preliminary** location and details of the connections **should** be per Appendix **V**. **Final locations are to be coordinated with the Buyer.**

3.1.26 The reboiler support frame detail sketches provided in the Appendix **V** of this specification illustrate the conceptual design to support remoteability.

3.1.27 Seller's reboiler frame design shall not protrude into the crane path as specified in Appendix **V**.

3.1.28 The hub type (remote clamp) connectors and PUREX nozzles are the only government-furnished equipment, which will be sent to Seller for installation. Buyer will provide Seller hydro test blanks for the remote clamp connectors (Grayloc) and the remote PUREX and other connectors for installation on the reboilers. **Hydro test connections for axial flow pumps to be provided by Seller.**

3.1.29 Nozzles for reboiler and support frame assemblies are to be designed to maintain positional tolerance during operational loading conditions and maintain structural integrity during and after a DBE. Preliminary loading information for the nozzle loads **and support loads** on the reboilers are provided in Appendix **V.**

3.1.30 All adjustable speed drives for pumps can be designed for non-radiation environment.

3.1.31 Seller's fabrication drawings shall be used as the document of record for fabrication of the components. Seller's specification drawings are not required to be revised and maintained in total agreement with approved fabrication drawings.

3.1.32 Regarding Buyer's specification 24590-WTP-3PS-G000-T0003, *Engineering Specification for Packing, Handling, and Storage requirements,* the center of gravity and sling points are not needed for off-gas piping pieces and separator vessel support towers because they are awkward hollow parts that do not allow a meaningful center of gravity to be determined or designed. Multiple sling configurations are possible to affect a successful lift and should be at the discretion of site construction supervisor.

3.1.33 Seller shall provide evaporator systems in the skids for ease of transportation, installation, and replacement. Seller is responsible for equipment skid sizing and layout to fit Buyer's facility. For the baseline design, each evaporator system will comprise the following skids:

- Separator vessel skids
- Reboiler and support frame assemblies.
- TLP feed pumps skid
- TLP concentrate pumps skid
- **Condenser skid which includes primary condenser, inter-condenser, after-condenser, and steam ejectors**
- Process condensate skids which includes vessel and pump
- Antifoam skids which include vessel and pumps

3.1.34 **Seller shall perform equipment environmental qualification for all supplied Q-components in accordance with Buyer's specifications 24590-WTP-3PS-G000-T0015, *Engineering Specification for Environmental Qualification of***

Mechanical Equipment **and 24590-WTP-3PS-JQ06-T0005,** ***Engineering Specification for Environmental Qualification of Control and Electrical Systems and Components*****, as applicable. Equipment qualification environmental data is provided in individual MDS or EQD in Section 2 of the MR.**

3.1.35 Condenser skids shall be designed with cast-in-anchors.

3.1.36 Seller is permitted to apply the Inelastic Energy Absorption Coefficient in accordance guideline provided in attachment # 7, Appendix V of this specification regardless of actual fabrication dates.

3.1.37 Seller engineering analyses and calculations as supplier submittals shall be in accordance with Buyer's Specification 24590-WTP-3PS-G000-T0014, ***Engineering Specification for Supplier Design Analyses.***

3.2 Basic Function

The evaporator systems employ forced circulation and vacuum evaporation. The Waste Feed Process (FEP) evaporator system consists of two (2) identical evaporators which will be installed at the west end of the pretreatment facility (PTF). The Treated Low Activity Waste Process (TLP) evaporator system will be installed at the east end of the PTF.

Each evaporator will be designed to process 100 % of the design feed flow (50 gpm for each FEP system and 39 gpm for TLP system) with an evaporation feed rate of 30 gpm and to operate independent of each other. Normal operation of the FEP evaporator system consists of one evaporator operating at a time but simultaneous operation is possible. The FEP evaporators partially evaporate Waste Feed from the Department of Energy (DOE) and various recycle streams from within the pretreatment process. The Waste Feed is evaporated in order to optimize the operation of downstream unit operations. The Waste Feed flow is varied in order to control the level in the FEP separator. The FEP evaporator shall be designed to achieve a sodium concentration of 5 to 6M.

The LAW Submerged Bed Scrubber (SBS) condensate and treated LAW are fed to the TLP evaporator simultaneously. The treated LAW feed is fed continuously and at a constant rate while the flow of SBS condensate is varied in order to control the level in the TLP separator vessel. The TLP evaporator shall be designed to achieve a sodium concentration of 8 to 10M.

The feed stream is introduced into the recirculation loop on the suction side of the recirculation pump. The recirculation pump circulates the liquor at a rate of approximately 11,000 gpm. The pump discharges liquor through evaporator reboiler, which raises the temperature of the liquor by approximately 2 to 4 °F using 2.5 psig steam throttled from **high** pressure steam supply to the building. This small temperature rise is necessary to prevent the liquor from boiling (fouling) in the tubes before it reaches the separator vessel. Sufficient hydrostatic head is maintained to suppress boiling inside the reboiler. When the recirculating liquor reaches the separator vessel, flash evaporation occurs due to the reduced pressure in the vessel. The vapor flows through a series of separation trays and a removable demister pad section which are internal parts of the separator vessel. The vapor then flows to the primary condenser where the majority of the vapor is condensed. The

noncondensables and a small amount of moisture are vented to the ejector/condenser vacuum system. The secondary condenser system consists of primary ejector, secondary ejector, inter-condenser, and after-condenser. The humid noncondensables from the primary condenser flow to the suction side of the primary ejector which discharges to the inter-condenser. The vent from the inter-condenser flows to the suction side of the secondary ejector which discharges into the after-condenser. The vent from the after-condenser flows to the facility vessel vent system. The secondary condenser system is designed to achieve a pressure of 1.0 to 1.3 psia in the separator vessel during normal operating conditions. The operating pressure is automatically controlled by an air in-bleed into the suction line of the primary ejector. This operating pressure lowers the boiling point of the liquor to approximately 122 °F which reduces potential corrosion of the evaporator by chlorides. Condensate from the condensers flows by gravity to the condensate vessel. Some of the condensate is drawn off and used to wash the demister pads in the separator vessel. Because of the foaming tendencies of evaporator feed chemistry, when foaming is anticipated in the separator vessel, antifoam will be continuously added.

3.3 Performance

3.3.1 All three (3) evaporator systems shall be capable of continuous operation while achieving a feed evaporation rate ranging from 10 to 30 gpm. The design feed evaporator rate shall exclude all water/fluid addition to demister pads spray, separation trays, and antifoam injection.

3.3.2 Each evaporator system shall operate independently.

3.3.3 Each evaporator system shall have the ability to be placed on "total reflux" mode.

3.3.4 A minimum **separator** decontamination factor of **6.E+07** shall be achieved with consideration to achieving the evaporator stream operating conditions described in subsection 3.4 and the ALARA general design condition in subsection 3.1. **Separator decontaminator factor is defined as the ratio of Cesium in the condensate to the maximum concentration of Cesium in the feed stream.**

3.3.5 Evaporator system operating parameters shall minimize reboiler fouling by using low differential temperature and high tube velocity to the extent practical in the design.

3.3.6 The FEP evaporator systems shall produce waste concentration of 5 to 6M sodium (1.23 to 1.50 SG).

3.3.7 The TLP evaporator system shall produce waste concentration of 8 to 10M sodium (1.33 to 1.57 SG).

3.3.8 All evaporator system components within the R5/C5 black cell (except the demister pads) shall be nonreplaceable components with a design life of 40 years. Reboilers and recirculation pumps in the R5/C5 hot cell shall be remotely replaceable.

3.4 Design Conditions

3.4.1 General

3.4.1.1 For nominal conditions refer to Appendix A and Appendix B for the FEP evaporator and TLP evaporator stream data, respectively. The data defines the system performance operating conditions and requirements. For predicted maximum radionuclides, refer to Appendix C.

3.4.1.2 All equipment skids shall meet applicable Department of Transportation (DOT) requirements for road transportation per 49 CFR 173.

3.4.2 Physical Constraints/Interfaces

3.4.2.1 The FEP evaporator separator vessels (FEP-SEP-00001A/B) with demister pads shall be located in the R5/C5 black cell, room P-0106 on the 0-ft floor elevation. The TLP evaporator separator vessel (TLP-SEP-00001) shall be located in the R5/C5 black cell, room P-0117 on the 0-ft floor elevation. Demister pad assemblies shall be accessed through a sealed, shielded aperture in the 56 ft floor (10-ft diameter maximum). Refer to Appendices I and J for their locations and layout.

3.4.2.2 All Reboiler and support frame assemblies and recirculation pumps shall be located in the R5/C5 hot cell, room P-0123 on the 0-ft floor elevation. Each reboiler and support frame assemblies shall not weigh more than 27.5 tons including all lifting fixtures and lifting beams. The available space for each reboiler (excluding nozzles) has dimensions of 6 ft diameter by 15 ft high. All equipment assembly must fit through a 13 ft by 13 ft air lock door and shall not exceed 21 ft length. Assume air lock transportation cart is 3 ft high. The space envelope limitation of 6 feet diameter shall be used for mounting of remote connectors and seal flush reservoir on the recirculation pump assembly.

3.4.2.3 FEP evaporator primary condensers (FEP-COND-00001A/B) and secondary condenser system (FEP-COND-00002A/B, -00003A/B, and FEP-EJCTR-00040, -00041, -00042, -00043) shall be designed to fit in room P-0304 on the 56-ft floor elevation. TLP evaporator primary condenser (TLP-COND-00001) and secondary condenser system (TLP-COND-00002, -00003, and TLP-EJCTR-00064, -00067) shall be designed to fit in room P-0311 on the 56-ft floor elevation. Refer to Appendices I and J for locations and layout.

3.4.2.4 FEP evaporator condensate vessel and pump system (FEP-VSL-00005 and FEP-PMP-00006A/B) shall be designed to fit in room P-0105B (R2/C3) on the 0-ft floor elevation. TLP evaporator condensate vessel and pump system (TLP-VSL-00002 and TLP-

PMP-00002A/B) shall be designed to fit in room P-0118 (R2/C3) on the 0-ft floor elevation. Refer to Appendices I and J for locations and layout.

3.4.2.5 Antifoam vessel and pump system (AFR-TK-00001 and AFR-PMP-00006, -00007, -00008) shall be designed to fit in room P-0429 on the 77-ft floor elevation (R2/C2). Refer to Appendix K for locations and layout.

3.4.3 Buyer Supplied Utilities

Values for all utility supply pressures and temperatures are nominal values.

3.4.3.1 Plant service air and instrument air will be supplied at approximately 100 psig and 65 °F.

3.4.3.2 Deleted.

3.4.3.3 High pressure steam supply conditions:

3.4.3.3.1 Minimum operating condition: 110 psig @ 344°F

3.4.3.3.2 Normal operating condition: 118 psig @ 349°F

3.4.3.3.3 Maximum operating condition: 135 psig @ 358°F

3.4.3.3.4 Design condition: 163 psig @ 372°F

3.4.3.4 Cooling water **for condensers** will be supplied at **100** psig design/**95 psig maximum operating conditions** and 75 °F with a peak summer maximum of 83 °F. The cooling water temperature of 75 °F is valid for 85 % of the time through a year.

3.4.3.5 Demineralized water will be supplied at approximately 72.5 psig and 75 °F for demister pad and separation tray spray in the event that sufficient process condensate is unavailable.

3.4.3.6 Water, 5 M nitric acid at approximately 75 psig and 77 °F, or 50 % wt caustic at approximately 75 psig and 77 °F can be supplied for the Seller's flushing system.

3.5 Environmental Conditions

3.5.1 Storage

Prior to installation, the evaporator systems may be stored outdoors at ambient temperature extremes ranging from –30 °F dry-bulb to 117 °F dry-bulb and with a relative humidity of 0-100 %.

3.5.2 Evaporator Separator Vessels

Equipment environmental data for separator vessel qualification is provided in their individual MDS in Section 2 of the MR.

3.5.3 Reboilers and Recirculation Pumps

Equipment environmental data for reboilers and recirculation pumps qualification is provided in their individual MDS in Section 2 of the MR.

3.5.4 Primary condensers and Vacuum Systems

Equipment environmental data for reboilers and recirculation pumps qualification is provided in their individual MDS in Section 2 of the MR..

3.5.5 Condensate Vessels, Antifoam Vessel, Condensate Pumps, Antifoam Pumps, FEP Feed Pumps, FEP Concentrate pumps, Reboiler Steam Condensate Transfer Stations, and steam conditioning systems components

The condensate vessels (FEP-VSL-00005 and TLP-VSL-00002), condensate pumps (FEP-PMP-00006A/B and TLP-PMP-00002A/B), and FEP/TLP reboiler steam condensate transfer stations (FEP-VSL-00021, FEP-PMP-00010A/B, FEP-VSL-00022, FEP-PMP-00011A/B, TLP-VSL-00047, TLP-PMP-00012A/B) will be installed indoors in an R2/C3 area. The antifoam vessel (AFR-TK-00001) and antifoam pumps (AFR-PMP-00006, -00007, and -00008) will be installed indoors in an R2/C2 area. **Steam conditioning systems components will be installed indoors in an R3/C3 area.** The R2/C3, R2/C2 **and R3/C3** areas are maintained between 59 to 113 °F dry-bulb temperature during normal operation. Radiation exposure will be 0.5 mRad/hr. **Equipment environmental data for Q components of steam conditioning systems is provided in their individual EQD in Section 2 of the MR.**

3.6 Feed Pumps

3.6.1 For feed pump requirements, refer to individual MDS in Section 2 of the MR and equipment sketches in Appendices I and J of this specification.

3.6.2 Two TLP feed pumps (TLP-PMP-00005A/B) shall be supplied by the Seller in accordance with Buyer's specification *24590-WTP-3PS-MPC0-T0002, Engineering Specification for General Centrifugal Pumps to Meet Requirements of ASME B73.1M-1991 and ASME B73.2M-1991 for Commercial (CM) Components.*

3.6.3 The TLP feed pumps shall be centrifugal type. Each pump shall be provided with a pump motor mounted on a common base plate for contact maintenance. The pumps are plumbed together for operational flexibility. Seal flush plan to API 7353.

3.6.4 Each TLP feed pump shall be provided with an adjustable speed drive (ASD). The ASD shall be compliant with specification *24590-WTP-3PS-EVV1-T0001, Engineering Specification for Low Voltage Adjustable Speed Drives* and specification *24590-WTP-3PS-MUMI-T0002, Engineering Specification for Low Voltage Induction Motors.*

3.6.5 LAW SBS Condensate feed pumps (TLP-PMP-00005A/B) for the TLP evaporator system shall be supplied by the Seller. These pumps shall be designed for contact maintenance and designed for the following operating conditions. All fluid properties are referenced at 77 °F.

- 10 to 38 gpm
- 1.0 to 16.3 cP
- 1.0 to 1.41 SG
- 68 to 167 °F
- less than 3 wt % feed solids.

3.6.6 For FEP feed pumps (FEP-PMP-00007A/B), the sections for liquid property and operating conditions on the Mechanical Data Sheets (Section 2 of the MR) shall be specified by the Seller. The Buyer will procure pumps which meet these criteria unless otherwise directed by the Seller as described in Section 1.2.16. The following operating conditions shall apply. All fluid properties are referenced at 77 °F.

- 20 to 50 gpm
- 4.2 to 12 cP
- 1.0 to 1.29 SG
- 59 to 122 °F
- 0 to 10 wt % suspended solids

3.6.7 Treated LAW Collection vessel feed pump (CXP-PMP-00002A/B) for the Treated LAW evaporator system will be specified and provided by the Buyer for the following operating conditions. All fluid properties are referenced at 77 °F.

- 22 to 34 gpm
- 0.6 to 5.0 cP
- 1.0 to 1.26 SG
- 59 to 113 °F
- 0 wt % suspended solids

3.6.8 The feed pump flow rate shall be controlled by the separator vessel liquid level.

3.6.9 All waste feeds shall be transferred by the feed pump into the recirculation line on the suction side of the recirculation pump.

3.6.10 Deleted.

3.7 Recirculation Pumps

3.7.1 For recirculation pump requirements, refer to individual MDS in Section 2 of the MR and equipment sketches in Appendices I and J of this specification.

3.7.2 The recirculation pumps shall be axial-flow type mounted vertically in an elbow of the recirculation loop.

3.7.3 Each recirculation pump shall be provided with a pump motor, **seal water cooling fan**, and an adjustable speed drive (ASD). Motors shall be provided with radiation resistant insulation, rated for **total integrated rad (gamma) as specified in MDS**. The ASD shall be compliant with specification *24590-WTP-3PS-EVV1-T0001, Engineering Specification for Low Voltage Adjustable Speed Drives* and specification *24590-WTP-3PS-MUMI-T0002, Engineering Specification for Low Voltage Induction Motors.*

3.7.4 The recirculating pumps shall have dual mechanical seals that will be lubricated/flushed with water. Flush piping will be based on API Plan 53. Seller shall coordinate with Buyer for details.

3.7.5 Inlet and outlet pipe ends of the recirculation pumps shall be prepared for butt welding.

3.7.6 Seller shall comply with API 610 nozzle loading requirements .

3.7.7 The recirculation pump nozzle locations shall be within (±) 1/4 inch tolerance. However, the tolerance measurement device shall have a minimum of 1/1000 inch accuracy.

3.7.8 The recirculation pump remote flange mating surface shall be approximately at 12 ft-11 inches plant elevation. The pump and motor withdrawal length shall not be greater than 6 ft-1 inch. The dowel pins shall be 2 in diameter with the master being 1 ft-3 3/4 inches and the secondary being 1ft-3/4 inch. The bolts shall be 1-1/4 inch ACME studs with 2 inches nuts.

3.7.9 The recirculation pumps shall be designed with the following features to ensure ease of process operating with a long expected mechanical lifetime:

- Low operating speed, high flow, and low head process conditions.
- Low casing fluid velocity to minimize wear on the casing.
- Top mounted motor and vertical removal design for easy crane access.
- The recirculation pump motor, impeller, shafting, and seals shall be remotely removable as one unit by using a single crane hook and crane mounted impact wrench with CCTV cameras.

3.7.10 FEP recirculation pumps (FEP-PMP-00009A/B) shall be designed for the following operating conditions. All fluid properties are referenced at 77 °F.

- 11,000 gpm

- 5.5 to 12 cP
- 1.23 to 1.50 SG
- 59 to 140 °F
- 1 to 20 wt % suspended solids

3.7.11 TLP recirculation pump (TLP-PMP-00001) shall be designed for the following operating conditions. All fluid properties are referenced at 77 °F.

- 11,000 gpm
- 0.68 to 30 cP
- 1.33 to 1.57 SG
- 77 to 145 °F
- less than 4 wt % suspended solids

3.7.12 Each recirculation pump shall be provided with the remote electrical and process connectors required for use on it. All remote electrical and process connectors, that are not provided by Buyer, shall be procured as commercial material.

3.7.12.1 Included with the connectors shall be the Harness "D" assemblies as described on the Appendix T, Section T.1, sketch titled "Fabrication Assembly Details Harness "D". This includes the fixed mounted electrical receptacle and protective cover, the electrical connector plug needed for the manufacture of the in-cell remote electrical jumper (by Buyer) for the power supply to the heat exchanger motor which will mount on the recirculation pumps. The cable for the Harness "D" assembly shall meet the 200 mega-rad TID requirement and shall be tested per the provided special instructions.

3.7.12.2 The fixed mounted fluid connectors for the mechanical seal barrier fluid systems and the required 90-degree shell housing design remote connectors for use in the fabrication of Buyer's jumpers and blanked connectors for sealing the pump grease and cooling system connections on the pumps shall be provided.

3.7.12.3 The electrical connectors shall meet the criteria defined on Appendix T, Section T.1 including electrical and instrumentation jumper connector data sheet.

3.7.13 All process and pneumatic connectors shall be designed and qualified per specification 24590-WTP-3PS-PF00-T0008, Engineering Specification for Pneumatic/Process connectors (Non-ITS). An in-line, keyed, process socket connector as noted in Section 3.5.1.3 of specification 24590-WTP-3PS-PF00-T0008 is not required. A keyed, process socket connector with 90 degree back shell is acceptable.

3.8 Concentrate Pumps

3.8.1 For concentrate pump requirements, refer to individual MDS in Section 2 of the MR and equipment sketches in Appendices I and J of this specification.

3.8.2 Two TLP concentrate pumps (TLP-PMP-00011A/B) shall be supplied by the Seller in accordance with Buyer's specification *24590-WTP-3PS-MPC0-T0002, Engineering Specification for General Centrifugal Pumps to Meet Requirements of ASME B73.1M-1991 and ASME B73.2M-1991 for Commercial (CM) Components.*

3.8.3 Deleted

3.8.4 The TLP concentrate pumps shall be centrifugal type. Each pump shall be provided with a pump motor mounted on a common base plate for contact maintenance. The pumps are plumbed together for operational flexibility. Seal flush plan to API 7353.

3.8.5 Each TLP concentrate pump shall be provided with an adjustable speed drive (ASD). The ASD shall be compliant with specification *24590-WTP-3PS-EVV1-T0001, Engineering Specification for LAW Voltage Adjustable Speed Drives* and specification *24590-WTP-3PS-MUMI-T0002, Engineering Specification for Low Voltage Induction Motors.*

3.8.6 The concentrate pump flow rate shall be controlled by the specific gravity of the waste concentrate in the evaporator separator vessel.

3.8.7 For FEP concentrate pumps (FEP-PMP-00008A/B), the sections for liquid property and operating conditions on the Mechanical Data Sheets (Section 2 of the MR) shall be specified by the Seller. The Buyer will procure pumps which meet these criteria unless otherwise directed by the Seller as described in Section 1.2.16. The following operating conditions shall apply. All fluid properties are referenced at 77 °F.

- 3 to 34 gpm
- 5.5 to 12 cP
- 1.23 to 1.50 SG
- 59 to 140 °F
- 1 to 20 wt % suspended solids

3.8.8 The TLP concentrate pumps (TLP-PMP-00011A/B) shall be supplied by the Seller. The pumps shall be designed for contact maintenance and designed for the following operating conditions. All fluid properties are referenced at 77 °F.

- 5 to 14 gpm
- 0.68 to 30 cP
- 1.4 to 1.57 SG
- 68 to 145 °F

- less than 4 wt % suspended solids

3.9 Reboilers

3.9.1 For reboiler requirements, refer to individual MDS in Section 2 of the MR and equipment sketches in Appendices I and J of this specification.

3.9.2 The reboilers shall be designed in accordance with Buyer's specification 24590-WTP-3PS-MES0-T0001, *Specification for Shell and Tube Heat Exchangers*. Seller shall comply with nozzle loading requirements specified in Appendix V of this specification **instead of nozzle loading requirements specified in Buyer's specification 24590-WTP-3PS-MV00-T0001, *Specification for Pressure Vessel Design and Fabrication.***

3.9.3 The reboilers (FEP-RBLR-00001A/B and TLP-RBLR-00001) shall be of all welded construction on both tube and shell sides.

3.9.4 Reboiler tubes shall be seamless and welded to the tubesheet(s) with full strength welds. The tubes shall include a corrosion allowance of 0.04 inch for the process side.

3.9.5 The reboilers shall be capable of sustaining a water evaporation rate of 10 to 30 gpm based on a final SG of 1.50 for the FEP evaporator systems and 1.57 for the TLP evaporator system.

3.9.6 Reboiler process fluid velocity shall be greater than 4.0 ft/sec for solid suspension and not exceed 10 ft/sec velocities for minimal erosion effects.

3.9.7 The reboiler and support frame assemblies shall be designed for remote installation and replacement as one unit.

3.9.8 The reboiler and support frame assemblies shall be designed for horizontal transportation as one unit within the hot cell but for vertical installation with integral tailing features.

3.9.9 The maximum dimensions for a reboiler shall be 6 ft diameter and 15 ft height. The reboiler design shall be either multi-pass or U-tube heat exchanger with side bottom process fluid inlet and outlet.

3.9.10 The reboiler process fluid inlet and outlet nozzles shall be sized not greater than 24 inch diameter. Inlet and outlet pipe ends of the reboiler shall be prepared for butt welding.

3.9.11 Seller shall supply as-built dimensions for the nozzle locations upon completion of fabrication. Measurements shall be taken to the nearest 0.001 inch measuring equipment accuracy shall be within ± 0.006 inch.

3.9.12 Deleted

3.9.13 **High** pressure steam will be provided by Buyer. The Seller is responsible for providing steam conditioning **system components . Each steam conditioning**

system consists of 2 pressure control valves, 2 flowmeters, and one surface absorption desuperheater to produce Seller's specified saturated pressure steam for reboiler operation.

3.9.14 Seller shall provide specifications for steam condensate removal system. The steam condensate will travel from the reboiler through approximately 100 lateral feet and 2 vertical feet of pipe to the steam condensate vessel.

3.9.15 The reboiler shall be designed such that the static pressure of the process fluid above the reboiler is sufficient to suppress the boiling in the reboiler tubes. Boiling shall occur only near or at the liquid surface in the evaporator separator vessel.

3.9.16 The temperature rise of the process fluid as it passes through the reboiler shall be approximately 2 – 4 °F design basis to minimize the potential for tube fouling.

3.9.17 Reboiler will be installed without insulation. Reboiler duty and steam demand calculations shall include heat loss from all reboiler surfaces without insulation.

3.9.18 Supply all piping from the reboiler vessel to remote connectors (i.e PUREX, Grayloc, etc.). Remote connectors will be provided by Buyer for Seller to install on reboilers.

3.9.19 Seller shall qualify the entire recirculation piping connecting to reboiler, recirculation pump, and separator vessel. Exception, Buyer will qualify all small bore piping/jumper connecting to reboilers.

3.10 Evaporator Separator Vessels

3.10.1 For separator vessel requirements, refer to individual MDS in Section 2 of the MR and equipment sketches in Appendices I and J of this specification.

3.10.2 The separator vessels shall be designed in accordance with Buyer's specification 24590-WTP-3PS-MV00-T0001, *Specification for Pressure Vessel Design and Fabrication*. Seller shall comply with nozzle loading requirements specified in Appendix V of this specification **instead of nozzle loading requirements specified in Buyer's specification 24590-WTP-3PS-MV00-T0001, *Specification for Pressure Vessel Design and Fabrication.***

3.10.3 The separator vessels shall be designed to maximize liquid – vapor separation and to achieve a 30 gpm feed evaporation rate.

3.10.4 The separator vessels shall incorporate nozzle connections for temperature (including thermowells), pressure, level, and density instrumentation as required. The Seller shall propose reliable measurement instrumentation for Buyer to review.

3.10.5 Deleted.

3.10.6 The top section of the separator vessel shall incorporate lateral guides to the 56 ft floor to minimize horizontal forces and base overturning moments during a seismic event.

3.10.7 The centerline elevation of the separator vessel offgas nozzles shall be no higher than 47.**0** ft plant elevation.

3.10.8 The separator vessel heads shall be removable for access to the demister pads section, which contains two layers of 12 inch thick Inconel 625 fine mesh.

3.10.9 The **FEP** separator vessel**s (FEP-SEP-00001A and FEP-SEP-00001B)** shall incorporate a 2 inch inlet nozzle to supply sufficient dilution air to negate hydrogen buildup. **The TLP separator vessel (TLP-SEP-00001) does not require a 2 inch inlet nozzle for purge air.**

3.10.10 The separator vessel shall incorporate a series of three internal separation trays and an internal two-layer demister pads section to deentrain the steam droplets and remove solids from the vapor.

3.10.11 Spray nozzles shall be provided to allow nitric acid cleaning of the demister mesh and separation trays. The placement of spray nozzles shall accommodate demister section removal and not hinder maintenance operations.

3.10.12 A spray pipe with nozzles located below the lower demister pad shall be provided to spray demin water or recycled condensate into the steam flow to assist in mesh performance.

3.10.13 To improve demister efficiency and facilitate decontamination, the demister pads shall be sprayed from above and below with recycled condensate or 5 M nitric acid from a spray control system located at the 56 ft elevation. Sections of the demister pads shall be able to be sprayed either individually or collectively.

3.10.14 Differential pressure across a series of separation trays and the demisters pad section shall not significantly elevate boiling point.

3.10.15 All nozzle connection points shall be provided clear and below any surrounding floor structural steel at 56 ft plant elevation.

3.10.16 The antifoam nozzles of the evaporator separator vessel shall be located above the uppermost liquid level.

3.10.17 Seller shall supply separator vessel external spray ring piping assembly for demister pads. However, Buyer will qualify separator vessel external spray ring piping assembly.

3.10.18 The separator vessel lower frame (square ring beam) will be filled with grout both inside and outside. Seller shall design to reflect this boundary condition.

3.11 Primary Condensers

3.11.1 For primary condenser requirements, refer to individual MDS in Section 2 of the MR and equipment sketches in Appendices I and J of this specification

3.11.2 Primary condensers shall be designed in accordance with Buyer's specification 24590-WTP-3PS-MES0-T0001, *Specification for Shell and Tube Heat Exchangers*.

3.11.3 The primary condensers (FEP-COND-00001A/B and TLP-COND-00001) shall be of all welded construction on the process fluid side. Tubes shall be welded to the tubesheets(s) with full strength welds.

3.11.4 Seller shall comply with nozzle loading requirements specified in Appendix V of this specification **instead of nozzle loading requirements specified in Buyer's specification 24590-WTP-3PS-MV00-T0001, *Specification for Pressure Vessel Design and Fabrication.***

3.11.5 Condensers shall be designed with hinged bonnets to allow isolation of leaking tubes utilizing contact maintenance techniques.

3.11.6 Condensers shall be designed for retubing as part of the maintenance strategy.

3.11.7 Condensers shall be designed to maximize vapor condensation from the offgas streams at a nominal rate of 30 gpm.

3.11.8 Average cooling water temperature rise of 18 °F shall be used for condenser design.

3.11.9 Cooling water (tube side) pressure must exceed the process vapor (shell side) pressure.

3.11.10 The primary condensers shall be compatible with process condensate that has a pH of 7 to10, a temperature of 122 °F, and a 0 to 300 ppm ammonium ion concentration. They shall also be compatible with 5M nitric acid used for separator vessel decontamination.

3.11.11 Primary condenser will be installed without insulation. Primary condenser duty and cooling water demand calculations shall include heat loss from all primary condenser surfaces without insulation.

3.12 Secondary Condenser System

3.12.1 The secondary condenser system shall consist of inter-condenser, after-condenser, and two steam ejectors. For secondary condenser system requirements, refer to individual MDS in Section 2 of the MR and equipment sketches in Appendices I and J of this specification.

3.12.2 Inter-condensers and after-condensers shall be designed in accordance with Buyer's specification 24590-WTP-3PS-MES0-T0001, *Specification for Shell and Tube Heat Exchangers*.

3.12.3 Seller shall comply with nozzle loading requirements specified in Appendix V of this specification **instead of nozzle loading requirements specified in Buyer's specification 24590-WTP-3PS-MV00-T0001, *Specification for Pressure Vessel Design and Fabrication.***.

3.12.4 Inter-condensers and after-condensers shall be of all welded construction on the process fluid side. Tubes shall be welded to the tubesheets(s) with full strength welds.

3.12.5 The boiling point elevation range of the evaporator concentrate for the FEP evaporator system is approximately 11 to 18 °F and for TLP evaporator system is approximately 17 to 24 °F.

3.12.6 The evaporator separator vessel pressure shall be maintained by a two-stage vacuum ejector system. The first stage shall maintain a vacuum on the primary condenser and consists of a steam ejector, air in-bleed control valve, and an inter-condenser. The vapor discharged from the inter-condenser enters the second stage of the vacuum system. The second stage shall consist of a second steam ejector and an after-condenser.

3.12.7 The secondary condenser systems shall provide capability for operating at a vacuum as low as practicably achievable.

3.12.8 The two-stage vacuum ejector system shall be designed to control the separator vessel pressures at between 1.0 and 1.3 psia.

3.12.9 The desired vacuum within the separator vessel shall be obtained by automatically controlling the air in-bleed into the suction side of the first-stage vacuum ejectors.

3.12.10 Process condensate from each condenser shall be individually routed to the process condensate vessel.

3.12.11 All components of secondary condenser skid will be installed without insulation. The duty, cooling water demand, and steam demand calculations shall include heat loss from all surfaces without insulation.

3.12.12 Cooling water pressure must exceed the process vapor pressure.

3.12.13 The operating cycle for each after-condenser is 7,001,950. This data is to be included in the Fatigue Assessment Report.

3.13 Evaporator Process Condensate Vessels & Pumps

3.13.1 For process condensate vessel and pump requirements, refer to individual MDS in Section 2 of the MR and equipment sketches in Appendices I and J of this specification

3.13.2 The evaporator process condensate vessels shall be designed in accordance with Buyer's specification 24590-WTP-3PS-MV00-T0001, *Specification for Pressure Vessel Design and Fabrication*.

3.13.3 Seller shall comply with nozzle loading requirements for vessels specified in Buyer's specification 24590-WTP-3PS-MV00-T0001, *Specification for Pressure Vessel Design and Fabrication.*

3.13.4 The FEP evaporator process condensate vessel (FEP-VSL-00005) shall be designed for an operating volume of 4144 gallons (911-gallon batch).

3.13.5 The support frame shall be made such that the overflow nozzle centerline for the FEP evaporator process condensate vessel shall be at or above 15 ft-5 3/8 inches plant elevation.

3.13.6 The TLP evaporator process condensate vessel (TLP-VSL-00002) shall be designed for an operating volume of **1916** gallons (375-gallon batch).

3.13.7 The support frame shall be made such that the overflow nozzle centerline for the TLP evaporator process condensate vessel shall be at or above 17 ft-5 7/8 inches in plant elevation.

3.13.8 The evaporator process condensate vessels shall be equipped with interior wash rings to facilitate decontamination per standard drawing 24590-WTP-MV-M59T-00011.

3.13.9 Evaporator process condensate vessels and pumps shall be designed for contact maintenance.

3.13.10 Process condensate pumps shall be in accordance with Buyer's specification 24590-WTP-3PS-MPC0-T0002, *Engineering Specification for General Centrifugal Pumps to Meet Requirements of ASME B73.1M-1991 and ASME B73.2M-1991 for Commercial (CM) Components.*

3.13.11 Each process condensate pump shall be provided with an adjustable speed drive (ASD). The ASD shall be compliant with specification *24590-WTP-3PS-EVV1-T0001, Engineering Specification for Low Voltage Adjustable Speed Drives* and specification *24590-WTP-3PS-MUMI-T0002, Engineering Specification for Low Voltage Induction Motors.*

3.13.12 The process condensate pumps (FEP-PMP-00006A/B and TLP-MPM-00002A/B) shall be centrifugal type. Each pump shall be provided with a pump motor mounted on a common base plate for contact maintenance. The pumps are plumbed together for operational flexibility.

3.13.13 The FEP evaporator process condensate pumps (FEP-PMP-00006A/B) shall be designed for the maximum feed evaporation rate of 60 gpm (30 gpm per FEP evaporator) and maximum steam ejector demands. The TLP Evaporator condensate pumps (TLP-PMP-00002A/B) shall be designed for the maximum feed evaporation rate of 30 gpm and maximum steam ejector demands.

3.13.14 The process condensate vessels and pumps shall be compatible with process condensate that has a pH of 7 to10, a temperature of 68 to 145 °F, and a 0 to 300 ppm ammonium ion concentration. They shall also be compatible with 5M nitric acid used for separator vessel decontamination.

3.13.15 The process condensate pumps shall have the ability to supply adequate condensate to the separation trays and demister pad sprays in the separator vessels.

3.13.16 Single mechanical seals shall be incorporated in each process condensate pump in accordance with American Petroleum Institute (API) Plan 11.

3.13.17 The process condensate pumps shall be designed to comply with pump nozzle loading requirements specified in API 610.

3.14 Antifoam Skid, Reboiler Condensate Transfer Stations, and Steam Conditioning Components

3.14.1 For antifoam vessel and pump requirements, refer to individual MDS in Section 2 of the MR and equipment sketches in Appendix K of this specification.

3.14.2 The antifoam vessel and reboiler condensate vessels shall be designed in accordance with Specification 24590-WTP-3PS-MV00-T0001, *Specification for Pressure Vessel Design and Fabrication.*

3.14.3 Seller shall comply with nozzle loading requirements specified Buyer's specification 24590-WTP-3PS-MV00-T0001, *Specification for Pressure Vessel Design and Fabrication.*

3.14.4 One (1) antifoam system composed of a vessel (AFR-TK-00001) with three metering pumps (AFR-PMP-00006, -00007, -00008) shall supply antifoam reagent to both FEP and TLP evaporator systems.

3.14.5 The antifoam vessel (AFR-TK-00001) shall be designed for a maximum operating volume of 1500 gallons.

3.14.6 Deleted.

3.14.7 Each antifoam vessel shall be equipped with the following:

- Reagent inlet nozzle
- Demineralized water inlet nozzle
- Level instrumentation nozzle
- Agitator to provide homogeneous antifoam solutions

3.14.8 The antifoam pumps shall be positive displacement metering types. The metering pump design shall include an internal relief valve or an internal bypass valve that automatically stops the pumping action when the line pressure gets above a setpoint.

3.14.9 Antifoam vessels and pumps shall be designed for contact maintenance.

3.14.10 Seller shall supply three (3) identical transfer stations, which collect steam condensate drained from the reboilers.

3.14.11 The transfer stations shall be designed to support continuous steady state operation in maintaining nominal operating level while receiving and supplying steam condensate to steam conditioning desuperheater and to a general condensate receiver.

3.14.12 The condensate transfer vessel design and configuration shall support installation of pressure-differential level instrumentation and associated flanged "direct connect diaphragm seal pressure transmitters.

3.14.13 The condensate transfer vessel shall be a vertical oriented vessel constructed of 304L stainless steel with a capacity of **approximately** 225 gallons.

3.14.14 Each condensate transfer vessel shall be designed to be attached to a mounting ring which will be installed using anchor bolts.

3.14.15 The condensate transfer vessel shall be designed to support a minimum operating volume of 80 gallons.

3.14.16 The condensate transfer pumps shall be vertical turbine pumps with a by-pass valve to limit the pump discharge pressure preventing the motor to become overloaded. The pumps along with their motors shall be mounted on the transfer stations.

3.14.17 Single mechanical seals shall be incorporated in each condensate transfer pump in accordance with American Petroleum Institute (API) Plan 11.

3.14.18 The condensate transfer pumps shall be designed to comply with pump nozzle loading requirements specified in API 610.

3.14.19 The condensate transfer pumps and accessories shall be made of 300 series stainless steel. The pump materials of construction for wetted parts shall be cast high alloy steel 316 SS **or better**.

3.14.20 A 2-inch nozzle on the side of each reboiler steam condensate vessel shall be provided for an additional condensate drain from the reboiler steam conditioning system desuperheater. Location of the 2-inch inlet drain nozzle is provided in Appendix L.

3.14.21 **Provide three (3) sets of steam conditioning system components for FEP and TLP evaporators to reduce high pressure steam to produce Seller's specified saturated pressure steam for optimal reboiler condition. Each set consists of two (2) control valves, two (2) flowmeters, and one (1) absorption desuperheater.**

3.14.22 **The absorption desuperheater vessels shall be designed in accordance with Specification 24590-WTP-3PS-MV00-T0001, *Engineering Specification for Pressure Vessel Design and Fabrication*. Although the absorption desuperheater vessel is classified as SC-III (see Appendix E), Seller is allowed to use SC-I vessel nozzle loads specified in Table A1 of Appendix A and thermal reduction factor specified in Section 7.7.4 of Specification 24590-WTP-3PS-MV00-T0001.**

3.14.23 The control valves and flowmeters shall be designed in accordance with Specification 24590-WTP-3PS-JQ07-T0001, *Engineering Specification for Instrumentation for Package Systems.*

3.14.24 The design and analysis of SC-I/II valves and flowmeters shall be performed to seismic/dynamic acceleration of 4.54g in accordance with Section 3 of 24590-WTP-DC-PS-01-001, Pipe Stress Design Criteria including "Pipe Stress Criteria" and "Span Method Criteria".

3.14.25 See Section T.14 of Appendix T for additional design inputs for steam conditioning system components.

3.15 Mechanical Handling Requirements

3.15.1 Equipment located in the R5/C5 hot cell shall be designed in accordance with Buyer's specification 24590-WTP-3PS-M000-T0002, *General Specification for Mechanical Handling Equipment Design & Manufacture.*

3.15.2 Seller designed equipment shall incorporate jumper connector nozzles to facilitate process, utility, instrument, and power connections to the Buyer supplied jumpers and systems.

3.15.3 Equipment skids shall incorporate jumper nozzles for process pipework (e.g., pump suction and discharge connections, utilities, instrumentation, and power, as required).

3.15.4 Seller shall identify all interface points for systems requiring connection to the Buyer's process piping, jumpers, and utility systems.

3.15.5 The nozzle **position** tolerance requirements for reboiler and recirculation pumps in the R5/C5 hot cell shall be ±1/4 inch.

3.15.6 Deleted

3.15.7 Deleted

3.16 Loadings

3.16.1 The evaporator equipment assemblies shall be self-supporting, capable of carrying the static loads of components, and capable of handling stresses imposed during shipment, installation, operation and an earthquake.

3.16.2 Loads to be considered for the structural design of evaporator vessel, equipment, and components shall be in accordance with applicable codes, standards, and reference documents listed in Section 2 of this specification.

3.16.3 All vessels or equipment with SC-I and SC-II designation shall be analyzed and **designed** in accordance with AISC N690 and requirements specified in the Appendix V.

3.16.4 All vessels or equipment with SC-III and SC-IV designation shall be analyzed and **designed** in accordance with the AISC **Allowable Stress Design (Manual of Steel construction)** and UBC zone 2B.

3.16.5 Seller shall complete a seismic analysis of the evaporator package designs, including skids, and skid anchorage, equipment and pressure vessel anchorage, piping anchorage. Loadings shall be calculated in accordance with the appropriate requirements of Buyer's specifications 24590-WTP-3PS-SS90-T0001, Engineering Specification for Seismic Qualification of Seismic Category I/II Equipment and Tanks, and 24590-WTP-3PS-FB01-T0001, Structural Design Loads for Seismic Category III & IV Equipment and Tanks.

3.16.6 All vessels, heat exchangers, and any other pressure containing vessels or equipment shall be analyzed and **designed** by the Seller per Buyer's specification 24590-WTP-3PS-MV00-T0002, *Engineering Specification for Seismic Qualification Criteria for Pressure Vessels,* Buyer's specification 24590-WTP-3PS-MV00-T0001, *Specification for Pressure Vessel Design and Fabrication.*

3.16.7 Deleted.

3.16.8 Except for reboiler and recirculation pump skids, all equipment skids shall be designed for a maximum floor loading of 160 lbs/ft^2. Refer to drawings 24590-PTF-DD-S13T-00022, 24590-PTF-DD-S13T-00025, 24590-PTF-DD-S13T-00028, 24590-PTF-DD-S13T-00027, 24590-PTF-DD-S13T-00036, 24590-PTF-DD-S13T-00042, 24590-PTF-DD-S13T-00043, and 24590-PTF-DD-S13T-00044 for structural concrete embed details.

3.16.9 The embed location for reboilers are detailed on drawings 24590-PTF-DD-S13T-00025, 24590-PTF-DD-S13T-00027, 24590-PTF-DD-S13T-00028, and 24590-PTF-DD-S13T-00049. Each embed connects to the **Buyer's rigid concrete-filled steel frame**. To avoid displacement in skid under the heavy reboiler weight, reboiler frame shall rest upon support posts with the embeds underneath. These embeds are type "D" which have been designed for ultimate compressive strength of 100 kips.

3.17 Electrical Requirements

3.17.1 The electric motor drive shall conform to the requirements set forth in Buyer's specification 24590-WTP-3PS-EVV1-T0001, *Engineering Specification for Low Voltage Adjustable Speed Drives.*

3.17.2 The pump motor and all other motors in this evaporator package shall conform to the requirements set forth in Buyer's specification 24590-WTP-3PS-MUMI-T0002, *Engineering Specification for Low Voltage Induction Motors.*

3.17.3 Seller shall comply with the requirements set forth in Buyer's specification 24590-WTP-3PS-EKP0-T0001, *Engineering Specification for Electrical Requirements for Packaged Equipment.*

3.18 Instrumentation and Control Requirements

3.18.1 General

3.18.1.1 All controls, control systems, control panels, alarm systems, analyzers, instrumentation, and their installation into the evaporator system shall conform to the requirements set forth in Buyer's specification 24590-WTP-3PS-JQ07-T0001, *Engineering Specification for Instrumentation for Package Systems*.

3.18.1.2 The Seller shall provide instrument data sheets and installation details. The Buyer will use this information for procurement and installation of required instrumentation.

3.18.1.3 The Seller shall provide functional test set points and recommended operating set points with the packaged systems.

3.18.1.4 The Seller shall supply the control requirements, which shall consist of the control loop definitions, system interlocks, alarms, and control philosophy.

3.18.1.5 The Buyer will use the Seller's control requirements to provide the software requirement specification for logic programming and DCS hardware, which will integrate the Seller's control requirements into the Buyer's overall control system.

3.18.1.6 Seller shall comply with NQA-1 1989, 11S-2, for computer program testing.

3.18.1.7 The following table describes the work processes and the division of the responsibilities:

	Buyer's Responsibility	Seller's Responsibility
Blank Instrument Data Sheet	•	
Complete Instrument Data Sheet		•
Instrument Installation Details		•
Instrumentation Procurement	•	
Instrumentation Installation	•	
Functional Test Set Points		•
Operating Set Points		•
Control Requirements		•
Software Requirements Specification	•	
Logic Programming	•	
DCS Hardware	•	

3.18.2 Other

The Seller shall select level, specific gravity, temperature, and pressure instrumentation that shall provide accuracy of the measured range as specified in Buyer's specification 24590-WTP-3PS-JQ07-T0001, *Engineering Specification for Instrumentation for Package Systems*.

3.19 Lifting Requirements

3.19.1 Seller shall identify the weight and center of gravity of each equipment skid.

3.19.2 Seller shall provide yokes for separator vessels, reboiler and support assemblies, and recirculation pumps for installation and remote maintenance. Each part will be made of 304SS. The yokes shall be designed for balanced lifting and handling by a single hook crane. The yokes shall be designed in accordance with ANSI N14.6 and Buyer's specification 24590-WTP-3PS-MJJ0-T0001, *Specification for Lifting Beams for Mechanical Handling Equipment*.

3.19.3 All evaporator equipment and skids shall have lift points and attachment mechanism. Lifting bail design shall comply with proposal hook design shown in Appendix G.

3.19.4 All lifting attachments shall have a safety factor of three (3), based on the material yield strength. The lifting points shall have a label clearly identifying its safe working load. If forged bolts are used, they shall be used in accordance with ASME B18.15.

3.19.5 The reboiler and support assemblies shall be designed for horizontal transportation in the hot cell following by vertical up-ending. The reboiler and support assemblies shall have tailing lug and tilt-up features for vertical installation with a 2-ton hoist for tailing operation.

3.19.6 The lifting lugs shall be designed to permit lifting the equipment skid without distortion or damage to the components of the equipment skid.

3.19.7 All lifting points shall be proof tested in situ. Test and examination certificates shall be provided to the Buyer review.

3.19.8 Each reboiler and support frame assembly shall be lift tested by the Seller to demonstrate proper vertical orientation using the Seller-supplied lifting fixture. This testing includes verification of all tilt up features. Each reboiler shall be balanced after fabrication. Actual vertical lift (with vessel empty) shall not more than 1/4 inch from true verticality. Permanent deflection or a change in the assembly alignment is unacceptable. The Seller shall notify the Buyer a minimum of 15 working days in advance of reboiler and support frame assembly lift test. The Buyer may send representatives to witness the inspections or perform an independent inspection.

3.19.9 Each recirculation pump motor assembly (that includes the pump motor, shaft, propeller, O-rings, barrier system heat exchanger and fan, seal housing, mechanical seal, and the upper cover plate assembly) shall be lift tested by the Seller to demonstrate proper vertical orientation using the Seller-supplied lifting fixture. The lift test shall include a vertical lift of the pump motor assembly from the pump support plate and back down onto the pump support plate in a single lift. The bottom of the pump motor assembly shall clear all alignment pins at its highest lift point. Pump motor assembly shall not exceed 1/4" from true vertical when suspended with the lifting fixture. Permanent deflection or a change in the assembly alignment that occurs during the test is unacceptable. The Seller shall notify the Buyer a minimum of 15 working days in advance of recirculation pump motor assembly lift test. The Buyer may send representatives to witness the inspections or perform an independent inspection.

3.20 Accessibility and Maintenance

3.20.1 General Maintenance Requirements

Accessibility and maintenance requirements shall be per this specification and its addenda and attachments.

3.20.2 R5/C5 Black Cell Equipment Maintenance Requirements

3.20.2.1 No equipment requiring maintenance, with the exception of demister pads, shall be located inside the R5/C5 black cells (rooms P-0106 and P-0117). The nonreplaceable 40-year life components shall include offgas piping, separator vessels and all its internal parts (except demister pads) and their supporting structures/anchorage.

3.20.2.2 Demister pad assembly shall be remotely removable and replaceable through a 10-foot diameter opening from the 56-foot elevation floor, rooms P-0304 and P-0311, which are directly above the black cells P-0106 and P-0117. If the water connections for the spray connections for the spray down mechanism are incorporated into the pad assembly, the connections shall utilize a quick disconnect type connection for the water source. Due to potential radiation and contamination concerns, viewing and removal of the of the demister pad will be accomplished with the top demister pads submerged approximately 6-inch below the water during the maintenance duration. Seller shall demonstrate and record video demister pad removal and replacement in their shop test.

3.20.3 R5/C5 Hot Cell Equipment Maintenance Requirements

3.20.3.1 Reboiler and support frame assemblies and recirculation pumps in the R5/C5 hot cell shall be designed to be remotely removable and replaceable in accordance with specification 24590-WTP-3PS-M000-T0002, *General Specification for Mechanical Handling Equipment Design and Manufacture*. No components shall require special tools.

3.20.3.2 Reboiler and support frame assemblies and recirculation pumps in R5/C5 hot cell shall be designed in accordance with the requirements stated within this specification.

3.20.3.3 Each reboiler and support frame assembly shall not weigh more than 27.5 tons, including all required lifting fixtures.

3.20.3.4 All fittings, pipe connections, electrical power, and control connections for equipment in R5/C5 hot cell shall be engineered on jumpers suitable for remote operation using a crane hook and crane mounted impact wrench with CCTV cameras.

3.20.3.5 Reboiler and support frame assemblies and recirculation pumps shall be made suitable for remote operation utilizing features such as trunnions, guide pins, location dowels, captive bolts, and lead-ins on bolts, and be able to be removed using a crane hook and crane mounted impact wrench with CCTV cameras. Refer to Appendix G for remote impact wrench and drawings nos. 24590-WTP-M0-M10T-00004 and 24590-PTF-M0-PIH-00008 for crane details.

3.20.3.6 The use of shims to position reboiler and support frame assemblies or recirculation pumps in the R5/C5 hot cell is not allowed. All surfaces shall be machined to locate equipment and support remote handling and replaceability.

3.20.3.7 Due to the requirement of a 12-foot reserved path for equipment removal in the hot cell, Seller shall comply with the location requirements for reboiler and support frame assemblies and recirculation pumps as shown in sketches in Appendices I and Q.

3.20.3.8 All services to or from the recirculation pumps shall be provided using jumper connections.

3.20.3.9 The maximum height of any 2-inch hex nut (jumper connector), oriented vertically, is 24 ft-6 inches in plant elevation.

3.20.3.10 The maximum height of any 2-inch hex nut (jumper connector), oriented horizontally, is 25 ft-6 inches in plant elevation.

3.20.3.11 The maximum height of the 2 ton slewing hoist is 28 ft-6 inches.

3.20.3.12 The maximum height and hook approach of the 30 ton hook is distinctly different than the 2 ton hoist. Refer to the crane data sheet, 24590-PTF-MJD-PIH-00001 for details.

3.20.4 Deleted.

4 Materials

4.1 Positive Material Identification

Refer to Buyer's specification 24590-WTP-3PS-G000-T0002, *Specification for Positive Material Identification (PMI)* for PMI requirements. Seller shall submit documentation of all PMI test results which show chemical properties and material classification.

4.2 Construction

4.2.1 Seller shall specify surface finish for all materials and submit to Buyer for review.

4.2.2 Seller shall maintain a record of ASTM numbers, material test reports, and manufacturer material certifications for all materials used for construction of evaporator equipment/skids. Seller shall provide copies to the Buyer.

4.2.3 **For vessels, classification of fabrication materials for bolts and nuts shall be in accordance with ASME Section II. For separator vessels (FEP-SEP-00001A/1B and TLP-SEP-00001), the use of Inconel alloy 625 ASTM B446 material for compression springs of captive bolt assembly on body flange is acceptable since the spring has no safety or pressure retaining function. For skids or structural frames, a**ll stainless steel bolts and studs shall conform to ASTM F593.

4.2.4 All stainless steel nuts shall conform to ASTM F594 **for skids or structural frames**.

4.2.5 Seller shall provide Material Safety Data Sheets (MSDSs) for all materials installed or used.

4.2.6 Process fluids may contain caustic solutions (50 wt % caustic), however 5 M nitric acid solutions may also be used for decontamination of the pipework, pumps, valves, and instruments/instrument tubing both inside and outside of the pipework assembly.

4.2.7 All flanges and pipe fittings shall conform to ASME B31.3 1996 and be weld-neck and long radius type, respectively, unless otherwise specified. Flanges shall also be in accordance with ASME B16.5, and B16.47 Series A, as applicable.

4.2.8 **Except for bolts on separator vessel body flanges and upper lateral support frames,** no threaded flanges or fittings shall be used in the black cells.

4.2.9 Certified material test reports shall be supplied for all stainless steel pipe, plate, sheet, and sections.

4.2.10 Selection of materials for threaded components shall minimize galling. Where the Seller determines that potential for galling is present assuming proper removal and reinstallation, designs shall be considered that favor components that are difficult to replace remotely. The Seller shall also consider different material selection, sleeving, etc. where practical.

4.2.11 All materials used in the construction of the evaporator equipment shall be new and unused. Where specific criteria are not provided, material section shall be determined by the Seller and have properties and composition suitable for the specific service conditions and consistent with this specification and its addenda and attachments.

4.2.12 The alternate ASTM and alternate ASME standard editions listed below can be used in lieu of the specified editions in effect.

Alternate Materials	Specified Materials
ASTM A182-98, A182-01	ASTM A182/A182M-99
ASTM A312-04	ASTM A312/A312M-00c
ASTM A403-95	ASTM A403/A403M-99
ASTM A403-99*	ASME Section II Part A, 2001 Edition 2002 Addenda, SA-403
ASTM A182-98*	ASME Section II Part A, 2001 Edition 2002 Addenda, SA-182
ASME 2001 Edition SA-312, 2003 Addenda SA-312 ASME 1995 Edition SA-312, 1995 Addenda SA-312	ASME Section II Part A, 2001 Edition 2002 Addenda, SA-312
ASME 1998 Edition SA-240, 2003 Addenda SA-240 ASME 1997 Addenda SA-240	ASME Section II Part A, 2001 Edition 2002 Addenda, SA-240
ASTM A240-00, -02, -03, -03c, - 04a	ASTM A240/A240M-03b
ASME SFA 5.22 Part C - 1995 Edition 1996 Addenda	ASME SFA 5.22, Section II, Part C 2001 Edition 2002 Addenda
ASTM A480-03c	ASTM A480-03b

ASTM 554-98, -03	ASTM 554-98el
ASME SFA-5.9, SFA5.22 Sec III, Subsec NB, 1995 Edition, 1996 Addenda	ASME Code, Section II, 2001 Edition with 2002 Addenda (weld wire)
ASME A240-00, -03 /A240-01	ASME A240/A240M-03b

*** only applicable to vessel FEP-VSL-00005**

4.3 Vessels

Vessel materials shall conform to individual MDS in Section 2 of the MR.

4.4 Pipework

Pipework material shall meet the piping material requirements in Buyer's specification 24590-WTP-3PS-P000-T0001, *Specification for Piping Material Classes*.

4.5 Prohibited Materials

4.5.1 Mercury and other low melting point metals, their alloys, or materials containing such metals as their basic constituents shall not be used in the construction of any components of the evaporator systems.

4.5.2 Molybdenum and halides shall not be used in direct contact with stainless steel.

4.5.3 Asbestos shall not be included in any component of the evaporator systems.

4.5.4 Halide containing materials shall not be used in any component of the evaporator systems.

4.5.5 **Polytetrafluoroethylene (PTFE)** or compounds thereof must be qualified for use with the radiation levels specified **in individual equipment MDS or EQDs. No PTFE is allowed to use in the blackcell. The use of PTFE is allowed in the areas where doses are below 1.5E+04 rads. If it is considered impractical to use other gasket materials than PTFE in areas where doses are greater than 1.5E+04 rads, the Seller may propose the use of PTFE with adequate justifications for Buyer's consideration. Justification shall include the replacement parts and schedules to meet the required 40 year life.**

4.6 Storage of Special Materials (e.g., stainless steel) prior to work

4.6.1 The Seller shall meet the storage requirements in Buyer's specification 24590-WTP-3PS-G000-T0003, *General Specification for Packaging, Shipping, Handling, and Storage Requirements*.

4.6.2 Stainless steel is susceptible to corrosion caused by the contact and interaction with incompatible materials. All stainless steel material shall be stored in separate areas away from other materials.

5 Fabrication

The Seller shall obtain written Final Design Review from the Buyer prior to the start of fabrication activities.

5.1 General

5.1.1 Fabrication of vessels shall be performed in accordance with Buyer's specification 24590-WTP-3PS-MV00-T0001, ***Engineering*** *Specification for Pressure Vessel Design and Fabrication.*

5.1.2 Fabrication of pipework shall be performed in accordance with Buyer's specification 24590WTP-3PS-PS02-T0001, ***Engineering*** *Specification for Shop Fabrication of Piping.*

5.1.3 Fabrication of mechanical handling equipment shall be performed in accordance with Buyer's specification 24590WTP-3PS-M000-T0002, *General Specification for Mechanical Handling Equipment Design and Manufacture.*

5.1.4 All fabrication shall be performed by personnel qualified in accordance with this specification and applicable documents in Section 2 of this specification.

5.1.5 **The welding, thermal treatment, examination, and testing for shop fabrication of structural welded materials and shapes shall be in accordance with Buyer's specification 24590-WTP-3PS-SS00-T0002, *Engineering Specification for Welding of Structural stainless Steel and Welding of Structural Carbon Steel to Structural Stainless Steel.***

5.2 Welding

5.2.1 Seller shall develop detailed welding, weld inspection, NDE, and weld repair procedures for fabrication of the evaporator vessel, equipment, and structural supports. Seller shall submit them to the Buyer for review prior to fabrication. Procedures shall include acceptance criteria. The procedures shall conform to the following, as applicable:

- Buyer's Specification 24590-WTP-3PS-SS00-T0002
- Buyer's Specification 24590-WTP-3PS-NWP0-T0001
- Buyer's Specification 24590-WTP-3PS-MVB2-T0001
- ASME Boiler and Press Vessel Code, Section VIII, Div. 1
- ASME B31.3-1996
- AWS D1.6
- AWS D9.1

5.2.2 Welding, weld inspection, NDE, and weld repair shall be carried out in accordance with the applicable procedures developed per Section 5.2.1 above.

5.2.3 Each procedure shall be prepared and qualified in accordance with the requirements of the listed specification and standards in 5.2.1 above or ASME Section IX, whichever is more stringent.

5.2.4 Welder qualifications shall be performed in accordance with ASME Section IX or AWS as required.

5.2.5 Personnel performing weld inspection shall be qualified in accordance with ASME Boiler and Pressure Vessel Code, Section VIII, Div. 1 and Buyer's specification 24590-WTP-3PS-SS00-T0002, *Specification for Welding of Structural Stainless Steel and Welding of Structural Carbon Steel to Structural Stainless Steel.*

5.2.6 Repairs required as a result of weld rejection by either the Buyer's or Seller's final inspection shall be fully documented in accordance with Seller's Quality Assurance Program (QAP). Weld repairs shall be performed in accordance with ASME Boiler and Pressure Vessel Code, Section VIII. Weld repair records shall be included with Seller's quality verification document package to be submitted to Buyer.

6 Inspections and Examinations

6.1 Nondestructive Examinations

6.1.1 Unless otherwise specified, all vessel welds shall be inspected in accordance with the requirements outlined in the Buyer's specification 24590-WTP-3PS-MV00-T0001, *Specification for Pressure Vessel Design and Fabrication.*

6.1.2 Unless otherwise specified all pipework welds shall be inspected in accordance with the requirements outlined in Buyer's specification 24590-WTP-3PS-PS02-T0001, *Specification for Shop Fabrication of Piping.* For nondestructive examination (NDE) of fabricated pipe welds. Appendix O of this evaporator specification, 24590-PTF-3PS-MEVV-T0001, shall be used in replacement of Appendix A of specification for Shop Fabrication of Piping, 24590-WTP-3PS-PS02-T0001.

6.1.3 **Unless otherwise specified, all structural frames/supports shall be inspected in accordance with the requirements outlined in Buyer's specification 24590-WTP-3PS-SS00-T0002, *Engineering Specification for Welding of structural stainless steel and welding of structural carbon steel to structural stainless steel.***

6.2 Dimensional Inspections

6.2.1 Refer to Buyer's specification 24590-WTP-3PS-PP00-T0002, *Specification for Dimensional Record Program*, for final dimensional measurement requirements. Third party validation of special dimensional inspection is not required.

6.2.2 Buyer's specification 24590-WTP-3PS-PP00-T0002, *Specification for Dimensional Record Program*, is applicable only to recirculation pumps and reboiler and support frame assemblies and does not apply to any other components.

6.2.3 For recirculation pumps, a dimensional record is required for remotable pump features that are not part of the process jumper. The process portion of the recirculation pump will be installed in a jumper, and the jumper dimensional record will be performed by the Buyer.

6.2.4 For reboilers, all remote connector nozzles shall be measured to precise as-built dimensions.

6.2.5 Seller shall furnish personnel to perform measurement activities.

6.3 Visual Weld Inspections

6.3.1 The Seller shall develop and implement a procedure to perform visual weld inspections (visual tests, VT) to inspect each weld. The inspection procedure shall be developed in accordance with Buyer's specification 24590-WTP-3PS-MVB2-T0001, *Specification for Welding Pressure Vessels, Heat Exchangers and Boilers* and ASME B31.3 1996, and shall include inspection materials and acceptance criteria.

6.3.2 Acceptance criteria for visual weld inspections for vessels shall be in accordance with Buyer's specification 24590-WTP-3PS-MVB2-T0001, *Specification for Welding Pressure Vessels, Heat Exchangers and Boilers* and for pipework shall be in accordance with ASME B31.3 1996.

6.3.3 The Seller shall prepare a visual weld inspection report for each fabricated item.

6.3.4 Deleted.

6.3.5 Deleted.

6.3.6 The Seller shall notify the Buyer in advance of inspections. The Buyer may send representatives to witness inspections or perform independent inspections.

6.4 Liquid Penetrant Test

6.4.1 The Seller shall develop and implement a procedure to perform a liquid penetrant test (PT) to inspect each weld. The procedure shall be developed in accordance with Buyer's specification 24590-WTP-3PS-MVB2-T0001, *Specification for Welding Pressure Vessels, Heat Exchangers and Boilers* and ASME B31.3 1996, and shall include inspection materials, dwell time for dye and developer, and acceptance criteria.

6.4.2 Acceptance criteria for PT inspection shall be in accordance with Buyer's specification 24590-WTP-3PS-MVB2-T0001, *Specification for Welding Pressure Vessels, Heat Exchangers and Boilers* and for pipework shall be in accordance with ASME B31.3 1996.

6.4.3 The Seller shall prepare a liquid penetrant test report for each weld connection on each fabricated item.

6.4.4 Deleted.

6.4.5 Deleted.

6.4.6 The Seller shall notify the Buyer in advance of testing. The Buyer may send representatives to witness testing or perform independent tests.

6.5 Radiography

6.5.1 Radiographic examinations shall be carried out on all primary **confinement** pipework butt-welds using 100 % radiography for Q components. For all other quality levels, refer to Appendix O of this specification for radiographic examination requirements.

6.5.2 The Seller shall develop and implement a procedure to perform radiographic weld examinations of piping butt-welds. The procedure shall be developed in accordance with ASME B31.3 1996, and shall include examination materials and acceptance criteria.

6.5.3 Deleted.

6.5.4 Deleted.

6.5.5 The Seller shall provide radiographic film with technique and reader sheets. Exposed film must be sent, along with a copy of the technique and reader sheets in accordance with Section 3 of the MR. Film must be suitably packaged to preclude moisture and handling damage.

6.5.6 The Seller shall notify the Buyer in advance of examinations. The Buyer may send representatives to witness or perform independent examinations.

6.6 Magnetic Particle Examination

6.6.1 The Seller shall develop and implement a procedure to perform magnetic particle examination. The procedure shall be submitted to the Buyer for review prior to fabrication.

6.6.2 Magnetic particle examination (MT) shall be in accordance with ASTM Specification E709.

6.6.3 Welds specified under AWS D1.1 will be evaluated and accepted under criteria of AWS D1.1 Table 6.1.

6.7 Final Inspection

6.7.1 The Seller shall develop and implement a procedure for final inspection of each fabricated item. The inspections shall be performed after completion of all fabrication, cleaning, and testing, and just prior to final packaging. The inspections shall include inspection of all surfaces for contamination. Visible evidence of contamination is not acceptable.

6.7.2 The Seller shall prepare a final inspection report for each item, which documents the results of the final inspection. The Seller shall include the final inspection report in the documentation package for each piece.

6.8 Inspection and Test Status

The Seller shall maintain a positive system for identifying inspection and testing status of items and systems.

6.9 Control of Nonconforming Items

The Seller shall use the Supplier Deviation Disposition Request per MR Section 2 to notify the Buyer of fabricated items and fabrication activities not conforming to the requirements. Any nonconforming work shall be redone by the Seller at Seller's cost.

7 Testing

7.1 Shop Tests

7.1.1 The Buyer reserves the right to witness all shop tests and shall be given a minimum of 10 working days written notice prior to each test date.

7.1.2 All pipework shall be hydrostatically tested in accordance with ASME B31.3 1996. Test water used for hydrostatic testing shall be tested for chlorides. The chloride content of the test water shall not exceed 50 ppm and the water temperature shall not exceed 120 °F. Buyer shall review all test pressures prior to commencement of any testing. The testing results shall be documented and provided to Buyer.

7.1.3 Testing of vessels shall be performed in accordance with Buyer's specification 24590-WTP-3PS-MV00-T0001, *Specification for Pressure Vessel Design and Fabrication.*

7.1.4 Functional tests of evaporator equipment/skids shall be performed by the Seller. If the antifoam agitator is tested by the fabricator prior to shipment to the vessel shop, then functional test of the antifoam tank/agitator assembly as a unit is not required.

7.1.5 Seller shall demonstrate and record video demister pad removal. Test shall be done with equipment representative of what will actually be installed and utilized in the Buyer's facility.

7.1.6 Seller will furnish lifting yokes details for separator vessels, reboiler and support frame assemblies, and recirculation pumps. All Seller supplied lifting yokes shall be load tested to 1.5 times the design load.

7.1.7 Each evaporator equipment skid shall be lift tested by the Seller to demonstrate proper vertical orientation using the Seller-supplied tooling and fixtures. This testing includes verification of all tilt up features. During the lift test the deflection at the midpoint of each skid shall be monitored and recorded to ensure that proper alignment is maintained. The centerline of the evaporator skid shall be within ±1 inch of true vertical when measured from the lift point. Permanent deflection or a change in the evaporator skid alignment is unacceptable.

7.1.8 Seller shall furnish blind flanges or other acceptable closures for the nozzles, as required for hydrotesting. Closures shall be removed after testing, unless they are required for shipment.

7.1.9 Deleted.

7.1.10 All test results shall be documented, certified, and submitted to the Buyer for review.

7.2 Deleted.

8 Preparation for Shipment

8.1 General Requirements

8.1.1 The evaporator equipment/skids shall be packaged/prepared for shipment, handled, and stored in accordance with the following requirements in

- Section 7 of the MR.
- Buyer's Specification 24590-WTP-3PS-G000-T0003, *General Specification for Packaging, Shipping, Handling, and Storage Requirements.*
- Buyer's Specification 24590-WTP-3PS-PS02-T0001, *Specification for Shop Fabrication of Piping.*
- Buyer's Specification 24590-WTP-MV00-T0001, *Pressure Vessel Design and Fabrication.*

8.1.2 Seller shall ensure that appropriate documentation is prepared and, if required, signed by the appropriate person(s). The shipping documentation shall accurately reflect specific traceability to the items being shipped.

8.1.3 Seller shall ensure that appropriate documentation is prepared for the evaporator equipment/skids. At a minimum, documentation shall include the following information, as applicable:

- Manufacturer name, model number, and serial number.
- Skid number.
- Plant item number.

8.1.4 Solvents and cleaning solutions used on stainless steel shall have a halogen content of less than 200 ppm.

8.1.5 Recirculation pumps will be shipped only in temporary shipping skids not meant for installation. The reboiler and support frame assemblies shall be transported from the Seller site to the Buyer site in the horizontal orientation due to air lock size limits.

8.1.6 Separator vessels will be shipped on temporary shipping skids. The installation skids are shipped separately, each in two pieces because of their height.

8.1.7 Lifting weight shall be clearly marked on both the equipment skid and its shipping documentation.

8.1.8 Regarding Buyer's Specification 24590-WTP-3PS-PS02-T0001, *Specification for Shop Fabrication of Piping,* polyethylene wrap can be used for off-gas piping pieces and subsequent blocking using Styrofoam cushioning and equivalent backed by plywood/wood to provide protection against damage or access by elements. Special end caps are not required.

8.2 Painting

8.2.1 Stainless steel shall not have coating applied.

8.2.2 Seller shall submit the information requested on Form H (see appendix S) along with technical data sheet and MSDS. Supplier shall provide Certificate of Conformance verifying application of coating in compliance with coating manufacturer's Technical Product Data Sheet.

8.2.3 All painting and coating shall be applied in accordance with the manufacturer's directions for application.

8.2.4 Exposed carbon steel surface shall be primed and painted with enamel base coating in accordance with the coating manufactures surface and application requirements. All visible oil, grease, dust, dirt, mill scale, rust, coating, oxides, corrosion products and other foreign matter shall be removed prior to application of primer. See Sections 8.2.14 and 8.2.15 for custom fabricated equipment.

8.2.5 In the absence of standard manufacturer's colors, the finish coat of all carbon steel items and equipment shall be ANSI 70 Gray. Contrasting colors shall be used for fasteners and bails.

8.2.6 Repainting by the Seller, or custom finishing by the manufacturer shall not be required when commercially available components and equipment which are normally mass produced, inventoried, supplied from stock, and have been coated with the manufacturer's standard coating system.

8.2.7 Surfaces exposed to the environment, but inaccessible after assembly, shall be coated prior to assembly.

8.2.8 Painting of interior and enclosed surfaces of the equipment, such as inside a welded box section, is not required.

8.2.9 Machined carbon steel mating surfaces and other surfaces not protected by coating system (such as seal surfaces, threaded surfaces, lifting hooks, hook nuts, wheel treads, gears, shafts, pinions, and couplings), shall be protected with a solvent cutback asphalt temporary preservative (Dauber Chemical Tectyl 891, EF Houghton Chemical Rust Veto 342 or Buyer's accepted equivalent) for shipment and storage. The Seller shall specify which preservatives must be removed and how the preservatives are removed by the Buyer before operation of the equipment.

8.2.10 Welds shall be coated only after completion of the required tests. Required tests include leak tightness, hydrostatic testing or other NDE of the welds.

8.2.11 Filler, sealant, and caulking compounds shall be compatible with the coating system.

8.2.12 The lifting fixtures for separator vessel shall be safety yellow # 13655 in accordance with FEP-STD 595B, *Colors Used in Government Procurement*. The lifting fixtures can be coated with the manufacturer's standard coating systems.

8.2.13 Items covered by 8.2.14 and 8.2.15, shall be surface prepared in accordance with SSPC SP10. For repair, the surfaces shall be prepared in accordance with SPPC SP11.

8.2.14 For support frames for steam conditioning skids and reboiler transporter, Seller shall use two coats of **High Build** Epoxy with 4-6 mils per coat. Acceptable coating products for **High Build Epoxy** are as follows:

8.2.14.1 Amercoat 385 from Ameron

8.2.14.2 Carboguard 890 from Carbonline

8.2.14.3 224HS from Devoe

8.2.14.4 Protecto-Coat 330 or 300 from Dudick

8.2.14.5 Intergard 475HS from International

8.2.14.6 Macropoxy 646 from Sherwin Williams

8.2.15 For reboiler and recirculation pump lifting beams, Seller shall use three coats with 1st coat of **Organic Zinc** Epoxy Primer with 3-5 mils and Epoxy Novolac with 5 - 10 mils for 2nd and 3rd coats. Acceptable coating products for **Organic Zinc Epoxy Primer** are as follows:

8.2.15.1 Amercoat 68HS from Ameron

8.2.15.2 Carbozinc 859 from Carbonline

8.2.15.3 313 from Devoe

8.2.15.4 Interzinc 52 from International

8.2.15.5 Zinc Clad IV from Sherwin Williams

Acceptable coating products for **Epoxy Novolac** are as follows:

8.2.15.6 Amercoat 91 from Ameron

8.2.15.7 Phenoline 1205 FR from Carbonline

8.2.15.8 253 from Devoe

8.2.15.9 Protecto-Coat 100XT or EN from Dudick

8.2.15.10 Intertherm 875 HS from International

8.2.15.11 Macropoxy 646 from Sherwin Williams

8.3 Tagging

8.3.1 Tagging of the evaporator component, equipment, and skids shall be per this specification and the applicable documents listed in Section 2 of this specification. Plant item numbers for evaporator component/equipment shall be per the data sheets that are in Section 2 of the MR.

8.3.2 Instruments shall have nameplates installed per Section 8 of Buyer's specification 24590-WTP-3PS-JQ07-T0001, *Engineering Specification for Instrumentation for Package Systems*.

8.3.3 Motors shall have nameplates per Section 3 of Buyer's specification 24590-WTP-3PS-MUMI-T0002, *Engineering Specification for Low Voltage Induction Motors*.

8.3.4 Packages shall be suitably marked on the outside to facilitate identification of the purchase order, the procurement specification, the package contents, and any special handling instructions.

8.3.5 Slinging points and orientation for storage shall be clearly marked.

8.3.6 Temporary material such as bolting and shipping material shall have clear identification per Sections 3.13 and 3.13.12 of Buyer's specification 24590-WTP-GPP-GCB-00100, *Field Materials Management.*

8.3.7 A stainless steel nameplate shall be rigidly attached to the evaporator equipment skid packages in a prominent position for ease of visibility, and shall include the following:

- Manufacturer's name.
- Shop location.
- Date of manufacture.
- Serial number.
- Skid number.
- Weight of assembly.
- Purchase order number.

9 Quality Assurance

9.1 General Commercial Designation (CM) Requirements

9.1.1 The Seller's Quality Assurance Program (QAP) Requirements are included in 24590-WTP-3PS-G000-T0001, *Supplier Quality Assurance Program.*

9.1.2 Seller's QAP Manual shall be submitted to buyer for review in accordance with 24590-WTP-3PS-G000-T0001, *Supplier Quality Assurance Program.*

9.1.3 Seller's QAP, as a minimum, shall contain the requirements of DOE Order 414.1A as detailed in the Supplier Quality Assurance Program Requirements Data Sheets listed in Section 2 of the MR. The very same requirements shall be passed down to any lower tier subcontractor.

9.2 Quality Level (Q) Requirements

9.2.1 Seller shall have in place a QA program meeting the requirements marked as applicable in Supplier Quality Assurance Program Requirements Data Sheet attached to the MR, and Buyer's specification 24590-WTP-3PS-G000-T0001.

9.2.2 Seller shall demonstrate that its quality program is in compliance with the procurement quality requirements listed in the Supplier Quality Assurance Program Requirements Data Sheet. The Supplier shall allow the Buyer, its agent, and DOE access to their facilities and records pertaining to this purchase order for the purpose of QA Audits and Surveillance at mutually agreed times.

9.2.3 All items shall be manufactured in accordance with the Supplier's Quality Assurance Program that has been previously evaluated and accepted by the RPP-WTP Quality Organization. The very same requirements shall be passed down to any lower tier subcontractor.

9.2.4 Seller shall submit their QA program and work plan to Buyer for review prior to commencement of work. The plan shall include documents and procedures to

implement the work and include a matrix of essential Quality Assurance elements cross referenced with the documents/procedures.

10 Configuration Management

Equipment and/or components covered by this specification are identified with Plant Item Numbers shown in the attached data sheets in Section 2 of the MR. Each item shall be identified in accordance with Section 8.3 of this specification.

11 Documentation and Submittals

11.1 General

11.1.1 Seller shall submit to Buyer all detailed designs, drawings, documentation, procedures, instructions, calculations, analyses, manufacturer documentation, manufacturer data, inspection reports, test reports, certifications, certificates, manuals, MSDSs, video tapes, and drawings required per this specification, the applicable codes, standards, and reference documents in Section 2 of this specification, and the MR.

11.1.2 All detailed designs, drawings, assembly drawings, shop drawings, final P&IDs, MDSs, supporting calculation, supporting analyses, and all other requirements in the 60 % design stage shall be issued to the Buyer for review prior to fabrication of evaporator vessels and equipment.

11.1.3 Seller shall submit to Buyer Engineering and Quality Verification documents in the forms and quantities shown in Form G-321-E, *Engineering Document Requirements*, and Form G-321-V, *Quality Verification Document Requirements* attached to the MR, Section 3.

11.1.4 Seller shall submit a report identifying any deviations and/or conflicts per Section 2 of the MR to the Buyer for review.

11.1.5 Each documentation transmittal package shall have a documentation inventory sheet attached listing all documents and the number of pages each.

11.1.6 All documents submitted for review (e.g., General Arrangement, Shop Details, Calculations must contain their own unique NAME AND IDENTIFICATION NUMBER) Example:

Calculations for Item:
Document No: Calc TLP-PMP-00001-0001

11.1.7 Data sheets in Section 2 of the MR shall be marked up by the Seller and submitted to the Buyer for review with the detailed design. Seller shall fill in all information that is marked as asterisk or TBD and markup actual overall

dimensions for each evaporator component, equipment, and skid based on the detailed design.

11.1.8 All drawings shall be produced per the drawing practices set forth in ASME Y14.100, Engineering Drawing Practices.

11.2 Calculations

- All **engineering analyses and** calculations provided **as supplier submittals** shall be **in accordance with Buyer's specification 24590-WTP-3PS-G000-T0014, Supplier Design Analyses.**

Design Stress/Seismic Reports shall provide, as a minimum, the following information:

11.2.1 ANSI/AISC N690 Steel Frame / Support Designs

For Finite Element Analysis (FEA) by Computer Program, submit the **basis,** or reference to the **basis** that supports applicability of the computer program to the specific physical problem being solved. (i.e; application /validation to steel code formulas and allowable stresses)

11.2.2 ASME VIII, Div 2, Appendix 4, Vessel including internal supports/components

For FEA Computer Program analysis, submittal for the **basis,** or reference to the **basis** supporting application of the computer program to the specific physical problem being solved. (i.e; application/validation to the ASME VIII, Div 2, Appendix 4, Maximum Shear Stress Theory.)

11.2.3 ASME B31.3 Piping Design

For FEA Computer Program analysis, submittal for the **basis,** or reference to the **basis** supporting application of the computer program to the specific physical problem being solved. [i.e; application/validity to the ASME B31.3 design requirements in accordance with B31.3-96, Section 300(c)(3)]

11.3 As-Built Drawings

11.3.1 Progress As-Builts

During construction, the Seller shall keep an updated marked-up set of progress as-built drawings on the jobsite as an accurate record of all deviations between the work, as shown on the Buyer reviewed drawings, and work as fabricated. These drawings shall be available to the Buyer for inspection at any time during regular business hours.

11.3.2 Final As-Builts

Seller shall furnish to Buyer final as-built drawings with AS-BUILT clearly printed on each sheet for all final work left in place. Seller shall accurately and neatly transfer all deviations from progress as-builts to final as-builts.

11.4 Dimensional Record Drawings

See 24590-WTP-3PS-PP00-T0002 for final dimensional measurement requirements. Third party validation of special dimensional inspection is not required. Seller shall furnish to Buyer dimensional record drawings for reboiler and support frame assemblies, and recirculation pumps with all their associated lifting yokes and/or lifting lugs.

11.5 Project Start

Seller shall submit drawing index and detailed schedule of engineering document submittals, material purchases, fabrication, shop test, and ready for shipment. Include bar charts or critical path method diagrams, which detail the chronological sequence of activities.

11.6 30 % Design Review

11.6.1 Provide drawings with outline dimensions, services, foundations, and mounting details of all three (3) evaporator systems. Drawings shall show external envelope, including lugs, centerline(s), location and size for electrical cable, conduit, fluid, other service connections, isometrics, and details related to foundations and mountings.

11.6.2 Provide preliminary dimension, location, and layout for all evaporator component, equipment, and skids.

11.6.3 Provide preliminary design of the demister pads replacement methodology.

11.6.4 Provide preliminary system description. Describe general system functions and basis of design. It shall include a systematic process flow diagram for system operation.

11.6.5 Provide preliminary Piping and Instrumentation Diagrams (P&IDs).

11.6.6 Provide preliminary instrument control requirements. Include system interlocks and control philosophy. Provide flow charts, schematics, logic diagrams, or function diagrams showing the equipment functional controls.

11.6.7 Provide document that describes the proposed equipment skids, including sketches of typical skids indicating skid-to-skid and skid-to-building interfaces, as well as the components included.

11.6.8 Identify all large and heavy items of equipment to ensure lifting capability during construction, maintenance, and decommissioning.

11.6.9 Provide preliminary electrical drawings, schematics, wiring drawings, and motor data sheets per Buyer's specifications 24590-WTP-3PS-MUMI-T0002 and 24590-WTP-3PS-EKP0-T0001.

11.6.10 Provide preliminary calculations as applicable

11.7 60 % Design Review

11.7.1 Provide final P&IDs.

11.7.2 Provide final skid constructability study.

11.7.3 Provide final evaporator component, equipment, skid size, and layout.

11.7.4 Provide assembly drawings.

11.7.5 Provide shop detail drawings with sufficient detail to facilitate fabrication, manufacture, or installation. This includes a complete Bill of Materials (BOM), pipe spool drawings, internal piping and wiring details, cross-section details, and structural details.

11.7.6 Provide wiring diagrams including schematic diagrams, equipment internal wiring diagrams, and interconnection wiring diagrams for electrical items.

11.7.7 Submit completed Instrument and Mechanical data sheets for all instruments and equipment, utilizing Buyer's supplied instrument data sheet samples attached in Section 2 of the MR as templates.

11.7.8 Provide functional test setpoints and recommended operating set points for the instrumentation and control packaged systems.

11.7.9 Provide final instrument control requirements including control loop definitions, system interlocks, alarms, and control philosophies. Control and sequencing requirements of the system and its components shall be detailed as described in Section 3.5 of 24590-WTP-3PS-JQ07-T0001, *Engineering Specification for Instrumentation for Package Systems*.

11.7.10 Submit all final detailed drawings, calculations, analyses, and information necessary for evaporator vessels and equipment fabrication.

11.7.11 Submit all FMEA documentation.

11.7.12 Provide final electrical drawings, schematics, wiring drawings, motor data sheets, nameplates per Buyer's specifications 24590-WTP-3PS-MUMI-T0002 and 24590-WTP-3PS-EKP0-T0001.

11.7.13 Provide calculations as applicable.

11.8 90 % Design Review

11.8.1 Provide detailed written procedures, instructions, and drawings (including all lifting requirements) for evaporator system erection/installation.

11.8.2 Provide complete remote installation instructions for the utilization of the hot cell existing cranes for the needed reorientation, installation, and extraction of the reboiler.

11.8.3 Provide instrument installation details.

11.8.4 Provide list of required spares.

11.8.5 Provide startup and commissioning spares list, including all components or equipment that may be needed during startup and commissioning.

11.8.6 Provide operation manuals with detailed written instructions describing how the evaporator systems and components should be operated. Manuals shall include specific instructions, procedures, and illustrations for the following:

11.8.6.1 Safety Precautions – List personnel hazards and equipment or product safety precautions for all operating conditions.

11.8.6.2 Operator Prestart – Include requirements to set up and prepare each system for use.

11.8.6.3 Start-up, Shutdown, and Post-shutdown Procedures – Include a control sequence for each of these operations.

11.8.6.4 Normal Operations – Include control diagrams with data to explain operation and control of systems and specific equipment.

11.8.6.5 Emergency Operations – Include emergency procedures for equipment malfunctions to permit a short period of continued operation or to shut down the equipment to prevent further damage to systems and equipment. Include emergency shutdown instructions for fire, over-pressure, spills, or other foreseeable contingencies. Provide guidance on emergency operations of all utility systems including valve locations and portions of systems controlled.

11.8.6.6 Operator Service Requirements – Include instructions for services to be performed by the operator, such as lubrication, adjustments, and inspections.

11.8.6.7 Environmental Conditions – Include a list of environmental conditions (temperature, humidity, and other relevant data) which are best suited for each product or piece of equipment and describe conditions under which equipment should not be allowed to run.

11.8.6.8 Lay-up Instructions – Include step-by-step instructions for lay-up.

11.8.7 Provide maintenance manuals with detailed written instructions to disassemble, reassemble, and maintain systems or components in an operating condition. Manuals shall include specific instructions, procedures, and illustrations for the following phases of maintenance:

11.8.7.1 Preventive Maintenance - Include the following information for preventive and scheduled maintenance to minimize corrective maintenance and repair:

11.8.7.1.1 Lubrication Data – Include lubrication data, other than instructions for lubrication, in accordance with operator service requirements to be included in operation manuals.

11.8.7.1.2 Preventive Maintenance Plan and Schedule – Include manufacturer's schedule for routine preventive maintenance, inspections, testing, and adjustments required to ensure proper and economical operation and to minimize corrective maintenance and repair. Provide manufacturer's projection of preventive maintenance frequency of work, and hours to complete the task. Provide surveillance and in-service inspection recommendations.

11.8.7.2 Corrective Maintenance – Include manufacturer's schedule for procedures and instructions for correcting problems and making repairs. Include the following information for performing corrective maintenance:

11.8.7.2.1 Troubleshooting Guide and Diagnostic Techniques – Include step-by-step procedures to promptly isolate the cause of typical malfunctions. Describe clearly why the checkout is performed and what conditions are to be sought. Identify tests or inspections and test equipment required to determine whether parts and equipment may be reused or require replacement.

11.8.7.2.2 Wiring Diagrams and Control Diagrams – Wiring diagrams and control diagrams shall be point-to-point drawings of wiring and control circuits including factor-field interfaces. Provide a complete and accurate depiction of the actual job specific wiring and control work. On diagrams, number electrical and electronic wiring and pneumatic control tubing, as well as the terminals for each type, identical to actual installation numbering.

11.8.7.2.3 Maintenance and Repair Procedures – Include instructions and list tools required to restore product or equipment to proper condition or operating standards.

11.8.7.2.4 Removal and Replacement Instructions – Include step-by-step procedures and list required tools and supplies for removal, replacement, disassembly, and assembly of components, assemblies, subassemblies,

accessories, and attachments. Provide all tolerances, dimensions, settings, and adjustments required. Instructions shall include a combination of text and illustrations.

11.8.7.2.5 Recommended Spare Parts and Supply Lists – Include list of spare parts and supplies required for maintenance and repair to ensure continued service or operation without unreasonable delays. Include the cost of each item.

11.8.7.2.6 MSDSs – Include MSDSs for all chemicals and hazardous materials supplied as part of the product, system, or equipment. In addition, include MSDSs for all chemicals and hazardous materials required to be added (lubricants, antifreeze, etc.).

11.8.7.2.7 Parts Identification – Provide identification and coverage for all parts of each component, assembly, subassembly, and accessory of the end items subject to replacement. Include special hardware requirements, such as requirement to use high-strength bolts and nuts. Identify parts by make, model, serial number, and source of supply to allow reordering without further identification. Provide clear and legible illustrations, drawings, and exploded views to enable easy identification of the items. When illustrations omit the part numbers and description, both the illustration and separate listing shall show the index, reference, or key number which will cross-reference the illustrated part to the listed part. Parts shown in the listings shall be grouped by components, assemblies, and subassemblies.

11.8.7.2.8 Other than Seller's Commercial Practice – End item manufacturer may add a cross-reference to implement component assemblies and parts requirements when implementation in manual form varies significantly from the style, format, and method of Seller's standard commercial practice.

11.8.7.2.9 Warranty Information – List and explain the various warranties and include the servicing and technical precautions prescribed by the Seller or contract documents to keep warranties in force.

11.8.7.2.10 Personnel Training Requirements – Provide information available from the Seller to use for training designated personnel to operate and maintain the equipment and systems properly.

11.8.7.3 Calibration Testing Equipment and Special Tool Information – Include information on test equipment required to perform specific tests and on special tools needed for the operation, maintenance, and repair of components.

11.8.8 Provide system, component, and instrumentation descriptions as identified below:

11.8.8.1 System Descriptions - Include comprehensive system description describing, in detail, how the overall system functions, and the basic design basis. Include component interfaces and interactions. Provide a systematic process flow diagram for system operation.

11.8.8.2 Component Descriptions – Include comprehensive component descriptions describing, in detail, how each individual process component functions and the basic design basis. Include other component interfaces and interactions. Provide a systematic process flow diagram for component operation.

11.8.8.3 Instrument Descriptions – Include a list or table describing instrument ID number, ID name, location, and basic operating function. Include separately, in systematic descriptive detail, instrument controls and logic that correspond to instrumentation and logic diagrams.

11.8.9 Provide design and operational requirements per the following:

11.8.9.1 Design requirements – Include a list or table describing the maximum design limits and conditions required to safely operate the equipment (i.e., temperatures, pressures, etc.).

11.8.9.2 Operational requirements – Include a list or table describing the normal operating ranges for equipment (i.e., temperatures, pressures, etc.).

11.8.10 Provide analysis and design reports, including analytical data (stress, electrical loading, fluid dynamics, etc.) which demonstrates that an item satisfies all specified requirements.

11.8.11 Provide seismic analysis or test data reports providing data and demonstrating suitability of materials, components, or systems in relation to the conditions imposed by the stated seismic criteria.

11.8.12 Provide thermal stress analysis or test data reports providing data and demonstrating suitability of materials, components, or systems in relation to the conditions imposed by thermal stresses.

11.8.13 Provide site storage and handling manuals including the requirements and time period for lubrication, rotation, heating, lifting, or other handling requirements to prevent damage or deterioration during storage and handling at job site. Include return shipping instructions.

11.8.14 Provide inspection and test plan including detailed descriptions of the inspections and tests planned during the receipt, manufacturing, and conformance verification activities. Include identification of witness and hold points.

11.8.15 Provide welding procedures, specifications, and supporting qualification records required for welding, hard facing, overlaying, brazing, and soldering.

11.8.16 Provide material control procedures including controlling issuance, handling, storage, and traceability of materials such as weld rod.

11.8.17 Provide PMI procedures for performing PMI testing of materials.

11.8.18 Provide repair procedures including controlling material removal and replacement by welding, brazing, etc., subsequent thermal treatments, and final acceptance inspection.

11.8.19 Provide pressure testing procedures including hydro, air, leak, separation, or vacuum test procedures for performing hydrostatic or pneumatic structural integrity and leakage tests.

11.8.20 Provide inspection procedures for the purpose of determining that specified requirements (i.e., dimensions, properties, performance results, etc.) are met.

11.8.21 Provide radiographic testing procedures for identifying the presence and certain characteristics of discontinuities and inclusions in materials by x-ray or gamma ray exposure of photographic film.

11.8.22 Provide liquid penetrant testing procedures for detection of surface discontinuities in materials by application of a penetrating liquid in conjunction with suitable developing techniques.

11.8.23 Provide functional shop test procedures to demonstrate that design function and operational parameters are met (e.g., pump performance data, valve stroking, load, temperature rise, calibration, environment, etc.).

11.8.24 Provide test requirements document per engineering specifications to demonstrate design function and operational parameters **(including a full simulation of abnormal shutdown conditions)** for the complete assembled evaporator systems.

11.8.25 Provide electrical test procedures to demonstrate that design function and operational parameters are met (e.g., impulse, overload, continuity, voltage, temperature rise, calibration, saturation loss, etc.).

11.8.26 Provide shipping preparation procedures for cleaning, packaging, and handling.

11.9 Final Design Review

Provide final design report including all design documents, manuals, and drawings that are specified in this specification. All procedures and instructions shall be completed and submitted to the Buyer a minimum of eight (8) weeks prior to evaporator components, equipment, and skid shipment.

APPENDIX A

WASTE FEED EVAPORATOR STREAM DATA

Stream Description	Evaporator Feed	Evaporator Concentrate	Process Condensate
Specific Gravity	1.050882E+00	1.197295E+00	1.000072E+00
pH	1.227066E+01	1.305375E+01	9.325531E+00
Total Volume (gpm)	1.962454E+01	3.234591E+00	1.710009E+01
Total Mass (lb/hr)	1.030370E+04	1.934908E+03	8.544156E+03
Na Molarity	8.231085E-01	5.000000E+00	3.116202E-05
Activity (Ci/gallon)			
129-I	1.070549E-07	6.456333E-07	7.335298E-10
134-Cs	6.794152E-06	4.120906E-05	2.202542E-09
137-Cs	1.531654E-01	9.292679E-01	1.866905E-09
14-C	4.343208E-06	2.632459E-05	4.923495E-09
126-Sn	3.687065E-07	2.235285E-06	3.195409E-10
233-U	7.147865E-07	4.333113E-06	6.729994E-10
235-U	5.308471E-09	3.218466E-08	4.216552E-12
152-Eu	1.787821E-06	1.083834E-05	1.612622E-09
154-Eu	1.047067E-04	6.347777E-04	9.210747E-08
155-Eu	2.783818E-05	1.688275E-04	1.307200E-08
237-Np	1.743947E-07	1.057294E-06	1.462592E-10
238-Pu	1.558783E-06	9.457271E-06	1.600678E-13
239-Pu	2.427044E-05	1.472509E-04	1.683651E-12
240-Pu	6.791157E-06	4.120253E-05	7.334047E-13
241-Am	1.539731E-04	9.341677E-04	4.075735E-11
243-Am	5.791005E-05	3.513452E-04	7.425120E-12
242-Cm	2.927004E-07	1.774511E-06	2.511805E-10
241-Pu	5.791005E-05	3.513452E-04	7.425120E-12
243-Cm	4.125221E-08	2.501032E-07	3.356803E-11
244-Cm	8.401929E-07	5.093914E-06	6.825013E-10
3-H	1.025165E-05	2.637668E-05	6.775766E-06
60-Co	1.897588E-06	1.150925E-05	6.773841E-10
90-Sr	2.251101E-02	1.365762E-01	1.437153E-09
99-Tc	5.315124E-04	3.223320E-03	2.669563E-07
125-Sb	6.485595E-05	3.931850E-04	1.619373E-07
Specific Mass (wt%)			
Ag+	0.0000851	0.0004528	0.0000000
Al+3	0.1407107	0.7486167	0.0001564
B+3	0.0002618	0.0013935	0.0000002
Ba+2	0.0001225	0.0006518	0.0000001
Bi+3	0.0001670	0.0008883	0.0000002
Ca+2	0.0023604	0.0125596	0.0000022
Cd+2	0.0006340	0.0033758	0.0000000
Cl-	0.0256441	0.1362996	0.0000587
CO3-2	0.3966942	2.1103727	0.0004730
Cr(TOTAL)	0.0140436	0.0747823	0.0000005
Cs+	0.0001128	0.0006007	0.0000000

F-	0.0209444	0.1115277	0.0000010
Fe+3	0.0111118	0.0591522	0.0000045
Hg+2	0.0001399	0.0007446	0.0000001
K+	0.0677068	0.3604479	0.0000230
La+3	0.0004065	0.0021647	0.0000000
Li+	0.0002899	0.0015438	0.0000000
Mg+2	0.0002586	0.0013766	0.0000001
Mn+4	0.0012678	0.0067511	0.0000001
Mo+6	0.0002105	0.0011200	0.0000002
Na+	1.8061286	9.6176128	0.0000717
NH3	0.0163755	0.0051900	0.0185725
Ni+2	0.0023278	0.0023372	0.0022779
NO2-	0.4747226	2.5269331	0.0002360
NO3-	3.5169979	18.6961248	0.0073514
OH(BOUND)	0.1876967	0.9986652	0.0001926
OH-	0.0301822	0.1605662	0.0000360
Pb+2	0.0007719	0.0040181	0.0000209
Phosphor containing components	0.0646907	0.3441493	0.0000768
Se+6	0.0010836	0.0057700	0.0000001
Si+4	0.0121852	0.0648277	0.0000137
SO4-2	0.0669264	0.3561423	0.0000570
Sr+2	0.0000854	0.0004544	0.0000001
Ti+4	0.0000312	0.0001660	0.0000000
TOC	0.0494322	0.2459911	0.0039049
U(TOTAL)	0.0002514	0.0013377	0.0000003
Zn+2	0.0001314	0.0006996	0.0000000
Zr+4	0.0115379	0.0613963	0.0000102
H2O	92.3882691	63.2687429	99.9664571
H+	0.0000000	0.0000000	0.0000000
CO2	0.0000000	0.0000000	0.0000000
Total Dissolved Solids (Na Excluded) (wt%)	5.0601243	26.7981844	0.0334712
Total Suspended Solids (wt%)	0.7454780	0.3154599	0.0000000

APPENDIX B

TREATED LAW EVAPORATOR STREAM DATA

Stream Description	Feed Treated LAW	Feed Neutralized Effluent	Concentrated LAW	Condensate from LAW Evap
Specific Gravity	1.201279E+00	9.960371E-01	1.354830E+00	1.000211E+00
pH	1.400000E+01	1.199980E+01	1.400000E+01	1.108047E+01
Total Volume (gpm)	1.398842E+01	9.800359E+00	8.316158E+00	1.574299E+01
Total Mass (lb/hr)	8.395616E+03	4.877051E+03	5.629209E+03	7.867172E+03
Na Molarity	4.654928E+00	9.564147E-02	8.001080E+00	1.384081E-04
Activity (Ci/gallon)				
129-I	4.749081E-07	0.000000E+00	7.940393E-07	2.531875E-09
134-Cs	1.575297E-08	4.663790E-10	2.703969E-08	4.038980E-12
137-Cs	3.359384E-04	9.978015E-06	5.768332E-04	3.256697E-12
14-C	3.582432E-05	0.000000E+00	6.019971E-05	3.147259E-08
126-Sn	1.430030E-06	0.000000E+00	2.403044E-06	1.256318E-09
233-U	8.109593E-07	0.000000E+00	1.362748E-06	7.124486E-10
235-U	7.044819E-09	0.000000E+00	1.183822E-08	6.189054E-12
152-Eu	1.012468E-05	0.000000E+00	1.701366E-05	8.894794E-09
154-Eu	1.453164E-04	0.000000E+00	2.441918E-04	1.276642E-07
155-Eu	3.750157E-05	0.000000E+00	6.301818E-05	3.294609E-08
237-Np	6.467932E-07	0.000000E+00	1.086881E-06	5.682244E-10
238-Pu	1.128371E-06	0.000000E+00	1.898007E-06	2.681847E-13
239-Pu	2.250086E-05	0.000000E+00	3.784818E-05	5.347876E-12
240-Pu	6.141525E-06	0.000000E+00	1.033052E-05	1.459683E-12
241-Am	1.046161E-04	0.000000E+00	1.759723E-04	6.571346E-11
243-Am	4.604254E-05	0.000000E+00	7.744709E-05	1.094313E-11
242-Cm	3.178432E-07	0.000000E+00	5.341082E-07	2.792334E-10
241-Pu	4.604254E-05	0.000000E+00	7.744709E-05	1.094313E-11
243-Cm	4.969903E-08	0.000000E+00	8.351496E-08	4.366187E-11
244-Cm	9.701220E-07	0.000000E+00	1.630207E-06	8.522771E-10
3-H	4.475971E-05	0.000000E+00	3.012124E-05	2.385981E-05
60-Co	5.350007E-06	0.000000E+00	8.990228E-06	4.700118E-09
90-Sr	1.768254E-02	0.000000E+00	2.974328E-02	6.760816E-08
99-Tc	1.119640E-04	0.000000E+00	1.881459E-04	9.836324E-08
125-Sb	2.554858E-04	0.000000E+00	4.293221E-04	2.244509E-07
Specific Mass (wt%)				
Ag+	0.0001789	0.0000000	0.0002666	0.0000002
Al+3	0.8781368	0.0000000	1.3083917	0.0009266
B+3	0.0011040	0.0000000	0.0016449	0.0000012
Ba+2	0.0003972	0.0000000	0.0005919	0.0000004
Bi+3	0.0009166	0.0000000	0.0013656	0.0000010
Ca+2	0.0036401	0.0000000	0.0054235	0.0000039
Cd+2	0.0001758	0.0000000	0.0002620	0.0000002
Cl-	0.1927241	0.3081970	0.5533995	0.0007536
CO3-2	1.8709695	0.0000000	2.7876764	0.0019741
Cr(TOTAL)	0.0436851	0.0000000	0.0651518	0.0000013

Cs+	0.0000002	0.0000000	0.0000003	0.0000000
F-	0.1369480	0.0311205	0.2312023	0.0000068
Fe+3	0.0051922	0.0000000	0.0077362	0.0000055
Hg+2	0.0002119	0.0017125	0.0002775	0.0000002
K+	0.4371071	0.0000000	0.6517338	0.0001319
La+3	0.0000717	0.0000000	0.0001068	0.0000001
Li+	0.0001031	0.0000000	0.0001537	0.0000001
Mg+2	0.0007039	0.0000000	0.0010487	0.0000007
Mn+4	0.0003630	0.0000000	0.0005408	0.0000004
Mo+6	0.0014914	0.0000000	0.0022221	0.0000016
Na+	8.9124915	0.2205096	13.4830308	0.0003183
NH3	0.0556091	0.0000000	0.0046946	0.0559853
Ni+2	0.0010718	0.0000000	0.0000905	0.0010791
NO2-	3.6214624	0.0000000	5.3989608	0.0015931
NO3-	8.2610982	0.1691503	12.4458561	0.0154626
OH(BOUND)	1.2709676	0.0000000	1.8936954	0.0013410
OH-	1.9297357	0.0170413	2.8899856	0.0020466
Pb+2	0.0022422	0.0000000	0.0032374	0.0000764
Phosphor containing components	0.2305136	0.0000000	0.3434569	0.0002432
Se+6	0.0007265	0.0000000	0.0010825	0.0000008
Si+4	0.0190601	0.0000000	0.0283989	0.0000201
SO4-2	0.4242482	0.0000000	0.6322928	0.0003199
Sr+2	0.0002059	0.0000000	0.0003067	0.0000002
Ti+4	0.0000875	0.0000000	0.0001303	0.0000001
TOC	0.1782369	0.0000016	0.2481087	0.0126807
U(TOTAL)	0.0014123	0.0000000	0.0021042	0.0000015
Zn+2	0.0001606	0.0000000	0.0002393	0.0000002
Zr+4	0.0092074	0.0000000	0.0137187	0.0000097
H2O	71.5070307	98.7871894	55.3633120	99.9050111
H+	0.0000000	0.0000000	0.0000000	0.0000000
CO2	0.0000000	0.0000000	0.0000000	0.0000000
Total Dissolved Solids (Na Excluded) (wt%)	19.5804777	0.5272233	29.5260185	0.0946707
Total Suspended Solids (wt%)	0.0000000	0.4650777	1.6276387	0.0000000

APPENDIX C

Predicted Maximum Radionuclide

Stream Number	Waste Feed Evaporators			Treated LAW Evaporator		
Stream Description	FEP Feed	FEP Concentrate	FEP Overhead	TLP Feed	TLP Concentrate	TLP overhead
Specific Gravity	1.108297E+00	1.291591E+00	1.000111E+00	1.105304E+00	1.278000E+00	1.000163E+00
pH	1.312459E+01	1.389913E+01	1.017151E+01	1.321351E+01	1.386570E+01	1.029492E+01
Total Volume (gpm)	1.921589E+01	3.462492E+00	2.248903E+00	1.074593E+01	2.391253E+00	1.179073E+00
Total Mass (lb/hr)	1.066579E+04	2.239702E+03	8.426084E+03	5.948428E+03	1.530498E+03	4.417929E+03
Na Molarity	1.678973E+00	1.000000E+01	6.235205E-05	2.217504E+00	9.964802E+00	8.915611E-05
Activity (Ci/gallon)						
129-I	1.118972E-06	5.133318E-06	1.657679E-06	6.388461E-07	2.124451E-06	1.513816E-06
134-Cs	1.129467E-04	6.250516E-04	2.728177E-06	2.084563E-08	9.341234E-08	5.370692E-10
137-Cs	4.359059E+00	2.419159E+01	2.232506E-06	4.525083E-04	2.033504E-03	4.407797E-10
14-C	1.530790E-05	8.491637E-05	5.895986E-08	8.056168E-06	3.616737E-05	7.268873E-08
126-Sn	1.923017E-04	1.067222E-03	1.486077E-10	2.043400E-08	9.173655E-08	1.841322E-10
233-U	1.150416E-06	6.384484E-06	1.248818E-11	1.717230E-09	7.709344E-09	1.547408E-11
235-U	6.946466E-07	3.853045E-06	3.162332E-09	4.348219E-07	1.952093E-06	3.918211E-09
152-Eu	6.188336E-04	3.434357E-03	6.581440E-10	9.049626E-08	4.062746E-07	8.154683E-10
154-Eu	6.562753E-02	3.642143E-01	8.345943E-07	1.147543E-04	5.151790E-04	1.034060E-06
155-Eu	3.737761E-02	2.074354E-01	2.034016E-07	2.796783E-05	1.255590E-04	2.520201E-07
237-Np	9.537993E-05	5.293324E-04	2.536272E-10	3.487470E-08	1.565667E-07	3.142584E-10
238-Pu	4.520421E-04	2.508710E-03	2.573295E-11	1.309172E-06	5.883206E-06	3.191544E-11
239-Pu	3.985830E-03	2.212027E-02	5.228669E-11	2.660106E-06	1.195409E-05	6.484898E-11
240-Pu	2.153818E-04	1.195310E-03	4.564062E-11	2.321981E-06	1.043461E-05	5.660605E-11
241-Am	4.833846E-02	2.682652E-01	3.172753E-09	6.111128E-05	2.746230E-04	3.937305E-09
241-Pu	2.838034E-02	1.575032E-01	8.472452E-10	4.310391E-05	1.937020E-04	1.050802E-09
242-Cm	4.706917E-15	2.611634E-14	8.863463E-18	1.212658E-15	5.444115E-15	1.092735E-17
243-Am	1.646951E-06	9.139638E-06	7.551321E-10	1.033137E-07	4.638171E-07	9.309668E-10
243-Cm	1.726031E-04	9.578996E-04	7.809701E-10	1.073837E-07	4.820890E-07	9.676419E-10
244-Cm	3.700041E-03	2.053421E-02	1.637305E-08	2.251301E-06	1.010701E-05	2.028663E-08
3-H	2.663313E-04	8.683912E-04	9.386773E-04	1.255884E-04	2.257503E-04	6.867589E-04
60-Co	1.287961E-02	7.147826E-02	6.882351E-08	9.462625E-06	4.248158E-05	8.526838E-08
90-Sr	1.320134E+01	7.326381E+01	2.292527E-06	7.286412E-03	3.274264E-02	2.857525E-06
99-Tc	3.006068E-02	1.668241E-01	6.876193E-06	2.174950E-04	9.764235E-04	1.959863E-06
125-Sb	4.141097E-02	2.298192E-01	6.367954E-09	8.755757E-07	3.930816E-06	7.889875E-09

APPENDIX D

EVAPORATOR PROCESS DATA

PROCESS DATA SHEET: Mechanical Pump

PLANT ITEM No.
24590-PTF-FEP-PMP-00007A

Project:	RPP-WTP		System:		FEP		
Project No:	24590		Description:		Waste Feed Evaporator Feed Pump		
Site:	Hanford		Supporting Calcs No.		24590-PTF-MEC-FEP-00001, Rev. A		
Building No.:	10		Associated Drawings:		24590-PTF-M5-V17T-P0004001		
PROCESS DATA	Units	Mode 1 (Note 1)	Mode 2 (Note2)	Mode 3 (Note 3)	Mode 4	ETC.	
Capacity Normal (Note 4)	gpm	50	39	36			
Capacity Rated	gpm	60	N/A	N/A			
Minimum Pumping Temperature	°F	59	59	59			
Normal Pumping Temperature	°F	77	77	77			
Maximum Pumping Temperature	°F	122	122	122			
Density at Normal Pumping Temperature (Note 7)	lb/ft^3	75.9	67.6	68.9			
Sp Gravity at Normal Pumping Temperature (Note 7)		1.23	1.08	1.10			
Viscosity at Normal Pumping Temperature	cP	11.8	11.8	11.8			
Vapor Press at Normal Pumping Temp	psia	0.43	0.44	0.44			
Origin Pressure	psia	14.61	14.61	14.61			
Delivery Pressure	psia	(Note 5)	(Note 5)	(Note 5)			
FLUID COMPOSITION							
Content Code (e.g. Type/Name of Liquid)							
Solids Content	% wt/wt	4	7	2			
Solids Size Range	microns	(Note 6)	(Note 6)	(Note 6)			
Solids Characteristics		(Note 6)	(Note 6)	(Note 6)			

Notes:
1. Mode 1 represents Envelope A waste feed and recycles required to meet production rate of 60 Mt/d LAW glass.
2. Mode 1 represents Envelope B waste feed and recycles required to meet production rate of 60 Mt/d LAW glass.
3. Mode 1 represents Envelope C waste feed and recycles required to meet production rate of 30 Mt/d LAW glass.
4. Minimum flowrate is 20 gpm for Envelope A, 25 gpm for Envelope B, and 23 gpm for Envelope C.
5. Delivery pressure to be determined by waste feed evaporator vendor.
6. Solids size range and characteristics to be determined by R&T.
7. Density and Specific Gravity based on pretreated AW-101 of same molarity. Does not include weight percent solids.

PROCESS DATA SHEET: Mechanical Pump

PLANT ITEM No.
24590-PTF-FEP-PMP-00007B

Project:	RPP-WTP		System:		FEP		
Project No:	24590		Description:		Waste Feed Evaporator Feed Pump		
Site:	Hanford		Supporting Calcs No.		24590-PTF-MEC-FEP-00001, Rev. A		
Building No.:	10		Associated Drawings:		24590-PTF-M5-V17T-P0004001		
PROCESS DATA	Units	Mode 1 (Note 1)	Mode 2 (Note2)	Mode 3 (Note 3)	Mode 4	ETC.	
Capacity Normal (Note 4)	gpm	50	39	36			
Capacity Rated	gpm	60	N/A	N/A			
Minimum Pumping Temperature	°F	59	59	59			
Normal Pumping Temperature	°F	77	77	77			
Maximum Pumping Temperature	°F	122	122	122			
Density at Normal Pumping Temperature (Note 7)	lb/ft^3	75.9	67.6	68.9			
Sp Gravity at Normal Pumping Temperature (Note 7)		1.23	1.08	1.10			
Viscosity at Normal Pumping Temperature	cP	11.8	11.8	11.8			
Vapor Press at Normal Pumping Temp	psia	0.43	0.44	0.44			
Origin Pressure	psia	14.61	14.61	14.61			
Delivery Pressure	psia	(Note 5)	(Note 5)	(Note 5)			
FLUID COMPOSITION							
Content Code (e.g. Type/Name of Liquid)							
Solids Content	% wt/wt	4	7	2			
Solids Size Range	microns	(Note 6)	(Note 6)	(Note 6)			
Solids Characteristics		(Note 6)	(Note 6)	(Note 6)			

Notes:
1. Mode 1 represents Envelope A waste feed and recycles required to meet production rate of 60 Mt/d LAW glass.
2. Mode 1 represents Envelope B waste feed and recycles required to meet production rate of 60 Mt/d LAW glass.
3. Mode 1 represents Envelope C waste feed and recycles required to meet production rate of 30 Mt/d LAW glass.
4. Minimum flowrate is 20 gpm for Envelope A, 25 gpm for Envelope B, and 23 gpm for Envelope C.
5. Delivery pressure to be determined by waste feed evaporator vendor.
6. Solids size range and characteristics to be determined by R&T.
7. Density and Specific Gravity pretreated AW-101 of same molarity. Does not include weight percent solids.

PROCESS DATA SHEET: Mechanical Pump

PLANT ITEM No.
24590-PTF-FEP-PMP-00008A

Project:	RPP-WTP		System:		FEP			
Project No:	24590		Description:		Waste Feed Evaporator Concentrate Pump			
Site:	DOE Hanford		Supporting Calcs No.		24590-PTF-MEC-FEP-00001, Rev. A			
Building No.:	10		Associated Drawings:		24590-PTF-M5-V17T-P0004002			
PROCESS DATA	Units	Mode 1 (Note 1)	Mode 2 (Note2)	Mode 3(Note 3)	Mode 4	ETC.		
Capacity Normal (Note 4)	gpm	28	14	14				
Capacity Rated	gpm	34	N/A	N/A				
Minimum Pumping Temperature	°F	59	59	59				
Normal Pumping Temperature	°F	122	122	122				
Maximum Pumping Temperature	°F	122	122	122				
Density at Normal Pumping Temperature (Note 7)	lb/ft^3	75.9	75.9	76.6				
Sp Gravity at Normal Pumping Temperature (Note 7)		1.23	1.23	1.25				
Viscosity at Normal Pumping Temperature	cP	5.5	5.5	5.5				
Vapor Press at Normal Pumping Temp	psia	1.3	1.3	1.2				
Origin Pressure	psia	Note 5	Note 5	Note 5				
Delivery Pressure	psia	14.6	14.6	14.6				
FLUID COMPOSITION								
Content Code (e.g. Type/Name of Liquid)								
Solids Content	% wt/wt	5	15	3				
Solids Size Range	microns	Note 6	Note 6	Note 6				
Solids Characteristics		Note 6	Note 6	Note 6				

Notes:
1. Mode 1 represents Envelope A concentrate required to meet production rate of 60 Mt/d LAW glass.
2. Mode 2 represents Envelope B concentrate required to meet production rate of 60 Mt/d LAW glass.
3. Mode 3 represents Envelope C concentrate required to meet production rate of 30 Mt/d LAW glass.
4. Minimum flowrate is 12 gpm for Envelope A, 4 gpm for Envelope B, and 3 gpm for Envelope C.
5. Origin pressure to be determined by treated LAW evaporator vendor.
6. Solids size range and characteristics to be determined by R&T.
7. Density and Specific Gravity based on pretreated AW-101 solutions of same molarity. Does not include weight percent solids.

PROCESS DATA SHEET: Mechanical Pump

PLANT ITEM No.
24590-PTF-FEP-PMP-00008B

Project:	RPP-WTP		System:		FEP			
Project No:	24590		Description:		Waste Feed Evaporator Concentrate Pump			
Site:	Hanford		Supporting Calcs No.		24590-PTF-MEC-FEP-00001, Rev. A			
Building No.:	10		Associated Drawings:		24590-PTF-M5-V17T-P0004002			
PROCESS DATA	Units	Mode 1 (Note 1)	Mode 2 (Note2)	Mode 3(Note 3)	Mode 4	ETC.		
Capacity Normal (Note 4)	gpm	28	14	14				
Capacity Rated	gpm	34	N/A	N/A				
Minimum Pumping Temperature	°F	59	59	59				
Normal Pumping Temperature	°F	122	122	122				
Maximum Pumping Temperature	°F	122	122	122				
Density at Normal Pumping Temperature (Note 7)	lb/ft^3	75.9	75.9	76.6				
Sp Gravity at Normal Pumping Temperature (Note 7)		1.23	1.23	1.25				
Viscosity at Normal Pumping Temperature	cP	5.5	5.5	5.5				
Vapor Press at Normal Pumping Temp	psia	1.3	1.3	1.2				
Origin Pressure	psia	Note 5	Note 5	Note 5				
Delivery Pressure	psia	14.6	14.6	14.6				
FLUID COMPOSITION								
Content Code (e.g. Type/Name of Liquid)								
Solids Content	% wt/wt	5	15	3				
Solids Size Range	microns	Note 6	Note 6	Note 6				
Solids Characteristics		Note 6	Note 6	Note 6				

Notes:
1. Mode 1 represents Envelope A concentrate required to meet production rate of 60 Mt/d LAW glass.
2. Mode 2 represents Envelope B concentrate required to meet production rate of 60 Mt/d LAW glass.
3. Mode 3 represents Envelope C concentrate required to meet production rate of 30 Mt/d LAW glass.
4. Minimum flowrate is 12 gpm for Envelope A, 4 gpm for Envelope B, and 3 gpm for Envelope C.
5. Origin pressure to be determined by treated LAW evaporator vendor.
6. Solids size range and characteristics to be determined by R&T.
7. Density and Specific Gravity based on pretreated AW-101 solutions of same molarity. Does not include weight percent solids.

PROCESS DATA SHEET: Evaporator

PLANT ITEM No.
24590-PTF-FEP-EVAP-00001B

Project:	RPP-WTP	System:	FEP
Project No:	24590	Description:	Waste Feed Evaporator
Site:	Hanford	Supporting Calcs No.	24590-PTF-MEC-FEP-00001, Rev. B
Building No.:	10	Associated Drawings:	24590-PTF-M5-V17T-P0004002, Rev. 0

UTILITIES DATA	Units	Cooling Water	Instrument Air
		Note 1	
Temperature	°F	83	60
Pressure	psig	65	100

		Envelope A					Evaporator Bypass (Envelop A)		
		Feed					Feed (Recycles)		
PROCESS DATA	Units	Minimum Na	Maximum Na	Concentrate	Overheads	Condensate	Minimum Na (Note 14)	Maximum Na (Note 14)	Concentrate (Note 14)
					Note 5,9				
Liquid Flow (Note 4)	lb_m/hr	11,000	27,000	7,000 (Note 7)	N/A	14,900 (Note 8)	14,200	16,300 (note 13)	14,200
Vapor Flow	lb_m/hr	N/A	N/A	N/A	14,900	N/A	N/A	N/A	N/A
Non-Condensables Flow	lb_m/hr	N/A	N/A	N/A	42.7	N/A	N/A	N/A	N/A
Temperature (Note 6)	°F	77	77	122	111	111	77	77	122
Na Molarity		1.4	4	5	N/A	0	0.2	1	5
Density	lb_m/ft^3	67.8	75.9	74.0	0.0039	61.9	63.4	66.6	75.9
Specific Gravity		1.09	1.22	1.23	N/A	1	1.02	1.07	1.23
Viscosity	Cp	11.8	11.8	5.5	0.01	0.7	11.8	11.8	5.5
Specific Heat	BTU/lb_m°F	0.93	0.88	0.68	0.45	1	0.99	0.94	0.68
Thermal Conductivity	BTU/hr ft °F	0.36	0.39	0.39	0.01	0.37	0.353	0.369	0.39

		Envelope B			Envelope C		
		Feed			Feed		
	Units	Minimum Na	Maximum Na	Concentrate	Minimum Na	Maximum Na	Concentrate
Liquid Flow (Note 4)	lb_m/hr	13,000	21,100	8,490(Note10)	11,900	19,800	8780 (Note 11)
Vapor Flow	lb_m/hr	N/A	N/A	N/A	N/A	N/A	N/A
Non-Condensables Flow	lb_m/hr	N/A	N/A	N/A	N/A	N/A	N/A
Temperature (Note 6)	°F	77	77	122	77	77	122
Na Molarity		0.78	1.81	5	0.77	2.30	6
Density (Note 12)	lbm /ft3	64.9	67.6	74.0	64.9	68.9	76.6
Specific Gravity (Note 12)		1.04	1.08	1.21	1.04	1.10	1.25
Viscosity	Cp	11.8	11.8	5.5	11.8	11.8	5.5
Specific Heat	BTU/lbm°F	0.94	0.91	0.68	0.94	0.91	0.68
Thermal Conductivity	BTU/hr ft °F	0.377	0.385	0.39	0.377	0.385	0.39

Notes:
1. Maximum temperature and pressure of cooling water supply.
2. Temperature and pressure of steam supply.
3. Delete
4. Evaporator to require 50% turndown capability.
5. Evaporator overheads prior to condensate removal.
6. Vacuum system to enable concentration of feed at reduced temperature .
7 Maximum transfer rate. Minimum Transfer rate is 7,300 lbs/hr.
8. Maximum evaporator overhead condensate production capacity. Envelope A average conditions require 11,800 lbs/hr.
9. Maximum overhead vapor and non-condensable flow. Average vapor flow is 11,800 lbs/hr. Non-condensable flow also applies to average conditions.
10. Maximum transfer rate. Minimum transfer rate is 2430 lbs/hr.
11. Maximum transfer rate. Minimum transfer rate is 1880 lbs/hr.
12. Density and Specific Gravity based on sodium hydroxide solutions of same molarity. Does not include weight percent solids.
13. Maximum transfer rate. Minimum transfer rate is 7,300 lbs/hr.
14. Based on evaporator semibatch operation
15. See section 3.4.3.3 for high pressure steam supply condition

PROCESS DATA SHEET: Evaporator

PLANT ITEM No.
24590-PTF-FEP-EVAP-00001B

Project:	RPP-WTP	System:	FEP
Project No:	24590	Description:	Waste Feed Evaporator
Site:	Hanford	Supporting Calcs No.	24590-PTF-MEC-FEP-00001, Rev. B
Building No.:	10	Associated Drawings:	24590-PTF-M5-V17T-P0004002, Rev. 0

UTILITIES DATA	Units	Cooling Water	Instrument Air	High Pressure Steam
		Note 1		
Temperature	°F	83	60	Note 15
Pressure	psig	65	100	Note 15

		Envelope A					Evaporator Bypass (Envelop A)		
		Feed					Feed (Recycles)		
PROCESS DATA	Units	Minimum Na	Maximum Na	Concentrate	Overheads	Condensate	Minimum Na (Note 14)	Maximum Na (Note 14)	Concentrate (Note 14)
					Note 5,9				
Liquid Flow (Note 4)	lb_m/hr	11,000	27,000	7,000 (Note 7)	N/A	14,900 (Note 8)	14,200	16,300 (note 13)	14,200
Vapor Flow	lb_m/hr	N/A	N/A	N/A	14,900	N/A	N/A	N/A	N/A
Non-Condensables Flow	lb_m/hr	N/A	N/A	N/A	42.7	N/A	N/A	N/A	N/A
Temperature (Note 6)	°F	77	77	122	111	111	77	77	122
Na Molarity		1.4	4	5	N/A	0	0.2	1	5
Density	lb_m/ft^3	67.8	75.9	74.0	0.0039	61.9	63.4	66.6	75.9
Specific Gravity		1.09	1.22	1.23	N/A	1	1.02	1.07	1.23
Viscosity	Cp	11.8	11.8	5.5	0.01	0.7	11.8	11.8	5.5
Specific Heat	$BTU/lb_m°F$	0.93	0.88	0.68	0.45	1	0.99	0.94	0.68
Thermal Conductivity	BTU/hr ft °F	0.36	0.39	0.39	0.01	0.37	0.353	0.369	0.39

		Envelope B			Envelope C		
		Feed			Feed		
	Units	Minimum Na	Maximum Na	Concentrate	Minimum Na	Maximum Na	Concentrate
Liquid Flow (Note 4)	lb_m/hr	13,000	21,100	8,490(Note10)	11,900	19,800	8780 (Note 11)
Vapor Flow	lb_m/hr	N/A	N/A	N/A	N/A	N/A	N/A
Non-Condensables Flow	lb_m/hr	N/A	N/A	N/A	N/A	N/A	N/A
Temperature (Note 6)	°F	77	77	122	77	77	122
Na Molarity		0.78	1.81	5	0.77	2.30	6
Density (Note 12)	lbm /ft3	64.9	67.6	74.0	64.9	68.9	76.6
Specific Gravity (Note 12)		1.04	1.08	1.21	1.04	1.10	1.25
Viscosity	Cp	11.8	11.8	5.5	11.8	11.8	5.5
Specific Heat	BTU/lbm°F	0.94	0.91	0.68	0.94	0.91	0.68
Thermal Conductivity	BTU/hr ft °F	0.377	0.385	0.39	0.377	0.385	0.39

Notes:
1. Maximum temperature and pressure of cooling water supply.
2. Temperature and pressure of steam supply.
3. Delete
4. Evaporator to require 50% turndown capability.
5. Evaporator overheads prior to condensate removal.
6. Vacuum system to enable concentration of feed at reduced temperature .
7 Maximum transfer rate. Minimum Transfer rate is 7,300 lbs/hr.
8. Maximum evaporator overhead condensate production capacity. Envelope A average conditions require 11,800 lbs/hr.
9. Maximum overhead vapor and non-condensable flow. Average vapor flow is 11,800 lbs/hr. Non-condensable flow also applies to average conditions.
10. Maximum transfer rate. Minimum transfer rate is 2430 lbs/hr.
11. Maximum transfer rate. Minimum transfer rate is 1880 lbs/hr.
12. Density and Specific Gravity based on sodium hydroxide solutions of same molarity. Does not include weight percent solids.
13. Maximum transfer rate. Minimum transfer rate is 7,300 lbs/hr.
14. Based on evaporator semibatch operation
15. See section 3.4.3.3 for high pressure steam supply condition

PROCESS DATA SHEET: VESSEL & PUMPS	Plant Item No. 24590-PTF-MV-TLP-VSL-00009A 24590-PTF-MV-TLP-VSL-00009B 24590-PTF-MV-TLP-PMP-00005A 24590-PTF-MV-TLP-PMP-00005B
Project: RPP-WTP	
Project No: 24590	Description: Treated LAW SBS Condensate Receipt Vessels and Pumps
Site: Hanford	
Building No.: 10	Associated Drawing: 24590-PTF-M5-V17T-00005

SUMMARY DATA	Units	Minimum	Nominal	Maximum
Batch Volume	Gal	N/A	80,000	N/A
Transfer Rate	gpm	10	13	38
Receipt Rate	gpm	N/A	175	N/A
Fluid Temperature	°F	68	113	167
Specific Gravity	N/A	1.02	1.02	1.02
Viscosity	cP	1	1	1
Internal Pressure	psig	-0.22	-0.14	0
Solids Content	wt %	0.30	0.34	0.41

PROCESS DATA SHEET: SYSTEM TLP				
Project: RPP-WTP				
Project No: 24590		Description: Treated LAW Evaporation - System TLP		
Site: Hanford				
Building No.: 10		Associated Drawing: 24590-PTF-M5-V17T-00005		
SUMMARY DATA	Units	Minimum	Nominal	Maximum
Treated LAW (TXP14)				
Transfer Rate	gpm	11.4	14.3	17.9
Fluid Temperature	°F	59	77	113
Specific Gravity	N/A	1.15	1.20	1.22
Viscosity	cP	2.0	3.3	4.0
LAW SBS Condensate (RLD21)				
Batch Volume	Gal	N/A	80,000	N/A
Transfer Rate	gpm	10	13	38
Receipt Rate	gpm	N/A	175	N/A
Fluid Temperature	°F	68	113	167
Specific Gravity	N/A	1.02	1.02	1.02
Viscosity	cP	1	1	1
Thermal Conductivity	BTU/(hr*ft-°F)	N/A	0.372	N/A
Treated LAW Concentrate (TLP02)				
Transfer Rate	gpm	5.6	9.2	13.7
Fluid Temperature	°F	77	122	150
Specific Gravity	N/A	1.33	1.40	1.57
Viscosity	cP	12.8	12.8	30.0
Vapor Pressure	torr	55	67	77
Thermal Conductivity	BTU/(hr*ft-°F)	N/A	0.397	0.399

APPENDIX E

Quality Level and Seismic Category for Evaporator Equipment

SSC	Description	Q	DL***	SC
FEP Separator Vessels	FEP-SEP-00001A/B	**Q**	**L-1**	SC-I
• Demister Pads	Pad Materials	CM	**N/A**	SC-II
• Upper Demister Pad Supports	Structural supports	CM	**N/A**	SC-II
• Lower Demister Pad Supports	Structural supports	**Q**	**L-2**	SC-II
• Internal Piping/Misc.	Bubble trays, spray rings, dip legs, etc.	**Q**	**L-2**	SC-II
TLP Separator Vessel	TLP-SEP-00001	**Q**	**L-1**	SC-I*
• Demister Pads	Pad Materials	CM	**N/A**	SC-II
• Upper Demister Pad Supports	Structural supports	CM	**N/A**	SC-II
• Lower Demister Pad Supports	Structural supports	**Q**	**L-2**	SC-II
• Internal Piping/Misc.	Bubble trays, spray rings, dip legs, etc.	**Q**	**L-2**	SC-II
Reboilers	FEP-RBLR-00001A/B	**Q**	**L-1**	SC-I
	TLP-RBLR-00001	**Q**	**L-1**	SC-I*
Recirculation Pumps, Motors, Speed Adjustable Drives, and Seal Barrier Systems	FEP-PMP-00009A/B, FEP-MTR-00009A/B	**Q**	**N/A**	SC-I
	TLP-PMP-00001, TLP-MTR-00001	**Q**	**N/A**	SC-I*
	FEP-ASD-00009A/B, TLP-ASD-00001, and Pump Seal Barrier Systems	CM	**N/A**	SC-III
Feed Pumps, Motors, and Speed Adjustable Drives	TLP-PMP-00005A/B, TLP-MTR-00005A/B, TLP-ASD-00005A/B	CM	**N/A**	SC-III
Concentrate Pumps, Motors, and Speed Adjustable Drives	TLP-PMP-00011A/B, TLP-MTR-00011A/B, TLP-ASD-00011A/B	CM	**N/A**	SC-III
Black Cell Separator Vessel Offgas Pipework	Piping from the top section of the FEP Evaporator separator vessels to the 56' Elev. floor (ceiling of black cell).	**Q**	**N/A**	SC-I*
	Piping from the top section of the TLP Evaporator separator vessel to the 56' Elev. floor (ceiling of black cell).	**Q**	**N/A**	SC-I*
Out-Cell Separator Vessel Offgas Pipework	Piping from 56' Elev. floor to the FEP Evaporator primary condenser in C3 room.	**Q**	**N/A**	SC-I*
	Piping from 56' Elev. floor to the TLP Evaporator primary condenser in C3 room.	**Q**	**N/A**	SC-I*
	FEP-COND-00001A/B FEP-COND-00002A/B FEP-COND-00003A/B FEP-EJCTR-00040, -00041, -00042,and -00043	**Q**	**L-1**	SC-I*
	TLP-COND-00001 TLP-COND-00002 TLP-COND-00003 TLP-EJCTR-000064 and -00067	**Q**	**L-1**	SC-I*
Condensate Collection Vessels	FEP-VSL-00005	CM	**N/A**	SC-III
	TLP-VSL-00002	CM	**N/A**	SC-III
Condensate Pumps, Motors, and Speed Adjustable Drives	FEP-PMP-00006A/B, FEP-MTR-00006A/B, FEP-ASD-00006A/B	CM	**N/A**	SC-III
	TLP-PMP-00002A/B, TLP-MTR-00002A/B, FEP-ASD-00002A/B	CM	**N/A**	SC-III
Antifoam Vessel	AFR-TK-00001	CM	**N/A**	SC-IV
Antifoam Pumps	AFR-PMP-00006, -00007, and –00008	CM	**N/A**	SC-IV

Steam Conditioning System Components	**Desuperheater vessels FEP-DHTR-00001, FEP-DHTR-00002, TLP-DHTR-00003**	**CM**	**N/A**	**SC-III**
	High Pressure Steam Control Valves and Flow Meters FEP-PV-0267, FEP-PV-0467, TLP-PV-0355 FEP-FT-0201, FEP-FT-0401, TLP-FT-0301	**Q**	**N/A**	**SC-I****
	Steam Condensate Control Valves and Flow Meters FEP-TV-0202, FEP-TV-0402, TLP-TV-0302 FEP-FT-0252, FEP-FT-0452, TLP-FT-0350	**CM**	**N/A**	**SC-III**
Reboiler Steam Condensate Transfer Stations	FEP-VSL-00021, FEP-PMP-00010A/B FEP-VSL-00022, FEP-PMP-00011A/B	CM	**N/A**	SC-III
	TLP-VSL-00047, TLP-PMP-00012A/B	CM	**N/A**	SC-III

*These quality level and seismic category designations are higher than those required for safety as deemed necessary for commercial reasons. They are consistent with the Buyer's Authorization Basis document because they meet and exceed the minimum safety requirements. These designations are not necessarily reflected in their associated Buyer's P&IDs.

****Safety function of these valves and flow meters is confinement. These valves and flow meters are not required to function during and after DBE.**

*****Design level (DL) is used to determine allowable nozzle reinforcement methods and nondestructive examination (NDE) requirements as specified in specification 24590-WTP-3PS-MV00-T0001.**

For CM material to the ASME or ASTM standards, any year of the standard is acceptable.

APPENDIX F

SEPARATOR VESSEL SKID SUPPORT LAYOUT

SEPARATOR VESSEL, EMBEDDED PLATES & SKID

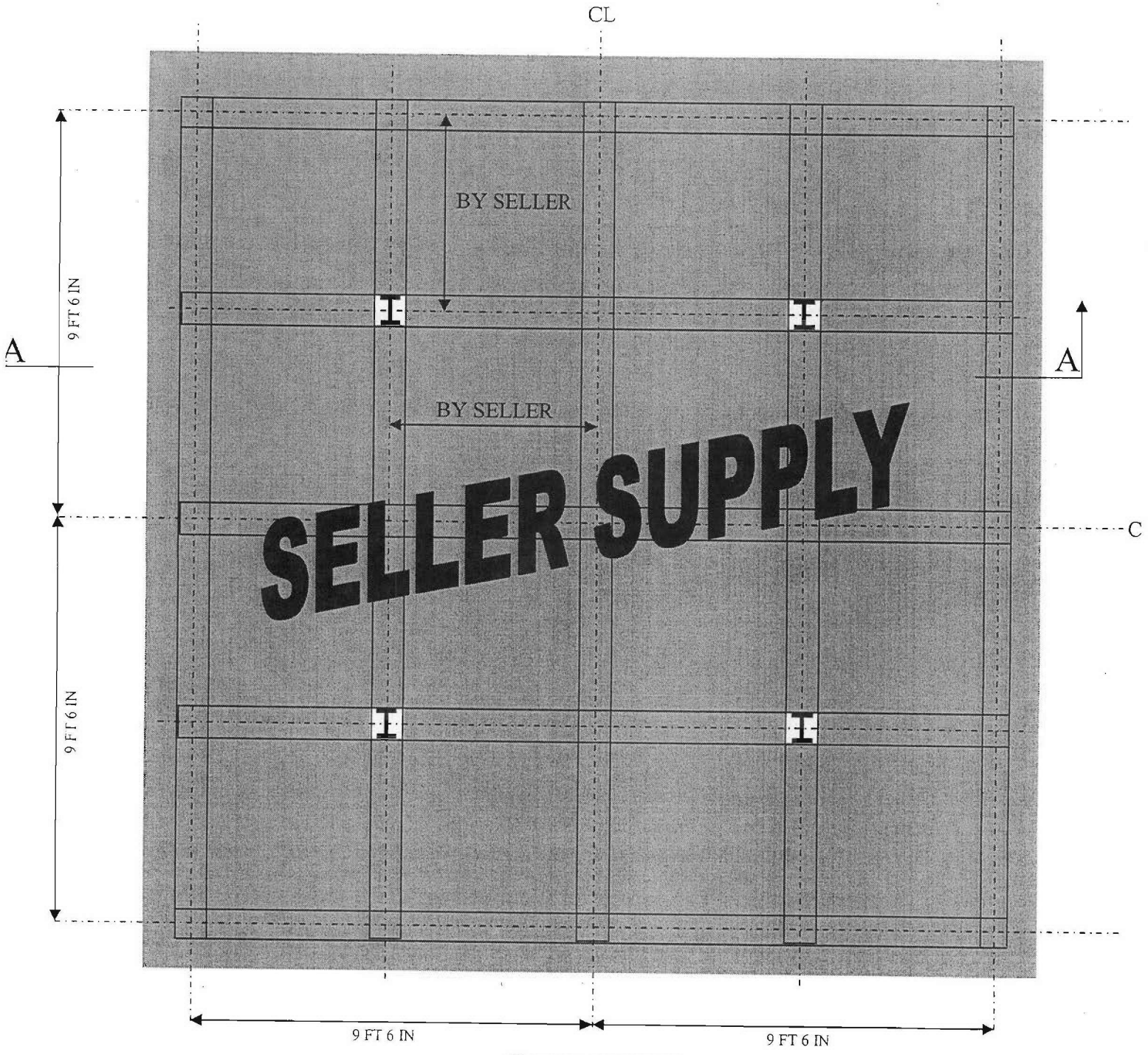

SKID PLAN VIEW

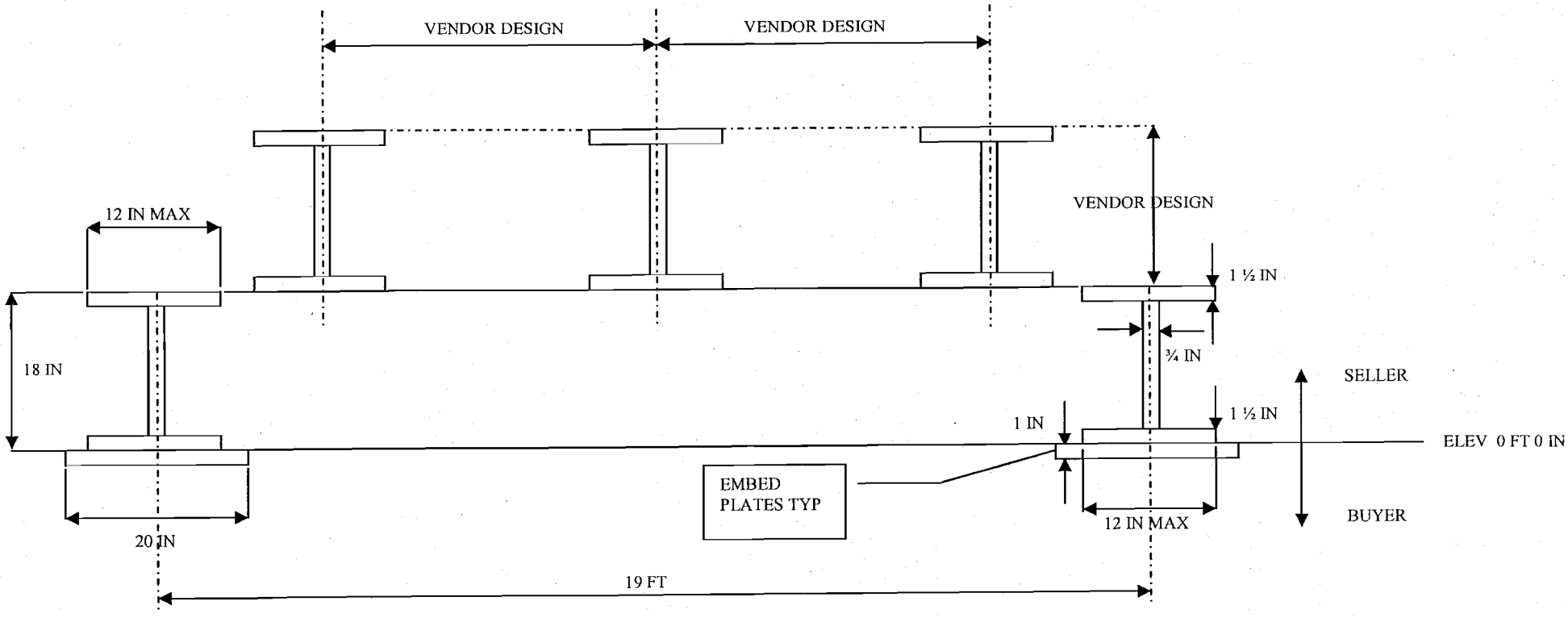
VENDOR DESIGN
VENDOR DESIGN
12 IN MAX
VENDOR DESIGN
1 ½ IN
¾ IN
18 IN
SELLER
1 IN
1 ½ IN
ELEV 0 FT 0 IN
EMBED
PLATES TYP
12 IN MAX
BUYER
20 IN
19 FT

SECTION A

APPENDIX G

HOT CELL REMOTE IMPACT WRENCH

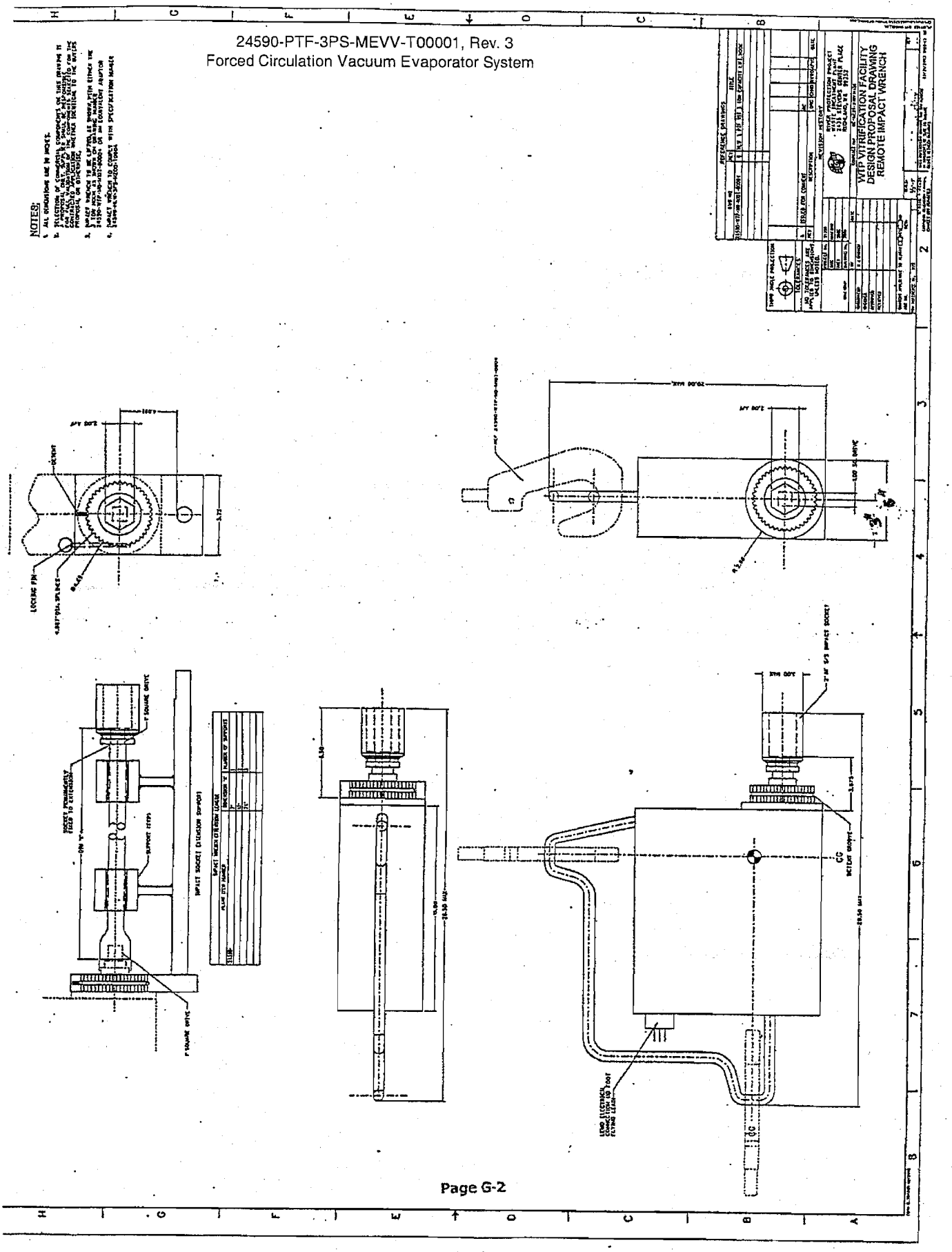
NOTES:
WTP VITRIFICATION FACILITY
DESIGN PROPOSAL DRAWING
REMOTE IMPACT WRENCH

APPENDIX H

Deleted

APPENDIX I

FEP EVAPORATOR EQUIPMENT SKIDS LOCATION AND LAYOUT SKETCHES

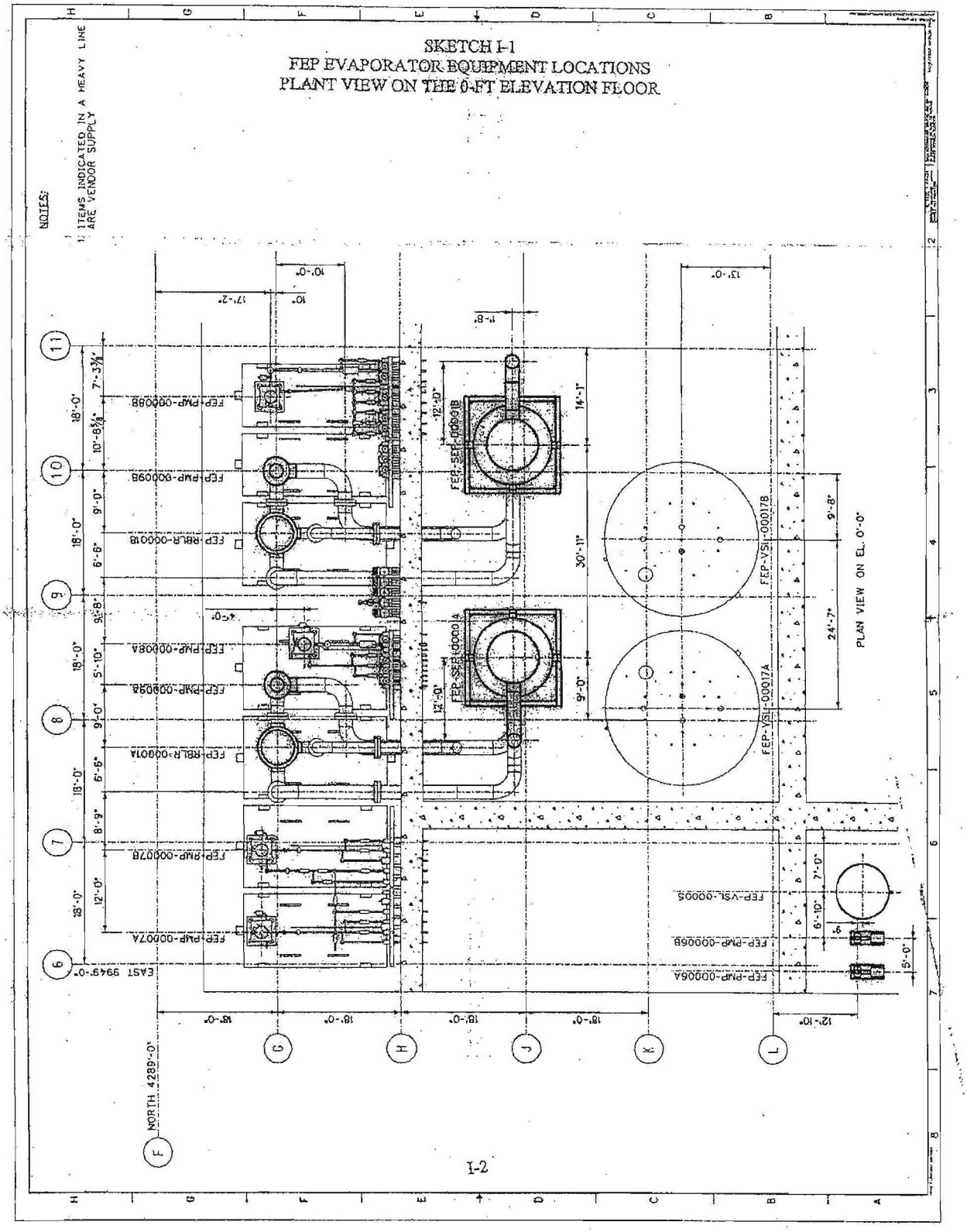
SKETCH I-1
FEP EVAPORATOR EQUIPMENT LOCATIONS
PLANT VIEW ON THE 0-FT ELEVATION FLOOR
NOTES:
1. ITEMS INDICATED IN A HEAVY LINE ARE VENDOR SUPPLY
PLAN VIEW ON EL. 0'-0"
FEP-PMP-000088
FEP-PMP-000098
FEP-RBLR-000018
FEP-PMP-000088
FEP-PMP-000098
FEP-RBLR-000018
FEP-PMP-000078
FEP-PMP-000078
FEP-SEP-00001B
FEP-SEP-00001A
FEP-VSL-00017B
FEP-VSL-00017A
FEP-VSL-00005
FEP-PMP-000068
FEP-PMP-000068
EAST 9949'-0"
NORTH 4289'-0"

I-2

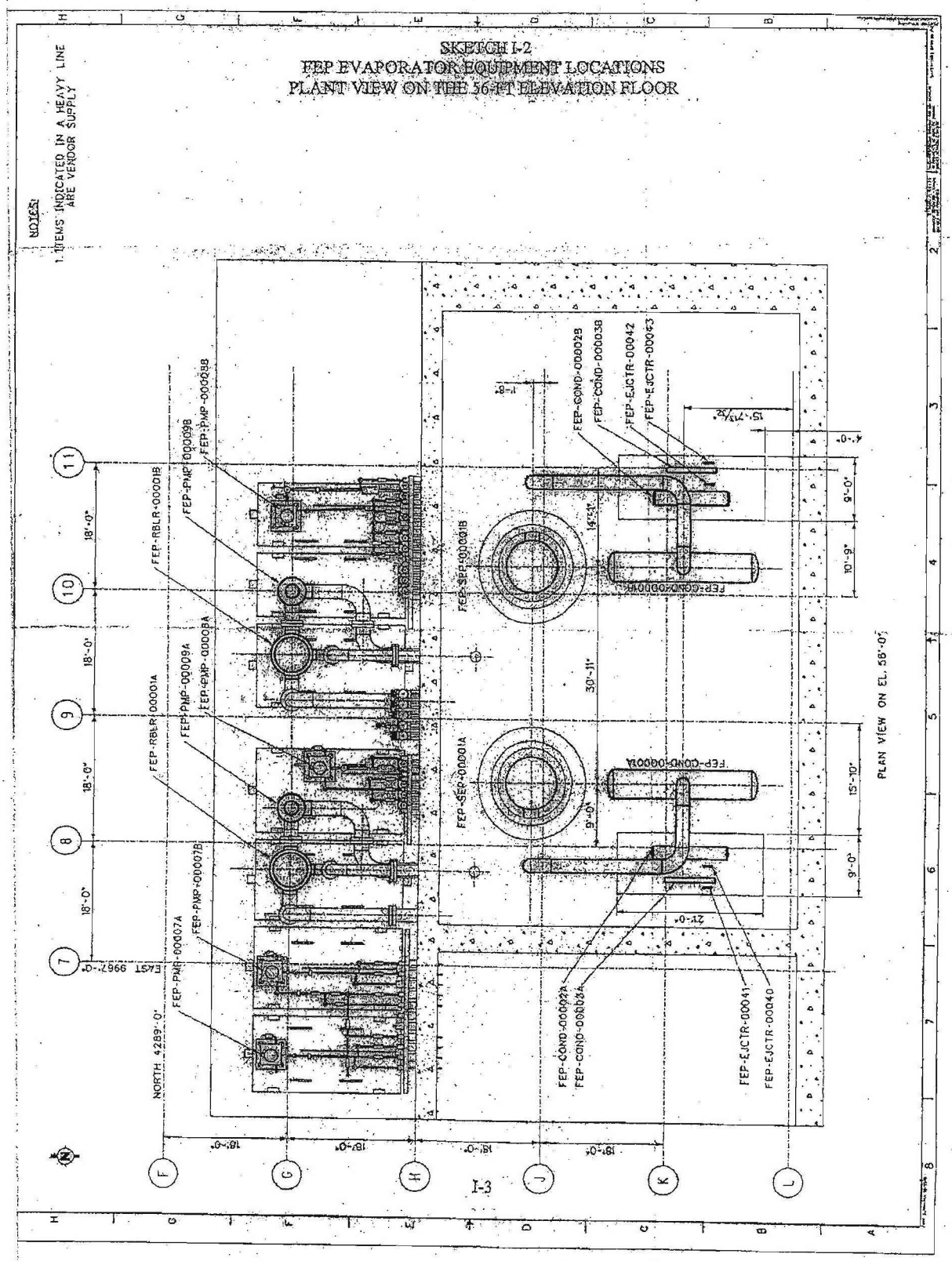
SKETCH I-2
FEP EVAPORATOR EQUIPMENT LOCATIONS
PLANT VIEW ON THE 56-FT ELEVATION FLOOR
NOTES:
1. ITEMS INDICATED IN A HEAVY LINE ARE VENDOR SUPPLY
FEP-PMP-00009B
FEP-PMP-00009A
FEP-PMP-00007B
FEP-PMP-00007A
FEP-RBLR-00001B
FEP-RBLR-00001A
FEP-SEP-00001B
FEP-SEP-00001A
FEP-COND-00002B
FEP-COND-00003B
FEP-EJCTR-00042
FEP-EJCTR-00043
FEP-COND-00002A
FEP-COND-00003A
FEP-EJCTR-00041
FEP-EJCTR-00040
PLAN VIEW ON EL. 56'-0"
NORTH 4289'-0"
EAST 9967'-0"
I-3

SKETCH I-3
ELEVATION VIEW LOOKING WEST
OF FEP EVAPORATOR EQUIPMENT LOCATIONS

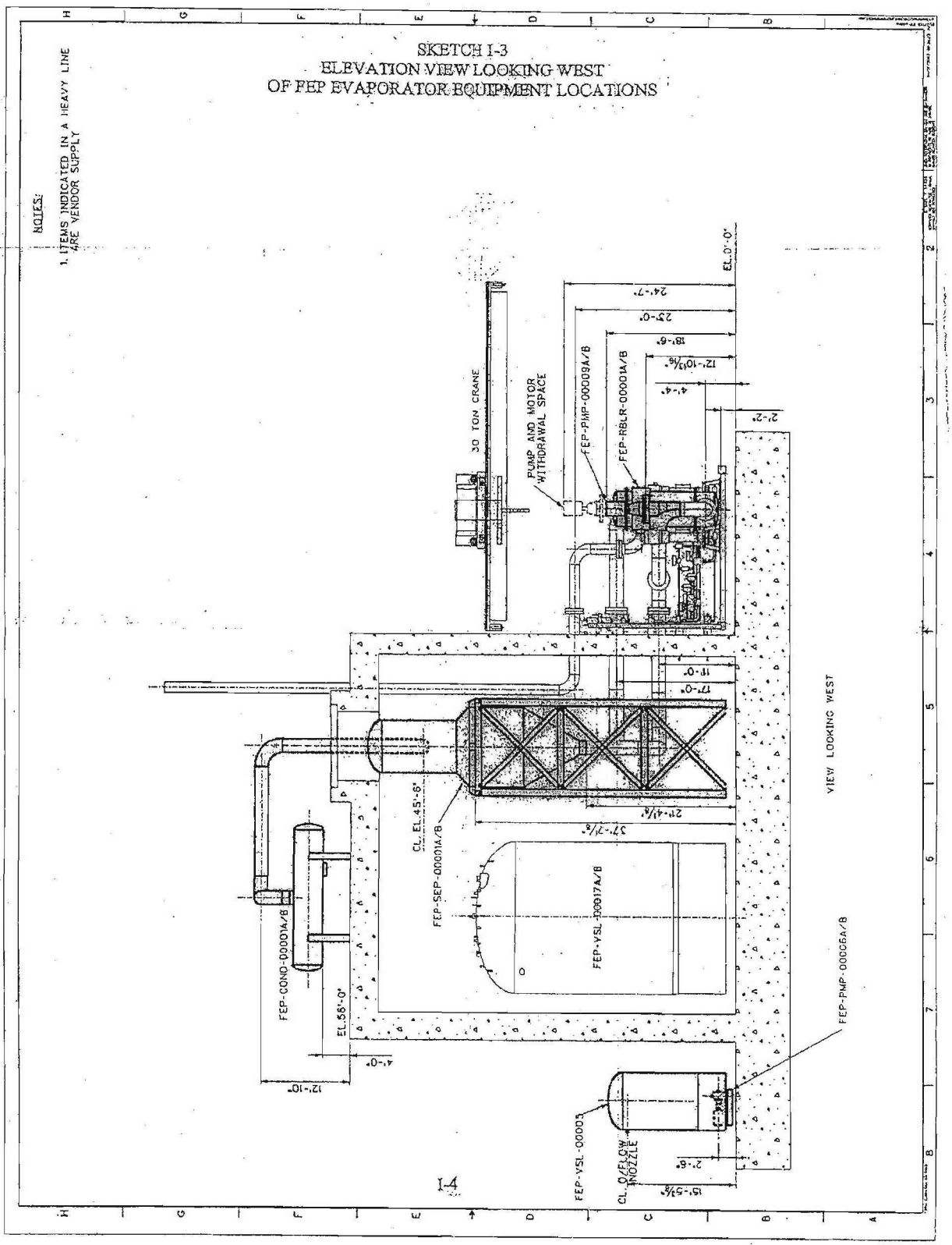

I-4

SKETCH I-4
ELEVATION VIEW LOOKING NORTH
OF FEP EVAPORATOR EQUIPMENT LOCATIONS

NOTES:
1. ITEMS INDICATED IN A HEAVY LINE ARE VENDOR SUPPLY

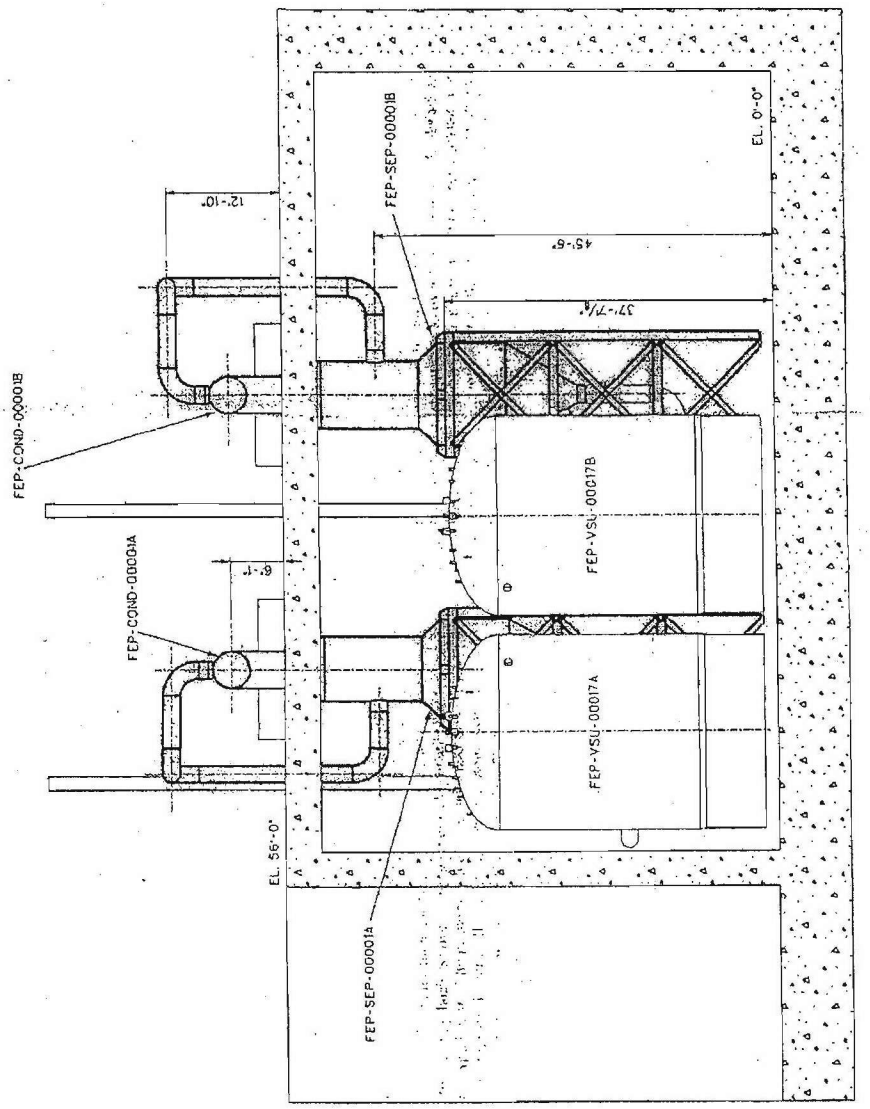

I-5

SKETCH I-5
ELEVATION VIEW LOOKING SOUTH
OF FEP EVAPORATOR EQUIPMENT LOCATIONS

NOTES:
1. ITEMS INDICATED IN A HEAVY LINE ARE VENDOR SUPPLY

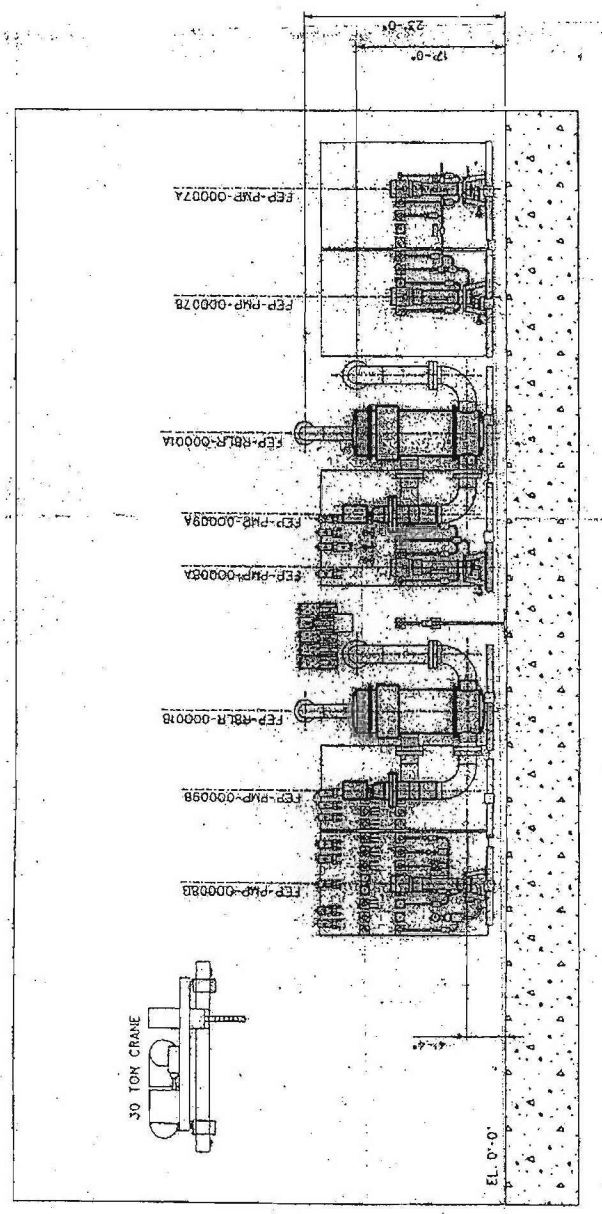

I-6

N

SKETCH I-6
ISOMETRIC SKETCH FOR FEP EVAPORATOR FEED
FROM FEED VESSEL TO FEEP PUMP

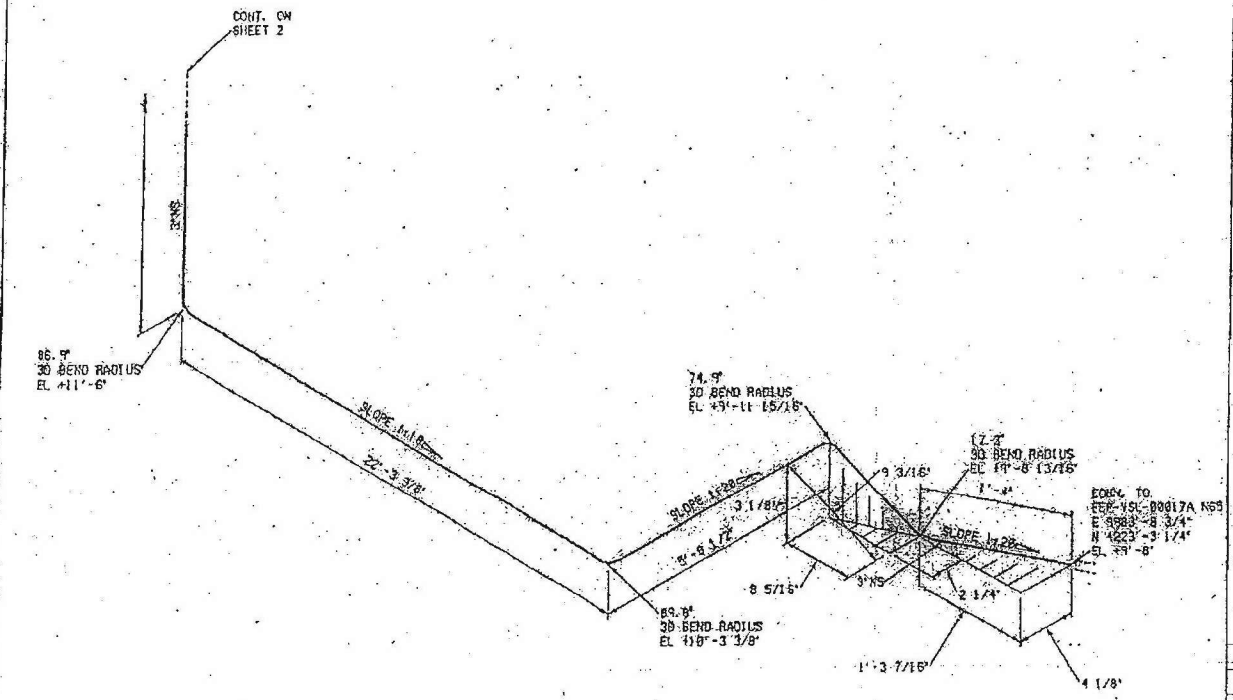

PART NO	COMPONENT DESCRIPTION	N.S. (INCHES)	QTY	BECHTEL STK CODE
	PIPE			
1	PIPE, A312TP316/316L, SMLS, SCH40S, BBE	3	25'-4"	PPFC03S03BX02
2	PIPE, A312TP316/316L, SMLS, SCH40S, BBE	3	3'-7"	PPFC03S03BX02

SHOP MATERIALS

PRELIMINARY

REV	DATE	DESCRIPTION	DRN	CHKD	STRESS	RVWD	APVD

REVISION HISTORY

RIVER PROTECTION PROJECT
WASTE TREATMENT PLANT
2435 STEVENS CENTER PLACE
RICHLAND, WA 99352

CONTRACT No: DE-AC27-01RV14136

P&ID: NO DATA | CONST. WORK AREA:

PRETREATMENT FACILITY
ISOMETRIC

LINE No. FEP-PZ-00239-S12A-3 | PIPE SPEC: S12A

DWG No. | REV

CONTENT APPLICABLE TO ALARA? ☐ YES ☐ NO
ADR NO. REV.
QUALITY LEVEL 4 | SEISMIC CAT. 4

NOTES:
1. FOR GENERAL NOTES AND LEGEND SEE DWG. 24590-PTF-P3-P38T-00060.
2. SEE DWG. 24590-BOF-E2-C12T-00002 FOR CONVERSION FROM PTF FACILITY ELEVATIONS TO SITE ELEVATIONS. PTF FACILITY ELEVATION 0'-0" EQUALS SITE ELEVATION 678'-0" MSL.

I-7

FORM: ISODRDR.DGN 02/2003 | COMPUTER GENERATED - MANUAL CHANGES NOT PERMITTED | PCF File: FEPPZ00239 | PLOTTED BY: grading | PLOT DATE: 03/27/2003 10:47:22 AM

NDG:B.3552.2000.Rev.1.1

SKETCH I-7
ISOMETRIC SKETCH FOR FEP EVAPORATOR FEED
FROM FEED VESSEL TO FEEP PUMP (Cont.)

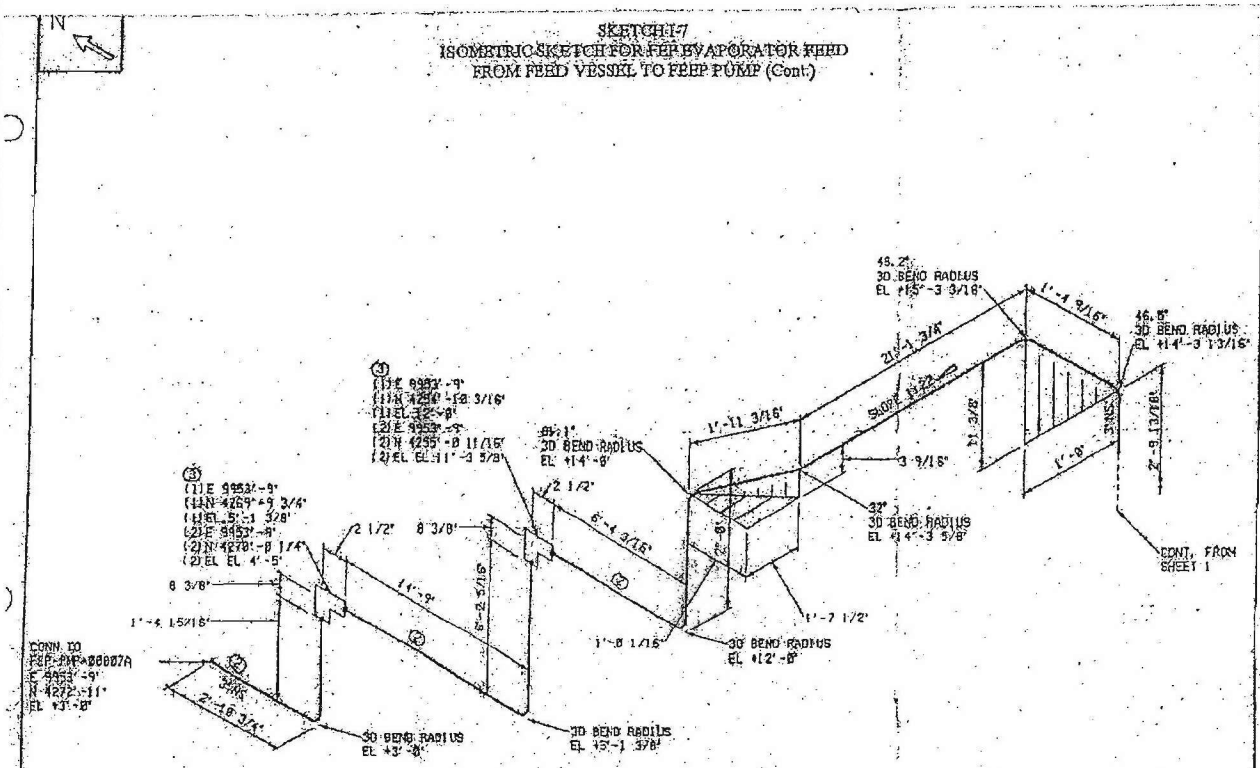

PART NO	COMPONENT DESCRIPTION	M.S. (LACES)	QTY	BECHTEL STK CODE
	PIPE			
1	PIPE, A312TP316/316L, SMLS, SCH10S, BBE	3	8' 5"	PPPC08B0GX02
2	PIPE, A312TP316/316L, SMLS, SCH10S, BBE	3	58' 11"	PPPC08B0GX02
	INSTRUMENTS			
3	PUREX	3	2	

NOTES:
1. FOR GENERAL NOTES AND LEGEND SEE DWG. 24590-PTF-P3-P36T-01000.
2. SEE DWG. 24590-BOF-C2-C12T-00002 FOR CONVERSION FROM PTF FACILITY ELEVATIONS TO SITE ELEVATIONS. PTF FACILITY ELEVATION 0'-0" EQUALS SITE ELEVATION 678'-0" MSL.

CONTENT APPLICABLE TO ALARA? ☐ YES ☐ NO
ADR NO. REV.
QUALITY LEVEL 4 SEISMIC CAT. 4

24590-PTF-3PS-MEVV-T0001, Rev. 3
Forced Circulation Vacuum Evaporator System

PRELIMINARY

REV	DATE	DESCRIPTION	DRN	CKD	STRESS	SYMD	APVD

REVISION HISTORY

RIVER PROTECTION PROJECT
WASTE TREATMENT PLANT
2435 STEVENS CENTER PLACE
RICHLAND, WA 99352

CONTRACT No: DE-AC27-01RV14136

P&ID: NO DATA | CONST. WORK AREA:

PRETREATMENT FACILITY
ISOMETRIC

LINE No. FEP-PZ-00239-S12A-3 | PIPE SPEC: S12A

DWG No. 2 | REV

d:\24590\wtp_dgn\p23g.dgn

FORM: ISOBRDR.DGN 02/2003 | COMPUTER GENERATED - MANUAL CHANGES NOT PERMITTED | PCF File: FEPP200239 | PLOTTED BY: gridley | PLOT DATE: 03/22/2003 10:50:55 AM

SKETCH I-8
ISOMETRIC SKETCH FOR FEP EVAPORATOR FEED
FROM FEED VESSEL TO FEEP PUMP (Cont.)

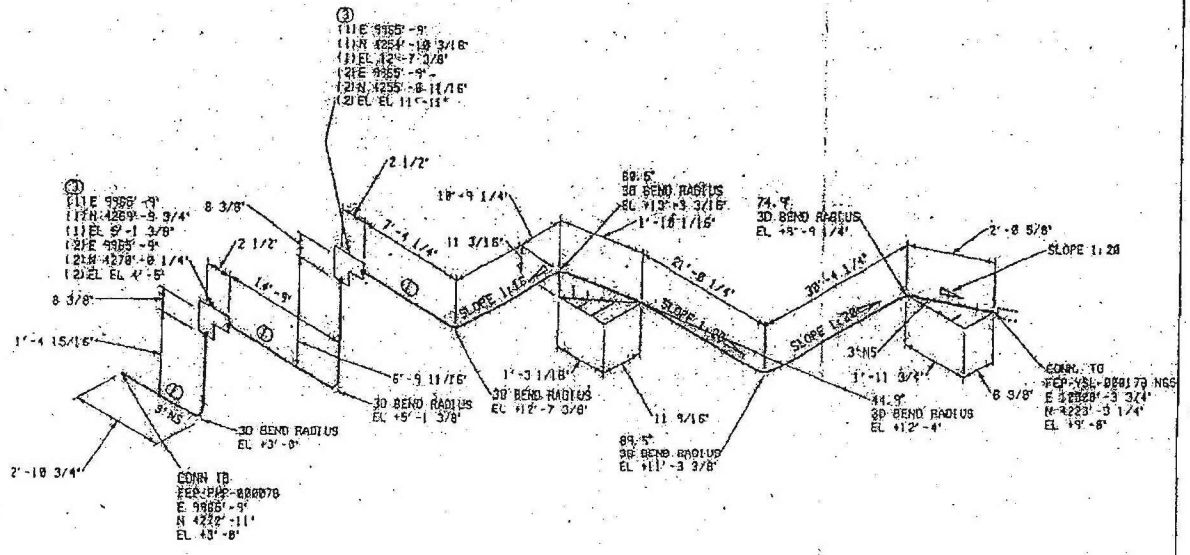

NOTES:

1. FOR GENERAL NOTES AND LEGEND SEE DWG. 24590-PTF-P3-P36T-00002.
2. SEE DWG. 24590-BOF-C2-C127-00002 FOR CONVERSION FROM PTF FACILITY ELEVATIONS TO SITE ELEVATIONS. PTF FACILITY ELEVATION 0'-0" EQUALS SITE ELEVATION 678'-0" MSL.

SHOP MATERIALS

PART NO	COMPONENT DESCRIPTION	N.S. (INCHES)	QTY	BECHTEL STK CODE
	PIPE			
1	PIPE, A312TP316/316L, SMLS, SCH40S, BBE	3	98'-8"	PFPC08B0GRX01
2	PIPE, A312TP316/316L, SMLS, SCH40S, BBE	3	7'-1"	PFPC08B0GRX02
	INSTRUMENTS			
3	PUREX	3	2	

24590-PTF-3PS-MEVV-T0001, Rev. 3
Forced Circulation Vacuum Evaporator System

PRELIMINARY

REV	DATE	DESCRIPTION	DRN	CHKD	STRESS	RVWD	APVD

REVISION HISTORY

RIVER PROTECTION PROJECT
WASTE TREATMENT PLANT
2435 STEVENS CENTER PLACE
RICHLAND, WA 99352

CONTRACT No: DE-AC27-01RV14136

PXID: NO DATA | CONST. WORK AREA:

PRETREATMENT FACILITY
ISOMETRIC

LINE No. FEP-PZ-00009-S12A-3 | PIPE SPEC: S12A

DWG No. 1 | REV

CONTENT APPLICABLE TO ALARA? ☐ YES ☐ NO
ADR NO. REV.
QUALITY LEVEL * | SEISMIC CAT. *

PLOTTED BY: grlong | PLOT DATE: 03/22/2003 10:53:46 AM

d:\ts\pf2\00009\d00049.dgn

FORM: ISOBRDR.DGN 02/2003 | COMPUTER GENERATED - MANUAL CHANGES NOT PERMITTED | PCF File: FEPPZ00009

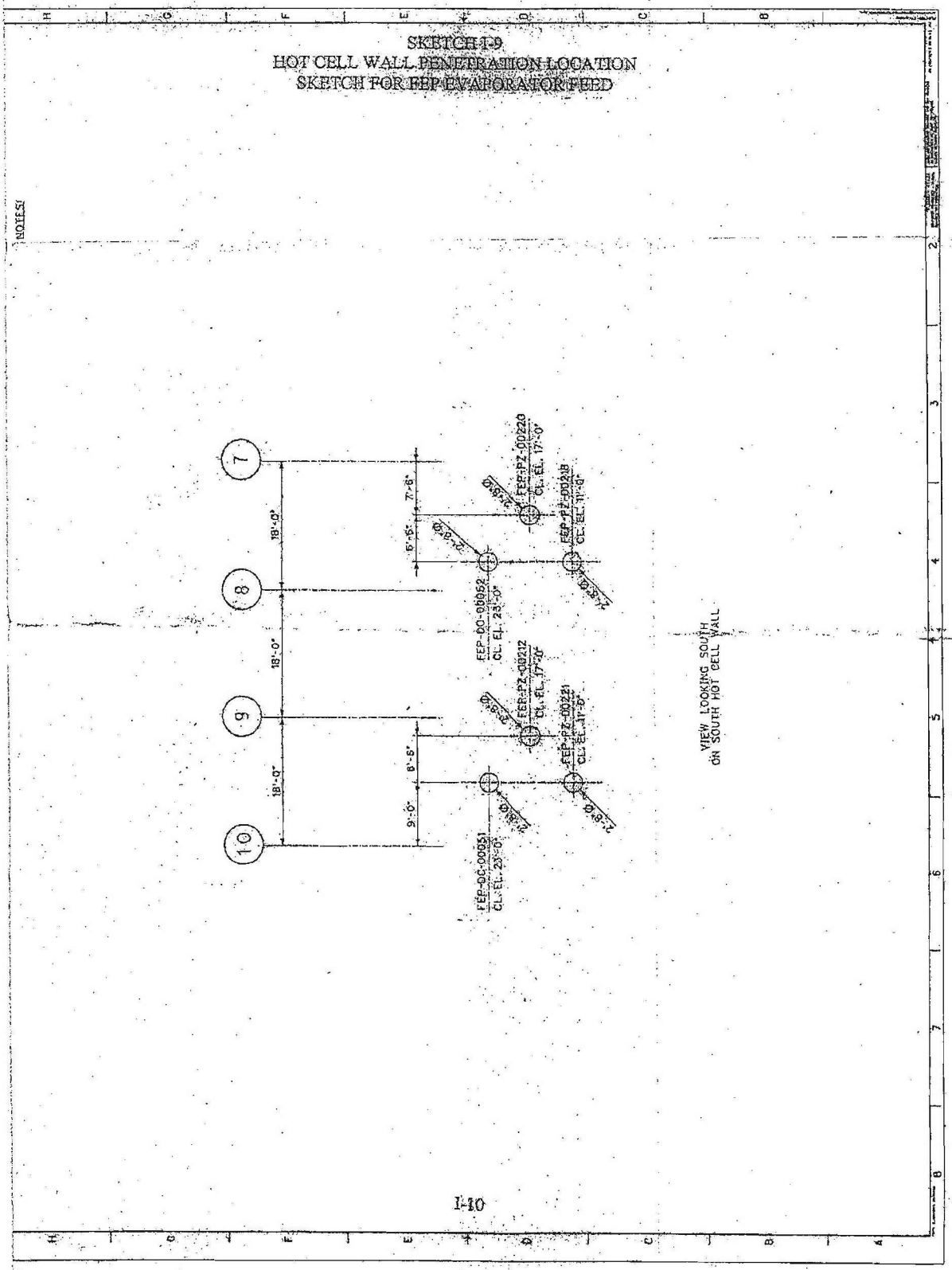
SKETCH I-9
HOT CELL WALL PENETRATION LOCATION
SKETCH FOR FEP EVAPORATOR FEED
NOTES:
7
8
9
10
18'-0"
18'-0"
18'-0"
7'-6"
6'-6"
8'-6"
9'-0"
FEP-PZ-00220
CL. EL. 17'-0"
FEP-PZ-00218
CL. EL. 17'-0"
FEP-DC-00052
CL. EL. 23'-0"
FEP-PZ-00212
CL. EL. 17'-0"
FEP-PZ-00221
CL. EL. 17'-0"
FEP-DC-00051
CL. EL. 23'-0"
VIEW LOOKING SOUTH
ON SOUTH HOT CELL WALL

APPENDIX J

TLP EVAPORATOR EQUIPMENT SKIDS LOCATION AND LAYOUT SKETCHES

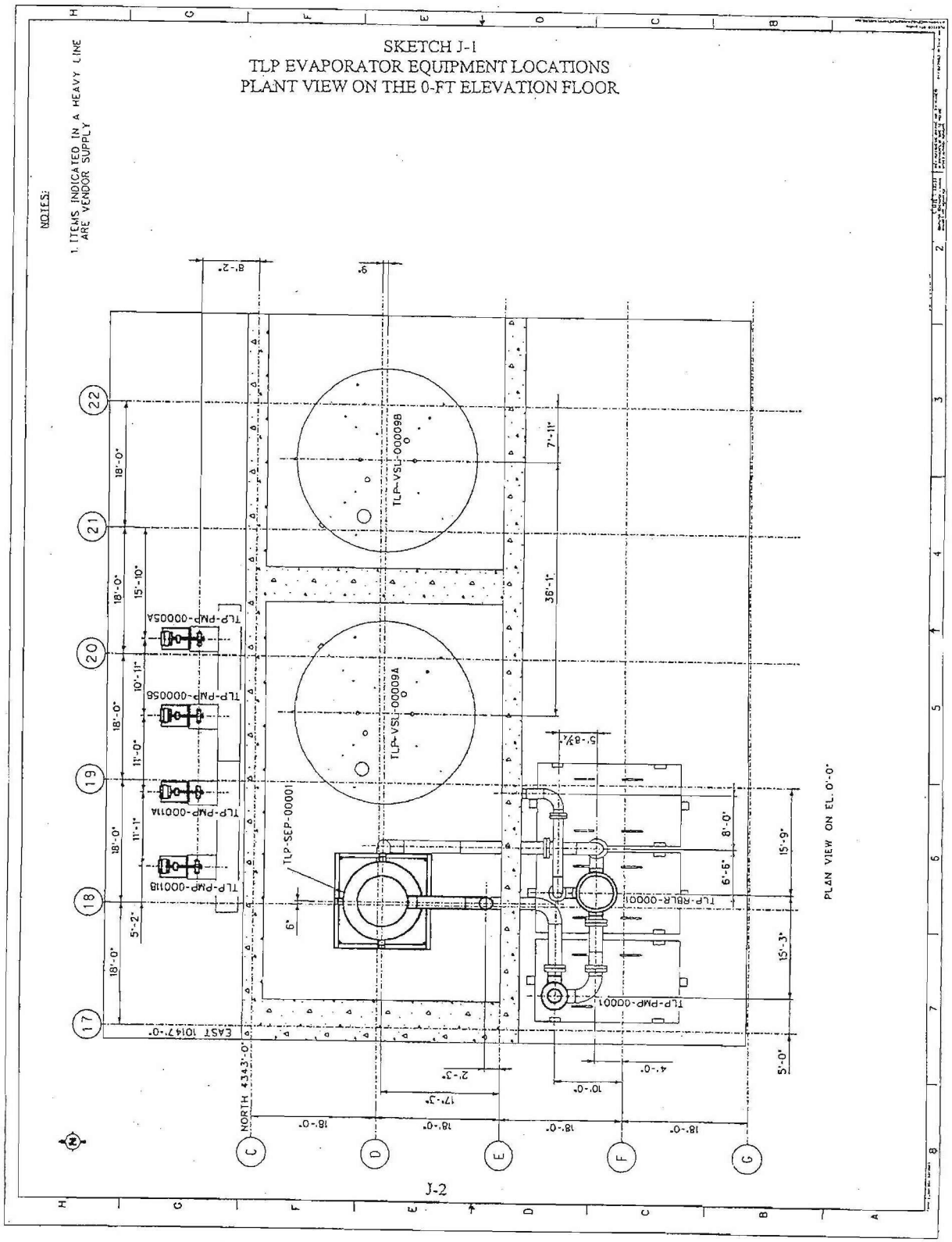
SKETCH J-1
TLP EVAPORATOR EQUIPMENT LOCATIONS
PLANT VIEW ON THE 0-FT ELEVATION FLOOR
NOTES:
1. ITEMS INDICATED IN A HEAVY LINE ARE VENDOR SUPPLY
TLP-VSL-00009B
TLP-VSL-00009A
TLP-SEP-00001
TLP-PMP-00001
TLP-RBLR-00001
TLP-PMP-00005A
TLP-PMP-00005B
TLP-PMP-00011A
TLP-PMP-00011B
PLAN VIEW ON EL. 0'-0"
NORTH 4343'-0"
EAST 10147'-0"
J-2

SKETCH J-2
TLP EVAPORATOR EQUIPMENT LOCATIONS
PLANT VIEW ON THE 56-FT ELEVATION FLOOR

NOTES:
1. ITEMS INDICATED IN A HEAVY LINE ARE VENDOR SUPPLY

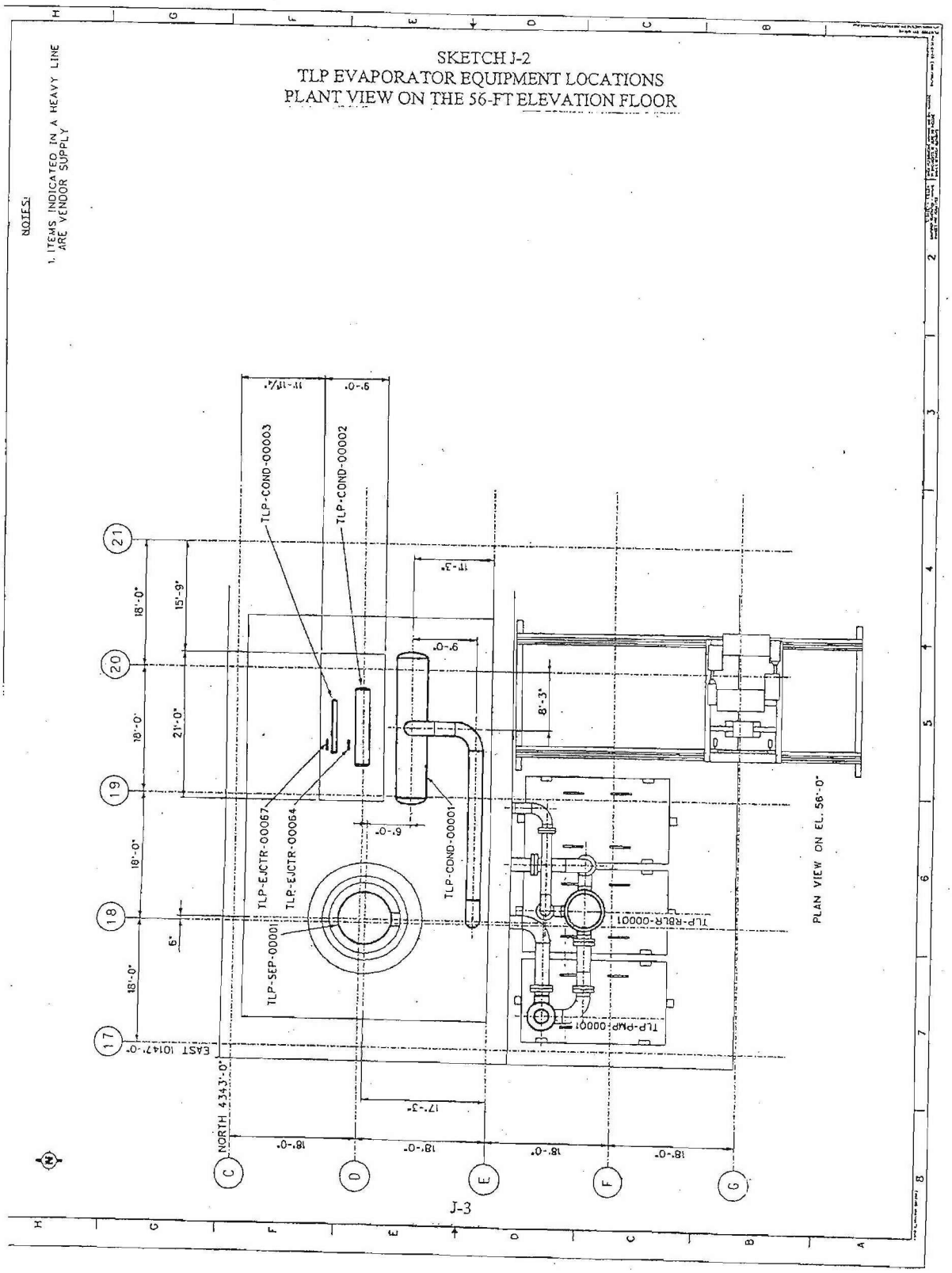

J-3

SKETCH J-3
ELEVATION VIEW LOOKING EAST
OF TLP EVAPORATOR EQUIPMENT LOCATIONS

NOTES:
1. ITEMS INDICATED IN A HEAVY LINE ARE VENDOR SUPPLY

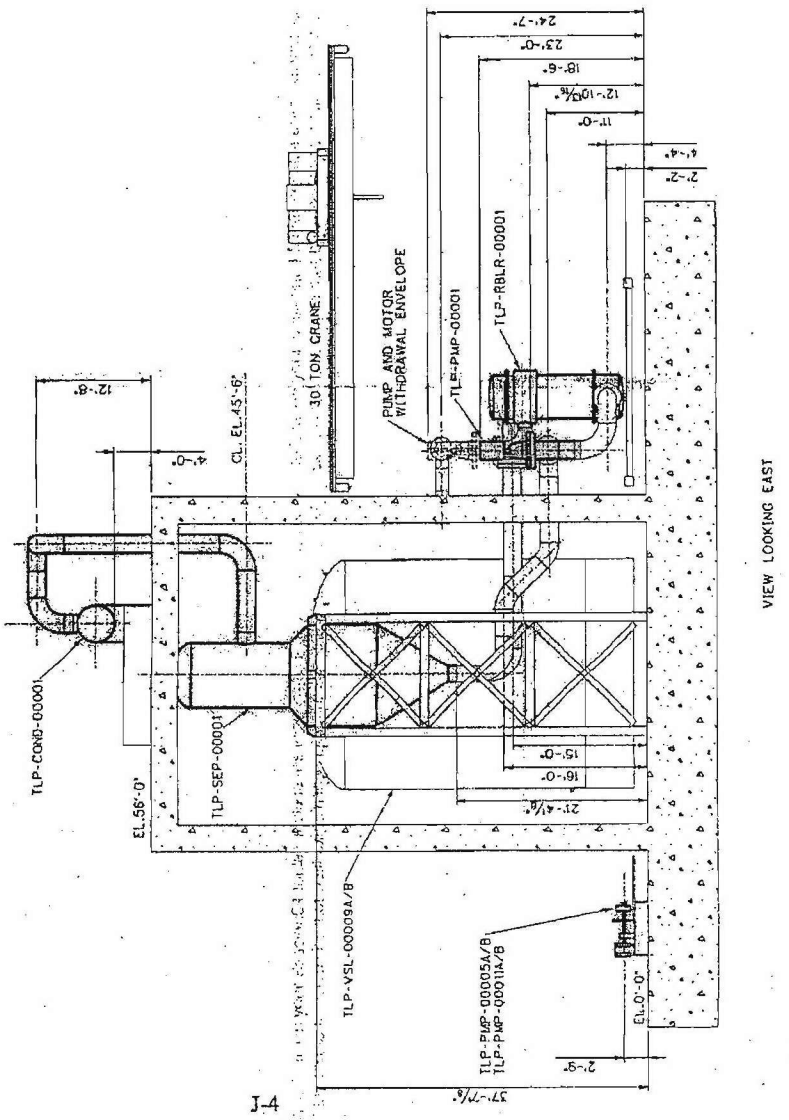

SKETCH J-4
ELEVATION VIEW LOOKING NORTH
OF TLP EVAPORATOR EQUIPMENT LOCATIONS

NOTES:
1. ITEMS INDICATED IN A HEAVY LINE ARE VENDOR SUPPLY.

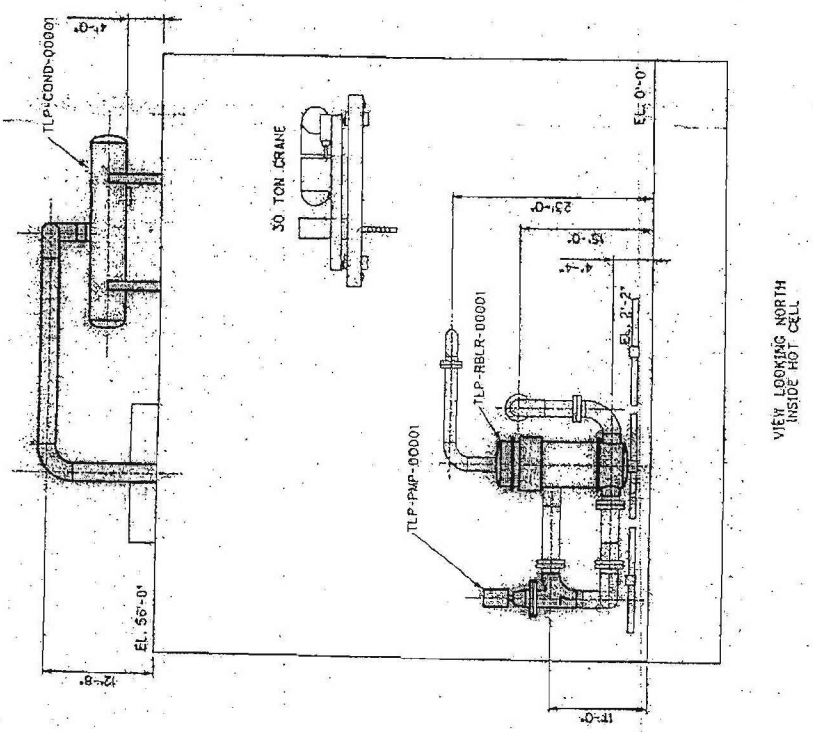

SKETCH J-5
ELEVATION VIEW LOOKING SOUTH
OF TLP EVAPORATOR EQUIPMENT LOCATIONS

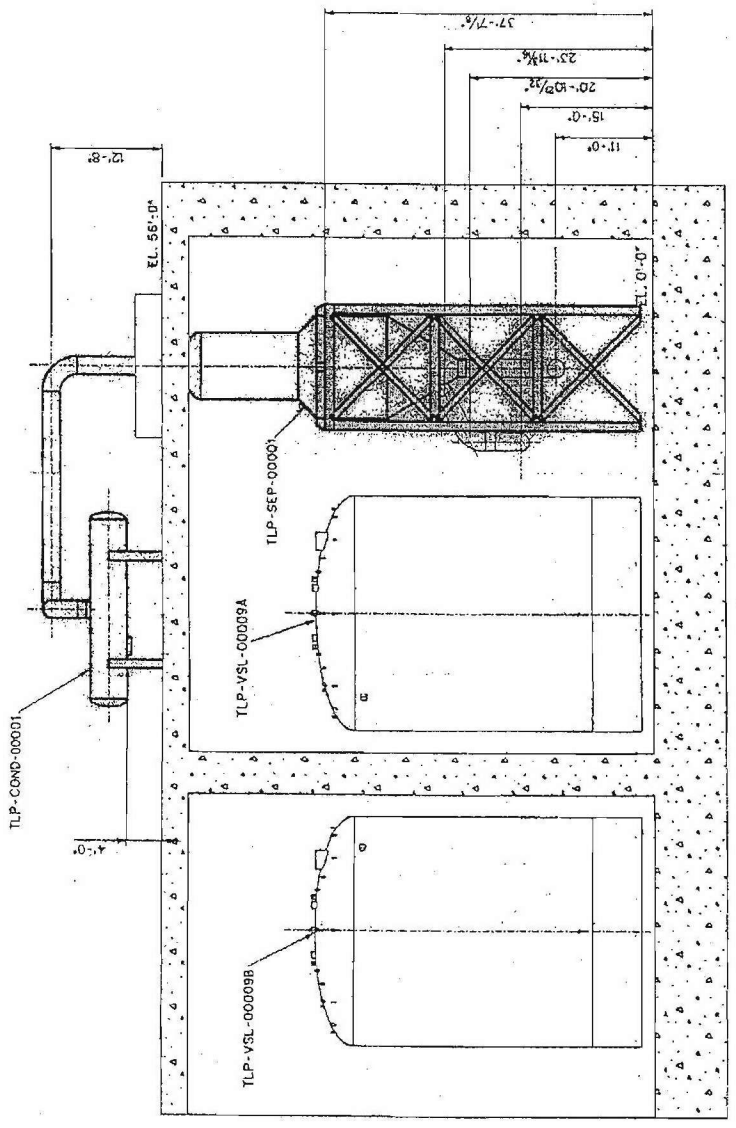

SKETCH J-6
PLANT VIEW ON THE 0-FT ELEVATION
OF TLP CONDENSATE EQUIPMENT LOCATIONS

NOTES:
1. ITEMS INDICATED IN A HEAVY LINE ARE VENDOR SUPPLY

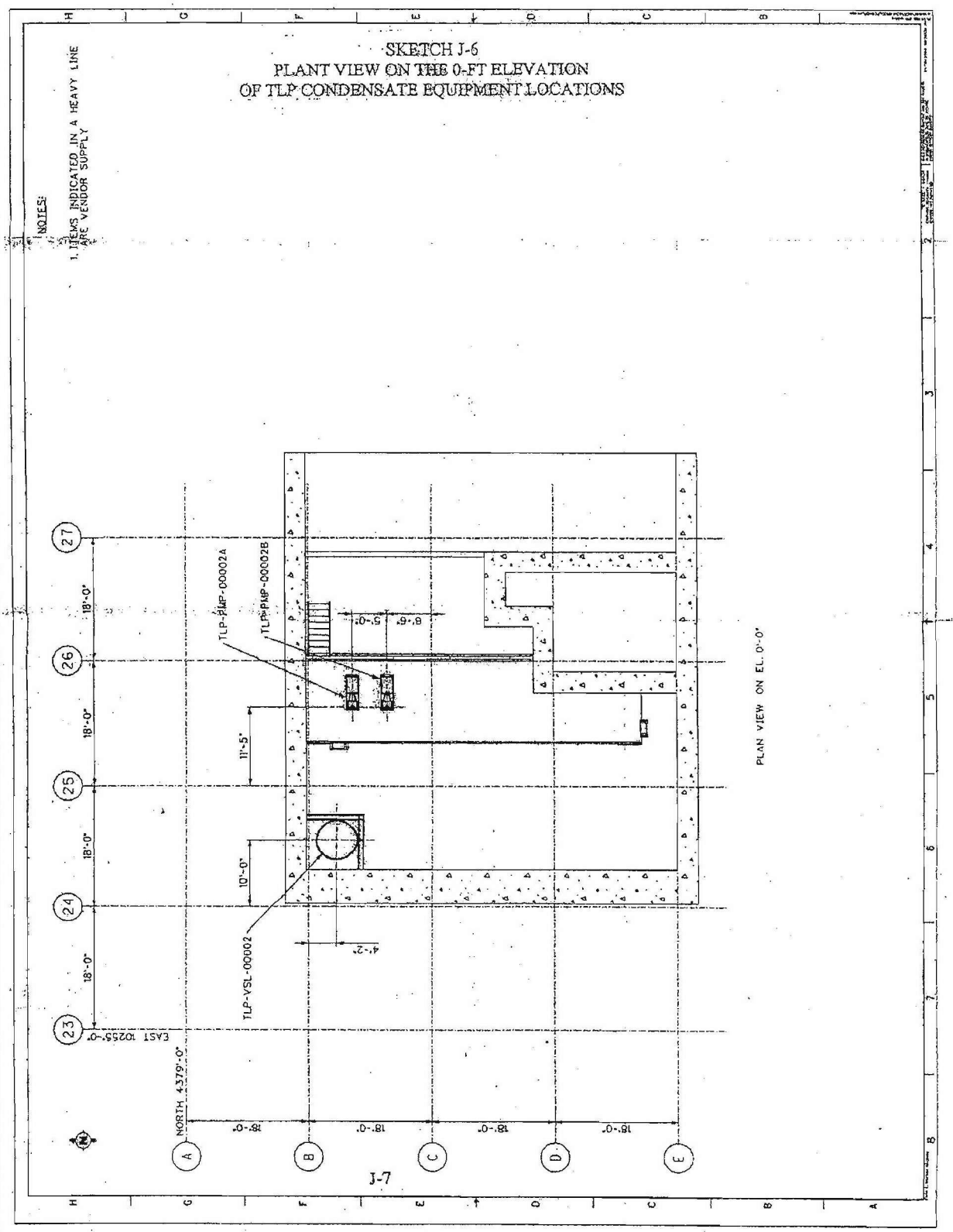

SKETCH J-7
ELEVATION VIEW LOOKING NORTH
OF TLP CONDENSATE EQUIPMENT LOCATIONS

NOTES:
1. ITEMS INDICATED IN A HEAVY LINE ARE VENDOR SUPPLY

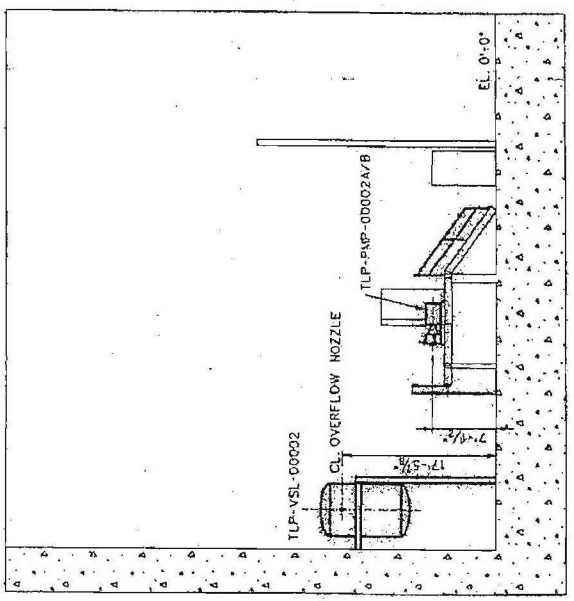

N

SKETCH J-8
ISOMETRIC SKETCH FOR TEF EVAPORATOR FEED
FROM FEED VESSEL TO FEED PUMP

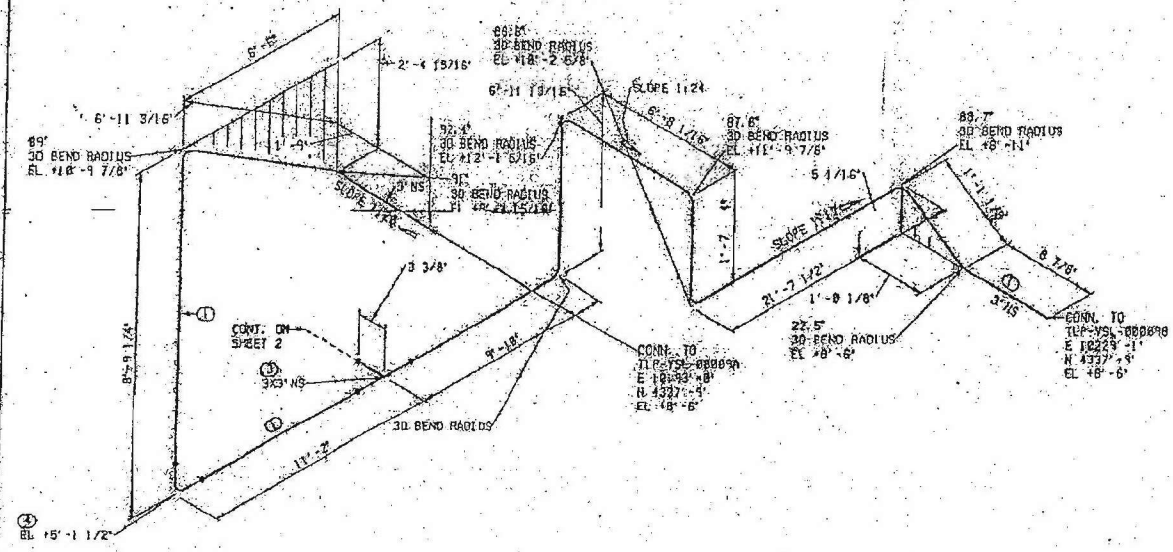

NOTES:

1. PER GENERAL NOTES AND LEGEND SEE DWG: 24590-PTF-P3P30T-01000.
2. SEE DWG: 24590-BOF-G2-G12T-00002 FOR CONVERSION FROM PTF FACILITY ELEVATIONS TO SITE ELEVATIONS. PTF FACILITY ELEVATION 0'-0" EQUALS SITE ELEVATION 578'-0" MSL.

SHOP MATERIALS

PART NO	COMPONENT DESCRIPTION	N.S. (INCHES)	QTY	BECHTEL STK CODE
	PIPE			
1	PIPE, A312TP316/316L, SMLS, SCH10S, BBE	3	69'1"	PP2CBBE03X82
2	PIPE, A312TP316/316L, SMLS, SCH10S, BBE	3	8'6"	PP2CBBE03X82
	FITTINGS			
3	TE, BW, A403WP316, SCH10S	3X3	1	FF03WBE03E00
4	EL - 90, LR, BW, A403WP316/316L-S, SCH10S	3	1	FF03WBE03L90

24590-PTF-3PS-MEVV-T0001, Rev. 3
Forced Circulation Vacuum Evaporator System

PRELIMINARY

REV	DATE	DESCRIPTION	DRN	CHKD	STRESS	RVWD	SPVD

REVISION HISTORY

RIVER PROTECTION PROJECT
WASTE TREATMENT PLANT
2435 STEVENS CENTER PLACE
RICHLAND, WA 99352

CONTRACT No: DE-AC27-01RV14136

P&ID: 24590-PTF-M6-TLP-00001 | CONST. WORK AREA:

PRETREATMENT FACILITY
ISOMETRIC

LINE No. | PIPE SPEC: S12C

DWG No. | REV

CONTENT APPLICABLE TO ALARA? ☐ YES ☐ NO

ADR NO. | REV.

QUALITY LEVEL: QL-2 | SEISMIC CAT.: SC-II

J-9

FORM: ISOBRDR.DGN 02/2003 | COMPUTER GENERATED - MANUAL CHANGES NOT PERMITTED | PCF File: TLPSUCTION | PLOTTED BY: griging | PLOT DATE: 03/24/2003 11:49:27 AM

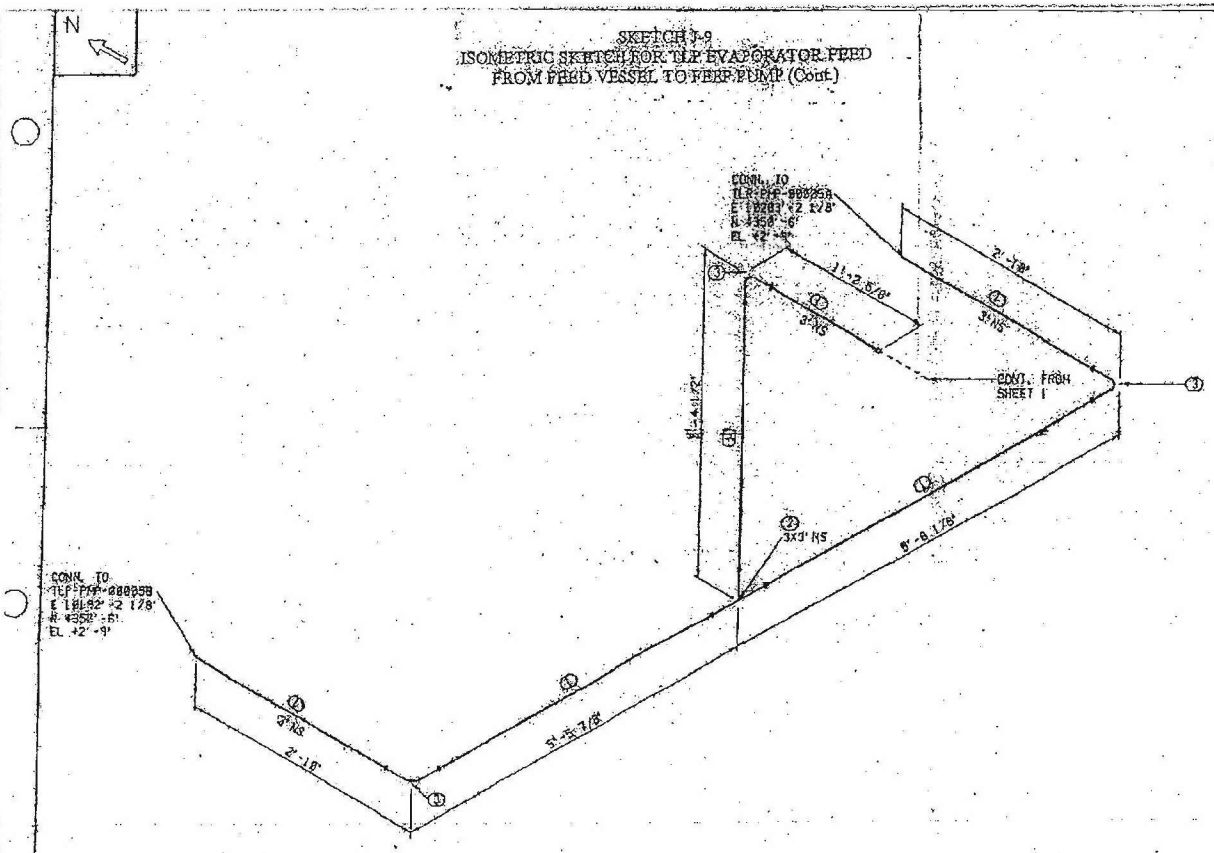

SKETCH J-9
ISOMETRIC SKETCH FOR TLP EVAPORATOR FEED FROM FEED VESSEL TO FEED PUMP (Cont.)

SHOP MATERIALS

PART NO	COMPONENT DESCRIPTION	N.S. (INCHES)	QTY	BECHTEL STK CODE
	PIPE			
1	PIPE, A312TP316/316L, SMLS, SCH40S, BE	3	17'-2"	PPPC88000X02
	FITTINGS			
2	TE, BW, A403WP316, SCH40S	3X3	1	PFCTY6001C80
3	EL - 90, LR, BW, A403WP316/316L-S, SCH40S	3	3	PFCWY6001L80

24590-PTF-3PS-MEVV-T0001, Rev. 3
Forced Circulation Vacuum Evaporator System

PRELIMINARY

REV	DATE	DESCRIPTION	DRN	CHKD	STRESS	RVWD	APVD

REVISION HISTORY

RIVER PROTECTION PROJECT
WASTE TREATMENT PLANT
2435 STEVENS CENTER PLACE
RICHLAND, WA 99352

CONTRACT No: DE-AC27-01RV14136

PROJ: 24590-PTF-MC-TLP-00001 | CONST. WORK AREA:

PRETREATMENT FACILITY
ISOMETRIC

LINE No. | PIPE SPEC: S1 2C

DWG No. 2 | REV

PLOTTED BY: gridins | PLOT DATE: 03/24/2003, 11:37:20 AM

NOTES:
1. FOR GENERAL NOTES AND LEGEND SEE DWG. 24590-PTF-P3-P367-00000.
2. SEE DWG. 24590-BOF-SC2-0127-00002 FOR CONVERSION FROM PTF FACILITY ELEVATIONS TO SITE ELEVATIONS. PTF FACILITY ELEVATION 0'-0" EQUALS SITE ELEVATION 678'-0" MSL.

CONTENT APPLICABLE TO ALARA? ☐ YES ☐ NO
ADR NO. REV.
QUALITY LEVEL: QL-2 | SEISMIC CAT.: SC-II

J-10

FORM: ISOBRDR.DGN 02/2003 | COMPUTER GENERATED - MANUAL CHANGES NOT PERMITTED | PDF File: TLPSUCTION

SKETCH J-10
HOT CELL WALL PENETRATION LOCATION
SKETCH FOR TLP EVAPORATOR FEED

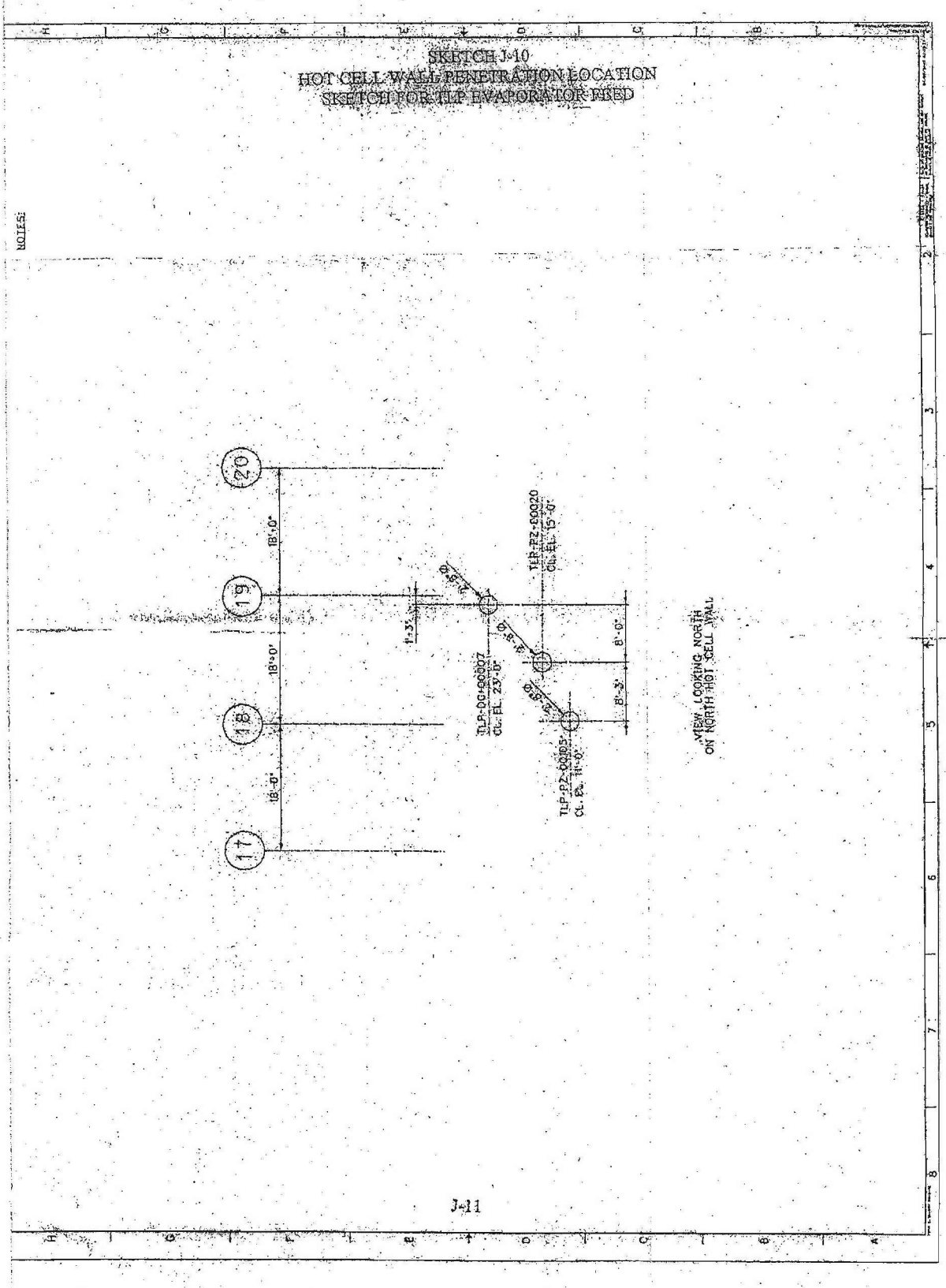

J-11

APPENDIX K

ANTIFOAM EQUIPMENT SKIDS LOCATION AND LAYOUT SKETCHES

SKETCH K-1
ANTIFOAM EQUIPMENT LOCATIONS
PLANT VIEW ON THE 77-FT ELEVATION FLOOR

NOTES:
1. ITEMS INDICATED IN A HEAVY LINE ARE VENDOR SUPPLY.

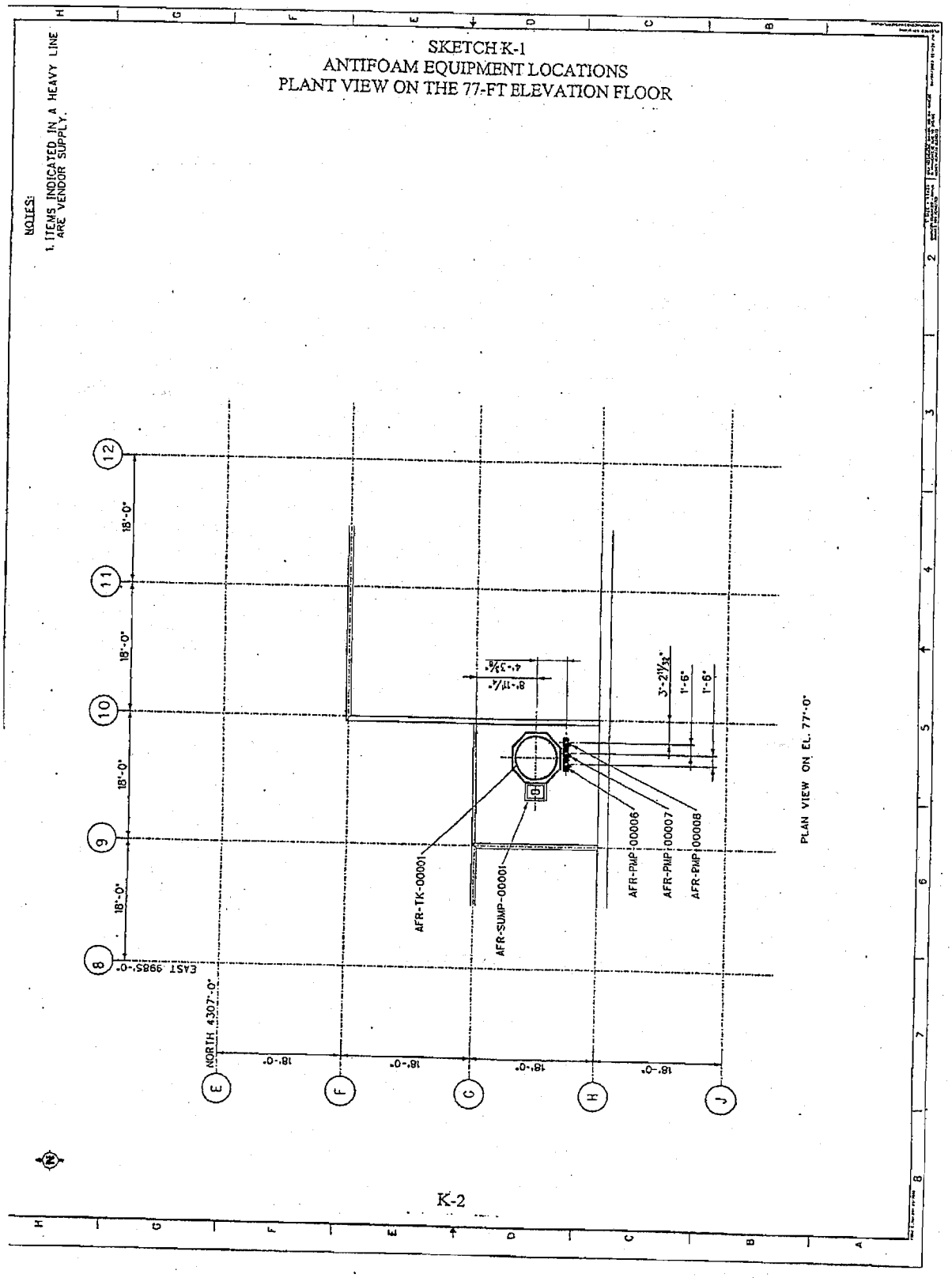

K-2

SKETCH K-2
ELEVATION VIEW LOOKING EAST
OF ANTIFOAM EQUIPMENT LOCATIONS

NOTES:
1. ITEMS INDICATED IN A HEAVY LINE ARE VENDOR SUPPLY.

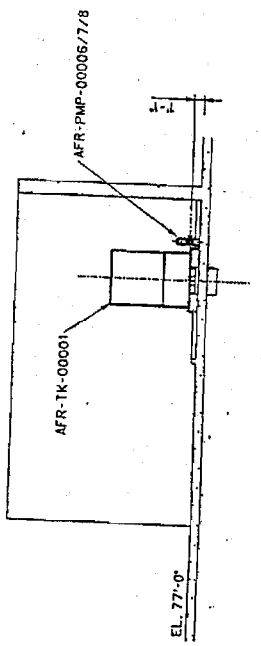

VIEW LOOKING EAST

K-3

APPENDIX L

Reboiler Steam Condensate Transfer Stations Location and Layout Sketches

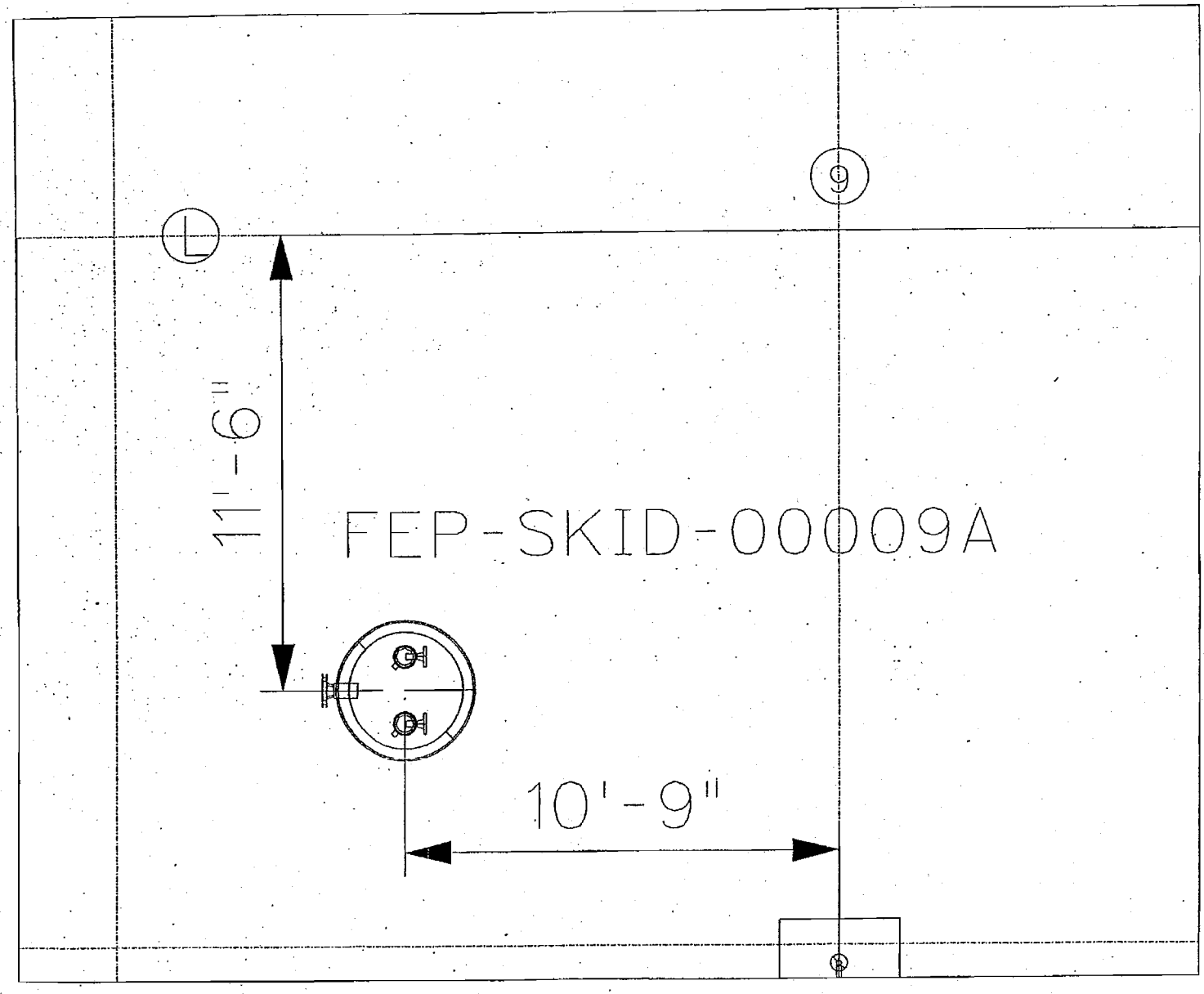

PLAN VIEW
@ 0'-0" Elevation

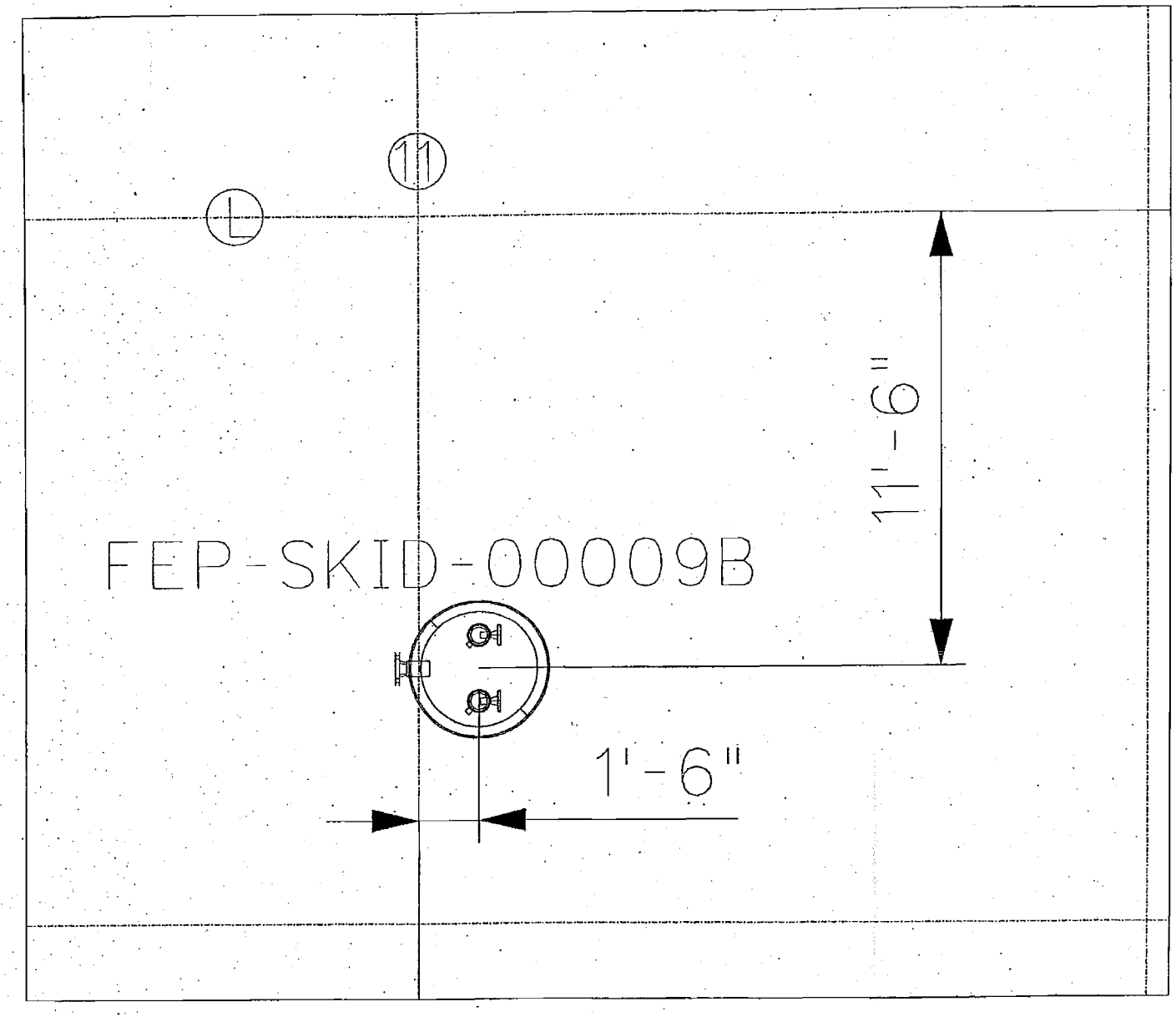

PLAN VIEW
@ 0'-0" Elevation

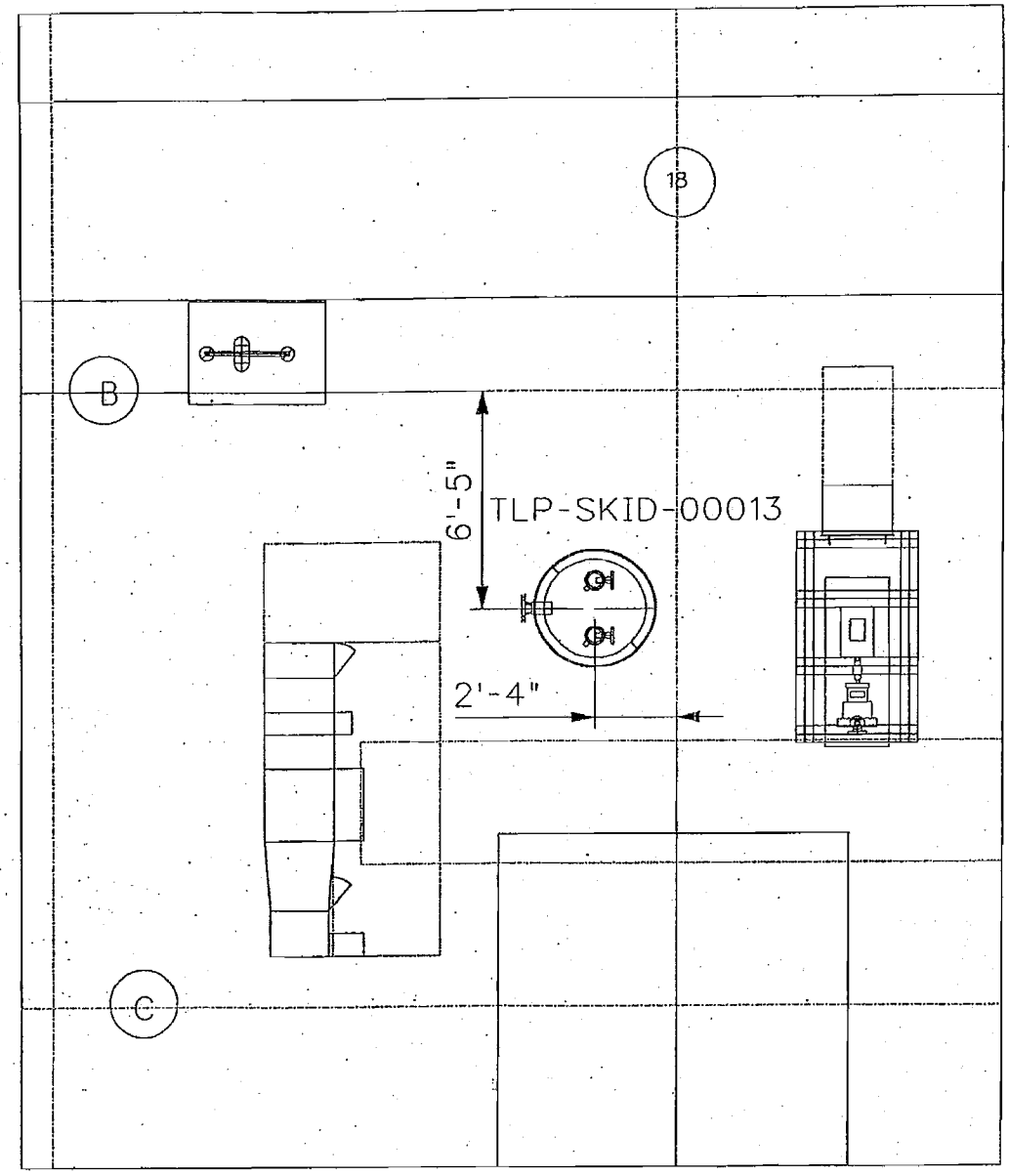

PLAN VIEW
@ 0'-0" Elevation

Sketch L-4
Location of 2"-150# R.F FLG inlet nozzle
on Roth Vessel FEP-VSL-00021 for DSH drain

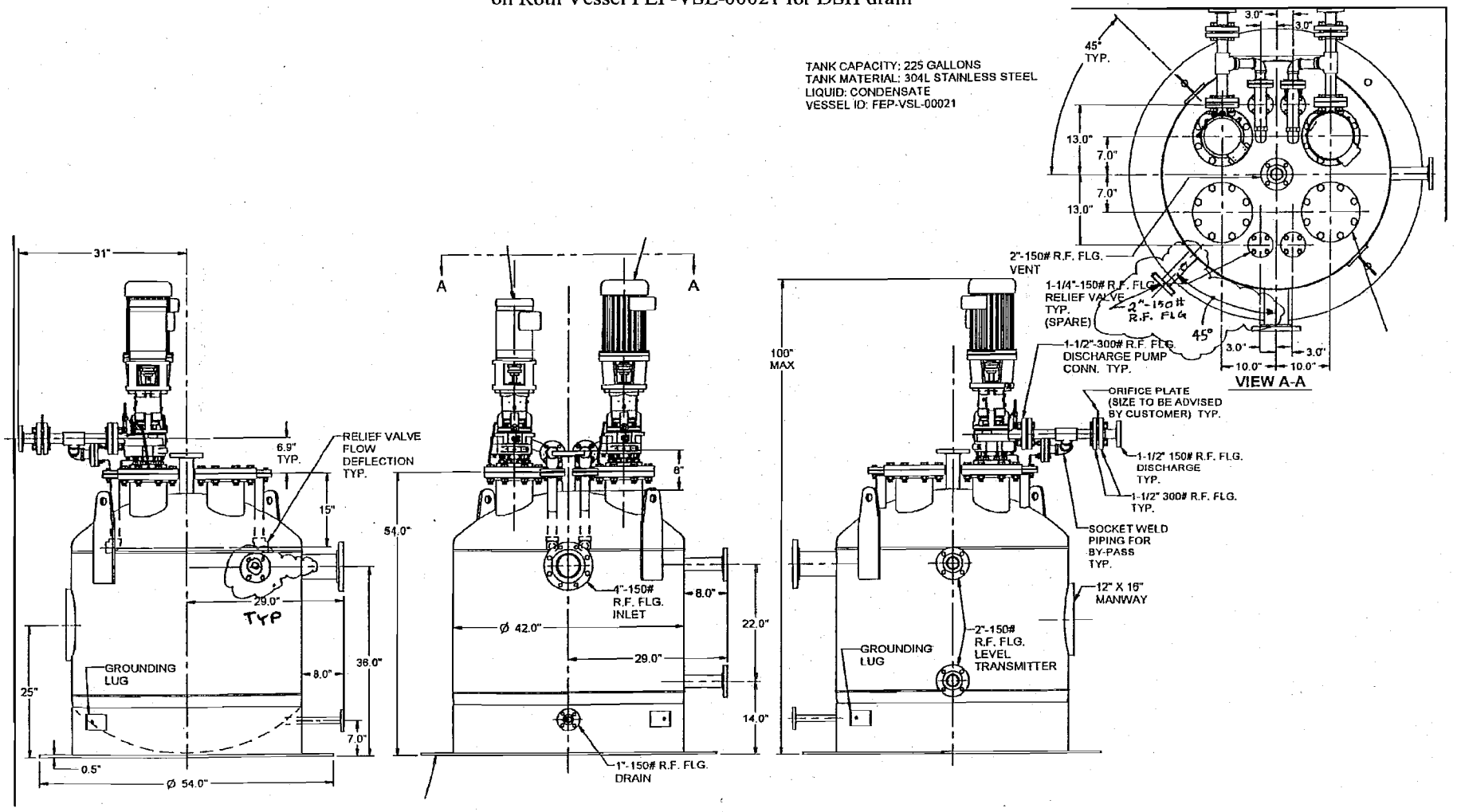

Sketch L-5
Location of 2"-150# R.F FLG inlet nozzle
on Roth Vessel FEP-VSL-00022 for DSH drain

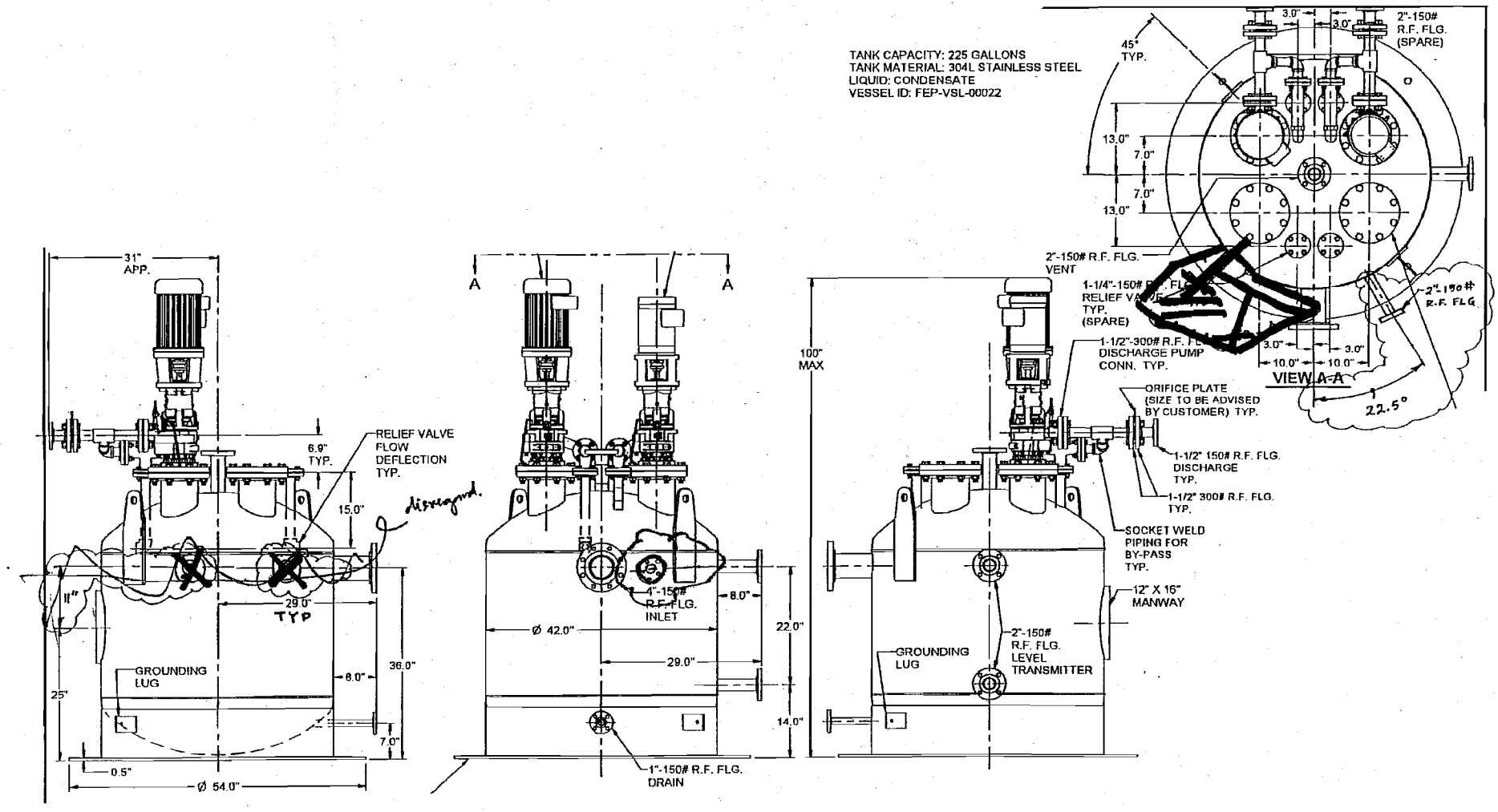

Sketch L-6
Location of 2"-150# R.F FLG inlet nozzle
on Roth Vessel TLP-VSL-00047 for DSH drain

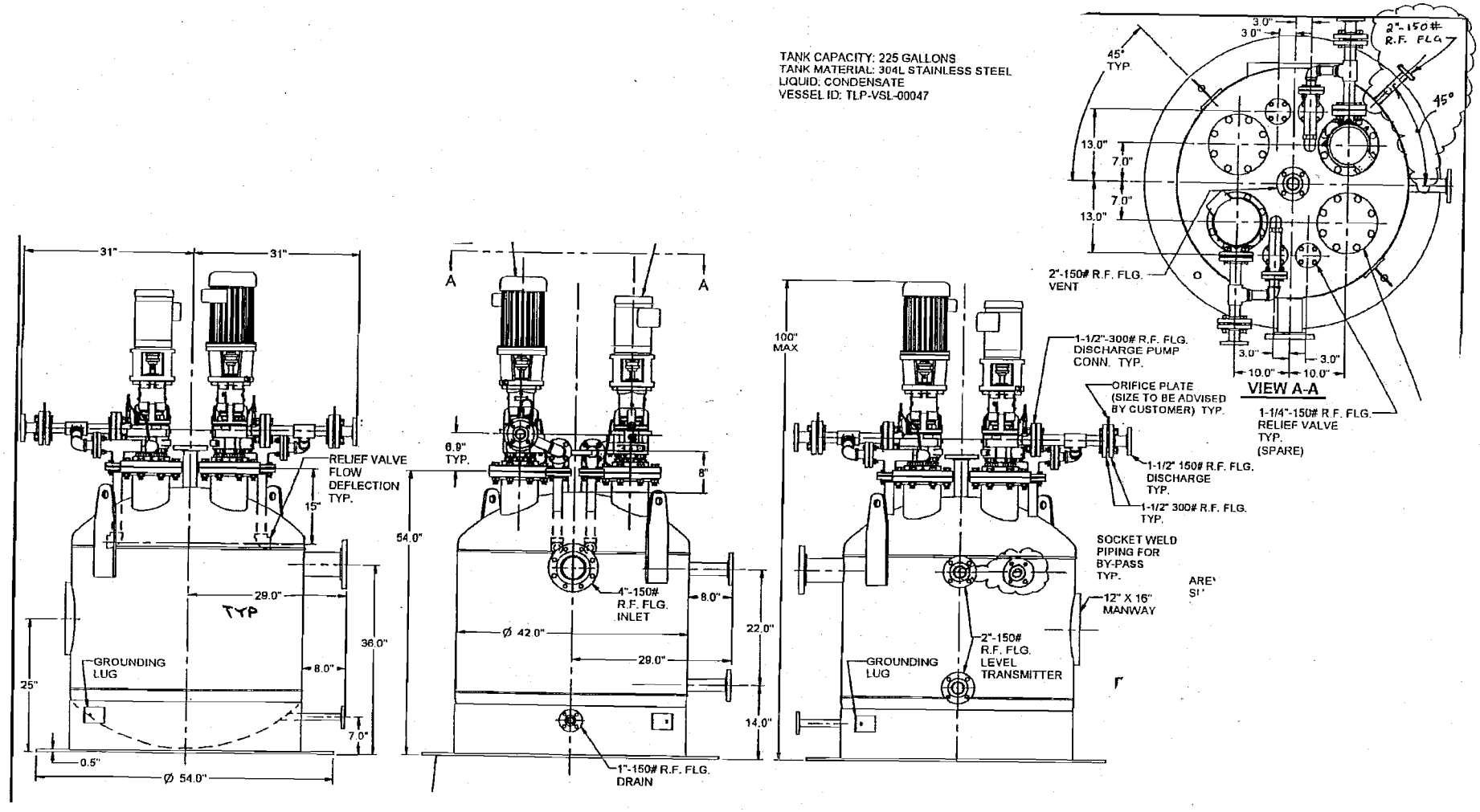

APPENDIX M

DELETED

APPENDIX N

DELETED

APPENDIX O

Nondestructive Examination (NDE) of Fabricated Pipe Welds

Non-Destructive Examination (NDE) of Fabricated Pipe Welds

ASME B31.3 Process Piping							
Type of Weld	Cat. D	Normal Fluid Service Less than Class 1500	Normal Fluid Service Class 1500 and Greater	Cat. M Black Cells	Cat. M Dual Containment Pipe		Cat. M All Others
					Inner Pipe	Jacket	
Girth and Miter Welds	100 % VT	100 % VT 5 % RT	100 % VT 100 % RT	100 % VT & RT (1)	100 % VT & RT (1)	100 % VT 5 % RT (3)	100 % VT 20 % PT/MT
Branch Connection Welds and Fillet Welds including Socket and Attachment Welds for Branch Reinforcement and Support Welds	100 % VT	100 % VT	100 % VT	100 % PT/MT (2)	100 % PT/MT (2)	100 % VT	100 % VT 20 % PT/MT

NOTES:

1. The radiographic acceptance criteria for normal fluid service applies except that incomplete penetration and undercut are not permitted.
2. The penetrant and magnetic particle test acceptance criteria shall be in accordance with B31.3 para. 344.4, except that no cracks are permitted.
3. A 5 % random in-process examination shall be performed in lieu of RT in accordance with ASME B31.3, Para. 341.4.1 & 344.7.
4. Black cells include Rm. No's. P-102, 104, 106, 108, 109, 111, 112, 113, 114 & 116 in the PT Building and Rm. No's. H-B005A, B032, B014, B021, B0005, B005A, B015, H-302 & H-308 in the HLW Building.

LEGEND:

RT – Radiographic Examination, PT/MT – Liquid Penetrant or Magnetic Particle Examination, VT – Visual Examination

APPENDIX P

Reboiler

Note: This appendix provides preliminary locations for reboiler large bore nozzles. Final nozzle locations are to be coordinated with the Buyer.

Sketch P-1 is deleted

Sketch P-2 is deleted

FEP/TLP Large Bore Reboiler Connector Loads are deleted

APPENDIX P

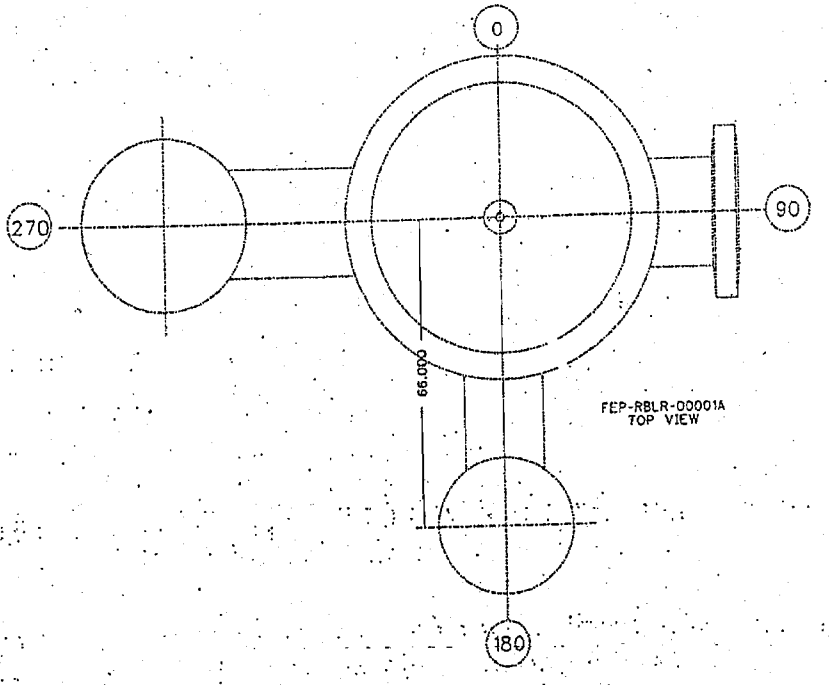

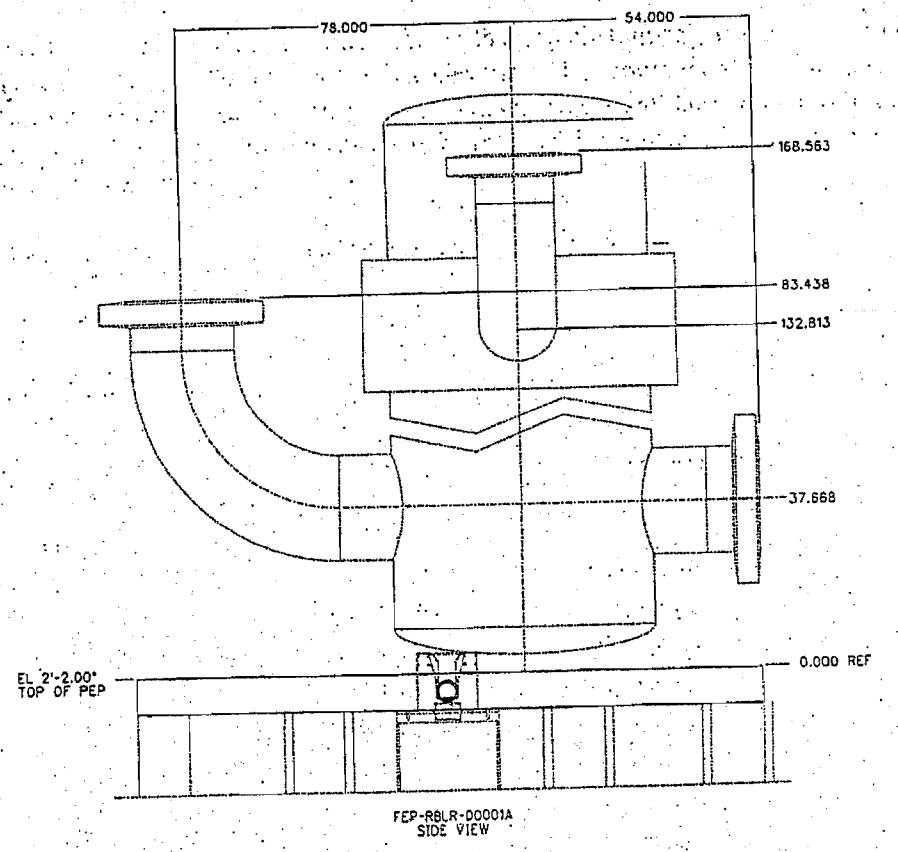

NOZZLE ORIENTATION, ELEVATION, AND DISTANCE FROM CENTERLINE
FEP-RBLR-00001A

NOZZLE ORIENTATION, ELEVATION, AND DISTANCE FROM CENTERLINE FEP-RBLR-00001B

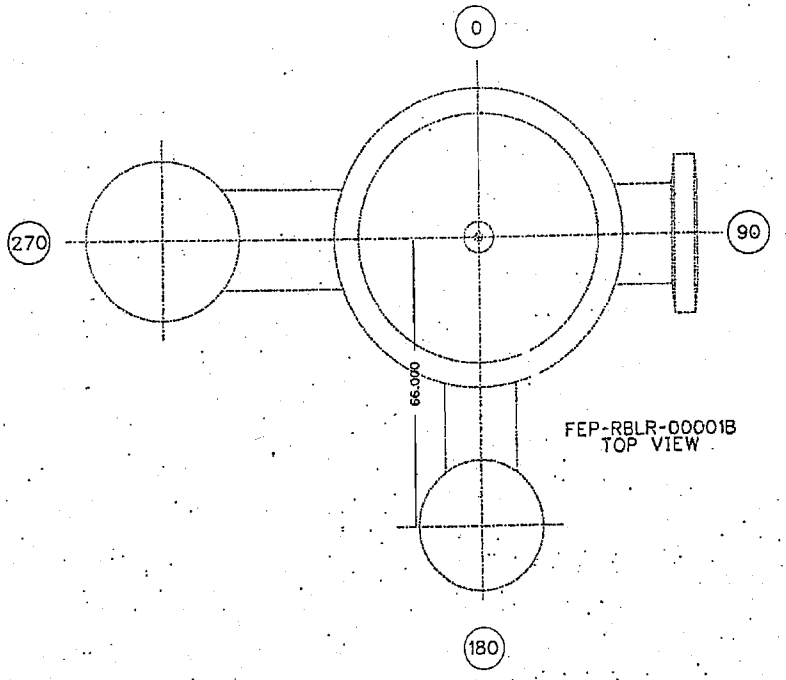

FEP-RBLR-00001B
TOP VIEW

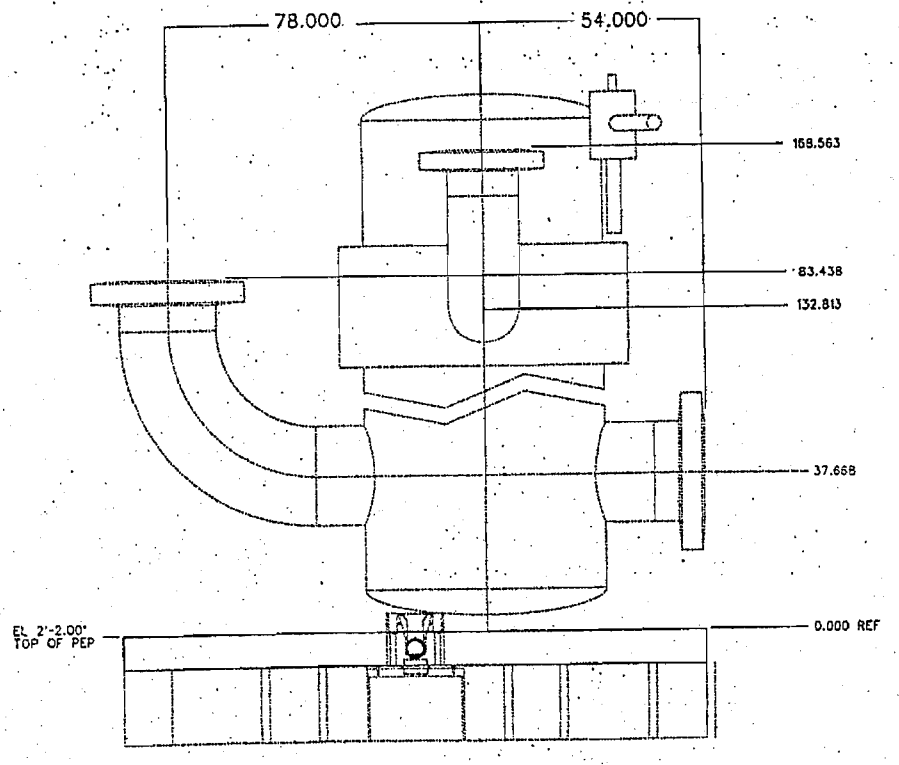

FEP-RBLR-00001B
SIDE VIEW

APPENDIX P

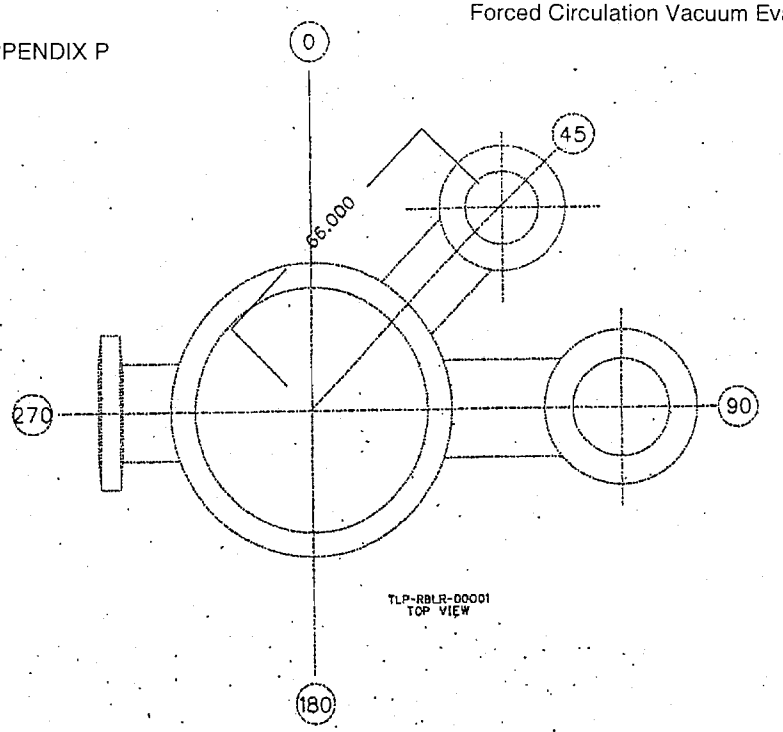

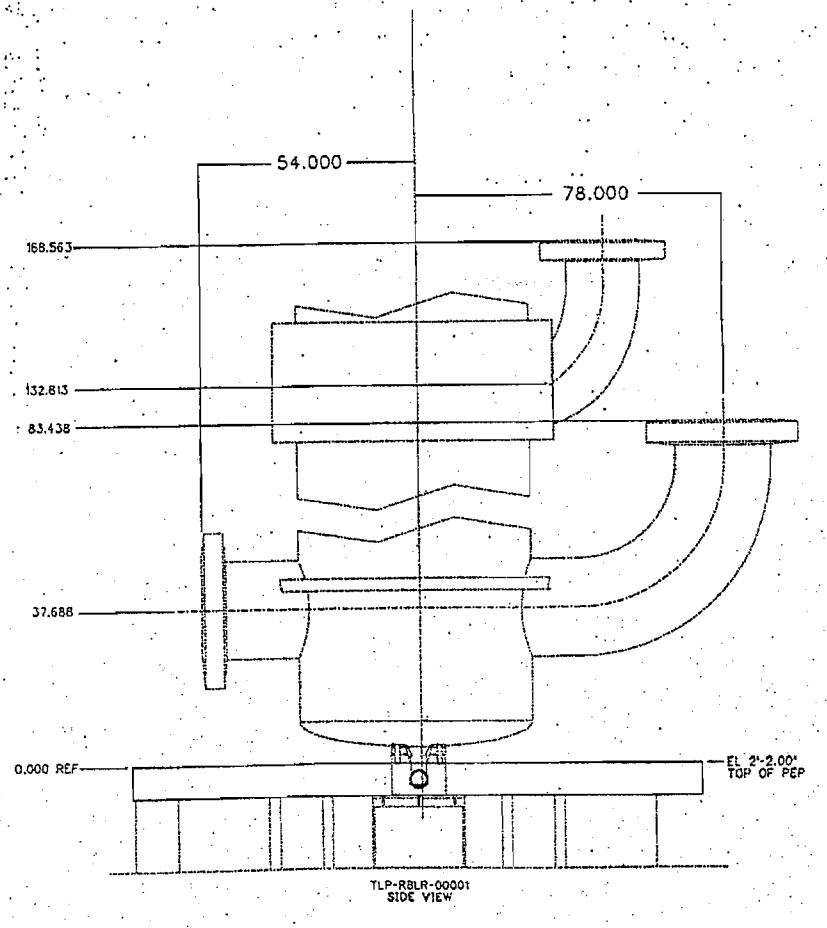

NOZZLE ORIENTATION, ELEVATION, AND DISTANCE FROM CENTERLINE
TLP-RBLR-00001

APPENDIX Q

Reboilers and Recirculation Pumps Layout

APPENDIX Q
SKETCH Q-1

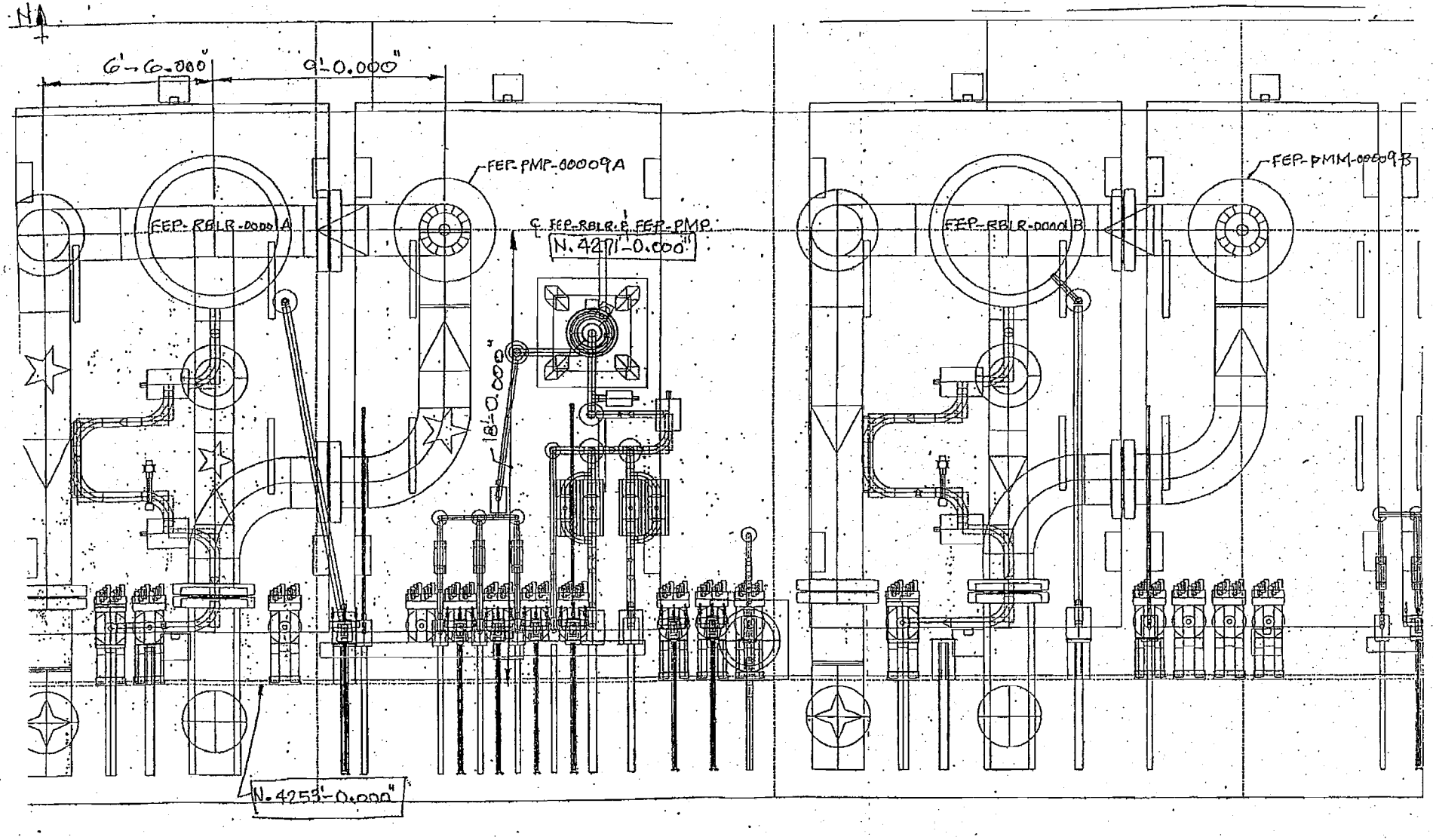

APPENDIX Q
Sketch Q-2

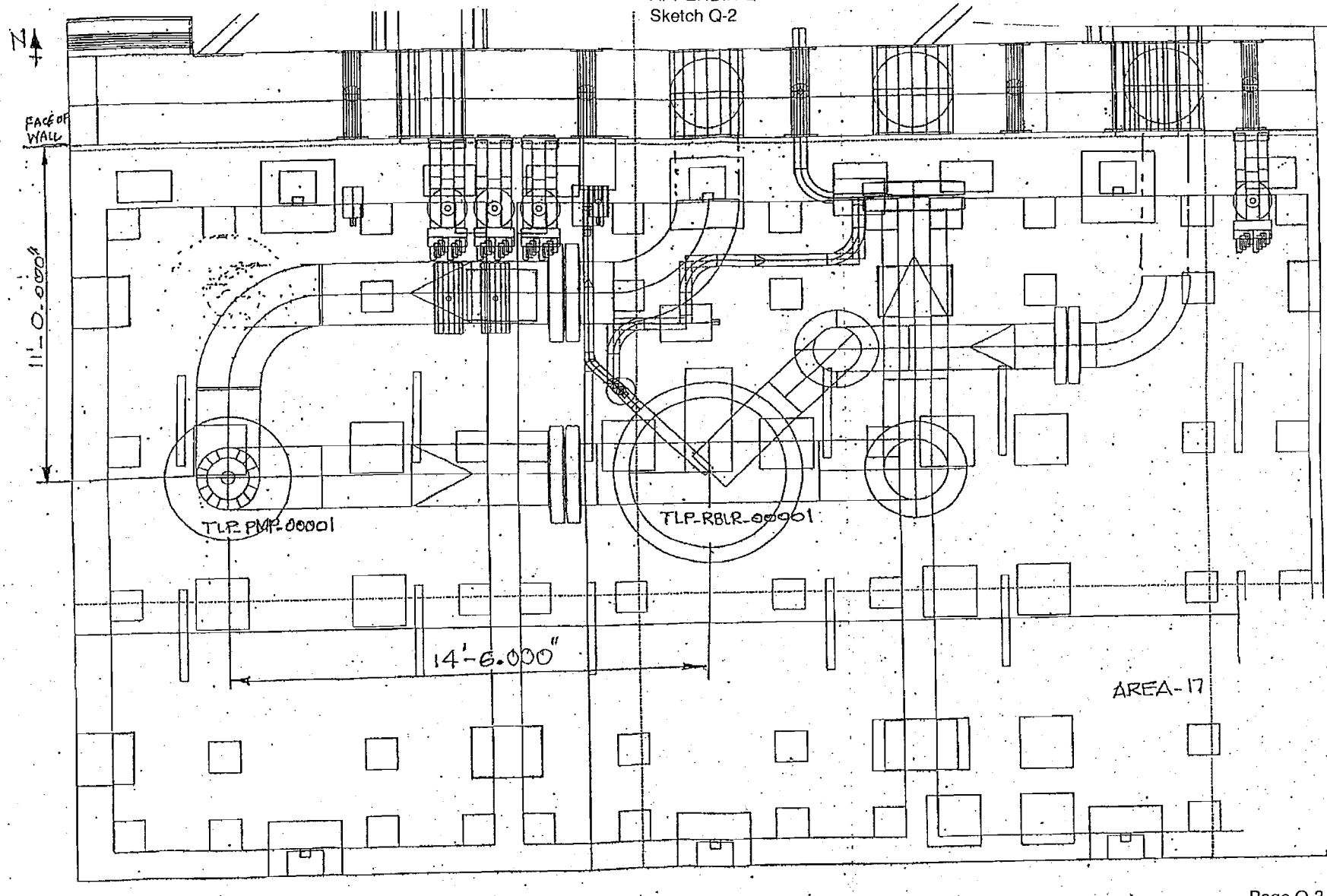

APPENDIX R

Deleted

APPENDIX S

Manufacturers Standard Coating Data Sheet

Manufacturers Standard Coating Data Sheet

The SELLER proposes the following Manufacturers Standard (Mfg. Std.) or alternate coating system that is suitable for the exposure conditions of steel items and equipment in radiation and non-radiation areas.

1. **Equipment Description:** _____
   - A. Tag Number _____
   - B. Part(s) i.e. skirt, shell, channels, lugs, etc.* _____
   - C. Design/Operating Temperatures, designate °F or °C..... _____ °F °C
   - D. Does Equipment Receive Steam out (Yes/No), Temperature _____ °F °C
   - E. Insulated/Uninsulated _____
   - F. Fireproofing (Yes/No) _____
   - G. Carbon Steel (CS), Stainless Steel (SS), other (List) _____
2. **Seller:** _____
3. **Surface Preparation:** SSPC No./Profile _____ / _____
4. **Coating System Designation:** (Code)

	First Coat	Second Coat	Third Coat
A. Type of Coating.....			
B. Coating Mfg./No.**			
C. Dry Film Thickness (Min/Max in mils)/(µm) ...			
D. Wet/Film Thickness (Min/Max in mils)/(µm)			
E. Curing Method.....			
F. Color.....			
G. Dry to Recoat			
H. Pot Life.....			
L. Thinner / %			

5. **Total DFT of System:** (Mils/µm)(Min/Max)..... _____ / Min. _____ /Max.
6. **Material Storage:** Temperature Requirements (Min/Max) _____ / _____
7. **Shelf Life:** ..... _____ Months
8. **Application Environmental Limits:**
   - A. Temperature Ambient and Surface (Min/Max) ..... _____ / _____ _____ / _____
   - B. Humidity (Min/Max)..... _____ / _____
   - C. Dew Point ≥5°F above surface temp. (Yes/No)..... _____
9. **Protection of surfaces that will be inaccessible after equipment installation (such as underside of base plates, interior of fans, vessels or equipment housings)** _____
10. **Rust Preventative for machined faces:** (**Mfg./No.) _____
11. **Quantity of touch-up coating supplied:** _____
12. **Additional information:** (attach extra page as necessary) _____

* Use additional copies of this form for each part described in 1 above that requires a different coating system. A completed copy of this data sheet shall be submitted to CONTRACTOR/BUYER with the initial vendor data submittal.

** Include manufacturers technical data sheets and MSDS' for each proposed coating, preservative & solvent

APPENDIX T

Design Evolution Inputs

T.1A Recirculation Pump Remote Connector Design Inputs

Design Input #T.1A-1: The Hanford connector loads are 2000 lbs resultant force and 2900 ft-lbs resultant moment.

Design Input #T.1A-2: **Deleted**

Design Input #T.1A-3: **Deleted**

Design Input #T.1A-4: Remote impact wrench specification on studs
a) Loosen 750 ft-lbs
b) Tighten 400 ± 25 ft-lbs
c) Range 100 - 400 ft-lbs

Design Input #T.1A-5: Recirculation pump shall be designed to incorporate remote grease application to thrust bearing.

T.1B Recirculation Pump Barrier Cooling Fan Motor Remote Electrical Connector Design Inputs

***Design Input #T.1B-1*: Each Recirculation Pump/Motor assembly (FEP-PMP-00009A/B, TLP-PMP-00001) shall be provided with one (1) remotely accessible electrical connector for Buyer provided power to the barrier system cooling fan motor. The connector shall be designed for remote handling and shall consist of one (1) 90 degree stainless steel elbow plug with cable clamp suitable for a cable diameter of 0.75 inches, 4 - 600 Volt, 30 amp crimp type sockets, PEEK insulator and keyed; one (1) mating fixed mounted stainless steel receptacle, 4 – 600 Volt, 30 amp crimp type pins, PEEK insulator and keyed; one (1) stainless steel blanking plug.**

***Design Input #T.1B-2*: The connectors shall be:**

1. **LEMO model no. FHU.5N.304.TLCY17 (plug), EDU.5N.304.TLM (receptacle)**
2. **Or STAUBLI model no. RVX25.120X.5304 (plug) and RVX 25.625X.0304 (receptacle)**
3. **Or engineering approved equal.**

***Design Input #T.1B-3*: The fixed receptacle shall be mounted on panel, box or steel stainless steel plate (1/8" thick) mounted adjacent to the mounting plate for the lower Hanford connector. The receptacle shall be mounted so that the vertical service with the pin side of the receptacle facing outward. The Seller shall provide Harness "D" wiring between the receptacle and the barrier fluid cooling fan motor. The wiring shall be #10 AWG and shall be provided with radiation resistant insulation, rated for $2x10^8$ TID rad (gamma). The Seller shall provide and install the raceway between the receptacle and the fan motor terminal box. The blanking plug shall be inserted into the receptacle for shipping and storage. The connector plug shall be provided to the Buyer for later installation. Seller shall coordinate mounting location with Buyer to ensure power manipulator access.**

T.1C Electrical and Instrumentation Jumper Connector Data Sheet

BECHTEL	**Electrical and Instrumentation Jumper Connector Data Sheet** RIVER PROTECTION PROJECT – WASTE TREATMENT PLANT	Connector Data Sheet Number: Rev:

Connector Type	Type 1
Service:	☒ Power ☐ Instrumentation & Control
Specification:	

Line No.	General Design Criteria			
				Comments
1	Function:	480 Volt motor loads and other 120V loads		Used in Pretreatment Facility
2	Quality Level:	☐ Q ☒ CM		
3	Design Life:			
4	Safety Class:	NS		
5	Seismic Criteria:	SC-IV		
Line No.				
		Min	Max	
6	Ambient Temperature (°F):	95	113	
7	Relative Humidity (%):	0	100	
8	Radiation Resistance (TID Rads):	N/A	$2X10^8$	
9	Other:	Connectors with be occasionally exposed to a 1-5 molar nitric acid spray, CO2 or steam for decontamination purposes or accidental contact		Connector shall continue operating normally without degradation

Line No.	Equipment Data					
		L	W	H	Dia	Comments
10	Dimensions (inches):	4.0	4.0	5.5	TBD	Defines maximum envelope, not actual connector dimensions.
11	Weight (lbs):	TBD by Vendor				Each half of the contactor is not to exceed 4.5 lbs.
12	Configuration(s):	☒ 90 Degree Back Shell (Plug) ☒ Straight Back Shell (Plug) ☒ Panel Mounted (Receptacle)				Panel Mounted configuration to fit through a 3/16" thick plate (maximum)
13	Accessories:	☒ Cable Clamp ☒ Blank Plug				A swivel fitting will be used for flexible metal conduit Blank Plug adapter for Panel Mounted configuration only. A single plug shall be able to fit over any keyed variation.
14	Protection rating:	☒ IP66* ☐ Other				*IP66 rating is required only when connected to mate or blank plug is attached

Line No.	Materials		
			Comments
15	Outer Shell Material:	300 Series Stainless Steel	304L or 316L
16	Insert Material:	PEEK	
17	Contact Material:	Gold plated Copper	
18	Internals:	300 Series Stainless Steel or approved equal	
19	Seals (o-rings):	Environment compatible	
Line No.	**Electrical Requirements**		
			Comments
20	Ampacity (amps):	30	
21	Voltage Rating (volts):	600	
22	Number of Contacts:	4	
23	Conductor Size (AWG):	#10 to # 8	Single or Multi Conductor
24	Cable Covering:	☐ Flexible Metal Conduit ☐ Armored ☐ Cable Insulation Only	Harness "D" by Vendor
25	Cable Covering Diameter (inches):	0.75	
Line No.	**Maintenance Requirements**		
			Comments
26	Remote Handling Tool	☒ PaR 6000 or PaR 4350* ☒ Master Slave Manipulator (MSM)** ☐ none	*PaR 4350 will have a Par 3000 wrist and hand. PaR 6000 may be substituted with PaR 4350 with a PaR 6000 wrist and hand ** MSM will have the same capabilities as Central Research Laboratories MSM mode RE
27	Push-through	☐ Yes ☒ N/A	Push through plug design, when elected, shall allow connector, cable clamp and additional accessories to pass through a 3" conduit with bends of 5 times the OD of the conduit

	Special Instructions: (See description below)
1	Connector shall be installed per the manufacturer's instructions.
2	Inspect all crimped connections for compliance with manufacturer's instructions and procedures for proper conductor termination.
3	Power wiring shall be tested and meet the requirements of NEC 110-7 as follows. After termination to the connector, by using megohmmeter tester, measure and record insulation resistance at 1000 volts. No short circuits (between contacts and connector housing) are to be present and insulation resistance shall be greater than 10 M ohms.

	Sketch

See SKETCH , Fabrication Assembly Details, Harness "D"

T.1D Sketch, Fabrication Assembly Details, Harness "D"

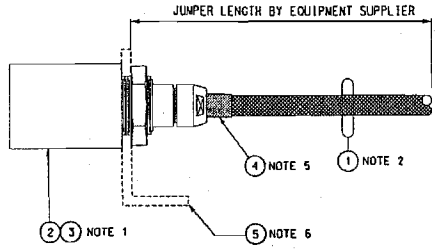

SUB-JUMPER
CABLE ASSEMBLY

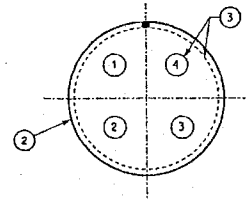

INSULATOR & CONTACTS
(VIEW OF CABLE TERMINATION SIDE)

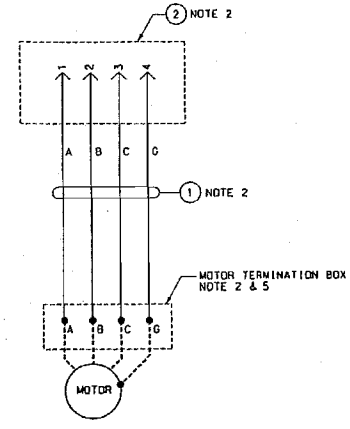

WIRING DIAGRAM

NOTES:

1. FABRICATE AND TEST HARNESS PER CONNECTOR DATA SHEET.
2. THE HARNESS ASSEMBLY SHALL BE TERMINATED PER THIS DRAWING. CABLES TERMINATION TO MOTOR LEADS SHALL UTILIZE COMPRESSION TYPE CONNECTORS.
3. THE HARNESS ASSEMBLY CONSISTS OF CONTACTS, RETENTION HARDWARE, CABLES, INSULATING PLATES, AND MARKERS AND SHALL BE ASSEMBLED PER THE CONNECTOR MANUFACTURER'S INSTRUCTIONS.
4. IDENTIFY EACH CONDUCTOR WITH PERMANENTLY ATTACHED LABEL AT EACH END OF THE CABLE. THIS LABEL SHALL DESIGNATE THE CONTACT NUMBER (1, 2, 3, ...) OF THE INSULATOR. IDENTIFY EACH CABLE WITH PERMANENTLY ATTACHED LABEL, AS NOTED ON WIRING DIAGRAM.
5. HEAT SHRINK (ITEM 4) HARNESS "D" AT MOTOR TERMINALS. IF SINGLE CONDUCTORS, HEAT SHRINK AT CONNECTOR CABLE GLAND/CLAMP. THE CABLE GLAND/CLAMP SHOULD BE CLAMPING HEAT SHRINK CABLE BUNDLE. IF MULTI-CORE CABLE, HEAT SHINK IS NOT REQUIRED AT CABLE GLAND/CLAMP.
6. MOUNTING BRACKET SHALL BE STAINLESS STEEL, FIXED TO THE LOAD, AND SUFFICIENTLY RIGID TO ALLOW REMOTE LATCHING AND UNLATCHING OF THE MATING CONNECTOR WITHOUT DAMAGE TO THE BRACKET OR CONNECTOR.

ITEM NO.	QTY	UNIT	DESCRIPTION
1	1	EA	600 VOLT CABLE, 3/C #10 AWG, W/#10 AWG GND OR 3-1/C #10 AWG, W/#10 AWG GND
2	1	EA	CONNECTOR, TYPE 1 WITH PANEL MOUNT SHELL
3	1	EA	INSULATOR & CONTACT ASSEMBLY, 4 CONTACT, MALE PINS
4	AR	-	HEAT SHRINK, RAYCHEM TYPE WCSF-N
5	1	EA	CONNECTOR MOUNTING BRACKET BY VENDOR

CM
QUALITY DESIGNATOR

REFERENCE DRAWINGS / PROCEDURES / SPECIFICATIONS

NUMBER	TITLE

ISSUE STAMP

CONTRACT No: DE-AC27-01RV14136
CONTENT APPLICABLE TO ALARA? [X] YES [ ] NO
ADR NO. 24590-WTP-ADR-PL-02-006 REV: 0
SAFETY SCREEN REQUIRED? [ ] YES [X] NO E&NS INITIAL IF YES ___

REV	DESCRIPTION	ORG	CHKD	RVWD	APVD	DATE

PROJECT No.	24590
SITE:	HANFORD
AREA:	200E
BUILDING No.	10
SCALE:	NTS

RIVER PROTECTION PROJECT
WASTE TREATMENT PLANT
2435 STEVENS CENTER PLACE
RICHLAND, WA 99354

FABRICATION ASSEMBLY DETAILS
HARNESS "D"

REV.

C:\Data\WTP\PTFE9E52T10043.dgn
PLOTTED BY: tcraig

T.2 Reboiler Grayloc Backing Plate

Design Input: It is acceptable design that the Grayloc backing plates for the 24" diameter process inlet of the reboilers FEP-RBLR-00001A/1B and TLP-RBLR-00001 can be installed after reboiler has after reboiler has been transported through airlock (inside hotcell). Furthermore, the Grayloc backing plate for the 18" diameter steam inlet of the reboiler TLP-RBLR-00001 can also be installed after the TLP reboiler has been through airlock.

T.3 Floor loading

Design Input: The uniform load is defined as floor loading transmitted by the skid to the floor without spreading of the load out through the supporting concrete slab. The floor loadings listed in the table below has been determined to be acceptable.

Allowable Uniform Floor Loading Directly Under Skid Footprint

Equipment	Location	Weight (Operating + Skid) (lbs)	Skid Foot Print Floor Area (ft^2)	Uniform Load (Operating) (lbs/ft^2)
FEP-SEP-00001A	J : 8-9 (0'-0")	134,500	400	**336**
FEP-SEP-00001B	J : 10-11 (0'-0")	134,500	400	**336**
TLP-SEP-00001	D : 18 (0'-0")	134,500	400	**336**
FEP Condenser Skid A	K-L : 8 (56'-0")	70,000	179	**391**
FEP Condenser Skid B	K-L : 10-11 (56'-0")	70,000	179	**391**
TLP Condenser Skid	D-E : 19-20 (56'-0")	70,000	179	**391**
FEP-VSL-00005	M : 7-8 (0'-0")	45,100	66	**683**
TLP-VSL-00002	B : 24-25 (0'-0")	24,000/4	1	**6000**
AFR-TK-00001	G-H : 9-10 (77'-0")	24,000	40	**600**
AFR Pump Skid	G-H : 9-10 (77'-0")	415	12	**35**

Note: Uniform load (lbs/ft^2) = Total Equipment Weight (lbs) / Foot Print Area (ft^2)

T.4 Surface Finish for Equipment in the Hot Cell

Design Input #1: A surface finish of 125 micro-inches is required for non-rotating parts such as reboiler, support stands, recirculation pump, recirculation piping, and lifting yokes. The surface finish of 125 micro inches shall be applied to machined surfaces not all surfaces

Design Input #2: A surface finish of 63 micro-inches is required for rotating parts such as pump shaft and impeller.

T.5 Manipulator Capability for Separator Vessel Head Crane

Design Input: There will be no manipulator capability for the crane on the 56-ft elevation for separator vessel head removal. The current plan is to install a monorail and hoist when there is a need to replace separator demister pads.

T.6 Axial Flow Pump ASDs

Design Input: The ASDs for FEP-PMP-00009A/9B will be installed in the MCC room P-417 on the 77'-0" elevation and the ASD for TLP-PMP-00009 will be installed in the MCC room P-0315 on the 56'-0" elevation. These MCC rooms are designed as R2/C2 as shown on the drawings 24590-PTF-P01T-00003 and 24590-PTF-P01T-00004. The temperature range for these MCC rooms is between 59-113 °F and the humidity range of 5 - 85 %.

T.7 Instrumentation

Design Input #1 - Final Instrument Location Drawings:

Seller is no longer required to provide instrument location and mounting information on the datasheet. Instrument location and mounting information will be completed by Buyer as required on the data sheets.

Design Input #2 - BNI Instrument Details:

Seller is no longer required to provide loop drawings that include schematic and wiring information. BNI will use Set Route and Intools for wiring information. For the 60% design stage, Seller is not required to provide environmental criteria, manufacturer or manufacturer's model number since they will be addressed at the 90% design milestone. Seller shall provide the following I&C information at 60% design:

1) An Instrument Index that includes the type of instrument, service description, calibration range, tag number, signal type, P&ID number and data sheet number.

2) Data Sheets as supplied with the contract package completed with as much information as is available, including tag numbers, calibration range, instrument range and specific process parameters, etc.

3) Logic diagrams which complement the system description.

T.8 Off-gas piping Condenser Intra-Skid Piping

Design Input: No insulation is required for off-gas piping and condenser intra-skid piping. These pipes are in restrictive rooms where no personnel enter during evaporator system operations.

T.9 Separator Vessels

Design Input #1: Separator Vessel Lower Frame:

No internal components are allowed except the use of Nelson studs on the lower ten inches of the inside surface. Seller shall provide minimum amount of grouting requirements to provide adequate stiffness for the lower frame of solid ring of 18-inches high and 19-feet square

Design Input #2: External Ring for Spray Nozzles:

Seller shall design and provide external rings for both the upper and lower demister pad spray nozzles. These external rings shall be connected together to provide an accessible connection at approximately 48'-0" plant elevation.

T.10 FEP Condensate vessel

Design Input: Seller shall provide a separate FEP condensate vessel support ring plate to interface properly with floor embeds. The ring plate will be field welded to embedded plates on both sides. Vessel skirt will be filed welded to ring plate at exterior face only with partial penetration and fillet welds.

T.11 Equivalent Lengths for Centrifugal Pumps

The piping equivalent length is provided on the table below for pump sizing calculation. Please be advised that the bounding values have incorporated the line size changes. However, the flow resistance due to flow restriction orifice, backpressure control valve, discharge spray nozzle has not incorporated into the bounding values because they are to be sized by Seller. Seller shall include these flow resistance in their pump sizing calculation.

For discharge lines from pumps TLP-PMP-00002A/B to separator vessel (TLP-SEP-00001) and from pumps FEP-PMP-00006A/B, FANP shall also add a flow resistance of 5 psi due to Millipore filter in the calculation. For discharge line from TLP-PMP-00005A/B to sampler, Seller shall also include sample delivery pressure of 5 psig.

	Description	From	To	Straight Runs	Elevation Change	Elbows (LR 90)	Eq. Length	Tees	Eq. Length	Valves	Eq. Length	Exits	Eq. Length	Entrances	Eq. Length	Other	Totals (ft) (EQ.L.)	Totals (ft) (ΔEL.)	Bounding Values (ft) (EQ.L.)	Bounding Values (ft) (ΔEL.)	Notes
TLP-PMP-00002A/B	Suction	TLP-VSL-00002	*Pump*	30	2	*5*	33	*1*	20	*4*	20	*0*	0	*1*	9	0	112	2	150	2	
	Discharge	*Pump*	TLP-VSL-00002	40	15	*5*	25	2	30	*4*	15	*1*	13	*0*	0	50	173	15	250	20	*1*
			RLD-TK-00006A/B	250	60	*25*	125	*4*	60	*8*	30	*1*	13	*0*	0	50	528	60	625	65	*2*
			TLP-VSL-00009A/B	250	60	*25*	125	*4*	60	*8*	30	*1*	13	*0*	0	50	528	60	625	65	*2*
			TLP-SEP-00001	250	60	*25*	125	3	45	*10*	38	*0*	0	*0*	0	50	508	60	600	65	*3, 4*
TLP-PMP-00011A/B	Suction	TLP-SEP-00001	*Pump*	100	5	*5*	25	*1*	15	3	11	*0*	0	*1*	7	0	158	5	250	5	
	Discharge	*Pump*	TCP-VSL-00002	300	60	*15*	50	*1*	10	3	8	*1*	9	*0*	0	0	376	60	450	65	
TLP-PMP-00005A/B	Suction	TLP-VSL-00009A/B	*Pump*	80	-4	*8*	40	2	30	5	13	*0*	0	*1*	7	0	169	4	200	4	
	Discharge	*Pump*	TLP-SEP-00001	125	15	*15*	38	3	22.5	2	4	*1*	7	*0*	0	0	195	10	250	15	
			SAMPLER	180	70	*15*	50	2	20	3	8	*0*	0	*0*	0	0	258	70	300	70	*5*
FEP-PMP-00006A/B	Suction	FEP-VSL-00005	*Pump*	15	2	*5*	33	*1*	20	*3*	15	*0*	0	*1*	9	0	92	2	125	2	
	Discharge	*Pump*	FEP-VSL-00005	25	20	*7*	35	2	30	5	19	*1*	13	*0*	0	50	172	20	250	25	*1*
			RLD-TK-00006A/B	1100	60	*50*	250	*6*	90	*8*	30	*1*	13	*0*	0	50	1533	60	1750	65	*2*
			FEP-VSL-00017A/B	550	60	*35*	175	*4*	60	*6*	23	*1*	13	*0*	0	50	871	60	1000	65	*2*
			FEP-SEP-00001A/B	600	60	*35*	175	3	45	*10*	38	0	0	*0*	0	50	908	60	1100	65	*3, 4*

Notes: Framatome Needs to also consider flow resistances due to...
1. Flow Restriction Orifice (sized by FANP)
2. Back Pressure Control valve (sized by FANP)
3. Milli-pore filter (max dP = 5 psi)
4. Discharge spray nozzle pressure (specified by FANP)
5. Sample Delivery pressure of 5 psig.

T.12 Equivalent Lengths for Roth Transfer Station Pump

The equivalent length is provided in the table below:

Description	From	To	Bounding values (ft)	
			EQ. L	ΔEL
Discharge	FEP A SKID 9A Pump	SCW Storage Tank	2200	60
Discharge	FEP A SKID 9A Pump	Steam Cond. Skid 6A	600	80
Discharge	FEP B SKID 9B Pump	SCW Storage Tank	2000	60
Discharge	FEP B SKID 9A Pump	Steam Cond. Skid 6B	700	80
Discharge	TLP SKID Pump	SCW Storage Tank	720	60
Discharge	FEP B SKID 9A Pump	Steam Cond. Skid 8	1130	100

T.13 Standard Kick-Off Plate

Design Input: Buyer will provide Seller 2" and 4" PUREX nozzle with square standard kick-off plate per drawing 24590-WTP-M61-P23T-00040 for FEP/TLP reboilers.

T.14 Steam Conditioning Components

Design input #1: Absorption desuperheaters are classified as pressure vessels. Seller shall design, analyze, and fabricate these desuperheater vessels to meet all applicable WTP specification requirements for CM and SC-III vessels provided in the current PO. Fabrication specification for these absorption desuperheater vessels is 24590-WTP-3PS-MV00-T0001. Design Code is ASME Section VIII Division 1 with Code Stamp and NB Registration. Seismic design shall be per 24590-WTP-3PS-MV00-T0002 and 24590-WTP-3PS-FB01-T0001.

Design input #2: Vessel Design: Design pressures shall be 50 psig maximum and full vacuum minimum based on the downstream piping of the safety valves (see layout sketch provided in page T-13 of this appendix). Design temperatures shall be 335 deg F maximum and 49 deg F minimum. 335 deg F max temperature is derived from enthalpy balance and 49 deg F is the minimum design metal temperature . All welds shall be continuous to avoid crevices. Welds are to be descaled as laid.

Design input #3: Desuperheater vessels are CM and SC-III. 0.040 inch shall be used for corrosion allowance. Due to high vessel nozzle load allowable for SC-III vessels, the 18"-inlet/outlet nozzles of these desuperheater vessels can be designed per Table A-1, "Minimum Nozzle Loads Due to Stainless Steam Piping on Vessels Designed as SC-I" for 18-inch pipe size of Pressure Vessel Design and Fabrication Spec 24590-WTP-3PS-MV00-T0001. The 1.4 multiplying factor does not apply for the 18"-inlet/outlet SC-I nozzle loads. Thermal reduction factor found in 24590-WTP-3PS-MV00-T0001, Section 3.7.4 can be applied.

Design input #4: The 28'-elevation floor and 56'-elevation floor has been poured. Post Installed Concrete Anchors for these desuperheater vessels to floors shall be designed per attached WTP spec 24590-WTP-3PS-FA02-T0003. The reactions shall be provided in the calculation at each floor anchor. Seller shall provide preliminary locations of these floor anchors for Buyer review and concurrence prior to incorporation into the design.

For desuperheater vessels, the design of the anchorage is in the scope of the Seller's responsibility. The quality level of the anchorage for the desuperheater vessels is Non-Q (non-ITS). Accordingly, specifications 24590-WTP-3PS-FA02-T0003 and 24590-WTP-3PS-FA02-T0004 shall apply except as described below.

If Seller chooses to use a higher safety class design (Q), specification 24590-WTP-3PS-FA02-T0005 (in lieu of 24590-WTP-3PS-FA02-T0003) and 24590-WTP-3PS-FA02-T0004 shall apply. In this case, the optional use of a higher safety class design (Q) shall be clearly indicated in the applicable Seller's documents (such as drawings, calculations, and installation manual, etc.)

Design input #5: Seller shall review the layout sketches (provided in section T.13 of this appendix) for FEP & TLP steam conditioning components to make sure there is no impact on AREVA process requirements. Please note that TLP absorption desuperheater has been relocated to 28'-elevation floor due to space constraints.

Design input #6: Seller shall confirm cooling water process requirement is adequate for desuperheater vessels which may need more water than required when compared to an enthalpy calculation due to conversion efficiency of cooling the steam close to saturation.

Design input #7: Seller shall confirm that the existing design of Roth pumps can support proposed required cooling water process requirements (i.e pressure, temperature, flowrate).

Design input #8: The Desuperheater vessels shall be made of SA240 316SS. All nozzles shall be SA312 316SS, based on ASME, CL 150. Steam inlet and outlet connections shall be 150# ANSI RF weld neck 18". Water inlet and drain connections shall be 1.5" 316SS, 150# ANSI RF weld neck flanges. Internal baskets shall be 316SS construction with 304SS Reaction Rings. The desuperheater support frames shall be made of 304 stainless steel tubing and 304 stainless steel baseplate material. Gaskets shall be Grafoil spiral wound 316SS.

Design input #9: For Q/SC-I control valves, the analysis shall apply 4.54g acceleration to the valve at its center of gravity in each of the 3 orthogonal directions to bound Section 3.1 of Piping Stress Design Criteria, 24590-WTP-DC-PS-01-001. In addition, these Q/SC-I control valves shall have the CL600 rating with an analysis to show that the actuators have a frequency greater than 33Hz. Please note that the valve function is pressure containment only. Valve operating during and after seismic event is defined as maintenance of pressure containment. Buyer will provide mating CL600 rating for Buyer's piping connection.

FEP-1A

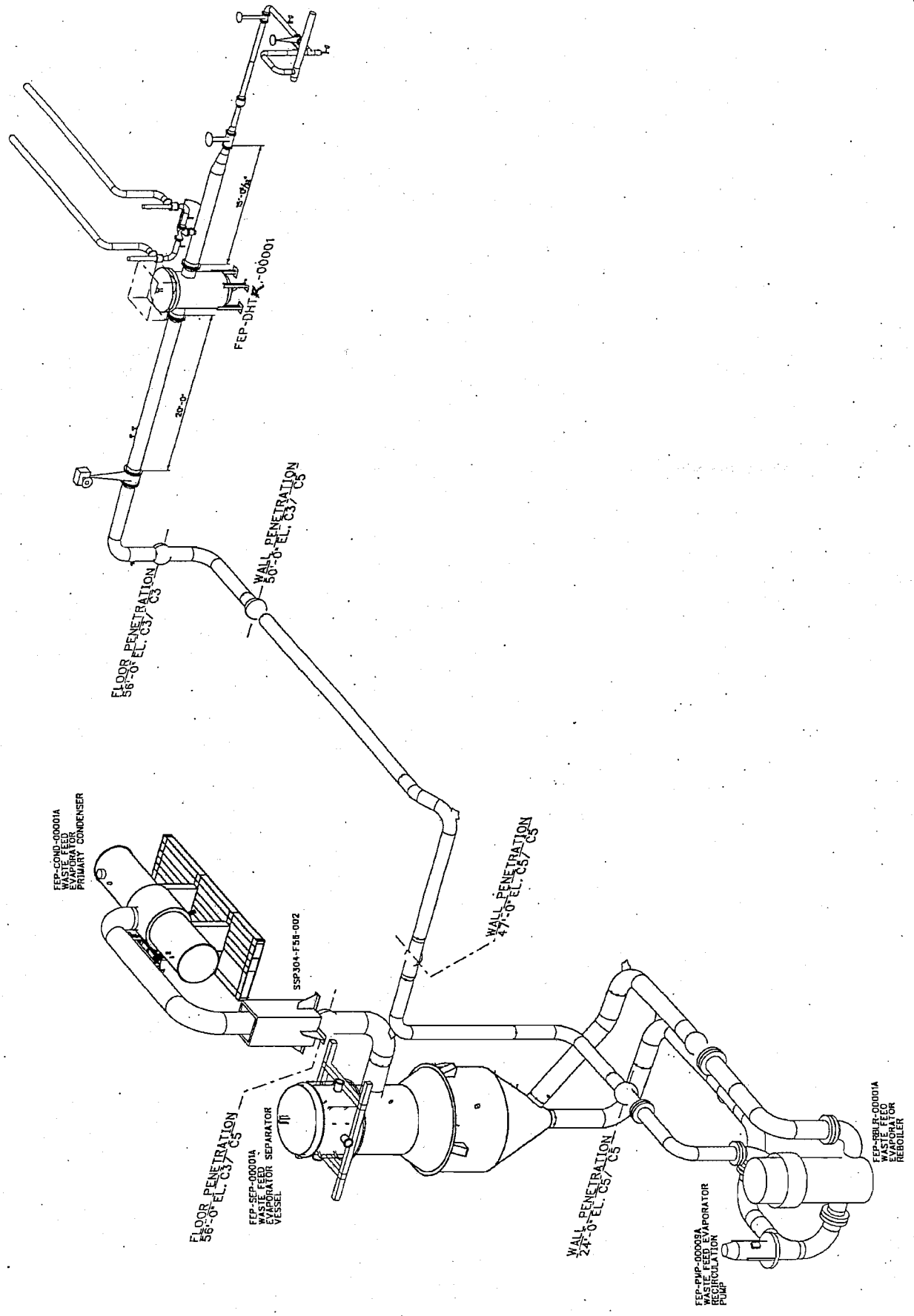
FEP-DHT-K-00001
FLOOR PENETRATION
56'-0" EL. C3/ C3
WALL PENETRATION
50'-0" EL. C3/ C5
WALL PENETRATION
47'-0" EL. C5/ C5
FLOOR PENETRATION
56'-0" EL. C3/ C5
WALL PENETRATION
24'-0" EL. C5/ C5
FEP-COND-00001A
WASTE FEED
EVAPORATOR
PRIMARY CONDENSER
SSP304-F58-002
FEP-SEP-00001A
WASTE FEED
EVAPORATOR SEPARATOR
VESSEL
FEP-PMP-00009A
WASTE FEED EVAPORATOR
RECIRCULATION
PUMP
FEP-RBLR-00001A
WASTE FEED
EVAPORATOR
REBOILER

24590-PTF-3PS-MEVV-T0001 Rev. 3

Pg T-14

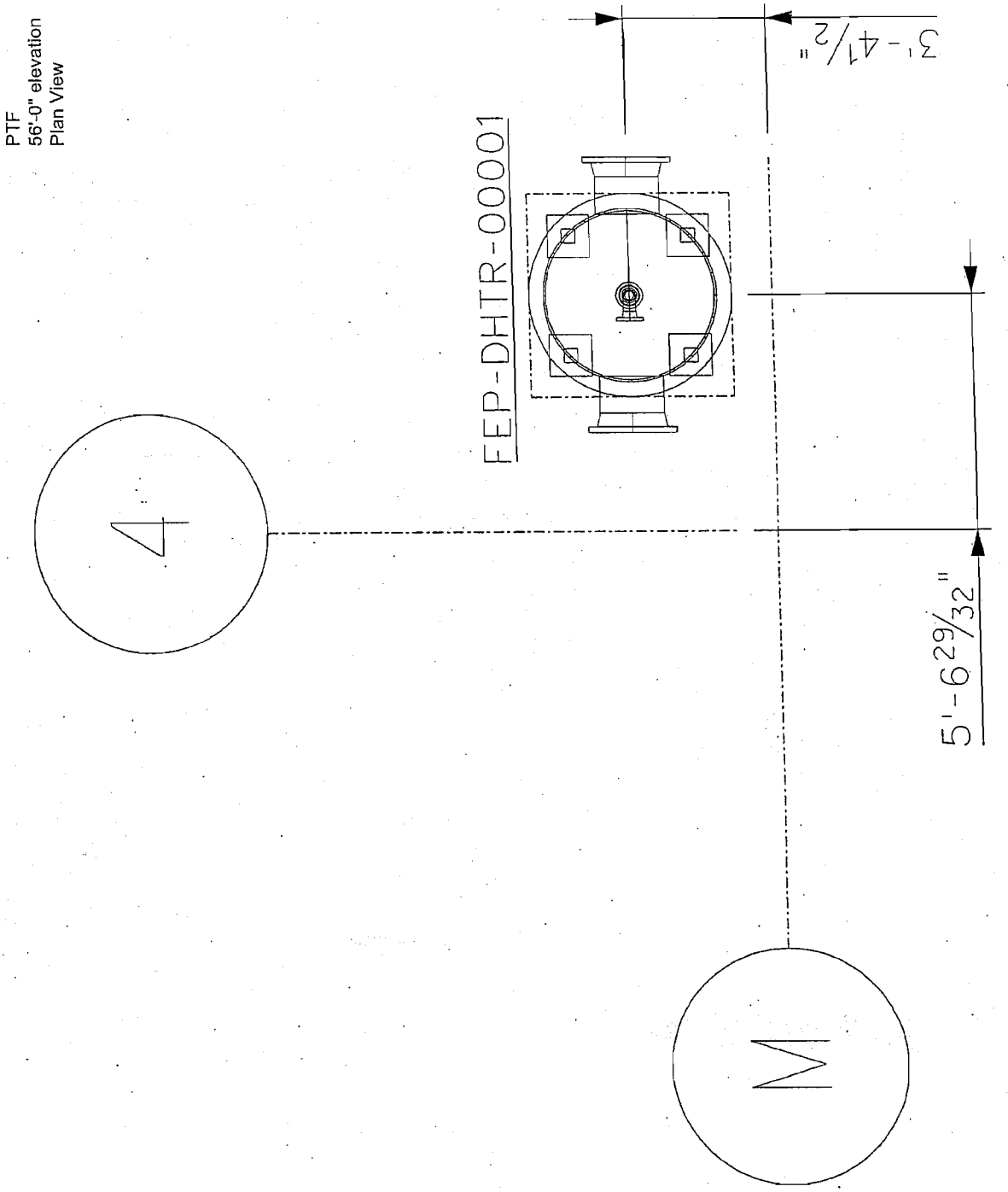

24590 - PTF-3PS-MEVV-T0001 Rev.3

Pg T-15

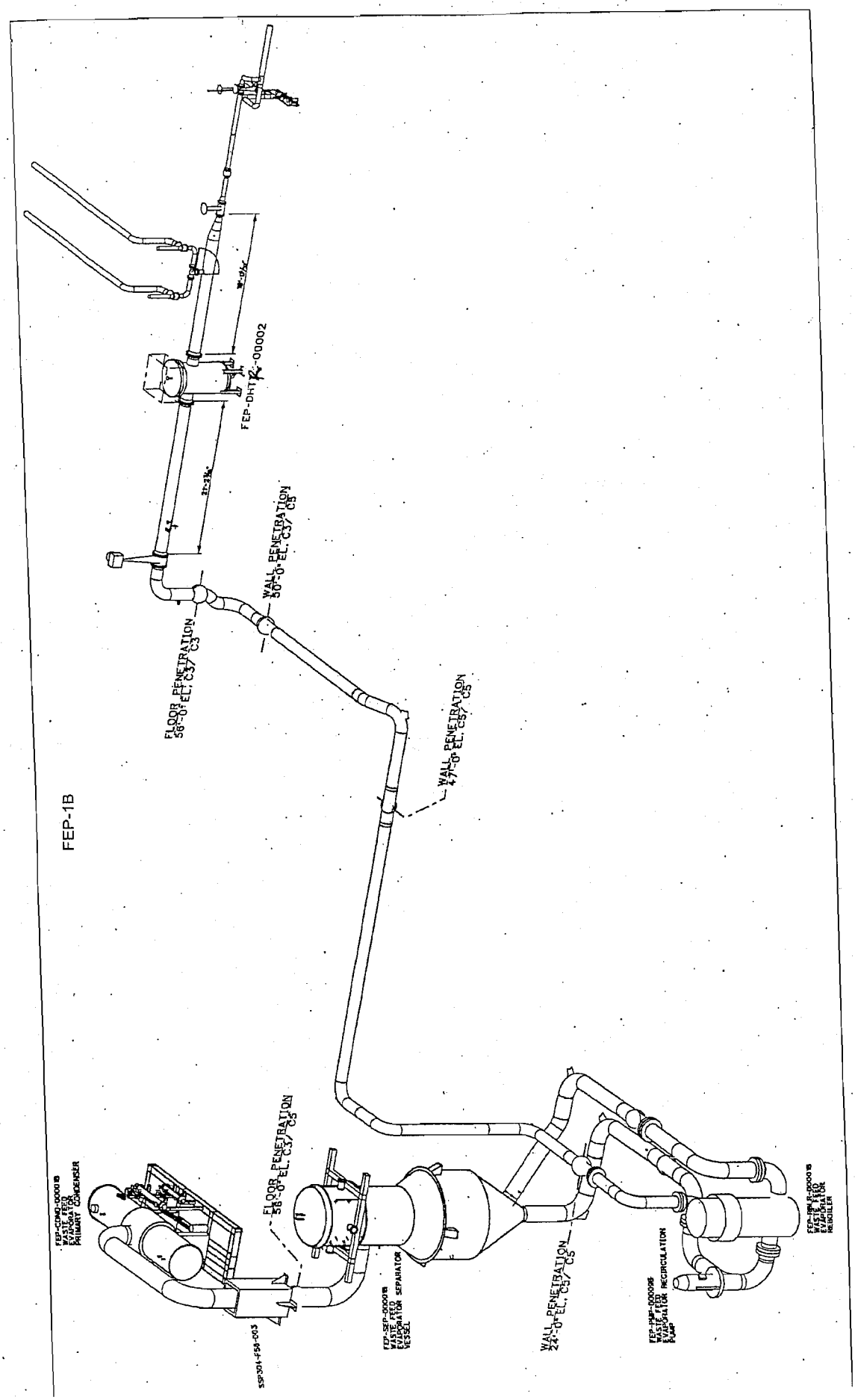

24590-PTF-3PS-MEVV-T0001 Rev 3
Pg T-16

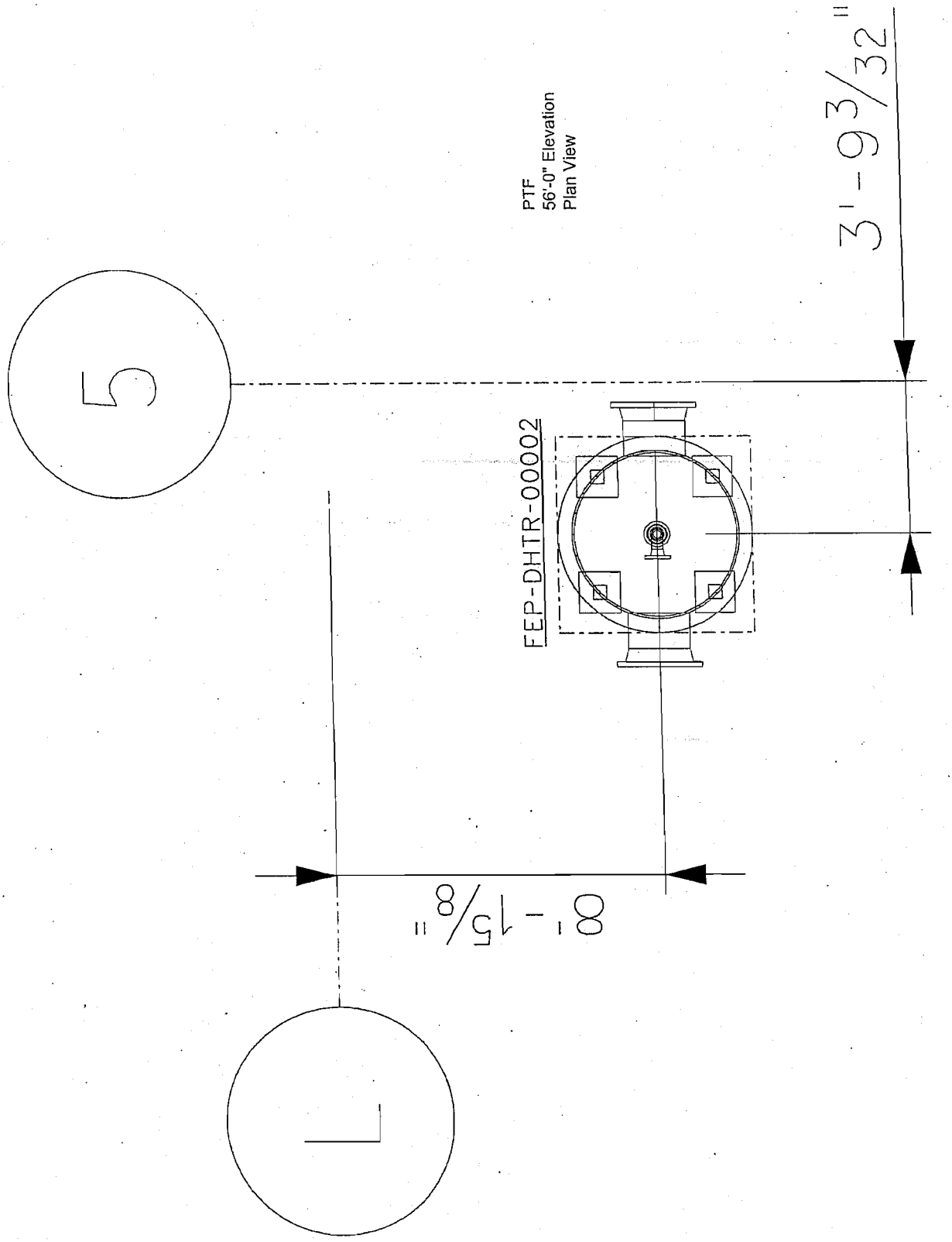

24590-PTF-3PS-MEVV-T0001
Rev. 3
Pg T-17

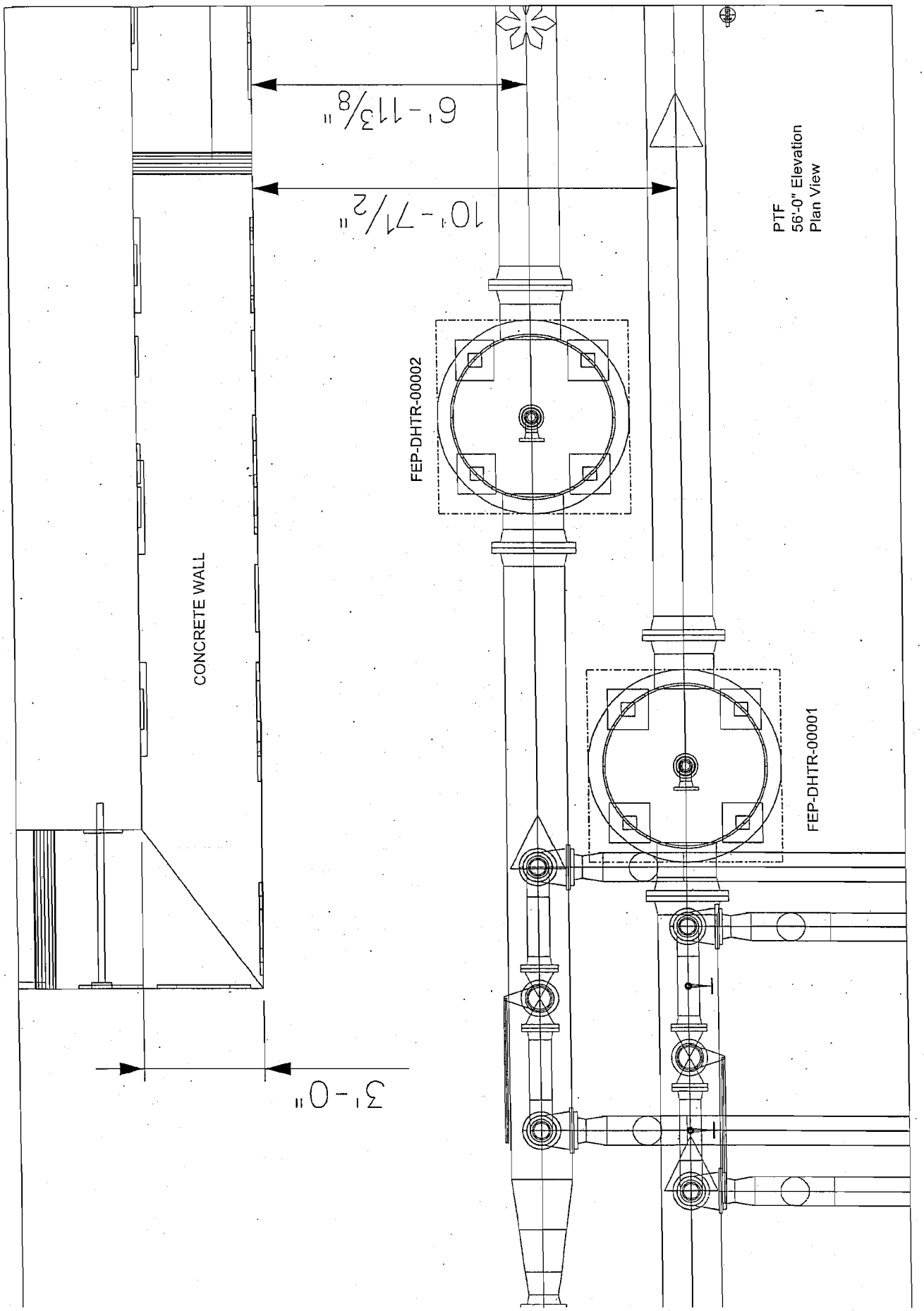

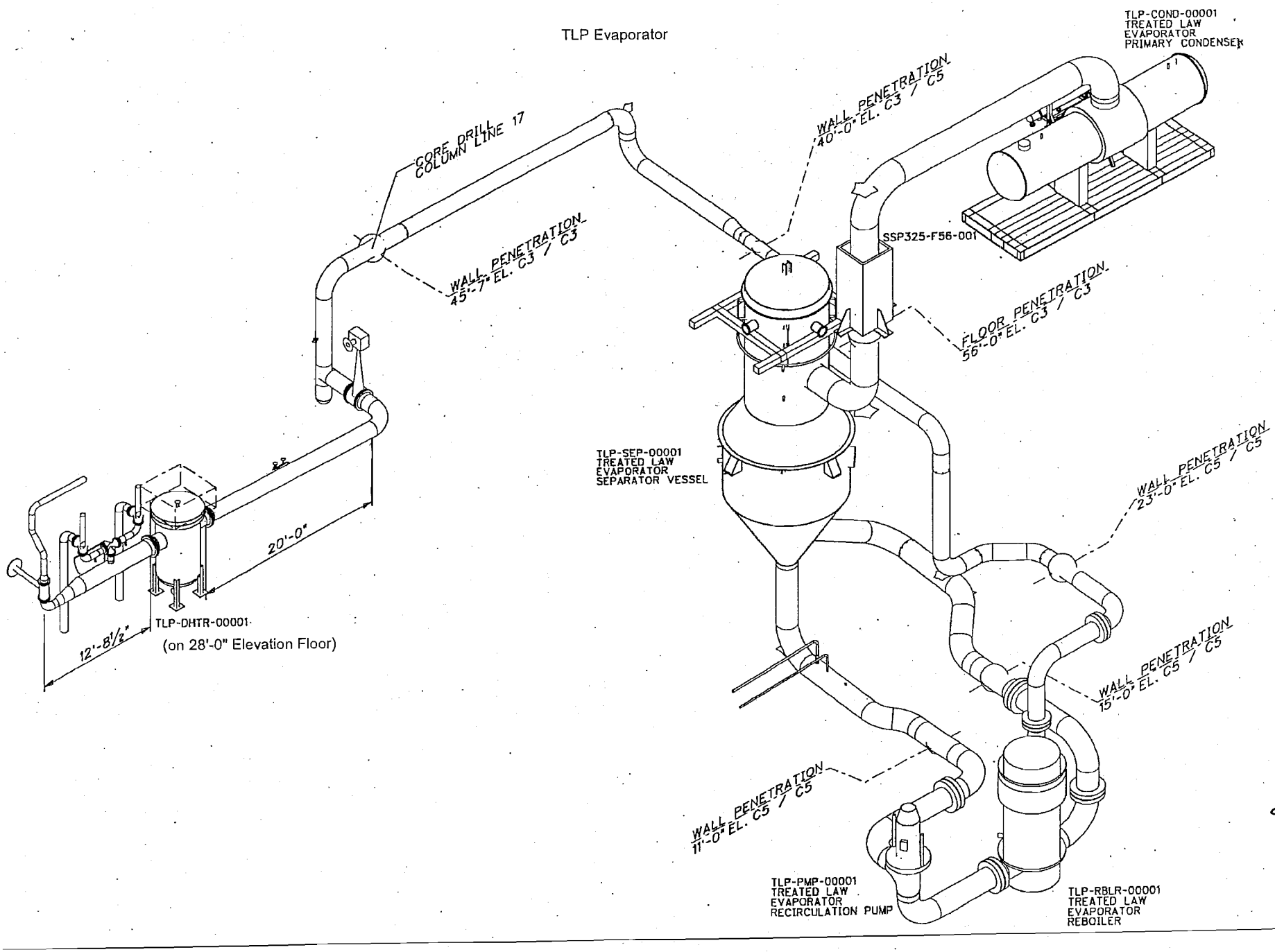

24590-PTF-3PS-MEVV-T0001 Rev. 3
Pg T-18

PTF
28'-0" Elevation
Plan View

TLP

24590-PTF-3PS-MEW-T0001 Rev 3

Pg T-19

APPENDIX U

Deleted

APPENDIX V

FEP/TLP EVAPORATOR SYSTEM COMPOSITE ANALYSES

V1. Seller shall perform a coupled dynamic analysis of each evaporator system (using stick models to represent all components, including the piping/process jumper, vessels, frames and pumps) to qualify the recirculation piping/process jumper, and offgas piping. Seller shall provide vessel nozzle loads, Grayloc loads, and all piping/jumper support interface loads. The evaporator system model shall include the separator vessel on its frames, reboiler in its frame, recirculation pump on its frame, all interconnecting large bore piping/jumpers but excluding branch piping, offgas piping, primary condenser and condenser frame (not including the vacuum system and other attachments).

V2. The coupled dynamic analysis shall be performed using the **WTP Site Specific Ground Motion (WSGM)** ISRS curves (provided in **individual MDS in section 2 of the MR**) and shall account for the seismic differential movement between 0' floor, 56' floor, and 77' floor (provided in this appendix).

V3. All piping dimensions, weights (including grayloc/guide assemblies), and support locations (including fixity) for each evaporator system are provided on the Isometric drawings included in this appendix shall be used as the design inputs for the coupled dynamic analysis.

V4. Although Seller has provided estimated process temperatures for various system condition and components, Seller shall define and use the maximum operating temperature in lieu of design temperature for each evaporator system.

V5. See attachment #5 for FEP/TLP recirculation pump frame conceptual designs. Seller is responsible for qualifying all support structures above 1'-4" in elevation, including all interface plates, bolts, nuts, and dowel pins for reboiler support frame and pump support frame. Seller is responsible for providing all final frame member sizes and configuration, all weld and joint designs, dowel / bolting configuration, quantity of bolts /nuts, and frame calculations to be submitted to Buyer for review. Location of dowels and location / quantity of bolts shall be provided to Buyer for review and permission to proceed.

V5.1 Top of concrete filled steel frame elevation will be 1'-4"

V5.2 Concrete filled steel frame will be rigid, e.g. 33 hz or greater

V5.3 Top of sole plate shall be 2'-2" in plant elevation for pump support. Top of sole plate for reboiler shall be 2'-2 5/16". Bottom of pump support and reboiler support frame shall be designed to interface with the corresponding sole plate without the use of shims.

V5.4 Seller shall qualify structural steel between 1'-4" and 2'-2" or 2'-2 5/16". Seller must design all weld joints and provide all weld details to Buyer. Buyer will be responsible for remotability interface and fabrication drawings.

V5.5 There will be two 4" diameter Dowel Pins per frame (opposing corners) as shown on drawings which will take the shear loads. The 4" diameter dowel pin is an assumption. Seller is responsible to verify and size the dowel pin diameter with actual loads. All Dowel pin material shall be ASTM A582 Type 416.

V5.6 Seller shall qualify all plates, structural steel, dowel pins, the bolting interface, and all weld joint designs.

V5.7 Initial assumption, there are two bolts per plate. Bolts shall be 1 1/4" - 8 ACME - 2G. Stud material shall be ASTM A564 Type 630 condition H1150 and Nut material shall be ASTM A194 Grade GR 8S. Seller is to determine quantity and configuration for studs. Stud location shall be submitted to Buyer for review and permission to proceed. Note: Tightening torque from impact wrench is 400 ft-lbs ± 25%. Loosening torque from impact wrench is 700 ft-lbs ± 25%. Tightening and loosening torques are not adjustable, or variable over time.

V5.8 Seller shall qualify recirculation pump frame. Seller must design all weld joints and provide all weld details to Buyer. Seller shall provide detail design of the frame in the form of a drawing that includes member sizes, configuration and weld design. The drawing shall be sufficient for Buyer to solicit a fabricator who can generate fabrication drawings. Buyer will be responsible for remotability interface for pump frame.

V6. Seller shall perform detailed Finite Element Analysis uncoupled dynamic analysis using **WSGM** ISRS curves of individual SC-I/SC-II vessel/equipment (including recirculation pumps) of each evaporator system. Internal components, supports, and piping systems shall be analyzed the same as the parent vessel/equipment.

V7. The report(s) shall be officially submitted to Bechtel for review per G321-E Categories **7.0 and** 8.0. The report(s) shall include pipe/jumper stress, nozzle loads, Grayloc loads, all piping/jumper support interface loads, pipe support design recommendations, and results of the coupled dynamic analysis of each evaporator system and FEA dynamic analyses for individual SC-I/SC-II components. Seller shall use the "SC-I/II Seismic Analysis Qualification and FEA Report Check List" provided in attachment #6 to document required data in their reports.

V8. Listed below are design inputs to be used

V8a. See Attachment #3 for 24" grayloc/guide assemblies design inputs provided on the isometric sketches.

V8b. **WSGM Site Specific Ground Motion (WSGM)** In-Structure Response Spectra curves **(refer to individual MDS in section 2 of the MR for WSGM ISRS figures).**

V8c. BNI TLP Coupled Structural Analysis Draft Report (See Attachment #2)

V8d. FEP/TLP Evaporator recirculation Isometrics and Mid Roller details (see Attachment #3)

V8e. Nozzle loading for separator vessels shall be based on actual values as listed in tables 1, 2, and 3 of Attachment #4. The Seller shall use the actual nozzle load values instead of the values shown in the table in Appendix A of the Pressure Vessel Design and Fabrication Specification,

24590-WTP-3PS-MV00-T0001. The thermal reduction factor found in 24590-WTP-3PS-MV00-T0001, Section 3.7.4, shall not be applied. The nozzle load for separator vessel offgas outlet nozzle (N04), discharge nozzle (N10) and inlet nozzle (N11) shall be per Seller's design & qualification using the results of the coupled **dynamic analysis**. **Please note that nozzle N13 loads have been reduced in this document revision.**

V8f. Nozzle loading for condenser vessels (FEP-COND-00001A/1B/2A/2B/3A/3B and TLP-COND-00001/2/3) shall be based on nozzle design loads for non-black cell vessels provided in table 4 of Attachment #4. The Seller shall use these nozzle load values instead of the values shown in the table in Appendix A of the Pressure Vessel Design and Fabrication Specification, 24590-WTP-3PS-MV00-T0001. The thermal reduction factor found in 24590-WTP-3PS-MV00-T0001, Section 3.7.4, shall not be applied. The primary condenser offgas inlet nozzle (N01) shall be per Seller's design and qualification using the results of the coupled **dynamic analysis**.

V8g. Nozzle loading for reboiler vessels (FEP-RBLR-00001A/1B and TLP-RBLR-00001) shall be based on nozzle design loads **provided in attachment #9 of this Appendix. Seller shall supply and design the all supports for reboiler small bore piping as specified in attachment #9.** The Seller shall use these nozzle load values **as specified in the attachment #9 of this Appendix** instead of the values shown in the table in Appendix A of the Pressure Vessel Design and Fabrication Specification, 24590-WTP-3PS-MV00-T0001. The thermal reduction factor found in 24590-WTP-3PS-MV00-T0001, Section 3.7.4, shall not be applied. The reboiler process inlet nozzle (N01) and outlet nozzle (N02) shall be per Seller's design and qualification using the results of the coupled **dynamic analysis.**

Attachment #9 of this appendix provides updated all nozzle loads and also support loads layout for the small bore piping of reboilers. The provided sketches show the proposed/preliminary small bore piping routing, support directions, and support locations. Seller shall coordinate with the Buyer to finalize all reboiler nozzle locations. Note that the nozzle loads are reported at the vessel shell. Please be advised that these new locations are tight and extreme care will be need to be taken not to damage the small bore piping when removing the reboilers from the up-ender skids. Please note that original steam vent routing and nozzle locations would have posed potential interferences when installed on the up-ender skid. The drain lines need to exit the bottom of the vessel vertically, the PUREX kick-off plates are lower than the bottom of the reboiler base plates. Seller shall raise FEP/TLP reboiler drain nozzle elevation by at least 1.5 inches in order to make any modification to the kick-off plates or connectors unnecessary. Seller will need to pay particularly close attention to items like new nozzle locations, pipe routing, the feasibility of the support directions and locations, potential up-ender interferences and the vulnerability of these small bore lines.

V8h. Nozzle loads for recirculation pumps shall be per Seller's design & qualification using the results of the coupled **dynamic analysis**.

V8i. For TLP-SEP-00001,

a. The relative floor movement at location Row D/Column 18 at elevation 0' to location Row D/Column 18 at elevation 56' is: 0.06" EW; 0.23" NS, and 0.03" vertical

b. The relative floor movement at location Row D/Column 18 at elevation 77' to location Row D/Column 18 at elevation 56' is: 0.04" EW; 0.12" NS, and 0.12" vertical

V8j. For FEP-SEP-00001A,

a. The relative floor movement at location Row J/Column 8.8 at elevation 0' to location Row J/Column 8.8 at elevation 56' is: 0.06" EW; 0.20" NS, and 0.08" vertical

b. The relative floor movement at location Row J/Column 8.8 at elevation 77' to location Row J/Column 8.8 at elevation 56' is: 0.04" EW; 0.08" NS, and 0.12" vertical

V8k. For FEP-SEP-00001B

a. The relative floor movement at location Row J/Column 10.5 at elevation 0' to location Row J/Column 10.5 at elevation 56' is: 0.06" EW; 0.21" NS, and 0.05" vertical

b. The relative floor movement at location Row J/Column 10.5 at elevation 77' to location Row J/Column 10.5 at elevation 56' is: 0.05" EW; 0.09" NS, and 0.11" vertical

V8l. FEP/TLP recirculation pump frame conceptual design (See attachment #5).

V8m. Seller shall perform and prepare all analyses for SC-I/SC-II vessels and equipment in accordance with the analytical methodology as described in attachment #7, Structural Analysis Requirements. The Structural Analysis Requirements (attachment #7) define the methodology, input data, acceptance criteria and output format to be used by Seller for preparation of structural analyses for evaporator vessels and equipment. These analyses cover frames/skids, piping, vessels, and heat exchangers and implement all relevant purchase order requirements.

- **Industry standards such as the ASME Code, AISC N690 and the TEMA Standard.**
- **Imposed Seller specifications**
- **Project-specific agreements reached between Buyer and Seller**

The pressures, temperatures, and other data are the latest at the time of issue of this document and are presented for information only. Seller shall use the updated data provided in individual MDS in Section 2 of the MR.

V8n. Piping Penetration Clearances

The floor and wall penetrations do not provide any restraint to the FEP/TLP evaporator recirculation piping or off-gas piping. Listed below are applicable penetration drawings associated with the subject piping that will be used to check if the existing clearances are acceptable due to thermal and seismic piping movements.

1) **Hot cell wall penetrations - FEP Evaporators**
   24590-PTF-DB-S13T-00165
   24590-PTF-DB-S13T-00172

24590-PTF-DB-S13T-00214
24590-PTF-DB-S13T-00166
24590-PTF-DB-S13T-00227
24590-PTF-DB-S13T-00171

2) Hot cell wall penetrations - TLP Evaporator
24590-PTF-DB-S13T-00159
24590-PTF-DB-S13T-00205

3) 56-ft floor penetrations - FEP Evaporators
24590-PTF-DB-S13T-00050
24590-PTF-DB-S13T-00051

4) 56-ft floor penetration - TLP Evaporators
24590-PTF-DB-S13T-00048

V8o. Ceiling Steel Stiffness Calculation Guideline for FEP and TLP Separator Frame Interface for Seismic and Thermal Analysis

Seller should use the value specified in the table of Coefficient of Expansion for 100 degrees = 100e, AISC 9th Edition, Page 6-6. For concrete, 100e = 0.00055. For stainless steel, 100e = 0.00099. Please note that Seller used slightly different thermal coefficient for stainless steel, e = 0.000009186 in/in-degree, based on ASME B31.1-1996. The equivalent 100e = 0.0009186. Seller needs to determine what is appropriate coefficients to use and implement consistent values in all of the applicable analyses.

<u>The stiffness guidelines are as follows:</u>

1. TLP Separator: Reference to Drawing 24590-PTF-SS-S15T-00034 and Drawing 24590-QL-POA-MEVV-00001-01-00287 (Seller doc # 02-5040816D-07). This separator is located on column lines 18 & D.

A. Two connections to East W30x235 girder: Each connection has East-West support from the opposite W27 beam, which is firmly connected to the Elevation 56' slab through studs. Therefore, each is fixed in East-West translation.

B. Two connections to West W30x235 girder: The W30 girder top flange is connected to concrete slab through studs. Therefore, lower bound stiffness can be calculated based on a cantilever beam, fixed at top flange.

Length L = 11" (Elev. 53'-0" TOS to about Elev. 52'-1" - centerline of tube steel) with cross section of 10 1/2" (bf of WT 8 x 50) x 0.83" (web of W30).

I = 10.5 x (0.83)^3 /12 = 0.5 in^4.
E = 29000 psi.
Lower bound k = 3EI/L^3 = 32.7 k/in. Seller needs to confirm to use this value.

Exact stiffness is not determined since it requires a FEA analysis. But it is safe to say the upper bound k is less than 5 times of the lower bound value.

Implementing into existing GTSTRUDL model, even with the upper bound k, will reduce thermal reaction load at East side to about 12 kips (which was based on outdated temperature). Seller needs to verify and confirm with new provided temperatures in MDS. Thermal loads will be much less with lower bound stiffness. However, no matter which k be used, most of the seismic loads and other loads in the East-West direction will be shifted to the East connections. Seller needs to confirm.

In addition, if the effect of concrete thermal expansion is included, the thermal loads should be even less. If Buyer's observation is true, Seller does not need to revise the existing model, since this thermal effect only affects the upper connections to Buyer's beams and has negligible impact to the rest of separator and skid. Frequency remains unchanged due to East connections being fixed. Therefore, seismic loads remain unchanged, except stating that East side connections should take the East-West reactions from the other two nodes. Same is true for other loads.

To avoid this exercise, Seller may want to consider leaving a 1/16" gap to the West bolt connections. Then Seller does need to implement the stiffness to GTSTRUDL. Thermal loads will not exist on the W30 girder. It will only have seismic loads and other design loads, applied to the East connections.

2. FEP 1A Separator: Reference to Drawing 24590-PTF-SS-S15T-00037 and Drawing 24590-QL-POA-MEVV-00001-01-00287 (Seller doc # 02-5040816D-07). FEP 1A is located on column lines 8, 9 & J.

A. Two connections to East W36x393 girder: Each connection has East-West support from from the opposite W30 beam, which is firmly connected to the Elevation 56' slab through studs. Therefore, each is fixed in East-West translation.

B. Two connections to West W36x235 girder: Can perform stiffness calculation similar to TLP Separator.

Cantilever beam length L = 14" (Elev. 52'-0" TOS to about Elev. 50'-10" - centerline of tube steel)
Cross Section: 10.5" x 1.22"
Lower bound k = 50.4 k/in. Seller needs to confirm to use this value.

Exact stiffness is not determined since it requires a FEA analysis. But it is safe to say the upper bound k is less than 5 times of the lower bound value.

3. FEP 1B Separator: Reference to Drawing 24590-PTF-SS-S15T-00037 and Drawing 24590-QL-POA-MEVV-00001-01-00287 (Seller doc # 02-5040816D-07). FEP 1B is located on column lines 10 & J.

Similar to 1A separator, except the connections to West W36x393 girders are fixed, connections to East W36x393 girders are flexible.

Please note that Drawings 24590-PTF-SS-S15T-00034 and 24590-PTF-SS-S15T-00037 are provided in Section 2 of the MR.

V8p. Separator Vessel Base Interfaces

1) For FEP/TLP separator vessel base frames (lower frames), not only is the interior box formed by the girders filled with grout, but the area around the outside the girders is also filled with grout, the boundary conditions that Seller had used previously will be changed to reflect this. Seller's GTSTRUDL model will be stopped at the top of the girders instead of the bottom of the girders. Seller will perform a detailed analysis on the girders that are essentially embedded in grout by using the support reaction loadings from the GTSTRUDL model.

2) Seller shall revise separator vessel lower support frame (square ring beams) drawings and calculations to reflect actual field welds (from lower support frame to embeds). The ring beams were prepped with a 1/2" bevels as per Option B on 24590-PTF-DD-S13T-00045 (provided in Section 2 of the MR), partial penetration weld. The partial penetration weld required a reduction in the root gap of 1/8" so the effective weld size is approximately 3/8" and the weld is full length rather than stitch welds.

V8q. Evaporator System Hydro-Testing

1. Only the Recirc loop/off-gas side of the system will be hydro-tested (Separator, Reboiler, Recirc pump, Recirc loop piping, off-gas piping, and primary condenser shell side). The desuperheater, Reboiler shell side, Roth systems, primary condenser tube side, etc. will not contain water during the test and will not be pressurized.

2. The pressure to which the system will be pressurized at the port on top of the off-gas piping is 1.3 times design pressure (1.3 x 50 = 62.5 psi) per VIII Div 1 UG-99. B31.3, 345.4.3(b) permits a pressure of 77% of the piping test pressure to be used, which would be .77*1.5 = 1.16 times design, so 1.3 times design is acceptable.

Where the test pressure of the piping exceeds the vessel test pressure, and it is not considered practicable to isolate the piping from the vessel, the piping and the vessel may be tested together at the vessel test pressure, provided the owner approves and the vessel test pressure is not less than 77% of the piping test pressure calculated in accordance with para. 345.4.3(b).

3. For purposes of this analysis, Seller will consider all nozzles are blocked off at the end of Seller scope of supply.

4. No other accident loads or thermal loads will be combined with resultant loads for the hydro. Hydro should ONLY include pressure and weight.

5. The off-gas piping being supported by spring hangers will be mechanically blocked to prevent over-stress of the springs. Seller might need to add a temp support, as this triples the weight of the pipe.

6. The loads at the nozzles from the filled pipes that are in Buyer's scope are provided below:

6.1 Separator Vessels

- Seller can determine the loads on the large lines from their coupled dynamic analysis.
- Seller is to use the deadweight loads from Table 1, 2, and 3 of this Appendix (attachment #4) for all miscellaneous nozzles of FEP/TLP separator vessels.

6.2 Reboilers

- Seller can determine the loads on the large lines (nozzle N01 & N02) from their coupled dynamic analysis.
- For the 18" steam line to the reboiler (nozzle N03) and the small bore nozzles on the reboilers, Seller shall use the deadweight loads given in the attachment #9.

6.3 Condensers

- Seller can determine the loads on the large lines from their coupled dynamic analysis.
- Seller is to use deadweight loads from table 4 of attachment #4 of this appendix.

V8r. Maximum Allowable Skid Foot Print for FEP and TLP Condensers

Seller shall make necessary design changes required to FEP and TLP condenser skids to obtain minimum frequency of 20 hz as a target. Sketches provided in attachment #8 of this appendix show the maximum allowable skid footprint for FEP and TLP condensers. Embed locations can be moved according the need for the condenser skids. The slabs are not scheduled to be poured till after 1/1/2011 for 56 ft and 77 ft elevations.

V8s. Pressure and Temperature Inputs for vessel internal piping/and utility piping

Attachment #10 of this appendix provides design inputs for pressure and temperature for Buyer piping nozzles to be used in Seller's vessel analysis. Piping pressures and temperatures shall be accounted in the vessel finite element analyses or vessel code calculations for piping components internal to the vessel and utility inlet nozzles such as spray headers, dip tubes, and other internal piping. These pressure/thermal stresses could potentially impact the design of the piping and/or the attachment points for the pipe.

V8t. Insulation

Insulation for piping are defined by Buyer's P&IDs. Listed below is the insulation information for vessels applicable for this order. Seller shall include insulation as applicable to their equipment design. However, insulation will be provided by Buyer.

1) Desuperheater vessels: 4" insulation of heat conservation.

2) Reboiler steam condensate receiver vessels: 1.5" of heat conservation.

V8u. TLP reboiler frame and sole plates modification

Seller shall incorporate design modification provided in the attachment #11 which shows changes made to existing TLP reboiler frame and sole plates.

V8v. Cooling Water Isometrics

FEP and TLP primary condenser cooling water piping isometrics are provided in the attachment #12 of this appendix. Seller shall include these isometrics in their coupled dynamic analysis. However, Buyer is responsible for qualification of the primary condenser cooling water piping.

This page is intentionally left blank

ATTACHMENT #1

DELETED

ATTACHMENT #2

BNI TLP Coupled Structural Analysis Draft Report

Memorandum

To:	Le, E.	MS5-H	Date: June 15, 2006
	Minichiello, J.	MS6-N2	
	Ocoma, E.C.	MS6-N1	
From:	E.O. Weiner		CCN: 122811
Ext:	371 3150		

Subject: **PT TLP COUPLED STRUCTURAL ANALYSIS**

Reference: SCN 24590-PTF-3PS-MEVV-T0001 Rev 1.

Attached is the coupled analysis draft as called for in Appendix U of the reference and containing supplemental tasks to date.

The draft has been checked.

This CCN supercedes CCN 134137.

E.O. Weiner
Structural Analyst
CSA

Attachment Draft: PT TLP Coupled Analysis for Evaluation of Nozzle Loads

Distribution

Copy Coverage	MSIN
Jeffrey, A.H.	MS5-K
Power, J.	MS5-K
Julyk, J.	MS5-I
PDC	MS9-A

BY: E.O. Weiner
DATE:6/15/06

SUBJECT: PT TLP Coupled Structural Analysis for Evaluation of Nozzle Loads

Contents

1 Objective 2
2 Inputs 3
3 Background 3
4 Applicable Codes and Standards 4
5 Methodology 4
5.1 Piping Models 4
5.2 Vessel and Support Frame Models 4
5.3 Merging of the Models 4
5.4 Seismic Analysis 6
5.5 SAP2000 Results Cases 9
5.6 Analysis Cases 9
6 Assumptions 11
7 Calculations 11
8 Results and Conclusions 11
9 References 36

BY: E.O. Weiner
DATE:6/15/06

SUBJECT: PT TLP Coupled Structural Analysis for Evaluation of Nozzle Loads

1 Objective

The objective of this analysis is to describe the effects of coupling on the nozzle loads of the TLP (Treated LAW Evaporation Process) arrangement consisting of a separator, pump, reboiler and major connecting piping. Load considered are deadweight, seismic and thermal. Nozzle loads are compared for coupled and uncoupled analysis and anchor movements are compiled. The first three analysis cases were specified in Ref. SCN, Section 8. The remainder evolved as requested by the participants of the study.

Analysis Cases

Case	Type	Pump Mount	Nozzle Flexibility	Other
8a	Uncoupled	Fixed	No	
8b	Coupled	Free EW & NS	No	
8c	Coupled	Free EW & NS	Yes	
8d	Coupled	Free EW	Yes	
8e	Uncoupled	Fixed	Yes	
8f	Coupled	Free EW	Yes	No Grayloc weights
8g	Coupled	Free EW	Yes	Removed separator top support
8h	Coupled	Free EW	Yes	Pre-RGM spectra
8i	Coupled	Free EW	Yes	NS support at top of 2nd elbow of reboiler discharge line
8j	Coupled	Fixed	Yes	8i plus pump fixed to frame
8k	Coupled	Free EW	Yes	8i plus replacement of separator discharge NS constraint with NS restraint on far end of 2nd elbow from pump inlet line.
8L	Coupled	Fixed	Yes	8k with fixed pump mount
8o	Coupled	Free EW	Yes	8i with 10.5 Kip upward load support on reboiler discharge line to represent a spring can support. Piping and vessels have 131 F temperature instead of 150 F.
8p	Coupled	Gapped	Yes	8i with 1/8" gap at west pump support point. Piping and vessels have 131 F temperature instead of 150 F
8q	Coupled	Gapped	Yes	8p with 1/16" gap instead of 1/8".
8r	Coupled	Gapped	Yes	8q with 1/32" gap.
8s	Coupled	Gapped	Yes	8r with Elev 00' spectra and 10.5 Kip upward load support on reboiler discharge line.

BY: E.Q. Weiner
DATE:6/15/06

SUBJECT: PT TLP Coupled Structural Analysis for Evaluation of Nozzle Loads

2 Inputs

Design Inputs

Item	Reference
Piping arrangement & properties	Ref SCN, Item 10c. Item includes piping isometrics with restraints, Grayloc fitting locations and weights. NS restraint at reboiler discharge was omitted per Ref. ECO
Piping content	Specific gravity 1.57
Separator model	GTSTRUDL (Ref GTS) model, from analysis of Ref A472
Reboiler model	GTSTRUDL model, from analysis of Ref A402
Pump frame	Fig 2 of Ref A603
Pump arrangement	Ref A647B
Pump weight & cg	Section 3.0 of Ref A603
Design temperatures	Frames 113 F Vessels, piping 150 F Reference 75 F
Seismic inertial loading	Ref SCN Item 10b with ISRS attachments. Damping = 3%.
Seismic drift loading	Drift of Elev 56' relative to Elev 00' is 0.06" EW, 0.23" NS, 0.03" Vertical per Ref. SCN Item 10d.
Material properties	Stainless steel Young's Modulus 28e6 psi Poisson's ratio 0.3 Coeff. Thermal Exp 9.25e-6 F^{-1} Density 0.284 lb/in^3
Nozzle flexibility for separator & reboiler	Vendor supplied. See table below.

Nozzle Stiffness Components

Component	Vessel: Nozzle:	Separator Dischg	Separator Inlet	Reboiler 24"	Reboiler 18"	Pump All
Axial	lb/in	9.39E+06	4.97E+05	7.78E+05	3.24E+06	1e9
Lateral	lb/in			1.00E+09	1.00E+09	1e9
Torsional	lb/in/rad	4.02E+09	3.27E+09	1.00E+09	1.00E+09	1e12
Outplane-rotational	lb/in/rad	2.15E+09	3.83E+07	9.95E+07	2.54E+08	1e12
Inplane-rotational	lb/in/rad	2.15E+09	2.71E+08	4.74E+08	4.52E+08	1e12

Notes
1. Unspecified lateral components set to 1e9. Rotational components given as 1e9 were set to 1e12, because there were flexible values given on the order of 1e9.
2. 24" reboiler data apply to inlet and discharge. 18" nozzle is not connected to piping.
3. Separator and reboiler components provided by vendor. Pump components are rigid per tee data of B31.3.

3 Background

Uncoupled analysis typically offers more restraint to thermal expansion than the more complex coupled analysis. Therefore, coupled analysis is expected to have lower nozzle loads.

4 Applicable Codes and Standards

ASME B31.3-2004, ASME Code for Process Piping.

5 Methodology

Models for the separator, reboiler, pump and piping were imported into SAP2000, Ref SAP, as separate models and then merged into one model.

5.1 Piping Models

Piping models were generated with an Excel VBA routine that takes keypoints and tangent intersections and produces joints and straight frame members representing straight runs and elbows with refinement. The elbows are modeled with 10° segments, and straight runs are limited to 2 ft. The data is imported into SAP2000, and the loadings, materials and sections are input graphically. Each of the five piping runs is a separate model.

Elbow flexibility (a section property) was used with the bending stiffnesses of the straight sections in the elbow and not with the torsional stiffness. The flexibility factor for the 24" OD x 0.375"T long radius elbow for both in-plane and out-of-plane is 16.27 (Ref B31.3 App D).

5.2 Vessel and Support Frame Models

The separator and reboiler vessels and their frames were provided as two GTSTRUDL models that were imported to SAP2000. The pump and frame model was developed from scratch.

5.3 Merging of the Models

The coupled model was obtained by merger of the individual models achieved by import after consistent positioning controlled by the piping arrangement. Short links between vessels and piping were added with the given nozzle stiffness properties. The merged model is shown below in an extruded view. The separator and reboiler vessels as well as the pump motor are shown as equivalent stick elements. The cross-sectional dimensions are scaled to solid cross sectional area. If they were scaled to radii of gyration, they would overwhelm the rest of the model. The XYZ coordinate triad shown in the figure gives the orientation of the SAP2000 global coordinate system that is used for reporting global results such as anchor movements.

BY: E.O. Weiner
DATE:6/15/06

SUBJECT: PT TLP Coupled Structural Analysis for Evaluation of Nozzle Loads

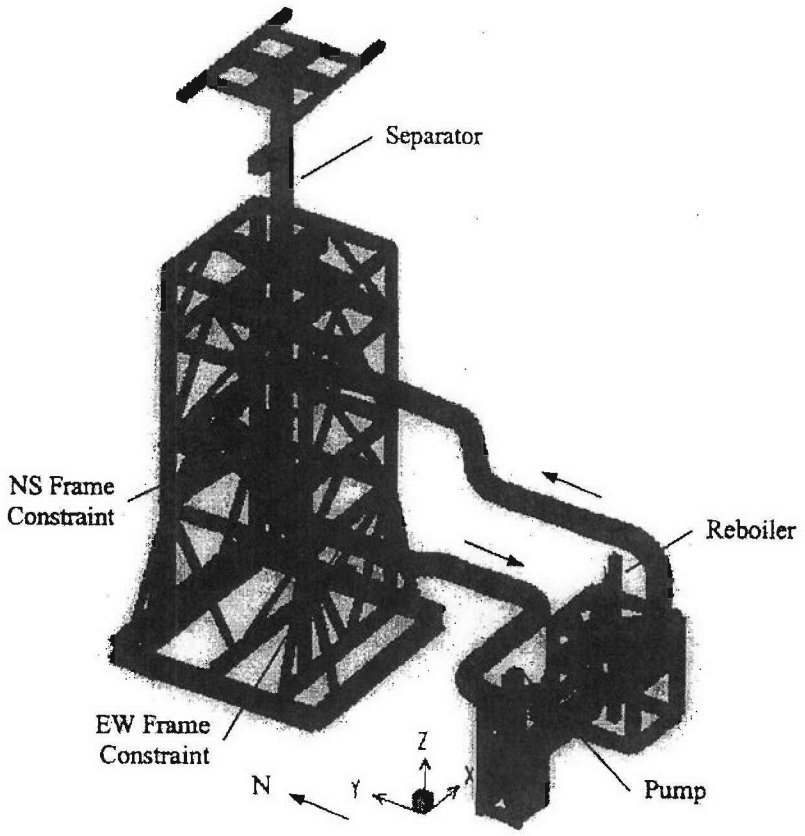

Merged Model

Two piping constraints to the separator frame are shown. They are not detailed in Ref SCN. For the constraint nearest the discharge nozzle, a weightless X-brace was placed in the north side of the frame to get a joint in line with the desired point of constraint. A TS10x10x5/8 section was then brought to the piping to provide a NS constraint. The choice of member end releases in the X-brace provides the NS support required but does not affect the inplane behavior of the north side of the frame. The EW constraint was implemented by a simple constraint condition to a joint in the center of a nearby EW beam. The frames are supported at their bases. The separator is also supported at the top. The piping restraints (to ground) are shown in the following piping restraint diagram.

BY: E.O. Weiner
DATE:6/15/06

SUBJECT: PT TLP Coupled Structural Analysis for Evaluation of Nozzle Loads

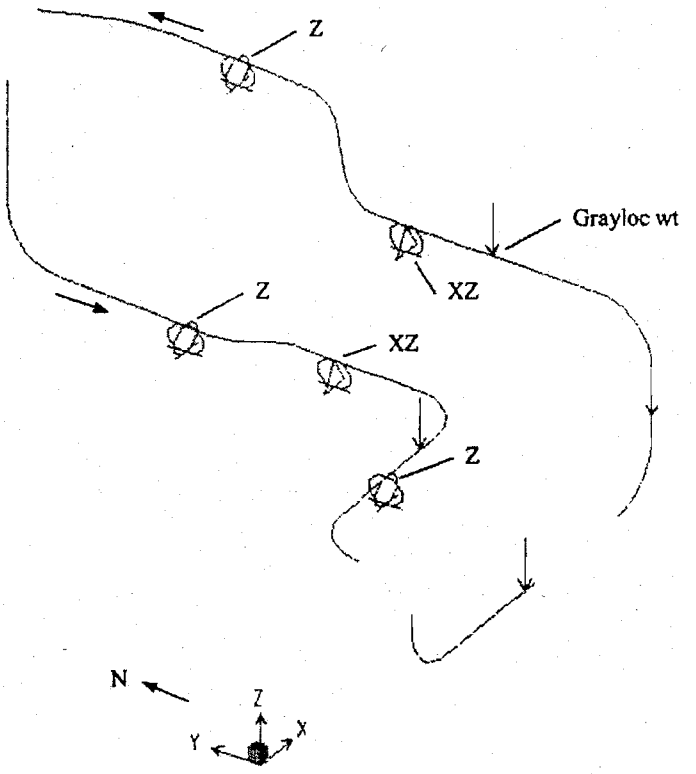

Piping Restraints and Grayloc Locations (Case 8d)

5.4 Seismic Analysis

Seismic data and parameters used in the analysis are as follows.

Seismic Parameters

Item	Description
Modal Analysis	Load Directed Ritz method
Inertia	From deadweight loading
Ritz Vectors	Linear in each direction: 8 Rotational about each axis: 3
Number of Modes	24
Damping	3%
Frequency Range	3.8 - 71 Hz (Case 8d)
Mass Participation	X = 95%, Y = 97%, Z = 92% (Case 8d)
Seismic Analysis Method	Response Spectrum Analysis
Modal Combination	CQC
Loading Directions	EW = X, NS = Y, Vert = Z
Directional Combination	SRSS.
Drift Combination	SRSS.

BY: E.O. Weiner
DATE:6/15/06

SUBJECT: PT TLP Coupled Structural Analysis for Evaluation of Nozzle Loads

Enveloped response spectra are shown below. The RGM data is that specified in Item 10b of the SCN, but the spectrum of Fig 407 was omitted in the envelope since there is no piping restraint normal to the wall. The Pre-RGM data precedes this data and corresponds to the same figure numbers in Ref. 00005A.

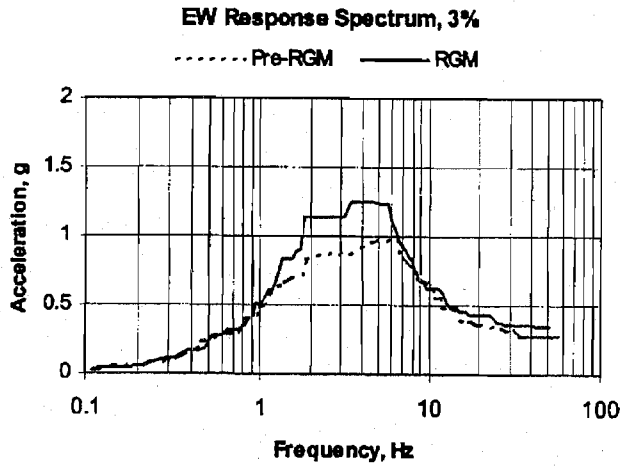

BY: E.O. Weiner
DATE:6/15/06

SUBJECT: PT TLP Coupled Structural Analysis for Evaluation of Nozzle Loads

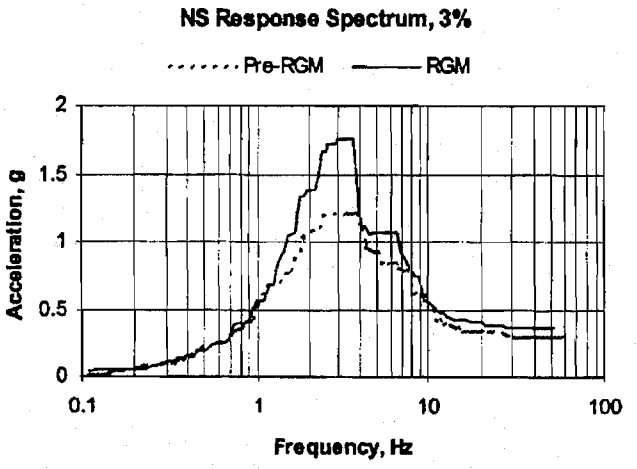

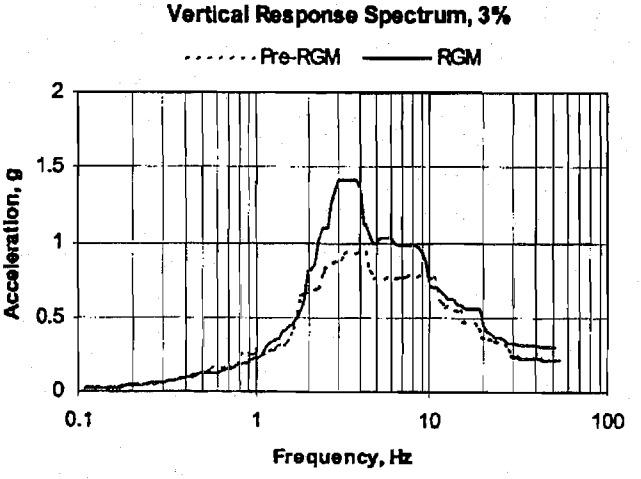

Case 8s used unenveloped RGM Elev 00 spectra that essentially leave out the Elev 56 effects. The vertical spectrum is the same as before. The horizontal spectra are those of Figures 21E and 22E of Ref. SCN, Item 10.b, and are shown below.

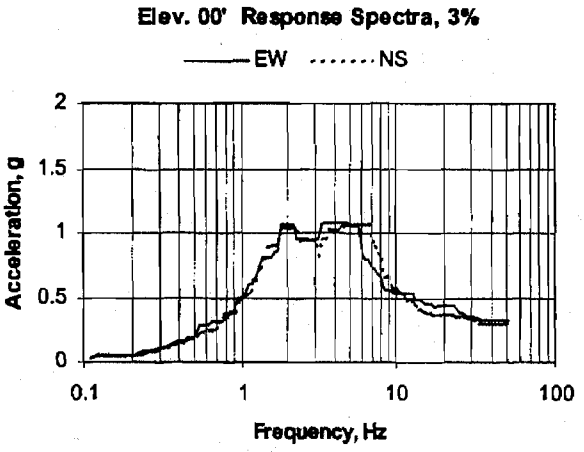

The static drift solution has the prescribed displacements at the top of the separator and 1/3 of those displacements at the piping restraints.

5.5 SAP2000 Results Cases

SAP2000 results cases (analysis cases and combinations) are as follows.

Results Cases

Case	Description
D	Deadweight
T	Thermal
MODAL	Modal analysis
RS	Response spectrum analysis
Dr	Drift
E	Seismic = SRSS of Dr and RS

5.6 Analysis Cases

Separate models were created for the various analysis cases. Each model is a modification of the merged model that was set up for Case 8d with the RGM spectra. The first three are those of Ref. SCN, and the remainders were subsequently requested by the participants of the study (J. Minichiello, E. Le, E. Ocoma & J. Julyk).

BY: E.O. Weiner
DATE:6/15/06

SUBJECT: PT TLP Coupled Structural Analysis for Evaluation of Nozzle Loads

Analysis Case Modifications

Analysis Case	Parent Case	Model Changes Relative to Parent Case
8a	8e	Relative to the final model of 8e, the nozzle links were assigned stiff properties.
8b	8d	Nozzle links were assigned stiff properties. Pump was set free in the horizontal plane.
8c	8d	Pump was set free in the horizontal plane.
8d		Parent model
8e	8d	Nozzle links were separated from the vessels but retained with the piping, thus isolating the runs between the pump, reboiler and separator. Vessel joints previously connected to the links were left free. Analysis provides anchor movements at these vessel-side joints. The deadweight and thermal movements were input as prescribed displacements on the piping-side joints. The seismic and drift displacements at all piping supports are input as zero. The vessels and frames were deleted to avoid obscuring mass participation of the piping, and the model was reanalyzed.
8f	8d	Removed Grayloc weights. This affects deadweight and seismic inertia.
8dB	8d	Constrained frame bases and top support to single joints for reporting reactions needed to compare with Case 8g.
8g	8dB	Removed separator top support.
8h	8d	Reread spectral functions with pre-RGM data.
8i	8d	Added NS restraint at top of 2nd elbow of reboiler discharge line.
8j	8i	Fixed the pump to the frame.
8k	8i	Replaced separator discharge NS frame constraint with NS ground restraint on far end of 2nd elbow from pump inlet.
8L	8k	Fixed the pump to the frame.
8o	8i	Added 10.5 Kip upward load support on reboiler discharge line between the first and second elbow from the reboiler. This does not affect inertia for seismic loading. Piping and vessels have 131 F temperature instead of 150 F.
8p	8i	Modeled 1/8" gap in EW direction at west pump support point. The gap was modeled by fixing the pump to the frame at this support and introducing a thermal load below reference on the support arm. The gap is the free thermal expansion. A large expansion coefficient was used to avoid swamping temperature contour plots used for checking. Piping and vessels have 131 F temperature instead of 150 F.
8q	8p	Reduced 1/8" gap to 1/16".
8r	8q	Reduced gap to 1/32".
8s	8r	Used Elev 00' spectra and 10.5 Kip upward load support on reboiler discharge line.

BY: E.O. Weiner
DATE:6/15/06

SUBJECT: PT TLP Coupled Structural Analysis for Evaluation of Nozzle Loads

6 Assumptions

Item	Assumption
Pump support	Various cases of pump fixity to the frame were considered, including gaps.
Nozzle stiffness	Vendor provided data, see Inputs section
Vessel & frame geometry, dimensions and weights	Base on preliminary data
Piping arrangement	Base on preliminary data
Weights of Grayloc fittings	Base on preliminary data
Piping constraints near separator discharge	Analyst provided. See Section 5.3.
SAP V&V	Dynamics features not included in Ref SAPVV.

7 Calculations

All calculations are in the SAP2000 system, Version 10. Verification and validation are reported in Ref SAPVV. It is to be noted that this reference does not cover dynamics features of the program.

8 Results and Conclusions

Nozzle loads and anchor movements from the SAP2000 analyses are shown in the following tables.

Results Tables - Description and Location

Table	Purpose	Page
Nozzle Loads	List P, V1, V2, T, M2 & M3 nozzle loads	12
Pump Support Gap Closure Loads	Gap compression loadings in west pump support arm indicate closure status	20
Mid-Elbow Loads	List P, V1, V2, T, M2 & M3 mid-elbow loads	21
RGM vs Pre-RGM Nozzle Loads	Compare RGM & Pre-RGM loads	25
Drift Nozzle Loads	Compare drift effects with total seismic	26
Frame Reactions	Show effect of top frame support on separator	26
Nozzle Displacements	List global nozzle displacements	27
Modal Participation	List mass participation of significant modes	34

BY: E.O. Weiner
DATE:6/15/06

SUBJECT: PT TLP Coupled Structural Analysis for Evaluation of Nozzle Loads

Nozzle Loads

Case	Location		Load	Kip P	Kip V2	Kip V3	in-Kip T	in-Kip M2	in-Kip M3
Case 8a	Pump	Inlet	D	-0.03	0.81	-0.04	-4	-1	55
		Dischg	D	4.27	2.36	0.76	26	-18	25
	Reboiler	Inlet	D	2.38	-3.95	0.76	17	-75	36
		Dischg	D	-0.53	-10.81	0.56	25	8	-275
	Separator	Inlet	D	0.32	-1.01	-0.56	-70	28	39
		Dischg	D	4.87	0.03	0.10	-1	-3	2
	Pump	Inlet	E	1.89	1.27	3.89	9	-109	37
		Dischg	E	1.88	0.62	0.98	13	-21	9
	Reboiler	Inlet	E	2.98	1.73	1.78	12	-43	25
		Dischg	E	7.55	4.30	7.88	473	-159	444
	Separator	Inlet	E	5.39	5.83	15.27	176	-1659	444
		Dischg	E	2.48	1.37	6.19	5	-33	55
	Pump	Inlet	T	-3.41	-2.62	-7.52	124	34	-29
		Dischg	T	-20.91	-70.84	0.51	21	-2	-1918
	Reboiler	Inlet	T	-70.73	-21.27	0.51	21	-46	-1512
		Dischg	T	-1.59	-1.91	5.14	352	-26	9
	Separator	Inlet	T	0.59	-1.00	-5.14	54	559	-84
		Dischg	T	-1.73	3.28	-22.24	16	1288	347
Case 8b	Pump	Inlet	D	0.02	0.64	0.02	2	1	49
		Dischg	D	2.88	-0.02	0.02	0	-6	-29
	Reboiler	Inlet	D	0.00	-5.35	0.02	-5	-3	-95
		Dischg	D	-0.53	-10.69	0.45	21	11	-269
	Separator	Inlet	D	0.28	-0.95	-0.45	-75	15	42
		Dischg	D	4.88	0.02	0.45	-1	-25	1
	Pump	Inlet	E	3.45	2.19	10.04	75	-189	59
		Dischg	E	3.45	15.76	14.51	519	-318	421
	Reboiler	Inlet	E	18.21	4.23	19.59	436	-1968	225
		Dischg	E	11.67	9.72	17.15	1058	-278	704
	Separator	Inlet	E	8.51	9.06	28.16	277	-3010	692
		Dischg	E	5.07	5.53	29.27	110	-1242	544
	Pump	Inlet	T	-1.70	-2.45	-1.91	106	-86	-23
		Dischg	T	-0.15	1.91	-1.70	-19	54	62
	Reboiler	Inlet	T	1.91	-0.14	-1.70	-23	207	-43
		Dischg	T	-1.49	-1.78	4.74	323	-24	9
	Separator	Inlet	T	0.53	-0.96	-4.74	51	512	-82
		Dischg	T	-1.07	0.41	2.57	19	-94	60

Notes:
P is axial, positive is tension. V3 is horizontal
V2 has an upward sense, unless P is vertical. Then V2 follows X (east)
M2 & M3 axes follow V2 and V3.
M2 has the sign reversed relative to the SAP2000 local system so all systems are right handed.
M2 reversal reverses the sign of the positive seismic amplitude.

BY: E.O. Weiner
DATE:6/15/06

SUBJECT: PT TLP Coupled Structural Analysis for Evaluation of Nozzle Loads

Nozzle Loads

Case	Location		Load	Kip P	Kip V2	Kip V3	in-Kip T	in-Kip M2	in-Kip M3
Case 8c	Pump	Inlet	D	0.01	0.65	0.00	2	1	50
		Dischg	D	3.35	0.00	0.01	1	-6	-34
	Reboiler	Inlet	D	0.02	-4.88	0.01	-5	-1	-39
		Dischg	D	-0.62	-10.57	0.37	20	13	-247
	Separator	Inlet	D	0.21	-1.03	-0.37	-74	2	17
		Dischg	D	4.87	0.03	0.29	-1	-15	2
	Pump	Inlet	E	8.50	1.94	27.76	96	-285	50
		Dischg	E	5.23	32.66	13.88	1244	-97	880
	Reboiler	Inlet	E	35.39	6.19	22.76	762	-1432	128
		Dischg	E	10.91	12.12	35.48	2404	-298	560
	Separator	Inlet	E	12.58	8.32	11.65	237	-458	388
		Dischg	E	8.00	9.62	27.69	136	-838	934
	Pump	Inlet	T	-1.11	-2.34	-0.80	100	-89	-21
		Dischg	T	-0.10	0.80	-1.11	-61	19	30
	Reboiler	Inlet	T	0.80	-0.09	-1.11	-32	87	-19
		Dischg	T	-0.96	-0.97	1.75	103	0	13
	Separator	Inlet	T	-0.82	-0.24	-1.75	36	69	-13
		Dischg	T	-0.86	0.06	0.64	16	-14	23
Case 8d	Pump	Inlet	D	-0.05	0.65	-0.11	2	2	50
		Dischg	D	3.37	0.11	0.09	6	-6	-31
	Reboiler	Inlet	D	0.14	-4.86	0.09	-2	-6	-39
		Dischg	D	-0.62	-10.57	0.37	20	14	-247
	Separator	Inlet	D	0.21	-1.03	-0.37	-74	2	17
		Dischg	D	4.85	0.06	0.32	-1	-15	5
	Pump	Inlet	E	4.53	1.93	8.57	80	-165	47
		Dischg	E	2.68	15.59	2.21	316	-85	423
	Reboiler	Inlet	E	19.04	3.57	4.39	157	-74	91
		Dischg	E	9.60	10.77	30.61	2074	-254	497
	Separator	Inlet	E	11.03	7.29	10.12	206	-398	339
		Dischg	E	5.22	3.46	23.88	102	-763	325
	Pump	Inlet	T	-2.01	-2.32	-2.75	103	-64	-19
		Dischg	T	0.21	2.75	-0.10	-6	11	82
	Reboiler	Inlet	T	2.75	0.23	-0.10	6	6	-13
		Dischg	T	-0.96	-0.95	1.73	103	1	13
	Separator	Inlet	T	-0.81	-0.24	-1.73	35	69	-14
		Dischg	T	-1.14	0.58	1.15	20	-5	74

Notes: P is axial, positive is tension. V3 is horizontal
V2 has an upward sense, unless P is vertical. Then V2 follows X (east)
M2 & M3 axes follow V2 and V3.
M2 has the sign reversed relative to the SAP2000 local system so all systems are right handed.
M2 reversal reverses the sign of the positive seismic amplitude.

BY: E.O. Weiner
DATE:6/15/06

SUBJECT: PT TLP Coupled Structural Analysis for Evaluation of Nozzle Loads

Nozzle Loads

Case	Location		Load	Kip P	Kip V2	Kip V3	in-Kip T	in-Kip M2	in-Kip M3
Case 8e	Pump	Inlet	D	-0.03	0.81	-0.04	-4	-1	55
		Dischg	D	3.86	1.30	0.14	11	-3	-2
	Reboiler	Inlet	D	1.32	-4.37	0.14	4	-7	1
		Dischg	D	-0.62	-10.66	0.40	18	12	-253
	Separator	Inlet	D	0.22	-1.08	-0.40	-70	4	16
		Dischg	D	4.86	0.03	0.06	-1	-2	1
	Pump	Inlet	E	2.03	1.40	3.95	9	-110	38
		Dischg	E	2.52	1.24	1.34	24	-31	30
	Reboiler	Inlet	E	1.65	1.44	1.25	22	-5	12
		Dischg	E	8.33	7.76	26.89	1837	-233	426
	Separator	Inlet	E	8.10	6.08	8.62	175	-336	285
		Dischg	E	2.27	1.27	5.94	6	-19	44
	Pump	Inlet	T	-3.37	-2.67	-7.31	125	29	-29
		Dischg	T	-6.66	-38.21	0.12	12	7	-1097
	Reboiler	Inlet	T	-38.18	-6.85	0.12	12	-4	-263
		Dischg	T	-0.99	-0.99	1.79	106	1	13
	Separator	Inlet	T	-0.84	-0.25	-1.79	37	72	-13
		Dischg	T	-1.69	2.59	-10.31	31	637	273
Case 8f	Pump	Inlet	D	-0.06	-0.22	-0.13	0	1	18
		Dischg	D	3.23	0.13	0.08	6	-3	-28
	Reboiler	Inlet	D	0.14	-2.05	0.08	0	-5	-18
		Dischg	D	-0.33	-6.09	0.25	15	5	-132
	Separator	Inlet	D	0.56	-1.32	-0.25	-56	-1	13
		Dischg	D	4.64	0.11	0.27	-4	-14	7
	Pump	Inlet	E	3.04	1.40	5.10	67	-91	26
		Dischg	E	2.18	12.57	1.38	200	-69	342
	Reboiler	Inlet	E	15.00	2.66	2.66	96	-51	72
		Dischg	E	4.74	6.48	18.02	1259	-141	257
	Separator	Inlet	E	8.38	5.03	6.65	127	-253	227
		Dischg	E	4.00	2.68	21.60	101	-776	246
	Pump	Inlet	T	-2.01	-2.32	-2.75	103	-64	-19
		Dischg	T	0.21	2.75	-0.10	-6	11	82
	Reboiler	Inlet	T	2.75	0.23	-0.10	6	6	-13
		Dischg	T	-0.96	-0.95	1.73	103	1	13
	Separator	Inlet	T	-0.81	-0.24	-1.73	35	69	-14
		Dischg	T	-1.14	0.58	1.15	20	-5	74

Notes: P is axial, positive is tension. V3 is horizontal
V2 has an upward sense, unless P is vertical. Then V2 follows X (east)
M2 & M3 axes follow V2 and V3.
M2 has the sign reversed relative to the SAP2000 local system so all systems are right handed.
M2 reversal reverses the sign of the positive seismic amplitude.

BY: E.O. Weiner
DATE:6/15/06

SUBJECT: PT TLP Coupled Structural Analysis for Evaluation of Nozzle Loads

Nozzle Loads

Case	Location		Load	Kip P	Kip V2	Kip V3	in-Kip T	in-Kip M2	in-Kip M3
Case 8i	Pump	Inlet	D	-0.05	0.65	-0.11	2	2	50
		Dischg	D	3.37	0.11	0.09	6	-6	-31
	Reboiler	Inlet	D	0.14	-4.86	0.09	-2	-6	-39
		Dischg	D	-0.62	-10.56	0.34	17	14	-247
	Separator	Inlet	D	0.20	-1.03	-0.38	-74	3	18
		Dischg	D	4.85	0.06	0.32	-1	-15	5
	Pump	Inlet	E	4.61	1.65	8.58	80	-167	34
		Dischg	E	2.62	15.60	2.17	318	-83	424
	Reboiler	Inlet	E	19.05	3.52	4.38	157	-63	79
		Dischg	E	8.79	7.06	1.86	112	-101	499
	Separator	Inlet	E	8.33	4.33	1.71	118	-57	163
		Dischg	E	5.33	3.44	24.43	102	-771	323
	Pump	Inlet	T	-2.01	-2.32	-2.75	103	-64	-19
		Dischg	T	0.22	2.75	-0.09	-6	10	82
	Reboiler	Inlet	T	2.75	0.23	-0.09	6	6	-13
		Dischg	T	-0.91	-0.82	1.30	71	4	15
	Separator	Inlet	T	-0.89	-0.16	-1.85	32	75	-10
		Dischg	T	-1.14	0.58	1.18	20	-7	74
Case 8j	Pump	Inlet	D	-0.04	0.65	-0.10	2	1	50
		Dischg	D	3.38	0.16	0.10	8	-6	-30
	Reboiler	Inlet	D	0.18	-4.85	0.10	-1	-6	-38
		Dischg	D	-0.61	-10.56	0.34	17	14	-247
	Separator	Inlet	D	0.20	-1.03	-0.38	-74	3	18
		Dischg	D	4.85	0.05	0.32	-1	-15	4
	Pump	Inlet	E	4.08	1.20	6.81	33	-154	32
		Dischg	E	1.02	5.15	1.74	217	-62	142
	Reboiler	Inlet	E	2.53	1.61	3.43	103	-50	42
		Dischg	E	7.91	6.83	2.15	101	-94	450
	Separator	Inlet	E	7.99	4.06	1.63	108	-58	155
		Dischg	E	5.21	1.63	24.65	102	-776	135
	Pump	Inlet	T	-3.14	-1.64	-5.76	56	-31	-14
		Dischg	T	-2.24	-12.28	0.29	37	14	-321
	Reboiler	Inlet	T	-12.27	-2.30	0.29	28	-2	-66
		Dischg	T	-0.99	-0.91	1.44	79	6	14
	Separator	Inlet	T	-0.91	-0.23	-1.87	37	75	-12
		Dischg	T	-1.39	1.72	1.85	26	4	182

Notes: P is axial, positive is tension. V3 is horizontal
V2 has an upward sense, unless P is vertical. Then V2 follows X (east)
M2 & M3 axes follow V2 and V3.
M2 has the sign reversed relative to the SAP2000 local system so all systems are right handed.
M2 reversal reverses the sign of the positive seismic amplitude.

BY: E.O. Weiner
DATE:6/15/06

SUBJECT: PT TLP Coupled Structural Analysis for Evaluation of Nozzle Loads

Nozzle Loads

Case	Location		Load	Kip P	Kip V2	Kip V3	in-Kip T	in-Kip M2	in-Kip M3
Case 8k	Pump	Inlet	D	0.01	0.65	-0.09	2	3	50
		Dischg	D	3.37	0.09	0.11	8	-6	-31
	Reboiler	Inlet	D	0.12	-4.86	0.11	-1	-6	-39
		Dischg	D	-0.61	-10.56	0.34	17	14	-247
	Separator	Inlet	D	0.20	-1.03	-0.38	-75	3	18
		Dischg	D	4.81	0.06	-0.19	-1	17	5
	Pump	Inlet	E	2.08	2.14	10.63	94	-120	43
		Dischg	E	3.20	19.55	2.16	305	-91	531
	Reboiler	Inlet	E	24.01	4.25	4.49	152	-57	92
		Dischg	E	8.87	7.19	2.24	114	-104	506
	Separator	Inlet	E	8.39	4.33	1.73	118	-43	157
		Dischg	E	3.86	4.15	9.42	102	-938	385
	Pump	Inlet	T	1.06	-2.19	-2.33	108	22	-9
		Dischg	T	0.14	2.33	0.61	70	18	71
	Reboiler	Inlet	T	2.33	0.15	0.61	45	-11	-15
		Dischg	T	-0.87	-0.80	1.28	70	4	14
	Separator	Inlet	T	-0.80	-0.18	-1.65	25	64	-12
		Dischg	T	-4.18	0.60	-12.15	17	1065	74
Case 8L	Pump	Inlet	D	0.02	0.65	-0.07	2	3	50
		Dischg	D	3.38	0.15	0.11	9	-6	-30
	Reboiler	Inlet	D	0.18	-4.85	0.11	-1	-7	-38
		Dischg	D	-0.61	-10.56	0.34	17	14	-247
	Separator	Inlet	D	0.20	-1.03	-0.38	-75	3	18
		Dischg	D	4.81	0.05	-0.18	-1	16	4
	Pump	Inlet	E	2.01	1.88	10.27	35	-134	55
		Dischg	E	1.08	5.71	1.82	254	-75	158
	Reboiler	Inlet	E	3.62	1.73	3.96	120	-56	42
		Dischg	E	7.89	6.85	2.45	103	-95	450
	Separator	Inlet	E	8.01	4.03	1.68	107	-45	149
		Dischg	E	3.84	2.07	8.08	106	-840	117
	Pump	Inlet	T	0.00	-1.55	-5.23	62	60	-5
		Dischg	T	-2.27	-12.39	0.92	104	20	-324
	Reboiler	Inlet	T	-12.38	-2.33	0.92	61	-18	-68
		Dischg	T	-0.94	-0.88	1.42	78	6	13
	Separator	Inlet	T	-0.81	-0.25	-1.66	30	64	-15
		Dischg	T	-4.37	1.73	-13.09	23	1149	180

Notes: P is axial, positive is tension. V3 is horizontal
V2 has an upward sense, unless P is vertical. Then V2 follows X (east)
M2 & M3 axes follow V2 and V3.
M2 has the sign reversed relative to the SAP2000 local system so all systems are right handed.
M2 reversal reverses the sign of the positive seismic amplitude.

BY: E.O. Weiner
DATE:6/15/06

SUBJECT: PT TLP Coupled Structural Analysis for Evaluation of Nozzle Loads

Nozzle Loads

Case	Location		Load	Kip P	Kip V2	Kip V3	in-Kip T	in-Kip M2	in-Kip M3
Case 8o	Pump	Inlet	D	-0.10	0.66	-0.25	2	3	50
		Dischg	D	3.82	0.25	0.11	8	-6	-34
	Reboiler	Inlet	D	0.27	-4.41	0.11	-1	-7	12
		Dischg	D	-0.01	-0.49	0.36	-4	-14	12
	Separator	Inlet	D	0.96	-1.61	-0.22	-46	1	6
		Dischg	D	4.83	0.10	0.34	0	-14	9
	Pump	Inlet	E	4.61	1.65	8.58	80	-167	34
		Dischg	E	2.62	15.60	2.17	318	-83	424
	Reboiler	Inlet	E	19.05	3.52	4.38	157	-63	79
		Dischg	E	8.79	7.06	1.86	112	-101	499
	Separator	Inlet	E	8.33	4.33	1.71	118	-57	163
		Dischg	E	5.33	3.44	24.43	102	-771	323
	Pump	Inlet	T	-1.45	-2.62	-2.02	98	-45	-36
		Dischg	T	0.26	2.02	-0.05	-3	12	57
	Reboiler	Inlet	T	2.02	0.27	-0.05	9	5	2
		Dischg	T	-0.71	-0.71	1.09	61	9	-1
	Separator	Inlet	T	-0.32	-0.68	-1.28	43	57	-67
		Dischg	T	0.03	0.29	0.83	24	25	53
Case 8p	Pump	Inlet	D	-0.05	0.65	-0.11	2	2	50
		Dischg	D	3.38	0.15	0.09	6	-6	-30
	Reboiler	Inlet	D	0.17	-4.85	0.09	-2	-6	-38
		Dischg	D	-0.61	-10.56	0.34	17	14	-247
	Separator	Inlet	D	0.20	-1.03	-0.38	-74	3	18
		Dischg	D	4.85	0.06	0.32	-1	-15	5
	Pump	Inlet	E	4.25	1.18	7.20	33	-148	30
		Dischg	E	1.00	4.50	1.99	273	-75	123
	Reboiler	Inlet	E	4.00	1.53	3.98	134	-57	44
		Dischg	E	8.02	6.89	2.09	103	-95	457
	Separator	Inlet	E	8.05	4.08	1.65	109	-58	155
		Dischg	E	5.28	1.90	24.72	101	-776	173
	Pump	Inlet	T	-1.32	-2.74	-1.67	106	-49	-37
		Dischg	T	0.57	3.83	-0.11	-9	11	106
	Reboiler	Inlet	T	3.83	0.59	-0.11	6	6	9
		Dischg	T	-0.70	-0.70	1.08	60	9	-1
	Separator	Inlet	T	-0.32	-0.67	-1.28	42	57	-67
		Dischg	T	0.07	0.15	0.75	24	24	41

Notes: P is axial, positive is tension. V3 is horizontal
V2 has an upward sense, unless P is vertical. Then V2 follows X (east)
M2 & M3 axes follow V2 and V3.
M2 has the sign reversed relative to the SAP2000 local system so all systems are right handed.
M2 reversal reverses the sign of the positive seismic amplitude.

BY: E.O. Weiner
DATE:6/15/06

SUBJECT: PT TLP Coupled Structural Analysis for Evaluation of Nozzle Loads

Nozzle Loads

Case	Location		Load	Kip P	Kip V2	Kip V3	in-Kip T	in-Kip M2	in-Kip M3
Case 8q	Pump	Inlet	D	-0.05	0.65	-0.11	2	2	50
		Dischg	D	3.38	0.15	0.09	6	-6	-30
	Reboiler	Inlet	D	0.17	-4.85	0.09	-2	-6	-38
		Dischg	D	-0.61	-10.56	0.34	17	14	-247
	Separator	Inlet	D	0.20	-1.03	-0.38	-74	3	18
		Dischg	D	4.85	0.06	0.32	-1	-15	5
	Pump	Inlet	E	4.25	1.18	7.20	33	-148	30
		Dischg	E	1.00	4.50	1.99	273	-75	123
	Reboiler	Inlet	E	4.00	1.53	3.98	134	-57	44
		Dischg	E	8.02	6.89	2.09	103	-95	457
	Separator	Inlet	E	8.05	4.08	1.65	109	-58	155
		Dischg	E	5.28	1.90	24.72	101	-776	173
	Pump	Inlet	T	-1.70	-2.51	-2.66	90	-39	-35
		Dischg	T	-0.26	-1.28	0.05	9	13	-32
	Reboiler	Inlet	T	-1.28	-0.27	0.05	15	3	-9
		Dischg	T	-0.73	-0.73	1.13	63	9	-1
	Separator	Inlet	T	-0.32	-0.69	-1.29	44	57	-68
		Dischg	T	-0.02	0.53	0.98	26	27	76
Case 8r	Pump	Inlet	D	-0.05	0.65	-0.11	2	2	50
		Dischg	D	3.38	0.15	0.09	6	-6	-30
	Reboiler	Inlet	D	0.17	-4.85	0.09	-2	-6	-38
		Dischg	D	-0.61	-10.56	0.34	17	14	-247
	Separator	Inlet	D	0.20	-1.03	-0.38	-74	3	18
		Dischg	D	4.85	0.06	0.32	-1	-15	5
	Pump	Inlet	E	4.25	1.18	7.20	33	-148	30
		Dischg	E	1.00	4.50	1.99	273	-75	123
	Reboiler	Inlet	E	4.00	1.53	3.98	134	-57	44
		Dischg	E	8.02	6.89	2.09	103	-95	457
	Separator	Inlet	E	8.05	4.08	1.65	109	-58	155
		Dischg	E	5.28	1.90	24.72	101	-776	173
	Pump	Inlet	T	-1.89	-2.39	-3.16	82	-34	-35
		Dischg	T	-0.68	-3.84	0.13	18	14	-101
	Reboiler	Inlet	T	-3.83	-0.70	0.13	20	1	-18
		Dischg	T	-0.74	-0.75	1.15	65	10	-2
	Separator	Inlet	T	-0.33	-0.70	-1.29	45	57	-68
		Dischg	T	-0.06	0.72	1.09	27	29	94

Notes: P is axial, positive is tension. V3 is horizontal
V2 has an upward sense, unless P is vertical. Then V2 follows X (east)
M2 & M3 axes follow V2 and V3.
M2 has the sign reversed relative to the SAP2000 local system so all systems are right handed.
M2 reversal reverses the sign of the positive seismic amplitude.

BY: E.O. Weiner
DATE:6/15/06

SUBJECT: PT TLP Coupled Structural Analysis for Evaluation of Nozzle Loads

Nozzle Loads

Case	Location		Load	Kip P	Kip V2	Kip V3	in-Kip T	in-Kip M2	in-Kip M3
Case 8s	Pump	Inlet	D	-0.07	0.64	-0.16	4	2	50
		Dischg	D	3.89	0.67	0.10	7	-6	-23
	Reboiler	Inlet	D	0.70	-4.33	0.10	-1	-7	14
		Dischg	D	-0.01	-0.49	0.36	-4	-14	12
	Separator	Inlet	D	0.96	-1.61	-0.22	-46	1	6
		Dischg	D	4.84	0.07	0.32	0	-14	6
	Pump	Inlet	E	4.19	1.17	6.57	32	-143	30
		Dischg	E	0.98	4.30	1.93	255	-70	118
	Reboiler	Inlet	E	3.68	1.50	3.77	125	-54	43
		Dischg	E	7.60	6.79	2.08	98	-91	434
	Separator	Inlet	E	7.77	3.93	1.61	104	-57	152
		Dischg	E	5.24	1.77	24.71	98	-774	163
	Pump	Inlet	T	-1.89	-2.39	-3.16	82	-34	-35
		Dischg	T	-0.68	-3.84	0.13	18	14	-101
	Reboiler	Inlet	T	-3.83	-0.70	0.13	20	1	-18
		Dischg	T	-0.74	-0.75	1.15	65	10	-2
	Separator	Inlet	T	-0.33	-0.70	-1.29	45	57	-68
		Dischg	T	-0.06	0.72	1.09	27	29	94

Notes: P is axial, positive is tension. V3 is horizontal
V2 has an upward sense, unless P is vertical. Then V2 follows X (east)
M2 & M3 axes follow V2 and V3.
M2 has the sign reversed relative to the SAP2000 local system so all systems are right handed.
M2 reversal reverses the sign of the positive seismic amplitude.

BY: E.O. Weiner
DATE:6/15/06

SUBJECT: PT TLP Coupled Structural Analysis for Evaluation of Nozzle Loads

Pump Support Gap Closure Loads

Case	in Gap	Load	Kip P	Remark
Case 8p	1/8	D	0.04	
		E	8.74	Seismic amplitude
		T	2.16	Tension, gap did not close
Case 8q	1/16	D	0.04	
		E	8.74	Seismic amplitude, exceeds thermal compression and suggests opening during seismic event
		T	-3.94	Compression, gap closed
Case 8r	1/32	D	0.04	
		E	8.74	Seismic amplitude, exceeds thermal compression and suggests opening during seismic event
		T	-6.99	Compression, gap closed
Case 8s	1/32	D	0.51	
		E	8.08	Seismic amplitude, exceeds thermal compression and suggests opening during seismic event
		T	-7.00	Compression, gap closed

BY: E.O. Weiner
DATE:6/15/06

SUBJECT: PT TLP Coupled Structural Analysis for Evaluation of Nozzle Loads

Mid-Elbow Loads

Case	Location		Load	Kip P	Kip V2	Kip V3	in-Kip T	in-Kip M2	in-Kip M3
Case 8a	Pump	Inlet	D	-0.05	0.01	-1.74	24	8	1
	Reboiler	Dischg	D	-7.40	6.57	0.56	30	3	-8
	Separator	Dischg	D	0.99	-0.98	-0.03	-2	0	16
	Pump	Inlet	E	2.42	3.28	1.16	8	2	17
	Reboiler	Dischg	E	4.24	7.47	7.83	349	217	288
	Separator	Dischg	E	5.76	4.23	0.34	3	5	40
	Pump	Inlet	T	-7.73	2.91	2.62	96	-39	128
	Reboiler	Dischg	T	-2.48	0.21	5.14	286	-134	42
	Separator	Dischg	T	-3.60	-1.27	-3.28	39	29	79
Case 8b	Pump	Inlet	D	0.03	0.00	-1.57	26	4	-1
	Reboiler	Dischg	D	-7.32	6.49	0.45	28	5	-4
	Separator	Dischg	D	1.04	-0.96	-0.02	-1	0	16
	Pump	Inlet	E	5.53	7.97	2.10	61	28	151
	Reboiler	Dischg	E	8.09	12.45	16.97	794	465	439
	Separator	Dischg	E	11.38	7.85	5.80	75	88	73
	Pump	Inlet	T	-2.55	0.14	2.45	86	-27	118
	Reboiler	Dischg	T	-2.32	0.20	4.74	263	-122	40
	Separator	Dischg	T	-1.83	-0.61	-0.41	28	3	29
Case 8c	Pump	Inlet	D	0.01	0.01	-1.58	26	4	-1
	Reboiler	Dischg	D	-7.29	6.34	0.37	28	5	13
	Separator	Dischg	D	1.02	-0.96	-0.03	-1	0	16
	Pump	Inlet	E	26.06	13.94	1.77	87	38	383
	Reboiler	Dischg	E	11.80	10.80	35.29	1895	975	368
	Separator	Dischg	E	20.84	14.10	9.62	109	171	139
	Pump	Inlet	T	-1.35	-0.23	2.34	82	-24	98
	Reboiler	Dischg	T	-1.36	-0.01	1.75	92	-28	28
	Separator	Dischg	T	-1.34	-0.27	-0.06	24	-1	27
Case 8d	Pump	Inlet	D	-0.11	0.05	-1.58	26	4	1
	Reboiler	Dischg	D	-7.29	6.34	0.37	28	5	13
	Separator	Dischg	D	0.97	-0.99	-0.06	-1	1	17
	Pump	Inlet	E	4.48	7.30	1.80	69	29	116
	Reboiler	Dischg	E	10.34	9.64	30.44	1638	839	326
	Separator	Dischg	E	12.42	8.95	3.79	67	74	71
	Pump	Inlet	T	-3.37	0.52	2.32	85	-26	115
	Reboiler	Dischg	T	-1.35	-0.01	1.73	92	-27	28
	Separator	Dischg	T	-2.12	-0.76	-0.58	28	7	32

Notes Results are at the center of each elbow listed nearest the nozzle listed.
Forces & moments are in the SAP2000 frame local coordinate system.
The user-specified local system for elbows have the 2-axis pointing to the center of the elbow run.
M2 is out-of-plane bending. M3 is in-plane bending. Positive P is tension.

BY: E.O. Weiner
DATE:6/15/06

SUBJECT: PT TLP Coupled Structural Analysis for Evaluation of Nozzle Loads

Mid-Elbow Loads

Case	Location		Load	Kip P	Kip V2	Kip V3	in-Kip T	in-Kip M2	in-Kip M3
Case 8e	Pump	Inlet	D	-0.05	0.01	-1.74	24	8	1
	Reboiler	Dischg	D	-7.35	6.40	0.40	26	6	10
	Separator	Dischg	D	0.98	-0.97	-0.03	-2	1	17
	Pump	Inlet	E	2.52	3.32	1.16	8	2	17
	Reboiler	Dischg	E	8.13	7.80	26.82	1439	756	285
	Separator	Dischg	E	5.78	4.24	0.32	4	6	40
	Pump	Inlet	T	-7.56	2.79	2.67	97	-39	128
	Reboiler	Dischg	T	-1.40	-0.01	1.79	95	-28	28
	Separator	Dischg	T	-3.55	-1.28	-2.59	44	36	77
Case 8f	Pump	Inlet	D	-0.13	0.05	-0.71	12	6	1
	Reboiler	Dischg	D	-3.91	3.39	0.25	17	-1	13
	Separator	Dischg	D	0.81	-0.85	-0.11	-5	2	17
	Pump	Inlet	E	2.96	3.95	1.32	55	25	96
	Reboiler	Dischg	E	6.13	4.79	17.90	995	516	183
	Separator	Dischg	E	8.83	6.56	3.12	65	65	46
	Pump	Inlet	T	-3.37	0.52	2.32	85	-26	115
	Reboiler	Dischg	T	-1.35	-0.01	1.73	92	-27	28
	Separator	Dischg	T	-2.12	-0.76	-0.58	28	7	32
Case 8i	Pump	Inlet	D	-0.11	0.05	-1.58	26	4	1
	Reboiler	Dischg	D	-7.28	6.33	0.34	26	6	13
	Separator	Dischg	D	0.97	-0.99	-0.06	-1	1	17
	Pump	Inlet	E	4.52	7.33	1.57	67	28	117
	Reboiler	Dischg	E	5.89	9.26	1.42	152	25	306
	Separator	Dischg	E	12.75	9.19	3.79	67	74	72
	Pump	Inlet	T	-3.37	0.52	2.32	85	-26	115
	Reboiler	Dischg	T	-1.22	-0.07	1.30	67	-14	26
	Separator	Dischg	T	-2.12	-0.76	-0.58	29	7	32
Case 8j	Pump	Inlet	D	-0.10	0.04	-1.58	26	4	1
	Reboiler	Dischg	D	-7.28	6.33	0.34	26	6	13
	Separator	Dischg	D	0.97	-0.99	-0.05	-1	1	17
	Pump	Inlet	E	4.37	5.85	1.10	30	12	93
	Reboiler	Dischg	E	5.64	8.43	1.70	137	26	276
	Separator	Dischg	E	12.37	8.95	2.41	66	55	67
	Pump	Inlet	T	-6.30	1.85	1.64	47	-7	149
	Reboiler	Dischg	T	-1.34	-0.06	1.44	76	-15	27
	Separator	Dischg	T	-3.02	-1.46	-1.72	34	27	39

Notes Results are at the center of each elbow listed nearest the nozzle listed.
Forces & moments are in the SAP2000 frame local coordinate system.
The user-specified local system for elbows have the 2-axis pointing to the center of the elbow run.
M2 is out-of-plane bending. M3 is in-plane bending. Positive P is tension.

BY: E.O. Weiner
DATE:6/15/06

SUBJECT: PT TLP Coupled Structural Analysis for Evaluation of Nozzle Loads

Mid-Elbow Loads

Case	Location		Load	Kip P	Kip V2	Kip V3	in-Kip T	in-Kip M2	in-Kip M3
Case 8k	Pump	Inlet	D	-0.06	0.07	-1.58	26	4	-1
	Reboiler	Dischg	D	-7.28	6.33	0.34	26	6	13
	Separator	Dischg	D	0.83	-1.05	-0.06	-1	1	19
	Pump	Inlet	E	6.21	7.16	1.99	75	35	163
	Reboiler	Dischg	E	5.96	9.38	1.80	153	26	310
	Separator	Dischg	E	9.55	6.02	4.28	67	83	113
	Pump	Inlet	T	-0.89	2.40	2.19	94	-25	51
	Reboiler	Dischg	T	-1.18	-0.06	1.28	67	-13	25
	Separator	Dischg	T	-11.40	-5.92	-0.60	24	8	159
Case 8L	Pump	Inlet	D	-0.04	0.06	-1.58	26	4	-1
	Reboiler	Dischg	D	-7.28	6.33	0.34	26	6	13
	Separator	Dischg	D	0.84	-1.05	-0.05	-1	1	19
	Pump	Inlet	E	6.32	7.28	1.64	35	16	142
	Reboiler	Dischg	E	5.65	8.42	2.00	137	27	276
	Separator	Dischg	E	8.94	5.61	1.88	69	66	100
	Pump	Inlet	T	-3.70	3.70	1.55	58	-7	78
	Reboiler	Dischg	T	-1.29	-0.05	1.42	75	-14	26
	Separator	Dischg	T	-12.18	-6.47	-1.73	29	28	170
Case 8o	Pump	Inlet	D	-0.25	0.10	-1.59	26	4	3
	Reboiler	Dischg	D	0.30	-0.32	0.36	-9	2	13
	Separator	Dischg	D	0.92	-1.02	-0.10	0	2	17
	Pump	Inlet	E	4.52	7.33	1.57	67	28	117
	Reboiler	Dischg	E	5.89	9.26	1.42	152	25	306
	Separator	Dischg	E	12.75	9.19	3.79	67	74	72
	Pump	Inlet	T	-2.46	0.40	2.62	73	-27	83
	Reboiler	Dischg	T	-1.00	0.00	1.09	62	-9	10
	Separator	Dischg	T	-0.91	-1.14	-0.29	36	2	3
Case 8p	Pump	Inlet	D	-0.11	0.04	-1.58	26	4	1
	Reboiler	Dischg	D	-7.28	6.33	0.34	26	6	13
	Separator	Dischg	D	0.97	-0.99	-0.06	-1	1	17
	Pump	Inlet	E	4.41	6.20	1.05	30	10	102
	Reboiler	Dischg	E	5.69	8.54	1.62	139	26	280
	Separator	Dischg	E	12.77	9.20	2.67	66	57	71
	Pump	Inlet	T	-2.12	0.25	2.74	79	-29	79
	Reboiler	Dischg	T	-0.99	0.00	1.08	61	-9	10
	Separator	Dischg	T	-0.80	-1.06	-0.15	36	-1	2

Notes Results are at the center of each elbow listed nearest the nozzle listed.
Forces & moments are in the SAP2000 frame local coordinate system.
The user-specified local system for elbows have the 2-axis pointing to the center of the elbow run.
M2 is out-of-plane bending. M3 is in-plane bending. Positive P is tension.

BY: E.O. Weiner
DATE:6/15/06

SUBJECT: PT TLP Coupled Structural Analysis for Evaluation of Nozzle Loads

Mid-Elbow Loads

Case	Location		Load	Kip P	Kip V2	Kip V3	in-Kip T	in-Kip M2	in-Kip M3
Case 8q	Pump	Inlet	D	-0.11	0.04	-1.58	26	4	1
	Reboiler	Dischg	D	-7.28	6.33	0.34	26	6	13
	Separator	Dischg	D	0.97	-0.99	-0.06	-1	1	17
	Pump	Inlet	E	4.41	6.20	1.05	30	10	102
	Reboiler	Dischg	E	5.69	8.54	1.62	139	26	280
	Separator	Dischg	E	12.77	9.20	2.67	66	57	71
	Pump	Inlet	T	-3.09	0.68	2.51	66	-23	91
	Reboiler	Dischg	T	-1.03	0.00	1.13	64	-9	10
	Separator	Dischg	T	-1.11	-1.30	-0.53	37	6	4
Case 8r	Pump	Inlet	D	-0.11	0.04	-1.58	26	4	1
	Reboiler	Dischg	D	-7.28	6.33	0.34	26	6	13
	Separator	Dischg	D	0.97	-0.99	-0.06	-1	1	17
	Pump	Inlet	E	4.41	6.20	1.05	30	10	102
	Reboiler	Dischg	E	5.69	8.54	1.62	139	26	280
	Separator	Dischg	E	12.77	9.20	2.67	66	57	71
	Pump	Inlet	T	-3.57	0.89	2.39	60	-20	97
	Reboiler	Dischg	T	-1.05	0.00	1.15	65	-9	10
	Separator	Dischg	T	-1.26	-1.41	-0.72	38	9	6
Case 8s	Pump	Inlet	D	-0.16	0.07	-1.57	27	4	2
	Reboiler	Dischg	D	0.30	-0.32	0.36	-9	3	13
	Separator	Dischg	D	0.95	-1.00	-0.07	-1	1	17
	Pump	Inlet	E	4.13	5.79	1.05	29	10	94
	Reboiler	Dischg	E	5.56	8.17	1.61	132	26	265
	Separator	Dischg	E	12.64	9.12	2.58	64	54	70
	Pump	Inlet	T	-3.57	0.89	2.39	60	-20	97
	Reboiler	Dischg	T	-1.05	0.00	1.15	65	-9	10
	Separator	Dischg	T	-1.26	-1.41	-0.72	38	9	6

Notes Results are at the center of each elbow listed nearest the nozzle listed.
Forces & moments are in the SAP2000 frame local coordinate system.
The user-specified local system for elbows have the 2-axis pointing to the center of the elbow run.
M2 is out-of-plane bending. M3 is in-plane bending. Positive P is tension.

BY: E.O. Weiner
DATE:6/15/06

SUBJECT: PT TLP Coupled Structural Analysis for Evaluation of Nozzle Loads

RGM vs Pre-RGM Nozzle Loads

Nozzle		Load	RGM - Case 8d Kip P	Kip V	In-Kip T	in-Kip M	Pre-RGM - Case 8h Kip P	Kip V	in-Kip T	in-Kip M
Pump	Inlet	D	-0.05	0.66	2	50	-0.05	0.66	2	50
	Dischg	D	3.37	0.15	6	31	3.37	0.15	6	31
Reboiler	Inlet	D	0.14	4.86	-2	39	0.14	4.86	-2	39
	Dischg	D	-0.62	10.58	20	248	-0.62	10.58	20	248
Separator	Inlet	D	0.21	1.10	-74	18	0.21	1.10	-74	18
	Dischg	D	4.85	0.32	-1	16	4.85	0.32	-1	16
Pump	Inlet	E	4.53	8.79	80	172	4.06	7.87	71	152
	Dischg	E	2.68	15.75	316	432	2.35	14.15	286	388
Reboiler	Inlet	E	19.04	5.66	157	117	17.13	5.05	142	102
	Dischg	E	9.60	32.45	2074	558	7.80	27.02	1725	455
Separator	Inlet	E	11.03	12.47	206	523	9.90	10.46	172	437
	Dischg	E	5.22	24.13	102	829	4.53	21.32	105	729
Pump	Inlet	T	-2.01	3.60	103	67	-2.01	3.60	103	67
	Dischg	T	0.21	2.75	-6	83	0.21	2.75	-6	83
Reboiler	Inlet	T	2.75	0.25	6	15	2.75	0.25	6	15
	Dischg	T	-0.96	1.97	103	13	-0.96	1.97	103	13
Separator	Inlet	T	-0.81	1.75	35	70	-0.81	1.75	35	70
	Dischg	T	-1.14	1.28	20	74	-1.14	1.28	20	74

BY: E.O. Weiner
DATE:6/15/06

SUBJECT: PT TLP Coupled Structural Analysis for Evaluation of Nozzle Loads

Drift Nozzle Loads (Case 8d)

Nozzle		Load	Kip P	Kip V	in-Kip T	in-Kip M
Pump	Inlet	E	4.53	8.79	80	172
	Dischg	E	2.68	15.75	316	432
Reboiler	Inlet	E	19.04	5.66	157	117
	Dischg	E	9.60	32.45	2074	558
Separator	Inlet	E	11.03	12.47	206	523
	Dischg	E	5.22	24.13	102	829
Pump	Inlet	Dr	0.40	1.06	-23	10
	Dischg	Dr	-0.13	0.85	-9	24
Reboiler	Inlet	Dr	-0.85	0.15	-6	3
	Dischg	Dr	0.16	0.24	-15	6
Separator	Inlet	Dr	-0.01	0.30	10	30
	Dischg	Dr	0.12	4.94	-19	251

Frame Base Reactions

Case	Base	Loc	Load	Kip FX	Kip FY	Kip FZ	Kip-ft MX	Kip-ft MY	Kip-ft MZ
Case 8g	Pump Frame	Bottom	E	3	6	8	61	57	12
	Reboiler Frame	Bottom	E	25	38	23	280	141	125
	Separator Frame	Bottom	E	133	153	67	4220	3841	80
Case 8d	Pump Frame	Bottom	Dr	0	0	-1	2	-2	2
	Reboiler Frame	Bottom	Dr	-1	0	0	1	-2	-1
	Separator Frame	Bottom	Dr	-10	-23	0	1236	-475	-3
	Separator Frame	Top	Dr	9	24	0	0	0	-1
	Pump Frame	Bottom	E	4	7	8	66	56	12
	Reboiler Frame	Bottom	E	24	36	21	261	142	115
	Separator Frame	Bottom	E	61	100	65	2007	1011	47
	Separator Frame	Top	E	32	47	1	0	1	41

Notes: Case 8g is Case 8d with top support removed from separator.
Frame bases constrained to single joint for reactions.
Components are global.

BY: E.O. Weiner
DATE: 6/15/06

SUBJECT: PT TLP Coupled Structural Analysis for Evaluation of Nozzle Loads

Nozzle Displacements

Case	Location		Load	in U1	in U2	in U3	deg R1	deg R2	deg R3
Case 8a	Pump	Inlet	D	0.0006	0.0000	-0.0011	0.0000	-0.0012	0.0000
		Dischg	D	0.0010	0.0000	-0.0011	0.0000	-0.0012	0.0000
	Reboiler	Inlet	D	0.0000	-0.0089	-0.0126	-0.0018	0.0001	-0.0001
		Dischg	D	0.0000	-0.0090	-0.0128	-0.0018	0.0001	-0.0001
	Separator	Inlet	D	0.0000	0.0000	-0.0297	0.0000	0.0000	0.0000
		Dischg	D	0.0000	0.0000	-0.0297	0.0000	0.0000	0.0000
	Pump	Inlet	E	0.0178	0.0217	0.0006	0.0005	0.0034	0.0238
		Dischg	E	0.0093	0.0215	0.0005	0.0005	0.0034	0.0238
	Reboiler	Inlet	E	0.0420	0.0245	0.0072	0.0020	0.0071	0.0015
		Dischg	E	0.0420	0.0250	0.0072	0.0020	0.0071	0.0015
	Separator	Inlet	E	0.0710	0.1839	0.0178	0.0229	0.0120	0.0003
		Dischg	E	0.0751	0.1879	0.0167	0.0229	0.0120	0.0003
	Pump	Inlet	T	0.0006	0.0252	0.0402	0.0000	-0.0001	0.0000
		Dischg	T	0.0007	0.0000	0.0238	0.0000	-0.0001	0.0000
	Reboiler	Inlet	T	-0.0296	-0.0036	-0.0020	0.0038	0.0000	0.0000
		Dischg	T	0.0296	-0.0036	-0.0020	0.0038	0.0000	0.0000
	Separator	Inlet	T	0.0221	0.0001	0.0714	0.0000	0.0000	0.0000
		Dischg	T	0.0000	0.0000	0.0506	0.0000	0.0000	0.0000
Case 8b	Pump	Inlet	D	0.0013	-0.0090	0.0007	0.0041	-0.0005	0.0004
		Dischg	D	0.0016	-0.0083	-0.0014	0.0018	0.0001	0.0003
	Reboiler	Inlet	D	-0.0031	-0.0106	-0.0136	-0.0021	0.0046	-0.0011
		Dischg	D	-0.0031	-0.0122	-0.0212	-0.0021	0.0060	-0.0011
	Separator	Inlet	D	-0.0002	0.0002	-0.0313	-0.0001	0.0000	0.0002
		Dischg	D	-0.0002	0.0001	-0.0313	-0.0001	0.0000	0.0002
	Pump	Inlet	E	0.2014	0.4905	0.0169	0.0249	0.0244	0.2407
		Dischg	E	0.1085	0.4751	0.0028	0.0379	0.0413	0.2425
	Reboiler	Inlet	E	0.0593	0.0769	0.0127	0.0057	0.0129	0.0572
		Dischg	E	0.0592	0.0418	0.0135	0.0069	0.0138	0.0527
	Separator	Inlet	E	0.0759	0.1572	0.0175	0.0204	0.0128	0.0092
		Dischg	E	0.0806	0.1557	0.0159	0.0201	0.0128	0.0087
	Pump	Inlet	T	-0.1541	-0.0214	0.0380	-0.0029	0.0046	0.0190
		Dischg	T	-0.1404	-0.0467	0.0226	0.0014	-0.0026	0.0215
	Reboiler	Inlet	T	-0.0355	-0.0109	-0.0026	0.0041	0.0011	0.0013
		Dischg	T	0.0252	-0.0098	-0.0043	0.0049	0.0012	0.0006
	Separator	Inlet	T	0.0227	0.0113	0.0713	0.0015	0.0001	0.0013
		Dischg	T	-0.0003	0.0112	0.0499	0.0014	0.0001	0.0012

Notes

1. Displacement components are global: 1 = East 2 = North 3 = Up
2. Case 8a seismic displacements are from the frame/vessel model analysis. Seismic anchor movements were input to the piping model as zero.

BY: E.O. Weiner
DATE:6/15/06

SUBJECT: PT TLP Coupled Structural Analysis for Evaluation of Nozzle Loads

Nozzle Displacements

Case	Location		Load	in U1	in U2	in U3	deg R1	deg R2	deg R3
Case 8c	Pump	Inlet	D	0.0018	-0.0087	0.0007	0.0042	-0.0004	0.0006
		Dischg	D	0.0021	-0.0079	-0.0015	0.0018	0.0003	0.0005
	Reboiler	Inlet	D	-0.0035	-0.0105	-0.0129	-0.0021	0.0054	-0.0011
		Dischg	D	-0.0035	-0.0120	-0.0215	-0.0020	0.0066	-0.0011
	Separator	Inlet	D	-0.0004	0.0002	-0.0314	-0.0001	0.0001	0.0001
		Dischg	D	-0.0005	0.0001	-0.0313	-0.0001	0.0001	0.0001
	Pump	Inlet	E	0.2583	2.0886	0.0180	0.0222	0.0459	0.5562
		Dischg	E	0.2316	2.0768	0.0049	0.0261	0.0807	0.6103
	Reboiler	Inlet	E	0.0776	0.0748	0.0198	0.0074	0.0210	0.0568
		Dischg	E	0.0771	0.0679	0.0189	0.0130	0.0213	0.0547
	Separator	Inlet	E	0.0842	0.1997	0.0198	0.0210	0.0138	0.0028
		Dischg	E	0.0895	0.2027	0.0183	0.0209	0.0138	0.0028
	Pump	Inlet	T	-0.1559	-0.1031	0.0375	-0.0040	0.0058	0.0332
		Dischg	T	-0.1346	-0.1293	0.0227	-0.0009	0.0000	0.0379
	Reboiler	Inlet	T	-0.0329	-0.0075	-0.0023	0.0038	0.0004	0.0013
		Dischg	T	0.0277	-0.0060	-0.0031	0.0040	0.0005	0.0010
	Separator	Inlet	T	0.0219	0.0049	0.0716	0.0006	0.0002	0.0002
		Dischg	T	-0.0011	0.0049	0.0502	0.0006	0.0002	0.0002
Case 8d	Pump	Inlet	D	0.0020	-0.0006	0.0006	0.0041	-0.0006	-0.0013
		Dischg	D	0.0014	0.0001	-0.0015	0.0017	0.0001	-0.0016
	Reboiler	Inlet	D	-0.0037	-0.0102	-0.0128	-0.0021	0.0054	-0.0013
		Dischg	D	-0.0037	-0.0120	-0.0215	-0.0020	0.0067	-0.0012
	Separator	Inlet	D	-0.0004	0.0003	-0.0314	-0.0001	0.0001	0.0001
		Dischg	D	-0.0005	0.0001	-0.0313	-0.0001	0.0001	0.0001
	Pump	Inlet	E	0.1957	0.0551	0.0057	0.0070	0.0227	0.1026
		Dischg	E	0.1292	0.0555	0.0028	0.0057	0.0411	0.0820
	Reboiler	Inlet	E	0.0534	0.0302	0.0088	0.0067	0.0133	0.0306
		Dischg	E	0.0532	0.0600	0.0168	0.0116	0.0141	0.0324
	Separator	Inlet	E	0.0751	0.1859	0.0174	0.0206	0.0127	0.0020
		Dischg	E	0.0798	0.1882	0.0160	0.0205	0.0127	0.0019
	Pump	Inlet	T	-0.1479	0.0187	0.0363	-0.0055	0.0033	-0.0031
		Dischg	T	-0.1470	-0.0083	0.0224	-0.0030	-0.0045	-0.0023
	Reboiler	Inlet	T	-0.0361	-0.0044	-0.0013	0.0038	0.0016	-0.0015
		Dischg	T	0.0246	-0.0066	-0.0036	0.0041	0.0016	-0.0016
	Separator	Inlet	T	0.0221	0.0056	0.0717	0.0007	0.0001	0.0001
		Dischg	T	-0.0009	0.0058	0.0503	0.0007	0.0001	0.0000

Notes
1. Displacement components are global: 1 = East 2 = North 3 = Up

BY: E.O. Weiner
DATE:6/15/06

SUBJECT: PT TLP Coupled Structural Analysis for Evaluation of Nozzle Loads

Nozzle Displacements

Case	Location		Load	in U1	in U2	in U3	deg R1	deg R2	deg R3
Case 8e	Pump	Inlet	D	0.0006	0.0000	-0.0011	0.0000	-0.0012	0.0000
		Dischg	D	0.0010	0.0000	-0.0011	0.0000	-0.0012	0.0000
	Reboiler	Inlet	D	0.0000	-0.0089	-0.0126	-0.0018	0.0001	-0.0001
		Dischg	D	0.0000	-0.0090	-0.0128	-0.0018	0.0001	-0.0001
	Separator	Inlet	D	0.0000	0.0000	-0.0297	0.0000	0.0000	0.0000
		Dischg	D	0.0000	0.0000	-0.0297	0.0000	0.0000	0.0000
	Pump	Inlet	E	0.0178	0.0217	0.0006	0.0005	0.0034	0.0238
		Dischg	E	0.0093	0.0215	0.0005	0.0005	0.0034	0.0238
	Reboiler	Inlet	E	0.0420	0.0245	0.0072	0.0020	0.0071	0.0015
		Dischg	E	0.0420	0.0250	0.0072	0.0020	0.0071	0.0015
	Separator	Inlet	E	0.0710	0.1839	0.0178	0.0229	0.0120	0.0003
		Dischg	E	0.0751	0.1879	0.0187	0.0229	0.0120	0.0003
	Pump	Inlet	T	0.0006	0.0252	0.0402	0.0000	-0.0001	0.0000
		Dischg	T	0.0007	0.0000	0.0238	0.0000	-0.0001	0.0000
	Reboiler	Inlet	T	-0.0296	-0.0036	-0.0020	0.0038	0.0000	0.0000
		Dischg	T	0.0296	-0.0036	-0.0020	0.0038	0.0000	0.0000
	Separator	Inlet	T	0.0221	0.0001	0.0714	0.0000	0.0000	0.0000
		Dischg	T	0.0000	0.0000	0.0506	0.0000	0.0000	0.0000
Case 8f	Pump	Inlet	D	0.0024	-0.0008	-0.0013	0.0007	-0.0009	-0.0009
		Dischg	D	0.0021	-0.0008	-0.0016	0.0000	-0.0002	-0.0013
	Reboiler	Inlet	D	-0.0023	-0.0093	-0.0122	-0.0019	0.0035	-0.0009
		Dischg	D	-0.0023	-0.0106	-0.0177	-0.0018	0.0042	-0.0009
	Separator	Inlet	D	-0.0003	0.0001	-0.0314	-0.0001	0.0001	0.0001
		Dischg	D	-0.0003	0.0000	-0.0314	-0.0001	0.0001	0.0001
	Pump	Inlet	E	0.1477	0.0420	0.0044	0.0045	0.0197	0.0640
		Dischg	E	0.1075	0.0427	0.0025	0.0043	0.0346	0.0524
	Reboiler	Inlet	E	0.0459	0.0247	0.0066	0.0045	0.0089	0.0181
		Dischg	E	0.0458	0.0393	0.0111	0.0074	0.0093	0.0191
	Separator	Inlet	E	0.0745	0.1808	0.0171	0.0204	0.0126	0.0014
		Dischg	E	0.0791	0.1831	0.0158	0.0202	0.0126	0.0013
	Pump	Inlet	T	-0.1479	0.0187	0.0363	-0.0055	0.0033	-0.0031
		Dischg	T	-0.1470	-0.0083	0.0224	-0.0030	-0.0045	-0.0023
	Reboiler	Inlet	T	-0.0361	-0.0044	-0.0013	0.0038	0.0016	-0.0015
		Dischg	T	0.0246	-0.0066	-0.0036	0.0041	0.0016	-0.0016
	Separator	Inlet	T	0.0221	0.0056	0.0717	0.0007	0.0001	0.0001
		Dischg	T	-0.0009	0.0058	0.0503	0.0007	0.0001	0.0000

Notes

1. Displacement components are global: 1 = East 2 = North 3 = Up
2. Case 8e seismic displacements are from the frame/vessel analysis. Seismic anchor movements were input to the piping model as zero.

BY: E.O. Weiner
DATE:6/15/06

SUBJECT: PT TLP Coupled Structural Analysis for Evaluation of Nozzle Loads

Nozzle Displacements

Case	Location		Load	in U1	in U2	in U3	deg R1	deg R2	deg R3
Case 8i	Pump	Inlet	D	0.0020	-0.0006	0.0006	0.0041	-0.0006	-0.0012
		Dischg	D	0.0014	0.0001	-0.0015	0.0017	0.0001	-0.0016
	Reboiler	Inlet	D	-0.0037	-0.0102	-0.0128	-0.0021	0.0054	-0.0012
		Dischg	D	-0.0037	-0.0120	-0.0215	-0.0020	0.0067	-0.0012
	Separator	Inlet	D	-0.0004	0.0003	-0.0314	-0.0001	0.0001	0.0001
		Dischg	D	-0.0005	0.0002	-0.0313	-0.0001	0.0001	0.0001
	Pump	Inlet	E	0.1957	0.0556	0.0052	0.0056	0.0228	0.1032
		Dischg	E	0.1288	0.0561	0.0028	0.0050	0.0411	0.0824
	Reboiler	Inlet	E	0.0525	0.0304	0.0090	0.0042	0.0107	0.0064
		Dischg	E	0.0523	0.0295	0.0114	0.0043	0.0113	0.0062
	Separator	Inlet	E	0.0749	0.1902	0.0176	0.0206	0.0127	0.0008
		Dischg	E	0.0796	0.1927	0.0164	0.0205	0.0126	0.0008
	Pump	Inlet	T	-0.1478	0.0187	0.0363	-0.0055	0.0033	-0.0030
		Dischg	T	-0.1469	-0.0083	0.0224	-0.0030	-0.0045	-0.0022
	Reboiler	Inlet	T	-0.0360	-0.0043	-0.0013	0.0037	0.0014	-0.0011
		Dischg	T	0.0247	-0.0059	-0.0034	0.0039	0.0015	-0.0011
	Separator	Inlet	T	0.0221	0.0058	0.0717	0.0007	0.0001	0.0001
		Dischg	T	-0.0009	0.0060	0.0503	0.0007	0.0001	0.0001
Case 8j	Pump	Inlet	D	0.0015	-0.0005	0.0006	0.0040	-0.0006	-0.0009
		Dischg	D	0.0012	0.0001	-0.0015	0.0016	0.0000	-0.0013
	Reboiler	Inlet	D	-0.0037	-0.0102	-0.0128	-0.0021	0.0055	-0.0013
		Dischg	D	-0.0037	-0.0120	-0.0215	-0.0020	0.0067	-0.0012
	Separator	Inlet	D	-0.0004	0.0003	-0.0314	-0.0001	0.0001	0.0001
		Dischg	D	-0.0005	0.0002	-0.0313	-0.0001	0.0001	0.0001
	Pump	Inlet	E	0.0582	0.0437	0.0036	0.0057	0.0056	0.0698
		Dischg	E	0.0257	0.0452	0.0012	0.0058	0.0111	0.0541
	Reboiler	Inlet	E	0.0391	0.0301	0.0076	0.0043	0.0086	0.0049
		Dischg	E	0.0392	0.0301	0.0103	0.0043	0.0094	0.0048
	Separator	Inlet	E	0.0752	0.1924	0.0176	0.0207	0.0127	0.0007
		Dischg	E	0.0798	0.1951	0.0164	0.0206	0.0127	0.0007
	Pump	Inlet	T	-0.0512	0.0202	0.0405	-0.0041	0.0200	0.0133
		Dischg	T	-0.0537	-0.0065	0.0258	-0.0022	0.0287	0.0096
	Reboiler	Inlet	T	-0.0126	-0.0050	-0.0069	0.0036	-0.0054	-0.0003
		Dischg	T	0.0479	-0.0055	0.0006	0.0039	-0.0051	-0.0003
	Separator	Inlet	T	0.0225	0.0068	0.0719	0.0008	-0.0001	-0.0002
		Dischg	T	-0.0004	0.0071	0.0504	0.0008	-0.0001	-0.0002

Notes
1. Displacement components are global: 1 = East 2 = North 3 = Up

BY: E.O. Weiner
DATE:6/15/06

SUBJECT: PT TLP Coupled Structural Analysis for Evaluation of Nozzle Loads

Nozzle Displacements

Case	Location		Load	in U1	in U2	in U3	deg R1	deg R2	deg R3
Case 8k	Pump	Inlet	D	0.0020	-0.0003	0.0006	0.0041	-0.0005	-0.0009
		Dischg	D	0.0016	0.0004	-0.0015	0.0017	0.0001	-0.0013
	Reboiler	Inlet	D	-0.0036	-0.0102	-0.0128	-0.0021	0.0054	-0.0013
		Dischg	D	-0.0036	-0.0120	-0.0215	-0.0020	0.0066	-0.0012
	Separator	Inlet	D	-0.0004	0.0010	-0.0314	0.0000	0.0001	0.0001
		Dischg	D	-0.0005	0.0010	-0.0313	0.0001	0.0001	0.0001
	Pump	Inlet	E	0.2337	0.0501	0.0067	0.0068	0.0289	0.1032
		Dischg	E	0.1620	0.0504	0.0036	0.0053	0.0518	0.0831
	Reboiler	Inlet	E	0.0655	0.0311	0.0104	0.0042	0.0126	0.0070
		Dischg	E	0.0652	0.0294	0.0121	0.0043	0.0131	0.0068
	Separator	Inlet	E	0.0747	0.1391	0.0174	0.0205	0.0126	0.0010
		Dischg	E	0.0794	0.1394	0.0161	0.0204	0.0126	0.0010
	Pump	Inlet	T	-0.1570	0.0335	0.0373	-0.0039	0.0042	0.0189
		Dischg	T	-0.1442	0.0066	0.0225	-0.0019	-0.0033	0.0144
	Reboiler	Inlet	T	-0.0353	-0.0030	-0.0013	0.0036	0.0013	-0.0020
		Dischg	T	0.0254	-0.0059	-0.0033	0.0039	0.0013	-0.0020
	Separator	Inlet	T	0.0218	0.0336	0.0725	0.0065	0.0001	0.0000
		Dischg	T	-0.0013	0.0370	0.0512	0.0067	0.0001	0.0000
Case 8L	Pump	Inlet	D	0.0014	-0.0003	0.0006	0.0041	-0.0006	-0.0006
		Dischg	D	0.0012	0.0004	-0.0015	0.0016	0.0000	-0.0010
	Reboiler	Inlet	D	-0.0037	-0.0102	-0.0128	-0.0021	0.0055	-0.0013
		Dischg	D	-0.0037	-0.0120	-0.0215	-0.0020	0.0067	-0.0012
	Separator	Inlet	D	-0.0004	0.0010	-0.0314	0.0000	0.0001	0.0001
		Dischg	D	-0.0005	0.0009	-0.0313	0.0001	0.0001	0.0001
	Pump	Inlet	E	0.0765	0.0455	0.0049	0.0079	0.0072	0.0860
		Dischg	E	0.0287	0.0472	0.0012	0.0068	0.0134	0.0670
	Reboiler	Inlet	E	0.0389	0.0312	0.0081	0.0043	0.0089	0.0058
		Dischg	E	0.0390	0.0304	0.0104	0.0044	0.0097	0.0057
	Separator	Inlet	E	0.0752	0.1506	0.0173	0.0207	0.0128	0.0006
		Dischg	E	0.0799	0.1516	0.0160	0.0207	0.0128	0.0006
	Pump	Inlet	T	-0.0608	0.0346	0.0416	-0.0021	0.0207	0.0324
		Dischg	T	-0.0528	0.0082	0.0258	-0.0007	0.0292	0.0235
	Reboiler	Inlet	T	-0.0124	-0.0038	-0.0068	0.0035	-0.0054	-0.0011
		Dischg	T	0.0481	-0.0054	0.0007	0.0038	-0.0051	-0.0011
	Separator	Inlet	T	0.0222	0.0358	0.0727	0.0070	-0.0001	-0.0003
		Dischg	T	-0.0008	0.0396	0.0512	0.0072	-0.0001	-0.0003

Notes
1. Displacement components are global: 1 = East 2 = North 3 = Up

BY: E.O. Weiner
DATE:6/15/06

SUBJECT: PT TLP Coupled Structural Analysis for Evaluation of Nozzle Loads

Nozzle Displacements

Case	Location		Load	In U1	in U2	in U3	deg R1	deg R2	deg R3
Case 8o	Pump	Inlet	D	0.0063	-0.0005	0.0006	0.0041	-0.0006	-0.0003
		Dischg	D	0.0063	0.0002	-0.0016	0.0016	0.0001	-0.0008
	Reboiler	Inlet	D	0.0005	-0.0094	-0.0153	-0.0020	-0.0020	-0.0005
		Dischg	D	0.0005	-0.0101	-0.0125	-0.0020	-0.0018	-0.0005
	Separator	Inlet	D	-0.0001	0.0001	-0.0316	-0.0001	0.0000	0.0001
		Dischg	D	-0.0001	0.0000	-0.0316	-0.0001	0.0000	0.0001
	Pump	Inlet	E	0.1957	0.0556	0.0052	0.0056	0.0228	0.1032
		Dischg	E	0.1288	0.0561	0.0028	0.0050	0.0411	0.0824
	Reboiler	Inlet	E	0.0525	0.0304	0.0090	0.0042	0.0107	0.0064
		Dischg	E	0.0523	0.0295	0.0114	0.0043	0.0113	0.0062
	Separator	Inlet	E	0.0749	0.1902	0.0176	0.0208	0.0127	0.0008
		Dischg	E	0.0796	0.1927	0.0164	0.0205	0.0126	0.0008
	Pump	Inlet	T	-0.1110	0.0142	0.0378	-0.0069	0.0041	-0.0022
		Dischg	T	-0.1106	-0.0070	0.0287	-0.0036	-0.0026	-0.0018
	Reboiler	Inlet	T	-0.0275	-0.0042	0.0055	0.0037	0.0015	-0.0009
		Dischg	T	0.0188	-0.0055	0.0033	0.0039	0.0015	-0.0009
	Separator	Inlet	T	0.0165	0.0043	0.0959	0.0006	0.0002	0.0000
		Dischg	T	-0.0011	0.0045	0.0797	0.0006	0.0002	0.0000
Case 8r	Pump	Inlet	D	0.0018	-0.0006	0.0006	0.0040	-0.0006	-0.0013
		Dischg	D	0.0012	0.0001	-0.0015	0.0016	0.0000	-0.0016
	Reboiler	Inlet	D	-0.0037	-0.0102	-0.0128	-0.0021	0.0055	-0.0012
		Dischg	D	-0.0037	-0.0120	-0.0215	-0.0020	0.0067	-0.0012
	Separator	Inlet	D	-0.0004	0.0003	-0.0314	-0.0001	0.0001	0.0001
		Dischg	D	-0.0005	0.0002	-0.0313	-0.0001	0.0001	0.0001
	Pump	Inlet	E	0.0805	0.0494	0.0030	0.0048	0.0058	0.0876
		Dischg	E	0.0380	0.0501	0.0008	0.0048	0.0105	0.0701
	Reboiler	Inlet	E	0.0390	0.0308	0.0070	0.0043	0.0081	0.0055
		Dischg	E	0.0390	0.0304	0.0103	0.0044	0.0089	0.0053
	Separator	Inlet	E	0.0752	0.1922	0.0177	0.0207	0.0127	0.0006
		Dischg	E	0.0798	0.1948	0.0165	0.0206	0.0127	0.0006
	Pump	Inlet	T	-0.0742	0.0150	0.0398	-0.0065	0.0104	0.0051
		Dischg	T	-0.0743	-0.0061	0.0305	-0.0034	0.0100	0.0038
	Reboiler	Inlet	T	-0.0184	-0.0044	0.0033	0.0036	-0.0011	-0.0006
		Dischg	T	0.0278	-0.0053	0.0049	0.0039	-0.0010	-0.0006
	Separator	Inlet	T	0.0166	0.0047	0.0960	0.0006	0.0001	-0.0001
		Dischg	T	-0.0010	0.0049	0.0797	0.0006	0.0001	-0.0001

Notes
1. Displacement components are global: 1 = East 2 = North 3 = Up

BY: E.O. Weiner
DATE: 6/15/06

SUBJECT: PT TLP Coupled Structural Analysis for Evaluation of Nozzle Loads

Nozzle Displacements

Case	Location		Load	in U1	in U2	in U3	deg R1	deg R2	deg R3
Case 8s	Pump	Inlet	D	0.0036	-0.0005	0.0004	0.0040	-0.0011	-0.0008
		Dischg	D	0.0037	0.0001	-0.0016	0.0016	-0.0009	-0.0012
	Reboiler	Inlet	D	-0.0002	-0.0094	-0.0152	-0.0020	-0.0018	-0.0005
		Dischg	D	-0.0002	-0.0101	-0.0126	-0.0020	-0.0016	-0.0005
	Separator	Inlet	D	-0.0001	0.0001	-0.0316	-0.0001	0.0001	0.0001
		Dischg	D	-0.0002	0.0000	-0.0316	-0.0001	0.0000	0.0001
	Pump	Inlet	E	0.0737	0.0467	0.0030	0.0048	0.0055	0.0814
		Dischg	E	0.0353	0.0475	0.0008	0.0047	0.0100	0.0651
	Reboiler	Inlet	E	0.0372	0.0306	0.0068	0.0043	0.0078	0.0052
		Dischg	E	0.0372	0.0304	0.0102	0.0043	0.0087	0.0051
	Separator	Inlet	E	0.0728	0.1921	0.0176	0.0207	0.0124	0.0006
		Dischg	E	0.0773	0.1947	0.0164	0.0206	0.0124	0.0006
	Pump	Inlet	T	-0.0742	0.0150	0.0398	-0.0065	0.0104	0.0051
		Dischg	T	-0.0743	-0.0061	0.0305	-0.0034	0.0100	0.0038
	Reboiler	Inlet	T	-0.0184	-0.0044	0.0033	0.0036	-0.0011	-0.0006
		Dischg	T	0.0278	-0.0053	0.0049	0.0039	-0.0010	-0.0006
	Separator	Inlet	T	0.0166	0.0047	0.0960	0.0006	0.0001	-0.0001
		Dischg	T	-0.0010	0.0049	0.0797	0.0006	0.0001	-0.0001

Notes
1. Displacement components are global: 1 = East 2 = North 3 = Up

BY: E.O. Weiner
DATE:6/15/06

SUBJECT: PT TLP Coupled Structural Analysis for Evaluation of Nozzle Loads

Modal Participation

Case	Mode Num	Hz Freq	Mass Participation X	Y	Z	Feature
Case8a	1	6.2	0.10	0.09	0.01	Reboiler Dischg EW & NS
	2	6.8	0.07	0.28	0.01	Separator Inlet NS
	3	13.4	0.01	0.28	0.00	Pump Inlet NS
	5	20.0	0.00	0.00	0.12	Separator Inlet Vert
	6	20.7	0.11	0.01	0.01	Pump Inlet EW
	14	47.4	0.00	0.00	0.11	
	17	63.8	0.22	0.01	0.01	
	19	85.7	0.00	0.00	0.15	
	23	161.5	0.00	0.02	0.13	
	24	183.3	0.12	0.00	0.00	
	Total		0.83	0.91	0.86	
Case8d	1	3.8	0.00	0.12	0.00	Reboiler Dischg NS
	3	7.2	0.01	0.55	0.00	Separator NS
	4	7.5	0.14	0.02	0.00	Pump EW
	5	9.9	0.50	0.00	0.00	Separator EW
	8	12.7	0.01	0.19	0.01	Reboiler NS
	12	18.2	0.00	0.00	0.39	Separator Vert
	17	28.5	0.00	0.01	0.13	Reboiler Vert
	24	71.0	0.01	0.00	0.11	Pump Vert
	Total		0.95	0.97	0.92	
Case 8e	1	3.9	0.00	0.41	0.00	Reboiler Dischg NS
	2	5.9	0.16	0.00	0.02	Reboiler Dischg EW
	3	13.4	0.01	0.28	0.00	Pump Inlet NS
	4	13.6	0.10	0.00	0.00	Separator Inlet EW
	7	20.6	0.11	0.01	0.01	Pump Inlet EW
	13	38.9	0.11	0.00	0.01	Reboiler Inlet EW
	18	57.2	0.12	0.00	0.02	
	19	62.5	0.14	0.00	0.06	
	21	93.2	0.00	0.00	0.11	
	23	105.6	0.00	0.00	0.14	
	Total		0.89	0.91	0.86	
Case 8g	1	3.9	0.00	0.13	0.00	Reboiler Dischg NS
	2	5.6	0.00	0.50	0.00	Separator NS
	4	6.7	0.53	0.00	0.00	Separator EW
	11	18.3	0.00	0.00	0.38	Separator Vert
	17	31.7	0.22	0.00	0.00	Reboiler EW
	19	34.3	0.00	0.19	0.00	Reboiler NS
	24	79.2	0.00	0.00	0.28	
	Total		0.93	0.93	0.89	

Notes: Modes shown for participation > 10%.
Total participation includes modes not shown.

BY: E.O. Weiner
DATE:6/15/06

SUBJECT: PT TLP Coupled Structural Analysis for Evaluation of Nozzle Loads

Modal Participation

Case	Mode Num	Hz Freq	Mass Participation X	Y	Z	Feature
Case 8i	2	7.2	0.01	0.59	0.00	Separator NS
	3	7.5	0.14	0.02	0.00	Pump EW
	4	9.9	0.50	0.00	0.00	Separator EW
	7	12.7	0.01	0.21	0.01	Reboiler NS
	12	18.4	0.00	0.00	0.46	Separator Vert
	17	28.6	0.00	0.00	0.18	Reboiler Vert
	Total		0.95	0.95	0.91	
Case 8j	2	7.2	0.00	0.61	0.00	Separator NS
	4	9.9	0.50	0.00	0.00	Separator EW
	5	11.5	0.21	0.01	0.00	Reboiler EW
	7	12.8	0.00	0.19	0.02	Reboiler NS
	12	18.4	0.00	0.00	0.47	Separator Vert
	17	28.7	0.00	0.00	0.11	Reboiler Vert
	Total		0.95	0.96	0.91	

Notes: Modes shown for participation > 10%.
Total participation includes modes not shown.

9 References

SCN 24590-PTF-3PN-MEVV-00012. Implementation of parametric study and high pressure steam design change.
A402 AREVA Doc Id 32-5058402-00 HEP 1 TLP Reboiler Vessel Skid Seismic Qualification
A472 AREVA Doc Id 32-5034472-03, HEP 1 FPE and TLP Separator Vessel Skids Seismic Qualification
A603 AREVA Doc Id 51-5071603-01, Recirculation Pump Support Arrangement
A647B AREVA Doc Id 51-5048647B-00, WTP 24590-QL-P0A-MEW-00001-01-00550, Rev. 00A
SAPVV 24590-WTP-VV-ST-05-004 Rev 1. SAP 2000 Verification and Validation Test Report
SAP Analysis Reference Manual, SAP2000, Integrated Software for Structural Analysis and Design, Version 10.0.1, Computer and Structure, Inc. (CSI), 1995 University Avenue, Berkeley, California 94704 USA.
GTS GTSTRUDL User Reference Manual, Rev 25, Computer Aided Structural Engineering Center, School of Civil and Environmental Engineering, Georgia Institute of Technology, Atlanta, GA 30332-0355.
B31.3 ASME B31.3-2004, ASME Code for Process Piping.
ECO E.C. Ocoma verbal instructions
00005A Calculation 24590-PTF-S0C-S15T-00005-RevA

ATTACHMENT #3

FEP & TLP Separator Recirculation Isometrics And Mid Roller Details

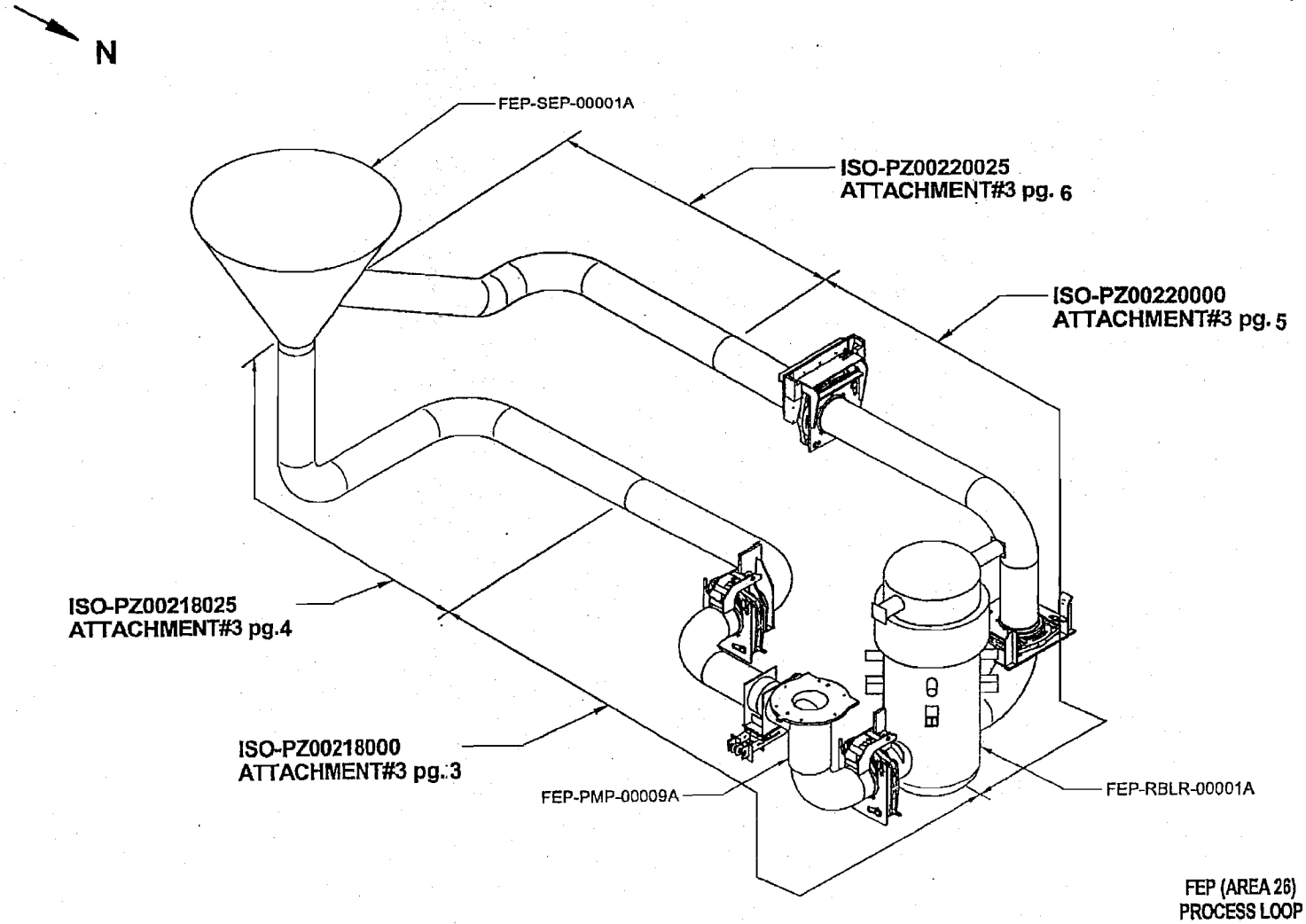

FEP (AREA 26)
PROCESS LOOP
INFORMATION ISO

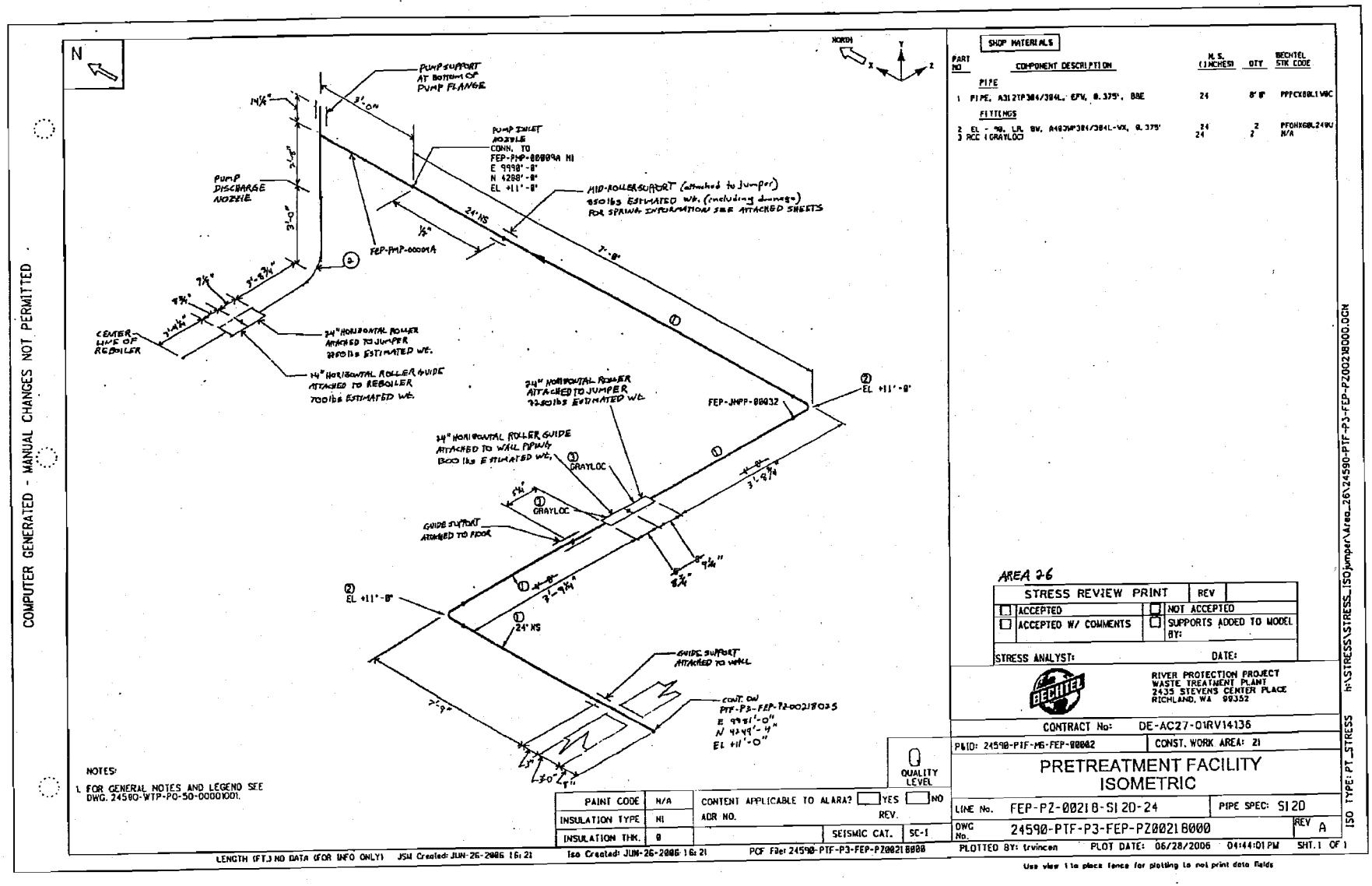
COMPUTER GENERATED - MANUAL CHANGES NOT PERMITTED
N
NORTH
PUMP SUPPORT AT BOTTOM OF PUMP FLANGE
PUMP INLET NOZZLE CONN. TO FEP-PMP-00009A NI
E 9998'-8"
N 4288'-8"
EL +11'-8"
PUMP DISCHARGE NOZZLE
MID-ROLLER SUPPORT (attached to Jumper)
850lbs ESTIMATED WT. (including damage)
FOR SPRING INFORMATION SEE ATTACHED SHEETS
24" NS
FEP-PMP-00009A
CENTER LINE OF REBOILER
24" HORIZONTAL ROLLER ATTACHED TO JUMPER
2200lbs ESTIMATED WT.
24" HORIZONTAL ROLLER GUIDE ATTACHED TO REBOILER
700lbs ESTIMATED WT.
24" HORIZONTAL ROLLER ATTACHED TO JUMPER
2200lbs ESTIMATED WT.
FEP-JMPP-00032
EL +11'-8"
24" HORIZONTAL ROLLER GUIDE ATTACHED TO WALL PIPING
1500 lbs ESTIMATED WT.
GRAYLOC
GRAYLOC
GUIDE SUPPORT ATTACHED TO FLOOR
EL +11'-8"
24" NS
GUIDE SUPPORT ATTACHED TO WALL
cont. on PTF-P3-FEP-P2-00218035
E 9991'-0"
N 4249'-4"
EL +11'-0"
NOTES:
1. FOR GENERAL NOTES AND LEGEND SEE DWG. 24590-WTP-PO-50-00001001.
SHOP MATERIALS
PART NO
COMPONENT DESCRIPTION
N.S. (INCHES)
QTY
BECHTEL STK CODE
PIPE
1 PIPE, A312TP304/304L, SFW, 0.375", BBE 24 8'-8" PFPCX08L1WBC
FITTINGS
2 EL - 90, LR, BW, A403WP304/304L-WX, 0.375" 24 2 PFOHX08L24WJ
3 RCC (GRAYLOC) 24 2 N/A
AREA 26
STRESS REVIEW PRINT
REV
ACCEPTED
NOT ACCEPTED
ACCEPTED W/ COMMENTS
SUPPORTS ADDED TO MODEL
BY:
STRESS ANALYST:
DATE:
BECHTEL
RIVER PROTECTION PROJECT
WASTE TREATMENT PLANT
2435 STEVENS CENTER PLACE
RICHLAND, WA 99352
CONTRACT No: DE-AC27-01RV14136
P&ID: 24590-PTF-M6-FEP-00002
CONST. WORK AREA: 21
PRETREATMENT FACILITY
ISOMETRIC
LINE No. FEP-P2-00218-S12D-24
PIPE SPEC: S12D
DWG No. 24590-PTF-P3-FEP-PZ00218000
REV A
PLOTTED BY: trvincen
PLOT DATE: 06/28/2006 04:44:01 PM
SHT. 1 OF 1
QUALITY LEVEL
PAINT CODE N/A
INSULATION TYPE NI
INSULATION THK. 0
CONTENT APPLICABLE TO ALARA? YES NO
ADR NO.
REV.
SEISMIC CAT. SC-1
LENGTH (FT.) NO DATA (FOR INFO ONLY)
JSM Created: JUN-26-2006 16:21
Iso Created: JUN-26-2006 16:21
PCF File: 24590-PTF-P3-FEP-PZ00218000
Use view 1 to place fence for plotting to not print data fields
ISO TYPE: PT_STRESS
h:\STRESS\STRESS_ISO\jumperArea_26\24590-PTF-P3-FEP-PZ00218000.OGN

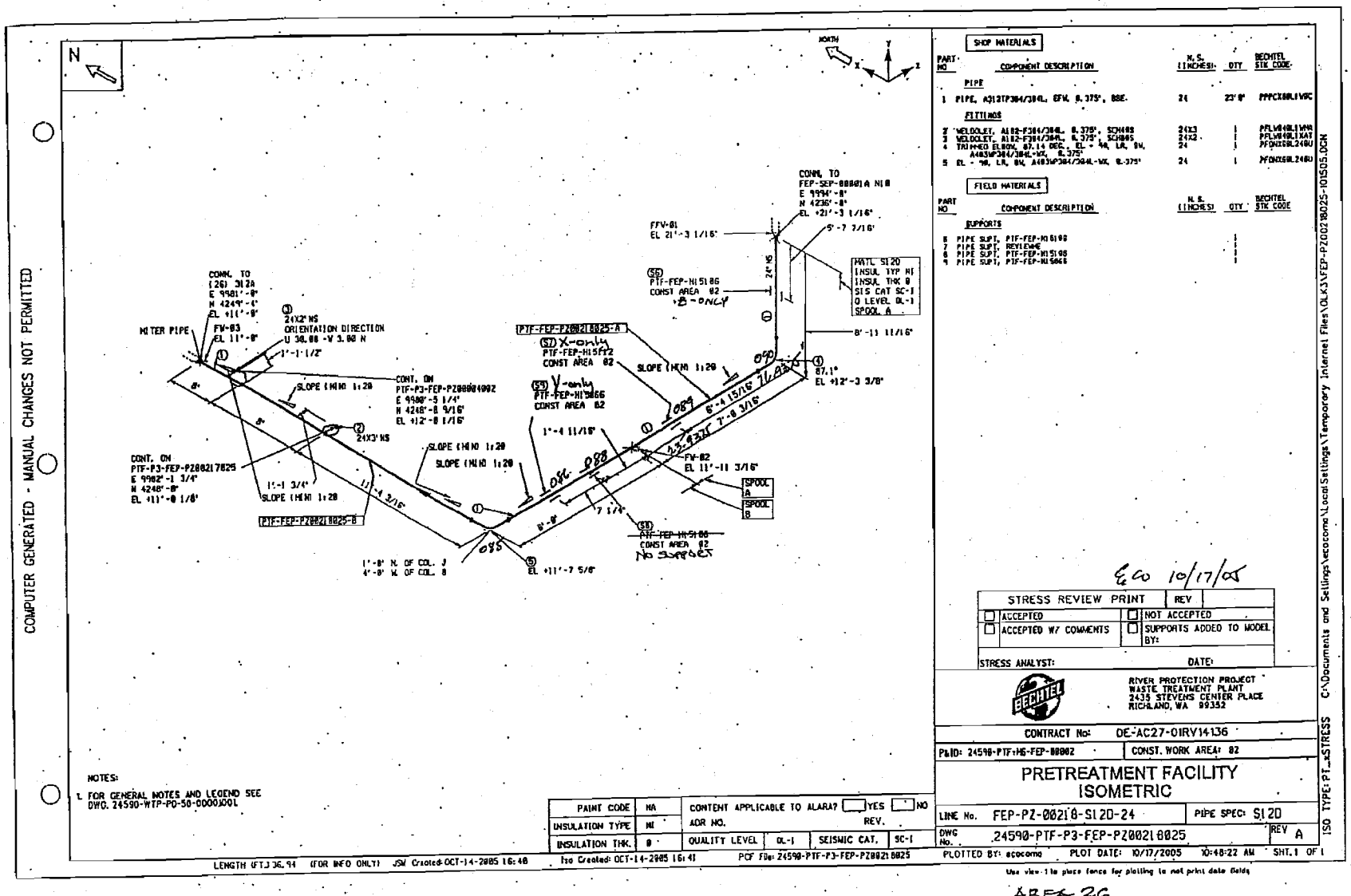

SHOP MATERIALS

PART NO	COMPONENT DESCRIPTION	N.S. (INCHES)	QTY	BECHTEL STK CODE
	PIPE			
1	PIPE, A312TP304/304L, SFW, 0.375", BBE.	24	23'-8"	PPPCX08R1VSC
	FITTINGS			
2	WELDOLET, A182-F304/304L, 0.375", SCH40S	2X24	1	PFLW40R1WW
3	WELDOLET, A182-F304/304L, 0.375", SCH80S	2X24	1	PFLW80R1XAT
4	TRIMMED ELBOW, 87.14 DEG., CL - 40, LR, BW, A403WP304/304L-WX, 0.375"	24	1	PFONX08R.248U
5	EL - 90, LR, BW, A403WP304/304L-WX, 0.375"	24	1	PFONX08R.248U

FIELD MATERIALS

PART NO	COMPONENT DESCRIPTION	N.S. (INCHES)	QTY	BECHTEL STK CODE
	SUPPORTS			
6	PIPE SUPT, PTF-FEP-H1618G		1	
7	PIPE SUPT, REVLEVHE		1	
8	PIPE SUPT, PTF-FEP-H1519G		1	
9	PIPE SUPT, PTF-FEP-H1566G		1	

Eco 10/17/05

STRESS REVIEW PRINT	REV
☐ ACCEPTED	☐ NOT ACCEPTED
☐ ACCEPTED W/ COMMENTS	☐ SUPPORTS ADDED TO MODEL BY:
STRESS ANALYST:	DATE:

BECHTEL

RIVER PROTECTION PROJECT
WASTE TREATMENT PLANT
2435 STEVENS CENTER PLACE
RICHLAND, WA 99352

CONTRACT No: DE-AC27-01RV14136

P&ID: 24590-PTF-M6-FEP-00002 | CONST. WORK AREA: 02

PRETREATMENT FACILITY ISOMETRIC

LINE No. FEP-PZ-00218-S12D-24 | PIPE SPEC: S12D

DWG No. 24590-PTF-P3-FEP-PZ00218025 | REV A

PAINT CODE: NA | CONTENT APPLICABLE TO ALARA? ☐ YES ☐ NO
INSULATION TYPE: MI | ADR NO. | REV.
INSULATION THK.: 8 | QUALITY LEVEL: QL-1 | SEISMIC CAT.: SC-I

LENGTH (FT.) 36.94 (FOR INFO ONLY) JSW Created: OCT-14-2005 16:48 Iso Created: OCT-14-2005 16:41 PCF File: 24590-PTF-P3-FEP-PZ00218025

PLOTTED BY: ecocomo PLOT DATE: 10/17/2005 10:48:22 AM SHT. 1 OF 1

Use view 1 to place fence for plotting to not print data fields

ISO TYPE: PT_3STRESS C:\Documents and Settings\ecocomo\Local Settings\Temporary Internet Files\OLK3\FEP-PZ00218025-101505.DGN

AREA 26

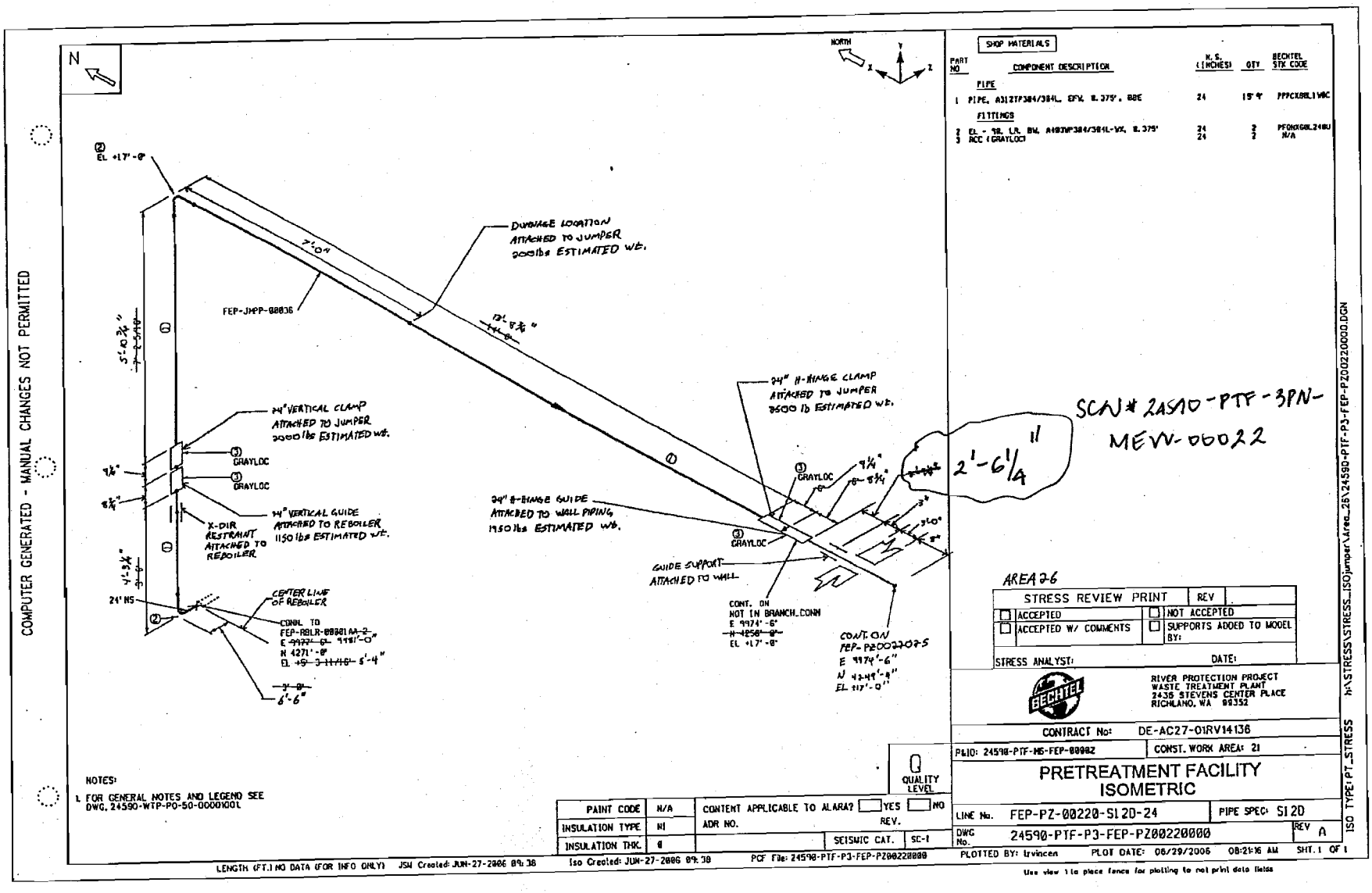
COMPUTER GENERATED - MANUAL CHANGES NOT PERMITTED
SHOP MATERIALS
PART NO
COMPONENT DESCRIPTION
N.S. (INCHES)
QTY
BECHTEL STK CODE
PIPE
1 PIPE, A312TP304/304L, SCH. 10.375", BBE 24 15'-9" PPPCX08L1WBC
FITTINGS
2 EL - 90, LR, BW, A403WP304/304L-WX, W.375 24 2 PFGNXG8L24BU
3 ACC (GRAYLOC) 24 2 N/A
DUNNAGE LOCATION ATTACHED TO JUMPER 2000lbs ESTIMATED WT.
24" H-HINGE CLAMP ATTACHED TO JUMPER 2500 lb ESTIMATED WT.
24" VERTICAL CLAMP ATTACHED TO JUMPER 2000lbs ESTIMATED WT.
24" VERTICAL GUIDE ATTACHED TO REBOILER 1150 lbs ESTIMATED WT.
24" H-HINGE GUIDE ATTACHED TO WALL PIPING 1950 lbs ESTIMATED WT.
X-DIR RESTRAINT ATTACHED TO REBOILER
GUIDE SUPPORT ATTACHED TO WALL
GRAYLOC
CENTER LINE OF REBOILER
CONNL TO FEP-RBLR-00001AA-2
CONT. ON NOT IN BRANCH. CONN
CONT. ON FEP-PZ00220075
SCN# 24590-PTF-3PN-MEVV-00022
AREA 26
STRESS REVIEW PRINT
REV
ACCEPTED
NOT ACCEPTED
ACCEPTED W/ COMMENTS
SUPPORTS ADDED TO MODEL BY:
STRESS ANALYST:
DATE:
RIVER PROTECTION PROJECT
WASTE TREATMENT PLANT
2435 STEVENS CENTER PLACE
RICHLAND, WA 99352
CONTRACT No: DE-AC27-01RV14136
P&ID: 24590-PTF-M6-FEP-00002
CONST. WORK AREA: 21
PRETREATMENT FACILITY
ISOMETRIC
LINE No. FEP-PZ-00220-S12D-24
PIPE SPEC: S12D
DWG No. 24590-PTF-P3-FEP-PZ00220000
REV A
NOTES:
1. FOR GENERAL NOTES AND LEGEND SEE DWG. 24590-WTP-PO-50-00001001
Q QUALITY LEVEL
PAINT CODE N/A
INSULATION TYPE MI
INSULATION THK. 4
CONTENT APPLICABLE TO ALARA? YES NO
ADR NO.
REV.
SEISMIC CAT. SC-1
LENGTH (FT.) NO DATA (FOR INFO ONLY) JSW Created: JUN-27-2006 09:38
Iso Created: JUN-27-2006 09:38
PCF File: 24590-PTF-P3-FEP-PZ00220000
PLOTTED BY: trvincen
PLOT DATE: 06/29/2006 08:21:16 AM
SHT. 1 OF 1
ISO TYPE: PT_STRESS
h:\STRESS\STRESS_ISO\jumper\Area_26\24590-PTF-P3-FEP-PZ00220000.DGN
Use view 1 to place fence for plotting to not print data twice

COMPUTER GENERATED - MANUAL CHANGES NOT PERMITTED

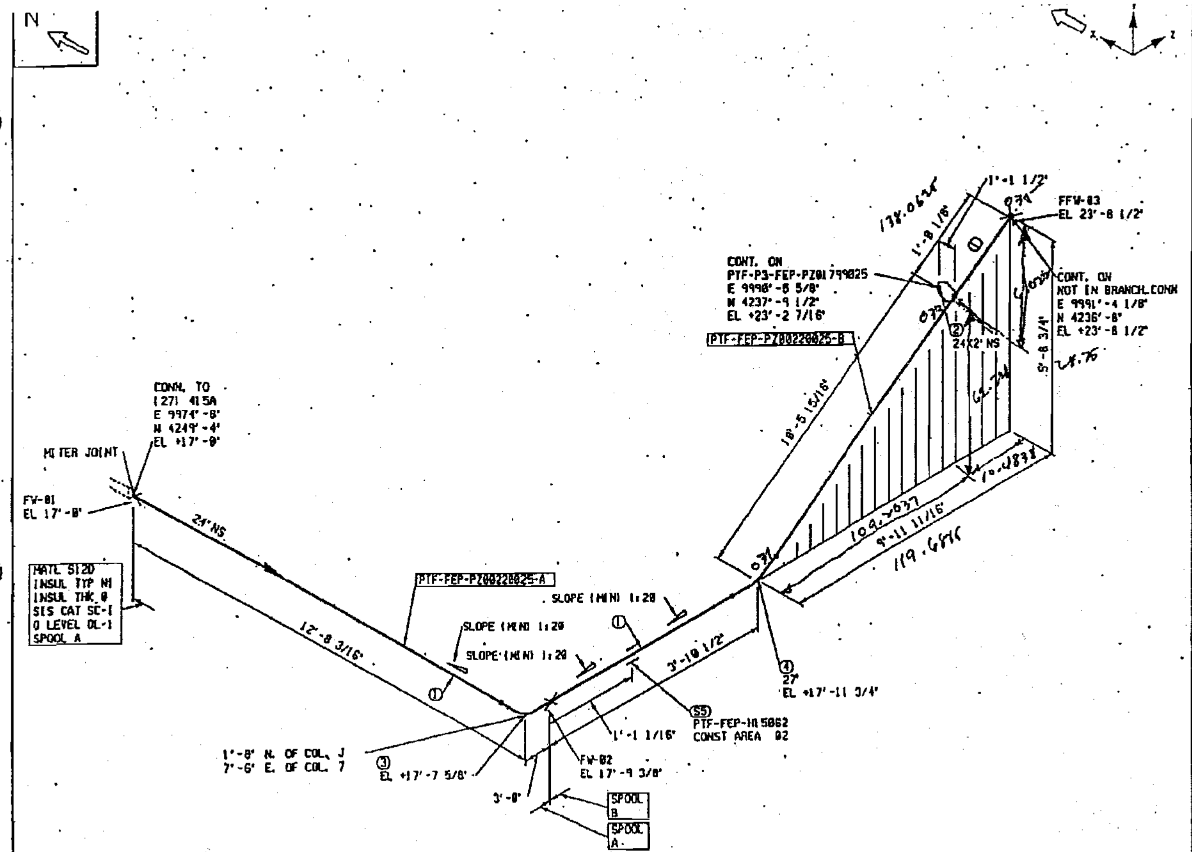

NOTES:

1. FOR GENERAL NOTES AND LEGEND SEE DWG. 24590-WTP-PO-50-00001OOL

PART NO	COMPONENT DESCRIPTION	N.S. (INCHES)	QTY	BECHTEL STK CODE
	PIPE			
1	PIPE, A312TP304/304L, EFW, 0.375", BBE	24	23'0"	PPPCX00L1WBC
	FITTINGS			
2	WELDOLET, A182-F304/304L, 0.375", SCH005	24X2	1	PFLW040L1XAT
3	EL - 90, LR, BW, A403WP304/304L-WX, 0.375"	24	1	PFONX60L240U
4	TRIMMED ELBOW, 27.02 DEG., EL - 45, LR, BW, A403WP304/304L-WX, 0.375"	24	1	PFRNX60L230U

FIELD MATERIALS

PART NO	COMPONENT DESCRIPTION	N.S. (INCHES)	QTY	BECHTEL STK CODE
	SUPPORTS.			
5	PIPE SUPT, PTF-FEP-HI5062			

ECO 10/17/05

2-9-05

STRESS REVIEW PRINT		REV	
☐ ACCEPTED		☐ NOT ACCEPTED	
☐ ACCEPTED W/ COMMENTS		☐ SUPPORTS ADDED TO MODEL BY:	
STRESS ANALYST:		DATE:	

RIVER PROTECTION PROJECT
WASTE TREATMENT PLANT
2435 STEVENS CENTER PLACE
RICHLAND, WA 99352

CONTRACT No: DE-AC27-01RV14136

P&ID: 24590-PTF-M6-FEP-00002 | CONST. WORK AREA: 02

PRETREATMENT FACILITY ISOMETRIC

PAINT CODE	NA	CONTENT APPLICABLE TO ALARA? ☐ YES ☐ NO			
INSULATION TYPE	NI	ADR NO.		REV.	
INSULATION THK.	0	QUALITY LEVEL	QL-1	SEISMIC CAT.	SC-1

LINE No. FEP-PZ-00220-S12D-24 | PIPE SPEC: S12D

DWG No. 24590-PTF-P3-FEP-PZ00220025 | REV A

LENGTH (FT.) 32.19 (FOR INFO ONLY) JSM Created: FEB-08-2005 07:24 | Iso Created: FEB-08-2005 07:25 | PCF File: 24590-PTF-P3-FEP-PZ00220025 | PLOTTED BY: ykim | PLOT DATE: 02/08/2005 07:27:53 AM | SHT. 1 OF 1

C:\iso\24590-PTF-P3-FEP-PZ00220025.DGN ISO TYPE: PT_xSTRESS

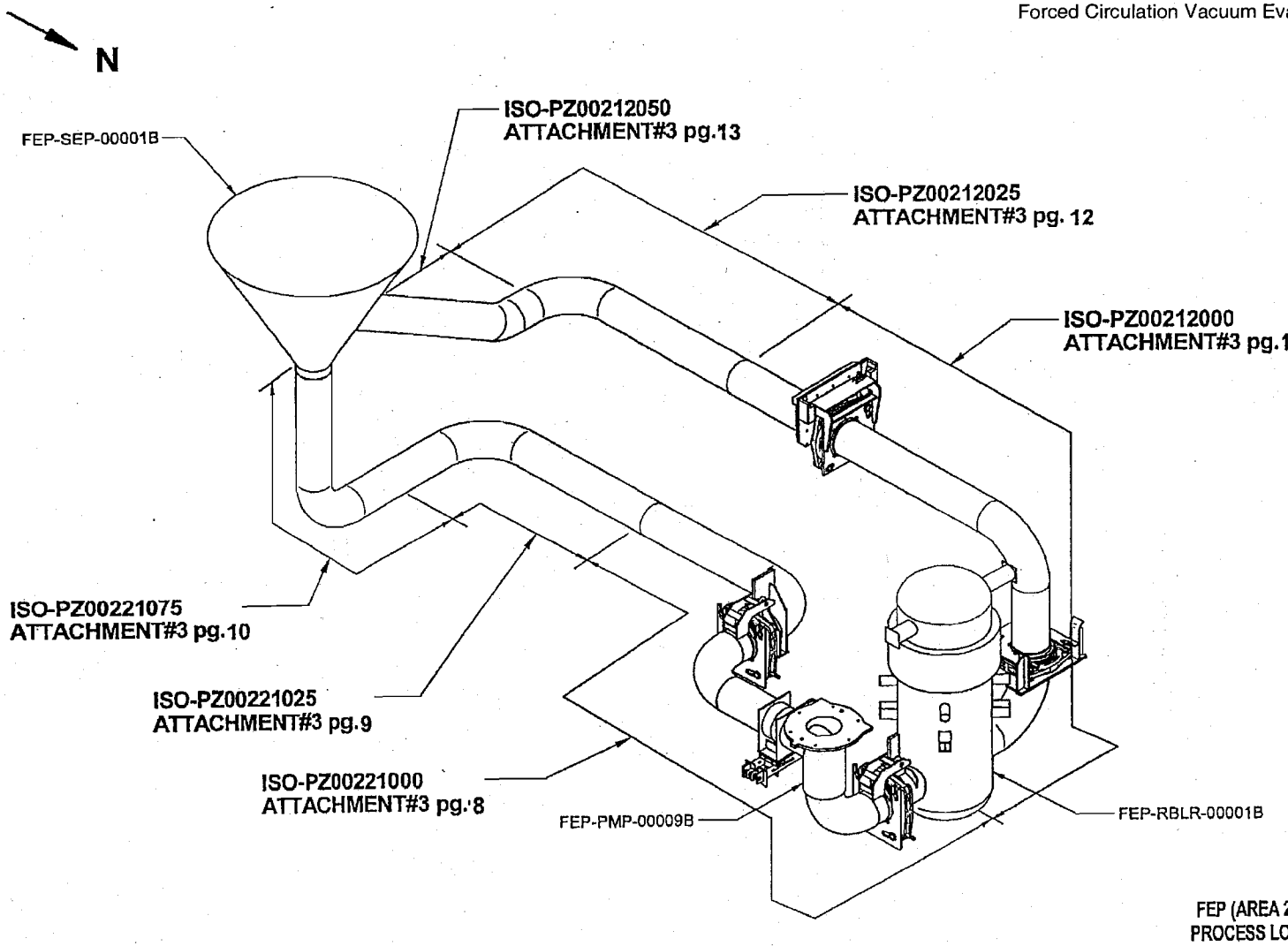

FEP (AREA 27)
PROCESS LOOP
INFORMATION ISO

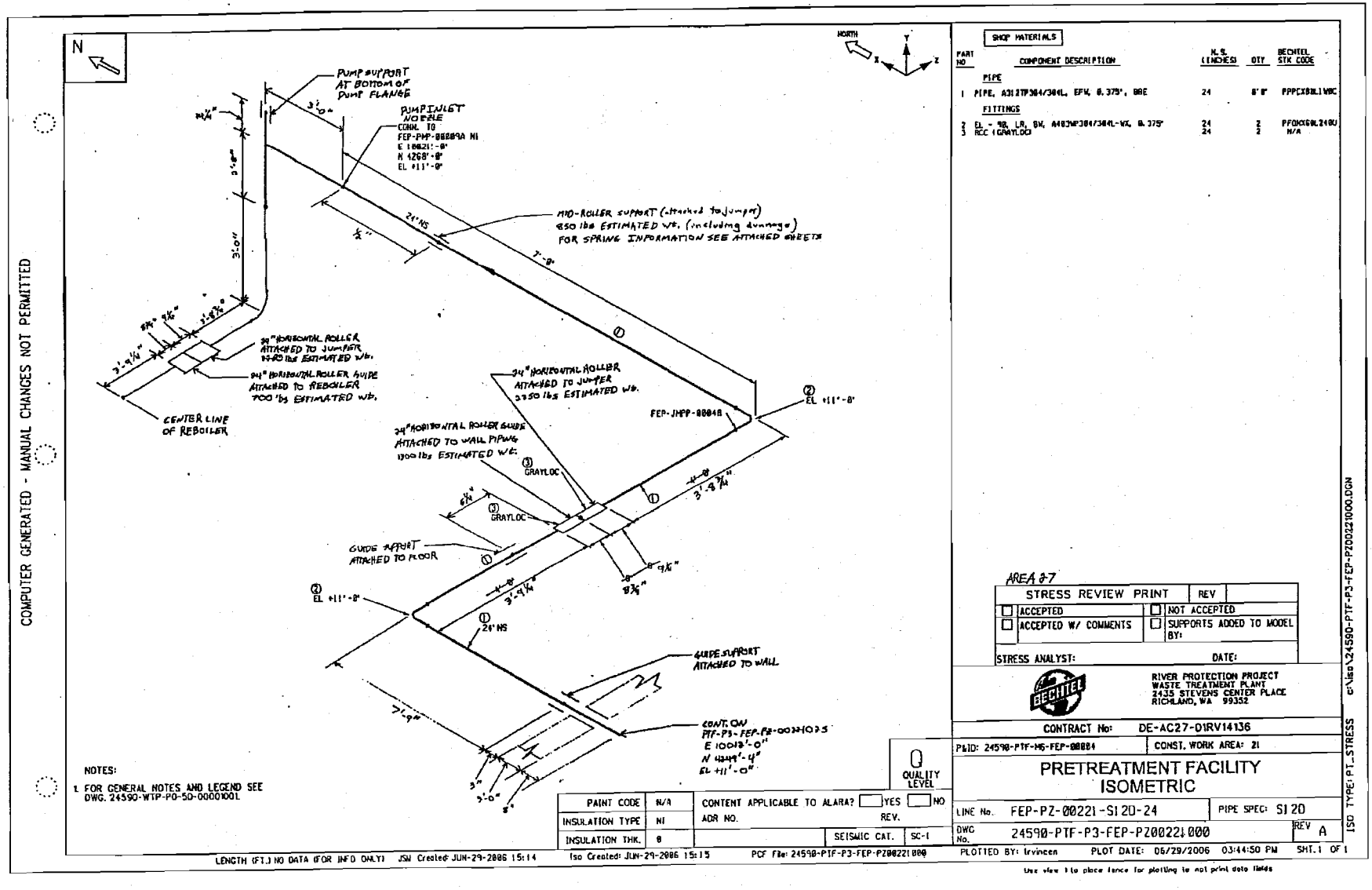
COMPUTER GENERATED - MANUAL CHANGES NOT PERMITTED
N
NORTH
PUMP SUPPORT AT BOTTOM OF PUMP FLANGE
PUMP INLET NOZZLE
CONN. TO FEP-PMP-00889A MI
E 100211'-0"
N 12681'-0"
EL +11'-0"
MID-ROLLER SUPPORT (attached to jumper)
650 lbs ESTIMATED Wt. (including damage)
FOR SPRING INFORMATION SEE ATTACHED SHEETS
24"NS
7'-8"
30" HORIZONTAL ROLLER ATTACHED TO JUMPER 1650 lbs ESTIMATED Wt.
24" HORIZONTAL ROLLER GUIDE ATTACHED TO REBOILER 700 lbs ESTIMATED Wt.
CENTER LINE OF REBOILER
24" HORIZONTAL ROLLER ATTACHED TO JUMPER 2250 lbs ESTIMATED Wt.
FEP-JMPP-00848
EL +11'-0"
24" HORIZONTAL ROLLER GUIDE ATTACHED TO WALL PIPING 1900 lbs ESTIMATED Wt.
GRAYLOC
GRAYLOC
GUIDE APPURT ATTACHED TO FLOOR
EL +11'-0"
24"NS
GUIDE SUPPORT ATTACHED TO WALL
CONT. ON PTF-P3-FEP-PZ-00221010-S
E 100213'-0"
N 12449'-4"
EL +11'-0"
NOTES:
1. FOR GENERAL NOTES AND LEGEND SEE DWG. 24590-WTP-PO-50-00001001
SHOP MATERIALS
PART NO
COMPONENT DESCRIPTION
N.S. (INCHES)
QTY
BECHTEL STK CODE
PIPE
1 PIPE, A312TP304/304L, EFW, 0.375", BBE 24 8'0" PPPCX80L1WBC
FITTINGS
2 EL - 90, LR, BW, A403WP304/304L-WX, 0.375" 24 2 PFDXCX80L240U
3 REC (GRAYLOC) 24 2 N/A
AREA 27
STRESS REVIEW PRINT
REV
ACCEPTED
NOT ACCEPTED
ACCEPTED W/ COMMENTS
SUPPORTS ADDED TO MODEL BY:
STRESS ANALYST:
DATE:
BECHTEL
RIVER PROTECTION PROJECT
WASTE TREATMENT PLANT
2435 STEVENS CENTER PLACE
RICHLAND, WA 99352
CONTRACT No: DE-AC27-01RV14136
P&ID: 24590-PTF-M5-FEP-00884
CONST. WORK AREA: 21
PRETREATMENT FACILITY
ISOMETRIC
LINE No. FEP-PZ-00221-S12D-24
PIPE SPEC: S12D
DWG No. 24590-PTF-P3-FEP-PZ00221000
REV A
PAINT CODE N/A
INSULATION TYPE NI
INSULATION THK. 0
CONTENT APPLICABLE TO ALARA? YES NO
ADR NO.
REV.
SEISMIC CAT. SC-1
QUALITY LEVEL Q
LENGTH (FT.) NO DATA (FOR INFO ONLY) JSW Created: JUN-29-2006 15:14
Iso Created: JUN-29-2006 15:15
PCF File: 24590-PTF-P3-FEP-PZ00221000
PLOTTED BY: krvincen
PLOT DATE: 06/29/2006 03:44:50 PM
SHT. 1 OF 1
Use view file to place fence for plotting to not print data fields
ISO TYPE: PT_STRESS
c:\iso\24590-PTF-P3-FEP-PZ00221000.DGN

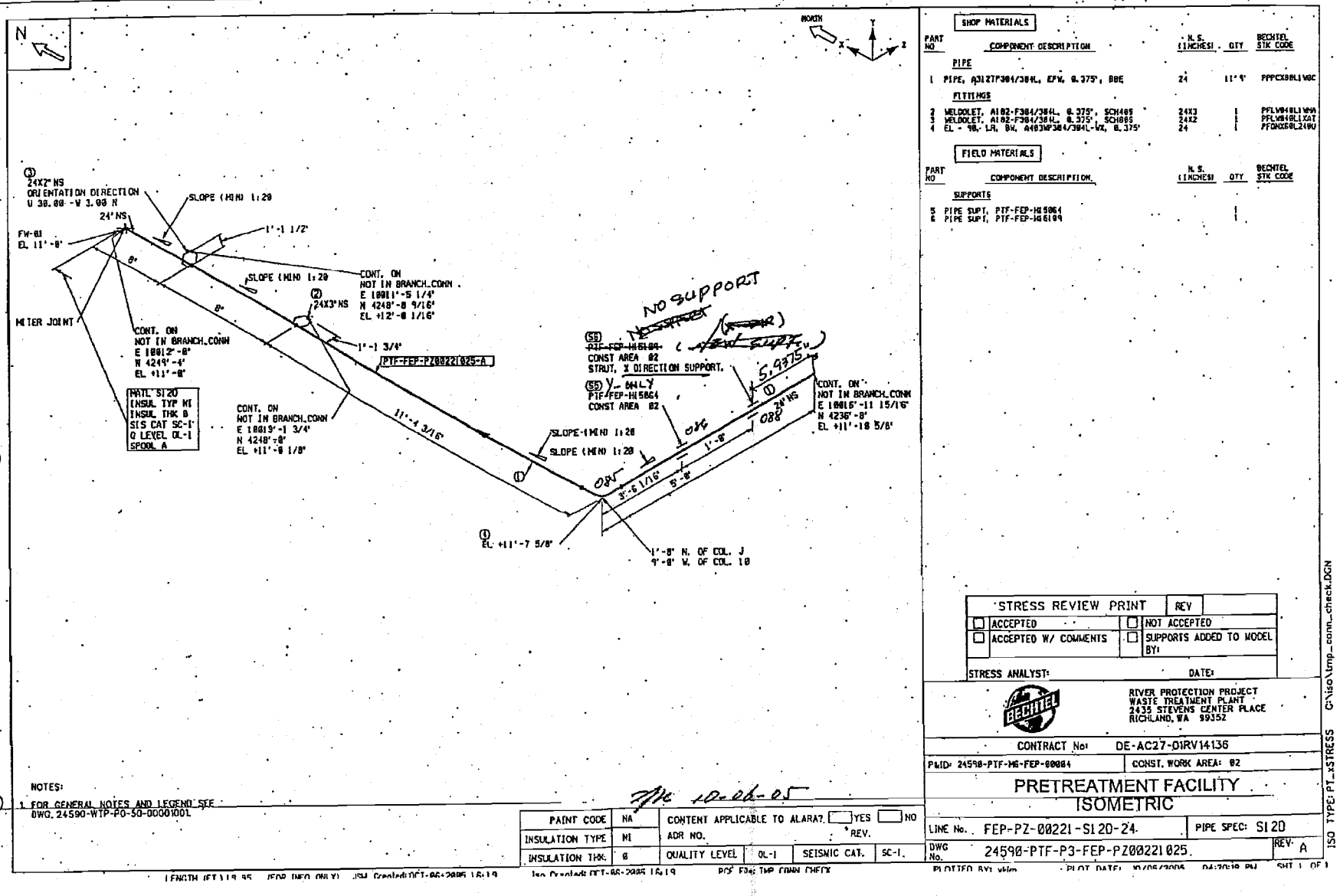
COMPUTER GENERATED - MANUAL CHANGES NOT PERMITTED
NORTH
SHOP MATERIALS
PART NO
COMPONENT DESCRIPTION
N.S. (INCHES)
QTY
BECHTEL STK CODE
PIPE
1 PIPE, A312TP304/304L, EFW, 0.375", BBE 24 11'-9" PPPCX98LLV0C
FITTINGS
2 WELDOLET, A182-F304/304L, 0.375", SCH40S 24X3 1 PFLW848LLWVA
3 WELDOLET, A182-F304/304L, 0.375", SCH80S 24X2 1 PFLW848LLXAT
4 EL - 90, LR, BW, A403WP304/304L-WX, 0.375" 24 1 PFDNX98L240U
FIELD MATERIALS
PART NO
COMPONENT DESCRIPTION
N.S. (INCHES)
QTY
BECHTEL STK CODE
SUPPORTS
5 PIPE SUPT, PTF-FEP-HI5864 1
6 PIPE SUPT, PTF-FEP-HI6184 1
24X2" NS
ORIENTATION DIRECTION
U 38.88 -W 3.98 N
SLOPE (MIN) 1:20
24" NS
FW-81
EL 11'-8"
1'-1 1/2"
SLOPE (MIN) 1:20
CONT. ON
NOT IN BRANCH_CONN
E 18811'-5 1/4"
N 4248'-8 9/16"
EL +12'-8 1/16"
24X3"NS
METER JOINT
CONT. ON
NOT IN BRANCH_CONN
E 18812'-8"
N 4249'-4"
EL +11'-8"
1'-1 3/4"
PTF-FEP-PZ00221025-A
MATL SI2D
INSUL TYP MI
INSUL THK 8
SIS CAT SC-I
Q LEVEL QL-1
SPOOL A
CONT. ON
NOT IN BRANCH_CONN
E 18819'-1 3/4"
N 4248'-0"
EL +11'-8 1/8"
11'-4 3/16"
NO SUPPORT
(55) PTF-FEP-HI5184
CONST AREA 02
STRUT, X DIRECTION SUPPORT.
(55) Y- ONLY
PTF-FEP-HI5864
CONST AREA 02
5.9375"
SLOPE (MIN) 1:20
SLOPE (MIN) 1:20
ON
1'-8"
24" NS
088
ON
3'-6 1/16"
5'-8"
CONT. ON
NOT IN BRANCH_CONN
E 18815'-11 15/16"
N 4236'-8"
EL +11'-10 5/8"
EL +11'-7 5/8"
1'-8" N. OF COL. J
9'-8" W. OF COL. 10
NOTES:
1 FOR GENERAL NOTES AND LEGEND SEE DWG. 24590-WTP-PO-50-00001001
STRESS REVIEW PRINT
REV
ACCEPTED
NOT ACCEPTED
ACCEPTED W/ COMMENTS
SUPPORTS ADDED TO MODEL BY:
STRESS ANALYST:
DATE:
RIVER PROTECTION PROJECT
WASTE TREATMENT PLANT
2435 STEVENS CENTER PLACE
RICHLAND, WA 99352
CONTRACT No: DE-AC27-01RV14136
P&ID: 24590-PTF-MS-FEP-00084
CONST. WORK AREA: 02
PRETREATMENT FACILITY
ISOMETRIC
LINE No. FEP-PZ-00221-SI2D-24.
PIPE SPEC: SI2D
DWG No. 24590-PTF-P3-FEP-PZ00221025.
REV: A
PAINT CODE NA
CONTENT APPLICABLE TO ALARA? YES NO
INSULATION TYPE MI
ADR NO.
REV.
INSULATION THK 8
QUALITY LEVEL QL-1
SEISMIC CAT. SC-1
ISO TYPE: PT_xSTRESS C:\iso\tmp_conn_check.DGN

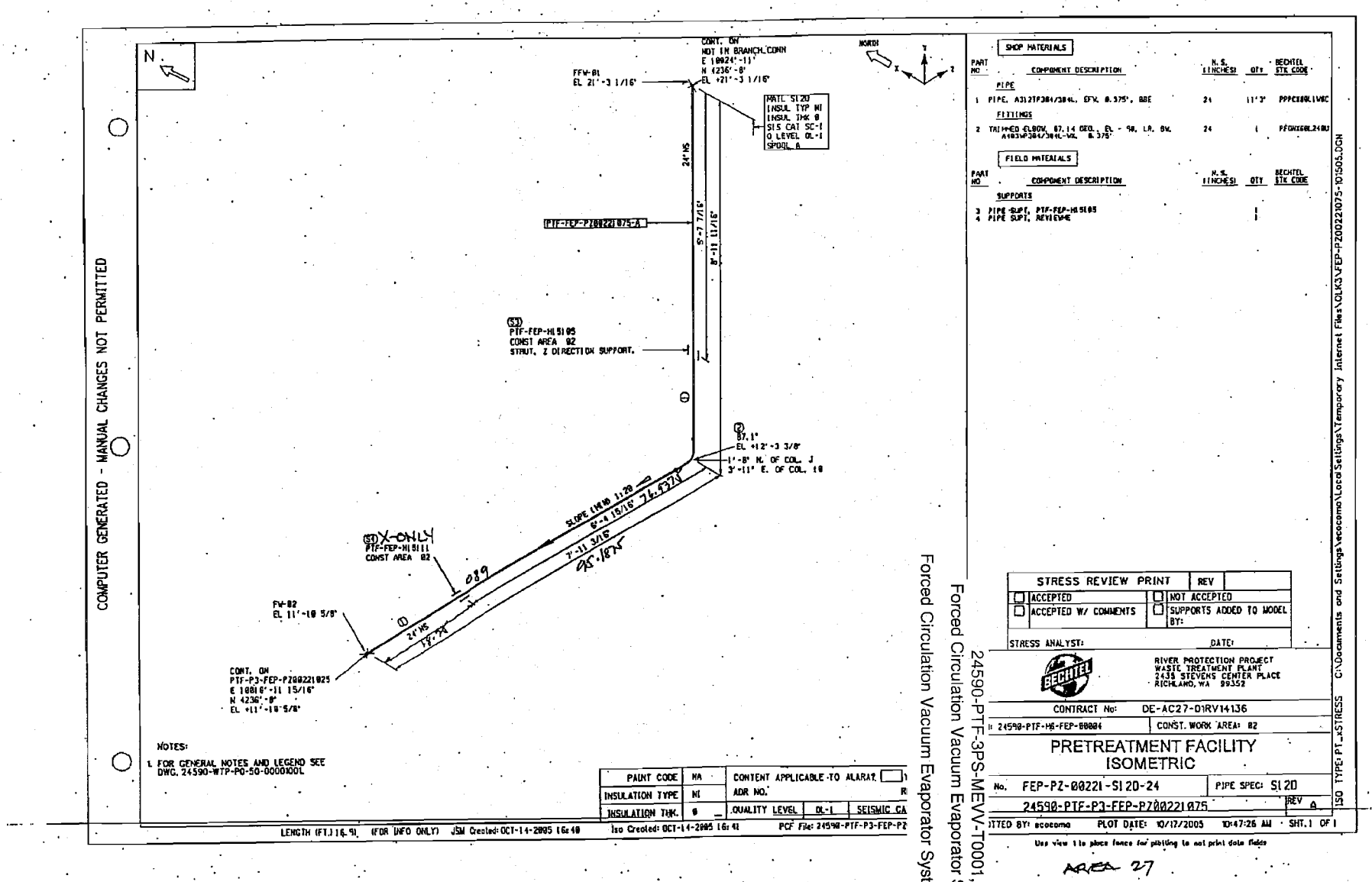
COMPUTER GENERATED - MANUAL CHANGES NOT PERMITTED
N
NORTH
CONT. ON
NOT IN BRANCH CONN
E 10024'-11"
N 4236'-8"
EL +21'-3 1/16"
FFW-01
EL 21'-3 1/16"
MATL S12D
INSUL TYP MI
INSUL THK 0
SIS CAT SC-1
Q LEVEL QL-1
SPOOL A
24" MS
PTF-FEP-PZ00221075-A
5'-7 7/16"
8'-11 11/16"
(S2)
PTF-FEP-HLS105
CONST AREA 82
STRUT, Z DIRECTION SUPPORT.
(S1)
87.1°
EL +12'-3 3/8"
1'-8" N. OF COL. J
3'-11" E. OF COL. 18
SLOPE (MIN) 1:20
6'-4 15/16"
76.6371
7'-11 3/16"
95.1875
(S1)
PTF-FEP-HLS111
CONST AREA 82
089
FW-02
EL 11'-10 5/8"
24" MS
19'-7"
CONT. ON
PTF-P3-FEP-PZ00221025
E 10016'-11 15/16"
N 4236'-8"
EL +11'-10 5/8"
NOTES:
1. FOR GENERAL NOTES AND LEGEND SEE DWG. 24590-WTP-PO-50-00001001
PAINT CODE | NA
INSULATION TYPE | NI
INSULATION THK. | 0
CONTENT APPLICABLE TO ALARAT
ADR NO.
QUALITY LEVEL | QL-1 | SEISMIC CA
LENGTH (FT.) 16.9 (FOR INFO ONLY) JSM Created: OCT-14-2005 16:40
Iso Created: OCT-14-2005 16:41
PCF File: 24590-PTF-P3-FEP-PZ
SHOP MATERIALS
PART NO | COMPONENT DESCRIPTION | N.S. (INCHES) | QTY | BECHTEL STK CODE
PIPE
1 PIPE, A312TP304/304L, SFW, 0.375", BBE | 24 | 11'3" | PPPCI80L1WSC
FITTINGS
2 TAPERED ELBOW, 87.14 DEG., EL - 90, LR, BW, A403WP304/304L-WL, 0.375" | 24 | 1 | PFDNI80L24BU
FIELD MATERIALS
PART NO | COMPONENT DESCRIPTION | N.S. (INCHES) | QTY | BECHTEL STK CODE
SUPPORTS
3 PIPE SUPT, PTF-FEP-HLS105
4 PIPE SUPT, REVIEW-E
STRESS REVIEW PRINT | REV
ACCEPTED | NOT ACCEPTED
ACCEPTED W/ COMMENTS | SUPPORTS ADDED TO MODEL BY:
STRESS ANALYST: | DATE:
RIVER PROTECTION PROJECT
WASTE TREATMENT PLANT
2435 STEVENS CENTER PLACE
RICHLAND, WA 99352
CONTRACT No: DE-AC27-01RV14136
24590-PTF-MS-FEP-00004 | CONST. WORK AREA: 82
PRETREATMENT FACILITY
ISOMETRIC
No. FEP-PZ-00221-S12D-24 | PIPE SPEC: S12D
24590-PTF-P3-FEP-PZ00221075 | REV A
ISO TYPE: PT_aSTRESS C:\Documents and Settings\ecocomo\Local Settings\Temporary Internet Files\OLK3\FEP-PZ00221075-101505.DGN
ITED BY: ecocomo PLOT DATE: 10/17/2005 10:47:26 AM SHT. 1 OF 1
Use view 1 to place fence for plotting to not print data fields
AREA 27

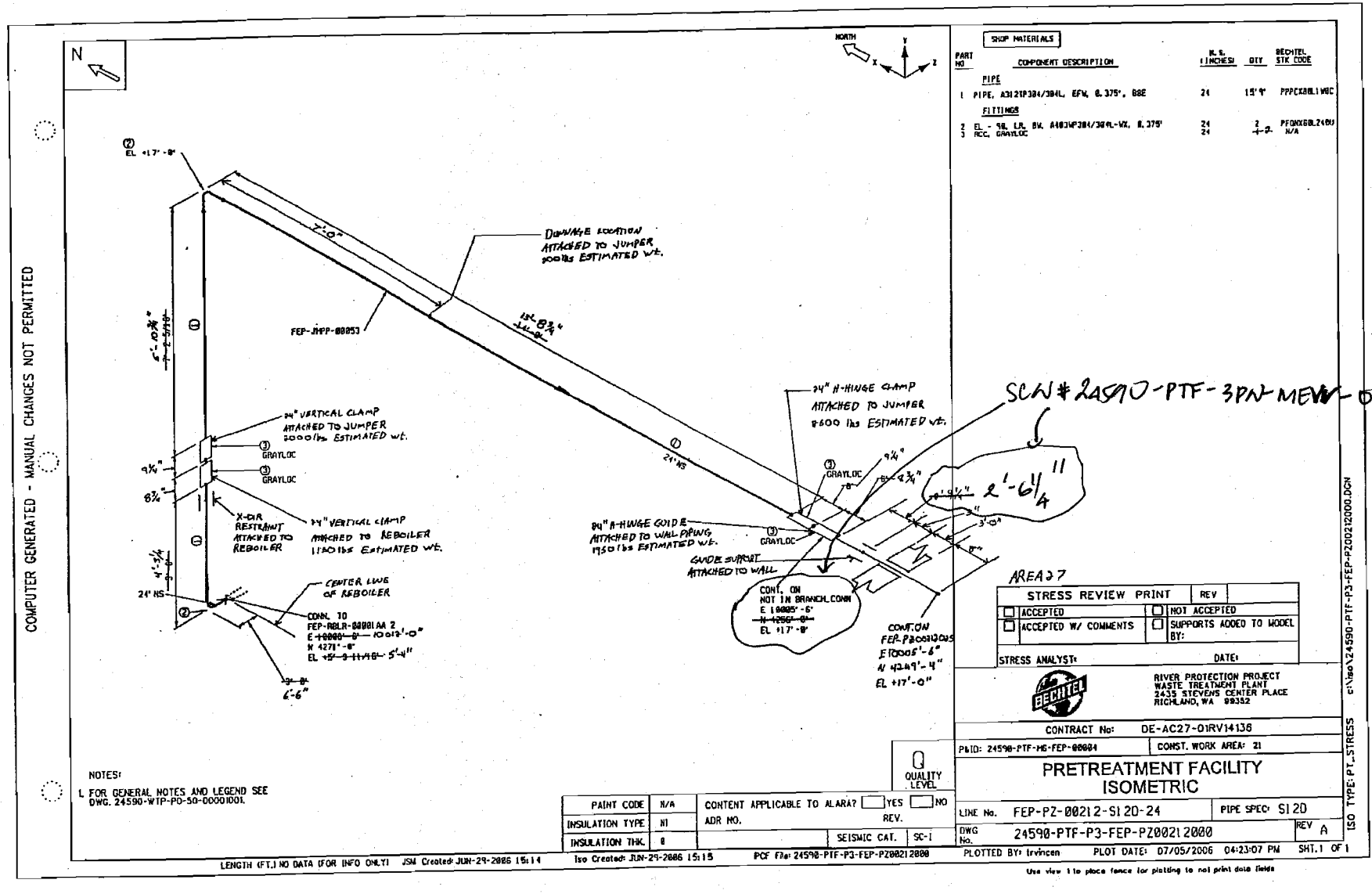
COMPUTER GENERATED - MANUAL CHANGES NOT PERMITTED
N
NORTH
SHOP MATERIALS
PART NO
COMPONENT DESCRIPTION
N. S. (INCHES)
QTY
BECHTEL STK CODE
PIPE
1 PIPE, A312TP304/304L, EFW, 0.375", SCH 80E 24 15'9" PPPCXSBL1WBC
FITTINGS
2 EL - 90, LR, BW, A403WP304/304L-WX, 0.375" 24 2 PFQNXSBL240U
3 RCC, GRAYLOC 24 4-2- N/A
EL +17'-8"
7'-0"
DRAWAVE LOCATION ATTACHED TO JUMPER 900lbs ESTIMATED WT.
FEP-JMPP-00053
24" HS
24" H-HINGE CLAMP ATTACHED TO JUMPER 8600 lbs ESTIMATED WT.
SCN# 24590-PTF-3PN-MEVV-00022
2'-6 1/4"
24" VERTICAL CLAMP ATTACHED TO JUMPER 2000lbs ESTIMATED WT.
GRAYLOC
9 1/4"
8 3/4"
X-DIR RESTRAINT ATTACHED TO REBOILER
24" VERTICAL CLAMP ATTACHED TO REBOILER 11400lbs ESTIMATED WT.
24" H-HINGE GUIDE ATTACHED TO WALL PIPING 11500lbs ESTIMATED WT.
GUIDE SUPPORT ATTACHED TO WALL
CENTER LINE OF REBOILER
CONN. TO FEP-RBLR-00001AA 2
CONT. ON NOT IN BRANCH CONN
CONN ON FEP-P20012CNS
AREA 27
STRESS REVIEW PRINT
REV
ACCEPTED
NOT ACCEPTED
ACCEPTED W/ COMMENTS
SUPPORTS ADDED TO MODEL BY:
STRESS ANALYST:
DATE:
BECHTEL
RIVER PROTECTION PROJECT
WASTE TREATMENT PLANT
2435 STEVENS CENTER PLACE
RICHLAND, WA 99352
CONTRACT No: DE-AC27-01RV14136
PWID: 24590-PTF-MS-FEP-00004
CONST. WORK AREA: 21
PRETREATMENT FACILITY
ISOMETRIC
LINE No. FEP-PZ-00212-S12D-24
PIPE SPEC: S12D
DWG No. 24590-PTF-P3-FEP-PZ00212000
REV A
NOTES:
1. FOR GENERAL NOTES AND LEGEND SEE DWG. 24590-WTP-PO-50-00001001.
QUALITY LEVEL
PAINT CODE N/A
INSULATION TYPE NI
INSULATION THK. 0
CONTENT APPLICABLE TO ALARA? YES NO
ADR NO.
REV.
SEISMIC CAT. SC-1
LENGTH (FT.) NO DATA (FOR INFO ONLY) JSM Created: JUN-29-2006 15:14
Iso Created: JUN-29-2006 15:15
PCF File: 24590-PTF-P3-FEP-PZ00212000
PLOTTED BY: tvincen
PLOT DATE: 07/05/2006 04:23:07 PM
SHT. 1 OF 1
Use view 1 to place fence for plotting to not print data fields
ISO TYPE: PT_STRESS
c:\Use\24590-PTF-P3-FEP-PZ00212000.DGN

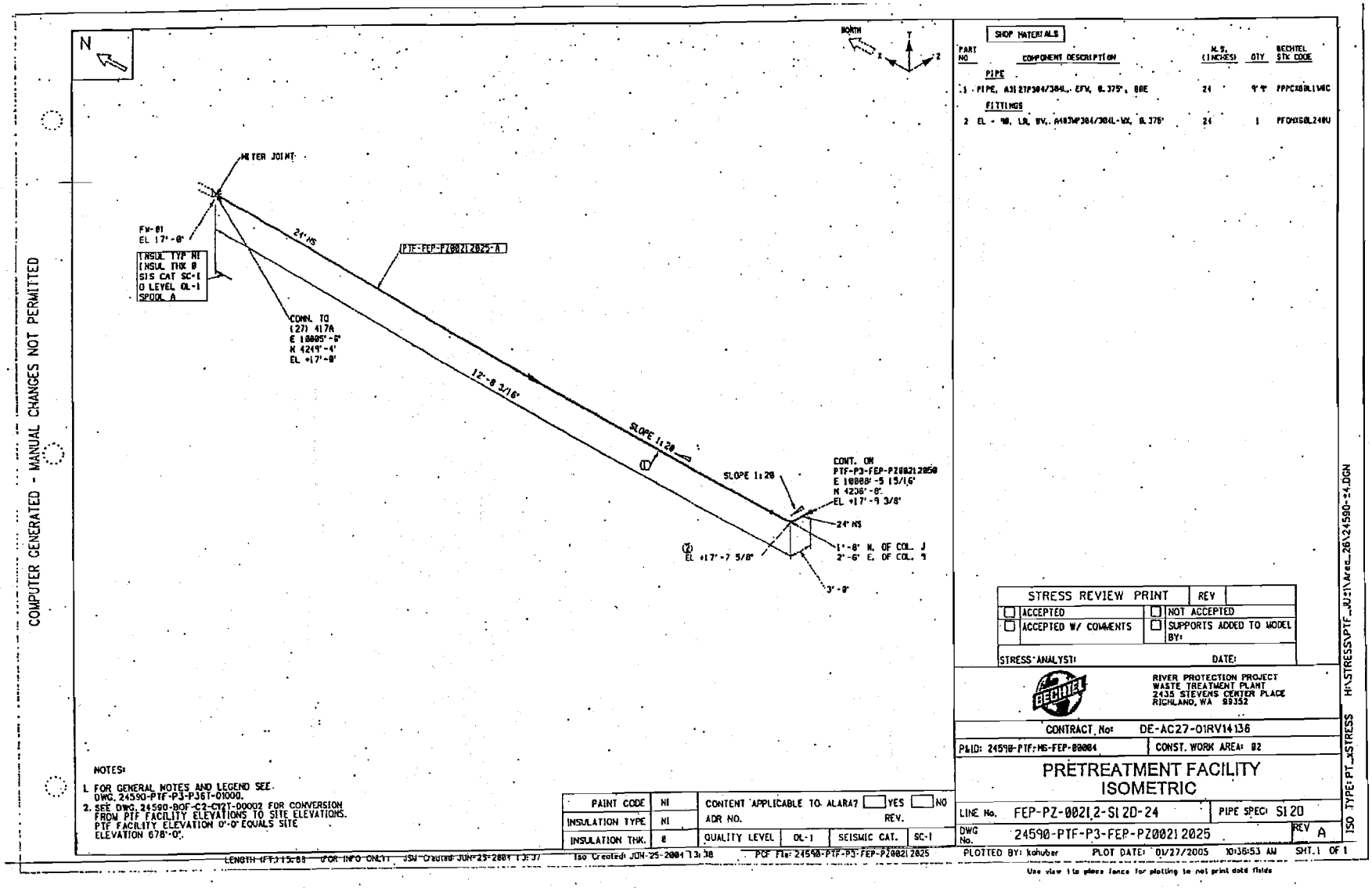
COMPUTER GENERATED - MANUAL CHANGES NOT PERMITTED
N
NORTH
METER JOINT
FV-81
EL 17'-0"
INSUL TYP NI
INSUL THK 0
SIS CAT SC-I
Q LEVEL QL-1
SPOOL A
24" NS
PTF-FEP-PZ00212025-A
CONN. TO
(27) 417A
E 18885'-8"
N 4249'-4"
EL +17'-0"
12'-8 3/16"
SLOPE 1:20
SLOPE 1:20
CONT. ON
PTF-P3-FEP-PZ00212050
E 18888'-5 15/16"
N 4236'-8"
EL +17'-9 3/8"
24" NS
1'-8" N. OF COL. J
2'-6" E. OF COL. 9
EL +17'-7 5/8"
3'-8"
SHOP MATERIALS
PART NO
COMPONENT DESCRIPTION
N.S. (INCHES)
QTY
BECHTEL STK CODE
PIPE
1 PIPE, A312TP304/304L, SFW, 0.375", BBE
24
9'-9"
PPPCXSBL1W0C
FITTINGS
2 EL - 90, LR, BW, A403WP304/304L-WX, 0.375"
24
1
PFCWXGBL240U
STRESS REVIEW PRINT
REV
ACCEPTED
NOT ACCEPTED
ACCEPTED W/ COMMENTS
SUPPORTS ADDED TO MODEL BY:
STRESS ANALYST:
DATE:
RIVER PROTECTION PROJECT
WASTE TREATMENT PLANT
2435 STEVENS CENTER PLACE
RICHLAND, WA 99352
CONTRACT, No: DE-AC27-01RV14136
P&ID: 24590-PTF-M6-FEP-00004
CONST. WORK AREA: 82
PRETREATMENT FACILITY
ISOMETRIC
LINE No. FEP-PZ-00212-SI20-24
PIPE SPEC: SI20
DWG No. 24590-PTF-P3-FEP-PZ00212025
REV A
PLOTTED BY: kahuber
PLOT DATE: 01/27/2005 10:36:53 AM
SHT. 1 OF 1
ISO TYPE: PT_ASTRESS
H:\STRESS\PTF_JU21\Area_26\24590-24.DGN
NOTES:
1. FOR GENERAL NOTES AND LEGEND SEE DWG. 24590-PTF-P3-PJ6T-01000.
2. SEE DWG. 24590-BOF-C2-CT2T-00002 FOR CONVERSION FROM PTF FACILITY ELEVATIONS TO SITE ELEVATIONS. PTF FACILITY ELEVATION 0'-0" EQUALS SITE ELEVATION 678'-0".
PAINT CODE NI
INSULATION TYPE NI
INSULATION THK. 0
CONTENT APPLICABLE TO ALARA? YES NO
ADR NO.
REV.
QUALITY LEVEL QL-1
SEISMIC CAT. SC-1
LENGTH (FT): 15.68 (FOR INFO ONLY)
ISO Created: JUN-25-2004 13:38
PCF File: 24590-PTF-P3-FEP-PZ00212025
Use view 1 to place fence for plotting to not print data fields

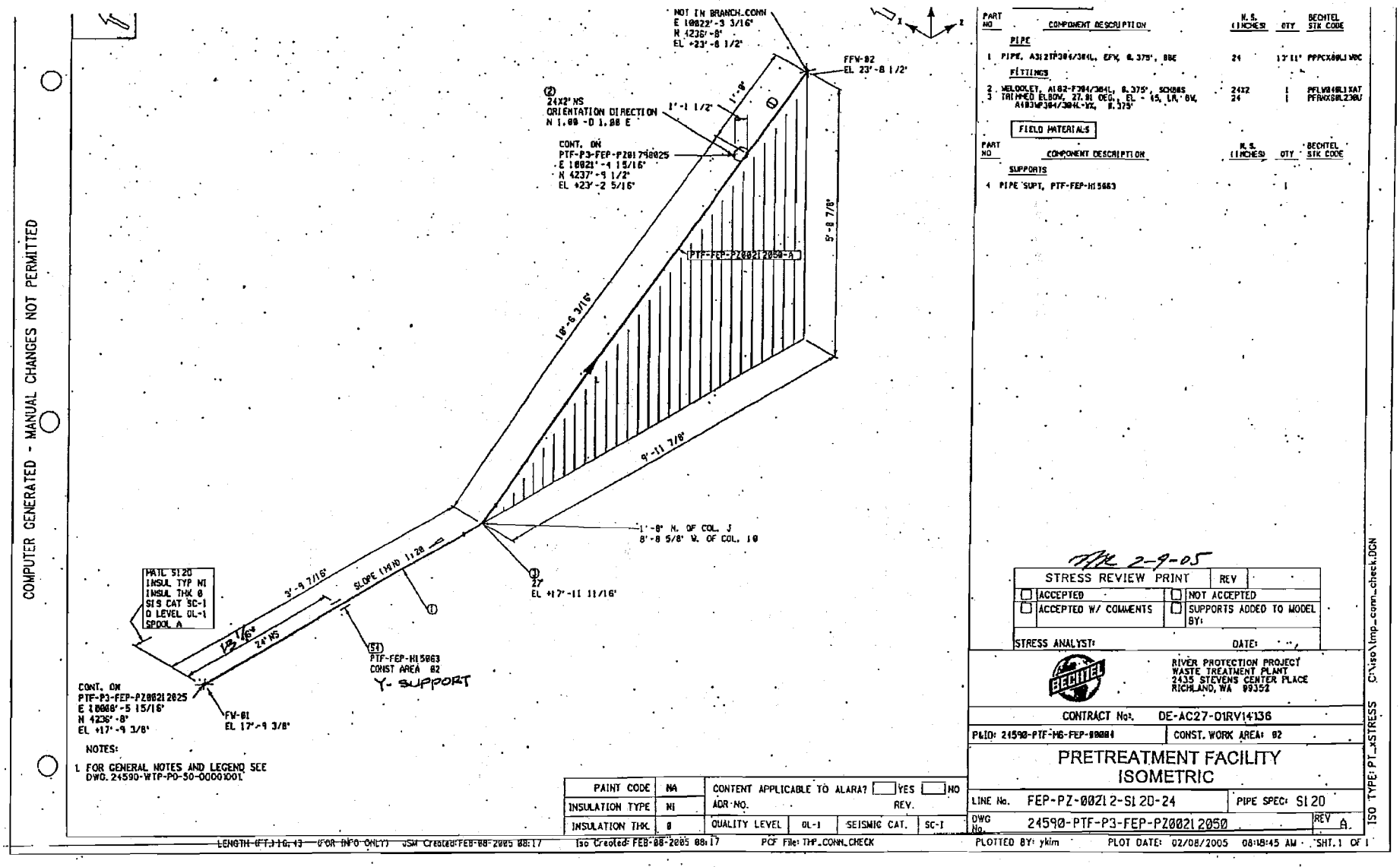
COMPUTER GENERATED - MANUAL CHANGES NOT PERMITTED
NOT IN BRANCH_CONN
E 10822'-3 3/16"
N 4236'-8"
EL +23'-8 1/2"
FFV-82
EL 23'-8 1/2"
(2)
24X2"NS
ORIENTATION DIRECTION
N 1.00 -0 1.00 E
1'-1 1/2"
1'-8"
CONT. ON
PTF-P3-FEP-PZ00212025
E 10821'-4 15/16"
N 4237'-9 1/2"
EL +23'-2 5/16"
PTF-FEP-PZ00212050-A
5'-8 7/8"
18'-6 3/16"
9'-11 7/8"
1'-8" N. OF COL. J
8'-8 5/8" W. OF COL. 10
(1)
27
EL +17'-11 11/16"
MATL S120
INSUL TYP NI
INSUL THK 0
SIS CAT SC-1
D LEVEL DL-1
SPOOL A
3'-9 7/16"
SLOPE 1"/FT 1:28
13 1/16"
24"NS
(51)
PTF-FEP-HI5063
CONST AREA 82
Y- SUPPORT
CONT. ON
PTF-P3-FEP-PZ00212025
E 10808'-5 15/16"
N 4236'-8"
EL +17'-9 3/8"
FV-81
EL 17'-9 3/8"
NOTES:
1. FOR GENERAL NOTES AND LEGEND SEE DWG. 24590-WTP-PO-S0-00001001
PART NO
COMPONENT DESCRIPTION
N.S. (INCHES)
QTY
BECHTEL STK CODE
PIPE
1 PIPE, A312TP304/304L, EFW, 0.375", BBE 24 13'11" PPPCX08LJWBC
FITTINGS
2 WELDOLET, A182-F304/304L, 0.375", SCH80S 24X2 1 PELW24BLJXAT
3 TRIMMED ELBOW, 27.81 DEG., EL - 45, LR, BW, A403WP304/304L-WX, W.375 24 1 PFWX08LJ30U
FIELD MATERIALS
PART NO
COMPONENT DESCRIPTION
N.S. (INCHES)
QTY
BECHTEL STK CODE
SUPPORTS
4 PIPE SUPT, PTF-FEP-HI5063 1
TMK 2-9-05
STRESS REVIEW PRINT
REV
ACCEPTED
NOT ACCEPTED
ACCEPTED W/ COMMENTS
SUPPORTS ADDED TO MODEL BY:
STRESS ANALYST:
DATE:
BECHTEL
RIVER PROTECTION PROJECT
WASTE TREATMENT PLANT
2435 STEVENS CENTER PLACE
RICHLAND, WA 99352
CONTRACT No: DE-AC27-01RV14136
P&ID: 24590-PTF-M6-FEP-00004
CONST. WORK AREA: 82
PRETREATMENT FACILITY
ISOMETRIC
LINE No. FEP-PZ-00212-S120-24
PIPE SPEC: S120
DWG No. 24590-PTF-P3-FEP-PZ00212050
REV A
PAINT CODE NA
INSULATION TYPE NI
INSULATION THK 0
CONTENT APPLICABLE TO ALARA? YES NO
ADR NO.
REV.
QUALITY LEVEL QL-1
SEISMIC CAT. SC-1
LENGTH (FT.) 16.13 (FOR INFO ONLY)
ISM Created: FEB-08-2005 08:17
Iso Created: FEB-08-2005 08:17
PCF File: THP_CONN_CHECK
PLOTTED BY: ykim
PLOT DATE: 02/08/2005 08:18:45 AM
SHT. 1 OF 1
ISO TYPE: PT_xSTRESS
C:\Iso\tmp_conn_check.DGN

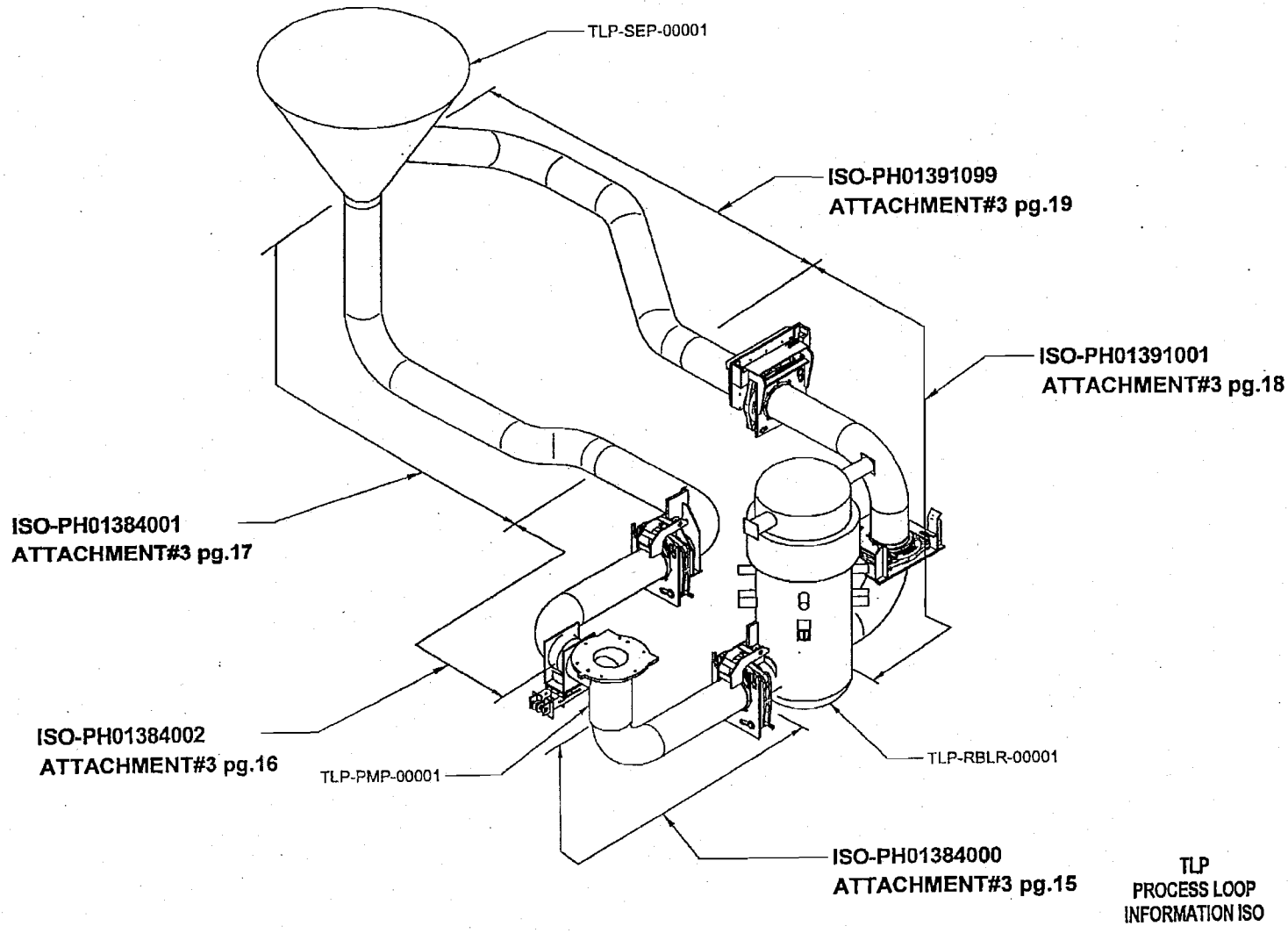
TLP-SEP-00001
ISO-PH01391099
ATTACHMENT#3 pg.19
ISO-PH01391001
ATTACHMENT#3 pg.18
ISO-PH01384001
ATTACHMENT#3 pg.17
ISO-PH01384002
ATTACHMENT#3 pg.16
TLP-PMP-00001
TLP-RBLR-00001
ISO-PH01384000
ATTACHMENT#3 pg.15
TLP
PROCESS LOOP
INFORMATION ISO

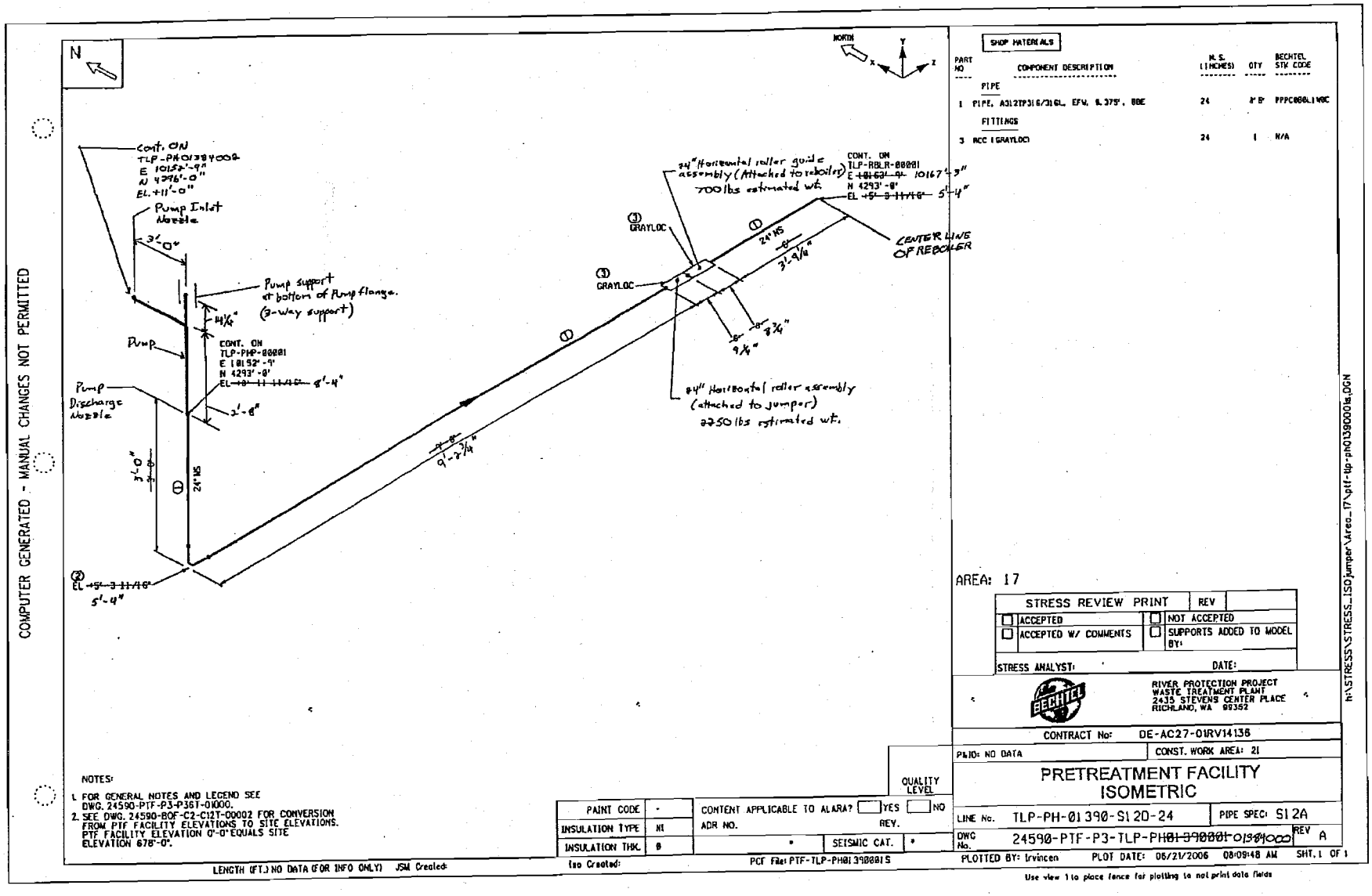
COMPUTER GENERATED - MANUAL CHANGES NOT PERMITTED
N
NORTH
Cont. ON TLP-PH-01391002 E 10152'-9" N 4296'-0" EL.+11'-0"
Pump Inlet Nozzle
3'-0"
Pump support at bottom of Pump flange. (3-way support)
Pump
Pump Discharge Nozzle
CONT. ON TLP-PHP-00001 E 10152'-9" N 4293'-8" EL +8'-11 11/16" 8'-4"
2'-8"
3'-0"
24" NS
EL +5'-3 11/16" 5'-4"
24" Horizontal roller guide assembly (Attached to reboiler) 700 lbs estimated wt.
CONT. ON TLP-RBLR-00001 E 10163'-9" 10167'-3" N 4293'-8" EL +5'-3 11/16" 5'-4"
3 GRAYLOC
3 GRAYLOC
24" NS
3'-9 1/16"
CENTER LINE OF REBOILER
9'-8 3/4"
9'-8 3/4"
84" Horizontal roller assembly (attached to jumper) 2250 lbs estimated wt.
SHOP MATERIALS
PART NO
COMPONENT DESCRIPTION
N.S. (INCHES)
QTY
BECHTEL STK CODE
PIPE
1 PIPE, A312TP316/316L, EFW, SCH 5S, BBE 24 AR FT PPPC00BL1W0C
FITTINGS
3 RCC (GRAYLOC) 24 1 N/A
AREA: 17
STRESS REVIEW PRINT
REV
ACCEPTED
NOT ACCEPTED
ACCEPTED W/ COMMENTS
SUPPORTS ADDED TO MODEL BY:
STRESS ANALYST:
DATE:
BECHTEL
RIVER PROTECTION PROJECT WASTE TREATMENT PLANT 2435 STEVENS CENTER PLACE RICHLAND, WA 99352
CONTRACT No: DE-AC27-01RV14136
PWID: NO DATA
CONST. WORK AREA: 21
PRETREATMENT FACILITY ISOMETRIC
LINE No. TLP-PH-01390-S12D-24
PIPE SPEC: S12A
DWG No. 24590-PTF-P3-TLP-PH01390001-01391000
REV A
PLOTTED BY: Irvincen
PLOT DATE: 06/21/2006 08:09:48 AM
SHT. 1 OF 1
NOTES:
1. FOR GENERAL NOTES AND LEGEND SEE DWG. 24590-PTF-P3-P36T-01000.
2. SEE DWG. 24590-BOF-C2-C12T-00002 FOR CONVERSION FROM PTF FACILITY ELEVATIONS TO SITE ELEVATIONS. PTF FACILITY ELEVATION 0'-0" EQUALS SITE ELEVATION 678'-0".
PAINT CODE
INSULATION TYPE
INSULATION THK.
CONTENT APPLICABLE TO ALARA? YES NO
ADR NO.
REV.
SEISMIC CAT.
QUALITY LEVEL
LENGTH (FT.) NO DATA (FOR INFO ONLY) JSM Created:
Iso Created:
PCF File: PTF-TLP-PH01390001S
Use view 1 to place fence for plotting to not print data fields
N:\STRESS\STRESS_ISO\jumper\area_17\ptf-tlp-ph01390001s.DGN

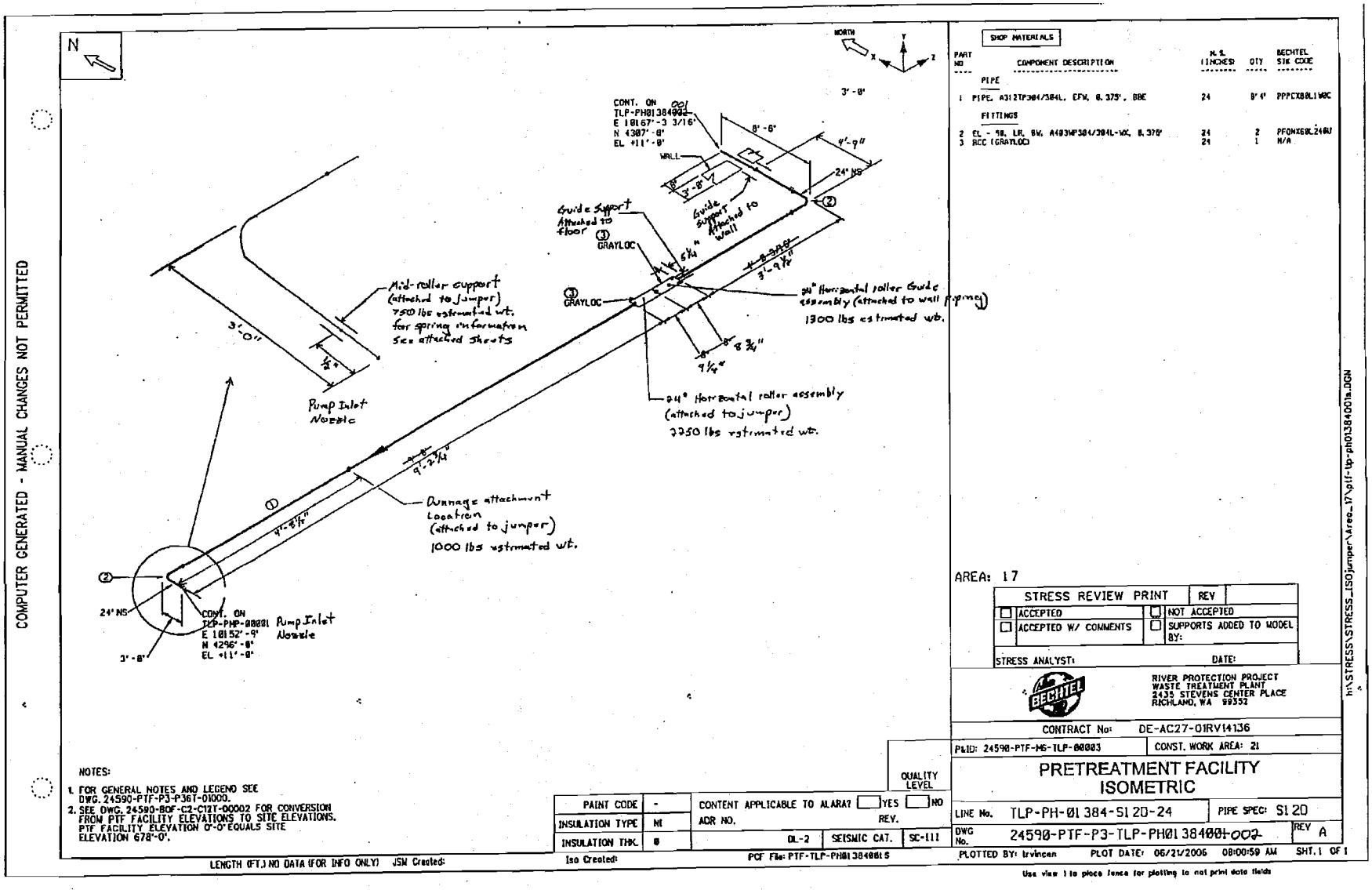
COMPUTER GENERATED - MANUAL CHANGES NOT PERMITTED
N
NORTH
CONT. ON TLP-PH01384001
E 10167'-3 3/16"
N 4307'-8"
EL +11'-8"
WALL
8'-8"
4'-9"
24" NS
3'-8"
Guide Support Attached to floor
Guide support Attached to wall
GRAYLOC
Mid-roller support (attached to jumper) 750 lbs estimated wt. for spring information see attached sheets
3'-0"
Pump Inlet Nozzle
24" Horizontal roller Guide assembly (attached to wall typical) 1300 lbs estimated wt.
24" Horizontal roller assembly (attached to jumper) 2250 lbs estimated wt.
Dunnage attachment Location (attached to jumper) 1000 lbs estimated wt.
CONT. ON TLP-PMP-00001
E 10152'-9"
N 4296'-8"
EL +11'-8"
Pump Inlet Nozzle
SHOP MATERIALS
PART NO
COMPONENT DESCRIPTION
N.S. (INCHES)
QTY
BECHTEL STK CODE
PIPE
1 PIPE, A312TP304/304L, EFW, 0.375", BBE 24 8'-0" PPPCX80L1WBC
FITTINGS
2 EL - 90, LR, BW, A403WP304/304L-WX, 0.375" 24 2 PFQNX80L24BU
3 REC (GRAYLOC) 24 1 N/A
AREA: 17
STRESS REVIEW PRINT
REV
ACCEPTED
NOT ACCEPTED
ACCEPTED W/ COMMENTS
SUPPORTS ADDED TO MODEL BY:
STRESS ANALYST:
DATE:
BECHTEL
RIVER PROTECTION PROJECT
WASTE TREATMENT PLANT
2435 STEVENS CENTER PLACE
RICHLAND, WA 99352
CONTRACT No: DE-AC27-01RV14136
P&ID: 24590-PTF-MS-TLP-00003
CONST. WORK AREA: 21
PRETREATMENT FACILITY
ISOMETRIC
LINE No. TLP-PH-01384-S12D-24
PIPE SPEC: S12D
DWG No. 24590-PTF-P3-TLP-PH01384001-002
REV A
NOTES:
1. FOR GENERAL NOTES AND LEGEND SEE DWG. 24590-PTF-P3-P36T-01000.
2. SEE DWG. 24590-BOF-C2-C12T-00002 FOR CONVERSION FROM PTF FACILITY ELEVATIONS TO SITE ELEVATIONS. PTF FACILITY ELEVATION 0'-0" EQUALS SITE ELEVATION 678'-0".
QUALITY LEVEL
PAINT CODE -
INSULATION TYPE MI
INSULATION THK. 0
CONTENT APPLICABLE TO ALARA? YES NO
ADR NO.
REV.
DL-2
SEISMIC CAT. SC-III
LENGTH (FT.) NO DATA (FOR INFO ONLY) JSW Created:
Iso Created:
PCF File: PTF-TLP-PH01384001.S
PLOTTED BY: trvincen
PLOT DATE: 06/21/2006 08:00:59 AM
SHT. 1 OF 1
Use view 1 to place fence for plotting to not print data fields
h:\STRESS\STRESS_ISO\jumper\Area_17\plf-tlp-ph01384001a.DGN

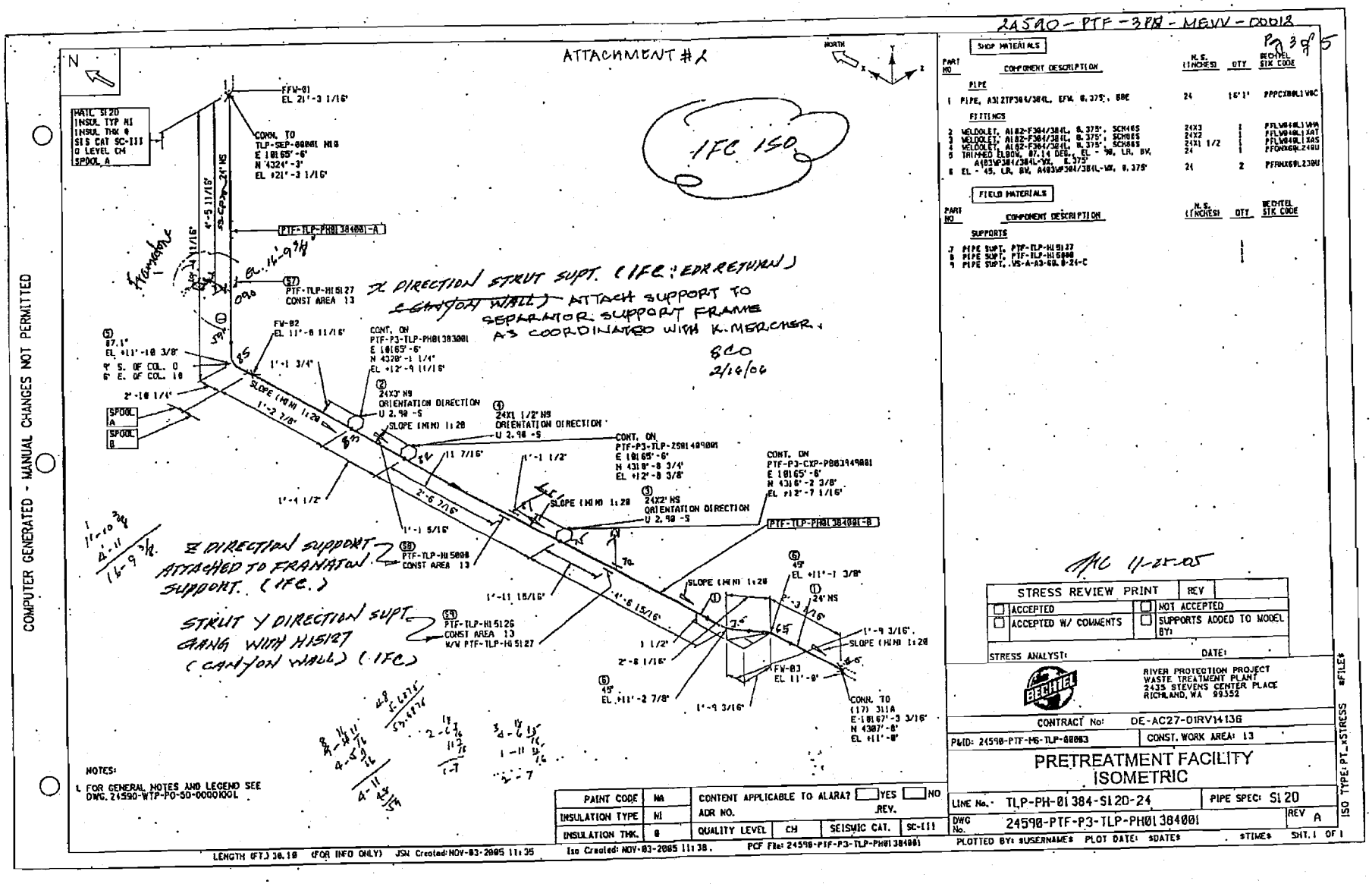
24590-PTF-3PS-MEVV-00018
Pg 38 of 45
ATTACHMENT #2
COMPUTER GENERATED - MANUAL CHANGES NOT PERMITTED
SHOP MATERIALS
FIELD MATERIALS
IFC ISO
STRESS REVIEW PRINT
ACCEPTED
ACCEPTED W/ COMMENTS
NOT ACCEPTED
SUPPORTS ADDED TO MODEL
RIVER PROTECTION PROJECT
WASTE TREATMENT PLANT
2435 STEVENS CENTER PLACE
RICHLAND, WA 99352
CONTRACT No: DE-AC27-01RV14136
PWID: 24590-PTF-M6-TLP-00003
CONST. WORK AREA: 13
PRETREATMENT FACILITY
ISOMETRIC
LINE No.: TLP-PH-01384-S12D-24
PIPE SPEC: S12D
DWG No. 24590-PTF-P3-TLP-PH01384001
REV A
PAINT CODE MA
INSULATION TYPE MI
INSULATION THK. 0
QUALITY LEVEL CH
SEISMIC CAT. SC-III
NOTES:
1. FOR GENERAL NOTES AND LEGEND SEE DWG. 24590-WTP-PO-SD-00001001
PLOTTED BY: $USERNAME$ PLOT DATE: $DATE$ $TIME$ SHT. 1 OF 1

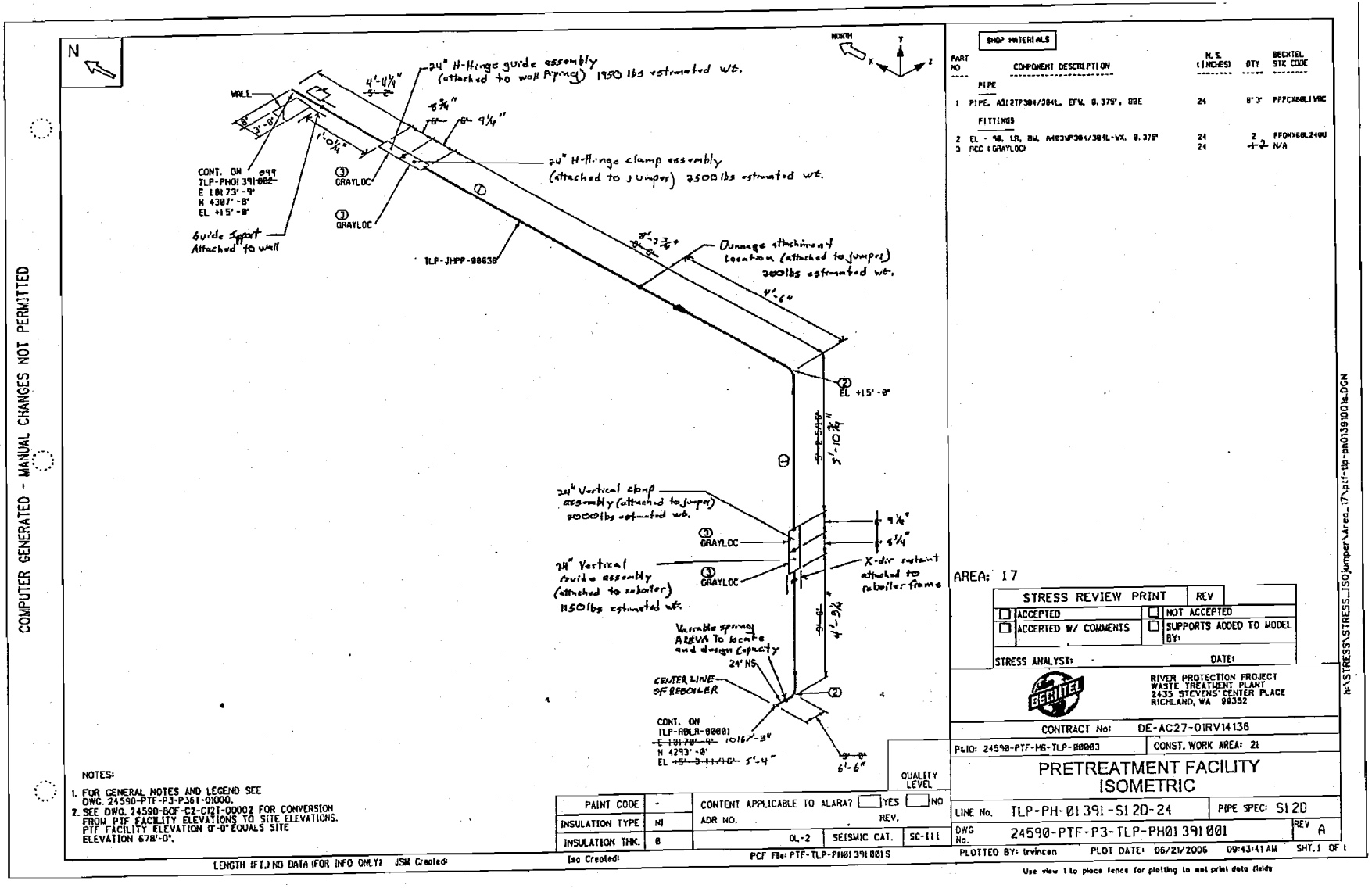
COMPUTER GENERATED - MANUAL CHANGES NOT PERMITTED
N
NORTH
24" H-Hinge guide assembly (attached to wall Piping) 1950 lbs estimated wt.
24" H-Hinge clamp assembly (attached to Jumper) 2500 lbs estimated wt.
WALL
CONT. ON TLP-PH01391002
E 101'3"-9"
N 4307'-8"
EL +15'-8"
Guide Support Attached to wall
GRAYLOC
TLP-JHPP-00030
Dunnage attachment Location (attached to jumper) 200lbs estimated wt.
EL +15'-8"
24" Vertical clamp assembly (attached to jumper) 2000lbs estimated wt.
24" Vertical Guide assembly (attached to reboiler) 1150lbs estimated wt.
X-dir restaint attached to reboiler frame
Variable spring AREVA To locate and design Capacity
24" NS
CENTER LINE OF REBOILER
CONT. ON TLP-RBLR-00001
N 4293'-8"
EL +5'-3 11/16"
5'-4"
6'-6"
SHOP MATERIALS
PART NO
COMPONENT DESCRIPTION
N.S. (INCHES)
QTY
BECHTEL STK CODE
PIPE
1 PIPE, A312TP304/304L, EFW, 0.375", BBE 24 8'-3" PPPCX6RL1VBC
FITTINGS
2 EL - 90, LR, BW, A403WP304/304L-WX, 0.375" 24 2 PFONX6RL240U
3 RCC (GRAYLOC) 24 +2 N/A
AREA: 17
STRESS REVIEW PRINT
REV
ACCEPTED
NOT ACCEPTED
ACCEPTED W/ COMMENTS
SUPPORTS ADDED TO MODEL BY:
STRESS ANALYST:
DATE:
RIVER PROTECTION PROJECT
WASTE TREATMENT PLANT
2435 STEVENS CENTER PLACE
RICHLAND, WA 99352
CONTRACT No: DE-AC27-01RV14136
P&ID: 24590-PTF-M6-TLP-00003
CONST. WORK AREA: 21
PRETREATMENT FACILITY
ISOMETRIC
LINE No. TLP-PH-01391-S120-24
PIPE SPEC: S120
DWG No. 24590-PTF-P3-TLP-PH01391001
REV A
PLOTTED BY: irvincen
PLOT DATE: 06/21/2006 09:43:41 AM
SHT. 1 OF 1
NOTES:
1. FOR GENERAL NOTES AND LEGEND SEE DWG. 24590-PTF-P3-P36T-01000.
2. SEE DWG. 24590-BOF-C2-C12T-00002 FOR CONVERSION FROM PTF FACILITY ELEVATIONS TO SITE ELEVATIONS. PTF FACILITY ELEVATION 0'-0" EQUALS SITE ELEVATION 678'-0".
QUALITY LEVEL
PAINT CODE -
INSULATION TYPE NI
INSULATION THK. 8
CONTENT APPLICABLE TO ALARA? YES NO
ADR NO. REV.
QL-2
SEISMIC CAT. SC-III
LENGTH (FT.) NO DATA (FOR INFO ONLY) JSM Created:
Iso Created:
PCF File: PTF-TLP-PH01391001S
Use view 1 to place fence for plotting to not print data fields
h:\STRESS\STRESS_150\jumper\Area_17\ptf-tlp-ph01391001a.DGN

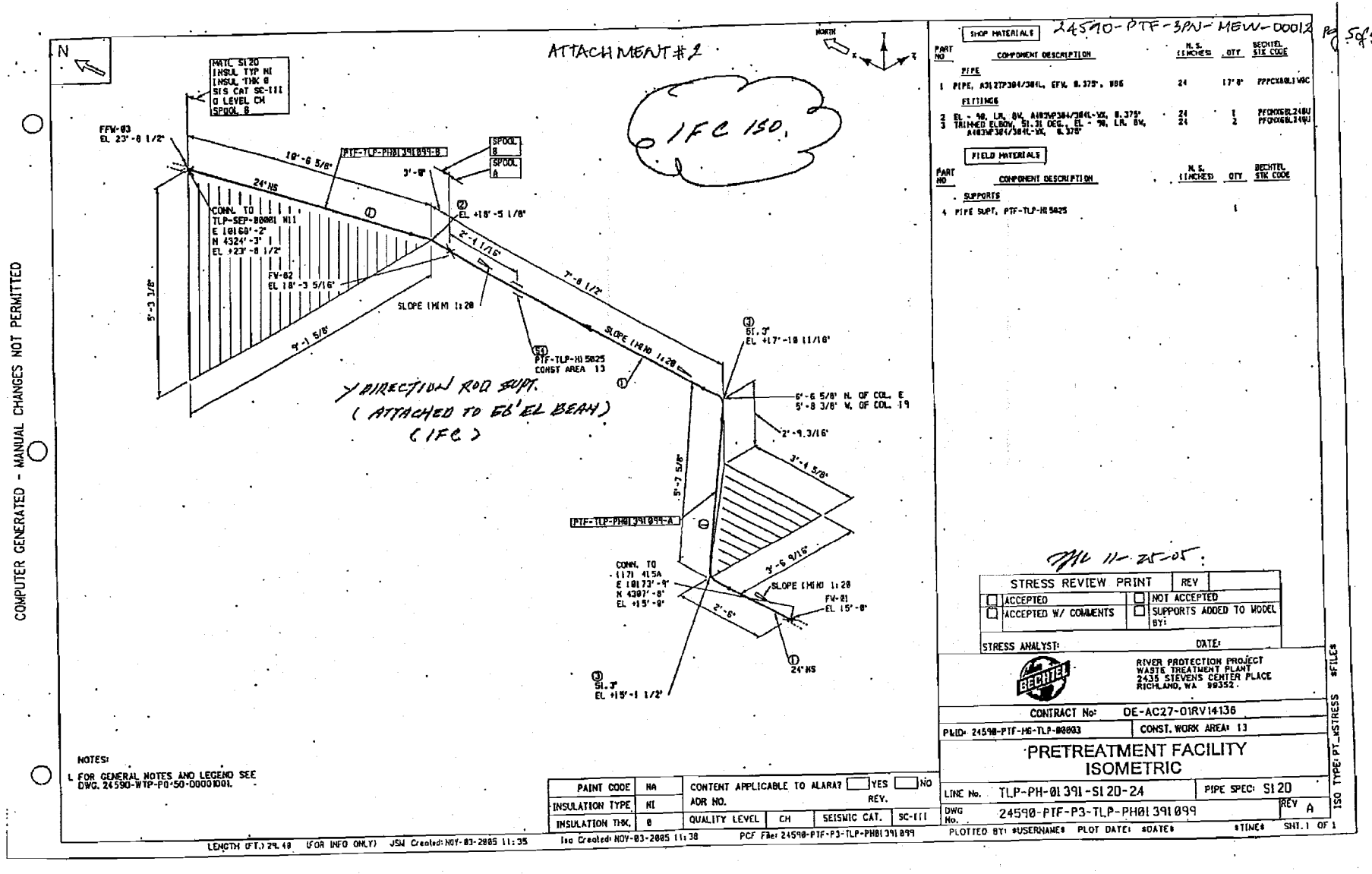
ATTACHMENT #2
24590-PTF-3PN-MEVV-00012
IFC 150.
COMPUTER GENERATED - MANUAL CHANGES NOT PERMITTED
MATL S120
INSUL TYP NI
INSUL THK 0
SIS CAT SC-III
O LEVEL CH
SPOOL B
FFW-03
EL 23'-8 1/2"
24"NS
CONN. TO
TLP-SEP-B0001 NII
E 181 68'-2"
N 4324'-3"
EL +23'-8 1/2"
FV-02
EL 18'-3 5/16"
5'-3 3/8"
4'-1 5/8"
19'-6 5/8"
PTF-TLP-PH01391099-B
SPOOL B
SPOOL A
3'-0"
EL +18'-5 1/8"
2'-1 1/16"
7'-8 1/2"
SLOPE (MIN) 1:20
PTF-TLP-HI5025
CONST AREA 13
Y DIRECTION ROD SUPT.
(ATTACHED TO 66' EL BEAM)
(IFC)
SL.3"
EL +17'-10 11/16"
6'-6 5/8" N. OF COL. E
5'-8 3/8" W. OF COL. 19
2'-9.3/16"
3'-4 5/8"
5'-7 5/8"
PTF-TLP-PH01391099-A
3'-6 9/16"
SLOPE (MIN) 1:20
CONN. TO
(17) 41.5A
E 181 73'-9"
N 4307'-8"
EL +15'-9"
FV-01
EL 15'-8"
2'-6"
24"NS
SL.3"
EL +15'-1 1/2"
NORTH
SHOP MATERIALS
PART NO
COMPONENT DESCRIPTION
N.S. (INCHES)
QTY
BECHTEL STK CODE
PIPE
1 PIPE, A312TP304/304L, EFW, 0.375", 80S 24 17'8" PPPCX80L1WC
FITTINGS
2 EL - 90, LR, BW, A403WP304/304L-WX, 0.375" 24 1 PFCXX80L240U
3 TRIMMED ELBOW, 51.31 DEG., EL - 90, LR, BW, A403WP304/304L-WX, 0.375" 24 2 PFCXX80L240U
FIELD MATERIALS
PART NO
COMPONENT DESCRIPTION
N.S. (INCHES)
QTY
BECHTEL STK CODE
- SUPPORTS
4 PIPE SUPT, PTF-TLP-HI5025 1
STRESS REVIEW PRINT
REV
ACCEPTED
NOT ACCEPTED
ACCEPTED W/ COMMENTS
SUPPORTS ADDED TO MODEL
BY:
STRESS ANALYST:
DATE:
RIVER PROTECTION PROJECT
WASTE TREATMENT PLANT
2435 STEVENS CENTER PLACE
RICHLAND, WA 99352
CONTRACT No: DE-AC27-01RV14136
PWID: 24590-PTF-MG-TLP-00003
CONST. WORK AREA: 13
PRETREATMENT FACILITY
ISOMETRIC
LINE No. TLP-PH-01391-S120-24
PIPE SPEC: S120
DWG No. 24590-PTF-P3-TLP-PH01391099
REV A
ISO TYPE: PT_MSTRESS #FILE#
NOTES:
1. FOR GENERAL NOTES AND LEGEND SEE DWG. 24590-WTP-PO-50-D0001001.
PAINT CODE NA
INSULATION TYPE NI
INSULATION THK. 0
CONTENT APPLICABLE TO ALARA? YES NO
ADR NO.
REV.
QUALITY LEVEL CH
SEISMIC CAT. SC-III
LENGTH (FT.) 29.48 (FOR INFO ONLY) JSW Created: NOV-03-2005 11:35
Iso Created: NOV-03-2005 11:38
PCF File: 24590-PTF-P3-TLP-PH01391099
PLOTTED BY: #USERNAME# PLOT DATE: #DATE# #TIME# SHT. 1 OF 1

24" Mid Roller Assembly.

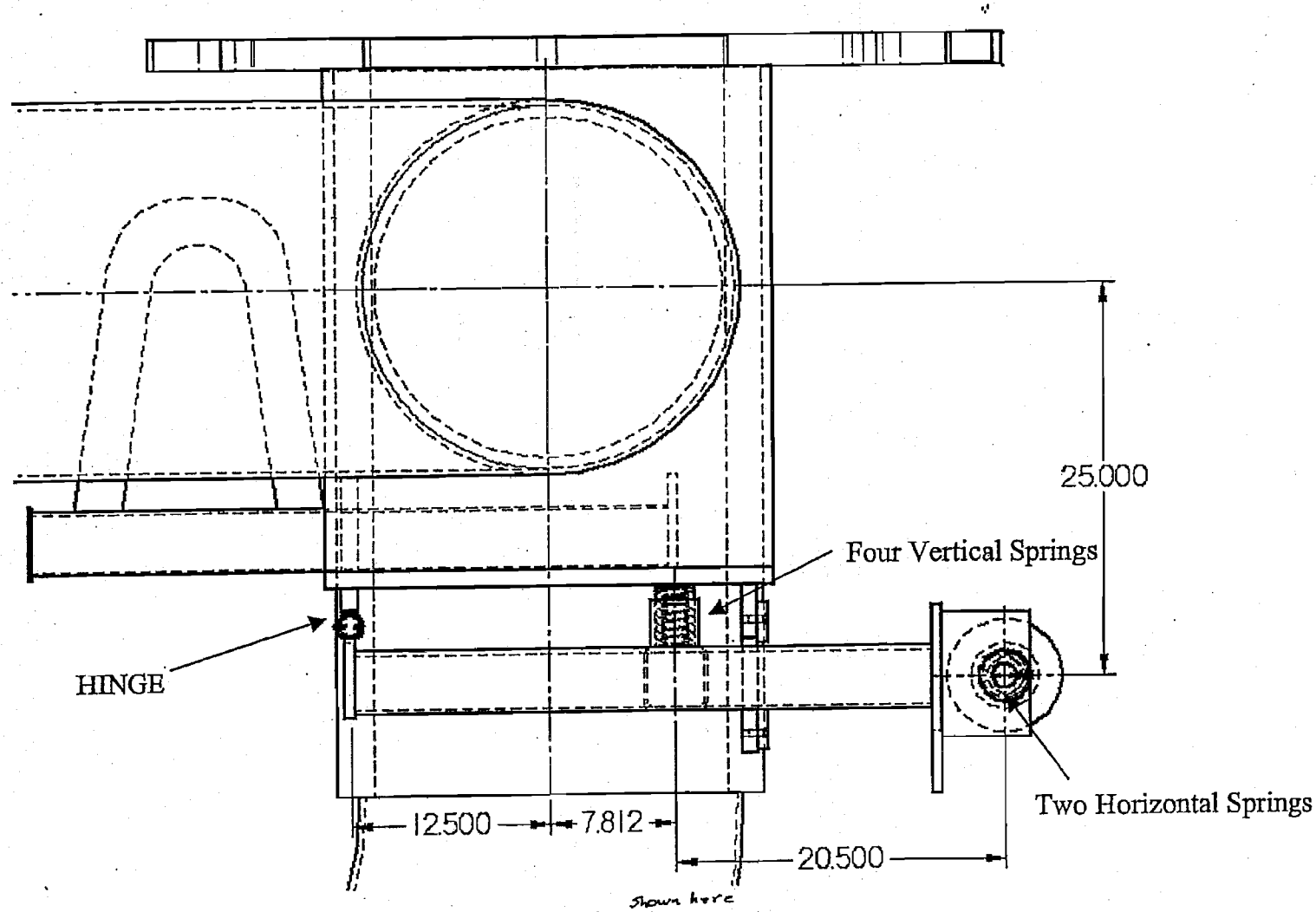

shown here

Note: Use Mid Roller Assembly spring configuration V for all Mid Roller Assemblies until finalized information is available.

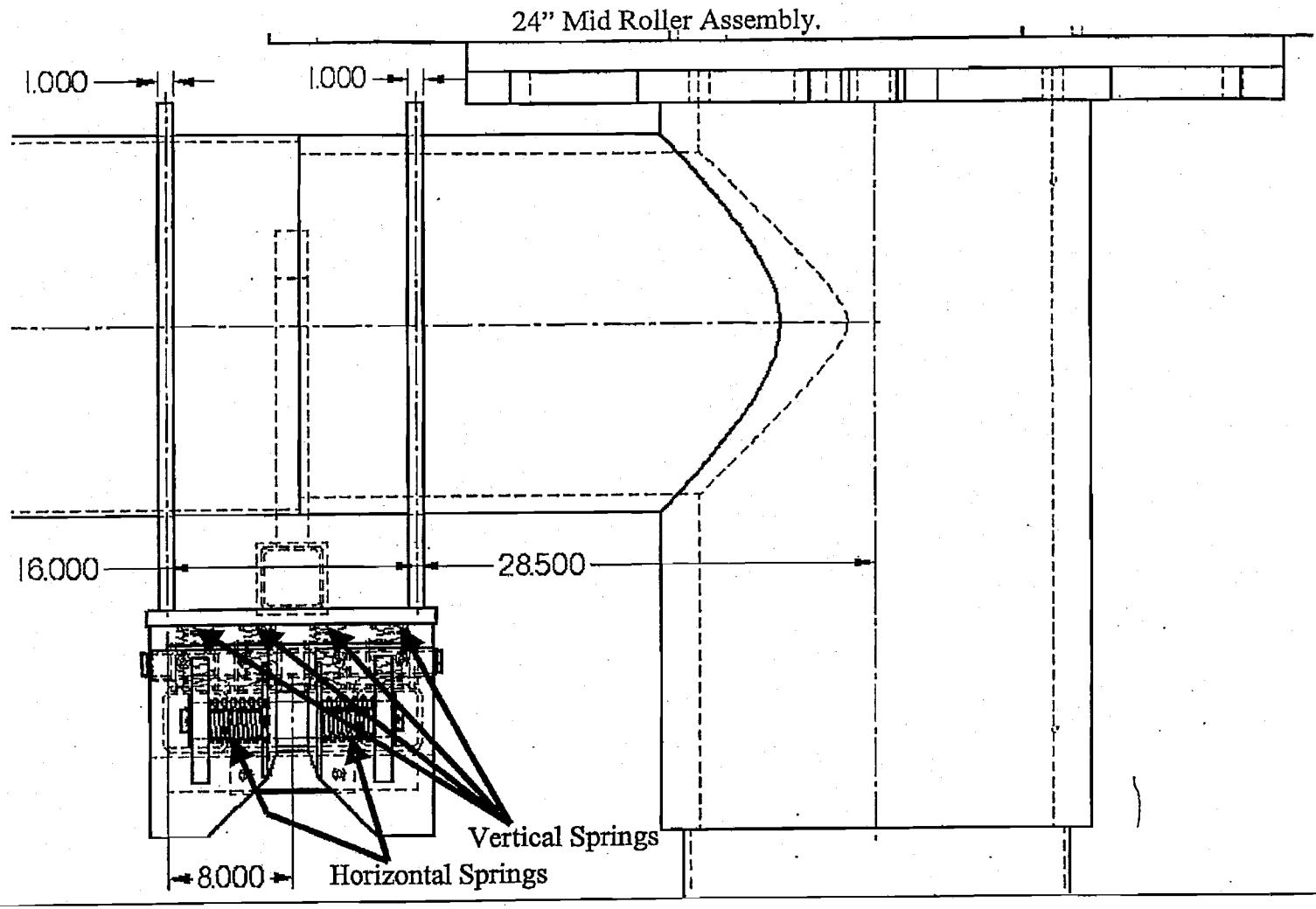

Vertical Spring:
•Spring Rate: 1310 lbs/in
•Preload: Four springs are compressed approximately 0.150" during installed cold condition. (Springs are in parallel)
Horizontal Spring (North-South):
•Spring Rate: 76 lbs/in
•Preload: 0.000" preload during the installed cold condition. (One spring acting in north direction, one acting spring in south direction)

ATTACHMENT # 4

Attached tables show the design load requirements for forces and moments applied to piping nozzles on separator vessels, ~~reboilers,~~ and condensers.

The direction of the listed forces and moments for vertical nozzles into the equipment head are provided in global coordinates (X = North/South, y = vertical, and z = East/West - Vessel 0° defined as North).

The directions of the listed forces and moments for horizontal nozzles into the equipment shell are provided in local coordinates per 24590-WTP-3PS-MV00-T0001.

FEP-SEP-00001A SC-I : TABLE 1

CCN 124031

Note:
*V = vertical head nozzle - values are x = North/South, y = vertical, z = East/West (global coordinates), Vessel 0° defined as North
**H = horizontal shell nozzle - values are per axes shown in 24590-WTP-3PS-MV00-T0001 Rev 2, Appendix A (local coordinates)

Nozzle Number	Nozzle Size (in)	Orientation (V* / H**)	Load Case	Design Loads (Force in lbs, Moment in ft-lb)					
				Fx	Fy	Fz	Mx	My	Mz
N01 *	1	H	Weight	15	20	15	20	20	20
			Seismic	30	20	30	37	55	55
			Thermal	10	10	10	10	20	20
N02 *	1	H	Weight	15	20	15	20	20	20
			Seismic	30	20	30	37	55	55
			Thermal	10	10	21	10	39	20
N03 *	1	H	Weight	15	20	15	20	20	20
			Seismic	30	20	30	37	55	55
			Thermal	10	10	10	10	20	20
N04	30	H	Weight	By Vendor	By Vendor	By Vendor	By Vendor	By Vendor	By Vendor
			Seismic	By Vendor	By Vendor	By Vendor	By Vendor	By Vendor	By Vendor
			Thermal	By Vendor	By Vendor	By Vendor	By Vendor	By Vendor	By Vendor
N05	2	H	Weight	50	60	50	75	75	75
			Seismic	106	70	106	158	237	237
			Thermal	30	38	40	68	80	80
N07	1	H	Weight	15	20	15	20	20	20
			Seismic	30	20	30	37	55	55
			Thermal	10	12	10	10	20	32
N08 *	1	H	Weight	15	20	15	20	20	20
			Seismic	30	20	30	37	55	55
			Thermal	10	10	10	10	20	20
N09 *	1	H	Weight	15	20	15	20	20	20
			Seismic	30	20	30	37	55	55
			Thermal	10	10	10	10	20	20
N10[1]	24	V	Weight	Later	Later	Later	Later	Later	Later
			Seismic	Later	Later	Later	Later	Later	Later
			Thermal	Later	Later	Later	Later	Later	Later
N11[1]	24	H	Weight	Later	Later	Later	Later	Later	Later
			Seismic	Later	Later	Later	Later	Later	Later
			Thermal	Later	Later	Later	Later	Later	Later
~~N13~~	~~4~~	~~H~~	~~Weight~~	~~90~~	~~242~~	~~90~~	~~267~~	~~161~~	~~398~~
			~~Seismic~~	~~626~~	~~712~~	~~626~~	~~2220~~	~~3330~~	~~3330~~
			~~Thermal~~	~~80~~	~~70~~	~~110~~	~~270~~	~~540~~	~~540~~
N14	2	H	Weight	50	64	50	75	75	188
			Seismic	106	189	106	158	237	593
			Thermal	86	33	46	94	154	80
N17	2	H	Weight	50	60	50	75	75	88
			Seismic	106	106	106	158	237	254
			Thermal	159	30	67	40	236	80
N19	1	H	Weight	15	20	15	20	20	20
			Seismic	33	29	55	37	55	55
			Thermal	16	13	25	10	20	20

1. Values to be provided later upon completion of piping analysis.

2 of 3

FEP-SEP-00001A SC-I : TABLE 1 (CONT.) CCN 124031

Note:
*V = vertical head nozzle - values are x = North/South, y = vertical, z = East/West (global coordinates), Vessel 0° defined as North
**H = horizontal shell nozzle - values are per axes shown in 24590-WTP-3PS-MV00-T0001 Rev 2, Appendix A (local coordinates)

Nozzle Number	Nozzle Size (in)	Orientation (V* / H**)	Load Case	Design Loads (Force in lbs, Moment in ft-lb)					
				Fx	Fy	Fz	Mx	My	Mz
N21*	1	H	Weight	15	20	15	20	20	20
			Seismic	30	20	30	37	55	55
			Thermal	10	10	10	10	20	20
N22	1	H	Weight	15	20	15	20	20	20
			Seismic	30	21	30	37	55	55
			Thermal	10	21	10	10	20	20
N23	1	H	Weight	15	20	15	20	20	20
			Seismic	30	23	30	37	55	55
			Thermal	10	10	10	10	20	20
N24	1	H	Weight	15	20	15	20	20	20
			Seismic	30	20	30	37	55	55
			Thermal	10	10	10	10	20	20
N25	1	H	Weight	15	20	15	20	20	20
			Seismic	30	23	30	37	73	55
			Thermal	10	10	10	10	20	20
N27*	1	H	Weight	15	20	15	20	20	20
			Seismic	30	20	30	37	55	55
			Thermal	10	10	10	10	20	20
N28*	1	H	Weight	15	20	15	20	20	20
			Seismic	30	20	30	37	55	55
			Thermal	12	10	10	10	20	20
N30	24	Manway	Weight	Manway	Manway	Manway	Manway	Manway	Manway
			Seismic	Manway	Manway	Manway	Manway	Manway	Manway
			Thermal	Manway	Manway	Manway	Manway	Manway	Manway
N32 Spare	1	H	Weight	15	20	15	20	20	20
			Seismic	30	20	30	37	55	55
			Thermal	10	10	10	10	20	20

*Nozzle loads for these bubblers due to hydrogen accumulation are not available and will be provided later.

Revised Nozzle N13 Loads (Ref. CCN 172485)

FEP A/B Separators (FEP-SEP-00001A/1B): Both nozzles

				Design Loads (Force in lbs, Moment in ft-lb)					
				Fx	Fy	Fz	Mx	My	Mz
N13	4	H	Weight	115	250	115	300	180	400
			Seismic	307	182	274	1156	1320	1320
			Thermal	90	120	120	425	540	540

3 of 3

1. Values to be provided later upon completion of piping analysis.

FEP-SEP-00001B SC-I : TABLE 2

CCN 124032

Note:
*V = vertical head nozzle - values are x = North/South, y = vertical, z = East/West (global coordinates), Vessel 0° defined as North
**H = horizontal shell nozzle - values are per axes shown in 24590-WTP-3PS-MV00-T0001 Rev 2, Appendix A (local coordinates)

Nozzle Number	Nozzle Size (in)	Orientation (V* / H**)	Load Case	Design Loads (Force in lbs, Moment in ft-lb)					
				Fx	Fy	Fz	Mx	My	Mz
N01*	1	H	Weight	15	20	15	20	20	20
			Seismic	30	20	30	37	55	55
			Thermal	10	10	10	10	20	20
N02*	1	H	Weight	15	20	15	20	20	20
			Seismic	30	20	30	37	55	55
			Thermal	10	10	10	10	20	20
N03*	1	H	Weight	15	20	15	20	20	20
			Seismic	30	20	30	37	55	55
			Thermal	10	10	10	10	20	20
N04	30	H	Weight	By Vendor	By Vendor	By Vendor	By Vendor	By Vendor	By Vendor
			Seismic	By Vendor	By Vendor	By Vendor	By Vendor	By Vendor	By Vendor
			Thermal	By Vendor	By Vendor	By Vendor	By Vendor	By Vendor	By Vendor
N05	2	H	Weight	50	60	50	75	75	75
			Seismic	106	70	106	158	237	237
			Thermal	30	30	40	40	80	80
N07	1	H	Weight	15	20	15	20	20	20
			Seismic	33	20	30	37	55	55
			Thermal	10	20	10	10	20	48
N08*	1	H	Weight	15	20	15	20	20	20
			Seismic	30	20	30	37	55	55
			Thermal	10	10	10	10	20	20
N09*	1	H	Weight	15	20	15	20	20	20
			Seismic	30	20	30	37	55	55
			Thermal	10	10	10	10	20	20
N10[1]	24	V	Weight	Later	Later	Later	Later	Later	Later
			Seismic	Later	Later	Later	Later	Later	Later
			Thermal	Later	Later	Later	Later	Later	Later
N11[1]	24	H?	Weight	Later	Later	Later	Later	Later	Later
			Seismic	Later	Later	Later	Later	Later	Later
			Thermal	Later	Later	Later	Later	Later	Later
~~N13~~	~~4~~	~~H~~	~~Weight~~	~~90~~	~~215~~	~~90~~	~~257~~	~~161~~	~~347~~
			~~Seismic~~	~~626~~	~~418~~	~~626~~	~~2220~~	~~3330~~	~~3330~~
			~~Thermal~~	~~80~~	~~70~~	~~116~~	~~407~~	~~540~~	~~540~~
N14	2	H	Weight	50	64	50	75	75	142
			Seismic	106	70	106	201	237	237
			Thermal	69	33	40	70	118	80
N17	2	H	Weight	50	60	50	75	75	80
			Seismic	106	70	106	188	237	237
			Thermal	158	30	53	40	298	80
N19	1	H	Weight	15	20	15	20	20	20
			Seismic	39	20	38	37	55	55
			Thermal	14	10	15	10	20	20

1. Values to be provided later upon completion of piping analysis.

2 of 3

FEP-SEP-00001B SC-I : TABLE 2 (cont.) CCN 124032

Note:
*V = vertical head nozzle - values are x = North/South, y = vertical, z = East/West (global coordinates), Vessel 0° defined as North
**H = horizontal shell nozzle - values are per axes shown in 24590-WTP-3PS-MV00-T0001 Rev 2, Appendix A (local coordinates)

Nozzle Number	Nozzle Size (in)	Orientation (V* / H**)	Load Case	Design Loads (Force in lbs, Moment in ft-lb)					
				Fx	Fy	Fz	Mx	My	Mz
N21*	1	H	Weight	15	20	15	20	20	20
			Seismic	30	21	30	37	55	55
			Thermal	10	10	10	10	20	20
N22	1	H	Weight	15	20	15	20	20	20
			Seismic	30	20	30	37	55	55
			Thermal	10	20	10	10	20	20
N23	1	H	Weight	15	20	15	20	20	20
			Seismic	30	21	30	37	55	55
			Thermal	10	10	10	10	20	20
N24	1	H	Weight	15	20	15	20	20	20
			Seismic	30	20	30	37	55	55
			Thermal	10	10	10	10	20	20
N25	1	H	Weight	15	20	15	20	20	20
			Seismic	30	20	30	37	55	55
			Thermal	10	10	10	10	20	20
N27*	1	H	Weight	15	20	15	20	20	20
			Seismic	30	20	30	37	55	55
			Thermal	10	10	10	10	20	20
N28*	1	H	Weight	15	20	15	20	20	20
			Seismic	30	20	30	37	55	55
			Thermal	10	10	10	10	20	20
N30	24	Manway	Weight	Manway	Manway	Manway	Manway	Manway	Manway
			Seismic	Manway	Manway	Manway	Manway	Manway	Manway
			Thermal	Manway	Manway	Manway	Manway	Manway	Manway
N32 Spare	1	H	Weight	15	20	15	20	20	20
			Seismic	30	20	30	37	55	55
			Thermal	10	10	10	10	20	20

* Nozzle loads for these bubblers due to hydrogen accumulation are not available and will be provided later.

Revised Nozzle N13 Loads (Ref. CCN 172485)

FEP A/B Separators (FEP-SEP-00001A/1B): Both nozzles

				Design Loads (Force in lbs, Moment in ft-lb)					
				Fx	Fy	Fz	Mx	My	Mz
N13	4	H	Weight	115	250	115	300	180	400
			Seismic	307	182	274	1156	1320	1320
			Thermal	90	120	120	425	540	540

1. Values to be provided later upon completion of piping analysis.

TLP-SEP-00001 SC-I : TABLE 3

CCN 139984

Note:
*V = vertical head nozzle - values are x = North/South, y = vertical, z = East/West (global coordinates), Vessel 0° defined as North
**H = horizontal shell nozzle - values are per axes shown in 24590-WTP-3PS-MV00-T0001 Rev 2, Appendix A (local coordinates)

Nozzle Number	Nozzle Size (in)	Orientation (V* / H*)	Load Case	Design Loads (Force in lbs, Moment in ft-lb)					
				Fx	Fy	Fz	Mx	My	Mz
N01 *	1	H	Weight	15	20	15	20	20	20
			Seismic	69	21	30	37	55	69
			Thermal	20	37	20	33	30	55
N02 *	1	H	Weight	15	24	15	20	20	25
			Seismic	117	28	46	43	55	117
			Thermal	20	10	20	20	30	30
N03 *	1	H	Weight	15	20	15	20	20	23
			Seismic	60	26	30	37	78	60
			Thermal	20	10	20	20	30	30
N04	30	Vendor	Weight Seismic Thermal	Vendor	Vendor	Vendor	Vendor	Vendor	Vendor
N07	1	H	Weight	15	20	15	20	20	20
			Seismic	30	20	30	37	55	55
			Thermal	20	13	20	20	30	30
N08 *	1	H	Weight	15	28	15	29	20	49
			Seismic	64	32	30	42	59	64
			Thermal	20	12	20	20	30	30
N09 *	1	H	Weight	15	21	15	20	20	42
			Seismic	89	33	64	37	145	89
			Thermal	20	10	20	20	30	30
N10	24	V	Weight Seismic Thermal	Later	Later	Later	Later	Later	Later
N11	24	H	Weight Seismic Thermal	Later	Later	Later	Later	Later	Later
~~N13~~	~~4~~	~~H~~	~~Weight~~	~~87~~	~~281~~	~~87~~	~~216~~	~~142~~	~~748~~
			~~Seismic~~	~~1722~~	~~641~~	~~274~~	~~878~~	~~1320~~	~~1722~~
			~~Thermal~~	~~150~~	~~246~~	~~200~~	~~486~~	~~950~~	~~950~~
N14	2	H	Weight	50	60	50	75	75	89
			Seismic	162	70	106	158	237	237
			Thermal	115	40	60	70	130	130
N17	2	H	Weight	50	60	50	75	75	75
			Seismic	106	70	106	158	237	237
			Thermal	136	81	60	75	130	130
N19	1	H	Weight	15	20	15	20	20	20
			Seismic	30	20	30	37	55	55
			Thermal	20	10	20	20	30	30

TLP-SEP-00001 SC-I : TABLE 3 (CONT.)

CCN 139984

Note:
*V = vertical head nozzle - values are x = North/South, y = vertical, z = East/West (global coordinates), Vessel 0° defined as North
**H = horizontal shell nozzle - values are per axes shown in 24590-WTP-3PS-MV00-T0001 Rev 2, Appendix A (local coordinates)

Nozzle Number	Nozzle Size (in)	Orientation (V* / H**)	Load Case	Design Loads (Force in lbs, Moment in ft-lb)					
				Fx	Fy	Fz	Mx	My	Mz
N21 *	1	H	Weight	15	20	15	20	20	20
			Seismic	30	20	30	37	55	55
			Thermal	20	10	20	20	30	30
N22	1	H	Weight	15	20	15	20	20	20
			Seismic	30	20	30	37	55	55
			Thermal	20	12	20	20	30	30
N23	1	H	Weight	15	20	15	20	20	20
			Seismic	30	20	30	37	55	55
			Thermal	20	23	20	20	30	30
N24	1	H	Weight	15	20	15	20	20	36
			Seismic	77	26	34	37	85	77
			Thermal	20	11	20	20	30	30
N25	1	H	Weight	15	20	15	20	20	20
			Seismic	41	20	30	37	62	55
			Thermal	20	10	20	20	30	30
N27 *	1	H	Weight	15	20	15	20	20	20
			Seismic	30	20	30	37	55	55
			Thermal	20	15	20	20	30	30
N28 *	1	H	Weight	15	20	15	20	20	20
			Seismic	30	20	30	37	55	55
			Thermal	20	10	20	20	30	30

* Nozzle loads for these bubblers due to hydrogen accumulation are not available and will be provided later.

Revised Nozzle N13 Loads (Ref. CCN 172485)

TLP Separator (TLP-SEP-000001)

				Design Loads (Force in lbs, Moment in ft-lb)					
				Fx	Fy	Fz	Mx	My	Mz
N13	4	H	Weight	115	280	115	288	180	743
			Seismic	365	243	365	585	880	880
			Thermal	244	140	200	315	630	630

TABLE 4 *

PRELIMINARY Nozzle Loads on Non-Black Cell Vessels Designated as SC-1 **							
Pipe Size	Load Type	Forces			Moments		
		Fx (lb)	Fy (lb)	Fz (lb)	Mx (ft-lb)	My (ft-lb)	Mz (ft-lb)
1 in	Weight	15	20	15	20	20	20
1 in	Seismic	45	30	45	56	83	83
1 in	Thermal	30	26	40	38	77	77
1-1/2 in	Weight	35	45	35	40	40	40
1-1/2 in	Seismic	90	60	90	137	206	206
1-1/2 in	Thermal	64	56	86	96	192	192
2 in	Weight	50	60	50	75	75	75
2 in	Seismic	159	105	159	237	356	356
2 in	Thermal	114	100	152	169	337	337
3 in	Weight	69	111	69	158	99	99
3 in	Seismic	323	215	323	935	1401	1401
3 in	Thermal	228	203	305	664	1330	1330
4 in	Weight	116	186	116	288	180	180
4 in	Seismic	548	365	548	1755	2640	2640
4 in	Thermal	393	350	524	1260	2520	2520
6 in	Weight	279	446	279	797	498	498
6 in	Seismic	1326	885	1326	4845	7275	7275
6 in	Thermal	980	872	1310	3580	7160	7160
8 in	Weight	311	497	311	988	618	618
8 in	Seismic	1467	980	1467	5895	8835	8835
8 in	Thermal	1190	1060	1590	4800	9590	9590
10 in	Weight	351	561	351	1880	1180	1180
10 in	Seismic	1635	1092	1635	11010	16500	16500
10 in	Thermal	1270	1130	1690	8500	17000	17000
12 in	Weight	485	776	485	2710	1700	1700
12 in	Seismic	2265	1515	2265	15750	23700	23700
12 in	Thermal	1780	1580	2370	12400	24800	24800
14 in	Weight	581	930	581	3320	2080	2080
14 in	Seismic	2700	1800	2700	18900	28350	28350
14 in	Thermal	2140	1900	2860	15000	30100	30100
16 in	Weight	729	1170	729	4170	2610	2610
16 in	Seismic	3420	2280	3420	24150	36300	36300
16 in	Thermal	2800	2490	3730	19800	39500	39500
18 in	Weight	911	1460	911	5070	3170	3170
18 in	Seismic	4230	2820	4230	30000	44850	44850
18 in	Thermal	3550	3160	4730	25200	50300	50300
20 in	Weight	1120	1790	1120	6310	3950	3950
20 in	Seismic	5100	3405	5100	35850	53700	53700
20 in	Thermal	4440	3950	5920	31200	62400	62400
22 in	Weight	1340	2150	1340	7300	4560	4560
22 in	Seismic	6045	4035	6045	42150	63300	63300
22 in	Thermal	5430	4830	7240	37900	75800	75800
24 in	Weight	1570	2510	1570	8510	5320	5320
24 in	Seismic	7065	4710	7065	48600	73050	73050
24 in	Thermal	6560	5840	8750	45200	90400	90400

* Reference CCN 186790

** Note: Nozzle loads provided in Table 4 are for condensers and ejectors. For reboilers, please refer to Attachment # 9 of this appendix.

TABLE 5: **DELETED**

ATTACHMENT #5

Design Concepts

Design Concepts

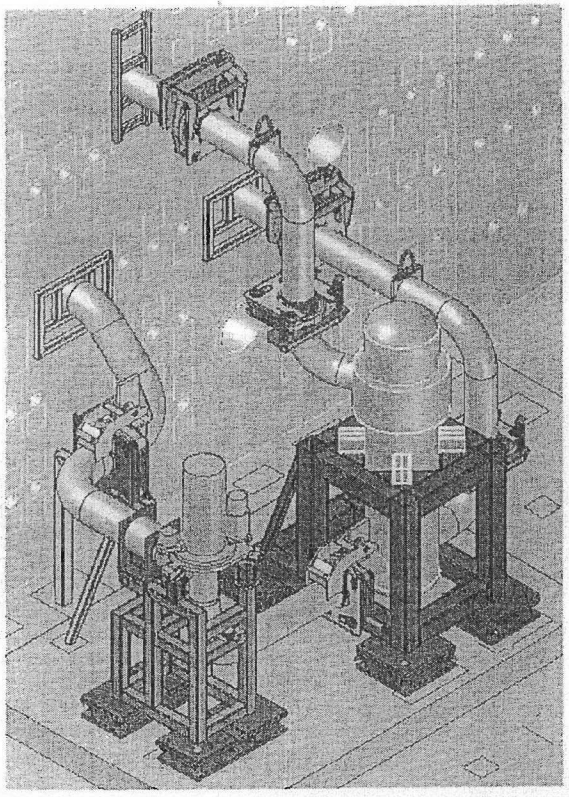

Area 9
CNP

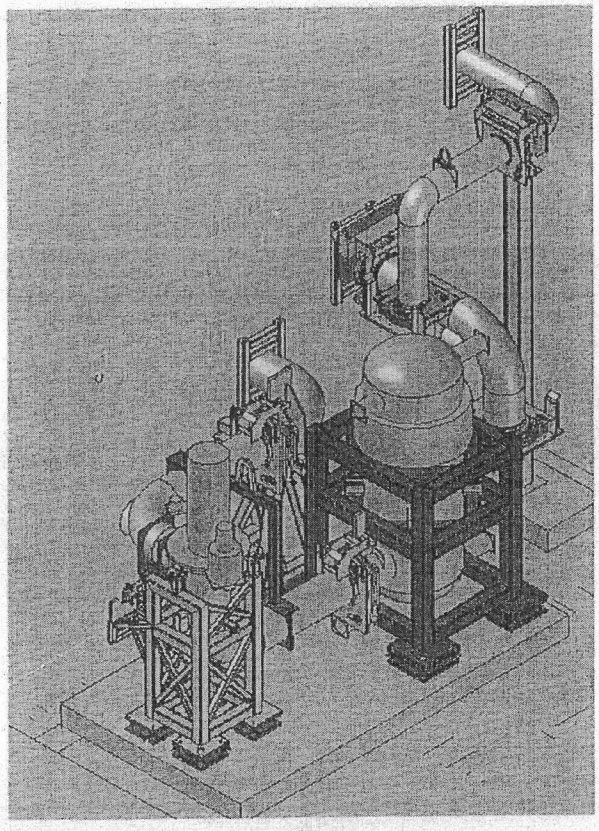

Area 17
TLP

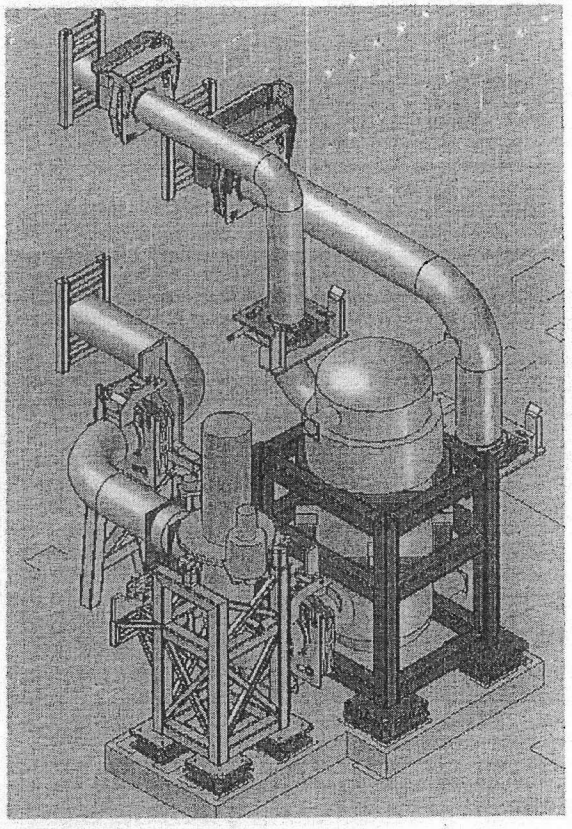

Area 26/27
FEP

Assumptions

- Top of concrete pad elevation will be 1'-4"
- Concrete pad will be rigid, e.g. 33 hz
- Bottom of Pump and Reboiler frames/top of remote interface will be 2'-2". With the exception of the FEP and TLP Reboilers, which will be 2'-2 5\16".
- AREVA will qualify Structural steel between 1'-4" and 2'-2", BNI will be responsible for remotability interface and fabrication drawings. Structural members will be same size as Reboiler and Pump frames or larger, see attached.
- There will be two 4" Dowel Pins per frame (opposing corners) as shown on drawings which will take the sheer loads.

Assumptions

- AREVA to qualify all plates, structural steel, dowel pins and the bolting interface.
- Initial assumption, bolts will be 1.25" diameter with two bolts per plate. Final diameter / quantity will be determined by analysis. Note: Max available torque from impact wrench is 400 ft-lbs
- AREVA to determine final dowel pin diameter and final number of bolts required. Note: Two dowel pins are required due to remote handling constraints.
- AREVA to qualify pump frame, BNI will be responsible for remotability interface and fabrication drawings.

Area 17 (TLP)
Design Concepts

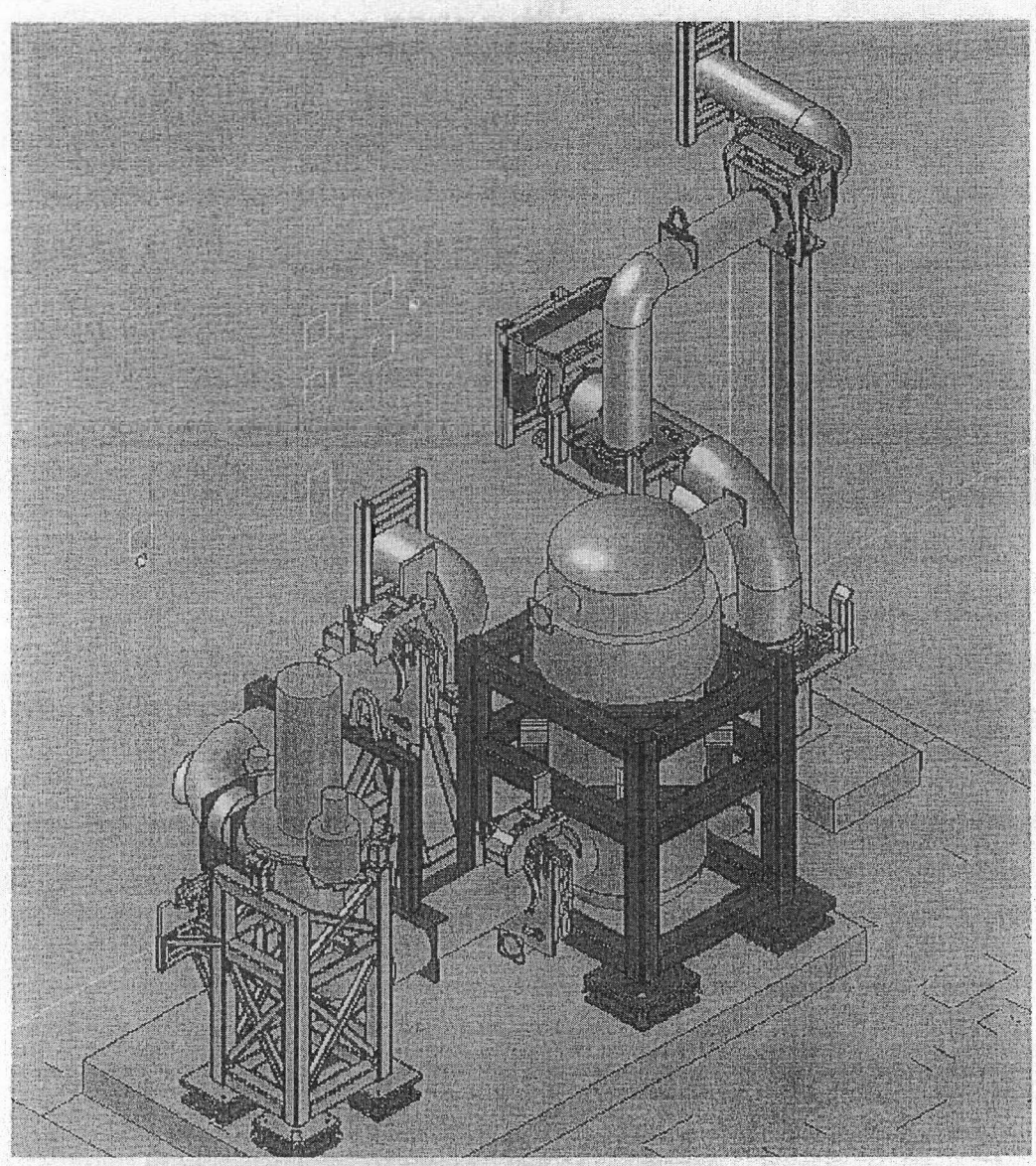

Current Layout

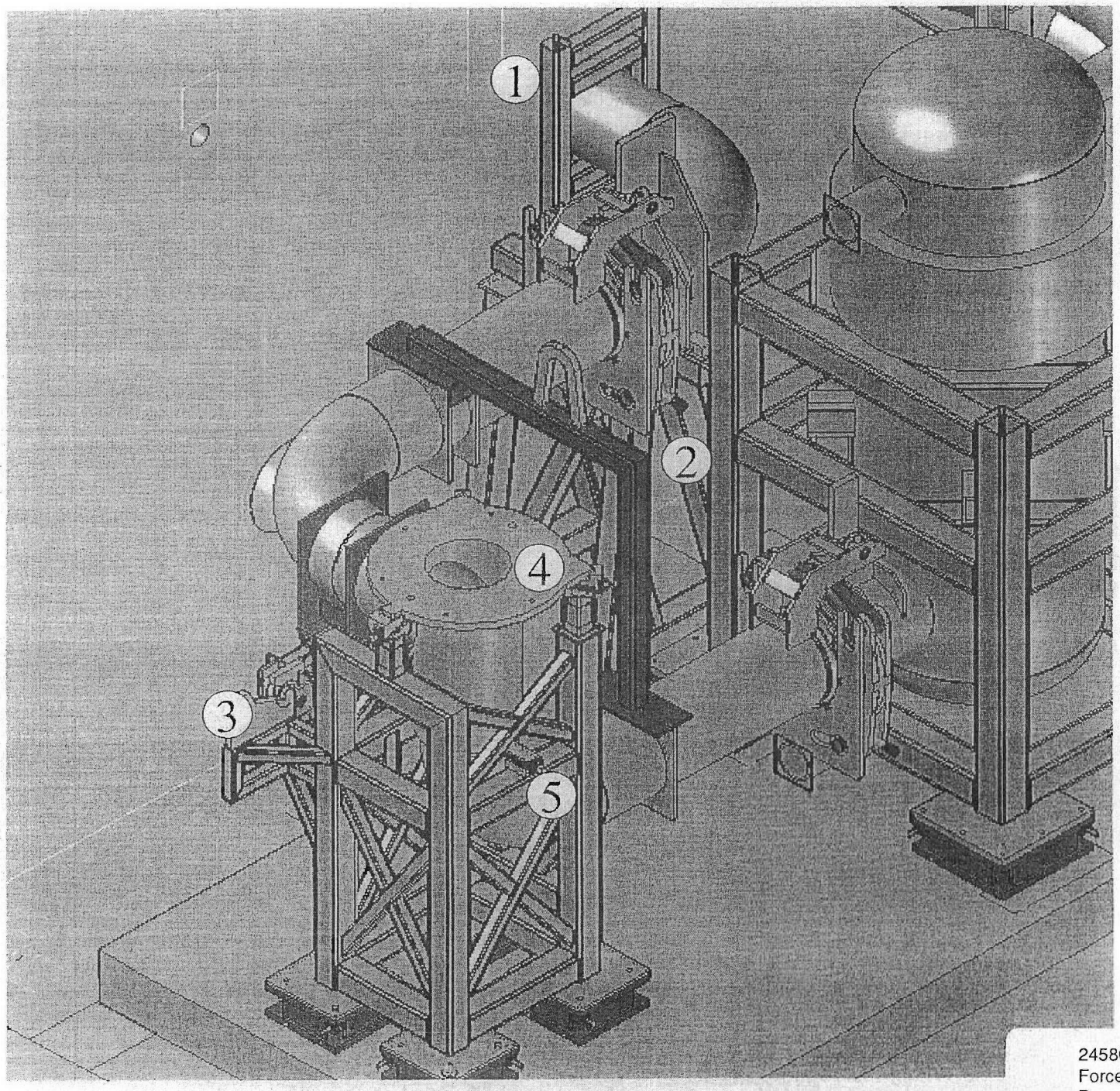

Proposed Support Configuration (TLP)

See corresponding details on following slides.

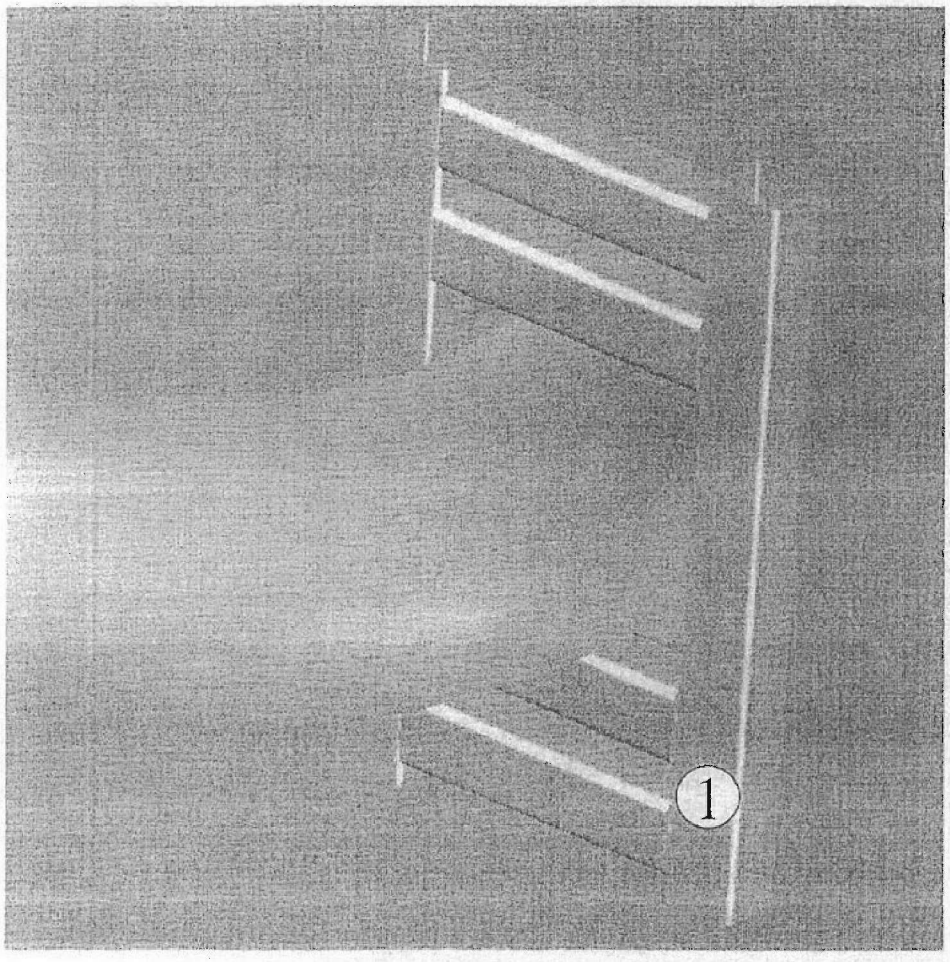

Guide supports at face of hot cell wall

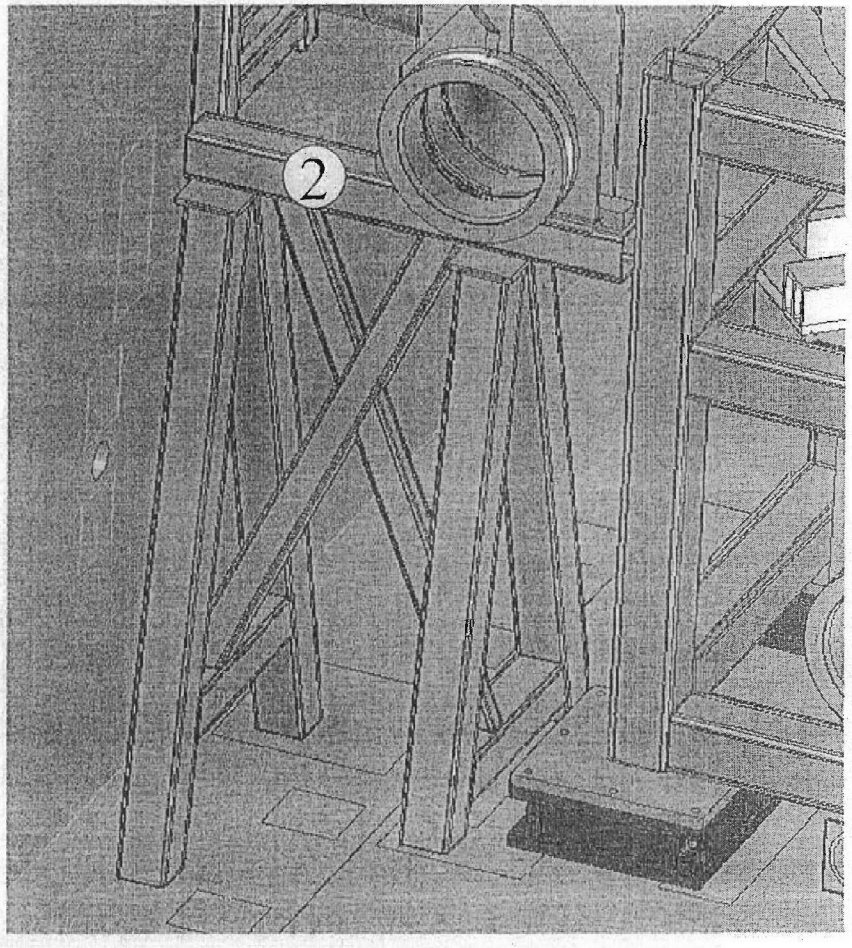

Guide support on back side of wall Grayloc hub.

TLP

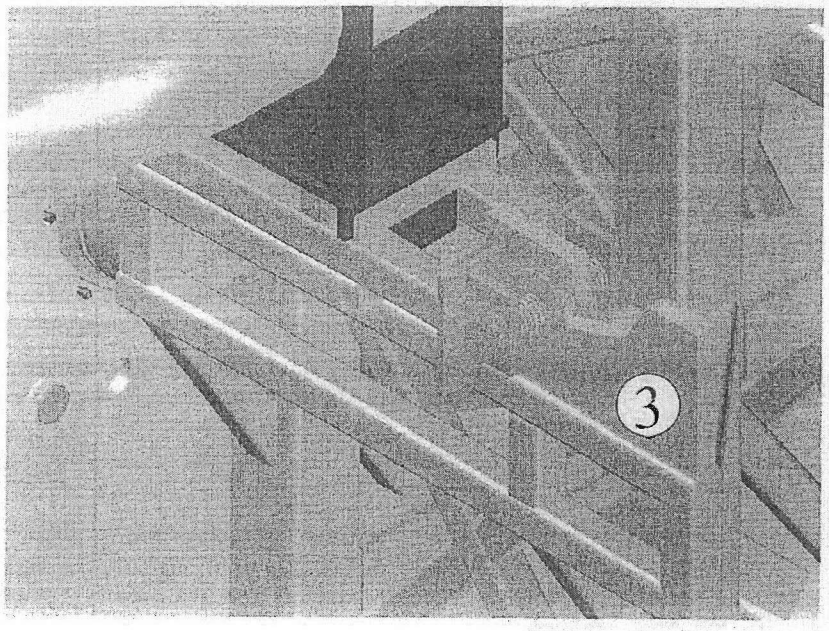

Midroller support

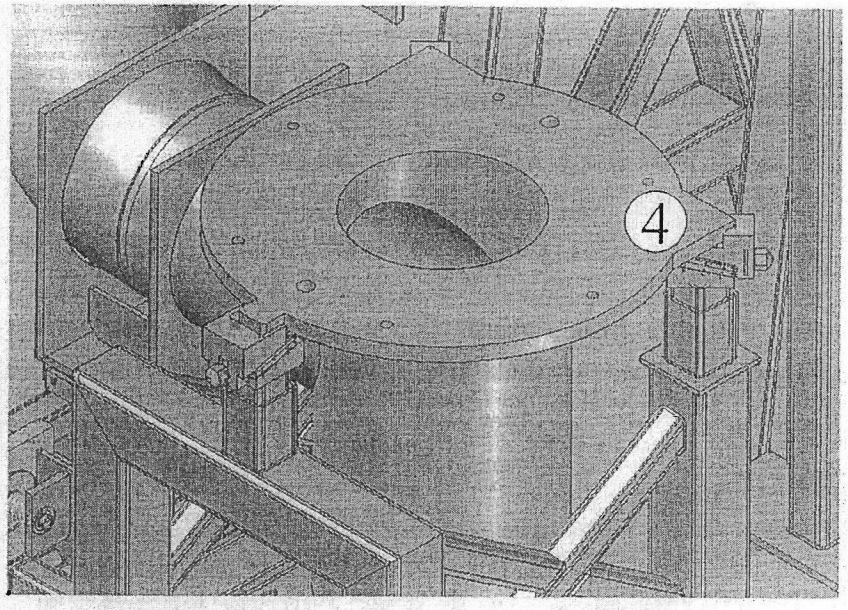

Three point pump support at pump flange.

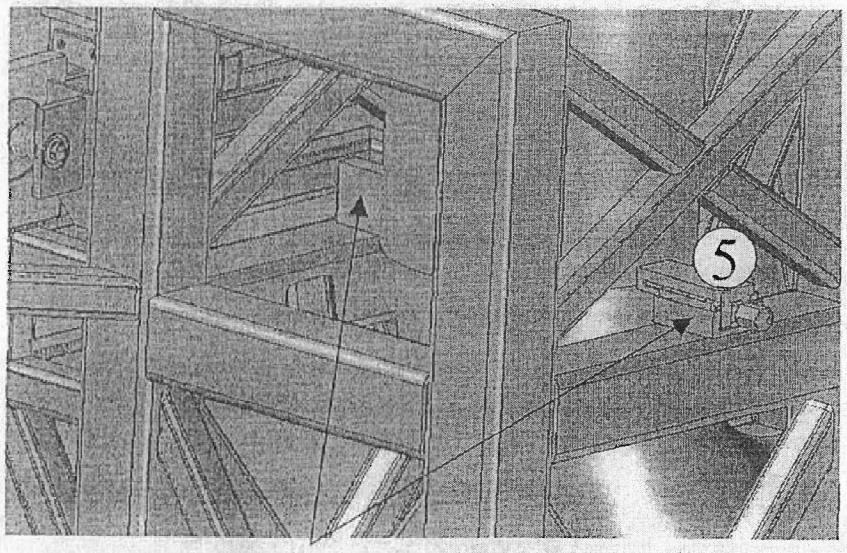

Pump discharge nozzle support.
(only if required by analysis)

TLP Layout

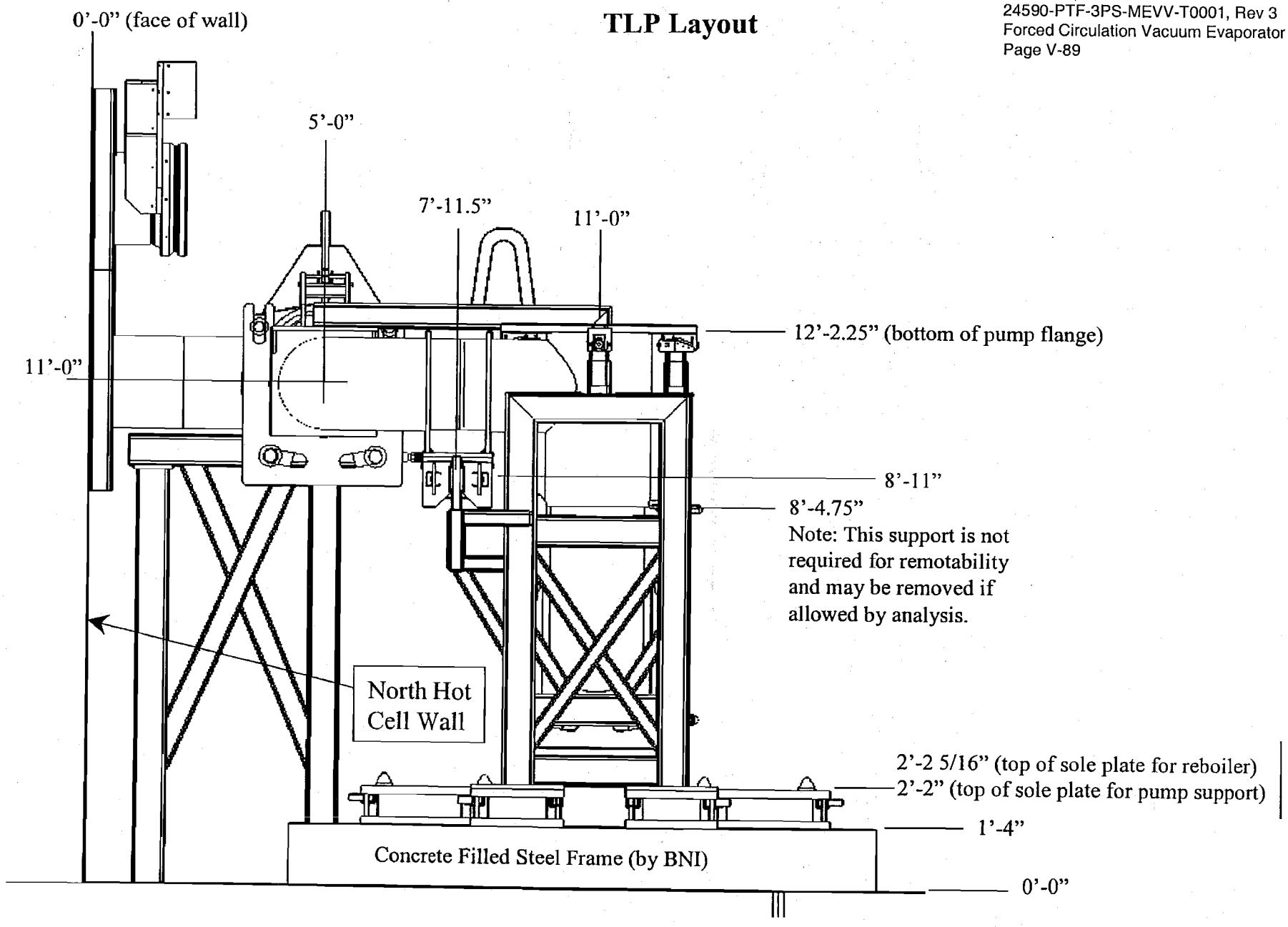

Elevation View (looking east)

TLP Layout

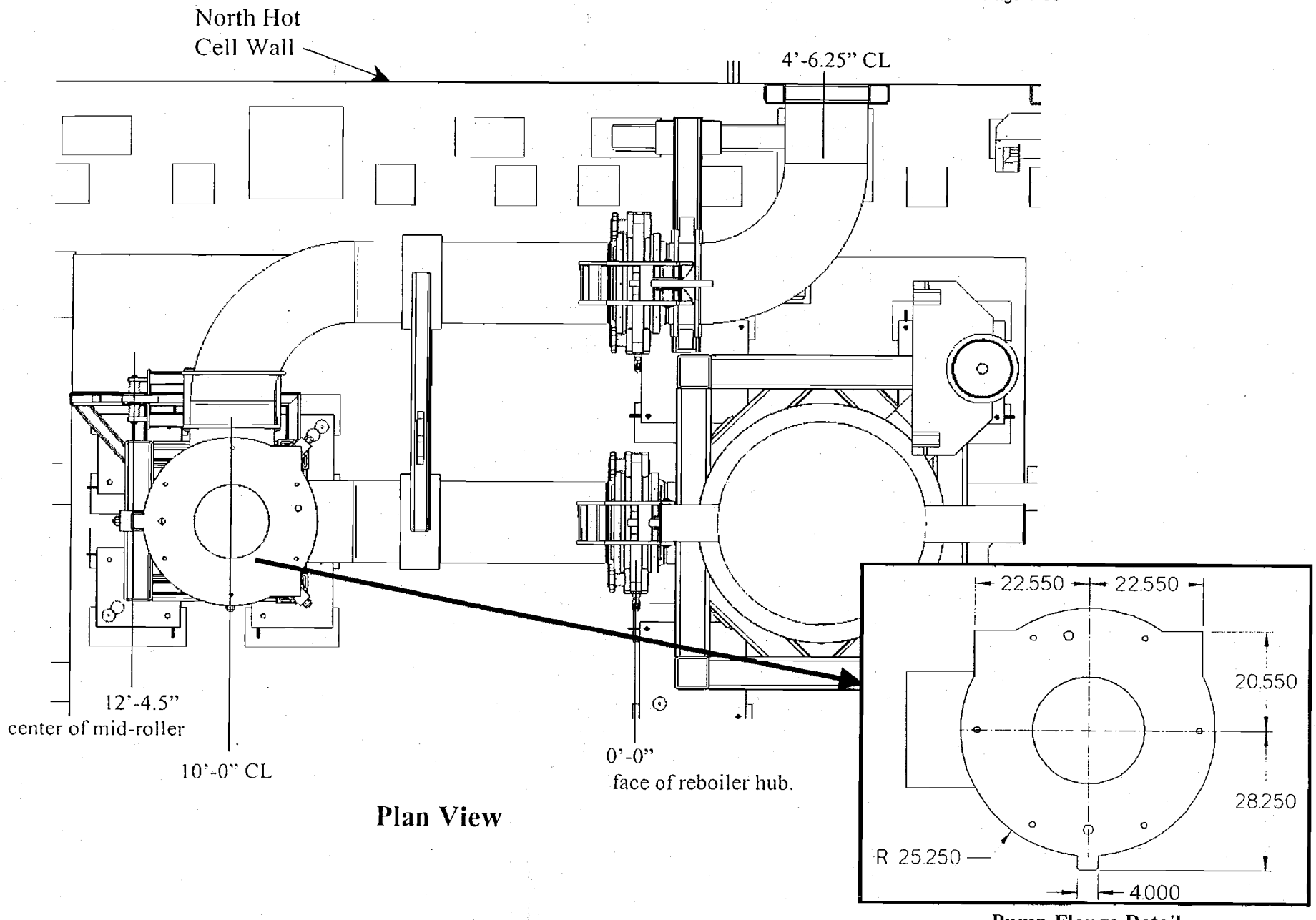

Plan View

Pump Flange Detail

Pump Support Frame (TLP)

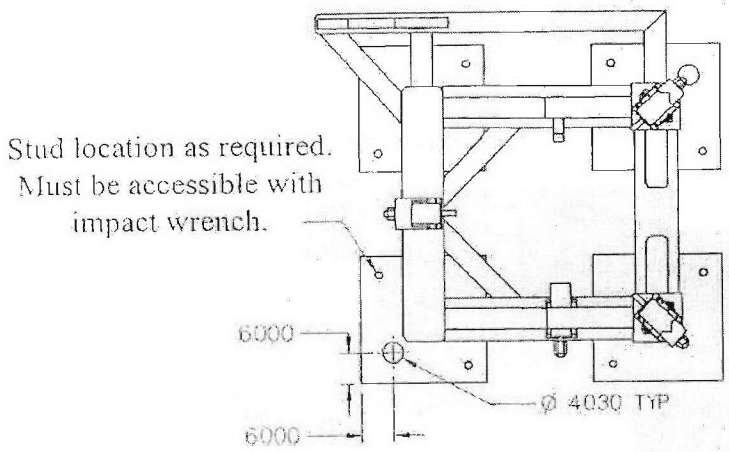

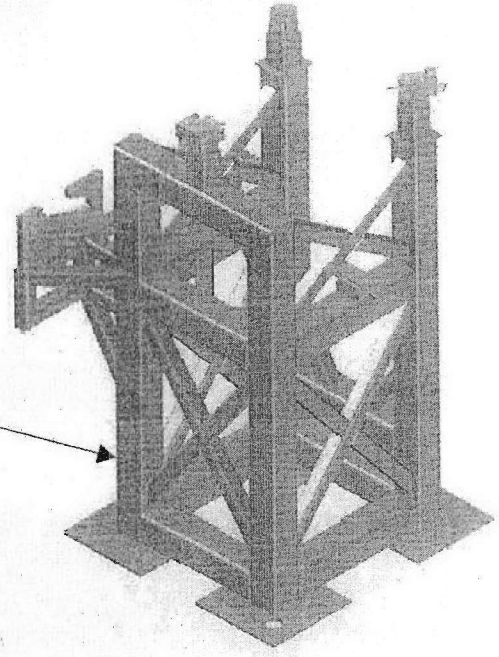

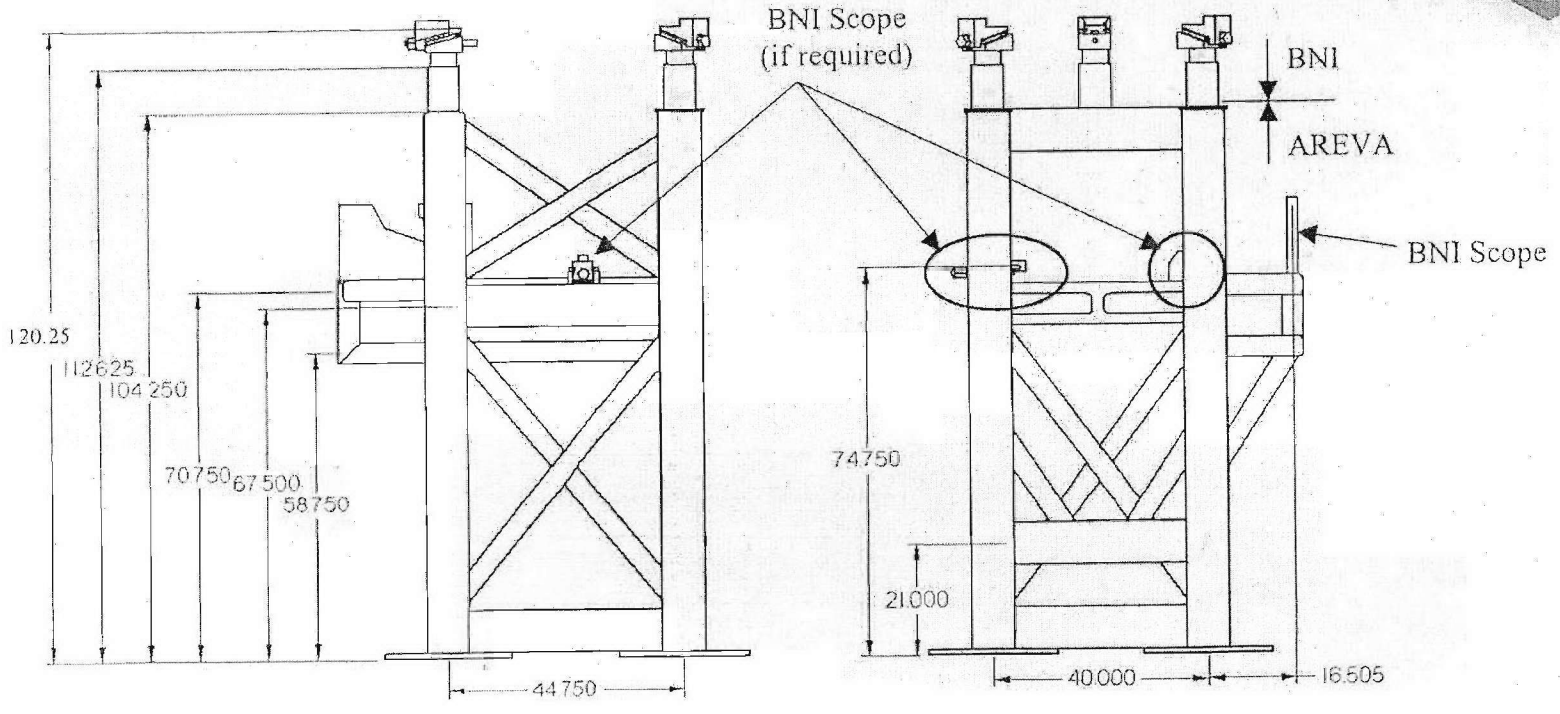

Equipment Pad and Sole Plates (TLP)

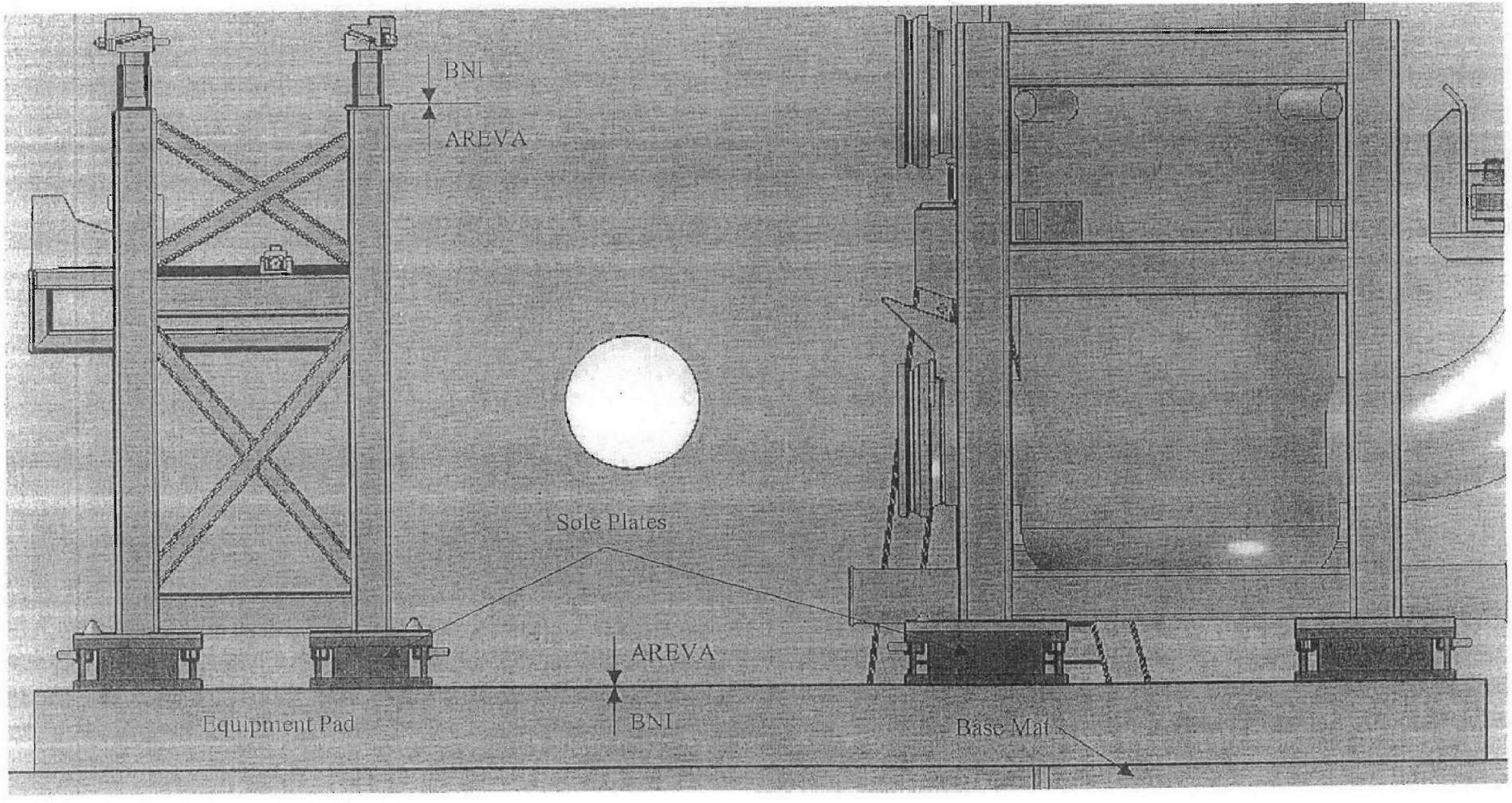

Sole Plates (TLP)

Stud location as required. Must be accessible with impact wrench.

Example Sole Plate

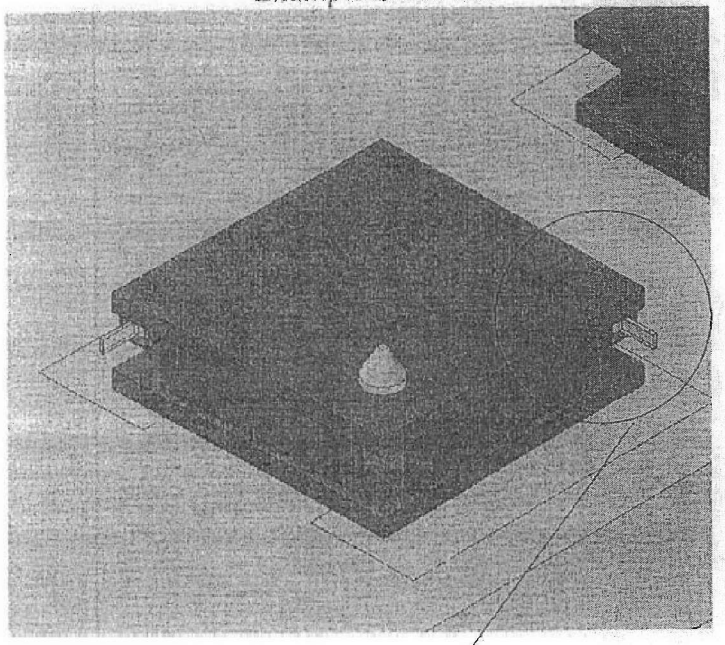

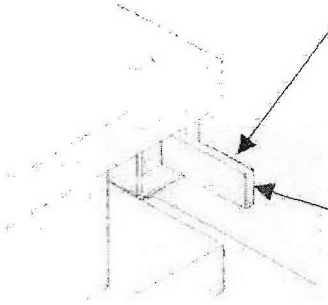

Dowel Pin (Typ)

Captured Nuts must be accessible with the Power Manipulator.

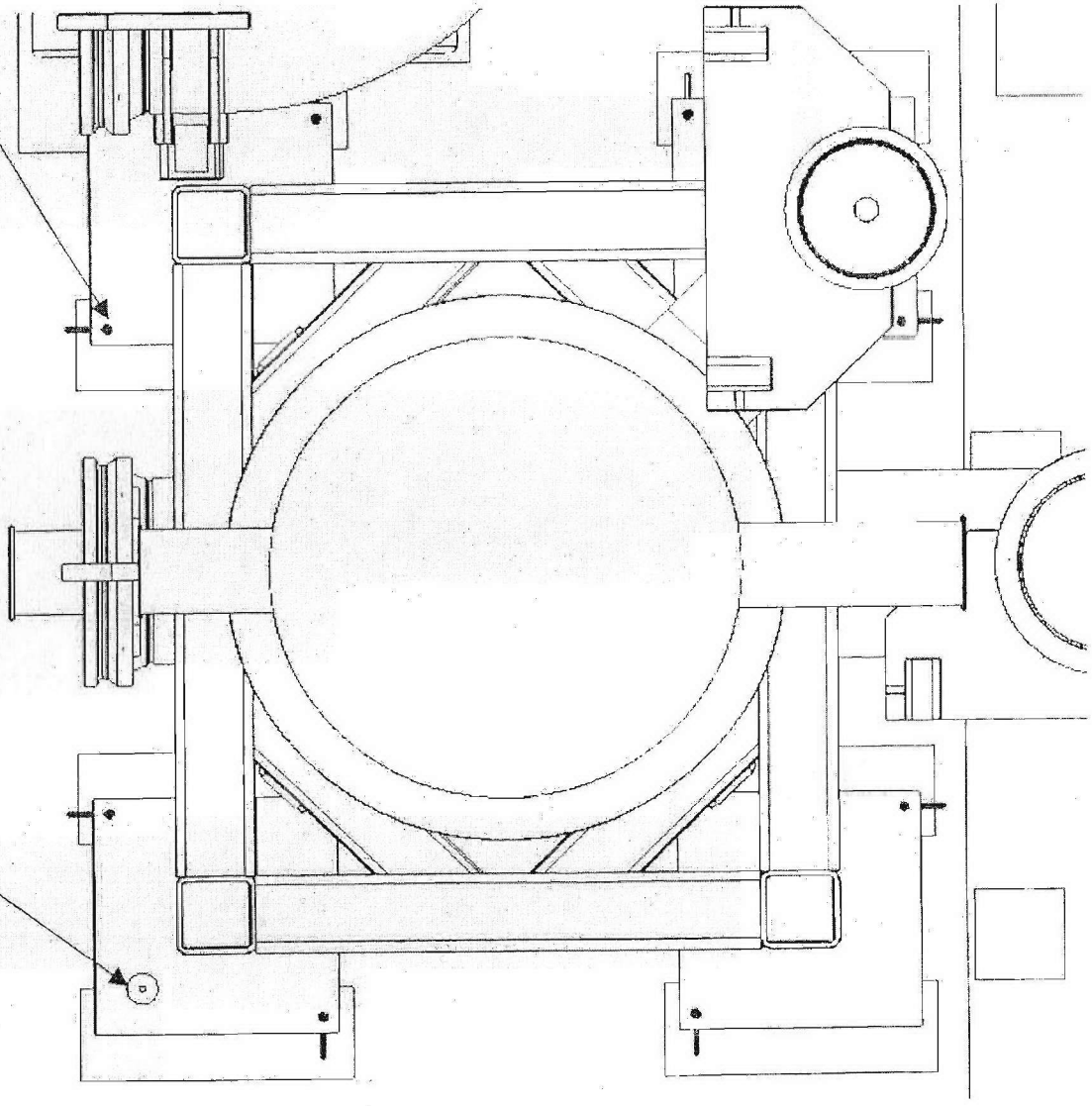

TLP

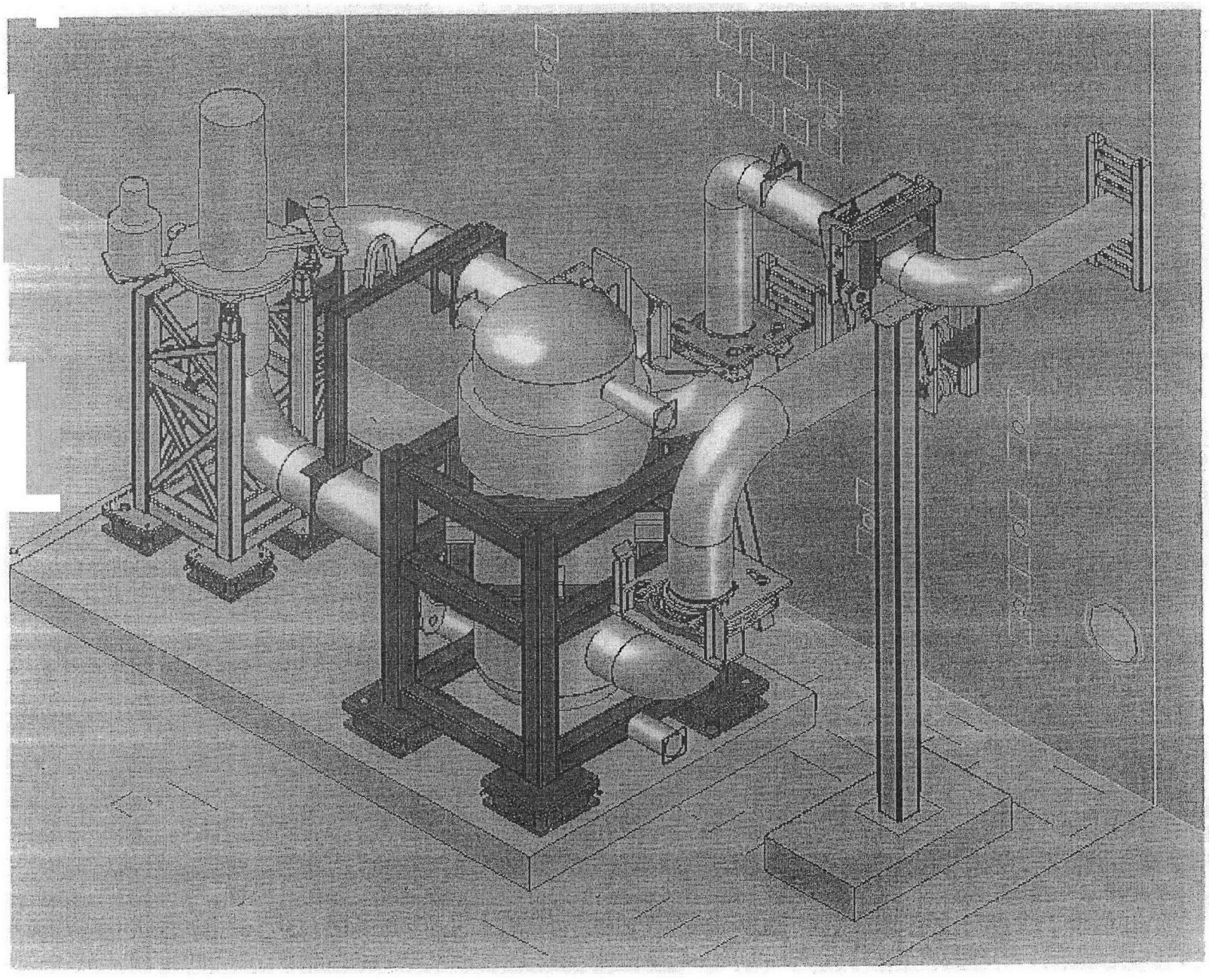

TLP

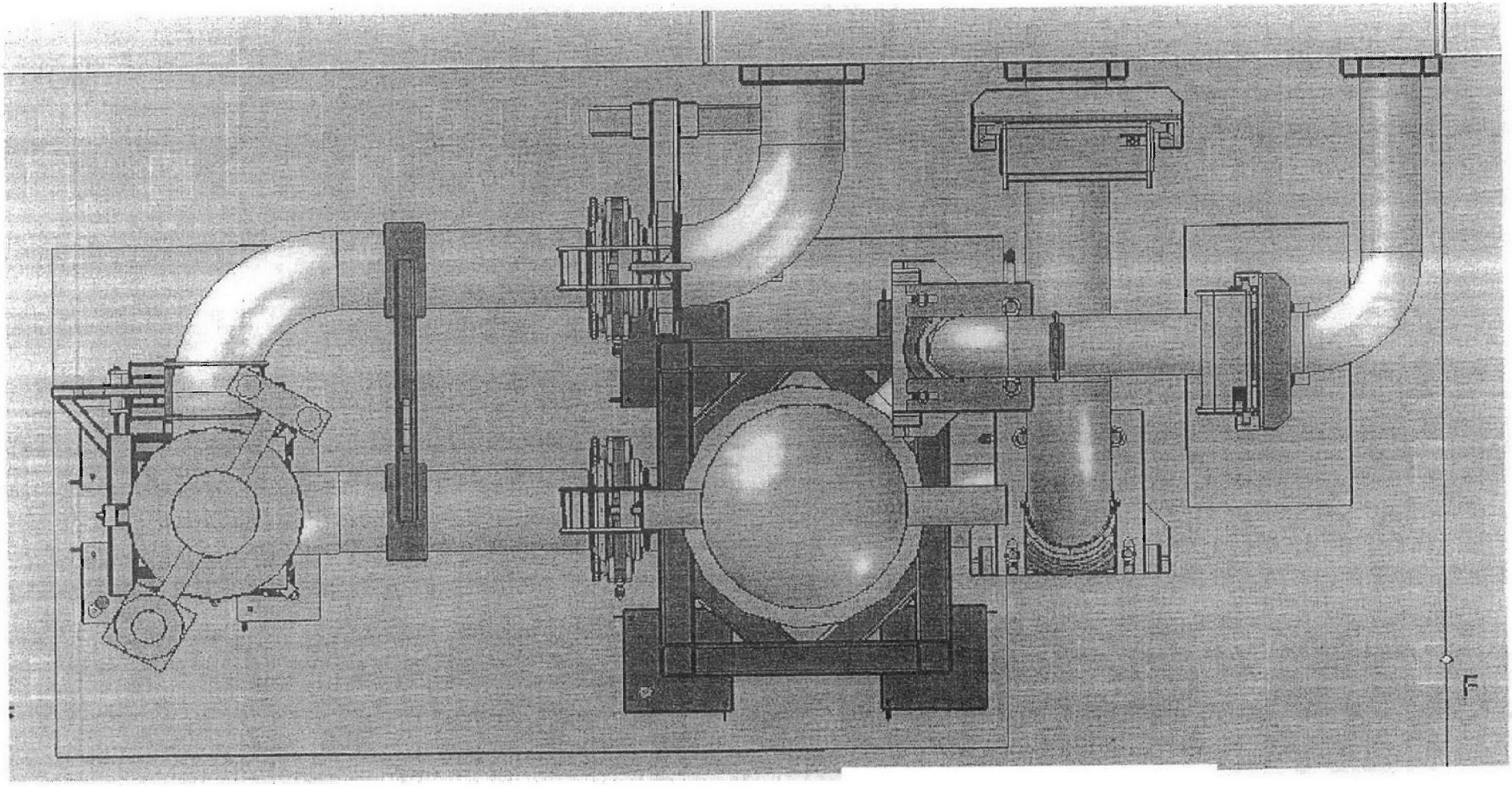

TLP

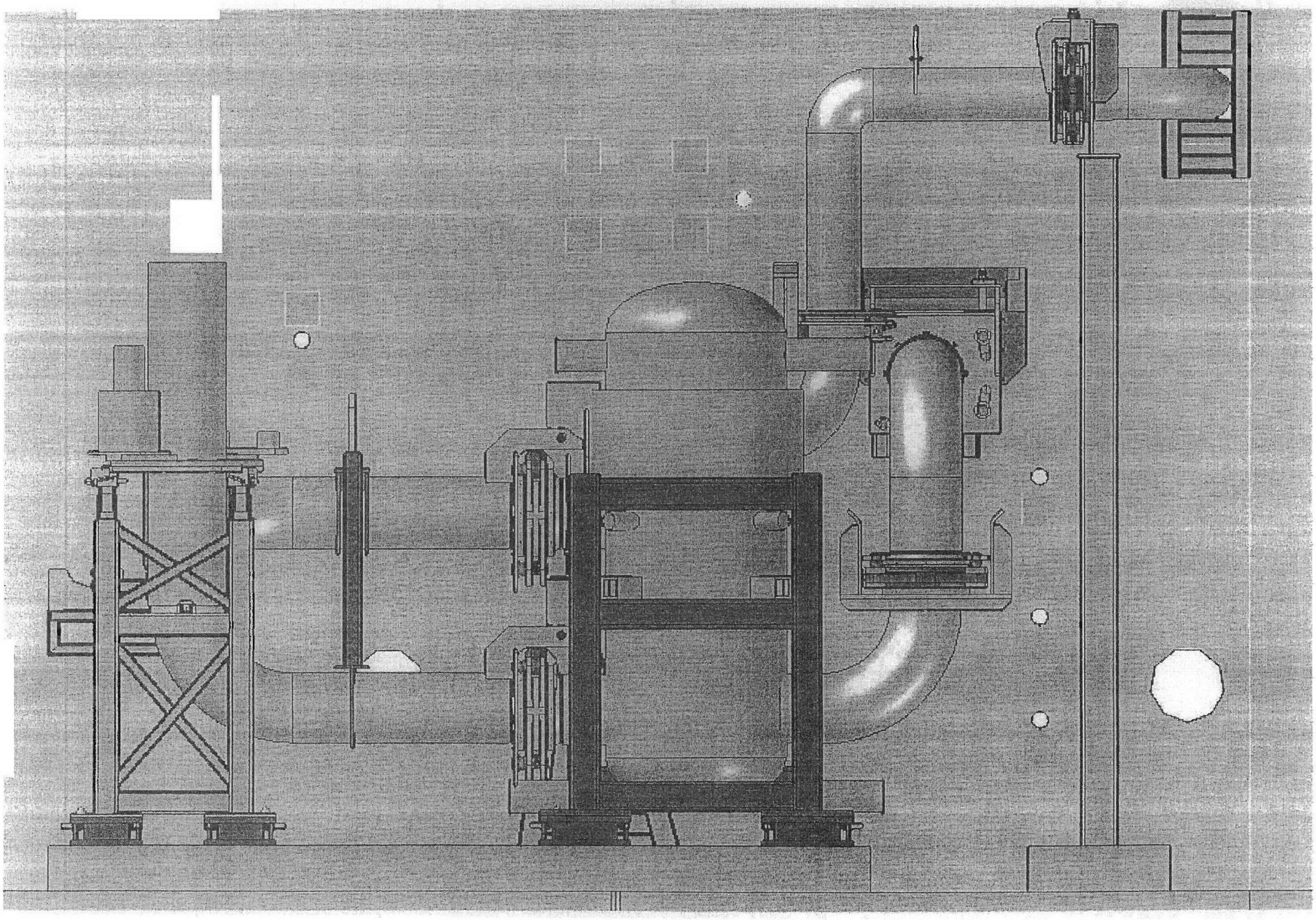

Area 26/27 (FEP)
Design Concepts

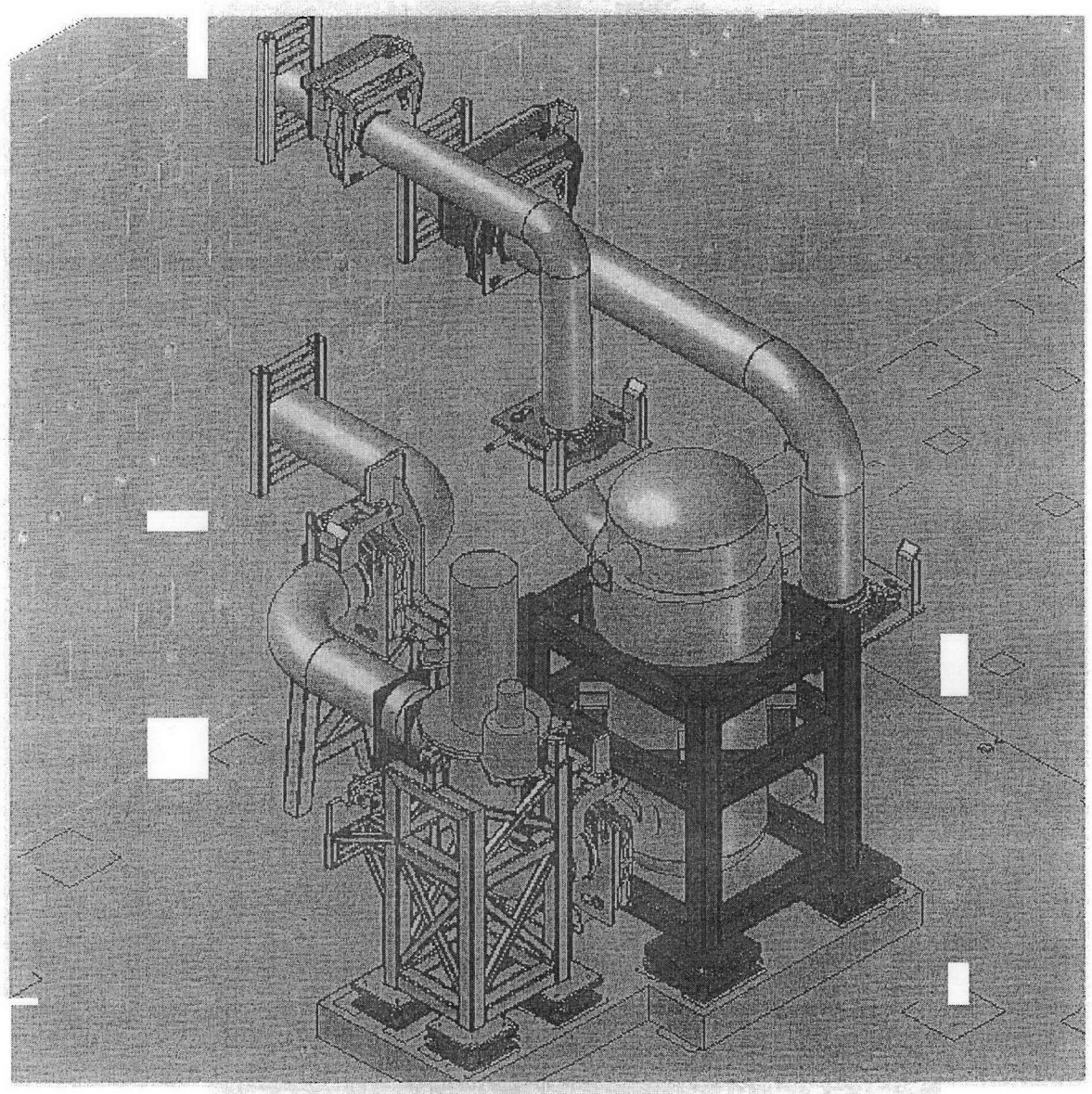

Current Layout

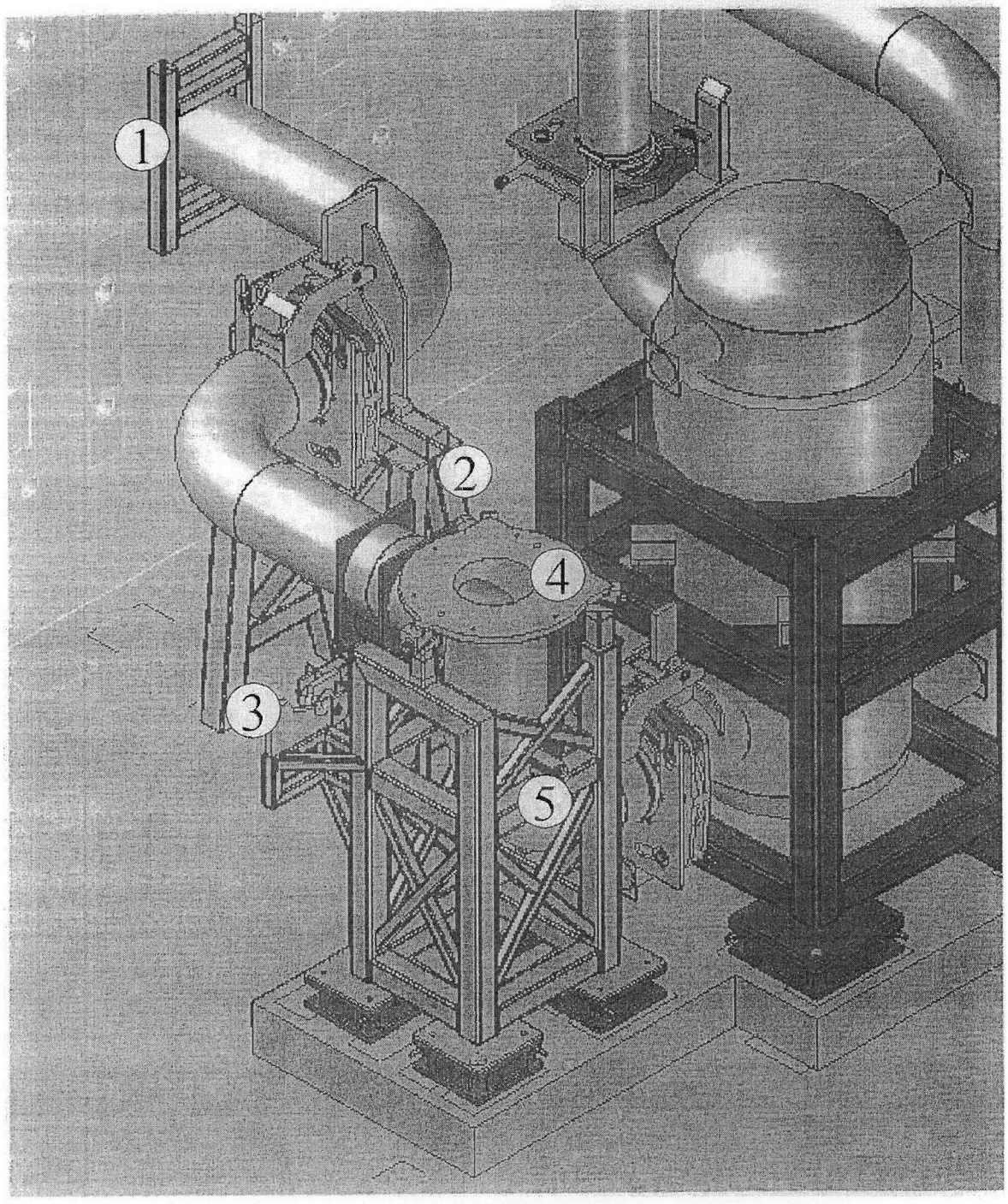

Proposed Support Configuration (FEP)

See corresponding detail on following slides.

FEP

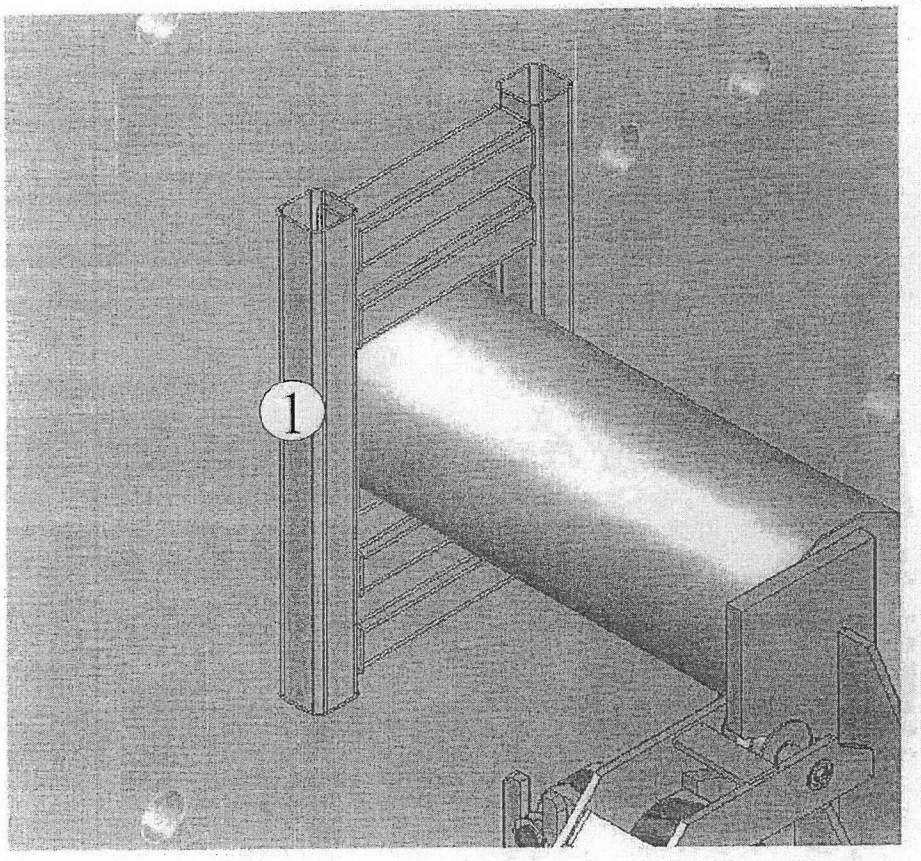

Guide supports at face of hot cell wall

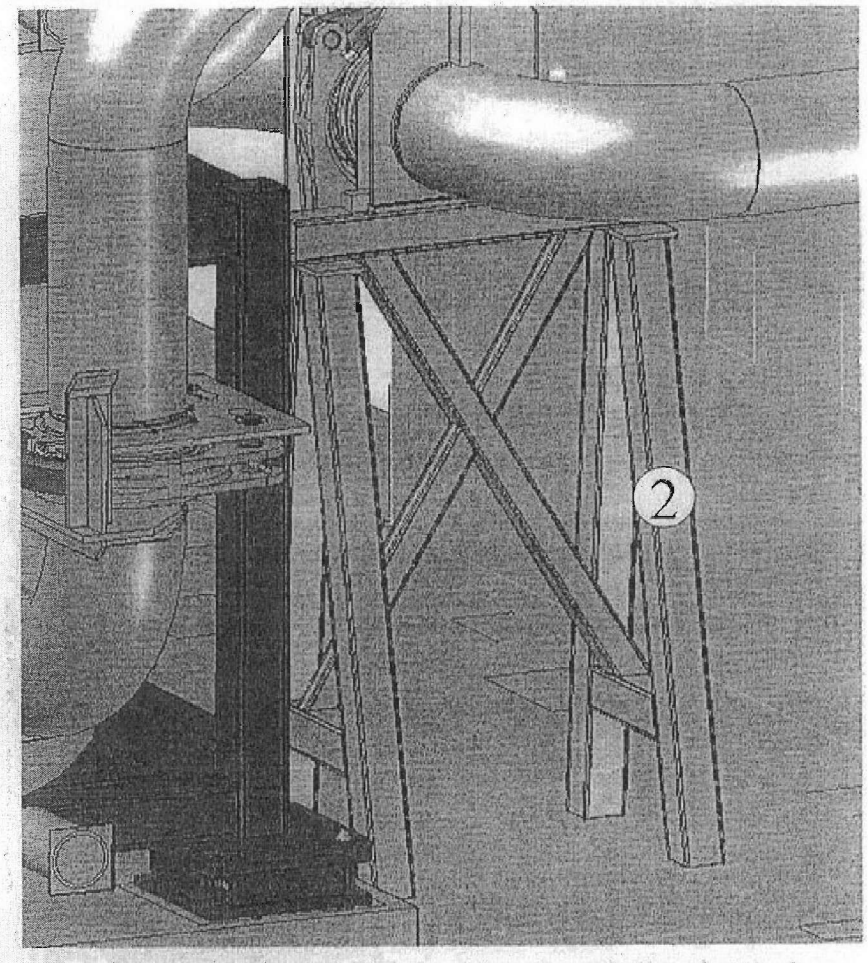

Guide support on back side of wall Grayloc hub.

FEP

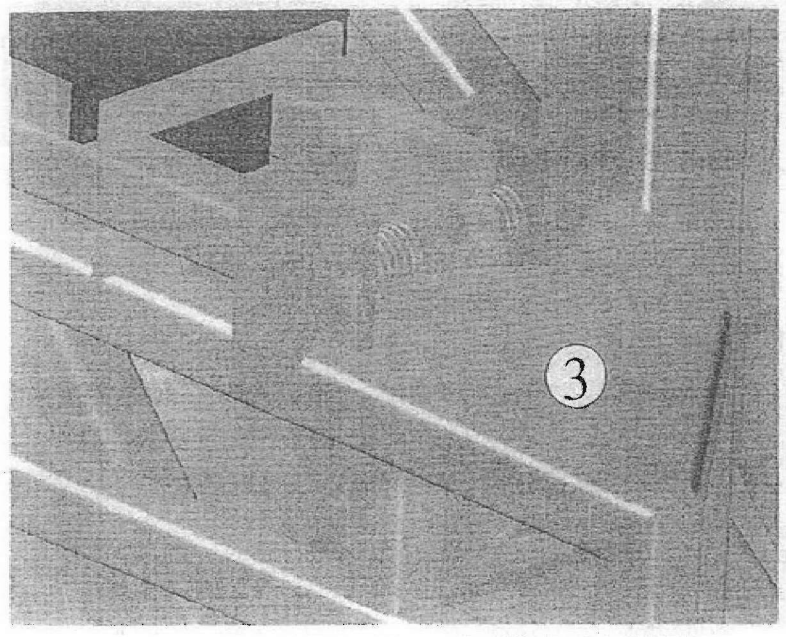

Midroller support

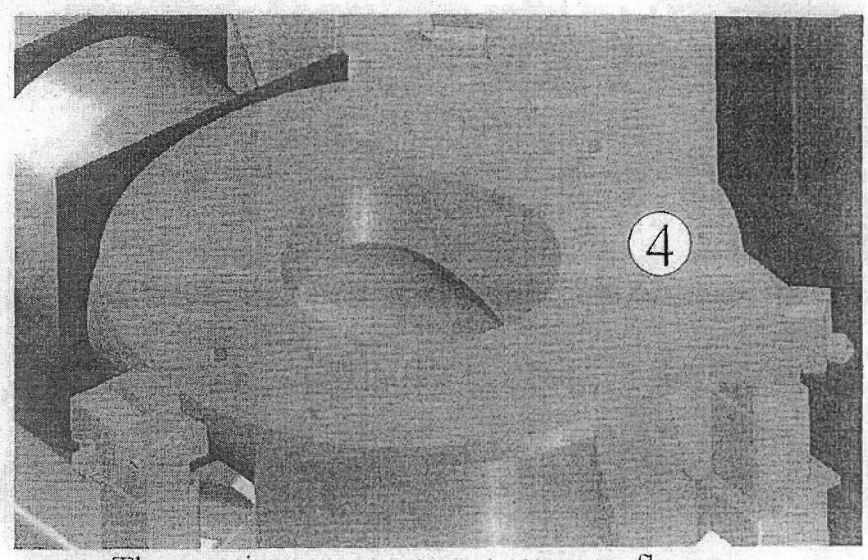

Three point pump support at pump flange.

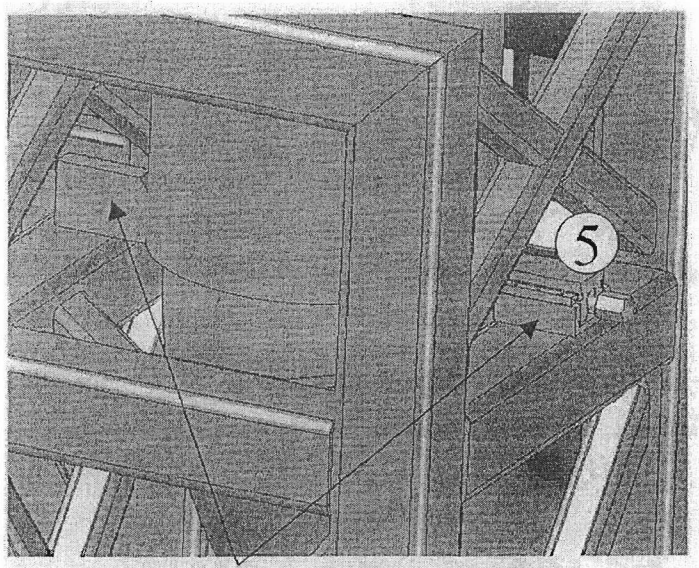

Pump discharge nozzle support.
(only if required by analysis)

FEP Layout

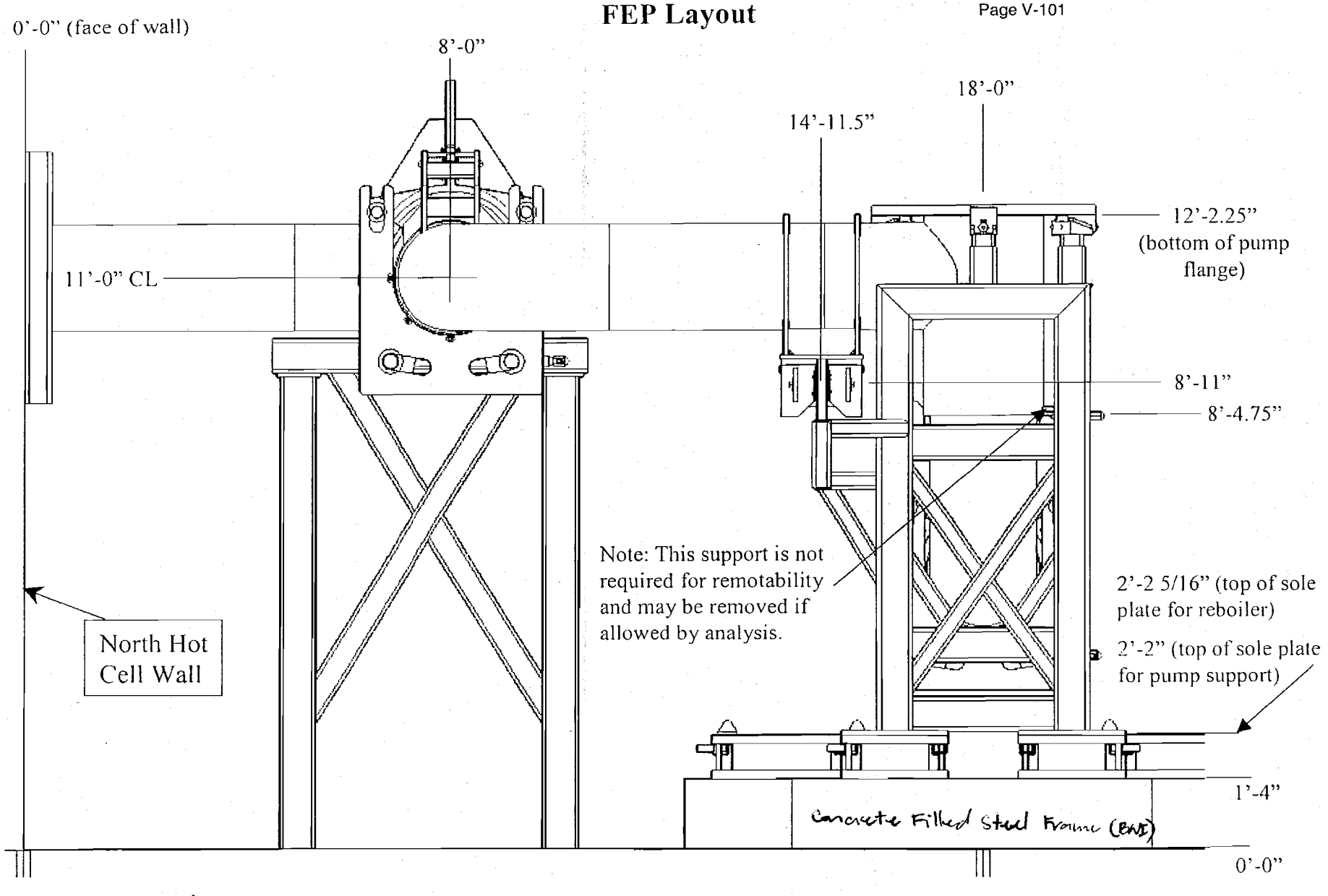

Elevation View (looking west)

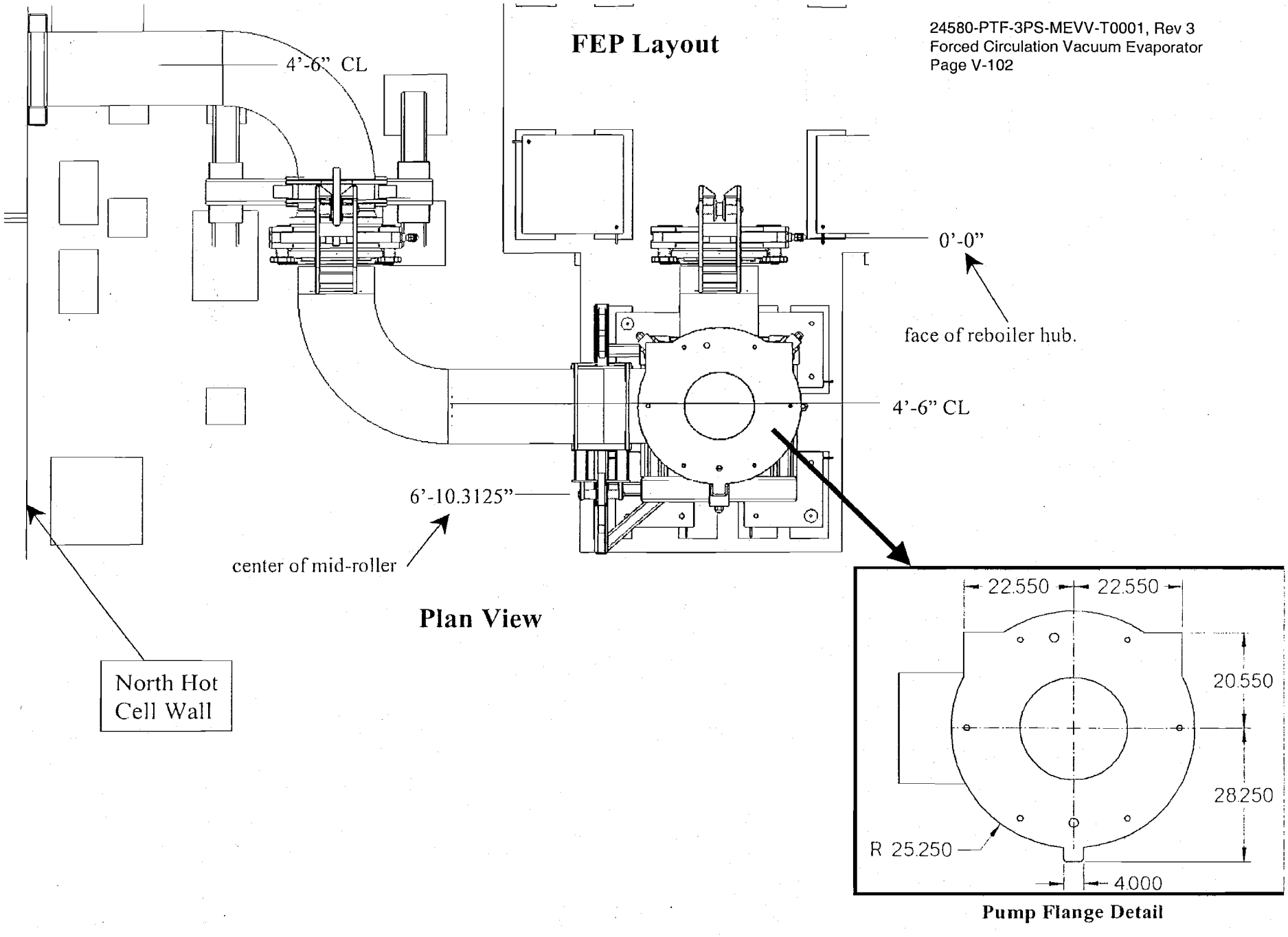
FEP Layout
4'-6" CL
0'-0"
face of reboiler hub.
4'-6" CL
6'-10.3125"
center of mid-roller
North Hot Cell Wall
Plan View
22.550
22.550
20.550
28.250
R 25.250
4.000
Pump Flange Detail

Pump Support Frame
(FEP)

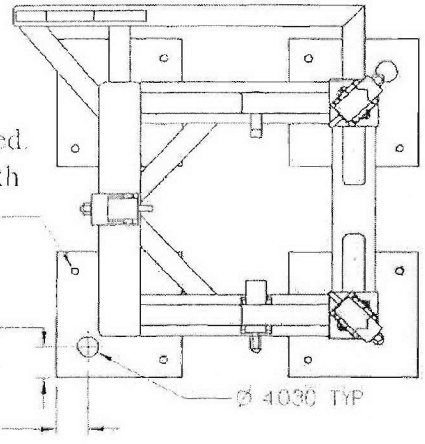

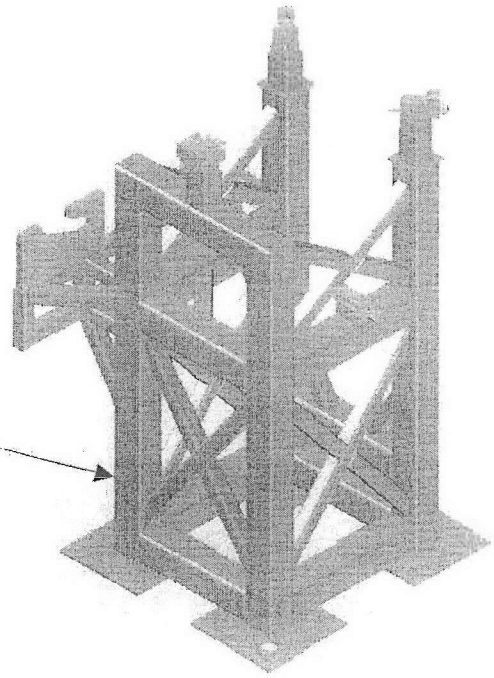

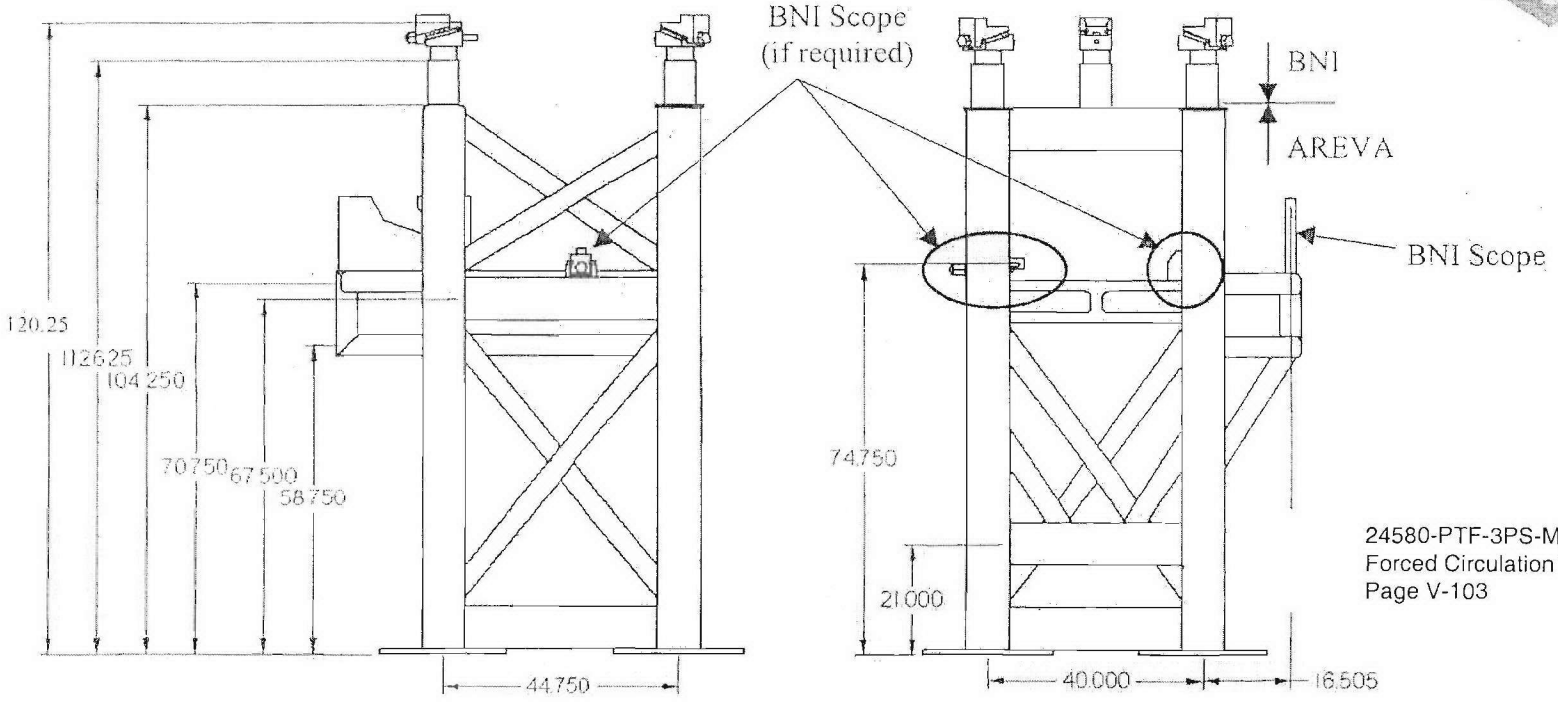

Equipment Pad and Sole Plates (FEP)

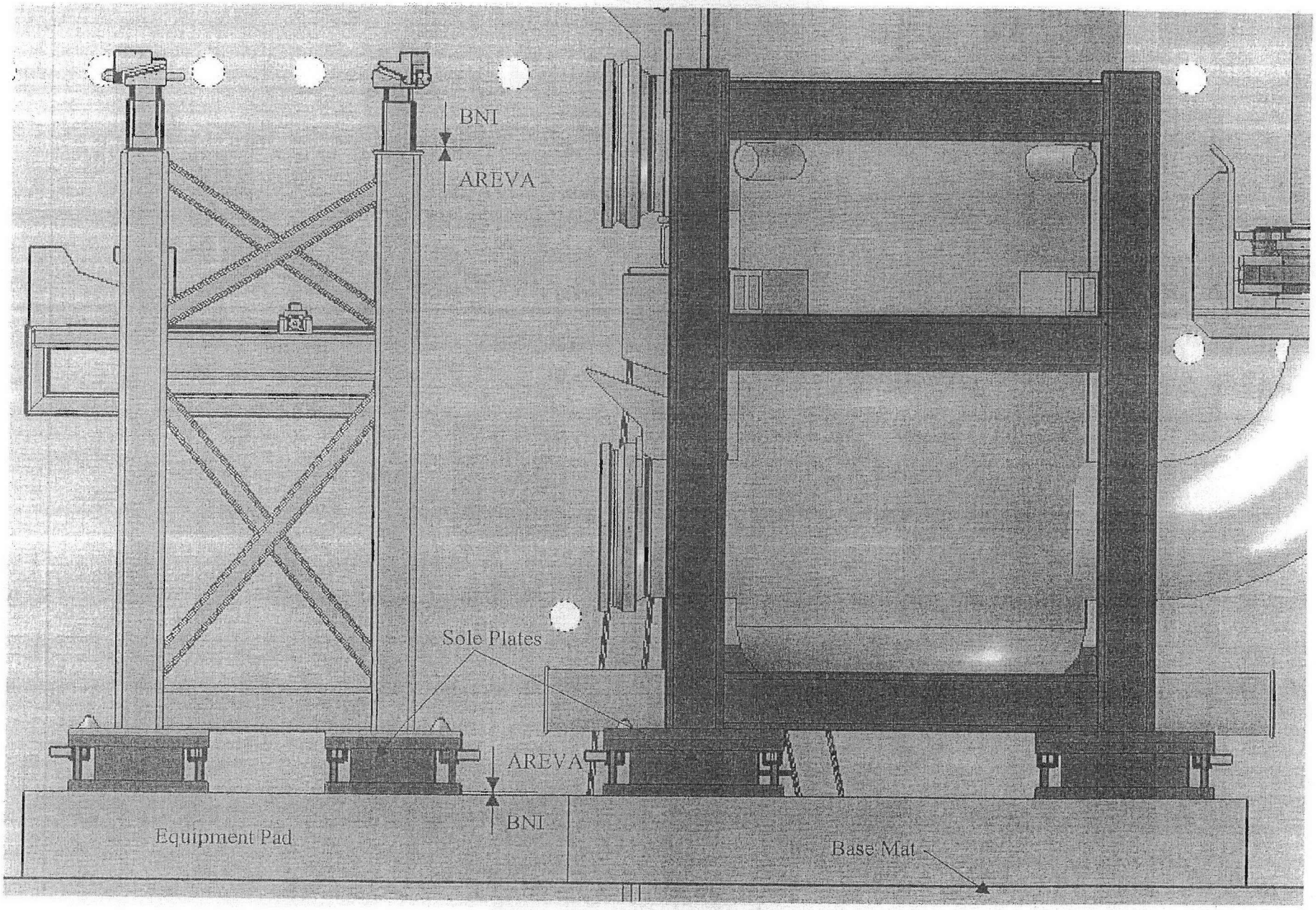

Sole Plates
(FEP)

Stud location as required. Must be accessible with impact wrench.

Example Sole Plate

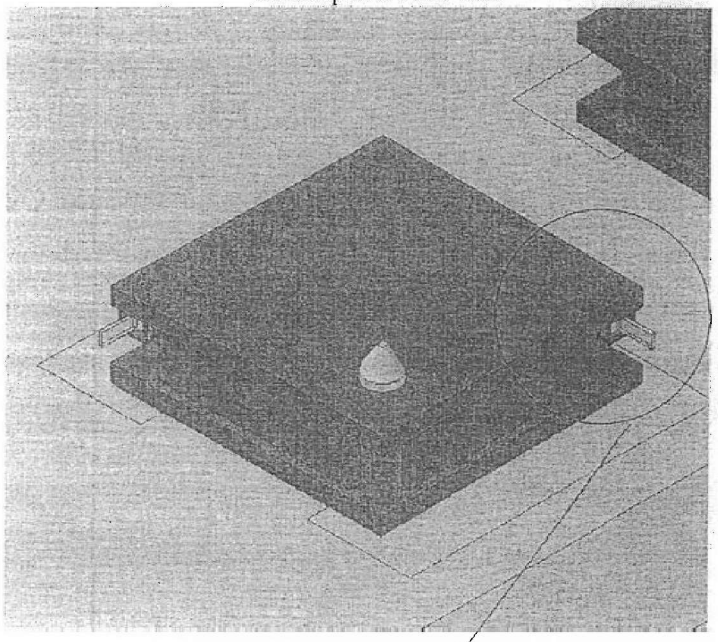

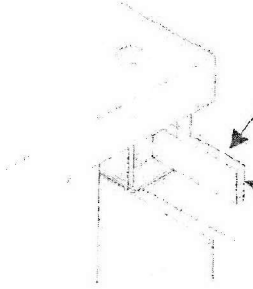

Captured Nuts must be accessible with the Power Manipulator.

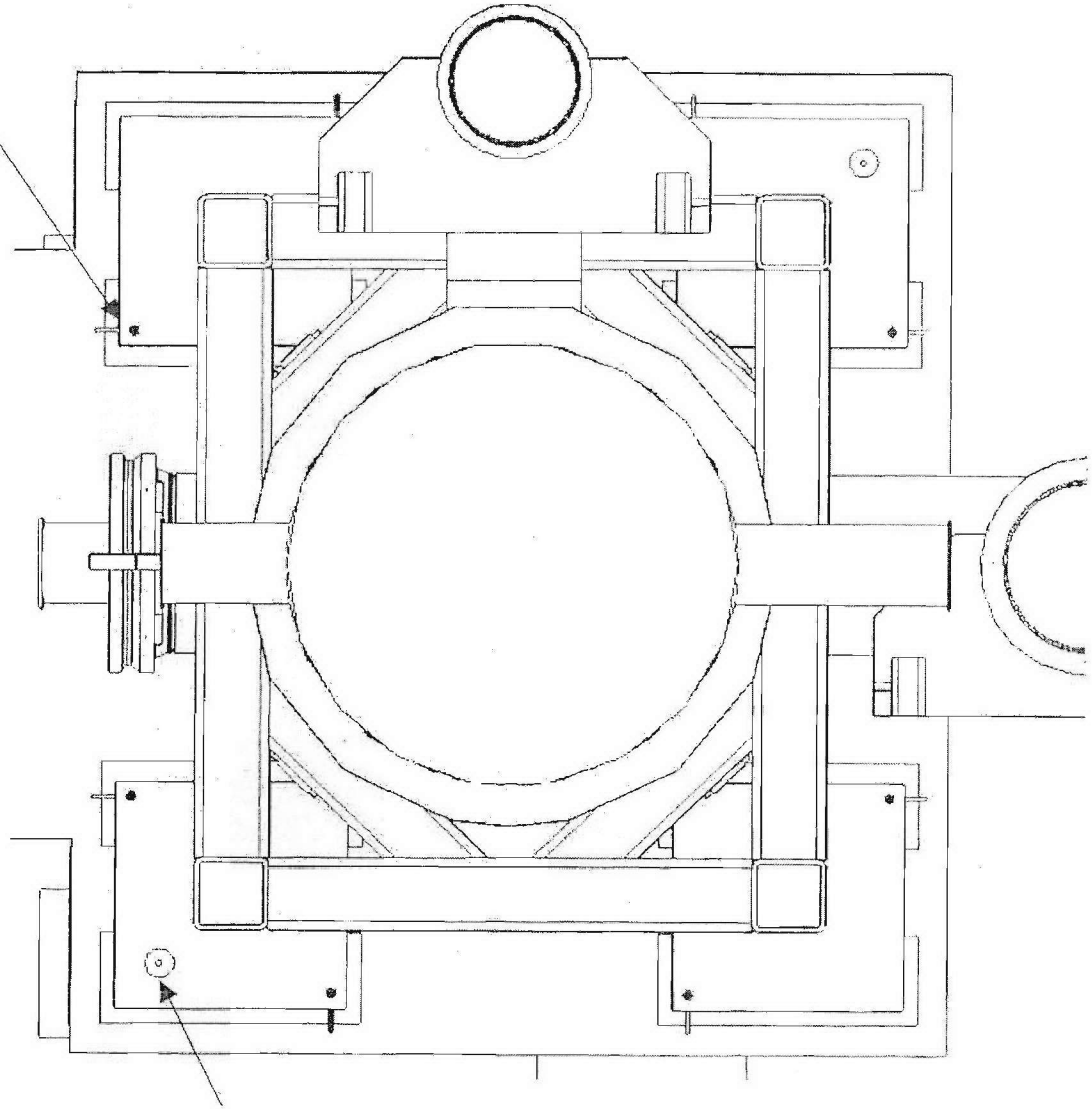

Dowel Pin (Typ)

FEP

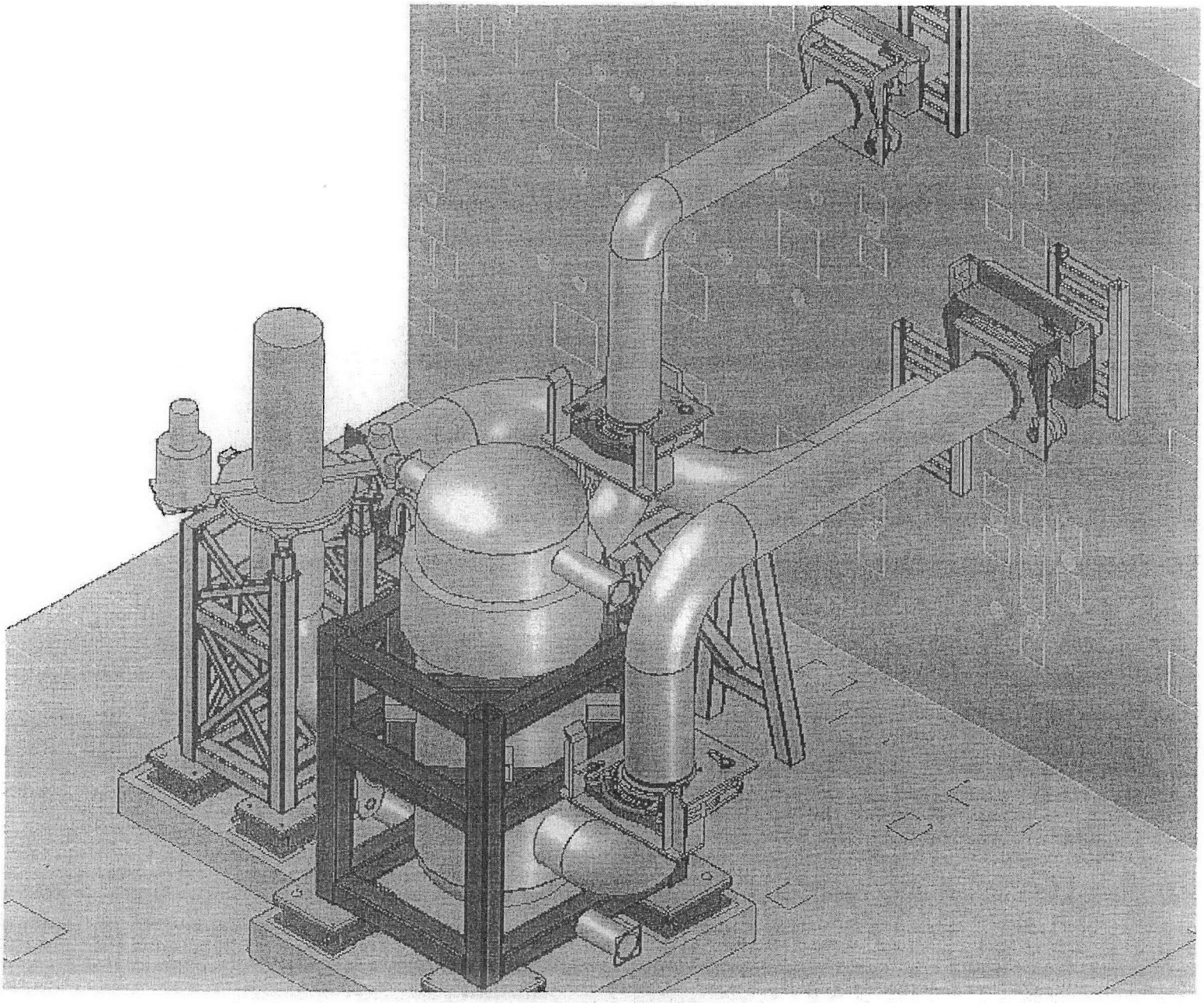

FEP

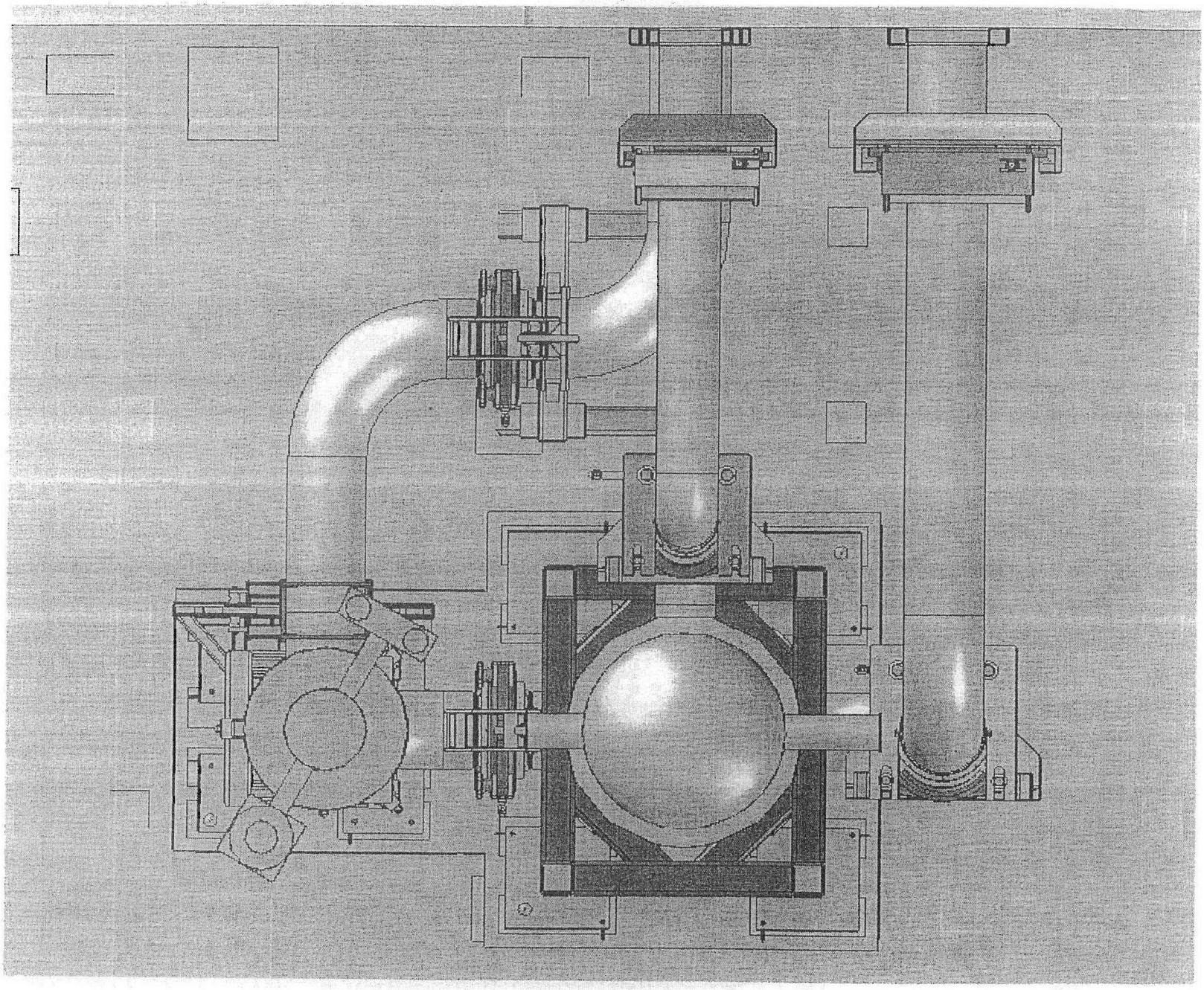

FEP

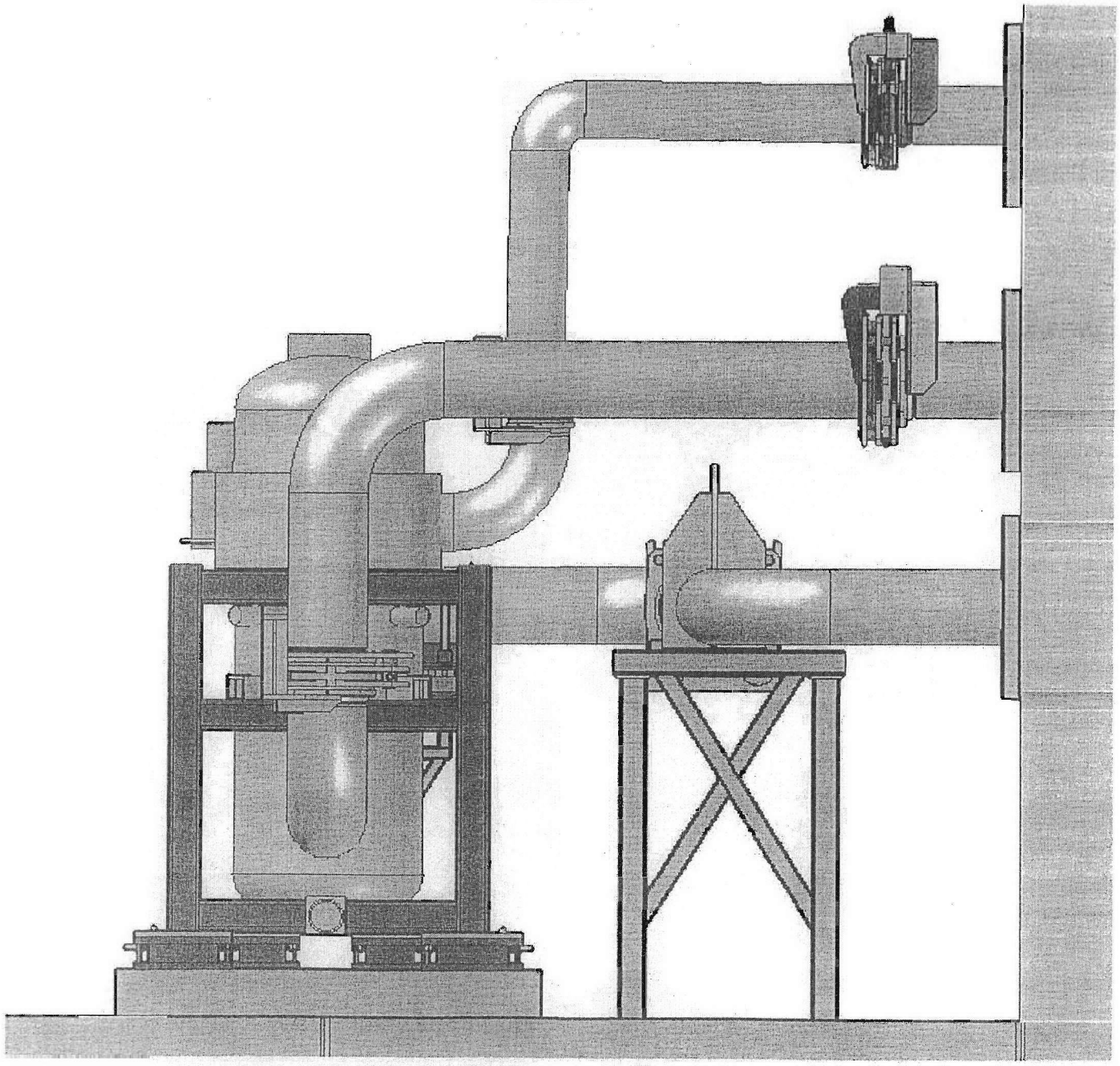

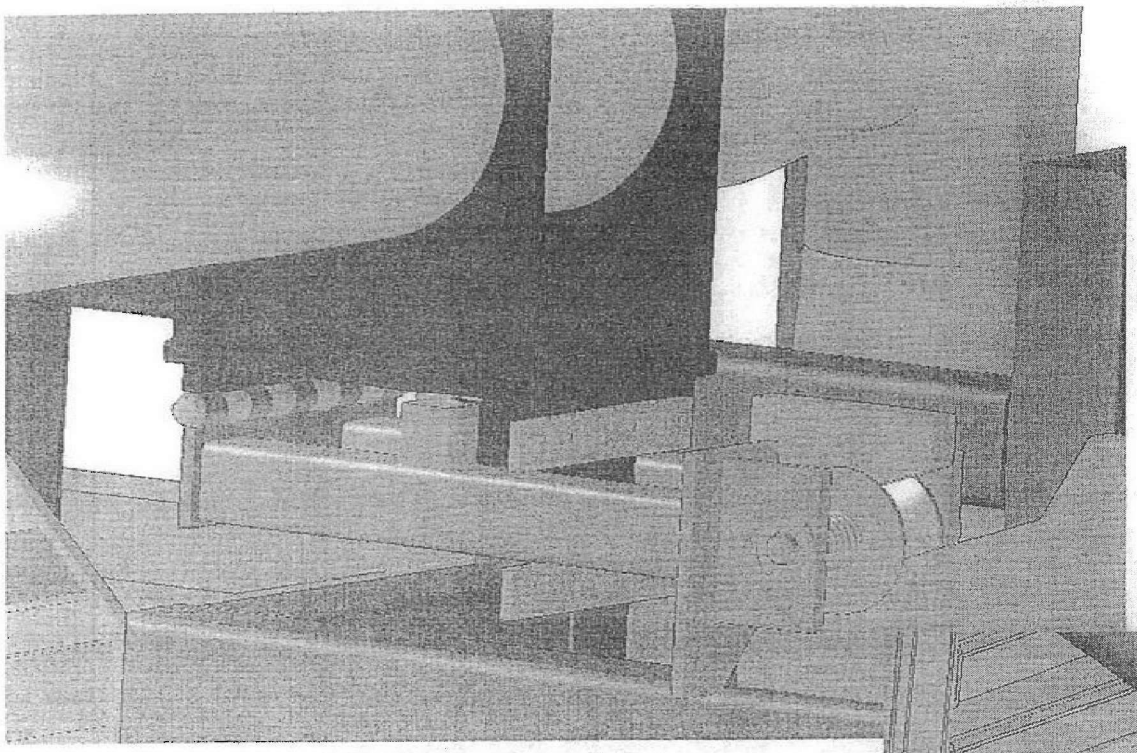

Mid-Roller Assembly

Connector Roller Assembly

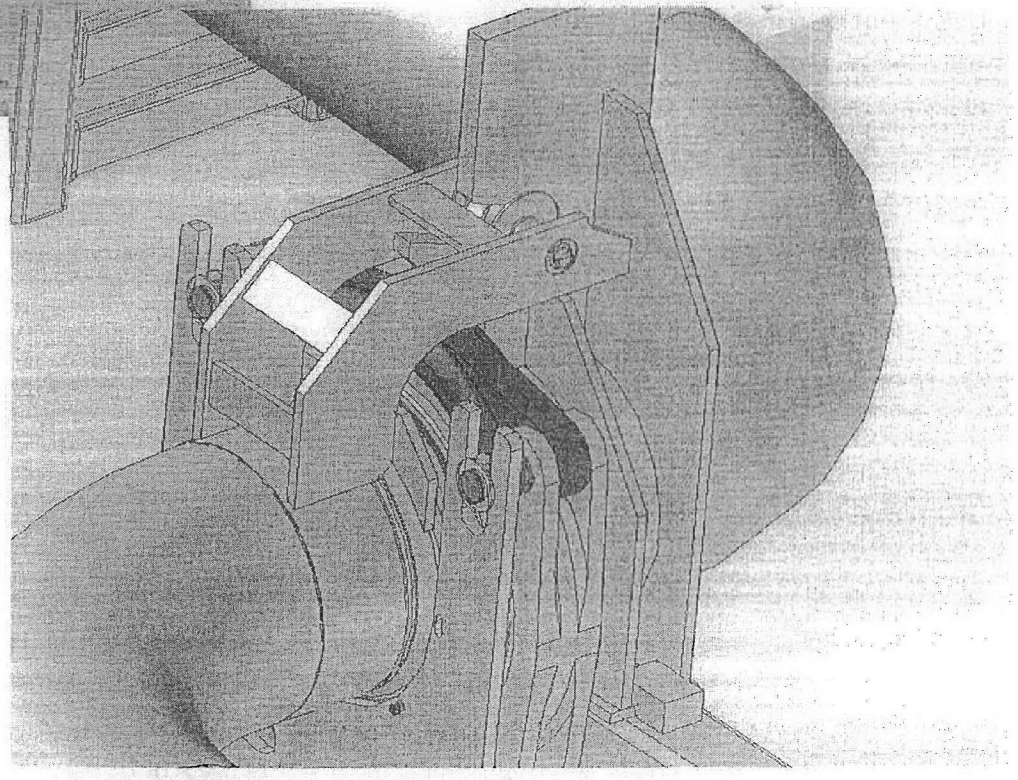

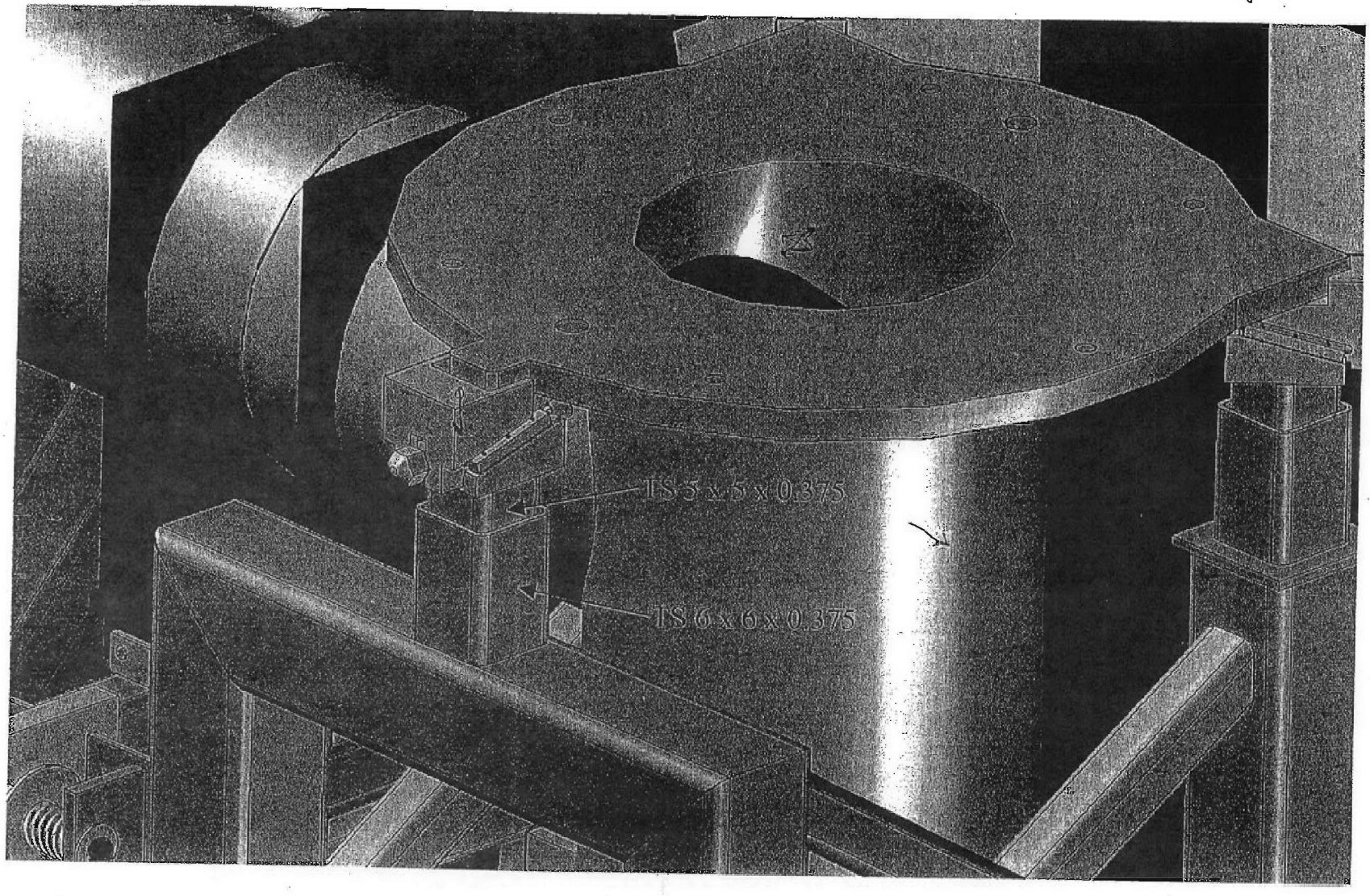

The show member sizes are typical for FEP, TLP and CNP pump support frames.

ATTACHMENT #6

SC-I/SC-II Seismic Analysis Qualification and FEA Report Check List

SC-I/II Seismic Analysis Qualification and FEA Report Check List

	Required Data	Source Reference	Applicable Section of Seismic Qualification Report
1	**Identification and Description of Equipment**		
1.1	Equipment Tag Number or other identification that uniquely defines the equipment	24590-WTP-3PS-SS90-T0001 §7.1.2(a)	
1.2	Identification of safety functions of the equipment that must be provided during and after a design basis earthquake (DBE)	24590-WTP-3PS-SS90-T0001 §7.1.2(d) 24590-WTP-3PS-MV00-T0002 §7.3.1 Equipment specification and/or data sheet	
1.3	Identification and description of the parts or features of the equipment that perform the safety functions and are therefore required to resist the DBE (this includes identification of Seismic Categories of relevant components or parts of the equipment)	Equipment specification and/or data sheet 24590-WTP-3PS-MV00-T0002 §2.2.4 DOE-STD-1020-94 §1.4 (page 1-7) and §C.8 (page C-65)	
1.4	Identification of basic material properties, key dimensions, and physical configuration of the equipment, including reference to design drawings/documents (including revision designation) that are used to control the design/configuration of the equipment	24590-WTP-3PS-SS90-T0001 §7.1.2(c)	
2	**Description of Analyses and Methodology**		
2.1	Reference to governing code(s) that specify ultimate or yield values (code allowable strength or stress levels)	Equipment specification and/or data sheet 24590-WTP-3PS-SS90-T0001 §7.1.2(e) 24590-WTP-3PS-MV00-T0002 §2.2.4 DOE-STD-1020-94 §2.3.2 (page 2-12)	
2.2	Identification of the code-defined strength or stress levels used in the analyses (the capacity of the equipment based on code ultimate or yield values)	24590-WTP-3PS-SS90-T0001 §7.1.2(e) 24590-WTP-3PS-MV00-T0002 §2.2.4 DOE-STD-1020-94 §2.3.2 (page 2-12)	
2.3	Definition of the seismic loads (earthquake loadings) used in the analysis (e.g., in-structure response spectra)	24590-WTP-3PS-SS90-T0001 §7.1.2(e) DOE-STD-1020-94 §1.4 (page 1-7), §2.2 (page 2-4), §C.8 (page C-65) 24590-WTP-3PS-MV00-T0002 §2.2.4	
2.4	Identification of equipment aging processes (e.g., corrosion, erosion, radiation, vibration/thermal fatigue, etc.), documentation or reference to documentation of these affects on material properties over the design life of the equipment, and evidence that the equipment will continue to provide its safety functions during and after a DBE at the end of design life	Equipment specification and/or data sheet 24590-WTP-3PS-SS90-T0001 §2.3 IEEE Std 344	

SC-I/II Seismic Analysis Qualification and FEA Report Check List

	Required Data	Source Reference	Applicable Section of Seismic Qualification Report
2.5	If an equivalent static analysis model is used in lieu of dynamic analyses, include justification of the adequacy of this approach (e.g., evidence that the structural features of the equipment are relatively simple, symmetric, and have essentially uniform distribution of mass and stiffness)	24590-WTP-3PS-SS90-T0001 §6.1.2 and §7.1.2(g) 24590-WTP-3PS-MV00-T0002 §2.2.4 DOE-STD-1020-94 §2.2, page 2-4	
2.6	Description of how the analysis considers 3 orthogonal components of earthquake ground motion (two horizontal and one vertical), and how the responses from the various direction components are combined in accordance with American Society of Civil Engineers (ASCE) Standard 4.	24590-WTP-3PS-SS90-T0001 §6.1.3 24590-WTP-3PS-MV00-T0002 §2.2.4 DOE-STD-1020-94 §2.3.2 (page 2-12)	
2.7	Identification of the damping values used in the analyses (e.g., damping values of 2 for massive low-stressed equipment with 0.5 for sloshing modes in liquid-containing metal tanks, or 3 for electrical cabinets and other equipment)	24590-WTP-3PS-SS90-T0001 §6.1.1(b) 24590-WTP-3PS-MV00-T0002 §2.2.4 DOE-STD-1020-94 §2.3.3 (page 2-15)	
2.8	Evidence that connecting structural supports and piping (and the associated dynamic coupling effects) are properly represented in the analytical model	Equipment specification and/or data sheet 24590-WTP-3PS-SS90-T0001 §6.2.3 24590-WTP-3PS-MV00-T0002 §2.2.4 DOE-STD-1020-94 §C.6.1, Items 2 & 3 (page C-58)	
2.9	Identification of the best estimate of all non-seismic demands expected to occur concurrently with a DBE (in a comparable format to the code allowable values)	Equipment specification and/or data sheet 24590-WTP-3PS-SS90-T0001 §4 and §5 24590-WTP-3PS-MV00-T0002 §2.2.4 DOE-STD-1020-94 §2.3.2 (page 2-12)	
3	**Results/Conclusions**		
3.1	Identification of the important natural frequencies of the equipment (or the peak of the design response spectrum must be used)	24590-WTP-3PS-SS90-T0001 §6.1.1(a) and §6.1.2(a) 24590-WTP-3PS-MV00-T0002 §2.2.4 DOE-STD-1020-94 §2.2 (page 2-4)	done
3.2	Identification of the computed elastic seismic response of the equipment (in a comparable format to the code allowable values)	24590-WTP-3PS-SS90-T0001 §7.1.2(g) 24590-WTP-3PS-MV00-T0002 §2.2.4 DOE-STD-1020-94 §2.3.2 (page 2-12)	

SC-I/II Seismic Analysis Qualification and FEA Report Check List

	Required Data	Source Reference	Applicable Section of Seismic Qualification Report
3.3	Description of how the analyses address the distribution of resulting seismic-induced inertial forces and evaluation of the load path(s)	24590-WTP-3PS-SS90-T0001 §7.1.2(g) 24590-WTP-3PS-MV00-T0002 §2.2.4 DOE-STD-1020-94 §2.2 (page 2-4)	
3.4	Description of method used to combine seismic and non-seismic loads (using code-defined load factors) and to compare the result with code-defined strength or stress levels to confirm the design is adequate	Equipment specification and/or data sheet 24590-WTP-3PS-SS90-T0001 §5 24590-WTP-3PS-MV00-T0002 §2.2.4 DOE-STD-1020-94 §2.3.2 (page 2-12)	
3.5	Identification of relative seismic anchor motion (SAM) between equipment and interconnected piping	24590-WTP-3PS-SS90-T0001 §7.4 24590-WTP-3PS-MV00-T0002 §2.2.4 DOE-STD-1020-94 §2.2 (page 2-6) and §2.4.1 (page 2-19)	
3.6	Identification of reaction loads on connecting structural supports and piping (individual loads as well as load combinations)	24590-WTP-3PS-SS90-T0001 §7.2	
4	**Quality Assurance**		
4.1	Signature of responsible engineer who performed the calculation	24590-WTP-3PS-MV00-T0002 §2.2.4 NQA-1-1989 DOE-STD-1020-94 §1.4 (page 1-7) and §C.8 (page C-65)	
4.2	Signature of engineer(s) who checked the calculation for numerical accuracy, and theory and assumptions	24590-WTP-3PS-MV00-T0002 §2.2.4 NQA-1-1989 Supplement 3S-1 DOE-STD-1020-94 §1.4 (page 1-7) and §C.8 (page C-65)	
4.3	Description of theory (analytical method) and assumptions used in the seismic analyses	NQA-1-1989 Supplement 3S-1 24590-WTP-3PS-SS90-T0001 §7.1.2(g)	
4.4	Description of computer program(s) used in the analyses, including model(s) used, input values, and output results calculated by the computer program	24590-WTP-3PS-SS90-T0001 §7.1.2(g) 24590-WTP-3PS-MV00-T0002 §2.2.4 NQA-1-1989 Supplement 3S-1 DOE-STD-1020-94 §C.8 (page C-65)	
4.5	Printout of output of computer analyses, including signature of responsible engineer who performed the computer analyses on first page of output	24590-WTP-3PS-MV00-T0002 §2.2.4 NQA-1-1989 Supplement 3S-1 DOE-STD-1020-94 §C.8 (page C-65)	

SC-I/II Seismic Analysis Qualification and FEA Report Check List

Required Data	Source Reference	Applicable Section of Seismic Qualification Report
4.6 Documentation or reference to documentation of verification of computer program accuracy	24590-WTP-3PS-SS90-T0001 §7.1.2(g) 24590-WTP-3PS-MV00-T0002 §2.2.4 NQA-1-1989 Supplement 3S-1 DOE-STD-1020-94 §C.8 (page C-65)	

ATTACHMENT #7

STRUCTURAL ANALYSIS REQUIREMENTS

Table of Contents

Page V-

LIST OF TABLES 118

LIST OF FIGURES 119

1.0 INTRODUCTION 121
- 1.1 Vessel Analysis per ASME Section VIII – Div. 1 and 2 Codes [1] 121
- 1.2 Skid Analysis per ANSI/AISC N690 [14] 122
- 1.3 Piping Analysis per ASME B31.3 [29] 122
- 1.4 Design Input Interfaces 123

2.0 VESSEL ANALYSIS METHODOLOGY 128
- 2.1 Classification of Stresses 129
- 2.2 Modal Response Spectrum Analysis 129
- 2.3 FEA Vessel Models and GTSTRUDL Piping Models 130
- 2.4 Stress Combinations 131
- 2.5 Ambient and Vessel Wall Temperatures 132
- 2.6 Pressures During Normal Operation and Seismic Event 133
- 2.7 Design Conditions 133
- 2.8 Operating Conditions 133
- 2.9 Incorporation of Under-Tolerances and Mill Tolerances 134
- 2.10 Nozzle Neck Thickness Calculation for Reinforcement Region 135
- 2.11 Vessel Buckling 135
- 2.12 Thermal and Seismic Anchor Movements at Vessel Nozzles 136
- 2.13 Flow Induced Vibration in Heat Exchangers 136
- 2.14 Seismic Loads on Bolted Flange Connections 136
- 2.15 Use of Higher Allowable Stresses for 304 and 316 Stainless Steel Materials 136
- 2.16 Parametric Study: 4-Node Shell Elements FEA and 3D Brick Elements FEA 137
- 2.17 Handling Loads 138
- 2.18 Internal Supports/Piping 138
- 2.19 Fatigue Analysis Requirement 138

3.0 SKID ANALYSIS METHODOLOGY 152
- 3.1 Applicable Codes 152
- 3.2 Applicable References for Inputs 152
- 3.3 Material 153

Table of Contents
(continued)

Page

3.4 Ambient Temperature From Contract Documents 153
3.5 Seismic Accelerations 153
3.6 Methodology 154
3.7 Loads and Load Combinations 156

4.0 PIPING ANALYSIS DATA AND METHODOLOGY 160

5.0 JUSTIFICATION FOR COUPLED AND DECOUPLED ANALYSES 170

6.0 ANALYSIS RESULTS DELIVERABLES 170

7.0 VERIFICATION AND VALIDATION 171

8.0 REFERENCES 172

APPENDIX A : PARAMETRIC STUDY – UTILIZING SHELL ELEMENT STRESSES AT NOZZLE/VESSEL INTERSECTIONS A-1

APPENDIX B : BECHTEL NATIONAL INC. CHECK LIST B-1

APPENDIX C : SELLER DESIGN VERIFICATION CHECK LIST C-1

APPENDIX D : EXAMPLES OF THE USE OF APPENDIX A PROCEDURES D-1

List of Tables

Page

Table 2-1: Stress Evaluation of Nozzle Walls Within the Limits of the Reinforcement Region 139
Table 2-2: Stress Evaluation of Nozzle Walls Outside the Limits of the Reinforcement Region 140
Table 2-3: Stress Evaluation of Vessel Walls Within and Outside the Limits of the Nozzle Reinforcement Region 141
Table 2-4: Normal and Abnormal Conditions Ambient Temperatures 142
Table 3-1: HEP1 – Applicable Figure Numbers for Spectra 158
Table 3-2: HEP2 – Applicable Figure Numbers for Spectra 159
Table 4-1: FEP & TLP Off-Gas Piping Analysis 161
Table 4-2: CNP Off-Gas Piping Analysis 162
Table 4-3: HEP1, FEP-A Recirculation Loop Piping System Coupled Evaluation 163
Table 4-4: HEP1, FEP-B Recirculation Loop Piping System Coupled Evaluation 164
Table 4-5: HEP1, TLP Recirculation Loop Piping System Coupled Evaluation 165
Table 4-6: CNP Recirculation Loop Piping System Coupled Evaluation 166
Table 4-7: HEP-1 FEP & TLP Vacuum Equipment Piping & Support Evaluation 168
Table 4-8: HEP-2 CNP Vacuum Equipment Piping & Support Evaluation 169

Table A-1: Maximum Linearized and Peak SI from Solid Brick Element Models of Several Nozzle/Vessel Configurations A-7
Table A-2: Comparison of Maximum SI from Shell Elements at Modeled Mid-Surfaces to Maximum Linearized Brick Element SI A-8
Table A-3: Comparison of Shell Element SI at Outer Surface Intersection Locations to Maximum Linearized Brick Element SI A-9
Table A-4: ANSYS Linearization Results for the TLP Reboiler 2" Nozzle N06 Local Solid Brick Element Model at the Maximum Linearized Stress Location in the Vessel A-10
Table A-5: Brick Element Model Mesh Refinement Details A-11
Table A-6: List of ANSYS Input File for Parametric Study A-12

List of Figures

Page

Figure 1-1: HEP1 - Process Flow Streams of FEP and TLP Evaporator Systems 124

Figure 1-2: HEP2 - Process Flow Diagram of CNP Evaporator System 126

Figure 1-3: Structural Analysis Process Flow Diagram 127

Figure 2-1: Vector Load Stresses Combination with Seismic Load Stresses 151

Figure A-A-1: Vessel Thickness / Nozzle Thickness vs. Brick Element Vessel Stress Multiplier (Peak SI / Linearized SI) A-13

Figure A-A-2: Vessel Thickness / Nozzle Thickness vs. Brick Element Nozzle Stress Multiplier (Peak SI / Linearized SI) A-14

Figure A-A-3: Comparison of ANSYS Shell Element and Brick Element Results for TLP Reboiler Vessel, 2" Nozzle N06 Model A-15

Figure A-A-4: Vessel Thickness/Nozzle Thickness vs. Shell SI to Brick Element Linearized SI Ratio for Vessel Stresses A-16

Figure A-A-5: Vessel Thickness/Nozzle Thickness vs. Shell SI to Brick Element Linearized SI Ratio for Nozzle Stresses A-17

Figure A-A-6: Stress Multipliers for Vessel Peak Stresses, Based on the Vessel Stress Multiplier Bounding Line of Figure A-1 Divided by the Bounding Line Data of Figure A-4 ..... A-18

Figure A-A-7: Stress Multipliers for Nozzle Peak Stresses, Based on the Vessel Stress Multiplier Bounding Line of Figure A-2 Divided by the Bounding Line Data of Figure A-5 ..... A-19

Figure A-A-8: Element Mesh in the TLP Reboiler Vessel ANSYS FEA Shell Element Model Near the Vessel/Nozzle Intersection of the 2" Nozzle N06 ..... A-20

Figure A-A-9: Element Mesh in the TLP Reboiler ANSYS FEA Local Shell Element Model Near the Vessel/Nozzle Intersection of the 2" Nozzle N06 ..... A-21

Figure A-A-10: Element Mesh in the TLP Reboiler ANSYS FEA Local Solid Brick Element Model Near the Vessel/Nozzle Intersection of the 2" Nozzle N06; w/o Element Details A-22

Figure A-A-11: Element Mesh in the TLP Reboiler ANSYS FEA Local Solid Brick Element Model Near the Vessel/Nozzle Intersection of the 2" Nozzle N06; Sectioned to Show 3-D Details A-23

Figure A-A-12: TLP Reboiler ANSYS FEA Brick Element Model From Figure A-11, Mesh Refined at Fillet/Vessel Region for Local Stress Evaluation A-24

Figure -A-13: TLP Reboiler ANSYS FEA Brick Element Model From Figure A-11, Mesh Refined at Fillet/Nozzle Region for Local Stress Evaluation A-25

Figure A-A-14: TLP Reboiler ANSYS 2" Nozzle N06 FEA Brick Element Model; Stress Intensities .A-26

Figure A-A-15: TLP Reboiler ANSYS 2" Nozzle N06 FEA Brick Element Model; Maximum Stress Intensities at Fillet/Vessel Region A-27

Figure A-A-16: TLP Reboiler ANSYS 2" Nozzle N06 FEA Brick Element Model; Stress Intensities .A-28

Figure A-A-17: TLP Reboiler ANSYS 2" Nozzle N06 FEA Brick Element Model; Maximum Stress Intensities at Fillet/Nozzle Region A-29

Figure A-A-18: TLP Reboiler ANSYS 2" Nozzle N06 FEA Shell Element Model; Stress Intensities With All Elements Selected A-30

Figure A-A-19: TLP Reboiler ANSYS 2" Nozzle N06 FEA Shell Element Model With Elements Within Nozzle/Vessel Intersection Removed; Stress Intensities A-31

Figure A-A-20: TLP Reboiler ANSYS 2" Nozzle N06 FEA Shell Element Model With Elements Within Nozzle/Vessel Intersection Removed; Maximum Local Stress Intensities A-32

Figure D-1: Example for Determining Linearized and Peak SI for a Nozzle at the Vessel Intersection .D-3

Figure D-2: Example for Determining Linearized and Peak SI for a Vessel at the Nozzle Intersection .D-4

1.0 INTRODUCTION

This document provides the analytical methodology and assumptions to be used in preparing analyses for certain evaporator components. (See Figures 1-1 and 1-2 for diagrams showing the main components of HEP1 and HEP2 evaporator systems in Seller' s workscope). This document is that report.

The purpose of this report is to ensure that the resultant analyses present a rational narrative that allows a qualified reviewer to understand the process used and the conclusions reached. The methodology used in resultant analyses will be accompanied by a logical justification or verification. In general, three types of analyses will be performed by Seller, each requiring unique modeling and methodology: (1) a global coupled analysis of each entire evaporator system (TLP, FEP-A, FEP-B, and CNP) using GTStrudl; (2) component analyses using either vessel/skid models or piping models; and (3) skid analyses (See Figure 1-3 for a Structural Analysis Process Flow Diagram of the three different types of analyses). Loads obtained from the coupled analyses will be used as input to the component analyses and loads from the component analyses will be used as input to the skid analyses. The following types of component analyses are addressed in this report:

1.1 Vessel Analysis per ASME Section VIII – Div. 1 and 2 Codes [1][1]

The vessels covered are:

TLP/FEP A/B Recirculation Pumps and CNP Recirculation Pump
(Per API-610-1995 [28] as applicable)
TLP Reboiler, FEP A/B Reboilers and CNP Reboiler
TLP Separator Vessel, FEP A/B Separator Vessels and CNP Separator Vessel
TLP/FEP A/B Primary Condensers and CNP Primary Condenser
CNP Distillation Column
TLP/FEP A/B /CNP Vacuum Systems

The seismic qualification analysis for the vessels will be performed using the ANSYS software program to the requirements of ASME Section VIII, Div. 2 Code. The ANSYS model will have the following features:

- 3-D vessel models will be developed using 4-node shell elements including the vessel internals modeled with shell or beam elements as appropriate
- 3-D vessel support structure model using beam elements
- The vessel model is coupled to its support structure
- The vessel model includes all large bore nozzles and representative small bore nozzles
- The boundary conditions for the vessel and support structure will be defined to represent the actual conditions
- The applied nozzle loads (DW, TH and Seismic) shall comply with Buyer contractual requirements. Recirculation and Off-Gas nozzle loads are developed by Seller. All other nozzle loads are specified by Buyer
- Differential seismic floor displacements are included in the model per Buyer contractual requirements
- Room and vessel temperature load cases are included in the model. Room temperatures are specified by Buyer

[1] The number in the brackets indicates reference number.

- ISRS provided by Buyer for the WTP Site Specific Ground Motion (WSGM) ISRS curves will be used in the dynamic response spectrum analysis with 4% critical damping. The three directional responses are combined per Buyer contractual requirements
- Load combinations are in accordance with the ASME Section VIII, Div. 2 Code

The ANSYS analysis also generates the following design input:

- Nozzle flexibility matrices for the recirculation, off-gas, and vacuum system piping coupled analyses
- Support loads for use in the structural qualification of the vessel support structure
- Thermal and seismic anchor displacements

1.2 Skid Analysis per ANSI/AISC N690 [14]

(As supplemented by Buyer SDC 24590-WTP-DC-ST-01-001 [20])

The skids covered are:

TLP/FEP A/B Recirc Pumps and CNP Recirc Pump
TLP Reboiler, FEP A/B Reboilers, and CNP Reboiler
TLP Separator Vessel, FEP A/B Separator Vessels and CNP Separator Vessel
TLP/FEP A/B Primary Condensers and CNP Primary Condenser
CNP Distillation Column

The seismic qualification analysis of the skids/support structures will be performed using the GTSTRUDL software program to the requirements of ANSI/AISC N690 Code. The GTSTRUDL model will have the following features:

- 3-D support structure model using beam elements
- Stick vessel model with no mass rigidly connected to the support structure
- The boundary conditions for the support structure will be defined to represent the actual conditions
- Vessel support loads that are generated from the ANSYS analysis and applied statically at the vessel support lug interface
- Any pipe support loads that may be present from the recirculation piping coupled analysis
- Dead weight loads from support structure members and seismic inertia loads

1.3 Piping Analysis per ASME B31.3 [29]

The piping systems covered are:

TLP and FEP A/B Off-Gas Piping
CNP Off-Gas Piping
FEP-A Recirculation Loop Piping System
FEP-B Recirculation Loop Piping System
TLP Recirculation Loop Piping System
CNP Recirculation Loop Piping System
FEP A/B and TLP Vacuum Equipment Piping & Support Evaluation
CNP Vacuum Equipment Piping & Support Evaluation (including CNP Condenser Condensate Piping)

The seismic qualification analysis of the piping systems will be performed using the following software programs to the requirements of ASME B31.3 Code:

- The GTSTRUDL program will be used for the FEP-A, FEP-B, TLP and CNP recirculation piping system coupled dynamic analyses using stick models to represent the vessels, support structures, and piping. It is noted that GTSTRUDL does not perform ASME B31.3 Code piping qualification. Seller has developed a spreadsheet that uses the GTSTRUDL results to perform the ASME B31.3 Code piping qualification which is then followed by manual verification. The recirculation piping is qualified in this manner. Each evaporator system model will include the separator vessel in its frame structure, reboiler in its frame structure, recirculation pump in its frame structure, and interconnecting recirculation piping/jumpers. Off-gas piping, and primary condenser and its frame structure may not be included in the model. The flexibility matrices for each recirculation piping nozzle will be included in the coupled analysis model. The coupled dynamic analysis will be performed using the revised ISRS curves provided by Buyer and will account for the seismic differential movement between the 0' and 56' floors. Conservatively 4% critical damping will be used to perform the coupled dynamic analysis
- The AutoPIPE program may be used for the FEP-A, FEP-B, TLP and CNP off-gas and vacuum system piping decoupled dynamic analyses. The decoupling criteria of Section 3.1.7 of ASCE 4-98 will be used to justify decoupling the piping from the applicable vessels. The decoupled dynamic analysis will be performed using the revised ISRS curves provided by Buyer or ITRS as required. 4% critical damping will be used to perform the decoupled dynamic analysis per Buyer Specification 24592-WTP-DC-PS-01-001 [21]

Each of the above analysis will clearly identify a) scope boundaries, b) governing analytical codes, c) assumptions, d) boundary conditions, e) interface requirements, f) governing evaluation criteria codes, and g) reaction loads at interface boundaries as applicable.

Handling and lifting equipment are not within the scope of this document.

1.4 Design Input Interfaces

All wall and floor penetrations for piping evaluated by Seller will have full freedom of movement, with no restraints. Buyer and Seller will coordinate and evaluate penetration clearances

Any insulation for vessels and piping will be defined by Buyer or assumed to be absent

The water lines to the condensers and steam line from the CNP Desuperheater to the CNP Reboiler must be defined by Buyer

1	Steam to Desuperheater	10	Vent from Primary Condenser	20	CW to Pri Cond
2	Desuperheater Water	11	Outside Air	21	CW from Pri Cond
3	Steam to Reboiler	12	Vent from Reboiler Shell	22	CW to Intercondenser
4	Gravity Drain from Reboiler	13	Vent from Vacuum System	23	CW to Aftercondenser
5	Feed (FEP,) SBS Cond (TLP)	14	High Pressure Steam (Ejector 1)	24	CW from Intercondenser
6	Circ Liquor to Reboiler	15	High Pressure Steam (Ejector 2)	25	CW from Aftercondenser
7	Circ Liquor from Reboiler	16	Condensate from Pri Cond	26	Process Condensate to Mesh
8	Concentrate	17	Condensate from Inter Cond	27	Anti Foam Addition
9	Vapor to Primary Condenser	18	Condensate from After Cond	28	Steam Condensate to SCW
		19	Process Condensate	29	Treated LAW Feed (TLP Only)

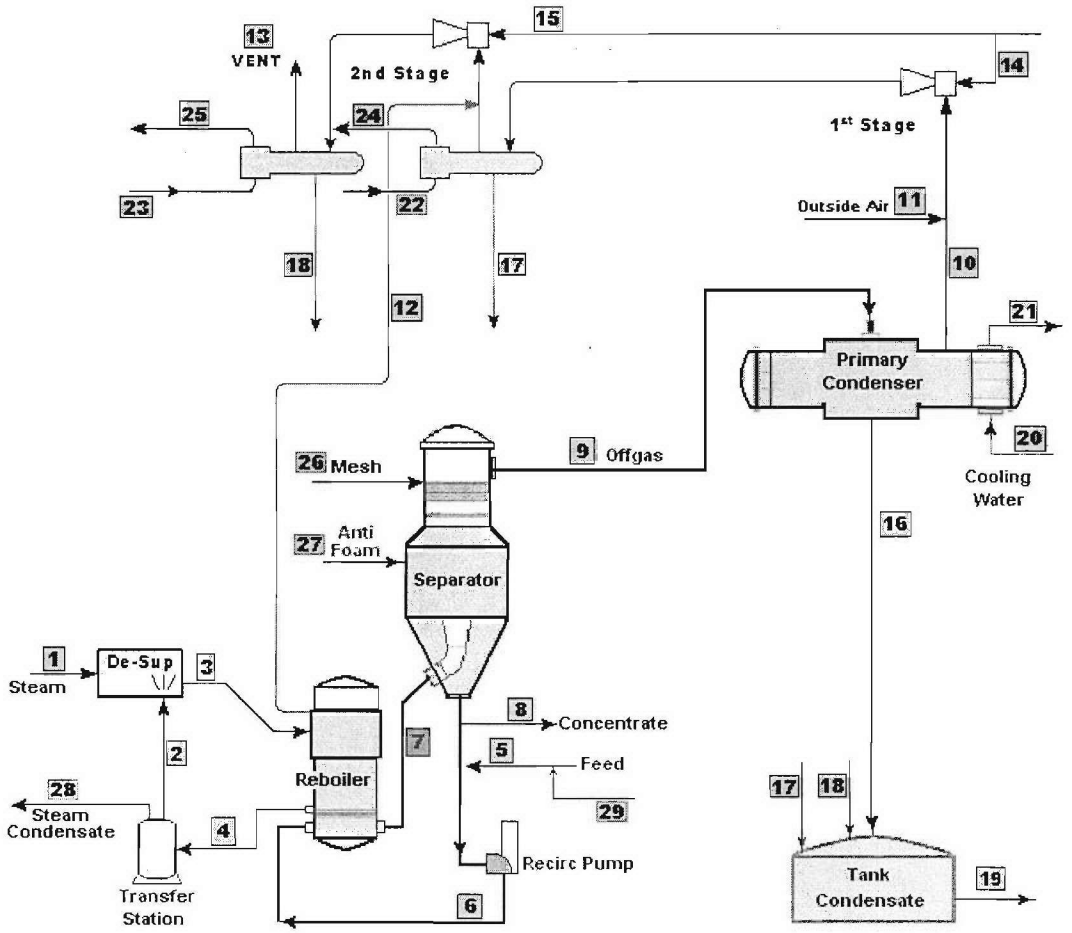

NOTE: Desuperheater, Transfer Station and Condensate tank are not part of the global analysis, and they are SC – III.

Figure 1-1: HEP1 - Process Flow Streams of FEP and TLP Evaporator Systems

1	Plant Steam	11	Vent from Pri Cond	22	Recovered Eluant
2	Desup Water	12	Vacuum Control Air	23	Condensate out
3	Steam to Reboiler	13	Vent from Reboiler Shell	24	CW to Primary Cond
4	Steam Condensate	14	Vent from Vacuum System	25	CW from Primary Cond
5	Feed	15	HP Steam to Ejector #1	26	CW to Inter Condenser
6	Circ to Reboiler	16	HP Steam to Ejector #2	27	CW from Inter Condenser
7	Circ from Reboiler	17	Condensate in Pri Cond	28	CW to After Condenser
8	Concentrate	18	Condensate from Inter Cond	29	CW from After Condenser
9	Vapor from Separator	19	Condensate from After Cond	30	Proc Cond to Mesh Spray
10	Vapor from Dist Col	20	Condensate from Pri Cond	31	Steam Cond to Receiver
		21	Condensate to Dist Col	32	Reflux

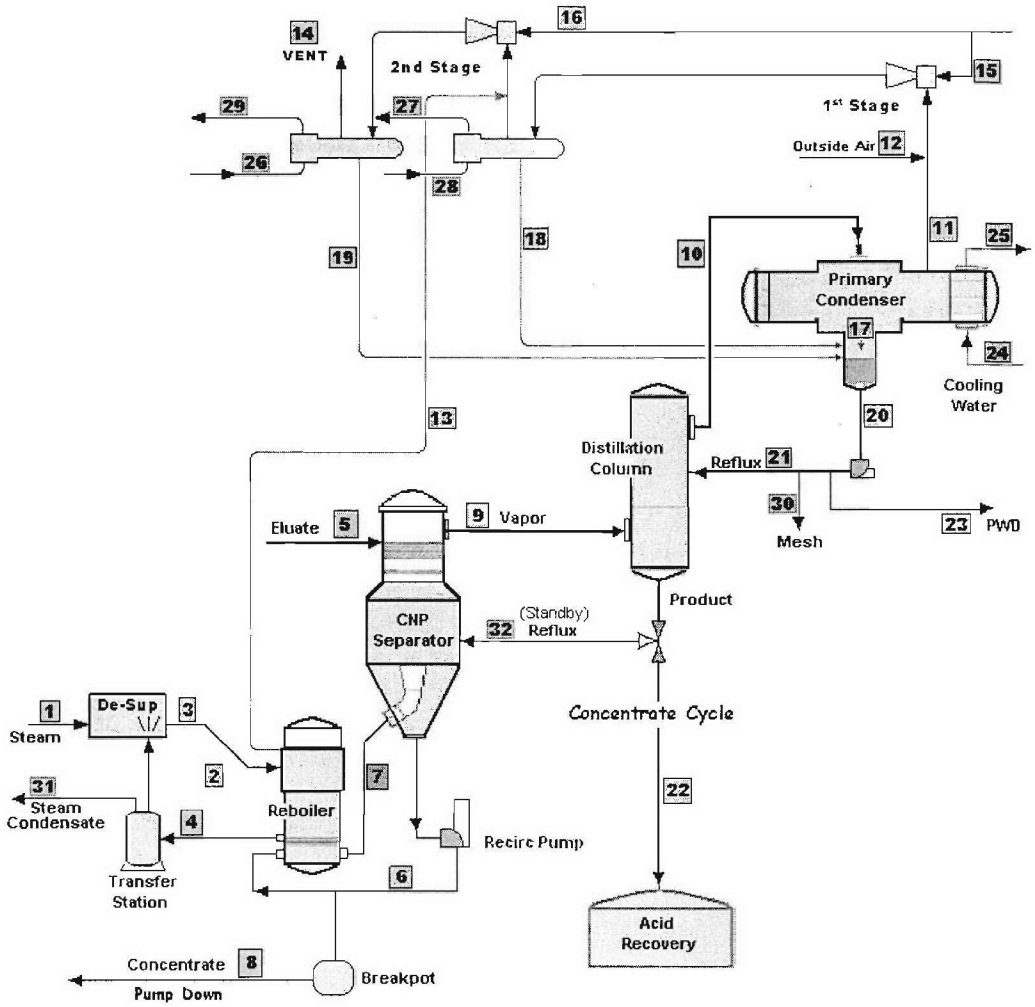

NOTE: Desuperheater, Transfer Station, Breakpot and Acid Recovery tank are not part of the global analysis, and they are SC – III.

Figure 1-2: HEP2 - Process Flow Diagram of CNP Evaporator System

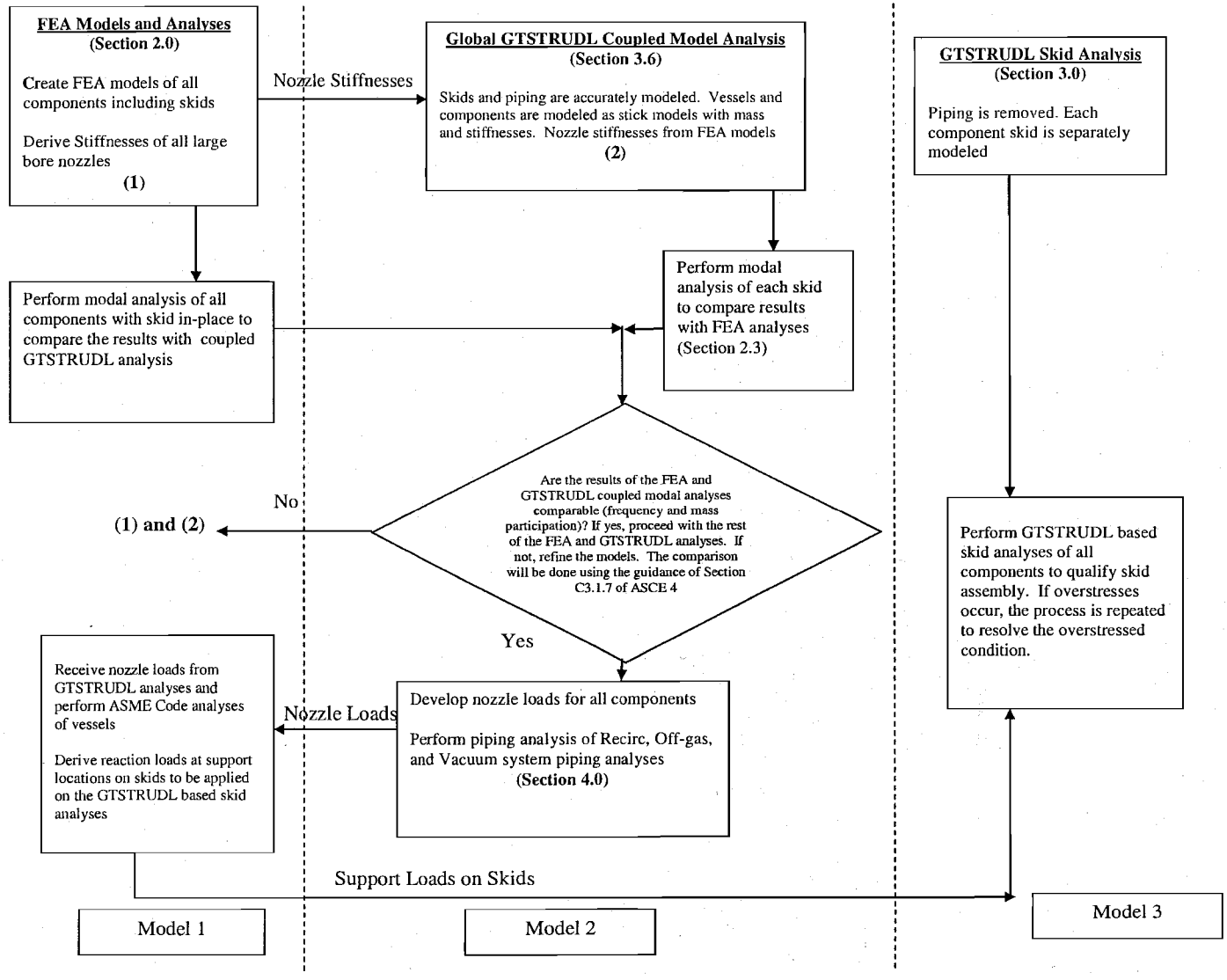

Figure 1-3: Structural Analysis Process Flow Diagram

2.0 VESSEL ANALYSIS METHODOLOGY

This report addresses the following items:

1. Incorporation of nozzle thermal loads as primary loads and nozzle piping transition region analysis per Paragraph 4-138 of Section VIII – Div. 2 of the ASME Code (Sections 2.1, 2.4 and 2.10)[2]

2. Seismic Analysis Methodology (Sections 2.2 and 2.3)

3. Comparison of 4-node shell element FEA stresses, 3D brick element FEA stresses, WRC107 [2] stresses at the nozzle to vessel attachments, and revised interpretation of FEA stresses using 4-node shell elements (Section 2.16 and detailed report is presented in Appendix A)

4. Incorporation of under-tolerance, mill tolerance, and corrosion allowances per UG-16(c) and (d) and UG-45 foot note 25 of the ASME Section VIII – Div. 1 Code; and also paragraph AF -105 of the ASME Section VIII- Div. 2 Code (Section 2.9). Note that references to fabrication requirements of ASME Section VIII- Div. 2 in this report are for information only.

5. Nozzle neck region analysis per UG45/UG22 of Section VIII – Div. 1 of the ASME Code (Section 2.10)

6. Stress combinations of different operating loads with seismic loads (Section 2.4)

7. Vessel thermal stresses due to differential ambient and vessel wall temperatures during operation (Section 2.5)

8. Pressure during normal operation and during the seismic event (Section 2.6)

9. Vessel Buckling due to external loads and negative (vacuum) operating pressure (Section 2.11)

10. Reaction Loads at Support Points (Section 2.3)

11. Thermal and Seismic Movements at Vessel Nozzles (Section 2.12)

12. Decoupling of Off-Gas piping from vessels per ASCE 4 [30] (Section 2.3)

13. Flow Induced Vibration in Heat Exchangers (Section 2.13)

14. Seismic loads on Bolted Flanged Connections (Section 2.14)

15. Use of Higher Allowable Stresses for 304 and 316 Stainless Steel Materials (Section 2.15)

16. Pressures and Temperatures for Design and Operating Conditions (Sections 2.7 and 2.8)

17. Handling Loads (Section 2.17)

[2] Section number in the parenthesis refers to the Section number in this report.

18. Sloshing effects in any partially filled vessel will be considered per the requirements of Section 3.5.4.5.4 of ASCE 4-98 [30].

It should be noted that all the HEP1 and HEP2 vessels will be (or have been) fabricated using the ASME Section VIII- Div. 1 requirements and they all will meet the design analysis requirements of Div. 1 performed by the vessel vendors. The welds between the vessel and vessel support lugs will be evaluated to ASME Section VIII requirements. The weld forces may be determined in accordance with Table 5 of Blodgett, "Design of Welded Structures" [39]. The additional analytical requirements resulting from Appendices 4 and 5 of ASME Section VIII- Div.2, and the Buyer specifications or Buyer request will also be incorporated in the HEP1 and HEP2 vessels. These analyses will not circumvent any existing or future Div. 1 analyses. This approach is consistent with paragraph U-2(g) of Div. 1.

2.1 Classification of Stresses

All analyses previously submitted to Buyer were based on the Buyer specification 24590-WTP-3PS-MV00-T0001 [4], which stipulated that the nozzle thermal loads be considered as secondary loads. During the review meetings that took place in early 2008, Buyer pointed out that the nozzle thermal loads should be treated as primary loads. Revision 3 of the Buyer specification is to be incorporated into the contract which deletes the section in question. Based on Paragraph 4-138 of ASME Section VIII – Div. 2, nozzle thermal loads (defined as the restrained free end displacement load of the attached pipe) in the nozzle reinforcement region are required to be considered as primary loads. As a result, nozzle to vessel shell attachment regions will be divided into the following different regions based on the classification of stresses presented in Table 4-120.1 of ASME Section VIII-Div. 2:

Table 2-1: Stress Evaluation of Nozzle Walls Within the Limits of the Reinforcement Region

Table 2-2: Stress Evaluation of Nozzle Walls Outside the Limits of the Reinforcement Region

Table 2-3: Stress Evaluation of Vessel Walls Within and Outside the Limits of the Nozzle Reinforcement Region

Stress classifications, allowable stresses, and the stress analysis methods for the nozzles, vessel reinforcement regions, and vessel walls are presented in Tables 2-1 through 2-3 in conjunction with Figure 2.1. The Region numbers referenced in Tables 2-1 through 2-3 are depicted in Figure 2-1.

2.2 Modal Response Spectrum Analysis

Paragraph 6.1.1 of Buyer Specification 24590-WTP-3PS-SS90-T0001 [19] provides guidance on dynamic analysis modeling. All FEA vessel models include the vessel and vessel internals with their appropriate mass. Therefore, no discrete masses and weightless springs are used in the FEA models. The following approach based on the Buyer specification will be used for the FEA modeling.

The modes are considered as significant, if the corresponding natural frequencies are less than the Zero Period Acceleration (ZPA) frequency, and the response calculated from these modes are greater than 10% of the total response obtained from the lower modes. This approach is acceptable provided at least 90% of the loading/inertia is contained in the modes used.

Paragraph 6.1.3 of Buyer Specification 24590-WTP-3PS-SS90-T0001 [19] provides guidance on combination of modal responses. Based on Section 3.2.7.1.1 (a) of ASCE 4 [30], the responses of the individual modes in each earthquake direction are combined using the Complete Quadratic Combination (CQC) method. The total seismic response is computed by combining the co-directional response from the two horizontal and the vertical analyses by the Square Root of the Sum of the Squares (SRSS) method.

The resultant seismic stresses will be combined with other stresses on a stress component basis as explained in Section 2.4. The seismic stresses will not be considered in the fatigue evaluation.

2.3 FEA Vessel Models and GTSTRUDL Piping Models

All ANSYS FEA vessel models are decoupled models and include only the vessel boundaries as identified in their ASME Section VIII-Div. 1 analysis. The recirculation loop piping connected to the vessels is not part of the FEA models, but the vessel internals are included in the ANSYS FEA models. The vessels are coupled with their support frames/skids in the ANSYS FEA models. Further clarification is provided in Section 5.0. The following is the approach Seller utilized and will continue to use in performing the seismic reanalysis effort for the vessels, their support frames/skids and the qualification of the recirculation piping:

1. Stiffnesses of the large bore nozzles are derived from the vessel ANSYS FEA models and then input to the GTSTRUDL coupled models which include the Recirculation Piping. The ANSYS FEA models, as stated earlier, do not contain the connected piping. Seller believes that the attached piping is more flexible than the vessels and if the piping was coupled to the vessels, the frequencies of the FEA model will further increase and this will produce lower accelerations since the existing frequencies are higher than the peaks of the amplified response spectra (ARS).

2. The GTSTRUDL coupled models contain the separators, reboilers, recirculation pumps, connecting recirculation piping, condensers/vacuum systems, rectifier (CNP only), respective vessel frames/skids, off-gas piping, steam line from the CNP desuperheater to the reboiler, and cooling water lines to the primary condensers . Seller will define in these coupled model analyses the mass and stiffness of each vessel stick model used. These models are used for development of input into recirculation piping analyses and development of nozzle loads for the ANSYS FEA vessel analyses.

3. Using the large bore piping nozzle loads from the GTSTRUDL coupled analyses along with other pressure, thermal, and seismic loads, ANSYS FEA vessel analyses are performed per the ASME Section VIII Div. 2 Code. In addition, based on these analyses, reaction loads at the vessels and pump support locations are developed. These reaction loads are then used in the frame analyses, as explained in the following step.

4. The frame structures of the GTSTRUDL coupled models are decoupled from the piping and vessels. The support loads derived from the ANSYS FEA vessel analyses are applied to analyze the frames per the AISC N690 Code. Seller will compare the support loads from both analyses for the TLP vessels to ensure that a gross discrepancy does not exist between the two analyses. In addition, the support loads from both GTSTRUDL and ANSYS analyses will be provided for Buyer to use in the verification of embedment plates, steel structural members and concrete floors or walls.

5. Seller will justify any governing base reaction differences greater than 10% between coupled analysis and ANSYS results.

6. Seller will, for each component type, determine the governing member(s) and perform comparisons of ANSYS and GTSRUDL results for all members whose GTSTRUDL interaction ratio (IR) exceeds (>) 75%

7. Seller will, for each component type, determine the governing member(s) and perform comparisons of ANSYS and GTSRUDL results for all welds whose interaction ratio (IR) exceeds (>) 90%

Further clarification and justification of the above analytical process and decoupling requirements of ASCE Std. 4 [30] are presented in Section 5.0.

2.4 Stress Combinations

The derivation of the maximum range of stress intensity (SI) between any two operating conditions is a requirement of Appendix 4 of Section VIII-Div. 2 Code. Paragraph 4-120 of the Div. 2 Code describes how the stress intensities (SI) are to be derived. Paragraphs 4-134 and 5-110.3 of the Div. 2 Code describe how the range of stress intensities between any two loadings is to be derived. Before the stress intensity is derived for a given load, all contributing stresses will be added on a component level.

Nozzle Load Combinations

Nozzle loads will be selected to maximize stresses in the nozzle reinforcement regions and vessel walls. The nozzle load directions will be either positive or negative and will be logically selected to maximize the stresses.

For Buyer-supplied nozzle loads, the deadweight, thermal and seismic loads will be treated as (+/-). However, for the Seller generated nozzle loads the signs of the deadweight and thermal loads will be taken into account and only the seismic loads will be treated as (+/-). If necessary, additional iterations may be performed for both sets of the above nozzle loads to ensure that the selected nozzle load directions are reasonable.

Seller will provide an appendix in each calculation documenting all nozzle load combinations evaluated and justification for selection of the nozzle load combination to be used in the qualification of the affected component.

DW + Pressure + Thermal Loads

The stresses due to these vector loads will be determined on the component level.

Summation of Component Stresses (Nozzle + DW + Pressure + Thermal)

All component stresses will be algebraically summed to determine principal stresses and stress intensity due to all vector loads.

Seismic Loads

Using the seismic spatial summation method SUMTYP, COMP, CQC Modal Combinations for X, Y, and Z spectrums will be used to derive and combine total component seismic stresses (SX through SZX) to determine seismic principal stresses S1, S2 and S3, and stress intensity SINT.

Final Load Combination

Principal stresses from the component/vector and seismic load combinations will be algebraically summed by using the ANSYS command "SUMTYP, PRIN" as shown in Figure 2-2.

2.5 Ambient and Vessel Wall Temperatures

General

In the current vessel analysis methodology, the principal focus is to use the combination of normal operating pressure and temperature conditions that produce the maximum range of stress intensity. Seller will conservatively select a set of temperature boundary conditions (vessel, ambient, and reference temperatures) that is likely to occur in combination with the dead weight + pressure + nozzle loads to produce the maximum range of stress intensity. In all future analyses, specific attention will be paid to address the minimum and maximum ambient and vessel wall temperatures, and what should be considered as the zero state (reference) temperature from which the minimum and maximum temperature differences will be measured.

The following temperatures will be considered in evaluating the maximum range of stress intensity due to primary + secondary stresses:

- The minimum design metal temperature (MDMT): This temperature will not be considered in any of the analyses. It is Seller's position that the MDMT is to be considered only for the impact testing of the materials, if required.
- Ambient Temperatures: These temperature values for normal operating and accident conditions were provided by Buyer and are presented in Table 2-4. The vessel support skids will be assumed to be at the ambient temperature for the evaluation of differential thermal stresses between the vessels and support skids. The accident condition ambient temperatures will not be considered with the seismic stresses for the range of stress intensity evaluation. However, all ambient temperatures will be considered for the derivation of range of stress intensities between different operating and accident conditions per 4-134 and 5-110.3 of Section VIII- Div. 2 Code.
- Vessel Wall Temperatures: These temperature values, maximum and minimum, will be retrieved from the Equipment Design Condition Documents, [10] and [11]. They will be considered for evaluation of differential thermal expansion stresses between the vessels and skids.
- Reference Temperature: 70°F will be used as the temperature from which the differential thermal stresses (expansion or contraction) will be evaluated.

Thermal Gradient Stresses in HEP1 and HEP2 Vessels

Based on the system descriptions presented in Buyer Documents 24590-PTF-3PS-MEVV-T0001 for HEP1 and 24590-PTF-3PS-MEVV-T0002 for HEP2 there are no specified time dependent thermal transients. Unlike the design of many components of nuclear steam supply systems, there are no fast cooldown or heat up or cold feed water injection transients associated with the HEP1 and HEP2 components. As a result, thermal gradient stresses in the vessel walls would be very small or negligible.

The fatigue assessment reports (References 12 and 13) were prepared for the exclusion of detailed fatigue analyses and to address the thermal stresses, fluctuations and fluctuation frequencies through the component wall being evaluated. Based on the conclusions from References 12 and 13, it is justifiable to exclude the through-wall thermal gradient stresses in the ASME Section VIII – Div. 2 analyses of the vessels. However, differential thermal stresses due to the temperature differences between the different compartments in a vessel or the temperature difference between the vessel, frame and ambient temperatures will be considered in the analyses.

To summarize, Seller will conservatively use the worst combination of events and temperatures to reduce the analytical efforts. Seller will use the latest data sheets as design input to the revised analyses. The ambient and vessel wall temperatures will be conservatively selected based on sound engineering judgment that will be justified in each report. A table similar to Table 2-7 will be included in each report that will define all necessary temperature data and load combinations. If this approach proves overly conservative, then the event-specific temperatures will be used for differential thermal stress analysis. It should be noted that the temperature discussions above are not relevant to the primary stress evaluation of Section 2.1.

2.6 Pressures During Normal Operation and Seismic Event

Buyer Specification 24590-WTP-3PS-MV00-T0002 [8], Seismic Qualification Criteria for Pressure Vessels, Section 6.1 states that "The seller is responsible for the analysis of the vessels according to the assigned seismic category. The analysis shall include dynamic loading resulting from seismic excitation while the vessel is operating under normal operating conditions". The normal operating pressure will be modified to account for static column heads of the process liquor in the separator vessels, reboilers and recirculation pumps for different operating conditions. The maximum operating vessel pressure during the seismic event will be increased by +15% or 2 psig (whichever is more conservative) and will be incorporated in all future analyses.

Table 2-10 presents elevations of the components and specific gravity of the process liquor for all three systems. Data presented in Table 2-10 will be used for the static head evaluation at the recirculation pumps and reboilers. It is noted that the static head in most cases could negate the vacuum condition in the recirculation pumps and reboilers. All analyses revisions will conservatively consider the static column heads of the process liquor.

2.7 Design Conditions

All design pressure and design temperature conditions specified in the HEP1 and HEP2 Equipment Design Conditions documents 51-5031985 [10] and 51-5063365 [11] will be considered for the primary stress allowable limits specified in Paragraphs 4-131, 4-132, 4-133 and 4-138 of the ASME Code Section VIII – Div. 2. In all analyses, wherever applicable, conservative combinations of design pressures and temperatures will be used. The same approach will be used in any future analyses revisions. The current maximum and minimum design pressure and temperature conditions for the HEP1 and HEP2 vessels are listed in Tables 2- 5 and 2- 6.

Design conditions include all specified mechanical loads that produce primary stresses. Also note that the ASME Code Section VIII-Div. 2 does not have separate allowable stresses for Level B (upset conditions), Level C (emergency condition), and Level D (Faulted condition) loads. Wherever seismic stresses are combined with other stresses, the primary stress allowables will be increased per Paragraph AD-140 and Table AD-150.1 of Section VIII- Div. 2.

2.8 Operating Conditions

Various operating conditions listed in HEP1 and HEP2 Equipment Design Conditions documents 51-5031985 [10] and 51-5063365 [11] will be considered for the primary + secondary range of stress intensity and primary + secondary + peak stress intensity allowables specified in Paragraphs 4-134 and 4-135 of the ASME Code Section VIII – Div. 2. In all existing analyses, wherever applicable, conservative combinations of operating pressures and temperatures were selected for efficiency in the analytical efforts. The same approach will be used in any future analyses revisions. The maximum and minimum operating pressure and temperature conditions for the HEP1 and HEP2 vessels are listed in Tables 2-5 and 2- 6. If this approach proves overly conservative, then each applicable operating condition may be analyzed separately.

Operational pressures, whenever used in seismic analysis, will be increased by 15% or 2 psig, whichever is more conservative. The effect of corrosion on the mass of components will be evaluated and defined in each analysis.

2.9 Incorporation of Under-Tolerances and Mill Tolerances

Seller has reviewed UG-16 (c) (d) and UG-45 of Section VIII-Div.1 [1] (also AD-602 and AF-105 of Section VIII- Div. 2) for under-tolerance requirements. The shell and large nozzle material for all vessels are (or will be) purchased per SA-240 or SA-312 of ASME Section II [7]. By reference, these material specifications include supplemental specifications SA-480 and SA-540 for dimensional and thickness requirements.
Note that references to fabrication requirements of ASME Section VIII- Div. 2 in this report are for information only.

Mill Under-Tolerance

A review of SA-480 and SA-540 reveals that plates specific to the subject projects (0.25" to 1.75" wall thickness) could be as much as 0.010 inch thinner than the nominal thickness and still would be acceptable per QA inspection. Paragraph UG -16 (c) of the ASME Section VIII-Div. 1 Code specifies "vessels made of plate furnished with an under-tolerance of not more than the smaller value of 0.010 inch or 6% of the ordered thickness may be used at the full design pressure for the thickness ordered." Based on Table A2.17 of SA-480 (required by SA-240), the tolerance under the specified thickness is 0.010 inch for all the plates of interest specific to HEP1 and HEP2 projects. All the plate materials are planned to be purchased, or have been purchased, using the standard mill tolerance of SA-480. Therefore, the incorporation of mill tolerances in any of the HEP1 and HEP2 projects analyses is not a requirement. However, if nozzles are fabricated from plate materials, Seller will use the 0.010 inch under tolerance for the nozzle neck minimum thickness analysis for pressure stress considerations, as implied in Paragraph AD-602 of Div. 2.

Table 2-8 presents a longitudinal stress calculation for a 24 inch diameter nozzle neck fabricated from plate material. In this example, similar to the COMPRESS Code, the pressure stress term includes both of the tolerances (0.010 inch mill tolerance plus the 0.040 inch corrosion allowance). However, note that the nozzle load axial stress term incorporates only the corrosion allowance.

In summary, plate material mill tolerance of 0.010 inch will be incorporated for pressure stress consideration in the minimum wall thickness analysis only when nozzles are fabricated from plate materials. In addition, the mill tolerances of 0.01 inch along with 0.04 inch corrosion allowance will be incorporated in the Div. 2 analysis.

Pipe Under-Tolerance

In the case where nozzles are fabricated from pipes, UG -16(d) states that the analysis thickness should incorporate the entire pipe under-tolerance. Paragraph UG-45 of Section VIII-Div. 1 (also AD-602 of Div. 2) requires a 12.5% under tolerance to be incorporated as part of the minimum thickness requirements for nozzle necks. Both Codes thus require under-tolerances to be incorporated in the nozzle sizing analyses for design loads. However, there are no similar requirements for under-tolerances to be taken into consideration for Div. 2 detailed analyses for operating conditions if the pipe materials are purchased to ASME Section II Code.
Based on the above discussion, Table 2-9 presents a longitudinal stress calculation for a 4 inch diameter nozzle fabricated from Sch. 80 pipe. In this example, similar to the COMPRESS Code analysis, the pressure stress term includes both tolerances (12.5% under tolerance and 0.040 inch corrosion allowance), and the nozzle load axial stress term incorporates only the corrosion allowance.

In summary, pipe tolerance of 12.5% will be incorporated for pressure stress consideration in the minimum wall thickness analysis when nozzles are fabricated from piping materials. Pipe tolerances will not need to be incorporated in any other Div. 1 or Div. 2 nozzle or vessel analysis for operating conditions.

Minimum Nozzle Neck Thickness Requirement

If nozzles are fabricated from piping materials, Seller will document that after incorporating the mill tolerances requirements for the piping materials in the minimum wall thickness evaluation, the remaining thickness of the piping meet the requirements of UG-45(b)(4) of ASME Section VIII-Div. 1 in corroded conditions. (Note that this is an ASME Section VIII - Div. 1 requirement that will be satisfied by vessel fabricators. However, Seller will include this documentation in Div. 2 analyses.)

2.10 Nozzle Neck Thickness Calculation for Reinforcement Region

Seller will analyze nozzles per UG-45/UG-22 of Div. 1 Code even though this is a part of the ASME Section VIII- Div.1 analyses generally performed by the vessel fabricators. The axial stresses due to DW + Thermal + Pressure + Seismic loads will be combined and the total stress will be compared against 1.2 x S per UG-23 (c) and 1.0 x S without seismic loads. The mill tolerance, pipe under-tolerance, and corrosion allowance will be incorporated as discussed in Section 2.9 and illustrated in Tables 2-8 and 2-9.

Table 2-8 illustrates a nozzle neck analysis where the nozzle is fabricated from plate material. A 0.01 inch under-tolerance along with 0.04 inch corrosion allowance is used for the pressure stress evaluation, and 0.04 inch corrosion allowance is used for the axial stress due to pipe loads.

Table 2-9 illustrates the nozzle neck analysis where the nozzle is fabricated from pipe material. A 12.5% mill-tolerance along with 0.04 inch corrosion allowance is used for the pressure stress evaluation, and 0.04 inch corrosion allowance is used for the pipe load axial stress. Note that the nozzle neck thickness example presented in Table 2-9 is in agreement with the Buyer provided example (N13 separator nozzle) that was generated using the COMPRESS Code.

As mentioned earlier in Section 2.9, Seller will apply the mill tolerances for nozzles made from plate along with the corrosion allowance in the proposed FEA models of the vessel nozzles.

2.11 Vessel Buckling

ASME Section VIII- Div. 1 analysis addresses vessel wall buckling due to external pressure. This is already addressed or will be addressed by vessel vendors in their vessel analysis using Codes similar to COMPRESS. The main objective of the nozzle reinforcements is to prevent buckling due to external nozzle loads in vessel walls. All nozzles meet Section VIII-Div. 1 Code and therefore, are sufficiently reinforced for HEP1 and HEP2 vessels. Seller will also address standard buckling due to external pressure on the piping within Seller scope using the methods of Section VIII Div. 1 or other appropriate means.

In addition, Seller will use FEA based axial compressive stresses (SZ component) to evaluate buckling in HEP1 and HEP2 vessels. Therefore, the buckling issue will be adequately addressed in Div. 1 and Div. 2 analyses. Please refer to Paragraph 5.4.1.2 of the ASME Publication, Guidebook for the Design of Section VIII Pressure Vessels. All the nozzle reinforcements are designed for 50 psi internal pressure. Therefore, they all conservatively meet the buckling and stability requirements for a maximum vacuum pressure of 14.7 psia.

2.12 Thermal and Seismic Anchor Movements at Vessel Nozzles

Seller will retrieve thermal movements at the vessel shell/nozzle interface for normal operating conditions at all nozzle locations and will provide these movements with appropriate orientations in all vessel reports. Similarly, vessel seismic inertia movements at all nozzles will be included in all the reports. These data will be based on the FEA analyses of the vessels. Seismic anchor movements (SAMs) and thermal anchor movements (TAMs) will be tabulated in each analysis. All movements will be provided using the FEA global coordinate system.

2.13 Flow Induced Vibration in Heat Exchangers

The HEP1 and HEP2 vessels that contain tube bundles, such as primary condensers, vacuum system condensers and reboilers, will be analyzed to examine the susceptibility of the tube bundles to flow induced vibrations. The evaluations will be based on the guidelines provided in the TEMA Standard [32] and will be performed by Seller or its vessel fabricators.

2.14 Seismic Loads on Bolted Flange Connections

The bolted vessel connections will be designed by the vessel fabricators using Appendix 2 of Section VIII- Div.1. The design loads considered are the internal design pressure and gasket seating loads based on the gasket material. Seismic loads are not part of the basic design of the bolted flange connection. This is also applicable for bolted flange connection design per Appendix 3 of Section VIII-Div. 2 Code.
In the HEP1 and HEP2 separator vessels and other vessels, the bolted connections are generally away from the vessel support locations where the seismic loads are significant. Based on the results from the existing FEA analyses, the seismic loads on the bolted connections are not significant and will have no effect in the vendor analyses per Section VIII – Div. 1.

2.15 Use of Higher Allowable Stresses for 304 and 316 Stainless Steel Materials

The majority of the vessels on Hanford Evaporator Projects are fabricated from either 304 or 316 stainless steel plate (SA240) or seamless pipe (SA312) materials.

ASME Code Section II – Part D, presents two different sets of allowable stresses for the same material; however, each set of allowables has different applicable notes. Based on a review of the notes in Table 1A of Section II – Part D, Note G5 is the only applicable note for the Hanford Projects which alerts the user with regard to the low yield strength of these stainless materials, and a possibility of slight permanent deformation. The rest of the notes in Table 1A are either applicable for elevated temperature applications and/or for welded pipes, but they are not applicable to HEP vessels.

Seller will use the following guidelines for the use of higher allowables for stainless steel materials.
Use higher allowable stresses except for the regions at or near the bolted or flanged connections.
The region where higher allowable stresses could be used must be away from the nearest edge of any bolted or flanged connection by a distance greater than $2.5\sqrt{Rt}$ as described in Paragraph AD-510 of Section VIII – Div. 2.
SA182 stainless steel forging materials, Grades 304 or 316, may not be used with higher allowable stresses.

2.16 Parametric Study: 4-Node Shell Elements FEA and 3D Brick Elements FEA

This Section presents the summary and conclusions of the parametric study provided in Appendix A. All HEP1 and HEP2 vessel FEA models are planned to be analyzed using the 4-node shell elements. Consequently, a nozzle to vessel intersection is simply the intersection of two cylinders (without fillet welds) at the vessel/nozzle shell mid-planes. Buyer has requested Seller to demonstrate how the shell element stresses will be used for deriving membrane, bending, and peak stresses required in Table 4-120.1 and Paragraph 4-138 of Section VIII-Div. 2 Code. In order to address the above issues and also to better understand the modeling differences between the 4-node shell elements and 3D brick elements, Seller has performed numerous additional analyses using 3D brick elements and performed a detailed parametric study which is documented in Appendix A. These analyses are localized models of vessel/nozzle intersections using different sizes of nozzles and vessels. Weld fillets modeled in the 3D brick element FEA models are based on the requirements of UW-16 of ASME Section VIII – Div. 1 Code. In the case of the 4-node shell element FEA models, nozzle to vessel connections were modeled as the intersection of two cylinders without fillet welds. The parametric study addresses the following items.

- How do the 4-node shell element nozzle and vessel stresses compare with the local membrane stresses (P_L) using 3D brick element FEA models at the nozzle to vessel interface?
- How do the 4-node shell element stresses compare with the linearized surface stresses ($P_L + P_b + Q$) using 3D brick element FEA models?
- How do the 4-node shell element stresses compare with the total peak surface stresses ($P_L + P_b + Q + F$) using 3D brick element FEA models?

Summary:

1. In the majority of cases, the FEA shell model surface stress intensities ($P_L + P_b + Q$) are conservative approximations of the linearized (primary + secondary) surface SI. Please note that the shell models only produce mid-plane membrane and linearized SI at the bottom and top surfaces.
2. Based on the study of the numerous FEA models using 4-node shell elements and 8-node brick elements, stress concentration factors (SCFs) were derived for the vessel shell and nozzle stresses. These SCFs can be applied to the 4-node shell element stresses to derive the peak SI ($P_L + P_b + Q + F$). Since the factors are applied to stress intensities instead of at the stress component level, these factors are identified as stress multipliers (SM). It was found that these SMs are dependent on the ratio of the vessel shell to nozzle shell thicknesses.
3. In most of the cases presented in Appendix A, the local membrane stress intensities (P_L or $P_L + P_b$) have been generally well within acceptable limits. Therefore, it was not necessary to make comparisons of shell element membrane stresses with the brick element membrane stresses.
4. FEA model element size will be determined and validated in the following manner:

   a) As discussed in the Parametric Study in Appendix A of this document, the element size at the nozzle/vessel intersections will depend on the vessel wall thickness. Element lengths along the nozzle axis in the vicinity of the nozzle/vessel intersections will be half (½) the vessel wall thickness. The aspect ratio of the elements at the vessel/nozzle intersections will be maintained to approximately lower than four.
   b) If the size and shape of the elements are not adequate, the ANSYS software automatically provides warnings and/or error messages which are regularly reviewed and addressed as appropriate.
   c) The error percentages in the stress results are reviewed and generally have been kept below 10%.

Conclusion:

The detailed parametric study has yielded several useful results that will be applied to improve the previous finite element analyses. The results from the shell element based analyses can now be used with a high level of confidence similar to that using analyses based on 3D brick elements. The methodology and results developed in this study will be documented in an Seller calculation.

Note, Seller will convert the parametric study (Appendix A) into a formal calculation such that it can be referenced in all applicable analyses. In addition, all software used on this project is controlled via the Seller Software QA procedures. The 3D brick element verification will be document in the ANSYS V&V report. This V&V report will be referenced in the calculations as applicable.

2.17 Handling Loads

A dynamic load factor of 1.5 times the maximum expected load will be applied at all lift points. The allowable design stress shall equal the applicable code allowable design stress at ambient temperature [Section 9.1 of Reference 37].

(Note that lifting and handling load design analysis of all the lugs, trunnions and vessels are (or will be) performed by the vessel fabricators per the ASME Code Section VIII-Div. 1 requirements.)

2.18 Internal Supports/Piping

Where applicable and as a method to demonstrate compliance with the ASME Code Section VIII Div 1, Seller will use AISC N690 as a guide for analysis of vessel internal supports and ASME B31.3 as a guide for analysis of vessel internal piping.

2.19 Fatigue Analysis Requirement

A fatigue analysis of these vessels is not required provided the peak stress intensity requirements of 97 and 106 ksi for HEP1 and HEP2 systems respectively, as documented in References 12 and 13, are met. In cases where the stress intensity criterion is not met, Seller and Buyer will coordinate any additional analysis requirements.

Table 2-1: Stress Evaluation of Nozzle Walls Within the Limits of the Reinforcement Region [Paragraph 4-138(b) of ASME Section VIII – Div. 2]

Region No.***	Origin of Stress	Type of Stress	Classification	Allowable	Method
1	Pressure + All Nozzle Loads + All Nozzle Moments [All loads including nozzle thermal loads and all moments but w/o discontinuity and w/o vessel thermal loads (temperature effects)]	General Membrane (Due to Pressure and Nozzle Loads and Moments) (Note: Nozzle bending load is classified as membrane load in the nozzle reinforcement)	P_m	S (Note 2)	Hand Calculation/FEA mid surface
2	Pressure + All Nozzle Loads + All Nozzle Moments + Discontinuity Effects (All Loads in No. 1 above which includes primary bending stress + Discontinuity, but without vessel thermal loads)	Local Membrane (Due to Pressure and Nozzle Loads and Moments + Discontinuity Effects) (Bending stress across full section of the nozzle is included)	$P_L + P_b^*$	1.5 x S (Note 2)	FEA – Mid surface stresses in the nozzle at gross discontinuity + bending stress in nozzle full section (Note 1)
3A	Pressure + All Nozzle Loads + All Nozzle Moments + Gross Discontinuity + Vessel Thermal Loads [All Loads in No. 2 above + include vessel thermal loads excluding local discontinuity (SCF)]	Range of Primary + Secondary Stress Intensity (Membrane + Bending linearized surface stress intensity at gross discontinuity)	$P_L + P_b^* + Q$	3 x S	FEA – Top/bottom surface stresses in the nozzle at gross discontinuity (Note 1)
3B	Same as Loads as in Region No. 3A including local discontinuity effects (SCF); but remove all pressure** and seismic loads	Primary + Secondary + Peak (Linear + Peak)	$P_L + P_b^* + Q + F$	Sa (Note 3)	FEA – Top/bottom surface stresses in the nozzle factored by stress multipliers (SM) (Note 1)

NOTE 1: The elements within the vessel wall that are connected to vessel shell will be removed before post processing the FEA results. Refer to Appendix A which summarizes the FEA parametric study performed by Seller
NOTE 2: Based on Table AD-150.1, where seismic loads are included, the allowable stresses are 1.2 x design allowable stresses
NOTE 3: For the HEP-1 vessels the total peak stress intensity limit is 97 ksi [12] and for the HEP-2 vessels it is 106 ksi [13]
* P_b stresses per Table 4-120.1 as applicable
** Based on Ref. 12 and 13 Fatigue Assessment Reports, the pressure loads are excluded per AD-160.2 (f) Condition B of Section VIII-Div. 2 Code
*** Refer to Figure 2-1 for vessel/nozzle regions and stress classifications.

DRAFT

Table 2-2: Stress Evaluation of Nozzle Walls Outside the Limits of the Reinforcement Region [Paragraph 4-138(c) of ASME Section VIII – Div. 2]

Region No.***	Origin of Stress	Type of Stress	Classification	Allowable	Method
4	Pressure + Nozzle (Axial + Shear +Torsion) Loads (Includes nozzle loads, but w/o nozzle bending moments and nozzle thermal loads. Vessel thermal stresses are also excluded)	General Membrane Due to Pressure + Primary Nozzle Loads	P_m	S (Note 2)	Hand Calculation/FEA mid surface
5	Pressure + Nozzle (Axial + Shear +Torsion) Loads + All primary nozzle bending moments other than nozzle thermal loads (All loads in No. 4 above + all primary bending moments)	Local Membrane Due to Pressure + Primary Nozzle Loads and Primary Moments near gross discontinuity (Bending stress across full section of the nozzle is included)	$P_L + P_b^*$	1.5 x S (Note 2)	Hand Calculation/FEA – Mid surface stresses in the nozzle near gross discontinuity + bending stress in nozzle full section (Note 1)
6A	Pressure + All nozzle loads and all nozzle moments + Gross Discontinuity Effects + Vessel thermal loads (excluding local discontinuity effects)	Range of Primary + Secondary Stress Intensity (Membrane + Bending linearized surface stress intensity near gross discontinuity)	$P_L + P_b^* + Q$	3 x S	FEA – Top/bottom surface stresses in the nozzle near gross discontinuity (Note 1)
6B	Same loads as in Region 6A above including local discontinuity effects (SCF), but remove all seismic and pressure** loads	Primary + Secondary + Peak (Linear + Peak)	$P_L + P_b^* + Q + F$	Sa (Note 3)	FEA – Top/bottom maximum surface stresses in the nozzle multiplied by SMs (Note 1)

NOTE 1: One row of elements beyond those removed for Table 2-1 will be removed before post processing the FEA results. If this approach proves overly conservative, then the elements removed will be based on the actual distance of the reinforcement region. Refer to Appendix A which summarizes the FEA parametric study performed by Seller.
NOTE 2: Based on Table AD-150.1 [1], where seismic loads are included, the allowable stresses are 1.2 x design allowable stresses.
NOTE 3: For HEP-1 vessels the total peak stress intensity limit is 97 ksi [12] and for the HEP-2 vessels it is 106 ksi [13].
* P_b stresses per Table 4-120.1 as applicable
** Based on Ref. 12 and 13 fatigue assessment reports, the pressure loads are excluded per AD-160.2 (f) Condition B of Section VIII-Div. 2 Code
*** Refer to Figure 2-1 for vessel/nozzle regions and stress classifications

DRAFT

Table 2-3: Stress Evaluation of Vessel Walls Within and Outside the Limits of the Nozzle Reinforcement Region [Table 4-120 of Appendix A of ASME Section VIII – Div. 2]

Region No.***	Location	Origin of Stress	Type of Stress	Classification	Allowable	Method
7	Vessel and head shell regions remote from discontinuity	Pressure + All Nozzle Loads + All Nozzle Moments [All nozzle loads and moments but w/o vessel thermal loads (temperature effects)]	General Membrane	P_m (Note 1)	S	FEA – Mid surface stresses in the vessel wall remote from gross and local discontinuity
8	Shell Junctions with heads, flanges, and conicals & Nozzle reinforcements	Pressure + All Nozzle Loads + All Nozzle Moments + Gross Discontinuity Effects [All nozzle loads and moments but w/o vessel thermal loads (temperature effects)]	Local Membrane (Membrane + Bending)	P_L (Note 1)	1.5 x S	FEA – Mid surface stresses in the vessel wall near gross discontinuity after removing the nozzle during post processing
9A	Shell Junctions with heads, flanges, and conicals & Nozzle reinforcements	Pressure + All Nozzle Loads + All Nozzle Moments + Vessel Thermal Loads + Discontinuity Effects (All Loads in No. 4 above + include discontinuity and vessel thermal loads)	Range of Primary + Secondary Stress Intensity (Membrane + Bending linearized surface stress intensity)	$P_L + P_b^* + Q$ (Linearized Surface Stresses)	3 x S	FEA – Vessel maximum Top/bottom surface SI (near gross discontinuity) after removing nozzles during post processing
9B	Shell Junctions with heads, flanges, and conicals & Nozzle reinforcements	Same loads as above in Region No. 9A including local discontinuity effects (SCF); but remove all pressure** and seismic loads	Primary + Secondary + Peak (Linear + Peak)	$P_L + P_b^* + Q + F$	Sa (Note 2)	FEA – Vessel Top/bottom maximum surface SI multiplied by a SMs after removing the nozzle during post processing (Note 3)

NOTE 1: Based on Table AD-150.1 [1], where seismic loads are included, the allowable stresses are 1.2 x design allowable stresses.
NOTE 2: For HEP-1 vessels the total peak stress intensity limit is 97 ksi [12] and for the HEP-2 vessels it is 106 ksi [13].
NOTE 3: If this approach proves over conservative, use the results of the parametric study to derive peak stresses.
* P_b stresses per Table 4-120.1 as applicable
** Based on Ref. 12 and 13 fatigue assessment reports, the pressure loads are excluded per AD-160.2 (f) Condition B of Section VIII-Div. 2 Code
*** Refer to Figure 2-1 for vessel/nozzle regions and stress classifications

Table 2-4: Normal and Abnormal Conditions Ambient Temperatures

No.	Equipment	Room No.	Normal Operating Temperature (To)		Abnormal Condition Temperature (Ta)	
			Low	High	Low	High
			Degree F	Degree F	Degree F	Degree F
1	FEP Sep Vessels, FEP Off-Gas Piping, FEP Recirc Piping	P-0106	59	128	40	138
2	CNP Sep Vessel, CNP Off-Gas Piping, CNP Recirc Piping	P-0112	59	118	40	144*
3	TLP Sep Vessels, TLP Off-Gas Piping, TLP Recirc Piping	P-0117	59	133	40	144*
4	FEP/TLP/CNP Reboilers, Recirc Pumps, and Recirc Piping	P-0123	59	131	40	148*
5	FEP Condenser Skid	P-0304	59	117	40	131*
6	CNP Distillation Column, CNP Offgas Piping	P-0320	59	125*	40	130*
7	TLP Condenser Skid, TLP Offgas Piping	P-0325	59	126*	40	128*
8	CNP Condenser Skid, CNP Offgas Piping	P-0430	59	115	40	125*

NOTE: The temperature data is the latest at the time of issue of this document. Seller shall use the updated data provided individual MDS in section 2 of the MR. Seller is advised that the values for Normal Operating Temperature (To) listed in the Table 2-4 are actually corresponding to the Abnormal Temperature values provided in the individual MDS from section 2 of the MR. The values for Abnormal Condition Temperature (Ta) listed in the Table 2-4 are actually corresponding to the Design Basis Event temperature values provided in the individual MDS from section 2 of the MR. The Abnormal Condition Temperatures (Ta) listed in Table 2-4 will not be used with seismic loads.

* Previous approved temperature values in MDS are used for conservatism to prevent reiteration in calculation.

TABLE 2-5: HEP-1 Vessels Design and Operating Conditions

Equipment Name	Location	Pressure				Temperature - °F			
		Maximum Design	Minimum Design	Max Operating	Normal Operating	Maximum Design	Minimum Design	Max Operating	Normal Operating
FEP – A/B Reboiler	Shell Side	50 psig	Full Vacuum	0 psig	14.4 psia/ 1.6 psia	275 °F	49 °F	250 °F	220.8 °F/ 118.2 °F
FEP – A/B Reboiler	Tube Side	50 psig	Full Vacuum	0 psig	1.3 psia	175 °F	49 °F	150 °F	120.7 °F/ 110.6 °F
FEP – A/B Separator	N/A	50 psig	Full Vacuum	0 psig	1.11 psia	175 °F	49 °F	150 F°	120.7 °F/ 105.1 °F
FEP- A/B Primary Condenser	Shell Side	50 psig	Full Vacuum	0 psig	0.93/1.11 psia	175 °F	49 °F	150 °F	105.1 °F/ 99.4 °F
FEP Primary Condenser	Tube Side	100 psig	Full Vacuum	45 psig	22.4/45 psig	175 °F	49 °F	150 °F	93 °F/ 75°F
TLP Reboiler	Shell Side	50 psig	Full Vacuum	16.9 psia	16.9 psia/ 1.6 psia	275 °F	49 °F	250 °F	229 °F/ 118 °F
TLP Reboiler	Tube Side	50 psig	Full Vacuum	0 psig	1.3 psia	175 °F	49 °F	150 °F	126.6 °F/ 110.6 °F
TLP Separator	N/A	50 psig	Full Vacuum	0 psig	1.11 psia	175 °F	49 °F	150 °F	126.6 °F/ 105.1 °F
TLP Primary Condenser	Shell Side	50 psig	Full Vacuum	0 psig	0.93/1.11 psia	175 °F	49 °F	150 °F	105.1 °F/ 99.3 °F
TLP Primary Condenser	Tube Side	100 psig	Full Vacuum	45 psig	22.4/45 psig	175 °F	49 °F	150 °F	92.9 °F/ 75 °F

NOTE: The vacuum system parameters for TLP and FEP systems are presented in Table 2-6, these data in the following Table are from Reference 10

Table 2-6: HEP- 2 Vessels Design and Operating Conditions

NOTE: These data in the following Table are from References 10 and 11

Equipment Name	Location	Pressure				Temperature			
		Maximum Design	Minimum Design	Max Operating[3]	Normal Operating	Maximum Design	Minimum Design	Max Operating	Normal Operating
CNP Reboiler	Shell Side	50 psig	Full Vacuum	0 psig	13.04 psia/ 3.55 psia	275 ^{0}F	40 ^{0}F	250 ^{0}F	206 ^{0}F/ 148 ^{0}F
CNP Reboiler	Tube Side	50 psig	Full Vacuum	0 psig	1.45 psia	230 ^{0}F	40 ^{0}F	150 ^{0}F	134.7 ^{0}F/ 130 ^{0}F
CNP Separator	N/A	50 psig	Full Vacuum	0 psig	1.38 psia	230 ^{0}F	40 ^{0}F	150 ^{0}F	134.7 ^{0}F/ 112.6 ^{0}F
CNP Distillation Column	N/A	50 psig	Full Vacuum	0 psig	1.08 psia/ 1.38 psia	230 ^{0}F	40 ^{0}F	150 ^{0}F	112.6 ^{0}F/ 94.4 ^{0}F
CNP Primary Condenser	Shell Side	50 psig	Full Vacuum	0 psig	1.11 psia/ 0.99 psia	240 ^{0}F	40 ^{0}F	150 ^{0}F	105.2 ^{0}F/ 94. ^{0}F
CNP Primary Condenser	Tube Side	100 psig	Full Vacuum	45 psig	34.6/45 psig	240 ^{0}F	40 ^{0}F	150 ^{0}F	93 ^{0}F/ 75^0 F
TLP/FEP/CNP Inter Condenser*	Shell Side	50 psig	Full Vacuum	0 psig	3.7/3.9 psia	378 ^{0}F	40 ^{0}F	226 ^{0}F	Inlet 226 ^{0}F, Outlet 90 ^{0}F
TLP/FEP/CNP Inter Condenser*	Tube Side	100 psig	Full Vacuum	45 psig	43.8/45 psig	150 ^{0}F	40 ^{0}F	101 ^{0}F	Inlet 75 ^{0}F, Outlet 88.4 ^{0}F
TLP/FEP/CNP After Condenser*	Shell Side	50 psig	Full Vacuum	15.7 psia	15.2/15.7 psia	378 ^{0}F	40 ^{0}F	249 ^{0}F	Inlet 249 ^{0}F, Outlet 120 ^{0}F
TLP/FEP/CNP After Condenser*	Tube Side	100 psig	Full Vacuum	45 psig	44.2/45 psia	150 ^{0}F	40 ^{0}F	101 ^{0}F	Inlet 75 ^{0}F, Outlet 101 ^{0}F

* These data are from the correspondence with Buyer and the vacuum system vendor. They will be incorporated in Ref. 11 in the next revision.

[3] Max operating pressures do not include the effects of static column heads. See Table 2-10.

Table 2-7: Typical Load Cases to be Analyzed

Load No.	Pressure	Temp.	Origin of Stress	Type of Stress	Classification	Code Paragraph	Allowable
1	Full Vacuum (Minimum NOP)	70°	**Design Condition 1** • -14.7 psig + DW + Pipe Loads (DW + Thermal + Seismic) • Combine stresses from above with seismic stresses from Case # 6	General Membrane	P_m	4-131 4-138	S
				Primary Local Membrane	P_L	4-132 4-138	1.5S
2	50 psig	70°	**Design Condition 2** Design Pressure 50 psig + DW + Pipe Loads (DW + Thermal)	General Membrane	P_m	4-131 4-138	S
				Primary Local Membrane	P_L	4-132 4-138	1.5S
3	2.94 psig (Max NOP)	70°	**Design Condition 3** • 2.94 psig + DW + Pipe Loads (DW + Thermal + Seismic) • Combine stresses from above with seismic stresses from Case # 6	General Membrane	P_m	4-131 4-138	1.2S
				Primary Local Membrane	P_L	4-132 4-138	1.8S
4	No Pressure	70°	Vessel DW + Nozzle DW	**Range of Primary + Secondary Stress Intensity** Derive the largest range of stress intensity among these events.	$P_L + P_b + Q$	4-134 4-138	3S
5	Develop several load cases to envelop maximum and minimum combinations of normal operating pressures, DW, temperatures, normal and accident condition ambient temperatures, and nozzle loads and perform stress analysis.						
6	0	70^0F	Vessel Seismic Loads from Spectrum Analysis	Derive the stresses due to the vessel seismic loads from the spectrum analysis.	N/A	N/A	N/A
7	Vessel Pressure + DW + Thermal + All Seismic Loads			Combine stresses from load steps 5 and 6 and derive the total range of stress intensity which includes the seismic loads, but excludes the accident condition ambient temperature loads.	$P_L + P_b + Q$	4-134 4-138	3S

DRAFT

8	N/A	N/A	Select the two loading combinations that were used in Load Case # 5, and remove all pressure loads and nozzle seismic loads. Re-perform the analysis. Use the results and multiply them by appropriate Stress Multipliers (SM).	**Primary + Secondary + Peak** (Linear + Peak)	$P_L + P_b + Q + F$	4-135	Sa (97 or 106 ksi)

DRAFT

Table 2-8: Div. 1 Nozzle Neck Analysis Using Tolerances for Plate Material

Nozzle N02 - Reboiler Nozzle Stresses

Nozzle ID No.:			Under Tolerance	CA	Effective Thickness to be Used	Nozzle Outside Diameter	Nozzle Outside Radius	Nozzle Inside Radius
N02	Plate Nominal Thickness	0.750	0.01	0.04	0.700	24.00	12.000	11.290

NOTE: Use 0.01 inch under tolerance for the plate products (SA240). (Note 1)

Nozzle Geometry		in	in		in	in^2	in^3	in	Design
		Ro	Ri		Thick	Area	Modulus	M_ Arm	Pressure -ksi
		12.000	11.290		0.700	51.949	293.798	6.000	0.050
					(Note 2)	(Note 3)			

No	Loading Condition	Loading Condition	Axial Load	Vertical Load	Lateral Load	Resultant Shear Load	Torsion			Resultant Moment	Hoop Stress	Axial Membrane Stress	Axial Bending Stress	Total Axial Stress
			Fx	Fy	Fz	Fyz	Mx	My	Mz	Myz				
			Lbs	Lbs	Lbs	lbs	ft-lbs	ft-lbs	ft-lbs	ft-lbs	ksi	ksi	ksi	ksi
N02	DW + Thermal + Seismic	Pm + Pb	10475	6310	24601	25397	N/A	68016	29728	86787	0.806	0.605	3.545	4.150
							(Note 6)				(Note 4)	(Note 5)		

Note 1: Nozzle Inside Radius includes the corrosion allowance only; undertolerance is not applied.
Note 2: The minimum thickness value incorporates the corrosion allowance and the undertolerance.
Note 3: The calculated Area and Section Modulus are based on the corroded thickness; the undertolerance is not applied.
Note 4: Pressure stress terms are based on the minimum thickness including the undertolerance and the corrosion allowance.
Note 5: Stresses due to pipe loads are based on the calculated area and section modulus which do not include the undertolerance, but do include the corrosion allowance.
Note 6: This example does not include calculation of shear stresses; therefore torsional loads are not applicable.

Table 2-9: Div. 1 Nozzle Neck Analysis Using Tolerances for Piping Material

Nozzle N13 - Separator Vessel Nozzle Stresses

Nozzle ID No.:			Under Tolerance	CA	Effective Thickness to be Used	Nozzle Outside Diameter	Nozzle Outside Radius	Nozzle Inside Radius
N13	Nozzle Nominal Thickness:	0.337	12.50%	0.04	0.255	4.500	2.250	1.953

NOTE: Use 12.5% undertolerance for all pipe products. (Note 1)

Nozzle Geometry		in	in		in	in^2	in^3	in	Design
		Ro	Ri		Thick	Area	Modulus	M_Arm	Pressure -ksi
		2.250	1.953		0.255	3.922	3.868	0.000	0.050
					(Note 2)	(Note 3)			

No	Loading Condition	Loading Condition	Axial Load	Vertical Load	Lateral Load	Resultant Shear Load	Torsion			Resultant Moment	Hoop Stress	Axial Membrane Stress	Axial Bending Stress	Total Axial Stress
			Fx	Fy	Fz	Fyz	Mx	My	Mz	Myz				
			Lbs	Lbs	Lbs	lbs	ft-lbs	ft-lbs	ft-lbs	ft-lbs	ksi	ksi	ksi	ksi
N13	DW + Thermal + Seismic	Pm + Pb	1962	-916	1239	1541	N/A	-4441	-5028	6708	0.383	0.692	20.813	21.505
						(Note 6)					(Note 4)	(Note 5)		

Note 1: Nozzle Inside Radius includes the corrosion allowance only; undertolerance is not applied.
Note 2: The minimum thickness value incorporates the corrosion allowance and the undertolerance.
Note 3: The calculated Area and Section Modulus are based on the corroded thickness; the undertolerance is not applied.
Note 4: Pressure stress terms are based on the minimum thickness including the undertolerance and the corrosion allowance.
Note 5: Stresses due to pipe loads are based on the calculated area and section modulus which do not include the undertolerance, but do include the corrosion allowance.
Note 6: This example does not include calculation of shear stresses; therefore torsional loads are not applicable.

Table 2-10: Density and Static Head

Location	TLP	FEP A/B	CNP
	(Elevation –Feet)	(Elevation –Feet)	(Elevation –Feet)
Separator Outlet Nozzle	21.26	21.26	29.92
Pump Inlet	11.00	11.00	8.50
Reboiler Inlet	5.33	5.33	4.33
	Static Head (Feet)	**Static Head (Feet)**	**Static Head (Feet)**
Static Head at Separator Outlet (min)	9.24	9.24	5.58
Static Head at Separator Outlet (max)	11.74	11.74	8.08
Static Head at Pump Inlet (min)	19.50	19.50	27.00
Static Head at Pump Outlet (max)	22.00	22.00	29.50
Static Head at Reboiler Inlet (min)	25.17	25.17	31.17
Static Head at Reboiler Inlet (max)	27.67	27.67	33.67
	Specific Gravity	**Specific Gravity**	**Specific Gravity**
Minimum	0.994	0.994	1.23
Maximum	1.57	1.50	1.37

DRAFT

NOTES:
1. The elevations data in this Table are taken from drawings listed in Reference 38.
2. Static pressures in the vessels will be calculated considering the minimum and maximum fluid densities and elevations in the vessels.
3. The above data are for information only. The above Table will not be revised to reflect the latest Equipment specifications.

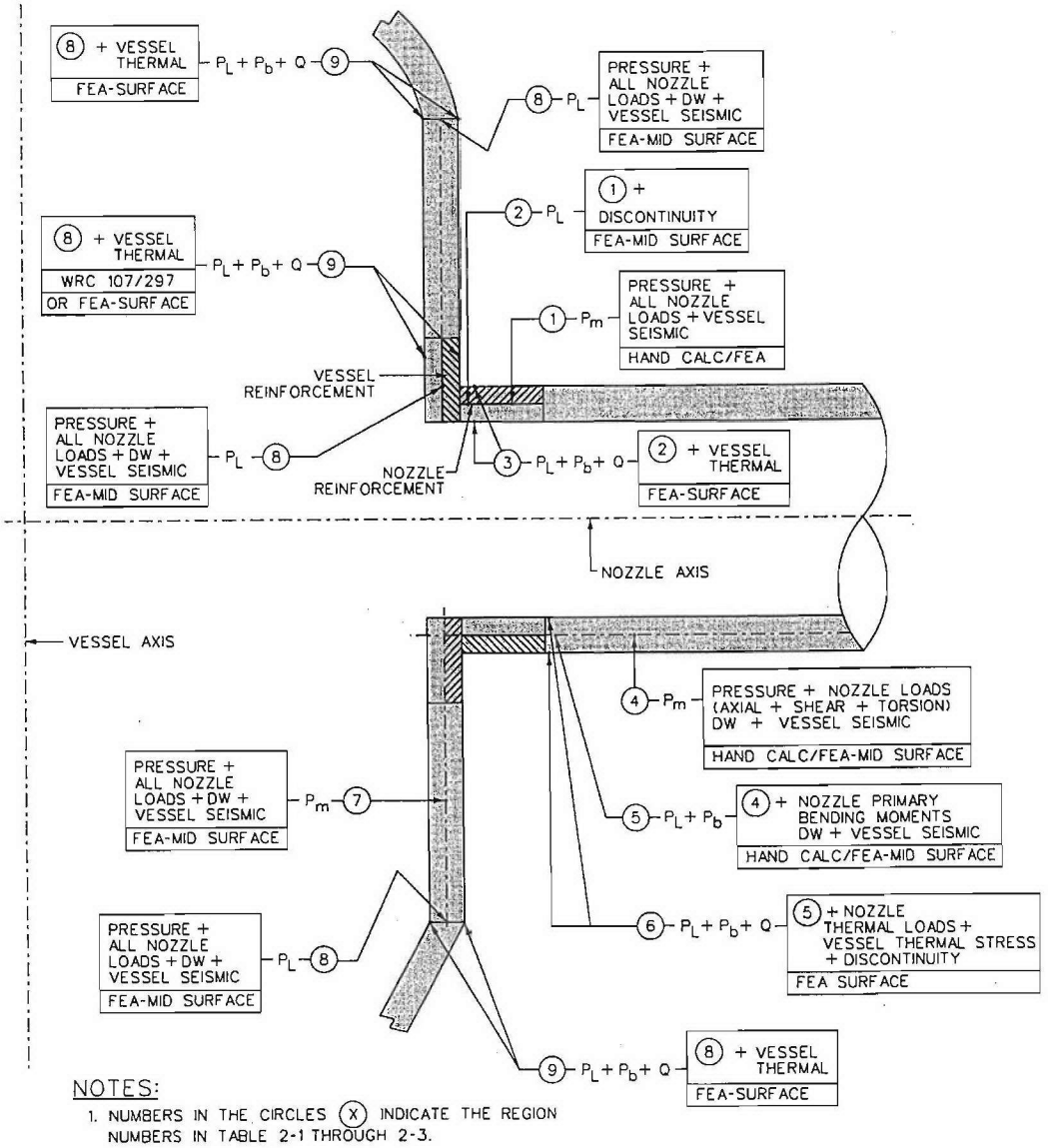

NOTES:

1. NUMBERS IN THE CIRCLES (X) INDICATE THE REGION NUMBERS IN TABLE 2-1 THROUGH 2-3.
2. THE ARROWS SHOW GENERAL LOCATIONS IN A TYPICAL VESSEL. FEA RESULTS WILL BE USED TO IDENTIFY MORE ACCURATE LOCATIONS.
3. EXCEPT FOR THE NOZZLE REINFORCEMENT REGIONS, NOZZLE THERMAL LOADS MAY BE EXCLUDED FROM REGIONS 7 AND 8 FOR P_m AND P_L EVALUATION.

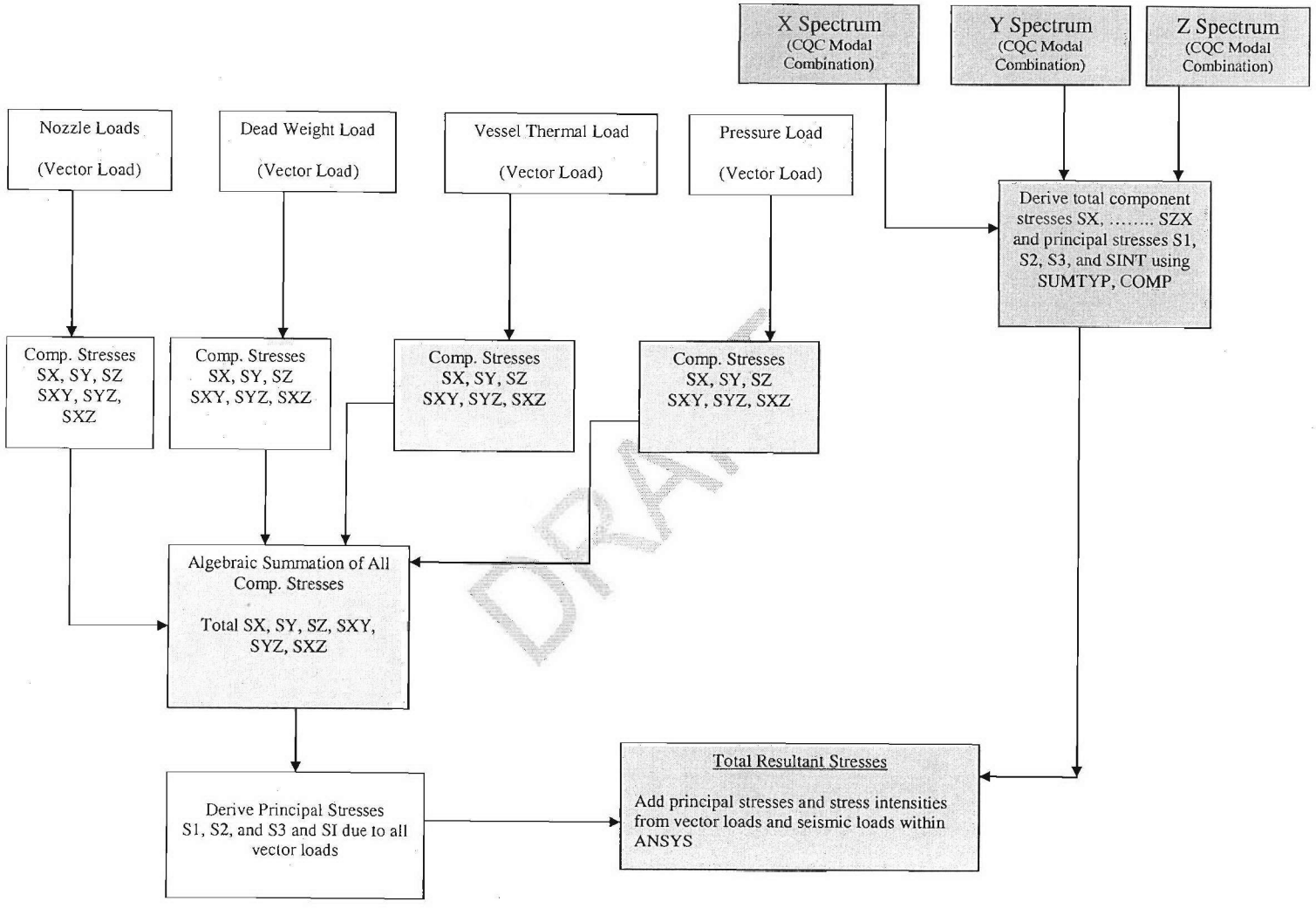

Figure 2-1: Vector Load Stresses Combination with Seismic Load Stresses

3.0 SKID ANALYSIS METHODOLOGY

The following criteria and codes apply to vessel skid analyses.

3.1 Applicable Codes

ANSI/AISC N690-1994 [14], is the "Specification for the Design, Fabrication, and Erection of Steel Safety-Related Structures for Nuclear Facilities." Buyer SDC 24590-WTP-DC-ST-01-001 [20] lists specific tailoring for N690 for use at WTP. The revised stress limit coefficient for compression in Table Q1.5.7.1 of N690 for load combinations 1 & 2 is 1.0 instead of 1.5; and for load combinations 8 & 9 it is 1.4 instead of 1.6.

GTSTRUDL does not perform code checks in accordance with AISC N690 [14]. However, it will perform a code check in accordance with the AISC ASD (Allowable Stress Design), 9th edition [15]. The AISC ASD is identical to AISC N690 for the purposes of these evaluations with one exception. Section Q1.5.9.1 of N690 provides allowable stresses for compression of axially loaded stainless steel members. These allowable stresses are less than those allowed by the ASD 9th edition. Therefore, the GTSTRUDL AISC ASD [16] code check along with a hand check of the members with the highest interaction ratios associated with axial compression is performed to qualify the members. Also, GTSTRUDL will perform an NF17 [31] code check. This feature is exercised to capture the code evaluation for shear stresses. The "SHEAR" provision within NF17 combines the transverse shear stresses along the Y and Z axis, torsional shear stress and the warping shear stresses. The complete procedure is explained in Reference [31], pages 2.2.5-509 through 2.2.5-565.

Seller will compare the fabricated skid girders to the existing AISC members substituted in the analysis, to see if the AISC members will provide conservative results. If this determination cannot be made, Seller will use the calculated properties to perform the AISC N690 Code Check.

In addition to the foregoing, the governing codes that are intended to be used as the basis of evaluation for the following structural components are as follows.

3.1.1 Anchor bolts: For anchor bolts, ACI 349 [34]; for remote fasteners, N690
3.1.2 Carbon steel A992 material: For Seismic Category I or II, N690; for Seismic Category III, AISC, ASD 9th Edition
3.1.3 Stainless Steel Plate SA240 and structural steel shapes ASTM MT304 A554 304SS: For Seismic Category I or II, N690
3.1.4 Reinforced concrete pad at skid base is not within the scope of this document.

3.2 Applicable References for Inputs

Buyer Document No. 24590-PTF-3PS-MEVV-T0001, Revision 2, "Engineering Specification for Forced Circulation Vacuum Evaporator System." (Seller Doc. ID 08-5032211 [17]).

Buyer Document No. 24590-PTF-3PS-MEVV-T0002, Revision 4, "Engineering Specification for Cesium Nitric Acid Forced Circulation Vacuum Evaporator System." (Seller Doc. ID 08-5037418 [18]).

DRAFT

Buyer Document No. 24590-WTP-3PS-SS90-T0001, Revision 1, "Engineering Specification for Seismic Qualification of Seismic Category I/II Equipment and Tanks". (Seller Doc. ID 08-5032273 [19]).

Buyer Document No. 24590-WTP-DC-ST-01-001, Revision 11. "Structural Design Criteria." (Seller Doc. ID 08-5036323 [20]).

3.3 Material

Material designations are obtained from the drawings for the part being analyzed and are therefore calculation specific. Material properties are obtained from the ASME B&PV Code, Section II, Part D [7]. Seller is considering that the 304 SS material is dual certified per drawings designation. The drawings call for dual certified material and vendor certification shall confirm that the vendor has complied with the dual certification material requirements. Therefore, allowable stresses for 304 SS material will be used in the analyses.

Seller will reference the corresponding sections in the ANSYS vessel report that document these material properties. In addition, the material properties and thermal expansion coefficients used by ANSYS and GSTRUDL will be consistent.

3.4 Ambient Temperature From Contract Documents

Room ambient design temperature variations are defined in Table 2-4. The reference temperature from which the differential thermal stress will be evaluated is 70 deg. F. The coefficients of thermal expansion will be documented in the analysis. The relative expansion or contraction between the skid members and the concrete for skids attached to the concrete will be considered. The same thermal load methodology/properties will be applied to both the ANSYS and the GTSTRUDL models. The thermal loads and load combinations with the operating temperature, To and the abnormal temperature, Ta will be used for the N690 [14] evaluations. The load combinations according to N690 are given in Section 3.7 herein.

DRAFT

3.5 Seismic Accelerations

Seismic Accelerations for HEP 1 SC I/II Equipment and Tanks

Seismic accelerations are obtained from the In-Structure Response Spectra contained in Appendix V, Attachment 1 of Buyer Document No. 24590-PTF-3PS-MEVV-T0001, Revision 2 [17]. The appropriate ISRS Figures are enveloped for 4% damping and are used as input in the ANSYS and GTSTRUDL coupled models. The 4% damping is based on Buyer Specification in Ref. 19 for Response Level 2 and considering vessels and frame/skid assemblies as "all other equipment". Refer to Table 3-1 for response spectra to be used for HEP1.

Seismic Accelerations for HEP 2 SC I/II Equipment and Tanks

Seismic accelerations are obtained from the In-Structure Response Spectra contained in Appendix J, Attachment 1 of Buyer Document No. 24590-PTF-3PS-MEVV-T0002, Revision 4 [18]. The appropriate ISRS Figures are enveloped for 4% damping and are used as input in the GTSTRUDL models. Refer to Table 3-2 for response spectra to be used for HEP2.

The same ISRS figures will be used for both the ANSYS FEA analyses and GTSTRUDL skid analyses.

3.6 Methodology

The methodology of the various analyses being performed is presented in Figure 1-3. ANSYS finite element models have been developed and exercised for the separator vessels and their supporting frames, the reboilers and their supporting frames, the recirculation pumps and their supporting frames, the primary condensers and their supporting frames and the distillation column and its support frame. These models have been analyzed for deadweight, pressure, thermal and vessel and frame seismic inertia loads. The seismic analysis that was performed is a response spectra dynamic analysis. The support frames were included so that the dynamic interaction between the vessels and their supporting structure would be accounted for in the analyses. In addition, the recirculation piping nozzle loads from the GTSTRUDL coupled analysis were included in this finite element analysis along with other large bore piping nozzles (4" diameter and larger). The purpose of the ANSYS analysis is to evaluate the vessels, not to evaluate the frame. In addition, the ANSYS models are used to develop the recirculation piping nozzle stiffnesses at the vessel shell/nozzle intersection and the vessel support reaction loads. These results are used in the recirculation piping analyses and the GTSTRUDL skid analyses respectively.

The purpose of the GTSTRUDL analyses is to evaluate the support frames, not the vessels. The reason for using GTSTRUDL to evaluate the frames is because GTSTRUDL will perform AISC [15] and NF 17 [31] Code check evaluations of the members. ANSYS does not have this capability.

The structural base support platforms (i.e., the sole plates) for the reboilers and recirculation pumps are modeled in the ANSYS FEA analysis. In as much as the sole plates are in the ANSYS models, their effect is in the flexibility matrices that are used in the GTSTRUDL coupled models, even though they are not explicitly included in the GTSTRUDL models. It should be noted that the boundary conditions for the GTSTRUDL analyses are the top of the sole plates. Buyer is to provide a rigid support structure (greater than 33 Hz) between the concrete floor embedments and the bottom of the soleplates of the reboiler vessel and recirculation pump support frames per contract requirements.

Seller will show that the GTSTRUDL AISC N690 Code Evaluation results are bounding when compared to the Separator ANSYS Code Evaluation results. The type of member specified in the GTSTRUDL models and the ANSYS models will be consistent. The lateral stiffening members (braces) in the GTSTRUDL Model are presently truss members while the lateral stiffening members in the ANSYS Model are presently frame members. The lateral stiffening members in the GTSTRUDL Model will be replaced with frame members for consistency. All members will not be compared but rather a number of members will be compared that fairly represent the loaded state of the skid. These members will be the most highly loaded column, the most highly loaded diagonal brace, the most highly loaded horizontal member at the base and the most highly loaded horizontal member at the top of the frame. Welds are not included in this comparison because the object is solely verification of member margins. For the comparison, any pipe loads that would normally be included in the GTSTRUDL Model will be included even though the pipe loads are normally excluded from the ANSYS Model. The object of the comparison is to show that the code evaluation of the as analyzed GTSTRUDL model bounds the code evaluation of the as analyzed ANSYS model.

The GTSTRUDL frame models that are used to qualify the frame members per the AISC N690 Code have been isolated from the coupled models for the TLP, FEP and CNP Systems. Therefore, both GTSTRUDL analyses use identical frame models.

Seller will compare the fabricated skid girders to the existing AISC members used in the analysis, to see if the AISC members will provide conservative results. If this determination cannot be made, Seller will use the calculated properties to perform the analyses. The corresponding properties used in ANSYS will be consistent with the GTSTRUDL models.

DRAFT

Also, for the Separator Vessel Skid, in as much as one of the skid girders being discussed here forms the base of the skid, and not only is the interior box formed by the girders filled with grout, but the area around the outside of the girders is also filled with grout, the boundary conditions that have been used previously will be changed. The GTSTRUDL model will be stopped at the top of the girders instead of the bottom of the girders. A detailed hand analysis will be performed on the girders that are essentially embedded in grout by using the support reaction loadings from the GTSTRUDL model.

The loads that the vessels apply to the frames are extracted from the ANSYS models and statically applied to the GTSTRUDL frame models. These are the deadweight, thermal and seismic loads that have been determined from seismic response spectra dynamic analyses. In addition, the applied loads to the frames that result from the nozzle loads are statically applied to the frame. Finally, if an integral pipe support has been added to the frame, the loads reacted by the support have been extracted from the coupled model and applied to the vessel frames.

Not included in the foregoing are the body forces on the frame members as a result of deadweight and seismic inertia loads. The deadweight forces are accounted for by invoking the applicable GTSTRUDL command. The seismic forces are accounted for by performing a seismic response spectra dynamic analysis on the frame. For the seismic analysis, each spectrum is applied separately for the three global directions and the responses of the individual modes in each earthquake direction are combined using the CQC method. The body mass is also computed and added to each combined response. The total seismic response is computed by combining the response from both horizontal and vertical analyses by the SRSS method. This is a conservative evaluation since the ANSYS analysis already includes a portion of these deadweight and seismic loads.

The loadings described above are combined as stipulated and the frame is evaluated for acceptance to the AISC N690 Code requirements. The deadweight (which includes nozzle deadweight and thermal loads) and seismic loads resulting from applying the lug loads from the ANSYS analysis are added to the deadweight and seismic loads resulting from the evaluation for body forces. For the deadweight loads, algebraic summation is used, while for seismic loads, absolute summation is used. Also, the frame member welded end connections are evaluated herein. Weld evaluations will be performed according to AISC N690 Section Q1.5.3 and CQ1.5.3. The weld forces may be determined in accordance with Table 5 of Blodgett, "Design of Welded Structures" [39].

Seller will provide both ANSYS and GTSTRUDL reactions for individual loads and load combinations for Buyer to use as appropriate. The GTSTRUDL model has the same vessel loads as the ANSYS model. In addition, GTSTRUDL includes piping loads when a pipe support is required on the frame/skid per Buyer isometrics, for the recirculation piping qualification. For the Sole Plate Analysis using ANSYS, Seller will include the pipe support interfacing loads. Note that the ANSYS model was generated to seismically qualify the vessel. Therefore, piping loads acting on the skid will not be included in the ANSYS analysis. The seismic qualification of the frame/skid is performed in the GTSTRUDL analysis. The loads for pipe supports that are attached to and integral to the skids are taken from the coupled analysis. Therefore, there is no coupling issue to be resolved based on ASCE 4-98, Section 3.1.7 [30].

Seller will summarize individual loads as well as load combinations, and SAM/TAM for all vessel nozzles and Grayloc connector load results, in tabular form, per Buyer Specification 24590-WTP-3PS-SS90-T0001, Sections 7.2 and 7.4 [19]. Seller will ensure that each analysis defines the slenderness ratio (Kl/r) and the rationale for its value.

The skids are modeled using the GTSTRUDL computer code, Version 28NT, running on a Dell computer with a Windows XP operating System. Within GTSTRUDL, the structural response of all components not integral to the pressure boundary are output as normal and shear stress (not stress intensities). These stress components are compatible with evaluations using the AISC N690 criteria. The vessels are modeled as a series of massless, rigid elements along their vertical center line. Massless rigid elements are also used to connect the vessel centerline to the support frame. The vessel portion of the GTSTRUDL model is not meant for evaluation of the vessel, but is

included to prevent the vessel attachment support lug locations on the frame from moving independently of each other.

The following defines what is meant by "Frame/Skid" herein:

Separator Frame/Skid: The Separator Frame/Skid consists of the following elements: support frame, two pipe supports, vessel represented by weightless rigid elements, bottom girders attached to embedment plates.

Reboiler Frame/Skid: The Reboiler Frame/Skid consists of the following elements: support frame, one pipe support, vessel represented by weightless rigid elements, base plates, shear pins and hold down bolts.

Recirculation Pump Frame/Skid: The Recirculation Pump Frame/Skid consists of the following elements: support frame, pump represented by weightless rigid elements, base plates, shear pins and hold down bolts.

Distillation Column Frame/Skid: The Distillation Column Frame/Skid consists of the following elements: support frame, vessel represented by weightless rigid elements, base plates attached to the concrete floor with post-installed concrete anchor bolts.

Primary Condenser Frame/Skid: The Primary Condenser Frame/Skid consists of the following elements: support frame, primary condenser represented by weightless rigid elements, Intercondenser and Aftercondenser represented by rigid elements that reflect their proper weight and cg, bottom girders attached to the concrete floor with cast-in-place anchor bolts.

DRAFT

3.7 Loads and Load Combinations

Buyer SDC 24590-WTP-DC-ST-01-001 [20] lists specific tailoring of N690 [14] for use at WTP. The revised stress limit coefficient (SLC) for compression in Table Q1.5.7.1 of N690 for load combinations 1 & 2 is 1.0 instead of 1.5; and for load combinations 8 & 9a is 1.4 instead of 1.6 for compression and shear. The stress limit for weld base metal shear is 1.4.

1. Loads

D – Deadweight of vessel and frame/skid.

T_0 – Thermal vessel and frame/skid loads during normal operating conditions.

Ta – Thermal vessel and frame/skid loads generated by postulated accident conditions.

Es – SSE inertia loads of vessel and frame/skid including nozzle seismic loads (Ro) when applicable.

L – Live loads if applicable.

R_0 – Operating piping reaction loads including nozzle deadweight and thermal loads.

Pa – Maximum differential pressure load generated by postulated accident conditions. For this project, Pa = 0.

2. Load Combinations

Normal Load Case 1: D + L; Stress Limit Coefficient, SLC =1.0

Normal Load Case 2: $D + L + R_0 + T_0$; Stress Limit Coefficient, SLC =1.0

Extreme Load Case 8: $D + L + R_0 + T_0 + Es$; SLC =1.4 for compression and shear, 1.6 for tension

Abnormal Load Case 9a: $D + L + Ta + Pa$; SLC = 1.4 for compression and shear, 1.6 for tension.

DRAFT

Table 3-1: HEP1 – Applicable Figure Numbers for Spectra

GTSTRUDL Analyses (HEP 1)						
Component	**Figures (E-W)**	**Elev.**	**Figures (N-S)**	**Elev.**	**Figures (Vertical)**	**Elev.**
Loop Coupled Analysis	37, 67, 21E	Enveloped (0' - 54')	38, 68, 22E	Enveloped (0' - 54')	24E	0'
TLP Separator Skid	37, 67	Enveloped (0' - 54')	38, 68	Enveloped (0' - 54')	24E	0'
FEP A/B Sep Skids	37, 67	Enveloped (0' - 54')	38, 68	Enveloped (0' - 54')	24E	0'
Recirc. Pumps Skids	21E	0'	22E	0'	24E	0'
Reboilers Skids	21E	0'	22E	0'	24E	0'
Primary Condenser Skid (TLP) *	37, 40	Enveloped (54')	38, 41	Enveloped (54')	115	56'
Primary Condensers Skids (FEP) *	37	54'	38	54'	121	56'

* Since FEP & TLP Condenser skids are qualified in one analysis, envelope of figures 37, 38, 40, 41, and 115, 121 values will be used.

ANSYS FEA Analyses (HEP 1)						
Component	**Figures (E-W)**	**Elev.**	**Figures (N-S)**	**Elev.**	**Figures (Vertical)**	**Elev.**
TLP Separator	37, 67	Enveloped (0' - 54')	38, 68	Enveloped (0' - 54')	24E	0'
FEP A/B Separators	37, 67	Enveloped (0' - 54')	38, 68	Enveloped (0' - 54')	24E	0'
Recirc. Pumps	21E	0'	22E	0'	24E	0'
Reboilers	21E	0'	22E	0'	24E	0'
Primary Condensers TLP*	37, 40	Enveloped (54')	38, 41	Enveloped (54')	115	56'
Primary Condenser FEP*	37	54'	38	54'	121	56'

Table 3-2: HEP2 – Applicable Figure Numbers for Spectra

GTSTRUDL Analyses (CNP)						
Component	**Figures (E-W)**	**Elev.**	**Figures (N-S)**	**Elev.**	**Figures (Vertical)**	**Elev.**
Loop Coupled Analysis	37, 49, 67	Enveloped (0', 27', 54')	38, 50, 68	Enveloped (0', 27', 54')	51, 69, 114	Enveloped (0', 27', 54', 56')
Separator Skid	37, 49	Enveloped (27', 54')	38, 50	Enveloped (27', 54')	51, 114	Enveloped (27', 54', 56')
Recirc. Pump Skid	67	0'	68	0'	69	0'
Reboiler Skid	67	0'	68	0'	69	0'
Primary Condenser Skid	16, 22	Enveloped (76')	17, 23	Enveloped (76')	144	77'
Distillation Column	37	54'	38	54'	114	56'

ANSYS FEA Analyses (CNP)						
Component	**Figures (E-W)**	**Elev.**	**Figures (N-S)**	**Elev.**	**Figures (Vertical)**	**Elev.**
Separator	37, 49	Enveloped (27', 54')	38, 50	Enveloped (27', 54')	51, 114	Enveloped (27', 54', 56')
Recirc. Pump	67	0'	68	0'	69	0'
Reboiler	67	0'	68	0	69	0'
Primary Condenser	16, 22	Enveloped (76')	17, 23	Enveloped (76')	144	77'
Distillation Column	37	54'	38	54'	114	56'

4.0 PIPING ANALYSIS DATA AND METHODOLOGY

Tables 4-1 through 4-8 present the major design input data, major references, and piping analysis methodology for HEP 1 and HEP 2 piping systems included in the Seller scope for seismic qualification and/or supply. Piping systems shall be analyzed using the same ISRS curves as the parent vessel/equipment. The justification for decoupling of the off-gas piping, or any other piping system from their respective vessels, will be documented in the piping analyses per the requirements of ASCE 4-98 criteria. Justification for use of 4% damping will be documented.

Piping and elbows material designations listed below are obtained from the applicable drawings. Material properties are obtained from the ASME B& PV Code, Section II, Part D [7].

Piping: A312 TP304/304L
Elbows: A403 WP304/304L

Seller is considering that the piping material is dual certified per isometric drawings designation. The drawings call for dual certified material and vendor certification shall confirm that the vendor has complied with the dual certification material requirements. Therefore, allowable stresses for TP304 material will be used in all piping analyses.

Seller will apply the inelastic energy absorption coefficient (Fμ) of 1.5, per Section 4.5.2.b of the Pipe Stress Criteria Document No. 24590-WTP-DC-PS-01-001, Rev. 5 [21] in following manner:

1. To the seismic nozzle loads from the coupled GTSTRUDL analysis before applying those loads to the ANSYS FEA models
2. When reporting seismic pipe support loads for use by Buyer, Seller will report the unmodified seismic loads (no Fμ applied) and then report the loads divided by 1.5. This will allow Buyer to choose the correct load, depending on the mode of failure, and to report the correct loads to CS&A.
3. In addition, Seller will apply the inelastic energy absorption coefficient (Fμ) of 1.5 to all SC-I and SC-II piping analyses performed by Seller.
4. Seller will not apply Fμ to pipe supports they are designing, since these are attached directly to the vessel frames.

Seller will comply with the limitations set forth in Section 4.5.2b of the Pipe Stress Criteria Document No. 24590-WTP-DC-PS-01-001, Rev. 5 [21]. Specifically, Fμ shall remain equal to 1.0 for the following:

1. Calculating piping displacements
2. Calculating loads and or accelerations on active equipment
3. Calculating loads on components that exhibit non-ductile failure modes (buckling and expansion anchor pull out)
4. Calculating pipe support attachment interface loads to be used in the evaluation of CS&A components.

DRAFT

Table 4-1: FEP & TLP Off-Gas Piping Analysis

Component	Category	Reference
FEP & TLP Off-Gas Piping Analysis (32-5037397)	**Design Input** Layout, pipe size, pipe class, material, wall thickness & design pressure =50 psig. Corrosion allowance = 0.040" Maximum operating temp = 150ºF In-structure Response Spectra Percentage Damping Used 5%	Seller Dwg. 02-5030692D, Rev. 03, "FEP Off Gas Piping A" Seller Dwg. 02-5030693D, Rev. 03, "FEP Off Gas Piping B" Seller Dwg. 02-5030696D, Rev. 03, "TLP Off Gas Piping" Buyer Specification No. 24590-WTP-3PS-P000-T0001, Rev. 5, "Piping Material Classes General Description and Summary" (08-5032269) Seller Technical Document 51-5031985, "HEP #1 Equipment Design Conditions" Buyer Specification No. 24590-PTF-3PS-MEVV-T0001, Rev. 2, "Forced Circulation Vacuum Evaporator System" (08-5032211-02), (Appendix V, Attachment 1) Buyer Specification 24590-WTP-DC-PS-01-001, Rev. 5 [21]
	Methodology	Buyer Specification 24590-WTP-DC-PS-01-001, Rev. 5, "Pipe Stress Design Criteria including "Pipe Stress Criteria "and "Span Method Criteria" [21] (08-5036324-002) Alternate Pipe Stress Methodology 38-9039408-000 SDDR 62 (24590-WTP-SDDR-M-06-00434) Computer Program Used AutoPIPE Plus-Win/ 6.20.9
	Acceptance Criteria Code	ASME B31.3-1996, Process Piping

DRAFT

Table 4-2: CNP Off-Gas Piping Analysis

CNP Off-Gas Piping Analysis (32-9045976)	**Design Input** Layout, pipe size, pipe class, material, wall thickness and insulation thickness	Seller Doc. 02-9049370-000, Buyer Dwg. 24590-PTF-P3-CNP-GU00001075, Rev. 0 Seller Doc. 08-5037418-004, Buyer Specification No. 24590-PTF-3PS-MEVV-T0002, Rev. 4 "Cesium Nitric Acid Recovery Forced Circulation Vacuum Evaporator System", (Appendix J, Attachment 3)
	In-structure Response Spectra	Same as above (Appendix J, Attachment 1)
	Insulation material and density	Seller Doc. 38-9049397-000, Buyer CCN 109338 Insulation Code and Density Seller Doc. 38-9049488-000, Buyer clarification of density use in CCN 109338
	Corrosion allowance = 0.040"	Buyer Specification No. 24590-WTP-3PS-P000-T0001, Rev. 5, "Piping Material Classes General Description and Summary" (08-5032269)
	Maximum operating temp = 150ºF Design pressure =50 psig.	Seller Doc. 51-5063365, "CNP Equipment Design Conditions"
	Percentage Damping Used 5%	See Buyer Specification 24590-WTP-DC-PS-01-001, Rev. 5 below
	Methodology	Buyer Specification 24590-WTP-DC-PS-01-001, Rev. 5, "Pipe Stress Design Criteria including "Pipe Stress Criteria "and "Span Method Criteria" (08-5036324-002) Alternate Pipe Stress Methodology and 38-9039410-000 SDDR 2-008 (24590-WTP-SDDR-M-06-00435) Computer Program Used AutoPIPE Plus-Win/ 6.20.9
	Acceptance Criteria Code	ASME B31.3-1996, Process Piping

DRAFT

Table 4-3: HEP1, FEP-A Recirculation Loop Piping System Coupled Evaluation

Component	Category	Reference
HEP1, FEP-A Recirculation Loop Piping System Evaluation (32-9048451)	**Design Input** Layout, pipe size, pipe class , material For max and min ambient temperatures, Refer to Table 2-4. In-Structure Response Spectra Corrosion allowance = 0.0937" Wall Thickness = 0.375" Design pressure =50 psig Maximum operating temp = 150ºF Percentage Damping Used 4% (1)	Buyer Specification No. 24590-PTF-3PS-MEVV-T0001, Rev. 2, "Forced Circulation Vacuum Evaporator System" (08-5032211), Appendix V, Attachment 3 Same as above (Appendix V, Attachment 1) Buyer Specification No. 24590-WTP-3PS-P000-T0001, Rev. 5, "Piping Material Classes General Description and Summary" (08-5032269) Seller Technical Document 51-5031985, "HEP #1 Equipment Design Conditions" See Buyer Specification 24590-WTP-DC-PS-01-001, Rev. 5 below, and Buyer Specification 24590-WTP-3PS-SS90-T0001, Rev. 1, "Engineering Specification for Seismic Qualification of Seismic Category I/II Equipment and Tanks" (08-5032273)
	Methodology	Buyer Specification 24590-WTP-DC-PS-01-001, Rev. 5, "Pipe Stress Design Criteria including "Pipe Stress Criteria "and "Span Method Criteria" (08-5036324-002) Buyer Document No. 24590-WTP-3PS-SS90-T0001, Revision 1, "Engineering Specification for Seismic Qualification of Seismic Category I/II Equipment and Tanks." (08-5032273) GTSTRUDL, Version 28NT
	Acceptance Criteria Code	ASME B31.3-1996, Process Piping

Notes: (1) As stated in Section 4.1.4 of Seller Calculation 32-9048451 [24], the damping value for piping is 5% and 4% for equipment skid structures. Therefore a conservative damping value for the coupled model (piping and skid) of 4% is used.

DRAFT

Table 4-4: HEP1, FEP-B Recirculation Loop Piping System Coupled Evaluation

Component	Category	Reference
HEP1, FEP-B Recirculation Loop Piping System Evaluation (32-9048174)	**Design Input** Layout, pipe size, pipe class, material For max and min ambient temperatures, Refer to Table 2-4. In-structure Response Spectra Corrosion allowance = 0.0937" Wall Thickness = 0.375" Design pressure =50 psig Maximum operating temp = 150ºF Percentage Damping Used 4% (1)	Buyer Specification No. 24590-PTF-3PS-MEVV-T0001, Rev. 2, "Forced Circulation Vacuum Evaporator System" (08-5032211), Appendix V, Attachment 3 Same as above (Appendix V, Attachment 1) Buyer Specification No. 24590-WTP-3PS-P000-T0001, Rev. 5, "Piping Material Classes General Description and Summary" (08-5032269) Seller Technical Document 51-5031985, "HEP #1 Equipment Design Conditions" See Buyer Specification 24590-WTP-DC-PS-01-001, Rev. 5 below, and Buyer Specification 24590-WTP-3PS-SS90-T0001, Rev. 1, "Engineering Specification for Seismic Qualification of Seismic Category I/II Equipment and Tanks" (08-5032273)
	Methodology	Buyer Specification 24590-WTP-DC-PS-01-001, Rev. 5, "Pipe Stress Design Criteria including "Pipe Stress Criteria "and "Span Method Criteria" (08-5036324-002) Buyer Document No. 24590-WTP-3PS-SS90-T0001, Revision 1, "Engineering Specification for Seismic Qualification of Seismic Category I/II Equipment and Tanks." (08-5032273) including SCN # 24590-WTP-3PN-SS90-00001 & 00002 GTSTRUDL, Version 28NT
	Acceptance Criteria Code	ASME B31.3-1996, Process Piping

Notes: (1) As stated in Section 4.1.4 of Seller Calculation 32-9048174 [25], the damping value for piping is 5% and 4% for equipment skid structures. Therefore a conservative damping value for the coupled model (piping and skid) of 4% is used.

DEF

Table 4-5: HEP1, TLP Recirculation Loop Piping System Coupled Evaluation

Component	Category	Reference
HEP1, TLP Recirculation Loop Piping System Evaluation (32-9049002)	**Design Input** Layout, pipe size, pipe class, material For max and min ambient temperatures, Refer to Table 2-4. In-structure Response Spectra Corrosion allowance = 0.0937" Wall Thickness = 0.375" Design pressure =50 psig Maximum operating temp = 150ºF Percentage Damping Used 4% (1)	Buyer Specification No. 24590-PTF-3PS-MEVV-T0001, Rev. 2, "Forced Circulation Vacuum Evaporator System" (08-5032211), Appendix V, Attachment 3 Same as above (Appendix V, Attachment 1) Buyer Specification No. 24590-WTP-3PS-P000-T0001, Rev. 5, "Piping Material Classes General Description and Summary" (08-5032269) Seller Technical Document 51-5031985, "HEP #1 Equipment Design Conditions" See Buyer Specification 24590-WTP-DC-PS-01-001, Rev. 5 below, and Buyer Specification 24590-WTP-3PS-SS90-T0001, Rev. 1, "Engineering Specification for Seismic Qualification of Seismic Category I/II Equipment and Tanks" (08-5032273)
	Methodology	Buyer Specification 24590-WTP-DC-PS-01-001, Rev. 5, "Pipe Stress Design Criteria including "Pipe Stress Criteria "and "Span Method Criteria" (08-5036324-002) Buyer Document No. 24590-WTP-3PS-SS90-T0001, Revision 1, "Engineering Specification for Seismic Qualification of Seismic Category I/II Equipment and Tanks." (08-5032273) including SCN # 24590-WTP-3PN-SS90-00001 & 00002 GTSTRUDL, Version 28NT
	Acceptance Criteria Code	ASME B31.3-1996, Process Piping

Notes: (1) As stated in Section 4.1.4 of Seller Calculation 32-9049002 [26], the damping value for piping is 5% and 4% for equipment skid structures. Therefore a conservative damping value for the coupled model (piping and skid) of 4% is used.

DRAFT

Table 4-6: CNP Recirculation Loop Piping System Coupled Evaluation

Component	Category	Reference
CNP Recirculation System Loop Coupled Analysis (32-9045700)	**Design Input** Layout, pipe size, pipe class, material For max and min ambient temperatures, Refer to Table 2-4.	Seller Doc. 08-5037418-004, Buyer Specification No. 24590-PTF-3PS-MEVV-T0002, Rev. 4 "Cesium Nitric Acid Recovery Forced Circulation Vacuum Evaporator System", Appendix J, Attachment 3
	In-structure Response Spectra	Same as above (Appendix J, Attachment 1)
	Corrosion allowance = 0.040" Wall Thickness = 0.375"	Buyer Specification No. 24590-WTP-3PS-P000-T0001, Rev. 5, "Piping Material Classes General Description and Summary" (08-5032269)
	Design pressure =50 psig Maximum operating temp = 150ºF	Seller Doc. 51-5063365, "CNP Equipment Design Conditions"
	Percentage Damping Used 4% [1]	See Buyer Specification 24590-WTP-DC-PS-01-001, Rev. 5 below, and Buyer Specification 24590-WTP-3PS-SS90-T0001, Rev. 1, "Engineering Specification for Seismic Qualification of Seismic Category I/II Equipment and Tanks" (08-5032273)
	Methodology	Buyer Specification 24590-WTP-DC-PS-01-001, Rev. 5, "Pipe Stress Design Criteria including "Pipe Stress Criteria "and "Span Method Criteria" (08-5036324-002) Buyer Document No. 24590-WTP-3PS-SS90-T0001, Revision 1, "Engineering Specification for Seismic Qualification of Seismic Category I/II Equipment and Tanks." (08-5032273) including SCN # 24590-WTP-3PN-SS90-00001/00002 GTSTRUDL, Version 28NT
	Acceptance Criteria Code	ASME B31.3-1996, Process Piping

Notes: (1) As stated in note to Table 4-1 of Seller Calculation 32-9045700 [27], the damping value for piping is 5% and 4% for equipment skid structures. Therefore a conservative damping value for the coupled model (piping and skid) of 4% is used.

DRAFT

DRAFT

This page is intentionally left blank

Table 4-7: HEP-1 FEP & TLP Vacuum Equipment Piping & Support Evaluation

Component	Category	Reference
HEP-1 FEP & TLP VACUUM EQUIPMENT PIPING & SUPPORT EVALUATION (32-5037399)	**Design Input** Layout, pipe size, pipe class, material and wall thickness	Seller Dwg. 02-5035018D, Rev. 05 and 02-5043567B, Rev. 06, "Isometric Detail of FEP Condenser FEP-COND-00001A Vacuum Equipment Piping" Seller Dwg. 02-5035019D, Rev. 05 and 02-5043849B, Rev. 06, "Isometric Detail of FEP Condenser FEP-COND-00001B Vacuum Equipment Piping" Seller Dwg. 02-5035020D, Rev. 05 and 02-5043850B, Rev. 06, "Isometric Detail of TLP Condenser TLP-COND-00001 Vacuum Equipment Piping"
	Corrosion allowance = 0.040"	Buyer Specification No. 24590-WTP-3PS-P000-T0001, Rev. 5, "Piping Material Classes General Description and Summary" (08-5032269)
	Design pressure =50 psig Maximum operating temp = 150ºF	Seller Technical Document 51-5031985, "HEP #1 Equipment Design Conditions"
	In-structure Response Spectra	Buyer Specification No. 24590-PTF-3PS-MEVV-T0001, Rev. 2, "Forced Circulation Vacuum Evaporator System" (08-5032211-02), (Appendix V, Attachment 1)
	Percentage Damping Used 5%	See Buyer Specification 24590-WTP-DC-PS-01-001, Rev. 5 below
	Methodology	Buyer Specification 24590-WTP-DC-PS-01-001, Rev. 5, "Pipe Stress Design Criteria including "Pipe Stress Criteria "and "Span Method Criteria" (08-5036324-002) Alternate Pipe Stress Methodology 38-9039408-000 SDDR 62 (24590-WTP-SDDR-M-06-00434) Computer Program Used AutoPIPE Plus-Win/ 6.20.9
	Acceptance Criteria Code	ASME B31.3-1996, Process Piping

DRAFT

Table 4-8: HEP-2 CNP Vacuum Equipment Piping & Support Evaluation

(Including CNP Condenser Condensate Piping)

HEP-2 CNP VACUUM EQUIPMENT PIPING & SUPPORT EVALUATION (32-5058510)	**Design Input** Layout, pipe size, pipe class, material, wall thickness	Seller Dwg. 02-5038016D-02, "CNP Condenser Skid Piping Isometric"
	In-structure Response Spectra	Seller Doc. 08-5037418-004, Buyer Specification No. 24590-PTF-3PS-MEVV-T0002, Rev. 4 "Cesium Nitric Acid Recovery Forced Circulation Vacuum Evaporator System", (Appendix J, Attachment 1)
	Corrosion allowance = 0.040"	Buyer Specification No. 24590-WTP-3PS-P000-T0001, Rev. 5, "Piping Material Classes General Description and Summary" (08-5032269)
	Maximum operating temp = 150ºF Design pressure =50 psig.	Seller Doc. 51-5063365, "CNP Equipment Design Conditions"
	Percentage Damping Used 5%	See Buyer Specification 24590-WTP-DC-PS-01-001, Rev. 5 below
	Methodology	Buyer Specification 24590-WTP-DC-PS-01-001, Rev. 5, "Pipe Stress Design Criteria including "Pipe Stress Criteria "and "Span Method Criteria" (08-5036324-002) Alternate Pipe Stress Methodology 38-9039408-000 SDDR 62 and 38-9039410 SDDR 2-008 Buyer Specification 24590-WTP-DC-PS-01-002, Rev. 3, "Pipe Support Design Criteria" (08-5036325-001) Computer Program Used AutoPIPE Plus-Win/ 6.20.9
	Acceptance Criteria Code	ASME B31.3-1996, Process Piping

DRAFT

5.0 JUSTIFICATION FOR COUPLED AND DECOUPLED ANALYSES

The recirculation loop piping will be qualified per coupled analyses as described in Section 2.3. All Off Gas piping systems may be decoupled from the separator vessels in the qualification analyses. Justification for decoupling will be provided in the pertinent calculations. Seller will use Section 3.1.7 of ASCE 4-98 to justify decoupling the Off Gas piping from the separator vessels. The mass and frequency ratio criteria from Sections 3.1.7.1 and 3.1.7.2 will be used to justify an uncoupled analysis. Similarly the Off Gas piping systems may be decoupled from the primary condenser vessels and the distillation column.

For the Off Gas piping, the static constraint concern defined in Section 3.1.7.3 of ASCE 4-98 will be addressed as follows:

> The configuration of the Off Gas piping shows each run having only two vertical spring hangers, a number of direction changes with no horizontal restraints or vertical rigid supports, and anchored only at the vessel nozzles. Seller will attempt to demonstrate that the Off Gas piping systems will not restrict movement of the separator vessel/support frame assembly, primary condenser vessel/support frame assembly, and distillation column/support frame assembly. The stiffness of the Off Gas piping relative to the stiffness of the separator, primary condenser and distillation column vessels/support frame assemblies will be determined by applying unit loads at the Off Gas piping nozzle location on the uncoupled Off Gas piping models and at the Off Gas nozzle locations on the various vessel/ support structure models. The resulting displacements will be used to demonstrate that the various vessels /support structures are significantly more rigid than the Off Gas piping systems and therefore, the Off Gas piping systems will not provide a static constraint for the various vessel/support frame assemblies.

If decoupling of the Off Gas piping systems can not be demonstrated using the above methodology, the recirculation piping coupled models may have to be expanded to include the Off Gas piping along with the primary condensers and distillation column. For other piping systems such as the steam lines between the desuperheaters and reboilers, and the primary condenser inlet and outlet water lines, Seller's current analysis approach is to seismically qualify vessels decoupled from the aforementioned piping systems. Should Buyer require that a coupled analyses be performed for these other systems, Seller must be provided with the most current piping arrangement drawings indicating location of any in-line components, supports and support function.

6.0 ANALYSIS RESULTS DELIVERABLES

Seller will summarize individual loads in tabular form, per Buyer Specification 24590-WTP-3PS-SS90-T0001, Section 7.2 [19] in a separate section in each report. The data to be provided is as follows:

1. The seismic and thermal anchor movements (SAM and TAM) at each nozzle location in the FEA global coordinate systems.

2. The mass and Center of Gravity Dimension (CGD) of vessel frame/skid

3. Interface reactions/loads for individual load conditions and load combinations from ANSYS/GTSTRUDL e.g., from Seller frame to Buyer embedments/beams, and bottom of the soleplates.

4. Interface reactions/loads from ANSYS and GTSTRUDL at vessel support locations on the frames

5. Report all locations and magnitudes of seismic and thermal displacements in excess of ± 1.0 inch (no combination) in order to avoid piping and support interferences.

6. Grayloc connector load results.

7. For each analysis, a table of natural frequencies and mass participation factors, and plots of the significant mode shapes

8. A listing of all safety-related subcomponents for each component.

9. Piping centerline displacements at the wall and floor penetrations.

10. Sketches will identify FEA global coordinate systems along with the Plant North direction for all displacements, loads, and reactions.

11. Pipe support loads on Buyer design supports as documented in Section 4.0.

7.0 VERIFICATION AND VALIDATION

In each analysis Seller will list the software used in the analysis along with documentation of their verification and validation in individual calculations. Software expected to be used include ANSYS, GTStrudl and AutoPIPE Plus. Each analysis will comply with Reference 40 Verification and Validation requirements and will reference an Seller document that presents detailed benchmark information. As an example, Seller will show the conservatism of using ANSYS shell elements by comparison to WRC 107 hand analysis. All models used in Seller analyses will be provided to Buyer for verification.

8.0 REFERENCES

1. ASME Boiler and Pressure Vessel Code, Section VIII, Divisions 1 and 2, 2004 Edition
2. Welding Research Council (WRC) Bulletin 107, Local Stresses in Spherical and Cylindrical Shells due to External Loadings
3. Seller Document Number 08-5032266, Buyer Specification 24590-WTP-3PS-MV00-T0003, Rev. 2, Pressure Vessel Fatigue Analysis
4. Seller Document Number 08-5032265, Buyer Specification 24590-WTP-3PS-MV00-T0001, Rev. 3, 04/23/07, "Engineering Specification For Pressure Vessel Design and Fabrication"
5. WinNOZL Program, Local Stress Analysis for Nozzle and Vessel Intersection by Bentley Systems
6. COMPRESS, Software for ASME Section VIII Design and Analysis by CODEWARE
7. ASME Boiler and Pressure Vessel Code, Section II, Part D, Properties, 2004 Edition
8. Seller Document Number 08-5036321, Buyer Specification 24590-WTP-3PS-MV00-T0002, Rev. 2, 12/14/03, "Engineering Specification For Seismic Qualification Criteria for Pressure Vessels"
9. ASME Boiler and Pressure Vessel Code, Section III, Subsection NCA, General Requirements for Division 1 and Division 2, 2004 Edition
10. Seller Document Number 51-5031985, "HEP-1 Equipment Design Conditions"
11. Seller Document Number 51-5063365, "CNP Equipment Design Conditions"
12. Seller Document Number 32-5031389, "Hanford Evaporator Project Number 1 – Fatigue Assessment Report"
13. Seller Document Number 32-5058514, "Hanford Evaporator Project Number 2 – Fatigue Assessment Report"
14. ANSI/AISC N690-1994, American National Standard Specification for the Design, Fabrication, and Erection of Steel Safety-Related Structures for Nuclear Facilities
15. Manual of Steel Construction, AISC Allowable Stress Design, 9th Edition, American Institute of Steel Construction, Inc.
16. GTSTRUDL Computer Program For Structural Analysis, Version 28NT Running On A Dell Computer With A Windows XP Operating System
17. Seller Document Number 08-5032211, Buyer Document No. 24590-PTF-3PS-MEVV-T0001, Revision 2, "Engineering Specification for Forced Circulation Vacuum Evaporator System"
18. Seller Document Number 08-5037418-004, Buyer Document No. 24590-PTF-3PS-MEVV-T0002, Revision 4, "Engineering Specification for Cesium Nitric Acid Forced Circulation Vacuum Evaporator System"
19. Seller Document Number 08-5032273, Buyer Document No. 24590-WTP-3PS-SS90-T0001, Revision 1, "Engineering Specification for Seismic Qualification of Seismic Category I/II Equipment and Tanks"
20. Seller Document Number 08-5036323, Buyer Document No. 24590-WTP-DC-ST-01-001, Revision 11 "Structural Design Criteria"
21. Seller Document Number 08-5036324, Buyer Document 24590-WTP-DC-PS-01-001, Rev. 5, "Pipe Stress Design Criteria including "Pipe Stress Criteria "and "Span Method Criteria"
22. Seller Document Number 32-5037397, FEP & TLP Off-Gas Piping Analysis
23. Seller Document Number 32-9045976, CNP Off-Gas Piping Analysis
24. Seller Document Number 32-9048451, HEP1, FEP-A Recirculation Loop Piping System Evaluation
25. Seller Document Number 32-9048174, HEP1, FEP-B Recirculation Loop Piping System Evaluation
26. Seller Document Number 32-9049002, HEP1, TLP Recirculation Loop Piping System Evaluation
27. Seller Document Number 32-9045700, CNP Recirculation System Loop Coupled Analysis
28. API610-1995 Centrifugal Pumps For Petroleum, Petrochemical And Natural Gas Industries
29. ASME B31.3-1996, ASME Code for Pressure Piping

30. ASCE 4-98 Seismic Analysis of Safety-Related Nuclear Structures
31. NF17: A Post-Processor Module within GTSTRUDL Based on the ASME Boiler and Pressure Vessel Code, Section III, Division I-Subsection NF, Rules for Construction of Nuclear Power Plant Components adapted on July 1, 1977, with Addenda through Winter 1979. This code checks I, channels, single angle, and structural tubing shapes profiles.
32. Tubular Exchanger Manufacturer Association, Inc; 8th Edition of TEMA Standard
33. GTSTRUDL User Reference Manual, Volume 2B, Member Selection (Steel) Commands, Revision N, Computer Aided Structural Engineering Center, School of Civil and Environmental Engineering, Georgia Institute of Technology, Atlanta, Georgia 30332-0355
34. ACI 349-90 Code Requirements for Nuclear Safety-Related Concrete Structures
35. Seller Document Number 32-9056888, TLP – Separator Vessel FEA Evaluation
36. WRC Bulletin 297, Local Stresses in Cylindrical Shells due to External Loadings on Nozzles – Supplement to WRC Bulletin No. 107 (Revision 1)
37. Seller Document Number 38-5032245, Buyer Specification 24590-WTP-3PS-G000-T0003, Rev. 01, "Packaging, Handling, and Storage Requirements"
38. List of Drawings Used for Elevations and Liquid Levels
    a. Seller Drawing 02-5038007D, Evaporator Project # 2 Separator Vessel CNP-EVAP-00001
    b. Seller Drawing 02-5030363D, Evaporator Project # 1 Separator Vessel TLP-SEP-00001
    c. Seller Drawing 02-5030361D, Evaporator Project # 1 Separator Vessel FEP-SEP-00001A
    d. Seller Drawing 02-5030362D, Evaporator Project # 1 Separator Vessel FEP-SEP-0000B
    e. Seller Document Number 08-5037418, page J-85, Buyer Drawing 24590-PTF-P3-CNP-PF00001-4000, Rev. A, "Pretreatment Facility Isometric"
    f. Seller Document Number 08-5037418, page J-86, Buyer Drawing 24590-PTF-P3-CNP-PF00001-4025, , Rev. A, "Pretreatment Facility Isometric"
    g. Seller Document Number 08-5032211, page V-133, Buyer Drawing 24590-PTF-P3-TLP-PH01384000-4000, Rev. A, "Pretreatment Facility Isometric"
    h. Seller Document Number 08-5032211, page V-135, Buyer Drawing 24590-PTF-P3-TLP-PH01384000-4001, Rev. A, "Pretreatment Facility Isometric"
    i. Seller Document Number 08-5032211, page V-121, Buyer Drawing 24590-PTF-P3-FEP-PZ0021-8000, Rev. A, "Pretreatment Facility Isometric"
    j. Seller Document Number 08-5032211, page V-122, Buyer Drawing 24590-PTF-P3-FEP-PZ0021-8025, Rev. A, "Pretreatment Facility Isometric"
    k. Seller Document Number 08-5032211, page V-126, Buyer Drawing 24590-PTF-P3-FEP-PZ221000, Rev. A, "Pretreatment Facility Isometric"
    l. Seller Document Number 08-5032211, page V-127 Buyer Drawing 24590-PTF-P3-FEP-PZ221025, Rev. A, "Pretreatment Facility Isometric"
39. "Design of Welded Structures" by Blodgett, Omer, June 1966,
40. Seller Document Number 08-9100606, Buyer Specification 24590-WTP-3PS-G000-T0014 Rev. 0, "Supplier Design Analyses"
41. Seller Document Number 38-9100623-000l for Table 2-4 note

APPENDIX A: PARAMETRIC STUDY – UTILIZING SHELL ELEMENT STRESSES AT NOZZLE/VESSEL INTERSECTIONS

INTRODUCTION

ANSYS Shell elements are used to perform finite element analyses of several vessel assemblies in the Hanford HEP1 and HEP2 projects. For some of the nozzle/vessel intersections initially analyzed in these projects, local stress intensities (SI) due to combined deadweight, thermal, and seismic nozzle loads were above allowable limits. These shell element stress results occur where the vessel/nozzle shell elements intersect, which is at the shell element mid-planes, and not at the vessel/nozzle intersection surfaces. Normally, these results are used as a conservative basis of evaluation. The purpose of this analysis is to reduce conservatism from the stress results. The method used to reduce conservatism is to determine how shell element results compare to more accurate values from solid brick element models and then use this comparison to present results that are still conservative, but closer to actual values. Seller earlier had submitted nozzle/vessel analyses using a method found to reduce the above conservatism. Buyer has requested a more detailed explanation of this method. As a result, Seller has performed a detailed study of several nozzle/vessel configurations. This report summarizes the results and conclusions using the revised method. All nozzle and vessel dimensions used in this analysis are based on nominal dimensions minus a 0.040" corrosion allowance.

The first step used in this analysis is to determine the actual stress values at nozzle/vessel intersections. One method to determine actual stresses would be to perform extensive physical tests, but this method is beyond the scope of these projects. Another method would be to perform finite element stress analyses of nozzle/vessel intersections using solid brick elements with refined element meshes at the nozzle/vessel intersections. The latter is the method used in this study.

4-NODE SHELL and 8-NODE BRICK ELEMENT FEA MODELS

The following presents a brief description of different FEA models used on the study.

This Appendix compares FEA results of shell elements to brick elements when both models are constructed with fine meshes at the nozzle/vessel intersection. For the solid brick element models, all nozzles are modeled with five elements through the thickness. All vessels, which are mostly thicker than the associated nozzles, include from six to eleven elements across the thickness. Solid brick element models were further refined outside the fillet weld ends to obtain accurate peak stresses. For all models, the element size adjacent to the fillet weld ends is from five to eleven percent of the fillet leg size. See Figures A-12 and A-13 for a typical representation of the above mesh refinements. Refined element proportions for all solid brick models are shown in Table A-5.

- Figure A-8 shows the element mesh in the TLP Reboiler ANSYS FEA shell model near the vessel/nozzle intersection of the 2" Nozzle N06. The first row of elements in the nozzle is a typical representation of the actual vessel outside surface location.

- Figure A-9 is a shell element model of only that local region with a refined mesh created to obtain local stress distributions at the nozzle/vessel intersection without the reinforced fillet welds.

- Figures A-10 through A-13 are the solid brick element model representing the same region as the shell model in Figure A-9, but with the reinforced fillet welds. For this small nozzle, only a small segment of the vessel circumference needs to be modeled to exclude boundary condition effects. However, for large nozzles (18" and larger), 180 degrees of the vessel circumference is included. Figure A-10 shows the overall model without element details, and Figure A-11 is a sectioned portion of the model showing element detail in the nozzle/vessel intersection region. Since this model is used to evaluate stress concentrations, it was found that the element mesh shown in Figure A-11 needed to be refined at the ends of the fillet for accurate stress representations. Considering that Figure A-11 represents only a very small

portion of the full circumference, a further refined mesh at both locations would produce a model with over a million degrees of freedom. Therefore, the mesh shown in Figure A-11 was refined separately for local vessel/weld and nozzle/weld stress analyses. Figures A-12 and A-13 are refinements of the model shown in Figure A-11, where Figure A-12 is refined to approximately 1/16 the size of the minimum required fillet weld leg in the fillet/vessel region and Figure A-13 is refined similarly in the fillet/nozzle region. These refinements produce accurate peak stresses at the ends of the fillet. Note that only well-shaped six-sided brick elements are used in the intersection regions to avoid inaccurate local stresses produced by tetrahedral, pyramid, or poor element shapes

- These models are typical of the three types of models used in this study; the vessel is modeled with shell elements, local nozzle region is modeled with a refined mesh using shell elements, and local nozzle region modeled with a refined mesh using solid brick elements.

- Table A-1 lists various nozzles on different vessels used in this study.

DISCUSSION OF RESULTS

Why Elements Within the Vessel Wall Are Unselected

Figure A-3 is a typical comparison of vessel linearized SI values from a refined brick element model to the surface SI values from a refined shell element (equivalent) model, where both models have the same applied loads. The applied loads are actual maximum combined deadweight plus thermal plus seismic loads for an actual nozzle/vessel configuration. The stresses are plotted at the maximum stressed location at the nozzle/vessel intersection, starting at the edge of the shell elements (at the nozzle mean radius) and moving radially outward. The shell elements represent a typical shell element model intersection, which does not take the local fillet weld into account. The first data point for the shell element model is at the mid-plane intersection of the nozzle and vessel shell elements (Rm), as indicated by the notation at the bottom left of Figure A-3. The refined solid brick element model is also typical of such a model, including the minimum required local fillet weld at the nozzle/vessel intersection. The first data point for the brick element model is at the outer edge of the fillet ("weld toe"), as indicated at the bottom of Figure A-3. As shown in Figure A-3, the maximum SI from the shell element model is substantially higher than the maximum linearized SI from the solid brick element model and lower than the maximum peak SI from the solid brick element model. In order to determine if this difference is typical, most of the models shown in Table A-1 are analyzed (see note at bottom of Table A-1) as follows. A similar comparison could be made for nozzle stresses in the nozzle axial direction. Based on these comparisons it was concluded that the shell element stresses are more representative of those at the intersection of the nozzle and vessel after the elements within the wall thickness are unselected from the FEA results.

Table A-2 shows the various geometries analyzed with a comparison of maximum shell element SI values to solid brick element linearized results for both vessel and nozzle stresses. From these results, it can be seen that the shell element results, if taken at the modeled nozzle/vessel intersection, are conservative (from about 30 percent to over a factor of three).

Table A-2 demonstrates that shell element results at nozzle/vessel intersections, if considered as linearized stress (which is what the ANSYS shell element surface stresses represent), can be very conservative, when compared to solid brick element linearized results at the weld toe. There are two methods that could be used to remove some of the conservatism. One method would be to mesh the shell element sizes coarse enough to lower stresses to more accurate levels. Using this method, it would be very difficult to assure that the mesh density is at an optimum level (not too fine and not too coarse). Another method would be to select a location in the shell element model at a prescribed distance from the modeled mid-plane intersection. An obvious location would be

the same as the solid model (weld toe), which is the maximum stressed location in the solid brick element models. Preliminary shell element results representative of a wide range of nozzle sizes (for 2" and 24" nozzles) indicated that selecting this location would be very conservative when compared to linearized brick element results for maximum linearized vessel stresses. This result is typically shown in Figure A-3 for the 2" nozzle by comparing the "Lin SI" Stress Intensity with the "Shell Elem SI" Stress Intensity at the "End of Fillet Leg" (weld toe) location. However, as more nozzle and vessel sizes were investigated, for some of the nozzles at the maximum stress locations, solid brick element linearized results were under-predicted by the shell elements at this location by more than a factor of two. Therefore, the intersection of the outside surfaces of the vessel and nozzle was selected for shell element surface SI for comparison to solid brick element linearized SI at the weld toe. At this shell element location, vessel SI results are always conservative relative to solid brick element linearized SI. As an example, see shell element SI at nozzle outside radius Ro, shown in Figure A-3 relative to "Lin SI" at "End of Fillet Leg". However, shell element nozzle SI are not always conservative relative to solid brick element linearized SI. The results for comparison of brick element vessel and nozzle linearized SI with shell element SI taken at the intersection of the nozzle and vessel outer surfaces are shown in Table A-3. In most cases, the shell element results for nozzle SI are conservative. However, for the configurations where the vessel to nozzle thickness ratio is greater than 2.0, the shell element results are unconservative. In order to address the unconservative results, one option would be to simply use the nozzle stress results at the original mid-plane intersection for the high thickness ratio configurations. However, the SI levels at this location are overly conservative, by up to a factor of two. Therefore, when the thickness ratio is greater than 2.0, the shell element SI needs to be increased to values that will still conservatively represent the linearized solid brick element result levels. These values will be conservative, but much less than the factor of two that would result from using the mid-plane intersection values.

Comparison of Shell and Brick Elements FEA Models

Table A-1 presents the maximum linearized and peak stress results and stress multipliers for several different nozzle/vessel configurations using brick elements. Table A-4 is a sample ANSYS output of linearization results at the vessel, including the maximum total (peak) stress for Nozzle N06. Stresses are linearized through the thickness of the nozzle and vessel at the maximum stress intensity points. The selected models are for the TLP Separator, Reboiler, and Desuperheater vessels, where the nozzles are located on cylindrical portions of the vessels. removed from local discontinuities. Note that the Desuperheater nozzle is included only to provide more data for the evaluation of solid model peak stress intensity comparison to linearized stress intensity. Because of the mesh refinements at the ends of the fillets, results presented in Table A-3 are considered to be accurate SI values for later comparison to shell element results, and include a comparison of brick element model maximum peak SI to the linearized SI.

Figures A-14 through A-17 are typical stress intensity plots of the maximum stressed vessel and nozzle regions. The highest stressed locations are at the ends of the fillets. The overall stress plots are shown in Figures A-14 and A-16, and regions of highest stress are detailed in the segments shown in Figures A-15 and A-17. In Figures A-15 and A-17, the locations of ANSYS stress linearization are indicated by bold lines. Note that the ANSYS error estimate SMXB values are conservatively used in this analysis, rather than the peak stress intensities (both values are shown on Figures A-15 and A-17).

In this report, the ratio of the peak SI to the linearized SI is referred to as a "stress multiplier". This is similar to a stress concentration factor, which is applied only on a stress component level. A review of the results shows that the stress multiplier for vessel and nozzle stresses is not a function of nozzle size, but a function of the ratio of vessel thickness to nozzle thickness.

For clarity, vessel and nozzle dimensions presented in the first part of Table A-1 are not repeated in Tables A-2 and A-3. Table A-2 presents a comparison of SIs at the intersection of the nozzle and vessel using the shell

elements vs. linearized SI using the brick elements. Table A-3 presents a comparison of the same two FEA models, but the elements within the vessel thickness were unselected from the shell element FEA model. Figure A-1 is a plot of the vessel thickness to nozzle thickness ratio vs. stress multiplier (SM) for vessel stresses using the vessel SI data from Table A-1. A conservative bounding line is included in the plot, and will be used for determining stress multipliers to factor the vessel shell element equivalent "linearized" (surface) stresses to obtain shell element equivalent peak stresses. Figure A-2 is a similar plot for determining stress multipliers for nozzle stresses using the nozzle SI data from Table A-1, again with a conservatively selected bounding line. Note that conservatively selected bounding lines are included in similar subsequent data plots to assure that final results include a reasonable degree of conservatism.

Figures A-18 through A-20 are typical stress intensity plots of the maximum stressed vessel and nozzle regions. The highest stressed location is at the modeled intersection of the vessel and nozzle, which for the shell element model is at the theoretical intersection of the mid-thicknesses of the vessel and nozzle. The overall stress plots are shown in Figures A-18 and A-19. In Figure A-19, elements (and therefore, stress results) located between the theoretical mid-plane intersection and the actual outside surface locations have been removed ("unselected"). Figure A-20 is a local stress plot of Figure A-19 showing the element mesh.
Nozzle/vessel results from full vessel shell element models using typical meshes are now compared to the above refined brick element and refined equivalent shell element model results. Actual full vessel shell element models cannot always be modeled to the detail of the above detailed shell element nozzle/vessel models. For all of the full model analyses, nozzles are modeled to include nodes located at the vessel O.D. However, since it is not practical in full vessel models to model vessel shell elements at nozzles to the detail where stresses could be obtained at the nozzle O.D., results for vessel shell elements at the vessel/nozzle modeled intersection are used for comparison to the refined local model results. All results from the full vessel models are based on typical mesh densities in the current FEA reports. Figures A-4 and A-5 summarize the results of this analysis for vessel and nozzle stresses. These figures include the shell element results for the above refined local models (identified in the figures as "Equiv. Shell"). Based on these results, the vessel shell element SI are very high relative to the solid brick model linearized SI. Therefore, applying a multiplier to these values based solely on brick element peak to linearized SI ratios would be overly conservative. As a result, when using the SI for vessel stresses from the shell element model results, the brick element stress multipliers in Figure A-1 can be modified by the shell element to brick element linearized SI ratios shown by the bounding line in Figure A-4. These resulting stress multipliers are presented in Figure A-6 and are derived by simply dividing the bounding curve of Figure A-1 by the bounding curve of Figure A-4. This is shown in the following equations:

Vessel Peak Stresses Based on Brick Model = Vessel Shell Surface SI x Stress Multiplier (SM)

$$SM = \frac{Brick\_Model\_Peak\_SI}{Brick\_Model\_Linear\_SI} x \frac{Brick\_Model\_Linear\_SI}{Shell\_Model\_Surface\_SI}$$

$$SM = (Ordinate\_From\_Figure\_A-1) x \frac{1}{(Ordinate\_From\_Figure\_A-4)}$$

Note that the stress multipliers are less than 1.0 for vessel to nozzle thickness ratios greater than 2.63. It is recommended that for these configurations, the stress multiplier should be conservatively considered to be 1.0.

Figure A-7 is developed in similar manner to Figure A-6, except Figure A-7 presents the stress multipliers for the SI for nozzle stresses from shell element model results.
Finally, in the full vessel shell element models, it is noted that when a nozzle is located close to a local discontinuity that stiffens up the local region, such as the basket support plate in the desuperheater or the separator vessel internal extension and support of the vapor outlet nozzle, the nozzle/vessel stresses are lower than if these effects were not there. This was confirmed by locally restraining the brick element model of the desuperheater

nozzle at a distance consistent with the location of the basket support plate. For this reason, results of these two actual vessel/nozzle models were not included in this analysis, as noted at the end of Table A-1. Similarly, when a nozzle is located near a discontinuity that makes the local region more flexible, such as the steam inlet plenum on the reboiler, the stresses are higher than if the vessels were continuous at those locations. The effects of the plenum are evident in the high SI ratio of nearly 2.0 in Figure A-5 for the full vessel model, compared to a SI ratio of only 1.3 for the refined "equivalent" nozzle shell model. Since the full model results are higher than without the local discontinuity, these results are included in this analysis - noting that it would be inappropriate to attempt to "reduce" the full model results for this nozzle based on comparison to the refined shell and brick element models.
A list of ANSYS input files for the parametric study is provided in Table A-6.

RECOMMENDATIONS FOR EVALUATING SHELL ELEMENT RESULTS

Based on the results of this parametric study, the following methods will be used to evaluate shell element stress results at nozzle/vessel intersections:

Vessel Stress Intensity

- The vessel "linearized" SI will be the ANSYS maximum surface SI from the full vessel shell models determined at nodes located at the nozzle/vessel modeled mid-plane intersection. Should the linearized SI be above allowable limits, the linearized SI may be further reduced by the bounding line shown in Figure A-4. Some further reduction could be attained by the use of a localized solid brick element model.

- The vessel peak SI will be based on multiplying the ANSYS shell element SI determined at nodes located at the nozzle/vessel modeled mid-plane intersection by factors derived from the curve/equation of Figure A-6. The vessel SI multiplier shall not be less than 1.0. Note that some further reduction in SI could be attained by the use of a localized solid brick element model.

Nozzle Stress Intensity

- The nozzle "linearized" SI will be derived from the ANSYS maximum surface SI from the full vessel shell models determined at nodes located at the O.D of the vessel for all nozzles. This SI will be modified by dividing by the SI ratio found using the bounding line shown in Figure A-5. Some further reduction may be attained by the use of a localized solid brick element model.

- The nozzle peak SI will be based on multiplying the ANSYS shell element SI determined at nodes located at the O.D of the vessel by factors derived from the curve/equation of Figure A-7. Note that some further reduction in SI could be attained by the use of a localized solid brick element model.

An example of how to use the above methods is presented in Appendix D.

Table A-1: Maximum Linearized and Peak SI from Solid Brick Element Models of Several Nozzle/Vessel Configurations

							Maximum Vessel Stress Intensity (psi)		
Vessel Name	Vessel O.D.	Vessel Thk.	Nozzle Designation	Nozzle O.D.	Nozzle Thk.	Ves. Thk./ Noz.	Linearized Stress Intensity (psi)	Total (Peak) Stress Intensity (psi)	SM Ratio, Peak to Linearized
	(in.)	(in.)		(in.)	(in.)	Thk.			
Separator	91.000	0.460	N24	1.315	0.139	3.309	9,112	19,979	2.19
Reboiler	60.750	0.335	N05	1.315	0.139	2.410	21,930	42,803	1.95
Reboiler	60.750	0.335	N06	2.375	0.178	1.882	56,250	107,299	1.91
Separator	138.375	0.835	N13	4.500	0.297	2.811	11,230	23,516	2.09
Desuperheater	54.000	1.46	N01*	18.000	0.95	1.537	32,730	58,935	1.80
Reboiler	72.000	0.710	N03	18.000	0.585	1.214	14,530	24,666	1.70
Reboiler	60.750	0.710	N02	24.000	0.710	1.000	24,640	37,464	1.52
Separator	92.000	0.960	N04*	30.000	1.085	0.848	16,450	26,185	1.59

NOTE: The SI data is plotted in Figure A-1.
The maximum linearized SI may not be necessarily at the same location where the maximum peak SI is. (See Figure A-3)

			Maximum Nozzle Stress Intensity (psi)		
Vessel Name	Nozzle Designation	Ves. Thk./ Noz. Thk.	Linearized Stress Intensity (psi)	Peak Stress Intensity (psi)	SM Ratio, Shell to Brick
Separator	N24	3.309	33,240	54,344	1.63
Reboiler	N05	2.410	50,680	82,965	1.64
Reboiler	N06	1.882	84,240	141,518	1.68
Separator	N13	2.811	31,550	52,603	1.67
Desuperheater	N01*	1.537	50,800	84,058	1.65
Reboiler	N03	1.214	15,240	26,684	1.75
Reboiler	N02	1.000	20,640	33,686	1.63
Separator	N04*	0.848	10,930	19,287	1.76

NOTE: The SI data is plotted in Figure A-2.

*Note: The vessel near Desuperheater Nozzle N01 is reinforced internally by the basket support plate. Separator nozzle N04 extends inside vessel. Therefore, the results for these configurations are used only for stress multiplier (SM) ratio evaluation.

Table A-2: Comparison of Maximum SI from Shell Elements at Modeled Mid-Surfaces to Maximum Linearized Brick Element SI

			Maximum Vessel Stress Intensity (psi)		
Vessel Name	Nozzle Designation	Ves. Thk./ Noz. Thk.	Shell Elements, Surface	Linearized Brick Elements	SI Ratio, Shell to Brick
Separator	N24	3.309	33,056	9,112	3.63
Reboiler	N05	2.410	67,554	21,930	3.08
Reboiler	N06	1.882	99,992	56,250	1.78
Separator	N13	2.811	32,505	11,270	2.89
Reboiler	N03	1.214	19,055	14,530	1.31
Reboiler	N02	1.000	34,774	24,640	1.41

NOTE: The SI data is plotted in Figure A-4.

			Maximum Nozzle Stress Intensity (psi)		
Vessel Name	Nozzle Designation	Ves. Thk./ Noz. Thk.	Shell Elements, Surface	Linearized Brick Elements	SI Ratio, Shell to Brick
Separator	N24	3.309	53,005	33,240	1.59
Reboiler	N05	2.410	104,463	50,680	2.06
Reboiler	N06	1.882	205,241	84,240	2.44
Separator	N13	2.811	59,982	31,550	1.90
Reboiler	N03	1.214	26,574	15,240	1.74
Reboiler	N02	1.000	33,801	20,640	1.64

NOTE: The shell element stresses are taken at the modeled intersection of the nozzle and vessel, without removing elements between the nozzle mean diameter and outside surface.

Table A-3: Comparison of Shell Element SI at Outer Surface Intersection Locations to Maximum Linearized Brick Element SI

			Maximum Vessel Stress Intensity (psi)		
Vessel Name	Nozzle Designation	Ves. Thk./ Noz. Thk.	Shell Elements, Surface at Nozzle O.D.	Linearized Brick Elements	SI Ratio, Shell to Brick
Separator	N24	3.309	25,946	9,112	2.85
Reboiler	N05	2.410	53,665	21,930	2.45
Reboiler	N06	1.882	88,221	56,250	1.57
Separator	N13	2.811	28,439	11,230	2.53
Reboiler	N03	1.214	16,861	14,530	1.16
Reboiler	N02	1.000	30,112	24,640	1.22

			Maximum Nozzle Stress Intensity (psi)		
Vessel Name	Nozzle Designation	Ves. Thk./ Noz. Thk.	Shell Elements, Surface at Vessel O.D.	Linearized Brick Elements	SI Ratio, Shell to Brick
Separator	N24	3.309	23,488	33,240	0.71
Reboiler	N05	2.410	50,628	50,680	1.00
Reboiler	N06	1.882	119,754	84,240	1.42
Separator	N13	2.811	27,937	31,550	0.89
Reboiler	N03	1.214	20,177	15,240	1.32
Reboiler	N02	1.000	27,367	20,640	1.33

NOTE: The SI data is plotted in Figure A-5.

Table A-4: ANSYS Linearization Results for the TLP Reboiler 2" Nozzle N06 Local Solid Brick Element Model at the Maximum Linearized Stress Location in the Vessel

PRINT LINEARIZED STRESS THROUGH A SECTION DEFINED BY PATH= N06VA DSYS= 0

***** POST1 LINEARIZED STRESS LISTING *****
INSIDE NODE = 138278 OUTSIDE NODE = 138259

LOAD STEP 1 SUBSTEP= 1
TIME= 1.0000 LOAD CASE= 0

THE FOLLOWING X,Y,Z STRESSES ARE IN THE GLOBAL COORDINATE SYSTEM.

** MEMBRANE **

SX	SY	SZ	SXY	SYZ	SXZ
5207.	5521.	3380.	2721.	2296.	1678.
S1	**S2**	**S3**	**SINT**	**SEQV**	
9413.	2780.	1916.	7498.	7105.	

** BENDING ** I=INSIDE C=CENTER O=OUTSIDE

	SX	SY	SZ	SXY	SYZ	SXZ
I	-0.4831E+05	-4946.	-0.4447E+05	-6658.	-4490.	-8998.
C	0.000	0.000	0.000	0.000	0.000	0.000
O	0.4831E+05	4946.	0.4447E+05	6658.	4490.	8998.
	S1	**S2**	**S3**	**SINT**	**SEQV**	
I	-3698.	-0.3720E+05	-0.5683E+05	0.5313E+05	0.4653E+05	
C	0.000	0.000	0.000	0.000	0.000	
O	0.5683E+05	0.3720E+05	3698.	0.5313E+05	0.4653E+05	

** MEMBRANE PLUS BENDING ** I=INSIDE C=CENTER O=OUTSIDE

	SX	SY	SZ	SXY	SYZ	SXZ
I	-0.4311E+05	575.9	-0.4109E+05	-3936.	-2194.	-7321.
C	5207.	5521.	3380.	2721.	2296.	1678.
O	0.5352E+05	0.1047E+05	0.4785E+05	9379.	6786.	0.1068E+05
	S1	**S2**	**S3**	**SINT**	**SEQV**	
I	985.4	-0.3473E+05	-0.4987E+05	0.5086E+05	0.4523E+05	
C	9413.	2780.	1916.	7498.	7105.	
O	0.6422E+05	0.3964E+05	7973.	**0.5625E+05**	0.4884E+05	

** PEAK ** I=INSIDE C=CENTER O=OUTSIDE

	SX	SY	SZ	SXY	SYZ	SXZ
I	2478.	-261.5	2093.	2332.	1887.	1566.
C	-2438.	871.0	-1969.	-1526.	-1202.	-1490.
O	0.1722E+05	-6093.	0.1352E+05	2037.	1334.	9501.
	S1	**S2**	**S3**	**SINT**	**SEQV**	
I	5440.	712.2	-1842.	7282.	6399.	
C	1585.	-697.5	-4424.	6009.	5254.	
O	0.2524E+05	5698.	-6286.	0.3152E+05	0.2756E+05	

** TOTAL ** I=INSIDE C=CENTER O=OUTSIDE

	SX	SY	SZ	SXY	SYZ	SXZ
I	-0.4063E+05	314.4	-0.3899E+05	-1604.	-307.4	-5755.
C	2769.	6392.	1411.	1195.	1094.	187.6
O	0.7074E+05	4374.	0.6137E+05	0.1142E+05	8120.	0.2018E+05
	S1	**S2**	**S3**	**SINT**	**SEQV**	**TEMP**
I	377.4	-0.3402E+05	-0.4567E+05	0.4604E+05	0.4147E+05	123.0
C	6970.	2424.	1179.	5791.	5280.	
O	0.8908E+05	0.4535E+05	2051.	**0.8703E+05**	0.7537E+05	123.0

Table A-5: Brick Element Model Mesh Refinement Details

	Nozzle Description	Sep. N24	Reb. N05	Reb. N06	Sep. N13	Desup N01	Reb. N03	Reb. N02	Sep. N04
	Nozzle Size (in.)	1	1	2	4	18	18	24	30
	Ves. Thk./Noz. Thk.	3.309	2.410	1.882	2.811	1.537	1.214	1.000	0.848
VESSEL	Thru Thk. Element Size, % Ves. Thk.	9.1	12.5	14.3	10.0	16.7	16.7	16.7	16.7
VESSEL	Element Size Next to Fillet Weld Leg, % Weld Leg	8.3	6.3	5.6	6.2	6.6	8.5	9.1	10.8
NOZZLE	Thru Thk. Element Size, % Noz. Thk.	20.0	20.0	20.0	20.0	20.0	20.0	20.0	20.0
NOZZLE	Element Size Next to Fillet Weld Leg, % Weld Leg	6.9	5.3	6.5	5.1	8.9	7.8	10.1	9.5

Note: All element sizes next to the fillet weld legs in the circumferential direction are maintained at an arc of approximately one degree, assuring good element proportions.

Table A-6: List of ANSYS Input File for Parametric Study

	Vessel Name	Nozzle Designation	Nozzle O.D.	ANSYS Input Files
			(in.)	
Shell Element Models	Separator	N24	1.315	01inNozREbShellINP.txt
	Reboiler	N05	1.315	01NozN05RebShellINP.txt
	Reboiler	N06	2.375	02inNozN06RebShellINP.txt
	Separator	N13	4.500	04in NozN13SepShellINP.txt
	Desuperheater	N01	18.000	18inNozN01DesupShellINP.txt
	Reboiler	N03	18.000	18inNozN03RebShellINP.txt
	Reboiler	N02	24.000	24inNozN02RebShellINP.txt
	Separator	N04	30.000	30inNozN04SepShellINP.txt
Brick Element Models	Separator	N24	1.315	CylNoz01inSepN24RN5TestINP.txt
	Reboiler	N05	1.315	CylNoz01inRebRN5TestINP.txt
	Reboiler	N06	2.375	CylNoz02inRN5TestINP.txt
	Separator	N13	4.500	CylNoz04inRN5BTestINP.txt
	Desuperheater	N01	18.000	CylNoz18inDesupRN5TestINP.txt CylNoz18inDesupRN5ATestINP.txt
	Reboiler	N03	18.000	CylNoz18inBN5TestINP.txt CylNoz18inCV5TestINP.txt
	Reboiler	N02	24.000	CylNoz24inRN5ATestINP.txt CylNoz24inRV6TestINP.txt
	Separator	N04	30.000	CylNoz30inSepRN5TestINP.txt CylNoz30inSepRV6TestINP.txt

Pg V-186

Figure A-A-1: Vessel Thickness / Nozzle Thickness vs. Brick Element Vessel Stress Multiplier (Peak SI / Linearized SI)

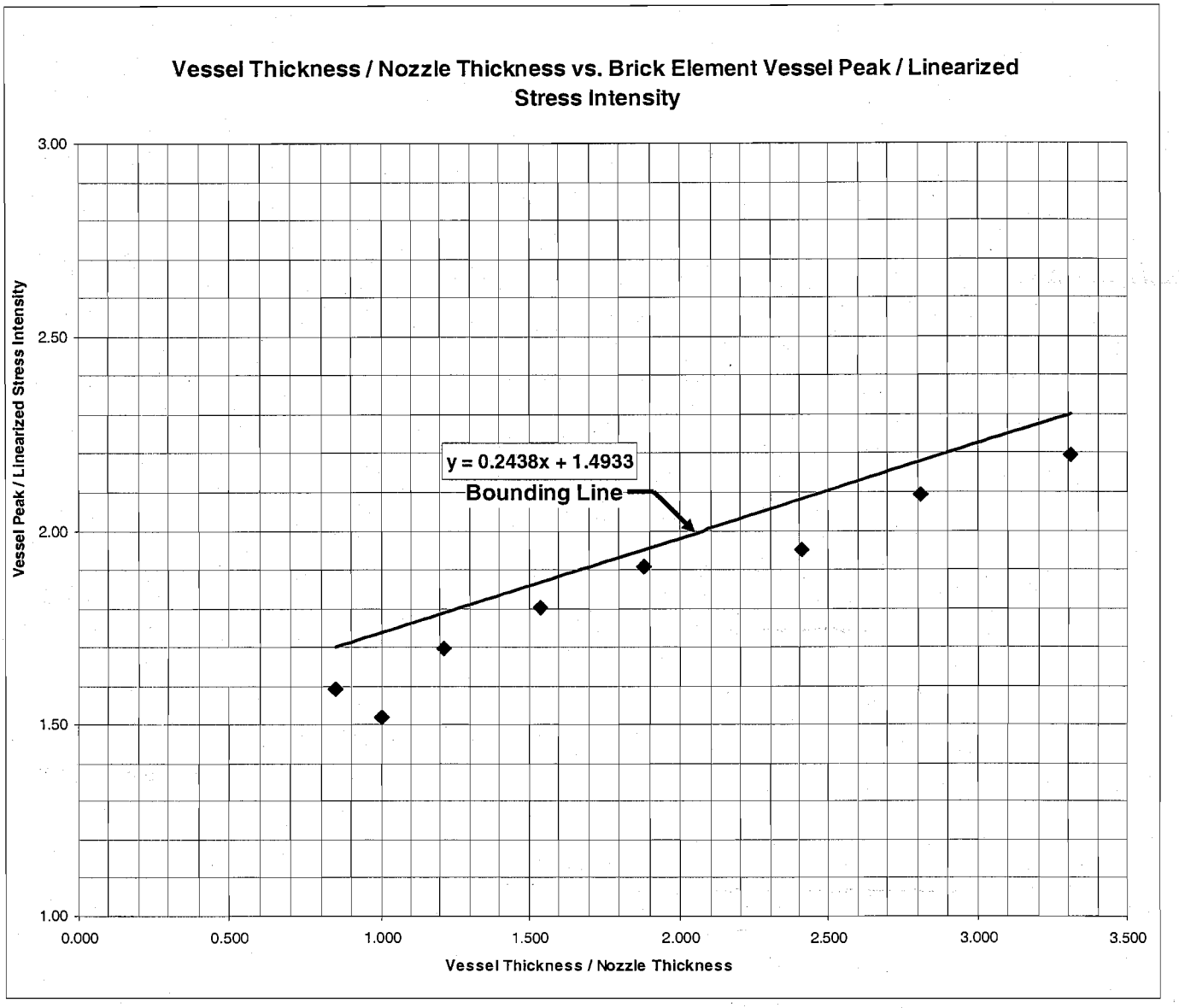

NOTE: The source data is from Table A-1 for vessel stresses.

Pg V-187

Figure A-A-2: Vessel Thickness / Nozzle Thickness vs. Brick Element Nozzle Stress Multiplier (Peak SI / Linearized SI)

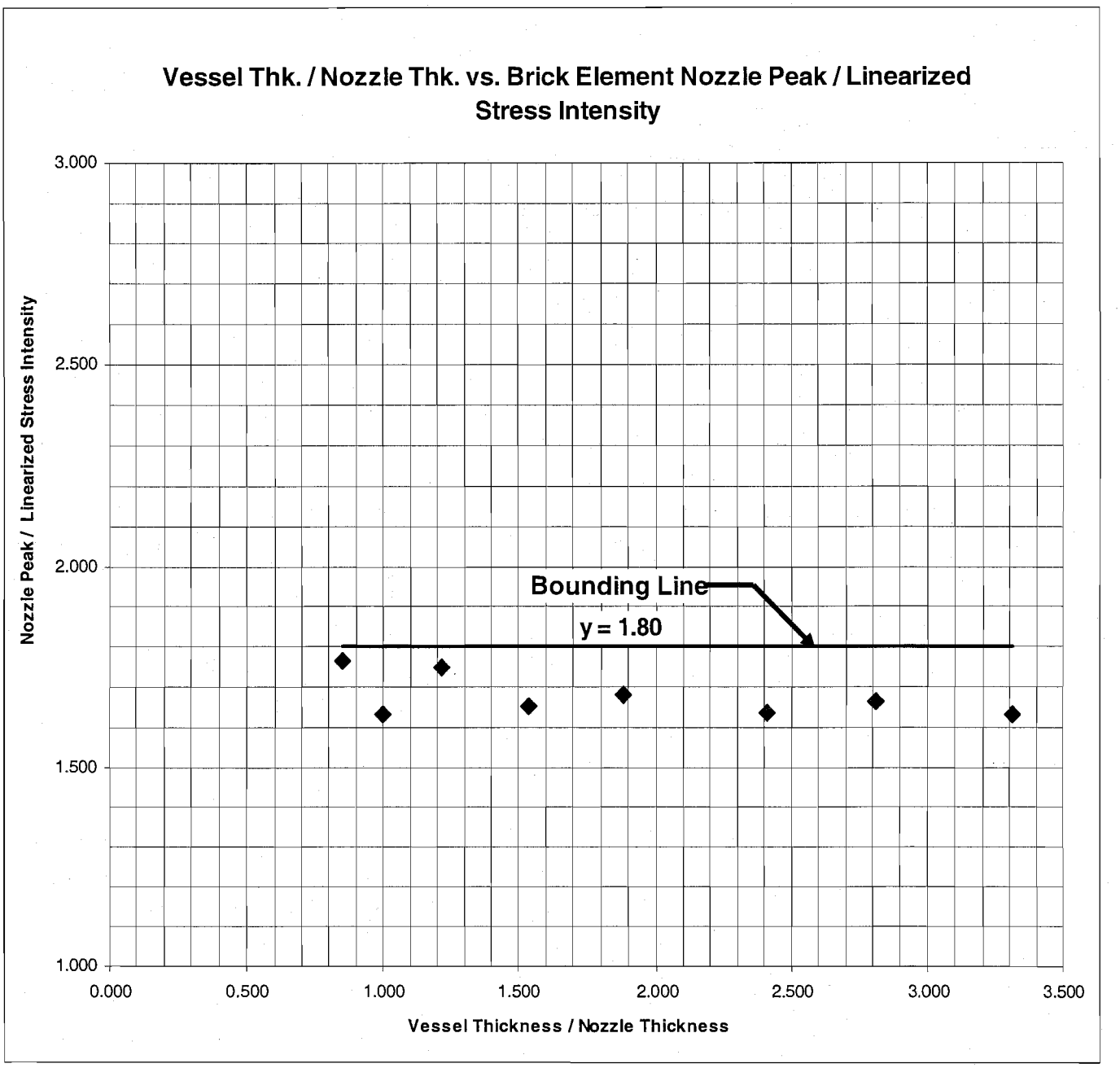

NOTE: The source data is from Table A-1 for nozzle stresses.

Figure A-A-3: Comparison of ANSYS Shell Element and Brick Element Results for TLP Reboiler Vessel, 2" Nozzle N06 Model

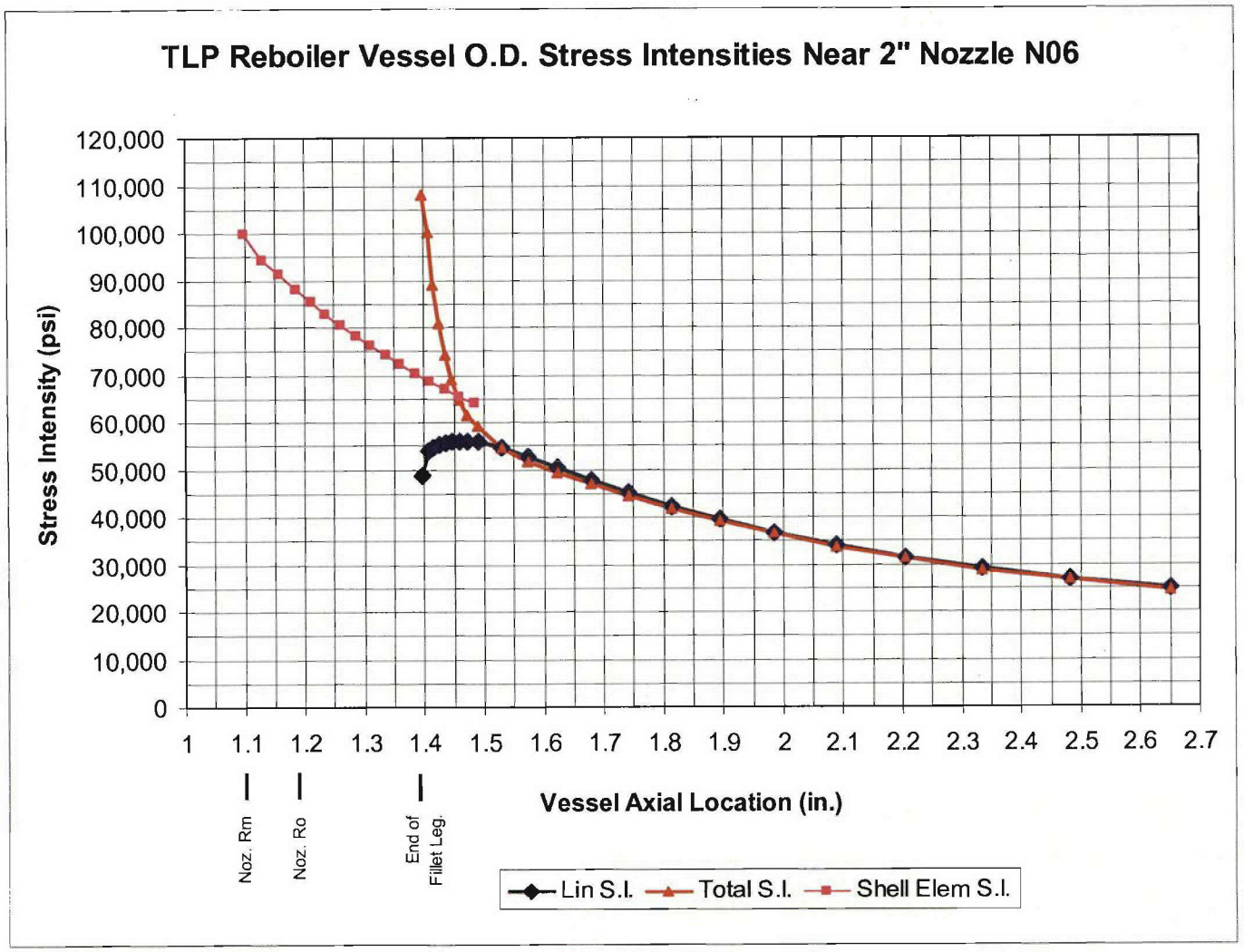

Definitions: Rm is the mean radius of the nozzle.
Ro is the outside radius of the nozzle.

Figure A-A-4: Vessel Thickness/Nozzle Thickness vs. Shell SI to Brick Element Linearized SI Ratio for Vessel Stresses

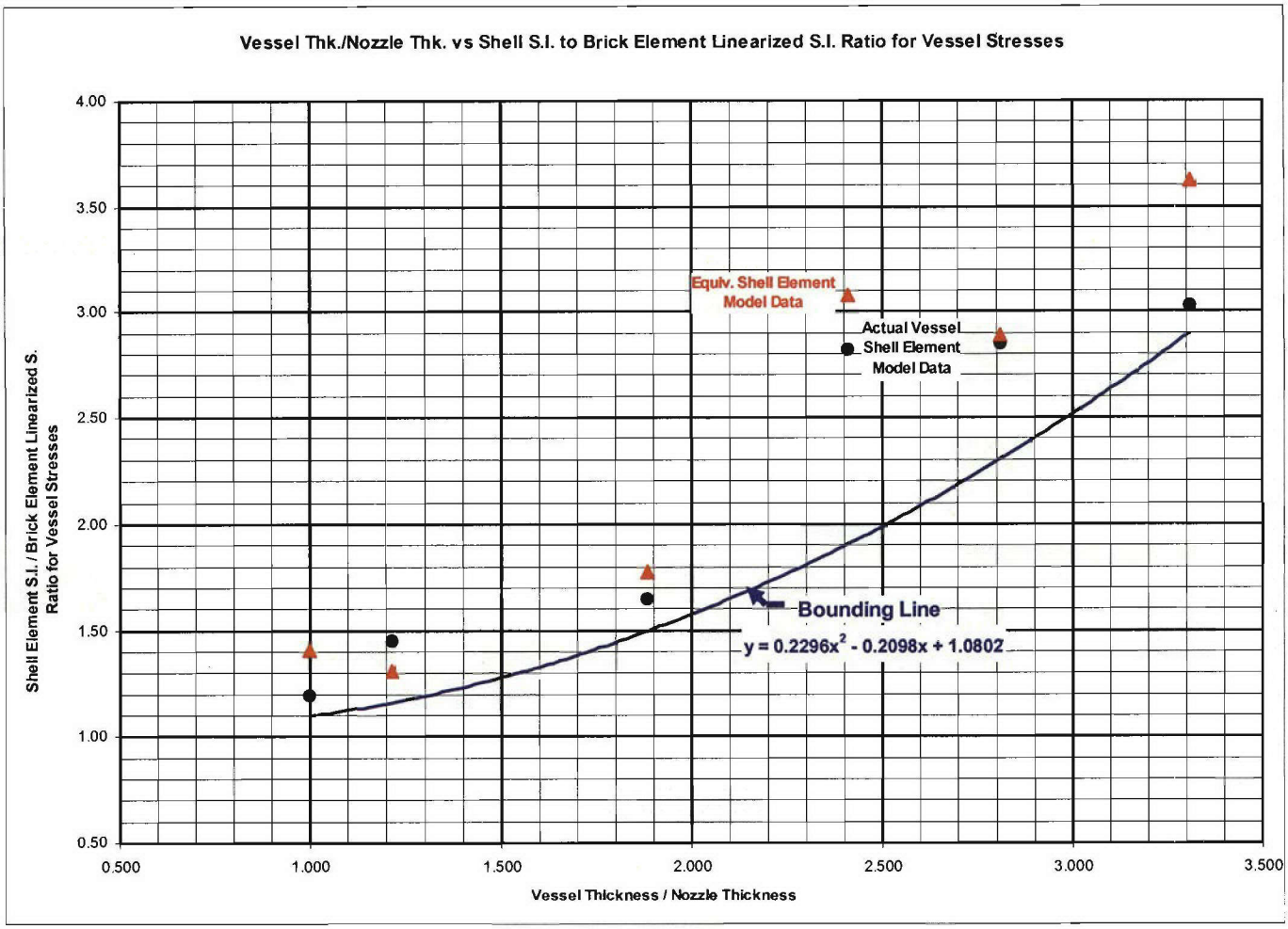

Notes:

1. Vessel SI are conservatively taken at the modeled intersection of nozzle/vessel.
2. Data represented by triangular points are from Table A-2. Data represented by round points are from actual vessel models that are not included in this report and are presented for information purposes only.

Figure A-A-5: Vessel Thickness/Nozzle Thickness vs. Shell SI to Brick Element Linearized SI Ratio for Nozzle Stresses

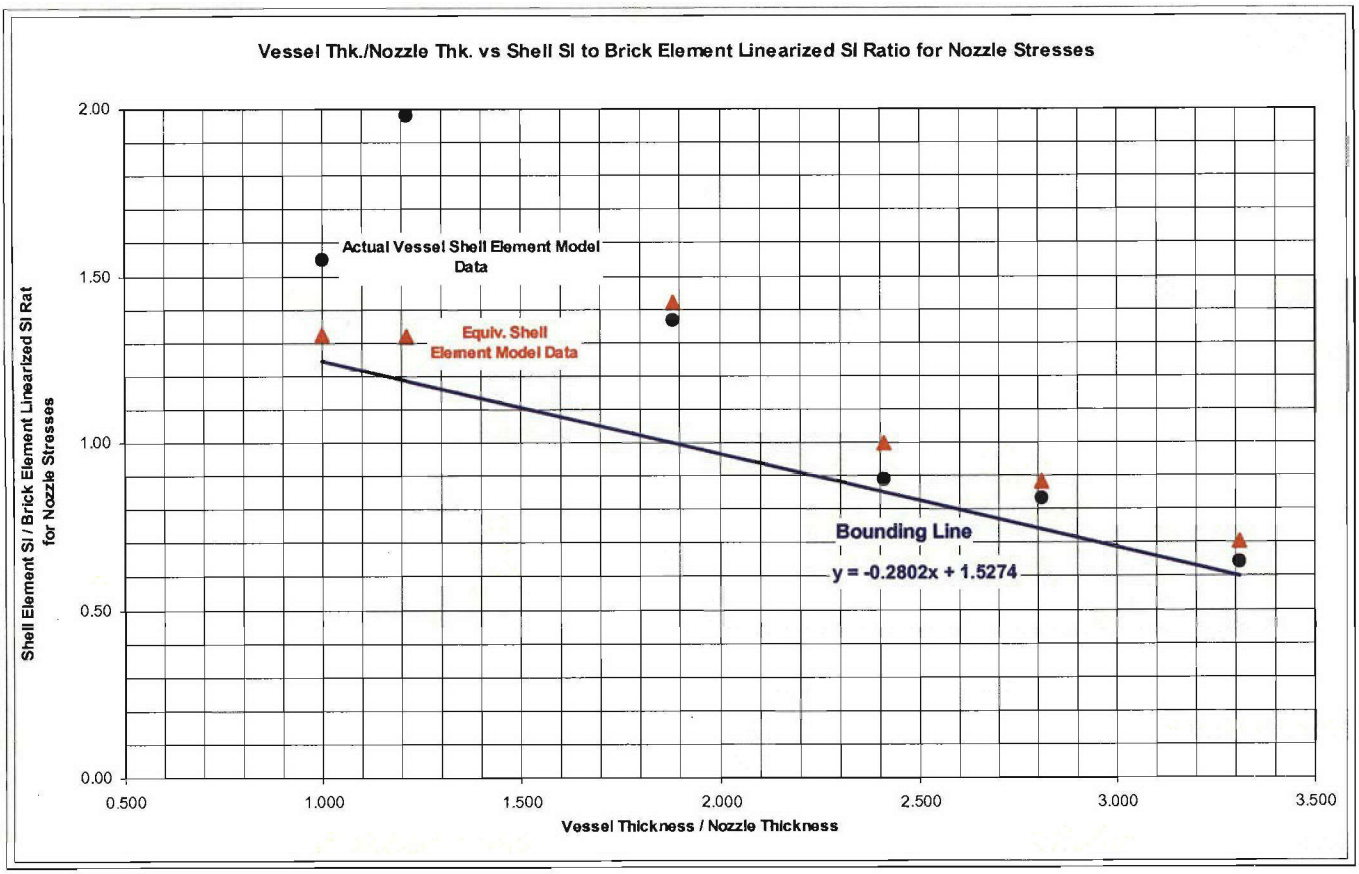

Note: Data represented by triangular points are from Table A-3. Data represented by round points are from actual vessel models that include variations in mesh densities and local discontinuities. These models are not included in this report and are presented for information purposes only.

Pg V-191

Figure A-A-6: Stress Multipliers for Vessel Peak Stresses, Based on the Vessel Stress Multiplier Bounding Line of Figure A-1 Divided by the Bounding Line Data of Figure A-4

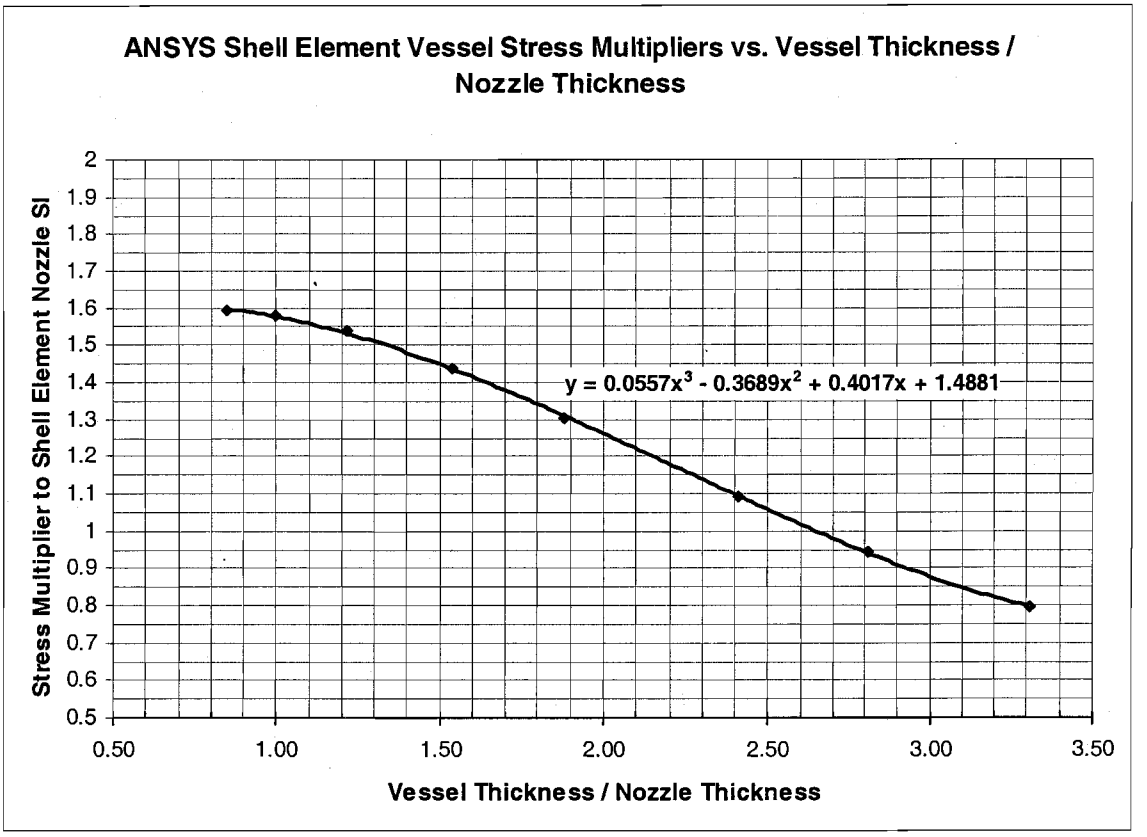

Note: Vessel SI Stress Multiplier is limited to not less than 1.0.

Note: It is recommended that a stress multiplier of 1.0 be conservatively used for thickness ratios greater than 2.63.

Figure A-A-7: Stress Multipliers for Nozzle Peak Stresses, Based on the Vessel Stress Multiplier Bounding Line of Figure A-2 Divided by the Bounding Line Data of Figure A-5

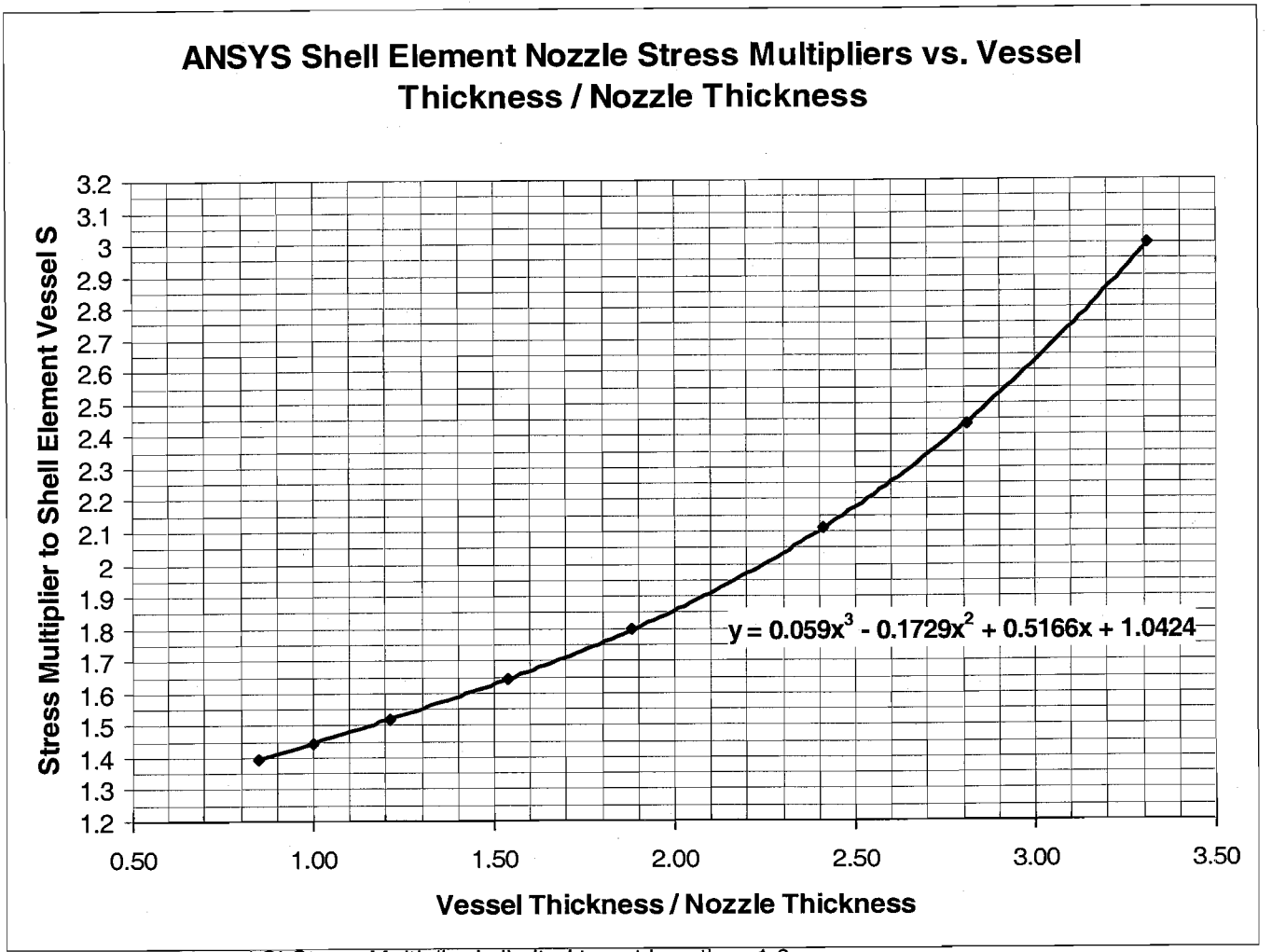

Note: Vessel SI Stress Multiplier is limited to not less than 1.0.

Figure A-A-8: Element Mesh in the TLP Reboiler Vessel ANSYS FEA Shell Element Model Near the Vessel/Nozzle Intersection of the 2" Nozzle N06

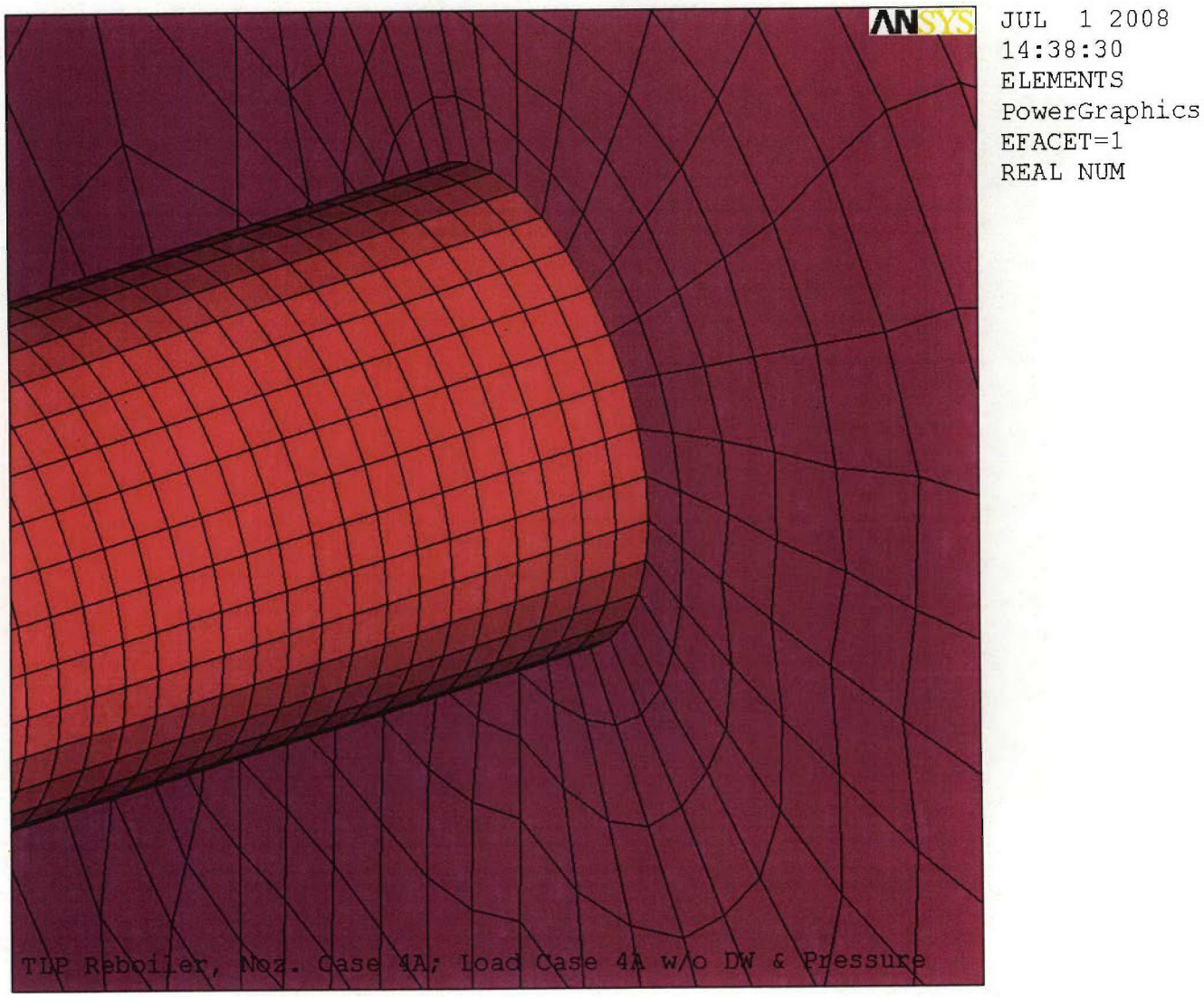

Figure A-A-9: Element Mesh in the TLP Reboiler ANSYS FEA Local Shell Element Model Near the Vessel/Nozzle Intersection of the 2" Nozzle N06

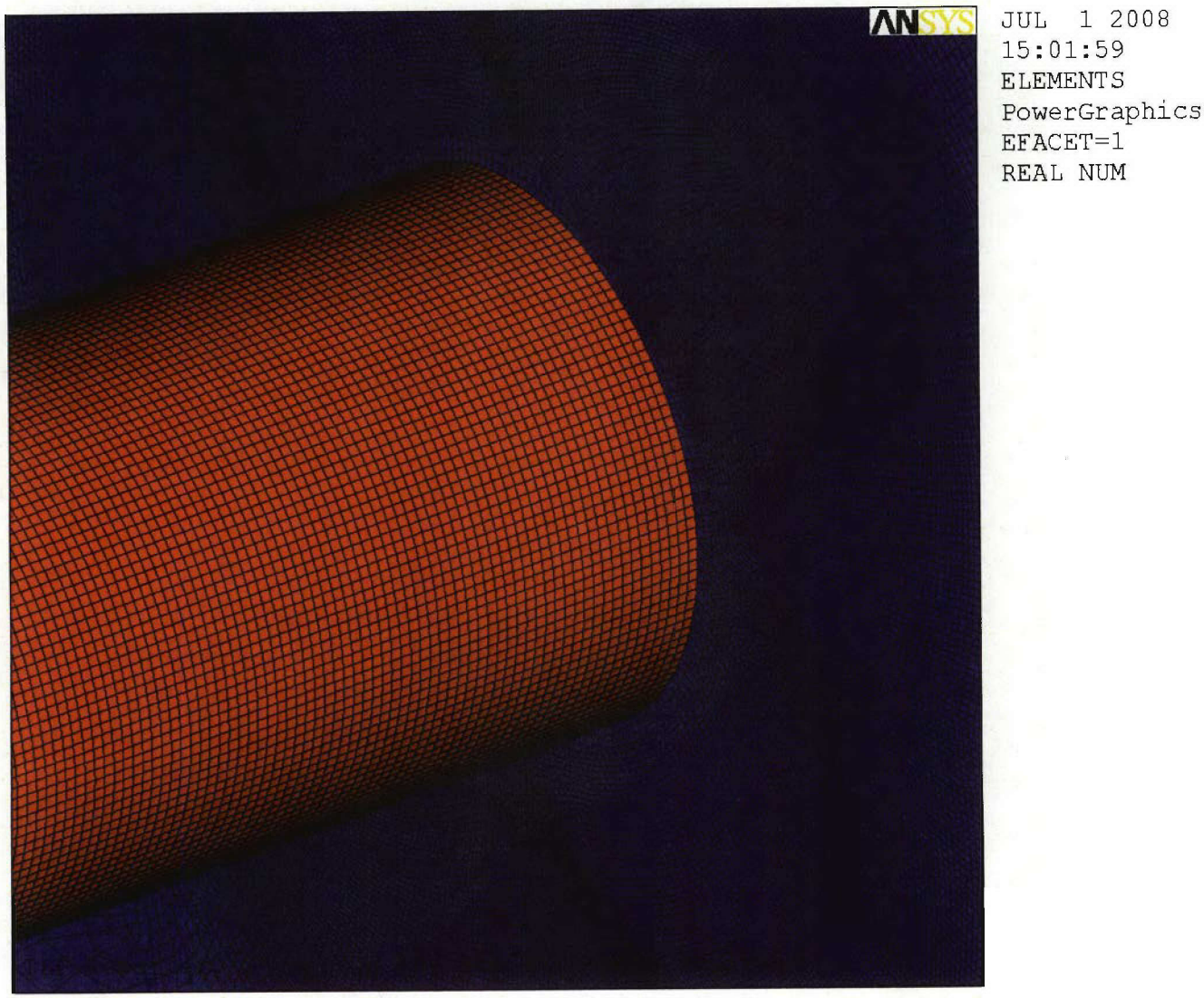

Figure A-A-10: Element Mesh in the TLP Reboiler ANSYS FEA Local Solid Brick Element Model Near the Vessel/Nozzle Intersection of the 2" Nozzle N06; w/o Element Details

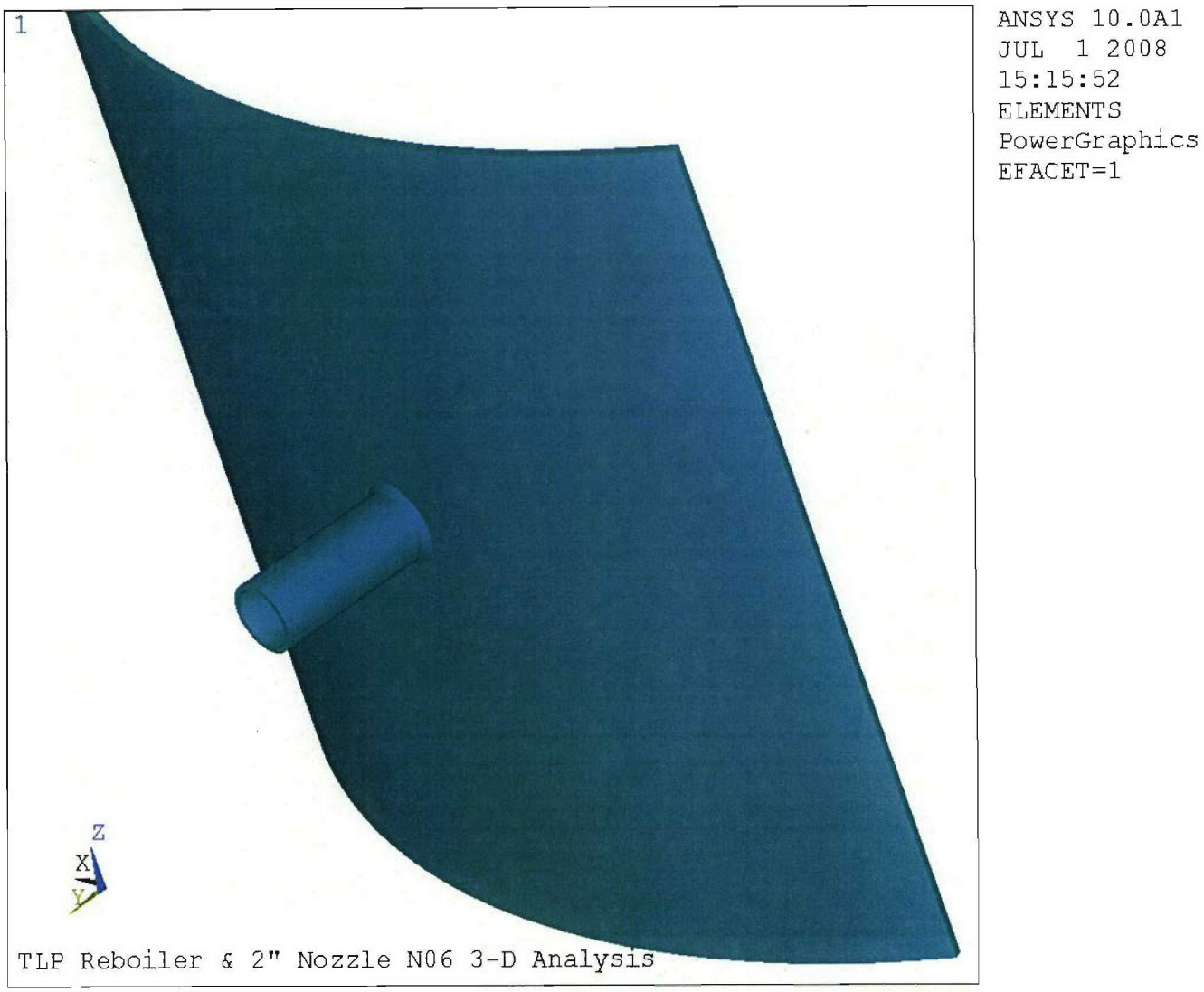

Pg V-196

Figure A-A-11: Element Mesh in the TLP Reboiler ANSYS FEA Local Solid Brick Element Model Near the Vessel/Nozzle Intersection of the 2" Nozzle N06; Sectioned to Show 3-D Details

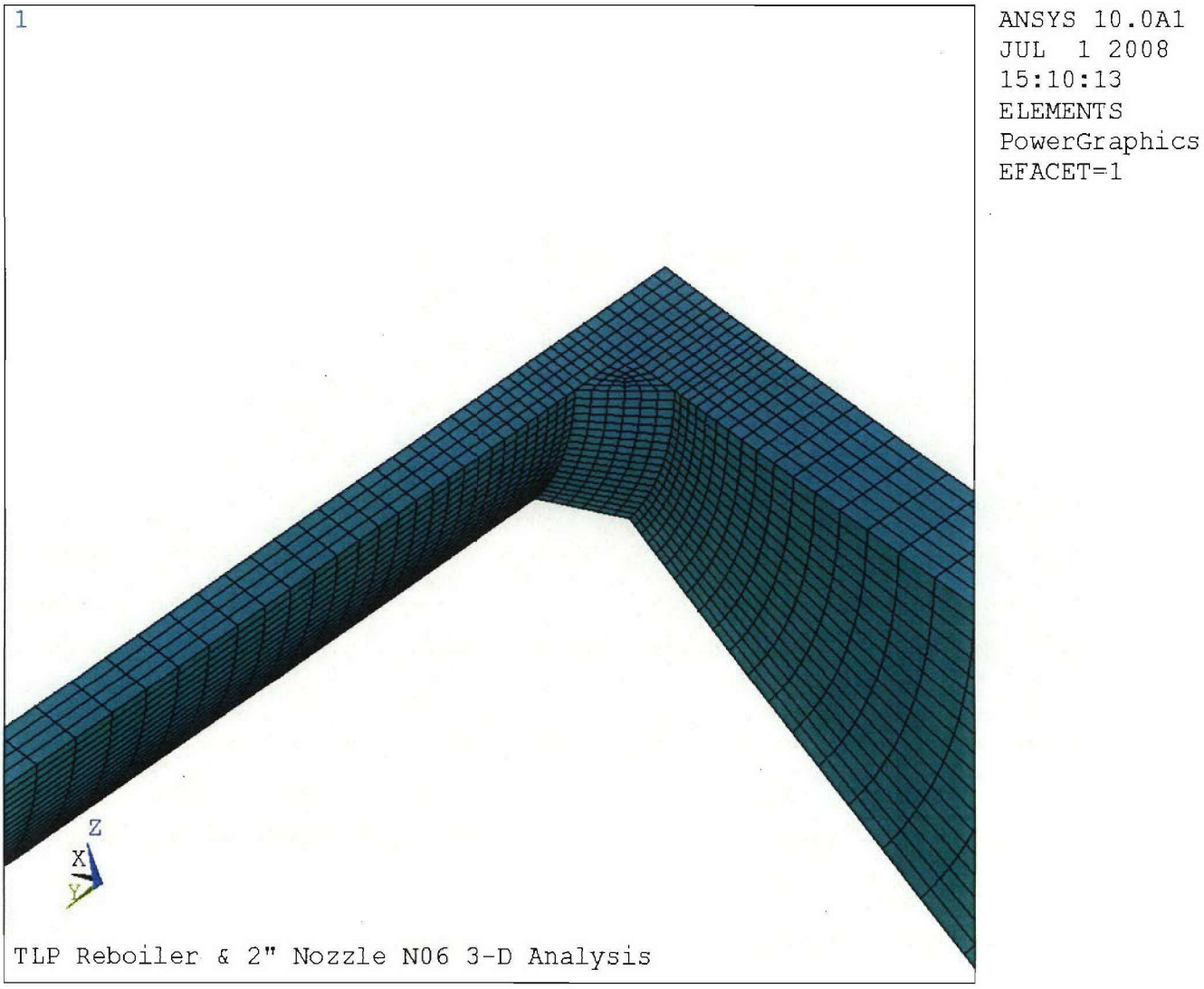

Pg V-197

Figure A-A-12: TLP Reboiler ANSYS FEA Brick Element Model From Figure A-11, Mesh Refined at Fillet/Vessel Region for Local Stress Evaluation

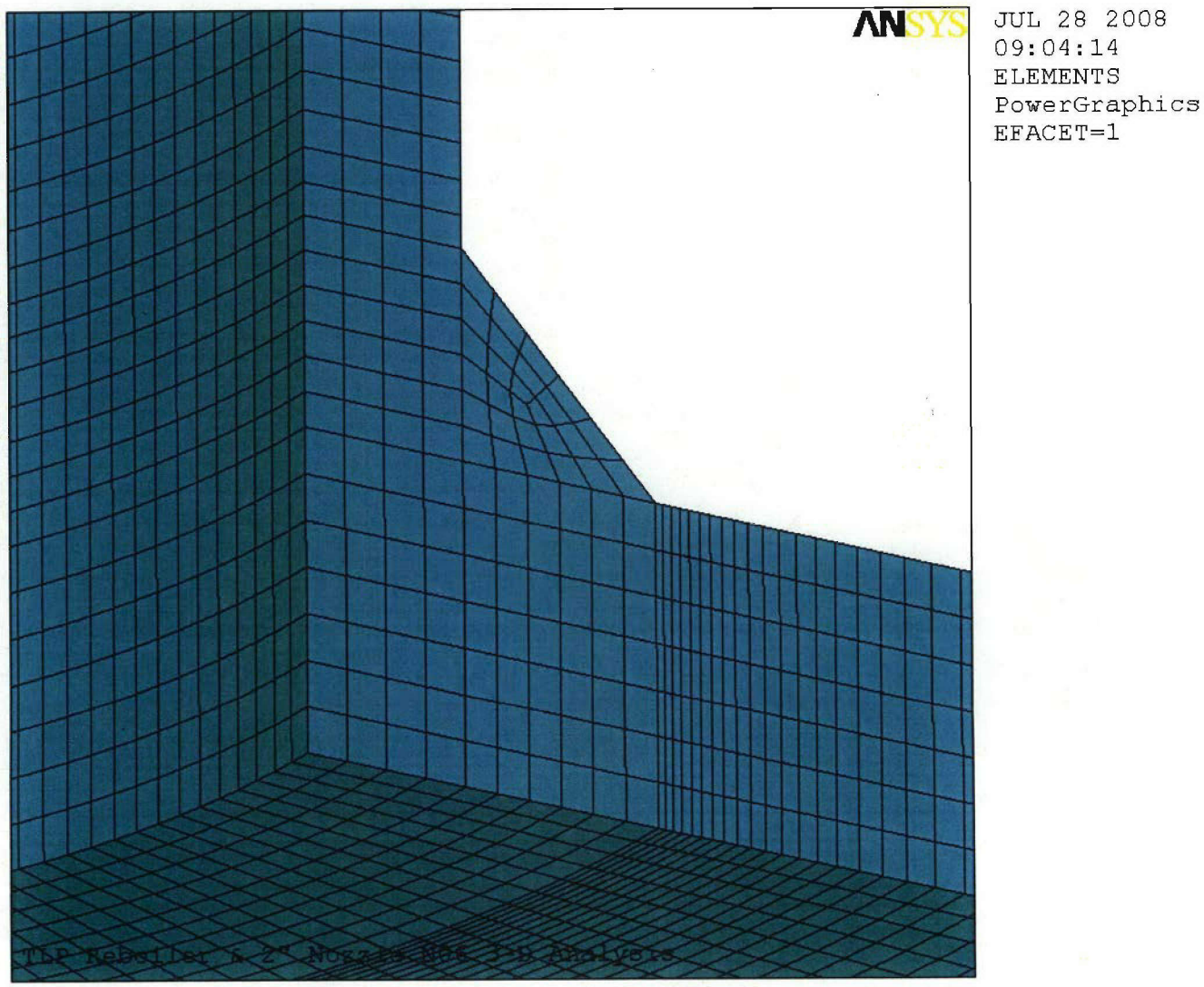

Figure -A-13: TLP Reboiler ANSYS FEA Brick Element Model From Figure A-11, Mesh Refined at Fillet/Nozzle Region for Local Stress Evaluation

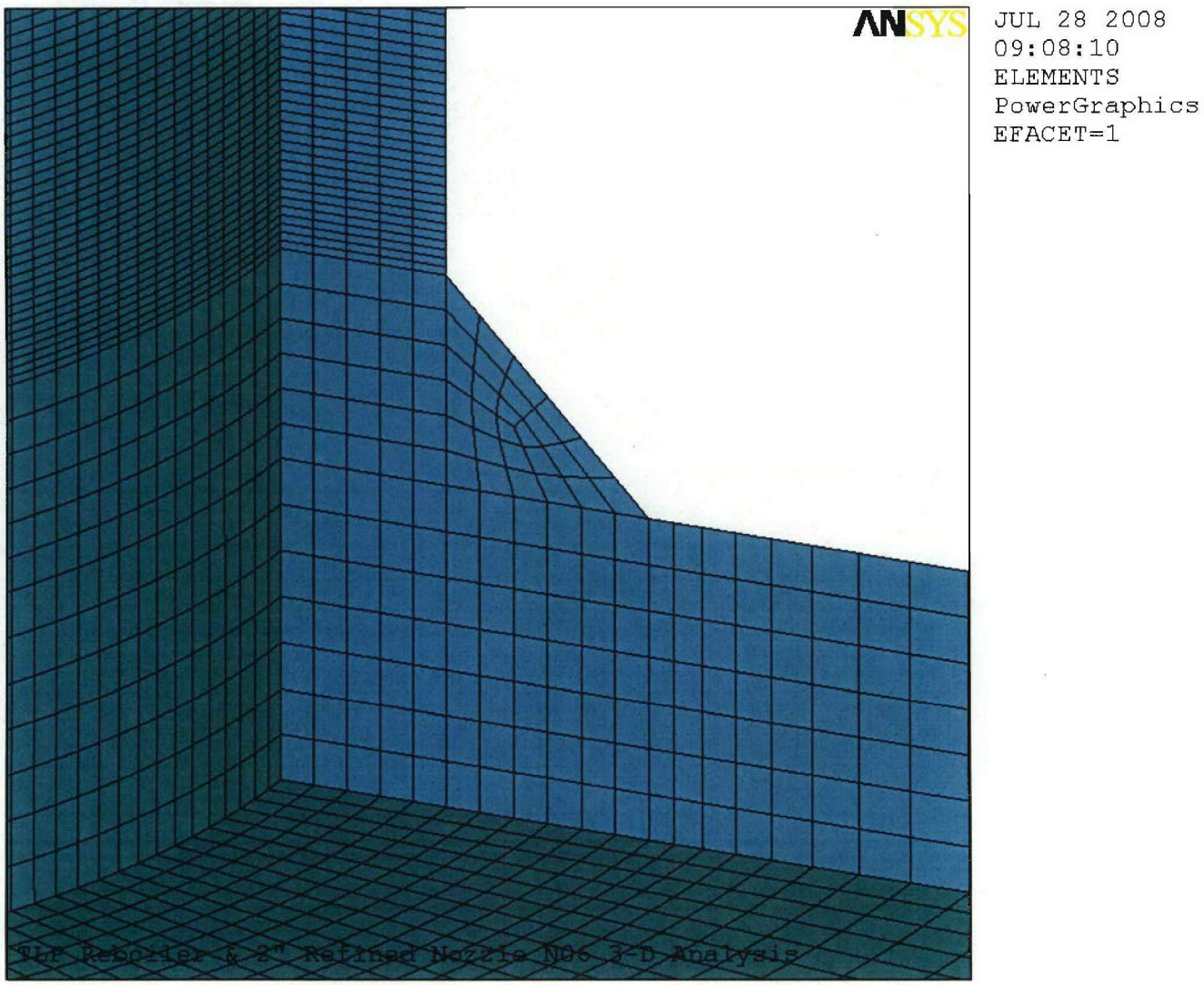

Figure A-A-14: TLP Reboiler ANSYS 2" Nozzle N06 FEA Brick Element Model; Stress Intensities

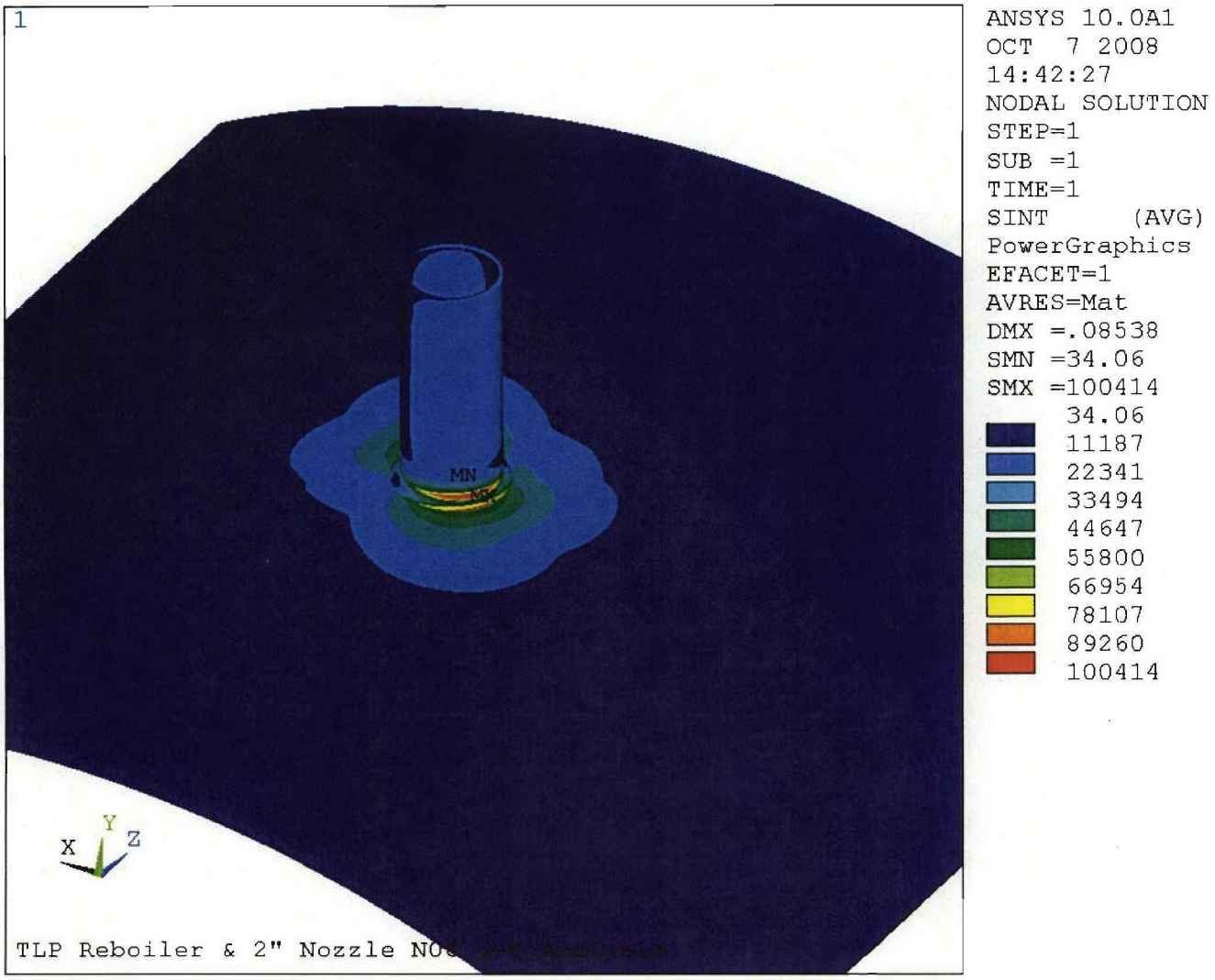

Figure A-A-15: TLP Reboiler ANSYS 2" Nozzle N06 FEA Brick Element Model; Maximum Stress Intensities at Fillet/Vessel Region

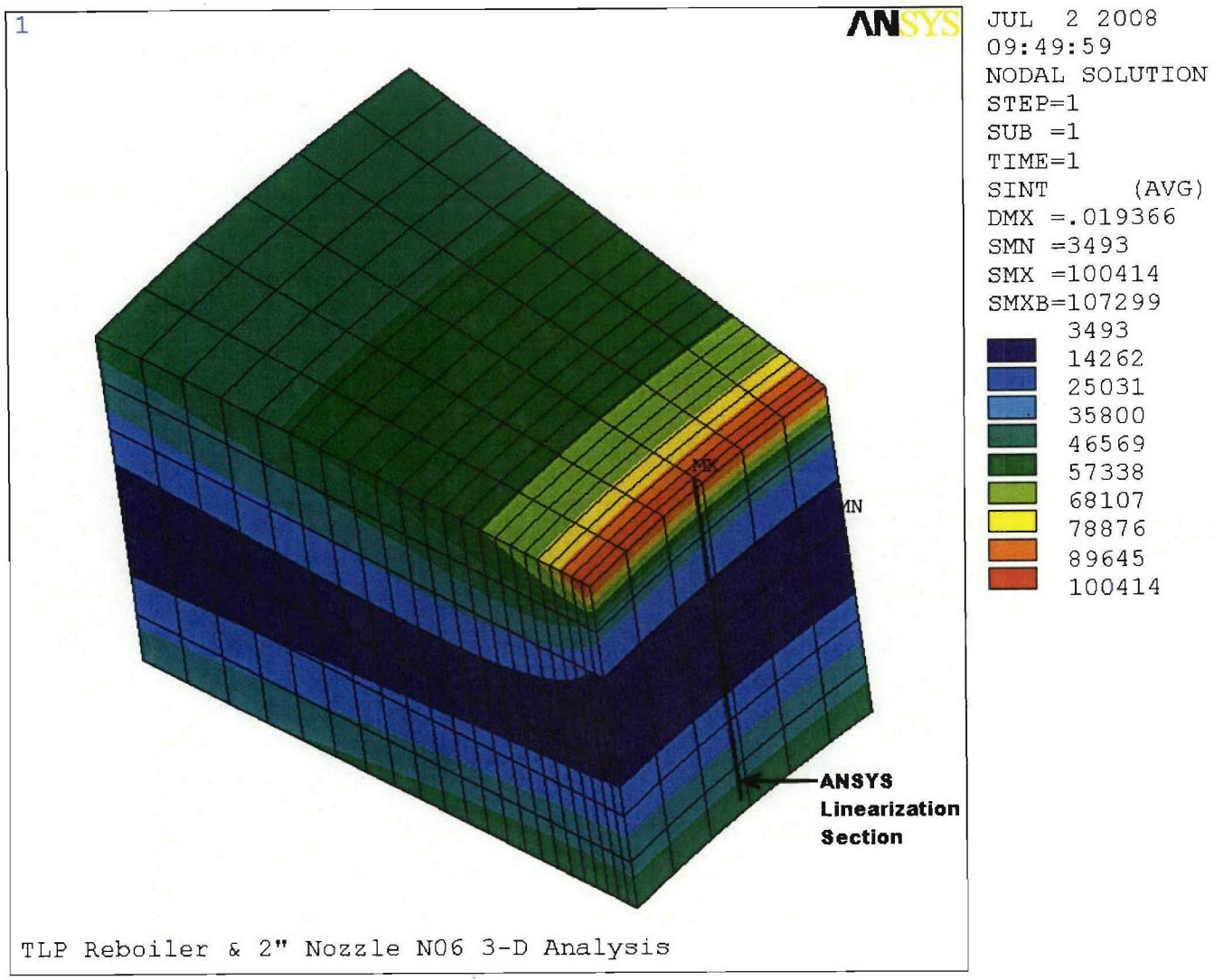

Pg V-201

Figure A-A-16: TLP Reboiler ANSYS 2" Nozzle N06 FEA Brick Element Model; Stress Intensities

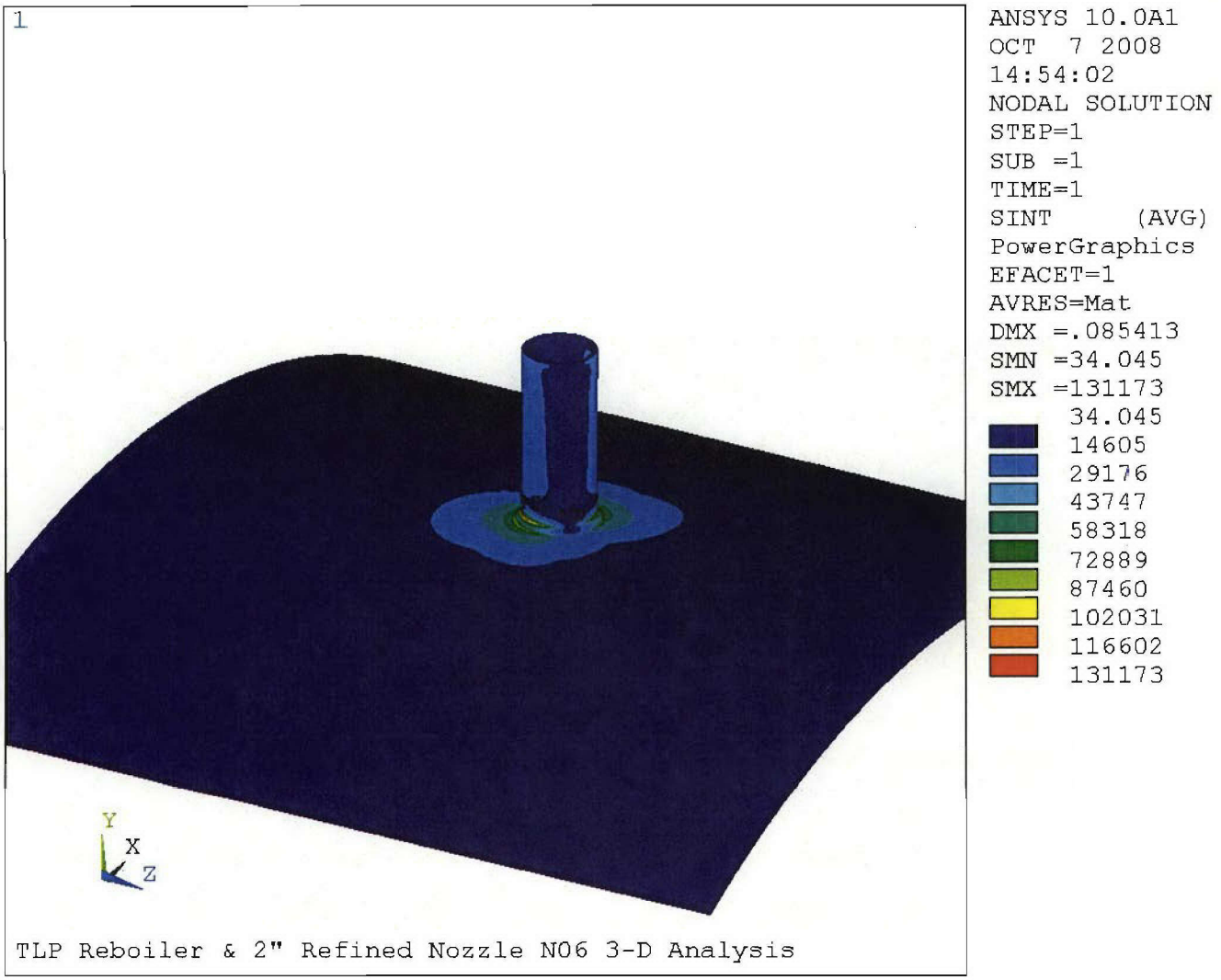

Pg V-202

Figure A-A-17: TLP Reboiler ANSYS 2" Nozzle N06 FEA Brick Element Model; Maximum Stress Intensities at Fillet/Nozzle Region

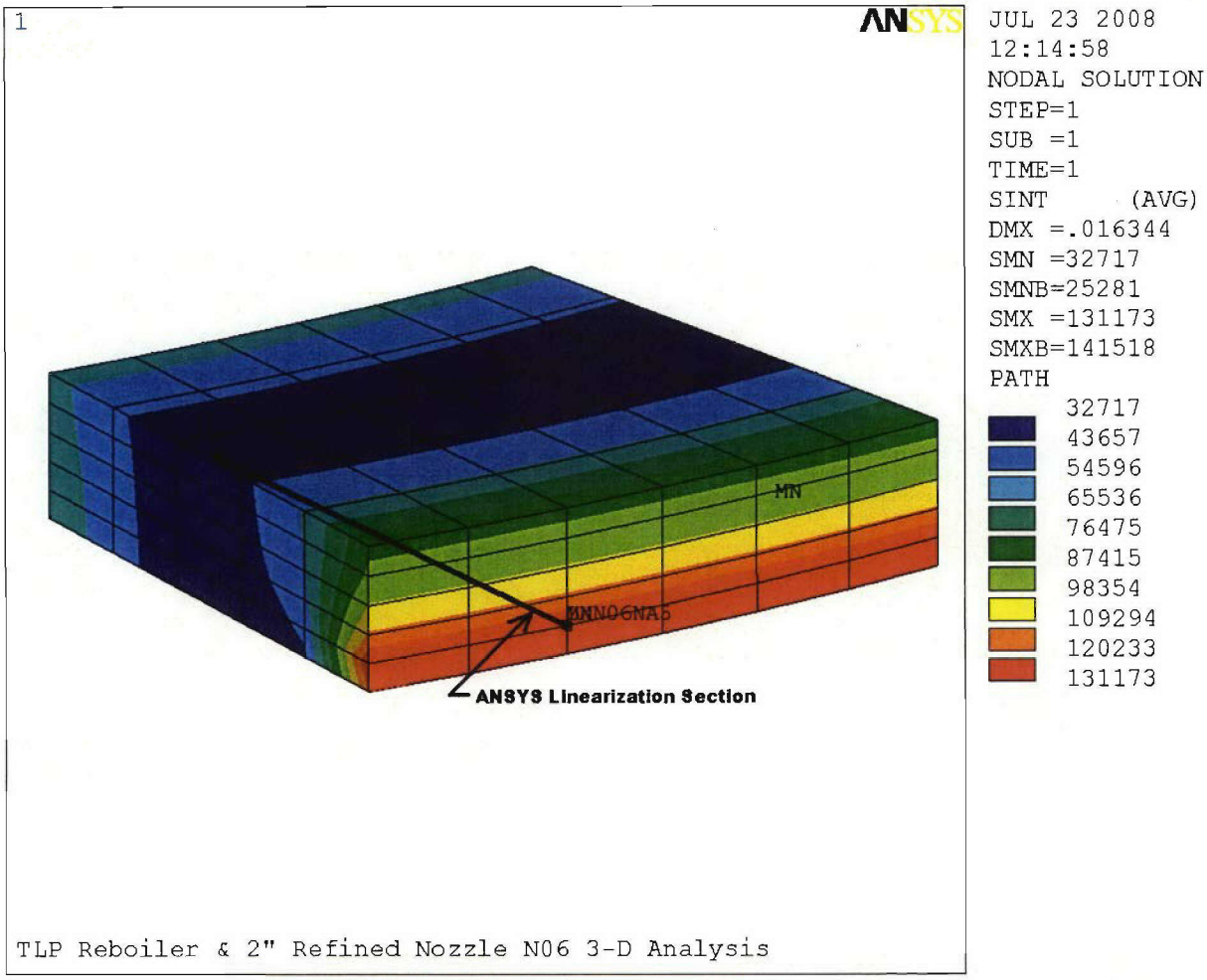

Figure A-A-18: TLP Reboiler ANSYS 2" Nozzle N06 FEA Shell Element Model; Stress Intensities With All Elements Selected

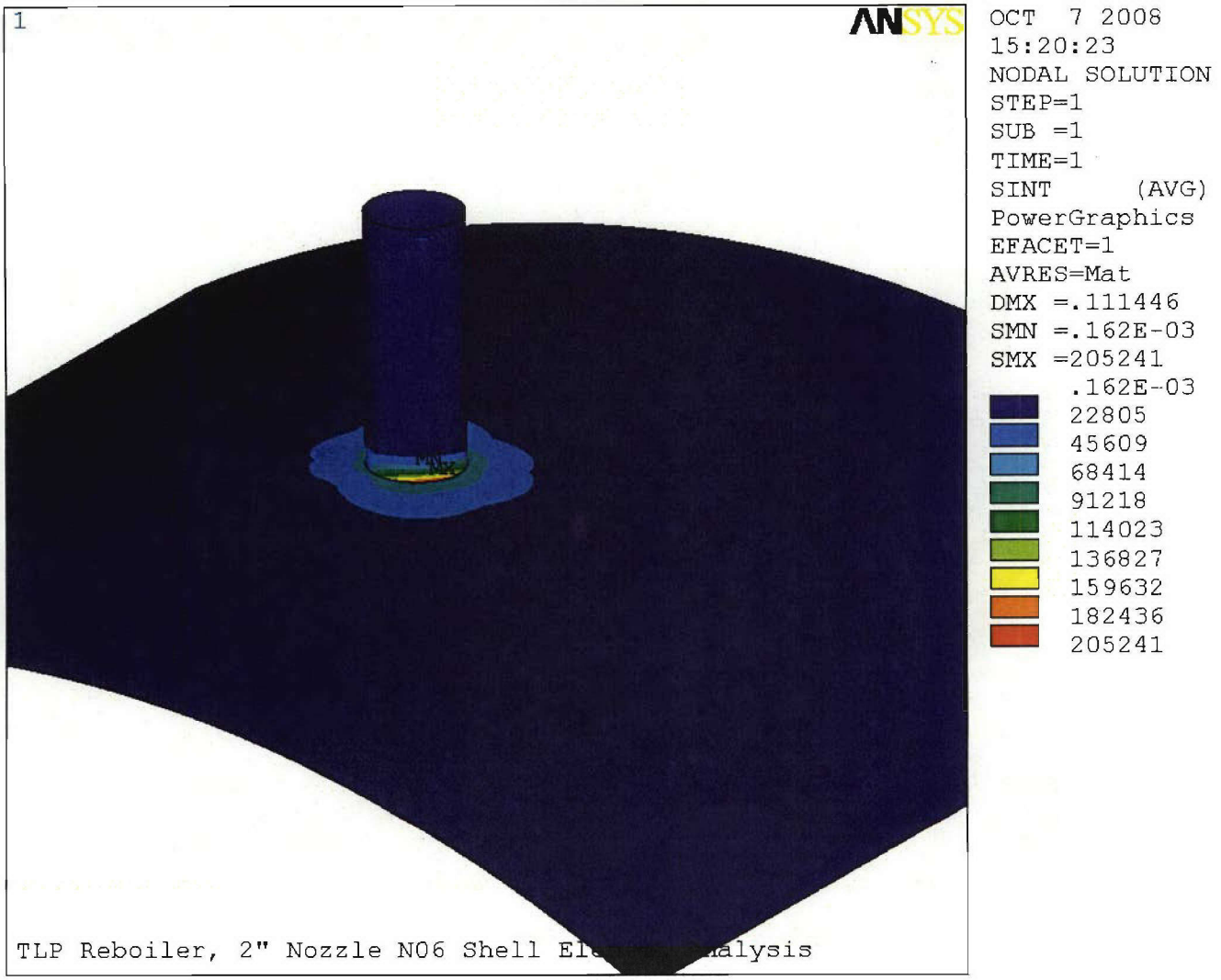

Pg V-204

Figure A-A-19: TLP Reboiler ANSYS 2" Nozzle N06 FEA Shell Element Model With Elements Within Nozzle/Vessel Intersection Removed; Stress Intensities

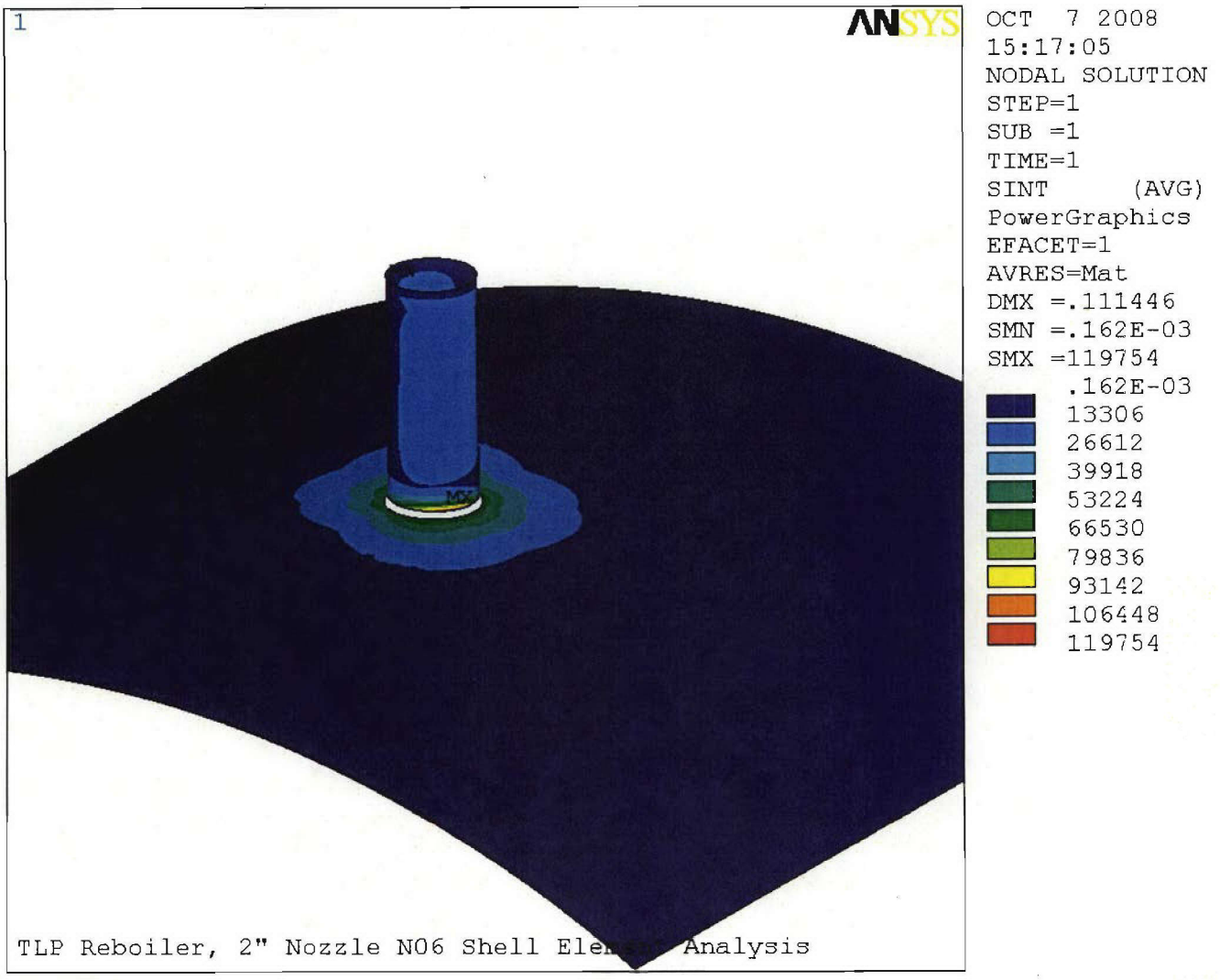

Pg V-205

Figure A-A-20: TLP Reboiler ANSYS 2" Nozzle N06 FEA Shell Element Model With Elements Within Nozzle/Vessel Intersection Removed; Maximum Local Stress Intensities

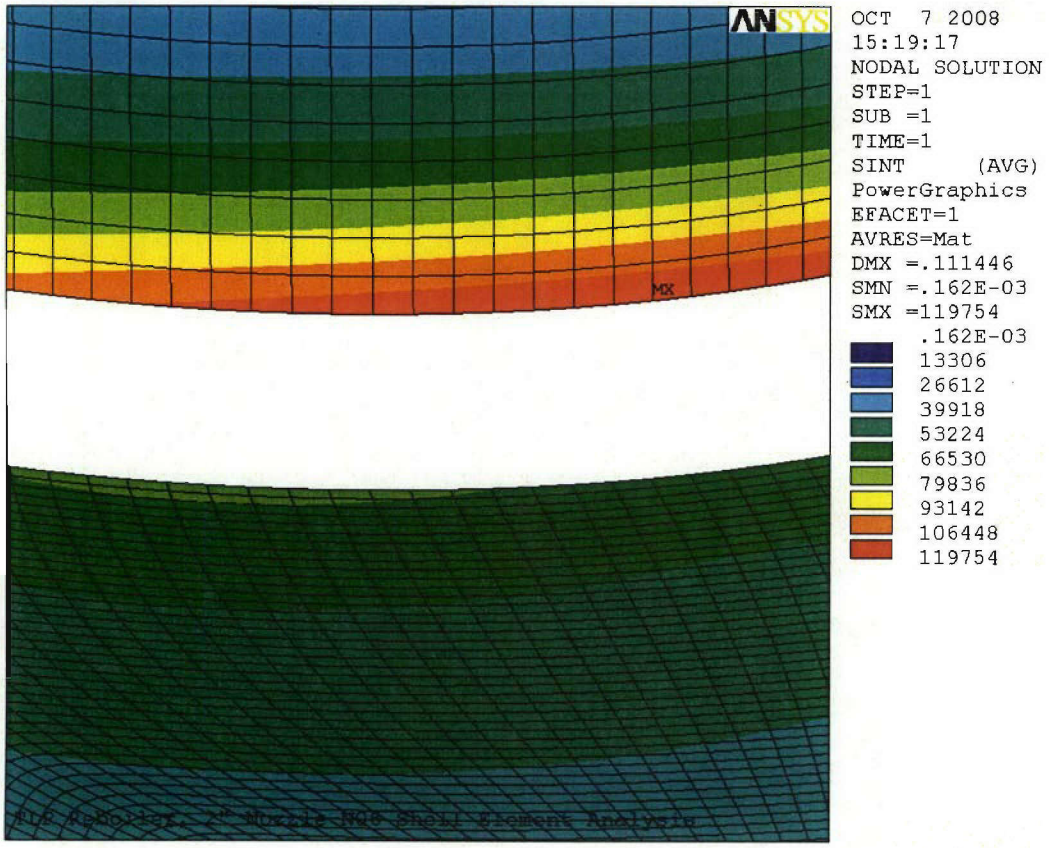

APPENDIX B: BECHTEL NATIONAL INC. CHECK LIST

	Required Data	Source Reference	Applicable Section of Seismic Qualification Report
1	**Identification and Description of Equipment**		
1.1	Equipment Tag Number or other identification that uniquely defines the equipment	24590-WTP-3PS-SS90-T0001 §7.1.2(a) This document is applicable to analysis of the many of the HEP 1 and HEP 2 vessels. Tag numbers for this report are unnecessary.	See the front sheet.
1.2	Identification of safety functions of the equipment that must be provided during and after a design basis earthquake (DBE)	Not Applicable. This document is applicable to may of the analysis for the HEP 1 and HEP 2 vessels. The design data, dimensions, material properties, and physical configurations and required safety functions to resist DBE will be included separately in the individual analysis of each vessel.	N/A
1.3	Identification and description of the parts or features of the equipment that perform the safety functions and are therefore required to resist the DBE (this includes identification of Seismic Categories of relevant components or parts of the equipment)	See Item 1.2 above	See Item 1.2 above
1.4	Identification of basic material properties, key dimensions, and physical configuration of the equipment, including reference to design drawings/documents (including revision designation) that are used to control the design/configuration of the equipment	See Item 1.2 above	See Item 1.2 above
2	**Description of Analyses and Methodology**		
2.1	Reference to governing code(s) that specify ultimate or yield values (code allowable strength or stress levels)	See Item 1.2 above	See Item 1.2 above
2.2	Identification of the code-defined strength or stress levels used in the analyses (the capacity of the equipment based on code ultimate or yield values)	See Item 1.2 above	See Item 1.2 above
2.3	Definition of the seismic loads (earthquake loadings) used in the analysis (e.g., in-structure response spectra)	See Item 1.2 above	See Item 1.2 above

	Required Data	Source Reference	Applicable Section of Seismic Qualification Report
2.4	Identification of equipment aging processes (e.g., corrosion, erosion, radiation, vibration/thermal fatigue, etc.), documentation or reference to documentation of these affects on material properties over the design life of the equipment, and evidence that the equipment will continue to provide its safety functions during and after a DBE at the end of design life	See Item 1.2 above	See Item 1.2 above
2.5	If an equivalent static analysis model is used in lieu of dynamic analyses, include justification of the adequacy of this approach (e.g., evidence that the structural features of the equipment are relatively simple, symmetric, and have essentially uniform distribution of mass and stiffness)	See Item 1.2 above	See Item 1.2 above
2.6	Description of how the analysis considers 3 orthogonal components of earthquake ground motion (two horizontal and one vertical), and how the responses from the various direction components are combined in accordance with American Society of Civil Engineers (AISC) Standard 4.	See Item 1.2 above	See Item 1.2 above
2.7	Identification of the damping values used in the analyses (e.g., damping values of 2 for massive low-stressed equipment with 0.5 for sloshing modes in liquid-containing metal tanks, or 3 for electrical cabinets and other equipment)	See Item 1.2 above	See Item 1.2 above
2.8	Evidence that connecting structural supports and piping (and the associated dynamic coupling effects) are properly represented in the analytical model	Equipment specification and/or data sheet 24590-WTP-3PS-SS90-T0001 §6.2.3 24590-WTP-3PS-MV00-T0002 §2.2.4 DOE-STD-1020-94 §C.6.1, Items 2 & 3 (page C-58)	See Section 3.5 and3.6.
2.9	Identification of the best estimate of all non-seismic demands expected to occur concurrently with a DBE (in a comparable format to the code allowable values)	See Item 1.2 above	See Item 1.2 above
3	**Results/Conclusions**		
3.1	Identification of the important natural frequencies of the equipment (or the peak of the design response spectrum must be used)	See Item 1.2 above	See Item 1.2 above
3.2	Identification of the computed elastic seismic response of the equipment (in a comparable format to the code allowable values)	See Item 1.2 above	See Item 1.2 above

V-204

	Required Data	Source Reference	Applicable Section of Seismic Qualification Report
3.3	Description of how the analyses address the distribution of resulting seismic-induced inertial forces and evaluation of the load path(s)	See Item 1.2 above	See Item 1.2 above
3.4	Description of method used to combine seismic and non-seismic loads (using code-defined load factors) and to compare the result with code-defined strength or stress levels to confirm the design is adequate	Equipment specification and/or data sheet 24590-WTP-3PS-SS90-T0001 §5 24590-WTP-3PS-MV00-T0002 §2.2.4 DOE-STD-1020-94 §2.3.2 (page 2-12)	See Sections 2.2 and 2.4
3.5	Identification of relative seismic anchor motion (SAM) between equipment and interconnected piping	24590-WTP-3PS-SS90-T0001 §7.4 24590-WTP-3PS-MV00-T0002 §2.2.4 DOE-STD-1020-94 §2.2 (page 2-6) and §2.4.1 (page 2-19)	See Section 2.12
3.6	Identification of reaction loads on connecting structural supports and piping (individual loads as well as load combinations)	24590-WTP-3PS-SS90-T0001 §7.2	See Section 2.3
4	**Quality Assurance**		
4.1	Signature of responsible engineers who performed the calculation	24590-WTP-3PS-MV00-T0002 §2.2.4 NQA-1-1989 DOE-STD-1020-94 §1.4 (page 1-7) and §C.8 (page C-65)	See Pages 1 and 2.
4.2	Signature of engineer(s) who checked the calculation for numerical accuracy, and theory and assumptions	24590-WTP-3PS-MV00-T0002 §2.2.4 NQA-1-1989 Supplement 3S-1 DOE-STD-1020-94 §1.4 (page 1-7) and §C.8 (page C-65)	See Pages 1 and 2.
4.3	Description of theory (analytical method) and assumptions used in the seismic analyses	NQA-1-1989 Supplement 3S-1 24590-WTP-3PS-SS90-T0001 §7.1.2(g)	See Sections 2.2 and 2.3
4.4	Description of computer program(s) used in the analyses, including model(s) used, input values, and output results calculated by the computer program	24590-WTP-3PS-SS90-T0001 §7.1.2(g) 24590-WTP-3PS-MV00-T0002 §2.2.4 NQA-1-1989 Supplement 3S-1 DOE-STD-1020-94 §C.8 (page C-65)	See Appendix A
4.5	Printout of output of computer analyses, including signature of responsible engineer who performed the computer analyses on first page of output	24590-WTP-3PS-MV00-T0002 §2.2.4 NQA-1-1989 Supplement 3S-1 DOE-STD-1020-94 §C.8 (page C-65)	A list of input files is listed in Appendix A. These files will be stored as described in Appendix A.
4.6	Documentation or reference to documentation of verification of computer program accuracy	24590-WTP-3PS-SS90-T0001 §7.1.2(g) 24590-WTP-3PS-MV00-T0002 §2.2.4 NQA-1-1989 Supplement 3S-1 DOE-STD-1020-94 §C.8 (page C-65)	See Reference 35.

APPENDIX C: SELLER DESIGN VERIFICATION CHECK LIST

22410-6 (09/02/2008) *Page 1 of 2*

AREVA

DESIGN VERIFICATION CHECKLIST

Document No. 51 - 9076787 - 001

Title HEP 1 and HEP 2 Structural Analysis Requirements

1.	Were the inputs correctly selected and incorporated into design or analysis?	☒ Y	☐ N	☐ N/A
2.	Are assumptions necessary to perform the design or analysis activity adequately described and reasonable? Where necessary, are the assumptions identified for subsequent re-verifications when the detailed design activities are completed?	☒ Y	☐ N	☐ N/A
3.	Are the appropriate quality and quality assurance requirements specified? Or, for documents prepared per AREVA NP Inc. procedures, have the procedural requirements been met?	☒ Y	☐ N	☐ N/A
4.	If the design or analysis cites or is required to cite requirements or criteria based upon applicable codes, standards, specific regulatory requirements, including issue and addenda, are these properly identified, and are the requirements/criteria for design or analysis met?	☒ Y	☐ N	☐ N/A
5.	Have applicable construction and operating experience been considered?	☐ Y	☐ N	☒ N/A
6.	Have the design interface requirements been satisfied?	☒ Y	☐ N	☐ N/A
7.	Was an appropriate design or analytical method used?	☒ Y	☐ N	☐ N/A
8.	Is the output reasonable compared to inputs?	☒ Y	☐ N	☐ N/A
9.	Are the specified parts, equipment and processes suitable for the required application?	☐ Y	☐ N	☒ N/A
10.	Are the specified materials compatible with each other and the design environmental conditions to which the material will be exposed?	☐ Y	☐ N	☒ N/A
11.	Have adequate maintenance features and requirements been specified?	☐ Y	☐ N	☒ N/A
12.	Are accessibility and other design provisions adequate for performance of needed maintenance and repair?	☐ Y	☐ N	☒ N/A
13.	Has adequate accessibility been provided to perform the in-service inspection expected to be required during the plant life?	☐ Y	☐ N	☒ N/A
14.	Has the design properly considered radiation exposure to the public and plant personnel?	☐ Y	☐ N	☒ N/A
15.	Are the acceptance criteria incorporated in the design documents sufficient to allow verification that design requirements have been satisfactorily accomplished?	☐ Y	☐ N	☒ N/A
16.	Have adequate preoperational and subsequent periodic test requirements been appropriately specified?	☐ Y	☐ N	☒ N/A
17.	Are adequate handling, storage, cleaning and shipping requirements specified?	☐ Y	☐ N	☒ N/A
18.	Are adequate identification requirements specified?	☐ Y	☐ N	☒ N/A
19.	Is the document prepared and being released under the AREVA NP Inc. Quality Assurance Program? If not, are requirements for record preparation review, approval, retention, etc., adequately specified?	☒ Y	☐ N	☐ N/A

AREVA

DESIGN VERIFICATION CHECKLIST

Document No. 51-9076787-001

Comments on the preceding responses:

This document is a design methodology document. It outlines numerous steps, procedures, and analytical techniques that will be employed for the HEP1 and HEP2 vessel analyses per the ASME Section VIII - Div. 2 Code. The analyses that were performed for the preparation of this document were primarily to develop FEA analytical techniques. No specific design requirements were required to be met for this document. Also, this document does not contain any HEP1 and HEP2 vessel analyses.

Verified By:	Al Paliulis	Al Paliulis	12/18/08
(First, MI, Last)	Printed / Typed Name	Signature	Date

APPENDIX D: EXAMPLES OF THE USE OF APPENDIX A PROCEDURES

EXAMPLES OF THE USE OF APPENDIX A PROCEDURES TO ADJUST OVERLY CONSERVATIVE SHELL ELEMENT STRESS INTENSITY RESULTS AT A VESSEL/NOZZLE INTERSECTION

Figure D-1 is an ANSYS maximum surface stress intensity (SI) plot at a local vessel/nozzle intersection. From Figure D-1, the nozzle elements located between the vessel mean diameter and outside diameter have been unselected from the ANSYS model results. The maximum surface stress intensity for the nozzle at the vessel outside surface is 61.88 ksi, which in this case exceeds the allowable primary + secondary ($P_L + P_b + Q$) SI of 3 x S = 59.88 ksi.

Based on the methods of Appendix A, the nozzle shell element surface stress intensities can be adjusted based on the ratio of the vessel wall to nozzle wall thicknesses. The nozzle wall thickness is 0.96 inch and vessel wall thickness is 1.45 inches. Therefore, the vessel to nozzle wall thickness ratio is 1.51. From Figure A-5 for a vessel to nozzle thickness ratio of 1.51, it is conservatively estimated that the shell element stresses are at least 10% higher than linearized stresses if the FEA model had employed 3D brick elements with a fine mesh density. Therefore, it is conservative to lower the shell element SI by dividing by 1.10.

The adjusted maximum surface stress intensity is 61.88/1.10 = 56.25 ksi < 3 x S = 59.88 ksi

The loading for the above example includes seismic loading, which is not included in evaluating peak SI. However, for this example, it is assumed that the 56.25 ksi value does not include seismic loading effects. The stress multiplier from Figure A-7 is used to factor the ANSYS SI value to obtain the peak SI. From Figure A-7, for a vessel to nozzle wall thickness ratio of 1.51, the stress multiplier is approximately 1.64. The peak vessel SI ($P_L + P_b + Q + F$) for the nozzle at the vessel is:

1.64 x 61.88 = 101.5 ksi

The above calculations adjust stress intensities in a nozzle to values that conservatively represent solid brick element results. The same method applies to adjusting ANSYS shell element stress intensities in the vessel to equivalent brick element linearized SI, except Figure A-4 would be used instead of Figures A-5. From Figure A-4, the reduction factor to derive the linearized vessel surface SI ($P_L + P_b + Q$) is 1.29 for a thickness ratio of 1.51. From Figure D-2, the maximum SI is 40.65 in the vessel (all nozzle elements unselected, no vessel elements unselected). Therefore, the maximum vessel SI of 40.65 ksi is reduced:

40.65 / 1.29 = 31.51 ksi

The 31.51 ksi value would then be compared to the allowable linearized SI of 3S.

As above, it is assumed for this example that no seismic loads are included for the loading condition of Figure D-2. The stress multiplier from Figure A-6 is used to factor the ANSYS shell element surface SI value to obtain the peak SI. From Figure A-6, for a vessel to nozzle wall thickness ratio of 1.51, the stress multiplier is approximately 1.45. The peak vessel SI ($P_L + P_b + Q + F$) for the vessel at the nozzle is:

1.45 x 40.65 = 58.94 ksi

Figure D-1: Example for Determining Linearized and Peak SI for a Nozzle at the Vessel Intersection

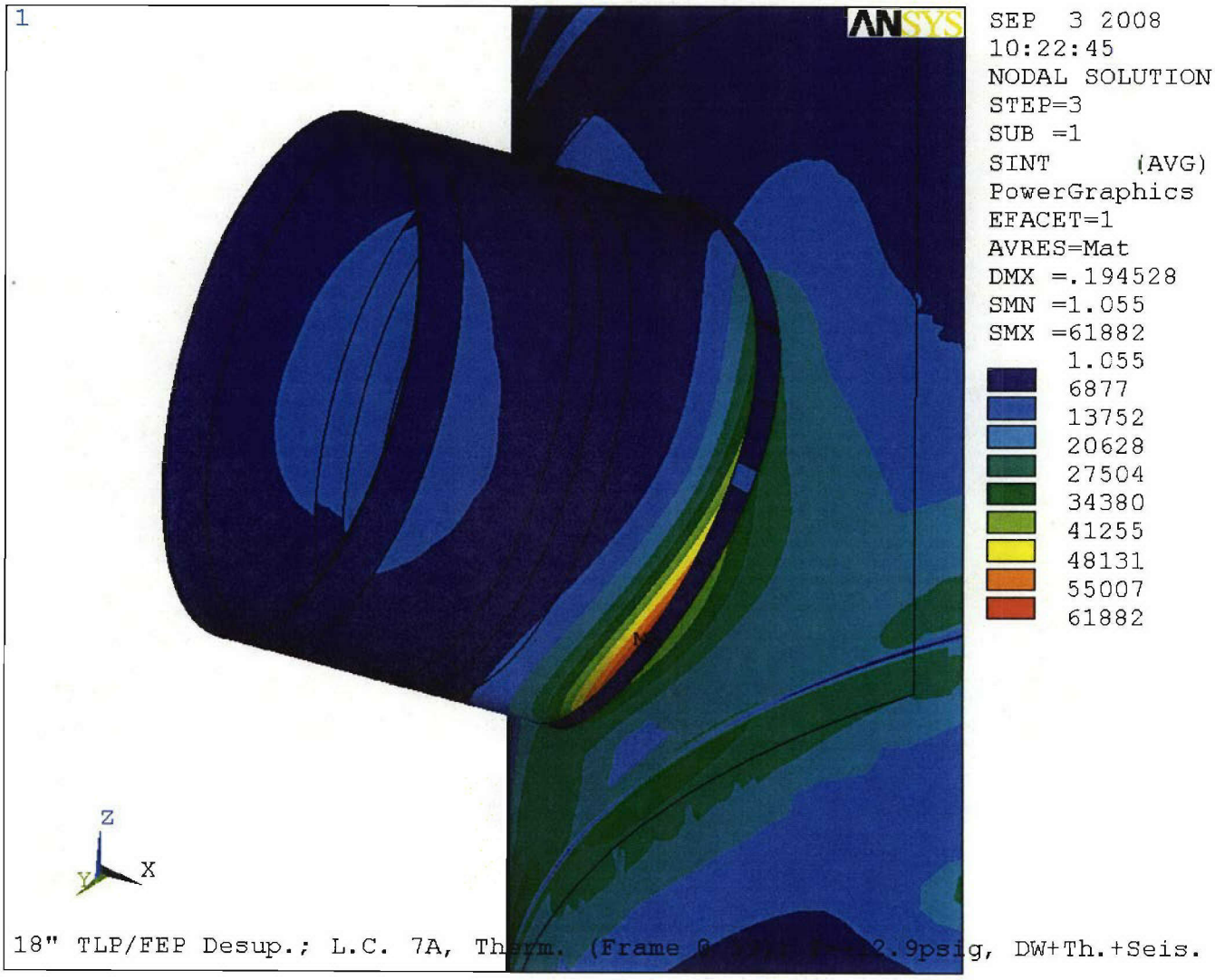

Figure D-2: Example for Determining Linearized and Peak SI for a Vessel at the Nozzle Intersection

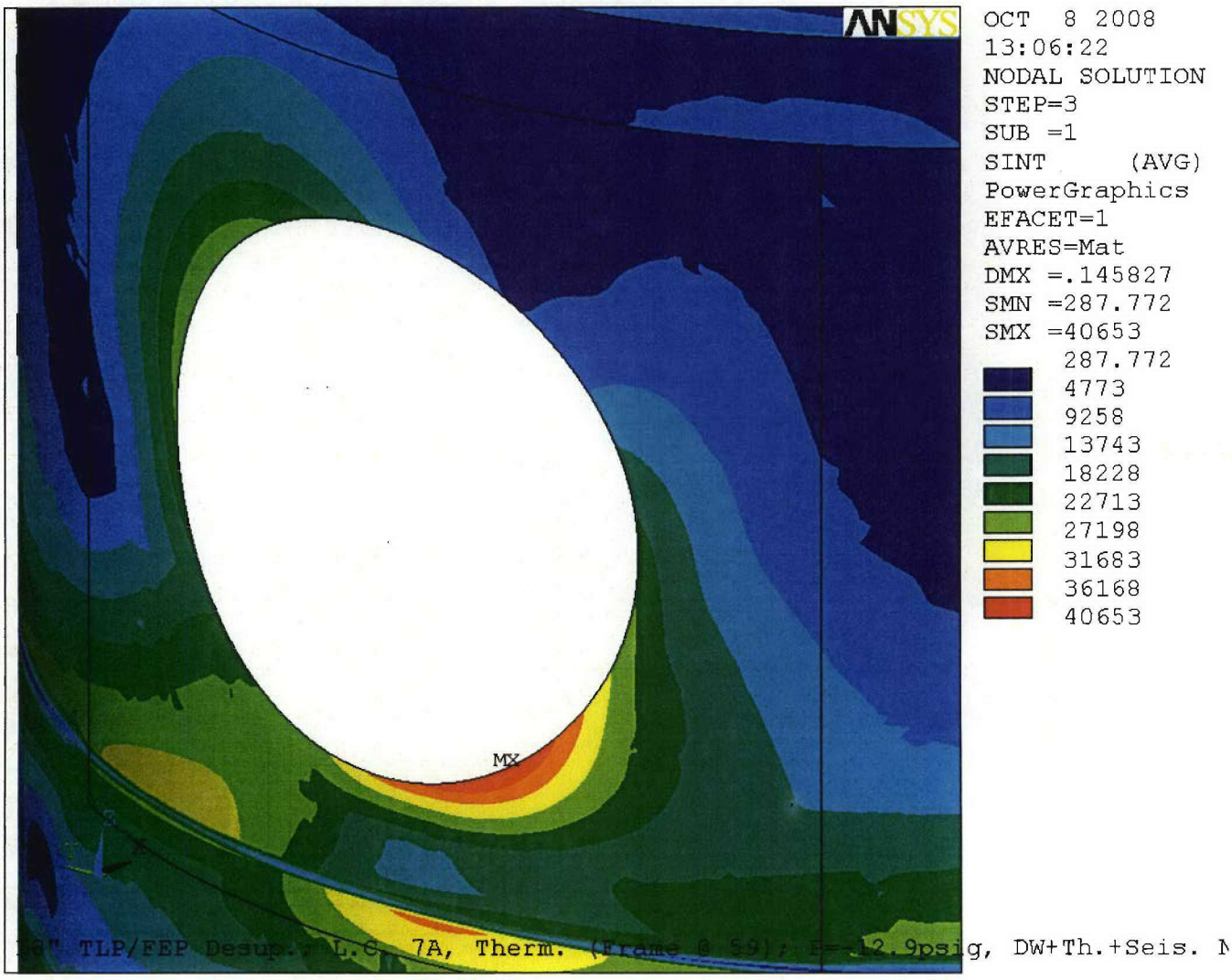

ATTACHMENT #8

Maximum Allowable Skid Foot Print for FEP and TLP Condensers

Note: Sketches provided on the next pages show the maximum allowable skid footprint for FEP and TLP condensers. Embed locations can be moved according the need for the condenser skids, The slabs are not scheduled to be poured till after 1/1/2011 for 56 ft and 77 ft elevations.

24590-PTF-3PS-MEVV-T000
Rev. 3

Pg V-217

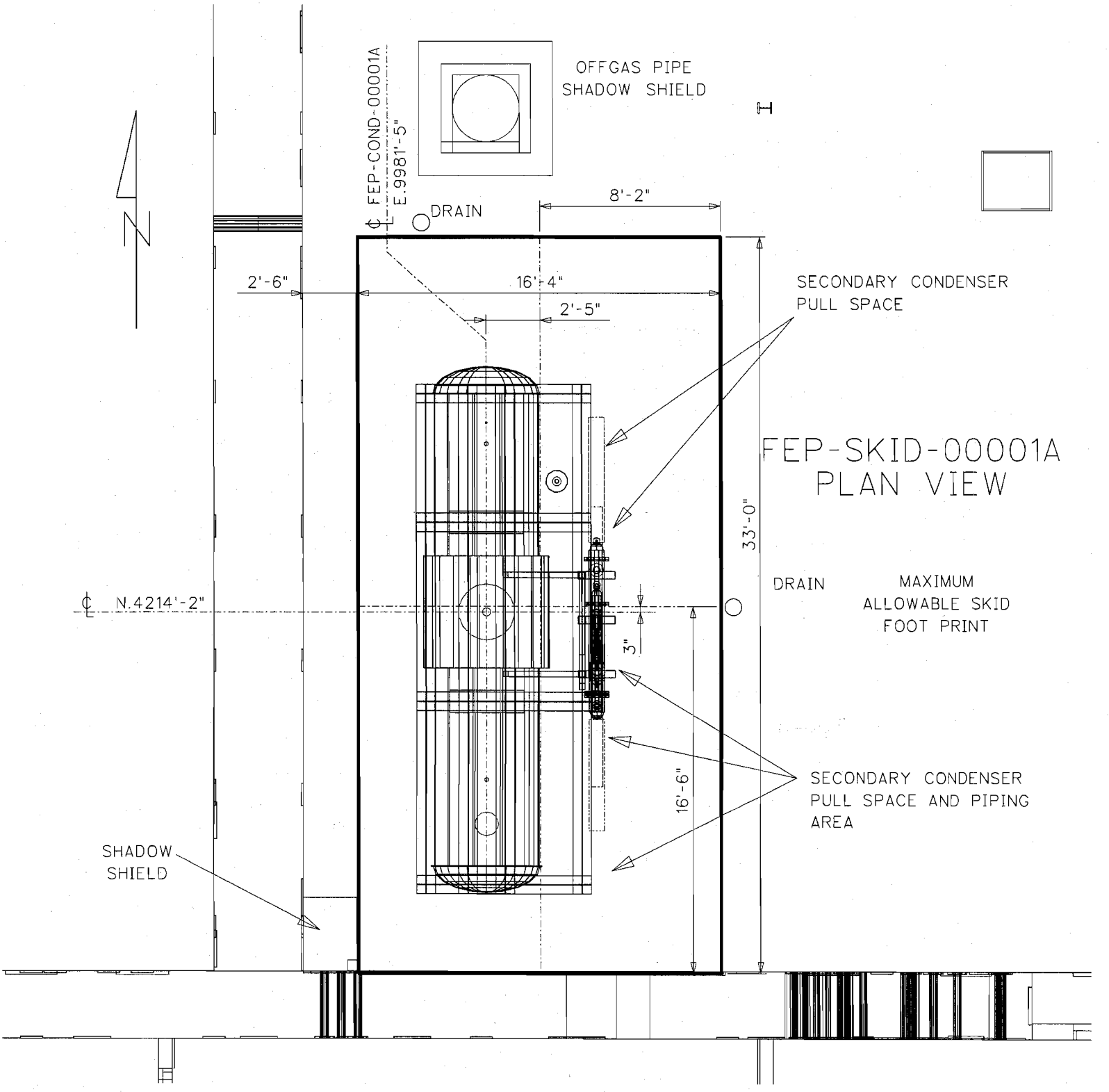

24590-PTF-3PS-MEVV-T0001 Rev. 3

Pg V-218

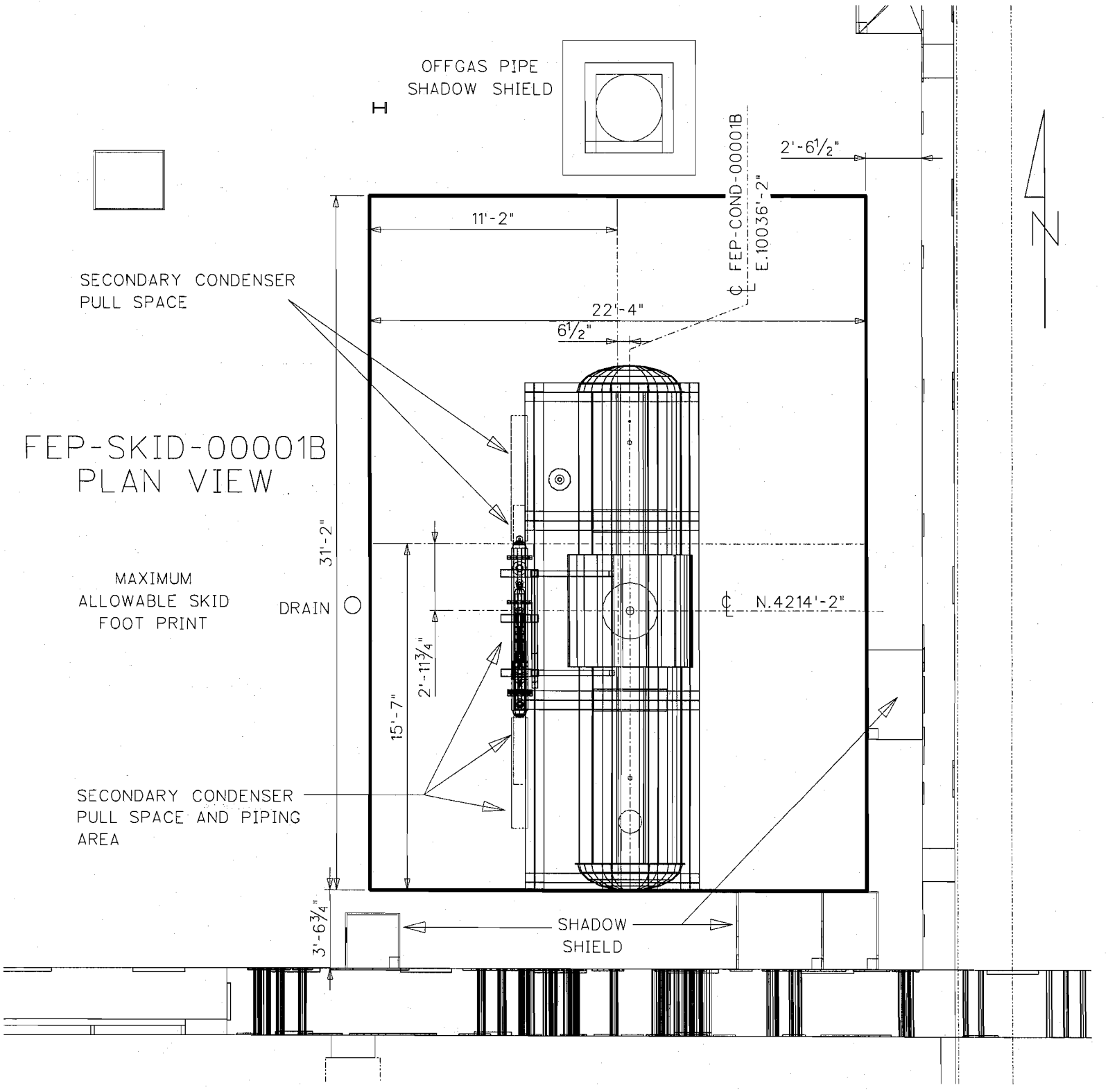

24590-PTF-3PS-MEW-T0001, Rev. 3
Pg V-219

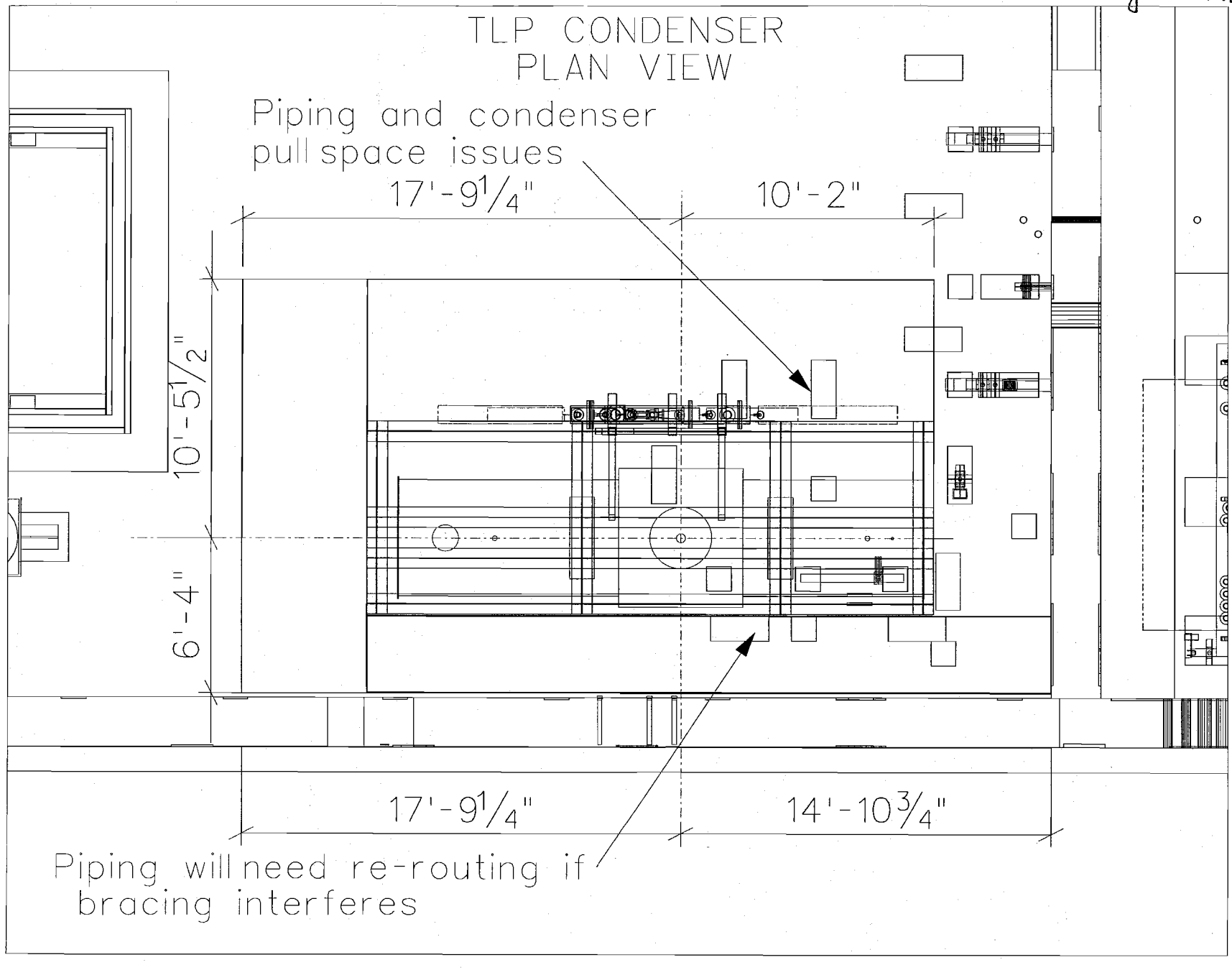

ATTACHMENT #9

Reboiler Nozzle Loads

Reboiler Small Bore Supports Loads and Layout

Tables provided in this attachment are updated all nozzle loads and also support loads layout for the small bore piping of reboilers. Seller shall use these nozzle load and support load value as specified in this attachment instead of the values shown in the table in Appendix A of the Pressure Vessel Design and Fabrication Specification 24590-WTP-3PS-MV00-T0001. The thermal reduction factor found in 24590-WTP-3PS-MV00-T0001, Section 3.7.4 shall not be applied. In addition, Seller shall not apply the inelastic energy absorption coefficient (F_u) greater than 1.0 to these provided nozzle load and support load values.

The provided sketches show the proposed/preliminary small bore piping routing, support directions, and support locations. Seller shall coordinate with the Buyer to finalize all reboiler nozzle locations. Note that the nozzle loads are reported at the vessel shell. Seller is advised that the existing Buyer's P&IDs do not necessarily reflect the proposed small bore pipe routing of the reboiler. Seller shall confirm with their fabricator if the reboiler nozzle N05 modification is physically possible (i.e no space limitation issue) to add a 2"x1" concentric reducer at the vessel to help with potential vessel stress issue prior to proceed with seismic reanalysis.

Please be advised that these new locations are tight and extreme care will be need to be taken not to damage the small bore piping when removing the reboilers from the up-ender skids. Please note that original steam vent routing and nozzle locations would have posed potential interferences when installed on the up-ender skid. The drain lines need to exit the bottom of the vessel vertically, the PUREX kick-off plates are lower than the bottom of the reboiler base plates. Seller shall rise FEP/TLP reboiler drain nozzle elevation by at least 1.5 inches in order to make any modification to the kick-off plates or connectors unnecessary. Seller needs to pay particularly close attention to items like new nozzle locations, pipe routing, the feasibility of the support directions and locations, potential up-ender interferences and the vulnerability of these small bore lines.

Proposed Nozzle Loads for FEP and TLP Reboiler Small Bore Piping

FEP (AREA 26 & 27)

		Fx	Fy	Fz	Mx	My	Mz
N04 (4" PIPE)	WT01	80	420	40	260	50	1180
	THRM01	830	70	220	380	230	1430
	SEISDB	360	240	230	630	870	1020
N05 (1" PIPE) *	WT01	40	40	30	50	50	40
*Changed to 2"x1" Concentric nozzle from 1" nozzle	THRM01	50	20	30	30	80	30
	SEISDB	90	50	60	80	150	40
N06 (2" PIPE)	WT01	30	80	30	60	40	60
	THRM01	70	70	70	110	100	160
	SEISDB	110	140	210	570	160	320
N07 (3" PIPE) *	WT01	50	340	30	230	40	530
*Changed to 3" pipe from 2" pipe	THRM01	860	170	340	410	110	850
	SEISDB	420	200	220	360	600	780
N08 (2" PIPE)	WT01	30	100	30	60	40	60
	THRM01	100	180	100	150	180	250
	SEISDB	150	130	150	500	500	250
N09 (2" PIPE)	WT01	30	100	30	60	40	60
	THRM01	100	180	100	150	180	250
	SEISDB	150	130	150	500	500	250

TLP (AREA 17)

		Fx	Fy	Fz	Mx	My	Mz
N04 (4" PIPE)	WT01	30	540	40	1150	60	380
	THRM01	370	50	70	140	810	710
	SEISDB	420	410	310	1520	1060	910
N05 (1" PIPE) *	WT01	40	30	30	30	30	30
*Changed to 2"x1" Concentric nozzle from 1" nozzle	THRM01	120	130	40	100	120	90
	SEISDB	310	60	100	30	290	80
N06 (2" PIPE)	WT01	40	60	30	40	30	30
	THRM01	30	200	60	60	70	120
	SEISDB	70	100	50	90	120	100
N07 (3" PIPE) *	WT01	50	230	30	40	30	290
*Changed to 3" pipe from 2" pipe	THRM01	210	50	30	40	70	160
	SEISDB	180	110	120	130	160	260
N08 (2" PIPE)	WT01	30	100	30	60	40	60
	THRM01	100	180	100	150	180	250
	SEISDB	150	130	150	500	500	250

N09 (2" PIPE)	WT01	30	100	30	60	40	60
	THRM01	100	180	100	150	180	250
	SEISDB	150	130	150	500	500	250

Global Coordinate System
North = X
East = Z
Elevation = Y

PTF
Reboilers

Nozzle Number	Nozzle Size (in)	Equipment ID	Orient	Load Case	Design Loads (Force in lbs, Moment in ft-lb)					
					Fx	Fy	Fz	Mx	My	Mz
N03	18	FEP-RBLR-00001A	H	Weight	500	5000	500	3000	3000	8900
				Seismic	2500	2500	2500	9100	4000	8500
				Thermal	5200	2500	2500	4000	4000	19700
N03	18	FEP-RBLR-00001B	H	Weight	500	5000	500	3000	3000	7700
				Seismic	2500	2500	2500	11700	4000	8600
				Thermal	4600	2500	2500	4000	4300	14100
N03	18	TLP-RBLR-00001	H	Weight	500	5000	500	3000	3000	8100
				Seismic	3100	2600	3700	19300	4000	7600
				Thermal	2500	4600	2500	9100	4200	13000

NOTES:
- ❖ Load direction per 24590-WTP-3PS-MV000-T0001, APPENDIX A.
- ❖ Tabulated loads are from ME101 analyses results with 20% increase factor for design purposes.
- ❖ Seismic loads considered with RGM ISRS, 5% damping and Modal Sum by CQC. Applied **Fμ** is 1.5

* Ref. CCN 177032

Proposed Support Loads for FEP and TLP Reboiler Small Bore Piping

		FORCED (LBS)		
		Fx	Fy	Fz
TLP SUPPORT 01	WEIGHT	30	150	-
	THERMAL	130	30	-
	SEISMIC	550	130	-
TLP SUPPORT 02	WEIGHT	-	350	40
	THERMAL	-	100	50
	SEISMIC	-	220	250
TLP SUPPORT 03	WEIGHT	-	350	40
	THERMAL	-	100	50
	SEISMIC	-	220	250
FEP SUPPORT 01	WEIGHT	150	190	50
	THERMAL	120	30	60
	SEISMIC	390	140	150
FEP SUPPORT 02	WEIGHT	-	150	30
	THERMAL	-	60	70
	SEISMIC	-	250	260
FEP SUPPORT 03	WEIGHT	-	350	40
	THERMAL	-	100	50
	SEISMIC	-	220	250
FEP SUPPORT 04	WEIGHT	-	350	40
	THERMAL	-	100	50
	SEISMIC	-	220	250
Global Coordinate System				
North = X				
East = Z				
Elevation = Y				

24590-PTF-3PS-MEVV-T0001, Rev. 3

Pg V-225

PROPOSED SMALL BORE PIPING LAYOUT
FEP-RBLR-00001A
FEP-RBLR-00001B

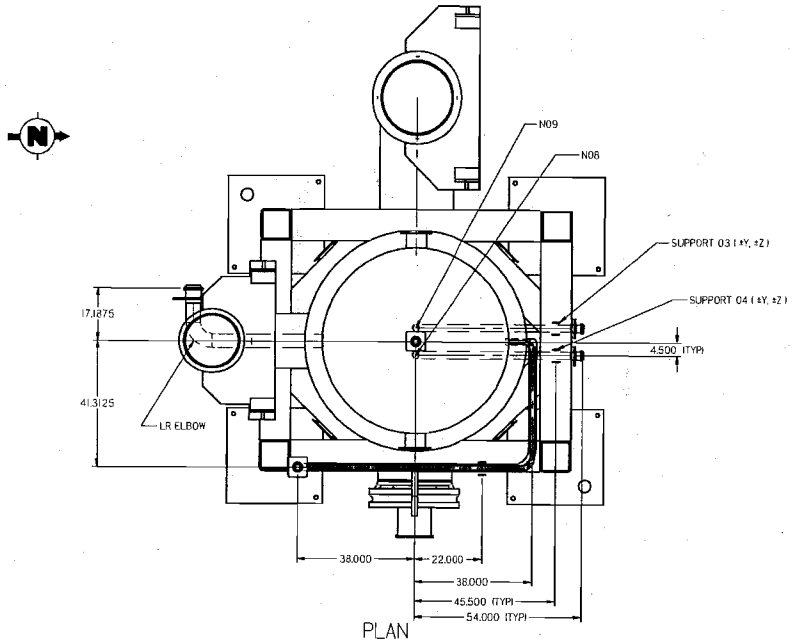

PLAN

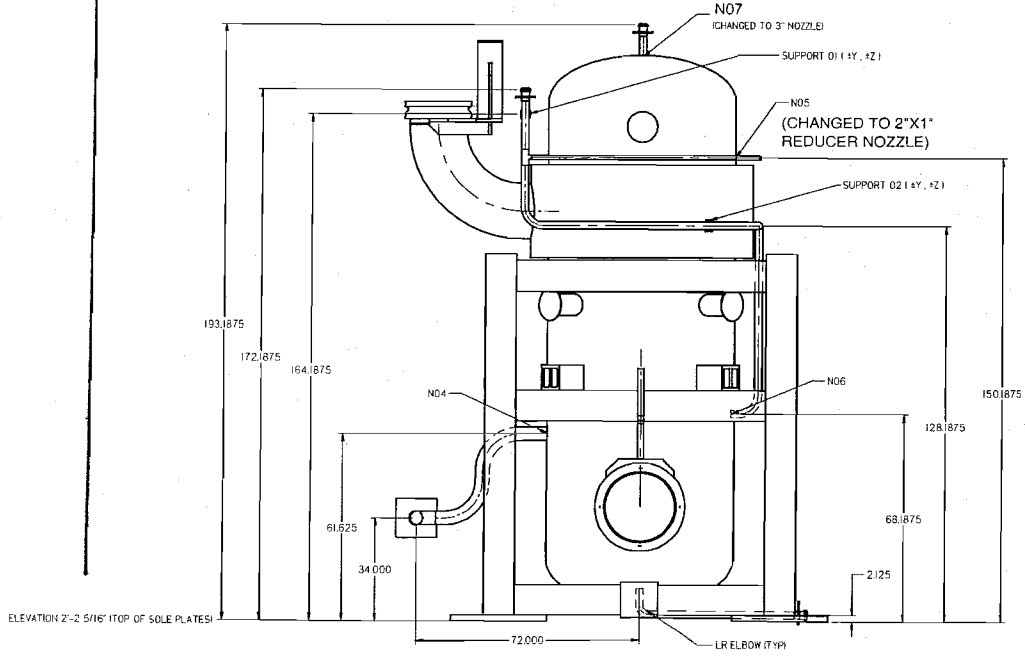

ELEVATION (LOOKING WEST)

NOTES:
1) ALL SMALL BORE PIPING WILL HAVE A 3D BEND RADIUS UNLESS OTHERWISE NOTED.
2) PUREX NOZZLES ARE DIMENSIONED FROM THE NOZZLE CRITICAL POINT.
3) RESTRAINT COORDINATE SYSTEM:
   NORTH: X
   ELEVATION: Y
   EAST: Z

24590-PTF-3PS-MEVV-T0001, Rev. 3

Pg V-226

PROPOSED SMALL BORE PIPING LAYOUT
TLP-RBLR-00001

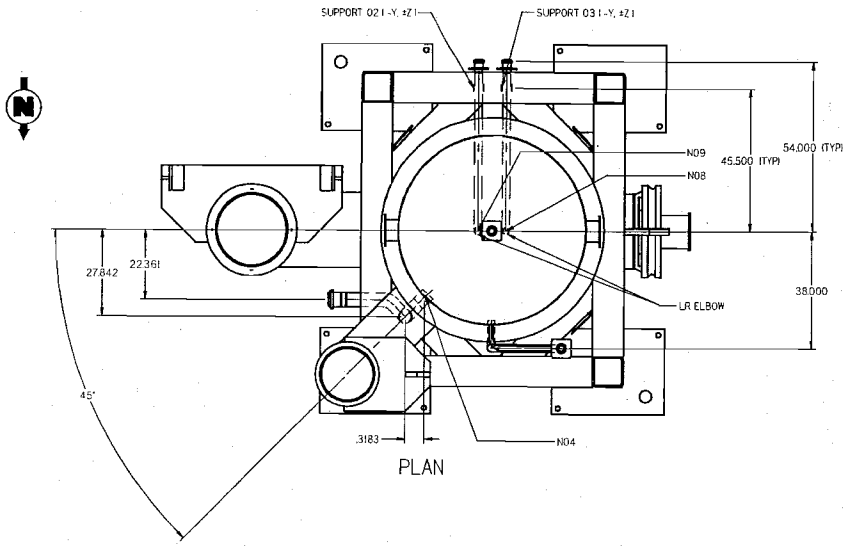

PLAN

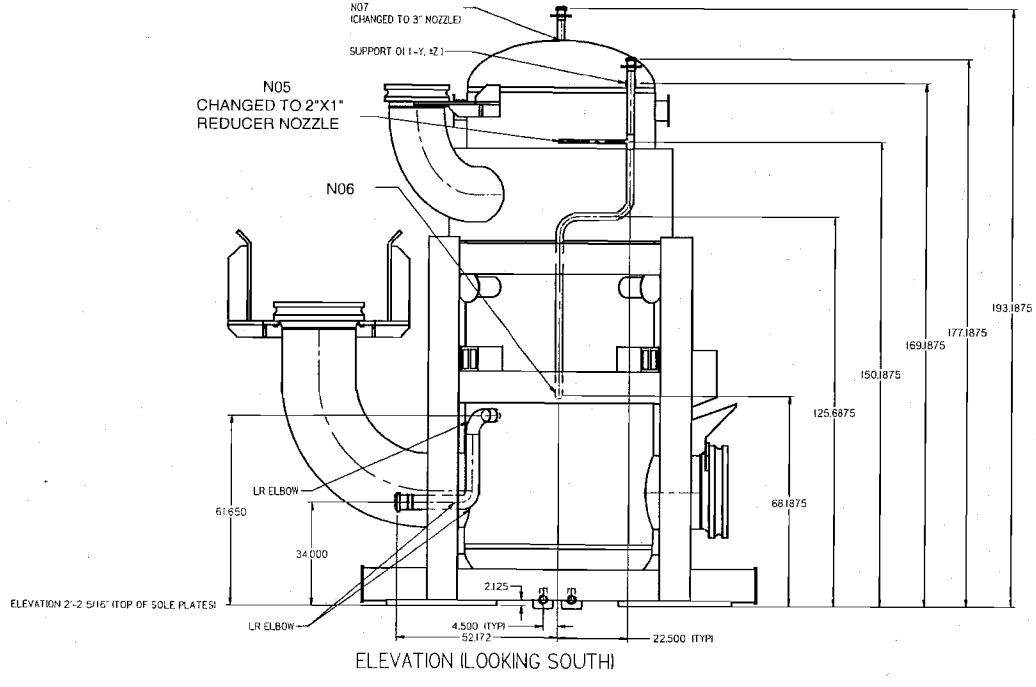

ELEVATION (LOOKING SOUTH)

NOTES:
1) ALL SMALL BORE PIPING WILL HAVE A 3D BEND RADIUS UNLESS OTHERWISE NOTED.
2) PUREX NOZZLES ARE DIMENSIONED FROM THE NOZZLE CRITICAL POINT.
3) RESTRAINT COORDINATE SYSTEM:
NORTH: X
ELEVATION: Y
EAST: Z

ATTACHMENT #10

Design Inputs for Pressure and Temperature for
Buyer Piping nozzles (Internal Piping and Utility Inlet Nozzles)
to be used in Seller's Vessel Analysis.

FEP-SEP-00001A/1B & TLP-SEP-00001

		Temp (F)		Pressure (PSI)	
Nozzle #	**Type**	**Design**	**Max**	**Design**	**Max**
N17	PC	175	115	125	125
N14	PC	175	115	125	125
N05**	Purge Air	175	150	50	50
N19*	Antifoam	125	110	185	185
N13	PC cycle	175	150	50	50
N27	Air	175	150	50	-14.7 / 0
N28	Air	175	150	50	-14.7 / 0
N01	Air	175	150	50	-14.7 / 0
N02	Air	175	150	50	-14.7 / 0
N03	Air	175	150	50	-14.7 / 0
N07	Temp	175	150	50	-14.7 / 0
N21	Air	175	150	50	-14.7 / 0
N08	Air	175	150	50	-14.7 / 0
N09	Air	175	150	50	-14.7 / 0
N22	Air	175	150	50	-14.7 / 0
N23	Air	175	150	50	-14.7 / 0
N24	Air	175	150	50	-14.7 / 0
N25	Air	175	150	50	-14.7 / 0
N10	Process	175	150	50	-14.7 / 0
N11	Process	175	150	50	-14.7 / 0
N04	Vapor	175	150	50	-14.7 / 0

* Nozzle N19A for TLP-SEP-00001

** No nozzle N05 on TLP-SEP-00001 so it does not apply

FEP-RBLR-00001A/1B		Temp (F)		Pressure (PSI)	
Nozzle #	**Type**	**Design**	**Max Op**	**Design**	**Max Op**
N03	Steam	275	250	50	-14.7 / 0
N05	Vent	275	250	50	-14.7 / 0
N06	Vent	275	250	50	-14.7 / 0
N04	Water	275	250	50	-14.7 / 0
N01	Process	175	150	50	-14.7 / 0
N02	Process	175	150	50	-14.7 / 0

NOTE: Seller can use their equipment design ratings for design/max operatings if their design values will provide more conservative design.

FEP-COND-00001A/1B		Temp (F)		Pressure (PSI)	
Nozzle #	**Type**	**Design**	**Max**	**Design**	**Max**
N01	Vapor	175	150	50	-14.7 / 0
N07	Tube Vent	125	110	100	95
N05	Water	125	110	100	95
N04	Water	110	85	100	95
N08	Tube Drain	125	110	100	95
N02	Condensate	175	150	50	-14.7 / 0
N03	Vent	175	150	50	-14.7 / 0
N06	Vent	175	150	50	-14.7 / 0

FEP-COND-00002A/2B		Temp (F)		Pressure (PSI)	
Nozzle #	**Type**	**Design**	**Max**	**Design**	**Max**
N01	Steam	378	226	50	-14.7 / 0
N07	Water	125	110	100	95
N05	Water	125	110	100	95
N04	Water	110	85	100	95
N08	Water	125	110	100	95
N02	Process Cond	175	150	50	-14.7 / 0
N03	Vent	175	90	100	-14.7 / 0
N06	Steam Vapor	275	250	50	-14.7 / 0

FEP-COND-00003A/3A		Temp (F)		Pressure (PSI)	
Nozzle #	**Type**	**Design**	**Max**	**Design**	**Max**
N01	Steam	378	249	50	-14.7 / 0
N07	Water	125	110	100	95
N05	Water	125	110	100	95
N04	Water	110	85	100	95
N08	Water	125	110	100	95
N02	Process Cond	175	150	50	-14.7 / 0
N03	Vent	200	120	100	-14.7 / 0

* Seller can use their equipment design ratings for design/max operatings if their design values will provide more conservative design.

ATTACHMENT #11

Modification requirements to
TLP Reboiler Frame and Sole Plates

REBOILER SUPPORT FRAME CLARIFICATION (TLP)

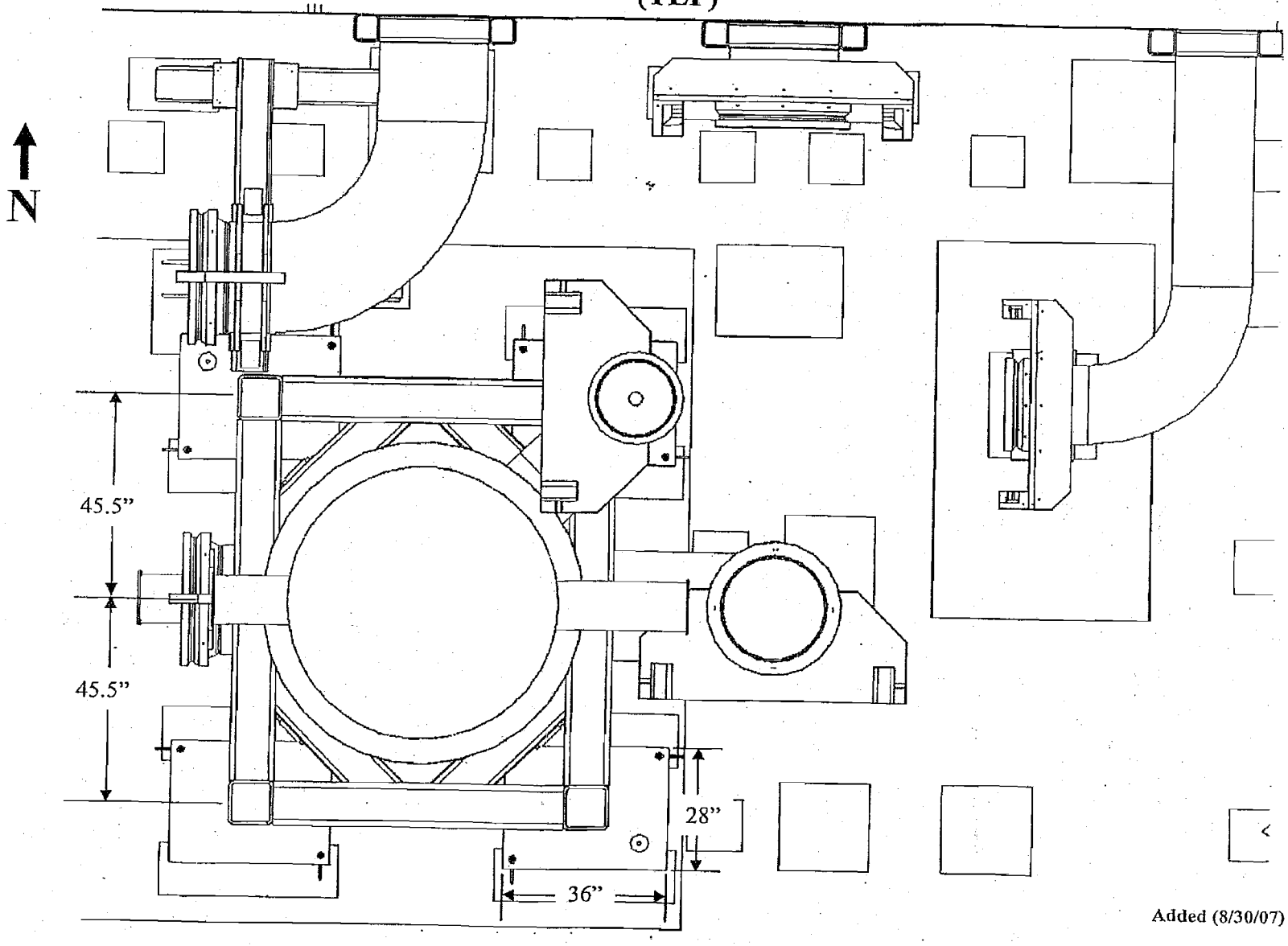

Added (8/30/07)

TLP

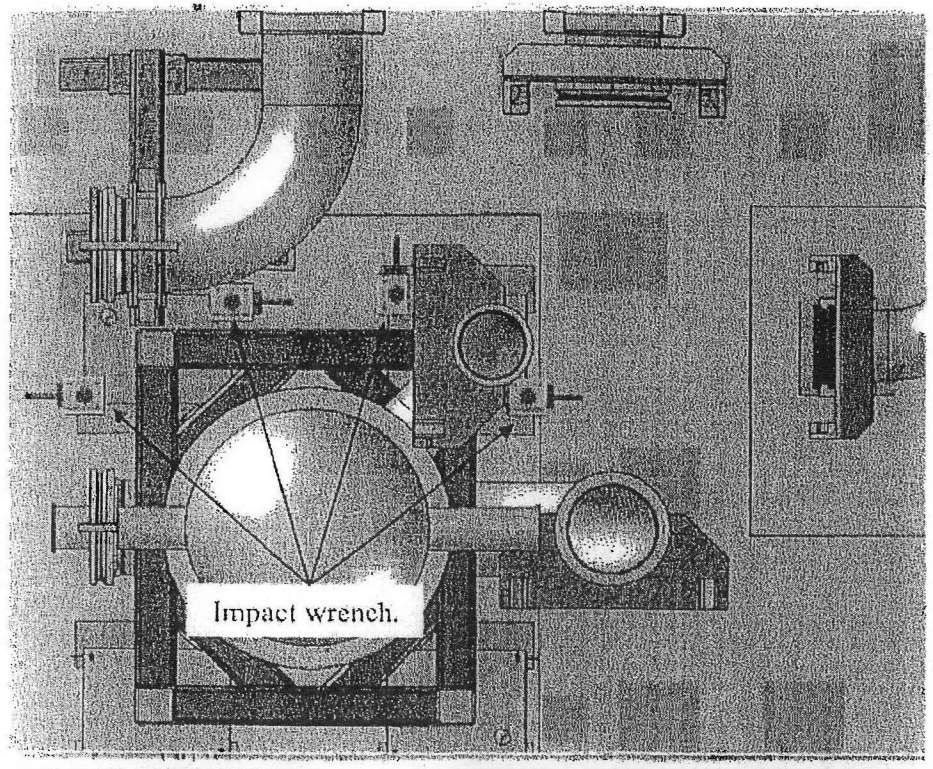

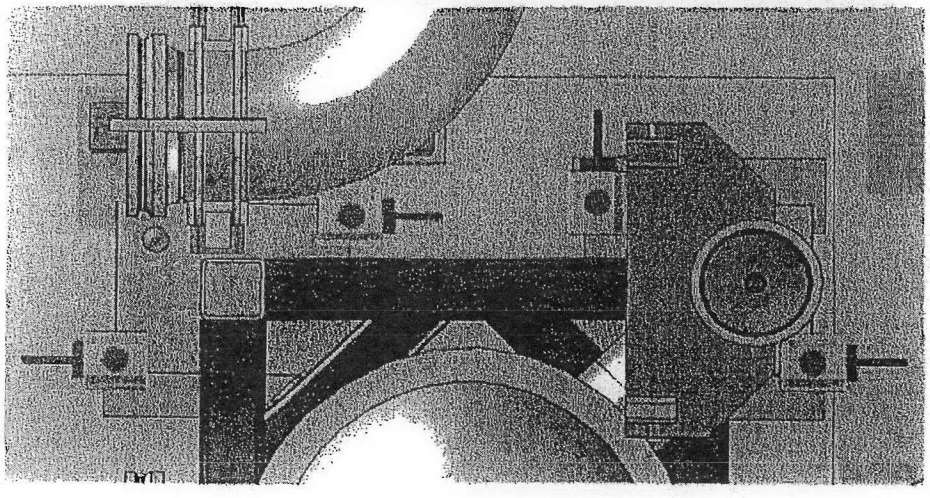

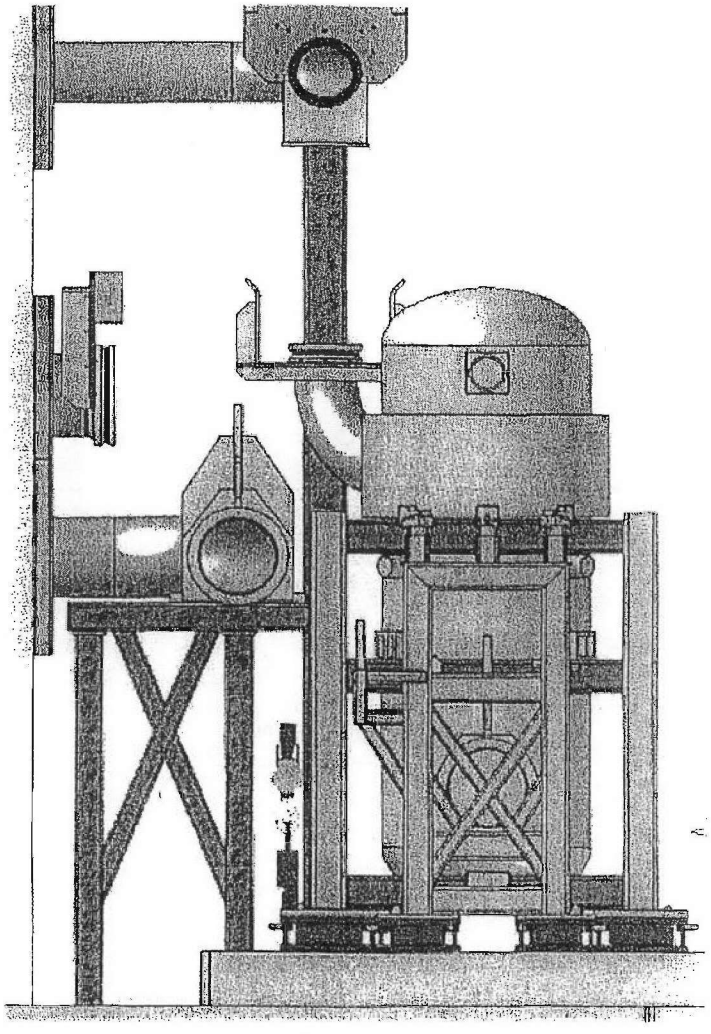

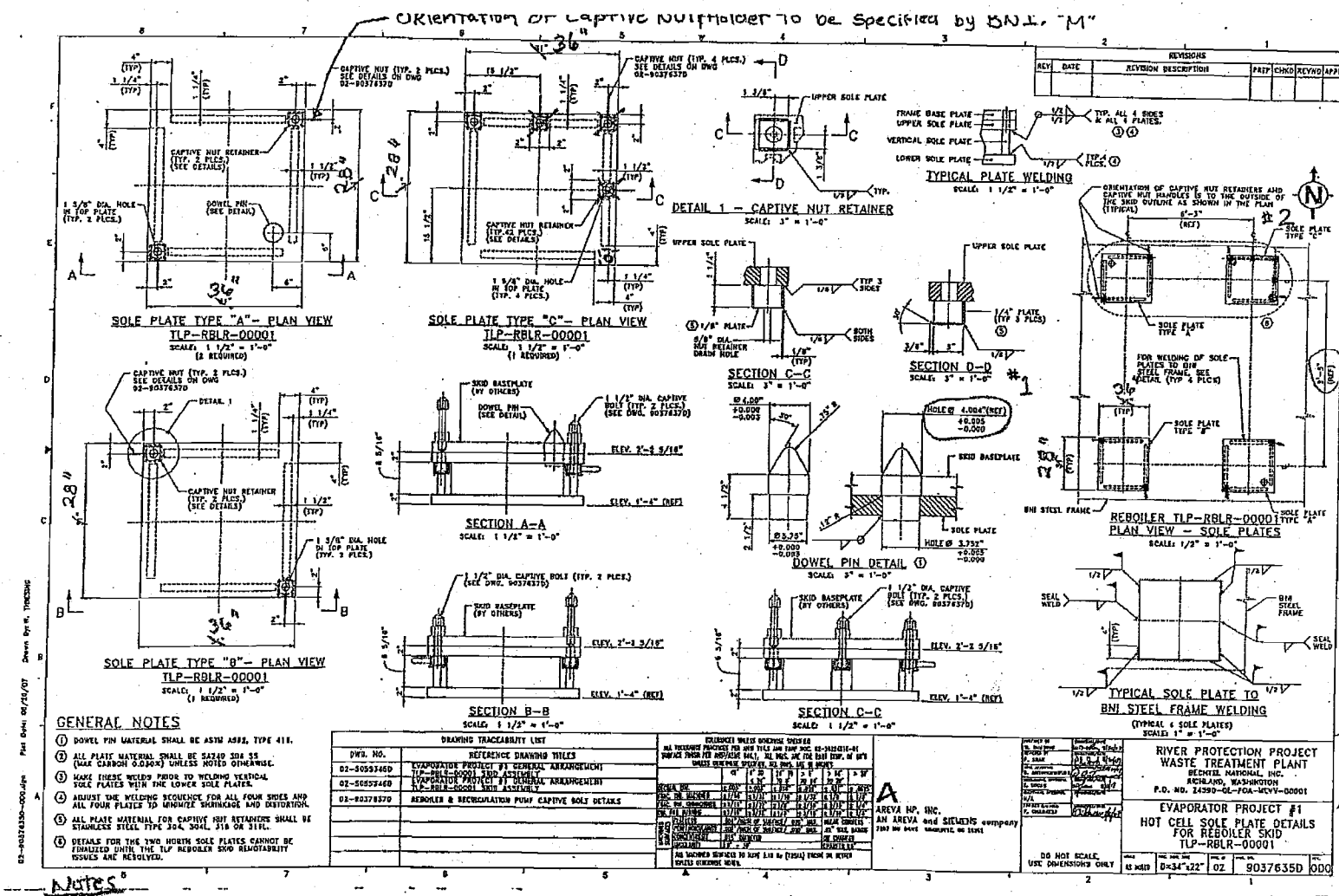

GENERAL NOTES

1. DOWEL PIN MATERIAL SHALL BE ASTM A582, TYPE 416.
2. ALL PLATE MATERIAL SHALL BE SA240 304 SS (MAX CARBON 0.030%) UNLESS NOTED OTHERWISE.
3. MAKE THESE WELDS PRIOR TO WELDING VERTICAL SOLE PLATES WITH THE LOWER SOLE PLATES.
4. ADJUST THE WELDING SEQUENCE FOR ALL FOUR SIDES AND ALL FOUR PLATES TO MINIMIZE SHRINKAGE AND DISTORTION.
5. ALL PLATE MATERIAL FOR CAPTIVE NUT RETAINERS SHALL BE STAINLESS STEEL TYPE 304, 304L, 316 OR 316L.
6. DETAILS FOR THE TWO NORTH SOLE PLATES CANNOT BE FINALIZED UNTIL THE TLP REBOILER SKID REMOTABILITY ISSUES ARE RESOLVED.

DRAWING TRACEABILITY LIST

DWG. NO.	REFERENCE DRAWING TITLES
02-30993460	EVAPORATOR PROJECT #1 GENERAL ARRANGEMENT TLP-RBLR-00001 SKID ASSEMBLY
02-30992460	EVAPORATOR PROJECT #1 GENERAL ARRANGEMENT TLP-RBLR-00001 SKID ASSEMBLY
02-90378370	REBOILER & RECIRCULATION PUMP CAPTIVE BOLT DETAILS

REVISIONS

REV	DATE	REVISION DESCRIPTION	PREP	CHKD	REVWD	APPR

AREVA NP, INC. AN AREVA and SIEMENS company

RIVER PROTECTION PROJECT WASTE TREATMENT PLANT
BECHTEL NATIONAL INC.
RICHLAND, WASHINGTON
P.O. NO. 24590-QL-POA-MEVV-00001

EVAPORATOR PROJECT #1
HOT CELL SOLE PLATE DETAILS FOR REBOILER SKID
TLP-RBLR-00001

DO NOT SCALE. USE DIMENSIONS ONLY

SIZE	CAGE CODE NO.	DWG. NO.	REV
D	34"x22"	02	9037635D 000

Notes

"M" #1. Hole for skid Base plate is called out @ 4.004" and on drawing # 9043526D skid Base plate Hole is called out To be 4.030".

"M" #2. Change hole pattern To only 2 Captive Bolts, location is one in North west and one in South east.

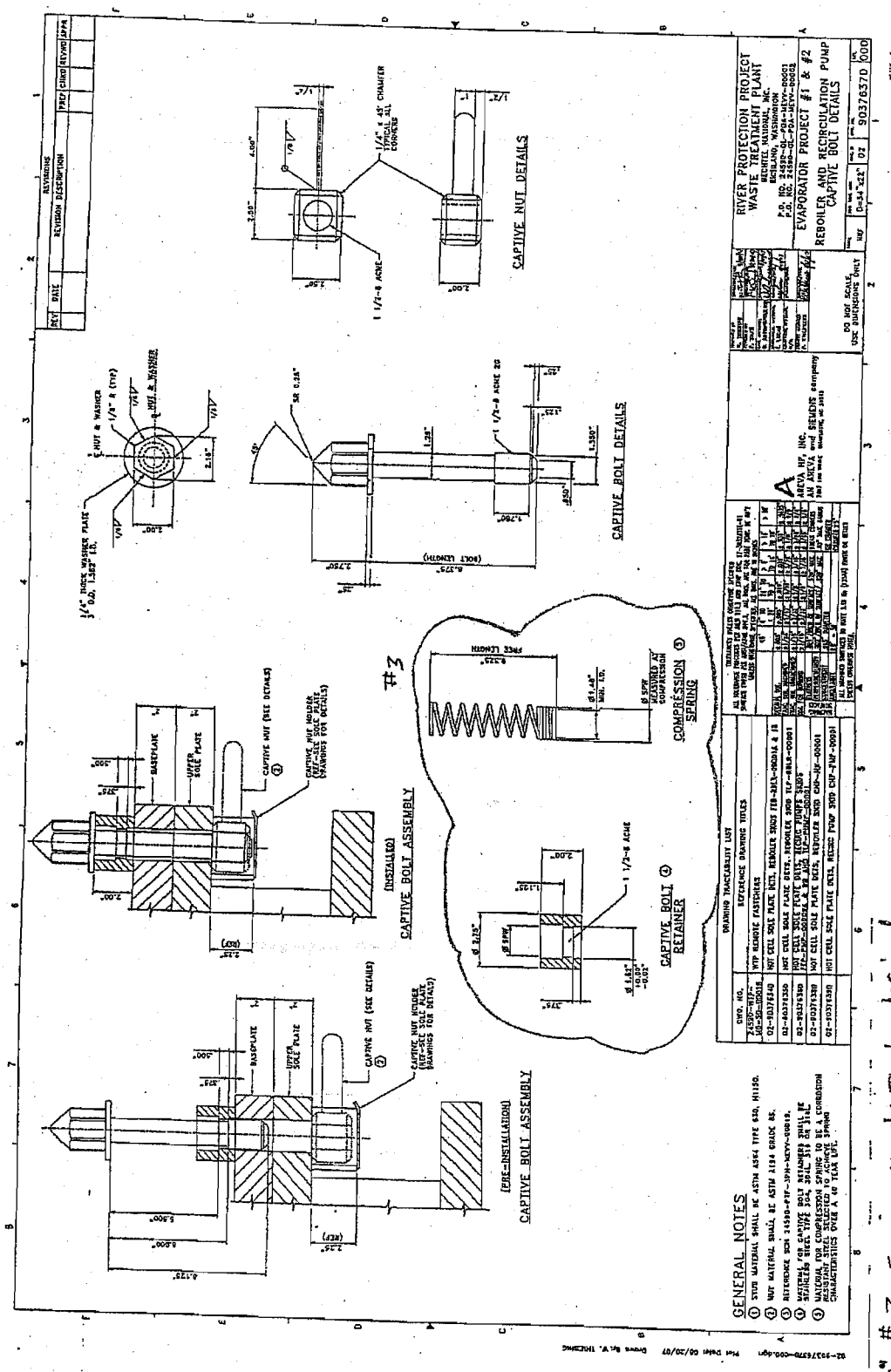

"M" # 3. Spring Needs To be defined.

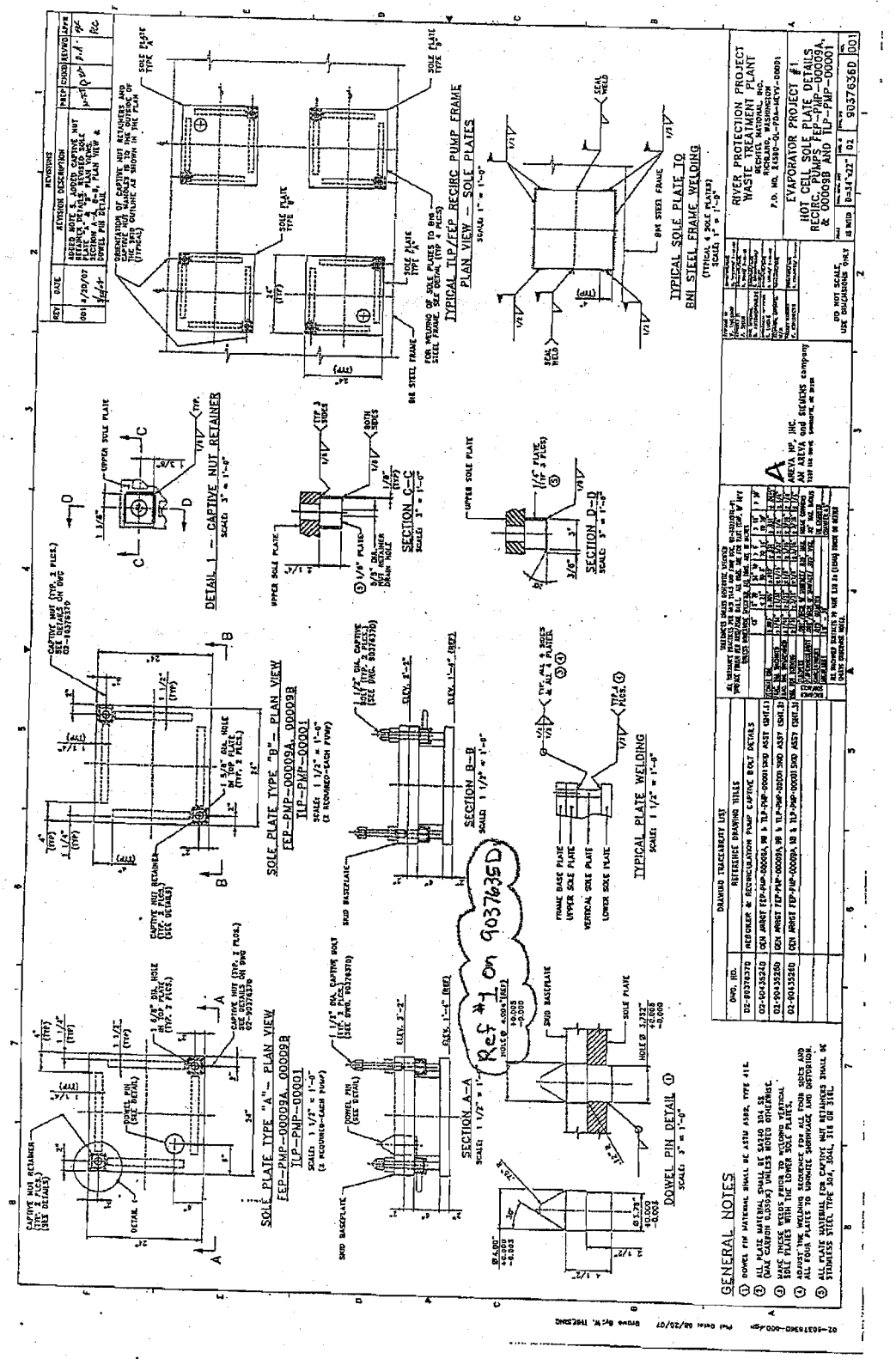
GENERAL NOTES
SOLE PLATE TYPE "A" — PLAN VIEW
FEP-PMP-00009A, 00009B
TLP-PMP-00001
SOLE PLATE TYPE "B" — PLAN VIEW
FEP-PMP-00009A, 00009B
TLP-PMP-00001
DETAIL 1 — CAPTIVE NUT RETAINER
SECTION A-A
SECTION B-B
SECTION C-C
SECTION D-D
DOWEL PIN DETAIL
TYPICAL SOLE PLATE WELDING
TYPICAL TLP/FEP RECIRC PUMP FRAME
PLAN VIEW — SOLE PLATES
TYPICAL SOLE PLATE TO
BNI STEEL FRAME WELDING
RIVER PROTECTION PROJECT
WASTE TREATMENT PLANT
EVAPORATOR PROJECT #1
HOT CELL SOLE PLATE DETAILS
RECIRC. PUMPS FEP-PMP-00009A,
& 00009B AND TLP-PMP-00001
90376360 001
Ref #1 on 90376350

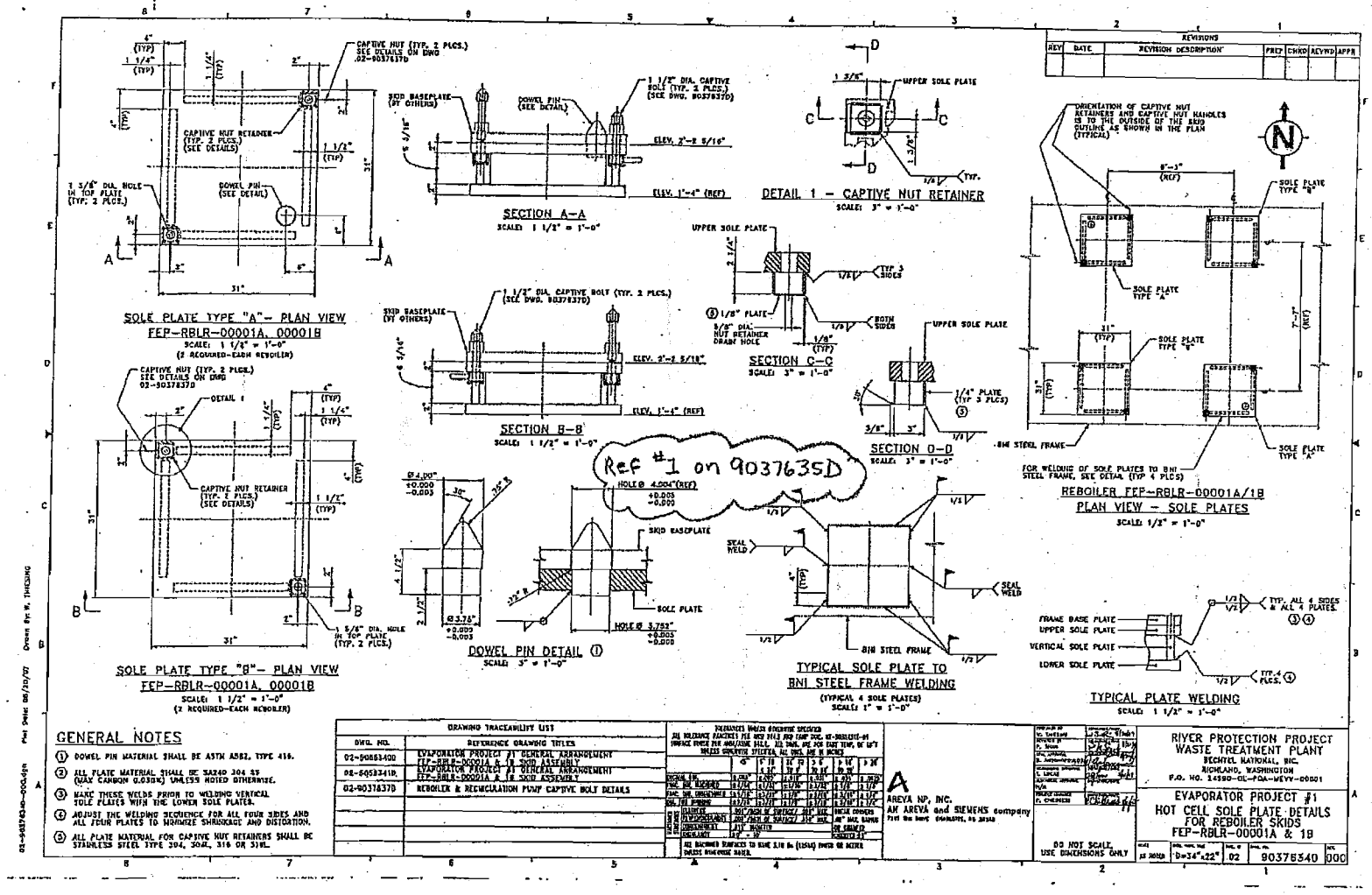

REVISIONS						
REV	DATE	REVISION DESCRIPTION	PREP	CHKD	ACVWD	APPR

GENERAL NOTES

1. DOWEL PIN MATERIAL SHALL BE ASTM A582, TYPE 416.
2. ALL PLATE MATERIAL SHALL BE SA240 304 SS (MAX CARBON 0.030%) UNLESS NOTED OTHERWISE.
3. MAKE THESE WELDS PRIOR TO WELDING VERTICAL SOLE PLATES WITH THE LOWER SOLE PLATES.
4. ADJUST THE WELDING SEQUENCE FOR ALL FOUR SIDES AND ALL FOUR PLATES TO MINIMIZE SHRINKAGE AND DISTORTION.
5. ALL PLATE MATERIAL FOR CAPTIVE NUT RETAINERS SHALL BE STAINLESS STEEL TYPE 304, 304L, 316 OR 316L.

DRAWING TRACEABILITY LIST	
DWG. NO.	REFERENCE DRAWING TITLES
02-90883400	EVAPORATOR PROJECT #1 GENERAL ARRANGEMENT
	FEP–RBLR–00001A & 1B SKID ASSEMBLY
02-90883410	EVAPORATOR PROJECT #1 GENERAL ARRANGEMENT
	FEP–RBLR–00001A & 1B SKID ASSEMBLY
02-90376370	REBOILER & RECIRCULATION PUMP CAPTIVE BOLT DETAILS

TOLERANCES UNLESS OTHERWISE SPECIFIED

A
AREVA NP, INC.
AN AREVA and SIEMENS company
Post Office Box 10935, Richland, WA 99352

DO NOT SCALE. USE DIMENSIONS ONLY

RIVER PROTECTION PROJECT
WASTE TREATMENT PLANT
BECHTEL NATIONAL, INC.
RICHLAND, WASHINGTON
P.O. NO. 24590-CL-POA-MEVV-00001

EVAPORATOR PROJECT #1
HOT CELL SOLE PLATE DETAILS
FOR REBOILER SKIDS
FEP–RBLR–00001A & 1B

SIZE	SCALE	DWG. NO.	REV.
D	0=34"=22"	02	90376340 000

02-90376340-0004.dgn Plot Date: 08/10/07 Drawn By: M. THOMAS

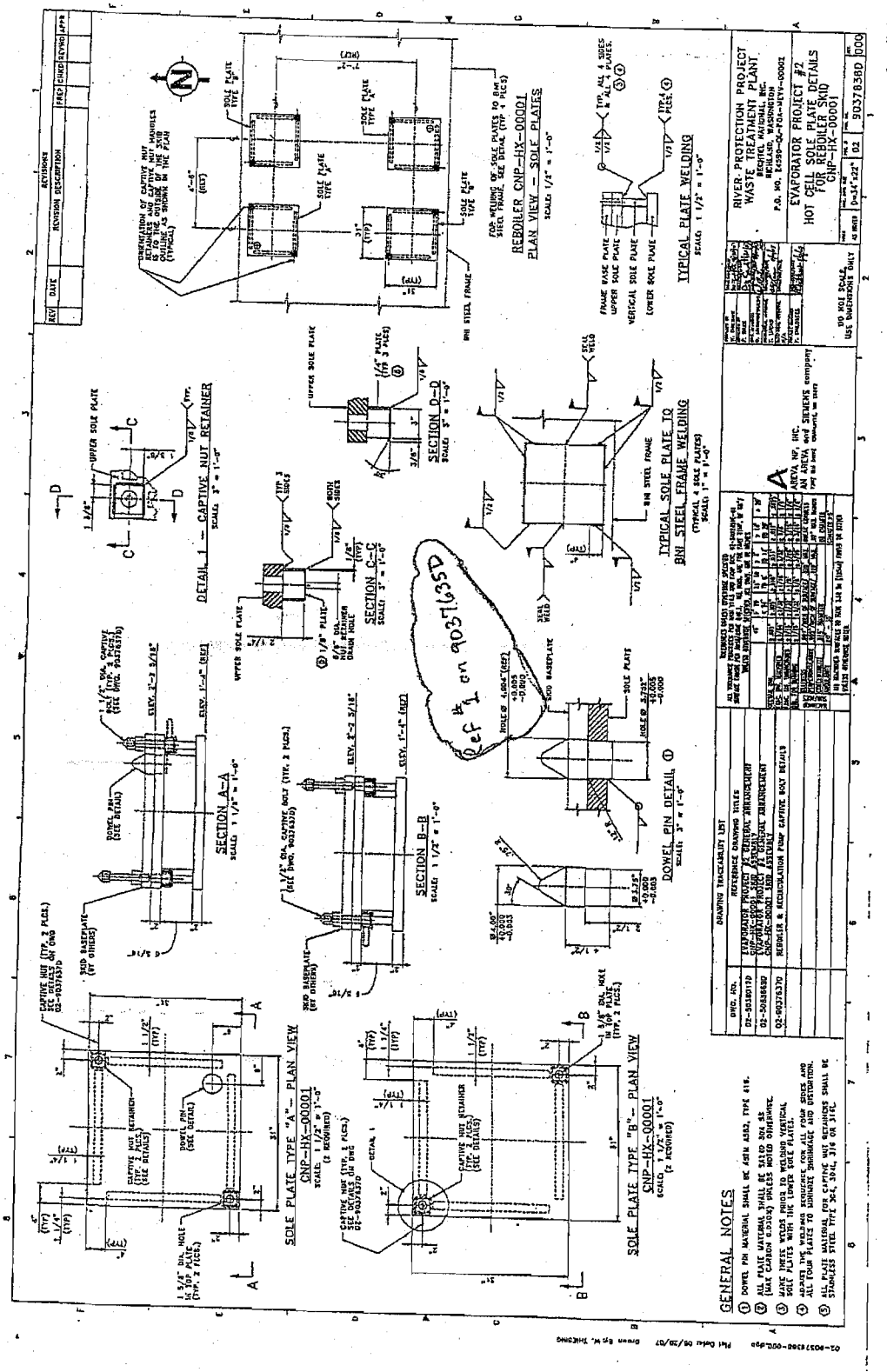
GENERAL NOTES
SOLE PLATE TYPE "A" - PLAN VIEW
SOLE PLATE TYPE "B" - PLAN VIEW
SECTION A-A
SECTION B-B
SECTION C-C
SECTION D-D
DETAIL 1 - CAPTIVE NUT RETAINER
REBOILER CNP-HX-00001
PLAN VIEW - SOLE PLATES
TYPICAL PLATE WELDING
TYPICAL SOLE PLATE TO BM STEEL FRAME WELDING
DOWEL PIN DETAIL ①
RIVER PROTECTION PROJECT
WASTE TREATMENT PLANT
EVAPORATOR PROJECT #2
HOT CELL SOLE PLATE DETAILS
FOR REBOILER SKID
CNP-HX-00001
24590-PTF-3PS-MEVV-T0001
90378380
AREVA NP, INC.
an AREVA and SIEMENS company

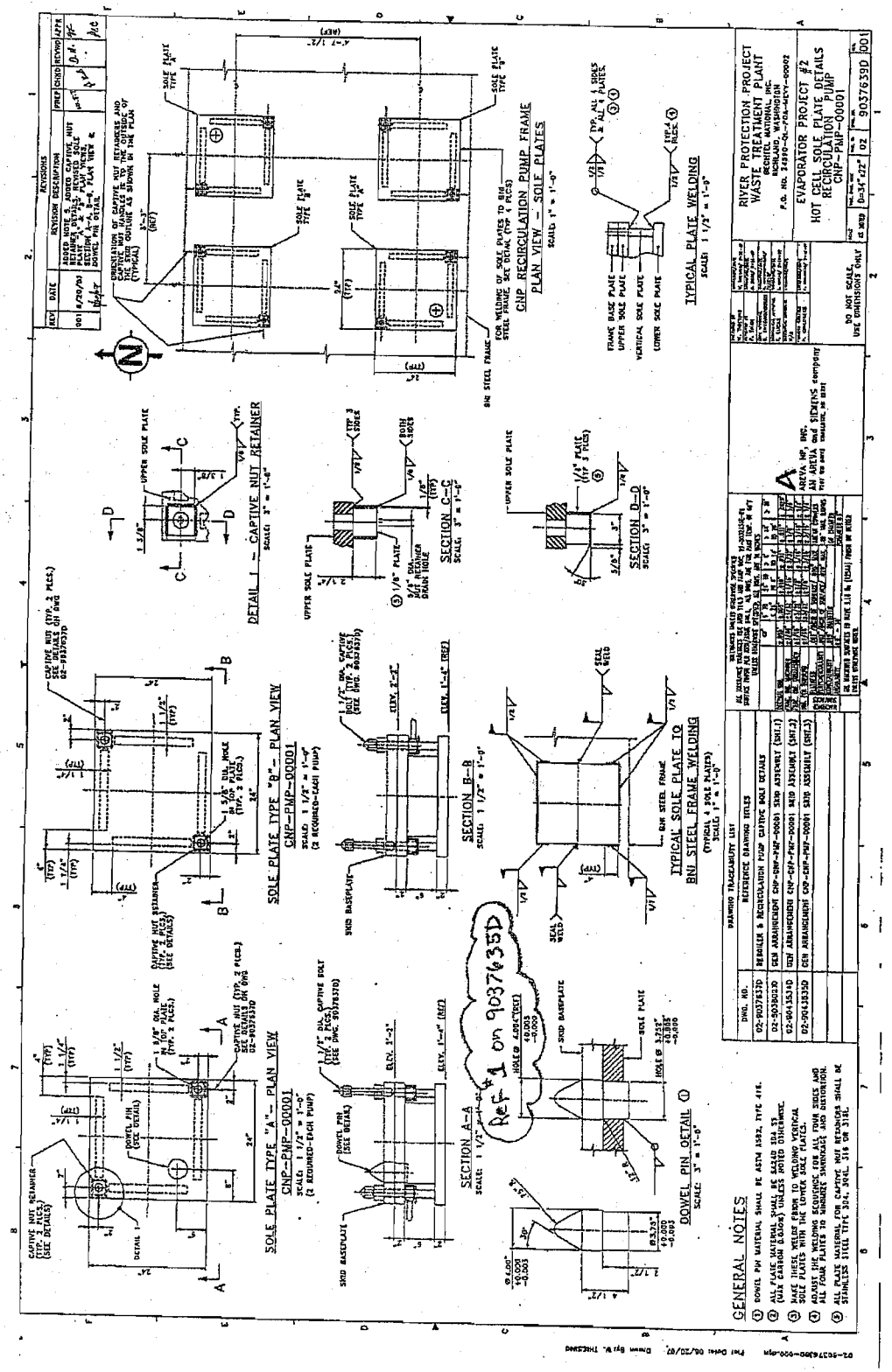
SOLE PLATE TYPE "A" – PLAN VIEW
CNP-PMP-00001
SOLE PLATE TYPE "B" – PLAN VIEW
CNP-PMP-00001
DETAIL 1 – CAPTIVE NUT RETAINER
CNP RECIRCULATION PUMP FRAME
PLAN VIEW – SOLE PLATES
TYPICAL PLATE WELDING
SECTION A–A
SECTION B–B
SECTION C–C
SECTION D–D
DOWEL PIN DETAIL ①
TYPICAL SOLE PLATE TO BNI STEEL FRAME WELDING
GENERAL NOTES
RIVER PROTECTION PROJECT
WASTE TREATMENT PLANT
EVAPORATOR PROJECT #2
HOT CELL SOLE PLATE DETAILS
RECIRCULATION PUMP
CNP-PMP-00001
90376350 001

ATTACHMENT #12

TLP Primary Condenser Cooling Water Isometrics (Ref. CCN 186782)

FEP Primary Condenser Cooling Water Isometrics (Ref. CCN 183789)

24590-PTF-3PS-MEW-T0001 Rev. 3

Pg V-240

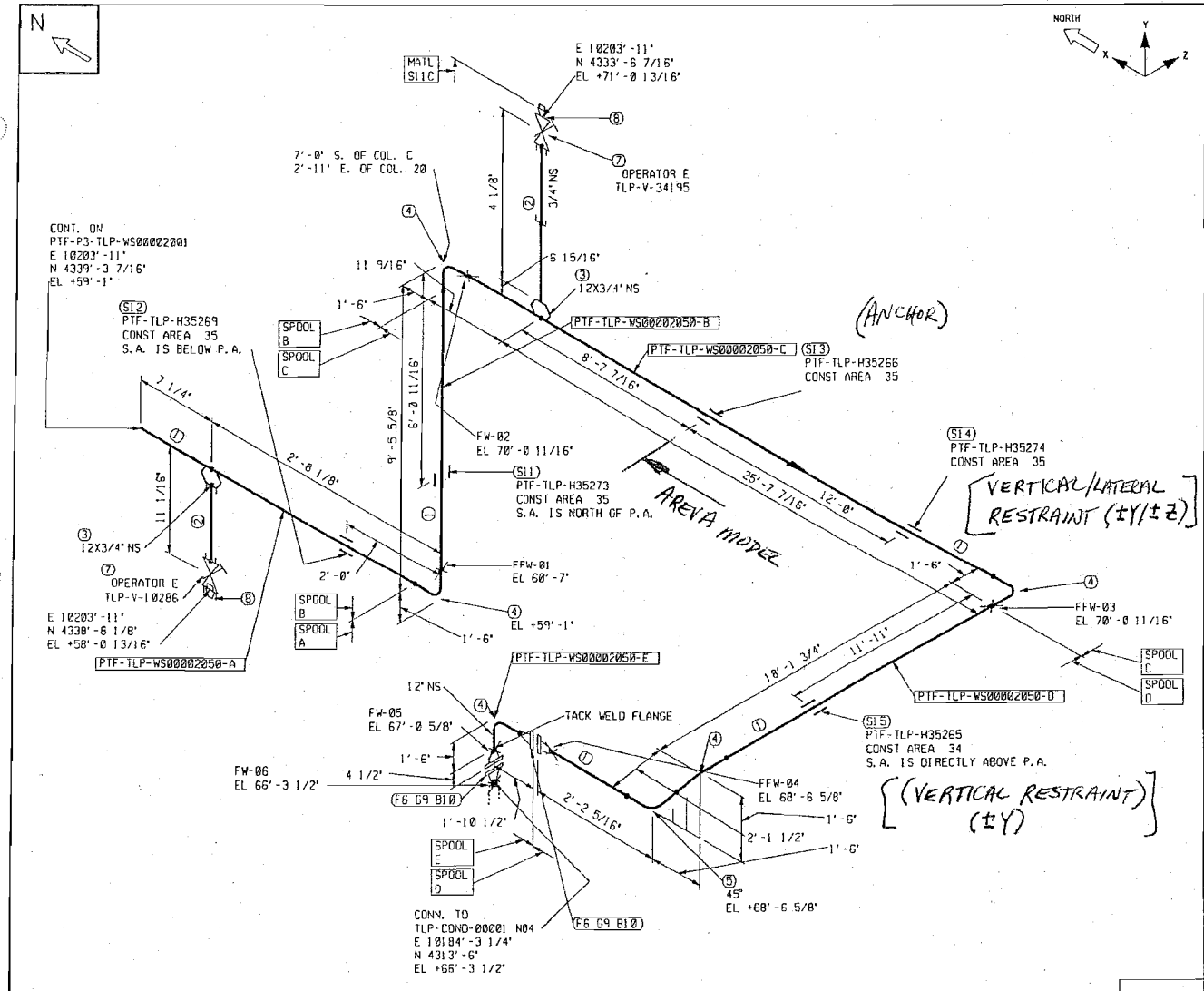

COMPUTER GENERATED - MANUAL DESIGN CHANGES NOT PERMITTED

NOTES:

1. FOR GENERAL NOTES AND LEGEND SEE DWG. 24590-WTP-PD-50-00001001.

SHOP MATERIALS

PART NO	COMPONENT DESCRIPTION	N.S. (INCHES)	QTY	BECHTEL STK CODE
	PIPE			
1	PIPE, A312TP316/316L, EFW, SCH 10S, BBE	12	52'-9"	PPPC0B0F0P07
2	PIPE, A312TP316/316L, SMLS, SCH40S, PE	3/4	0'-6"	PPPC0B0G1A0L
	FITTINGS			
3	SOCKOLET, A182-F316+, CL3000	12X3/4	2	PFLSX7X01P92
4	EL - 90, LR, BW, A403WP316/316L-W, SCH 10S	12	5	PFQN4X0F1A0N
5	EL - 45, LR, BW, A403WP316/316L-W, SCH10S	12	1	PFRN4X0F180N
	FLANGES			
6	FLGWN, A182-F316/316L, CL150, SCH40S, RF, STDFF, B16.5	12	4	PFFWX71G5Y0D
	VALVES / IN-LINE ITEMS			
7	VLV-GT, SLOWDGRS, A182F316L, CL000, SW, FNPT, API602CBB, TRM12, HW	3/4	2	FVVGUY80R001

FIELD MATERIALS

PART NO	COMPONENT DESCRIPTION	N.S. (INCHES)	QTY	BECHTEL STK CODE
	FITTINGS			
8	PLUG S/HD, MNPT, A182F316L	3/4	2	PFTKUY002F01
	GASKETS			
9	GASKET, SPWND, 316L-FG, 1/8"SS, CL150, B16.20, B16.5	12	2	PGSC2W10060C
	BOLTS			
10	0.875 X 4.75 BOLT, STDBLT, A193B8-2/8	7/8	24	FB8S5Y000029
	SUPPORTS			
11	PIPE SUPT, WS-A-A1-64.0-12-C		1	
12	PIPE SUPT, GS-A-40-42.0-12		1	
13	PIPE SUPT, PTF-TLP-H35266, WELDED PIPE ATTCHMT		1	
14	PIPE SUPT, PTF-TLP-H35274		1	
15	PIPE SUPT, MS-A-2-72.0, WS-A-A1-64.0-12-C		1	

STRESS REVIEW PRINT		REV	
☐	ACCEPTED	☐	NOT ACCEPTED
☐	ACCEPTED W/ COMMENTS	☐	SUPPORTS ADDED TO MODEL BY:
STRESS ANALYST:		DATE:	

BECHTEL

RIVER PROTECTION PROJECT
WASTE TREATMENT PLANT
2435 STEVENS CENTER PLACE
RICHLAND, WA 99354

CONTRACT No: DE-AC27-01RV14136

P&ID: 24590-PTF-M6-TLP-00002 | CONST. WORK AREA: 35

PRETREATMENT FACILITY ISOMETRIC

LINE No. TLP-WS-00002-S11C-12 | PIPE SPEC: S11C

DWG No. 24590-PTF-P3-TLP-WS00002050 | REV A

CM QUALITY LEVEL

PAINT CODE	N/A	CONTENT APPLICABLE TO ALARA? ☐ YES ☐ NO	
INSULATION TYPE	NI	ADR NO.	REV.
INSULATION THK.	.0	SEISMIC CAT.	SC-IV

ISO TYPE PT_XSTRESS C:\iso\24590-PTF-P3-TLP-WS00002050.DGN

LENGTH (FT.) 72.66 (FOR INFO ONLY) JSM Created: JAN-16-2009 13:09 Iso Created: JAN-16-2009 13:10 PCF File: 24590-PTF-P3-TLP-WS00002050 PLOTTED BY: rmendoz1 PLOT DATE: 01/16/2009 01:11:50 PM SHT. 1 OF 1

24590-PTF-3PS-MEVV-T0001 Rev. 3

Pg V-241

COMPUTER GENERATED - MANUAL DESIGN CHANGES NOT PERMITTED

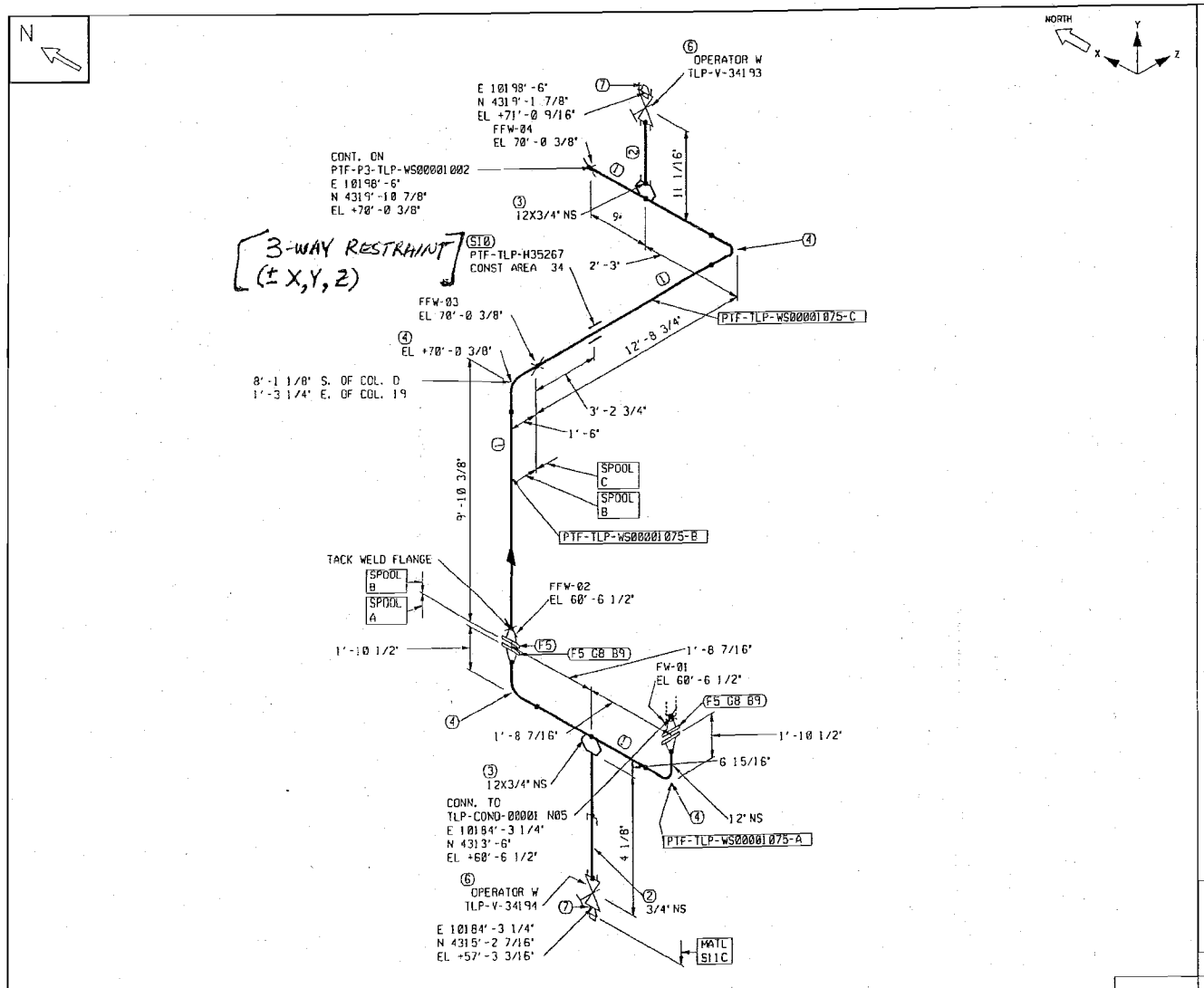

NOTES:

1. FOR GENERAL NOTES AND LEGEND SEE DWG. 24590-WTP-P0-50-00001001.

SHOP MATERIALS

PART NO	COMPONENT DESCRIPTION	N.S. (INCHES)	QTY	BECHTEL STK CODE
	PIPE			
1	PIPE, A312TP316/316L, EFW, SCH 10S, BBE	12	21'2"	PPPC080F8P07
2	PIPE, A312TP316/316L, SMLS, SCH40S, PE	3/4	0'6"	PPPC0B0C1A0L
	FITTINGS			
3	SOCKOLET, A182-F316*, CL3000	12X3/4	2	PFLSX7X01P92
4	EL - 90, LR, BW, A403WP316/316L-W, SCH 10S	12	4	PFDN4X0F1A0N
	FLANGES			
5	FLGWN, A182-F316/316L, CL150, SCH40S, RF, STDFF, B16.5	12	4	PFFWX71G5Y0D
	VALVES / IN-LINE ITEMS			
6	VLV-GT, SLOWDGRS, A182F316L, CL800, SW, FNPT, API602089, TRM12, HW	3/4	2	PVVGUY80RO01

FIELD MATERIALS

PART NO	COMPONENT DESCRIPTION	N.S. (INCHES)	QTY	BECHTEL STK CODE
	FITTINGS			
7	PLUG S/HD, MNPT, A182F316L	3/4	2	PFTKUY800F01
	GASKETS			
8	GASKET, SPWND, 316L-FG, 1/8"SS, CL150, B16.20, B16.5	12	2	PGGC2W10060E
	BOLTS			
9	0.875 X 4.75 BOLT, STDBLT, A19308-2/8	7/8	24	FBBS5YB08029
	SUPPORTS			
10	PIPE SUPT, PTF-TLP-H35267, WELDED PIPE ATTCHMT		1	

STRESS REVIEW PRINT	REV
☐ ACCEPTED	☐ NOT ACCEPTED
☐ ACCEPTED W/ COMMENTS	☐ SUPPORTS ADDED TO MODEL BY:
STRESS ANALYST:	DATE:

CM QUALITY LEVEL

PAINT CODE	N/A	CONTENT APPLICABLE TO ALARA? ☐ YES ☐ NO	
INSULATION TYPE	NI	ADR NO.	REV.
INSULATION THK.	0	SEISMIC CAT.	SC-IV

BECHTEL

RIVER PROTECTION PROJECT
WASTE TREATMENT PLANT
2435 STEVENS CENTER PLACE
RICHLAND, WA 99354

CONTRACT No: DE-AC27-01RV14136

P&ID: 24590-PTF-M6-PCW-00001 | CONST. WORK AREA: 34

PRETREATMENT FACILITY ISOMETRIC

LINE No. TLP-WS-00001-S11C-12 | PIPE SPEC: S11C

DWG No. 24590-PTF-P3-TLP-WS00001075 | REV 4

LENGTH (FT.) 36.85 (FOR INFO ONLY) JSM Created: JAN-21-2009 10:40 Iso Created: JAN-21-2009 10:41 PCF File: 24590-PTF-P3-TLP-WS00001075 PLOTTED BY: mmercier PLOT DATE: 01/21/2009 10:44:43 AM SHT 1 OF 1

ISO TYPE: PT_xSTRESS C:\iso\24590-PTF-P3-TLP-WS00001075B.DGN

24590-PTF-3PS-MEVV-T0001 Rev. 3

Pg V-242

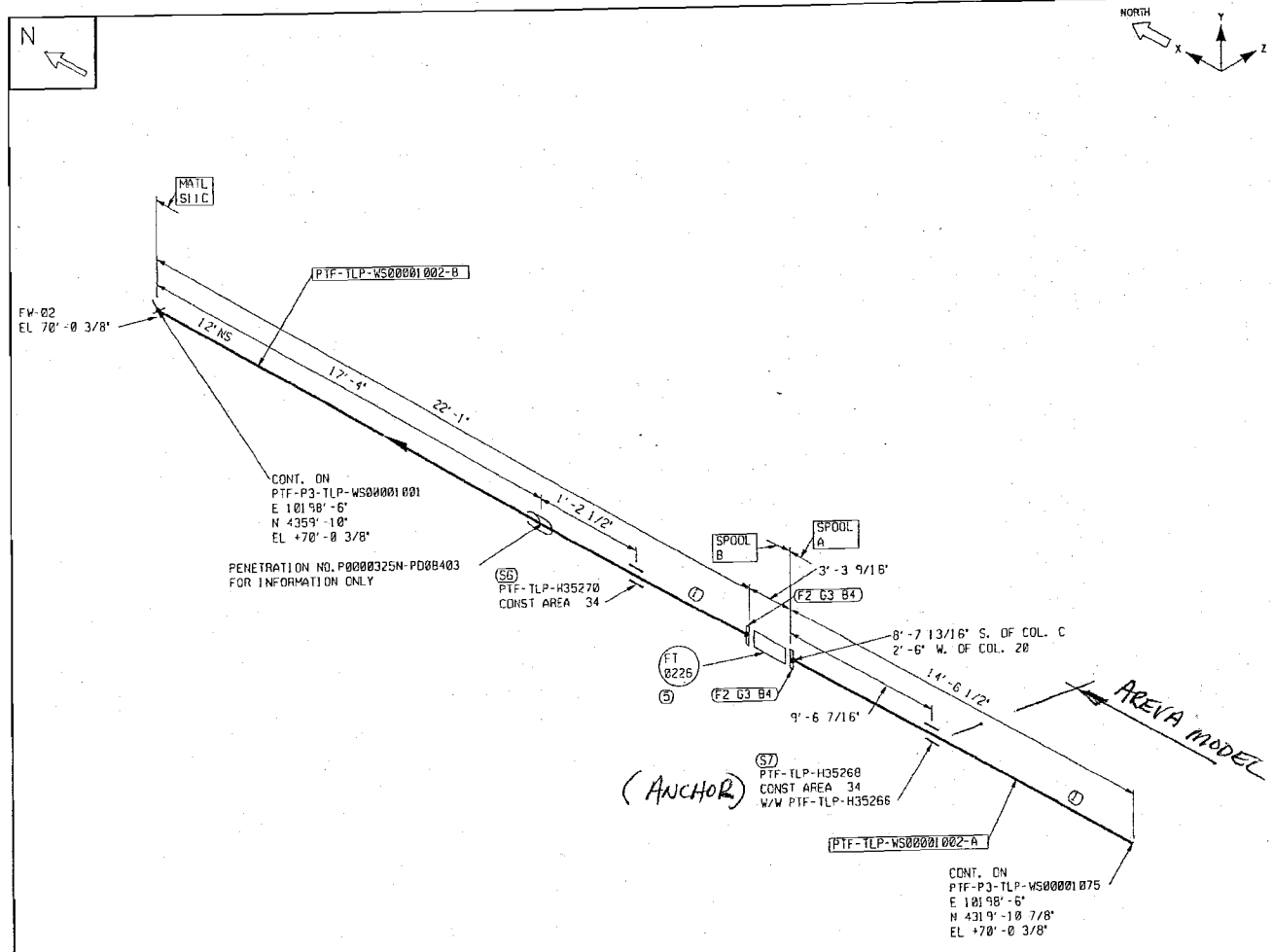

SHOP MATERIALS

PART NO	COMPONENT DESCRIPTION	N.S. (INCHES)	QTY	BECHTEL STK CODE
	PIPE			
1	PIPE, A312TP316/316L, EFW, SCH 10S, BBE	12	36'6"	PPPC080F0P07
	FLANGES			
2	FLGSLPON, A182-F316/316L, CL150, RF, STDFF, B16.5	12	2	PFFPX7102P0D

FIELD MATERIALS

PART NO	COMPONENT DESCRIPTION	N.S. (INCHES)	QTY	BECHTEL STK CODE
	GASKETS			
3	GASKET, SPWND, 316L-FG, 1/8"SS, CL150, B16.20, B16.5	12	2	PGGC2W10062C
	BOLTS			
4	0.875 X 4.75 BOLT, STDBLT, A19388-2/8	7/8	24	FBBSSY000029
	INSTRUMENTS / SPECIALTY ITEMS			
5	FT-0226	12	1	N/A
	SUPPORTS			
6	PIPE SUPT, PTF-TLP-H35270		1	
7	PIPE SUPT, PTF-TLP-H35268, WELDED PIPE ATTCHMT		1	

STRESS REVIEW PRINT	REV
☐ ACCEPTED	☐ NOT ACCEPTED
☐ ACCEPTED W/ COMMENTS	☐ SUPPORTS ADDED TO MODEL BY:
STRESS ANALYST:	DATE:

BECHTEL

RIVER PROTECTION PROJECT
WASTE TREATMENT PLANT
2435 STEVENS CENTER PLACE
RICHLAND, WA 99354

CONTRACT No: DE-AC27-01RV14136

P&ID: 24590-PTF-MG-TLP-00002 | CONST. WORK AREA: 34

PRETREATMENT FACILITY ISOMETRIC

LINE No. TLP-WS-00001-S11C-12 | PIPE SPEC: S11C

DWG No. 24590-PTF-P3-TLP-WS00001002 | REV A

CM QUALITY LEVEL

PAINT CODE	N/A	CONTENT APPLICABLE TO ALARA? ☐ YES ☐ NO	
INSULATION TYPE	NI	ADR NO.	REV.
INSULATION THK.	0	SEISMIC CAT.	SC-IV

NOTES:

1. FOR GENERAL NOTES AND LEGEND SEE DWG. 24590-WTP-PO-50-00001001.

LENGTH (FT.) 39.92 (FOR INFO ONLY) JSM Created: JAN-16-2009 13:09 Iso Created: JAN-16-2009 13:10 PCF File: 24590-PTF-P3-TLP-WS00001002 PLOTTED BY: rmendozi PLOT DATE 01/16/2009 01:13:45 PM SHT. 1 OF 1

ISO TYPE: PT_XSTRESS C:\Iso\24590-PTF-P3-TLP-WS00001002.DGN

COMPUTER GENERATED - MANUAL DESIGN CHANGES NOT PERMITTED

24590-PTF-3PS-MEVV-T0001 Rev. 3

Pg V-243

COMPUTER GENERATED - MANUAL DESIGN CHANGES NOT PERMITTED

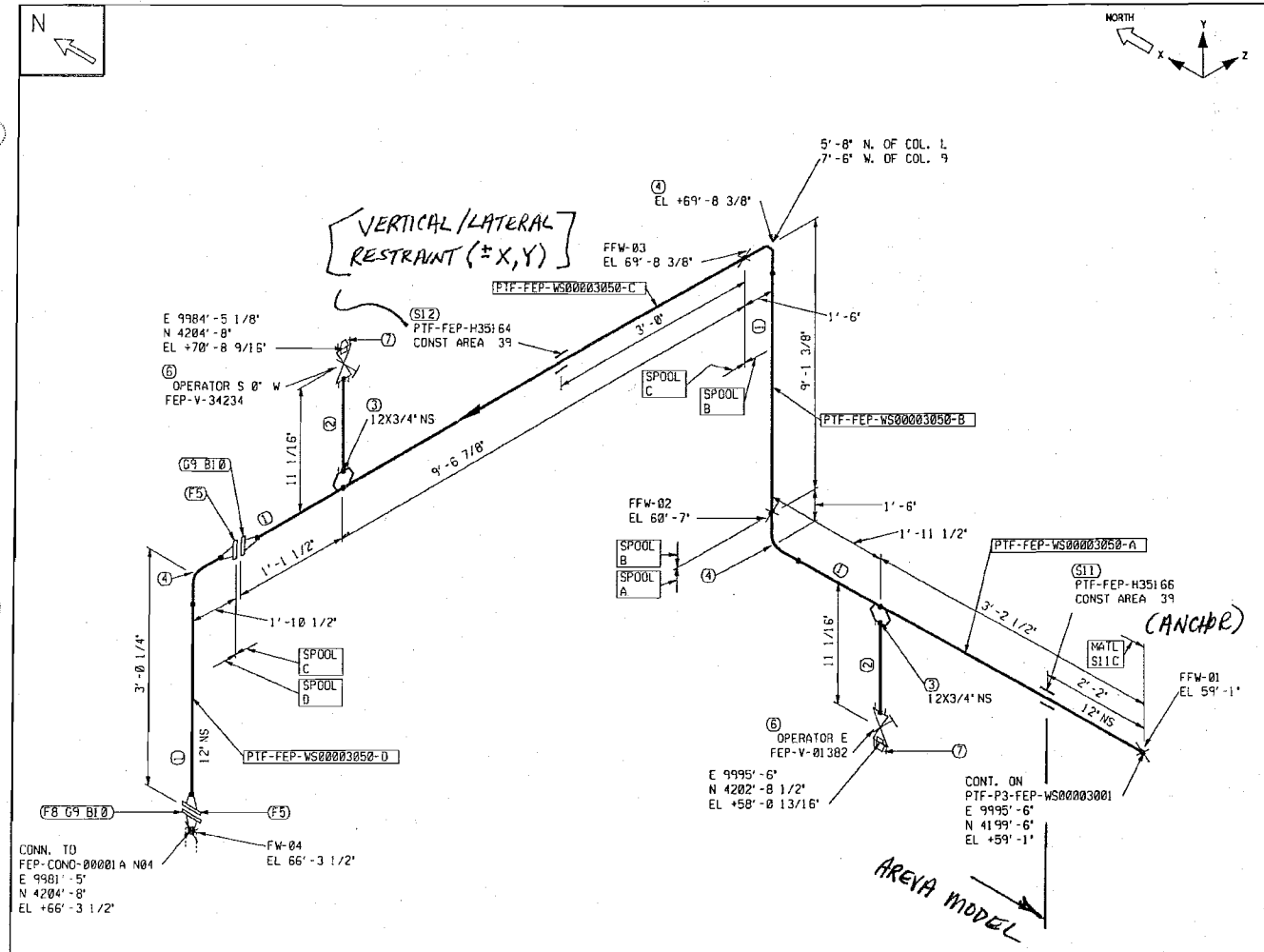

NOTES:

1. FOR GENERAL NOTES AND LEGEND SEE DWG. 24590-WTP-PO-50-00001001.

SHOP MATERIALS

PART NO	COMPONENT DESCRIPTION	N.S. (INCHES)	QTY	BECHTEL STK CODE
	PIPE			
1	PIPE, A312TP316/316L, EFW, SCH 10S, BBE	12	22'9"	PPPC880F0P07
2	PIPE, A312TP316/316L, SMLS, SCH40S, PE	3/4	0'6"	PPPC880G1A0L
	FITTINGS			
3	SOCKOLET, A182-F316*, CL3000	12X3/4	2	PFLSX7X01F92
4	EL - 90, LR, BW, A403WP316/316L-W, SCH 10S	12	3	PFQN4X0F1A0N
	FLANGES			
5	FLGWN, A182-F316/316L, CL150, SCH40S, RF, STDFF, B16.5	12	3	PFFWX71G5Y0D
	VALVES / IN-LINE ITEMS			
6	VLV-GT, SLOWGRS, A182F316L, CL800, SW, FNPT, API602DB, TRM12, HW	3/4	2	PVVGUY80R001

FIELD MATERIALS

PART NO	COMPONENT DESCRIPTION	N.S. (INCHES)	QTY	BECHTEL STK CODE
	FITTINGS			
7	PLUG S/HD, MNPT, A182F316L	3/4	2	PFTKUY000F01
	FLANGES			
8	FLGWN, A182-F316/316L, CL150, SCH40S, RF, STDFF, B16.5	12	1	PFFWX71G5Y0D
	GASKETS			
9	GASKET, SPWND, 316L-FG, 1/8"SS, CL150, B16.20, B16.5	12	2	PGGC2W10060C
	BOLTS			
10	0.875 X 4.75 BOLT, STDBLT, A19388-2/8	7/8	24	F8B55Y000029
	SUPPORTS			
11	PIPE SUPT, PTF-FEP-H35166, WELDED PIPE ATTCHMT		1	
12	PIPE SUPT, GS-A-4D-48.0-12		1	

STRESS REVIEW PRINT	REV
☐ ACCEPTED	☐ NOT ACCEPTED
☐ ACCEPTED W/ COMMENTS	☐ SUPPORTS ADDED TO MODEL BY:
STRESS ANALYST:	DATE:

RIVER PROTECTION PROJECT
WASTE TREATMENT PLANT
2435 STEVENS CENTER PLACE
RICHLAND, WA 99354

CONTRACT No: DE-AC27-01RV14136

P&ID: 24590-PTF-M6-PCW-00001 | CONST. WORK AREA: 39

PRETREATMENT FACILITY ISOMETRIC

PAINT CODE	N/A	CONTENT APPLICABLE TO ALARA? ☐ YES ☐ NO	
INSULATION TYPE	NI	ADR NO.	REV.
INSULATION THK.	0	SEISMIC CAT.	SC-IV

CM QUALITY LEVEL

LINE No. FEP-WS-00003-S11C-12 | PIPE SPEC: S11C

DWG No. 24590-PTF-P3-FEP-WS00003050 | REV A

LENGTH (FT.) 35.48 (FOR INFO ONLY) JSM Created: FEB-05-2009 08:23 | Iso Created: FEB-05-2009 08:23 | PCF File: 24590-PTF-P3-FEP-WS00003050 | PLOTTED BY: mmercier | PLOT DATE: 02/05/2009 09:14:56 AM | SHT. 1 OF 1

ISO TYPE: PT_xSTRESS C:\iso\24590-PTF-P3-FEP-WS00003050C.DGN

24590-PTF-3PS-MEVV-T0001 Rev. 3

Pg V-244

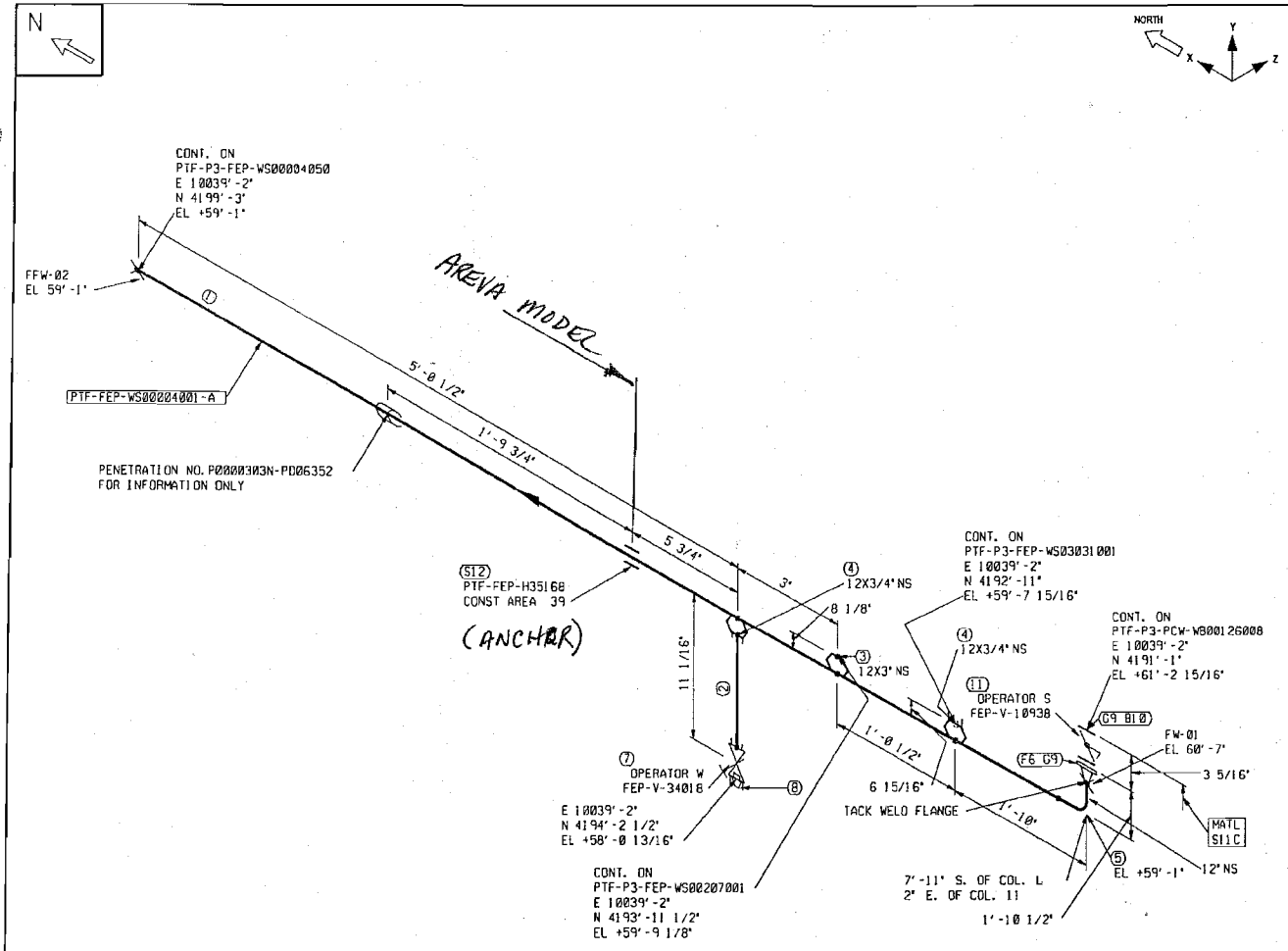

NOTES:

1. FOR GENERAL NOTES AND LEGEND SEE OWG. 24590-WTP-PO-50-00001001.

SHOP MATERIALS

PART NO	COMPONENT DESCRIPTION	N.S. (INCHES)	QTY	BECHTEL STK CODE
	PIPE			
1	PIPE, A312TP316/316L, EFW, SCH 10S, BBE	12	6'8"	PPPC080F0P07
2	PIPE, A312TP316/316L, SMLS, SCH40S, PE	3/4	0'3"	PPPC0B0G1A0L
	FITTINGS			
3	WELDOLET, A182-F316*, SCH 10S, SCH40S	12X3	1	PFLWX70F1WRG
4	SOCKOLET, A182-F316*, CL3000	12X3/4	2	PFLSX7X01P92
5	EL - 90, LR, BW, A403WP316/316L-W, SCH 10S	12	1	PFON4X0F1A0N
	FLANGES			
6	FLGWN, A182-F316/316L, CL150, SCH10S, RF, STDFF, B16.5	12	1	PFFWX71F5Y0D
	VALVES / IN-LINE ITEMS			
7	VLV-GT, SLOWDGRS, A182F316L, CL800, SW, FNPT, API602088, TRM12, HW	3/4	1	PVVGUY08R001

FIELD MATERIALS

PART NO	COMPONENT DESCRIPTION	N.S. (INCHES)	QTY	BECHTEL STK CODE
	FITTINGS			
8	PLUG S/HD, MNPT, A182F316L	3/4	1	PFTKUY200F01
	GASKETS			
9	GASKET, SPWND, 316L-FG, 1/8"SS, CL150, B16.20, B16.5	12	2	PGGC2W10060C
	BOLTS			
10	0.875 X 8.25 BOLT, STDBLT, A1B88-2/B	7/8	12	FBBS5Y000020
	VALVES / IN-LINE ITEMS			
11	VLV-BFLY, WFRTYP, A351CF8M, CL150, STDFF, B16.34, 316DSR	12	1	PVVFUC108R03
	SUPPORTS			
12	PIPE SUPT, PTF-FEP-H35168, WELDED PIPE ATTCHMT		1	

STRESS REVIEW PRINT		REV
☐ ACCEPTED	☐ NOT ACCEPTED	
☐ ACCEPTED W/ COMMENTS	☐ SUPPORTS ADDED TO MODEL BY:	
STRESS ANALYST:	DATE:	

BECHTEL

RIVER PROTECTION PROJECT
WASTE TREATMENT PLANT
2435 STEVENS CENTER PLACE
RICHLAND, WA 99354

CONTRACT No: DE-AC27-01RV14136

P&ID: 24590-PTF-M6-PCW-00001 | CONST. WORK AREA: 39

PRETREATMENT FACILITY ISOMETRIC

LINE No. FEP-WS-00004-S11C-12 | PIPE SPEC: S11C

DWG No. 24590-PTF-P3-FEP-WS00004001 | REV A

CM QUALITY LEVEL

PAINT CODE	N/A	CONTENT APPLICABLE TO ALARA? ☐ YES ☐ NO	
INSULATION TYPE	NI	ADR NO. REV.	
INSULATION THK.	0	SEISMIC CAT.	SC-IV

LENGTH (FT.) 12.69 (FOR INFO ONLY) JSW Created: FEB-05-2009 08:23 | Iso Created: FEB-05-2009 08:23 | PCF File: 24590-PTF-P3-FEP-WS00004001 | PLOTTED BY: mmercier | PLOT DATE: 02/05/2009 09:14:45 AM | SHT. 1 OF 1

ISO TYPE: PT_xSTRESS C:\iso\24590-PTF-P3-FEP-WS00004001C.DGN

COMPUTER GENERATED - MANUAL DESIGN CHANGES NOT PERMITTED

24590-PTF-3PS-MEVV-T0001 Rev
Pg V-245

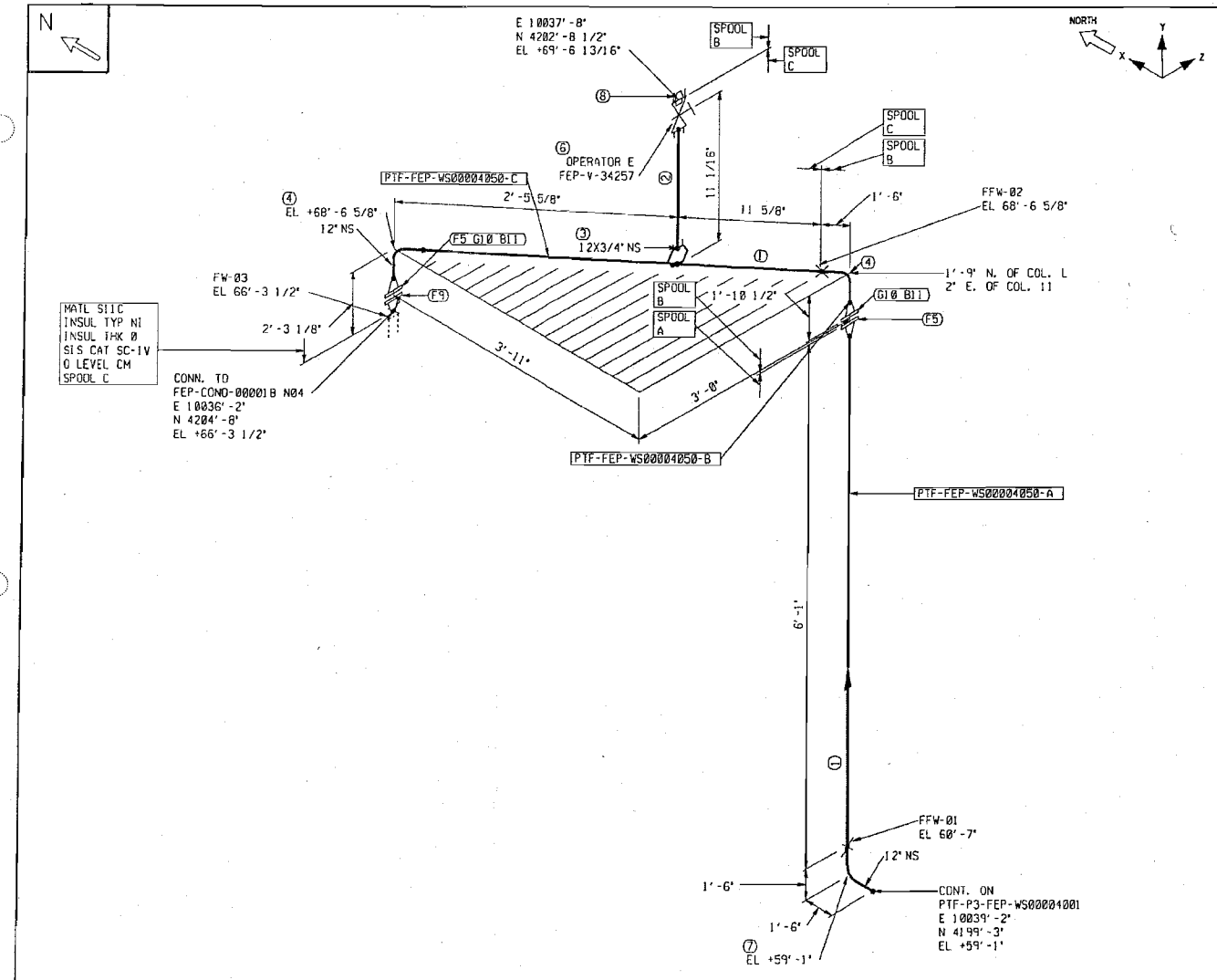

NOTES:

1. FOR GENERAL NOTES AND LEGEND SEE DWG. 24590-WTP-P0-50-00001001.

SHOP MATERIALS

PART NO	COMPONENT DESCRIPTION	N.S. (INCHES)	QTY	BECHTEL STK CODE
	PIPE			
1	PIPE, A312TP316/316L, EFW, SCH 10S, BBE	12	7'8"	PPPC080F0P07
2	PIPE, A312TP316/316L, SMLS, SCH40S, PE	3/4	0'3"	PPPC080G1A0L
	FITTINGS			
3	SOCKOLET, A182-F316*, CL3000	12X3/4	1	PFLSX7X01P92
4	EL - 90, LR, BW, A403WP316/316L-W, SCH 10S	12	2	PFQN4X0F1A0N
	FLANGES			
5	FLGWN, A182-F316/316L, CL150, SCH40S, RF, STDFF, B16.5	12	3	PFFWX71G5Y0D
	VALVES / IN-LINE ITEMS			
6	VLV-GT, SLDWDGRS, A182F316L, CL800, SW, FNPT, API602088, TRM12, HW	3/4	1	PVVGUYB0RG01

FIELD MATERIALS

PART NO	COMPONENT DESCRIPTION	N.S. (INCHES)	QTY	BECHTEL STK CODE
	FITTINGS			
7	EL - 90, LR, BW, A403WP316/316L-W, SCH 10S	12	1	PFQN4X0F1A0N
8	PLUG S/HD, MNPT, A182F316L	3/4	1	PFTKUY000F01
	FLANGES			
9	FLGWN, A182-F316/316L, CL150, SCH40S, RF, STDFF, B16.5	12	1	PFFWX71G5Y0D
	GASKETS			
10	GASKET, SPWND, 316L-FG, 1/8" SS, CL150, B16.20, B16.5	12	2	PGGC2W10060C
	BOLTS			
11	0.875 X 4.75 BOLT, STDBLT, A19388-2/8	7/8	24	FBBS5Y000029

AREVA MODEL

STRESS REVIEW PRINT		REV	
☐	ACCEPTED	☐	NOT ACCEPTED
☐	ACCEPTED W/ COMMENTS	☐	SUPPORTS ADDED TO MODEL
		BY:	
STRESS ANALYST:		DATE:	

BECHTEL

RIVER PROTECTION PROJECT
WASTE TREATMENT PLANT
2435 STEVENS CENTER PLACE
RICHLAND, WA 99354

CONTRACT No: DE-AC27-01RV14136

P&ID: 24590-PTF-M6-PCW-00001 | CONST. WORK AREA: 39

PRETREATMENT FACILITY ISOMETRIC

LINE No. FEP-WS-00004-S11C-12 | PIPE SPEC: S11C

DWG No. 24590-PTF-P3-FEP-WS00004050 | REV A

CM QUALITY LEVEL

PAINT CODE	N/A	CONTENT APPLICABLE TO ALARA? ☐ YES ☐ NO	
INSULATION TYPE	NI	ADR NO.	REV.
INSULATION THK.	0	SEISMIC CAT.	SC-IV

COMPUTER GENERATED - MANUAL DESIGN CHANGES NOT PERMITTED

ISO TYPE: PT_XSTRESS C:\iso\24590-PTF-P3-FEP-WS00004050C.DGN

LENGTH (FT.) 19.27 (FOR INFO ONLY) JSM Created: FEB-05-2009 08:23 Iso Created: FEB-05-2009 08:23 PCF File: 24590-PTF-P3-FEP-WS00004050 PLOTTED BY: mmercier PLOT DATE: 02/05/2009 09:14:36 AM SHT. 1 OF 1

24590-PTF-3PS-MEVV-T0001 Rev. 3

Pg V-246

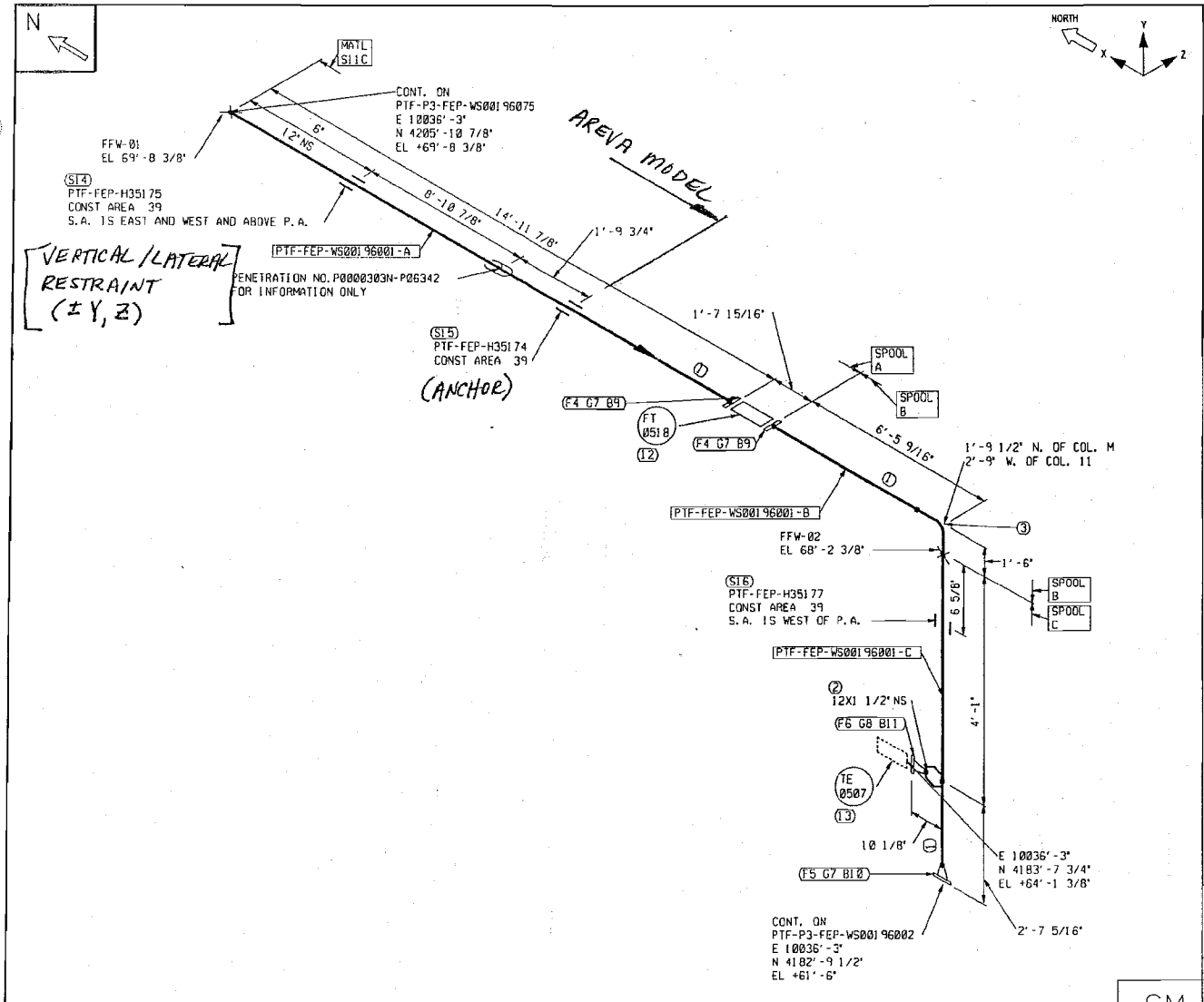

NOTES:

1. FOR GENERAL NOTES AND LEGEND SEE DWG. 24590-WTP-P0-50-00001001.

SHOP MATERIALS

PART NO	COMPONENT DESCRIPTION	N.S. (INCHES)	QTY	BECHTEL STK CODE
	PIPE			
1	PIPE, A312TP316/316L, EFW, SCH 10S, BBE	12	26'1"	PPPC080F0P07
	FITTINGS			
2	WELDOLET, A182-F316*, SCH 10S, SCH40S	12X1 1/2	1	PFLWX70F1W94
3	EL - 90, LR, BW, A403WP316/316L-W, SCH 10S	12	1	PFON4X0F1A0N
	FLANGES			
4	FLGSLPON, A182-F316/316L, CL150, RF, STDFF, B16.5	12	2	PFFPX7102P0D
5	FLGWN, A182-F316/316L, CL150, SCH40S, RF, STDFF, B16.5	12	1	PFFWX71G5Y0D
6	FLGWN, A182-F316/316L, CL150, SCH40S, RF, STDFF, B16.5	1 1/2	1	PFFWX71G5Y04

FIELD MATERIALS

PART NO	COMPONENT DESCRIPTION	N.S. (INCHES)	QTY	BECHTEL STK CODE
	GASKETS			
7	GASKET, SPWND, 316L-FG, 1/8"SS, CL150, B16.20, B16.5	12	3	PGGC2W100600
8	GASKET, SPWND, 316L-FG, 1/8"SS, CL150, B16.20, B16.5	1 1/2	1	PGGC2W100603
	BOLTS			
9	0.875 X 4.75 BOLT, STDBLT, A19388-2/8	7/8	24	FBBS5Y000029
10	0.875 X 8.25 BOLT, STDBLT, A19388-2/8	7/8	12	FBBS5Y00002G
11	0.5 X 2.75 BOLT, STDBLT, A19388-2/8	1/2	4	FBBS5Y000003
	INSTRUMENTS / SPECIALTY ITEMS			
12	FT-0518	12	1	N/A
13	TE-0507	1 1/2	1	N/A
	SUPPORTS			
14	PIPE SUPT, MS-F-2-72.0, GS-A-4D-36.0-12		1	
15	PIPE SUPT, PTF-FEP-H35174, WELDED PIPE ATTCHMT		1	
16	PIPE SUPT, WS-A-A1-76.0-12-C		1	

STRESS REVIEW PRINT		REV	
☐	ACCEPTED	☐	NOT ACCEPTED
☐	ACCEPTED W/ COMMENTS	☐	SUPPORTS ADDED TO MODEL
STRESS ANALYST:		BY: DATE:	

CM QUALITY LEVEL

PAINT CODE	N/A	CONTENT APPLICABLE TO ALARA? ☐ YES ☐ NO	
INSULATION TYPE	NI	ADR NO.	REV.
INSULATION THK.	0	SEISMIC CAT.	SC-1V

RIVER PROTECTION PROJECT
WASTE TREATMENT PLANT
2435 STEVENS CENTER PLACE
RICHLAND, WA 99354

CONTRACT No: DE-AC27-01RV14136

P&ID: 24590-PTF-M6-PCW-00001 | CONST. WORK AREA: 39

PRETREATMENT FACILITY ISOMETRIC

LINE No. FEP-WS-00196-S11C-12 | PIPE SPEC: S11C

DWG No. 24590-PTF-P3-FEP-WS00196001 | REV A

COMPUTER GENERATED - MANUAL DESIGN CHANGES NOT PERMITTED

ISO TYPE: PT_xSTRESS C:\iso\24590-PTF-P3-FEP-WS00196001.DGN

LENGTH (FT.) 32.42 (FOR INFO ONLY) JSW Created: FEB-05-2009 08:23 Iso Created: FEB-05-2009 08:24 PCF File: 24590-PTF-P3-FEP-WS00196001 PLOTTED BY: mmercier PLOT DATE: 02/05/2009 09:14:22 AM SHT. 1 OF 1

24590-PTF-3PS-MEVV-T0001 Rev. 3

Pg V-247

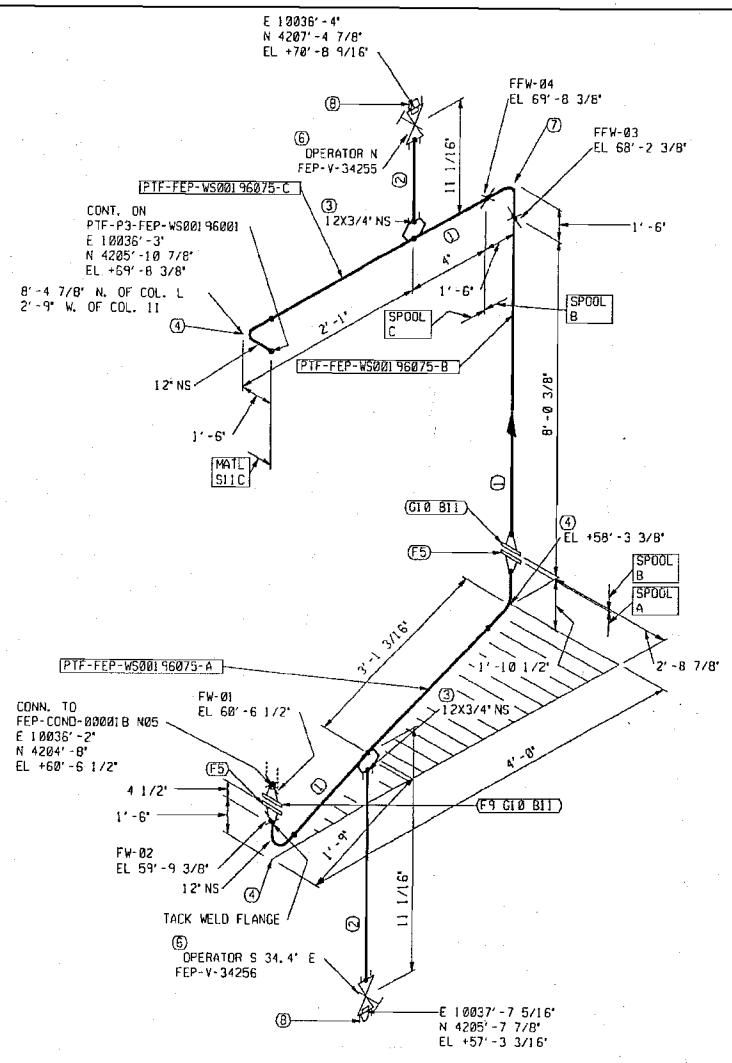

SHOP MATERIALS

PART NO	COMPONENT DESCRIPTION	N.S. (INCHES)	QTY	BECHTEL STK CODE
	PIPE			
1	PIPE, A312TP316/316L, EFW, SCH 10S, BBE	12	10'6"	PPPC080F0P07
2	PIPE, A312TP316/316L, SMLS, SCH40S, PE	3/4	0'6"	PPPC080G1A0L
	FITTINGS			
3	SOCKOLET, A182-F316+, CL3000	12X3/4	2	PFLSX7X01P92
4	EL - 90, LR, BW, A403WP316/316L-W, SCH 10S	12	3	PFQN4X0F1A0N
	FLANGES			
5	FLGWN, A182-F316/316L, CL150, SCH40S, RF, STDFF, B16.5	12	3	PFFWX71G5Y0D
	VALVES / IN-LINE ITEMS			
6	VLV-GT, SLOWDGRS, A182F316L, CL800, SW, FNPT, API602088, TRM12, HW	3/4	2	PVVGDY80A0D1

FIELD MATERIALS

PART NO	COMPONENT DESCRIPTION	N.S. (INCHES)	QTY	BECHTEL STK CODE
	FITTINGS			
7	EL - 90, LR, BW, A403WP316/316L-W, SCH 10S	12	1	PFQN4X0F1A0N
8	PLUG S/HD, MNPT, A182F316L	3/4	2	PFTKUY000F01
	FLANGES			
9	FLGWN, A182-F316/316L, CL150, SCH40S, RF, STDFF, B16.5	12	1	PFFWX71G5Y0D
	GASKETS			
10	GASKET, SPWND, 316L-FG, 1/8"SS, CL150, B16.20, B16.5	12	2	PGGC2W10060C
	BOLTS			
11	0.875 X 4.75 BOLT, STDBLT, A193B8-2/8	7/8	24	FBBS5Y000029

AREVA MODEL

STRESS REVIEW PRINT		REV	
☐ ACCEPTED		☐ NOT ACCEPTED	
☐ ACCEPTED W/ COMMENTS		☐ SUPPORTS ADDED TO MODEL BY:	
STRESS ANALYST:		DATE:	

RIVER PROTECTION PROJECT
WASTE TREATMENT PLANT
2435 STEVENS CENTER PLACE
RICHLAND, WA 99354

CONTRACT No: DE-AC27-01RV14136

P&ID: 24590-PTF-M6-PCW-00001 | CONST. WORK AREA: 39

PRETREATMENT FACILITY ISOMETRIC

LINE No. FEP-WS-00196-S11C-12 | PIPE SPEC: S11C

DWG No. 24590-PTF-P3-FEP-WS00196075 | REV A

NOTES:

1. FOR GENERAL NOTES AND LEGEND SEE DWG. 24590-WTP-PO-50-00001001.

CM QUALITY LEVEL

PAINT CODE	N/A	CONTENT APPLICABLE TO ALARA? ☐ YES ☐ NO	
INSULATION TYPE	NI	ADR NO. REV.	
INSULATION THK.	0	SEISMIC CAT.	SC-IV

LENGTH (FT.) 26.15 (FOR INFO ONLY) JSM Created: FEB-09-2009 11:12 Iso Created: FEB-09-2009 11:12 PCF File: 24590-PTF-P3-FEP-WS00196075 PLOTTED BY: mrmercier PLOT DATE: 02/09/2009 11:38:09 AM SHT. 1 OF 1

ISO TYPE: PT_xSTRESS C:\Documents and Settings\mrmercier\Local Settings\Temporary Internet Files\OLKA\24590-PTF-P3-FEP-WS00196075.DGN

COMPUTER GENERATED - MANUAL DESIGN CHANGES NOT PERMITTED

24590-PTF-3PS-MEVV-T0001 Rev. 3

Pg V-248

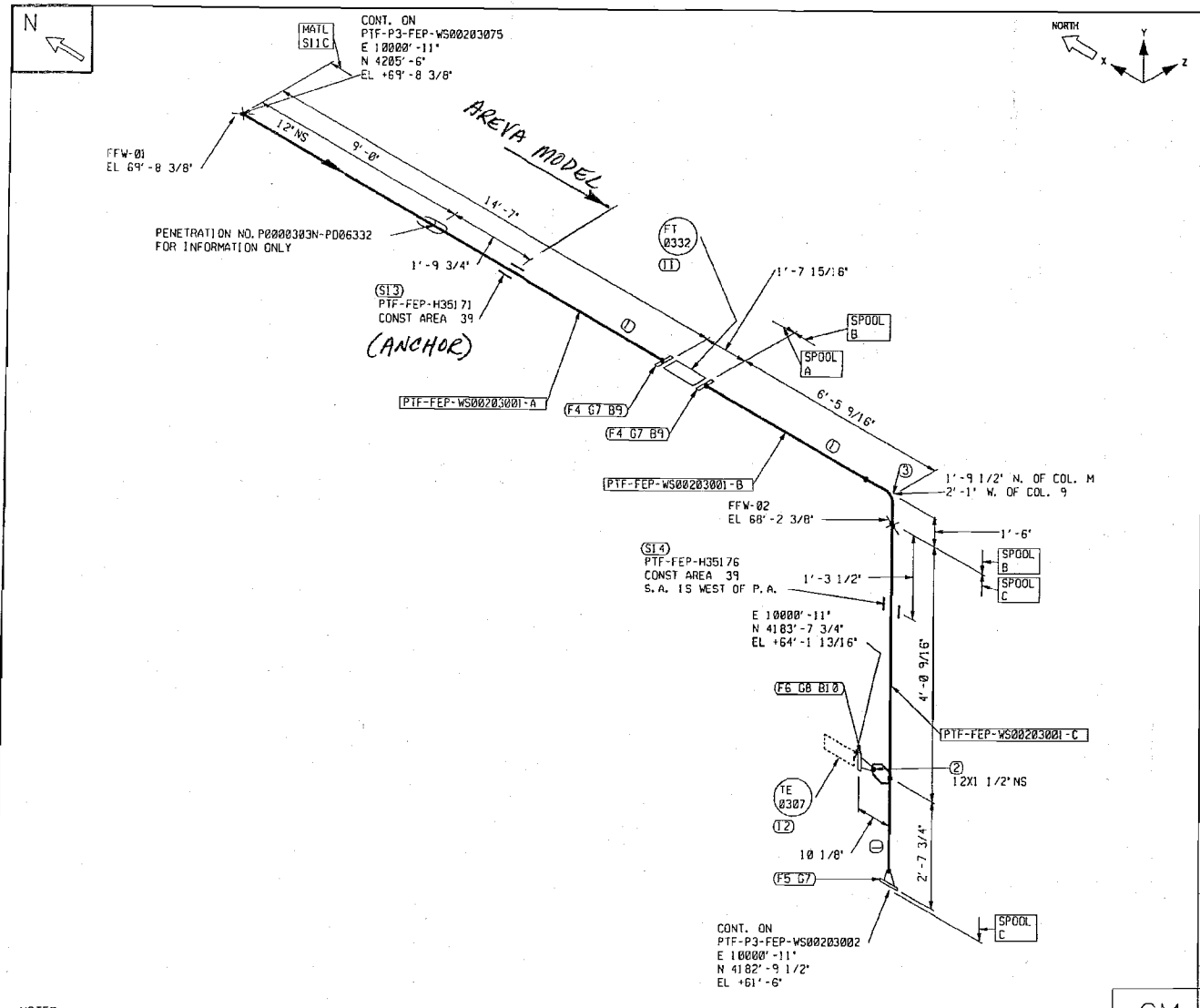

COMPUTER GENERATED - MANUAL DESIGN CHANGES NOT PERMITTED

NOTES:

1. FOR GENERAL NOTES AND LEGEND SEE DWG. 24590-WTP-PO-50-00001001

CM QUALITY LEVEL

PAINT CODE	N/A	CONTENT APPLICABLE TO ALARA?	YES	NO	
INSULATION TYPE	NI	ADR NO.	REV.		
INSULATION THK.	0		SEISMIC CAT.	SC-1V	

LENGTH (FT.) 32.01 (FOR INFO ONLY) JSM Created: FEB-05-2009 08:23 Iso Created: FEB-05-2009 08:24 PCF File: 24590-PTF-P3-FEP-WS00203001

SHOP MATERIALS

PART NO	COMPONENT DESCRIPTION	N.S. (INCHES)	QTY	BECHTEL STK CODE
	PIPE			
1	PIPE, A312TP316/316L, EFW, SCH 10S, BBE	12	25'-8"	PPPC080F0P07
	FITTINGS			
2	WELDOLET, A182-F316*, SCH 10S, SCH40S	12X1 1/2	1	PFLWX70F1W94
3	EL - 90, LR, BW, A403WP316/316L-W, SCH 10S	12	1	PFQN4X0F1A0N
	FLANGES			
4	FLGSLPON, A182-F316/316L, CL150, RF, STOFF, B16.5	12	2	PFFPX71B2F0D
5	FLGWN, A182-F316/316L, CL150, SCH40S, RF, STOFF, B16.5	12	1	PFFWX71G5Y0D
6	FLGWN, A182-F316/316L, CL150, SCH40S, RF, STOFF, B16.5	1 1/2	1	PFFWX71G5Y04

FIELD MATERIALS

PART NO	COMPONENT DESCRIPTION	N.S. (INCHES)	QTY	BECHTEL STK CODE
	GASKETS			
7	GASKET, SPWND, 316L-FG, 1/8"SS, CL150, B16.20, B16.5	12	3	PGGC2W1B060C
8	GASKET, SPWND, 316L-FG, 1/8"SS, CL150, B16.20, B16.5	1 1/2	1	PGGC2W1B0603
	BOLTS			
9	0.875 X 4.75 BOLT, STDBLT, A19388-2/8	7/8	24	FBBS5Y000029
10	0.5 X 2.75 BOLT, STDBLT, A19388-2/8	1/2	4	FBBS5Y000003
	INSTRUMENTS / SPECIALTY ITEMS			
11	FT-0332	12	1	N/A
12	TE-0307	1 1/2	1	N/A
	SUPPORTS			
13	PIPE SUPT, PTF-FEP-H35171, WELDED PIPE ATTCHMT		1	
14	PIPE SUPT, WS-A-B1-84.0-12-C		1	

STRESS REVIEW PRINT		REV	
☐ ACCEPTED		☐ NOT ACCEPTED	
☐ ACCEPTED W/ COMMENTS		☐ SUPPORTS ADDED TO MODEL BY:	
STRESS ANALYST:		DATE:	

BECHTEL

RIVER PROTECTION PROJECT
WASTE TREATMENT PLANT
2435 STEVENS CENTER PLACE
RICHLAND, WA 99354

CONTRACT No: DE-AC27-01RV14136

P&ID: 24590-PTF-M6-PCW-00001 | CONST. WORK AREA: 39

PRETREATMENT FACILITY ISOMETRIC

LINE No. FEP-WS-00203-S11C-12 | PIPE SPEC: S11C

DWG No. 24590-PTF-P3-FEP-WS00203001 | REV A

PLOTTED BY: mmercier PLOT DATE: 02/05/2009 08:27:39 AM SHT. 1 OF 1

ISO TYPE: PT_xSTRESS C:\iso\24590-PTF-P3-FEP-WS00203001F.DGN

24590-PTF-3PS-MEVV-T0001 Rev. 3

Pg V-249 of V-249

COMPUTER GENERATED - MANUAL DESIGN CHANGES NOT PERMITTED

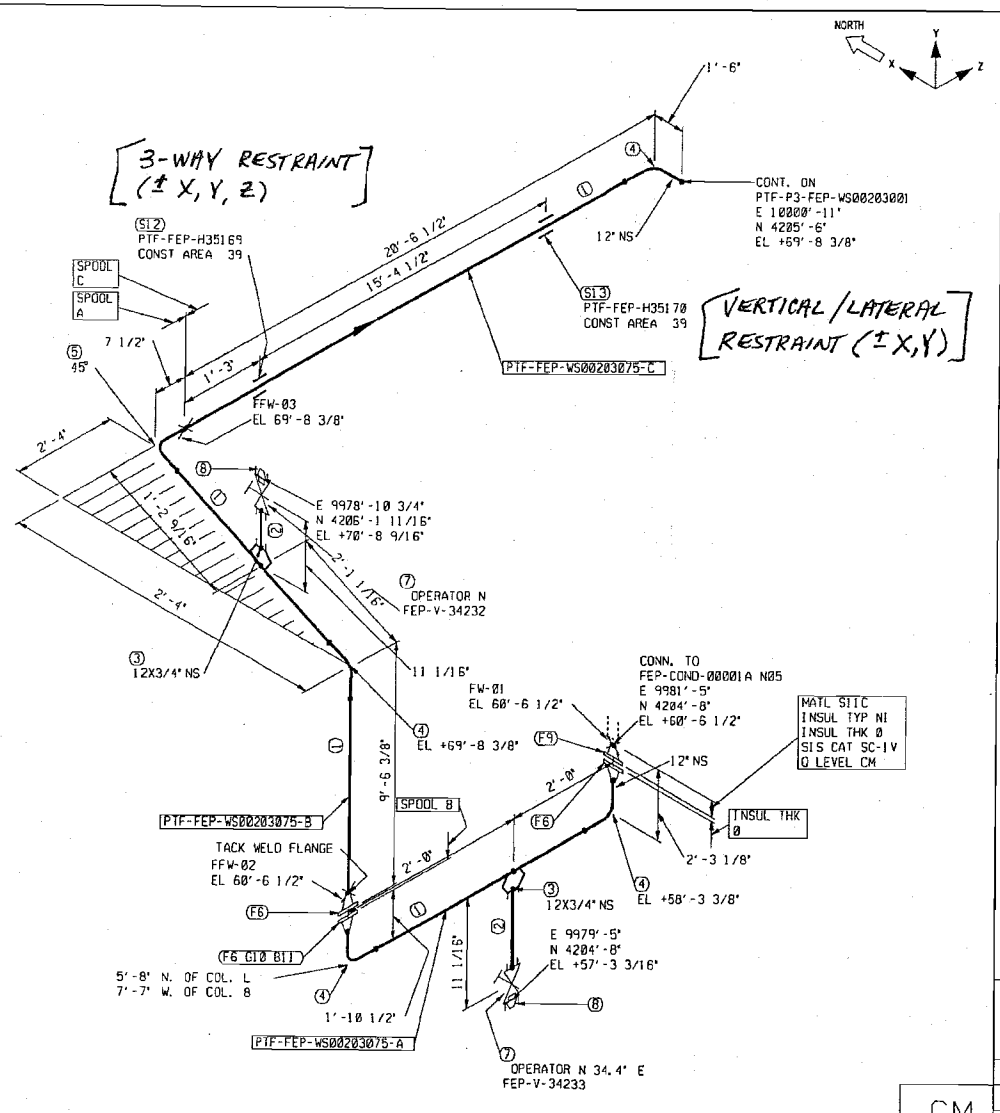

NOTES:

1. FOR GENERAL NOTES AND LEGEND SEE DWG. 24590-WTP-PO-50-00001001.

SHOP MATERIALS

PART NO	COMPONENT DESCRIPTION	N.S. (INCHES)	QTY	BECHTEL STK CODE
	PIPE			
1	PIPE, A312TP316/316L, EFW, SCH 10S, BBE	12	28'11"	PPPC080F0P07
2	PIPE, A312TP316/316L, SMLS, SCH40S, PE	3/4	0'6"	PPPC080G1A0L
	FITTINGS			
3	SOCKOLET, A182-F316*, CL3000	12X3/4	2	PFLSX7X01P92
4	EL - 90, LR, BW, A403WP316/316L-W, SCH 10S	12	4	PFGN4X0F1A0N
5	EL - 45, LR, BW, A403WP316/316L-W, SCH10S	12	1	PFAN4X0F180N
	FLANGES			
6	FLGWN, A182-F316/316L, CL150, SCH40S, RF, STDFF, B16.5	12	3	PFFWX71G5Y0D
	VALVES / IN-LINE ITEMS			
7	VLV-GT, SLDWDGRS, A182F316L, CL800, SW, FNPT, API6020BB, TRM12, HW	3/4	2	PVVGUY80R001

FIELD MATERIALS

PART NO	COMPONENT DESCRIPTION	N.S. (INCHES)	QTY	BECHTEL STK CODE
	FITTINGS			
8	PLUG S/HD, MNPT, A182F316L	3/4	2	PFTKUY800F01
	FLANGES			
9	FLGWN, A182-F316/316L, CL150, SCH40S, RF, STDFF, B16.5	12	1	PFFWX71G5Y0D
	GASKETS			
10	GASKET, SPWND, 316L-FG, 1/8" SS, CL150, B16.20, B16.5	12	2	PGGC2W100G0C
	BOLTS			
11	0.875 X 4.75 BOLT, STDBLT, A193B8-2/8	7/8	24	F8B55Y000029
	SUPPORTS			
12	PIPE SUPT, PTF-FEP-H35169, WELDED PIPE ATTCHMT		1	
13	PIPE SUPT, GS-A-4D-48.0-12		1	

AREVA MODEL

STRESS REVIEW PRINT		REV	
☐ ACCEPTED		☐ NOT ACCEPTED	
☐ ACCEPTED W/ COMMENTS		☐ SUPPORTS ADDED TO MODEL	
		BY:	
STRESS ANALYST:		DATE:	

CM QUALITY LEVEL

PAINT CODE	N/A	CONTENT APPLICABLE TO ALARA? ☐ YES ☐ NO	
INSULATION TYPE	NI	ADR NO.	REV.
INSULATION THK.	0	SEISMIC CAT.	SC-1V

RIVER PROTECTION PROJECT
WASTE TREATMENT PLANT
2435 STEVENS CENTER PLACE
RICHLAND, WA 99354

CONTRACT No: DE-AC27-01RV14136

P&ID: 24590-PTF-MG-PCW-00001 | CONST. WORK AREA: 39

PRETREATMENT FACILITY ISOMETRIC

LINE No. FEP-WS-00203-S11C-12 | PIPE SPEC: S11C

DWG No. 24590-PTF-P3-FEP-WS00203075 | REV A

ISO TYPE: PT_XSTRESS C:\Documents and Settings\mmercier\Local Settings\Temporary Internet Files\OLKA\24590-PTF-P3-FEP-WS00203075.DGN

LENGTH (FT.) 45.85 (FOR INFO ONLY) JSM Created: FEB-09-2009 11:12 Iso Created: FEB-09-2009 11:13 PCF File: 24590-PTF-P3-FEP-WS00203075 PLOTTED BY: mmercier PLOT DATE: 02/09/2009 11:37:44 AM SHT. 1 OF 1

RCRA Operating Record Cover Sheet

Document Number: 24590-PTF-PCN-ENV-11-001

Waste Management Records:

- ☐ **R101** List of Waste Management Areas
- ☐ **R102** Waste Analysis Records
- ☐ **R103** Waste Designation Information
- ☐ **R104** Waste Transfer Records
- ☐ **R105** Movement of Containerized Waste Onsite
- ☐ **R106** Release/Spill Records
- ☐ **R114** Field Change Request/Field Change Notice
- ☐ **R116** Field Monitoring / Surveillance Checklists
- ☐ **R119** Reserved
- ☐ **R120** Reserved
- ☐ **R126** Satellite and 90-Day Accumulation Area

Compliance Schedule Submittals:

- ☐ **R401** Pretreatment Facility
- ☐ **R402** LAW Facility
- ☐ **R403** HLW Facility
- ☐ **R404** Laboratory
- ☐ **R405** Balance of Facility
- ☐ **R406** WTP All Facilities
- ☐ **R407** Human Health & Ecological Risk Assessment

Other Operating Record Documents:

- ☐ **R601** Outgoing Correspondence (RCRA Permit Relating)
- ☐ **R602** Contingency Plan Implementation
- ☐ **R603** Closure Plan Deviation
- ☐ **R604** Permit Equivalency Notice (PEN)
- ☒ **R605** Permit Change Notice (PCN)
- ☐ **R606** Annual RCRA Permit Closure and Post-Closure Cost Adjustment Report
- ☐ **R607** Permit Modification
- ☐ **R608** Incoming Correspondence (RCRA Permit Relating)

Non-Operating Record Documents:

- ☐ **N101** Meeting Minutes
- ☐ **N102** Memoranda

Special Instructions to PDC:

Link CCNs:

234653

238506

240223

Quarter Ending 09/30/2011 24590-PTF-PCN-ENV-11-004

Hanford Facility RCRA Permit Modification Notification Form

Part III, Operating Unit 10

Waste Treatment and Immobilization Plant

Index

Page 2 of 3: Hanford Facility RCRA Permit, Part III, Operating Unit 10, Waste Treatment and Immobilization Plant
Update PTF Piping and Instrumentation Diagrams (P&ID) to incorporate M3 design changes for UFP-VSL-00001A and UFP-VSL-00001B.

Submitted by Co-Operator:

D. M. Busche 9/9/11 Date

Reviewed by ORP Program Office:

D. L. Noyes 9/14/11 Date

Quarter Ending 09/30/2011 24590-PTF-PCN-ENV-11-004

Hanford Facility RCRA Permit Modification Notification Form

Unit:	Permit Part:
Waste Treatment and Immobilization Plant	**Part III, Operating Unit 10**

Description of Modification:

The purpose of this Class 1 prime modification is to update PTF P&IDs for UFP-VSL-00001A and UFP-VSL-00001B. These changes incorporate M3 design input requirements for increased number, arrangement, and performance of pulse jet mixers (PJM). The following 7000 series permitted documents are submitted to replace the documents currently in Appendix 8.2 of the DWP for Plant Service Air (PSA) utility racks for UFP-VSL-00001B PJMs. The 27000 series drawings are new drawings for PSA utility racks for UFP-VSL-00001A PJMs using the same design as Vessel 1B. In addition, it is requested that the 8000 Revision 0 series drawings be removed from the permit since they have been revised and no longer contain dangerous waste components.

Appendix 8.2			
Replace:	24590-PTF-M6-UFP-00007001, Rev. 0	With:	24590-PTF-M6-UFP-00007001, Rev. 1
	24590-PTF-M6-UFP-00007002, Rev. 0		24590-PTF-M6-UFP-00007002, Rev. 1
	24590-PTF-M6-UFP-00007003, Rev. 0		24590-PTF-M6-UFP-00007003, Rev. 1
	24590-PTF-M6-UFP-00007004, Rev. 0		24590-PTF-M6-UFP-00007004, Rev. 1
	24590-PTF-M6-UFP-00007005, Rev. 0		24590-PTF-M6-UFP-00007005, Rev. 1
	24590-PTF-M6-UFP-00007006, Rev. 0		24590-PTF-M6-UFP-00007006, Rev. 1
	24590-PTF-M6-UFP-00007007, Rev. 0		24590-PTF-M6-UFP-00007007, Rev. 1
Add:	24590-PTF-M6-UFP-00027001, Rev. 0	Remove:	24590-PTF-M6-UFP-00008001. Rev. 0
	24590-PTF-M6-UFP-00027002, Rev. 0		24590-PTF-M6-UFP-00008002. Rev. 0
	24590-PTF-M6-UFP-00027003, Rev. 0		24590-PTF-M6-UFP-00008003. Rev. 0
	24590-PTF-M6-UFP-00027004, Rev. 0		24590-PTF-M6-UFP-00008004. Rev. 0
	24590-PTF-M6-UFP-00027005, Rev. 0		24590-PTF-M6-UFP-00008005. Rev. 0
	24590-PTF-M6-UFP-00027006, Rev. 0		24590-PTF-M6-UFP-00008006. Rev. 0
	24590-PTF-M6-UFP-00027007, Rev. 0		24590-PTF-M6-UFP-00008007. Rev. 0

This modification requests Ecology approval and incorporation into the permit the specific changes to these drawings that are identified in the Revision History of the drawings that have been issued since the last revision of the permit-version. Revisions are the result of ongoing design. The following identifies the significant changes on the attached documents:

- Added Jet Pump Pairs and drivers for new PJMs in UFP-VSL-00001A and UFP-VSL-00001B
- Moved PWD Jet Pump Pairs and drivers to new HLP-RK-00071 and HLP-RK-00072 racks
- Converted PSA-RK-00026 from 50 percent train design for UFP-VSL-00001A and UFP-VSL-00001B to 100 percent redundant backup design dedicated to UFP-VSL-00001B
- Changed PJM on/off gate valves to PJM on/off globe valves
- Changed arrangement of wash lines for Important to Safety (ITS) and non-ITS pressure transmitters to share a common sensing line
- Revised configuration of pressure transmitters on PSA racks to have a common sensing line connection
- The 8000 Rev 0 series drawings have been revised. The new versions do not contain dangerous waste components

This modification requests Ecology approval and incorporation of the following outstanding change document(s) into the permit. Although not yet incorporated into the revised documents included in this Permit Change Notice, the listed change document(s) are intended to be incorporated into the permit:

None.

Quarter Ending 09/30/2011 24590-PTF-PCN-ENV-11-004

WAC 173-303-830 Modification Class:	Class 1	Class 1	Class 2	Class 3
Please mark the Modification Class:		X		

Enter relevant WAC 173-303-830, Appendix I Modification citation number: NA

Enter wording of WAC 173-303-830, Appendix I Modification citation:

In accordance with WAC 173-303-830(4)(d)(i), this modification notification is requested to be reviewed and approved as a Class 1 modification. WAC 173-303-830(4)(d)(ii)(A) states, "Class 1 modifications apply to minor changes that keep the permit current with routine changes to the facility or its operation. These changes do not substantially alter the permit conditions or reduce the capacity of the facility to protect human health or the environment. In the case of Class 1 modifications, the director may require prior approval."

Modification Approved/Concur:	Reviewed by Ecology:
[X] Yes [ ] Denied (state reason below)	D. McDonald 11-8-11 Date
Reason for denial:	

24590-PTF-M6-UFP-00007001

PSA-RK-00025
UFP FEED PREP VESSEL
PJM FLUIDICS CONTROL RACK
=
12 POINTS
13'8" Lx4'2" Wx12'3" H

UFP-EJCTR-00143
JET PUMP PAIR
=
MODEL H80SX2
12 IN W X 29 IN L

UFP-EJCTR-00141
JET PUMP PAIR
=
MODEL H80SX2
12 IN W X 29 IN L

LI-0207/LSLL-0207/
LSH-0207
PTF-M6-UFP-00001005 F2

TSHH-0203
PTF-M6-UFP-00001004 D2

LI-9228
PTF-M6-UFP-00001005 E2

HOLD 1

PSA-RK-00025
NOTE 6

DEMIN WATER HEADER
PTF-M6-DIW-00001004 C4
DIW-WE-03364-S1C-02
N14
UFP-V-34062
UFP-V-68240
UFP-STR-01227
FI 0718
001/2-B02
UFP-V-34305

PLANT SERVICE AIR HEADER
PTF-M6-PSA-00002 G2
PSA-GQ-02959-S10A-08
PSA-V-84251
N13

FIRE AREA 'B'

3/8" TUBING
N15
VENT
N16
ISA-V-68217

ITS ISA
1" TUBING
N18
ISA-V-68216

ISA
1" TUBING
N17
ISA-V-70399
(TYP 24)
INSTRUMENT AIR HEADER

UFP-WE-04279-S1C-02
PTF-M6-UFP-00007002 G8

UFP-GQ-05585-S1C-D6
PTF-M6-UFP-00007002 G8

ITS ISA CONTROL HEADER
PTF-M6-UFP-00007002 F8

ITS ISA HEADER
PTF-M6-UFP-00007002 F8

YC-0806D
PTF-M6-UFP-00007002 H8

YC-0806E
PTF-M6-UFP-00007002 H8

YC-0806F
PTF-M6-UFP-00007002 H8

YC-0806A
PTF-M6-UFP-00007002 H8

YC-0806A
PTF-M6-UFP-00007002 H8

SET @ 71 PSIG

SET @ 73 PSIG

3/8" SS TUBING

NOTE 10

NOTE 8

UFP-V-68092
UFP-V-68093
UFP-V-68094
UFP-V-68095

UFP-V-00045
UFP-V-00048
UFP-V-00049
UFP-V-00034
UFP-V-00037
UFP-V-00038

UFP-STR-00023
UFP-STR-00124
UFP-STR-00027
UFP-STR-00128

N01C
N01B
N01A
N02C
N02B
N02A

UFP-WE-00513-S1C-01
UFP-WE-00565-S1C-00374
UFP-WE-00513-S1B-01
UFP-WE-00565-S1B-00374

UFP-GQ-00567-S1C-02
UFP-GQ-05576-S1C-02
UFP-GQ-00565-S1C-02
UFP-GQ-00574-S1C-02

UFP-GQ-00567-S1B-02
UFP-GQ-00576-S1B-02
UFP-GQ-00565-S1B-02
UFP-GQ-00574-S1B-02

1 1/2"
N01
N03
N02
N04

UFP-EJCTR-00143
UFP-EJCTR-00141

UFP-GV-00382-S1Z-02
PULSE JET VENT HEADER
PTF-M6-UFP-00007007 E8

UFP-PJM-00048 IN
UFP-VSL-00001B
PTF-M6-UFP-00007007 B8

UFP-GQ-00157-S1B-02
UFP-GQ-00153-S1B-02

YC-0835A
PTF-M6-UFP-00008001 G8

YC-0833A
PTF-M6-UFP-00008001 G8

MIXING SUPERVISION
HS 9221S ACTIVE
HS 9222S RESET
HS 9221M ACTIVE
HS 9222M RESET
PY 0801
YA 0801

FIRE AREA 'A'
FIRE AREA 'B'
UFP-V-37913
PT 0823
PY
PI 0823
UFP-V-37910
PT 0821
PI 0821
1:100
C3 S11C
BC S11B

PSA-RK-00026
PTF-M6-UFP-00008001 B2
UFP-GQ-00575-S11C-02
UFP-GQ-00566-S11C-02
UFP-GQ-00564-S11C-02
UFP-GQ-00546-S11C-02

NOTES:

1. SEE DRAWINGS 24590-WTP-M6-50-00001 THROUGH 24590-WTP-M6-50-00008 FOR GENERAL NOTES, SYMBOLS AND LEGEND, AND GENERAL SLOPE REQUIREMENTS.
2. CONTENTS OF THIS DOCUMENT ARE DANGEROUS WASTE PERMIT AFFECTING.
3. THE PRESSURE BOUNDARY FOR ALL COMPONENTS ON THIS DRAWING IS QUALITY LEVEL Q AND SEISMIC CATEGORY SC-1, UNLESS OTHERWISE NOTED. THE PRESSURE BOUNDARY FOR THE NON-SAFETY INSTRUMENT SERVICE AIR (ISA) AND THE CORRESPONDING NON-SAFETY SOLENOID VALVES IT SUPPLIES IS QUALITY LEVEL CM AND SEISMIC CATEGORY SC-IV.
4. ALL LINES SHOWN ON THIS DRAWING SHALL BE FREE DRAINING, EXCEPT BLACK CELL LINES WHICH ARE SELF-DRAINING, UNLESS OTHERWISE NOTED.
5. DELETED
6. ALL TUBING OUTSIDE RACK TO BE FIELD RUN. TUBING ROUTING, SPECIFICATION OF ADDITIONAL IN-TUBING DEVICES, AND TAGGING OF IN-TUBING DEVICES WITHIN THE RACK TO BE DONE IN ACCORDANCE WITH C&I INSTALLATION DETAILS AND DESIGN GUIDE 24590-WTP-GPG-ENG-0412.
7. CONNECTION PROVIDED FOR REAGENTS, PLANT WASH, AND SERVICE AIR.
8. STRAINER PERMANENTLY INSTALLED.
9. THIS DRAWING IS CONVERTED FROM A SINGLE SHEET TO MULTI-SHEET DRAWINGS AND, IN PART, SUPERSEDES 24590-PTF-M6-UFP-00007 REV 2. THIS IS A MAJOR REVISION, NO REVISION CLOUDS ARE SHOWN. THIS DRAWING MAY INCLUDE INFORMATION FROM 24590-PTF-M6N-M80T-00014, -00015, -00026, -00037, -00038, 24590-PTF-M6N-UFP-00049, AND -00072.
10. RECOMMENDED INSTALLATION FOR THE PCV IS TO CONNECT THE CONTROL LINE TO A STRAIGHT RUN OF PIPE 3 TO 5 FEET DOWNSTREAM OF THE PCV AND TO HAVE MINIMUM STRAIGHT PIPE RUN OF 3 FEET UPSTREAM AND 4 FEET DOWNSTREAM OF THE PCV.
11. REVISION 1: MAJOR REVISION, NO REVISION CLOUDS ARE SHOWN INCORPORATED 24590-PTF-M6LN-M80T-00004, -00007, -00033, -00036, 24590-PTF-M6N-M80T-00057, -00102, AND 24590-PTF-M6PR-UFP-00001. FURTHER REVISED TO INCORPORATE EFRT M-3 DESIGN-INPUT REQUIREMENTS FOR INCREASED NUMBER, ARRANGEMENT, AND PERFORMANCE OF PULSE JET MIXERS. EARMARKED ALL JET PUMP PAIRS (JPP) AND THEIR DRIVERS TO PJM SERVICE IN UFP-VSL-00001B, ADDED JPP AND DRIVES FOR NEW PULSE JET MIXERS (PJM) IN UFP-VSL-00001B, MOVED PWD JPP AND DRIVES TO NEW HLP-RK-00071 AND -00072 RACKS, AND CONVERTED RACK FROM 50 TO 100 PERCENT REDUNDANT TRAIN DESIGN. CHANGED JPP MODEL NUMBER.

HOLD/OPEN ITEMS:

1. PENDING SAFETY-RELATED MIXING DESIGN.

REFERENCES:

1. DELETED
2. 24590-WTP-3YD-50-00003, SYSTEM DESCRIPTION FOR PULSE JET MIXER AND SPARGER MIXING SUBSYSTEMS.

Please note that source, special nuclear, and byproduct materials, as defined in the Atomic Energy Act of 1954 (AEA) are regulated at the U. S. Department of Energy (DOE) facilities exclusively by DOE acting pursuant to its AEA authority. DOE asserts that pursuant to AEA, it has sole and exclusive responsibility and authority for regulating source, special nuclear, and byproduct materials at DOE-owned nuclear facilities. Information contained herein on radionuclides is provided for process description purposes only.

DRAWING INDEX

DWG NO	TITLE
24590-PTF-M6-UFP-00007001	UFP SYSTEM PSA-RK-00025 UFP-VSL-00001B
24590-PTF-M6-UFP-00007002	UFP SYSTEM PSA-RK-00025 UFP-VSL-00001B
24590-PTF-M6-UFP-00007003	UFP SYSTEM PSA-RK-00025 UFP-VSL-00001B
24590-PTF-M6-UFP-00007004	UFP SYSTEM PSA-RK-00025 UFP-VSL-00001B
24590-PTF-M6-UFP-00007005	UFP SYSTEM PSA-RK-00025 UFP-VSL-00001B
24590-PTF-M6-UFP-00007006	UFP SYSTEM PSA-RK-00025 UFP-VSL-00001B
24590-PTF-M6-UFP-00007007	VESSEL PJM UFP-VSL-00001B

Q
QUALITY DESIGNATOR

REVISION HISTORY

REV	DESCRIPTION	ORG	CHKD	RVWD	APVD	DATE
1	REVISED PER NOTE 11	MAS	SJ	SDS	RS/JM	2/17/11
0	ISSUED FOR CONSTRUCTION SEE NOTE 9	MAS	APP	ES/CL	RS/JM	10/28/08

ISSUED BY RPP-WTP PDC
INT DATE
ISSUE STAMP

PROJECT No.	24590
SITE	HANFORD
AREA	200E
BUILDING No.	10

	BY	DATE
ORIGINATOR	SUMMERS, MICHAEL	10/22/08
CHECKER	PINTO, PAT	10/22/08
APPROVER	STEVENS, ROBERT	10/28/08
REVIEWER	STRIEPER, EGBERT	10/23/08

CONTENT APPLICABLE TO ALARA? [X] YES [ ] NO
ADR NO. 24590-PTF-ADR-M-02-046 REV: 4
EMS SCREENING REQUIRED? [X] YES [ ] NO EMS INITIAL IF YES

SCREENING IS REQUIRED FOR DRAWING TYPES IDENTIFIED IN 24590-WTP-GPP-SREG-002

E SIZE - 44x34
COMPUTER GENERATED - MANUAL DESIGN CHANGES NOT PERMITTED

BECHTEL

RIVER PROTECTION PROJECT
WASTE TREATMENT PLANT
2435 STEVENS CENTER PLACE
RICHLAND, WA 99354

CONTRACT No: DE-AC27-01RV14136

P&ID - PTF
ULTRAFILTRATION PROCESS SYSTEM
UTILITY RACK PSA-RK-00025
UFP-VSL-00001B

SCALE: NONE

24590-PTF-M6-UFP-00007001

REV 1

2/16/2011 3:32:04 PM

PLOTTED BY: wmchaney C:\Work\wmchaney\dms0353\24590-PTF-M6-UFP-00007001.dgn

FORM E_SDN.DGN 02/2009

24590-PTF-M6-UFP-00007002

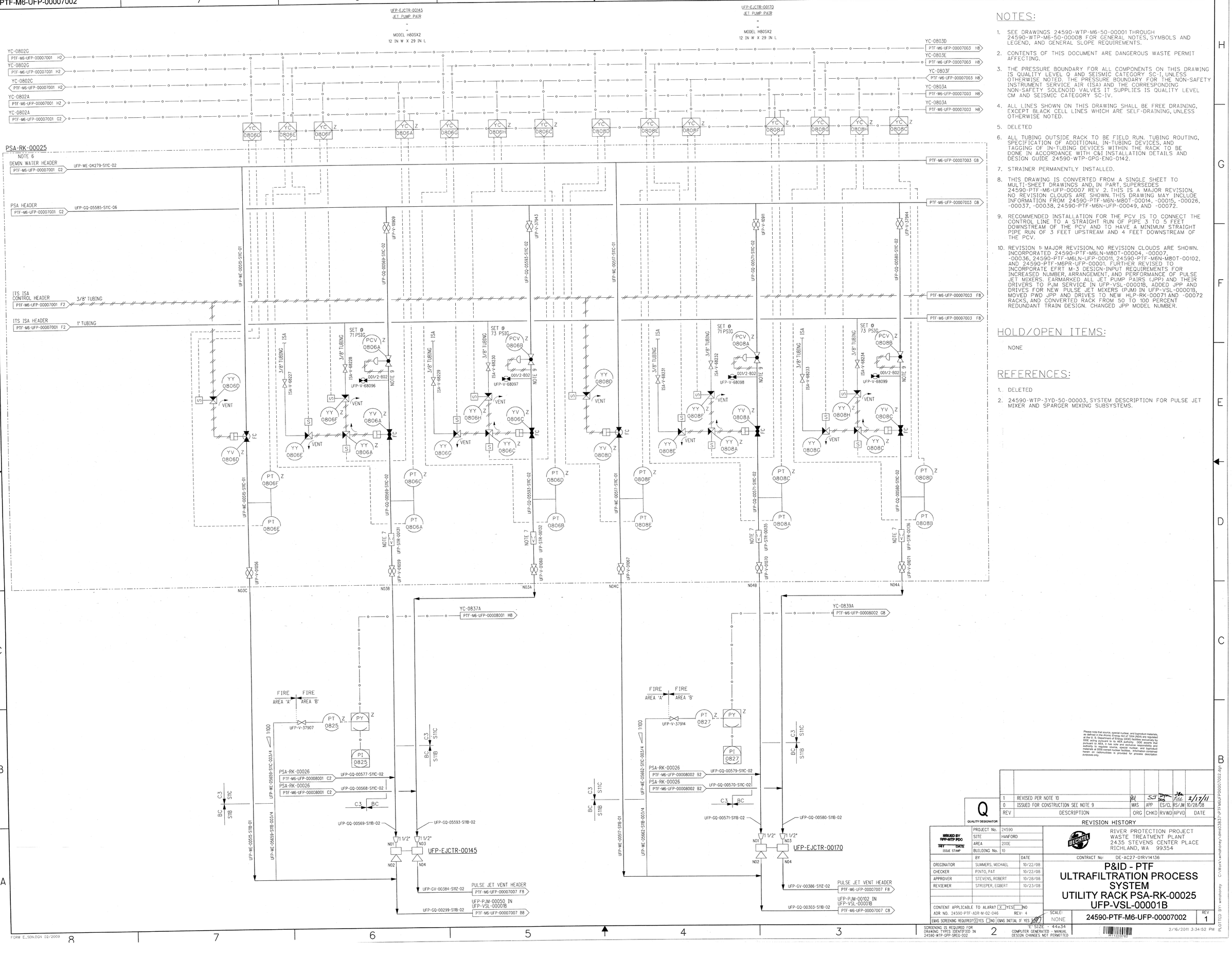

NOTES:

1. SEE DRAWINGS 24590-WTP-M6-50-00001 THROUGH 24590-WTP-M6-50-00008 FOR GENERAL NOTES, SYMBOLS AND LEGEND, AND GENERAL SLOPE REQUIREMENTS.
2. CONTENTS OF THIS DOCUMENT ARE DANGEROUS WASTE PERMIT AFFECTING.
3. THE PRESSURE BOUNDARY FOR ALL COMPONENTS ON THIS DRAWING IS QUALITY LEVEL Q AND SEISMIC CATEGORY SC-I, UNLESS OTHERWISE NOTED. THE PRESSURE BOUNDARY FOR THE NON-SAFETY INSTRUMENT SERVICE AIR (ISA) AND THE CORRESPONDING NON-SAFETY SOLENOID VALVES IT SUPPLIES IS QUALITY LEVEL CM AND SEISMIC CATEGORY SC-IV.
4. ALL LINES SHOWN ON THIS DRAWING SHALL BE FREE DRAINING, EXCEPT BLACK CELL LINES WHICH ARE SELF-DRAINING, UNLESS OTHERWISE NOTED.
5. DELETED
6. ALL TUBING OUTSIDE RACK TO BE FIELD RUN. TUBING ROUTING, SPECIFICATION OF ADDITIONAL IN-TUBING DEVICES, AND TAGGING OF IN-TUBING DEVICES WITHIN THE RACK TO BE DONE IN ACCORDANCE WITH C&I INSTALLATION DETAILS AND DESIGN GUIDE 24590-WTP-GPG-ENG-0142.
7. STRAINER PERMANENTLY INSTALLED.
8. THIS DRAWING IS CONVERTED FROM A SINGLE SHEET TO MULTI-SHEET DRAWINGS AND, IN PART, SUPERSEDES 24590-PTF-M6-UFP-00007 REV 2. THIS IS A MAJOR REVISION. NO REVISION CLOUDS ARE SHOWN. THIS DRAWING MAY INCLUDE INFORMATION FROM 24590-PTF-M6N-M80T-00014, -00015, -00026, -00037, -00038, 24590-PTF-M6N-UFP-00049, AND -00072.
9. RECOMMENDED INSTALLATION FOR THE PCV IS TO CONNECT THE CONTROL LINE TO A STRAIGHT RUN OF PIPE 3 TO 5 FEET DOWNSTREAM OF THE PCV AND TO HAVE A MINIMUM STRAIGHT PIPE RUN OF 3 FEET UPSTREAM AND 4 FEET DOWNSTREAM OF THE PCV.
10. REVISION 1: MAJOR REVISION, NO REVISION CLOUDS ARE SHOWN. INCORPORATED 24590-PTF-M6LN-M80T-00004, -00007, -00036, 24590-PTF-M6LN-UFP-00011, 24590-PTF-M6N-M80T-00102, AND 24590-PTF-M6PR-UFP-00001. FURTHER REVISED TO INCORPORATE EFRT M-3 DESIGN-INPUT REQUIREMENTS FOR INCREASED NUMBER, ARRANGEMENT, AND PERFORMANCE OF PULSE JET MIXERS. EARMARKED ALL JET PUMP PAIRS (JPP) AND THEIR DRIVERS TO PJM SERVICE IN UFP-VSL-000018, ADDED JPP AND DRIVES FOR NEW PULSE JET MIXERS (PJM) IN UFP-VSL-000018, MOVED PWD JPP AND DRIVES TO NEW HLP-RK-00071 AND -00072 RACKS, AND CONVERTED RACK FROM 50 TO 100 PERCENT REDUNDANT TRAIN DESIGN. CHANGED JPP MODEL NUMBER.

HOLD/OPEN ITEMS:

NONE

REFERENCES:

1. DELETED
2. 24590-WTP-3YD-50-00003, SYSTEM DESCRIPTION FOR PULSE JET MIXER AND SPARGER MIXING SUBSYSTEMS.

Please note that source, special nuclear, and byproduct materials, as defined in the Atomic Energy Act of 1954 (AEA), are regulated at the U.S. Department of Energy (DOE) facilities exclusively by DOE acting pursuant to its AEA authority. DOE, exclusively by virtue of its AEA, it has sole and exclusive responsibility and authority to regulate source, special nuclear, and byproduct materials at DOE owned nuclear facilities. Information contained herein on radionuclides is provided for process description purposes only.

REV	DESCRIPTION	ORG	CHKD	RVWD	APVD	DATE
1	REVISED PER NOTE 10		SJ	DPM	JBR	2/17/11
0	ISSUED FOR CONSTRUCTION SEE NOTE 9	MAS	APP	ES/CL	RS/JM	10/28/08

Q QUALITY DESIGNATOR

REVISION HISTORY

ISSUED BY RPP-WTP PDC — DATE — ISSUE STAMP

PROJECT No.	24590
SITE	HANFORD
AREA	200E
BUILDING No.	10

BECHTEL

RIVER PROTECTION PROJECT
WASTE TREATMENT PLANT
2435 STEVENS CENTER PLACE
RICHLAND, WA 99354

	BY	DATE
ORIGINATOR	SUMMERS, MICHAEL	10/22/08
CHECKER	PINTO, PAT	10/22/08
APPROVER	STEVENS, ROBERT	10/28/08
REVIEWER	STRIEPER, EGBERT	10/23/08

CONTENT APPLICABLE TO ALARA? [X] YES [ ] NO
ADR NO. 24590-PTF-ADR-M-02-046 REV: 4
EMS SCREENING REQUIRED? [X] YES [ ] NO | EMS INITIAL IF YES

CONTRACT No: DE-AC27-01RV14136

P&ID - PTF ULTRAFILTRATION PROCESS SYSTEM UTILITY RACK PSA-RK-00025 UFP-VSL-00001B

SCALE: NONE

24590-PTF-M6-UFP-00007002

REV 1

SCREENING IS REQUIRED FOR DRAWING TYPES IDENTIFIED IN 24590-WTP-GPP-SREG-002

SIZE - 44x34
COMPUTER GENERATED - MANUAL DESIGN CHANGES NOT PERMITTED

FORM E_SDN.DGN 02/2009

2/16/2011 3:34:52 PM

PLOTTED BY: wmahoney C:\Work\wmahoney\dms03837\PTFM6UFP00007002.dgn

24590-PTF-M6-UFP-00007003

UFP-EJCTR-00142 JET PUMP PAIR = = MODEL H80SX2 12 IN W X 29 IN L

UFP-EJCTR-00140 JET PUMP PAIR = = MODEL H80SX2 12 IN W X 29 IN L

YC-0808C PTF-M6-UFP-00007002 H2
YC-0808D PTF-M6-UFP-00007002 H2
YC-0808C PTF-M6-UFP-00007002 H2
YC-0808A PTF-M6-UFP-00007002 H2
YC-0808A PTF-M6-UFP-00007002 G2

YC-0805D PTF-M6-UFP-00007004 H8
YC-0805E PTF-M6-UFP-00007004 H8
YC-0805F PTF-M6-UFP-00007004 H8
YC-0805A PTF-M6-UFP-00007004 H8
YC-0805A PTF-M6-UFP-00007004 H8

YC 0803D, 0803E, 0803F, 0803A, 0803G, 0803H, 0803C, 0801D, 0801E, 0801F, 0801A, 0801G, 0801H, 0801C

PSA-RK-00025

NOTE 6

DEMIN WATER HEADER PTF-M6-UFP-00007002 G2 — UFP-WE-04279-S11C-02 — PTF-M6-UFP-00007004 G8

PSA HEADER PTF-M6-UFP-00007002 G2 — UFP-GQ-05585-S11C-06 — PTF-M6-UFP-00007004 G8

ITS ISA CONTROL HEADER PTF-M6-UFP-00007002 F2 — 3/8" TUBING — PTF-M6-UFP-00007004 F8

ITS ISA HEADER PTF-M6-UFP-00007002 F2 — 1" TUBING — PTF-M6-UFP-00007004 F8

UFP-WE-00143-S11C-01 · UFP-V-00960 · UFP-GQ-04236-S11C-02 · UFP-V-37945 · UFP-WE-00149-S11C-01 · UFP-V-00966 · UFP-GQ-04227-S11C-02 · UFP-GQ-04226-S11C-02 · UFP-V-37946

SET @ 71 PSIG — PCV 0803A — 001/2-B02 — UFP-V-68100 — NOTE 9
SET @ 73 PSIG — PCV 0803B — 001/2-B02 — UFP-V-68101 — NOTE 9
SET @ 71 PSIG — PCV 0801A — 001/2-B02 — UFP-V-68102 — NOTE 9
SET @ 73 PSIG — PCV 0801B — 001/2-B02 — UFP-V-68103 — NOTE 9

3/8 TUBING · ISA-V-68235 · ISA-V-68236 · ISA-V-68237 · ISA-V-68238 · ISA-V-68239 · ISA-V-68240 · ISA-V-68241 · ISA-V-68242

YY 0803D, 0803E, 0803F, 0803A, 0803G, 0803H, 0803C, 0801D, 0801E, 0801F, 0801A, 0801G, 0801H, 0801C — VENT — S — Z — FC

PT 0803F, 0803C, 0803D, 0803E, 0801F, 0801C, 0801A, 0801E

UFP-WE-00143-S11C-01 · UFP-GQ-01278-S11C-02 · UFP-V-00972 · UFP-STR-00078 · UFP-GQ-04236-S11C-02 · UFP-V-00973 · UFP-STR-00079 · UFP-WE-00149-S11C-01 · UFP-V-00969 · UFP-GQ-04227-S11C-02 · UFP-STR-00086 · UFP-GQ-04226-S11C-02 · UFP-V-00924 · UFP-STR-00087 · UFP-V-00925

NOTE 7 — LC — Z

N05C · N05B · N05A · N06C · N06B · N06A

YC-0834A PTF-M6-UFP-00008002 G8

YC-0832A PTF-M6-UFP-00008002 H8

FIRE AREA 'A' / FIRE AREA 'B' — UFP-V-37917 — PT 0822 — PY — PI 0822

FIRE AREA 'A' / FIRE AREA 'B' — UFP-V-37920 — PT 0820 — PY — PI 0820

1:100 — UFP-WE-05679-S11C-0031/4 — UFP-WE-05679-S11B-0031/4 — UFP-WE-05680-S11C-0031/4 — UFP-WE-05680-S11B-0031/4

C3 S11C / BC S11B

PSA-RK-00026 PTF-M6-UFP-00008002 B2 — UFP-GQ-04234-S11C-02
PSA-RK-00026 PTF-M6-UFP-00008002 B2 — UFP-GQ-04235-S11C-02
PSA-RK-00026 PTF-M6-UFP-00008002 B2 — UFP-GQ-04224-S11C-02
PSA-RK-00026 PTF-M6-UFP-00008002 B2 — UFP-GQ-04225-S11C-02

UFP-GQ-01278-S11B-02 · UFP-GQ-04236-S11B-02 · UFP-GQ-04227-S11B-02 · UFP-GQ-04226-S11B-02

1 1/2" — N01 · N03 · N02 · N04

UFP-EJCTR-00142 · UFP-EJCTR-00140

UFP-GV-00157-S11Z-02 — PULSE JET VENT HEADER PTF-M6-UFP-00007007 F8
UFP-PJM-00047 IN UFP-VSL-00001B — UFP-GQ-00123-S11B-02 — PTF-M6-UFP-00007007 C8
UFP-GV-00163-S11Z-02 — PULSE JET VENT HEADER PTF-M6-UFP-00007007 F8
UFP-PJM-00045 IN UFP-VSL-00001B — UFP-GQ-00135-S11B-02 — PTF-M6-UFP-00007007 C8

NOTES:

1. SEE DRAWINGS 24590-WTP-M6-50-00001 THROUGH 24590-WTP-M6-50-00008 FOR GENERAL NOTES, SYMBOLS AND LEGEND, AND GENERAL SLOPE REQUIREMENTS.
2. CONTENTS OF THIS DOCUMENT ARE DANGEROUS WASTE PERMIT AFFECTING.
3. THE PRESSURE BOUNDARY FOR ALL COMPONENTS ON THIS DRAWING IS QUALITY LEVEL Q AND SEISMIC CATEGORY SC-I, UNLESS OTHERWISE NOTED. THE PRESSURE BOUNDARY FOR THE NON-SAFETY INSTRUMENT SERVICE AIR (ISA) AND THE CORRESPONDING NON-SAFETY SOLENOID VALVES IT SUPPLIES IS QUALITY LEVEL CM AND SEISMIC CATEGORY SC-IV.
4. ALL LINES SHOWN ON THIS DRAWING SHALL BE FREE DRAINING, EXCEPT BLACK CELL LINES WHICH ARE SELF-DRAINING, UNLESS OTHERWISE NOTED.
5. DELETED
6. ALL TUBING OUTSIDE RACK TO BE FIELD RUN. TUBING ROUTING, SPECIFICATION OF ADDITIONAL IN-TUBING DEVICES, AND TAGGING OF IN-TUBING DEVICES WITHIN THE RACK TO BE DONE IN ACCORDANCE WITH C&I INSTALLATION DETAILS AND DESIGN GUIDE 24590-WTP-GPG-ENG-0142.
7. STRAINER PERMANENTLY INSTALLED.
8. THIS DRAWING IS CONVERTED FROM A SINGLE SHEET TO MULTI-SHEET DRAWINGS AND, IN PART, SUPERSEDES 24590-PTF-M6-UFP-00007 REV 2. THIS IS A MAJOR REVISION, NO REVISION CLOUDS ARE SHOWN. THIS DRAWING MAY INCLUDE INFORMATION FROM 24590-PTF-M6N-M8OT-00014, -00015, -00026, -00037, -00038, 24590-PTF-M6N-UFP-00049, AND -00072.
9. RECOMMENDED INSTALLATION FOR THE PCV IS TO CONNECT THE CONTROL LINE TO A STRAIGHT RUN OF PIPE 3 TO 5 FEET DOWNSTREAM OF THE PCV AND TO HAVE A MINIMUM STRAIGHT PIPE RUN OF 3 FEET UPSTREAM AND 4 FEET DOWNSTREAM OF THE PCV.
10. REVISION 1: MAJOR REVISION, NO REVISION CLOUDS ARE SHOWN. INCORPORATED 24590-PTF-M6LN-M8OT-00004, -00007, -00036, 24590-PTF-M6N-M8OT-00102, AND 24590-PTF-M6PR-UFP-00001. FURTHER REVISED TO INCORPORATE EFRT M-3 DESIGN-INPUT REQUIREMENTS FOR INCREASED NUMBER, ARRANGEMENT, AND PERFORMANCE OF PULSE JET MIXERS. EARMARKED ALL JET PUMP PAIRS (JPP) AND THEIR DRIVERS TO PJM SERVICE IN UFP-VSL-00001B, ADDED JPP AND DRIVES FOR NEW PULSE JET MIXERS (PJM) IN UFP-VSL-00001B, MOVED PWD JPP AND DRIVES TO NEW HLP-RK-00071 AND -00072 RACKS, AND CONVERTED RACK FROM 50 TO 100 PERCENT REDUNDANT TRAIN DESIGN. CHANGED JPP MODEL NUMBER.

HOLD/OPEN ITEMS:

NONE

REFERENCES:

1. DELETED
2. 24590-WTP-3YD-50-00003, SYSTEM DESCRIPTION FOR PULSE JET MIXER AND SPARGER MIXING SUBSYSTEMS.

Please note that source, special nuclear, and byproduct materials, as defined in the Atomic Energy Act of 1954 (AEA) are regulated at the U. S. Department of Energy (DOE) facilities exclusively by DOE acting pursuant to its AEA authority. DOE asserts that pursuant to AEA, it has sole and exclusive responsibility and authority for regulating nuclear safety at DOE-owned nuclear materials at DOE-owned nuclear facilities. Information contained herein on radionuclides is provided for process description purposes only.

Q — QUALITY DESIGNATOR

REVISION HISTORY

REV	DESCRIPTION	ORG	CHKD	RVWD	APVD	DATE
1	REVISED PER NOTE 10		SJ			2/17/11
0	ISSUED FOR CONSTRUCTION SEE NOTE 8	MAS	APP	ES/CL	RS/JM	10/28/08

ISSUED BY RPP-WTP PDC — DRT DATE — ISSUE STAMP

PROJECT No.	24590
SITE	HANFORD
AREA	200E
BUILDING No.	10

	BY	DATE
ORIGINATOR	SUMMERS, MICHAEL	10/22/08
CHECKER	PINTO, PAT	10/22/08
APPROVER	STEVENS, ROBERT	10/23/08
REVIEWER	STRIEPER, ECBERT	10/28/08

CONTENT APPLICABLE TO ALARA? [X] YES [ ] NO
ADR NO. 24590-PTF-ADR-M-02-046 REV: 4
EMAS SCREENING REQUIRED? [X] YES [ ] NO EMAS INITIAL IF YES JMT

RIVER PROTECTION PROJECT
WASTE TREATMENT PLANT
2435 STEVENS CENTER PLACE
RICHLAND, WA 99354

CONTRACT No: DE-AC27-01RV14136

P&ID - PTF ULTRAFILTRATION PROCESS SYSTEM UTILITY RACK PSA-RK-00025 UFP-VSL-00001B

SCALE: NONE — 24590-PTF-M6-UFP-00007003 — REV. 1

"E" SIZE - 44 x 34
COMPUTER GENERATED - MANUAL DESIGN CHANGES NOT PERMITTED

SCREENING IS REQUIRED FOR DRAWING TYPES IDENTIFIED IN 24590-WTP-GPP-SREG-002

FORM E_SDN.DGN 02/2009

2/16/2011 3:38:16 PM

PLOTTED BY: wmchorney C:\Work\wmchorney\dms29337\PTF\M6\PTF00007003.dgn

24590-PTF-M6-UFP-00007004

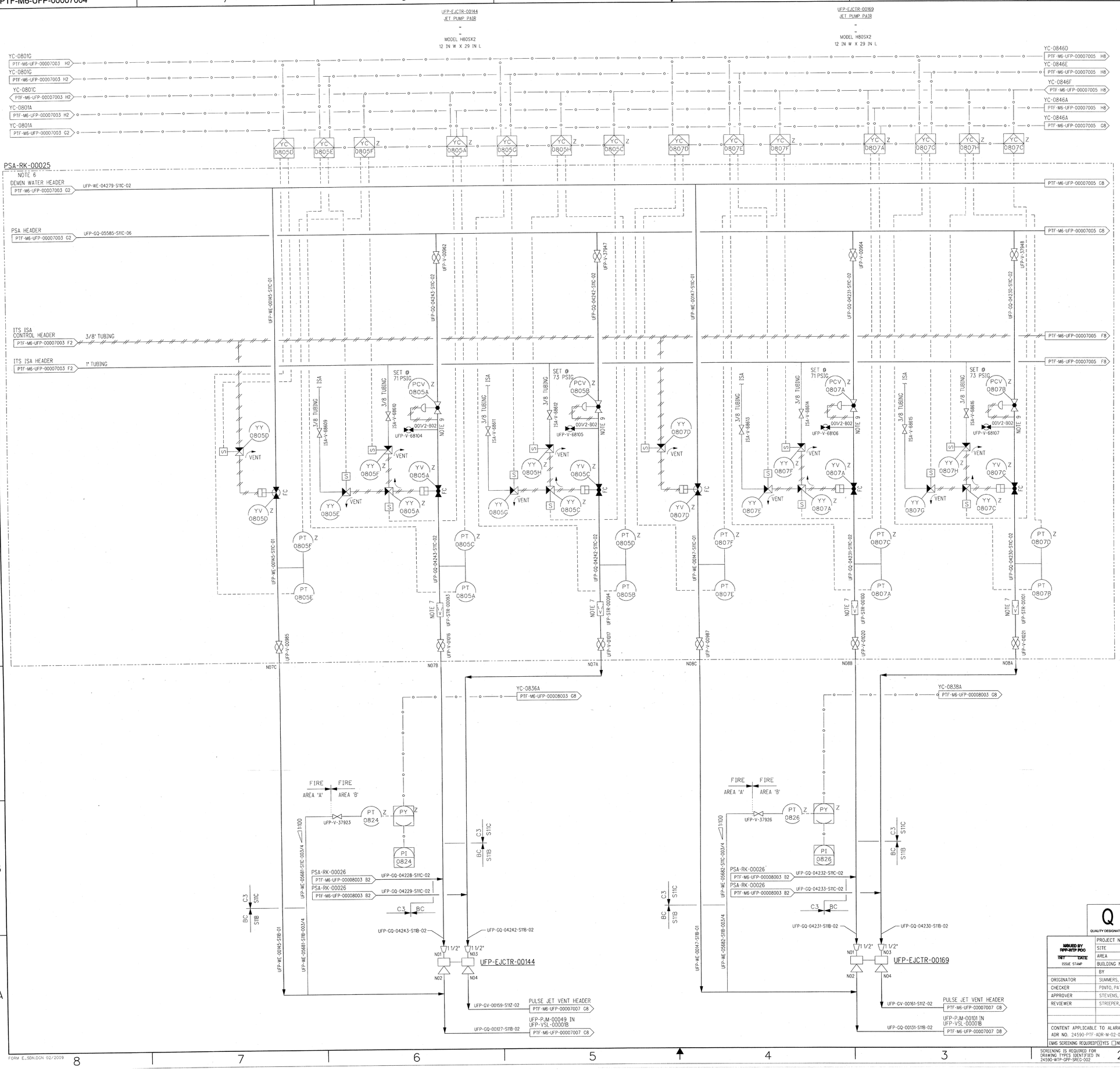

NOTES:

1. SEE DRAWINGS 24590-WTP-M6-50-00001 THROUGH 24590-WTP-M6-50-00008 FOR GENERAL NOTES, SYMBOLS AND LEGEND, AND GENERAL SLOPE REQUIREMENTS.
2. CONTENTS OF THIS DOCUMENT ARE DANGEROUS WASTE PERMIT AFFECTING.
3. THE PRESSURE BOUNDARY FOR ALL COMPONENTS ON THIS DRAWING IS QUALITY LEVEL Q AND SEISMIC CATEGORY SC-1, UNLESS OTHERWISE NOTED. THE PRESSURE BOUNDARY FOR THE NON-SAFETY INSTRUMENT SERVICE AIR (ISA) AND THE CORRESPONDING NON-SAFETY SOLENOID VALVES IT SUPPLIES IS QUALITY LEVEL CM AND SEISMIC CATEGORY SC-IV.
4. ALL LINES SHOWN ON THIS DRAWING SHALL BE FREE DRAINING, EXCEPT BLACK CELL LINES WHICH ARE SELF-DRAINING, UNLESS OTHERWISE NOTED.
5. DELETED
6. ALL TUBING OUTSIDE RACK TO BE FIELD RUN. TUBING ROUTING, SPECIFICATION OF ADDITIONAL IN-TUBING DEVICES, AND TAGGING OF IN-TUBING DEVICES WITHIN THE RACK TO BE DONE IN ACCORDANCE WITH C&I INSTALLATION DETAILS AND DESIGN GUIDE 24590-WTP-GPG-ENG-0142.
7. STRAINER PERMANENTLY INSTALLED.
8. THIS DRAWING IS CONVERTED FROM A SINGLE SHEET TO MULTI-SHEET DRAWINGS AND, IN PART, SUPERSEDES 24590-PTF-M6-UFP-00007 REV 2. THIS IS A MAJOR REVISION. NO REVISION CLOUDS ARE SHOWN. THIS DRAWING MAY INCLUDE INFORMATION FROM 24590-PTF-M6N-M8OT-00014, -00015, -00026, -00037, -00038, 24590-PTF-M6N-UFP-00049, AND -00072.
9. RECOMMENDED INSTALLATION FOR THE PCV IS TO CONNECT THE CONTROL LINE TO A STRAIGHT RUN OF PIPE 3 TO 5 FEET DOWNSTREAM OF THE PCV AND TO HAVE A MINIMUM STRAIGHT PIPE RUN OF 3 FEET UPSTREAM AND 4 FEET DOWNSTREAM OF THE PCV.
10. REVISION 1: MAJOR REVISION, NO REVISION CLOUDS ARE SHOWN. INCORPORATED 24590-PTF-M6LN-M8OT-00004, -00007, -00056, 24590-PTF-M6N-M8OT-00102, AND 24590-PTF-M6PR-UFP-00001. FURTHER REVISED TO INCORPORATE EFRT M-3 DESIGN-INPUT REQUIREMENTS FOR INCREASED NUMBER, ARRANGEMENT, AND PERFORMANCE OF PULSE JET MIXERS. EARMARKED ALL JET PUMP PAIRS (JPP) AND THEIR DRIVERS TO PJM SERVICE IN UFP-VSL-00001B, ADDED JPP AND DRIVES FOR NEW PULSE JET MIXERS (PJM) IN UFP-VSL-00001B, MOVED PWD JPP AND DRIVES TO NEW HLP-RK-00071 AND -00072 RACKS, AND CONVERTED RACK FROM 50 TO 100 PERCENT REDUNDANT TRAIN DESIGN. CHANGED JPP MODEL NUMBER.

HOLD/OPEN ITEMS:

NONE

REFERENCES:

1. DELETED
2. 24590-WTP-3YD-50-00003, SYSTEM DESCRIPTION FOR PULSE JET MIXER AND SPARGER MIXING SUBSYSTEMS.

Please note that source, special nuclear, and byproduct materials, as defined in the Atomic Energy Act of 1954 (Act), are present at the U. S. Department of Energy (DOE) facilities. Accordingly, DOE asserts that pursuant to AEA, it has sole and exclusive responsibility and authority to regulate source, special nuclear, and byproduct materials at DOE-owned nuclear facilities. Information contained herein on radionuclides is provided for process description purposes only.

REV	DESCRIPTION	ORG	CHKD	RVWD	APVD	DATE
1	REVISED PER NOTE 10		SJ			2/17/11
0	ISSUED FOR CONSTRUCTION SEE NOTE 8	MAS	APP	ES/CL	RS/JM	10/28/08

REVISION HISTORY

	BY	DATE
ORIGINATOR	SUMMERS, MICHAEL	10/23/08
CHECKER	PINTO, PAT	10/23/08
APPROVER	STEVENS, ROBERT	10/28/08
REVIEWER	STRIEPER, EGBERT	10/23/08

ISSUED BY RPP-WTP PDO — INIT / DATE — ISSUE STAMP

PROJECT No. 24590 | SITE HANFORD | AREA 200E | BUILDING No. 10

CONTENT APPLICABLE TO ALARA? [X] YES [ ] NO
ADR NO. 24590-PTF-ADR-M-02-046 REV: 4
E&MS SCREENING REQUIRED? [X] YES [ ] NO E&MS INITIAL IF YES

SCREENING IS REQUIRED FOR DRAWING TYPES IDENTIFIED IN 24590-WTP-GPP-SREG-002

BECHTEL
RIVER PROTECTION PROJECT
WASTE TREATMENT PLANT
2435 STEVENS CENTER PLACE
RICHLAND, WA 99354

CONTRACT No: DE-AC27-01RV14136

P&ID - PTF ULTRAFILTRATION PROCESS SYSTEM UTILITY RACK PSA-RK-00025 UFP-VSL-00001B

SCALE: NONE

24590-PTF-M6-UFP-00007004 REV 1

"E" SIZE - 44x34
COMPUTER GENERATED - MANUAL DESIGN CHANGES NOT PERMITTED

FORM E_SDN.DGN 02/2009

2/16/2011 3:40:33 PM

PLOTTED BY: amdohney C:\Work\amdohney\dms03837\DFTM\UFP00007004.dgn

UFP-EJCTR-00203
JET PUMP PAIR
=
MODEL H80SX2
12 IN W X 29 IN L

UFP-EJCTR-00204
JET PUMP PAIR
=
MODEL H80SX2
12 IN W X 29 IN L

YC-0807G PTF-M6-UFP-00007004 H2
YC-0807G PTF-M6-UFP-00007004 H2
YC-0807C PTF-M6-UFP-00007004 H2
YC-0807A PTF-M6-UFP-00007004 H2
YC-0807A PTF-M6-UFP-00007004 G2

YC-0843D PTF-M6-UFP-00007006 H8
YC-0843E PTF-M6-UFP-00007006 H8
YC-0843F PTF-M6-UFP-00007006 H8
YC-0843A PTF-M6-UFP-00007006 H8
YC-0843A PTF-M6-UFP-00007006 G8

YC 0846D Z · YC 0846E Z · YC 0846F Z · YC 0846A Z · YC 0846G Z · YC 0846H Z · YC 0846C Z · YC 0849D Z · YC 0849E Z · YC 0849F Z · YC 0849A Z · YC 0849G Z · YC 0849H Z · YC 0849C Z

PSA-RK-00025
NOTE 6

DEMIN WATER HEADER
PTF-M6-UFP-00007004 G2 — UFP-WE-04279-S1IC-02
PTF-M6-UFP-00007006 G8

PSA HEADER
PTF-M6-UFP-00007004 G2 — UFP-GQ-05585-S1IC-06
PTF-M6-UFP-00007006 G8

ITS ISA CONTROL HEADER
PTF-M6-UFP-00007004 F2 — 3/8" TUBING
PTF-M6-UFP-00007006 F8

ITS ISA HEADER
PTF-M6-UFP-00007004 F2 — 1" TUBING
PTF-M6-UFP-00007006 F8

UFP-WE-67603-S1IC-01 · UFP-GQ-05869-S1IC-02 · UFP-V-68454 · UFP-GQ-05871-S1IC-02 · UFP-V-68457 · UFP-WE-67605-S1IC-01 · UFP-V-68462 · UFP-GQ-05872-S1IC-02 · UFP-V-68465 · UFP-GQ-05875-S1IC-02

SET @ 71 PSIG — PCV 0846A Z — 3/8 TUBING — ISA-V-70297 — 001V2-B02 — UFP-V-68455 — NOTE 9
SET @ 73 PSIG — PCV 0846B Z — 3/8 TUBING — ISA-V-70299 — 001V2-B02 — UFP-V-68458 — NOTE 9
SET @ 71 PSIG — PCV 0849A Z — 3/8 TUBING — ISA-V-70301 — 001V2-B02 — UFP-V-68463 — NOTE 9
SET @ 73 PSIG — PCV 0849B Z — 3/8 TUBING — ISA-V-70303 — 001V2-B02 — UFP-V-68466 — NOTE 9

ISA-V-70296 · ISA-V-70298 · ISA-V-70300 · ISA-V-70302

YY 0846D Z · YY 0846E Z · YY 0846F Z · YY 0846A Z · YY 0846G Z · YY 0846H Z · YY 0846C Z · YY 0849D Z · YY 0849E Z · YY 0849F Z · YY 0849A Z · YY 0849G Z · YY 0849H Z · YY 0849C Z

S · VENT · FC

PT 0846F Z · PT 0846E · PT 0846C Z · PT 0846A · PT 0846D Z · PT 0846B · PT 0849F Z · PT 0849E · PT 0849C Z · PT 0849A · PT 0849D Z · PT 0849B

UFP-WE-67603-S1IC-01 · UFP-GQ-05869-S1IC-02 · UFP-GQ-05871-S1IC-02 · UFP-WE-67605-S1IC-01 · UFP-GQ-05873-S1IC-02 · UFP-GQ-05875-S1IC-02

NOTE 7 — LT — UFP-S1IR-04258 · UFP-S1IR-04259 · UFP-S1IR-04260 · UFP-S1IR-04261

UFP-V-68452 · UFP-V-68456 · UFP-V-68459 · UFP-V-68460 · UFP-V-68464 · UFP-V-68467

N09C · N09B · N09A · N10C · N10B · N10A

YC-0847A PTF-M6-UFP-00008003 H8

FIRE AREA 'A' · FIRE AREA 'B' · UFP-V-68453 · PT 0848 Z · PY Z · PI 0848

PSA-RK-00026 PTF-M6-UFP-00008003 C2 — UFP-GQ-05861-S1IC-02
PSA-RK-00026 PTF-M6-UFP-00008003 C2 — UFP-GQ-05862-S1IC-02

UFP-WE-67604-S1IC-00374 · UFP-WE-67604-S1IB-00374 · 1:100 · C3 S1IC · BC S1IB

UFP-GQ-05869-S1IB-02 · UFP-GQ-05871-S1IB-02 · 1 1/2" · N01 · N03 · N02 · N04 · UFP-EJCTR-00203

UFP-GV-05872-S1IZ-02 — PULSE JET VENT HEADER PTF-M6-UFP-00007007 G8
UFP-PJM-00114 IN UFP-VSL-00001B — UFP-GQ-05870-S1IB-02 — PTF-M6-UFP-00007007 D8

YC-0850C PTF-M6-UFP-00008004 G8

FIRE AREA 'A' · FIRE AREA 'B' · UFP-V-68461 · PT 0851 Z · PY Z · PI 0851

PSA-RK-00026 PTF-M6-UFP-00008004 B2 — UFP-GQ-05863-S1IC-02
PSA-RK-00026 PTF-M6-UFP-00008004 B2 — UFP-GQ-05864-S1IC-02

UFP-WE-67606-S1IC-00374 · UFP-WE-67606-S1IB-00374 · 1:100 · C3 S1IC · BC S1IB

UFP-GQ-05873-S1IB-02 · UFP-GQ-05875-S1IB-02 · 1 1/2" · N01 · N03 · N02 · N04 · UFP-EJCTR-00204

UFP-GV-05876-S1IZ-02 — PULSE JET VENT HEADER PTF-M6-UFP-00007007 G8
UFP-PJM-00115 IN UFP-VSL-00001B — UFP-GQ-05874-S1IB-02 — PTF-M6-UFP-00007007 D8

NOTES:

1. SEE DRAWINGS 24590-WTP-M6-50-00001 THROUGH 24590-WTP-M6-50-00008 FOR GENERAL NOTES, SYMBOLS AND LEGEND, AND GENERAL SLOPE REQUIREMENTS.
2. CONTENTS OF THIS DOCUMENT ARE DANGEROUS WASTE PERMIT AFFECTING.
3. THE PRESSURE BOUNDARY FOR ALL COMPONENTS ON THIS DRAWING IS QUALITY LEVEL Q AND SEISMIC CATEGORY SC-I, UNLESS OTHERWISE NOTED. THE PRESSURE BOUNDARY FOR THE NON-SAFETY INSTRUMENT SERVICE AIR (ISA) AND THE CORRESPONDING NON-SAFETY SOLENOID VALVES IT SUPPLIES IS QUALITY LEVEL CM AND SEISMIC CATEGORY SC-IV.
4. ALL LINES SHOWN ON THIS DRAWING SHALL BE FREE DRAINING, EXCEPT BLACK CELL LINES WHICH ARE SELF-DRAINING, UNLESS OTHERWISE NOTED.
5. DELETED
6. ALL TUBING OUTSIDE RACK TO BE FIELD RUN. TUBING ROUTING, SPECIFICATION OF ADDITIONAL IN-TUBING DEVICES, AND TAGGING OF IN-TUBING DEVICES WITHIN THE RACK TO BE DONE IN ACCORDANCE WITH C&I INSTALLATION DETAILS AND DESIGN GUIDE 24590-WTP-GPG-ENG-0142.
7. STRAINER PERMANENTLY INSTALLED.
8. THIS DRAWING IS CONVERTED FROM A SINGLE SHEET TO MULTI-SHEET DRAWINGS AND, IN PART, SUPERSEDES 24590-PTF-M6-UFP-00007 REV 2. THIS IS A MAJOR REVISION. NO REVISION CLOUDS ARE SHOWN. THIS DRAWING MAY INCLUDE INFORMATION FROM 24590-PTF-M6N-M8OT-00014, -00015, -00026, -00037, -00038, 24590-PTF-M6N-UFP-00049, AND -00072.
9. RECOMMENDED INSTALLATION FOR THE PCV IS TO CONNECT THE CONTROL LINE TO A STRAIGHT RUN OF PIPE 3 TO 5 FEET DOWNSTREAM OF THE PCV AND TO HAVE A MINIMUM STRAIGHT PIPE RUN OF 3 FEET UPSTREAM AND 4 FEET DOWNSTREAM OF THE PCV.
10. REVISION 1: MAJOR REVISION, NO REVISION CLOUDS ARE SHOWN. FURTHER REVISED TO INCORPORATE 24590-PTF-M6LN-M8OT-00004, -00007, -00036, 24590-PTF-M6N-M8OT-00102, AND 24590-PTF-M6PR-UFP-00001. INCORPORATE EFRT M-3 DESIGN-INPUT REQUIREMENTS FOR INCREASED NUMBER, ARRANGEMENT, AND PERFORMANCE OF PULSE JET MIXERS. EARMARKED ALL JET PUMP PAIRS (JPP) AND THEIR DRIVERS TO PJM SERVICE IN UFP-VSL-00001B, ADDED JPP AND DRIVES FOR NEW PULSE JET MIXERS (PJM) IN UFP-VSL-00001B, MOVED PWD JPP AND DRIVES TO NEW HLP-RK-00071 AND -00072 RACKS, AND CONVERTED RACK FROM 50 TO 100 PERCENT REDUNDANT TRAIN DESIGN.

HOLD/OPEN ITEMS:

NONE

REFERENCES:

1. DELETED
2. 24590-WTP-3YD-50-00003, SYSTEM DESCRIPTION FOR PULSE JET MIXER AND SPARGER MIXING SUBSYSTEMS.

Please note that source, special nuclear, and byproduct materials, as defined in the Atomic Energy Act of 1954 (AEA) are regulated at the U. S. Department of Energy (DOE) facilities exclusively by DOE acting pursuant to its AEA authority. DOE asserts that pursuant to AEA, it has sole and exclusive responsibility and authority regarding regulation of source, special nuclear, and byproduct materials at DOE-owned nuclear facilities. Information contained herein on radionuclides is provided for process description purposes only.

Q — QUALITY DESIGNATOR

REVISION HISTORY

REV	DESCRIPTION	ORG	CHKD	RVWD	APVD	DATE
1	REVISED PER NOTE 10	MJ	SJ	JBA	KLS	2/17/11
0	ISSUED FOR CONSTRUCTION SEE NOTE 8	MAS	APP	ES/CL	RS/JM	10/28/08

ISSUED BY RPP-WTP PDC — DATE — ISSUE STAMP

	BY	DATE
ORIGINATOR	SUMMERS, MICHAEL	10/23/08
CHECKER	PINTO, PAT	10/23/08
APPROVER	STEVENS, ROBERT	10/28/08
REVIEWER	STRIEPER, EGBERT	10/23/08

CONTENT APPLICABLE TO ALARA? [X] YES [ ] NO
ADR NO. 24590-PTF-ADR-M-02-046 REV: 4
EMAIL SCREENING REQUIRED? [X] YES [ ] NO EMAIL INITIAL IF YES

PROJECT No. 24590 · SITE HANFORD · AREA 200E · BUILDING No. 10

BECHTEL
RIVER PROTECTION PROJECT
WASTE TREATMENT PLANT
2435 STEVENS CENTER PLACE
RICHLAND, WA 99354

CONTRACT No: DE-AC27-01RV14136

P&ID - PTF ULTRAFILTRATION PROCESS SYSTEM UTILITY RACK PSA-RK-00025 UFP-VSL-00001B

SCALE: NONE
24590-PTF-M6-UFP-00007005
REV 1

SCREENING IS REQUIRED FOR DRAWING TYPES IDENTIFIED IN 24590-WTP-GPP-SREG-002
E-SIZE - 44x34
COMPUTER GENERATED - MANUAL DESIGN CHANGES NOT PERMITTED

FORM E_SDNOGN 02/2009

2/16/2011 3:43:17 PM

PLOTTED BY: emahoney C:\Work\emahoney\dms\3837\PTFM6UFP00007005.dgn

24590-PTF-M6-UFP-00007006

UFP-EJCTR-00205
JET PUMP PAIR
=
MODEL H80SX2
12 IN W X 29 IN L

UFP-EJCTR-00206
JET PUMP PAIR
=
MODEL H80SX2
12 IN W X 29 IN L

YC-0849G PTF-M6-UFP-00007005 H2
YC-0849G PTF-M6-UFP-00007005 H2
YC-0849C PTF-M6-UFP-00007005 H2
YC-0849A PTF-M6-UFP-00007005 H2
YC-0849A PTF-M6-UFP-00007005 G2

YC-0843D, YC-0843E, YC-0843F, YC-0843A, YC-0843G, YC-0843H, YC-0843C, YC-0840D, YC-0840E, YC-0840F, YC-0840A, YC-0840G, YC-0840H, YC-0840C

PSA-RK-00025

NOTE 6

DEMIN WATER HEADER PTF-M6-UFP-00007005 G2 — UFP-WE-04279-S11C-02

PSA HEADER PTF-M6-UFP-00007005 G2 — UFP-GQ-05585-S11C-06

ITS ISA CONTROL HEADER PTF-M6-UFP-00007005 F2 — 3/8" TUBING

ITS ISA HEADER PTF-M6-UFP-00007005 F2 — 1" TUBING

UFP-WE-67707-S11C-01 | UFP-GQ-05877-S11C-02 | UFP-V-68474 | UFP-V-68477 | UFP-GQ-05879-S11C-02 | UFP-WE-67709-S11C-01 | UFP-GQ-05880-S11C-02 | UFP-V-68482 | UFP-V-68484 | UFP-GQ-05882-S11C-02

SET @ 71 PSIG — PCV 0843A — ISA — 3/8 TUBING — ISA-V-70308 — 3/8 TUBING — ISA-V-70309 — 001/2-802 — UFP-V-68475 — NOTE 9

SET @ 73 PSIG — PCV 0843B — ISA — 3/8 TUBING — ISA-V-70311 — 001/2-802 — UFP-V-68478 — NOTE 9

SET @ 71 PSIG — PCV 0840A — ISA — 3/8 TUBING — ISA-V-70316 — 3/8 TUBING — ISA-V-70317 — 001/2-802 — UFP-V-05880 — NOTE 9

SET @ 73 PSIG — PCV 0840B — ISA — 3/8 TUBING — ISA-V-70318 — 3/8 TUBING — ISA-V-70319 — 001/2-802 — PWD-V-68458 — NOTE 9

YY 0843D, VENT, YY 0843F, YY 0843A, YY 0843E, YY 0843C, YY 0840D, YY 0840E, YY 0840F, YY 0840A, YY 0840H, YY 0840C, YY 0840G — S — FC

PT 0843F, PT 0843E, PT 0843C, PT 0843A, PT 0843D, PT 0843B, PT 0840F, PT 0840E, PT 0840C, PT 0840A, PT 0840D, PT 0840B

UFP-WE-67707-S11C-01 | UFP-GQ-05877-S11C-02 | UFP-SIR-04262 | UFP-V-68476 | UFP-GQ-05879-S11C-02 | UFP-SIR-04263 | UFP-V-68479 | UFP-WE-67709-S11C-01 | UFP-V-68480 | UFP-SIR-04264 | UFP-V-68483 | UFP-SIR-04265 | UFP-V-68485 — NOTE 7

N11C | N11B | N11A | N12C | N12B | N12A

UFP-V-68472

YC-0844A PTF-M6-UFP-00008004 C8

FIRE AREA 'A' / FIRE AREA 'B' — UFP-V-68473 — PT 0845 — PY — PI 0845 — 1:100

PSA-RK-00026 PTF-M6-UFP-00008004 B2 — UFP-GQ-05865-S11C-02
PSA-RK-00026 PTF-M6-UFP-00008004 B2 — UFP-GQ-05866-S11C-02

C.3 S11C / BC S11B — C3 BC

UFP-WE-67708-S11C-003/4 | UFP-WE-67708-S11B-003/4 | UFP-WE-67707-S11B-01

UFP-GQ-05877-S11B-02 | UFP-GQ-05879-S11B-02

1 1/2" — N01 | N03 | N02 | N04 — UFP-EJCTR-00205

UFP-GV-05877-S11Z-02 — PULSE JET VENT HEADER PTF-M6-UFP-00007007 H8

UFP-PJM-00113 IN UFP-VSL-00001B — PTF-M6-UFP-00007007 D8

UFP-GQ-05878-S11B-02

YC-0841A PTF-M6-UFP-00008004 H8

FIRE AREA 'A' / FIRE AREA 'B' — UFP-V-68481 — PT 0842 — PY — PI 0842 — 1:100

PSA-RK-00026 PTF-M6-UFP-00008004 C2 — UFP-GQ-05867-S11C-02
PSA-RK-00026 PTF-M6-UFP-00008004 C2 — UFP-GQ-05868-S11C-02

C.3 S11C / BC S11B — C3 BC

UFP-WE-67710-S11C-003/4 | UFP-WE-67710-S11B-003/4 | UFP-WE-67709-S11B-01

UFP-GQ-05880-S11B-02 | UFP-GQ-05882-S11B-02

1 1/2" — N01 | N03 | N02 | N04 — UFP-EJCTR-00206

UFP-GV-05878-S11Z-02 — PULSE JET VENT HEADER PTF-M6-UFP-00007007 H8

UFP-GQ-05881-S11B-02 — UFP-PJM-00112 IN UFP-VSL-00001B — PTF-M6-UFP-00007007 D8

NOTES:

1. SEE DRAWINGS 24590-WTP-M6-50-00001 THROUGH 24590-WTP-M6-50-00008 FOR GENERAL NOTES, SYMBOLS AND LEGEND, AND GENERAL SLOPE REQUIREMENTS.
2. CONTENTS OF THIS DOCUMENT ARE DANGEROUS WASTE PERMIT AFFECTING.
3. THE PRESSURE BOUNDARY FOR ALL COMPONENTS ON THIS DRAWING IS QUALITY LEVEL Q AND SEISMIC CATEGORY SC-I, UNLESS OTHERWISE NOTED. THE PRESSURE BOUNDARY FOR THE NON-SAFETY INSTRUMENT SERVICE AIR (ISA) AND THE CORRESPONDING NON-SAFETY SOLENOID VALVES IT SUPPLIES IS QUALITY LEVEL CM AND SEISMIC CATEGORY SC-IV.
4. ALL LINES SHOWN ON THIS DRAWING SHALL BE FREE DRAINING, EXCEPT BLACK CELL LINES WHICH ARE SELF-DRAINING, UNLESS OTHERWISE NOTED.
5. DELETED
6. ALL TUBING OUTSIDE RACK TO BE FIELD RUN. TUBING ROUTING, SPECIFICATION OF ADDITIONAL IN-TUBING DEVICES, AND TAGGING OF IN-TUBING DEVICES WITHIN THE RACK TO BE DONE IN ACCORDANCE WITH C&I INSTALLATION DETAILS AND DESIGN GUIDE 24590-WTP-GPG-ENG-0142.
7. STRAINER PERMANENTLY INSTALLED.
8. THIS DRAWING IS CONVERTED FROM A SINGLE SHEET TO MULTI-SHEET DRAWINGS AND, IN PART, SUPERSEDES 24590-PTF-M6-UFP-00007 REV 2. THIS IS A MAJOR REVISION. NO REVISION CLOUDS ARE SHOWN. THIS DRAWING MAY INCLUDE INFORMATION FROM 24590-PTF-M6N-M8OT-00014, -00015, -00026, -00037, -00038, 24590-PTF-M6N-UFP-00049, AND -00072.
9. RECOMMENDED INSTALLATION FOR THE PCV IS TO CONNECT THE CONTROL LINE TO A STRAIGHT RUN OF PIPE 3 TO 5 FEET DOWNSTREAM OF THE PCV AND TO HAVE A MINIMUM STRAIGHT PIPE RUN OF 3 FEET UPSTREAM AND 4 FEET DOWNSTREAM OF THE PCV.
10. REVISION 1: MAJOR REVISION, NO REVISION CLOUDS ARE SHOWN. 24590-PTF-M6LN-M8OT-00004, -00007, -00036, 24590-PTF-M6N-M8OT-00102, AND 24590-PTF-M6PR-UFP-00001. FURTHER REVISED TO INCORPORATE EFRT M-3 DESIGN-INPUT REQUIREMENTS FOR INCREASED NUMBER, ARRANGEMENT, AND PERFORMANCE OF PULSE JET MIXERS. EARMARKED ALL JET PUMP PAIRS (JPP) AND THEIR DRIVERS TO PJM SERVICE IN UFP-VSL-00001B, ADDED JPP AND DRIVES FOR NEW PULSE JET MIXERS (PJM) IN UFP-VSL-00001B, MOVED PWD JPP AND DRIVES TO NEW HLP-RK-00071 AND -00072 RACKS, AND CONVERTED RACK FROM 50 TO 100 PERCENT REDUNDANT TRAIN DESIGN.

HOLD/OPEN ITEMS:

NONE

REFERENCES:

1. DELETED
2. 24590-WTP-3YD-50-00003, SYSTEM DESCRIPTION FOR PULSE JET MIXER AND SPARGER MIXING SUBSYSTEMS.

Please note that source, special nuclear, and byproduct materials, as defined in the Atomic Energy Act of 1954 (AEA) are regulated at the U. S. Department of Energy (DOE) facilities exclusively by DOE acting pursuant to its AEA authority. DOE asserts that pursuant to AEA, it has sole and exclusive responsibility and authority over regulation of source, special nuclear, and byproduct materials at DOE-owned nuclear facilities. Information contained herein on radionuclides is provided for process description purposes only.

REV	DESCRIPTION	ORG	CHKD	RVWD	APVD	DATE
1	REVISED PER NOTE 10, INCORP. LISTED DCNS.	MH	SJT	[illegible]	JBH	2/17/11
0	ISSUED FOR CONSTRUCTION SEE NOTE 8	MAS	APP	ES/CL	RS/JM	10/28/08

REVISION HISTORY

Q — QUALITY DESIGNATOR

ISSUED BY RPP-WTP PDC — INIT / DATE — ISSUE STAMP

	BY	DATE
PROJECT No.	24590	
SITE	HANFORD	
AREA	200E	
BUILDING No.	10	
ORIGINATOR	SUMMERS, MICHAEL	10/23/08
CHECKER	PINTO, PAT	10/23/08
APPROVER	STEVENS, ROBERT	10/28/08
REVIEWER	STRIEPER, EGBERT	10/23/08

CONTENT APPLICABLE TO ALARA? [X] YES [ ] NO
ADR NO. 24590-PTF-ADR-M-02-046 REV: 4
E&MS SCREENING REQUIRED? [X] YES [ ] NO E&MS INITIAL IF YES [illegible]

SCREENING IS REQUIRED FOR DRAWING TYPES IDENTIFIED IN 24590-WTP-GPP-SREG-002

2

"E" SIZE - 44x34
COMPUTER GENERATED - MANUAL DESIGN CHANGES NOT PERMITTED

RIVER PROTECTION PROJECT
WASTE TREATMENT PLANT
2435 STEVENS CENTER PLACE
RICHLAND, WA 99354

CONTRACT No: DE-AC27-01RV14136

P&ID - PTF ULTRAFILTRATION PROCESS SYSTEM UTILITY RACK PSA-RK-00025 UFP-VSL-00001B

SCALE: NONE

24590-PTF-M6-UFP-00007006

REV 1

2/16/2011 3:45:57 PM

PLOTTED BY: wmahoney C:\Work\wmahoney\dms\s0353\7-0\PTFM6UFP00007006.dgn

FORM E_SDN.DGN 02/2009

24590-PTF-M6-UFP-00007007

UFP-PJM-00048 PULSE JET MIXER — 700 GAL 3'-0" ID x 11'-8" T-T
UFP-PJM-00046 PULSE JET MIXER — 700 GAL 3'-0" ID x 11'-8" T-T
UFP-PJM-00050 PULSE JET MIXER — 700 GAL 3'-0" ID x 11'-8" T-T
UFP-PJM-00102 PULSE JET MIXER — 700 GAL 3'-0" ID x 11'-8" T-T
UFP-PJM-00047 PULSE JET MIXER — 700 GAL 3'-0" ID x 11'-8" T-T
UFP-PJM-00045 PULSE JET MIXER — 700 GAL 3'-0" ID x 11'-8" T-T
UFP-PJM-00049 PULSE JET MIXER — 700 GAL 3'-0" ID x 11'-8" T-T
UFP-PJM-00101 PULSE JET MIXER — 700 GAL 3'-0" ID x 11'-8" T-T
UFP-PJM-00114 PULSE JET MIXER — 700 GAL 2'-8" ID x 15'-5" T-T
UFP-PJM-00115 PULSE JET MIXER — 700 GAL 2'-8" ID x 15'-5" T-T
UFP-PJM-00113 PULSE JET MIXER — 700 GAL 2'-8" ID x 15'-5" T-T
UFP-PJM-00112 PULSE JET MIXER — 700 GAL 2'-8" ID x 15'-5" T-T

UFP-EJCTR-00206 — PTF-M6-UFP-00007006 A3 — UFP-GV-05878-S11Z-02
UFP-EJCTR-00205 — PTF-M6-UFP-00007006 A5 — UFP-GV-05877-S11Z-02
UFP-EJCTR-00204 — PTF-M6-UFP-00007005 A3 — UFP-GV-05876-S11Z-02
UFP-EJCTR-00203 — PTF-M6-UFP-00007005 A5 — UFP-GV-05872-S11Z-02
UFP-EJCTR-00169 — PTF-M6-UFP-00007004 A3 — UFP-GV-00161-S11Z-02
UFP-EJCTR-00144 — PTF-M6-UFP-00007004 A5 — UFP-GV-00159-S11Z-02
UFP-EJCTR-00140 — PTF-M6-UFP-00007003 A3 — UFP-GV-00163-S11Z-02
UFP-EJCTR-00142 — PTF-M6-UFP-00007003 A5 — UFP-GV-00157-S11Z-02
UFP-EJCTR-00170 — PTF-M6-UFP-00007002 A3 — UFP-GV-00386-S11Z-02
UFP-EJCTR-00145 — PTF-M6-UFP-00007002 A5 — UFP-GV-00384-S11Z-02
UFP-EJCTR-00141 — PTF-M6-UFP-00007001 A3 — UFP-GV-00380-S11Z-02
UFP-EJCTR-00143 — PTF-M6-UFP-00007001 A5 — UFP-GV-00382-S11Z-02
PLANT WASH RACK PWD-RK-00006 — PTF-M6-HLP-00010003 A3 — PJV-ZS-06605-S11Z-02
PJV-GV-00007-S11Z-18

UFP-RK-00025/UFP-RK-00026 VENT HEADER

PULSE JET VENT HEADER — PTF-M6-UFP-00005007 E8

UFP-EJCTR-00206 — PTF-M6-UFP-00007006 A3 — UFP-GQ-05881-S11B-02
UFP-EJCTR-00205 — PTF-M6-UFP-00007006 A5 — UFP-GQ-05878-S11B-02
UFP-EJCTR-00204 — PTF-M6-UFP-00007005 A3 — UFP-GQ-05874-S11B-02
UFP-EJCTR-00203 — PTF-M6-UFP-00007005 A5 — UFP-GQ-05870-S11B-02
UFP-EJCTR-00169 — PTF-M6-UFP-00007004 A3 — UFP-GQ-00131-S11B-02
UFP-EJCTR-00144 — PTF-M6-UFP-00007004 A5 — UFP-GQ-00127-S11B-02
UFP-EJCTR-00140 — PTF-M6-UFP-00007003 A3 — UFP-GQ-00135-S11B-02
UFP-EJCTR-00142 — PTF-M6-UFP-00007003 A5 — UFP-GQ-00123-S11B-02
UFP-EJCTR-00170 — PTF-M6-UFP-00007002 A3 — UFP-GQ-00303-S11B-02
UFP-EJCTR-00145 — PTF-M6-UFP-00007002 A5 — UFP-GQ-00299-S11B-02
UFP-EJCTR-00141 — PTF-M6-UFP-00007001 A3 — UFP-GQ-00153-S11B-02
UFP-EJCTR-00143 — PTF-M6-UFP-00007001 A5 — UFP-GQ-00157-S11B-02

N40 UFP-PJM-00048
N38 UFP-PJM-00046
N42 UFP-PJM-00050
N44 UFP-PJM-00102
N39 UFP-PJM-00047
N37 UFP-PJM-00045
N41 UFP-PJM-00049
N43 UFP-PJM-00101
N74 UFP-PJM-00114
N75 UFP-PJM-00115
N73 UFP-PJM-00113
N72 UFP-PJM-00112

UFP-VSL-00001B
OUTER PULSE JET MIXERS (8)

UFP-VSL-00001B
INNER PULSE JET MIXERS (4)

NOTES:

1. SEE DRAWINGS 24590-WTP-M6-50-00001 THROUGH 24590-WTP-M6-50-00005 FOR GENERAL NOTES, SYMBOLS AND LEGEND, AND GENERAL SLOPE REQUIREMENTS.
2. CONTENTS OF THIS DOCUMENT ARE DANGEROUS WASTE PERMIT AFFECTING.
3. THE PRESSURE BOUNDARY FOR ALL COMPONENTS ON THIS DRAWING IS QUALITY LEVEL Q AND SEISMIC CATEGORY SC-I, UNLESS OTHERWISE NOTED.
4. ALL LINES ON THIS DRAWING ARE LOCATED IN THE BLACK CELL AND SHALL BE SELF-DRAINING, UNLESS OTHERWISE NOTED.
5. DELETED
6. THIS DRAWING IS CONVERTED FROM A SINGLE SHEET TO MULTI-SHEET DRAWINGS AND, IN PART, SUPERSEDES 24590-PTF-M6-UFP-00007 REV 2. THIS IS A MAJOR REVISION. NO REVISION CLOUDS ARE SHOWN. THIS DRAWING MAY INCLUDE INFORMATION FROM 24590-PTF-M6N-M80T-00014, -00015, -00026, -00037, -00038, 24590-PTF-M6N-UFP-00049, AND -00072.
7. REVISION 1: MAJOR REVISION, NO REVISION CLOUDS ARE SHOWN. INCORPORATED 24590-PTF-M6LN-UFP-00027, 24590-PTF-M6N-10-00004, 24590-PTF-M6N-M80T-00055, AND 24590-PTF-M6PR-10-00002. FURTHER REVISED TO INCORPORATE EFRT M-3 DESIGN-INPUT REQUIREMENTS FOR INCREASED NUMBER, ARRANGEMENT, AND PERFORMANCE OF PULSE JET MIXERS. MOVED DEPICTION OF PULSE MIXERS (PJM) FOR UFP-VSL-00001A TO 24590-PTF-M6-UFP-00027007, ADDED DEPICTION OF PJM FORMERLY SHOWN ON 24590-PTF-M6-UFP-00008007, MOVED PJM FOR PWD-VSL-00044 TO 24590-PTF-M6-HLP-00027006 AND -00028006, AND RECONFIGURED VENT HEADER COMMENSURATE WITH UFP-RK-00025 AND -00026 DESIGNS.

HOLD/OPEN ITEMS:

1. DELETED

REFERENCES:

1. 24590-WTP-3YD-50-00003, SYSTEM DESCRIPTION FOR PULSE JET MIXER AND SPARGER MIXING SUBSYSTEMS.

Please note that source, special nuclear, and byproduct materials, as defined in the Atomic Energy Act of 1954 (AEA) are regulated by the U.S. Nuclear Regulatory Commission. Bechtel National, Inc. DOE acting pursuant to its AEA authority. DOE asserts that pursuant to AEA, it has sole and exclusive responsibility and authority to regulate source, special nuclear, and byproduct materials at DOE-owned nuclear facilities. Information contained herein on radionuclides is provided for process description purposes only.

REV	DESCRIPTION	ORG	CHKD	RVWD	APVD	DATE
1	REVISED PER NOTE 7	MA	SJ	JBA	JBA	2/17/11
0	ISSUED FOR CONSTRUCTION SEE NOTE 6	MAS	APP	ES/CL	RS/JM	10/28/08

REVISION HISTORY

Q — QUALITY DESIGNATOR

ISSUED BY RPP-WTP PDO — INIT ____ DATE ____ ISSUE STAMP

PROJECT No.	24590
SITE	HANFORD
AREA	200E
BUILDING No.	10

	BY	DATE
ORIGINATOR	SUMMERS, MICHAEL	10/23/08
CHECKER	PINTO, PAT	10/23/08
APPROVER	STEVENS, ROBERT	10/28/08
REVIEWER	STRIEPER, EGBERT	10/23/08

CONTENT APPLICABLE TO ALARA? [X] YES [ ] NO
ADR NO. 24590-PTF-ADR-M-02-046 REV: 4
E&NS SCREENING REQUIRED? [X] YES [ ] NO E&NS INITIAL IF YES

SCREENING IS REQUIRED FOR DRAWING TYPES IDENTIFIED IN 24590-WTP-GPP-SREQ-002

E SIZE = 44"x34"
COMPUTER GENERATED - MANUAL DESIGN CHANGES NOT PERMITTED

BECHTEL — RIVER PROTECTION PROJECT WASTE TREATMENT PLANT 2435 STEVENS CENTER PLACE RICHLAND, WA 99354

CONTRACT No: DE-AC27-01RV14136

P&ID - PTF ULTRAFILTRATION PROCESS SYSTEM - VESSEL PJM UFP-VSL-00001B

SCALE: NONE

24590-PTF-M6-UFP-00007007

REV 1

2/10/2011 12:23:28 PM

PLOTTED BY: eisom

C:\Work\eisom\dms\3837\PTF\M6\PTF00007007.dgn

FORM E_SDNLDGN 02/2009

24590-PTF-M6-UFP-00027001

PSA-RK-00069
UFP FEED PREP VESSEL
PJM FLUIDICS CONTROL RACK
12 POINTS
13'8"LX4'2"WX12'3"H

UFP-EJCTR-00042
JET PUMP PAIR
EJECTOR
=
MODEL H80SX2
12 IN W X 29 IN L

UFP-EJCTR-00181
JET PUMP PAIR
EJECTOR
=
MODEL H80SX2
12 IN W X 29 IN L

LI-0107/LSLL-0107/
LSH-0107
PTF-M6-UFP-00001002 F2
TSHH-0103
PTF-M6-UFP-00001001 D2
LI-0126
PTF-M6-UFP-00001002 E2
HOLD 1

DEMIN WATER
PTF-M6-DIW-00001004 D3
DIW-WE-43836-S11C-02
UFP-V-68316
UFP-V-68317
UFP-STR-01490
FI 0818
UFP-WE-64394-S11C-02
UFP-V-68320
NOTE 6
UFP-V-68319
UFP-WE-64394-S11C-01
UFP-V-68318
UFP-WE-64394-S11C-03

PSA S10A
UFP S11C
PSA-RK-00069 NOTE 5

PLANT SERVICE AIR
PTF-M6-PSA-00002 B4
PSA-GQ-64930-S10A-08
UFP-V-68315
UFP-GQ-64965-S11C-01
UFP-V-68314
UFP-GQ-64964-S11C-01
UFP-V-68313
UFP-GQ-64963-S11C-01

FIRE AREA 'B'
YC 0819B
YC 0819A
YY 0819B
YY 0819A
VENT
3/8" TUBING
ISA-V-69988
ITS ISA
1" TUBING
ISA-V-69987

UFP-WE-64389-S11C-01
UFP-V-68312
UFP-V-68311
UFP-GQ-64955-S11C-02
UFP-GQ-64954-S11C-02
UFP-WE-64390-S11C-01
UFP-V-68310
UFP-V-68309
UFP-GQ-64951-S11C-02
UFP-GQ-64952-S11C-02
UFP-WE-64390-S11C-02

RACK FLUSH WATER HEADER
PTF-M6-UFP-00027002 G8
RACK PSA HEADER
PTF-M6-UFP-00027002 G8
RACK ITS CONTROL AIR HEADER
PTF-M6-UFP-00027002 F8
RACK ITS/ISA HEADER
PTF-M6-UFP-00027002 F8

YC-0706D
PTF-M6-UFP-00027002 H8
YC-0706E
PTF-M6-UFP-00027002 H8
YC-0706F
PTF-M6-UFP-00027002 H8
YC-0706A
PTF-M6-UFP-00027002 H8
YC-0706A
PTF-M6-UFP-00027002 H8

YC 0702D
YC 0702E
YC 0702F
YC 0702A
YC 0702G
YC 0702H
YC 0702C
YC 0708D
YC 0708E
YC 0708F
YC 0708A
YC 0708G
YC 0708H
YC 0708C

SET @ 71 PSIG
SET @ 73 PSIG
PCV 0702A
PCV 0702B
PCV 0708A
PCV 0708B
ISA-V-69980
ISA-V-69982
ISA-V-69984
ISA-V-69986
001/2-B02
UFP-V-68305
UFP-V-68306
UFP-V-68307
UFP-V-68308
NOTE 8
ISA-V-69979
ISA-V-69981
ISA-V-69983
ISA-V-69985
ISA
3/8" TUBING
VENT
FC

PT 0702F
PT 0702C
PT 0702D
PT 0702E
PT 0702A
PT 0702B
PT 0708F
PT 0708C
PT 0708D
PT 0708E
PT 0708A
PT 0708B

UFP-WE-64389-S11C-01
UFP-GQ-64955-S11C-02
UFP-GQ-64954-S11C-02
UFP-WE-64390-S11C-01
UFP-GQ-64951-S11C-02
UFP-GQ-64952-S11C-02
NOTE 7
UFP-STR-01486
UFP-STR-01487
UFP-STR-01488
UFP-STR-01489
UFP-V-68300
UFP-V-68301
UFP-V-68302
UFP-V-68303
UFP-V-68304
UFP-V-68299
N01C
N01B
N01A
N02C
N02B
N02A

ISA
1" TUBING
ISA-V-70430
INSTRUMENT AIR HEADER
3/8" TUBING
(TYP 24)

PSA-RK-00070
PTF-M6-UFP-00028004 C2
UFP-GQ-64529-S11C-02
PSA-RK-00070
PTF-M6-UFP-00028004 C2
UFP-GQ-64528-S11C-02
YC-0733C
PTF-M6-UFP-00028004 H8

PSA-RK-00070
PTF-M6-UFP-00028004 B2
UFP-GQ-64527-S11C-02
PSA-RK-00070
PTF-M6-UFP-00028004 B2
UFP-GQ-64526-S11C-02
YC-0739C
PTF-M6-UFP-00028004 G8

HS 9201S ACTIVE
HS 9202S RESET
HS 9201M ACTIVE
HS 9202M RESET
PY 0701
YA 0701
MIXING SUPERVISION

FIRE AREA 'A'
FIRE AREA 'B'
UFP-WE-64386-S11C-003/4
UFP-V-68298
PT 0721
PY 0721
PI 0721
UFP-V-58297
PT 0727
PY 0727
PI 0727

C.3 S11C
BC S11B
UFP-WE-64389-S11B-01
UFP-GQ-64955-S11B-02
UFP-GQ-64954-S11B-02
UFP-GQ-64951-S11B-02
UFP-GQ-64952-S11B-02
UFP-WE-64390-S11B-01
1 1/2"
N01
N03
N02
N04
UFP-EJCTR-00042
UFP-EJCTR-00181
UFP-GV-02895-S11Z-02
UFP-GQ-64953-S11B-02
UFP-GQ-64950-S11B-02
PULSE JET VENT HEADER
PTF-M6-UFP-00027007 E8
UFP-PJM-00002 IN UFP-VSL-00001A
PTF-M6-UFP-00027007 B8
UFP-PJM-00106 IN UFP-VSL-00001A

NOTES:

1. SEE DRAWINGS 24590-WTP-M6-50-00001 THROUGH 24590-WTP-M6-50-00008 FOR GENERAL NOTES, SYMBOLS AND LEGEND, AND GENERAL SLOPE REQUIREMENTS.
2. CONTENTS OF THIS DOCUMENT ARE DANGEROUS WASTE PERMIT AFFECTING.
3. THE PRESSURE BOUNDARY FOR ALL COMPONENTS ON THIS DRAWING IS QUALITY LEVEL Q AND SEISMIC CATEGORY SC-I, UNLESS OTHERWISE NOTED. THE PRESSURE BOUNDARY FOR THE NON-SAFETY INSTRUMENT SERVICE AIR (ISA) AND THE CORRESPONDING NON-SAFETY SOLENOID VALVES IT SUPPLIES IS QUALITY LEVEL CM AND SEISMIC CATEGORY SC-IV.
4. ALL LINES SHOWN ON THIS DRAWING SHALL BE FREE DRAINING, EXCEPT BLACK CELL LINES WHICH ARE SELF-DRAINING, UNLESS OTHERWISE NOTED.
5. ALL TUBING OUTSIDE RACK IS TO BE FIELD RUN. TUBING ROUTING, SPECIFICATION OF ADDITIONAL IN-TUBING DEVICES, AND TAGGING OF IN-TUBING DEVICES WITHIN THE RACK TO BE DONE IN ACCORDANCE WITH C&I INSTALLATION DETAILS AND DESIGN GUIDE 24590-WTP-GPG-ENG-0142.
6. CONNECTION PROVIDED FOR REAGENTS, PLANT WASH, AND SERVICE AIR.
7. STRAINER PERMANENTLY INSTALLED.
8. RECOMMENDED INSTALLATION FOR THE PCV IS TO CONNECT THE CONTROL LINE TO A STRAIGHT RUN OF PIPE 3 TO 5 FEET DOWNSTREAM OF THE PCV AND TO HAVE A MINIMUM STRAIGHT PIPE RUN OF 3 FEET UPSTREAM AND 4 FEET DOWNSTREAM OF THE PCV.

HOLD/OPEN ITEMS:

1. PENDING SAFETY-RELATED MIXING DESIGN.

REFERENCES:

1. 24590-WTP-3YD-50-00003, SYSTEM DESCRIPTION FOR PULSE JET MIXER AND SPARGER MIXING SUBSYSTEMS.

Please note that source, special nuclear, and byproduct materials, as defined in the Atomic Energy Act of 1954 (AEA), are regulated by DOE. The Nuclear Regulatory Commission (NRC) regulates by DOE acting pursuant to its AEA authority. DOE asserts that pursuant to AEA, it has sole and exclusive responsibility and authority to regulate source, special nuclear, and byproduct materials at DOE-owned nuclear facilities. Information contained herein on radionuclides is provided for process description purposes only.

DRAWING INDEX	
DWG NO	TITLE
24590-PTF-M6-UFP-00027001	UTILITY RACK PSA-RK-00069 UFP-VSL-00001A
24590-PTF-M6-UFP-00027002	UTILITY RACK PSA-RK-00069 UFP-VSL-00001A
24590-PTF-M6-UFP-00027003	UTILITY RACK PSA-RK-00069 UFP-VSL-00001A
24590-PTF-M6-UFP-00027004	UTILITY RACK PSA-RK-00069 UFP-VSL-00001A
24590-PTF-M6-UFP-00027005	UTILITY RACK PSA-RK-00069 UFP-VSL-00001A
24590-PTF-M6-UFP-00027006	UTILITY RACK PSA-RK-00069 UFP-VSL-00001A
24590-PTF-M6-UFP-00027007	VESSEL PJM UFP-VSL-00001A

Q
QUALITY DESIGNATOR

REV	DESCRIPTION	ORG	CHKD	RVWD	APVD	DATE
0	ISSUED FOR CONSTRUCTION	JH	SJ	DTF	JDR	2/17/11

REVISION HISTORY

ISSUED BY RPP-WTP PDC
1ST DATE
ISSUE STAMP

	BY	DATE
PROJECT No. 24590		
SITE HANFORD		
AREA 200E		
BUILDING No. 10		
ORIGINATOR	Rita Mastrel	2/7/11
CHECKER	SATISH JAIN	2/17/11
APPROVER	Rita Mastrel	2/17/11
REVIEWER	D.T. MILDON	2-17-11
		2/17/11

CONTENT APPLICABLE TO ALARA? [X] YES [ ] NO
ADR NO. 24590-PTF-ADR-M-02-046 REV: 4
EMS SCREENING REQUIRED? [X] YES [ ] NO EMS INITIAL IF YES

SCREENING IS REQUIRED FOR DRAWING TYPES IDENTIFIED IN 24590-WTP-GPP-SREG-002

"E" SIZE - 44 x 34
COMPUTER GENERATED - MANUAL DESIGN CHANGES NOT PERMITTED

BECHTEL
RIVER PROTECTION PROJECT
WASTE TREATMENT PLANT
2435 STEVENS CENTER PLACE
RICHLAND, WA 99354

CONTRACT No: DE-AC27-01RV14136

P&ID - PTF
ULTRAFILTRATION PROCESS SYSTEM
UTILITY RACK PSA-RK-00069
UFP-VSL-00001A PJM

SCALE: NONE
24590-PTF-M6-UFP-00027001
REV 0

2/17/2011 7:21:33 AM
C:\Work\ewebb\.dms\13837\PTFM6UFP00027001.dgn
PLOTTED BY: ewebb

FORM E_SDN.DGN 02/2009

UFP-EJCTR-00134
JET PUMP PAIR
EJECTOR
MODEL H80SX2
12 IN W X 29 IN L

UFP-EJCTR-00044
JET PUMP PAIR
EJECTOR
MODEL H80SX2
12 IN W X 29 IN L

YC-0708G PTF-M6-UFP-00027001 H2
YC-0708G PTF-M6-UFP-00027001 H2
YC-0708C PTF-M6-UFP-00027001 H2
YC-0708A PTF-M6-UFP-00027001 H2
YC-0708A PTF-M6-UFP-00027001 H2

YC-0701D PTF-M6-UFP-00027003 H8
YC-0701E PTF-M6-UFP-00027003 H8
YC-0701F PTF-M6-UFP-00027003 H8
YC-0701A PTF-M6-UFP-00027003 H8
YC-0701A PTF-M6-UFP-00027003 H8

YC 0706D · YC 0706E · YC 0706F Z · YC 0706A Z · YC 0706G Z · YC 0706H Z · YC 0706C Z · YC 0704D · YC 0704E · YC 0704F Z · YC 0704A Z · YC 0704C Z · YC 0704H Z · YC 0704C Z

PSA-RK-00069 NOTE 5

RACK FLUSH WATER HEADER PTF-M6-UFP-00027001 G2 — UFP-WE-64394-S11C-02 — PTF-M6-UFP-00027003 G8

RACK PSA HEADER PTF-M6-UFP-00027001 G2 — UFP-GQ-64966-S11C-08 — PTF-M6-UFP-00027003 G8

RACK ITS CONTROL AIR HEADER PTF-M6-UFP-00027001 F2 — 3/8" TUBING — PTF-M6-UFP-00027003 F8

RACK ITS ISA HEADER PTF-M6-UFP-00027001 F2 — 1" TUBING — PTF-M6-UFP-00027003 F8

UFP-WE-64404-S11C-01 · UFP-GQ-64974-S11C-02 · UFP-V-68356 · UFP-GQ-64977-S11C-02 · UFP-V-68357 · UFP-WE-64401-S11C-01 · UFP-GQ-64975-S11C-02 · UFP-V-68358 · UFP-GQ-64976-S11C-02 · UFP-V-68359

3/8" TUBING · ISA · ISA-V-70006 · ISA-V-70007 · ISA-V-70008 · ISA-V-70009 · ISA-V-70010 · ISA-V-70011 · ISA-V-70012 · ISA-V-70013

SET @ 71 PSIG · PCV 0706A Z · SET @ 73 PSIG · PCV 0706B Z · SET @ 71 PSIG · PCV 0704A Z · SET @ 73 PSIG · PCV 0704B Z

01/2-B02 · UFP-V-68352 · UFP-V-68353 · UFP-V-68354 · UFP-V-68355 · NOTE 7

YY 0706D · YY 0706E · YY 0706F Z · YY 0706A Z · YY 0706G · YY 0706H Z · YY 0706C Z · YY 0704D · YY 0704E · YY 0704F Z · YY 0704A Z · YY 0704G · YY 0704H Z · YV 0704C Z

VENT · S · FC

PT 0706F Z · PT 0706C Z · PT 0706D Z · PT 0706E · PT 0706A · PT 0704F Z · PT 0704C Z · PT 0704D Z · PT 0704E · PT 0704A · PT 0706B

NOTE 6 · UFP-STR-04232 · UFP-STR-04233 · UFP-STR-04234 · UFP-STR-04235

UFP-V-68346 · UFP-V-68347 · UFP-V-68348 · UFP-V-68349 · UFP-V-68350 · UFP-V-68351

N03C · N03B · N03A · N04C · N04B · N04A

PSA-RK-00070 PTF-M6-UFP-00028004 B2 — UFP-GQ-64525-S11C-02
PSA-RK-00070 PTF-M6-UFP-00028004 B2 — UFP-GQ-64524-S11C-02

PSA-RK-00070 PTF-M6-UFP-00028003 C2 — UFP-GQ-64523-S11C-02
PSA-RK-00070 PTF-M6-UFP-00028003 C2 — UFP-GQ-64522-S11C-02

YC-7037C PTF-M6-UFP-00028004 G8

YC-0735C PTF-M6-UFP-00028003 H8

FIRE AREA 'A' · FIRE AREA 'B'

UFP-WE-64400-S11C-003/4 · UFP-V-68343 · PT 0725 Z · PY 0725 Z · PI 0725

UFP-WE-64399-S11C-003/4 · UFP-V-68342 · PT 0723 Z · PY 0723 Z · PI 0723

C.3 S11C · BC S11B

UFP-WE-64402-S11B-01 · UFP-GQ-64974-S11B-02 · UFP-GQ-64977-S11B-02 · 1 1/2" · N01 · N03 · N02 · N04 · UFP-EJCTR-00134

UFP-WE-64401-S11B-01 · UFP-GQ-64975-S11B-02 · UFP-GQ-64976-S11B-02 · 1 1/2" · NOTE 7 · N03 · N02 · N04 · UFP-EJCTR-00044

UFP-GV-02897-S11Z-02 · PULSE JET VENT HEADER PTF-M6-UFP-00027007 F8

UFP-PJM-00053 IN UFP-VSL-00001A · UFP-GQ-64986-S11B-02 · PTF-M6-UFP-00027007 B8

UFP-GV-02898-S11Z-02 · PULSE JET VENT HEADER PTF-M6-UFP-00027007 F8

UFP-PJM-00004 IN UFP-VSL-00001A · UFP-GQ-64987-S11B-02 · PTF-M6-UFP-00027007 C8

NOTES:

1. SEE DRAWINGS 24590-WTP-M6-50-00001 THROUGH 24590-WTP-M6-50-00008 FOR GENERAL NOTES, SYMBOLS AND LEGEND, AND GENERAL SLOPE REQUIREMENTS.
2. CONTENTS OF THIS DOCUMENT ARE DANGEROUS WASTE PERMIT AFFECTING.
3. THE PRESSURE BOUNDARY FOR ALL COMPONENTS ON THIS DRAWING IS QUALITY LEVEL Q AND SEISMIC CATEGORY SC-I, UNLESS OTHERWISE NOTED. THE PRESSURE BOUNDARY FOR THE NON-SAFETY INSTRUMENT SERVICE AIR (ISA) AND THE CORRESPONDING NON-SAFETY SOLENOID VALVES IT SUPPLIES IS QUALITY LEVEL CM AND SEISMIC CATEGORY SC-IV.
4. ALL LINES SHOWN ON THIS DRAWING SHALL BE FREE DRAINING, EXCEPT BLACK CELL LINES WHICH ARE SELF-DRAINING, UNLESS OTHERWISE NOTED.
5. ALL TUBING OUTSIDE RACK IS TO BE FIELD RUN. TUBING ROUTING, SPECIFICATION OF ADDITIONAL IN-TUBING DEVICES, AND TAGGING OF IN-TUBING DEVICES WITHIN THE RACK TO BE DONE IN ACCORDANCE WITH C&I INSTALLATION DETAILS AND DESIGN GUIDE 24590-WTP-GPG-ENG-0142.
6. STRAINER PERMANENTLY INSTALLED.
7. RECOMMENDED INSTALLATION FOR THE PCV IS TO CONNECT THE CONTROL LINE TO A STRAIGHT RUN OF PIPE 3 TO 5 FEET DOWNSTREAM OF THE PCV AND TO HAVE A MINIMUM STRAIGHT PIPE RUN OF 3 FEET UPSTREAM AND 4 FEET DOWNSTREAM OF THE PCV.

HOLD/OPEN ITEMS:

NONE

REFERENCES:

1. 24590-WTP-3YD-50-00003, SYSTEM DESCRIPTION FOR PULSE JET MIXER AND SPARGER MIXING SUBSYSTEMS.

Please note that source, special nuclear, and byproduct materials, as defined in the Atomic Energy Act of 1954 (AEA) are regulated at the U. S. Department of Energy (DOE) nuclear facilities. DOE acting pursuant to the AEA authority, DOE asserts that authority to the fullest extent, to the sole and exclusive responsibility and authority to regulate source, special nuclear, and byproduct materials at DOE-owned nuclear facilities. Information contained herein on radionuclides is provided for process description purposes only.

Q QUALITY DESIGNATOR

REV	DESCRIPTION	ORG	CHKD	RVWD	APVD	DATE
0	ISSUED FOR CONSTRUCTION	JLH	SSJ	DRS	JBA	2/17/11

REVISION HISTORY

ISSUED BY RPP-WTP PCC — SIGNATURE / DATE — TISSUE STAMP

	BY	DATE
ORIGINATOR	Peter Martinez	2/17/11
CHECKER	SATISH SAIN	2/17/11
APPROVER	J.B. Alderson	2/17/11
REVIEWER	D.T. WILDER	2.17.11
		2/17/11

CONTENT APPLICABLE TO ALARA? [X] YES [ ] NO
ADR NO. 24590-PTF-ADR-M-02-046 REV: 4
EMS SCREENING REQUIRED? [X] YES [ ] NO EMS INITIAL IF YES

PROJECT No. 24590 · SITE HANFORD · AREA 200E · BUILDING No. 10

BECHTEL

RIVER PROTECTION PROJECT
WASTE TREATMENT PLANT
2435 STEVENS CENTER PLACE
RICHLAND, WA 99354

CONTRACT No: DE-AC27-01RV14136

P&ID - PTF ULTRAFILTRATION PROCESS SYSTEM - UTILITY RACK PSA-RK-00069 UFP-VSL-00001A PJM

SCALE: NONE
24590-PTF-M6-UFP-00027002
REV 0

SCREENING IS REQUIRED FOR DRAWING TYPES IDENTIFIED IN 24590-WTP-GPP-SREG-002

E SIZE - 44x34
COMPUTER GENERATED - MANUAL DESIGN CHANGES NOT PERMITTED

2/17/2011 7:13:49 AM

PLOTTED BY: stewebb C:\Work\stewebb\dm\00837\PTF\M6UFP00027002.dgn

FORM E_SDN.DGN 02/2009

24590-PTF-M6-UFP-00027003

UFP-EJCTR-00041
JET PUMP PAIR
EJECTOR
=
MODEL H80SX2
12 IN W X 29 IN L

UFP-EJCTR-00180
JET PUMP PAIR
EJECTOR
=
MODEL H80SX2
12 IN W X 29 IN L

YC-0704G PTF-M6-UFP-00027002 H2
YC-0704G PTF-M6-UFP-00027002 H2
YC-0704C PTF-M6-UFP-00027002 H2
YC-0704A PTF-M6-UFP-00027002 H2
YC-0704A PTF-M6-UFP-00027002 H2

YC-0703D PTF-M6-UFP-00027004 H8
YC-0703E PTF-M6-UFP-00027004 H8
YC-0703F PTF-M6-UFP-00027004 H8
YC-0703A PTF-M6-UFP-00027004 H8
YC-0703A PTF-M6-UFP-00027004 H8

YC 0701D Z
YC 0701E Z
YC 0701F Z
YC 0701A Z
YC 0701G Z
YC 0701H Z
YC 0701C Z
YC 0707D Z
YC 0707E Z
YC 0707F Z
YC 0707A Z
YC 0707G Z
YC 0707H Z
YC 0707C Z

PSA-RK-00069 NOTE 5

RACK FLUSH WATER HEADER
PTF-M6-UFP-00027002 G2
UFP-WE-64394-S1TC-02
PTF-M6-UFP-00027004 C8

RACK PSA HEADER
PTF-M6-UFP-00027002 G2
UFP-GQ-64966-S1TC-08
PTF-M6-UFP-00027004 C8

RACK ITS CONTROL AIR HEADER
PTF-M6-UFP-00027002 F2
3/8" TUBING
PTF-M6-UFP-00027004 F8

RACK ITS ISA HEADER
PTF-M6-UFP-00027002 F2
1" TUBING
PTF-M6-UFP-00027004 F8

UFP-WE-64412-S1TC-01
UFP-GQ-64978-S1TC-02
UFP-V-68389
UFP-GQ-64981-S1TC-02
UFP-V-68392
UFP-WE-64414-S1TC-01
UFP-GQ-64980-S1TC-02
UFP-V-68396
UFP-GQ-64979-S1TC-02
UFP-V-68399

3/8" TUBING
ISA
ISA-V-70041
ISA-V-70042
ISA-V-70043
ISA-V-70044
ISA-V-70045
ISA-V-70046
ISA-V-70047
ISA-V-70048
SET @ 71 PSIG
SET @ 73 PSIG
PCV 0701A Z
PCV 0701B Z
PCV 0707A Z
PCV 0707B Z
001/2-B02
UFP-V-68391
UFP-V-68394
UFP-V-68398
UFP-V-68401
NOTE 7
VENT
S
FC
YY 0701D Z
YY 0701E Z
YY 0701F Z
YY 0701A Z
YY 0701G Z
YY 0701H Z
YY 0701C Z
YY 0707D Z
YY 0707E Z
YY 0707F Z
YY 0707A Z
YY 0707G Z
YY 0707H Z
YY 0707C Z

PT 0701F Z
PT 0701C Z
PT 0701E
PT 0701A
PT 0701D
PT 0707F Z
PT 0707C Z
PT 0707E
PT 0707A
PT 0707D
PT 0707B

UFP-WE-64412-S1TC-01
UFP-GQ-64978-S1TC-02
UFP-GQ-64981-S1TC-02
UFP-WE-64414-S1TC-01
UFP-GQ-64980-S1TC-02
UFP-GQ-64979-S1TC-02

NOTE 6
UFP-STR-04242
UFP-STR-04243
UFP-STR-04244
UFP-STR-04245

UFP-V-68388
UFP-V-68390
UFP-V-68393
UFP-V-68395
UFP-V-68397
UFP-V-68400

N05C
N05B
N05A
N06C
N06B
N06A

PSA-RK-00070 PTF-M6-UFP-00028003 B2 UFP-GQ-64521-S1TC-02
PSA-RK-00070 PTF-M6-UFP-00028003 B2 UFP-GQ-64520-S1TC-02
PSA-RK-00070 PTF-M6-UFP-00028003 B2 UFP-GQ-64519-S1TC-02
PSA-RK-00070 PTF-M6-UFP-00028003 B2 UFP-GQ-64518-S1TC-02

YC-0732C PTF-M6-UFP-00028003 G8
YC-0738C PTF-M6-UFP-00028003 G8

FIRE AREA 'A' | FIRE AREA 'B'
UFP-WE-64413-S1TC-003/4
UFP-V-68402
PT 0720 Z
PY 0720 Z
PI 0720
UFP-WE-64415-S1TC-003/4
UFP-V-68403
PT 0726 Z
PY 0726 Z
PI 0726

C.3 S1TC
BC S11B
UFP-WE-64412-S1B-01
UFP-WE-64414-S1B-01
UFP-GQ-64978-S1B-02
UFP-GQ-64981-S1B-02
UFP-GQ-64980-S1B-02
UFP-GQ-64979-S1B-02
1 1/2"
N01
N02
N03
N04
UFP-EJCTR-00041
UFP-EJCTR-00180

UFP-GV-02899-S1Z-02
PULSE JET VENT HEADER
PTF-M6-UFP-00027007 F8
UFP-GV-02900-S1Z-02

UFP-PJM-00001 IN UFP-VSL-00001A
PTF-M6-UFP-00027007 C8
UFP-GQ-64990-S1B-02
UFP-PJM-00105 IN UFP-VSL-00001A
UFP-GQ-64991-S1B-02

NOTES:

1. SEE DRAWINGS 24590-WTP-M6-50-00001 THROUGH 24590-WTP-M6-50-00008 FOR GENERAL NOTES, SYMBOLS AND LEGEND, AND GENERAL SLOPE REQUIREMENTS.
2. CONTENTS OF THIS DOCUMENT ARE DANGEROUS WASTE PERMIT AFFECTING.
3. THE PRESSURE BOUNDARY FOR ALL COMPONENTS ON THIS DRAWING IS QUALITY LEVEL Q AND SEISMIC CATEGORY SC-I, UNLESS OTHERWISE NOTED. THE PRESSURE BOUNDARY FOR THE NON-SAFETY INSTRUMENT SERVICE AIR (ISA) AND THE CORRESPONDING NON-SAFETY SOLENOID VALVES IT SUPPLIES IS QUALITY LEVEL CM AND SEISMIC CATEGORY SC-IV.
4. ALL LINES SHOWN ON THIS DRAWING SHALL BE FREE DRAINING, EXCEPT BLACK CELL LINES WHICH ARE SELF-DRAINING, UNLESS OTHERWISE NOTED.
5. ALL TUBING OUTSIDE RACK IS TO BE FIELD RUN. TUBING ROUTING, SPECIFICATION OF ADDITIONAL IN-TUBING DEVICES, AND TAGGING OF IN-TUBING DEVICES WITHIN THE RACK TO BE DONE IN ACCORDANCE WITH C&I INSTALLATION DETAILS AND DESIGN GUIDE 24590-WTP-GPG-ENG-0142.
6. STRAINER PERMANENTLY INSTALLED.
7. RECOMMENDED INSTALLATION FOR THE PCV IS TO CONNECT THE CONTROL LINE TO A STRAIGHT RUN OF PIPE 3 TO 5 FEET DOWNSTREAM OF THE PCV AND TO HAVE A MINIMUM STRAIGHT PIPE RUN OF 3 FEET UPSTREAM AND 4 FEET DOWNSTREAM OF THE PCV.

HOLD/OPEN ITEMS:

NONE

REFERENCES:

1. 24590-WTP-3YD-50-00003, SYSTEM DESCRIPTION FOR PULSE JET MIXER AND SPARGER MIXING SUBSYSTEMS.

Please note that source, special nuclear, and byproduct materials, as defined in the Atomic Energy Act of 1954 (AEA) are regulated at the U. S. Department of Energy (DOE) facilities exclusively by DOE acting pursuant to its AEA authority. DOE asserts that there is no NRC AEA authority or Commission licensing authority to regulate source, special nuclear, and byproduct materials at DOE-owned nuclear facilities. Information contained herein on radionuclides is provided for process description purposes only.

Q
QUALITY DESIGNATOR

REVISION HISTORY

REV	DESCRIPTION	ORG	CHKD	RVWD	APVD	DATE
0	ISSUED FOR CONSTRUCTION	SJ	SJ	DCM	JMH	2/17/11

ISSUED BY RPP-WTP PDC
DATE
ISSUE STAMP

	BY	DATE
ORIGINATOR	Victor Martelli	2/7/11
CHECKER	SATISH JAIN	2/17/11
APPROVER		2/17/11
REVIEWER	D.T. MILDON	2-17-11
		2/17/11

CONTENT APPLICABLE TO ALARA? [X] YES [ ] NO
ADR NO. 24590-PTF-ADR-M-02-046 REV: 4
E&NS SCREENING REQUIRED? [X] YES [ ] NO E&NS INITIAL IF YES

PROJECT No.	24590
SITE	HANFORD
AREA	200E
BUILDING No.	10

BECHTEL
RIVER PROTECTION PROJECT
WASTE TREATMENT PLANT
2435 STEVENS CENTER PLACE
RICHLAND, WA 99354

CONTRACT No: DE-AC27-01RV14136

P&ID - PTF ULTRAFILTRATION PROCESS SYSTEM - UTILITY RACK PSA-RK-00069 UFP-VSL-00001A PJM

SCALE: NONE
24590-PTF-M6-UFP-00027003
REV 0

SCREENING IS REQUIRED FOR DRAWING TYPES IDENTIFIED IN 24590-WTP-GPP-SREG-002

"E" SIZE - 44x34
COMPUTER GENERATED - MANUAL DESIGN CHANGES NOT PERMITTED

FORM E_SDN.DGN 02/2009

2/17/2011 7:08:31 AM

PLOTTED BY: ckewbb C:\Work\ckewbb\dms03837\PTFM6UFP00027003.dgn

24590-PTF-M6-UFP-00027004

UFP-EJCTR-00186
JET PUMP PAIR
EJECTOR
=
MODEL H80SX2
12 IN W X 29 IN L

UFP-EJCTR-00152
JET PUMP PAIR
EJECTOR
=
MODEL H80SX2
12 IN W X 29 IN L

YC-0707G PTF-M6-UFP-00027003 H2
YC-0707G PTF-M6-UFP-00027003 H2
YC-0707C PTF-M6-UFP-00027003 H2
YC-0707A PTF-M6-UFP-00027003 H2
YC-0707A PTF-M6-UFP-00027003 H2

YC-0743D PTF-M6-UFP-00027005 H8
YC-0743E PTF-M6-UFP-00027005 H8
YC-0743F PTF-M6-UFP-00027005 H8
YC-0743A PTF-M6-UFP-00027005 H8
YC-0743A PTF-M6-UFP-00027005 H8

YC 0703D · YC 0703E · YC 0703F · YC 0703A · YC 0703G · YC 0703H · YC 0703C · YC 0705D · YC 0705E · YC 0705F · YC 0705A · YC 0705G · YC 0705H · YC 0705C

PSA-RK-00069 NOTE 5

RACK FLUSH WATER HEADER
PTF-M6-UFP-00027003 G2
UFP-WE-64394-S11C-02
PTF-M6-UFP-00027005 G8

RACK PSA HEADER
PTF-M6-UFP-00027003 G2
UFP-GQ-64966-S11C-08
PTF-M6-UFP-00027005 G8

RACK ITS CONTROL AIR HEADER 3/8" TUBING
PTF-M6-UFP-00027003 F2
PTF-M6-UFP-00027005 F8

RACK ITS ISA HEADER 1" TUBING
PTF-M6-UFP-0002703 F2
PTF-M6-UFP-00027005 F8

UFP-WE-64418-S11C-01 · UFP-GQ-64985-S11C-02 · UFP-V-68405 · UFP-GQ-64984-S11C-02 · UFP-V-68408 · UFP-WE-64417-S11C-01 · UFP-V-68412 · UFP-GQ-64983-S11C-02 · UFP-V-68415 · UFP-GQ-64982-S11C-02

SET @ 71 PSIG · SET @ 73 PSIG · 3/8" TUBING · ISA · NOTE 7

PCV 0703A · PCV 0703B · PCV 0705A · PCV 0705B

ISA-V-70058 · ISA-V-70059 · ISA-V-70061 · ISA-V-70062 · ISA-V-70063 · ISA-V-70064 · ISA-V-70065

001/2-B02 · UFP-V-68407 · UFP-V-68409 · UFP-V-68414 · UFP-V-68417

YY 0703D · YY 0703E · YY 0703F · YY 0703A · YY 0703G · YY 0703H · YY 0703C · YY 0705D · YY 0705E · YY 0705F · YY 0705A · YY 0705G · YY 0705H · YY 0705C

VENT · S · FC

PT 0703E · PT 0703C · PT 0703A · PT 0703B · PT 0705E · PT 0705C · PT 0705A · PT 0705D · PT 0705B

UFP-WE-64418-S11C-01 · UFP-GQ-64985-S11C-02 · UFP-GQ-64984-S11C-02 · UFP-WE-64417-S11C-01 · UFP-GQ-64983-S11C-02 · UFP-GQ-64982-S11C-02

NOTE 6 · UFP-STR-04246 · UFP-STR-04247 · UFP-STR-04248 · UFP-STR-04249

UFP-V-68404 · UFP-V-68406 · UFP-V-68408 · UFP-V-68411 · UFP-V-68413 · UFP-V-68416

NO7C · NO7B · NO7A · NO8C · NO8B · NO8A

PSA-RK-00070 PTF-M6-UFP-00028002 C2 UFP-GQ-64517-S11C-02
PSA-RK-00070 PTF-M6-UFP-00028002 C2 UFP-GQ-64516-S11C-02
YC-0734C PTF-M6-UFP-00028002 G8

PSA-RK-00070 PTF-M6-UFP-00028002 B2 UFP-GQ-64515-S11C-02
PSA-RK-00070 PTF-M6-UFP-00028002 B2 UFP-GQ-64514-S11C-02
YC-0736C PTF-M6-UFP-00028002 G8

FIRE AREA 'A' · FIRE AREA 'B'
UFP-WE-64418-S11C-003/4 · UFP-V-68410 · PT 0722 · PY 0722 · PI 0722
UFP-WE-64419-S11C-003/4 · UFP-V-68418 · PT 0724 · PY 0724 · PI 0724

C3 S11C · BC S11B · UFP-WE-64418-S11B-01 · UFP-WE-64417-S11B-01

UFP-GQ-64985-S11B-02 · UFP-GQ-64984-S11B-02 · UFP-GQ-64983-S11B-02 · UFP-GQ-64982-S11B-02

1 1/2" · NO1 · NO2 · NO3 · NO4

UFP-EJCTR-00186 · UFP-EJCTR-00152

UFP-GV-02901-S11Z-02 · UFP-GV-02902-S11Z-02 · PULSE JET VENT HEADER PTF-M6-UFP-00027007 C8

UFP-PJM-00003 IN UFP-VSL-00001A · UFP-GQ-64988-S11B-02 PTF-M6-UFP-00027007 C8
UFP-PJM-00044 IN UFP-VSL-00001A · UFP-GQ-64989-S11B-02 PTF-M6-UFP-00027007 D8

NOTES:

1. SEE DRAWINGS 24590-WTP-M6-50-00001 THROUGH 24590-WTP-M6-50-00008 FOR GENERAL NOTES, SYMBOLS AND LEGEND, AND GENERAL SLOPE REQUIREMENTS.
2. CONTENTS OF THIS DOCUMENT ARE DANGEROUS WASTE PERMIT AFFECTING.
3. THE PRESSURE BOUNDARY FOR ALL COMPONENTS ON THIS DRAWING IS QUALITY LEVEL Q AND SEISMIC CATEGORY SC-I, UNLESS OTHERWISE NOTED. THE PRESSURE BOUNDARY FOR THE NON-SAFETY INSTRUMENT SERVICE AIR (ISA) AND THE CORRESPONDING NON-SAFETY SOLENOID VALVES IT SUPPLIES IS QUALITY LEVEL CM AND SEISMIC CATEGORY SC-IV.
4. ALL LINES SHOWN ON THIS DRAWING SHALL BE FREE DRAINING, EXCEPT BLACK CELL LINES WHICH ARE SELF-DRAINING, UNLESS OTHERWISE NOTED.
5. ALL TUBING OUTSIDE RACK IS TO BE FIELD RUN. TUBING ROUTING, SPECIFICATION OF ADDITIONAL IN-TUBING DEVICES, AND TAGGING OF IN-TUBING DEVICES WITHIN THE RACK TO BE DONE IN ACCORDANCE WITH C&I INSTALLATION DETAILS AND DESIGN GUIDE 24590-WTP-GPG-ENG-0142.
6. STRAINER PERMANENTLY INSTALLED.
7. RECOMMENDED INSTALLATION FOR THE PCV IS TO CONNECT THE CONTROL LINE TO A STRAIGHT RUN OF PIPE 3 TO 5 FEET DOWNSTREAM OF THE PCV AND TO HAVE A MINIMUM STRAIGHT PIPE RUN OF 3 FEET UPSTREAM AND 4 FEET DOWNSTREAM OF THE PCV.

HOLD/OPEN ITEMS:

NONE

REFERENCES:

1. 24590-WTP-3YD-50-00003, SYSTEM DESCRIPTION FOR PULSE JET MIXER AND SPARGER MIXING SUBSYSTEMS.

Please note that source, special nuclear, and byproduct materials, as defined in the Atomic Energy Act of 1954 (AEA) are regulated at the U.S. Department of Energy (DOE) facilities exclusively by DOE acting pursuant to its AEA authority. DOE asserts that pursuant to AEA, it has sole and exclusive responsibility and authority to regulate source, special nuclear, and byproduct materials at DOE-owned nuclear facilities. Information contained herein on radionuclides is provided for process description purposes only.

Q QUALITY DESIGNATOR

REVISION HISTORY

REV.	DESCRIPTION	ORG	CHKD	RVWD	APVD	DATE
0	ISSUED FOR CONSTRUCTION					2/17/11

ISSUED BY RPP-WTP PDC
RFT ISSUE STAMP DATE

	BY	DATE
ORIGINATOR	Peter Mattucci	2/16/11
CHECKER	SAMSH SMITH	2/17/11
APPROVER		2/17/11
REVIEWER	D. TAYLOR	2-17-11
		2/17/11

CONTENT APPLICABLE TO ALARA? [X] YES [ ] NO
ADR NO. 24590-PTF-ADR-M-02-046 REV: 4
EMAS SCREENING REQUIRED? [X] YES [ ] NO EMAS INITIAL IF YES

PROJECT No.	24590
SITE	HANFORD
AREA	200E
BUILDING No.	10

CONTRACT No: DE-AC27-01RV14136

RIVER PROTECTION PROJECT
WASTE TREATMENT PLANT
2435 STEVENS CENTER PLACE
RICHLAND, WA 99354

P&ID - PTF
ULTRAFILTRATION PROCESS SYSTEM - UTILITY RACK PSA-RK-00069
UFP-VSL-00001A PJM

SCALE: NONE
24590-PTF-M6-UFP-00027004
REV 0

SCREENING IS REQUIRED FOR DRAWING TYPES IDENTIFIED IN 24590-WTP-GPP-SREG-002

'E' SIZE - 44x34
COMPUTER GENERATED - MANUAL DESIGN CHANGES NOT PERMITTED

2/16/2011 4:00:48 PM

PLOTTED BY: cmmood C:\Work\cmcooney\dms\23837\PTF\M6\PTF00027004.dgn

FORM E_SDN.DGN 02/2009

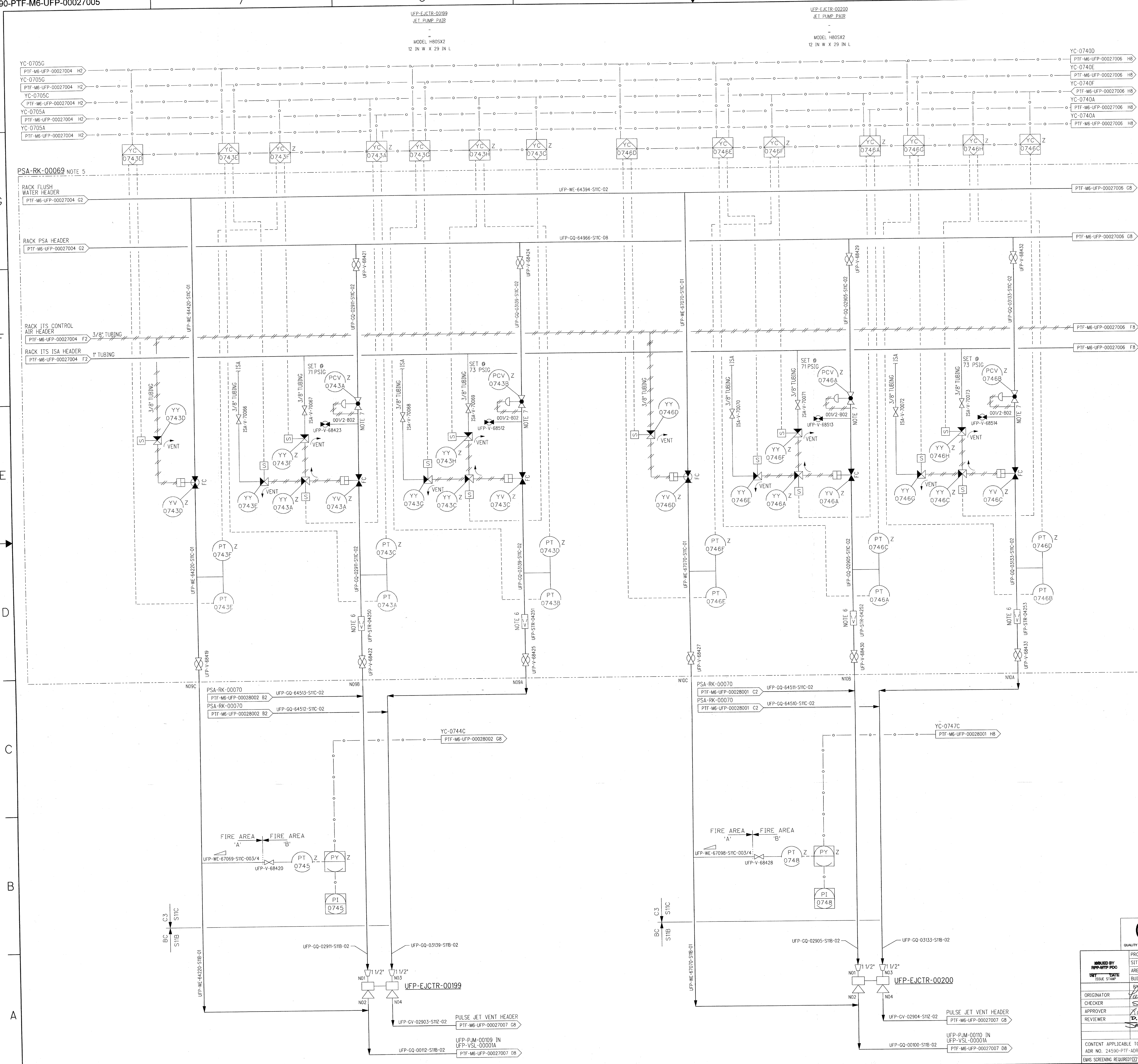

NOTES:

1. SEE DRAWINGS 24590-WTP-M6-50-00001 THROUGH 24590-WTP-M6-50-00008 FOR GENERAL NOTES, SYMBOLS AND LEGEND, AND GENERAL SLOPE REQUIREMENTS.
2. CONTENTS OF THIS DOCUMENT ARE DANGEROUS WASTE PERMIT AFFECTING.
3. THE PRESSURE BOUNDARY FOR ALL COMPONENTS ON THIS DRAWING IS QUALITY LEVEL Q AND SEISMIC CATEGORY SC-I, UNLESS OTHERWISE NOTED. THE PRESSURE BOUNDARY FOR THE NON-SAFETY INSTRUMENT SERVICE AIR (ISA) AND THE CORRESPONDING NON-SAFETY SOLENOID VALVES IT SUPPLIES IS QUALITY LEVEL CM AND SEISMIC CATEGORY SC-IV.
4. ALL LINES SHOWN ON THIS DRAWING SHALL BE FREE DRAINING, EXCEPT BLACK CELL LINES WHICH ARE SELF-DRAINING, UNLESS OTHERWISE NOTED.
5. ALL TUBING OUTSIDE RACK IS TO BE FIELD RUN. TUBING ROUTING, SPECIFICATION OF ADDITIONAL IN-TUBING DEVICES, AND TAGGING OF IN-TUBING DEVICES WITHIN THE RACK TO BE DONE IN ACCORDANCE WITH C&I INSTALLATION DETAILS AND DESIGN GUIDE 24590-WTP-GPG-ENG-0142.
6. STRAINER PERMANENTLY INSTALLED.
7. RECOMMENDED INSTALLATION FOR THE PCV IS TO CONNECT THE CONTROL LINE TO A STRAIGHT RUN OF PIPE 3 TO 5 FEET DOWNSTREAM OF THE PCV AND TO HAVE A MINIMUM STRAIGHT PIPE RUN OF 3 FEET UPSTREAM AND 4 FEET DOWNSTREAM OF THE PCV.

HOLD/OPEN ITEMS:

NONE

REFERENCES:

1. 24590-WTP-3YD-50-00003, SYSTEM DESCRIPTION FOR PULSE JET MIXER AND SPARGER MIXING SUBSYSTEMS.

Please note that source, special nuclear, and byproduct materials, as defined in the Atomic Energy Act of 1954 (AEA) are regulated at the U. S. Department of Energy (DOE) facilities exclusively by DOE acting pursuant to its AEA authority. DOE asserts that pursuant to AEA, it has sole and exclusive responsibility and authority to regulate source, special nuclear, and byproduct materials at DOE-owned nuclear facilities. Information contained herein on radionuclides is provided for process description purposes only.

Q
QUALITY DESIGNATOR

REVISION HISTORY

REV	DESCRIPTION	ORG	CHKD	RVWD	APVD	DATE
0	ISSUED FOR CONSTRUCTION	[signature]	SJ	DMM SOS	JBM RCS	2/17/11

ISSUED BY RPP-WTP PDC
INIT DATE
ISSUE STAMP

PROJECT No.	24590
SITE	HANFORD
AREA	200E
BUILDING No.	10

RIVER PROTECTION PROJECT
WASTE TREATMENT PLANT
2435 STEVENS CENTER PLACE
RICHLAND, WA 99354

CONTRACT No: DE-AC27-01RV14136

	BY	DATE
ORIGINATOR	Peter Martinelli	2/16/11
CHECKER	SATISH JAIN	2/17/11
APPROVER	RC Stein / JB Mah	2/17/11
REVIEWER	D. MILDON	2.17.11
	[signature]	2/17/11

P&ID - PTF ULTRAFILTRATION PROCESS SYSTEM - UTILITY RACK PSA-RK-00069 UFP-VSL-00001A PJM

CONTENT APPLICABLE TO ALARA? [X] YES [ ] NO
ADR NO. 24590-PTF-ADR-M-02-046 REV: 4
E&NS SCREENING REQUIRED? [X] YES [ ] NO E&NS INITIAL IF YES [initials]

SCALE: NONE

24590-PTF-M6-UFP-00027005 REV 0

SCREENING IS REQUIRED FOR DRAWING TYPES IDENTIFIED IN 24590-WTP-GPP-SREG-002

'E' SIZE - 44x34
COMPUTER GENERATED - MANUAL DESIGN CHANGES NOT PERMITTED

R11333780

2/16/2011 3:58:49 PM

PLOTTED BY: cmmead C:\Work\cmcooney\dms03837\PTFM6UFP00027005.dgn

FORM E_SDN.DGN 02/2009

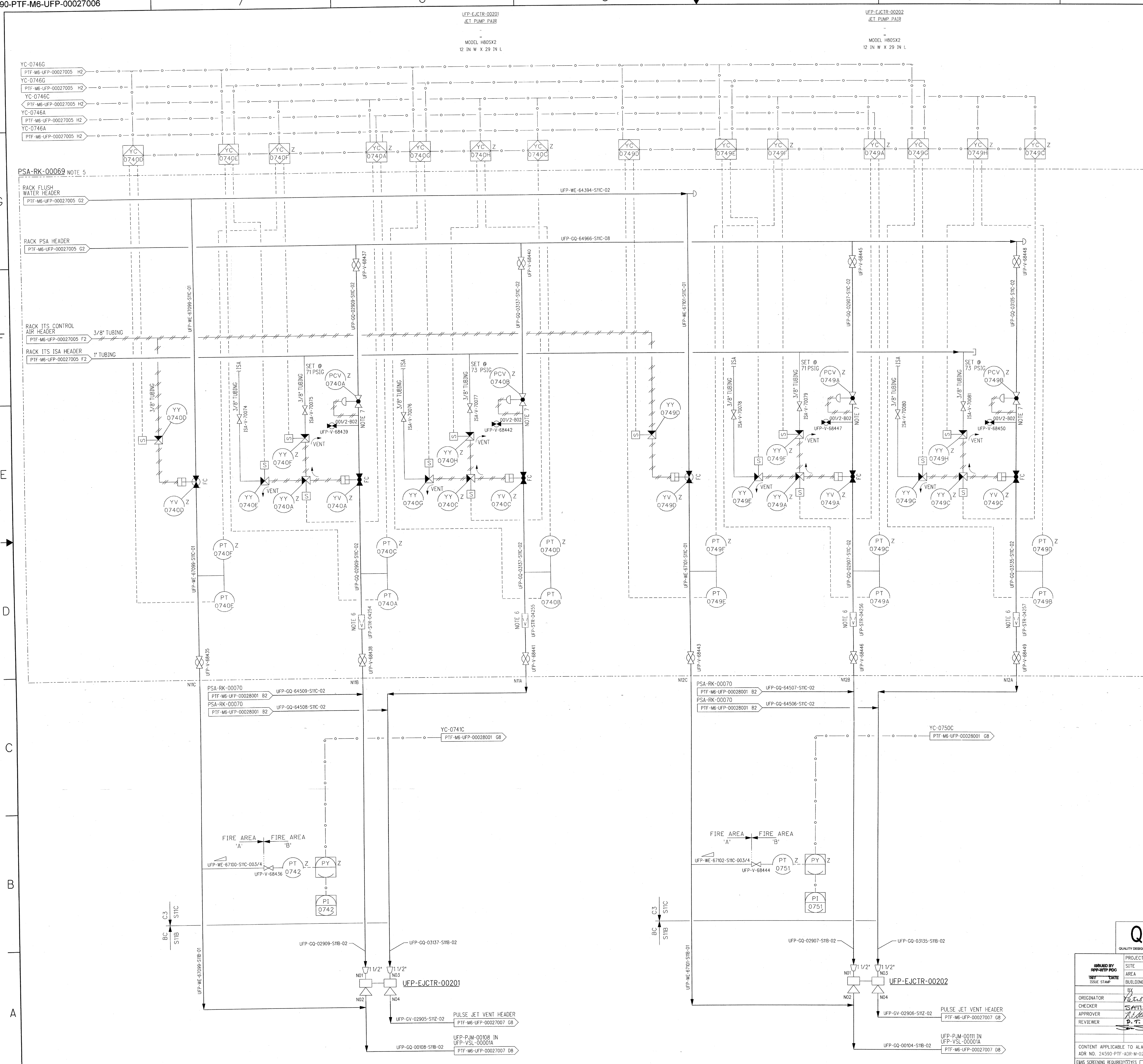

NOTES:

1. SEE DRAWINGS 24590-WTP-M6-50-00001 THROUGH 24590-WTP-M6-50-00008 FOR GENERAL NOTES, SYMBOLS AND LEGEND, AND GENERAL SLOPE REQUIREMENTS.
2. CONTENTS OF THIS DOCUMENT ARE DANGEROUS WASTE PERMIT AFFECTING.
3. THE PRESSURE BOUNDARY FOR ALL COMPONENTS ON THIS DRAWING IS QUALITY LEVEL Q AND SEISMIC CATEGORY SC-I, UNLESS OTHERWISE NOTED. THE PRESSURE BOUNDARY FOR THE NON-SAFETY INSTRUMENT SERVICE AIR (ISA) AND THE CORRESPONDING NON-SAFETY SOLENOID VALVES IT SUPPLIES IS QUALITY LEVEL CM AND SEISMIC CATEGORY SC-IV.
4. ALL LINES SHOWN ON THIS DRAWING SHALL BE FREE DRAINING, EXCEPT BLACK CELL LINES WHICH ARE SELF-DRAINING, UNLESS OTHERWISE NOTED.
5. ALL TUBING OUTSIDE RACK IS TO BE FIELD RUN. TUBING ROUTING, SPECIFICATION OF ADDITIONAL IN-TUBING DEVICES, AND TAGGING OF IN-TUBING DEVICES WITHIN THE RACK TO BE DONE IN ACCORDANCE WITH C&I INSTALLATION DETAILS AND DESIGN GUIDE 24590-WTP-GPG-ENG-0142.
6. STRAINER PERMANENTLY INSTALLED.
7. RECOMMENDED INSTALLATION FOR THE PCV IS TO CONNECT THE CONTROL LINE TO A STRAIGHT RUN OF PIPE 3 TO 5 FEET DOWNSTREAM OF THE PCV AND TO HAVE A MINIMUM STRAIGHT PIPE RUN OF 3 FEET UPSTREAM AND 4 FEET DOWNSTREAM OF THE PCV.

HOLD/OPEN ITEMS:

NONE

REFERENCES:

1. 24590-WTP-3YD-50-00003, SYSTEM DESCRIPTION FOR PULSE JET MIXER AND SPARGER MIXING SUBSYSTEMS.

Please note that source, special nuclear, and byproduct materials, as defined in the Atomic Energy Act of 1954 (AEA) are regulated at the U. S. Department of Energy (DOE) facilities exclusively by DOE acting pursuant to its AEA authority. DOE asserts that pursuant to AEA, it has sole and exclusive responsibility and authority to regulate source, special nuclear, and byproduct materials at DOE-owned nuclear facilities. Information contained herein on radionuclides is provided for process description purposes only.

REV	DESCRIPTION	ORG	CHKD	RVWD	APVD	DATE
0	ISSUED FOR CONSTRUCTION		SS			2/17/11

REVISION HISTORY

Q QUALITY DESIGNATOR

ISSUED BY RPP-WTP PDC
INIT DATE
ISSUE STAMP

PROJECT No.	24590
SITE	HANFORD
AREA	200E
BUILDING No.	10

	BY	DATE
ORIGINATOR	Pietro Martinelli	2/17/11
CHECKER	SATISH JAIN	2/17/11
APPROVER		2/17/11
REVIEWER	D. T. MILDON	2-17-11
		2/17/11

CONTENT APPLICABLE TO ALARA? [X] YES [ ] NO
ADR NO. 24590-PTF-ADR-M-02-046 REV: 4
E&NS SCREENING REQUIRED? [X] YES [ ] NO E&NS INITIAL IF YES

RIVER PROTECTION PROJECT
WASTE TREATMENT PLANT
2435 STEVENS CENTER PLACE
RICHLAND, WA 99354

CONTRACT No: DE-AC27-01RV14136

P&ID - PTF ULTRAFILTRATION PROCESS SYSTEM - UTILITY RACK PSA-RK-00069 UFP-VSL-00001A PJM

SCALE: NONE

24590-PTF-M6-UFP-00027006 REV 0

SCREENING IS REQUIRED FOR DRAWING TYPES IDENTIFIED IN 24590-WTP-GPP-SREG-002

'E' SIZE - 44x34
COMPUTER GENERATED - MANUAL DESIGN CHANGES NOT PERMITTED

R11333781

2/17/2011 7:04:25 AM

PLOTTED BY: eewebb C:\Work\eewebb\dms03837\PTFM6UFP00027006.dgn

FORM E_SDRLSGN 02/2009

24590-PTF-M6-UFP-00027007

UFP-PJM-00002 PULSE JET MIXER = = 700 GAL 3'-0" ID x 11'-8" T-T

UFP-PJM-00106 PULSE JET MIXER = = 700 GAL 3'-0" ID x 11'-8" T-T

UFP-PJM-00053 PULSE JET MIXER = = 700 GAL 3'-0" ID x 11'-8" T-T

UFP-PJM-00004 PULSE JET MIXER = = 700 GAL 3'-0" ID x 11'-8" T-T

UFP-PJM-00001 PULSE JET MIXER = = 700 GAL 3'-0" ID x 11'-8" T-T

UFP-PJM-00105 PULSE JET MIXER = = 700 GAL 3'-0" ID x 11'-8" T-T

UFP-PJM-00003 PULSE JET MIXER = = 700 GAL 3'-0" ID x 11'-8" T-T

UFP-PJM-00044 PULSE JET MIXER = = 700 GAL 3'-0" ID x 11'-8" T-T

UFP-PJM-00109 PULSE JET MIXER = = 700 GAL 2'-8" ID x 15'-5" T-T

UFP-PJM-00110 PULSE JET MIXER = = 700 GAL 2'-8" ID x 15'-5" T-T

UFP-PJM-00108 PULSE JET MIXER = = 700 GAL 2'-8" ID x 15'-5" T-T

UFP-PJM-00111 PULSE JET MIXER = = 700 GAL 2'-8" ID x 15'-5" T-T

UFP-EJCTR-00202 PTF-M6-UFP-00027006 A3 — UFP-GV-02906-S11Z-02

UFP-EJCTR-00201 PTF-M6-UFP-00027006 A6 — UFP-GV-02905-S11Z-02

UFP-EJCTR-00200 PTF-M6-UFP-00027005 A3 — UFP-GV-02904-S11Z-02

UFP-EJCTR-00199 PTF-M6-UFP-00027005 A6 — UFP-GV-02903-S11Z-02

UFP-EJCTR-00152 PTF-M6-UFP-00027004 A3 — UFP-GV-02902-S11Z-02

UFP-EJCTR-00186 PTF-M6-UFP-00027004 A6 — UFP-GV-02901-S11Z-02

UFP-EJCTR-00180 PTF-M6-UFP-00027003 A3 — UFP-GV-02900-S11Z-02

UFP-EJCTR-00041 PTF-M6-UFP-00027003 A6 — UFP-GV-02899-S11Z-02

UFP-EJCTR-00044 PTF-M6-UFP-00027002 A3 — UFP-GV-02898-S11Z-02

UFP-EJCTR-00134 PTF-M6-UFP-00027002 A6 — UFP-GV-02897-S11Z-02

UFP-EJCTR-00042 PTF-M6-UFP-00027001 A5 — UFP-GV-02895-S11Z-02

UFP-EJCTR-00181 PTF-M6-UFP-00027001 A3 — UFP-GV-02896-S11Z-02

PLANT WASH RACK PWD-RK-000011 PTF-M6-PWD-00022 B2 — PJV-ZS-66965-S11Z-02

PJV-GV-06607-S11Z-16

PULSE JET VENT HEADER PTF-M6-PJV-00001 D7

PSA-RK-00069/ PSA-RK-00070 VENT HEADER

UFP-EJCTR-00202 PTF-M6-UFP-00027006 A3 — UFP-GQ-00104-S11B-02

UFP-EJCTR-00201 PTF-M6-UFP-00027006 A6 — UFP-GQ-00108-S11B-02

UFP-EJCTR-00200 PTF-M6-UFP-00027005 A3 — UFP-GQ-00100-S11B-02

UFP-EJCTR-00199 PTF-M6-UFP-00027005 A6 — UFP-GQ-00112-S11B-02

UFP-EJCTR-00152 PTF-M6-UFP-00027004 A3 — UFP-GQ-64989-S11B-02

UFP-EJCTR-00186 PTF-M6-UFP-00027004 A6 — UFP-GQ-64988-S11B-02

UFP-EJCTR-00180 PTF-M6-UFP-00027003 A3 — UFP-GQ-64991-S11B-02

UFP-EJCTR-00041 PTF-M6-UFP-00027003 A5 — UFP-GQ-64990-S11B-02

UFP-EJCTR-00044 PTF-M6-UFP-00027002 A3 — UFP-GQ-64987-S11B-02

UFP-EJCTR-00134 PTF-M6-UFP-00027002 A6 — UFP-GQ-64986-S11B-02

UFP-EJCTR-00181 PTF-M6-UFP-00027001 A3 — UFP-GQ-64950-S11B-02

UFP-EJCTR-00042 PTF-M6-UFP-00027001 A5 — UFP-GQ-64953-S11B-02

N38 UFP-PJM-00002 | N44 UFP-PJM-00106 | N42 UFP-PJM-00053 | N40 UFP-PJM-00004 | N37 UFP-PJM-00001 | N43 UFP-PJM-00105 | N39 UFP-PJM-00003 | N41 UFP-PJM-00044 | N73 UFP-PJM-00109 | N74 UFP-PJM-00110 | N72 UFP-PJM-00108 | N75 UFP-PJM-00111

UFP-VSL-00001A
OUTER PULSE JET MIXERS (8)

UFP-VSL-00001A
INNER PULSE JET MIXERS (4)

NOTES:

1. SEE DRAWINGS 24590-WTP-M6-50-00001 THROUGH 24590-WTP-M6-50-00008 FOR GENERAL NOTES, SYMBOLS AND LEGEND, AND GENERAL SLOPE REQUIREMENTS.
2. CONTENTS OF THIS DOCUMENT ARE DANGEROUS WASTE PERMIT AFFECTING.
3. THE PRESSURE BOUNDARY FOR ALL COMPONENTS ON THIS DRAWING IS QUALITY LEVEL Q AND SEISMIC CATEGORY SC-I, UNLESS OTHERWISE NOTED.
4. ALL LINES ON THIS DRAWING ARE LOCATED IN THE BLACK CELL AND SHALL BE SELF-DRAINING, UNLESS OTHERWISE NOTED.

HOLD/OPEN ITEMS:

NONE

REFERENCES:

1. 24590-WTP-3YD-50-00003, SYSTEM DESCRIPTION FOR PULSE JET MIXER AND SPARGER MIXING SUBSYSTEMS.

Please note that source, special nuclear, and byproduct materials, as defined in the Atomic Energy Act of 1954 (AEA) are regulated at the U. S. Department of Energy (DOE) facilities exclusively by DOE acting pursuant to its AEA authority. DOE asserts that pursuant to AEA, it has sole and exclusive responsibility and authority regarding regulation of source, special nuclear, and byproduct materials at DOE-owned nuclear facilities. Information contained herein on radionuclides is provided for process description purposes only.

Q QUALITY DESIGNATOR

REVISION HISTORY

REV	DESCRIPTION	ORG	CHKD	RVWD	APVD	DATE
0	ISSUED FOR CONSTRUCTION	MH	SJ	SDM	MAH	2/17/11

ISSUED BY RPP-WTP PDC — DBT DATE — ISSUE STAMP

	BY	DATE
ORIGINATOR	Pedro Martinez	2/10/11
CHECKER	SATISH JAIN	2/17/11
APPROVER	Sudeer JOAA	2/17/11
REVIEWER	D.T. MILDON	2.17.11
		2/17/11

CONTENT APPLICABLE TO ALARA? [X] YES [ ] NO
ADR NO. 24590-PTF-ADR-M-02-046 REV: 4
EMAS SCREENING REQUIRED? [X] YES [ ] NO EMAS INITIAL IF YES

SCREENING IS REQUIRED FOR DRAWING TYPES IDENTIFIED IN 24590-WTP-GPP-SREG-002

BECHTEL

RIVER PROTECTION PROJECT
WASTE TREATMENT PLANT
2435 STEVENS CENTER PLACE
RICHLAND, WA 99354

CONTRACT No: DE-AC27-01RV14136

P&ID - PTF ULTRAFILTRATION PROCESS SYSTEM - VESSEL PJM UFP-VSL-00001A

SCALE: NONE

24590-PTF-M6-UFP-00027007

REV 0

E-SIZE - 44x34
COMPUTER GENERATED - MANUAL DESIGN CHANGES NOT PERMITTED

RT 1335782

2/10/2011 10:23:31 AM

PLOTTED BY: eidorn

C:\Work\eidorn\dms0383\24TM6UFP00027007.dgn

FORM E_SDN.DGN 02/2009

RCRA Operating Record Cover Sheet

Document Number: 24590-PTF-PCN-ENV-11-004

Waste Management Records:

- ☐ **R101** List of Waste Management Areas
- ☐ **R102** Waste Analysis Records
- ☐ **R103** Waste Designation Information
- ☐ **R104** Waste Transfer Records
- ☐ **R105** Movement of Containerized Waste Onsite
- ☐ **R106** Release/Spill Records
- ☐ **R114** Field Change Request/Field Change Notice
- ☐ **R116** Field Monitoring / Surveillance Checklists
- ☐ **R119** Reserved
- ☐ **R120** Reserved
- ☐ **R126** Satellite and 90-Day Accumulation Area

Compliance Schedule Submittals:

- ☐ **R401** Pretreatment Facility
- ☐ **R402** LAW Facility
- ☐ **R403** HLW Facility
- ☐ **R404** Laboratory
- ☐ **R405** Balance of Facility
- ☐ **R406** WTP All Facilities
- ☐ **R407** Human Health & Ecological Risk Assessment

Other Operating Record Documents:

- ☐ **R601** Outgoing Correspondence (RCRA Permit Relating)
- ☐ **R602** Contingency Plan Implementation
- ☐ **R603** Closure Plan Deviation
- ☐ **R604** Permit Equivalency Notice (PEN)
- ☒ **R605** Permit Change Notice (PCN)
- ☐ **R606** Annual RCRA Permit Closure and Post-Closure Cost Adjustment Report
- ☐ **R607** Permit Modification
- ☐ **R608** Incoming Correspondence (RCRA Permit Relating)

Non-Operating Record Documents:

- ☐ **N101** Meeting Minutes
- ☐ **N102** Memoranda

Special Instructions to PDC:

Link CCNs:

237274

239524

241827

Quarter Ending 09/30/2011 24590-PTF-PCN-ENV-11-005

Hanford Facility RCRA Permit Modification Notification Form

Part III, Operating Unit 10

Waste Treatment and Immobilization Plant

Index

Page 2 of 2: Hanford Facility RCRA Permit, Part III, Operating Unit 10, Waste Treatment and Immobilization Plant
Update PTF Piping and Instrumentation Diagrams (P&ID) to incorporate new Pulse Jet Mixer (PJM) utility racks for HLP-VSL-00022.

Submitted by Co-Operator:

D. M. Busche 7/28/11
Date

Reviewed by ORP Program Office:

D. L. Noyes 8/17/11
Date

Quarter Ending 09/30/2011 24590-PTF-PCN-ENV-11-005

Hanford Facility RCRA Permit Modification Notification Form

Unit:	Permit Part:
Waste Treatment and Immobilization Plant	**Part III, Operating Unit 10**

Description of Modification:

The purpose of this Class 1 prime modification is to incorporate the following P&IDs for the PTF into Appendix 8.2 of the DWP. The P&IDs are not replacements for previously permitted P&IDs but incorporate advanced HLP system design details to the permitted HLP system. These changes partially incorporate M3 design input requirements for increased number, arrangement, and performance of PJMs. The P&IDs support erosion hold vessel permitting efforts and include advanced design details on utility racks.

Appendix 8.2	
24590-PTF-M6-HLP-00027001	Rev.0
24590-PTF-M6-HLP-00027002	Rev.0
24590-PTF-M6-HLP-00027003	Rev.0
24590-PTF-M6-HLP-00027004	Rev.0
24590-PTF-M6-HLP-00027005	Rev.0
24590-PTF-M6-HLP-00027006	Rev.0
24590-PTF-M6-HLP-00028004	Rev.0
24590-PTF-M6-HLP-00028005	Rev.0
24590-PTF-M6-HLP-00028006	Rev.0

The change document 24590-PTF-M6LN-HLP-00044 has not been incorporated into this modification and applies to the following P&IDs:

- 24590-PTF-M6-HLP-00027001
- 24590-PTF-M6-HLP-00027002
- 24590-PTF-M6-HLP-00027003
- 24590-PTF-M6-HLP-00027006

WAC 173-303-830 Modification Class:	Class 1	Class [1]1	Class 2	Class 3
Please mark the Modification Class:		X		

Enter relevant WAC 173-303-830, Appendix I Modification citation number: NA

Enter wording of WAC 173-303-830, Appendix I Modification citation:

In accordance with WAC 173-303-830(4)(d)(i), this modification notification is requested to be reviewed and approved as a Class [1]1 modification. WAC 173-303-830(4)(d)(ii)(A) states, "Class 1 modifications apply to minor changes that keep the permit current with routine changes to the facility or its operation. These changes do not substantially alter the permit conditions or reduce the capacity of the facility to protect human health or the environment. In the case of Class 1 modifications, the director may require prior approval."

Modification Approved/Concur: [X] Yes [ ] Denied (state reason below)

Reason for denial:

Reviewed by Ecology:

for 10-05-11

J. J. Wallace Date

24590-PTF-M6-HLP-00027001

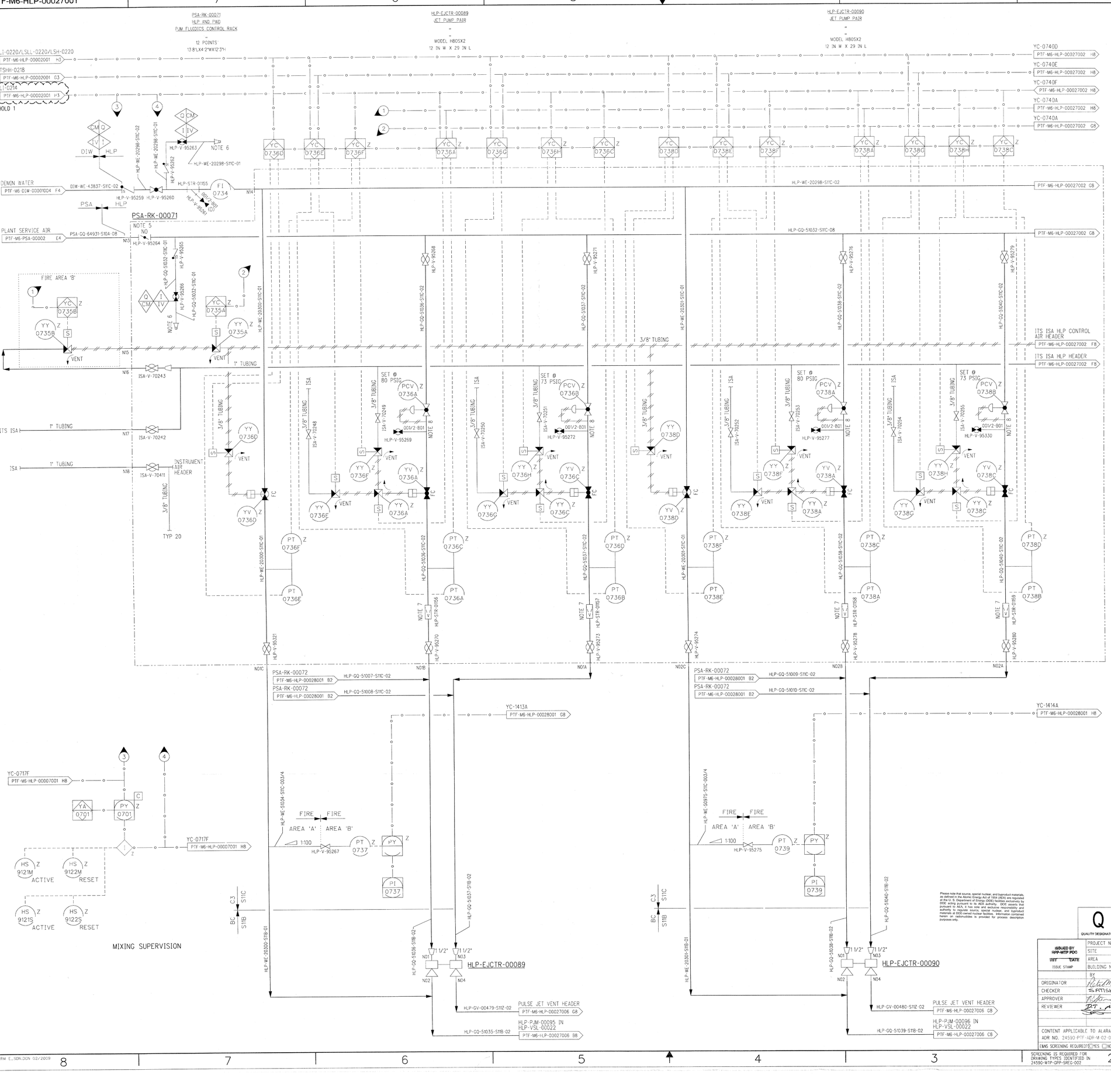

NOTES:

1. SEE DRAWINGS 24590-WTP-M6-50-00001 THROUGH 24590-WTP-M6-50-00008 FOR GENERAL NOTES, SYMBOLS AND LEGEND, AND GENERAL SLOPE REQUIREMENTS.
2. CONTENTS OF THIS DOCUMENT ARE DANGEROUS WASTE PERMIT AFFECTING.
3. THE PRESSURE BOUNDARY FOR ALL COMPONENTS ON THIS DRAWING IS QUALITY LEVEL Q AND SEISMIC CATEGORY SC-I, UNLESS OTHERWISE NOTED. THE PRESSURE BOUNDARY FOR THE NON-SAFETY INSTRUMENT SERVICE AIR (ISA) AND THE CORRESPONDING NON-SAFETY SOLENOID VALVES IT SUPPLIES IS QUALITY LEVEL CM AND SEISMIC CATEGORY SC-IV.
4. ALL LINES SHOWN ON THIS DRAWING SHALL BE FREE DRAINING, EXCEPT BLACK CELL LINES WHICH ARE SELF-DRAINING, UNLESS OTHERWISE NOTED.
5. ALL TUBING OUTSIDE RACK TO BE FIELD RUN. TUBING ROUTING, SPECIFICATION OF ADDITIONAL IN-TUBING DEVICES, AND TAGGING OF IN-TUBING DEVICES WITHIN THE RACK TO BE DONE IN ACCORDANCE WITH C&I INSTALLATION DETAILS AND DESIGN GUIDE 24590-WTP-GPG-ENG-0142.
6. CONNECTION PROVIDED FOR REAGENTS, PLANT WASH, AND SERVICE AIR.
7. STRAINER PERMANENTLY INSTALLED.
8. RECOMMENDED INSTALLATION FOR THE PCV IS TO CONNECT THE CONTROL LINE TO A STRAIGHT RUN OF PIPE 3 TO 5 FEET DOWNSTREAM OF THE PCV AND TO HAVE A MINIMUM STRAIGHT PIPE RUN OF 3 FEET UPSTREAM AND 4 FEET DOWNSTREAM OF THE PCV.

HOLD/OPEN ITEMS:

1. PENDING SAFETY-RELATED MIXING DESIGN.

REFERENCES:

1. 24590-WTP-3YD-50-00003, SYSTEM DESCRIPTION FOR PULSE JET MIXER AND SPARGER MIXING SUBSYSTEMS.

DRAWING INDEX	
DWG NO	TITLE
24590-PTF-M6-HLP-00027001	UTILITY RACK PSA-RK-00071 HLP-VSL-00022 INNER PJM
24590-PTF-M6-HLP-00027002	UTILITY RACK PSA-RK-00071 HLP-VSL-00022 INNER PJM
24590-PTF-M6-HLP-00027003	UTILITY RACK PSA-RK-00071 HLP-VSL-00022 INNER PJM
24590-PTF-M6-HLP-00027004	UTILITY RK PSA-RK-00071, PWD-VSL-00044 INNER PJM
24590-PTF-M6-HLP-00027005	UTILITY RK PSA-RK-00071, PWD-VSL-00044 INNER PJM
24590-PTF-M6-HLP-00027006	HLP-VSL-00022/PWD-VSL-00044 INNER PJM

Please note that source, special nuclear, and byproduct materials, as defined in the Atomic Energy Act of 1954 (AEA) are regulated at the U. S. Department of Energy (DOE) facilities exclusively by DOE pursuant to the AEA. In the event of any authority DOE asserts that pursuant to AEA, it has sole and exclusive responsibility and authority to regulate source, special nuclear, and byproduct materials at DOE-owned nuclear facilities. Information contained herein on radionuclides is provided for process description purposes only.

Q QUALITY DESIGNATOR						
REVISION HISTORY						
REV	DESCRIPTION	ORG	CHKD	RVWD	APVD	DATE
0	ISSUED FOR CONSTRUCTION	JM	SJ			2/17/11

ISSUED BY RPP-WTP PDC		PROJECT No.	24590
DBY DATE		SITE	HANFORD
ISSUE STAMP		AREA	200E
		BUILDING No.	10

	BY	DATE
ORIGINATOR	Heleh Mortazavi	2/16/11
CHECKER	SATISH JAIN	2/17/11
APPROVER		2/17/11
REVIEWER	DT. MILDON	2/17/11

CONTENT APPLICABLE TO ALARA? [X] YES [ ] NO
ADR NO. 24590-PTF-ADR-M-02-005 REV: 7
ENS SCREENING REQUIRED? [X] YES [ ] NO ENS INITIAL IF YES

BECHTEL

RIVER PROTECTION PROJECT
WASTE TREATMENT PLANT
2435 STEVENS CENTER PLACE
RICHLAND, WA 99354

CONTRACT No: DE-AC27-01RV14136

P&ID - PTF
HLW LAG STORAGE AND FEED BLENDING PROCESS SYSTEM
UTILITY RACK PSA-RK-00071
HLP-VSL-00022 INNER PJM

SCALE: NONE

24590-PTF-M6-HLP-00027001

REV 0

E SIZE - 44x34

SCREENING IS REQUIRED FOR DRAWING TYPES IDENTIFIED IN 24590-WTP-GPP-SREG-002

COMPUTER GENERATED - MANUAL DESIGN CHANGES NOT PERMITTED

2/16/2011 3:39:30 PM

FORM E_SDN.DGN 02/2009

PLOTTED BY: mgriffer C:\Work\mgriffer\dms03837\PTF\M6\HLP00027001.dgn

HLP-EJCTR-00091
JET PUMP PAIR
=
MODEL H80SX2
12 IN W X 29 IN L

HLP-EJCTR-00092
JET PUMP PAIR
=
MODEL H80SX2
12 IN W X 29 IN L

YC-0738C PTF-M6-HLP-00027001 H2
YC-0738G PTF-M6-HLP-00027001 H2
YC-0738C PTF-M6-HLP-00027001 H2
YC-0738A PTF-M6-HLP-00027001 H2
YC-0738A PTF-M6-HLP-00027001 G2

YC-0744D PTF-M6-HLP-00027003 H8
YC-0744E PTF-M6-UFP-00027003 H8
YC-0774F PTF-M6-UFP-00027003 H8
YC-0774A PTF-M6-UFP-00027003 H8
YC-0774A PTF-M6-UFP-00027003 G8

YC 0740D · YC 0740E · YC 0740F Z · YC 0740A Z · YC 0740G · YC 0740H Z · YC 0740C Z · YC 0742D · YC 0742E · YC 0742F Z · YC 0742A Z · YC 0742G · YC 0742H Z · YC 0742C Z

PSA-RK-00071
NOTE 5

DEMIN WATER HEADER
PTF-M6-HLP-00027001 G2 — HLP-WE-20298-S11C-02 — PTF-M6-HLP-00027003 C8

PLANT SERVICE AIR HEADER
PTF-M6-HLP-00027001 G2 — HLP-CQ-51032-S11C-08 — PTF-M6-HLP-00027003 C8

ITS ISA CONTROL AIR HEADER
PTF-M6-HLP-00027001 F2 — 3/8" TUBING — PTF-M6-HLP-00027003 F8

ITS ISA AIR HEADER
PTF-M6-HLP-00027001 F2 — 1" TUBING — PTF-M6-HLP-00027003 F8

HLP-WE-20302-S11C-01 · HLP-WE-20303-S11C-01 · HLP-CQ-51046-S11C-02 · HLP-CQ-51048-S11C-02 · HLP-CQ-51050-S11C-02 · HLP-CQ-51052-S11C-02

HLP-V-95283 · HLP-V-95286 · HLP-V-95291 · HLP-V-95293

SET @ 80 PSIG — PCV 0740A Z — HLP-V-95284 — 001/2-B01 — NOTE 7
SET @ 73 PSIG — PCV 0740B Z — HLP-V-95287 — 001/2-B01 — NOTE 7
SET @ 80 PSIG — PCV 0742A Z — HLP-V-95296 — 001/2-B01 — NOTE 7
SET @ 73 PSIG — PCV 0742B Z — HLP-V-95294 — 001/2-B01 — NOTE 7

3/8" TUBING · ISA · ISA-V-70257 · ISA-V-70258 · ISA-V-70259 · ISA-V-70256 · ISA-V-70260 · ISA-V-70261 · ISA-V-70262 · ISA-V-70263 · S · VENT · FC

YY 0740D · YY 0740F Z · YY 0740A Z · YY 0740G · YY 0740H Z · YY 0740C Z · YY 0742D · YY 0742E · YY 0742F Z · YY 0742A Z · YY 0742G · YY 0742H Z · YY 0742C Z

PT 0740F Z · PT 0740E · PT 0740C Z · PT 0740A · PT 0740D Z · PT 0740B · PT 0742E Z · PT 0742F · PT 0742C Z · PT 0742A · PT 0742D Z · PT 0742B

HLP-V-95281 · HLP-V-95285 · HLP-V-95288 · HLP-V-95289 · HLP-V-95292 · HLP-V-95295

NOTE 6 — HLP-STR-01160 · HLP-STR-01161 · HLP-STR-01162 · HLP-STR-01163

N03C · N03B · N03A · N04C · N04B · N04A

PSA-RK-00072 PTF-M6-HLP-00028002 B2 — HLP-CQ-51011-S11C-02
PSA-RK-00072 PTF-M6-HLP-00028002 B2 — HLP-CQ-51012-S11C-02
PSA-RK-00072 PTF-M6-HLP-00028002 C2 — HLP-CQ-51013-S11C-02
PSA-RK-00072 PTF-M6-HLP-00028002 C2 — HLP-CQ-51014-S11C-02

YC-1415A PTF-M6-HLP-00028002 G8
YC-1416A PTF-M6-HLP-00028002 H8

HLP-WE-53045-S11C-03/4 · HLP-WE-53049-S11C-03/4

FIRE AREA 'A' / FIRE AREA 'B' — 1:100 — HLP-V-95282 — PT 0741 Z — PY Z — PI 0741
FIRE AREA 'A' / FIRE AREA 'B' — 1:100 — HLP-V-95290 — PT 0743 Z — PY Z — PI 0743

BC C3 S11C S11B

HLP-WE-20302-S11B-01 · HLP-WE-20303-S11B-01 · HLP-CQ-51048-S11B-02 · HLP-CQ-51050-S11B-02

1 1/2" N01 · N02 · N03 · N04 — HLP-EJCTR-00091 — HLP-EJCTR-00092

HLP-GV-00481-S11Z-02 — PULSE JET VENT HEADER — PTF-M6-HLP-00027006 C8
HLP-PJM-00097 IN HLP-VSL-00022 — PTF-M6-HLP-00027006 C8
HLP-CQ-51047-S11B-02

HLP-GV-00482-S11Z-02 — PULSE JET VENT HEADER — PTF-M6-HLP-00027006 C8
HLP-PJM-00098 IN HLP-VSL-00022 — PTF-M6-HLP-00027006 C8
HLP-CQ-51051-S11B-02

NOTES:

1. SEE DRAWINGS 24590-WTP-M6-50-00001 THROUGH 24590-WTP-M6-50-00008 FOR GENERAL NOTES, SYMBOLS AND LEGEND, AND GENERAL SLOPE REQUIREMENTS.
2. CONTENTS OF THIS DOCUMENT ARE DANGEROUS WASTE PERMIT AFFECTING.
3. THE PRESSURE BOUNDARY FOR ALL COMPONENTS ON THIS DRAWING IS QUALITY LEVEL Q AND SEISMIC CATEGORY SC-I, UNLESS OTHERWISE NOTED. THE PRESSURE BOUNDARY FOR THE NON-SAFETY INSTRUMENT SERVICE AIR (ISA) AND THE CORRESPONDING NON-SAFETY SOLENOID VALVES IT SUPPLIES IS QUALITY LEVEL CM AND SEISMIC CATEGORY SC-IV.
4. ALL LINES SHOWN ON THIS DRAWING SHALL BE FREE DRAINING, EXCEPT BLACK CELL LINES WHICH ARE SELF-DRAINING, UNLESS OTHERWISE NOTED.
5. ALL TUBING OUTSIDE RACK TO BE FIELD RUN. TUBING ROUTING, SPECIFICATION OF ADDITIONAL IN-TUBING DEVICES, AND TAGGING OF IN-TUBING DEVICES WITHIN THE RACK TO BE DONE IN ACCORDANCE WITH C&I INSTALLATION DETAILS AND DESIGN GUIDE 24590-WTP-GPG-ENG-0142.
6. STRAINER PERMANENTLY INSTALLED.
7. RECOMMENDED INSTALLATION FOR THE PCV IS TO CONNECT THE CONTROL LINE TO A STRAIGHT RUN OF PIPE 3 TO 5 FEET DOWNSTREAM OF THE PCV AND TO HAVE A MINIMUM STRAIGHT PIPE RUN OF 3 FEET UPSTREAM AND 4 FEET DOWNSTREAM OF THE PCV.

HOLD/OPEN ITEMS:

NONE

REFERENCES:

1. 24590-WTP-3YD-50-00003, SYSTEM DESCRIPTION FOR PULSE JET MIXER AND SPARGER MIXING SUBSYSTEMS.

Please note that source, special nuclear, and byproduct materials, as defined in the Atomic Energy Act of 1954 (AEA) are regulated at the U. S. Department of Energy (DOE) facilities exclusively by the DOE pursuant to the AEA. Regulation by the DOE pursuant to AEA, it has sole and exclusive responsibility and authority to regulate source, special nuclear, and byproduct materials at DOE-owned nuclear facilities. Information contained herein on radionuclides is provided for process description purposes only.

REV	DESCRIPTION	ORG	CHKD	RVWD	APVD	DATE
0	ISSUED FOR CONSTRUCTION		SJ	DK JWS		2/17/11

REVISION HISTORY

Q QUALITY DESIGNATOR

ISSUED BY RPP-WTP PDC — ISSUE STAMP

	BY	DATE
ORIGINATOR		
CHECKER		
APPROVER		
REVIEWER		

CONTENT APPLICABLE TO ALARA? [X] YES [ ] NO
ADR NO. 24590-PTF-ADR-M-02-005 REV: 7
ENS SCREENING REQUIRED? [ ] YES [ ] NO ENS INITIAL IF YES

SCREENING IS REQUIRED FOR DRAWING TYPES IDENTIFIED IN 24590-WTP-GPP-SREQ-002

PROJECT No.	24590
SITE	HANFORD
AREA	200E
BUILDING No.	90

BECHTEL

RIVER PROTECTION PROJECT
WASTE TREATMENT PLANT
2435 STEVENS CENTER PLACE
RICHLAND, WA 99354

CONTRACT No: DE-AC27-01RV14136

P&ID - PTF
HLW LAG STORAGE AND FEED BLENDING PROCESS SYSTEM UTILITY RACK PSA-RK-00071 HLP-VSL-00022 INNER PJM

SCALE: NONE

24590-PTF-M6-HLP-00027002

REV 0

"E" SIZE - 44x34
COMPUTER GENERATED - MANUAL DESIGN CHANGES NOT PERMITTED

2/16/2011 3:38:14 PM

PLOTTED BY: mgritter C:\Work\mgritter\dms\03837\PTF\M6\HLP\00027002.dgn

FORM E_SDN.DGN 02/2009

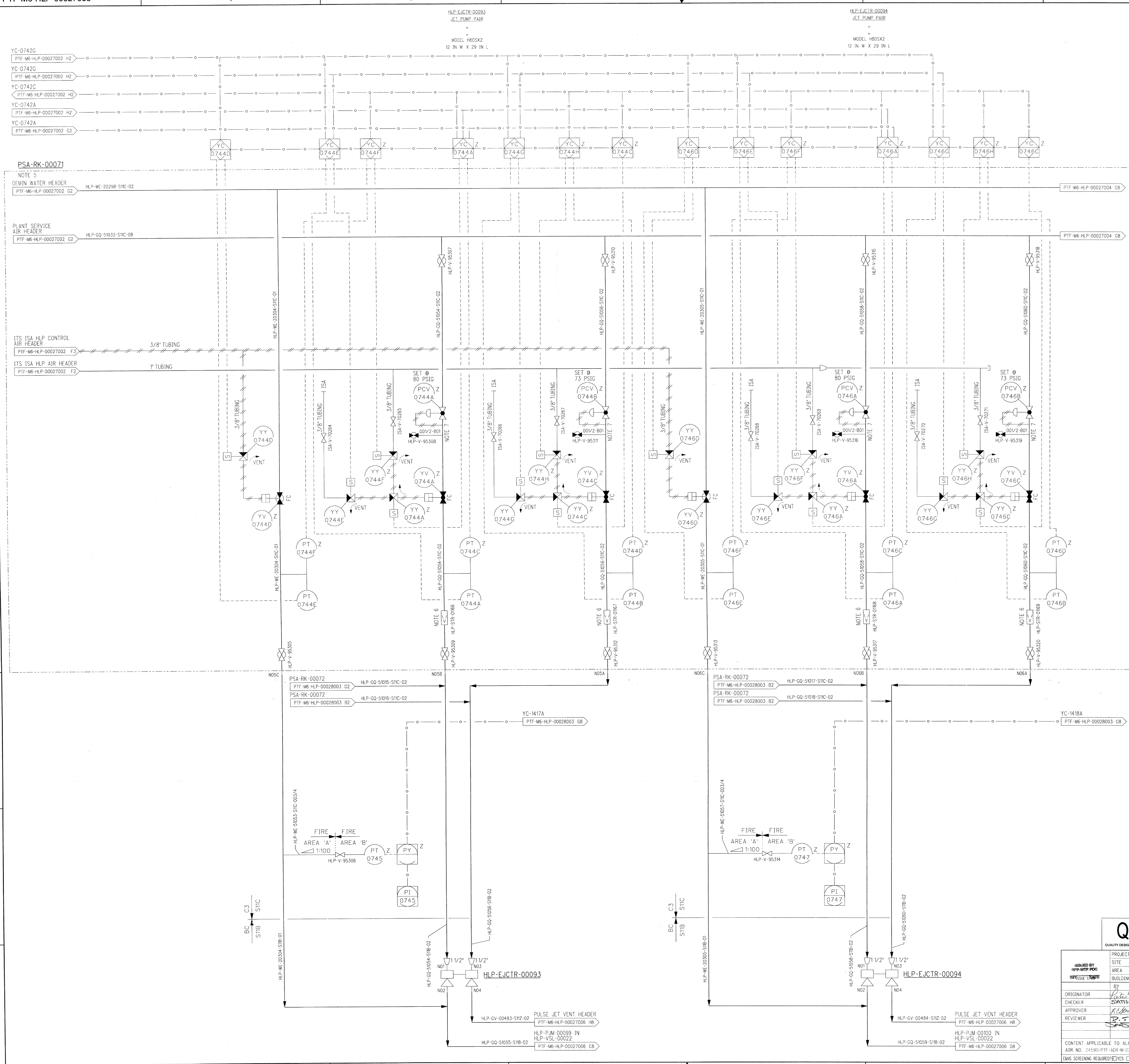

NOTES:

1. SEE DRAWINGS 24590-WTP-M6-50-00001 THROUGH 24590-WTP-M6-50-00008 FOR GENERAL NOTES, SYMBOLS AND LEGEND, AND GENERAL SLOPE REQUIREMENTS.
2. CONTENTS OF THIS DOCUMENT ARE DANGEROUS WASTE PERMIT AFFECTING.
3. THE PRESSURE BOUNDARY FOR ALL COMPONENTS ON THIS DRAWING IS QUALITY LEVEL Q AND SEISMIC CATEGORY SC-I, UNLESS OTHERWISE NOTED. THE PRESSURE BOUNDARY FOR THE NON-SAFETY INSTRUMENT SERVICE AIR (ISA) AND THE CORRESPONDING NON-SAFETY SOLENOID VALVES IT SUPPLIES IS QUALITY LEVEL CM AND SEISMIC CATEGORY SC-IV.
4. ALL LINES SHOWN ON THIS DRAWING SHALL BE FREE DRAINING, EXCEPT BLACK CELL LINES WHICH ARE SELF-DRAINING, UNLESS OTHERWISE NOTED.
5. ALL TUBING OUTSIDE RACK TO BE FIELD RUN. TUBING ROUTING, SPECIFICATION OF ADDITIONAL IN-TUBING DEVICES, AND TAGGING OF IN-TUBING DEVICES WITHIN THE RACK TO BE DONE IN ACCORDANCE WITH C&I INSTALLATION DETAILS AND DESIGN GUIDE 24590-WTP-GPG-ENG-0142.
6. STRAINER PERMANENTLY INSTALLED.
7. RECOMMENDED INSTALLATION FOR THE PCV IS TO CONNECT THE CONTROL LINE TO A STRAIGHT RUN OF PIPE 3 TO 5 FEET DOWNSTREAM OF THE PCV AND TO HAVE A MINIMUM STRAIGHT PIPE RUN OF 3 FEET UPSTREAM AND 4 FEET DOWNSTREAM OF THE PCV.

HOLD/OPEN ITEMS:

NONE

REFERENCES:

1. 24590-WTP-3YD-50-00003, SYSTEM DESCRIPTION FOR PULSE JET MIXER AND SPARGER MIXING SUBSYSTEMS.

Please note that source, special nuclear, and byproduct materials, as defined in the Atomic Energy Act of 1954 (AEA) are regulated at the U. S. Department of Energy (DOE) facilities exclusively by DOE acting pursuant to its AEA authority. DOE asserts that pursuant to AEA, it has sole and exclusive responsibility and authority to regulate source, special nuclear, and byproduct materials at DOE-owned nuclear facilities. Information contained herein on radionuclides is provided for process description purposes only.

Q
QUALITY DESIGNATOR

REV	DESCRIPTION	ORG	CHKD	RVWD	APVD	DATE
0	ISSUED FOR CONSTRUCTION		SJ	DM SGS		2/17/11

REVISION HISTORY

ISSUED BY RPP-WTP PDC
ISSUE STAMP

PROJECT No.	24590
SITE	HANFORD
AREA	200E
BUILDING No.	10

RIVER PROTECTION PROJECT
WASTE TREATMENT PLANT
2435 STEVENS CENTER PLACE
RICHLAND, WA 99354

CONTRACT No: DE-AC27-01RV14136

	BY	DATE
ORIGINATOR		2/16/11
CHECKER	SATISH JAIN	2/17/11
APPROVER		2/17/11
REVIEWER	D.T. MILDON	2.17.11
		2/17/11

P&ID - PTF
HLW LAG STORAGE AND FEED BLENDING PROCESS SYSTEM UTILITY RACK PSA-RK-00071 HLP-VSL-00022 INNER PJM

CONTENT APPLICABLE TO ALARA? [X] YES [ ] NO
ADR NO. 24590-PTF-ADR-M-02-005 REV: 7
E&NS SCREENING REQUIRED? [X] YES [ ] NO E&NS INITIAL IF YES

SCALE: NONE
24590-PTF-M6-HLP-00027003
REV 0

SCREENING IS REQUIRED FOR DRAWING TYPES IDENTIFIED IN 24590-WTP-GPP-SREG-002

'E' SIZE - 44x34
COMPUTER GENERATED - MANUAL DESIGN CHANGES NOT PERMITTED

R11333469

2/16/2011 3:36:42 PM

PLOTTED BY: mdritter C:\Work\mdritter\dms03837\PTFM6HLP00027003.dgn

FORM E_SDLDOV 02/2009

24590-PTF-M6-HLP-00027004

NOTES:

1. SEE DRAWINGS 24590-WTP-M6-50-00001 THROUGH 24590-WTP-M6-50-00008 FOR GENERAL NOTES, SYMBOLS AND LEGEND, AND GENERAL SLOPE REQUIREMENTS.
2. CONTENTS OF THIS DOCUMENT ARE DANGEROUS WASTE PERMIT AFFECTING.
3. THE PRESSURE BOUNDARY FOR ALL COMPONENTS ON THIS DRAWING IS QUALITY LEVEL Q AND SEISMIC CATEGORY SC-I, UNLESS OTHERWISE NOTED. THE PRESSURE BOUNDARY FOR THE NON-SAFETY INSTRUMENT SERVICE AIR (ISA) AND THE CORRESPONDING NON-SAFETY SOLENOID VALVES IT SUPPLIES IS QUALITY LEVEL CM AND SEISMIC CATEGORY SC-IV.
4. ALL LINES SHOWN ON THIS DRAWING SHALL BE FREE DRAINING, EXCEPT BLACK CELL LINES WHICH ARE SELF-DRAINING, UNLESS OTHERWISE NOTED.
5. ALL TUBING OUTSIDE RACK TO BE FIELD RUN. TUBING ROUTING, SPECIFICATION OF ADDITIONAL IN-TUBING DEVICES, AND TAGGING OF IN-TUBING DEVICES WITHIN THE RACK TO BE DONE IN ACCORDANCE WITH C&I INSTALLATION DETAILS AND DESIGN GUIDE 24590-WTP-GPG-ENG-0142.
6. STRAINER PERMANENTLY INSTALLED.
7. RECOMMENDED INSTALLATION FOR THE PCV IS TO CONNECT THE CONTROL LINE TO A STRAIGHT RUN OF PIPE 3 TO 5 FEET DOWNSTREAM OF THE PCV AND TO HAVE A MINIMUM STRAIGHT PIPE RUN OF 3 FEET UPSTREAM AND 4 FEET DOWNSTREAM OF THE PCV.

HOLD/OPEN ITEMS:

1. PENDING SAFETY-RELATED MIXING DESIGN.

REFERENCES:

1. 24590-WTP-3YD-50-00003, SYSTEM DESCRIPTION FOR PULSE JET MIXER AND SPARGER MIXING SUBSYSTEMS.

MIXING SUPERVISION

SUCTION MODE VENTING SUPERVISION

Please note that source, special nuclear, and byproduct materials, as defined in the Atomic Energy Act of 1954, as amended, are not managed by Bechtel National, Inc. (BNI) or its affiliates exclusively for the U. S. Department of Energy (DOE) at the Hanford Site. Therefore, DOE asserts that DOE and its AEA, it has sole and exclusive responsibility and authority to regulate source, special nuclear, and byproduct materials at DOE-owned nuclear facilities. Information contained herein on radionuclides is provided for process description purposes only.

REV	DESCRIPTION	ORG	CHKD	RVWD	APVD	DATE
0	ISSUED FOR CONSTRUCTION					2/17/11

REVISION HISTORY

PROJECT No.	24590
SITE	HANFORD
AREA	200E
BUILDING No.	10

	BY	DATE
ORIGINATOR	Peter Mortensen	2/16/11
CHECKER	Satish Jain	2/17/11
APPROVER		2/17/11
REVIEWER		2.17.11
		2/17/11

CONTENT APPLICABLE TO ALARA? [X] YES [ ] NO
ADR NO. 24590-PTF-ADR-M-08-0001 REV: 0
EMAS SCREENING REQUIRED? [X] YES [ ] NO EMAS INITIAL IF YES

RIVER PROTECTION PROJECT
WASTE TREATMENT PLANT
2435 STEVENS CENTER PLACE
RICHLAND, WA 99354

CONTRACT No: DE-AC27-01RV14136

P&ID - PTF
HLW LAG STORAGE AND FEED BLENDING PROCESS SYSTEM UTILITY RACK PSA-RK-00071 PWD-VSL-00044 INNER PJM

SCALE:	24590-PTF-M6-HLP-00027004	REV
NONE		0

E-SIZE - 44x34
COMPUTER GENERATED - MANUAL DESIGN CHANGES NOT PERMITTED

SCREENING IS REQUIRED FOR DRAWING TYPES IDENTIFIED IN 24590-WTP-GPP-SREQ-002

FORM E_SDNDSN 02/2009

2/16/2011 3:35:21 PM

PLOTTED BY: mpritter C:\Work\mpritter\pmis\8537\PTF\M6\PD0027004.dgn

24590-PTF-M6-HLP-00027005

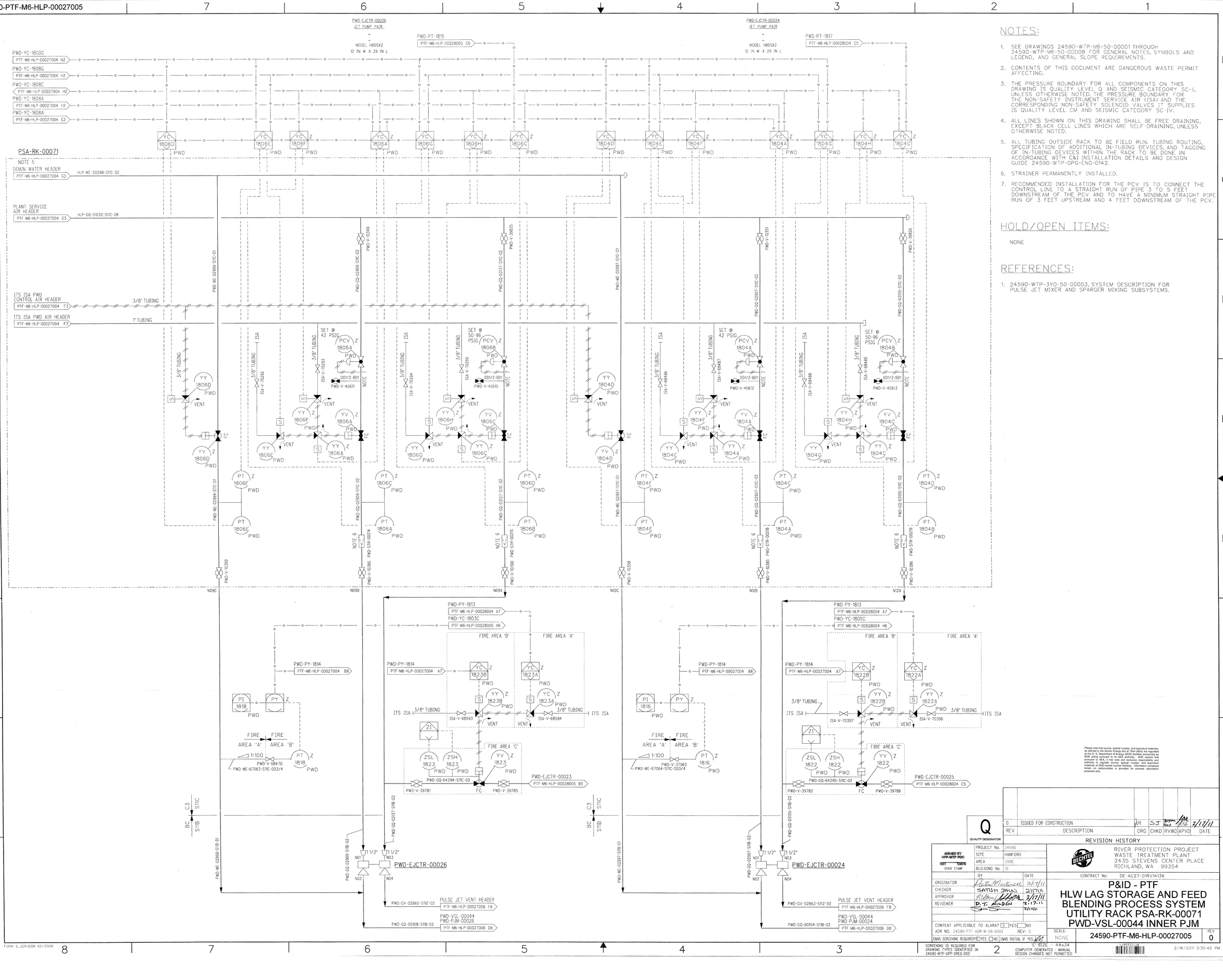

NOTES:

1. SEE DRAWINGS 24590-WTP-M6-50-00001 THROUGH 24590-WTP-M6-50-00008 FOR GENERAL NOTES, SYMBOLS AND LEGEND, AND GENERAL SLOPE REQUIREMENTS.
2. CONTENTS OF THIS DOCUMENT ARE DANGEROUS WASTE PERMIT AFFECTING.
3. THE PRESSURE BOUNDARY FOR ALL COMPONENTS ON THIS DRAWING IS QUALITY LEVEL Q AND SEISMIC CATEGORY SC-I, UNLESS OTHERWISE NOTED. THE PRESSURE BOUNDARY FOR THE NON-SAFETY INSTRUMENT SERVICE AIR (ISA) AND THE CORRESPONDING NON-SAFETY SOLENOID VALVES IT SUPPLIES IS QUALITY LEVEL CM AND SEISMIC CATEGORY SC-IV.
4. ALL LINES SHOWN ON THIS DRAWING SHALL BE FREE DRAINING, EXCEPT BLACK CELL LINES WHICH ARE SELF-DRAINING, UNLESS OTHERWISE NOTED.
5. ALL TUBING OUTSIDE RACK TO BE FIELD RUN. TUBING ROUTING, SPECIFICATION OF ADDITIONAL IN-TUBING DEVICES, AND TAGGING OF IN-TUBING DEVICES WITHIN THE RACK TO BE DONE IN ACCORDANCE WITH C&I INSTALLATION DETAILS AND DESIGN GUIDE 24590-WTP-GPG-ENG-0142.
6. STRAINER PERMANENTLY INSTALLED.
7. RECOMMENDED INSTALLATION FOR THE PCV IS TO CONNECT THE CONTROL LINE TO A STRAIGHT RUN OF PIPE 3 TO 5 FEET DOWNSTREAM OF THE PCV AND TO HAVE A MINIMUM STRAIGHT PIPE RUN OF 3 FEET UPSTREAM AND 4 FEET DOWNSTREAM OF THE PCV.

HOLD/OPEN ITEMS:

NONE

REFERENCES:

1. 24590-WTP-3YD-50-00003, SYSTEM DESCRIPTION FOR PULSE JET MIXER AND SPARGER MIXING SUBSYSTEMS.

Please note that source, special nuclear, and byproduct materials, as defined in the Atomic Energy Act of 1954 (AEA) are regulated at the U. S. Department of Energy (DOE) facilities exclusively by DOE acting pursuant to its AEA authority. DOE asserts that regulation by DOE acting pursuant to its exclusive responsibility and authority to regulate source, special nuclear, and byproduct materials at DOE-owned nuclear facilities. Information contained herein on radionuclides is provided for process description purposes only.

REV	DESCRIPTION	ORG	CHKD	RVWD	APVD	DATE
0	ISSUED FOR CONSTRUCTION	JW	SJ	DTM	MG	2/17/11

Q
QUALITY DESIGNATOR

REVISION HISTORY

ISSUED BY RPP-WTP PDC	
SIGNATURE DATE	
ISSUE STAMP	

PROJECT No.	24590
SITE	HANFORD
AREA	200E
BUILDING No.	10

	BY	DATE
ORIGINATOR	Pedro Montoya	2/7/11
CHECKER	SATISH JAIN	2/17/11
APPROVER		2/17/11
REVIEWER	D.T. MILDON	2-17-11

CONTENT APPLICABLE TO ALARA? [X] YES [ ] NO
ADR NO. 24590-PTF-ADR-M-08-0001 REV: 0
EMS SCREENING REQUIRED? [X] YES [ ] NO EMS INITIAL IF YES

SCREENING IS REQUIRED FOR DRAWING TYPES IDENTIFIED IN 24590-WTP-GPP-SREG-002

E SIZE 44x34
COMPUTER GENERATED - MANUAL DESIGN CHANGES NOT PERMITTED

BECHTEL
RIVER PROTECTION PROJECT
WASTE TREATMENT PLANT
2435 STEVENS CENTER PLACE
RICHLAND, WA 99354

CONTRACT No: DE-AC27-01RV14136

P&ID - PTF
HLW LAG STORAGE AND FEED BLENDING PROCESS SYSTEM UTILITY RACK PSA-RK-00071 PWD-VSL-00044 INNER PJM

SCALE: NONE
24590-PTF-M6-HLP-00027005
REV 0

ENGINEERING

2/16/2011 3:30:45 PM

C:\Work\mpritter\dms03837\PTF-M6HLP00027005.dgn
PLOTTED BY: mpritter

FORM: E_SDN.DGN 02/2009

24590-PTF-M6-HLP-00027006

HLP-PJM-00095 PULSE JET MIXER = = 1700 GAL 4'-6" ID x 12'-1" T-T

HLP-PJM-00096 PULSE JET MIXER = = 1700 GAL 4'-6" ID x 12'-1" T-T

HLP-PJM-00097 PULSE JET MIXER = = 1700 GAL 4'-6" ID x 12'-1" T-T

HLP-PJM-00098 PULSE JET MIXER = = 1700 GAL 4'-6" ID x 12'-1" T-T

HLP-PJM-00099 PULSE JET MIXER = = 1700 GAL 4'-6" ID x 12'-1" T-T

HLP-PJM-00100 PULSE JET MIXER = = 1700 GAL 4'-6" ID x 12'-1" T-T

PWD-PJM-00028 PULSE JET MIXER = = 1100 GAL 3'-6" ID x 17'-1" T-T

PWD-PJM-00022 PULSE JET MIXER = = 1100 GAL 3'-6" ID x 17'-1" T-T

PWD-PJM-00026 PULSE JET MIXER = = 1100 GAL 3'-6" ID x 17'-1" T-T

PWD-PJM-00024 PULSE JET MIXER = = 1100 GAL 3'-6" ID x 17'-1" T-T

HLP-EJCTR-00094 PTF-M6-HLP-00027003 A3 — HLP-GV-00484-S11Z-02

HLP-EJCTR-00093 PTF-M6-HLP-00027003 A5 — HLP-GV-00483-S11Z-02

HLP-EJCTR-00089 PTF-M6-HLP-00027001 A5 — HLP-GV-00479-S11Z-02

HLP-EJCTR-00090 PTF-M6-HLP-00027001 A3 — HLP-GV-00480-S11Z-02

HLP-EJCTR-00091 PTF-M6-HLP-00027002 A5 — HLP-GV-00481-S11Z-02

HLP-EJCTR-00092 PTF-M6-HLP-00027002 A3 — HLP-GV-00482-S11Z-02

PWD-EJCTR-00022 PTF-M6-HLP-00027004 A5 — PWD-GV-02861-S11Z-02

PWD-EJCTR-00028 PTF-M6-HLP-00027004 A3 — PWD-GV-02867-S11Z-02

PWD-EJCTR-00026 PTF-M6-HLP-00027005 A5 — PWD-GV-02865-S11Z-02

PWD-EJCTR-00024 PTF-M6-HLP-00027005 A3 — PWD-GV-02863-S11Z-02

PULSE JET VENT PTF-M6-HLP-00028006 E2 — PJV-GV-66964-S11Z-16

PSA-RK-00071 VENT HEADER

PULSE JET VENT HEADER PTF-M6-PJV-00001 G5

PWD-EJCTR-00024 PTF-M6-HLP-00027005 A3 — PWD-GQ-00104-S11B-02

PWD-EJCTR-00026 PTF-M6-HLP-00027005 A5 — PWD-GQ-00108-S11B-02

PWD-EJCTR-00022 PTF-M6-HLP-00027004 A5 — PWD-GQ-00100-S11B-02

PWD-EJCTR-00028 PTF-M6-HLP-00027004 A3 — PWD-GQ-00112-S11B-02

HLP-EJCTR-00094 PTF-M6-HLP-00027003 A3 — HLP-GQ-51059-S11B-02

HLP-EJCTR-00093 PTF-M6-HLP-00027003 A5 — HLP-GQ-51055-S11B-02

HLP-EJCTR-00092 PTF-M6-HLP-00027002 A3 — HLP-GQ-51051-S11B-02

HLP-EJCTR-00091 PTF-M6-HLP-00027002 A5 — HLP-GQ-51047-S11B-02

HLP-EJCTR-00090 PTF-M6-HLP-00027001 A3 — HLP-GQ-51039-S11B-02

HLP-EJCTR-00089 PTF-M6-HLP-00027001 A5 — HLP-GQ-51035-S11B-02

N51 N52 N53 N54 N55 N56

HLP-PJM-00095 HLP-PJM-00096 HLP-PJM-00097 HLP-PJM-00098 HLP-PJM-00099 HLP-PJM-00100

HLP-VSL-00022 (INNER PJM)

N21 N15 N19 N17

PWD-PJM-00028 PWD-PJM-00022 PWD-PJM-00026 PWD-PJM-00024

PWD-VSL-00044 (INNER PJM)

NOTES:

1. SEE DRAWINGS 24590-WTP-M6-50-00001 THROUGH 24590-WTP-M6-50-00008 FOR GENERAL NOTES, SYMBOLS AND LEGEND, AND GENERAL SLOPE REQUIREMENTS.
2. CONTENTS OF THIS DOCUMENT ARE DANGEROUS WASTE PERMIT AFFECTING.
3. THE PRESSURE BOUNDARY FOR ALL COMPONENTS ON THIS DRAWING IS QUALITY LEVEL Q AND SEISMIC CATEGORY SC-I, UNLESS OTHERWISE NOTED.
4. ALL LINES SHOWN ON THIS DRAWING ARE LOCATED IN THE BLACK CELL AND SHALL BE SELF-DRAINING, UNLESS OTHERWISE NOTED.

HOLD/OPEN ITEMS:

NONE

REFERENCES:

1. 24590-WTP-3YD-50-00003, SYSTEM DESCRIPTION FOR PULSE JET MIXER AND SPARGER MIXING SUBSYSTEMS.
2. ALARA DESIGN REVIW REFERENCE 24590-PTF-ADR-M-02-005 REV 7 (HLP) AND 24590-PTF-ADR-M-08-0001 REV 0 (PWD).
3. 24590-PTF-M6-HLP-00007007, P&ID-PTF HLW LAG STORAGE AND FEED BLENDING PROCESS SYSTEM VESSEL PJM HLP-VSL-00022 (OUTER PJM).

Please note that source, special nuclear, and byproduct materials, as defined by the Atomic Energy Act of 1954 (AEA) are regulated at the U. S. Department of Energy (DOE) facilities exclusively by DOE acting pursuant to its AEA authority. DOE asserts that pursuant to AEA, it has sole and exclusive responsibility and authority to regulate source, special nuclear and byproduct materials. Any reference herein to the regulation contained herein on radionuclides is provided for process description purposes only.

REV	DESCRIPTION	ORG	CHKD	RVWD	APVD	DATE
0	ISSUED FOR CONSTRUCTION		SJ	DDM		2/17/11

REVISION HISTORY

Q QUALITY DESIGNATOR

ISSUED BY RPP-WTP PDC TSP STATE ISSUE STAMP

PROJECT No.	24590	
SITE	HANFORD	
AREA	200E	
BUILDING No.	10	

	BY	DATE
ORIGINATOR	[illegible]	2/10/11
CHECKER	SATISH JOSHI	2/11/11
APPROVER	[illegible]	2/17/11
REVIEWER	D.F. MCDONALD	2-17-11

CONTENT APPLICABLE TO ALARA? [X] YES [ ] NO
ADR NO. SEE REFERENCE 2 REV: N/A
EMS SCREENING REQUIRED? [X] YES [ ] NO EMS INITIAL IF YES: [illegible]

SCREENING IS REQUIRED FOR DRAWING TYPES IDENTIFIED IN 24590-WTP-GPP-SREQ-002

E-SIZE - 44x34

COMPUTER GENERATED - MANUAL DESIGN CHANGES NOT PERMITTED

BECHTEL

RIVER PROTECTION PROJECT
WASTE TREATMENT PLANT
2435 STEVENS CENTER PLACE
RICHLAND, WA 99354

CONTRACT No: DE-AC27-01RV14136

P&ID - PTF
HLW LAG STORAGE AND FEED BLENDING PROCESS SYSTEM HLP-VSL-00022/ PWD-VSL-00044 INNER PJM

SCALE: NONE

24590-PTF-M6-HLP-00027006 REV 0

2/10/2011 9:23:26 AM

C:\Revit\Models\dm03837\PTFM6HLP00027006.dgn

PLOTTED BY: adorn

FORM_E_SDN.DGN 02/2009

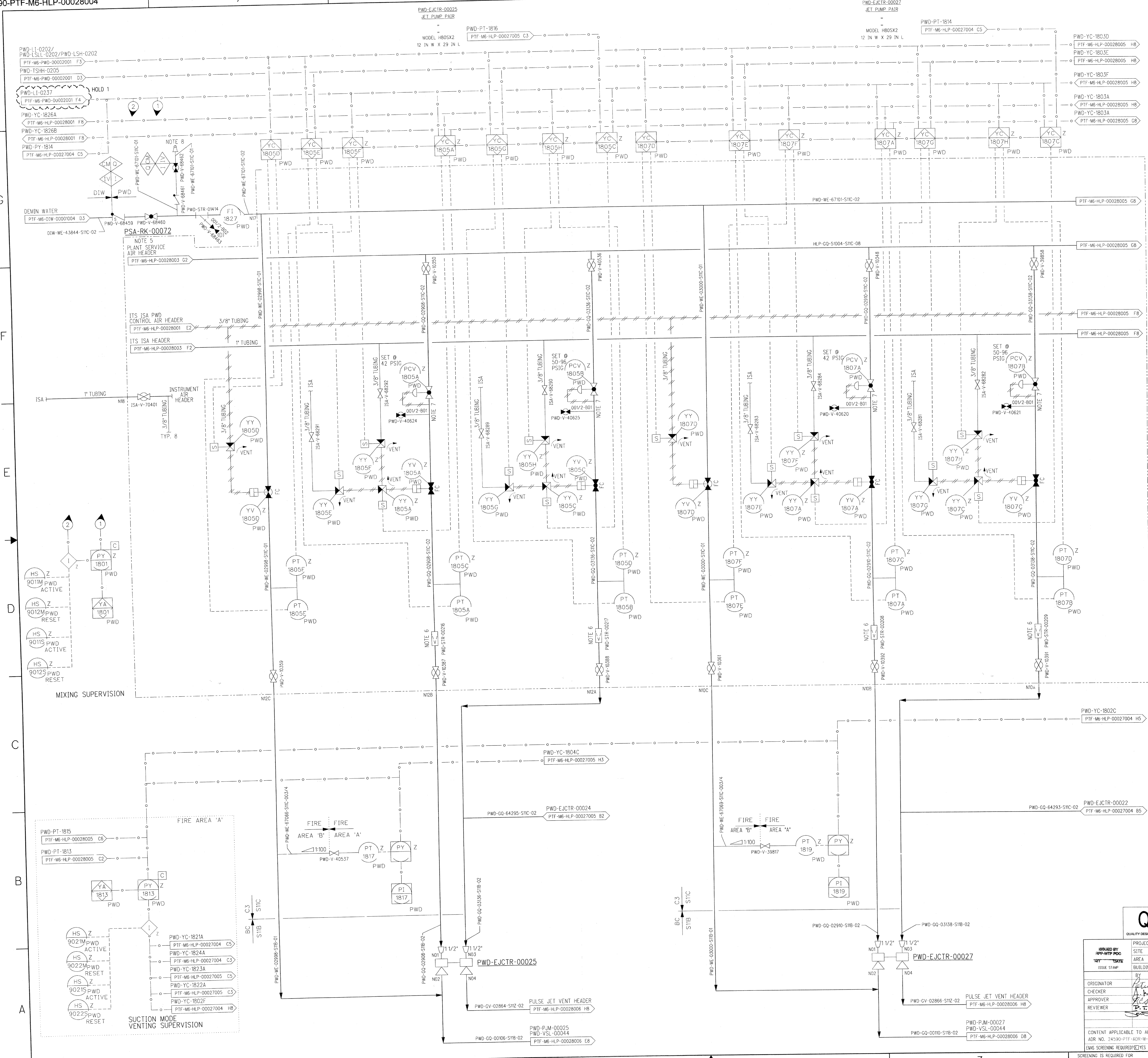

NOTES:

1. SEE DRAWINGS 24590-WTP-M6-50-00001 THROUGH 24590-WTP-M6-50-00008 FOR GENERAL NOTES, SYMBOLS AND LEGEND, AND GENERAL SLOPE REQUIREMENTS.
2. CONTENTS OF THIS DOCUMENT ARE DANGEROUS WASTE PERMIT AFFECTING.
3. THE PRESSURE BOUNDARY FOR ALL COMPONENTS ON THIS DRAWING IS QUALITY LEVEL Q AND SEISMIC CATEGORY SC-I, UNLESS OTHERWISE NOTED. THE PRESSURE BOUNDARY FOR THE NON-SAFETY INSTRUMENT SERVICE AIR (ISA) AND THE CORRESPONDING NON-SAFETY SOLENOID VALVES IT SUPPLIES IS QUALITY LEVEL CM AND SEISMIC CATEGORY SC-IV.
4. ALL LINES SHOWN ON THIS DRAWING SHALL BE FREE DRAINING, EXCEPT BLACK CELL LINES WHICH ARE SELF-DRAINING, UNLESS OTHERWISE NOTED.
5. ALL TUBING OUTSIDE RACK TO BE FIELD RUN. TUBING ROUTING, SPECIFICATION OF ADDITIONAL IN-TUBING DEVICES, AND TAGGING OF IN-TUBING DEVICES WITHIN THE RACK TO BE DONE IN ACCORDANCE WITH C&I INSTALLATION DETAILS AND DESIGN GUIDE 24590-WTP-GPG-ENG-0142.
6. STRAINER IS PERMANENTLY INSTALLED.
7. RECOMMENDED INSTALLATION FOR THE PCV IS TO CONNECT THE CONTROL LINE TO A STRAIGHT RUN OF PIPE 3 TO 5 FEET DOWNSTREAM OF THE PCV AND TO HAVE A MINIMUM STRAIGHT PIPE RUN OF 3 FEET UPSTREAM AND 4 FEET DOWNSTREAM OF THE PCV.
8. CONNECTION PROVIDED FOR REAGENTS, PLANT WASH, AND SERVICE AIR.

HOLD/OPEN ITEMS:

1. PENDING SAFETY-RELATED MIXING DESIGN.

REFERENCES:

1. 24590-WTP-3YD-50-00003, SYSTEM DESCRIPTION FOR PULSE JET MIXER AND SPARGER MIXING SUBSYSTEMS.

Please note that source, special nuclear, and byproduct materials, as defined in the Atomic Energy Act of 1954 (AEA) are regulated at the U. S. Department of Energy (DOE) facilities exclusively by DOE acting pursuant to its AEA authority. DOE asserts that pursuant to AEA, it has sole and exclusive responsibility and authority to regulate source, special nuclear, and byproduct materials at DOE-owned nuclear facilities. Information contained herein on radionuclides is provided for process description purposes only.

Q
QUALITY DESIGNATOR

REV	DESCRIPTION	ORG	CHKD	RVWD	APVD	DATE
0	ISSUED FOR CONSTRUCTION		JK	SGS		2/17/11

REVISION HISTORY

ISSUED BY RPP-WTP PDC — ISSUE STAMP

PROJECT No.	24590
SITE	HANFORD
AREA	200E
BUILDING No.	10

RIVER PROTECTION PROJECT
WASTE TREATMENT PLANT
2435 STEVENS CENTER PLACE
RICHLAND, WA 99354

CONTRACT No: DE-AC27-01RV14136

	BY	DATE
ORIGINATOR		2/17/11
CHECKER		2/17/11
APPROVER		2/17/11
REVIEWER	D. T. MILDIN	2-17-11
		2/17/11

CONTENT APPLICABLE TO ALARA? [X] YES [ ] NO
ADR NO. 24590-PTF-ADR-M-08-0001 REV: 0
E&NS SCREENING REQUIRED? [X] YES [ ] NO E&NS INITIAL IF YES

P&ID - PTF
HLW LAG STORAGE AND FEED BLENDING PROCESS SYSTEM UTILITY RACK PSA-RK-00072 PWD-VSL-00044 OUTER PJM

SCALE: NONE
24590-PTF-M6-HLP-00028004
REV 0

SCREENING IS REQUIRED FOR DRAWING TYPES IDENTIFIED IN 24590-WTP-GPP-SREG-002
2
'E' SIZE - 44x34
COMPUTER GENERATED - MANUAL DESIGN CHANGES NOT PERMITTED
2/17/2011 8:11:05 AM
PLOTTED BY: eewebb C:\Work\eewebb\dms03837\PTFM6HLP00028004.dgn

FORM E_100N.DGN 02/2009

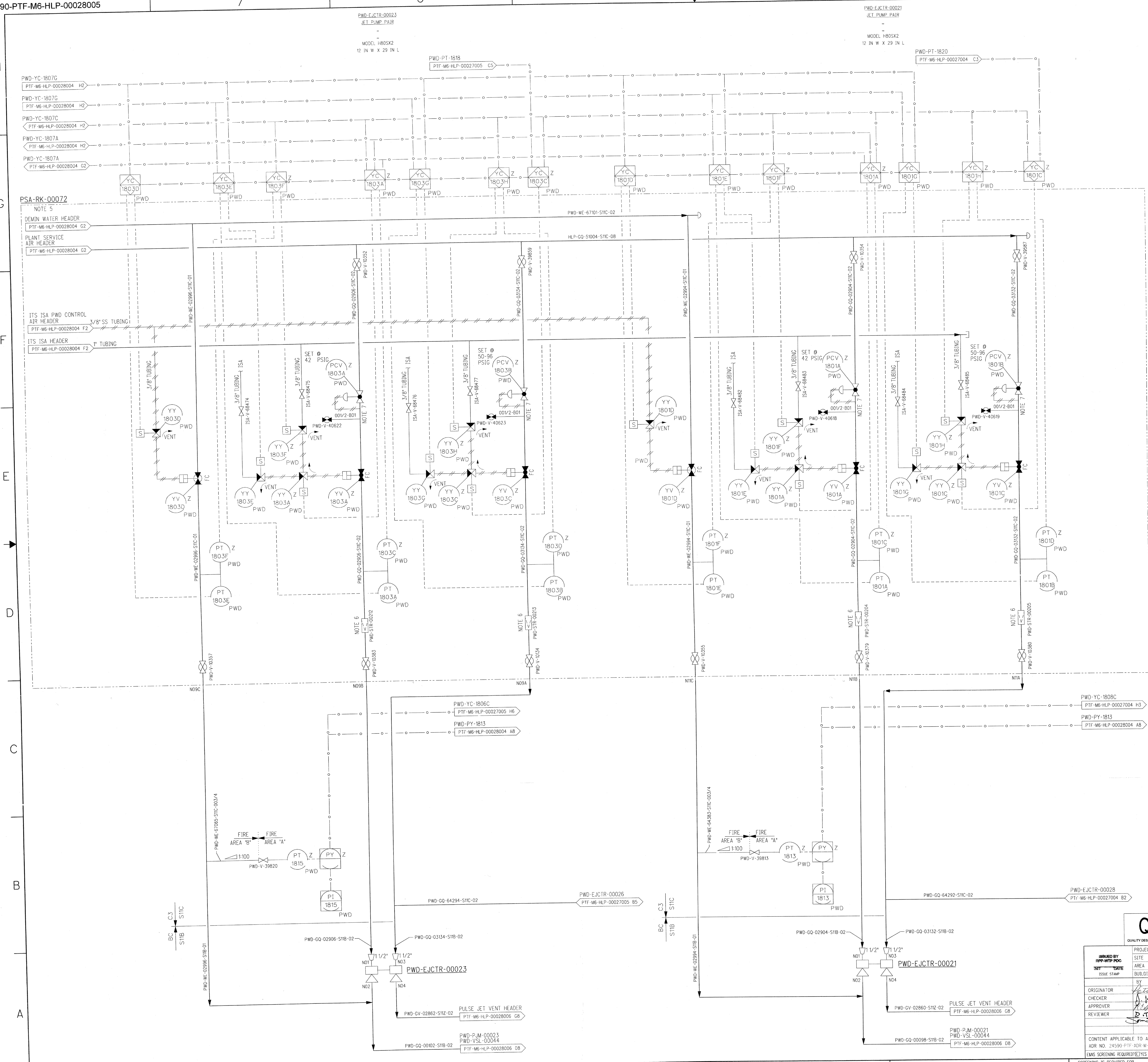

NOTES:

1. SEE DRAWINGS 24590-WTP-M6-50-00001 THROUGH 24590-WTP-M6-50-00008 FOR GENERAL NOTES, SYMBOLS AND LEGEND, AND GENERAL SLOPE REQUIREMENTS.
2. CONTENTS OF THIS DOCUMENT ARE DANGEROUS WASTE PERMIT AFFECTING.
3. THE PRESSURE BOUNDARY FOR ALL COMPONENTS ON THIS DRAWING IS QUALITY LEVEL Q AND SEISMIC CATEGORY SC-I, UNLESS OTHERWISE NOTED. THE PRESSURE BOUNDARY FOR THE NON-SAFETY INSTRUMENT SERVICE AIR (ISA) AND THE CORRESPONDING NON-SAFETY SOLENOID VALVES IT SUPPLIES IS QUALITY LEVEL CM AND SEISMIC CATEGORY SC-IV.
4. ALL LINES SHOWN ON THIS DRAWING SHALL BE FREE DRAINING, EXCEPT BLACK CELL LINES WHICH ARE SELF-DRAINING, UNLESS OTHERWISE NOTED.
5. ALL TUBING OUTSIDE RACK TO BE FIELD RUN. TUBING ROUTING, SPECIFICATION OF ADDITIONAL IN-TUBING DEVICES, AND TAGGING OF IN-TUBING DEVICES WITHIN THE RACK TO BE DONE IN ACCORDANCE WITH C&I INSTALLATION DETAILS AND DESIGN GUIDE 24590-WTP-GPG-ENG-0142.
6. STRAINER PERMANENTLY INSTALLED.
7. RECOMMENDED INSTALLATION FOR THE PCV IS TO CONNECT THE CONTROL LINE TO A STRAIGHT RUN OF PIPE 3 TO 5 FEET DOWNSTREAM OF THE PCV AND TO HAVE A MINIMUM STRAIGHT PIPE RUN OF 3 FEET UPSTREAM AND 4 FEET DOWNSTREAM OF THE PCV.

HOLD/OPEN ITEMS:

NONE

REFERENCES:

1. 24590-PTF-3YD-HLP-00001, SYSTEM DESCRIPTION FOR PULSE JET MIXER AND SPARGER MIXING SUBSYSTEMS.

Please note that source, special nuclear, and byproduct materials, as defined in the Atomic Energy Act of 1954 (AEA) are regulated at the U. S. Department of Energy (DOE) facilities exclusively by DOE acting pursuant to its AEA authority. DOE asserts that pursuant to AEA, it has sole and exclusive responsibility and authority to regulate source, special nuclear, and byproduct materials at DOE-owned nuclear facilities. Information contained herein on radionuclides is provided for process description purposes only.

Q
QUALITY DESIGNATOR

REVISION HISTORY

REV	DESCRIPTION	ORG	CHKD	RVWD	APVD	DATE
0	ISSUED FOR CONSTRUCTION					2/17/11

ISSUED BY RPP-WTP PDC
INIT DATE
ISSUE STAMP

PROJECT No.	24590
SITE	HANFORD
AREA	200E
BUILDING No.	10

	BY	DATE
ORIGINATOR	[signature]	2/16/11
CHECKER	[signature]	2/18/11
APPROVER	[signature]	2/17/11
REVIEWER	D.T. MILDON	2-17-11
	[signature]	2/17/11

BECHTEL
RIVER PROTECTION PROJECT
WASTE TREATMENT PLANT
2435 STEVENS CENTER PLACE
RICHLAND, WA 99354

CONTRACT No: DE-AC27-01RV14136

P&ID - PTF
HLP LAG STORAGE AND FEED BLENDING PROCESS SYSTEM UTILITY RACK PSA-RK-00072 PWD-VSL-00044 OUTER PJM

CONTENT APPLICABLE TO ALARA? [X] YES [ ] NO
ADR NO. 24590-PTF-ADR-M-08-0001 REV: 0
E&NS SCREENING REQUIRED? [X] YES [ ] NO E&NS INITIAL IF YES

SCALE: NONE
24590-PTF-M6-HLP-00028005
REV 0

SCREENING IS REQUIRED FOR DRAWING TYPES IDENTIFIED IN 24590-WTP-GPP-SREG-002

'E' SIZE - 44x34
COMPUTER GENERATED - MANUAL DESIGN CHANGES NOT PERMITTED

2/16/2011 3:43:52 PM

C:\Work\mdritter\dms03837\PTFM6HLP00028005.dgn
PLOTTED BY: mdritter

FORM E_SDN.DGN 02/2009

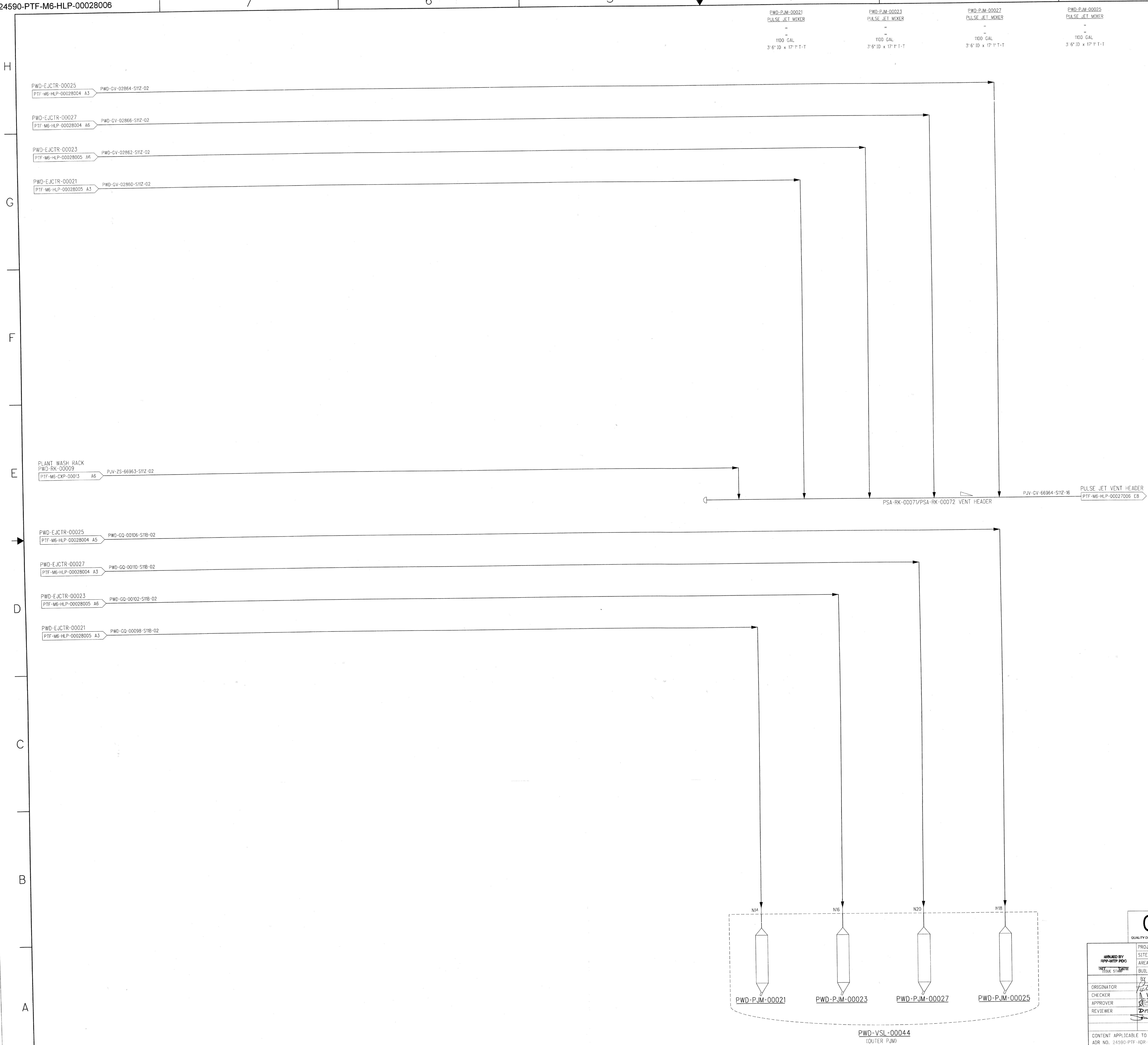

NOTES:

1. SEE DRAWINGS 24590-WTP-M6-50-00001 THROUGH 24590-WTP-M6-50-00008 FOR GENERAL NOTES, SYMBOLS AND LEGEND, AND GENERAL SLOPE REQUIREMENTS.
2. CONTENTS OF THIS DOCUMENT ARE DANGEROUS WASTE PERMIT AFFECTING.
3. THE PRESSURE BOUNDARY FOR ALL COMPONENTS ON THIS DRAWING IS QUALITY LEVEL Q AND SEISMIC CATEGORY SC-I, UNLESS OTHERWISE NOTED.
4. ALL LINES SHOWN ON THIS DRAWING ARE LOCATED IN THE BLACK CELL AND SHALL BE SELF-DRAINING, UNLESS OTHERWISE NOTED.

HOLD/OPEN ITEMS:

NONE

REFERENCES:

1. 24590-WTP-3YD-50-00003, SYSTEM DESCRIPTION FOR PULSE PULSE JET MIXER AND SPARGER MIXING SUBSYSTEMS.

Please note that source, special nuclear, and byproduct materials, as defined in the Atomic Energy Act of 1954 (AEA) are regulated at the U. S. Department of Energy (DOE) facilities exclusively by DOE acting pursuant to its AEA authority. DOE asserts that pursuant to AEA, it has sole and exclusive responsibility and authority to regulate source, special nuclear, and byproduct materials at DOE-owned nuclear facilities. Information contained herein on radionuclides is provided for process description purposes only.

REV	DESCRIPTION	ORG	CHKD	RVWD	APVD	DATE
0	ISSUED FOR CONSTRUCTION					2/17/11

REVISION HISTORY

Q
QUALITY DESIGNATOR

ISSUED BY RPP-WTP PDC
ISSUE STAMP

PROJECT No.	24590
SITE	HANFORD
AREA	200E
BUILDING No.	10

	BY	DATE
ORIGINATOR		2/10/11
CHECKER		2/14/11
APPROVER		2/17/11
REVIEWER	D. T. ALLDON	2.17.11
		2/17/11

CONTENT APPLICABLE TO ALARA? [X] YES [ ] NO
ADR NO. 24590-PTF-ADR-M-08-0001 REV: 0
E&NS SCREENING REQUIRED? [X] YES [ ] NO E&NS INITIAL IF YES

BECHTEL
RIVER PROTECTION PROJECT
WASTE TREATMENT PLANT
2435 STEVENS CENTER PLACE
RICHLAND, WA 99354

CONTRACT No: DE-AC27-01RV14136

P&ID - PTF
HLP LAG STORAGE AND FEED BLENDING PROCESS SYSTEM PLANT WASH VESSEL OUTER PJM PWD-VSL-00044

SCALE: NONE

24590-PTF-M6-HLP-00028006 REV 0

SCREENING IS REQUIRED FOR DRAWING TYPES IDENTIFIED IN 24590-WTP-GPP-SREG-002

2

'E' SIZE - 44x34
COMPUTER GENERATED - MANUAL DESIGN CHANGES NOT PERMITTED

R11333478

2/10/2011 9:32:12 AM

C:\Work\eidorn\dms03837\PTFM6HLP00028006.dgn

PLOTTED BY: eidorn

FORM E_SDH.DGN 02/2009

RCRA Operating Record Cover Sheet

Document Number: 24590-PTF-PCN-ENV-11-005

Waste Management Records:

- ☐ **R101** List of Waste Management Areas
- ☐ **R102** Waste Analysis Records
- ☐ **R103** Waste Designation Information
- ☐ **R104** Waste Transfer Records
- ☐ **R105** Movement of Containerized Waste Onsite
- ☐ **R106** Release/Spill Records
- ☐ **R114** Field Change Request/Field Change Notice
- ☐ **R116** Field Monitoring / Surveillance Checklists
- ☐ **R119** Reserved
- ☐ **R120** Reserved
- ☐ **R126** Satellite and 90-Day Accumulation Area

Compliance Schedule Submittals:

- ☐ **R401** Pretreatment Facility
- ☐ **R402** LAW Facility
- ☐ **R403** HLW Facility
- ☐ **R404** Laboratory
- ☐ **R405** Balance of Facility
- ☐ **R406** WTP All Facilities
- ☐ **R407** Human Health & Ecological Risk Assessment

Other Operating Record Documents:

- ☐ **R601** Outgoing Correspondence (RCRA Permit Relating)
- ☐ **R602** Contingency Plan Implementation
- ☐ **R603** Closure Plan Deviation
- ☐ **R604** Permit Equivalency Notice (PEN)
- ☒ **R605** Permit Change Notice (PCN)
- ☐ **R606** Annual RCRA Permit Closure and Post-Closure Cost Adjustment Report
- ☐ **R607** Permit Modification
- ☐ **R608** Incoming Correspondence (RCRA Permit Relating)

Non-Operating Record Documents:

- ☐ **N101** Meeting Minutes
- ☐ **N102** Memoranda

Special Instructions to PDC:

Link CCNs:

237270

238627

240224

ISSUED BY
RPP-WTP PDC
BY DATE

Quarter Ending 12/31/2011

24590-WTP-PCN-ENV-11-007

Hanford Facility RCRA Permit Modification Notification Form

Part III, Operating Unit 10

Waste Treatment and Immobilization Plant

Index

Page 2 of 2: Hanford Facility RCRA Permit, Part III, Operating Unit 10, Waste Treatment and Immobilization Plant
Update Engineering Specification 24590-WTP-3PS-AFPS-T0006, *Field Applied Special Protective Coatings for Secondary Containment Areas* in Appendix 7.7.

Submitted by Co-Operator:

Donna Busche 9/6/11

D. M. Busche Date

Reviewed by ORP Program Office:

D. L. Noyes 9/26/11

Date

Quarter Ending 12/31/2011

24590-WTP-PCN-ENV-11-007

Hanford Facility RCRA Permit Modification Notification Form

Unit:	Permit Part:
Waste Treatment and Immobilization Plant	**Part III, Operating Unit 10**

Description of Modification:

The purpose of this Class 1 modification is to update Engineering Specification 24590-WTP-3PS-AFPS-T0006, *Field Applied Special Protective Coatings for Secondary Containment Areas* in Appendix 7.7.

The following specification is submitted to replace the document currently in Appendix 7.7:

Appendix 7.7			
Replace:	24590-WTP-3PS-AFPS-T0006 Rev. 1	With	24590-WTP-3PS-AFPS-T0006 Rev. 2

This modification requests Ecology approval and incorporation into the permit the specific changes to this engineering specification that are identified in Revision History of the specification that have been issued since the last revision of the document. Revisions are the result of ongoing design. This specification has been revised to incorporate the following changes:

- Incorporated two Field Changes (provided to Ecology in accordance with Condition III.10.C.9.h.)
- Added ALARA definitions in Section 2.3
- Updated ASTM codes and standards in Section 3.1.1
- Updated references in Section 3.1.4
- Clarified manufacturer prequalification requirement in Section 4.2
- Modified abrasive cleaning and adhesive-backed tape in Sections 6.4 and 6.6
- Clarified acceptability requirement for drying time in Section 7.4.10
- Updated ALARA-related information in Appendices A and B
- Added coating requirements for outdoor areas in Appendix C, Table 1
- Other minor editorial changes and corrections

This modification requests Ecology approval and incorporation of the following outstanding change document(s) into the permit. Although not yet incorporated into the revised documents included in this PCN, the listed outstanding change document(s) are intended to be incorporated into the permit:

None

WAC 173-303-830 Modification Class:	Class 1	Class 1	Class 2	Class 3
Please mark the Modification Class:	X			

Enter relevant WAC 173-303-830, Appendix I Modification citation number: A.1 and A3.

Enter wording of WAC 173-303-830, Appendix I Modification citation:

A.1. Administrative and informational changes

A.3. Equipment replacement or upgrading with functionally equivalent components (e.g., pipes, valves, pumps, conveyors, controls)

Modification Approved/Concur: [X] Yes [ ] Denied (state reason below)

Reason for denial:

Reviewed by Ecology:

D. McDonald — 10-14-11 Date

ISSUED BY
RPP-WTP PDC

R1127 1500

RIVER PROTECTION PROJECT – WASTE TREATMENT PLANT

ENGINEERING SPECIFICATION

FOR

Field Applied Special Protective Coatings For Secondary Containment Areas

Please note that source, special nuclear, and byproduct materials, as defined in the Atomic Energy Act of 1954 (AEA) are regulated at the U. S. Department of Energy (DOE) facilities exclusively by DOE acting pursuant to its AEA authority. DOE asserts that pursuant to AEA, it has sole and exclusive responsibility and authority to regulate source, special nuclear, and byproduct materials at DOE-owned nuclear facilities. Information contained herein on radionuclides is provided for process description purposes only.

Content applicable to ALARA? ☒ **Yes** ☐ **No**

ADR No.	**Rev**
24590-WTP-ADR-CSA-02-001	0
24590-WTP-ADR-ENG-03-004	7

Specification changes retroactive? ☐ **Yes** ☒ **No**
☐ **N/A (alpha revision or revision 0)**

NOTE: Contents of this document are Dangerous Waste Permit affecting.

Quality Level
CM
DOE Contract No. DE-AC27-01RV14136

REV	DATE	BY	CHECK	REVIEW	E&NS	DPEM/EM
2	9-2-10	Eric A. Hoh			Mel Rosenberg	JRB
1	3/16/09	TRC	LRL	LDK	RFC	JRB
0	11/10/03	TRC	LDK	JH		DTS

SPECIFICATION No. 24590-WTP-3PS-AFPS-T0006 **Rev** 2

Revision History

Revision	Reason for Revision
0	Issued for Construction
1	Incorporate 24590-WTP-3PN-AFPS-00016 with modifications to section 6.6.1 to read "All coating materials, thinners, solvents and cleaning materials used on SS shall be shown to have a low leachable halogens content that shall not exceed 200ppm, total sulfur content shall not exceed 400 ppm sulfur. The total amounts of low melting point metals such as lead, zinc copper, tin, antimony and mercury shall not exceed one (1) percent and mercury shall not exceed 50 ppm."; 24590-WTP-3PN-AFPS-00017 with modifications to section 6.2.1.5.2 to remove "regulated tanks", modify Appendix I note 2 to remove "or contain regulated tanks" ; 24590-WTP-3PN-AFPS-00027; 24590-WTP-FC-C-05-0120; 24590-WTP-FC-C-06-0068; Add section 2.1.1.1 to incorporate job mock ups; Change section 4.2 to read "Only materials that are prequalified in accordance with Appendix B and the subcontractor has a current Appendix F shall be used."; Add to section 7.3.3.2 "Concrete shall be suitably roughened and textured using one of the specified methods of surface preparation during the coating system mock-ups performed and accepted by the CONTRACTOR."; Remove all section references on Appendix I Installation detail drawings; Add Appendix J to incorporate interface installation detail drawings; Delete Appendix D; Delete Appendix H
2	Incorporated 24590-WTP-FC-C-08-0535, 24590-WTP-FC-C-09-0102. Deleted all references to Appendix D throughout specification. Delete section 2.2.1. Added definitions for ALARA, ALARA Areas, and Non-ALARA Areas. Deleted term "Radiation Areas"; replaced with ALARA Areas throughout specification. In section 2.4.5, added phrase "in accordance with WTP E&NS Site requirements." In section 3, updated codes and standards editions and added 24590-WTP-3PS-NW00-T0002. In section 3.1.4, deleted 24590-WTP-GPP-SRAD-007 because it is not IFC. Clarified section 4.2. In section 4.3, added requirement for Subcontractor to submit latest MSDS. Inserted or corrected G321-E & -V category numbers in section 4.5 and 4.9. Modified section 6.4 to align with abrasive requirements in other coating specifications. In section 6.6.1, add "adhesive-backed tape or labels" to list requiring testing for contact with stainless steel. In section 7.4.10, clarified acceptability requirement for drying time of coatings. In section 7.5.6, changed placeholder from "Later" to "Reserved for Future Use". Added section 7.6. Reformatted section 8.1.9 to enhance readability. In section 8.3.1, added cross reference 8.1.6. In section 9.1.5, changed requirement for shelf life extension. Revised Appendix A. In Appendix C Table 1, added coating system SC-T5-P for outdoor secondary containment on concrete and steel. In Appendix C Table 2, added system code SW16-1, and changed SW16 to SW16-2. In Appendix C Table 2, added system code SW30 (SC-T5-P). Identified Appendix I Details as "No Scale".

Contents

1 Scope 1
2 General 1
2.1 Responsibility 1
2.2 Surfaces Not To Be Coated 3
2.3 Definitions 3
2.4 Safety 5
3 Applicable Documents 6
3.1 Codes and Standards 6
4 Submittals 8
5 Quality Assurance 10
5.1 General 10
6 Materials 12
6.1 Coating Materials 12
6.2 Patching/Filler Materials 13
6.3 Batch Information 15
6.4 Abrasives 15
6.6 Coating Over Stainless Steel (SS) 15
7 Application 16
7.1 General 16
7.2 Pre-Surface Preparation 16
7.3 Surface Preparation 17
7.4 Coating Application 19
7.5 Remedial Work 21
7.6 Interferences 22
8 Inspection 22
8.1 General 22
8.2 Surface Preparation Inspection 24
8.3 Coating Application 24
9 Storage, Handling and Shipping 25
9.1 Coating Materials 25
10 Documentation 26
11 Design Changes Incorporated by Reference 26

Appendices

Appendix A Supplier Quality Assurance Program Requirements Data Sheet A-1

Appendix B WTP Project Special Protective Coating (SPC) Material Prequalification Requirements for Secondary Containment B-1

Appendix C C-1

Appendix D Deleted D-1

Appendix E Color Scheme E-1

Appendix F Coating Manufacturer's Product Identity Certification Record F-1

Appendix G Surface Preparation and Coating Inspection Form G-1

Appendix H Deleted H-1

Appendix I Secondary Containment Installation Typical Details I-1

Appendix J Interface Installation Detail Drawing References J-1

1 Scope

1.1 This specification defines the minimum requirements for the field application of Special Protective Coating's (SPC's) applied onto concrete and steel surfaces that have been identified as a Secondary Containment area. The coating systems for concrete and steel surfaces are identified in Appendix C Table 2 of this specification. The CONTRACTOR shall identify the areas requiring secondary containment coatings in the appropriate room finish schedule for each facility (i.e., LAW, HLW, PTF, LAB & BOF). Unless indicated elsewhere in the subcontract documents, the field coating Work shall include-

- Touch up of shop or field coated carbon steel embeds prior to application of identified secondary containment coating system.
- Surface preparation and application of the applicable coating system for concrete and steel surfaces. Corner coving on floor/wall, wall/wall corners, around concrete, steel embed attachments, grouted anchor bolts and other items that create a corner or sharp transition in coating system direction.
- Saw cutting and chipping concrete as required by applicable installation detail.
- Surface preparation and application of a primer/sealer/barrier coat on shop coated steel embeds that have been determined unsuitable for the installation location exposure conditions in the secondary containment enclosure area or incompatible with the specified secondary containment coating system.

1.2 Finish color shall be as noted in Appendix E.

1.3 All SPC's are designated as Commercial Grade and non-safety. SPC quality program requirements must comply with DOE Order 414.1C as identified in Appendix A. The full order is not applicable (also refer to Section 5). **NQA-1 Quality Assurance requirements do not apply to the manufacture or application of SPC's.** However, SPC's used in high radiation areas (>2E8 rads over 40 years) shall be prequalified in accordance with Appendix B.

1.4 The Field application of all concrete and steel coatings will be performed at the WTP project located in the 200 East Area of the Hanford Site in Washington.

2 General

2.1 Responsibility

2.1.1 The SUBCONTRACTOR shall supply all personnel, coating materials and all necessary surface preparation, application, inspection and equipment including all Personal Protection Equipment (PPE), safety, rigging/access (as required), masking protection, containment, environmental control/dehumidification/ventilation equipment, area covering to protect from direct sunlight and inclement weather and all consumables. The SUBCONTRACTOR shall

perform all pre-surface preparation, surface preparation, coating application, inspection and documentation for all SPC work.

2.1.1.1 The SUBCONTRACTOR shall perform a job mock up for each coating system identified for installation. Special concrete walls and floors or a sample area of the facility shall be provided by the CONTRACTOR for the mock ups. Each sample area shall be approximately 5'x5' in size. The mock up coating sample shall be applied in accordance with the specification and CONTRACTOR accepted procedures. Surface defects in the concrete shall be filled flush with the surface plane and shall result in a smooth, decontaminable finish when top-coated with the remainder of the coating system. The completed mock-up shall provide a surface finish acceptable to the CONTRACTOR. The accepted mock-up shall be used as a reference standard of quality for surface preparation and applied coating surface finish. At the CONTRACTOR's notification the SUBCONTRACTOR shall inspect all concrete surfaces scheduled for coatings to ensure they are suitable for performing the specified surface preparation and coating application. Within 72 hours of notification, the SUBCONTRACTOR shall notify the CONTRACTOR in writing, of items found to be damaged or otherwise unsuitable for surface preparation or coating application.

2.1.2 The SUBCONTRACTOR shall provide surface preparation of overlap or tie-in areas on stainless steel, concrete and carbon steel surfaces as required.

2.1.3 The SUBCONTRACTOR shall install flexible joint sealant, flexible epoxy filler material, foam backer rod, bond breaker tape and material where specifically identified for use by the CONTRACTOR.

2.1.4 The SUBCONTRACTOR shall store all coating materials in accordance with this Specification and CONTRACTOR accepted procedures. The coating system and associated coating materials shall be in accordance with Appendix C Table 1 Secondary Containment Coating Systems, and Table 2 Secondary Containment Coating Materials or as otherwise identified by the CONTRACTOR. All coating materials shall be used on a first in first out basis where the oldest batch of any given material or component is used before batches with a later expiration date.

2.1.5 The SUBCONTRACTOR shall perform all inspections and tests contained in this Specification prior to acceptance by the CONTRACTOR.

2.1.6 The SUBCONTRACTOR shall provide application and inspection documentation for all coating Work accepted by the CONTRACTOR.

2.1.7 The SUBCONTRACTOR shall provide marking materials that are fully compatible with the coating system(s) specified. Marking materials shall be suitable for use on stainless steel.

2.1.8 The SUBCONTRACTOR shall provide environmental control equipment as necessary for surface preparation, coating application and curing.

2.1.9 The SUBCONTRACTOR shall only use inspection equipment that is currently calibrated and controlled by a calibration program accepted by the CONTRACTOR.

2.1.10 The SUBCONTRACTOR shall give CONTRACTOR a minimum of ten (10) working days written notice prior to the start of coating Work and coordinate all field coating Work with the CONTRACTOR on a daily basis prior to the start of daily coating Work.

2.1.11 The SUBCONTRACTOR shall give the CONTRACTOR at least twenty four (24) hours written (e.g., letter, memo, e-mail) notice for all agreed upon inspection witness and hold points including mock-ups.

2.2 Surfaces Not To Be Coated

2.2.1 Deleted

2.2.2 Rubber or similar nonmetallic parts.

2.2.3 Non-Ferrous metals unless otherwise specified.

2.2.4 Stainless Steel surfaces unless specifically required by the CONTRACTOR (areas where stainless steel is welded to carbon steel the coating overlap onto the stainless steel shall be at least 1" or as otherwise specified).

2.3 Definitions

2.3.1 ALARA- "As Low As is Reasonably Achievable" is the approach to radiation protection to manage and control exposures (both individual and collective) to the work force and to the general public to as low as is reasonable, taking into account social, technical, economic, practical, and public policy considerations. ALARA is not a dose limit but a process which has the objective of attaining doses as far below the applicable limits as is reasonably achievable.

2.3.2 ALARA Areas or ALARA Zones- The designation used to identify the "Work Area" where personnel exposure to radiation and radioactive materials is managed and controlled at levels As Low As is Reasonably Achievable (ALARA) by employing Special Protective Coatings (SPC's) to facilitate decontamination. Typically this includes C2 areas floors, C3 and occupied C5 areas (floors, walls, ceilings and various commodities) up to 7.5 feet above the floor finish or platform and reachable surfaces within 40 inches of the "Work Area".

2.3.3 Batch- A quantity of coating made in one production run. A unique batch number is assigned for each production run of the epoxy coating material, the curing agent, fillers and the thinner.

2.3.4 Bug Holes- Small regular or irregular cavities resulting from entrapment of air bubbles in the surface of formed concrete during placement and consolidation.

2.3.5 Curing Membrane - Materials applied to prevent the moisture in uncured concrete from evaporating too rapidly. Where Special Protective Coatings are being applied, the curing membranes or compounds shall not contain paraffin, oil, silicone or other compounds in sufficient quantities to compromise proper coating adhesion.

2.3.6 CONTRACTOR- Means BECHTEL NATIONAL, INC. (BNI) and all of its authorized representatives acting in their professional capacities.

2.3.7 Dry Film Thickness (DFT)- The thickness of an applied coating, once dry or cured. Usually expressed in mils (each mil is 1/1000 of an inch). Measured using a wet film thickness gage and calculating dry film thickness based on coating material volume solids. Alternatively measured using an ultra sonic dry film thickness device or using a destructive test that cuts the dry film and optically measures the dry film thickness.

2.3.8 Fish Eyes (cratering)- Formation of holes or visible depression in the coating film. Usually from a contaminated particle on the surface prior to applying the coating.

2.3.9 Efflorescence- A white crystalline or powdery deposit on the surface of concrete. Efflorescence results from leaching of lime or calcium hydroxide out of the permeable concrete mass over time by water , followed by reaction with carbon dioxide and acidic pollutants.

2.3.10 Form Release Agents- Compounds such as glossy paint or other film forming release material applied to forms to allow easy removal of forms. Where Special Protective Coatings are being applied the form release agent should not impart a residue of paraffin, oil, silicone or other contaminant onto the surface that could compromise proper coating adhesion.

2.3.11 Hydration- The reaction of water with the calcium silicate, aluminate or aluminoferrite components of fine cement grains, necessary for the setting and densifying of concrete. Hydration results in the formation of calcium hydroxide and colloidal gels which occupy a larger volume than the original cement.

2.3.12 Hydrostatic Pressure- The pressure exerted by water at rest.

2.3.13 Holiday- A Pinhole, skip, discontinuity, or void in the applied coating film.

2.3.14 Laitance- A thin, weak, brittle layer of cement and aggregate fines in a concrete surface. The amount of laitance is influenced by the degree of working or amount of water in the concrete. For the application of Special Protective Coatings all laitance must be removed to sound, dense concrete.

2.3.15 Item- An all inclusive term used in place of any of the following: appurtenance, assembly, component, equipment, material, module, part, structure, sub-assembly, sub-system, system, unit or support systems.

2.3.16 Mfg. Std. Coating- A manufacturer's standard coatings system applied to off the shelf items or standard line items of routine manufacture that are not specifically manufactured for the WTP project.

2.3.17 NIST- National Institute of Standards and Technology.

2.3.18 Non-ALARA Areas or Non-ALARA Zones- The designation for areas outside of the defined "Work Area" where the potential to become contaminated with radioactive material is low. This includes all C2 walls, all C1 areas and all other areas that do not have a contamination class designation.

2.3.19 Outgassing- The upward and outward emission of air or moisture vapor from concrete or coatings.

2.3.20 Pinhole- Minute hole visible in the applied coating without magnification, that appear to penetrate one or more layers of the coating film.

2.3.21 Profile- The surface roughness resulting from surface preparation by abrasive blasting or other CONTRACTOR accepted methods (Refer to Section 7.3.4.3)

2.3.22 Deleted

2.3.23 Sag- The running of freshly applied coating on a vertical surface due to being applied too thick. (Same definition for runs and drips).

2.3.24 Supplier Deviation Disposition Report (SDDR)- A standard WTP project document that can be used by a vendor or SUBCONTRACTOR to identify an actual or potential deviation or discrepancy that requires engineering evaluation and disposition prior to acceptance.

2.3.25 Surface Hardeners- Compounds applied to a concrete surface to improve hardness, and to decrease permeability.

2.3.26 Surface Porosity- Permeability of the surface that allows absorption of vapors, moisture, chemicals, and coating liquids. Small interconnected voids that allow fluids to penetrate an otherwise impervious material.

2.3.27 SUBCONTRACTOR- Means the company, corporation, partnership, individual, or other entity to which this subcontract (purchase order/material requisition) is issued, its authorized representatives, successors, and permitted assigns.

2.3.28 Training and Certification- Training to include an understanding of the specification, CONTRACTOR accepted Work procedures and manufacturer's published instructions. Certification to include a documented performance test demonstrating quality Work acceptable to the CONTRACTOR. (Refer to Sections 4.6, 5.1.3.2, 5.1.7, 7.1.2, 8.1.1.1 and Appendix A)

2.3.29 RPP-WTP- River Protection Project-Waste Treatment Plant

2.3.30 Work Area- The physical area of the facility that operations personnel can come in contact with contaminated surfaces of the building structure or commodities therein.

2.4 Safety

2.4.1 All surface preparation and coatings Work shall comply with all applicable environmental and safety provisions, laws, regulations in local jurisdiction (e.g., County and State). Work being performed in the United Sates shall be in strict accordance with OSHA 29 CFR 1910, State and local safety and environmental requirements.

2.4.2 The SUBCONTRACTOR shall comply fully with OSHA Hazard Communication Standard 29CFR 1910. Material Safety Data Sheets (MSDS) for all materials, including thinners and cleaning solvents, shall be obtained from the materials manufacturer and made available at the place of application for review.

2.4.3 The Volatile Organic Compound (VOC) content of all materials shall comply with Federal, State and Local or other Regulatory requirements.

2.4.4 The SUBCONTRACTOR shall control safe working and environmental conditions employing items such as but not limited to barricades, masking/tarping, ventilation, dehumidification and safety watches to provide safe quality work from surface preparation through application, curing and inspection activities.

2.4.5 The SUBCONTRACTOR shall be responsible for proper disposal of liquid or solid waste generated during the work described herein (residual coating material, thinners, solvent, wipes, rags, etc.), in accordance to WTP E&NS Site requirements.

3 Applicable Documents

3.1 Codes and Standards

The latest applicable edition of the following codes, standards, specifications or WTP procedures form a part of this Specification.

3.1.1 American Society for Testing and Materials (ASTM)

ASTM E337-02 (Reapproved 2007)
Test for Relative Humidity by Wet-and-Dry Bulb Psychrometer
ASTM D412-98, 98 (Reapproved 2002), 06 (Editorial Revision 2008)
Standard Test Methods for Vulcanized Rubber and Thermoplastic Elastomers-Tension
ASTM D1653-93 (Reapproved 1999), 03, 03 (Reapproved 2008)
Standard Test Methods for Water Vapor Transmission for Organic Coating Films
ASTM D3912-95 (Reapproved 2001)
Standard Test Method for Chemical Resistance of Coatings Used in Light-Water Nuclear Power Plants
ASTM D3276-00, 05, 07
Standard Guide for Painting Inspectors (Concrete and Masonry Substrates)
ASTM D4060-01, 10
Standard Test Method for Abrasion Resistance of Organic Coatings by the Taber Abraser
ASTM D4082-02
Standard Test Method for Effects of Gamma Radiation on Coatings for Use in Light-Water Nuclear Power Plants
ASTM D4138-94 (Reapproved 2001), 07
Test Method for Measurement of Dry Film Thickness of Protective Coating Systems by Destructive Means
ASTM D4227-99 (Reapproved 05), 05
Practice for Qualification of Journeyman Painters for Application of Coatings to Concrete Surfaces of Safety Related Areas in Nuclear Facilities
ASTM D4228-99 (Reapproved 05), 05
Practice for Qualification of Journeyman Painters for Application of Coatings to Steel Surfaces of Safety Related Areas in Nuclear Facilities
ASTM D4258-83 (Reapproved 2005), 05
Practice for Surface Cleaning of Concrete for Coating
ASTM D4259-88 (Reapproved 2006)

Standard Practice for Abrading Concrete
ASTM D4262-83 (Reapproved 2005), 05
Standard Test Method for pH for Chemically Cleaned or Etched Concrete Surfaces
ASTM D4263-83 (Reapproved 2005)
Test Method for Indicating Moisture in Concrete by the Plastic Sheet Method
ASTM D4285-83 (Reapproved 2006)
Test Method for Indicating Oil or Water in Compressed Air
ASTM D4414-95 (Reapproved 2007)
Practice for Measurement of Wet Film Thickness of Organic Coatings by Notch Gages
ASTM D4417-93(Reapproved 1999), 03
Field Measurement of Surface Profile of Blast Cleaned Steel
ASTM D4537-91 (Reapproved 1996), 04
Standard Guide for Establishing Procedures to Qualify and Certify Inspection Personnel for Coating Work Inspectors in Nuclear Facilities.
ASTM D4541-02, -09
Standard Test Method for Pull-Off Strength of Coatings Using Portable Adhesion Testers
ASTM D4940-98 (Reapproved 2003)
Test for Conductimetric Analysis of Water Soluble Ionic Contaminants of Blasting Abrasives
ASTM D5139-90 (Reapproved 2001)
Standard Specification for Sample Preparation for Qualification Testing of Coatings Used in Nuclear Power Plants
ASTM D5144-00, (Editorial Revision 2009)
Standard Guide for Use of Protective Coating Standards in Nuclear Power Plants
ASTM D5498-01, 09
Standard Guide for Developing a Training Program for Coating Work Inspectors in Nuclear Facilities.
ASTM D6132-97, 04, 08
Standard Test Method for Nondestructive Measurement of Dry Film Thickness of Applied Organic Coatings Over Concrete Using an Ultrasonic Gage
ASTM D6237-98, 03, -09
Standard Guide for Painting Inspectors (Concrete and Masonry Substrates)

3.1.2 The Society for Protective Coatings (SSPC)

SSPC-AB1-91 (Editorial Revision 2004) -91 (Editorial Revision 2007)
Mineral and Slag Abrasive
SSPC-PA2-96, 04
Measurement of Dry Paint Thickness with Magnetic Gages
SSPC-SP1-82 (Editorial Revision 2004)
Solvent Cleaning
SSPC-SP6-00, 07
Commercial Blast Cleaning
SSPC-SP7-00, 07
Brush -Off Blast Cleaning
SSPC-SP10-00, 07
Near-White Metal Blast Cleaning
SSPC-SP11-87 (Editorial Revision 2004)

Power Tool Cleaning to Bare Metal
SSPC-SP12-95, 02
Surface Preparation and Cleaning of Metals by Waterjetting Prior to Recoating
SSPC-SP13-97 (Reapproved 2003)
Surface Preparation of Concrete
SSPC-Vis 1-02 (Editorial Revision 2004)
Visual Standard for Abrasive Blast Clean Steel
SSPC-Vis 3-93, 04
Visual Standard for Power and Hand Tool Cleaning

3.1.3 Occupational Safety and Health Administration (OSHA)

OSHA 29 CFR 1910	Occupational Safety and Health Standards

3.1.4 WTP Project Documents

24590-WTP-3PS-AFPS-T0004	Field Applied Special Protective Coatings for Concrete Surfaces
24590-WTP-3PS-AFPS-T0003	Field Applied Special Protective Coating for Steel items and Equipment.
24590-WTP-3PS-AFPS-T0002	Special Protective Coating Limited-Combustible Testing Protocol
24590-WTP-3PS-AFPP-T0001	Painting (Professional Line Products) 09912
24590-WTP-3PS-NW00-T0002	Chemical Requirements for Materials Used in Contact with Austenitic Stainless Steel and Nickel Based Alloys

3.1.5 Department of Energy (DOE)

DOE Std. 1066-97	DOE STANDARD Fire Protection Design Criteria
DOE Order 414.1C Change 1 Issued 6/17/07	Quality Assurance

3.1.6 National Fire Protection Association (NFPA)

NFPA 801 2003 Edition	Standard For Fire Protection For Facilities Handling Radioactive Materials

4 Submittals

4.1 SUBCONTRACTOR shall submit detailed written procedures for the following-

- Material receiving, marking, storage, handling
- Surface preparation
- Environmental control
- Application
- Curing
- Inspection and testing

- Touch-up/repair
- Application personnel qualification and Inspector qualification (G321-E, category 28.0)
- Proposed documentation forms. The final procedure and documentation forms shall be submitted for the CONTRACTOR's approval (G321-E category 15.0).

(The above items can be grouped into a common procedure where appropriate)

4.2 Materials shall only be used if they are prequalified in accordance with Appendix B and the subcontractor has a current Coating Manufacturer's Product Identity Certification Record, contained in Appendix F. **Coating material prequalification testing is only required of the coating manufacturer and not the Special Protective Coating Application SUBCONTRACTOR.**

4.3 The SUBCONTRACTOR shall identify the specific products by manufacturer and catalog number and shall submit the coating manufacturer's latest published product data sheet application instructions and Material Safety Data (MSDS). When coating/sealant material is purchased, it shall be accompanied by the latest MSDS revision for the material at the time of shipment. If the MSDS received with the material shipment is newer than the Project record on file for that material, the new revision of the MSDS shall be submitted by the SUBCONTRACTOR. Conflicts, if any, between the SUBCONTRACTOR's normal procedures, the coating manufacturer's recommendations, and this Specification shall be brought to the attention of the CONTRACTOR for resolution and written permission to proceed (G321- E category 11.0).

4.4 The SUBCONTRACTOR shall submit original Coating Manufacturer's Product Identity Certification Records for each and every batch of coating material purchased for use on the WTP project. (Refer to Appendix F) (Refer to G321 V category 13.0)

4.5 The SUBCONTRACTOR shall complete and submit a daily inspection record as a part of the Work procedures that includes all elements provided in Appendix G as a minimum. An entry for wet bulb is not required when the accepted device used to measure humidity and dew point does not require a wet bulb. (Refer to Section 8.1.9 and 10.2) (G321-V category 25.0)

4.6 The SUBCONTRACTOR shall submit with coating procedures a Supplier Quality Assurance Program Data Sheet (Appendix A) appropriate for the activity being performed (e.g. manufacture of SPC's or application of specified SPC's). The SUBCONTRACTOR shall identify their Quality Assurance Program (QA) Plan documents and paragraph references on the QA Program Data Sheet. All required QA Plan elements and corresponding SUBCONTRACTOR's identified documents are subject to CONTRACTOR's evaluation and verification.

4.7 The SUBCONTRACTOR shall provide a personnel training and certification plan for applicators and inspectors. (Refer to Sections, 5.1.3.2, 5.1.7, 7.1.2, 8.1.1.1 and Appendix A).

4.8 The SUBCONTRACTOR shall supply with their coating procedures a list of previous project case histories, where they applied coating materials similar to the materials specified herein. This list shall include the type of item coated, the project name, a project client contact name and phone number, if possible, for verification.

4.9 Color samples shall be submitted prior to the start of Work. Colors shall be as defined in Appendix E or as otherwise defined by the CONTRACTOR. Color samples shall be 1' x 1' in size. At least five sets of all colors shall be submitted. The type of panel used and the coating material used for the color samples shall be as agreed upon with the CONTRACTOR (G321-E category 10.0.

5 Quality Assurance

5.1 General

5.1.1 The SUBCONTRACTOR shall control the quality of items and services to meet the requirements of this Specification, applicable codes and standards referenced herein, and associated subcontract documents. The SUBCONTRACTOR shall prepare and maintain documentation to provide evidence of compliance with CONTRACTOR accepted procedures and this Specification. A copy of the coating inspection documentation shall be included in the shipping documentation.

5.1.2 The SUBCONTRACTOR, including any lower-tier organizations , shall be subject to surveillance inspection by the CONTRACTOR's representative until completion or termination of the subcontract. This surveillance inspection does not relieve the SUBCONTRACTOR from the responsibility for conformance to the requirements of procurement documents, this specification and CONTRACTOR accepted procedures.

5.1.3 The SUBCONTRACTOR shall maintain a quality assurance plan for items located in Non-ALARA and ALARA Areas, as defined in Section 2.3 that addresses as a minimum, the elements and implementing procedures called for in the Supplier Quality Assurance Program Data Sheet, Appendix A.

5.1.3.1 Quality Assurance Plan (QAP)

5.1.3.1.1 A written QAP must be developed, implemented, and maintained.

5.1.3.1.2 The QAP must describe the organizational structure, functional responsibilities, levels of authority, and interfaces for those managing, performing, and assessing the Work.

5.1.3.1.3 The QAP must describe management processes, including planning, scheduling, and resource considerations.

5.1.3.2 Personnel Training and Qualification.

5.1.3.2.1 Personnel must be trained and qualified to ensure they are capable of performing their assigned Work.

5.1.3.2.2 Personnel must be provided continuing training to ensure that job proficiency is maintained.

5.1.3.3 Quality Improvement.

5.1.3.3.1 Processes to detect and prevent quality problems must be established and implemented.

5.1.3.3.2 Items, services, and processes that do not meet established requirements must be identified, controlled, and corrected according to the importance of the problem and the Work affected.

5.1.3.3.3 Correction must include identifying the causes of problems and working to prevent recurrence.

5.1.3.3.4 Item characteristics, process implementation, and other quality-related information must be reviewed and the data analyzed to identify items, services, and processes needing improvement.

5.1.3.4 Documents and Records.

5.1.3.4.1 Documents must be prepared, reviewed, approved, issued, used, and revised to prescribe processes, specify requirements, or establish design.

5.1.3.4.2 Records must be specified, prepared, reviewed, approved, and maintained.

5.1.3.5 Work Processes.

5.1.3.5.1 Work must be performed to established technical standards and administrative controls using approved instructions, procedures, or other appropriate means.

5.1.3.5.2 Items must be identified and controlled to ensure their proper use.

5.1.3.5.3 Items must be maintained to prevent their damage, loss, or deterioration.

5.1.3.5.4 Equipment used for process monitoring or data collection must be calibrated and maintained.

5.1.3.6 Design.

5.1.3.6.1 NA

5.1.3.7 Procurement.

5.1.3.7.1 Procured items and services must meet established requirements and perform as specified.

5.1.3.7.2 Prospective suppliers must be evaluated and selected on the basis of specified criteria.

5.1.3.7.3 Processes to ensure that approved suppliers continue to provide acceptable items and services must be established and implemented.

5.1.3.8 Inspection and Acceptance Testing.

5.1.3.8.1 Inspection and testing of specified items, services, and processes must be conducted using established acceptance and performance criteria.

5.1.3.8.2 Equipment used for inspections and tests must be calibrated and maintained.

5.1.3.9 Management Assessment.

5.1.3.9.1 NA

5.1.3.10 Independent Assessment.

5.1.3.10.1 NA

5.1.4 The SUBCONTRACTOR shall provide the CONTRACTOR's representative with a Work activity schedule and shall notify the CONTRACTOR of all required inspection points prior to the scheduled date for coating activities (Refer to Section 2.1.10 and 2.1.11 herein).

5.1.5 If the SUBCONTRACTOR's proposed Work plan or procedures differ from the requirements of this Specification, the SUBCONTRACTOR shall specifically identify and explain all differences in writing, using an SDDR or other appropriate WTP project document, and submitted to the CONTRACTOR for review and approval prior to proceeding with a known deviation after the fact.

5.1.6 All pre-established witness and hold points shall be witnessed by the CONTRACTOR unless a written waiver has been issued.

5.1.7 All personnel shall receive training in the specific project coating requirements and the associated CONTRACTOR accepted work procedures that are relevant to their individual work assignments.

5.1.7.1 Painter/coating application personnel used to prepare the surface and apply coatings shall be trained, qualified and certified in accordance with the SUBCONTRACTOR's procedures accepted by the CONTRACTOR.

5.1.7.2 The SUBCONTRACTOR's coating Work inspectors shall have previous experience in coating inspection and shall receive documented training in the specific project coating requirements, ASTM standards and other relevant standards including the CONTRACTOR accepted Work procedures. All coating inspectors shall be trained, qualified and certified Level I inspectors meeting the requirements of Section 8.1.1.1. Inspector training, qualification and certification shall also comply with the SUBCONTRACTOR's document(s) identified on the submitted Supplier QA Program Data Sheet (Appendix A).

6 Materials

6.1 Coating Materials

6.1.1 All Special Protective Coating (SPC) secondary containment materials applied to concrete or steel items located in ALARA Areas are prequalified in accordance with Appendix B. All SPC's applied to the building structure in ALARA Areas or in any of the process buildings shall employ Approved coating materials as defined in Appendix B.

6.1.2 The Volatile Organic Compound (VOC) content of all materials shall comply with Federal, State and Local or other Regulatory requirements that have jurisdiction. The maximum allowable VOC for this project is 3.8 lbs./gal (450 gms/liter)

6.1.3 Coating materials including the primer intermediate and finish coat on a given item, shall all be from the same manufacturer as identified in Appendix C.

6.1.4 Secondary Containment repair materials shall be the same as those originally used or shall be those recommended by the manufacturer or shown to be compatible with the original coating and acceptable to the CONTRACTOR. Repair materials shall be in pre-measured units, and only complete kits shall be mixed. Splitting or breaking down pre-measured units of multi-component coating materials may be considered if the SUBCONTRACTOR prepares a procedure that requires accurate measurement of all materials and the SUBCONTRACTOR's QC inspector monitors/verifies each and every mix. This procedure must be submitted to the CONTRACTOR for review and permission to proceed.

6.1.5 Appendix C Tables contain the specified Special Protective Coatings for the WTP project. Appendix C contains the generic coating systems and approved coating materials. The generic coating system (primarily Epoxy or Epoxy Novolac materials) used on concrete and steel in secondary containment areas shall be coordinated with the generic coating materials indicated in the Architectural Room Finish Schedules for LAW, HLW, PTF, LAB and selected areas of BOF and their physical location. The Architectural Room Finish Schedules will identify coating materials for Secondary containment based on evaluation of chemical exposure , temperature and mechanical abuse based on a case by case criteria and specifically tailored for the conditions / exposure that is to be expected.

6.1.6 Appendix F is the Coating Manufacturer's Product Identity Certification Record. This document is required from the coating manufacturer for each component of each batch of coating material (manufactured coating material not individual ingredients).

6.1.7 Appendix G is an example for a Surface Preparation and Coating Inspection Form. This form or a form that contains the same information is required for daily inspection documentation.

6.2 Patching/Filler Materials

6.2.1 Materials used to patch or fill holes, shrinkage cracks, and defects in the concrete shall meet the following requirements:

6.2.1.1 For holes larger than 1/2" in its largest dimension, the filler may be a non-shrink structural concrete grout with a slump sufficient to fill holes on a vertical or overhead surface while staying flush with the surface plane. The concrete structural grout shall be compatible with the SPC system specified for use on the concrete surface. Compatibility shall be verified by applying the SPC over a cast sample of the structural concrete grout followed by a pull off adhesion of at least 200 psi per ASTM D4541 using test procedures applicable for type II and type IV instruments listed in Annex A.2 and A.4.

6.2.1.2 For holes up to 2" in its largest dimension, the filler may be a 100% solids proprietary rigid polymeric filler material as recommended by the SPC manufacturer with a slump sufficient to fill holes on a vertical or overhead surface while staying flush with the surface plane. Rigid polymeric fillers using a curing compound, catalyst or accelerator that develop heat during the cure process shall not cause blowholes in the applied filler that requires subsequent repair. The polymeric filler may be applied in more than one application to fill large voids flush with the concrete surface plane of concrete to steel embed surface plane. The proprietary polymeric filler material shall be compatible with the SPC system specified

for use on the concrete surface. Compatibility shall be verified by applying the SPC over a cast sample of the proprietary filler material followed by a pull off adhesion of at least 200 psi per ASTM D4541 using test procedures applicable for type II and type IV instruments listed in Annex A.2 and A.4.

6.2.1.2.1 Rigid polymeric filler materials used in R5 areas where the 40 year accumulated radiation level will be greater than 2E8 rads that are not made with the same generic resin type shall be radiation tolerance tested in combination with the SPC system specified for use in that particular area. The specimens shall be prepared for testing as follows:

- Using the standard concrete test blocks identified in Appendix B, drill a hole 1/2" x 1/2" in each face of each block. Fill the hole with the proposed filler material flush with the surface plane of the block. Apply the SPC systems identified for use in the R5 areas. Perform radiation tolerance testing per Appendix B.

6.2.1.3 For stable non moving cracks fill flush with the surface plane using a 100% solids proprietary polymeric filler material recommended by the SPC manufacturer as defined in section 6.2.1.2. Large cracks shall be routed out as shown on Appendix I installation detail 4.

6.2.1.4 Construction Joints

6.2.1.4.1 For construction joints (other than those at inside wall to wall or wall to floor corners) in walls or floors, within areas required for secondary containment "Dangerous Waste Permitting (DWP and/or Non-DWP), a formed or created (e.g., saw-cut) rectangular slot shall be provided by others, centered on the construction joint after the concrete is placed and cured, apply specified coating system primer in the joint, then install a bond breaking tape in the base of the joint. Install the flexible epoxy filler flush with the concrete surface and overcoat the joint with the specified coating system. Refer to Appendix I installation detail 3B.

6.2.1.5 For coving in corners (filler material with 2" radius) use a flexible epoxy filler material. Where coving materials will serve as a water stop, the prequalification requirements in Appendix B section 1.2.10 apply.

6.2.1.5.1 Secondary Containment (DWP and/or Non-DWP) areas that do not have free flowing drains must use the glass reinforced coving installation detail. Refer to Appendix I for installation details 2A and 2B.

6.2.1.5.2 Secondary containment areas that do not have regulated tanks and have free flowing open floor drains, do not require the glass reinforced coving detail (Refer to Appendix I for installation details 1A and 1B).

6.2.1.5.3 If the proximity of permanent plant equipment or material (e.g. drains, ladder, piping, electrical, etc.) prohibits the full 2" radius coving, the coving radius may be reduced to accommodate the coating installation.

6.3 Batch Information

6.3.1 Each container of coating material received and used by the SUBCONTRACTOR shall be marked with the following:

- The manufacturer's name
- The product designation
- Batch/lot number
- Location and date of manufacture
- The shelf life expiration date

6.4 Abrasives

6.4.1 Abrasives for blast cleaning shall be clean, free of oil or contaminants, and dry. The particle size shall be capable of producing the specified surface texture or surface profile. Mineral slag abrasives shall meet the requirements of SSPC AB-1. The first batch/lot of bulk, non packaged abrasives shall be tested for water soluble contaminants and the conductivity shall not exceed 500 microsiemens/cm when tested in accordance with ASTM D4940 Section 1.0-2.0. As an alternate, a chloride ion test kit such as the Chlor*Test "A" manufactured by Chlor Rid International, Inc. or CONTRACTOR accepted equal may be used. Abrasives used at the RPP-WTP project site shall be < 1% silica.

6.4.2 When using reclaimed steel grit/shot abrasive, the particle size shall be capable of producing the specified surface texture . All reclaimed abrasives shall be tested for water-soluble contaminants and conductivity. Conductivity shall not exceed 500 microsiemens when tested in accordance with ASTM D 4940 Section 1.0-2.0. Reclaimed abrasives already in use and the first batch/lot of bulk, non-packaged abrasives shall be tested for oil and grease contamination using the water floatation test at the beginning of each shift.

6.4.3 Reclaimed grit used for abrasive cleaning shall be tested for the presence of oil and grease by immersing a sample of spent abrasive in clean tap water and checking for oil flotation. Tests shall be made at the start of blasting and every four (4) hours thereafter. If oil is evident, the contaminated abrasive shall be cleaned or replaced. All surfaces blasted since the last successful test shall be completely cleaned of contamination then re-blasted using clean abrasive.

6.4.4 Expendable abrasive (Green Diamond / Black Beauty) shall be used on a once only basis and then discarded.

6.5 Water Quality

6.5.1 Water used for wet abrasive blasting or high pressure water jetting shall be clean tap or potable water and shall not exhibit any evidence of an oily sheen.

6.6 Coating Over Stainless Steel (SS)

6.6.1 All coating materials, adhesive-backed tape or labels, thinners, solvents and cleaning materials used on SS shall be shown to have a low leachable halogens content that shall not exceed 200 ppm, total sulfur content shall not exceed 400 ppm . The total amounts of low melting point

metals such as lead, zinc copper, tin, antimony and mercury shall not exceed one (1) percent and mercury shall not exceed 50 ppm.

7 Application

7.1 General

7.1.1 It shall be the SUBCONTRACTOR's responsibility to stop the surface preparation and coating at any time when conditions exist that might adversely affect the quality. The CONTRACTOR's representative may reject any prepared or coated surfaces not in compliance with this Specification.

7.1.2 All painters and other personnel used to apply coatings on to concrete and steel items shall be individually qualified and certified in accordance with the SUBCONTRACTOR's accepted written procedures that includes classroom training on the WTP Project Specification. Guidance for qualifying painters/application personnel are contained in ASTM D4228 and ASTM 4227 Section 1-10 and Figure #2 or other as accepted by the CONTRACTOR.

7.1.3 The secondary containment coating Mock ups shall have been satisfactorily completed and accepted by the CONTRACTOR prior to starting production work on a given area. That does not mean that all mock ups for all coating systems must be completed prior to the start of work, but at least the mock ups for the coating systems that are scheduled for facility production shall be completed prior to start of work with those coating systems.

7.2 Pre-Surface Preparation

7.2.1 Prior to mechanical cleaning, the surfaces to be coated shall be cleaned in accordance with SSPC SP1 to remove oil, grease, dirt, silicone, marks made with waxy or greasy makers, graffiti, curing compounds or form release residue or other foreign matter that could interfere with the proper bonding of the coating contamination of this type shall be removed by steam cleaning or solvent washing in accordance with ASTM D4258 Section 1.0 - 9.0. The SUBCONTRACTOR shall inspect floor for surface hardeners. Surface hardeners shall be removed prior to applying Special Protective Coatings.

7.2.2 Inspection of surfaces exhibiting fins, ridges, and sharp projections or surfaces that require repair of honeycomb areas, tie rod holes, and cavities that are greater than 1/2" in its largest dimension (i.e., length, width or depth) or cracks wider than 1/8" shall be performed by the SUBCONTRACTOR and includes a punch list to the CONTRACTOR. These defects must be removed or corrected prior to applying any coating.

7.2.3 All sharp corners that are scheduled to receive Special Protective Coatings shall be included in punch list and rounded to a radius of no less than 1/8" by others.

7.2.4 The SUBCONTRACTOR shall inspect all joint details and the configuration of the finished concrete sections in relation to the application of materials as shown in installation details shown in Appendix I Secondary Containment Installation Details and the requirements of this specification.

7.2.5 Any remaining sharp edges, weld spatter, or burrs, fins, ridges, tie rods, projections found after the start of coating Work shall be completely removed by grinding or other means. Pneumatic tools shall not be used unless they are fitted with effective oil and water traps on the exhaust air. If the steel embeds exhibits salt deposits or were shipped or stored so that the surface could have been contaminated with soluble salts (e.g., above deck ship transport, truck transport on dirt roads close to ocean, storage), the area shall be pressure water washed (e.g., 2,000-5,000 psi) with demineralized water to remove the soluble salt contamination as possible prior to abrasive blasting/water jetting.

7.2.6 Floor/Wall and Wall/Wall coving shall be installed using the same flexible epoxy filler material defined in section 6.2.1.5 or a filler material as recommended by the coating manufacturer and accepted by the CONTRACTOR. Coving shall be installed after concrete surface preparation and shall comply with the installation details in Appendix I.

7.2.7 To insure a seal and a smooth transition from concrete surfaces onto steel embed plates, the concrete shall be chipped away from the edge of the embed plate at least ½" and at least ¼" below the surface plane of the embed plate. The chipped away area shall be filled flush between the concrete and steel embed plate using the same rigid filler material defined in section 6.2.1.2 or a filler material as recommended by the coating manufacturer and accepted by the CONTRACTOR. (refer to Appendix I).

7.2.8 To provide a structurally sound termination of a floor coating, a perimeter key shall be placed in the floor (refer to Appendix I).

7.3 Surface Preparation

7.3.1 Prior to the start of Work, the SUBCONTRACTOR shall examine all surfaces to be coated to determine their acceptability for the specified coating application Work. If the surfaces are found to be unacceptable, the SUBCONTRACTOR shall either return the surface to an acceptable condition or immediately notify the CONTRACTOR in the punch list (section 7.2.2) if the repairs are outside the scope of work. Coating Work shall not commence until corrective action has been taken. Starting Work prior to completion of corrective action shall preclude any subsequent claim by the SUBCONTRACTOR. The CONTRACTOR may require corrective action at the SUBCONTRACTOR's expense.

7.3.2 The abrasive mixture and the compressed air shall be clean, dry and oil free. Moisture traps, in addition to oil and water separators mounted on the compressor, shall be used in compressed air lines to remove oil and moisture from air close to the point of use. (refer to Section 7.3.4.4 and 8.1.6)

7.3.3 Concrete Surfaces

7.3.3.1 Floors, walls shall be free of curing compounds, laitance, dirt or other residue that could interfere with proper adhesion of the coating system.

7.3.3.2 Concrete shall be suitably roughened and textured using one of the specified methods of surface preparation during the coating system mock-ups performed and accepted by the CONTRACTOR. To achieve a clean roughened surface suitable for the specified coating systems, surfaces may be dry abrasive blasted, wet abrasive blasted (Refer to ASTM D4259 Sections 1.0-10.0) or cleaned and roughened by high pressure (10,000 psi to 25,000 psi)

water jetting using a rotating head hand lance or self propelled robot (Refer to SSPC SP12 Appendix C for a description and operation and SSPC SP13 Sections 3.0-6.0). Small areas may be prepared using grinders or sanders as accepted for use during mock-ups. Needle guns may only be used if followed by full abrasive blasting or water jetting to remove weakened/crushed concrete surface layer to sound dense concrete and only when the procedure has been shown to result in a coating adhesion of 200 psi minimum.

7.3.3.3 In addition, floors may be acid etched using 20 % citric acid solution when accepted by the CONTRACTOR. Acid etched surfaces shall be pH tested in accordance with ASTM D4262 Sections 1.0-8.0. The pH shall be no more than 1.0 pH lower or 2.0 pH higher than the pH of the potable rinse water. A suitable texture shall be achieved that will be agreed upon during the mock up coating application. A detailed procedure on the use, clean up and disposal of acid etching materials/rinse must be provided for review and acceptance by the CONTRACTOR.

7.3.4 Carbon Steel Surfaces

7.3.4.1 Prior to blast cleaning, items to be coated shall be visibly dry with the surface temperature of at least 5°F above the dew point. Concrete surfaces shall be determined suitably cured as defined by the CONTRACTOR.

7.3.4.2 Carbon steel surfaces to be coated shall be blast cleaned in accordance with the surface preparation requirements specified in Appendix D of 24590-WTP-3PS-AFPS-T0003. Where abrasive blasting will damage the items or is impractical, SSPC-SP11 Power Tool Cleaning to Bare Metal may be substituted only in limited areas and only with CONTRACTOR's written permission to proceed.

7.3.4.3 Abrasive blasting of carbon steel shall result in an angular surface profile 1.5 to 3.0 mils as measured using a Testex Press-O-Film replication tape in accordance with ASTM D4417 method C.

7.3.4.4 The recycled abrasive mix shall be maintained clean of contaminants by continuous effective operations of cleaning machine scalping and air wash separators. Reclaimed grit used for abrasive cleaning shall be tested for the presence of oil/grease by immersing a sample of spent abrasive in clean tap water and checking for oil flotation. Tests shall be made at the start of blasting, and every four (4) hours thereafter. If oil is evident, the contaminated abrasive shall be cleaned or replaced. All surfaces blasted since the last successful test shall be completely cleaned of contamination then re-blasted using clean abrasive. Blast cleaning shall not be performed in the immediate area where coating or curing of coated surfaces is in progress unless a vacuum system is employed that contains dust. All surfaces and equipment which are not to be coated shall be suitably protected from blast cleaning.

7.3.4.5 Burrs, slivers, scabs, lamination, and weld spatter fins, ridges, sharp protrusions which become visible after blasting shall be removed. The tools and manner employed to remove defects and sharp edges, shall not burnish or destroy the surface profile. If the profile or roughness is reduced, it shall be re-blasted to produce the profile and roughness as required. The exhaust of pneumatic grinders shall not impinge on the cleaned surface. If the surface becomes contaminated, it shall be cleaned of contamination then re-blasted as required. Carbon steel tools or implements shall not be used on stainless steel surfaces.

7.3.4.6 If visible rust occurs or if the cleaned surface becomes wet or otherwise contaminated, these surfaces shall be re-cleaned to the specified standard. Cleaned surfaces remaining un-coated overnight shall be re-cleaned to the specified cleanliness prior to applying the coating. Where Concrete and Carbon Steel interface and are proposed to be coated in one operation every effort will be made to apply coating to the steel before surface deterioration.

7.3.4.7 After surface preparation is complete and before coating, pressurized air or a vacuum cleaning shall be used to remove all dust and abrasive residue. The air shall be clean and dry as verified in accordance with Section 8.1.6 so as not to contaminate the prepared surface. The operator shall ensure that all dust and abrasive residues are removed from the surface of blast profiles when vacuum cleaning is carried out.

7.3.4.8 Machined surfaces shall be protected from damage due to blasting and coating operations.

7.3.4.9 Equipment shall have all openings plugged, masked, and/or blinded sufficiently to protect internals before abrasive blasting. After the coating operation is complete all internals shall be blown clean and/or vacuumed to remove any dust or abrasive blast media that may have entered the coated equipment.

7.3.5 The abrasive mixture and the compressed air shall be clean, dry and oil free. Moisture Traps, in addition to oil and water extractor mounted on the compressor, shall be used in compressed air lines to remove oil and moisture from air close to the point of use. (refer to Section 7.3.4.4 and 8.1.6)

7.3.6 Where galvanized steel falls into secondary containment areas and requires a coating, the surface shall be cleaned per SSPC SP1 and allowed to dry. The galvanizing shall then be pretreated using a phosphoric acid solution (e.g., Amchem Galva-Prep) or brush blasted per SP7 as recommended by the manufacturer of the coating material intended for use. After flushing the acid off using potable water, the surface area contacted by the acid and the rinse water shall be tested for pH. The pH shall be as indicated in specification section 7.3.3.3.

7.3.7 Damaged galvanized steel shall be cleaned per SSPC SP11 using a 3M Clean-N-Strip disc and wheel, a flapper wheel with a 60-80 grit size or a slow variable speed sander using 60-80 grit sanding disc. All galvanizing to be coated shall be pretreated as indicated in specification section 7.3.6.

7.4 Coating Application

7.4.1 Prior to applying Special Protective Coatings (SPC's) the concrete surface shall be dry as determined by the plastic sheet method in accordance with ASTM D4263 sections 1.0-8.0.

7.4.2 Coatings shall be applied in accordance with CONTRACTOR accepted procedures (refer to Section 4.1). The coating manufacturer's recommendations for the application temperature and curing temperatures versus times (between coats and after last coat) of the specified material shall be considered when determining minimum and maximum cure to recoat time intervals. Application and curing temperatures above or below the limits allowed by this specification (Refer to Section 7.4.5) shall be submitted to the CONTRACTOR for review and permission to proceed.

7.4.3 Coatings shall be applied using properly sized and type of equipment for the size and complexity of the item being coated. The equipment shall be clean with all components in good working order.

7.4.4 Bug holes, cracks and construction joints shall be filled flush with the concrete surface plane or as identified in Appendix I Secondary Containment Installation Details using a structural concrete grout, Five Star V/O or Five Star Vertical patch or CONTRACTOR accepted alternate structural concrete grout or polymeric filler. Structural Concrete grout shall be applied prior to applying the first coat or by applying the proprietary polymeric filler listed in Appendix C Table 2 for the selected coating system or CONTRACTOR accepted equal. Proprietary filler materials may be applied before or after the primer sealer coat where acceptable to the specific coating manufacturer. The filler technique shall be developed during the mock up to minimize the occurrence of pinholes in the finish coats.

7.4.5 Coatings shall be applied only when the surfaces to be coated are free of curing compound, free of concrete laitance, clean, properly textured and dry. The substrate temperature shall be a minimum of 5°F above the dew point during coating application and until the applied coating is no longer moisture sensitive per the coating manufacturer's published data or written recommendations. The substrate and air temperature during coating application and curing shall be a minimum of 50°F (Inorganic zinc primers 40°F) and a maximum of 110°F. The relative humidity during coating application shall not exceed 85 percent. Measure humidity in accordance with ASTM E 337 (Sections 1.0-19.0). Deviations from the above listed minimum and maximum substrate/air temperature and humidity limits may be allowed when in accordance with the coating manufacturer's published data or written recommendations and are accepted by the CONTRACTOR. The one firm limit is that the minimum substrate or air temperature shall not be less than 35°F regardless of the coating manufacturer's published or written recommendations.

7.4.6 The SUBCONTRACTOR shall record all batch numbers for each coating component used along with other information necessary for the CONTRACTOR to relate the batch to the area or item for which it was applied. (Refer to Appendix G)

7.4.7 All coatings shall be thoroughly mixed until they are smooth and free from lumps, then strained through a screen of at least 30 mesh. Heavy bodied materials that will not flow through a 30-mesh screen are exempt from straining. All coatings that could settle in the container during application must be kept under continuous mechanical agitation to ensure coatings expend their solid contents and do not settle during application.

7.4.8 Alternating coats shall have a visible color difference to insure full coverage over previous coats.

7.4.9 Dry film thickness of each coating shall be in accordance with Appendix C Table 2 Secondary Containment Prequalified Coating Materials or as specified in the subcontract document (Refer to Section 8.3.6). The film thickness of concrete primer sealer may be measured using a wet film thickness gage. The primer sealer must be tinted to a color that allows visual verification that it has been applied. At floors, walls and ceilings that only require a clear sealer, the sealer shall not require tinting.

7.4.10 The minimum and maximum drying times between coats shall be in strict accordance with the coating manufacturer's latest published technical data sheets or written recommendations as accepted by CONTRACTOR.

7.4.11 Runs, sags, voids, drips, overspray, loss of adhesion, bubbling, peeling, pinholes or inadequate cure are not permitted and shall be corrected using CONTRACTOR accepted repair procedures.

7.4.12 Application equipment that will be reused such as spray equipment, brushes and rollers shall be cleaned using the coating manufacturer's recommended solvents/cleaners.

7.5 Remedial Work

7.5.1 The completed coating on each item shall have the correct dry film thickness and shall be free of damage and visible defects.

7.5.2 Repair of Dry Film Thickness (DFT) deficiencies

7.5.2.1 Defects such as runs, sags, overspray and embedded particles shall be corrected by sanding to remove the defect. When the defects are in the finish coat, all areas sanded must be overcoated with the finish coat. If the DFT of primer or intermediate coat is reduced to less than the specified minimum, the area shall be abraded with 60-80 grit sand paper or flapper wheel and an additional layer of coating shall be applied until sufficient thickness is achieved. If noticed during application, the sags or runs may be brushed out.

7.5.3 Repair of Damage

7.5.3.1 All damaged and loosely adhering coating shall be removed and the surface thoroughly cleaned using a vacu-blaster or high pressure water jetting, 60-80 grit sanding disc, 60 - 80 grit sandpaper, 60-80 grit flapper wheel or 3M Clean-N-Strip. Edges of the breaks shall be feathered to insure a smooth transition and the designated number of prime and finish coats shall be applied. Care shall be taken to insure adjacent coatings are not heat damaged, polished or burnished.

7.5.4 Loss of adhesion, delamination, blisters, bubbling and fish eyes in the applied coating requires the affected area of coating to be removed and reapplied in accordance with this Specification.

7.5.5 Pinholes shall be filled or otherwise repaired prior to the application of the final coat. Pinhole repairs in the final coat shall blend in and not be visually obvious.

7.5.6 (Reserved for Future Use)

7.5.7 Touch-up Coating and Sealing of Steel Items Attached by Post-installed Concrete Anchors.

7.5.7.1 Post-installed anchors that attach carbon steel items to concrete surfaces require the mechanical joint formed between the concrete and carbon steel attachment to be sealed. Carbon steel anchors and the anchored carbon steel item shall also receive coating touch-up.

7.5.7.2 Stainless steel post-installed anchors that attach stainless steel items to concrete surfaces require the mechanical joint formed between the concrete and attachment to be sealed.

Stainless steel post-installed anchors and stainless steel attachments do not require touch-up coating.

7.6 Interferences

7.6.1 Refer to Appendix J

8 Inspection

8.1 General

8.1.1 The SUBCONTRACTOR shall have the full responsibility for the coating application quality in accordance with this Specification and shall be responsible for stopping Work activities when conditions develop that could adversely affect the quality. All Work is subject to the CONTRACTOR's inspection surveillance.

8.1.1.1 All coating Work inspection personnel shall be trained, qualified and certified in accordance with the SUBCONTRACTOR's accepted procedures. The inspectors shall meet or exceed the minimum requirements for a Level I coatings inspector as described in ASTM D4537 Section 1.0-8.0. At least one inspector shall meet the minimum requirements for a Level II inspector as described in ASTM D4537 Section 1.0-8.0. The SUBCONTRACTOR shall conduct an examination, a performance evaluation and issue a certification for each inspector in accordance with ASTM D4537 Section 9.0. The Level II inspector shall supervise the Work of all Level I Inspectors. The SUBCONTRACTOR's inspector must demonstrate his/her capability of using the inspection equipment and performing all the required inspections. The SUBCONTRACTOR's inspector training, qualification and certification plan and associated procedures shall satisfy the requirements of ASTM D4537, Sections 1.0-8.0 using the guidelines provided in ASTM D5498 including classroom training on the WTP specifications applicable to coating inspection. Additional coating work inspection guidance is found in ASTM D6237 and ASTM D3276 which shall be used in developing procedures for training and certifying coating work inspectors.

8.1.2 The CONTRACTOR's representative shall be the final authority on the specification compliance for surface preparation and material application. Any coating which, in the judgment of the CONTRACTOR's representative has not been applied in conformance with this Specification, shall be rejected.

8.1.3 The CONTRACTOR representative shall have access to each part of the process and shall have the right and opportunity to witness any of the Quality Control Tests.

8.1.4 The SUBCONTRACTOR shall furnish the necessary testing and inspection instruments, properly calibrated and certificates maintained. Calibration of testing and inspection instruments shall be traceable to NIST or CONTRACTOR authorized alternative standards. If equipment is suspected of being out of calibration, it shall be re-calibrated and certificates made available for verification by the CONTRACTOR. Such equipment shall be available for use by the CONTRACTOR in conducting surveillance of the Work.

8.1.5 The SUBCONTRACTOR shall halt the coating Work and make corrections to the procedures, as necessary to correct repetitive faults found in the Work.

8.1.6 Prior to using compressed air, the quality of the air downstream of the separator shall be tested in accordance with the requirements of ASTM D4285 by blowing the air onto a clean white blotter or cloth for two (2) minutes at a distance of no more than twelve (12) inches to check for any contamination, oil, or moisture. This test shall be performed at the start of work and at not more than four (4) hour intervals. The test shall also be made after any interruption of the air compressor operation or as required by the CONTRACTOR. The air shall be used only if the test indicates no visible contamination, oil, or moisture. If contaminants are evident, the equipment deficiencies shall be corrected and the air stream shall be re-tested. Moisture separators shall be bled continuously. All lines shall be tested individually prior to use. Surfaces determined to have been blown down or blasted with contaminated air shall be cleaned of all contamination then re-blasted with clean air and abrasive. Coatings determined to have been applied using contaminated air shall be removed and reapplied using clean air.

8.1.7 Inspection points shall be established as follows:

- Prior to the start of Work
- Immediately following the surface preparation
- Immediately prior to the coating application
- Following the application of each coat
- Following the curing of the coating
- Final inspection and sign-off, in accordance with the project requirements

8.1.8 Any defects disclosed by inspection shall be re-inspected after correction.

8.1.9 The SUBCONTRACTOR shall keep the records indicated below, and submit these records to the CONTRACTOR (refer to Section 4.5 and Appendix G). The following lists the frequencies:

Coating/Inspection Step		Required Frequency
1.	Pre-Surface Prep Surface Preparation Profile / Texture	100% visual on Pre-Surface 100% on Surface Prep Cleanliness Steel profile first item of each type per shift and every 20 items thereafter / Concrete 100% visual for cleanliness and texture.
2.	Environmental/Air Quality	At the start of work and every 4 hours thereafter or more often during changing conditions.
3.	Recirculated Abrasive	At the start of work and as required with a minimum of every 4 hours thereafter
4.	Thickness per SSPC PA2	5 spot readings per 100 sq.ft. on large surfaces or steel items Surfaces or steel items < 100 sq.ft. 4 spot readings on each surface or steel item, 2 spot readings on steel items less than 4 inches. (e.g., valves, fittings, components, etc.)
5.	Visual on Applied Coating	100% of all items

8.2 Surface Preparation Inspection

8.2.1 Verify bug holes, voids, cracks and construction joints are properly filled. This is not necessary if filler is applied after surface preparation and sealer coat application.

8.2.2 Verify environmental conditions and compressed air quality (refer to Section 7.3.5, 7.3.4.1, 7.4.5)

8.2.3 Verify recycled abrasive is grease and oil free (refer to Section 7.3.5).

8.2.4 Verify surface cleanliness and texture.(refer to Sections 7.3.3.1, 7.3.3.2, 7.3.4.2 and 7.3.4.3).

8.2.5 Grease free chalk shall be used to mark local areas which do not meet the specified requirements (e.g., soapstone and crayons are not acceptable).

8.3 Coating Application

8.3.1 Environmental conditions and compressed air quality shall be verified per Sections 7.3.4.1, 7.3.5, 7.4.5, 8.1.6 and 8.1.9.

8.3.2 Dry coating thickness (DFT) on steel items shall be measured with a magnetic film thickness gage such as an Elektro-Physik "Mikrotest" or Positector 2000, 6000 or CONTRACTOR accepted equal in accordance with SSPC PA2. Steel items and individual items on equipment less than one hundred (100) sq.ft. in surface area shall have at least four (4) evenly spaced spot readings per item. Equipment or equipment components less than four (4) inches in its largest dimension only require two (2) evenly spaced spot reading per item.

8.3.3 Dry coating thickness (DFT) on concrete shall be measured using a Wet Film Thickness (WFT) gage (Refer to ASTM D4414 Sections 1.0-10.0 applicable to procedure A) and calculating thickness based on coating material volume solids (added thinners require recalculation of volume solids) or by using a nondestructive ultrasonic tester such as the Positector 100 or accepted equivalent (Refer to ASTM D6132 Sections 1.0-11.0). Each 100 sq.ft. shall receive 5 evenly spaced gage readings. Areas less than 100 sq.ft. in surface area shall have at least 2 evenly spaced spot readings per area.

8.3.4 Wet film thickness gages shall be of high quality steel or stainless steel, with a maximum blade width of 1.5", that can be purchased with calibration certifications. Wet film thickness gages shall be visually inspected for paint residue and physical damage at the start of work and every 4 hours thereafter during use.

8.3.5 The Dry Film Thickness gage shall have a minimum of a zero to 40 mil or zero to 60 mil working range and shall be checked for calibration accuracy in accordance with SSPC-PA2 at the start of each shift against certified coating thickness calibration standards for non-magnetic coating of steel traceable to NIST or CONTRACTOR's accepted alternative standards. The calibration standards shall be in the 1.5 mil to 40.0 mil range, unless otherwise specified. Any surface with a measured thickness outside of the limits described in section 7.4.9 shall be rejected. These areas shall be reworked or re-cleaned and re-coated at the SUBCONTRACTOR's expense prior to acceptance by the CONTRACTOR.

8.3.6 When dry film thickness becomes debatable or indeterminate, the CONTRACTOR reserves the right to require the use of destructive testing using a Tooke gage in accordance with ASTM D4138 Sections 1.0-9.0 or by nondestructive ultrasonic testing in accordance with ASTM D6132 Sections 1.0-11.0 to verify dry film thickness. All areas damaged by destructive testing shall be repaired by the SUBCONTRACTOR.

8.3.7 Runs, sags, voids, drips, overspray, loss of adhesion, bubbling, pinholes, peeling, or inadequate cure are not permitted and shall be repaired or reworked.

9 Storage, Handling and Shipping

9.1 Coating Materials

9.1.1 Coating materials shall not be stored in direct sunlight or exposed to inclement weather (e.g., rain, snow, sleet, freezing rain, dew point condensation, see also section 9.1.5). Materials shall remain under cover until ready to use.

9.1.2 Coatings, thinners, cleaning solvents and other flammable materials stored at any location, shall be kept away from combustion sources and shall be stored in metal flammable material storage cabinets meeting NFPA and OSHA standards. Thinners and solvents shall be transported to the point of use in approved safety containers meeting OSHA standards.

9.1.3 Coating material shall be delivered in manufacturer's original unopened containers. Each container shall be clearly identified with the manufacturer's name, product designation, batch number, date of manufacture and shelf life expiration date.

9.1.4 Coating materials shall have a minimum of 120 days of its shelf life remaining at the time the shipment arrives at the project site or the SUBCONTRACTOR's warehouse.

9.1.5 Coating materials that are older than twenty four (24) months from the date of manufacture or that exceed the manufacturer's shelf life, if less than twenty four (24) months, shall not be used and shall be placed on HOLD and segregated from other coating materials. Where the coating material has exceeded its shelf life and can be shown to have been stored as specified herein, an extension for no less than three (3) months and no more than six (6) months may be issued by the coating manufacturer. The shelf life extension shall be based on laboratory testing of retain samples taken at the time of manufacture or by testing a sample of the actual coating material in question. Where testing verified an outdated coating material still complies with its original design criteria, it is acceptable for shelf life extension. Expiration date stickers, provided by the coating manufacturer, shall be affixed to each container prior to release from HOLD. The stickers shall include the product number, batch/lot number, the new expiration date and suitably marked to indicate that they came from the coating manufacturer. A new Appendix F shall be provided by the coating manufacturer that includes the test results and specifically indicate that the new Appendix F was provided to document shelf life extension including new expiration date. Coating materials that have not been stored or handled in accordance with sections 9.1.1, 9.1.6, 9.1.7 and 9.1.8, may not have their shelf life extended.

9.1.6 Coating material shall be protected from moisture, direct sunlight and temperatures below 40°F or above 100°F unless otherwise allowed by the coating manufacturer's latest published instructions and accepted by the CONTRACTOR.

9.1.7 Coating material containers where the airtight seal has been broken or any of the contents are lost, shall not be used.

9.1.8 Coating material containers shall not be opened except for immediate use.

9.1.9 Unused material shall be returned to storage as soon as possible at the end of each Workday. Materials left out for more than ten (10) hours in an uncontrolled storage area (areas without environmental controls or environmental monitoring that are exposed to ambient weather) shall not be used and shall be placed in a segregated hold area until final disposition then removed from the job site if rejected. No water borne coatings shall be stored in areas where the temperatures are below 40°F.

9.1.10 All required coating material certifications for each batch of material delivered to the job site shall be available at the time of material receipt. Materials delivered to the shop or field without the required documentation shall not be used and the SUBCONTRACTOR shall tag and place discrepant materials into a hold area clearly separated from acceptable material. Once the required documentation is received or otherwise corrected and found to be acceptable, the discrepant material may then be taken off hold status and used.

10 Documentation

10.1 The SUBCONTRACTOR shall provide a record of all materials used (Regarding individual batch numbers, refer to Appendix F).

10.2 The SUBCONTRACTOR shall provide a record of all required daily inspections (Example-Appendix G) that includes pre-surface preparation, compressed air cleanliness, environmental conditions, surface preparation and roughness, location of field repairs coated, application, visual inspection, dry film thickness, and all touch up/repair. This record shall include the coating and thinner materials used and the ID of the items coated to provide traceability.

10.3 All quality documentation shall be available for review by the CONTRACTOR representative within twenty four (24) hours from the time it is generated.

10.4 SUBCONTRACTOR documentation forms or the way that the actual Work will be documented shall be provided by the SUBCONTRACTOR as part of the procedures submittal for review by the CONTRACTOR.

11 Design Changes Incorporated by Reference

11.1 The following is a listing of design changes that are identified by reference and do not require modification to the specification.

Design Change Document
(none at this time)

* Denotes a new entry for this revision of the specification.

Appendix A
Supplier Quality Assurance Program Requirements Data Sheet

SUBCONTRACTOR QUALITY ASSURANCE PROGRAM REQUIREMENTS DATA SHEET

DOE ORDER 414.1c REQUIREMENTS

The following marked QA Program Elements of DOE ORDER 414.1c apply and are subject to CONTRACTOR evaluation and verification.

DOE O 414.1c	N/A	PROGRAM ELEMENTS	SUBCONTRACTOR SHALL IDENTIFY QUALITY ASSURANCE DOCUMENTS AND ASSOCIATED PARAGRAPH REFERENCES FOR EACH REQUIRED ELEMENT
[X]	[ ]	PROGRAM	
[X]	[ ]	PERSONNEL TRAINING & QUALIFICATION	
[X]	[ ]	QUALITY IMPROVEMENT	
[X]	[ ]	DOCUMENTS & RECORDS	
[X]	[ ]	WORK PROCESSES	
[ ]	[X]	DESIGN	NA
[X]	[ ]	PROCUREMENT	
[X]	[ ]	INSPECTION & ACCEPTANCE TESTING	
[ ]	[X]	MANAGEMENT ASSESSMENT	NA
[ ]	[X]	INDEPENDENT ASSESSMENT	NA

SIGNATURE OF SUBCONTRACTOR REPRESENTATIVE-_____ DATE-_____

TITLE_____

The SUBCONTRACTOR shall identify the Quality Assurance Documents and associated section(s) and procedures that address the elements listed above in compliance with DOE Order 414.1c.

Appendix B
WTP Project Special Protective Coating (SPC) Material Prequalification Requirements for Secondary Containment.

1.0 Prequalification Testing for ALARA Areas

1.1 All the coating material prequalification testing shall be performed by the coating manufacturers listed in Appendix C. Coating systems listed as "Prequalified" have been fully tested and all data has been reviewed and accepted. Only those systems listed as Prequalified may be used.

1.2 Coating systems that will be applied on items that will be located inside ALARA Areas shall satisfy the following test requirements:

1.2.1 Radiation Tolerance Testing: Coating systems shall be tested for tolerance to radiation exposure as a complete system in accordance with the requirements of ASTM D4082 and as follows:

1.2.1.1 For coating systems to be used in areas where the total anticipated accumulate dose will not exceed 2E8 rads, no radiation tolerance testing is required.

1.2.1.2 For coating systems to be used in areas where the total anticipated accumulated dose is >2E8 rads up to 1E9 rads, test the coatings at 1E9 rads.

1.2.1.3 For coating systems to be used in areas where the total anticipated accumulated dose is >1E9 rads, the test radiation level shall equal or exceed the highest anticipated accumulated dose.

1.2.1.4 The acceptance criteria for the irradiation test shall be "no defects" as described in ASTM D4082. In addition to the defects stated in ASTM D4082, also check the coating on the test specimens for softening. The coating shall not soften because of the irradiation exposure.

1.2.2 Decontamination Testing: Generic Special Protective Coating materials such as two component or three component Epoxy, and Epoxy Novolac's, type have historically shown very good decontamination and chemical resistance properties and are suitable for use on the WTP project. Other generic coating materials located in areas that will require operational decontamination must be able to withstand the decontamination chemicals and temperatures that will be used as part of the decontamination process.

1.2.3 Abrasion Resistance Testing: In addition to radiation tolerance testing of coating systems that will be applied to surfaces inside ALARA Areas or on items that will be located inside ALARA Areas, those coating systems and

selected Non-ALARA Area coating systems shall satisfy the following test requirements:

1.2.3.1 Coating systems for use -in secondary containment areas, where abrasion will be a factor in the in-service performance of the coating system, shall be tested in accordance with ASTM D4060. The weight loss shall not exceed 175 mg per 1000 cycles when a CS-17 wheel is used with a 1000-g load.

1.2.4 Adhesion Testing: Coating systems shall be tested for adhesion in accordance with the requirements of ASTM D4541 and ASTM D5144 Section 5.5.1. The minimum adhesion value shall be 200 psi for coatings applied to concrete or steel substrates.

1.2.5 Chemical Resistance Testing: Perform chemical resistance testing on coating systems in chemical exposure areas in accordance with the requirements of ASTM D3912 Section 6.3. The test reagents and test duration of the tests shall be governed by the anticipated service conditions. The test shall last for 5 days for secondary containment coating systems and for coating systems where cleanup of spills will not be immediate, for 24 hours.

If the test duration exceeds 24 hours, examine the test specimens after each 24-hour period and report the condition of the specimens after each 24-hour interval. Examine and report the condition of the specimens in accordance with the requirements of ASTM D3912, Sections 7 and 8. The test reagents and concentrations shall be as follows:

1.2.5.1 Chemical Reagents and Concentrations that may require testing

- 2.0, 5.0 & 12.2 Molar HNO3
- 0.25, 2.0, 5 & 19 Molar NaOH
- 3.27 Molar Sr(NO3)2
- 7.4 Molar NaNO2
- 4.4 Molar NaMnO4

1.2.6 Test Specimen Preparation: Test specimens shall be prepared in accordance with the requirements of ASTM D5139. The surface preparation methods utilized for radiation tolerance, adhesion and chemical resistance testing shall be representative of those proposed for use. If more than one surface preparation method is proposed for use, each proposed surface preparation method shall be tested independently. The size of the test specimens shall be appropriate for the test being carried out. The minimum size of test specimens shall be 2" X 4" X ¼" for steel substrates and 2" X 2" X 4" for concrete substrates.

1.2.7 Infra Red (IR) Scan: The coating manufacturer shall run an IR scan of the prequalification batch of the liquid component of each coating system to maintain as a record of that formulation. The IR scans shall be maintained indefinitely for all coating systems that are accepted for use by RPP/WTP and shall be identified and submitted with the test documentation for each coating

system. Thereafter, the manufacturer shall certify that each subsequent batch of an accepted coating system was manufactured with the same formulation, raw materials, production methods, and quality control standards as the coating materials originally tested and accepted for use by the RPP/WTP (refer to the statement included on the Coating Manufacturer's Product Identity Certification Record in Appendix F).

1.2.8 Flame Spread and Smoke Developed: All Special Protective Coatings that will be applied on the building structure (e.g., concrete walls, floors, ceilings, structural steel) located in the LAW, HLW, PTF, LAB and areas of BOF that transport, process or store radioactive materials or items, shall comply with the requirements of NFPA 801, DOE Standard 1066, NFPA 255 and NFPA 253 as defined in specification 24590-WTP-3PS-AFPS-T0002 Special Protective Coatings Limited-Combustible Testing Protocol. Concrete floors are required to have a minimum Critical Radiant Flux rating of 0.45 watts/cm^2. The Maximum allowable flame spread for the building structure walls and ceiling is 25 and the maximum allowable smoke developed is 50. Concrete floors, equipment, piping, and steel items installed in the building do not require flame spread and smoke developed testing.

1.2.9 Volatile Organic Compounds (VOC): The VOC content of all Special Protective Coatings shall not exceed 3.8 lbs./gal (450 grams/liter). If the VOC requirement in the location where the coating is being applied is less than the 3.8 lbs./gal, the local (e.g., a facility offsite in Tri-Cities area) requirements take precedence and must be met.

1.2.10 Prequalification Testing for Flexible Epoxy Filler Material Acting as a Water Stop

1.2.10.1 Permeability testing of flexible epoxy filler material shall be preformed in accordance with ASTM D1653 method B. Permeability shall be similar to epoxy coating materials.

1.2.10.2 Radiation tolerance testing of flexible epoxy filler material shall be performed per ASTM D4082 when installed in areas where the 40 year integrated dose exposure is expected to be greater than 2E8 rads. The flexible epoxy filler shall exhibit residual flexibility and remain bonded to the substrate.

1.2.10.3 Elongation of the flexible epoxy filler material shall be at least 50% when tested in accordance with ASTM D412.

1.2.10.4 Abrasion resistance testing of flexible epoxy filler material per ASTM D4060 is not required.

1.2.10.5 Adhesion testing of the flexible epoxy filler material to concrete shall be performed in accordance with ASTM D4541 and ASTM D5144. The adhesion shall be 200psi minimum.

1.2.10.6 Chemical resistance testing of the flexible epoxy filler material shall be performed per section 1.2.5 above. The testing results shall be reported.

1.2.10.7 Aging shall be demonstrated by at least 10 years of successful field service in secondary containment applications or other similar application. Accelerated aging testing may also be used such as radiation tolerance testing at 2E8 rads minimum (see Section 1.2.1 above).

1.2.10.8 Crack-filling- Due to the thick viscous nature of the flexible epoxy filler material, it is only required to be mechanically forced into the cracks, primarily bridging over the cracks creating a thick well bonded protective barrier.

2.0 Prequalification Testing for Non-ALARA Areas

Special Protective Coating materials or systems that will be applied on items that will be located in Non-ALARA areas have the same prequalification requirements as listed in Appendix "B" Section 1.0 except no radiation tolerance testing is required.

Appendix C
Table 1- Secondary Containment Coating Systems

Usage Type	Thickness Groups Concrete/ Steel	Resin Type/ Surface Type	Coating System Description	Prequalified Coating Systems						
				Ameron	Carboline	ICI-Devoe	Dudick	Inter-National	Sherwin Williams	Remarks
FLOOR COATING SYSTEMS										
SC	T4	ECF	Heavy Spray or Self Leveling Epoxy Floor Coatings (Epoxy primer and one coat of epoxy finish)	AM07	CA07	DE07	DD07	IN07	SW07	When the room finish schedule specifies system designation SC-E it includes this concrete floor coating system.
SC	T4	NCF	Heavy Spray or Self Leveling Epoxy Novolac Floor Coatings (Epoxy Novolac primer and one coat of epoxy Novolac finish)	AM08	CA08	DE08	DD08	(none)	SW08	When the room finish schedule specifies system designation SC-N it includes this concrete floor coating system.
WALL and SUMP COATING SYSTEMS										
SC	T2	ECW	Epoxy Wall & Sump Coatings (Fill bug holes flush, apply 1 coat of epoxy primer and two coats of epoxy finish)	AM15	CA15	(none)	(none)	IN15	SW15	When the room finish schedule specifies system designation SC-E it includes this concrete wall coating system.
SC	T2	NCW	Epoxy Novolac Wall & Sump Coatings (Fill bug holes flush, apply 1 coat of epoxy Novolac primer and two coats of epoxy Novolac finish)	AM16	CA16	(none)	(none)	IN16	SW16	When the room finish schedule specifies system designation SC-N it includes this concrete wall coating system.
STEEL EMBED COATING SYSTEMS										
SC	T4	ESE	Epoxy Coatings for Embed Plates and Support Steel, (Touch up existing shop coating or abrasive blast and apply two coats of Epoxy Finish)	AM19	CA19	(none)	(none)	IN19	SW19	When the room finish schedule specifies system designation SC-E it includes this steel coating system.
SC	T5	NSE	Epoxy Novolac Coatings for, Embed Plates and Support Steel (Touch up existing shop coating or abrasive blast and then apply two coats of Epoxy Novolac Finish)	AM20	CA20	(none)	(none)	IN20	SW20	When the room finish schedule specifies system designation SC-N it includes this steel coating system.
OUTDOOR SECONDARY CONTAINMENT COATING SYSTEMS										
SC	T5	P	Coating system for outdoor secondary containment areas; concrete and steel	(none)	(none)	(none)	(none)	(none)	SW30	100% solids Polyurca Coating

SC = Secondary Containment

ECF = Epoxy Concrete Floors; NCF = Epoxy Novolac Concrete Floors; ECW = Epoxy Concrete Walls; NCW = Epoxy Novolac Concrete Walls

ESE = Epoxy Steel Embeds; NSE = Epoxy Novolac Steel Embeds

P = Polyurea

Appendix C
Table 2 Secondary Containment Prequalified Coating Materials

WTP Concrete System Code	Surface Type	Appendix C Table 1 Mfg. System Code	Coating Mfg.	Concrete Filler (flush)	Mfg. Products	Required Dry Film Thickness (Mils) **
SC-T4-ECF	Concrete Floors	AM07	Ameron	None	X00701 / Nu Klad 120A	1-2 / 40-60 = 41-62 mils
SC-T4-ECF	Concrete Floors	CA07	Carboline	None	Semstone 5401 / Semstone 140SL+SAND / 140SL	4-6 / 10-15 / 30-50 =44-71 mils
SC-T4-ECF	Concrete Floors	DE07	Devoe	Futura- Bond 320 Gel	Pre Prime 167/ Devmat 111	1-2 / 40-60 = 41-62 mils
SC-T4-ECF	Concrete Floors	DU07	Dudick	None	Primer 67 / Polymer Alloy 2500 FR	4-6 / 40-60 = 44-66 mils
SC-T4-ECF	Concrete Floors	IN07	International	Intercryl 320	Interseal 670HS / Interzone 954	2-4 / 45-55 = 47-59 mils
SC-T4-ECF	Concrete Floors	SW07-2	Sherwin Williams	Kem Cati-Cote HS or Steel-Seam FT910	Macropoxy 920 / Cor-Cote HP SL Mortar	1.5-2 / 38.5-58 = 40-60 mils
SC-T4-NCF	Concrete Floors	AM08	Ameron	None	X00701 / Nu Klad 120A / Amercoat 91	1-2 / 34-50 / 6-10 = 41-62 mils
SC-T4-NCF	Concrete Floors	CA08	Carboline	None	Semstone 5401 / 145SL+SAND / 145SL.	4-6 / 40-60 = 44-66 mils
SC-T4-NCF	Concrete Floors	DE08	Devoe	Futura- Bond 320 Gel	Pre Prime 167/ Devmat 111	1-1.5 / 40-60 = 41-61.5 mils
SC-T4-NCF	Concrete Floors	DU08	Dudick	None	Primer 67 / Polymer Alloy 2100 FR	4-6 / 40-60 = 44-66 mils
SC-T4-NCF	Concrete Floors	SW08	Sherwin Williams	Kem Cati-Cote HS or Steel-Seam FT910	Cor Cote HCR / Cor Cote HCR SL Mortar.	4-6 / 36-54 = 40-60 mils
SC-T2-ECW	Concrete Walls	AM15	Ameron	Nuclad 114A	Amerlock 400 / Amerlock 400	4-8 / 4-8=8-16 mils
SC-T2-ECW	Concrete Walls	CA15	Carboline	Semstone 195	Carbogard 1340 / Carbog890C705 / C890S800	1-2 / 4-5 / 4-5=10-14 mils
SC-T2-ECW	Concrete Walls	IN15	International	Intercyrl 320	Intergard 345 / 345 / 345	4-6 / 4-6 / 4-6=12-18 mils

WTP Concrete System Code	Surface Type	Appendix C Table 1 Mfg. System Code	Coating Mfg.	Concrete Filler (flush)	Mfg. Products	Required Dry Film Thickness (Mils) **
SC-T2-ECW	Concrete Walls	SW15	Sherwin Williams	Kem Cati-Cote HS or Steel-Seam FT910	Macropoxy 920 / Macropoxy 646 / Macropoxy 646	1-2 / 3-7 / 4 -7=8-16 mils
SC-T2-NCW	Concrete Walls	AM16	Ameron	Nu Klad 114A	Amercoat 91 / Amercoat 91	4-8 / 4-8=8-16 mils
SC-T2-NCW	Concrete Walls	CA16	Carboline	Semstone 195	Carbogard 1340 / Phenoline1205FR0700 / 1205FRS800	1-2 / 5-6 / 5-6=12-16 mils
SC-T2-NCW	Concrete Walls	IN16	International	Intercyrl 320	Intertherm 228 / 228 / 228	2-4 / 4-6 / 4-6=10-16 mils
SC-T2-NCW	Concrete Walls	SW16-1	Sherwin Williams	Kem Cati-Cote HS or Steel Seam FT910	Cor-Cote HCR / Phenicon HS / Phenicon HS	1.5-2.0 / 3-6 / 3-6 = 7.5-14 mils
SC-T2-NCW	Concrete Walls	SW16-2	Sherwin Williams	Kem Cati-Cote HS or Steel-Seam FT910	Macropoxy 920 / Phenicon HS / Phenicon HS /	1.5-2.0 / 3-7 / 4-7=8.5-16 mils

WTP Steel System Code	Surface Type	Appendix C Mfg. System Code	Coating Mfg.	Steel Primer	Mfg. Products	Required Dry Film Thickness (Mils) **
SC-T4-ESE	Steel Embeds	CA19	Carboline	*Carbozinc 859	Carbogard 890 / 890	3-5 / 4-6 / 4-6 = 11-17 mils
SC-T4-ESE	Steel Embeds	IN19	International	*Interzinc 52	Intergard 475HS / 475HS	3-5 / 4-6 / 4-6 = 11-17 mils
SC-T4-ESE	Steel Embeds	SW19	Sherwin Williams	*Zinc Clad IV	Macropoxy 646 / 646	3-5 / 4-6 / 4-6 = 11-17 mils
SC-T4-ESE*	Steel Embeds	AM19	Ameron	*Amercoat 68HS	Amerlock 385 / 385	3-5 / 4-6 / 4-6 = 11-17 mils
SC-T5-NSE	Steel Embeds	AM20	Ameron	* Amercoat 68 HS	Amercoat 91 / 91	3-5 / 6-12 / 6-12 = 15-29 mils
SC-T5-NSE	Steel Embeds	CA20	Carboline	*Carbozinc 859	Phenoline1205 / 1205	3-5 / 5-6 / 5-6 =13-17 mils
SC-T5-NSE	Steel Embeds	IN20	International	*Interzinc 52	Intertherm 228 / 228	3-5 / 4-6 / 4-6 = 13-17 mils
SC-T5-NSE	Steel Embeds	SW20	Sherwin Williams	*Zinc Clad IV	Phenicon HS / Phenicon HS	3-5 / 6-8 / 6-8 = 16-21 mils***

WTP Concrete System Code	Surface Type	Appendix C Table 1 Mfg. System Code	Coating Mfg.	Concrete Filler (flush)	Mfg. Products	Required Dry Film Thickness (Mils) **
SC-T5-P	Concrete & Steel	SW30	Sherwin Williams	Steel-Seam FT910	Macropoxy 920 / Envirolastic AR425	1.5-2.0 / 40-60 = 41.5-62.0

NOTES TO APPENDIX C Table 2

* Note 1- This is a steel coating system shown on the room finish schedule for steel embedded in concrete and structural steel that requires the listed touch up primer and finish coating for chemical resistance. The steel coating system shall be from the same coating manufacturer as the concrete coating system.

** Note 2- The dry film thickness limitations listed in this column are based on testing to the NFPA 801-2003 and DOE STD 1066 flame spread and smoke developed requirements. The listed dry film thicknesses are the maximum allowed for wall coatings. The maximum total film thickness listed in this column includes the residual filler. Differences in dry film thickness from one coating manufacturer's system to another is due to NFPA 801 and DOE STD 1066 flame and smoke independent laboratory testing results.

*** Note 3- Using system SC-T5-NSE (SW20) from Sherwin Williams as an example, the required dry film thickness is determined by reading from left to right, the first coat is Zinc Clad IV applied at 3-5 mils, the slash separates the second coat which is Phenicon HS applied at 6-8 mils, the slash separates the third coat which Phenicon HS applied at 6-8 mils. An additional slash would define a fourth coat and so on. The total dry film thickness is listed after the equal sign.

Appendix D
Deleted

Appendix E
Color Scheme

1.0 The finish coat on all steel items and equipment other than electrical shall be ANSI* 70 Gray or approved substitute to ANSI color standard. (*American National Standards Institute)

2.0 The finish coat on standard electrical components and cabinets shall be ANSI 61 Gray or approved substitute to ANSI color standard.

3.0 Finish coat on floor coatings and sumps shall match Benjamin Moore color 2143-50 Old Prairie or approved substitute.

4.0 Finish coat on wall coatings shall match Benjamin Moore color 2143-60 Moonlight White or approved substitute.

5.0 Floor coatings color shall transition over the standard coving and up the wall 6"(-0" +1"). The thickness on the floor/wall coving and wall above the floor coating shall match the wall coating thickness. For gypsum board walls refer to drawing 24590-WTP-A3-A10T-04200002, WTP process Building Architectural Common Interior Wall Details, using detail #4, Detail for typical rated wall base at concrete floor.

Appendix F
Coating Manufacturer's Product Identity Certification Record

Project Name: _____ Coating Manufacturer: _____

Project Number: _____ Purchase Order Number: _____

Project Location: _____ Contract Number: _____

Coating Applicator: _____ Generic Coating Type: _____

Product Name: _____ Product Number: _____

(For multi-component products, provide data for all components. Provide the standard range and actual batch values for each test)

TEST RESULTS

Test	Test Method Used	Component A Batch No.		Component B Batch No.	
		Standard Range	Batch Actual	Standard Range	Batch Actual
Weight per Gallon					
Viscosity					
Flash Point (Typical)					
% Solids by Volume (Typical)					
Cure to recoat time @ 50F, 70F & 90F (Typical)					
Batch Size					
Date of Mfg.					
Shelf Life					
Expiration Date					

COMMENTS:

I hereby certify that the coating materials described above were manufactured with the same formulation, raw materials, production methods, and quality control standards as the coating materials originally tested and/or accepted for use at the River Protection-Waste Treatment Plant (WTP) Project site, located in the 200 East Area of the Hanford Site in Washington State in accordance with the requirements of Specifications 24590-WTP-3PS-AFPS-T0001, 24590-WTP-3PS-AFPS-T0003, 24590-WTP-3PS-AFPS-T0004 & 24590-WTP-3PS-AFPS-T0006.

Signed: _____ Date: _____

Title: _____ Company: _____

Appendix G
Surface Preparation and Coating Inspection Form

Page __ of ___

REPORT NO:_____ DATE: _____
PROJECT:_____ DAY: M T W T F S S
SUBCONTRACTOR:_____ SHIFT: _____
EQUIPMENT/AREA:_____ INSPECTOR: _____
SUBSTRATE: STEEL/CONCRETE/OTHER-_____ COATING SPEC NO/REV:_____
ENVIRONMENTAL CONDITIONS:

WORK ACTIVITY						
TIME						
DRY BULB TEMP. °F						
WET BULB TEMP. °F						
RH %						
DEW POINT °F						
SURFACE TEMP. °F						
BLOTTER TEST						

PRE-SURFACE PREPARATION:
SP-1:_____ MASKING/PROTECTION:_____ SURFACE DEFECTS:_____

SURFACE PREPARATION:
METHOD:_____ ABRASIVE TYPE/SIZE/STORAGE:_____
RECYCLED ABRASIVE OIL FLOATATION TEST:_____ABRASIVE CONDUCTIVITY TEST:_____
CLEANLINESS SPEC:_____ ACTUAL:_____PROFILE SPEC:_____ ACTUAL:_____
EQUIPMENT:_____

COATING MATERIALS & MIXING:
PRODUCT(S)_____
BATCH NO(S)/QUANTITIES/EXPIRATION DATE:_____/_____/_____
THINNERS/BATCH NO(S)/THINNING RATIO:_____/_____/_____
STORAGE:_____ MIXING: _____ INDUCTION TIME:_____
MATERIAL TEMPERATURE:_____ POT LIFE EXPIRATION TIME:_____
COATING/LINING APPLICATION START TIME:_____ FINISH TIME:_____
COAT: PRIMER/PRIMER T.U./SECOND/SECOND T.U./THIRD/THIRD T.U./OTHER
METHOD:_____ WFT:_____ RECOAT TIME/TEMP:_____ CURE TIME/TEMP:_____
EQUIPMENT:_____

APPLIED COATING:
VISUAL INSPECTION (FILM IMPERFECTIONS):_____
DRY FILM THICKNESS: SPEC:_____ ACTUAL:_____ METHOD:_____
HOLIDAY TEST:_____ METHOD:_____ OTHER TESTING:_____ METHOD:_____
TOUCH-UP AND REPAIR:_____ FINAL CURE:_____

COMMENTS: (*Use reverse side or attach extra pages*)

_____/_____
INSPECTOR'S SIGNATURE/DATE

Appendix H
Deleted

Appendix I
Secondary Containment Installation Typical Details (no scale)

- Installation Detail 1A-Floor /Wall Junction
- Installation Detail 1B-Wall/Wall Junction
- Installation Detail 2A-Reinforced Floor/Wall Junction
- Installation Detail 2B-Reinforced Wall/Wall Junction
- Installation Detail 3A-Reserved
- Installation Detail 3B-Construction Joint
- Installation Detail 4-Crack Repair
- Installation Detail 5A-Embed Plates without Steel Attachment
- Installation Detail 5B-Embed Plates with Steel Attachment
- Installation Detail 6-Perimeter Key
- Installation Detail 7-Floor or Wall Steel Embed With Stainless Steel Plate Overlay

Notes-

1. Details 1A and 1B are used for areas containing ancillary equipment with normally open floor drains, which do not contain tanks. (DWP and/or Non-DWP affecting)
2. Details 2A and 2B are for areas that do not have normally open floor drains. (DWP and/or Non-DWP affecting)
3. RESERVED
4. Detail 3B is to be used for construction joints within the limits of the secondary containment lining. The 3B construction joint detail, formed or created (e.g., saw-cut) rectangular slot, shall be centered over the existing concrete construction joint (Refer to Section 6.2.1.4.1). (DWP and/or Non-DWP affecting)
5. Detail 4 is only to be used for large cracks other than minor shrinkage cracks. (DWP and/or Non-DWP affecting)
6. Detail 5A, 5B, 7 are to be used for embedded steel plates, angles, penetrations etc. The perimeter of all embeds shall be chipped back and filled as shown on detail 5A.

Areas containing free flowing floor drains shall use the rigid polymeric filler material. Areas that do not contain free flowing floor drains and within a flood zone shall use flexible polymeric epoxy filler material. (DWP and/or Non-DWP affecting)

7. Detail 6 is only used where the coating system terminates in the middle of a floor. (DWP and/or Non-DWP affecting)

INSTALLATION DETAIL 1A - FLOOR/WALL JUNCTION

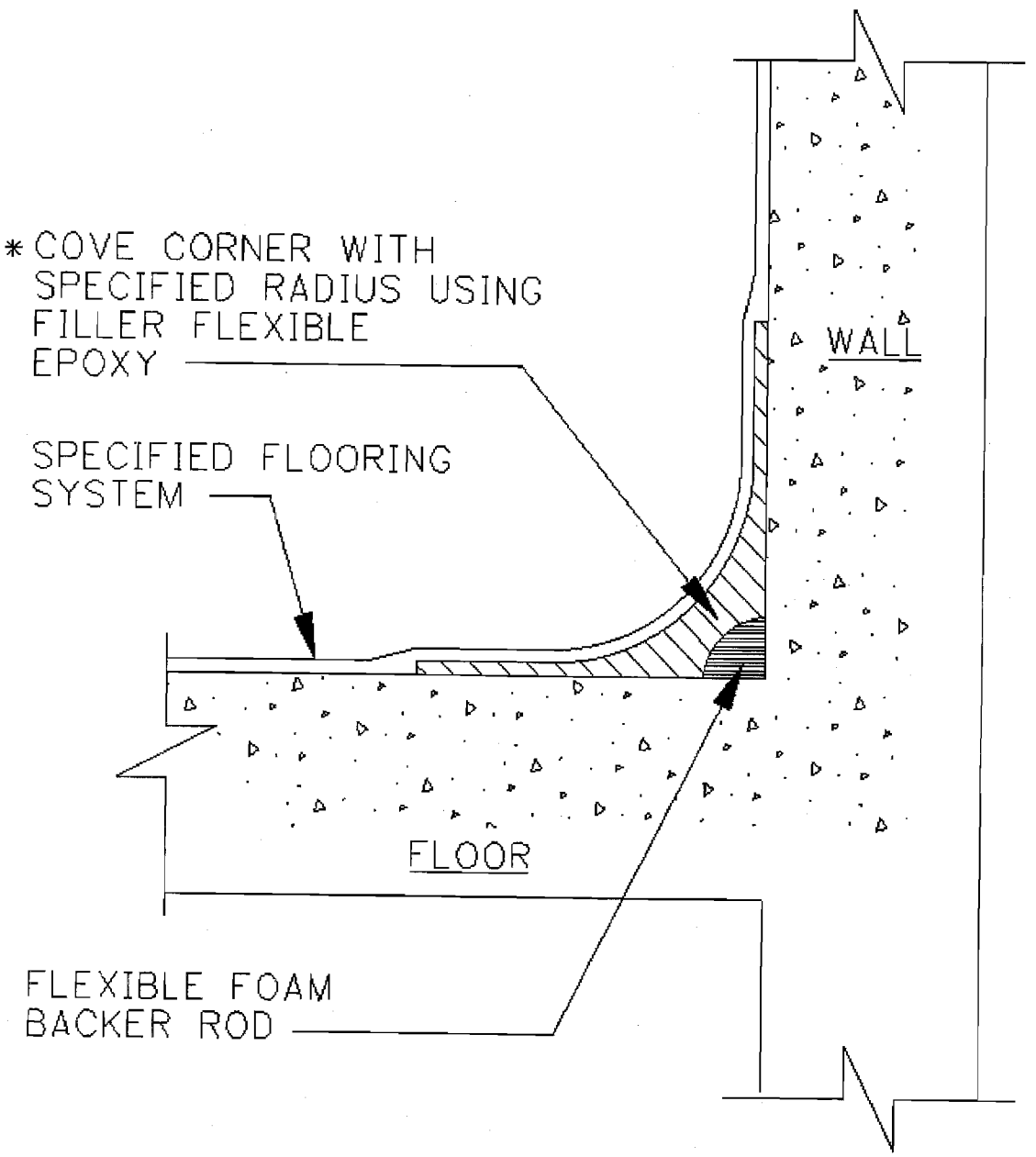

INSTALLATION DETAIL 1B - WALL/WALL JUNCTION

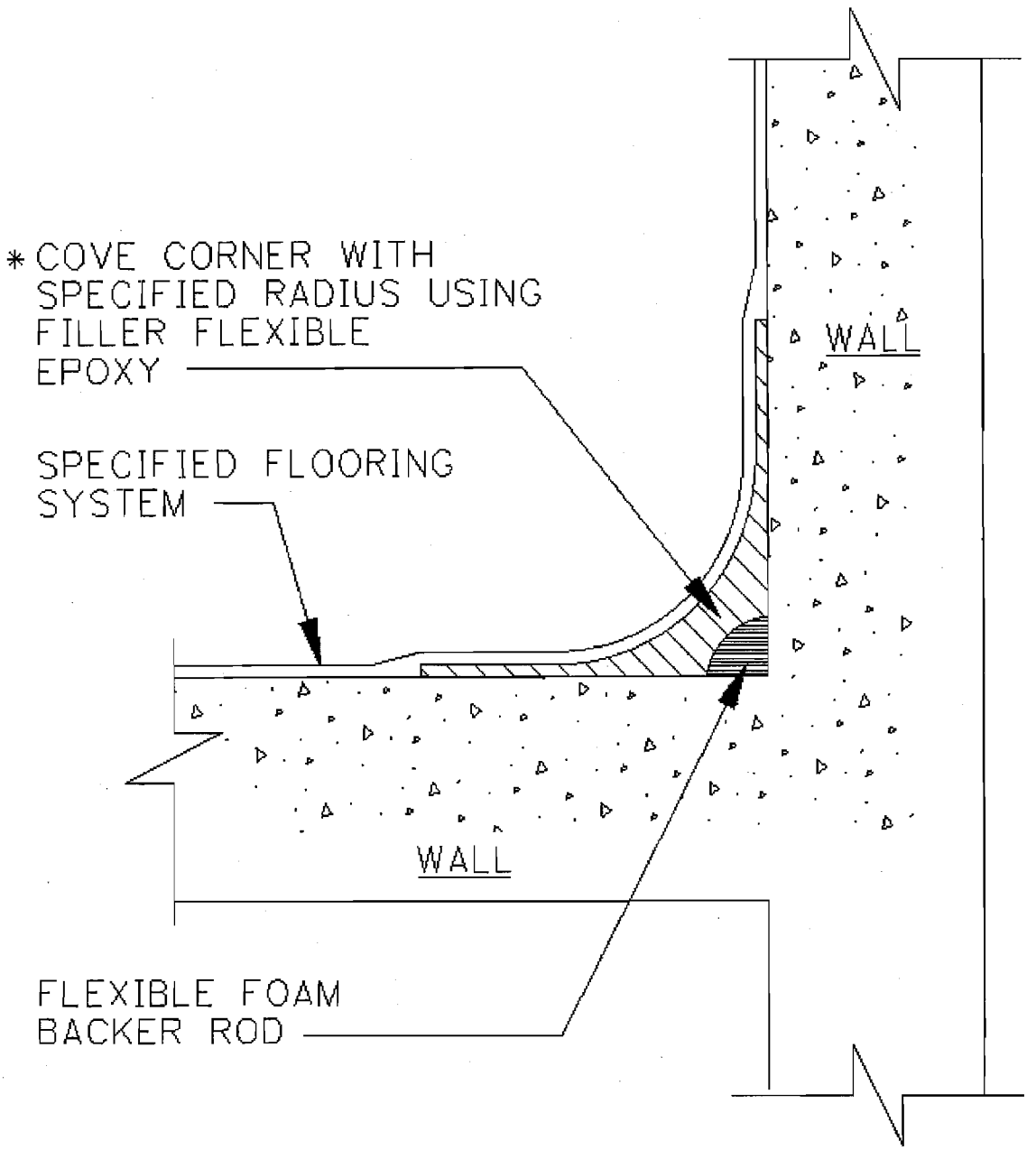

INSTALLATION DETAIL 2A
REINFORCED FLOOR/WALL JUNCTION

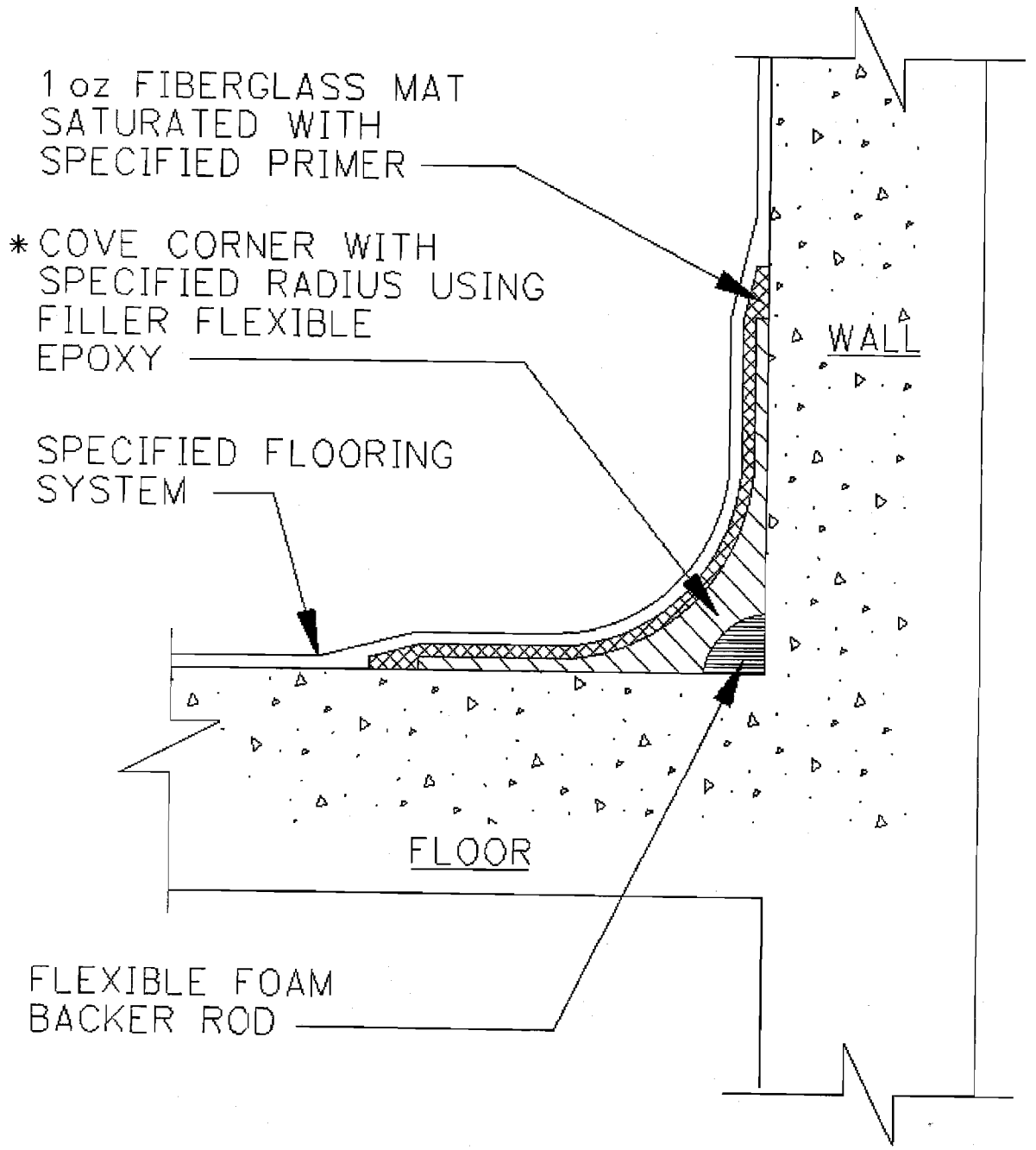

INSTALLATION DETAIL 2B
REINFORCED WALL/WALL JUNCTION

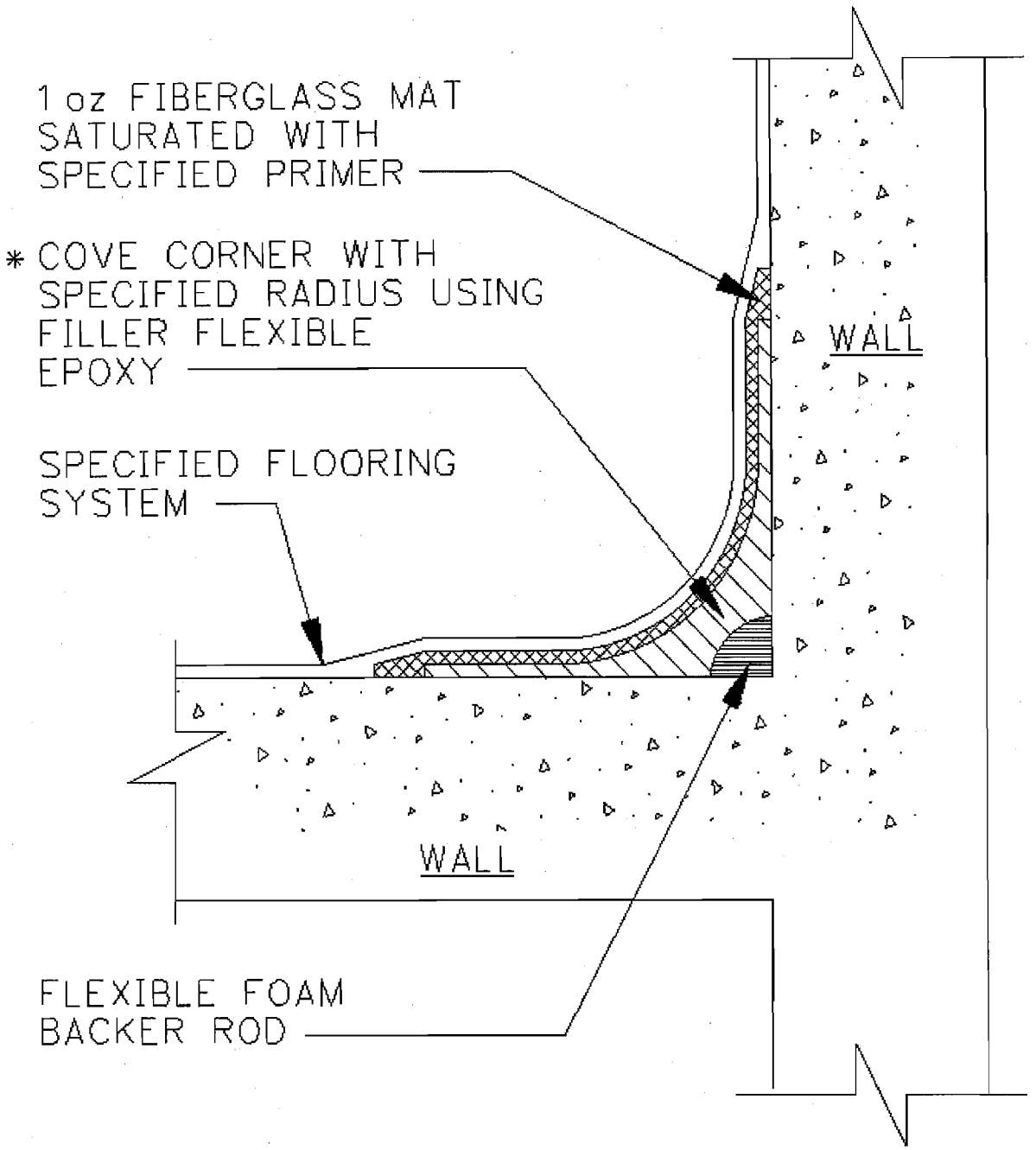

INSTALLATION DETAIL 3A - RESERVED

INSTALLATION DETAIL 3B - CONSTRUCTION JOINT

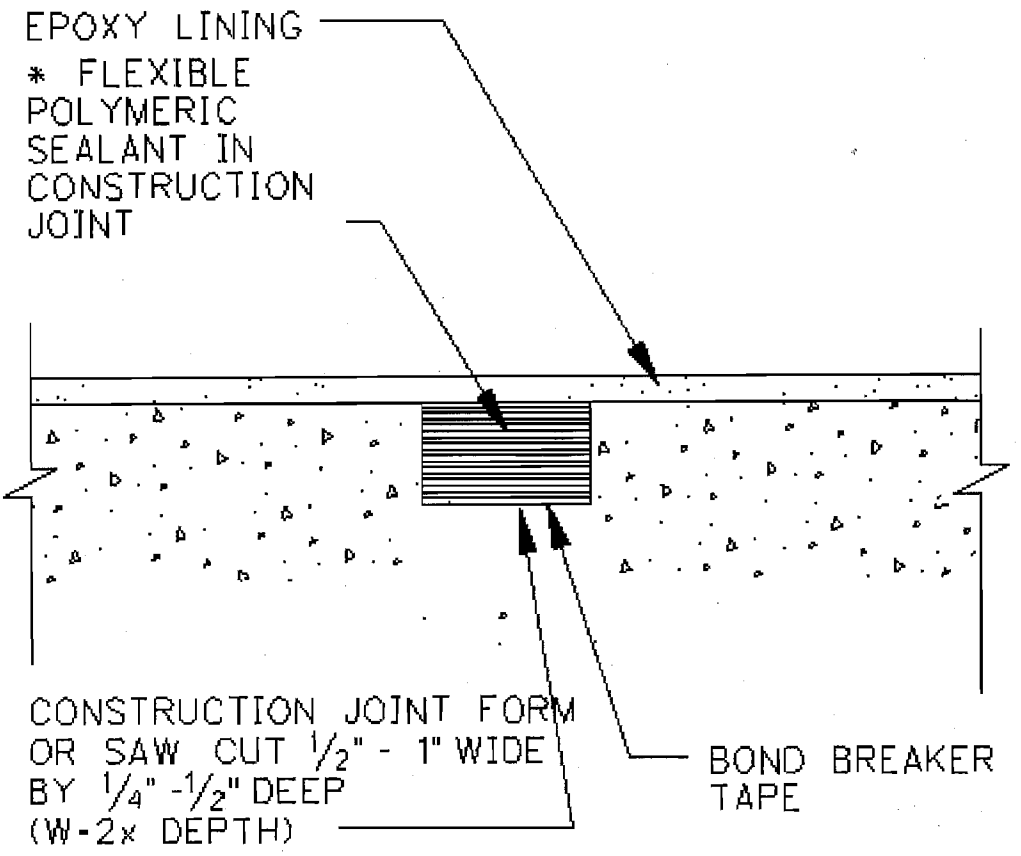

CONCRETE FLOOR/WALL

INSTALLATION DETAIL 4 - CRACK REPAIR

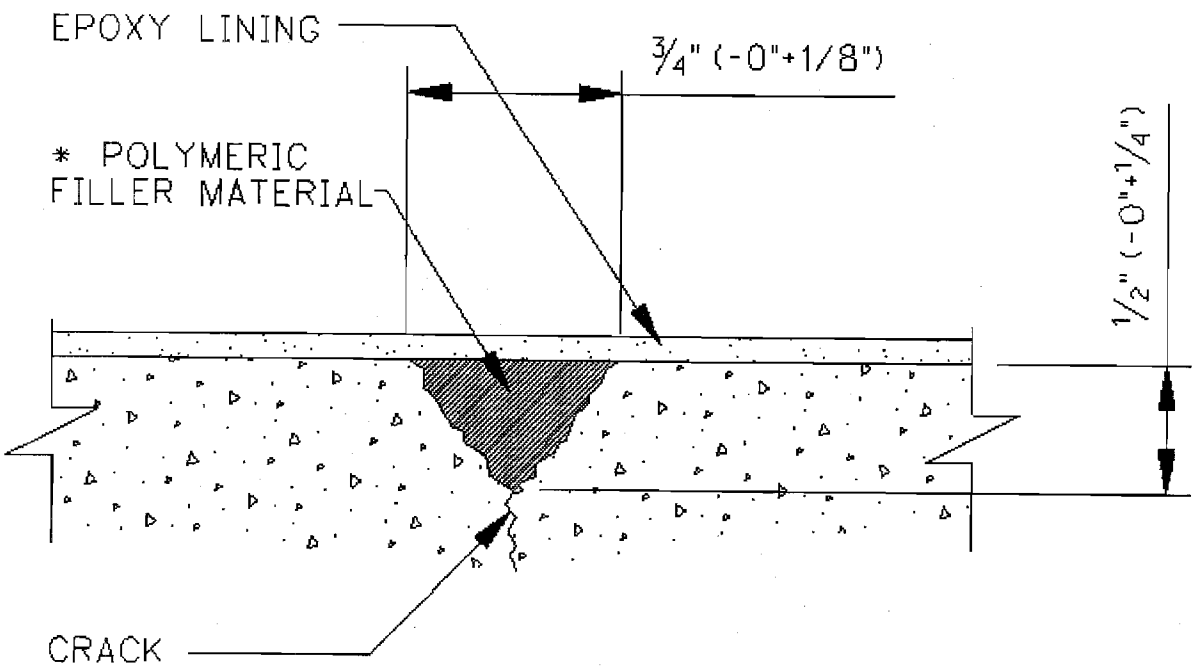

CONCRETE FLOOR/WALL

INSTALLATION DETAIL 5A - EMBED PLATES WITHOUT STEEL ATTACHMENT

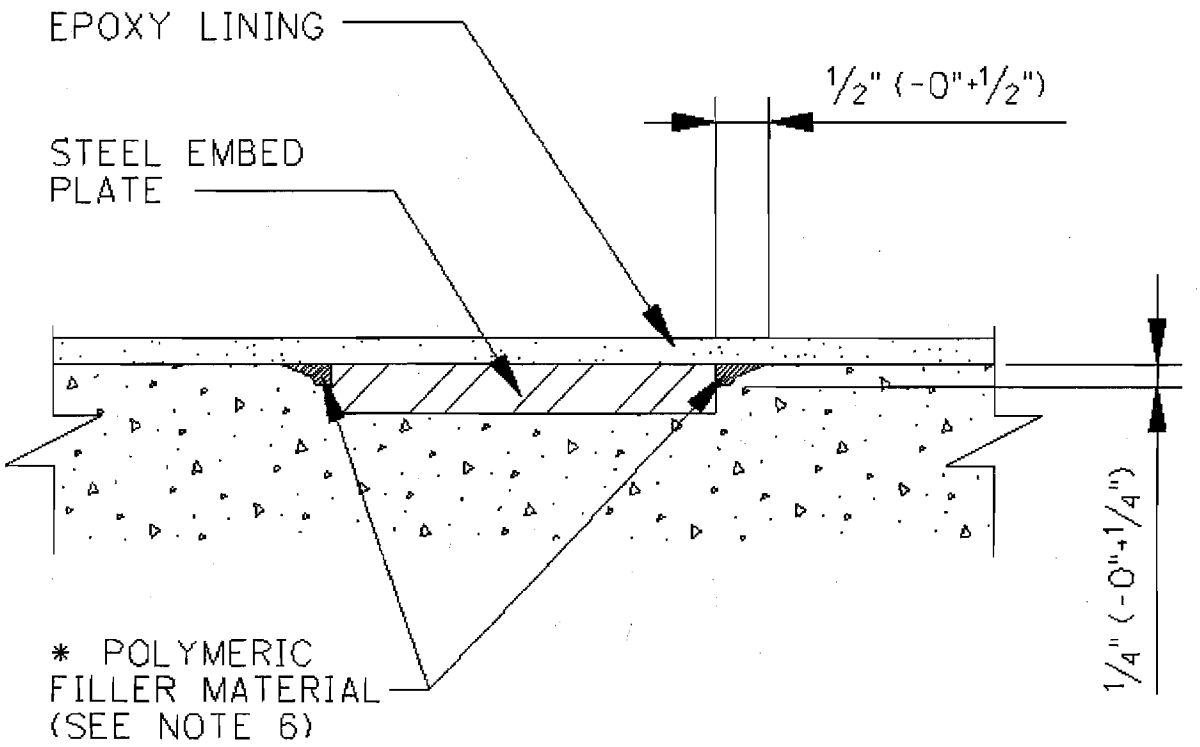

CONCRETE FLOOR/WALL

INSTALLATION DETAIL 5B - EMBED PLATES WITH STEEL ATTACHMENT

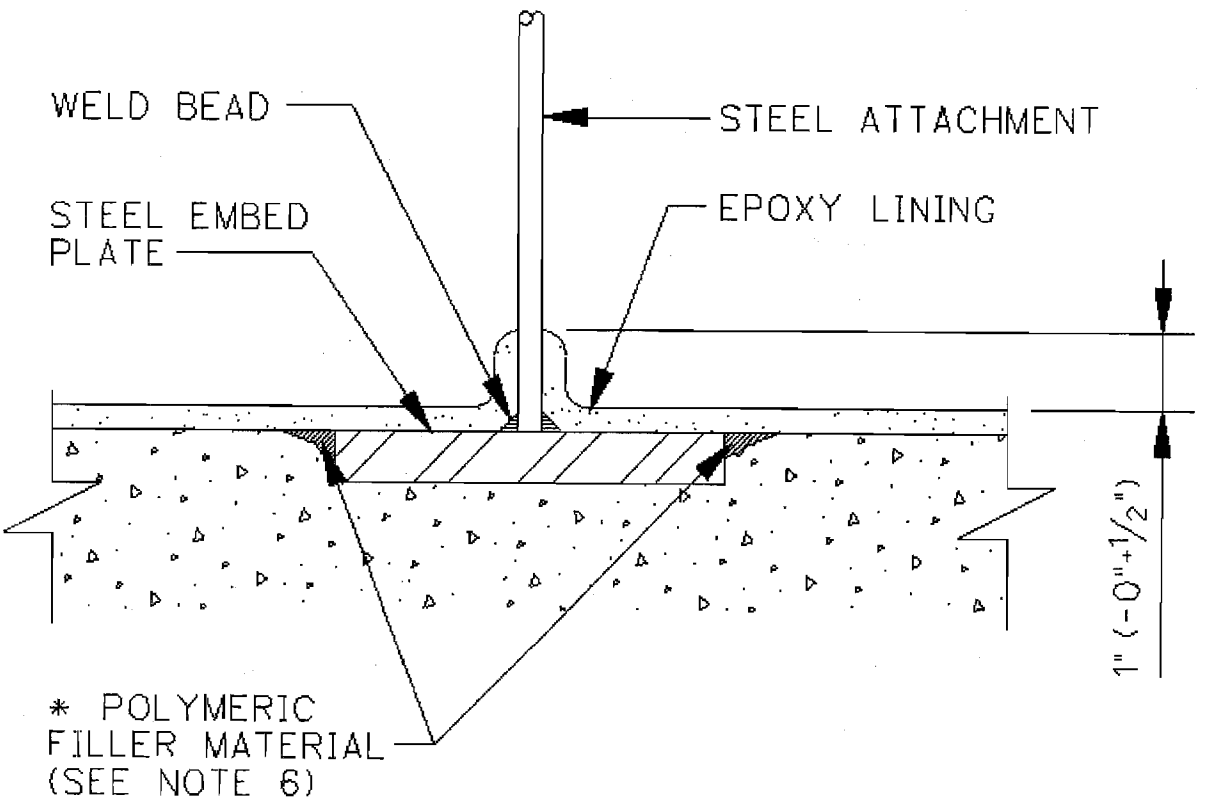

CONCRETE FLOOR/WALL

INSTALLATION DETAIL 6 - PERIMETER KEY

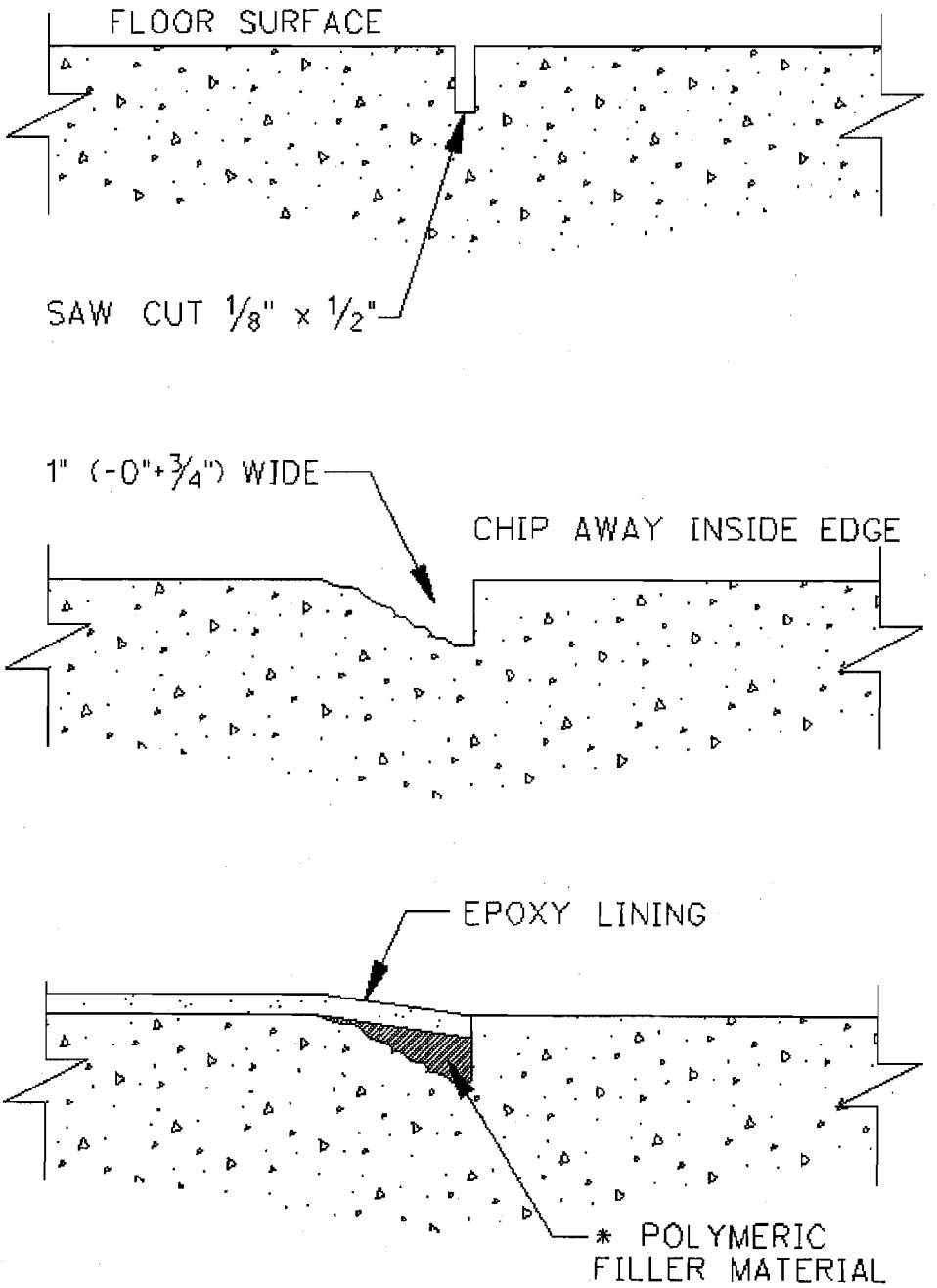

INSTALLATION DETAIL 7 - FLOOR OR WALL STEEL EMBED WITH STAINLESS STEEL PLATE OVERLAY

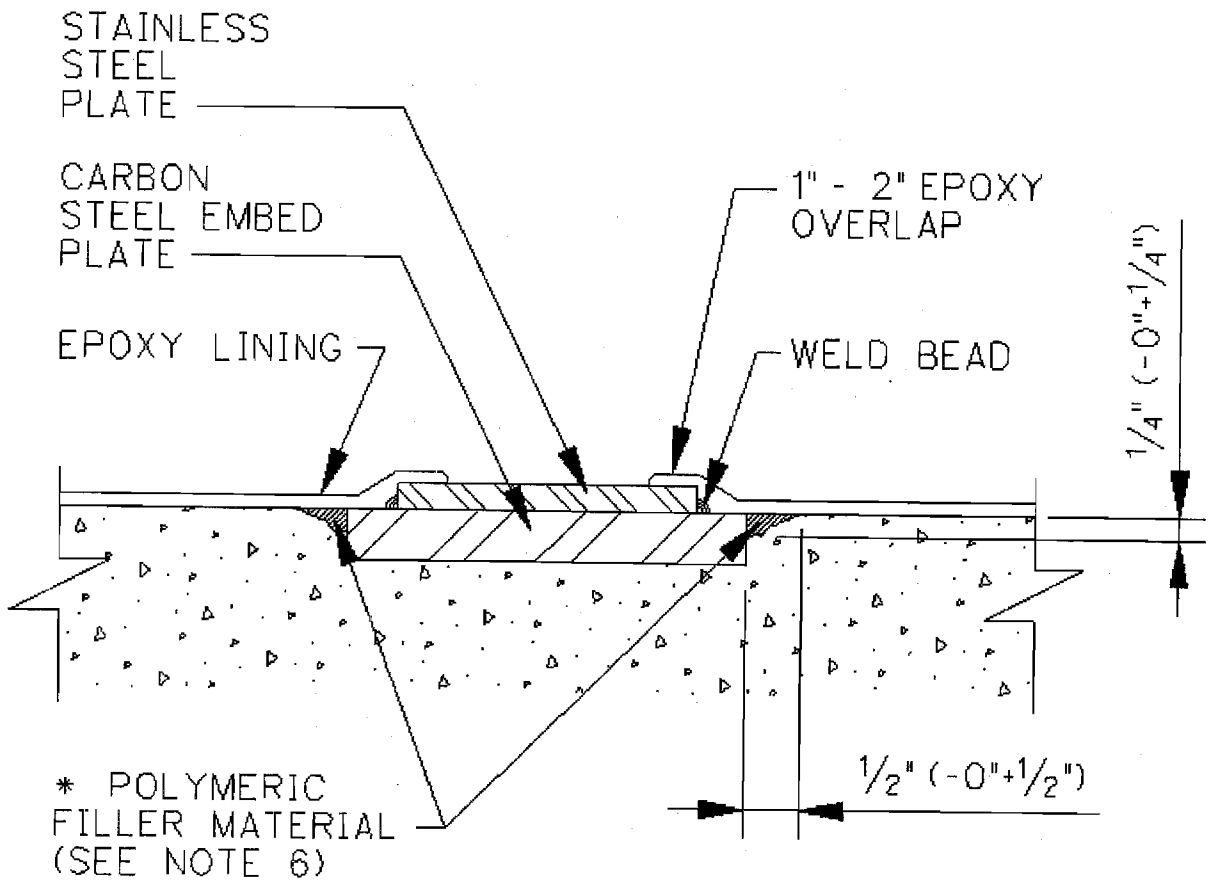

CONCRETE FLOOR/WALL

Appendix J
Interface Installation Detail Drawing References

The table below lists the drawing numbers for Secondary Containment Interface Installation Details. The latest issued revision of these drawings shall be used.

DRAWING NO.	DRAWING TITLE
24590-WTP-DD-S13T-00050	Civil/Structural Standard Secondary Containment Coating Details Electrical Interfaces
24590-WTP-DD-S13T-00051	Civil/Structural Standard Secondary Containment Coating Details Embedment Interfaces
24590-WTP-DD-S13T-00052	Civil/Structural Standard Secondary Containment Coating Details Steel Interfaces
24590-WTP-DD-S13T-00053	Civil/Structural Standard Secondary Containment Coating Details Concrete Interfaces
24590-WTP-DD-S13T-00054	Civil/Structural Standard Secondary Containment Coating Details Mechanical Interfaces
24590-WTP-DD-S13T-00056	Civil/Structural Standard Secondary Containment Coating Details Commodity Support Interfaces

RCRA Operating Record Cover Sheet

Document Number: 24590-WTP-PCN-ENV-11-007

Waste Management Records:

- ☐ **R101** List of Waste Management Areas
- ☐ **R102** Waste Analysis Records
- ☐ **R103** Waste Designation Information
- ☐ **R104** Waste Transfer Records
- ☐ **R105** Movement of Containerized Waste Onsite
- ☐ **R106** Release/Spill Records
- ☐ **R114** Field Change Request/Field Change Notice
- ☐ **R116** Field Monitoring / Surveillance Checklists
- ☐ **R119** Reserved
- ☐ **R120** Reserved
- ☐ **R126** Satellite and 90-Day Accumulation Area

Compliance Schedule Submittals:

- ☐ **R401** Pretreatment Facility
- ☐ **R402** LAW Facility
- ☐ **R403** HLW Facility
- ☐ **R404** Laboratory
- ☐ **R405** Balance of Facility
- ☐ **R406** WTP All Facilities
- ☐ **R407** Human Health & Ecological Risk Assessment

Other Operating Record Documents:

- ☐ **R601** Outgoing Correspondence (RCRA Permit Relating)
- ☐ **R602** Contingency Plan Implementation
- ☐ **R603** Closure Plan Deviation
- ☐ **R604** Permit Equivalency Notice (PEN)
- ☒ **R605** Permit Change Notice (PCN)
- ☐ **R606** Annual RCRA Permit Closure and Post-Closure Cost Adjustment Report
- ☐ **R607** Permit Modification
- ☐ **R608** Incoming Correspondence (RCRA Permit Relating)

Non-Operating Record Documents:

- ☐ **N101** Meeting Minutes
- ☐ **N102** Memoranda

Special Instructions to PDC:

Link CCNs:

237288

239903

240487

ISSUED BY
RPP-WTP PDC

R11434708

Quarter Ending 12/31/2011

24590-WTP-PCN-ENV-11-008

Hanford Facility RCRA Permit Modification Notification Form

Part III, Operating Unit 10

Waste Treatment and Immobilization Plant

Index

Page 2 of 2: Hanford Facility RCRA Permit, Part III, Operating Unit 10, Waste Treatment and Immobilization Plant
Update 24590-WTP-PER-CSA-02-001, *Secondary Containment Design*, with Revision 10 of the permit document in Appendix 7.5 of the Dangerous Waste Permit (DWP).

Submitted by Co-Operator:

D. M. Busche — Date: 10/24/11

Reviewed by ORP Program Office:

D. L. Noyes — Date: 10/27/11

Quarter Ending 12/31/2011

24590-WTP-PCN-ENV-11-008

Hanford Facility RCRA Permit Modification Notification Form

Unit:	Permit Part:
Waste Treatment and Immobilization Plant	**Part III, Operating Unit 10**

Description of Modification:

The purpose of this Class 1 prime modification is to update 24590-WTP-PER-CSA-02-001, *Secondary Containment Design* , with Revision 10 of the permit document in Appendix 7.5 of the Dangerous Waste Permit.

Appendix 7.5			
Replace:	24590-WTP-PER-CSA-02-001, Rev. 9	With:	24590-WTP-PER-CSA-02-001, Rev. 10

This permit document has been updated to incorporate the following changes:

- Revised Figure 6 to update the plan view and add section labels to views of a typical under sink and fume hood secondary containment leak detection drip pan for the LAB facility
- Revised drawings and associated notes to reflect the change in the thickness of the 304L stainless steel leak detection pan material to a minimum of 18 gauge to match the thickness of the materials of construction for the fume hood sinks
- Revised note 3 to state: Weld NDE Testing 100% liquid penetrant test (PT) or 100% hydraulic test under atmospheric pressure
- Added a note to document dimensions provided on the drawing are typical dimensions, and actual dimensions may vary based on piping configuration and base cabinet dimensions
- Revised the Figure 6 Title and Title Block
- Added note to Figure 7 to document that the 4 machine screws in Detail 2 and the Plug Detail will be removed once the facility is operational
- Removed revision numbers from the title blocks of all figures
- Updated the revision history section of the document

This modification requests Ecology approval and incorporation of the following outstanding change document(s) into the permit. Although not yet incorporated into the revised document included in this PCN, the listed change document is intended to be incorporated into the permit. None

WAC 173-303-830 Modification Class:	Class 1	Class [1]1	Class 2	Class 3
Please mark the Modification Class:		X		

Enter relevant WAC 173-303-830, Appendix I Modification citation number: NA

Enter wording of WAC 173-303-830, Appendix I Modification citation:

In accordance with WAC 173-303-830(4)(d)(i), this modification notification is requested to be reviewed and approved as a Class [1]1 modification. WAC 173-303-830(4)(d)(ii)(A) states, "Class 1 modifications apply to minor changes that keep the permit current with routine changes to the facility or its operation. These changes do not substantially alter the permit conditions or reduce the capacity of the facility to protect human health or the environment. In the case of Class 1 modifications, the director may require prior approval."

Modification Approved/Concur: [X] Yes [ ] Denied (state reason below)

Reason for denial:

Reviewed by Ecology:

D. McDonald — Date: 11-2-11

R11432722

ISSUED BY
RPP-WTP PDC

Document title: **Secondary Containment Design**

Contract number: DE-AC27-01RV14136

Department: CSA

Author(s): Bryson Bogart Dan Robertson Mike Mudry

Principal author signature: By Bogart

Document number: 24590-WTP-PER-CSA-02-001, Rev 10

Checked by: Mike Shaw

Checker signature: [signature]

Date of issue: 10-19-2011

Issue status: Approved

Approved by: Jim Booth

Approver's position: CSA/LBL, Engineering Group Supervisor

Approver signature: JR Booth 10-19-2011

River Protection Project
Waste Treatment Plant
2435 Stevens Center Place
Richland, WA 99354
United States of America
Tel: 509 371 2000

Notice

Please note that source, special nuclear, and byproduct materials, as defined in the Atomic Energy Act of 1954 (AEA), are regulated at the US Department of Energy (DOE) facilities exclusively by DOE acting pursuant to its AEA authority. DOE asserts, that pursuant to the AEA, it has sole and exclusive responsibility and authority to regulate source, special nuclear, and byproduct materials at DOE-owned nuclear facilities. Information contained herein on radionuclides is provided for process description purposes only.

History Sheet

Rev	Date	Reason for revision	Revised by
0	6/24/02	Initial issue	Indra Ghosh
1	9/26/02	Issued for Permitting Use	Indra Ghosh / N. T. Desai
2	10/09/02	• Revised text in Section 1 • Added Yard Transfer Lines structural support description. • Changed material type from 304L to 316L on Fig. 4. • Added Reference to "LAB" building in all sections	Indra Ghosh / N. T. Desai
3	3/27/03	• Revised Figures 1,2,3 and 4, and deleted Figure 5 • Replaced Ref. 2.1.5 with Washington Administrative Code • Editorial changes in Section 3.1 as marked. Issued for Permitting Use	Indra Ghosh / N. T. Desai
4	2/12/04	• Addition of AEA Statement • Editorial changes in Section 3.2 as marked. • Revise Figure 1 to reflect changes to LAW vessel skirt • Deleted reference to the Lab in Figure 3 • Addition of Figure 5 describing the typical Laboratory vessel support details • Addition of Figures 6 and 7 providing typical Laboratory under sink and fume hood drain secondary containment drip pan details • Addition of Figure 8 describing typical Laboratory piping and pump pit sump weir details	Harsh Raval
5	8/4/04	Issued for Permitting Use	H. Raval, D. Robertson
6	8/25/04	Issued for Permitting Use	H. Raval, D. Robertson

Rev	Date	Reason for revision	Revised by
7	5/19/05	• Revised Section 3.1, Seismic Peak Ground Acceleration. Nathan Kyle • Corrected specification callout on Figure 1 • Revised typical PT sump and typical wall/mat penetration details on Figure 4 • Revised Note 3 and revised details on Figure 7 • General revision to Figure 8 (Added Details 1 and 2) • Revised Notes 3 and 4 for cupsink detail, and revised hot cell transfer port drain details on Figure 9. Added Note 5 for cupsink cover. • Revised Note 3, added Note 4 to embed plate detail on Figure 10. Added adjacent embed plate optional detail. • Added Figures 11 and 12. Issued for Permitting Use	Nathan Kyle
8	8/25/08	• Revised Figures 8 and 11 to provide additional sketch notes for Laboratory weir plans and sections • Addition of Figure 13 LAW Melter Encasement Assembly sketch Issued for Permitting Use	Bryson Bogart
9	2/8/10	• Added Figures 14 through 16, revised Figure 13 Issued for Permitting Use	Bryson Bogart, Dan Robertson
10	10/18/11	• Revised Figure 6 and 7, revised figure title blocks Issued for Permitting Use	Bryson Bogart, Dan Robertson

Contents

Notice ii

History Sheet ii

1 Introduction 1

2 Applicable Documents 1

2.1 Codes and Standards 1

3 Description 2

3.1 Design Methodology, Material, Loads, and Load Combinations 2

3.2 Typical Details 3

Figures

Figure 1 Typical Vessel Embed, Support, and Flat Bottom Tank Details for LAW 3 Building 4

Figure 2 Liner Plate and Grillage Support Details for PT, HLW, LAW and LAB Buildings 5

Figure 3 Typical Process Vessel Support Details for PT and HLW Buildings 6

Figure 4 Misc. Typical Details Sumps, Trenches, Wall Penetrations, Embedded Plates and Special Protective Coating PT, HLW, LAW and LAB Buildings 7

Figure 5 Typical Process Vessel Support Details for LAB Building 8

Figure 6 Plan View of Typical Under Sink and Fume Hood Drain for LAB Bldg Secondary Containment Leak Collection Pan 9

Figure 7 Section View of Typical Laboratory Under Sink and Fume Hood Drain for LAB Bldg Secondary Containment Leak Collection Pan, Including Leak Test Plug 10

Figure 8 Typical Laboratory Piping and Pump Pit Sump and Weir Details for LAB Building 11

Figure 9 Typical Hot Cell Floor Drain Detail and Transfer Port Drain Detail for LAB Building 12

Figure 10 Typical HLW Building Sump Details & Typical PT Building SS Liner/CS Embed Detail 13

Figure 11 Typical Laboratory C3 Piping and Pump Pit Sump and Weir Details for LAB Building 14

Figure 12 Typical RLD Condensate Tank Support Details for PT Building (Exterior) 15

Figure 13 LAW Melter Encasement Assembly Secondary Containment Details 16

Figure 14 Typical Autosampling System ASX Sampler Full Half Section 17

Figure 15 Typical Autosampling System Lower Containment Area Leak Detection Details 18

Figure 16 HLW Building HOP Drum Transfer Tunnel Drip Pan Plan, Sections and Details 19

1 Introduction

In accordance with Chapter 173-303 Washington Administrative Code (Ref. 2.1.5), facilities that manage liquid dangerous waste must provide secondary containment[1]. At the Waste Treatment and Immobilization Plant, secondary containment systems have been designed to prevent a release of dangerous waste to the environment as required by the Code.

This report describes and provides references to the design criteria, load definitions, load combinations, material of construction, and methodology for the analysis/design of Pretreatment (PT), High-Level Waste (HLW), Low-Activity Waste (LAW) facilities, and Analytical Laboratory (LAB) building with emphasis on secondary containment components. It also includes several representative typical details.

2 Applicable Documents

2.1 Codes and Standards

2.1.1 ACI 349, Code Requirements for Nuclear Safety-Related Concrete Structures.

2.1.2 ACI 318, Code Requirements for Structural Concrete.

2.1.3 Uniform Building Code (UBC), 1997.

2.1.4 ANSI/AISC N690, Specification for the Design, Fabrication, and Erection of Steel Safety-Related Structures for Nuclear Facilities.

2.1.5 Washington Administrative Code, Chapter 173-303.

2.1.6 AISC M016-89, Manual of Steel Construction -Allowable Stress Design, Ninth Edition.

2.1.7 ASCE 7, Minimum Design Loads for Buildings and Other Structures.

2.1.8 ASCE 4, Seismic Analysis of Safety-Related Nuclear Structures and Commentary.

2.1.9 Safety Requirements Document, Volume 11, 24590-WTP-SRD-ESH-01-001-02.

[1] With the exception of ancillary equipment as provided by 173-303-640(4)(f) and approved by DWP.

3 Description

3.1 Design Methodology, Material, Loads, and Load Combinations

Methodology	Codes and specifications: • PT and HLW: General: ASCE 4 (Ref. 2.1.8). Concrete: ACI 349 (Ref. 2.1.1). Steel: ANSI/AISC N690 (Ref. 2.1.4) and AISC (Ref. 2.1.6). • LAW and LAB: General: UBC (Ref. 2.1.3). Concrete: ACI 318 (Ref. 2.1.2). Steel: AISC M016 (Ref. 2.1.6).
Dead Loads and Live loads:	ASCE 7 (Ref. 2.1.7), UBC (Ref. 2.1.3), and Tables 4-1 and 4-2 of SRD (Ref. 2.1.9).
Seismic Loads	Site-specific response spectra as specified in SRD (Ref. 2.1.9). • PT and HLW: Peak Ground Horizontal Acceleration = 0.30g. Peak Ground Vertical Acceleration = 0.21g. • LAW and LAB: Seismic Zone 2B (UBC, Ref. 2.1.3). Peak Ground Horizontal Acceleration = 0.24g. Peak Ground Vertical Acceleration = 0.16g.
Material	
Concrete	28-day compressive strength, f,' = 4,000 psi and 5,000 psi.
Reinforcing Bar	ASTM A706, deformed.
Steel	W Shape – ASTM A992 or A572 Grade 50; Angles and Channels - ASTM A36 or A529 Grade 50; Plates - ASTM A36; Pipe - ASTM A53; Anchor Rods - ASTM F1554; Welded studs A108; Steel deck-ASTM A653.
Load Combinations	
Concrete	• HLW and PT: Based on ACI 349 (Ref 2.1.1). • LAW and LAB: ACI 318 (Ref. 2.1.2) and UBC (Ref 2.1.3).
Steel	• HLW and PT: Based on ANSI/AISC N690 (Ref 2.1.4) and AISC (Ref 2.1.6). • LAW and LAB: AISC M016-89 (Ref. 2.1.6) and UBC (Ref 2.1.3).
Stainless Steel Liners (SS)	Most commonly used in the process cells. Refer to Figures 2-5 for typical details. Refer to Figures 14 and 15 for ASX liner typical details.
Special Protective Coating	Material for coatings will be compatible with the dangerous waste.
Yard Transfer Lines Structural Support	Structural support for yard transfer lines (intra and inter facility waste transfer lines) is described in Ancillary Equipment Pipe Support Design, 24590-WTP-PER-PS-02-001.

3.2 Typical Details

Figures 1 through 16 show several typical details related to secondary containment for PT, HLW, LAW, and LAB buildings.

Figure 1 Typical Vessel Embed, Support, and Flat Bottom Tank Details for LAW 3 Building

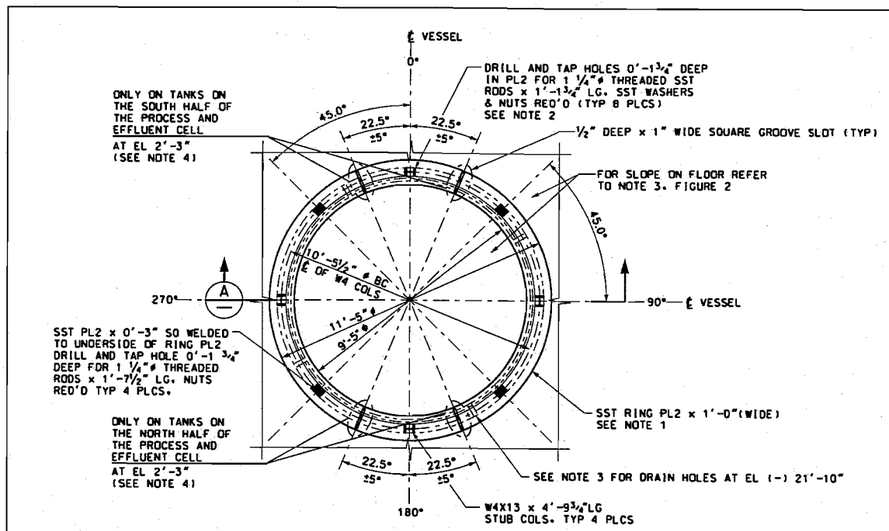

TYPICAL VESSEL RING SUPPORT - PLAN VIEW

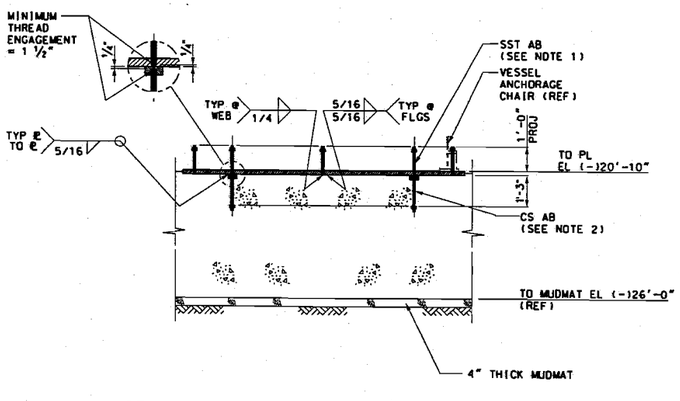

C3/C5 COLLECTION VESSEL EMBED ASSEMBLY

SECTION A

NOTES

1. STAINLESS STEEL MATERIAL:
   - ASTM A240, TYPE 304L FOR ANNULAR RING
   - ASTM A193, GRADE B8 FOR THREADED RODS
   - ASTM A194, GRADE 8 FOR HEAVY HEX NUTS
   - CONFORM TO F844, TYPE 304L FOR WASHERS
2. CARBON STEEL MATERIAL:
   - ASTM A992 FOR WIDE FLANGES
   - ASTM A36 FOR PLATES AND SHAPES (EXCEPT WIDE FLANGES)
   - ASTM F1554, GRADE 36, PLAIN FOR ANCHOR BOLTS
   - (THREADED ROD)
   - ASTM A 563, GRADE A HEAVY HEX, PLAIN FOR NUTS ANSI B1.1, CLASS 2A FIT FOR THREADS (UNC)
3. FOR THE ELEV (-) 21'-0" TANK, FOUR DRAIN HOLES SHALL BE PROVIDED ON THE SKIRT AND SKIRT BASE PLATE THE DRAIN HOLE SHALL BE FORMED BY REMOVING A 2-INCH WIDE STRIP FROM THE SKIRT RING, AND A 1-INCH RADIUS HALF-HOLE FROM THE SKIRT. DRAIN HOLES SHALL BE LOCATED AT 60°, 150°, 240°, AND 330° ORIENTATIONS.
4. FOR THE TANKS AT NOMINAL ELEV (+) 2'-0", TWO DRAIN SLOTS SHALL BE PROVIDED IN THE BASE RING TO ALLOW DRAINAGE TO THE LOW SIDE LINER PLATE EXTERIOR TO THE TANK.

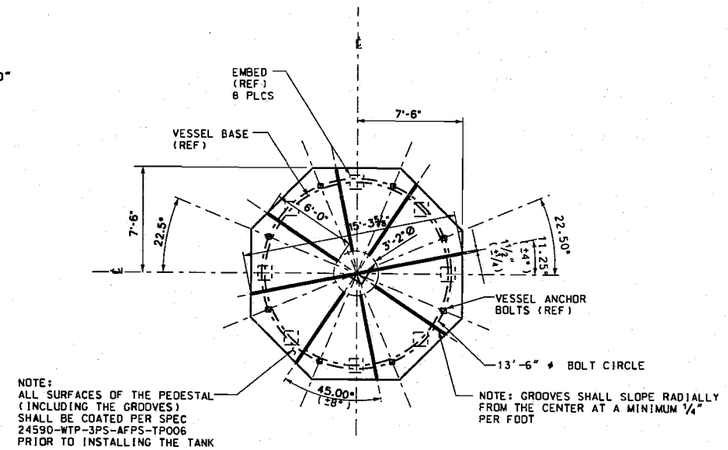

CAUSTIC COLLECTION TANK

BECHTEL

FIGURE 1
TYPICAL VESSEL EMBED, SUPPORT, AND FLAT BOTTOM TANK DETAILS FOR LAW BUILDING

DOCUMENT NO.	PAGE:
24590-WTP-PER-CSA-02-001	4

Figure 2 Liner Plate and Grillage Support Details for PT, HLW, LAW and LAB Buildings

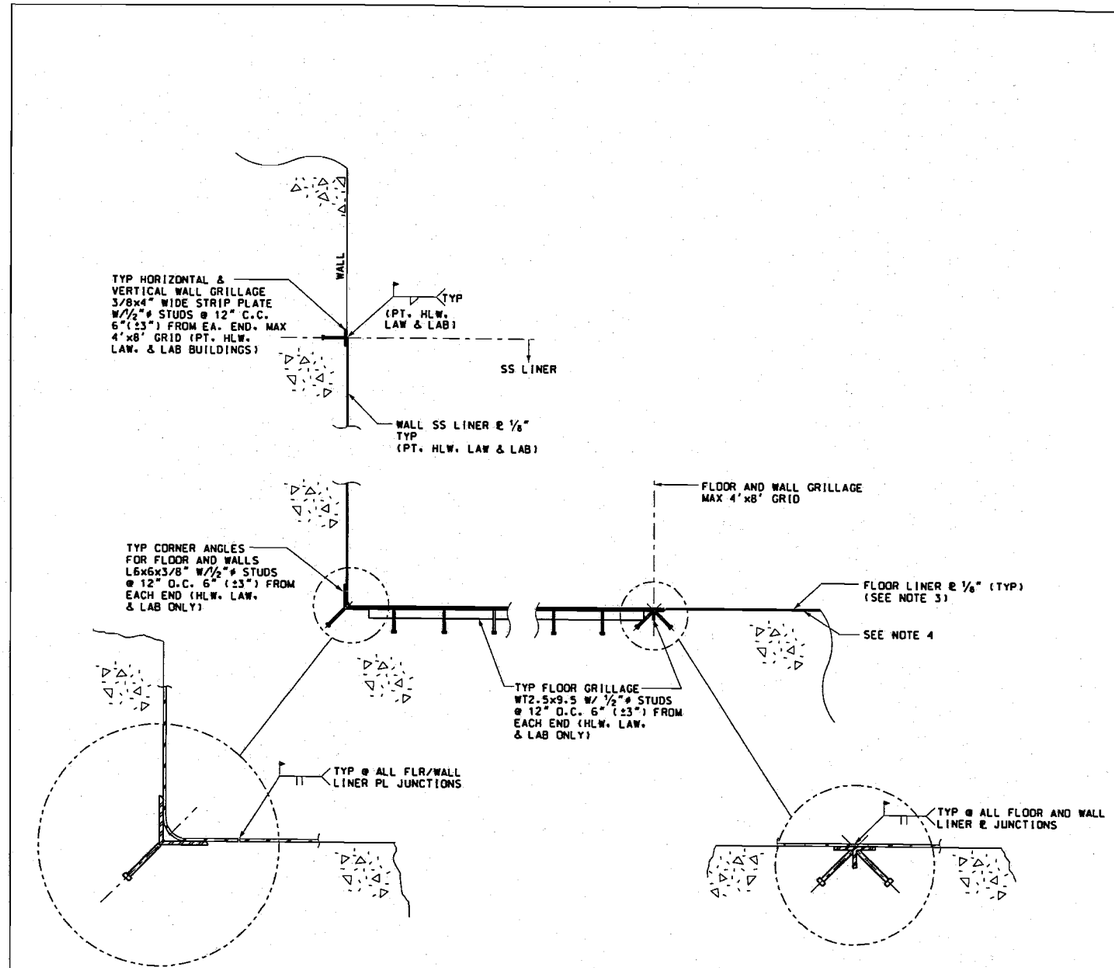

NOTES:

1. EMBEDMENT MATERIALS SHALL CONFORM TO THE FOLLOWING:
   - ASTM A36 FOR PLATES, ANGLES
   - ASTM A992 FOR WT SECTIONS
   - ASTM A108 FOR WELDED STUDS
   - NO COATING REQUIRED (BARE STEEL)
2. LINER PLATE MATERIAL:
   - ASTM A240 TYPE 304L
3. THE FLOOR LINER PLATE SHALL BE SLOPED MIN 1% (OUTSIDE OF THE TANK PERIMETER & ALSO DIRECTLY UNDER THE TANK).
4. IN PT BUILDING THERE IS 4,000 PSI CONCRETE FILL BETWEEN THE TOP OF CONCRETE AND SS LINER PLATE.

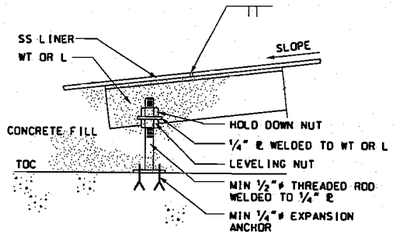

FLOOR LINER GRILLAGE DETAIL
PT BLDG

FIGURE 2

LINER PLATE AND GRILLAGE SUPPORT DETAILS FOR PT, HLW, LAW & LAB BUILDINGS

DOCUMENT NO.	PAGE:
24590-WTP-PER-CSA-02-001	5

Figure 3 **Typical Process Vessel Support Details for PT and HLW Buildings**

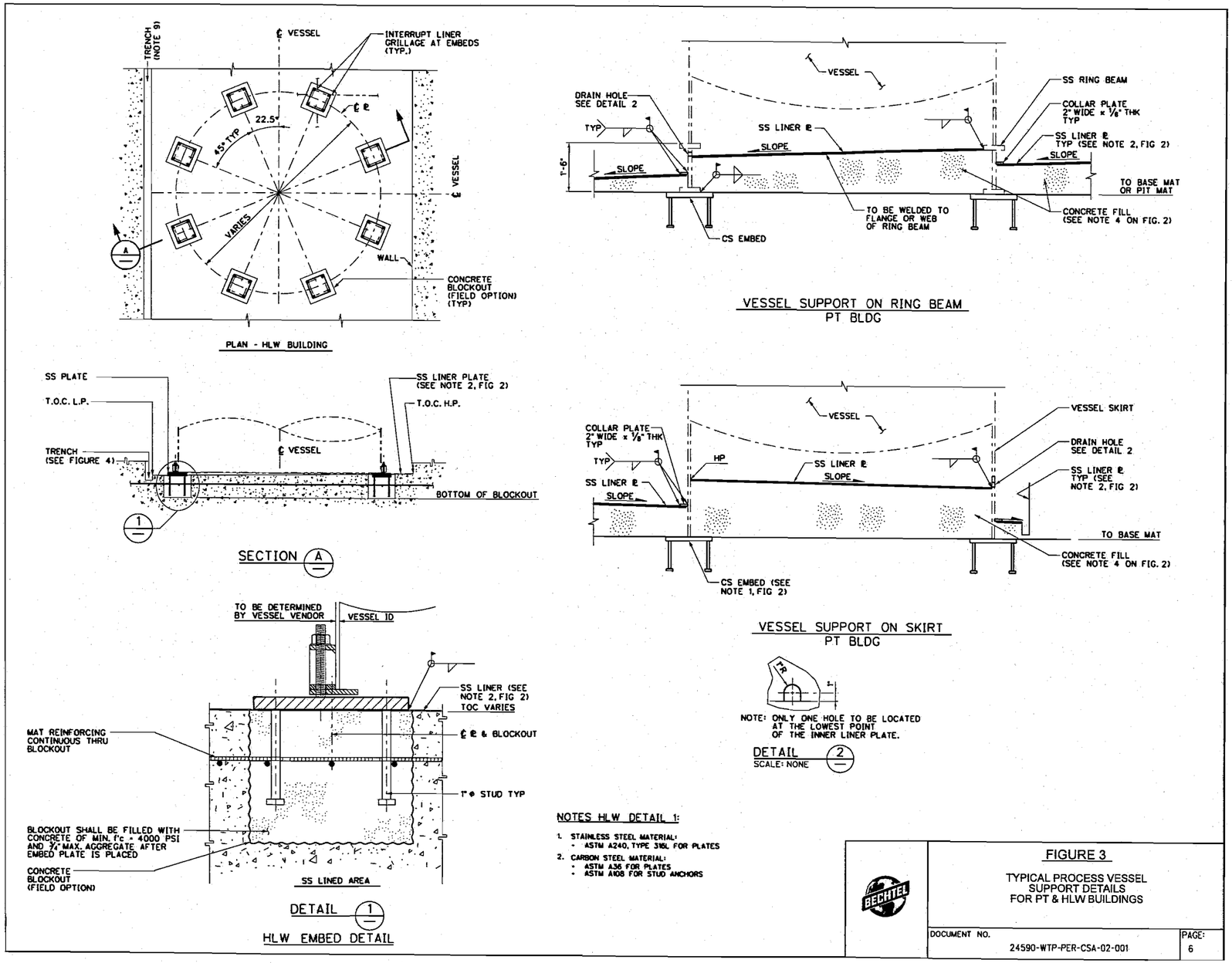

Figure 4 **Misc. Typical Details Sumps, Trenches, Wall Penetrations, Embedded Plates and Special Protective Coating PT, HLW, LAW and LAB Buildings**

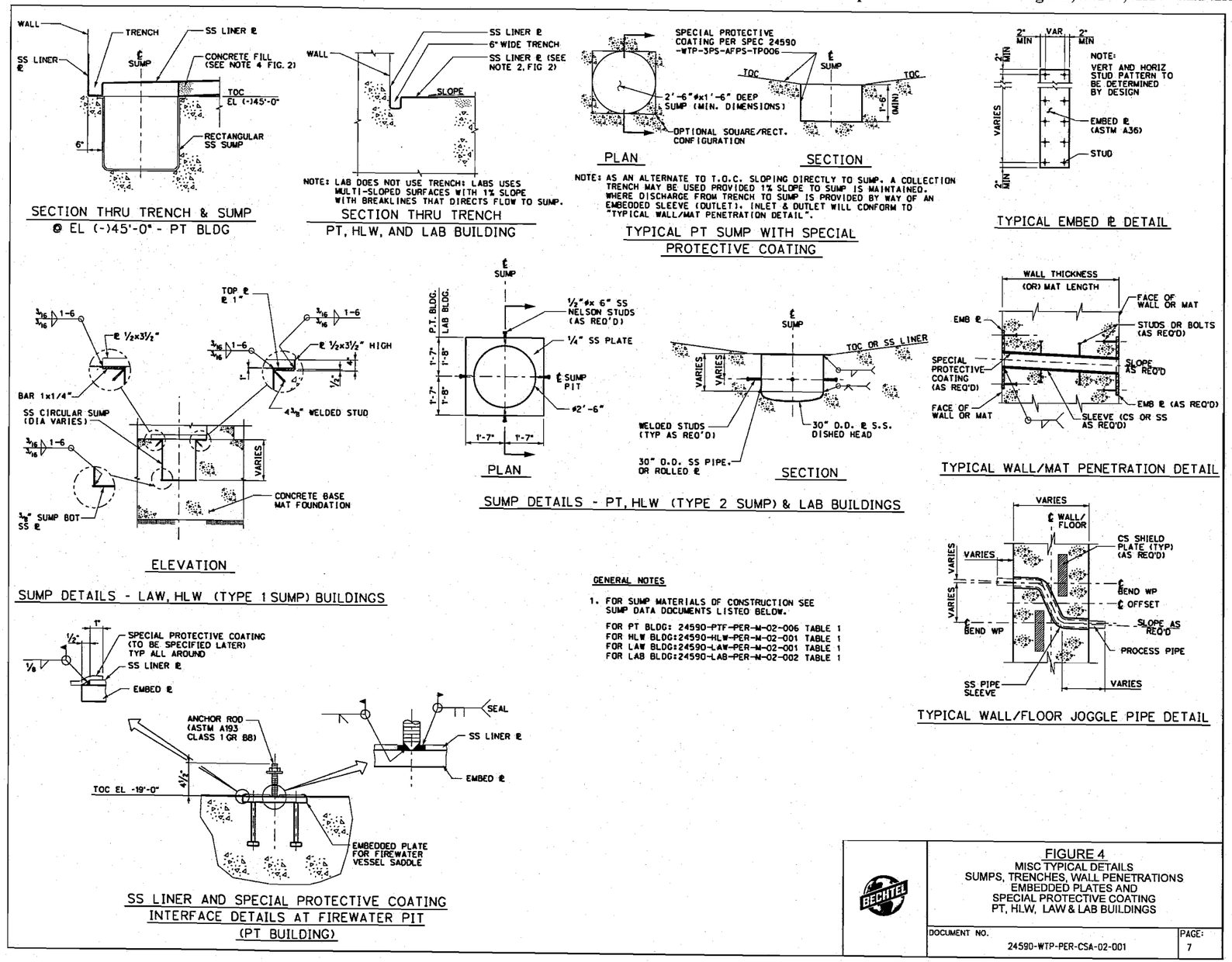

Figure 5 Typical Process Vessel Support Details for LAB Building

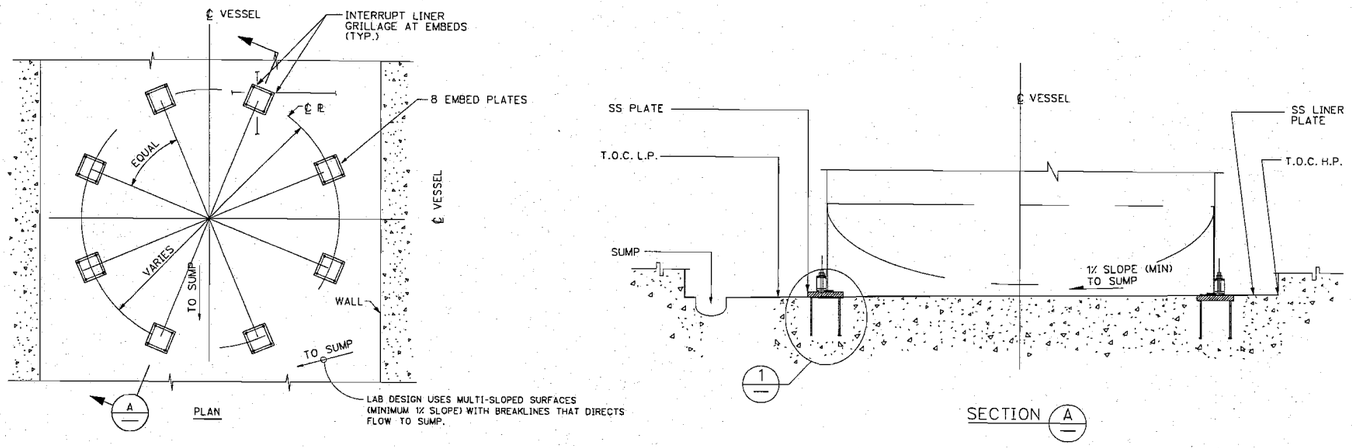

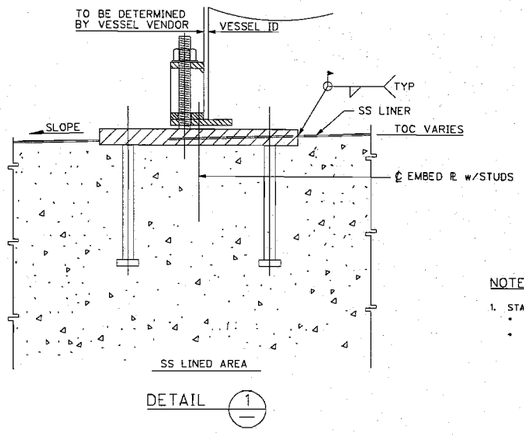

NOTES:

1. STAINLESS STEEL MATERIAL:
   - ASTM A240, TYPE 304L FOR PLATES
   - ASTM A108 GRADE C1010 THRU C1020 FOR STUD ANCHORS

FIGURE 5

TYPICAL PROCESS VESSEL SUPPORT DETAILS FOR LAB BUILDING

DOCUMENT NO. 24590-WTP-PER-CSA-02-001 | PAGE: 8

Figure 6 **Plan View of Typical Under Sink and Fume Hood Drain for LAB Bldg Secondary Containment Leak Collection Pan**

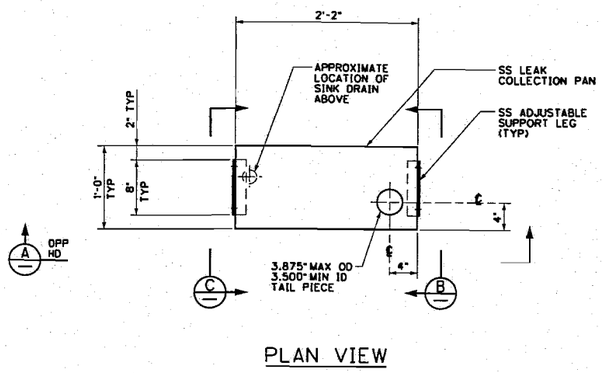

PLAN VIEW

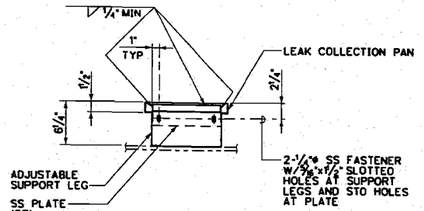

SECTION B

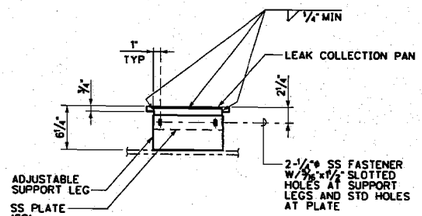

SECTION C

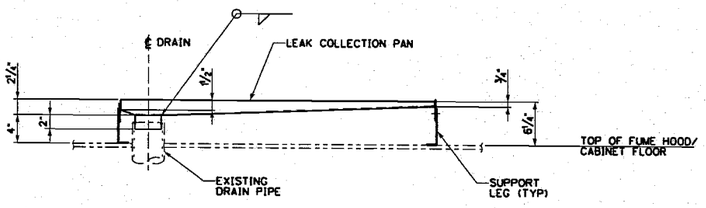

SECTION A

NOTES:

1. STAINLESS STEEL MATERIALS SHALL BE TYPE 304L 18 GA MINIMUM PER ASTM A240.A 2009 OR LATER REVISION.
2. ALL WELDING SHALL BE PERFORMED IN ACCORDANCE WITH AWS D9.1.
3. WELD NDE TESTING 100% LIQUID PENETRANT TEST (PT) OR 100% HYDRAULIC TEST UNDER ATMOSPHERIC PRESSURE
4. DRIP PAN DIMENSIONS ARE TYPICAL AND CAN VARY BASED ON FUME HOOD PIPING CONFIGURATION AND BASE CABINET DIMENSIONS.
5. LEAK COLLECTION PANS SHALL BE FABRICATED TO BE WATER TIGHT.

FIGURE 6

TYPICAL UNDER SINK
AND FUME HOOD DRAIN FOR LAB BLDG
SECONDARY CONTAINMENT LEAK COLLECTION PAN

DOCUMENT NO.	PAGE:
24590-WTP-PER-CSA-02-001	9

Figure 7 **Section View of Typical Laboratory Under Sink and Fume Hood Drain for LAB Bldg Secondary Containment Leak Collection Pan, Including Leak Test Plug**

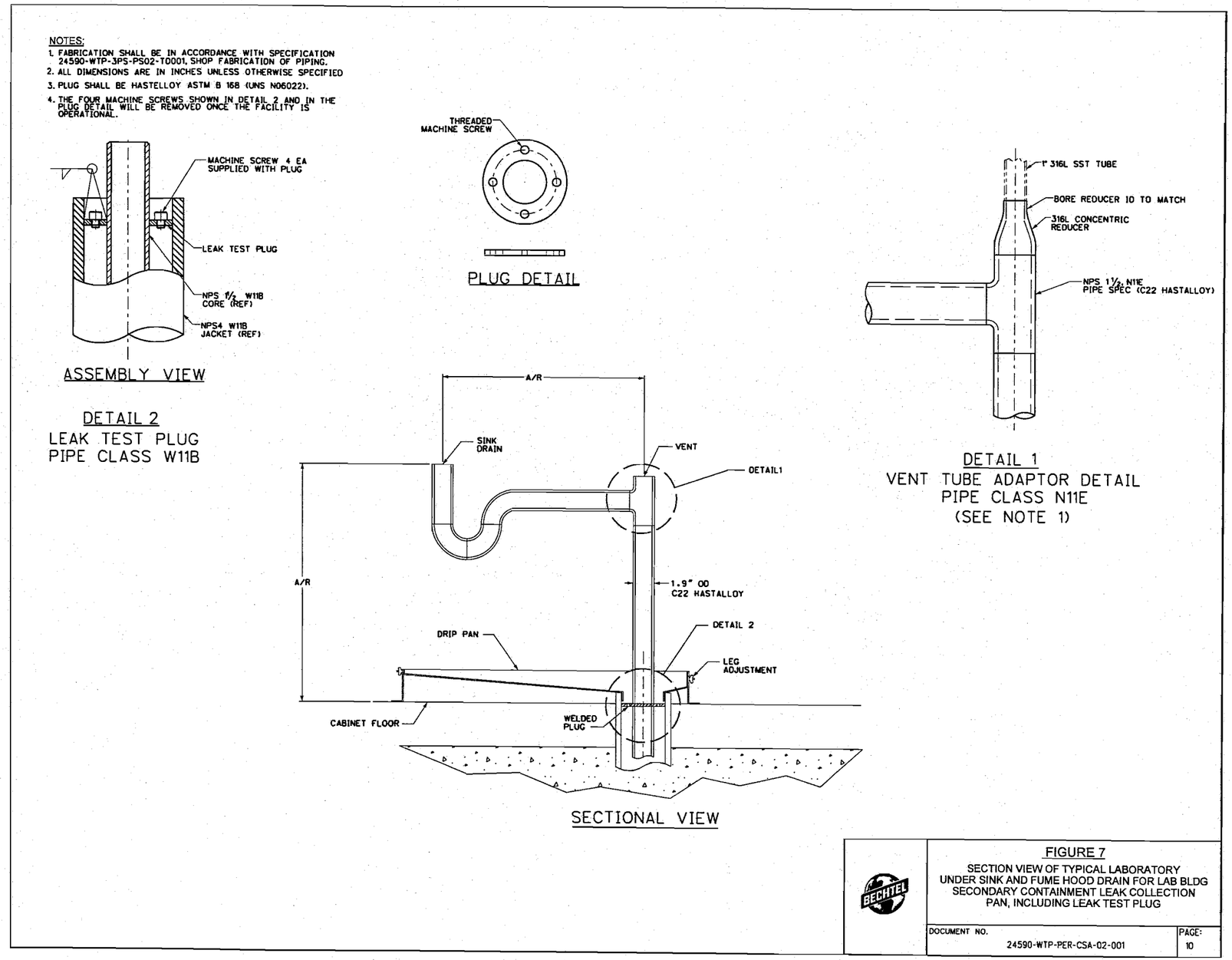

Figure 8 **Typical Laboratory Piping and Pump Pit Sump and Weir Details for LAB Building**

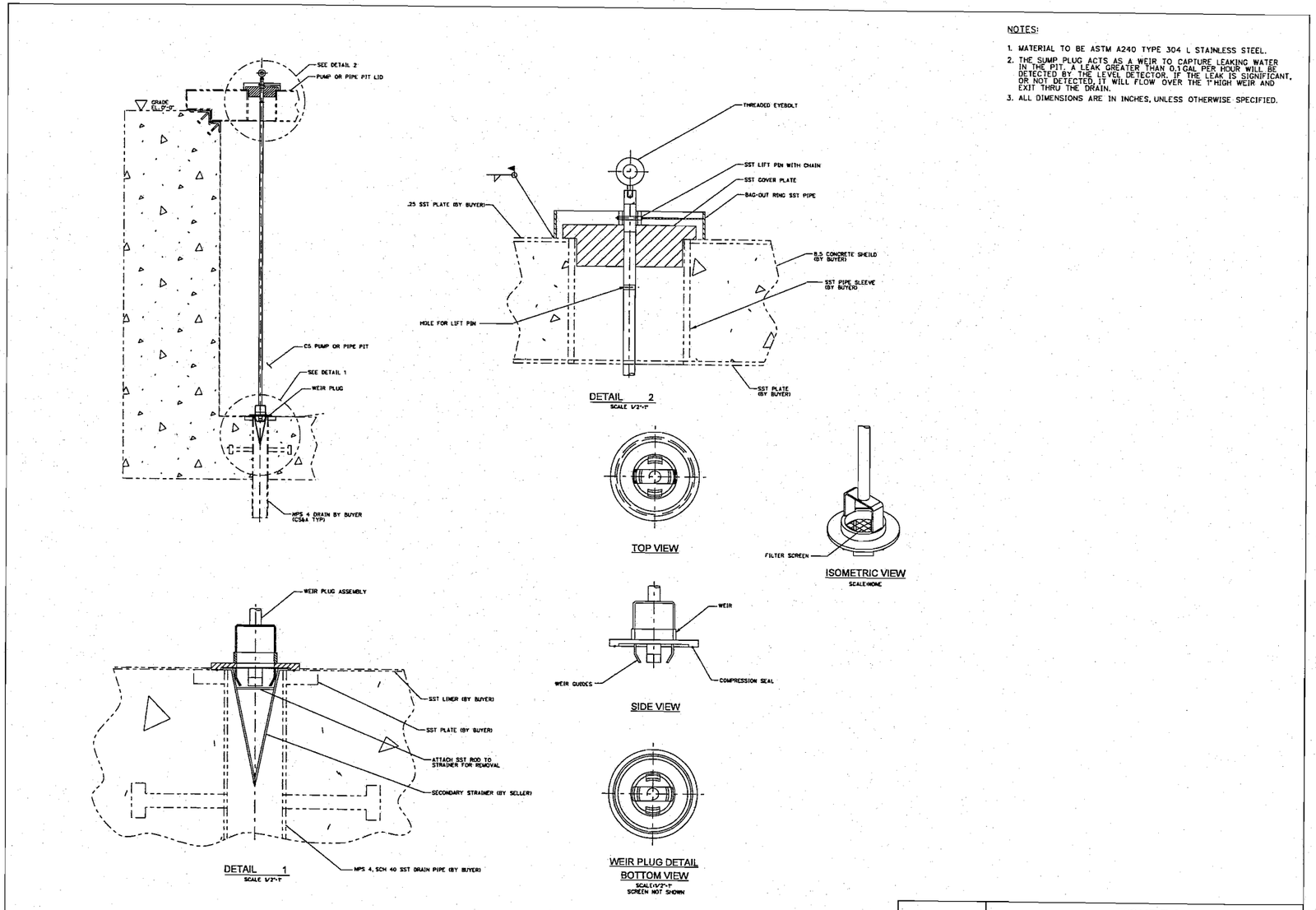

NOTES:

1. MATERIAL TO BE ASTM A240 TYPE 304 L STAINLESS STEEL.
2. THE SUMP PLUG ACTS AS A WEIR TO CAPTURE LEAKING WATER IN THE PIT. A LEAK GREATER THAN 0.1GAL PER HOUR WILL BE DETECTED BY THE LEVEL DETECTOR. IF THE LEAK IS SIGNIFICANT, OR NOT DETECTED, IT WILL FLOW OVER THE 1" HIGH WEIR AND EXIT THRU THE DRAIN.
3. ALL DIMENSIONS ARE IN INCHES, UNLESS OTHERWISE SPECIFIED.

FIGURE 8

TYPICAL LABORATORY C5 PIPING AND PUMP PIT SUMP AND WEIR DETAILS FOR LAB BUILDING

DOCUMENT NO.	PAGE:
24590-WTP-PER-CSA-02-001	11

Figure 9 **Typical Hot Cell Floor Drain Detail and Transfer Port Drain Detail for LAB Building**

NOTES:

1. FABRICATION SHALL BE IN ACCORDANCE WITH SPECIFICATION 24590-WTP-3PS-PS02-T0001, SHOP FABRICATION OF PIPING.
2. ALL DIMENSIONS ARE IN INCHES UNLESS OTHERWISE SPECIFIED
3. MATERIAL FOR THE FLANGE PLATE SHALL BE ASTM A240 TYPE 316L, STAINLESS STEEL. ALL OTHER STAINLESS STEEL ITEMS TO BE 300 SERIES.
4. MATERIAL: 14 GA., SST. PERFORATED PLATE 1/8" DIA. HOLES ON 7/16" CENTERS (40% OPEN AREA, 33 HOLES/SQ. IN.).
5. CUPSINK COVER - SST REGIMESH SINTERED WOVEN WIRE MESH GRADE 1 FILTER OR EQUIVALENT.

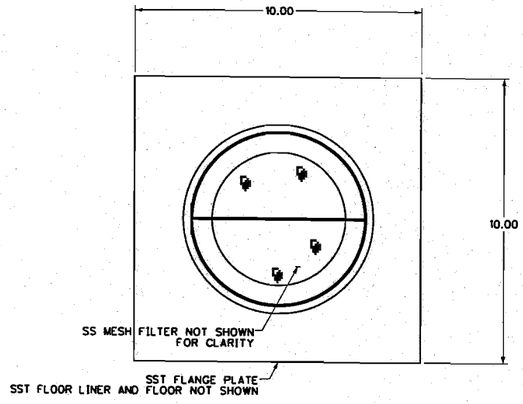

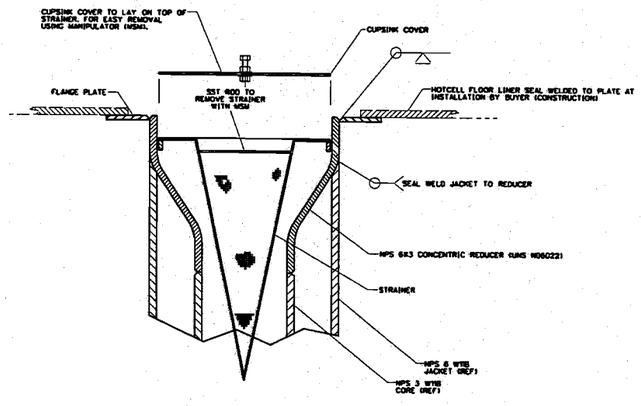

HOTCELL CUPSINK (FLOOR DRAIN) DETAIL
NPS 3 CORE PIPE
PIPE CLASS WT18

NOTES:

1. ALL DIMENSIONS ARE IN INCHES UNLESS OTHERWISE SPECIFIED.
2. FABRICATION SHALL BE IN ACCORDANCE WITH SPECIFICATION 24590-WTP-3PS-PS02-T0001, SHOP FABRICATION OF PIPING.
3. PIPE CLASS S32B
4. DIMENSION TO SLIP FIT WITH OD OF CORE PIPE.

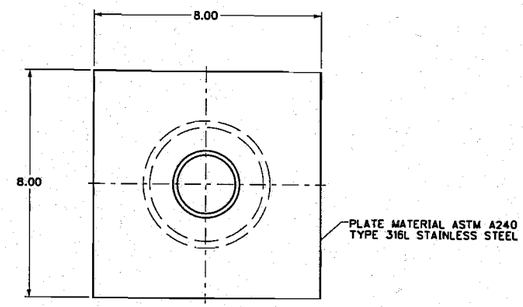

TOP VIEW

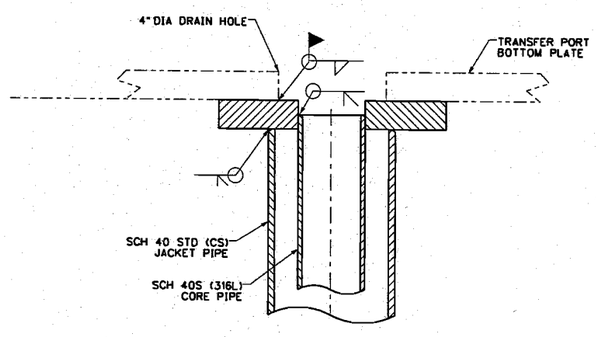

SECTION VIEW

HOT CELL TRANSFER PORT DRAIN

FIGURE 9

TYPICAL HOT CELL FLOOR DRAIN DETAIL AND TRANSFER PORT DRAIN DETAIL FOR LAB BUILDING

DOCUMENT NO.	PAGE:
24590-WTP-PER-CSA-02-001	12

Figure 10 **Typical HLW Building Sump Details & Typical PT Building SS Liner/CS Embed Detail**

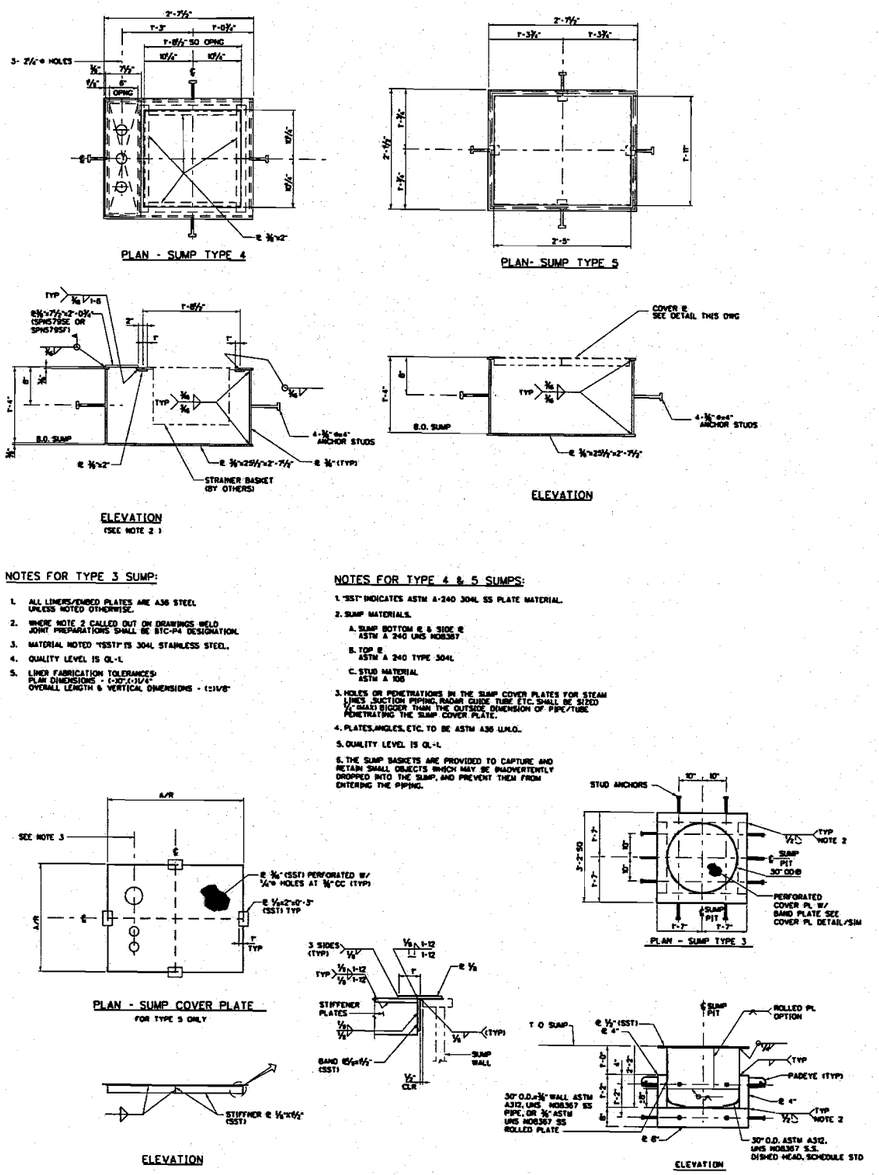

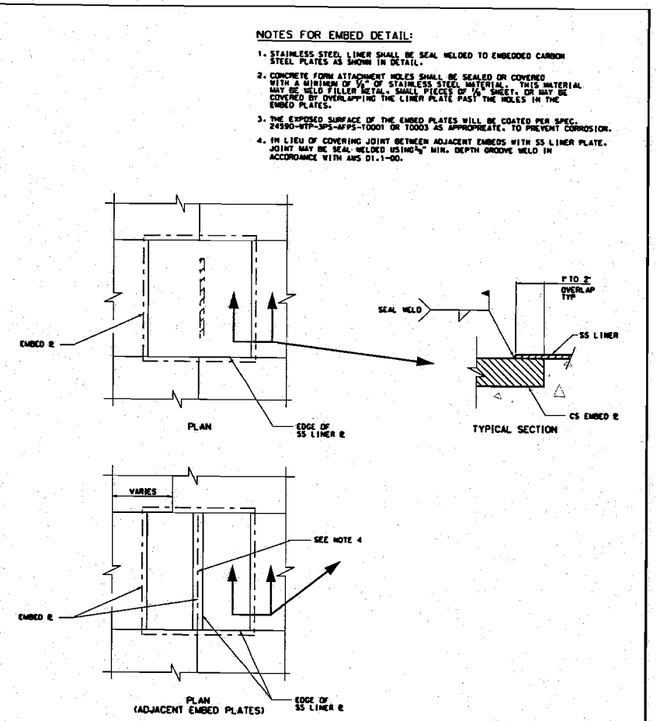

BECHTEL	FIGURE 10 TYPICAL HLW BUILDING SUMP DETAILS & TYPICAL PT BUILDING SS LINER/CS EMBED DETAIL	
	DOCUMENT NO. 24590-WTP-PER-CSA-02-001	PAGE: 13

Figure 11 Typical Laboratory C3 Piping and Pump Pit Sump and Weir Details for LAB Building

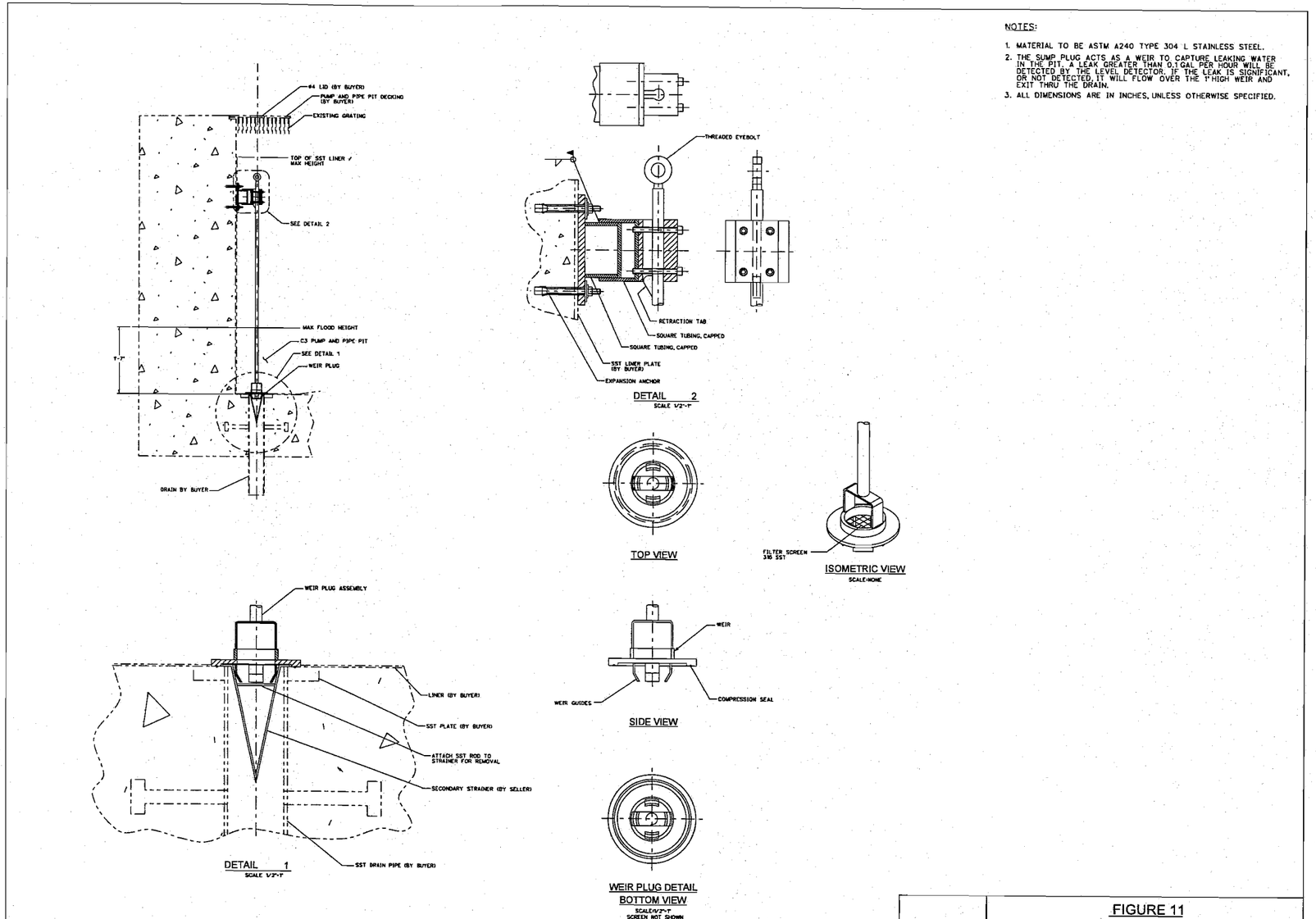

NOTES:

1. MATERIAL TO BE ASTM A240 TYPE 304 L STAINLESS STEEL.
2. THE SUMP PLUG ACTS AS A WEIR TO CAPTURE LEAKING WATER IN THE PIT. A LEAK GREATER THAN 0.1 GAL PER HOUR WILL BE DETECTED BY THE LEVEL DETECTOR. IF THE LEAK IS SIGNIFICANT, OR NOT DETECTED, IT WILL FLOW OVER THE 1"HIGH WEIR AND EXIT THRU THE DRAIN.
3. ALL DIMENSIONS ARE IN INCHES, UNLESS OTHERWISE SPECIFIED.

FIGURE 11

TYPICAL LABORATORY C3 PIPING AND PUMP PIT SUMP AND WEIR DETAILS FOR LAB BUILDING

DOCUMENT NO.	PAGE:
24590-WTP-PER-CSA-02-001	14

Figure 12 Typical RLD Condensate Tank Support Details for PT Building (Exterior)

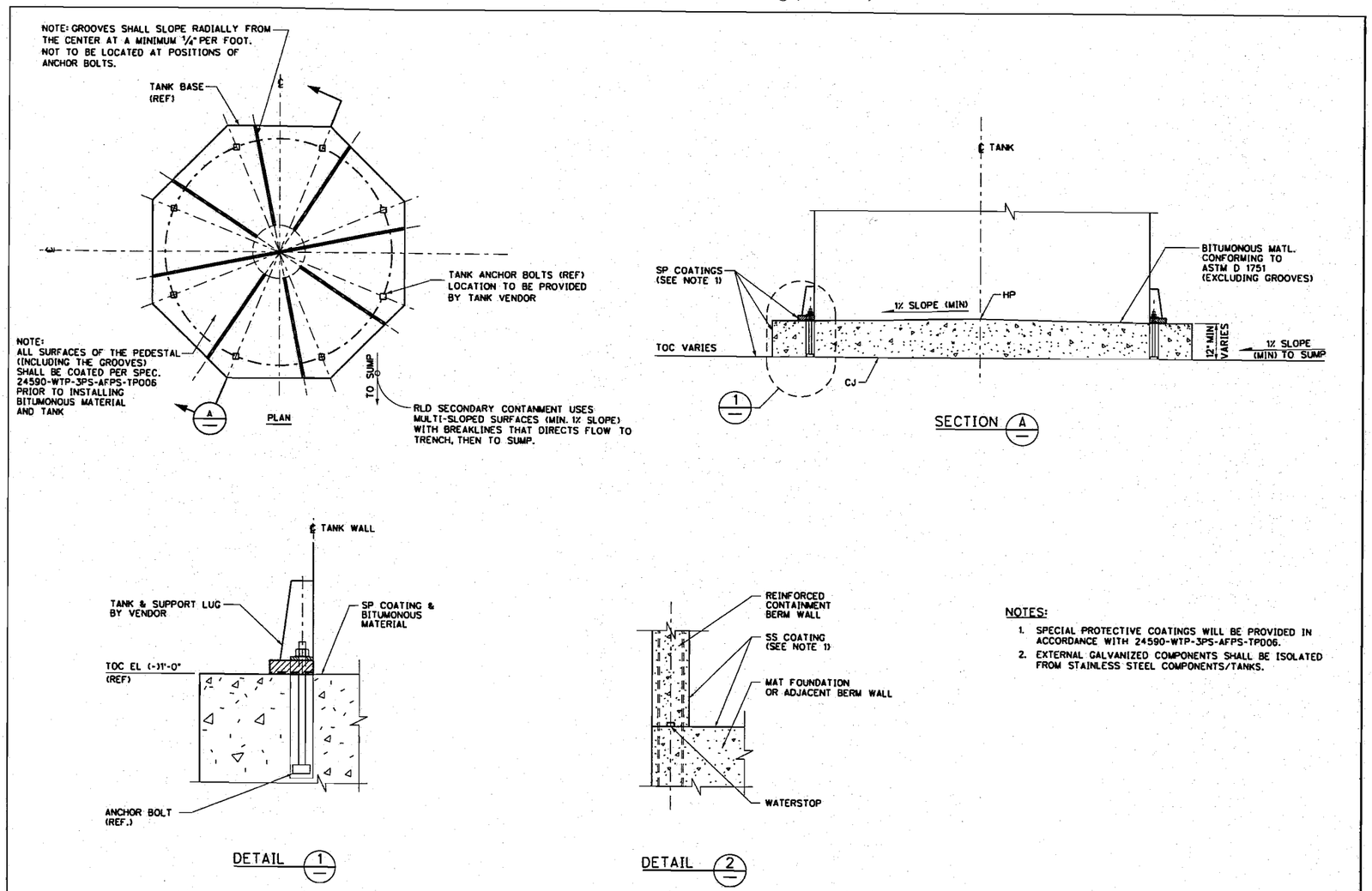

Figure 13 LAW Melter Encasement Assembly Secondary Containment Details

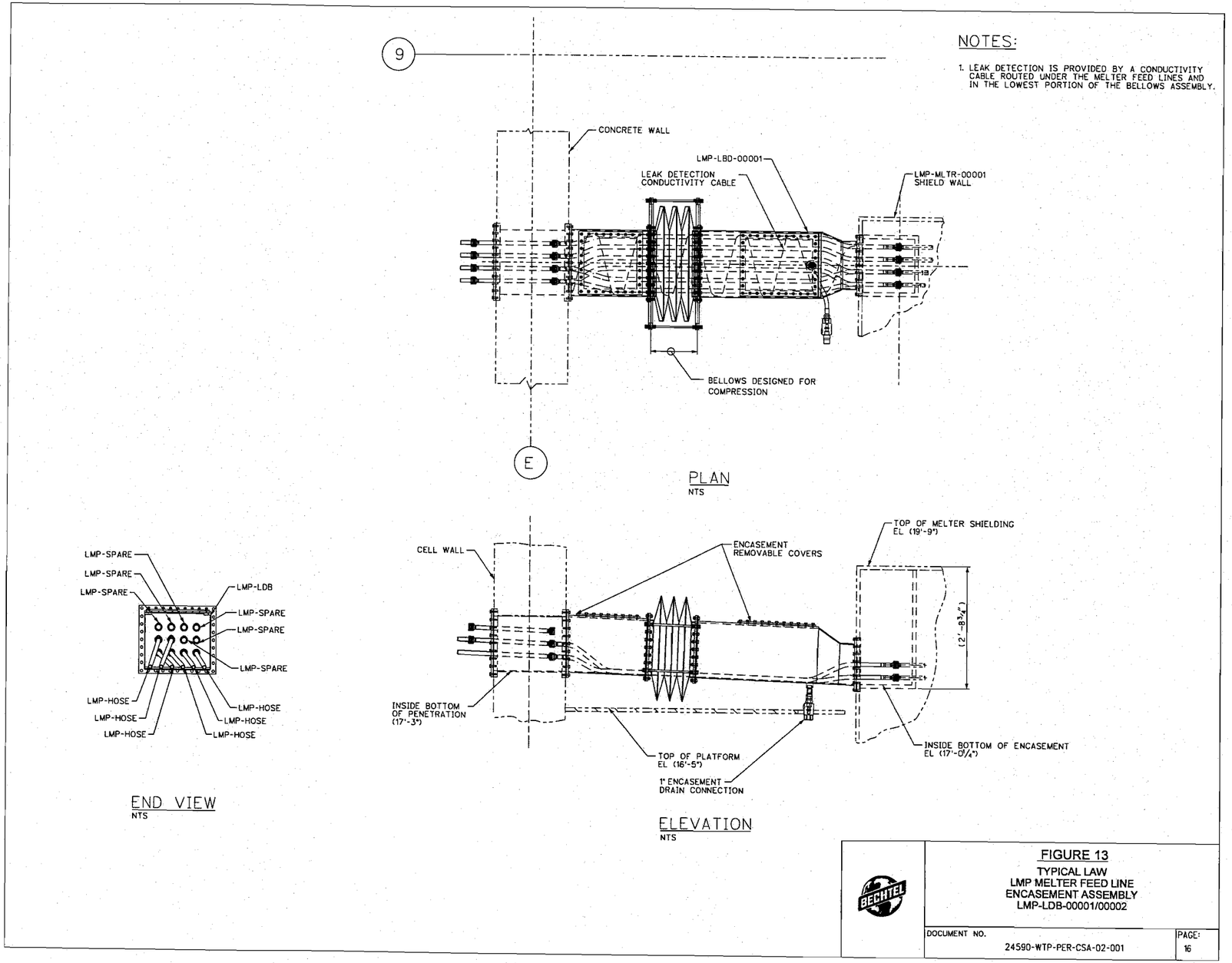

Figure 14 Typical Autosampling System ASX Sampler Full Half Section

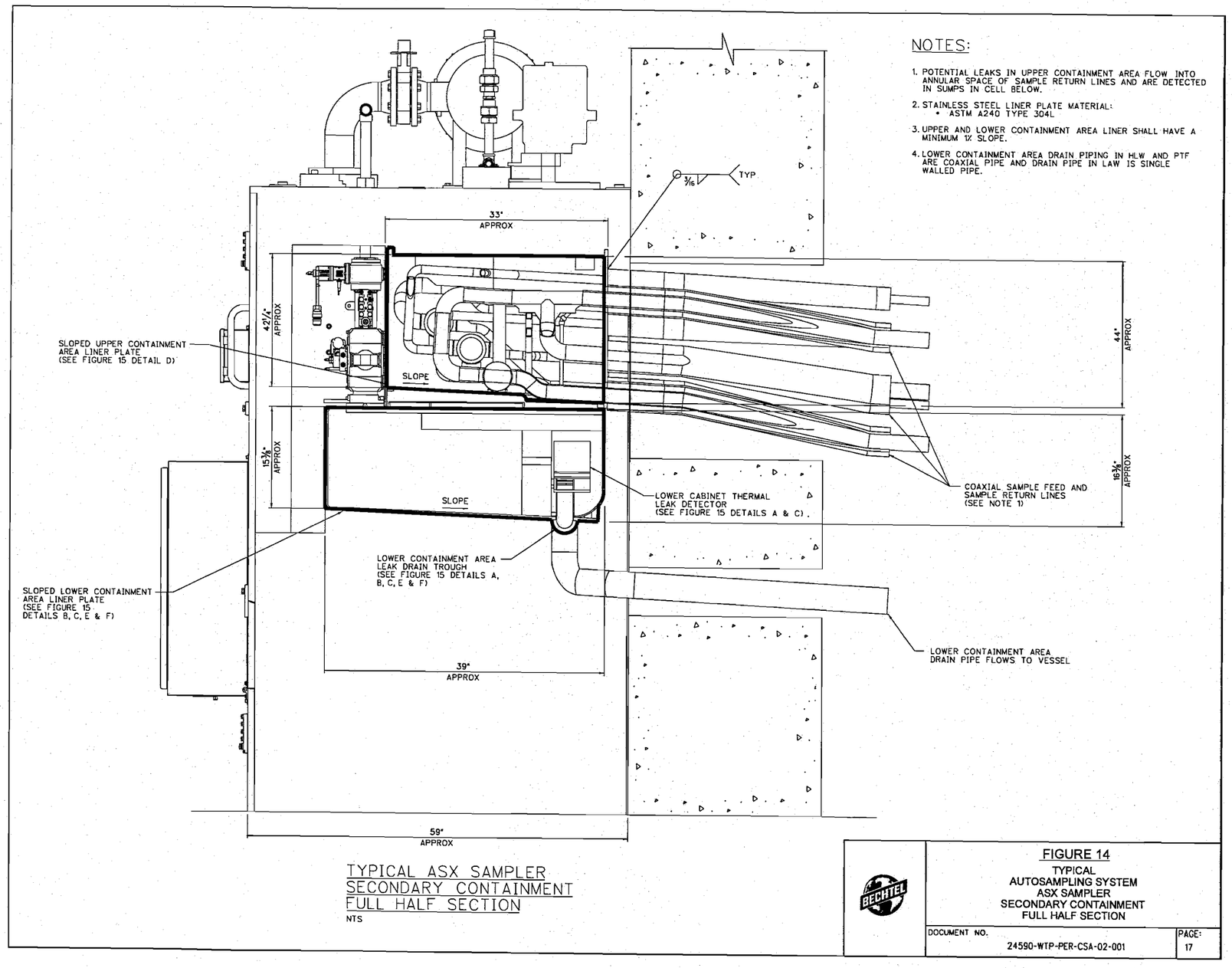

Figure 15 Typical Autosampling System Lower Containment Area Leak Detection Details

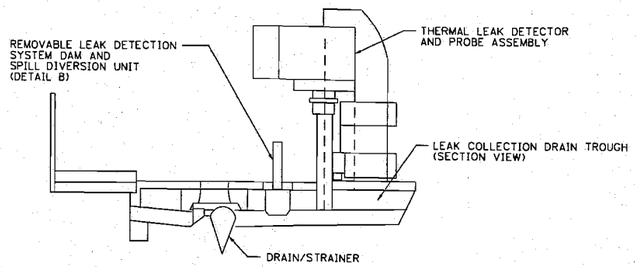

DETAIL A
SECTION VIEW OF DETAIL C
NTS

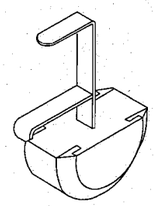

DETAIL B
ISOMETRIC VIEW
REMOVABLE LEAK DETECTION
SYSTEM DAM (WEIR)
NTS

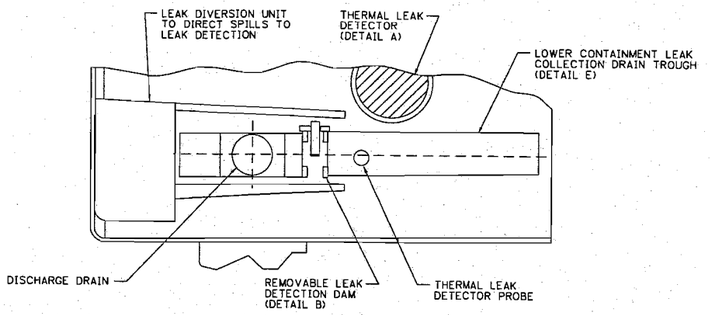

DETAIL C
PLAN VIEW OF DETAIL A
LOWER CONTAINMENT AREA
AND LEAK DIVERSION UNIT
NTS

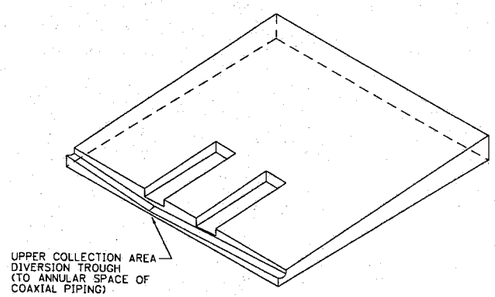

DETAIL D
ISOMETRIC VIEW
UPPER CONTAINMENT AREA
LINER PLATE
NTS

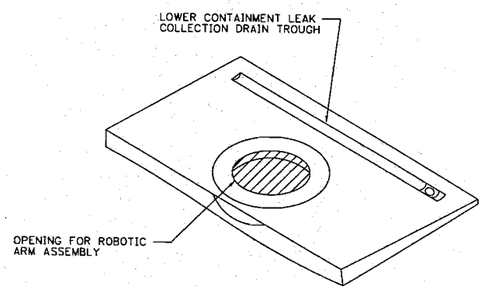

DETAIL E
ISOMETRIC VIEW
LOWER CONTAINMENT AREA
LINER PLATE
NTS

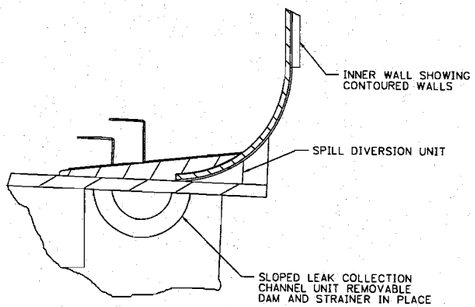

DETAIL F
SECTION VIEW
NTS

FIGURE 15
TYPICAL AUTOSAMPLING SYSTEM CONTAINMENT AREA AND LEAK DETECTION DETAILS

DOCUMENT NO. 24590-WTP-PER-CSA-02-001 | PAGE: 18

Figure 16 HLW Building HOP Drum Transfer Tunnel Drip Pan Plan, Sections and Details

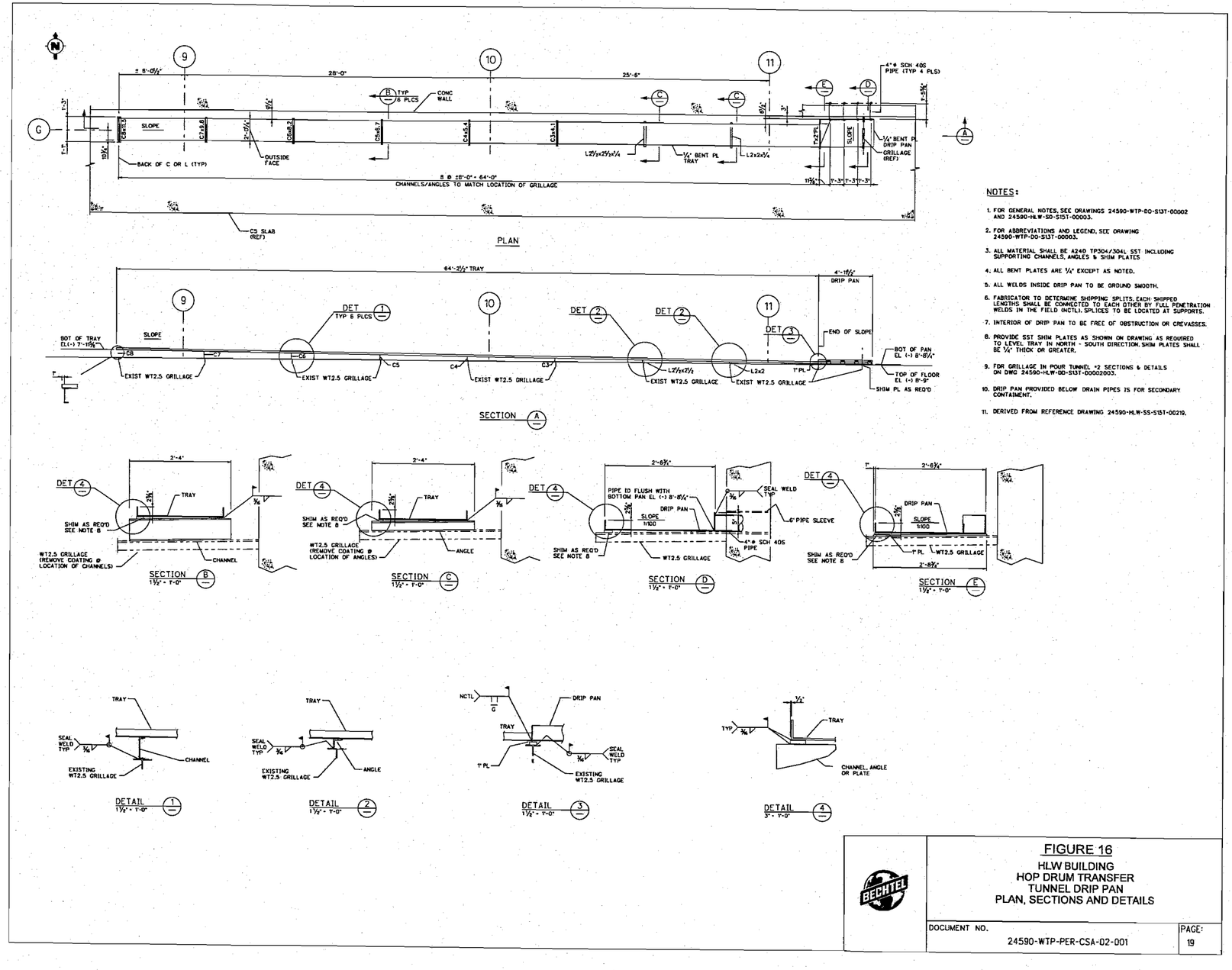

RCRA Operating Record Cover Sheet

Document Number: 24590-WTP-PCN-ENV-11-008

Waste Management Records:

- ☐ **R101** List of Waste Management Areas
- ☐ **R102** Waste Analysis Records
- ☐ **R103** Waste Designation Information
- ☐ **R104** Waste Transfer Records
- ☐ **R105** Movement of Containerized Waste Onsite
- ☐ **R106** Release/Spill Records
- ☐ **R114** Field Change Request/Field Change Notice
- ☐ **R116** Field Monitoring / Surveillance Checklists
- ☐ **R119** Reserved
- ☐ **R120** Reserved
- ☐ **R126** Satellite and 90-Day Accumulation Area

Compliance Schedule Submittals:

- ☐ **R401** Pretreatment Facility
- ☐ **R402** LAW Facility
- ☐ **R403** HLW Facility
- ☐ **R404** Laboratory
- ☐ **R405** Balance of Facility
- ☐ **R406** WTP All Facilities
- ☐ **R407** Human Health & Ecological Risk Assessment

Other Operating Record Documents:

- ☐ **R601** Outgoing Correspondence (RCRA Permit Relating)
- ☐ **R602** Contingency Plan Implementation
- ☐ **R603** Closure Plan Deviation
- ☐ **R604** Permit Equivalency Notice (PEN)
- ☒ **R605** Permit Change Notice (PCN)
- ☐ **R606** Annual RCRA Permit Closure and Post-Closure Cost Adjustment Report
- ☐ **R607** Permit Modification
- ☐ **R608** Incoming Correspondence (RCRA Permit Relating)

Non-Operating Record Documents:

- ☐ **N101** Meeting Minutes
- ☐ **N102** Memoranda

Special Instructions to PDC:

Link CCNs:

240015

241260

241337