U.S. Department of Energy
Office of River Protection
P.O. Box 450, MSIN H6-60
Richland, Washington 99352

SEP 2 8 2011

11-ESQ-237

Ms. Jane A. Hedges, Program Manager
Nuclear Waste Program
Washington State
Department of Ecology
3100 Port of Benton Blvd.
Richland, Washington 99354

Dear Ms. Hedges:

SUBMITTAL OF DANGEROUS WASTE PERMIT PACKAGE PTF-009, REVISION 2, FOR THE PRETREATMENT FACILITY

Reference: WA7890008967, "Dangerous Waste Portion of the Hanford Facility Resource Conservation and Recovery Act Permit for the Treatment, Storage, and Disposal of Dangerous Waste, Part III, Operating Unit 10, 'Waste Treatment and Immobilization Plant.'"

Attached please find the following Permit Package PTF-009, Revision 2, Supplemental Permit Package for FRP-VSL-00002A, FRP-VSL-00002B, FRP-VSL-00002C, and FRP-VSL-00002D Vessel Alterations.

A description of the PTF-009, Revision 2 permit package is provided in Attachment 1. This permit package provides the information necessary for the Washington State Department of Ecology (Ecology) to confirm that the structures, equipment, and processes described in the permit package will comply with the Reference. This package will allow Ecology to permit the alterations of the FRP-VSL-00002A/B/C/D vessels.

Bechtel National, Inc. and U.S. Department of Energy, Office of River Protection certification statements are provided in Attachment 2.

Ecology comments resulting from the review of this permit package and associated information have been resolved.

Due to the potential sensitivity of the attached engineering information, Ecology is requested to place the data for public review in the standard information repositories, but not provide electronic dissemination of the information.

If you have any questions, please contact me, or your staff may contact Gae M. Neath, Office of Environmental Safety and Quality, (509) 376-7828.

Sincerely,

Stay Charboneau for

Scott L. Samuelson, Manager
Office of River Protection

ESQ:GMN

Attachments: (2)

cc w/attachs:
B. L. Curn, BNI
B. G. Erlandson, BNI
P. A. Fisher, BNI
S. K. Murdock, BNI
F. M. Russo, BNI
J. F. Schneider, BNI
Administrative Record (WTP H-0-8)
BNI Correspondence
Environmental Portal, LMSI

cc electronic:
R. K. Biyani, Ecology
J. Cantu, Ecology (2 hard copies)
A. S. Carlson, Ecology
M. Faber, Ecology
M. E. Jones, Ecology
J. F. Ollero, MSA
A. C. McKarns, RL
D. J. Sommer, SCS

cc w/o attachs:
D. M. Busche, BNI
J. Cox, CTUIR
S. G. Harris, CTUIR
S. L. Dahl, Ecology
D. McDonald, Ecology
G. P. Bohnee, NPT
K. Niles, Oregon Energy
S. R. Weil, RL
R. Jim, YN

Attachment 1
11-ESQ-237
(190 Pages)

Permit Package PTF-009, Revision 2, Supplemental
Permit Package for FRP-VSL-00002A, FRP-VSL-00002B,
FRP-VSL-00002C, and FRP-VSL-00002D Vessel Alterations

Attachment 1 to CCN 237283

DWP SUPPLEMENTAL PERMIT PACKAGE PTF-009, REVISION 2

PACKAGE DESCRIPTION	1 Page
TABLE OF CONTENTS	1 Page
CCN 208823	11 Pages
24590-PTF-MVD-FRP-00005, REV 12	16 Pages
24590-PTF-MVD-FRP-00006, REV 12	17 Pages
24590-PTF-MVD-FRP-00007, REV 12	17 Pages
24590-PTF-MVD-FRP-00008, REV 12	17 Pages
24590-PTF-VDCN-MS-11-00003	16 Pages
24590-PTF-VDCN-MS-11-00004	24 Pages
24590-PTF-VDCN-MS-11-00005	23 Pages
24590-PTF-VDCN-MS-11-00006	23 Pages
24590-PTF-VDCN-MS-11-00007	23 Pages

Supplemental Permit Package PTF-009, Rev. 2 Description
Vessel Alterations to FRP-VSL-00002A/B/C/D

This supplemental permit package addresses Pulse Jet Mixer (PJM) nozzle design and vessel alterations of the support system due to revised loading conditions in the following vessels.

Vessel Number	Vessel Title
FRP-VSL-00002A	Waste Feed Receipt Vessel
FRP-VSL-00002B	Waste Feed Receipt Vessel
FRP-VSL-00002C	Waste Feed Receipt Vessel
FRP-VSL-00002D	Waste Feed Receipt Vessel

The vessels are located at the 0-ft elevation level of the Pretreatment Facility (PTF). These vessels are located at the west end of the facility in feed receipt cells P-0108, P-0108A, P-0108B, and P-0108C. The vessels are regulated since the material that will be managed within the vessels is designated as dangerous and/or mixed waste.

The re-analysis of the vessels resulted from:

- Application of revised PJM multiple over-blow loads
- Seismic application of WTP Site Specific Ground Motion (WSGM)
- Process changes from external flowsheet review team (EFRT) recommendations

Vessel alterations will include one or more of the following additions and/or modifications.

- Knuckle stiffener plates
- PJM design and PJM support modifications
- Nozzle modifications
- Removal of dipped lines
- Piping supports

The supplemental permit package, PTF-009, Rev. 2 contains a limited assessment report signed by an independent qualified registered professional engineer (IQRPE) certifying the integrity of the stamped and installed vessels inclusive of the planning stage to the start of cutting an entry opening in each vessel's wall, during the alterations, and after completing the alterations, closing the vessels. The limited IQRPE report may be made integral to the final IQRPE report(s) that will be prepared and submitted to Ecology prior to receipt of waste.

The supplemental permit package contains revised mechanical data sheets to update the versions in the dangerous waste permit. Other documents that describe the alteration being performed to the vessels are proposed to be included in the permit, as listed on the Table of Contents.

DWP Supplemental Permit Package
PTF-009, Rev. 2
Pretreatment Facility FRP Tank System
Vessel Alterations to FRP-VSL-00002A/B/C/D

Table of Contents
For Incorporation into the Permit

Engineering Document Title	Document Number	Revision	Permit Condition	Included	Remarks
Focused IQRPE Report	CCN 208823		III.10.E.9.c.i	Y	
Mechanical Systems Data Sheet	24590-PTF-MVD-FRP-00005 24590-PTF-MVD-FRP-00006 24590-PTF-MVD-FRP-00007 24590-PTF-MVD-FRP-00008	12 12 12 12	III.10.E.9.c.ii	Y	Replace all listed Mechanical Data Sheets, Revision 11 currently in DWP with Revision 12 submitted with this package.
Drawings	24590-PTF-VDCN-MS-11-00003 24590-PTF-VDCN-MS-11-00004 24590-PTF-VDCN-MS-11-00005 24590-PTF-VDCN-MS-11-00006 24590-PTF-VDCN-MS-11-00007	NA	III.10.E.9.c.ii III.10.E.9.c.vi	Y	
Engineering Specification for Alteration and Repair of Site Stamped ASME Code Vessels and Boilers for Subcontract	24590-WTP-3PS-MVB2-T0002	0	III.10.E.9.c.ii	N	Submitted with package PTF-040 Rev. 1 (UFP-VSL-00062A/B/C)
Specification Change Notice - Stiffening and Stabilizing the Openings of Access Opening Repair Vessels	24590-WTP-3PN-MVB2-00010	NA	III.10.E.9.c.ii	N	Submitted with package PTF-040 Rev. 1 (UFP-VSL-00062A/B/C)
Specification Change Notice - Cutting Method for Access Opening	24590-WTP-3PN-MVB2-00011	NA	III.10.E.9.c.ii	N	Submitted with package PTF-040 Rev. 1 (UFP-VSL-00062A/B/C)

For Incorporation into the Administrative Record

Engineering Document Title	Document Number	Revision	Permit Condition	Included	Remarks
EFRT Issue M3 PJM Vessel Mixing Assessment, Volume 6 - FRP-VSL-00002A/B/C/D	24590-WTP-RPT-ENG-08-021-06	1	III.10.E.9.c.ii	N	Document available upon request.
Pretreatment Vessel Heel Dilution/Cleanout Feasibility Study	24590-WTP-RPT-PET-10-013	0	III.10.E.9.c.ii	N	Document available upon request.

R11416895

208823

AREVA

AFS-11-0534

August 29, 2011

RPP-WTP
RECEIVED

AUG 30 2011

BY PDC

Ms. Trina Howard
Subcontract Administrator
Bechtel National, Inc.
2435 Stevens Center Place
Richland, Washington 99354

Dear Ms. Howard:

BECHTEL NATIONAL, INC. CONTRACT NO. 24590-CM-HC4-HXYG-00211 IQRPE STRUCTURAL INTEGRITY ASSESSMENT REPORT FOR ALTERATION/REWORK OF PTF FRP FEED RECEIPT PROCESS VESSELS (FRP-VSL-00002A/B/C/D) – (IA-3005879-000)

The integrity assessment of the subject vessels' alteration/rework has been completed per the contract requirements and is enclosed for your use. The assessment found that the updated design alteration/rework of the vessels will maintain structural integrity throughout the performance, completion, and after the modification work. It further ensures that the vessels and their components are adequately designed to have sufficient structural strength to sustain applicable loads and that they will not collapse, rupture, or fail.

If you have any questions, please contact Tarlok Hundal at (509) 371-1975, or via email at tarlok.hundal@areva.com.

Sincerely,

Fred R. Renz
Contract Management
AREVA Federal Services LLC
Richland Office

llm

Enclosure (1)

cc: D. C. Pfluger, MS 5-I w/enclosures (2)

AREVA Federal Services LLC

2101 Horn Rapids Road, RC-19, Richland, WA 99354, P. O. Box 840, Richland, WA 99352
Tel: 509 375 8096 - Fax: 509 375 8495 - www.areva.com

IA-3005879-000

IQRPE STRUCTURAL INTEGRITY ASSESSMENT REPORT FOR ALTERATION/REWORK OF PTF FRP FEED RECEIPT PROCESS VESSELS (FRP-VSL-00002A/B/C/D)

Please note that source, special nuclear and byproduct materials, as defined in the Atomic Energy Act of 1954 (AEA), are regulated at the U.S. Department of Energy (DOE) facilities exclusively by DOE acting pursuant to its AEA authority. DOE asserts that pursuant to the AEA, it has sole and exclusive responsibility and authority to regulate source, special nuclear, and byproduct materials at DOE-owned nuclear facilities. Information contained herein on radionuclides is provided for process description purposes only.

IA-3005879-000

IQRPE STRUCTURAL INTEGRITY ASSESSMENT REPORT FOR ALTERATION/REWORK OF PTF FRP FEED RECEIPT PROCESS VESSELS (FRP-VSL-00002A/B/C/D)

"I, Tarlok S. Hundal have reviewed and certified a portion of the design of a new tank system or component located at the Hanford Waste Treatment Plant, owned/operated by Department of Energy, Office of River Protection, Richland, Washington. My duties were independent review of the current design for the Alteration/Rework of PTF FRP Feed Receipt Process Vessels (FRP-VSL-00002A/B/C/D), as required by the Washington Administrative Code, *Dangerous Waste Regulations*, Section WAC-173-303-640(3) (a) through (g) applicable components."

"I certify under penalty of law that I have personally examined and am familiar with the information submitted in this document and all attachments and that, based on my inquiry of those individuals immediately responsible for obtaining the information, I believe that the information is true, accurate, and complete. I am aware that there are significant penalties for submitting false information, including the possibility of fine and imprisonment."

The documentation reviewed indicates that the design fully satisfies the requirements of the WAC.

The attached review is eight (8) pages numbered one (1) through eight (8).

TARLOK SINGH HUNDAL
STATE OF WASHINGTON
26213
REGISTERED
PROFESSIONAL ENGINEER

Signature

8/29/11
Date

Scope	Scope of this Integrity Assessment	This Integrity Assessment report is limited to address only the integrity of the stamped and installed vessels (FRP-VSL-00002A/B/C/D). The assessment will be inclusive of the planning stage-to-the-start of cutting an entry opening in each vessel's wall, during, and after finish closing it. The entry opening is required to perform the repair/rework and/or modifications of the support systems for each main vessel's internal vessels and piping due to revised loading conditions. The re-assessment of the vessels is mandated to ensure their re-compliance with the requirements of the applicable codes and standards. These vessels (A, B, C, and D) are individually located in Room P-0108, P-0108A, P-0108B, and P-0108C, respectively, at Elevation 0'-0" of the Pretreatment Facility Building as shown on the General Arrangement Plan drawing 24590-PTF-P1-P01T-00001. Note: This limited Integrity Assessment report may be made an integral part of the separately prepared final Integrity Assessment report of the vessels (FRP-VSL-00002A/B/C/D).
Summary of Assessment		For each item of "Information Assessed" (i.e., Criteria) on the following pages, the items listed under "Source of Information" were reviewed and found to furnish adequate design requirements and controls to ensure that the internal vessels and piping supports and associated alteration and/or repair work intended to be performed on the parent stamped vessels (FRP-VSL-00002A/B/C/D), will satisfy the applicable re-stamping requirements of the Washington Administrative Code (WAC) Chapter 296-104 WAC-*Board of Boiler Rules-Substantive*. WAC 296-104-502 (1) has adopted the *National Board of Inspectors Code (NBIC) 2007 Edition, Part 3,* as a standard guideline for the repairs and alteration of non-nuclear vessels. This assessment also satisfies the requirements of Washington Administrative Code (WAC), Chapter 173-303-WAC *Dangerous Waste Regulations*, WAC-173-303-640, *Tank Systems*.

References	Specifications and Mechanical Data Sheets	Specifications: 24590-WTP-3PS-MVB2-T0002, Rev. 0, Engineering Specification for Alteration and Repair of on Site Stamped ASME Code Vessels and Boilers for Subcontract (including SCN # 00010 and 00011); 24590-WTP-3PS-MV00-T0001, Rev. 4, Engineering Specification for Pressure Vessel Design and Fabrication (including SCN # 00034); 24590-WTP-3PS-MV00-T0002, Rev. 3, Engineering Specification for Seismic Qualification Criteria for Pressure Vessels (including SCN # 00034); 24590-WTP-3PS-MV00-T0003, Rev. 3, Engineering Specification for Pressure Vessel Fatigue Analysis (including SCN # 00034); 24590-WTP-3PS-MVB2-T0001, Rev. 2, Engineering Specification for Welding of Pressure Vessels, Heat Exchangers, and Boilers (including 24590-WTP-FC-M-06-0022 and SCN # 00012) 24590-WTP-3PS-G000-T0001, Rev. 1, Engineering Specification for Supplier Quality Assurance Program Requirements; 24590-WTP-3PS-G000-T0010, Rev. 2, Engineering Specification for Positive Material Identification (PMI) for Construction; 24590-WTP-3PS-SS90-T0001, Rev. 2, Engineering Specification for Seismic Qualification of Seismic Category I/II Equipment and Tanks. Mechanical Data Sheets: 24590-PTF-MVD-FRP-00005, Rev. 12, Mechanical Data Sheet for Waste Feed Receipt Vessel (FRP-VSL-00002A); 24590-PTF-MVD-FRP-00006, Rev. 12, Mechanical Data Sheet for Waste Feed Receipt Vessel (FRP-VSL-00002B); 24590-PTF-MVD-FRP-00007, Rev. 12, Mechanical Data Sheet for Waste Feed Receipt Vessel (FRP-VSL-00002C); 24590-PTF-MVD-FRP-00008, Rev. 12, Mechanical Data Sheet for Waste Feed Receipt Vessel (FRP-VSL-00002D).

References (cont'd)	Drawings	Plant Drawing: 24590-PTF-P1-P01T-00001, Rev. 7, Pretreatment Facility General Arrangement Plan at Elev. 0'-0". Vendor Fabrication Drawings (Bechtel Code 1 Drawings*): * Drawings reviewed and approved for fabrication by Bechtel National Inc. (BNI). The "As Built" Drawings listed in the following VDCNs had been approved by BNI and are now affected with detailed repair work (removal and/or replacement of components) as shown on these drawings: 24590-PTF-VDCN-MS-08-00002, Removal of Dipped Spare Lines on FRP Vessels (FRP-VSL-00002A/B/C/D), (see list of all Affected "As Built" Design Documents on Page 2 of this VDCN); 24590-PTF-VDCN-MS-11-00003, PTF-FRP-VSL-00002A/B/C/D PJM Supports Redesign, (see list of all Affected "As Built" Design Documents on Page 1 of this VDCN); 24590-PTF-VDCN-MS-11-00004, PTF-FRP-VSL-00002A Vessel Supports Redesign, (see list of all Affected "As Built" Design Documents on Page 1 of this VDCN); 24590-PTF-VDCN-MS-11-00005, PTF-FRP-VSL-00002B Redesign, (see list of all Affected "As Built" Design Documents on Page 1 of this VDCN); 24590-PTF-VDCN-MS-11-00006, PTF-FRP-VSL-00002C Redesign, (see list of all Affected "As Built" Design Documents on Page 1 of this VDCN); 24590-PTF-VDCN-MS-11-00007, PTF-FRP-VSL-00002D Redesign, (see list of all Affected "As Built" Design Documents on Page 1 of this VDCN);

	Information Assessed	Source of Information	Assessment
Design	The design standards are appropriate and adequate for the alteration and repair work of the existing stamped vessel.	Drawings, Mechanical Data Sheets, and Specifications listed above under References; ASME Boiler & Pressure Vessel Code, Section VIII, Div. 1, Rules for Construction of Pressure Vessels; NBIC 2007, Part 3 with addenda, National Board Inspection Code, National Board of Boiler and Pressure Vessel Inspectors; WAC 296-104-502(1), Washington Administrative Code.	The original Mechanical Data Sheets (MDS) required that the PTF vessels (FRP-VSL-00002A/B/C/D) be designed and fabricated per ASME Code, Section VIII, Div. 1 and be stamped and registered per National Board of Registration requirements. The stamped vessels are installed in Rooms P-0108, P-0108A, P-0108B, and P-0108C at Elevation 0'-0" as shown on the PTF General Arrangement Plan drawing. However, subsequent to the installation of each vessel, its MDS was revised with new loading conditions such as seismic and thermal. The Specification for Alteration and Repair of Stamped Vessels requires that the alterations and repairs shall be done in accordance with the requirements of ASME Section VIII, Div. 1 Code, NBIC 2007 Part 3 Code, and WAC 296-104-502(1). It further states that the altered/repaired vessel shall be re-stamped (R-stamped) and re-registered with the National Board of Registration. The requirements of the referenced engineering specifications are inclusive of the design of altered vessel. The requirements include structural design, positive material identification, fabrication tolerances, acceptable welding procedures, welder qualifications and testing records, and NDE inspections. Each vessel is identified as Quality Level (Q) and Seismic Category (SC-I) in the MDS and drawings. The requirements listed in the aforementioned codes, documents, and standards identified in Specification for Alteration and Repair, are adequate and acceptable for the repair work of the vessel's internal vessels supports and piping supports and associated components.

	Information Assessed	Source of Information	Assessment
Design (cont'd)	Vessel repair work of modifying the internals will not compromise vessel's integrity and the design calculations for the altered vessel demonstrate that sound engineering principles of construction are used	Drawings, Mechanical Data Sheets, and Specifications listed above under References; ASME Boiler & Pressure Vessel Code, Section VIII, Div. 1, Rules for Construction of Pressure Vessels; 24590-PTF-MVC-FRP-00003, Rev. A, FRP-VSL-00002A/B/C/D, Waste Feed Receipt Vessels Stress Analysis w/ANSYS (BNI Design Calculation); 24590-PTF-RPT-MS-10-002, Rev. 0, Buckling Evaluation for Vessels Onsite that Need a Construction Access Through the Vessel Shell; 24590-QL-POD-MVA0-00001-09-07, Rev. 00B, Vessel Code Calculations (Vendor Code Calculations); NBIC 2007, Part 3 with addenda, National Board Inspection Code, National Board of Boiler and Pressure Vessel Inspectors; WAC 296-104-502(1), Washington Administrative Code.	The PTF Vessels (FRP-VSL-00002A/B/C/D) are standard stamped and registered ASME Code Section VIII, Div. 1 vessels. These stamped, registered, and installed vessels comply with the requirements stated in the original MDS. However, the MDS have been revised after the installation of the vessels. The revised current MDS show new design loading conditions such as seismic and thermal. Subsequent to the issuance of revised loading conditions, BNI performed Design Calculation of the vessels as a supplement to the Vendor Code Calculations. The BNI Design Calculation determined initially that the original vessels configuration do not sustain the new loading conditions of the revised MDS. Series of design modifications were performed on the original design which required the redesign of internal components supports system namely the Pulse Jet Mixers (PJM) vessel supports and piping and pipe supports as detailed and shown in Attachment C of the BNI Design Calculation document. Each vessel shell wall entry opening of 8 ft x 8 ft size required to perform modifications of support system of the internals was evaluated. The Buckling Evaluation document determined that the structural stresses of the parent vessels with the above mentioned opening for repair work will be well within the allowable limits, therefore, its structural integrity will not be compromised. The Specification for Alteration and Repair of the vessels identifies that all repair work on the stamped vessels will be done in accordance with the requirements of ASME Section VIII, Div. 1, NBIC 2007 Code Part 3, and WAC 296-104-502(1). Review of the drawings and the BNI Design Calculation demonstrates that sound engineering principles of design/construction have been used in the design media. It should be noted that the final evaluation of each parent vessel and its components is not in the scope of this report; however, it will be addressed in their final integrity report.

	Information Assessed	Source of Information	Assessment
Design (cont'd)	Modified internal supports (material, welding details, design configuration) will not compromise vessel's integrity, i.e., the altered vessel has adequate strength, after consideration of the corrosion allowance, to withstand the operating pressure and temperature, and seismic loads	Drawings, Mechanical Data Sheets, and Specifications listed above under References; ASME Boiler & Pressure Vessel Code, Section VIII, Div. 1, Rules for Construction of Pressure Vessels; 24590-PTF-S0C-S15T-00057, Rev. A, Seismic Analysis of Pretreatment Building-WSGM In-Structure Response Spectra; 24590-WTP-MVC-50-00011, Rev. B, Pulse Jet Mixer Overblow Vessel Loads.; 24590-PTF-MVC-FRP-00003, Rev. A, FRP-VSL-00002A/B/C/D, Waste Feed Receipt Vessels Stress Analysis w/ANSYS (BNI Design Calculation); 24590-QL-POD-MVA0-00001-09-07, Rev. 00B, Vessel Code Calculations (Vendor Code Calculations); NBIC 2007, Part 3 with addenda, National Board Inspection Code, National Board of Boiler and Pressure Vessel Inspectors; WAC 296-104-502(1), Washington Administrative Code.	The MDS and the Specification for Alteration and Repair of Stamped ASME Vessels identify each vessel's new loading conditions and applicable codes for its re-qualification. Detailed requirements for seismic design of the vessels are furnished in the Engineering Specification for Seismic Qualification of Seismic Category I/II Equipment and Tanks. After the installation of the vessels the design loading such as seismic and temperature conditions have been revised per MDS which necessitated the review of the Vendor Code Calculations for design verification purposes. The BNI Design Calculation was performed using revised seismic forces per Seismic Analysis of PTF document, new thermal conditions, and PJM load per Pulse Jet Mixer Overblow Vessels Loads document, as a supplement to the Vendor Code Calculations. The BNI Design Calculation initially showed that the stamped vessels (FRP-VSL-00002A/B/C/D) could not sustain the revised loading conditions stated above. Therefore, in order to qualify each vessel for revised loading conditions including the specified corrosion allowance in the MDS document, the BNI Design Calculation recommended modification of the internals including internal vessels' supports and piping supports and piping system to have adequate strength for the specified design life of 40 years. The Engineering Specification for Alteration and Repair of Stamped ASME Vessel requires that any alterations made to the vessel and its internals shall comply with the requirements of ASME Section VIII, Div.1, NBIC 2007 Code Part 3, and WAC 296-104-502(1). Therefore, the rework/repair modifications performed in compliance to the above listed codes and standards will ensure structural integrity of each parent vessel and its components.

Information Assessed		Source of Information	Assessment
Design (cont'd)	Modified internal supports (material, welding details, and design configuration) will not compromise integrity of pulse jet mixers and charge vessels.	Drawings, Mechanical Data Sheets, and Specifications listed above under References; 24590-WTP-DC-ST-04-001, Rev. 3A, Seismic Analysis and Design Criteria; ASME Boiler & Pressure Vessel Code, Section VIII, Div. 1, Rules for Construction of Pressure Vessels; 24590-PTF-S0C-S15T-00057, Rev. A, Seismic Analysis of Pretreatment Building-WSGM In-Structure Response Spectra; 24590-WTP-MVC-50-00011, Rev. B, Pulse Jet Mixer Overblow Vessel Loads; 24590-PTF-MVC-FRP-00003, Rev. A, FRP-VSL-00002A/B/C/D, Waste Feed Receipt Vessels Stress Analysis w/ANSYS (BNI Design Calculation); NBIC 2007 Code, Part 3 with addenda, National Board Inspection Code, National Board of Boiler and Pressure Vessel Inspectors; WAC 296-104-502(1), Washington Administrative Code.	The MDS for each vessel identifies its operating pressure and temperature ranges, the materials selected for the vessel and its internals, the corrosion allowance, the quality level, and the seismic design requirements. The ASME Code, Section VIII, Div. 1 Code, requires that corrosion allowance material be considered when evaluating the adequacy of vessel components for these loads at end of its life. Detailed requirements for seismic design of the vessels are furnished in the Engineering Specification for Seismic Qualification of Seismic Category I/II Equipment and Tanks. The vendor drawings show that each vertical parent vessel houses twelve internal PJM vessels. All parent and PJM vessels are built using 316L stainless steel plates (max. 0.03% C dual certified). The internal vessels are supported off from the parent vessel and some of them from an adjoining internal vessel. The Engineering Specification for Alteration and Repair of Stamped ASME vessel requires that any alterations made to each vessel and its internals shall comply with the requirements of ASME Section VIII, Div. 1, NBIC 2007 Code Part 3, and WAC 296-104-502(1). The BNI Design Calculation reviewed shows that each modified vessel will withstand the loading conditions identified in MDS, Seismic Analysis of PTF, and Pulse Jet Mixer Overblow Vessel Loads documents. Therefore, the structural integrity of each vessel and its internals will not be compromised.

	Information Assessed	Source of Information	Assessment
Foundation	The vessel support and foundation of the altered/modified vessel will sustain modified full vessel load.	Mechanical Data Sheets and Specifications listed above under References; 24590-WTP-DC-ST-04-001, Rev. 3A, Seismic Analysis and Design Criteria; 24590-WTP-DC-ST-01-001, Rev. 12D, Structural Design Criteria; 24590-PTF-MVC-FRP-00003, Rev. A, FRP-VSL-00002A/B/C/D, Waste Feed Receipt Vessels Stress Analysis w/ANSYS (BNI Design Calculation).	The MDS for vessels (FRP-VSL-00002A/B/C/D) requires that each vessel's support system is to be designed in accordance with the applicable provisions specified in Seismic Analysis and Design Criteria and Engineering Specification for Seismic Qualification of Seismic Category I/II Equipment and Tanks. The requirements of the above listed two documents require the use of Structural Design Criteria. The BNI Design Calculation reviewed show that vessels' support skirt resting on a base plate is adequately designed to sustain the applicable loads of the modified vessel. The support skirt base plate in turn is anchored to floor with welds to the plates embedded in the concrete slab. The slab is designed to sustain the full load of the vessels, however, their assessment is not in the scope of this integrity assessment. It will be covered under a separate report.

ISSUED BY
RPP-WTP PDC

R11364429

MECHANICAL DATA SHEET: VESSEL

PLANT ITEM No.
24590-PTF-MV-FRP-VSL-00002A

Project	**RPP-WTP**	P&IDs	**24590-PTF-M6-FRP-00001, 24590-PTF-M6-FRP-00005, 24590-PTF-M6-FRP-00009, 24590-PTF-M6-FRP-00017**
Project No	**24590**	Calculations 12	**Attachment 1**
Project Site	**Hanford**	Vessel drawings	**24590-PTF-M2-FRP-00001**
Description	**Waste Feed Receipt Vessel**	Reports/Other Documents 12	**Attachment 1**

Reference Data

Charge Vessels (Tag Numbers)	**None**
Pulsejet Mixers / Agitators (Tag Numbers)	**FRP-PJM-00061, FRP-PJM-00062, FRP-PJM-00063, FRP-PJM-00064, FRP-PJM-00065, FRP-PJM-00066, FRP-PJM-00067, FRP-PJM-00068, FRP-PJM-00069, FRP-PJM-00070, FRP-PJM-00071, FRP-PJM-00072**
RFDs/Pumps (Tag Numbers)	**None**

Design Data

Quality Level		**Q**	Fabrication Specs	**24590-WTP-3PS-MV00-T0001**
Design Level		**L-1**	Design Code	**ASME Section VIII Div 1**
Seismic Category		**SC-I**	Equipment Qualification	**See EQ Sections**
Service/Contents		**Radioactive Liquid**	Code Stamp	**Yes**
Design Specific Gravity 12		**1.46**	NB Registration	**Yes**
Maximum Design Volume	gal	**402,300 (Note 6)**		
Total Volume	gal	**472,900 (Note 6)**		

Inside Diameter	inch	**564**			Wind Design	**Not Required**	
Length/Height (TL-TL)	inch	**322**			Snow Design	**Not Required**	
		Vessel Operating	Vessel Design	Coil/Jacket Design	Seismic Design	**24590-WTP-3PS-SS90-T0001 24590-WTP-3PS-MV00-T0002**	
Internal Pressure	psig	**0**	**15**	**N/A**	Corrosion Allowance	inch	**0.04 (Note 11)**
External Pressure	psig	**1.5**	**2.0 (Note 13)**	**N/A**	Min. Design Metal Temp.	°F	**40**
Temperature	°F	**140**	**215**	**N/A**			

Materials of Construction

Component	Material	Containment
Top Head	**SA 240 316 (Note 2)**	**Auxiliary (Note 1)**
Shell	**SA 240 316 (Note 2)**	**Primary (Note 1)**
Bottom Head	**SA 240 316 (Note 2)**	**Primary (Note 1)**
Support (Skirt)	**SA 240 304 (Note 2)**	**N/A**
Internals	**SA 240 316 / SA 479 316 (Note 2)**	**Thermocouples Primary (Note 1)**
Pipe	**SA 312 TP316 Smls (Notes 2 & 7)**	**Note 1**
Forgings/ Bar stock	**SA 182 F316 (Note 2)**	**N/A**

Miscellaneous Data

Orientation	**Vertical**	Support Type	**Skirt**
Insulation Function	**Not Applicable**	Insulation Material	**Not Applicable**
Insulation Thickness (inch)	**Not Applicable**	Internal Finish	**Note 4**
		External Finish	**Welds Descaled as Laid**

Notes/Remarks

Note 1: ***All welds forming part of the primary and auxillary containments, including the nozzle attachment welds shall be subjected to 100% volumetric examination.***

Note 2: ***Maximum carbon content of 0.030% for all welded components.***

Note 3: ***Operating weight includes weight of liquid filled to top of overflow nozzle.***

Note 4: ***Descale all internal welds as laid, grind smooth and blend all starts/stops, high spots, and crevices, finish welds as required for NDE purposes.***

Note 5: ***Deleted.***

Note 6: ***Vessel volumes are approximated and do not account for manufacturing tolerances, nozzles, and displacement of internals.***

Note 7: ***Welded pipe may be used for 14" NPS PJM supports per 24590-WTP-SDDR-PROC-03-0154.***

Note 8: ***This vessel is located in a Black Cell.***

Note 9: ***Contents of this document are Dangerous Waste Permit affecting (internal use only).***

Note 10: ***Deleted.***

12 ***Note 11:*** ***Ensure that an additional 0.103" is available for erosion in the spherical portion of the bottom head and ensure an additional 0.054" is available for erosion on the lower portions of the PJM cone. The area affected on the bottom head by the PJM flow should be at least 78" in diameter centered under the nozzle of each PJM.***

12 ***Note 12:*** ***Deleted.***

Note 13: ***External design pressure of 2.0 psig is based on a normal operating pressure of -35 in WG (1.26 psig) with an additional margin (see 24590-PTF-M6C-PVP-00017).***

Note 14: ***Revised P&IDs, Calculations, and added Reports/Other Documents section. Revised Design data. Deleted Notes 5 and 10. Revised Note 11 and 13. Revised Cyclic data for parent vessel and PJMs. Added Hydrodynamic Loading requirements section, added multiple overblow requirements section, added nozzle loads, added Equipment Qualification.***

12 ***Note 15:*** ***Added Attachment 1 (for BNI purposes only). Revised Hydrodynamic Loads, Nozzle Loads, and Equipment Qualification data.***

Seismic 12

Seismic analysis to be combined with operating conditions, single PJM overblow, and any sloshing loads imposed. Sloshing loads on vessel shell and internals are calculated per ASCE 4-98. Analysis to consider worst case seismic loads on the vessel proper and on the vessel internals.

BECHTEL	**MECHANICAL DATA SHEET: VESSEL**	PLANT ITEM No. ***24590-PTF-MV-FRP-VSL-00002A***

Equipment Cyclic Data Sheet - Parent Vessel 12

Plant Item Number:	***24590-PTF-MV-FRP-VSL-00002A***
Description	***Parent Vessel***

The information below is provisional and envelopes operational duty for fatigue assessment. It is not to be used as operational data.

Materials of Construction	***SA 240 316 with maximum carbon content of 0.030%***
Design Life	***40 years***
Component Function and Life Cycle Description	***This vessel receives and stores waste in a batch transfer from off-site tanks. It shall be designed to be filled to the maximum content level over a period of one day. Additionally, this vessel will be subjected to fluid dynamic forces from the operation of the pulse jet mixers during the process of suspending the solids in the waste feed. This vessel is washed down not more than once per year with nitric acid and water.***

Load Type		Range		Number of Cycles	Comment
Design Pressure	psig	*-2.5*	*15*	*10*	***Nominal assumption for testing, not to be used in conjunction with other design loads***
Operating Pressure	psig	*-1.5*	*0*	*7.0E6*	***PVP header pressure fluctuations***
Operating Pressure	psig	*0*	*2.8*	*40*	***Loss of Power***
Operating Temperature	°F	*59*	*140*	*310*	
Contents Specific Gravity		*1.0*	*1.46*	*310*	***Assume vessel empty at beginning of cycle***
Contents Level	inch	*18*	*409*	*233*	***Liquid level measured from crown of bottom head***
Localized Features					
Supports		***Same as vessel***		***Number of cycles same as vessel***	

	MECHANICAL DATA SHEET: VESSEL	PLANT ITEM No. *24590-PTF-MV-FRP-VSL-00002A*

Equipment Cyclic Data Sheet - PJMs 12

Component Plant Item Number:	***24590-PTF-MV-FRP-PJM-00061, 24590-PTF-MV-FRP-PJM-00062, 24590-PTF-MV-FRP-PJM-00063, 24590-PTF-MV-FRP-PJM-00064, 24590-PTF-MV-FRP-PJM-00065, 24590-PTF-MV-FRP-PJM-00066, 24590-PTF-MV-FRP-PJM-00067, 24590-PTF-MV-FRP-PJM-00068, 24590-PTF-MV-FRP-PJM-00069, 24590-PTF-MV-FRP-PJM-00070, 24590-PTF-FRP-MV-PJM-00071, 24590-PTF-MV-FRP-PJM-00072***
Component Description:	***Pulse Jet Mixer Vessels (PJM)***

The information below is provisional and envelopes operational duty for fatigue assessment. It is not to be used as operational data.

Materials of Construction	***SA 240 316 with maximum carbon content of 0.030%***
Design Life	***40 years***
Component Function and Life Cycle Description	***These PJMs are cyclically loaded using vacuum to fully fill the PJM with process liquid and compressed air to fully empty the PJM. The PJMs are contained within a parent vessel with varying liquid level. They shall be designed to cycle between the maximum pressure and the minimum pressure plus the external static head imposed by the parent vessel.*** ***The PJM supports shall be designed to cycle between the fully buoyant (parent vessel full and PJM empty) and fully loaded (parent vessel empty and PJM full) conditions.***

Load Type		Range		Number of Cycles	Comment
Design Pressure	psig	***FV***	***80***	***100***	
Operating Pressure	psig	***FV***	***47***	***4.2E6***	
Operating Temp	°F	***59***	***140***	***310***	***Same as parent vessel.***
Contents Specific Gravity		***1.0***	***1.46***	***4.2E6***	***Same as parent vessel***
Contents Level	inch	***Empty***	***Flooded***	***4.2E6***	
PJM Thrust	lbf	***-420***	***420***	***4.2E6***	
Localized Features					
Supports		***Fully Buoyant***	***Fully Loaded***	***4.2E6***	

Notes

Cycle increase: The Seller must increase the numbers of operational cycles given above by 10% to account for commissioning duty unless otherwise noted.

Design Considerations for Loads Induced by Pulse Jet Mixers (PJMs) 12

Pulse Jet Mixers (PJMs) are designed to mix the vessel contents using a liquid jet discharge. PJMs are driven by compressed air. The mixing is required to enhance heat transfer, to break up hydrogen-containing particles, and to homogenize the solution. Normally, the PJMs are operated simultaneously within the parent vessel.

The PJMs operate in the following three cycles: Suction, Drive and Vent. During the suction cycle a vacuum is created in the PJM headspace and the level within the PJM rises to fill the PJM. During the drive cycle the PJM is pressurized and liquid is discharged. During the vent cycle, the pressure in the headspace approaches atmospheric and the level within the PJM is allowed to reach equilibrium.

Vessel components shall be designed to withstand loading induced by PJM operations as described herein.

Normal Operations: Liquid flows around internal structures within the parent vessel producing hydrodynamic loads such as drag and vortex shedding.

To mitigate the dynamic effects, the following pipe sizes dipped internal to the vessel are required to have a minimum first natural frequency that is double the vortex shedding frequency:

Nominal Pipe Size	Minimum First Natural Frequency
1 inch	14 Hz*
2 inch	8.0 Hz*
3 inch	5.0 Hz**

* See 24590-WTP-MVC-50-00001, Section 8.1.5.2
** By extrapolation from 1 inch and 2 inch

Overblow Condition: Occasionally the drive cycle lasts too long and compressed air is discharged from the PJM. Overblows can also occur during system calibration. One or multiple PJMs may overblow at any time. These conditions induce acoustic and bubble rise loads on structures.

All internal components shall be designed for the combination of normal operational hydrodynamic loads and overblow loads. Single overblows (SOB) are assumed to act concurrently with the seismic event, however multiple overblows (MOB) are not assumed to act concurrently with the seismic event. Figure 1 (below) provides the acoustic load intensity that encompasses both SOB and MOB.

Hydrodynamic Loads Due to PJM Operations 12

Normal operation imposes a cyclical load ranging between -0.06 and 0.12 psi in the radial direction and -0.03 to 0.1 psi in the vertical direction for 4.2E6 cycles. The hydrodynamic pressure applies across the projected area of the component. Positive hydrodynamic forces act in the radial, outward direction and the vertical, upward direction. Seller shall apply the radial load simultaneously in the radial direction and normal to the radial direction in the horizontal plane.

PJM Overblow Loads 12

Discussion: *During normal operation, pulse jet mixers (PJMs) mix the fluid by pulling in (suction) and pushing out (drive) fluid. During an upset condition, designated as an 'overblow', air is discharged following the drive cycle of one or more PJMs. The load consists of acoustic pressure (2Hz to 200Hz) developed in the first 200ms of the event and a load due to the bubble rising through the fluid.*

The acoustic load and the bubble load are design loads as defined by ASME B&PVC, Section 8, Division 1, UG-22, applied statically. The acoustic load is not added to the bubble rise load because they occur at different times during the overblow event.

Acoustic Load

- ***The acoustic design load in Figure 1 is applied to the visible (as viewed from the overblow origin) surface of cylindrical targets such as pipes, charge vessels, and PJMs. The load is applied in the direction normal to the principal axis of the target as illustrated in Figure 2. Note: The intended net effective load on the target is equal to the projected (i.e. cross-sectional) area of the object times the acoustic design load (psi) indicated in Figure 1.***
- ***Each target is considered independent of the surrounding targets: e.g. the surrounding targets do not impede the acoustic wave by casting a shadow, as illustrated in Figure 2.***
- ***The load is not applied to small supports such as gussets, brackets, tabs, clamps, and bolts because they are rigid and the pressure drop across the target is negligible.***
- ***When the vessel contains multiple PJMs, the load from one PJM is independent of the load from other PJMs. The loads are not additive for multiple overblows.***
- ***No internal components shall be placed within 5 PJM nozzle diameters (5 * 4 in = 20 in) of a spherical zone centered at any overblowing PJM nozzle.***

Figure 1: Acoustic Design Load

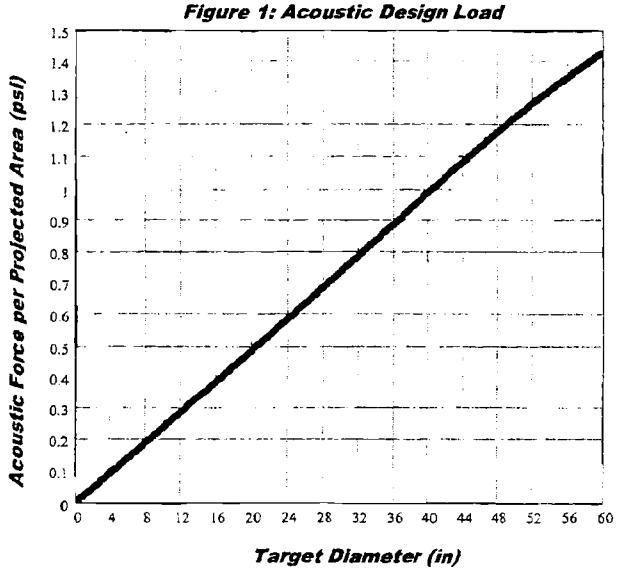

Figure 2: Load Application

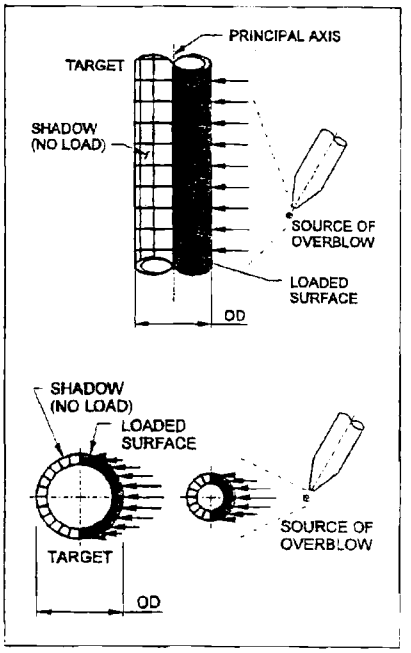

The following data is required to determine the load:

- ***Target Diameter***
- ***Target Principal Axis***
- ***Overblow Source Coordinates***

Number of Acoustic Cycles

1000 events X 40 cycles/event for a total of 40,000 acoustic cycles.

Bubble Rise Load

A vertical force per projected area of 1.7 psi is applied to the surfaces in the 36-inch diameter cylindrical zone centered at the overblowing PJM(s). The bubble can be at any elevation above the overblowing PJM and only affects one zone (36-inch diameter region) at a time. When there are multiple PJMs in a vessel (MOB), each PJM has it's own bubble. To simplify analysis the bubble can be applied in a continuous cylindrical zone above each PJM top head.

Number Bubble Rise Cycles

1000 events X 1 cycle/event

12

Nozzle Loads

Nozzle	Design Nozzle Press (psig) (Note E)	Design Nozzle Temp (°F) (Note E & Note G)	Size	Load Type	Loads - lbs Fx	Fy	Fz	Moments - ft-lbs Mx	My	Mz
N01	15	215	24"	Weight	Manway					
				Seismic						
				Thermal						
N02	400	215	3"	Weight	52	230	52	119	75	471
				Seismic	403	140	298	928	1986	1129
				Thermal	251	100	190	410	400	300
N03	15	215	6"	Weight	N03 is parent nozzle, nozzle loads are applied via N03A, N03B, N03C					
				Seismic						
				Thermal						
N03A (Note C)	115	215	1"	Weight	15	20	15	20	20	20
				Seismic	53	35	53	65	96	96
				Thermal	20	20	30	30	50	50
N03B (Note C)	115	215	1"	Weight	15	20	15	20	20	20
				Seismic	53	35	53	65	96	96
				Thermal	20	20	30	30	50	50
N03C (Note C)	115	215	1"	Weight	15	20	15	20	20	20
				Seismic	53	35	53	65	96	96
				Thermal	20	20	30	30	50	50
N08	22	215	8"	Weight	234	373	234	741	474	1314
				Seismic	1488	1033	1437	1750	7875	3063
				Thermal	2750	2298	1210	2500	8250	8500
N10	15	215	6"	Weight	210	335	210	598	374	374
				Seismic	1160	775	1160	4240	6367	6367
				Thermal	600	530	800	2180	4350	4350
N11	15	215	8"	Weight	234	373	234	741	464	464
				Seismic	1635	858	1285	5159	7732	7732
				Thermal	1020	1037	970	2920	5830	5830
N18	15	215	2"OD	Weight	15	39	15	20	20	20
				Seismic	53	35	53	65	96	96
				Thermal	20	20	30	30	50	50
N19 spare	190	215	2"OD	Weight	15	20	15	20	20	20
				Seismic	53	35	53	65	96	96
				Thermal	20	20	30	30	50	50
N20	190	215	2"	Weight	50	60	50	75	75	75
				Seismic	177	112	280	478	352	448
				Thermal	70	70	100	171	210	210
N21 spare	190	215	2"OD	Weight	15	20	15	20	20	20
				Seismic	53	35	53	65	96	96
				Thermal	20	20	30	30	50	50
N22 spare	15	215	3"	Weight	52	84	52	119	75	75
				Seismic	284	189	284	819	1227	1227
				Thermal	140	130	190	410	810	810

	MECHANICAL DATA SHEET: VESSEL	PLANT ITEM No. 24590-PTF-MV-FRP-VSL-00002A

Nozzle	Design Nozzle Press (psig) (Note E)	Design Nozzle Temp (°F) (Note E & Note G)	Size	Load Type	Loads - lbs			Moments - ft-lbs		
					Fx	Fy	Fz	Mx	My	Mz
N44	150	215	2"	Weight	50	60	50	75	75	75
				Seismic	448	123	186	277	415	1134
				Thermal	70	70	100	110	210	210
N45	150	215	2"	Weight	50	63	50	75	75	75
				Seismic	186	161	186	308	415	543
				Thermal	70	70	100	110	210	210
N46	150	215	2"	Weight	50	60	50	75	75	75
				Seismic	186	135	186	277	415	415
				Thermal	70	70	100	110	210	210
N47	150	215	2"	Weight	50	60	50	75	75	75
				Seismic	198	123	186	277	415	415
				Thermal	70	70	100	110	210	215
N48	150	215	2"	Weight	50	60	50	75	75	75
				Seismic	186	240	385	728	418	606
				Thermal	70	70	100	110	210	210
N49	150	215	2"	Weight	50	60	50	75	75	75
				Seismic	186	196	441	992	511	439
				Thermal	70	70	100	110	210	210
N50	150	215	2"	Weight	50	64	50	75	75	75
				Seismic	186	229	186	310	714	415
				Thermal	74	70	100	110	210	210
N51	150	215	2"	Weight	50	60	50	75	75	75
				Seismic	186	123	186	277	415	415
				Thermal	100	78	100	110	210	210
N52	150	215	2"	Weight	50	60	50	75	75	75
				Seismic	186	123	329	565	415	415
				Thermal	70	70	100	110	210	210
N53	150	215	2"	Weight	50	60	50	75	75	75
				Seismic	186	123	186	277	415	415
				Thermal	70	70	100	110	210	210
N54	150	215	2"	Weight	50	60	50	75	75	75
				Seismic	186	123	208	452	415	415
				Thermal	70	70	100	110	210	210
N55	150	215	2"	Weight	50	63	50	75	75	80
				Seismic	186	123	186	291	415	415
				Thermal	70	70	100	110	210	210
N56	170	215	2"	Weight	50	190	50	75	75	150
				Seismic	186	259	186	277	415	415
				Thermal	70	213	100	110	210	210
N57	170	215	2"	Weight	50	60	50	75	75	75
				Seismic	186	123	186	277	415	415
				Thermal	70	70	100	110	210	210

	MECHANICAL DATA SHEET: VESSEL	PLANT ITEM No. 24590-PTF-MV-FRP-VSL-00002A

Nozzle	Design Nozzle Press (psig) (Note E)	Design Nozzle Temp (°F) (Note E & Note G)	Size	Load Type	Loads - lbs			Moments - ft-lbs		
					Fx	Fy	Fz	Mx	My	Mz
N58	170	215	2"	Weight	50	60	50	75	75	75
				Seismic	266	116	175	263	394	543
				Thermal	70	136	100	194	210	210
N59	170	215	2"	Weight	50	65	50	75	75	83
				Seismic	186	123	186	623	415	415
				Thermal	70	70	100	110	210	210
N60	170	215	2"	Weight	50	71	50	75	75	75
				Seismic	186	123	186	277	415	415
				Thermal	70	82	100	203	210	210
N61	170	215	2"	Weight	50	94	50	158	75	75
				Seismic	186	151	186	488	415	415
				Thermal	70	70	100	110	210	210
N62	170	215	2"	Weight	50	129	50	77	75	75
				Seismic	186	161	186	298	415	415
				Thermal	70	70	100	156	210	210
N63	170	215	4"	Weight	87	297	87	477	135	1324
				Seismic	480	368	541	1537	2310	2310
				Thermal	240	220	320	770	1530	1530
N64	15	215	1 1/2"	Weight	35	35	35	40	40	40
				Seismic	116	70	105	159	240	291
				Thermal	93	96	60	60	120	120
N70	15	215	6"	Weight	N70 is parent nozzle, nozzle loads are applied via N70A, N70B, N70C					
				Seismic						
				Thermal						
N70A (Note C)	115	215	1"	Weight	15	20	15	20	20	20
				Seismic	53	35	53	65	96	96
				Thermal	20	20	30	30	50	50
N70B (Note C)	115	215	1"	Weight	15	20	15	20	20	20
				Seismic	53	35	53	65	96	96
				Thermal	20	20	30	30	50	50
N70C (Note C)	115	215	1"	Weight	15	20	15	20	20	20
				Seismic	53	35	53	65	96	96
				Thermal	20	20	30	30	50	50

Notes for Nozzle Loads

A. Direction of load application is per diagrams in 24590-WTP-3PS-MV00-T0001, Appendix A.

B. For nozzles in head: x = North/South, y = Vertical, and z = East/West - Vessel 0° defined as north.

C. Values provided at plate on top of parent nozzle.

D. Nozzle loads shown are to be used in place of those specified in 24590-WTP-3PS-MV00-T0001 – do not apply thermal reduction factors.

E. Design Temperatures and Pressures for qualification of nozzles only.

12 F. All Pretreatment RGM Seismic Piping Nozzles loads from Plant Design have a 1.75 load factor applied to all seismic loads to address coupling effects between the flexible vessels and piping in accordance with the Seismic Classification and Evaluation for the Pretreatment Facility Piping and Vessels, 24590-WTP-RPT-ENG-09-040. (BNI use only, see 24590-WTP-GPG-ENG-0150 for nozzle load management).

12 G. Nozzles temperatures that are equal or less than vessel design temperature shall use the vessel design temperature as the bounding temperature to perform the nozzle analysis. Nozzles temperatures that are greater than the vessel design temperature shall be used to analyze the hot nozzles.

EQUIPMENT QUALIFICATION DATASHEET (EQD)

Equipment Identification		
Full Component Tag Number or BNI Stock Code Number	24590-PTF-MV-FRP-VSL-00002A	Safety Classification ☒ SC ☐ SS ☐ APC-PAM
Equipment Datasheet Number	24590-PTF-MVD-FRP-00005	
Description	Waste Feed Receipt Process System (FRP) Vessel.	Seismic Category ☒ SC-I ☐ SC-II ☐ SC-III ☐ SC-IV ☐ SC-III Seismic Interaction only
Location (Facility / Building and Room No.)	PTF Building; located in Room P-0108, Elev. 0'-00", column lines J/5.5	
Safety Function(s)	FRP-VSL-00002A (parent vessel) is considered a high active process vessel credited to prevent spills of large quantities of high activity process liquid and provide primary confinement for radioactive releases. Pulse Jet Mixers (PJMs) provide a mixing function in the vessel to prevent hydrogen accumulation. Reference: 24590-WTP-PSAR-ESH-01-002-02, Table 4A-1, Preliminary Documented Safety Analysis to Support Construction Authorization; PT Facility Specific Information.	
Equipment Safety Function Type	☒ Passive Mechanical ☐ Active Mechanical	☐ Electrical
Seismic Safety Function ☒ Yes ☐ No	Seismic Operability Requirements ☒ During Seismic Event ☒ After Seismic Event	☐ None

Equipment Environmental Qualification (EEQ)

(Parameter values stated in this section do not include process conditions or operation induced conditions)

Classification of Environment ☐ Mild ☒ Harsh | Qualified Life (years) ☒ 40 ☐ Other

Parameter Type/Units	Parameter Value	Parameter Duration (number)	Duration Units	WTP Source Document Number
Normal Ambients				
High Temperature (°F)	113	Note a	Years	24590-PTF-U0D-W16T-00001, E-Note 1
Low Temperature (°F)	59	Note b	N/A	24590-PTF-U0D-W16T-00001, E-Note 1
High Relative Humidity (%RH)	90	Note c	N/A	24590-PTF-U0D-W16T-00001, E-Note 1
Low Relative Humidity (%RH)	5	Note c	N/A	24590-PTF-U0D-W16T-00001, E-Note 1
High Pressure (in.-w.g.)	0 (E-Note 2)	Note d	N/A	24590-PTF-U0D-W16T-00001, E-Note 1
Low Pressure (in.-w.g.)	(-) 1.4 (E-Note 2)	Note d	N/A	24590-PTF-U0D-W16T-00001, E-Note 1
Radiation Dose Rate (mRad/hr)	761000 (E-Note 4)	40 (E-Note 3)	Years (Note e-1)	24590-PTF-U0D-W16T-00001, E-Note 1
Plant/Process Induced Vibration	☐ Yes ☒ No			

Equipment Environmental Qualification (EEQ) *(continued)*

Parameter Type/Units	Parameter Value	Parameter Duration (number)	Duration Units	WTP Source Document Number
Normal Ambients				
Additional Normal Ambient Information:	N/A			
Abnormal Ambients				
High Temperature (°F)	118	8	hours / year	24590-PTF-U0D-W16T-00001, E-Note 1
Low Temperature (°F)	40	Note b	N/A	24590-PTF-U0D-W16T-00001, E-Note 1
High Relative Humidity (%RH)	100c	Note c	N/A	24590-PTF-U0D-W16T-00001, E-Note 1
Low Relative Humidity (%RH)	8	Note c	N/A	24590-PTF-U0D-W16T-00001, E-Note 1
High Pressure (in.-w.g)	4 (E-Note 2)	Note d	N/A	24590-PTF-U0D-W16T-00001, E-Note 1
Low Pressure (in.-w.g)	(-) 7.3 (E-Note 2)	Note d	N/A	24590-PTF-U0D-W16T-00001, E-Note 1
Radiation Dose Rate (mR/hr)	761000 (E-Note 4)	0 (E-Note 3)	Years (Note e-1)	24590-PTF-U0D-W16T-00001, E-Note 1
Exposure to Wet Sprinkler System	☐ Yes ☒ No	N/A	hours	24590-PTF-U0D-W16T-00001, E-Note 1
Additional Abnormal Ambient Information	N/A			
Design Basis Events (DBE) Ambients				
High Temperature (°F)	135	1000	hours	24590-PTF-U0D-W16T-00001, E-Note 1
Low Temperature (°F)	40	Note b	N/A	24590-PTF-U0D-W16T-00001, E-Note 1
High Relative Humidity (%RH)	100c	40	hours	24590-PTF-U0D-W16T-00001, E-Note 1
Low Relative Humidity (%RH)	6	1000	hours	24590-PTF-U0D-W16T-00001, E-Note 1
High Pressure (in.-w.g)	4	8	hours	24590-PTF-U0D-W16T-00001, E-Note 1
Low Pressure (in.-w.g)	(-) 7.3 (E-Note 2)	1000	hours	24590-PTF-U0D-W16T-00001, E-Note 1
Radiation Dose Rate (mR/hr)	761000 (E-Note 4)	0 (E-Note 3)	hours	24590-PTF-U0D-W16T-00001, E-Note 1
Submergence	☐ Yes ☒ No	N/A	hours	24590-PTF-U0D-W16T-00001, E-Note 5
Chemical/Spray Exposure	☒ Yes ☐ No	12.5	hours	24590-PTF-U0D-W16T-00001, E-Note 1
Additional DBE Information	N/A			

DBE Chemical Exposure Details

EQUIPMENT QUALIFICATION DATASHEET (EQD)

DBE Chemical Exposure Details	
DBE Chemical Types / Concentrations	Process Rad Condensate Water Neutral Solution (PVP14), 77°F, pH 7.0 Sodium Hydroxide (PJV09), 66°F, pH 13.0 Sodium Hydroxide (FEP01fl), 101°F, pH 11.5 Sodium Hydroxide (FEP01), 103°F, pH 14.5 Sodium Hydroxide (FEP12a), 104°F, pH 11.5 Sodium Hydroxide (PWD02), 104°F, pH 12.5 Sodium Hydroxide (PWD01), 106°F, pH 14.0 Sodium Hydroxide (FRP02), 110°F, pH 14.5 Sodium Hydroxide (FRP13), 110°F, pH 14.5 Sodium Hydroxide (TCP05), 120°F, pH 15.0 Sodium Hydroxide (FRP01), 121°F, pH 14.5 Sodium Hydroxide (FEP19), 121°F, pH 15.0 Sodium Hydroxide (FRP14), 191°F, pH 15.0

Electrical Interfaces Supporting the Safety Function	
Power Supply Voltage (VAC, VDC)	N/A
Power Supply Frequency (Hz)	N/A
Power Connection Method	N/A
I/O Signals to/from Equipment	N/A
I/O Connection Method	N/A

Mechanical Interfaces	
Mounting Configuration (orientation)	Vertically Mounted
Mounting Method (bolts, welds, etc.)	Welded skirt to embed. Embed plate details per 24590-PTF-DD-S13T-00039, 24590-PTF-DD-S13T-00036, 24590-PTF-DD-S13T-00042
Auxiliary Devices	FRP-PJM-00061, FRP-PJM-00062, FRP-PJM-00063, FRP-PJM-00064, FRP-PJM-00065, FRP-PJM-00066, FRP-PJM-00067, FRP-PJM-00068, FRP-PJM-00069, FRP-PJM-00070, FRP-PJM-00071, FRP-PJM-00072

Equipment Seismic Qualification (ESQ)

Parameter	Title	Reference/Document Number	Version / Revision	Remarks
WTP Seismic Design Specification	Engineering Specification for Seismic Qualification of Seismic Category I/II Equipment and Tanks Engineering Specification for Seismic Qualification Criteria for Pressure Vessels	24590-WTP-3PS-SS90-T0001 24590-WTP-3PS-MV00-T0002	2 3	N/A
Specified Seismic Load Parameters	Seismic Analysis of Pretreatment Building - WSGM In-Structure Response Spectra	24590-PTF-S0C-S15T-00057	A	CCN: 185271; WSGM ISRS Curves: Figures 61 thru 66

EQUIPMENT QUALIFICATION DATASHEET (EQD)

Equipment Seismic Qualification (ESQ)				
Parameter	**Title**	**Reference/Document Number**	**Version / Revision**	**Remarks**
	(ISRS)			

Equipment Qualification Notes and Additional Information

Note a) For thermal aging, the high normal temperature shall be assumed to subsist for 40 years less the duration of the high abnormal temperature. For any lesser qualified life, the normal and abnormal condition durations shall be assigned proportionally. The abnormal temperature is stated to subsist for a certain number of hours per year. It shall be taken to subsist for this number of hours for each year of the qualified life.

Note b) The ability to provide the safety function at the low normal temperature, the low abnormal temperature or the low DBE temperature (whichever be the lowest) shall be established by test, analysis, or operating experience. The thermal aging at these respective low temperatures will be conservatively covered by the thermal aging per item a) above. Therefore, no duration is assigned for the low temperatures.

Note c) The ability to provide the safety function at the extremes of the normal and abnormal humidity conditions, taking into consideration the high and the low normal and high and low abnormal, shall be established by test, analysis, or operating experience. No duration is assigned for the normal and abnormal humidity conditions.

Note d) If the performance of the safety function of the equipment is affected by ambient pressure, the ability to provide the safety function at the extremes of the normal and abnormal pressure conditions, taking into consideration the high and the low normal and the high and low abnormal pressures, shall be established by test, analysis, or operating experience. No duration is assigned to the normal and abnormal pressure conditions.

Note e) (1) If the abnormal radiation dose rate is the same as the normal radiation dose rate, the normal radiation dose rate shall be assumed to subsist for 40 years, or any lesser qualified life, and the duration of the abnormal radiation dose rate is "0."

(2) If the abnormal radiation dose rate is higher than the normal radiation dose rate, the abnormal radiation dose rate shall be assumed to subsist for 40 years, or any lesser qualified life, and the duration of the normal radiation dose rate is "0."

Note f) The DBE conditions shall be taken to subsist for the stated number of hours following the qualified life of the equipment.

Note g) Spray due to fire sprinkler actuation shall be taken to occur once over the entire qualified life duration for a period of 2 hours, even if the qualified life is a period less than 40 years. If spray qualification is provided for DBE conditions (whether for water or chemical spray), then separate qualification for the fire sprinkler spray need not be provided.

Note h) The values stated in this EQD are the ambients and do not include the thermodynamic and radiation conditions imposed by the process fluids, self-heating, etc. The data pertaining to process fluid and service induced parameters are to be taken into account where significant, such as in thermal aging analyses. These data can be obtained from the equipment data sheets or the Equipment Specification.

Note i) Equipment that is to be installed in inaccessible locations must be qualified to a 40-year life without the need for maintenance or replacement.

E-Note 1: BNI (BUYER) shall perform Equipment Environmental Qualification in accordance with 24590-WTP-DC-ENG-06-001, Design Criteria for Environmental and Natural Phenomena Hazard Qualification of Equipment.

E-Note 2: Where pressure is given in inches of water column (in-w.c.) in the source document, it is generally assumed that this is in reference to atmospheric pressure and is therefore equivalent to inches of water gage (in-w.g.).

E-Note 3: Normal, Abnormal, and DBE dose rates are the same, therefore, abnormal and DBE doses do not add to total integrated dose based on normal dose rates over 40 years.

E-Note 4: Radiation Dose Rates are for determining shielding requirements only for the black cell and are not at the source (vessel). Since the vessel is all metallic and the source has no neutron components for material embrittlement, the dose rates are of no concern on the vessel or its subcomponents.

E-Note 5: Flood height is 2.08 ft above the floor, bottom of vessel is above this level therefore, no submergence evaluation is required.

EQUIPMENT QUALIFICATION DATASHEET (EQD)

DOE Radioactive Materials Disclaimer:
Please note that source, special nuclear and byproduct materials, as defined in the Atomic Energy Act of 1954 (AEA), are regulated at the US Department of Energy (DOE) facilities exclusively by DOE acting pursuant to its AEA authority. DOE asserts, that pursuant to the AEA, it has sole and exclusive responsibility and authority to regulate source, special nuclear, and byproduct materials at DOE-owned nuclear facilities. Information contained herein on radionuclides is provided for process description purposes only.

Screening / Evaluation Required? If yes per 24590-WTP-GPP-SREG-002, E&NS signature required below	X	Yes		No

Approval

Rev	Description	System Engineer	Vessel Engineer	Checked	MET	E&NS	Approved	Date
0	Issue for Purchase	Y. Hovanski	R. Simmons	C. Slater/ CEC	N/A	N/A	S. Kirk	04/18/02
1	Revised as Noted	Y. Hovanski	R. Simmons	C. Corriveau	N/A	N/A	S. Kirk	06/02/02
2	Revised Cyclical Data	Y. Hovanski	R. Simmons	C. Slater	N/A	N/A	S. Kirk	08/29/02
3	Revised as Noted, Deleted Charge Vessels	Y. Hovanski	R. Simmons	CS / JJ	N/A	N/A	M.Hoffmann	12/13/02
4	Revised per Note 5	Y. Hovanski	R. Simmons	CS / JJ	N/A	N/A	M.Hoffmann	05/16/03
5	Revised per Note 7	Y. Hovanski	R. Simmons	CS / JJ	N/A	N/A	M.Hoffmann	11/03/03
6	Added Black Cell Requirements	R. Rider	R. Simmons	YH/CS/JJ	N/A	N/A	M. Hoffmann	04/05/04
7	Added Material Specification for Internal Supports and Hydrodynamic Loads	R. Rider	R. Simmons	YH/RT/JJ D. Adler	N/A	N/A	M. Hoffmann	06/23/04
8	Revised Hydrodynamic Loading Criteria	R. Rider	R. Simmons	YH/CS/JJ	N/A	N/A	M. Hoffmann	07/13/04
9	Revised Hydrodynamic Loading Criteria	R. Rider	R. Simmons	CS/JJ	N/A	N/A	M. Hoffmann	07/20/04
10	Revised per Note 12 on sheet 2 of 5.	R. Rider	J. Polani	M. Seed C. Slater	D. Adler	N/A	J. Julyk	10/28/05
11	Revised per Note 14 and as noted by revision triangles. Supersedes 24590-PTF-MVD-FRP-P0005, Rev 4.	B Lindberg	M Seed	S Jain	D Adler	J Hinckley	J Julyk	05/14/09
12	Revised per Note 15 and as noted by revision triangles.	B Lindberg	D Harris	M Arulampalam	D Adler	G Hendricks	J Julyk	5/10/11

ATTACHMENT 1: Page 1 of 2
REFERENCES for Data Sheets: 24590-PTF-MVD-FRP-00005, 00006, 00007, and 00008, Rev 12 12
Vessel Tags: FRP-VSL-00002A/B/C/D

(For BNI Use only)

Data	Document #	Rev	Document Title
Quality Level	24590-PTF-M6-FRP-00001 24590-PTF-M6-FRP-00002	3 3	*P&ID PTF Waste Feed Receipt Vessels FRP-VSL-00002A and FRP-VSL-00002B* *P&ID PTF Waste Feed Receipt Vessels FRP-VSL-00002C and FRP-VSL-00002D*
Seismic Category	24590-PTF-M6-FRP-00001 24590-PTF-M6-FRP-00002	3 3	*P&ID PTF Waste Feed Receipt Vessels FRP-VSL-00002A and FRP-VSL-00002B* *P&ID PTF Waste Feed Receipt Vessels FRP-VSL-00002C and FRP-VSL-00002D*
Design Specific Gravity	24590-WTP-ICD-MG-01-019	4	*ICD 19 - Interface Control Document for Waste Feed* / Section 2.4.3.2, Table 6
Max Operating Volume	24590-PTF-MTC-FRP-00001	E	*Vessel Sizing Calculation FRP-VSL-00002A/B/C/D*
Total Volume	24590-PTF-MTC-FRP-00001	E	*Vessel Sizing Calculation FRP-VSL-00002A/B/C/D*
Inside Diameter	24590-PTF-MTC-FRP-00001	E	*Vessel Sizing Calculation FRP-VSL-00002A/B/C/D*
Length TL-TL	24590-PTF-MTC-FRP-00001	E	*Vessel Sizing Calculation FRP-VSL-00002A/B/C/D*
Operating Pressure (external)	24590-PTF-M6C-PVP-00017	A	*HADCRT Analysis of PTF PVP System at various Operating Scenarios* / *(see sheet 14 - the PVP scrubber inlet is controlled to 35 in-wg)* External pressure of 1.5 psig is based on a normal operating pressure of -35 in WG (1.26 psig) with an additional margin. (24590-PTF-M5-V17T-00021001 & 00021004 indicate the process flow diagrams)
Operating Pressure (internal)	24590-PTF-MVC-10-00003	C	*PTF Vessel Cyclic Datasheet Inputs*
Design Pressure (internal)	24590-WTP-DB-ENG-01-001	1P	*Basis of Design*
Design Pressure (external)	24590-PTF-M6C-PVP-00017	A	*HADCRT Analysis of PTF PVP System at various Operating Scenarios* / External design pressure of 2.5 psig is based on a normal operating pressure of -35 in WG (1.26 psig) with an additional margin
Operating Temp	24590-WTP-RPT-ENG-07-007	0A	*Process Stream Properties* / page 12 based on maximum of all FRP streams (max operating 140 F). (Note - FRP14 stream is not an input to these vessels per Section 4.1.6)
Design Temp	24590-WTP-RPT-ENG-07-007	0A	*Process Stream Properties* / maximum off normal temp per this report page 12
Corrosion Allowance, Erosion Allowance	24590-PTF-N1D-FRP-00001 24590-WTP-M0C-50-00004	7 E	*Corrosion Evaluation FRP-VSL-00002A/B/C/D* *Wear Allowance for WTP Waste Slurry Systems*
Materials of Construction	24590-PTF-N1D-FRP-00001	7	*Corrosion Evaluation FRP-VSL-00002A/B/C/D*
Design Pressure (PJM)	24590-PTF-MVC-10-00003 24590-PTF-M6-FRP-00005	C 3	*PTF Vessel Cyclic Datasheet Inputs* *P&ID PTF Waste Feed Receipt - PSA Rack* / ITS pressure regulator set at 75 psig plus a margin
Operating Pressure (PJM)	24590-PTF-MVC-10-00003	C	*PTF Vessel Cyclic Datasheet Inputs*
Operating Temperature (PJM)	N/A	N/A	same as parent vessel
Cyclic Data (Vessel)	24590-PTF-MVC-10-00003	C	*PTF Vessel Cyclic Datasheet Inputs* (24590-PTF-MVE-10-00008)
Cyclic Data (PJM)	24590-PTF-MVC-10-00003	C	*PTF Vessel Cyclic Datasheet Inputs* (24590-PTF-MVE-10-00012)

REFERENCES for Data Sheets: 24590-PTF-MVD-FRP-00005, 00006, 00007, and 00008, Rev 12 12

Vessel Tags: FRP-VSL-00002A/B/C/D

(For BNI Use only)

Data	Document #	Rev	Document Title
Hydrodynamic Loads	24590-WTP-MVC-50-00001	A	*Hydrodynamic Loads for Normal PJM Operation in Vessels with Newtonian Fluids*
Single PJM Overblow Loads	24590-WTP-MVC-50-00001	A	*Hydrodynamic Loads for Normal PJM Operation in Vessels with Newtonian Fluids*
PJM Overblow Loads	24590-WTP-MVC-50-00011	B	*Pulse Jet Mixer Overblow Vessel Loads*
Single Overblow Cycles	24590-PTF-MVC-10-00003	C	*PTF Vessel Cyclic Datasheet Inputs (24590-PTF-MVE-10-00004)*
Multiple Overblow Cycles	24590-PTF-MVC-10-00003	C	*PTF Vessel Cyclic Datasheet Inputs (24590-PTF-MVE-10-00004)*
Nozzle Loads	CCN 125802	N/A	*Nozzle Design Loads for FRP-VSL-00002A*
	CCN 125803	N/A	*Nozzle Design Loads for FRP-VSL-00002D*
	CCN 125804	N/A	*Nozzle Design Loads for FRP-VSL-00002B*
	CCN 125805	N/A	*Nozzle Design Loads for FRP-VSL-00002C*
	CCN 198206	N/A	*Supplemental Design Nozzle Loads for FRP-VSL-00002C/D*
	CCN 230856	N/A	*Supplemental Nozzle Design Loads for FRP-VSL-00002A*
	CCN 230857	N/A	*Supplemental Nozzle Design Loads for FRP-VSL-00002B*
	CCN 230858	N/A	*Supplemental Nozzle Design Loads for FRP-VSL-00002C*
	CCN 230859	N/A	*Supplemental Nozzle Design Loads for FRP-VSL-00002D*
Nozzle Design Pressures and Temperatures (FRP-VSL-00002A)	24590-PTF-M6X-FRP-00007	3	*MS Line List for P&ID 24590-PTF-M6-FRP-00001, Rev 3*
	24590-PTF-M6X-FRP-00011	3	*MS Line List for P&ID 24590-PTF-M6-FRP-00005, Rev 3*
	24590-PTF-M6X-FRP-00027	3	*MS Line List for P&ID 24590-PTF-M6-FRP-00009, Rev 3*
	24590-PTF-M6X-FRP-00038	0	*MS Line List for P&ID 24590-PTF-M6-FRP-00017, Rev 0*
Nozzle Design Pressures and Temperatures (FRP-VSL-00002B)	24590-PTF-M6X-FRP-00007	3	*MS Line List for P&ID 24590-PTF-M6-FRP-00001, Rev 3*
	24590-PTF-M6X-FRP-00015	3	*MS Line List for P&ID 24590-PTF-M6-FRP-00006, Rev 3*
	24590-PTF-M6X-FRP-00027	3	*MS Line List for P&ID 24590-PTF-M6-FRP-00009, Rev 3*
	24590-PTF-M6X-FRP-00043	0	*MS Line List for P&ID 24590-PTF-M6-FRP-00018, Rev 0*
Nozzle Design Pressures and Temperatures (FRP-VSL-00002C)	24590-PTF-M6X-FRP-00009	3	*MS Line List for P&ID 24590-PTF-M6-FRP-00002, Rev 3*
	24590-PTF-M6X-FRP-00019	3	*MS Line List for P&ID 24590-PTF-M6-FRP-00007, Rev 3*
	24590-PTF-M6X-FRP-00031	3	*MS Line List for P&ID 24590-PTF-M6-FRP-00010, Rev 3*
	24590-PTF-M6X-FRP-00048	0	*MS Line List for P&ID 24590-PTF-M6-FRP-00019, Rev 0*
Nozzle Design Pressures and Temperatures (FRP-VSL-00002D)	24590-PTF-M6X-FRP-00009	3	*MS Line List for P&ID 24590-PTF-M6-FRP-00002, Rev 3*
	24590-PTF-M6X-FRP-00023	3	*MS Line List for P&ID 24590-PTF-M6-FRP-00008, Rev 3*
	24590-PTF-M6X-FRP-00031	3	*MS Line List for P&ID 24590-PTF-M6-FRP-00010, Rev 3*
	24590-PTF-M6X-FRP-00053	0	*MS Line List for P&ID 24590-PTF-M6-FRP-00020, Rev 0*
Equipment Qualification Datasheet	24590-PTF-U0D-W16T-00001	2	*PTF-Room Environment Datasheet* (24590-PTF-U0N-W16T-00007)
Nozzle Load Management	24590-WTP-GPG-ENG-0150	0	*Plant Design/Mechanical Systems Equipment Interfaces: Terminal End Equipment* / CCN 229865

ISSUED BY
RPP-WTP PDC

R11364430

MECHANICAL DATA SHEET: VESSEL

PLANT ITEM No.
24590-PTF-MV-FRP-VSL-00002B

Project	**RPP-WTP**	P&IDs	**24590-PTF-M6-FRP-00001, 24590-PTF-M6-FRP-00006, 24590-PTF-M6-FRP-00009, 24590-PTF-M6-FRP-00018**
Project No	**24590**	Calculations 12	**Attachment 1**
Project Site	**Hanford**	Vessel drawings	**24590-PTF-M2-FRP-00002**
Description	**Waste Feed Receipt Vessel**	Reports/Other Documents 12	**Attachment 1**

Reference Data

Charge Vessels (Tag Numbers)	**None**
Pulsejet Mixers / Agitators (Tag Numbers)	**FRP-PJM-00017, FRP-PJM-00018, FRP-PJM-00019, FRP-PJM-00020, FRP-PJM-00021, FRP-PJM-00022, FRP-PJM-00023, FRP-PJM-00024, FRP-PJM-00025, FRP-PJM-00026, FRP-PJM-00027, FRP-PJM-00028**
RFDs/Pumps (Tag Numbers)	**None**

Design Data

Quality Level		**Q**	Fabrication Specs	**24590-WTP-3PS-MV00-T0001**
Design Level		**L-1**	Design Code	**ASME Section VIII Div 1**
Seismic Category		**SC-I**	Equipment Qualification	**See EQ Sections**
Service/Contents		**Radioactive Liquid**	Code Stamp	**Yes**
Design Specific Gravity	12	**1.46**	NB Registration	**Yes**
Maximum Operating Volume	gal	**402,300 (Note 6)**		
Total Volume	gal	**472,900 (Note 6)**		

Inside Diameter	inch	**564**			Wind Design		**Not Required**
Length/Height (TL-TL)	inch	**322**			Snow Design		**Not Required**
		Vessel Operating	Vessel Design	Coil/Jacket Design	Seismic Design		**24590-WTP-3PS-SS90-T0001** **24590-WTP-3PS-MV00-T0002**
Internal Pressure	psig	**0**	**15**	**N/A**	Corrosion Allowance	inch	**0.04 (Note 11)**
External Pressure	psig	**1.5**	**2.0 (Note 13)**	**N/A**	Min. Design Metal Temp.	°F	**40**
Temperature	°F	**140**	**215**	**N/A**			

Materials of Construction

Component	Material	Containment
Top Head	**SA 240 316 (Note 2)**	**Auxiliary (Note 1)**
Shell	**SA 240 316 (Note 2)**	**Primary (Note 1)**
Bottom Head	**SA 240 316 (Note 2)**	**Primary (Note 1)**
Support (Skirt)	**SA 240 304 (Note 2)**	**N/A**
Internals	**SA 240 316 / SA 479 316 (Note 2)**	**Thermocouples Primary (Note 1)**
Pipe	**SA 312 TP316 Smls (Notes 2 & 7)**	**Note 1**
Forgings/ Bar stock	**SA 182 F316 (Note 2)**	**N/A**

Miscellaneous Data

Orientation	**Vertical**	Support Type	**Skirt**
Insulation Function	**Not Applicable**	Insulation Material	**Not Applicable**
Insulation Thickness (inch)	**Not Applicable**	Internal Finish	**Note 4**
		External Finish	**Welds Descaled as Laid**

Notes/Remarks

Note 1: ***All welds forming part of the primary and auxiliary containments, including the nozzle attachment welds shall be subjected to 100% volumetric examination.***

Note 2: ***Maximum carbon content of 0.030% for all welded components.***

Note 3: ***Operating weight includes weight of liquid filled to top of overflow nozzle.***

Note 4: ***Descale all internal welds as laid, grind smooth and blend all starts/stops, high spots, and crevices, finish welds as required for NDE purposes.***

Note 5: ***Deleted.***

Note 6: ***Vessel volumes are approximated and do not account for manufacturing tolerances, nozzles, and displacement of internals.***

Note 7: ***Welded pipe may be used for 14" NPS PJM supports per 24590-WTP-SDDR-PROC-03-0154.***

Note 8: ***This vessel is located in a Black Cell.***

Note 9: ***Contents of this document are Dangerous Waste Permit affecting (internal use only).***

Note 10: ***Deleted.***

12 ***Note 11:*** ***Ensure that an additional 0.103" is available for erosion in the spherical portion of the bottom head and ensure an additional 0.054" is available for erosion on the lower portions of the PJM cone. The area affected on the bottom head by the PJM flow should be at least 78" in diameter centered under the nozzle of each PJM.***

12 ***Note 12:*** ***Deleted.***

Note 13: ***External design pressure of 2.0 psig is based on a normal operating pressure of -35 in WG (1.26 psig) with an additional margin (see 24590-PTF-M6C-PVP-00017).***

Note 14: ***Revised P&IDs, Calculations, and added Reports/Other Documents section. Revised Design data. Deleted Notes 5 and 10. Revised Note 11 and 13. Revised Cyclic data for parent vessel and PJMs. Added Hydrodynamic Loading requirements section, added multiple overblow requirements section, added nozzle loads, added Equipment Qualification.***

12 ***Note 15:*** ***Added Attachment 1 (for BNI purposes only). Revised Hydrodynamic Loads, Nozzle Loads and Equipment Qualification data.***

Seismic 12

Seismic analysis to be combined with operating conditions, single PJM overblow, and any sloshing loads imposed. Sloshing loads on vessel shell and internals are calculated per ASCE 4-98. Analysis to consider worst case seismic loads on the vessel proper and on the vessel internals.

BECHTEL	**MECHANICAL DATA SHEET: VESSEL**	PLANT ITEM No. ***24590-PTF-MV-FRP-VSL-00002B***

Equipment Cyclic Data Sheet - Parent Vessel 12

Plant Item Number:	***24590-PTF-MV-FRP-VSL-00002B***
Description	***Parent Vessel***

The information below is provisional and envelopes operational duty for fatigue assessment. It is not to be used as operational data.

Materials of Construction	***SA 240 316 with maximum carbon content of 0.030%***
Design Life	***40 years***
Component Function and Life Cycle Description	***This vessel receives and stores waste in a batch transfer from off-site tanks. It shall be designed to be filled to the maximum content level over a period of one day. Additionally, this vessel will be subjected to fluid dynamic forces from the operation of the pulse jet mixers during the process of suspending the solids in the waste feed. This vessel is washed down not more than once per year with nitric acid and water.***

Load Type		Range		Number of Cycles	Comment
Design Pressure	psig	*-2.5*	*15*	*10*	***Nominal assumption for testing, not to be used in conjunction with other design loads***
Operating Pressure	psig	*-1.5*	*0*	*7.0E6*	***PVP header pressure fluctuations***
Operating Pressure	psig	*0*	*2.8*	*40*	***Loss of Power***
Operating Temperature	°F	*59*	*140*	*310*	
Contents Specific Gravity		*1.0*	*1.46*	*310*	***Assume vessel empty at beginning of cycle***
Contents Level	inch	*18*	*409*	*233*	***Liquid level measured from crown of bottom head***
Localized Features					
Supports		***Same as vessel***		***Number of cycles same as vessel***	

BECHTEL	**MECHANICAL DATA SHEET: VESSEL**	PLANT ITEM No. ***24590-PTF-MV-FRP-VSL-00002B***

Equipment Cyclic Data Sheet - PJMs 12

Component Plant Item Number:	***24590-PTF-MV-FRP-PJM-00017, 24590-PTF-MV-FRP-PJM-00018, 24590-PTF-MV-FRP-PJM-00019, 24590-PTF-MV-FRP-PJM-00020, 24590-PTF-MV-FRP-PJM-00021, 24590-PTF-MV-FRP-PJM-00022, 24590-PTF-MV-FRP-PJM-00023, 24590-PTF-MV-FRP-PJM-00024, 24590-PTF-MV-FRP-PJM-00025, 24590-PTF-MV-FRP-PJM-00026, 24590-PTF-FRP-MV-PJM-00027, 24590-PTF-MV-FRP-PJM-00028***
Component Description:	***Pulse Jet Mixer Vessels (PJM)***

The information below is provisional and envelopes operational duty for fatigue assessment. It is not to be used as operational data.

Materials of Construction	***SA 240 316 with maximum carbon content of 0.030%***
Design Life	***40 years***
Component Function and Life Cycle Description	***These PJMs are cyclically loaded using vacuum to fully fill the PJM with process liquid and compressed air to fully empty the PJM. The PJMs are contained within a parent vessel with varying liquid level. They shall be designed to cycle between the maximum pressure and the minimum pressure plus the external static head imposed by the parent vessel.*** ***The PJM supports shall be designed to cycle between the fully buoyant (parent vessel full and PJM empty) and fully loaded (parent vessel empty and PJM full) conditions.***

Load Type		Range		Number of Cycles	Comment
Design Pressure	psig	***FV***	***80***	***100***	
Operating Pressure	psig	***FV***	***47***	***4.2E6***	
Operating Temp	°F	***59***	***140***	***310***	***Same as parent vessel.***
Contents Specific Gravity		***1.0***	***1.46***	***4.2E6***	***Same as parent vessel.***
Contents Level	inch	***Empty***	***Flooded***	***4.2E6***	
PJM Thrust	lbf	***-420***	***420***	***4.2E6***	
Localized Features					
Supports		***Fully Buoyant***	***Fully Loaded***	***4.2E6***	

Notes

Cycle increase: The Seller must increase the numbers of operational cycles given above by 10% to account for commissioning duty unless otherwise noted.

Design Considerations for Loads Induced by Pulse Jet Mixers (PJMs) 12

Pulse Jet Mixers (PJMs) are designed to mix the vessel contents using a liquid jet discharge. PJMs are driven by compressed air. The mixing is required to enhance heat transfer, to break up hydrogen-containing particles, and to homogenize the solution. Normally, the PJMs are operated simultaneously within the parent vessel.

The PJMs operate in the following three cycles: Suction, Drive and Vent. During the suction cycle a vacuum is created in the PJM headspace and the level within the PJM rises to fill the PJM. During the drive cycle the PJM is pressurized and liquid is discharged. During the vent cycle, the pressure in the headspace approaches atmospheric and the level within the PJM is allowed to reach equilibrium.

Vessel components shall be designed to withstand loading induced by PJM operations as described herein.

Normal Operations: Liquid flows around internal structures within the parent vessel producing hydrodynamic loads such as drag and vortex shedding.

To mitigate the dynamic effects, the following pipe sizes dipped internal to the vessel are required to have a minimum first natural frequency that is double the vortex shedding frequency:

Nominal Pipe Size	Minimum First Natural Frequency
1 inch	14 Hz*
2 inch	8.0 Hz*
3 inch	5.0 Hz**

* See 24590-WTP-MVC-50-00001, Section 8.1.5.2
** By extrapolation from 1 inch and 2 inch

Overblow Condition: Occasionally the drive cycle lasts too long and compressed air is discharged from the PJM. Overblows can also occur during system calibration. One or multiple PJMs may overblow at any time. These conditions induce acoustic and bubble rise loads on structures.

All internal components shall be designed for the combination of normal operational hydrodynamic loads and overblow loads. Single overblows (SOB) are assumed to act concurrently with the seismic event, however multiple overblows (MOB) are not assumed to act concurrently with the seismic event. Figure 1 (below) provides the acoustic load intensity that encompasses both SOB and MOB.

Hydrodynamic Loads Due to PJM Operations 12

Normal operation imposes a cyclical load ranging between -0.06 and 0.12 psi in the radial direction and -0.03 to 0.1 psi in the vertical direction for 4.2E6 cycles. The hydrodynamic pressure applies across the projected area of the component. Positive hydrodynamic forces act in the radial, outward direction and the vertical, upward direction. Seller shall apply the radial load simultaneously in the radial direction and normal to the radial direction in the horizontal plane.

PJM Overblow Loads 12

Discussion: *During normal operation, pulse jet mixers (PJMs) mix the fluid by pulling in (suction) and pushing out (drive) fluid. During an upset condition, designated as an 'overblow', air is discharged following the drive cycle of one or more PJMs. The load consists of acoustic pressure (2Hz to 200Hz) developed in the first 200ms of the event and a load due to the bubble rising through the fluid.*

The acoustic load and the bubble load are design loads as defined by ASME B&PVC, Section 8, Division 1, UG-22, applied statically. The acoustic load is not added to the bubble rise load because they occur at different times during the overblow event.

Acoustic Load	• ***The acoustic design load in Figure 1 is applied to the visible (as viewed from the overblow origin) surface of cylindrical targets such as pipes, charge vessels, and PJMs. The load is applied in the direction normal to the principal axis of the target as illustrated in Figure 2. Note: The intended net effective load on the target is equal to the projected (i.e. cross-sectional) area of the object times the acoustic design load (psi) indicated in Figure 1.*** • ***Each target is considered independent of the surrounding targets: e.g. the surrounding targets do not impede the acoustic wave by casting a shadow, as illustrated in Figure 2.*** • ***The load is <u>not</u> applied to small supports such as gussets, brackets, tabs, clamps, and bolts because they are rigid and the pressure drop across the target is negligible.*** • ***When the vessel contains multiple PJMs, the load from one PJM is independent of the load from other PJMs. The loads are not additive for multiple overblows.*** • ***No internal components shall be placed within 5 PJM nozzle diameters (5 * 4 in = 20 in) of a spherical zone centered at any overblowing PJM nozzle.*** ***Figure 1: Acoustic Design Load*** 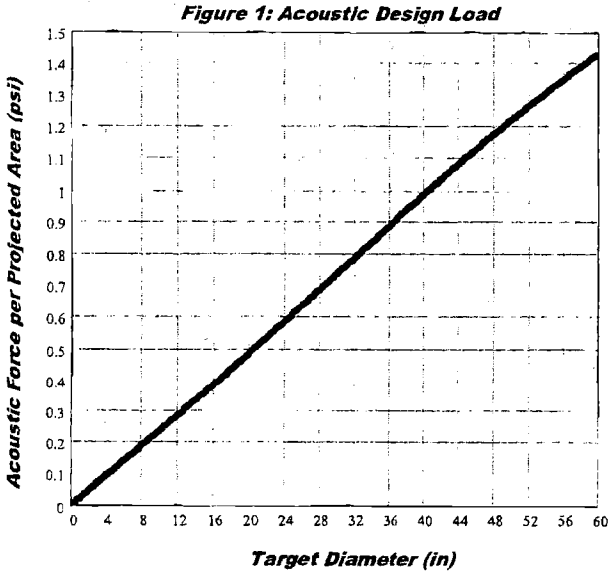 ***Figure 2: Load Application*** 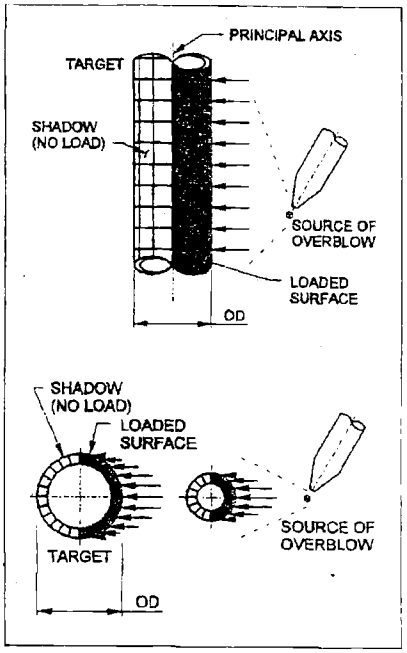 ***The following data is required to determine the load:*** • ***Target Diameter*** • ***Target Principal Axis*** • ***Overblow Source Coordinates***
Number of Acoustic Cycles	***1000 events X 40 cycles/event for a total of 40,000 acoustic cycles.***
Bubble Rise Load	***A vertical force per projected area of 1.7 psi is applied to the surfaces in the 36-inch diameter cylindrical zone centered at the overblowing PJM(s). The bubble can be at any elevation above the overblowing PJM and only affects one zone (36-inch diameter region) at a time. When there are multiple PJMs in a vessel (MOB), each PJM has it's own bubble. To simplify analysis the bubble can be applied in a continuous cylindrical zone above each PJM top head.***
Number Bubble Rise Cycles	***1000 events X 1 cycle/event***

Nozzle Loads 12

Nozzle	Design Nozzle Press (psig) (Note E)	Design Nozzle Temp (°F) (Note E & Note G)	Size	Load Type	Loads - lbs			Moments - ft-lbs		
					Fx	Fy	Fz	Mx	My	Mz
N01	15	215	24"	Weight	Manway					
				Seismic						
				Thermal						
N02	400	215	3"	Weight	52	148	69	202	137	238
				Seismic	284	334	649	1517	1227	1281
				Thermal	140	130	190	471	810	810
N03	15	215	6"	Weight	N03 is parent nozzle, nozzle loads are applied via N03A, N03B, N03C					
				Seismic						
				Thermal						
N03A (Note C)	115	215	1"	Weight	15	20	15	20	20	20
				Seismic	53	35	53	65	96	96
				Thermal	20	20	30	30	50	50
N03B (Note C)	115	215	1"	Weight	15	20	15	20	20	20
				Seismic	53	35	53	65	96	96
				Thermal	20	20	30	30	50	50
N03C (Note C)	115	215	1"	Weight	15	20	15	20	20	20
				Seismic	53	35	53	65	96	96
				Thermal	20	20	30	30	50	50
N08	22	215	8"	Weight	234	839	234	832	464	3470
				Seismic	3231	1124	1358	2664	9478	5595
				Thermal	7655	650	970	3840	5830	6820
N10	15	215	6"	Weight	210	335	210	598	374	374
				Seismic	1160	775	1160	4240	6367	6367
				Thermal	600	530	800	2180	4350	4350
N11	15	215	8"	Weight	234	373	234	741	464	464
				Seismic	1285	858	1285	5159	7732	7732
				Thermal	730	650	970	2920	5830	5830
N18	15	215	2"OD	Weight	15	20	15	20	20	20
				Seismic	53	35	53	65	96	96
				Thermal	20	26	30	30	50	50
N19 spare	15	215	2"OD	Weight	15	20	15	20	20	20
				Seismic	53	35	53	65	96	96
				Thermal	20	20	30	30	50	50
N20	190	215	2"	Weight	50	60	50	75	75	75
				Seismic	205	103	158	390	352	473
				Thermal	70	70	100	110	210	317
N21 spare	15	215	2"OD	Weight	15	20	15	20	20	20
				Seismic	53	35	53	65	96	96
				Thermal	20	20	30	30	50	50

Nozzle	Design Nozzle Press (psig) (Note E)	Design Nozzle Temp (°F) (Note E & Note G)	Size	Load Type	Loads - lbs			Moments - ft-lbs		
					Fx	Fy	Fz	Mx	My	Mz
N22 spare	15	215	3"	Weight	52	84	52	119	75	75
				Seismic	284	189	284	819	1227	1227
				Thermal	140	130	190	410	810	810
N42	125	215	3"	Weight	52	84	52	119	75	75
				Seismic	284	189	284	819	1227	1227
				Thermal	140	130	190	410	810	810
N44	150	215	2"	Weight	50	71	50	75	75	75
				Seismic	110	109	371	1066	249	249
				Thermal	70	70	100	110	210	210
N45	150	215	2"	Weight	50	60	50	75	75	75
				Seismic	252	123	186	277	415	555
				Thermal	70	70	100	110	210	210
N46	150	215	2"	Weight	50	60	50	75	75	75
				Seismic	382	126	186	277	415	543
				Thermal	70	70	100	110	210	210
N47	150	215	2"	Weight	50	60	50	150	75	75
				Seismic	186	123	186	341	541	415
				Thermal	70	70	100	110	210	210
N48	150	215	2"	Weight	50	60	50	75	75	75
				Seismic	459	123	186	287	553	686
				Thermal	70	70	100	110	210	210
N49	150	215	2"	Weight	50	60	50	75	75	75
				Seismic	186	123	355	679	415	415
				Thermal	70	70	100	110	210	210
N50	150	215	2"	Weight	50	60	50	75	75	75
				Seismic	186	123	186	277	415	415
				Thermal	70	70	100	110	210	210
N51	150	215	2"	Weight	50	60	50	75	75	75
				Seismic	186	123	186	277	415	415
				Thermal	70	70	100	110	210	210
N52	150	215	2"	Weight	50	60	50	75	75	75
				Seismic	194	123	186	277	415	415
				Thermal	70	70	100	110	210	210
N53	150	215	2"	Weight	50	60	50	75	75	75
				Seismic	186	123	186	277	415	415
				Thermal	70	70	100	110	210	210
N54	150	215	2"	Weight	50	83	50	75	75	75
				Seismic	186	123	186	277	415	415
				Thermal	70	70	118	228	210	210
N55	150	215	2"	Weight	50	60	50	83	75	75
				Seismic	186	123	186	340	415	415
				Thermal	70	70	100	130	210	210

Nozzle	Design Nozzle Press (psig) (Note E)	Design Nozzle Temp (°F) (Note E & Note G)	Size	Load Type	Loads - lbs			Moments - ft-lbs		
					Fx	Fy	Fz	Mx	My	Mz
N56	170	215	2"	Weight	50	60	50	75	75	75
				Seismic	238	123	186	355	415	613
				Thermal	70	70	100	110	210	210
N57	170	215	2"	Weight	50	60	50	75	75	75
				Seismic	186	123	186	277	415	415
				Thermal	95	138	100	129	210	210
N58	170	215	2"	Weight	50	60	50	75	75	75
				Seismic	186	123	186	277	415	415
				Thermal	70	70	100	110	210	254
N59	170	215	2"	Weight	50	83	50	75	75	98
				Seismic	186	123	186	497	415	551
				Thermal	70	70	100	141	210	210
N60	170	215	2"	Weight	50	68	50	75	75	75
				Seismic	186	123	186	277	415	415
				Thermal	70	70	100	110	210	210
N61	170	215	2"	Weight	50	60	50	75	75	75
				Seismic	186	123	186	277	415	415
				Thermal	70	70	100	110	210	210
N62	170	215	2"	Weight	50	60	50	75	75	75
				Seismic	186	130	186	277	415	544
				Thermal	70	70	100	110	210	210
N63	170	215	4"	Weight	87	244	87	371	135	532
				Seismic	480	791	480	1710	2310	2310
				Thermal	242	220	320	770	1530	1530
N64	15	215	1 1/2"	Weight	35	35	35	40	40	40
				Seismic	105	70	105	159	240	240
				Thermal	40	40	60	106	120	120
N70	15	215	6"	Weight	N70 is parent nozzle, nozzle loads are applied via N70A, N70B, N70C					
				Seismic						
				Thermal						
N70A (Note C)	115	215	1"	Weight	15	20	15	20	20	20
				Seismic	53	35	53	65	96	96
				Thermal	20	20	30	30	50	50
N70B (Note C)	115	215	1"	Weight	15	20	15	20	20	20
				Seismic	53	35	53	65	96	96
				Thermal	20	20	30	30	50	50
N70C (Note C)	115	215	1"	Weight	15	20	15	20	20	20
				Seismic	53	35	53	65	96	96
				Thermal	20	20	30	30	50	50

Notes for Nozzle Loads

A. Direction of load application is per diagrams in 24590-WTP-3PS-MV00-T0001, Appendix A.

B. For nozzles in head: x = North/South, y = Vertical, and z = East/West - Vessel 0° defined as north.

C. Values provided at plate on top of parent nozzle.

D. Nozzle loads shown are to be used in place of those specified in 24590-WTP-3PS-MV00-T0001 -- do not apply thermal reduction factors.

E. Design Temperatures and Pressures for qualification of nozzles only.

12 F. All Pretreatment RGM Seismic Piping Nozzles loads from Plant Design have a 1.75 load factor applied to all seismic loads to address coupling effects between the flexible vessels and piping in accordance with the Seismic Classification and Evaluation for the Pretreatment Facility Piping and Vessels, 24590-WTP-RPT-ENG-09-040. (BNI use only, see 24590-WTP-GPG-ENG-0150 for nozzle load management).

12 G. Nozzles temperatures that are equal or less than vessel design temperature shall use the vessel design temperature as the bounding temperature to perform the nozzle analysis. Nozzles temperatures that are greater than the vessel design temperature shall be used to analyze the hot nozzles.

EQUIPMENT QUALIFICATION DATASHEET (EQD)

Equipment Identification		
Full Component Tag Number or BNI Stock Code Number	24590-PTF-MV-FRP-VSL-00002B	Safety Classification ☒ SC ☐ SS ☐ APC-PAM
Equipment Datasheet Number	24590-PTF-MVD-FRP-00006	
Description	Waste Feed Receipt Process System (FRP) Vessel.	Seismic Category ☒ SC-I ☐ SC-II ☐ SC-III ☐ SC-IV ☐ SC-III Seismic Interaction only
Location (Facility / Building and Room No.)	PTF Building; located in Room P-0108A, Elev. 0'-00", column lines J/2.5	
Safety Function(s)	FRP-VSL-00002B (parent vessel) is considered a high active process vessel credited to prevent spills of large quantities of high activity process liquid and provide primary confinement for radioactive releases. Pulse Jet Mixers (PJMs) provide a mixing function in the vessel to prevent hydrogen accumulation. Reference: 24590-WTP-PSAR-ESH-01-002-02, Table 4A-1, Preliminary Documented Safety Analysis to Support Construction Authorization; PT Facility Specific Information.	
Equipment Safety Function Type	☒ Passive Mechanical ☐ Active Mechanical	☐ Electrical
Seismic Safety Function ☒ Yes ☐ No	Seismic Operability Requirements ☒ During Seismic Event ☒ After Seismic Event	☐ None

Equipment Environmental Qualification (EEQ)

(Parameter values stated in this section do not include process conditions or operation induced conditions)

Classification of Environment ☐ Mild ☒ Harsh

Qualified Life (years) ☒ 40 ☐ Other

Parameter Type/Units	Parameter Value	Parameter Duration (number)	Duration Units	WTP Source Document Number
Normal Ambients				
High Temperature (°F)	113	Note a	Years	24590-PTF-U0D-W16T-00001, E-Note 1
Low Temperature (°F)	59	Note b	N/A	24590-PTF-U0D-W16T-00001, E-Note 1
High Relative Humidity (%RH)	90	Note c	N/A	24590-PTF-U0D-W16T-00001, E-Note 1
Low Relative Humidity (%RH)	5	Note c	N/A	24590-PTF-U0D-W16T-00001, E-Note 1
High Pressure (in.-w.g.)	0 (E-Note 2)	Note d	N/A	24590-PTF-U0D-W16T-00001, E-Note 1
Low Pressure (in.-w.g.)	(-) 1.4 (E-Note 2)	Note d	N/A	24590-PTF-U0D-W16T-00001, E-Note 1
Radiation Dose Rate (mRad/hr)	761000 (E-Note 4)	40 (E-Note 3)	Years (Note e-1)	24590-PTF-U0D-W16T-00001, E-Note 1

Plant/Process Induced Vibration ☐ Yes ☒ No

Equipment Environmental Qualification (EEQ) *(continued)*

Parameter Type/Units	Parameter Value	Parameter Duration (number)	Duration Units	WTP Source Document Number
Normal Ambients				
Additional Normal Ambient Information:	N/A			
Abnormal Ambients				
High Temperature (°F)	116	8	hours / year	24590-PTF-U0D-W16T-00001, E-Note 1
Low Temperature (°F)	40	Note b	N/A	24590-PTF-U0D-W16T-00001, E-Note 1
High Relative Humidity (%RH)	100c	Note c	N/A	24590-PTF-U0D-W16T-00001, E-Note 1
Low Relative Humidity (%RH)	10	Note c	N/A	24590-PTF-U0D-W16T-00001, E-Note 1
High Pressure (in.-w.g)	4 (E-Note 2)	Note d	N/A	24590-PTF-U0D-W16T-00001, E-Note 1
Low Pressure (in.-w.g)	(-) 7.3 (E-Note 2)	Note d	N/A	24590-PTF-U0D-W16T-00001, E-Note 1
Radiation Dose Rate (mR/hr)	761000 (E-Note 4)	0 (E-Note 3)	Years (Note e-1)	24590-PTF-U0D-W16T-00001, E-Note 1
Exposure to Wet Sprinkler System	☐ Yes ☒ No	N/A	hours	24590-PTF-U0D-W16T-00001, E-Note 1
Additional Abnormal Ambient Information	N/A			
Design Basis Events (DBE) Ambients				
High Temperature (°F)	130	1000	hours	24590-PTF-U0D-W16T-00001, E-Note 1
Low Temperature (°F)	40	Note b	N/A	24590-PTF-U0D-W16T-00001, E-Note 1
High Relative Humidity (%RH)	100c	40	hours	24590-PTF-U0D-W16T-00001, E-Note 1
Low Relative Humidity (%RH)	6	1000	hours	24590-PTF-U0D-W16T-00001, E-Note 1
High Pressure (in.-w.g)	4	8	hours	24590-PTF-U0D-W16T-00001, E-Note 1
Low Pressure (in.-w.g)	(-) 7.3 (E-Note 2)	1000	hours	24590-PTF-U0D-W16T-00001, E-Note 1
Radiation Dose Rate (mR/hr)	761000 (E-Note 4)	0 (E-Note 3)	hours	24590-PTF-U0D-W16T-00001, E-Note 1
Submergence	☐ Yes ☒ No	N/A	hours	24590-PTF-U0D-W16T-00001, E-Note 5
Chemical/Spray Exposure	☒ Yes ☐ No	12.5	hours	24590-PTF-U0D-W16T-00001, E-Note 1
Additional DBE Information	N/A			

DBE Chemical Exposure Details

DBE Chemical Exposure Details	
DBE Chemical Types / Concentrations	Process Rad Condensate Water Sodium Hydroxide (FRP02), 110°F, pH 14.5 Sodium Hydroxide (FRP13), 110°F, pH 14.5 Sodium Hydroxide (TCP05), 120°F, pH 15.0 Sodium Hydroxide (FRP01), 121°F, pH 14.5 Sodium Hydroxide (FEP19), 191°F, pH 15.0 Sodium Hydroxide (FRP14), 191°F, pH 15.0

Electrical Interfaces Supporting the Safety Function	
Power Supply Voltage (VAC, VDC)	N/A
Power Supply Frequency (Hz)	N/A
Power Connection Method	N/A
I/O Signals to/from Equipment	N/A
I/O Connection Method	N/A

Mechanical Interfaces	
Mounting Configuration (orientation)	Vertically Mounted
Mounting Method (bolts, welds, etc.)	Welded skirt to embed plates. Embed plate details per 24590-PTF-DD-S13T-00039, 24590-PTF-DD-S13T-00036, 24590-PTF-DD-S13T-00042
Auxiliary Devices	FRP-PJM-00017, FRP-PJM-00018, FRP-PJM-00019, FRP-PJM-00020, FRP-PJM-00021, FRP-PJM-00022, FRP-PJM-00023, FRP-PJM-00024, FRP-PJM-00025, FRP-PJM-00026, FRP-PJM-00027, FRP-PJM-00028

Equipment Seismic Qualification (ESQ)

Parameter	Title	Reference/Document Number	Version / Revision	Remarks
WTP Seismic Design Specification	Engineering Specification for Seismic Qualification of Seismic Category I/II Equipment and Tanks Engineering Specification for Seismic Qualification Criteria for Pressure Vessels	24590-WTP-3PS-SS90-T0001 24590-WTP-3PS-MV00-T0002	2 3	N/A
Specified Seismic Load Parameters	Seismic Analysis of Pretreatment Building - WSGM In-Structure Response Spectra (ISRS)	24590-PTF-S0C-S15T-00057	A	CCN: 185271; WSGM ISRS Curves: Figures 61 thru 66

Equipment Qualification Notes and Additional Information

Note a) For thermal aging, the high normal temperature shall be assumed to subsist for 40 years less the duration of the high abnormal temperature. For any lesser qualified life, the normal and abnormal condition durations shall be assigned proportionally. The abnormal temperature is stated to subsist for a certain number of hours per year. It shall be taken to subsist for this number of hours for each year of the qualified life.

Note b) The ability to provide the safety function at the low normal temperature, the low abnormal temperature or the low DBE temperature (whichever be the lowest) shall be established by test, analysis, or operating experience. The thermal aging at these respective low temperatures will be conservatively covered by the thermal aging per item a) above. Therefore, no duration is assigned for the low temperatures.

Note c) The ability to provide the safety function at the extremes of the normal and abnormal humidity conditions, taking into consideration the high and the low normal and high and low abnormal, shall be established by test, analysis, or operating experience. No duration is assigned for the normal and abnormal humidity conditions.

Note d) If the performance of the safety function of the equipment is affected by ambient pressure, the ability to provide the safety function at the extremes of the normal and abnormal pressure conditions, taking into consideration the high and the low normal and the high and low abnormal pressures, shall be established by test, analysis, or operating experience. No duration is assigned to the normal and abnormal pressure conditions.

Note e)
(1) If the abnormal radiation dose rate is the same as the normal radiation dose rate, the normal radiation dose rate shall be assumed to subsist for 40 years, or any lesser qualified life, and the duration of the abnormal radiation dose rate is "0."
(2) If the abnormal radiation dose rate is higher than the normal radiation dose rate, the abnormal radiation dose rate shall be assumed to subsist for 40 years, or any lesser qualified life, and the duration of the normal radiation dose rate is "0."

Note f) The DBE conditions shall be taken to subsist for the stated number of hours following the qualified life of the equipment.

Note g) Spray due to fire sprinkler actuation shall be taken to occur once over the entire qualified life duration for a period of 2 hours, even if the qualified life is a period less than 40 years. If spray qualification is provided for DBE conditions (whether for water or chemical spray), then separate qualification for the fire sprinkler spray need not be provided.

Note h) The values stated in this EQD are the ambients and do not include the thermodynamic and radiation conditions imposed by the process fluids, self-heating, etc. The data pertaining to process fluid and service induced parameters are to be taken into account where significant, such as in thermal aging analyses. These data can be obtained from the equipment data sheets or the Equipment Specification.

Note i) Equipment that is to be installed in inaccessible locations must be qualified to a 40-year life without the need for maintenance or replacement.

E-Note 1: BNI (BUYER) shall perform Equipment Environmental Qualification in accordance with 24590-WTP-DC-ENG-06-001, Design Criteria for Environmental and Natural Phenomena Hazard Qualification of Equipment.

E-Note 2: Where pressure is given in inches of water column (in-w.c.) in the source document, it is generally assumed that this is in reference to atmospheric pressure and is therefore equivalent to inches of water gage (in-w.g.).

E-Note 3: Normal, Abnormal, and DBE dose rates are the same, therefore, abnormal and DBE doses do not add to total integrated dose based on normal dose rates over 40 years.

E-Note 4: Radiation Dose Rates are for determining shielding requirements only for the black cell and are not at the source (vessel). Since the vessel is all metallic and the source has no neutron components for material embrittlement, the dose rates are of no concern on the vessel or its subcomponents.

E-Note 5: Flood height is 2.08 ft above the floor, bottom of vessel is above this level therefore, no submergence evaluation is required.

EQUIPMENT QUALIFICATION DATASHEET (EQD)

DOE Radioactive Materials Disclaimer:
Please note that source, special nuclear and byproduct materials, as defined in the Atomic Energy Act of 1954 (AEA), are regulated at the US Department of Energy (DOE) facilities exclusively by DOE acting pursuant to its AEA authority. DOE asserts, that pursuant to the AEA, it has sole and exclusive responsibility and authority to regulate source, special nuclear, and byproduct materials at DOE-owned nuclear facilities. Information contained herein on radionuclides is provided for process description purposes only.

Screening / Evaluation Required? If yes per 24590-WTP-GPP-SREG-002, E&NS signature required below	X	Yes		No

Approval

Rev	Description	System Engineer	Vessel Engineer	Checked	MET	E&NS	Approved	Date
0	Issue for Purchase	Y. Hovanski	R. Simmons	C. Slater/ CEC	N/A	N/A	S. Kirk	04/18/02
1	Revised as Noted	Y. Hovanski	R. Simmons	C. Corriveau	N/A	N/A	S. Kirk	06/02/02
2	Revised Cyclical Data	Y. Hovanski	R. Simmons	C. Slater	N/A	N/A	S. Kirk	08/29/02
3	Revised as Noted, Deleted Charge Vessels	Y. Hovanski	R. Simmons	CS / JJ	N/A	N/A	M..Hoffmann	12/13/02
4	Revised per Note 5	Y. Hovanski	R. Simmons	CS / JJ	N/A	N/A	M..Hoffmann	05/16/03
5	Revised per Note 7	Y. Hovanski	R. Simmons	CS / JJ	N/A	N/A	M..Hoffmann	11/03/03
6	Added Black Cell Requirements	R. Rider	R. Simmons	YH/CS/JJ	N/A	N/A	M. Hoffmann	04/05/04
7	Added Material Specification for Internal Supports and Hydrodynamic Loads	R. Rider	R. Simmons	YH/RT/JJ D. Adler	N/A	N/A	M. Hoffmann	06/23/04
8	Revised Hydrodynamic Loading Criteria	R. Rider	R. Simmons	YH/CS/JJ	N/A	N/A	M. Hoffmann	07/13/04
9	Revised Hydrodynamic Loading Criteria	R. Rider	R. Simmons	CS/JJ	N/A	N/A	M. Hoffmann	07/20/04
10	Revised per Note 12 on sheet 2 of 5.	R. Rider	J. Polani	M. Seed C. Slater	D. Adler	N/A	J. Julyk	10/28/05
11	Revised per Note 14 and as noted by revision triangles. Supersedes 24590-PTF-MVD-FRP-P0006, Rev 4.	B Lindberg	M Seed	S Jain	D Adler	J Hinckley	J Julyk	05/14/09
12	Revised per Note 15 and as noted by revision triangles.	B Lindberg	D Harris	M Arulampalam	D Adler	G Hendricks	J Julyk	5/10/11

ATTACHMENT 1: Page 1 of 2
REFERENCES for Data Sheets: 24590-PTF-MVD-FRP-00005, 00006, 00007, and 00008, Rev 12 12 ***(For BNI Use only)***
Vessel Tags: FRP-VSL-00002A/B/C/D

Data	Document #	Rev	Document Title
Quality Level	24590-PTF-M6-FRP-00001 24590-PTF-M6-FRP-00002	3 3	*P&ID PTF Waste Feed Receipt Vessels FRP-VSL-00002A and FRP-VSL-00002B* *P&ID PTF Waste Feed Receipt Vessels FRP-VSL-00002C and FRP-VSL-00002D*
Seismic Category	24590-PTF-M6-FRP-00001 24590-PTF-M6-FRP-00002	3 3	*P&ID PTF Waste Feed Receipt Vessels FRP-VSL-00002A and FRP-VSL-00002B* *P&ID PTF Waste Feed Receipt Vessels FRP-VSL-00002C and FRP-VSL-00002D*
Design Specific Gravity	24590-WTP-ICD-MG-01-019	4	*ICD 19 - Interface Control Document for Waste Feed* / Section 2.4.3.2, Table 6
Max Operating Volume	24590-PTF-MTC-FRP-00001	E	*Vessel Sizing Calculation FRP-VSL-00002A/B/C/D*
Total Volume	24590-PTF-MTC-FRP-00001	E	*Vessel Sizing Calculation FRP-VSL-00002A/B/C/D*
Inside Diameter	24590-PTF-MTC-FRP-00001	E	*Vessel Sizing Calculation FRP-VSL-00002A/B/C/D*
Length TL-TL	24590-PTF-MTC-FRP-00001	E	*Vessel Sizing Calculation FRP-VSL-00002A/B/C/D*
Operating Pressure (external)	24590-PTF-M6C-PVP-00017	A	*HADCRT Analysis of PTF PVP System at various Operating Scenarios / (see sheet 14 - the PVP scrubber inlet is controlled to 35 in-wg)* External pressure of 1.5 psig is based on a normal operating pressure of -35 in WG (1.26 psig) with an additional margin. (24590-PTF-M5-V17T-00021001 & 00021004 indicate the process flow diagrams)
Operating Pressure (internal)	24590-PTF-MVC-10-00003	C	*PTF Vessel Cyclic Datasheet Inputs*
Design Pressure (internal)	24590-WTP-DB-ENG-01-001	1P	*Basis of Design*
Design Pressure (external)	24590-PTF-M6C-PVP-00017	A	*HADCRT Analysis of PTF PVP System at various Operating Scenarios /* External design pressure of 2.5 psig is based on a normal operating pressure of -35 in WG (1.26 psig) with an additional margin
Operating Temp	24590-WTP-RPT-ENG-07-007	0A	*Process Stream Properties* / page 12 based on maximum of all FRP streams (max operating 140 F). (Note - FRP14 stream is not an input to these vessels per Section 4.1.6)
Design Temp	24590-WTP-RPT-ENG-07-007	0A	*Process Stream Properties* / maximum off normal temp per this report page 12
Corrosion Allowance, Erosion Allowance	24590-PTF-N1D-FRP-00001 24590-WTP-M0C-50-00004	7 E	*Corrosion Evaluation FRP-VSL-00002A/B/C/D* *Wear Allowance for WTP Waste Slurry Systems*
Materials of Construction	24590-PTF-N1D-FRP-00001	7	*Corrosion Evaluation FRP-VSL-00002A/B/C/D*
Design Pressure (PJM)	24590-PTF-MVC-10-00003 24590-PTF-M6-FRP-00005	C 3	*PTF Vessel Cyclic Datasheet Inputs* *P&ID PTF Waste Feed Receipt - PSA Rack* / ITS pressure regulator set at 75 psig plus a margin
Operating Pressure (PJM)	24590-PTF-MVC-10-00003	C	*PTF Vessel Cyclic Datasheet Inputs*
Operating Temperature (PJM)	N/A	N/A	same as parent vessel
Cyclic Data (Vessel)	24590-PTF-MVC-10-00003	C	*PTF Vessel Cyclic Datasheet Inputs* (24590-PTF-MVE-10-00008)
Cyclic Data (PJM)	24590-PTF-MVC-10-00003	C	*PTF Vessel Cyclic Datasheet Inputs* (24590-PTF-MVE-10-00012)

REFERENCES for Data Sheets: 24590-PTF-MVD-FRP-00005, 00006, 00007, and 00008, Rev 12 12

Vessel Tags: FRP-VSL-00002A/B/C/D

(For BNI Use only)

Data	Document #	Rev	Document Title
Hydrodynamic Loads	24590-WTP-MVC-50-00001	A	*Hydrodynamic Loads for Normal PJM Operation in Vessels with Newtonian Fluids*
Single PJM Overblow Loads	24590-WTP-MVC-50-00001	A	*Hydrodynamic Loads for Normal PJM Operation in Vessels with Newtonian Fluids*
PJM Overblow Loads	24590-WTP-MVC-50-00011	B	*Pulse Jet Mixer Overblow Vessel Loads*
Single Overblow Cycles	24590-PTF-MVC-10-00003	C	*PTF Vessel Cyclic Datasheet Inputs (24590-PTF-MVE-10-00004)*
Multiple Overblow Cycles	24590-PTF-MVC-10-00003	C	*PTF Vessel Cyclic Datasheet Inputs (24590-PTF-MVE-10-00004)*
Nozzle Loads	CCN 125802	N/A	*Nozzle Design Loads for FRP-VSL-00002A*
	CCN 125803	N/A	*Nozzle Design Loads for FRP-VSL-00002D*
	CCN 125804	N/A	*Nozzle Design Loads for FRP-VSL-00002B*
	CCN 125805	N/A	*Nozzle Design Loads for FRP-VSL-00002C*
	CCN 198206	N/A	*Supplemental Design Nozzle Loads for FRP-VSL-00002C/D*
	CCN 230856	N/A	*Supplemental Nozzle Design Loads for FRP-VSL-00002A*
	CCN 230857	N/A	*Supplemental Nozzle Design Loads for FRP-VSL-00002B*
	CCN 230858	N/A	*Supplemental Nozzle Design Loads for FRP-VSL-00002C*
	CCN 230859	N/A	*Supplemental Nozzle Design Loads for FRP-VSL-00002D*
Nozzle Design Pressures and Temperatures (FRP-VSL-00002A)	24590-PTF-M6X-FRP-00007	3	*MS Line List for P&ID 24590-PTF-M6-FRP-00001, Rev 3*
	24590-PTF-M6X-FRP-00011	3	*MS Line List for P&ID 24590-PTF-M6-FRP-00005, Rev 3*
	24590-PTF-M6X-FRP-00027	3	*MS Line List for P&ID 24590-PTF-M6-FRP-00009, Rev 3*
	24590-PTF-M6X-FRP-00038	0	*MS Line List for P&ID 24590-PTF-M6-FRP-00017, Rev 0*
Nozzle Design Pressures and Temperatures (FRP-VSL-00002B)	24590-PTF-M6X-FRP-00007	3	*MS Line List for P&ID 24590-PTF-M6-FRP-00001, Rev 3*
	24590-PTF-M6X-FRP-00015	3	*MS Line List for P&ID 24590-PTF-M6-FRP-00006, Rev 3*
	24590-PTF-M6X-FRP-00027	3	*MS Line List for P&ID 24590-PTF-M6-FRP-00009, Rev 3*
	24590-PTF-M6X-FRP-00043	0	*MS Line List for P&ID 24590-PTF-M6-FRP-00018, Rev 0*
Nozzle Design Pressures and Temperatures (FRP-VSL-00002C)	24590-PTF-M6X-FRP-00009	3	*MS Line List for P&ID 24590-PTF-M6-FRP-00002, Rev 3*
	24590-PTF-M6X-FRP-00019	3	*MS Line List for P&ID 24590-PTF-M6-FRP-00007, Rev 3*
	24590-PTF-M6X-FRP-00031	3	*MS Line List for P&ID 24590-PTF-M6-FRP-00010, Rev 3*
	24590-PTF-M6X-FRP-00048	0	*MS Line List for P&ID 24590-PTF-M6-FRP-00019, Rev 0*
Nozzle Design Pressures and Temperatures (FRP-VSL-00002D)	24590-PTF-M6X-FRP-00009	3	*MS Line List for P&ID 24590-PTF-M6-FRP-00002, Rev 3*
	24590-PTF-M6X-FRP-00023	3	*MS Line List for P&ID 24590-PTF-M6-FRP-00008, Rev 3*
	24590-PTF-M6X-FRP-00031	3	*MS Line List for P&ID 24590-PTF-M6-FRP-00010, Rev 3*
	24590-PTF-M6X-FRP-00053	0	*MS Line List for P&ID 24590-PTF-M6-FRP-00020, Rev 0*
Equipment Qualification Datasheet	24590-PTF-U0D-W16T-00001	2	*PTF-Room Environment Datasheet* (24590-PTF-U0N-W16T-00007)
Nozzle Load Management	24590-WTP-GPG-ENG-0150	0	*Plant Design/Mechanical Systems Equipment Interfaces: Terminal End Equipment* / CCN 229865

ISSUED BY
RPP-WTP PDC

R11364431

MECHANICAL DATA SHEET: VESSEL

PLANT ITEM No.
24590-PTF-MV-FRP-VSL-00002C

Project	**RPP-WTP**	P&IDs	**24590-PTF-M6-FRP-00002, 24590-PTF-M6-FRP-00007, 24590-PTF-M6-FRP-00010, 24590-PTF-M6-FRP-00019**
Project No	**24590**	Calculations 12	**Attachment 1**
Project Site	**Hanford**	Vessel drawings	**24590-PTF-M2-FRP-00003**
Description	**Waste Feed Receipt Vessel**	Reports/Other Documents 12	**Attachment 1**

Reference Data

Charge Vessels (Tag Numbers)	**None**
Pulsejet Mixers / Agitators (Tag Numbers)	**FRP-PJM-00029, FRP-PJM-00030, FRP-PJM-00031, FRP-PJM-00032, FRP-PJM-00033, FRP-PJM-00034, FRP-PJM-00035, FRP-PJM-00036, FRP-PJM-00001, FRP-PJM-00002, FRP-PJM-00003, FRP-PJM-00004**
RFDs/Pumps (Tag Numbers)	**None**

Design Data

Quality Level		**Q**	Fabrication Specs	**24590-WTP-3PS-MV00-T0001**
Design Level		**L-1**	Design Code	**ASME Section VIII Div 1**
Seismic Category		**SC-I**	Equipment Qualification	**See EQ Sections**
Service/Contents		**Radioactive Liquid**	Code Stamp	**Yes**
Design Specific Gravity	12	**1.46**	NB Registration	**Yes**
Maximum Design Volume	gal	**402,300 (Note 6)**		
Total Volume	gal	**472,900 (Note 6)**		

Inside Diameter	inch	**564**			Wind Design		**Not Required**
Length/Height (TL-TL)	inch	**322**			Snow Design		**Not Required**
		Vessel Operating	Vessel Design	Coil/Jacket Design	Seismic Design		**24590-WTP-3PS-SS90-T0001 24590-WTP-3PS-MV00-T0002**
Internal Pressure	psig	**0**	**15**	**N/A**	Corrosion Allowance	inch	**0.04 (Note 11)**
External Pressure	psig	**1.5**	**2.0 (Note 13)**	**N/A**	Min. Design Metal Temp.	°F	**40**
Temperature	°F	**140**	**215**	**N/A**			

Materials of Construction

Component	Material	Containment
Top Head	**SA 240 316 (Note 2)**	**Auxiliary (Note 1)**
Shell	**SA 240 316 (Note 2)**	**Primary (Note 1)**
Bottom Head	**SA 240 316 (Note 2)**	**Primary (Note 1)**
Support (Skirt)	**SA 240 304 (Note 2)**	**N/A**
Internals	**SA 240 316 / SA 479 316 (Note 2)**	**Thermocouples Primary (Note 1)**
Pipe	**SA 312 TP316 Smls (Notes 2 & 7)**	**Note 1**
Forgings/ Bar stock	**SA 182 F316 (Note 2)**	**N/A**

Miscellaneous Data

Orientation	**Vertical**	Support Type	**Skirt**
Insulation Function	**Not Applicable**	Insulation Material	**Not Applicable**
Insulation Thickness (inch)	**Not Applicable**	Internal Finish	**Note 4**
		External Finish	**Welds Descaled as Laid**

Notes/Remarks

Note 1:	***All welds forming part of the primary and auxiliary containments, including the nozzle attachment welds shall be subjected to 100% volumetric examination.***
Note 2:	***Maximum carbon content of 0.030% for all welded components.***
Note 3:	***Operating weight includes weight of liquid filled to top of overflow nozzle.***
Note 4:	***Descale all internal welds as laid, grind smooth and blend all starts/stops, high spots, and crevices, finish welds as required for NDE purposes.***
Note 5:	***Deleted.***
Note 6:	***Vessel volumes are approximated and do not account for manufacturing tolerances, nozzles, and displacement of internals.***
Note 7:	***Welded pipe may be used for 14" NPS PJM supports per 24590-WTP-SDDR-PROC-03-0154.***
Note 8:	***This vessel is located in a Black Cell.***
Note 9:	***Contents of this document are Dangerous Waste Permit affecting (internal use only).***
Note 10:	***Deleted.***
12 ***Note 11:***	***Ensure that an additional 0.103" is available for erosion in the spherical portion of the bottom head and ensure an additional 0.054" is available for erosion on the lower portions of the PJM cone. The area affected on the bottom head by the PJM flow should be at least 78" in diameter centered under the nozzle of each PJM.***
12 ***Note 12:***	***Deleted.***
Note 13:	***External design pressure of 2.0 psig is based on a normal operating pressure of -35 in WG (1.26 psig) with an additional margin (see 24590-PTF-M6C-PVP-00017).***
Note 14:	***Revised P&IDs, Calculations, and added Reports/Other Documents section. Revised Design data. Deleted Notes 5 and 10. Revised Note 11 and 13. Revised Cyclic data for parent vessel and PJMs. Added Hydrodynamic Loading requirements section, added multiple overblow requirements section, added nozzle loads, added Equipment Qualification.***
12 ***Note 15:***	***Added Attachment 1 (for BNI purposes only). Revised Hydrodynamic Loads, Nozzle Loads and Equipment Qualification data.***

Seismic 12

Seismic analysis to be combined with operating conditions, single PJM overblow, and any sloshing loads imposed. Sloshing loads on vessel shell and internals are calculated per ASCE 4-98. Analysis to consider worst case seismic loads on the vessel proper and on the vessel internals.

BECHTEL	**MECHANICAL DATA SHEET: VESSEL**	PLANT ITEM No. ***24590-PTF-MV-FRP-VSL-00002C***

Equipment Cyclic Data Sheet - Parent Vessel 12

Plant Item Number:	***24590-PTF-MV-FRP-VSL-00002C***
Description	***Parent Vessel***

The information below is provisional and envelopes operational duty for fatigue assessment. It is not to be used as operational data.

Materials of Construction	***SA 240 316 with maximum carbon content of 0.030%***
Design Life	***40 years***
Component Function and Life Cycle Description	***This vessel receives and stores waste in a batch transfer from off-site tanks. It shall be designed to be filled to the maximum content level over a period of one day. Additionally, this vessel will be subjected to fluid dynamic forces from the operation of the pulse jet mixers during the process of suspending the solids in the waste feed. This vessel is washed down not more than once per year with nitric acid and water***

Load Type		Range		Number of Cycles	Comment
Design Pressure	psig	***-2.5***	***15***	***10***	***Nominal assumption for testing, not to be used in conjunction with other design loads***
Operating Pressure	psig	***-1.5***	***0***	***7.0E6***	***PVP header pressure fluctuations***
Operating Pressure	psig	***-1.5***	***2.8***	***40***	***Loss of Power***
Operating Temperature	°F	***59***	***140***	***310***	
Contents Specific Gravity		***1.0***	***1.46***	***310***	***Assume vessel empty at beginning of cycle***
Contents Level	inch	***18***	***409***	***233***	***Liquid level measured from crown of bottom head***
Localized Features					
Supports		***Same as vessel***		***Number of cycles same as vessel***	

BECHTEL	**MECHANICAL DATA SHEET: VESSEL**	PLANT ITEM No. ***24590-PTF-MV-FRP-VSL-00002C***

Equipment Cyclic Data Sheet - PJMs 12

Component Plant Item Number:	***24590-PTF-MV-FRP-PJM-00001, 24590-PTF-MV-FRP-PJM-00002, 24590-PTF-MV-FRP-PJM-00003, 24590-PTF-MV-FRP-PJM-00004, 24590-PTF-MV-FRP-PJM-00029, 24590-PTF-MV-FRP-PJM-00030, 24590-PTF-MV-FRP-PJM-00031, 24590-PTF-MV-FRP-PJM-00032, 24590-PTF-MV-FRP-PJM-00033, 24590-PTF-MV-FRP-PJM-00034, 24590-PTF-FRP-MV-PJM-00035, 24590-PTF-MV-FRP-PJM-00036***
Component Description:	***Pulse Jet Mixer Vessels (PJM)***

The information below is provisional and envelopes operational duty for fatigue assessment. It is not to be used as operational data.

Materials of Construction	***SA 240 316 with maximum carbon content of 0.030%***
Design Life	***40 years***
Component Function and Life Cycle Description	***These PJMs are cyclically loaded using vacuum to fully fill the PJM with process liquid and compressed air to fully empty the PJM. The PJMs are contained within a parent vessel with varying liquid level. They shall be designed to cycle between the maximum pressure and the minimum pressure plus the external static head imposed by the parent vessel.*** ***The PJM supports shall be designed to cycle between the fully buoyant (parent vessel full and PJM empty) and fully loaded (parent vessel empty and PJM full) conditions.***

Load Type		Range		Number of Cycles	Comment
Design Pressure	psig	***FV***	***80***	***100***	
Operating Pressure	psig	***FV***	***47***	***4.2E6***	
Operating Temp	°F	***59***	***140***	***310***	***Same as parent vessel.***
Contents Specific Gravity		***1.0***	***1.46***	***4.2E6***	***Same as parent vessel.***
Contents Level	inch	***Empty***	***Flooded***	***4.2E6***	
PJM Thrust	lbf	***-420***	***420***	***4.2E6***	
Localized Features					
Supports		***Fully Buoyant***	***Fully Loaded***	***4.2E6***	

Notes

Cycle increase: The Seller must increase the numbers of operational cycles given above by 10% to account for commissioning duty unless otherwise noted.

Design Considerations for Loads Induced by Pulse Jet Mixers (PJMs) 12

Pulse Jet Mixers (PJMs) are designed to mix the vessel contents using a liquid jet discharge. PJMs are driven by compressed air. The mixing is required to enhance heat transfer, to break up hydrogen-containing particles, and to homogenize the solution. Normally, the PJMs are operated simultaneously within the parent vessel.

The PJMs operate in the following three cycles: Suction, Drive and Vent. During the suction cycle a vacuum is created in the PJM headspace and the level within the PJM rises to fill the PJM. During the drive cycle the PJM is pressurized and liquid is discharged. During the vent cycle, the pressure in the headspace approaches atmospheric and the level within the PJM is allowed to reach equilibrium.

Vessel components shall be designed to withstand loading induced by PJM operations as described herein.

Normal Operations: Liquid flows around internal structures within the parent vessel producing hydrodynamic loads such as drag and vortex shedding.

To mitigate the dynamic effects, the following pipe sizes dipped internal to the vessel are required to have a minimum first natural frequency that is double the vortex shedding frequency:

Nominal Pipe Size	Minimum First Natural Frequency
1 inch	14 Hz*
2 inch	8.0 Hz*
3 inch	5.0 Hz**

* See 24590-WTP-MVC-50-00001, Section 8.1.5.2
** By extrapolation from 1 inch and 2 inch

Overblow Condition: Occasionally the drive cycle lasts too long and compressed air is discharged from the PJM. Overblows can also occur during system calibration. One or multiple PJMs may overblow at any time. These conditions induce acoustic and bubble rise loads on structures.

All internal components shall be designed for the combination of normal operational hydrodynamic loads and overblow loads. Single overblows (SOB) are assumed to act concurrently with the seismic event, however multiple overblows (MOB) are not assumed to act concurrently with the seismic event. Figure 1 (below) provides the acoustic load intensity that encompasses both SOB and MOB.

Hydrodynamic Loads Due to PJM Operations 12

Normal operation imposes a cyclical load ranging between -0.06 and 0.12 psi in the radial direction and -0.03 to 0.1 psi in the vertical direction for 4.2E6 cycles. The hydrodynamic pressure applies across the projected area of the component. Positive hydrodynamic forces act in the radial, outward direction and the vertical, upward direction. Seller shall apply the radial load simultaneously in the radial direction and normal to the radial direction in the horizontal plane.

PJM Overblow Loads 12

Discussion: *During normal operation, pulse jet mixers (PJMs) mix the fluid by pulling in (suction) and pushing out (drive) fluid. During an upset condition, designated as an 'overblow', air is discharged following the drive cycle of one or more PJMs. The load consists of acoustic pressure (2Hz to 200Hz) developed in the first 200ms of the event and a load due to the bubble rising through the fluid.*

The acoustic load and the bubble load are design loads as defined by ASME B&PVC, Section 8, Division 1, UG-22, applied statically. The acoustic load is not added to the bubble rise load because they occur at different times during the overblow event.

Acoustic Load	• ***The acoustic design load in Figure 1 is applied to the visible (as viewed from the overblow origin) surface of cylindrical targets such as pipes, charge vessels, and PJMs. The load is applied in the direction normal to the principal axis of the target as illustrated in Figure 2. Note: The intended net effective load on the target is equal to the projected (i.e. cross-sectional) area of the object times the acoustic design load (psi) indicated in Figure 1.*** • ***Each target is considered independent of the surrounding targets: e.g. the surrounding targets do not impede the acoustic wave by casting a shadow, as illustrated in Figure 2.*** • ***The load is not applied to small supports such as gussets, brackets, tabs, clamps, and bolts because they are rigid and the pressure drop across the target is negligible.*** • ***When the vessel contains multiple PJMs, the load from one PJM is independent of the load from other PJMs. The loads are not additive for multiple overblows.*** • ***No internal components shall be placed within 5 PJM nozzle diameters (5 * 4 in = 20 in) of a spherical zone centered at any overblowing PJM nozzle.*** ***Figure 1: Acoustic Design Load*** 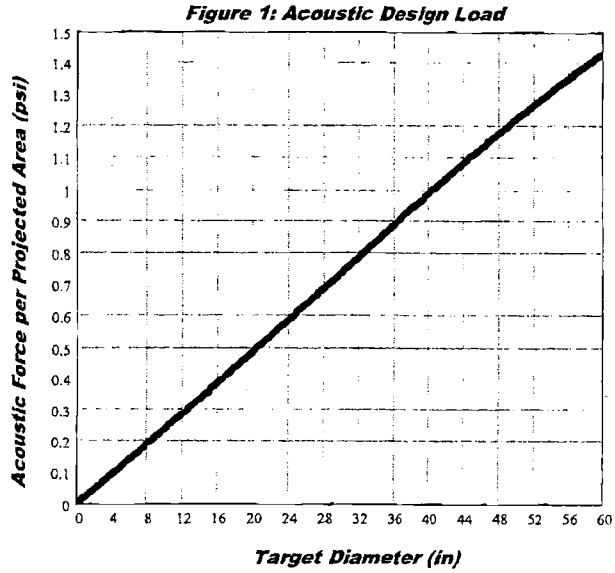 ***Figure 2: Load Application*** 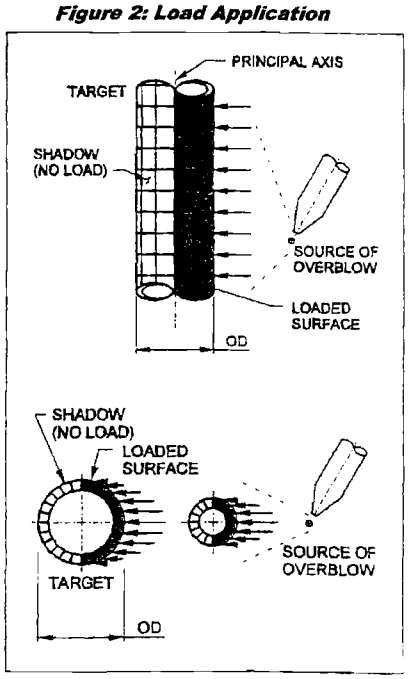 ***The following data is required to determine the load:*** • ***Target Diameter*** • ***Target Principal Axis*** • ***Overblow Source Coordinates***
Number of Acoustic Cycles	***1000 events X 40 cycles/event for a total of 40,000 acoustic cycles.***
Bubble Rise Load	***A vertical force per projected area of 1.7 psi is applied to the surfaces in the 36-inch diameter cylindrical zone centered at the overblowing PJM(s). The bubble can be at any elevation above the overblowing PJM and only affects one zone (36-inch diameter region) at a time. When there are multiple PJMs in a vessel (MOB), each PJM has it's own bubble. To simplify analysis the bubble can be applied in a continuous cylindrical zone above each PJM top head.***
Number Bubble Rise Cycles	***1000 events X 1 cycle/event***

Nozzle Loads (12)

Nozzle	Design Nozzle Press (psig) (Note E)	Design Nozzle Temp (°F) (Note E & Note G)	Size	Load Type	Loads - lbs			Moments - ft-lbs		
					Fx	Fy	Fz	Mx	My	Mz
N01	15	215	24"	Weight	Manway					
				Seismic						
				Thermal						
N02	400	215	3"	Weight	52	132	52	119	75	78
				Seismic	350	238	770	1897	1227	1391
				Thermal	140	141	190	502	810	810
N03	15	215	6"	Weight	N03 is parent nozzle, nozzle loads are applied via N03A, N03B, N03C					
				Seismic						
				Thermal						
N03A (Note C)	115	215	1"	Weight	15	20	15	20	20	20
				Seismic	53	35	53	65	96	96
				Thermal	20	20	30	30	50	50
N03B (Note C)	115	215	1"	Weight	15	20	15	20	20	20
				Seismic	53	35	53	65	96	96
				Thermal	20	20	30	30	50	50
N03C (Note C)	115	215	1"	Weight	15	20	15	20	20	20
				Seismic	53	35	53	65	96	96
				Thermal	20	20	30	30	50	50
N08	22	215	8"	Weight	273	915	200	1746	300	3634
				Seismic	2100	656	2625	3544	17675	4200
				Thermal	975	525	1600	4425	10675	1925
N10	15	215	6"	Weight	210	335	210	598	374	374
				Seismic	1160	775	1160	4240	6367	6367
				Thermal	600	530	800	2180	4350	4350
N11	15	215	8"	Weight	234	373	234	741	464	464
				Seismic	1285	858	1285	5159	7732	7732
				Thermal	730	650	970	2920	5830	5830
N18	15	215	2"OD	Weight	15	21	15	20	20	20
				Seismic	53	35	53	65	96	96
				Thermal	20	20	30	40	50	50
N19 spare	15	215	2"OD	Weight	15	20	15	20	20	20
				Seismic	53	35	53	65	96	96
				Thermal	20	20	30	30	50	50
N20	190	215	2"	Weight	50	60	50	75	75	75
				Seismic	186	130	186	277	415	415
				Thermal	147	238	100	110	210	210
N21 spare	15	215	2"OD	Weight	15	20	15	20	20	20
				Seismic	53	35	53	65	96	96
				Thermal	20	20	30	30	50	50

Nozzle	Design Nozzle Press (psig) (Note E)	Design Nozzle Temp (°F) (Note E & Note G)	Size	Load Type	Loads - lbs			Moments - ft-lbs		
					Fx	Fy	Fz	Mx	My	Mz
N22 spare	15	215	3"	Weight	52	84	52	119	75	75
				Seismic	284	189	284	819	1227	1227
				Thermal	140	130	190	410	810	810
N42	125	215	3"	Weight	52	140	52	119	75	170
				Seismic	284	389	982	1825	1227	1227
				Thermal	140	130	190	410	810	810
N44	150	215	2"	Weight	50	60	50	75	75	75
				Seismic	455	123	186	277	488	473
				Thermal	70	70	100	110	210	210
N45	150	215	2"	Weight	50	60	50	75	75	75
				Seismic	186	123	186	277	415	415
				Thermal	605	183	100	110	398	738
N46	150	215	2"	Weight	50	60	50	75	75	75
				Seismic	186	123	186	277	415	415
				Thermal	275	200	100	110	268	718
N47	150	215	2"	Weight	50	60	50	134	75	75
				Seismic	186	123	186	277	415	415
				Thermal	70	70	100	110	210	210
N48	150	215	2"	Weight	50	60	50	134	75	75
				Seismic	186	123	186	277	415	415
				Thermal	70	70	100	110	210	210
N49	150	215	2"	Weight	50	60	50	134	75	75
				Seismic	186	123	186	277	415	415
				Thermal	70	70	100	110	210	210
N50	150	215	2"	Weight	50	60	50	75	75	75
				Seismic	186	123	186	277	415	415
				Thermal	70	70	100	110	210	210
N51	150	215	2"	Weight	50	60	50	134	75	75
				Seismic	186	123	186	277	415	415
				Thermal	70	70	100	110	210	210
N52	150	215	2"	Weight	50	60	50	75	75	75
				Seismic	186	123	186	277	415	415
				Thermal	70	184	100	269	210	276
N53	150	215	2"	Weight	50	60	50	75	75	75
				Seismic	455	123	186	277	488	473
				Thermal	70	70	100	110	210	210
N54	150	215	2"	Weight	50	60	50	75	75	75
				Seismic	186	123	186	277	415	415
				Thermal	70	92	100	242	210	210
N55	150	215	2"	Weight	50	60	50	75	75	75
				Seismic	186	123	186	277	415	415
				Thermal	605	183	100	110	398	738

Nozzle	Design Nozzle Press (psig) (Note E)	Design Nozzle Temp (°F) (Note E & Note G)	Size	Load Type	Loads - lbs			Moments - ft-lbs		
					Fx	Fy	Fz	Mx	My	Mz
N56	170	215	2"	Weight	50	98	50	75	75	201
				Seismic	186	123	186	424	415	513
				Thermal	70	70	100	110	210	210
N57	170	215	2"	Weight	50	60	50	75	75	75
				Seismic	186	123	186	277	770	520
				Thermal	70	70	100	194	210	210
N58	170	215	2"	Weight	50	60	50	75	75	75
				Seismic	152	86	130	383	289	543
				Thermal	200	242	100	201	210	471
N59	170	215	2"	Weight	50	60	50	75	75	75
				Seismic	186	123	186	277	415	415
				Thermal	70	70	100	184	210	210
N60	170	215	2"	Weight	50	60	50	75	75	75
				Seismic	186	123	320	635	415	415
				Thermal	70	70	100	110	210	210
N61	170	215	2"	Weight	50	60	50	75	75	75
				Seismic	242	123	186	277	415	415
				Thermal	70	70	100	110	210	210
N62	170	215	2"	Weight	50	71	50	75	75	135
				Seismic	186	123	186	277	415	415
				Thermal	70	70	100	110	210	210
N63	170	215	4"	Weight	87	225	87	235	135	150
				Seismic	422	282	558	613	875	613
				Thermal	325	100	466	250	2500	500
N64	15	215	1 1/2"	Weight	35	39	35	100	40	40
				Seismic	105	70	105	165	240	240
				Thermal	40	40	60	60	120	120
N70	15	215	6"	Weight	N70 is parent nozzle, nozzle loads are applied via N70A, N70B, N70C					
				Seismic						
				Thermal						
N70A (Note C)	115	215	1"	Weight	15	20	15	20	20	20
				Seismic	53	35	53	65	96	96
				Thermal	20	20	30	30	50	50
N70B (Note C)	115	215	1"	Weight	15	20	15	20	20	20
				Seismic	53	35	53	65	96	96
				Thermal	20	20	30	30	50	50
N70C (Note C)	115	215	1"	Weight	15	20	15	20	20	20
				Seismic	53	35	53	65	96	96
				Thermal	20	20	30	30	50	50

Notes for Nozzle Loads

A. Direction of load application is per diagrams in 24590-WTP-3PS-MV00-T0001, Appendix A.

B. For nozzles in head: x = North/South, y = Vertical, and z = East/West - Vessel 0° defined as north.

C. Values provided at plate on top of parent nozzle.

D. Nozzle loads shown are to be used in place of those specified in 24590-WTP-3PS-MV00-T0001 – do not apply thermal reduction factors.

E. Design Temperatures and Pressures for qualification of nozzles only.

12 F. All Pretreatment RGM Seismic Piping Nozzles loads from Plant Design have a 1.75 load factor applied to all seismic loads to address coupling effects between the flexible vessels and piping in accordance with the Seismic Classification and Evaluation for the Pretreatment Facility Piping and Vessels, 24590-WTP-RPT-ENG-09-040. (BNI use only, see 24590-WTP-GPG-ENG-0150 for nozzle load management).

12 G. Nozzles temperatures that are equal or less than vessel design temperature shall use the vessel design temperature as the bounding temperature to perform the nozzle analysis. Nozzles temperatures that are greater than the vessel design temperature shall be used to analyze the hot nozzles.

EQUIPMENT QUALIFICATION DATASHEET (EQD)

Equipment Identification		
Full Component Tag Number or BNI Stock Code Number	24590-PTF-MV-FRP-VSL-00002C	Safety Classification ☒ SC ☐ SS ☐ APC-PAM
Equipment Datasheet Number	24590-PTF-MVD-FRP-00007	
Description	Waste Feed Receipt Process System (FRP) Vessel.	Seismic Category ☒ SC-I ☐ SC-II ☐ SC-III ☐ SC-IV ☐ SC-III Seismic Interaction only
Location (Facility / Building and Room No.)	PTF Building; located in Room P-0108B, Elev. 0'-00", column lines F/2.5	
Safety Function(s)	FRP-VSL-00002C (parent vessel) is considered a high active process vessel credited to prevent spills of large quantities of high activity process liquid and provide primary confinement for radioactive releases. Pulse Jet Mixers (PJMs) provide a mixing function in the vessel to prevent hydrogen accumulation. Reference: 24590-WTP-PSAR-ESH-01-002-02, Table 4A-1, Preliminary Documented Safety Analysis to Support Construction Authorization; PT Facility Specific Information.	
Equipment Safety Function Type	☒ Passive Mechanical ☐ Active Mechanical	☐ Electrical
Seismic Safety Function ☒ Yes ☐ No	Seismic Operability Requirements ☒ During Seismic Event ☒ After Seismic Event	☐ None

Equipment Environmental Qualification (EEQ)

(Parameter values stated in this section do not include process conditions or operation induced conditions)

Classification of Environment ☐ Mild ☒ Harsh

Qualified Life (years) ☒ 40 ☐ Other

Parameter Type/Units	Parameter Value	Parameter Duration (number)	Duration Units	WTP Source Document Number
Normal Ambients				
High Temperature (°F)	113	Note a	Years	24590-PTF-U0D-W16T-00001, E-Note 1
Low Temperature (°F)	59	Note b	N/A	24590-PTF-U0D-W16T-00001, E-Note 1
High Relative Humidity (%RH)	90	Note c	N/A	24590-PTF-U0D-W16T-00001, E-Note 1
Low Relative Humidity (%RH)	5	Note c	N/A	24590-PTF-U0D-W16T-00001, E-Note 1
High Pressure (in.-w.g.)	0 (E-Note 2)	Note d	N/A	24590-PTF-U0D-W16T-00001, E-Note 1
Low Pressure (in.-w.g.)	(-) 1.4 (E-Note 2)	Note d	N/A	24590-PTF-U0D-W16T-00001, E-Note 1
Radiation Dose Rate (mRad/hr)	761000 (E-Note 4)	40 (E-Note 3)	Years (Note c-1)	24590-PTF-U0D-W16T-00001, E-Note 1
Plant/Process Induced Vibration	☐ Yes ☒ No			

EQUIPMENT QUALIFICATION DATASHEET (EQD)

Equipment Environmental Qualification (EEQ) *(continued)*

Parameter Type/Units	Parameter Value	Parameter Duration (number)	Duration Units	WTP Source Document Number
Normal Ambients				
Additional Normal Ambient Information:	N/A			
Abnormal Ambients				
High Temperature (°F)	120	8	hours / year	24590-PTF-U0D-W16T-00001, E-Note 1
Low Temperature (°F)	40	Note b	N/A	24590-PTF-U0D-W16T-00001, E-Note 1
High Relative Humidity (%RH)	100c	Note c	N/A	24590-PTF-U0D-W16T-00001, E-Note 1
Low Relative Humidity (%RH)	8	Note c	N/A	24590-PTF-U0D-W16T-00001, E-Note 1
High Pressure (in.-w.g)	4 (E-Note 2)	Note d	N/A	24590-PTF-U0D-W16T-00001, E-Note 1
Low Pressure (in.-w.g)	(-) 7.3 (E-Note 2)	Note d	N/A	24590-PTF-U0D-W16T-00001, E-Note 1
Radiation Dose Rate (mR/hr)	761000 (E-Note 4)	0 (E-Note 3)	Years (Note e-1)	24590-PTF-U0D-W16T-00001, E-Note 1
Exposure to Wet Sprinkler System	☐ Yes ☒ No	N/A	hours	24590-PTF-U0D-W16T-00001, E-Note 1
Additional Abnormal Ambient Information	N/A			
Design Basis Events (DBE) Ambients				
High Temperature (°F)	139	1000	hours	24590-PTF-U0D-W16T-00001, E-Note 1
Low Temperature (°F)	40	Note b	N/A	24590-PTF-U0D-W16T-00001, E-Note 1
High Relative Humidity (%RH)	100c	40	hours	24590-PTF-U0D-W16T-00001, E-Note 1
Low Relative Humidity (%RH)	4	1000	hours	24590-PTF-U0D-W16T-00001, E-Note 1
High Pressure (in.-w.g)	4	8	hours	24590-PTF-U0D-W16T-00001, E-Note 1
Low Pressure (in.-w.g)	(-) 7.3 (E-Note 2)	1000	hours	24590-PTF-U0D-W16T-00001, E-Note 1
Radiation Dose Rate (mR/hr)	761000 (E-Note 4)	0 (E-Note 3)	hours	24590-PTF-U0D-W16T-00001, E-Note 1
Submergence	☐ Yes ☒ No	N/A	hours	24590-PTF-U0D-W16T-00001, E-Note 5
Chemical/Spray Exposure	☒ Yes ☐ No	12.5	hours	24590-PTF-U0D-W16T-00001, E-Note 1
Additional DBE Information	N/A			

DBE Chemical Exposure Details

EQUIPMENT QUALIFICATION DATASHEET (EQD)

DBE Chemical Exposure Details	
DBE Chemical Types / Concentrations	Process Rad Condensate Water Sodium Hydroxide (FEP21), 86°F, pH 15.5 Sodium Hydroxide (FRP02), 110°F, pH 14.5 Sodium Hydroxide (FRP13), 110°F, pH 14.5 Sodium Hydroxide (TCP05), 120°F, pH 15.0 Sodium Hydroxide (FRP01), 121°F, pH 14.5 Sodium Hydroxide (FEP19), 121°F, pH 15.0 Sodium Hydroxide (FRP14), 191°F, pH 15.0

Electrical Interfaces Supporting the Safety Function	
Power Supply Voltage (VAC, VDC)	N/A
Power Supply Frequency (Hz)	N/A
Power Connection Method	N/A
I/O Signals to/from Equipment	N/A
I/O Connection Method	N/A

Mechanical Interfaces	
Mounting Configuration (orientation)	Vertically Mounted
Mounting Method (bolts, welds, etc.)	Welded skirt to embed plates. Embed plate details per 24590-PTF-DD-S13T-00039, 24590-PTF-DD-S13T-00036, 24590-PTF-DD-S13T-00042
Auxiliary Devices	FRP-PJM-00029, FRP-PJM-00030, FRP-PJM-00031, FRP-PJM-00032, FRP-PJM-00033, FRP-PJM-00034, FRP-PJM-00035, FRP-PJM-00036, FRP-PJM-00001, FRP-PJM-00002, FRP-PJM-00003, FRP-PJM-00004

Equipment Seismic Qualification (ESQ)

Parameter	Title	Reference/Document Number	Version / Revision	Remarks
WTP Seismic Design Specification	Engineering Specification for Seismic Qualification of Seismic Category I/II Equipment and Tanks Engineering Specification for Seismic Qualification Criteria for Pressure Vessels	24590-WTP-3PS-SS90-T0001 24590-WTP-3PS-MV00-T0002	2 3	N/A
Specified Seismic Load Parameters	Seismic Analysis of Pretreatment Building - WSGM In-Structure Response Spectra (ISRS)	24590-PTF-S0C-S15T-00057	A	CCN: 185271; WSGM ISRS Curves: Figures 61 thru 66

EQUIPMENT QUALIFICATION DATASHEET (EQD)

Equipment Qualification Notes and Additional Information

Note a) For thermal aging, the high normal temperature shall be assumed to subsist for 40 years less the duration of the high abnormal temperature. For any lesser qualified life, the normal and abnormal condition durations shall be assigned proportionally. The abnormal temperature is stated to subsist for a certain number of hours per year. It shall be taken to subsist for this number of hours for each year of the qualified life.

Note b) The ability to provide the safety function at the low normal temperature, the low abnormal temperature or the low DBE temperature (whichever be the lowest) shall be established by test, analysis, or operating experience. The thermal aging at these respective low temperatures will be conservatively covered by the thermal aging per item a) above. Therefore, no duration is assigned for the low temperatures.

Note c) The ability to provide the safety function at the extremes of the normal and abnormal humidity conditions, taking into consideration the high and the low normal and high and low abnormal, shall be established by test, analysis, or operating experience. No duration is assigned for the normal and abnormal humidity conditions.

Note d) If the performance of the safety function of the equipment is affected by ambient pressure, the ability to provide the safety function at the extremes of the normal and abnormal pressure conditions, taking into consideration the high and the low normal and the high and low abnormal pressures, shall be established by test, analysis, or operating experience. No duration is assigned to the normal and abnormal pressure conditions.

Note e)
(1) If the abnormal radiation dose rate is the same as the normal radiation dose rate, the normal radiation dose rate shall be assumed to subsist for 40 years, or any lesser qualified life, and the duration of the abnormal radiation dose rate is "0."
(2) If the abnormal radiation dose rate is higher than the normal radiation dose rate, the abnormal radiation dose rate shall be assumed to subsist for 40 years, or any lesser qualified life, and the duration of the normal radiation dose rate is "0."

Note f) The DBE conditions shall be taken to subsist for the stated number of hours following the qualified life of the equipment.

Note g) Spray due to fire sprinkler actuation shall be taken to occur once over the entire qualified life duration for a period of 2 hours, even if the qualified life is a period less than 40 years. If spray qualification is provided for DBE conditions (whether for water or chemical spray), then separate qualification for the fire sprinkler spray need not be provided.

Note h) The values stated in this EQD are the ambients and do not include the thermodynamic and radiation conditions imposed by the process fluids, self-heating, etc. The data pertaining to process fluid and service induced parameters are to be taken into account where significant, such as in thermal aging analyses. These data can be obtained from the equipment data sheets or the Equipment Specification.

Note i) Equipment that is to be installed in inaccessible locations must be qualified to a 40-year life without the need for maintenance or replacement.

E-Note 1: BNI (BUYER) shall perform Equipment Environmental Qualification in accordance with 24590-WTP-DC-ENG-06-001, Design Criteria for Environmental and Natural Phenomena Hazard Qualification of Equipment.

E-Note 2: Where pressure is given in inches of water column (in-w.c.) in the source document, it is generally assumed that this is in reference to atmospheric pressure and is therefore equivalent to inches of water gage (in-w.g.).

E-Note 3: Normal, Abnormal, and DBE dose rates are the same, therefore, abnormal and DBE doses do not add to total integrated dose based on normal dose rates over 40 years.

E-Note 4: Radiation Dose Rates are for determining shielding requirements only for the black cell and are not at the source (vessel). Since the vessel is all metallic and the source has no neutron components for material embrittlement, the dose rates are of no concern on the vessel or its subcomponents.

E-Note 5: Flood height is 2.08 ft above the floor, bottom of vessel is above this level therefore, no submergence evaluation is required.

EQUIPMENT QUALIFICATION DATASHEET (EQD)

DOE Radioactive Materials Disclaimer:
Please note that source, special nuclear and byproduct materials, as defined in the Atomic Energy Act of 1954 (AEA), are regulated at the US Department of Energy (DOE) facilities exclusively by DOE acting pursuant to its AEA authority. DOE asserts, that pursuant to the AEA, it has sole and exclusive responsibility and authority to regulate source, special nuclear, and byproduct materials at DOE-owned nuclear facilities. Information contained herein on radionuclides is provided for process description purposes only.

Screening / Evaluation Required? If yes per 24590-WTP-GPP-SREG-002, E&NS signature required below	X	Yes		No

Approval

Rev	Description	System Engineer	Vessel Engineer	Checked	MET	E&NS	Approved	Date
0	Issue for Purchase	Y. Hovanski	R. Simmons	C. Slater/ CEC	N/A	N/A	S. Kirk	04/18/02
1	Revised as Noted	Y. Hovanski	R. Simmons	C. Corriveau	N/A	N/A	S. Kirk	06/02/02
2	Revised Cyclical Data	Y. Hovanski	R. Simmons	C. Slater	N/A	N/A	S. Kirk	08/29/02
3	Revised as Noted, Deleted Charge Vessels	Y. Hovanski	R. Simmons	CS / JJ	N/A	N/A	M..Hoffmann	12/13/02
4	Revised per Note 5	Y. Hovanski	R. Simmons	CS / JJ	N/A	N/A	M..Hoffmann	05/16/03
5	Revised per Note 7	Y. Hovanski	R. Simmons	CS / JJ	N/A	N/A	M..Hoffmann	11/03/03
6	Added Black Cell Requirements	R. Rider	R. Simmons	YH/CS/JJ	N/A	N/A	M. Hoffmann	04/05/04
7	Added Material Specification for Internal Supports and Hydrodynamic Loads	R. Rider	R. Simmons	YH/RT/JJ D. Adler	N/A	N/A	M. Hoffmann	06/23/04
8	Revised Hydrodynamic Loading Criteria	R. Rider	R. Simmons	YH/CS/JJ	N/A	N/A	M. Hoffmann	07/13/04
9	Revised Hydrodynamic Loading Criteria	R. Rider	R. Simmons	CS/JJ	N/A	N/A	M. Hoffmann	07/20/04
10	Revised per Note 12 on sheet 2 of 5.	R. Rider	J. Polani	M. Seed C. Slater	D. Adler	N/A	J. Julyk	10/28/05
11	Revised per Note 14 and as noted by revision triangles. Supersedes 24590-PTF-MVD-FRP-P0006, Rev 4.	B Lindberg	M Seed	S Jain	D Adler	J Hinckley	J Julyk	05/14/09
12	Revised per Note 15 and as noted by revision triangles.	B Lindberg	D Harris	M Arulampalam	D Adler	G Hendricks	J Julyk	5/10/11

ATTACHMENT 1: Page 1 of 2
REFERENCES for Data Sheets: 24590-PTF-MVD-FRP-00005, 00006, 00007, and 00008, Rev 12 12 ***(For BNI Use only)***
Vessel Tags: FRP-VSL-00002A/B/C/D

Data	Document #	Rev	Document Title
Quality Level	24590-PTF-M6-FRP-00001 24590-PTF-M6-FRP-00002	3 3	*P&ID PTF Waste Feed Receipt Vessels FRP-VSL-00002A and FRP-VSL-00002B* *P&ID PTF Waste Feed Receipt Vessels FRP-VSL-00002C and FRP-VSL-00002D*
Seismic Category	24590-PTF-M6-FRP-00001 24590-PTF-M6-FRP-00002	3 3	*P&ID PTF Waste Feed Receipt Vessels FRP-VSL-00002A and FRP-VSL-00002B* *P&ID PTF Waste Feed Receipt Vessels FRP-VSL-00002C and FRP-VSL-00002D*
Design Specific Gravity	24590-WTP-ICD-MG-01-019	4	*ICD 19 - Interface Control Document for Waste Feed* / Section 2.4.3.2, Table 6
Max Operating Volume	24590-PTF-MTC-FRP-00001	E	*Vessel Sizing Calculation FRP-VSL-00002A/B/C/D*
Total Volume	24590-PTF-MTC-FRP-00001	E	*Vessel Sizing Calculation FRP-VSL-00002A/B/C/D*
Inside Diameter	24590-PTF-MTC-FRP-00001	E	*Vessel Sizing Calculation FRP-VSL-00002A/B/C/D*
Length TL-TL	24590-PTF-MTC-FRP-00001	E	*Vessel Sizing Calculation FRP-VSL-00002A/B/C/D*
Operating Pressure (external)	24590-PTF-M6C-PVP-00017	A	*HADCRT Analysis of PTF PVP System at various Operating Scenarios / (see sheet 14 - the PVP scrubber inlet is controlled to 35 in-wg)* External pressure of 1.5 psig is based on a normal operating pressure of -35 in WG (1.26 psig) with an additional margin. (24590-PTF-M5-V17T-00021001 & 00021004 indicate the process flow diagrams)
Operating Pressure (internal)	24590-PTF-MVC-10-00003	C	*PTF Vessel Cyclic Datasheet Inputs*
Design Pressure (internal)	24590-WTP-DB-ENG-01-001	1P	*Basis of Design*
Design Pressure (external)	24590-PTF-M6C-PVP-00017	A	*HADCRT Analysis of PTF PVP System at various Operating Scenarios /* External design pressure of 2.5 psig is based on a normal operating pressure of -35 in WG (1.26 psig) with an additional margin
Operating Temp	24590-WTP-RPT-ENG-07-007	0A	*Process Stream Properties* / page 12 based on maximum of all FRP streams (max operating 140 F). (Note - FRP14 stream is not an input to these vessels per Section 4.1.6)
Design Temp	24590-WTP-RPT-ENG-07-007	0A	*Process Stream Properties* / maximum off normal temp per this report page 12
Corrosion Allowance, Erosion Allowance	24590-PTF-N1D-FRP-00001 24590-WTP-M0C-50-00004	7 E	*Corrosion Evaluation FRP-VSL-00002A/B/C/D* *Wear Allowance for WTP Waste Slurry Systems*
Materials of Construction	24590-PTF-N1D-FRP-00001	7	*Corrosion Evaluation FRP-VSL-00002A/B/C/D*
Design Pressure (PJM)	24590-PTF-MVC-10-00003 24590-PTF-M6-FRP-00005	C 3	*PTF Vessel Cyclic Datasheet Inputs* *P&ID PTF Waste Feed Receipt - PSA Rack* / ITS pressure regulator set at 75 psig plus a margin
Operating Pressure (PJM)	24590-PTF-MVC-10-00003	C	*PTF Vessel Cyclic Datasheet Inputs*
Operating Temperature (PJM)	N/A	N/A	same as parent vessel
Cyclic Data (Vessel)	24590-PTF-MVC-10-00003	C	*PTF Vessel Cyclic Datasheet Inputs* (24590-PTF-MVE-10-00008)
Cyclic Data (PJM)	24590-PTF-MVC-10-00003	C	*PTF Vessel Cyclic Datasheet Inputs* (24590-PTF-MVE-10-00012)

REFERENCES for Data Sheets: 24590-PTF-MVD-FRP-00005, 00006, 00007, and 00008, Rev 12 12 ***(For BNI Use only)***

Vessel Tags: FRP-VSL-00002A/B/C/D

Data	Document #	Rev	Document Title
Hydrodynamic Loads	24590-WTP-MVC-50-00001	A	*Hydrodynamic Loads for Normal PJM Operation in Vessels with Newtonian Fluids*
Single PJM Overblow Loads	24590-WTP-MVC-50-00001	A	*Hydrodynamic Loads for Normal PJM Operation in Vessels with Newtonian Fluids*
PJM Overblow Loads	24590-WTP-MVC-50-00011	B	*Pulse Jet Mixer Overblow Vessel Loads*
Single Overblow Cycles	24590-PTF-MVC-10-00003	C	*PTF Vessel Cyclic Datasheet Inputs (24590-PTF-MVE-10-00004)*
Multiple Overblow Cycles	24590-PTF-MVC-10-00003	C	*PTF Vessel Cyclic Datasheet Inputs (24590-PTF-MVE-10-00004)*
Nozzle Loads	CCN 125802	N/A	*Nozzle Design Loads for FRP-VSL-00002A*
	CCN 125803	N/A	*Nozzle Design Loads for FRP-VSL-00002D*
	CCN 125804	N/A	*Nozzle Design Loads for FRP-VSL-00002B*
	CCN 125805	N/A	*Nozzle Design Loads for FRP-VSL-00002C*
	CCN 198206	N/A	*Supplemental Design Nozzle Loads for FRP-VSL-00002C/D*
	CCN 230856	N/A	*Supplemental Nozzle Design Loads for FRP-VSL-00002A*
	CCN 230857	N/A	*Supplemental Nozzle Design Loads for FRP-VSL-00002B*
	CCN 230858	N/A	*Supplemental Nozzle Design Loads for FRP-VSL-00002C*
	CCN 230859	N/A	*Supplemental Nozzle Design Loads for FRP-VSL-00002D*
Nozzle Design Pressures and Temperatures (FRP-VSL-00002A)	24590-PTF-M6X-FRP-00007	3	*MS Line List for P&ID 24590-PTF-M6-FRP-00001, Rev 3*
	24590-PTF-M6X-FRP-00011	3	*MS Line List for P&ID 24590-PTF-M6-FRP-00005, Rev 3*
	24590-PTF-M6X-FRP-00027	3	*MS Line List for P&ID 24590-PTF-M6-FRP-00009, Rev 3*
	24590-PTF-M6X-FRP-00038	0	*MS Line List for P&ID 24590-PTF-M6-FRP-00017, Rev 0*
Nozzle Design Pressures and Temperatures (FRP-VSL-00002B)	24590-PTF-M6X-FRP-00007	3	*MS Line List for P&ID 24590-PTF-M6-FRP-00001, Rev 3*
	24590-PTF-M6X-FRP-00015	3	*MS Line List for P&ID 24590-PTF-M6-FRP-00006, Rev 3*
	24590-PTF-M6X-FRP-00027	3	*MS Line List for P&ID 24590-PTF-M6-FRP-00009, Rev 3*
	24590-PTF-M6X-FRP-00043	0	*MS Line List for P&ID 24590-PTF-M6-FRP-00018, Rev 0*
Nozzle Design Pressures and Temperatures (FRP-VSL-00002C)	24590-PTF-M6X-FRP-00009	3	*MS Line List for P&ID 24590-PTF-M6-FRP-00002, Rev 3*
	24590-PTF-M6X-FRP-00019	3	*MS Line List for P&ID 24590-PTF-M6-FRP-00007, Rev 3*
	24590-PTF-M6X-FRP-00031	3	*MS Line List for P&ID 24590-PTF-M6-FRP-00010, Rev 3*
	24590-PTF-M6X-FRP-00048	0	*MS Line List for P&ID 24590-PTF-M6-FRP-00019, Rev 0*
Nozzle Design Pressures and Temperatures (FRP-VSL-00002D)	24590-PTF-M6X-FRP-00009	3	*MS Line List for P&ID 24590-PTF-M6-FRP-00002, Rev 3*
	24590-PTF-M6X-FRP-00023	3	*MS Line List for P&ID 24590-PTF-M6-FRP-00008, Rev 3*
	24590-PTF-M6X-FRP-00031	3	*MS Line List for P&ID 24590-PTF-M6-FRP-00010, Rev 3*
	24590-PTF-M6X-FRP-00053	0	*MS Line List for P&ID 24590-PTF-M6-FRP-00020, Rev 0*
Equipment Qualification Datasheet	24590-PTF-U0D-W16T-00001	2	*PTF-Room Environment Datasheet* (24590-PTF-U0N-W16T-00007)
Nozzle Load Management	24590-WTP-GPG-ENG-0150	0	*Plant Design/Mechanical Systems Equipment Interfaces: Terminal End Equipment* / CCN 229865

ISSUED BY
RPP-WTP PDC

R11364432

MECHANICAL DATA SHEET: VESSEL

PLANT ITEM No.
24590-PTF-MV-FRP-VSL-00002D

Project	**RPP-WTP**	P&IDs	**24590-PTF-M6-FRP-00002, 24590-PTF-M6-FRP-00008, 24590-PTF-M6-FRP-00010, 24590-PTF-M6-FRP-00020**
Project No	**24590**	Calculations 12	**Attachment 1**
Project Site	**Hanford**	Vessel drawings	**24590-PTF-M2-FRP-00004**
Description	**Waste Feed Receipt Vessel**	Reports/Other Documents 12	**Attachment 1**

Reference Data

Charge Vessels (Tag Numbers)	**None**
Pulsejet Mixers / Agitators (Tag Numbers)	**FRP-PJM-00005, FRP-PJM-00006, FRP-PJM-00007, FRP-PJM-00008, FRP-PJM-00009, FRP-PJM-00010, FRP-PJM-00011, FRP-PJM-00012, FRP-PJM-00013, FRP-PJM-00014, FRP-PJM-00015, FRP-PJM-00016**
RFDs/Pumps (Tag Numbers)	**None**

Design Data

Quality Level		**Q**	Fabrication Specs	**24590-WTP-3PS-MV00-T0001**
Design Level		**L-1**	Design Code	**ASME VIII Div 1**
Seismic Category		**SC-I**	Equipment Qualification	**See EQ Sections**
Service/Contents		**Radioactive Liquid**	Code Stamp	**Yes**
Design Specific Gravity 12		**1.46**	NB Registration	**Yes**
Maximum Operating Volume	gal	**402,300 (Note 6)**		
Total Volume	gal	**472,900 (Note 6)**		

Inside Diameter	inch	**564**			Wind Design	**Not Required**	
Length/Height (TL-TL)	inch	**322**			Snow Design	**Not Required**	
		Vessel Operating	Vessel Design	Coil/Jacket Design	Seismic Design	**24590-WTP-3PS-SS90-T0001 24590-WTP-3PS-MV00-T0002**	
Internal Pressure	psig	**0**	**15**	**N/A**	Corrosion Allowance	inch	**0.04 (Note 11)**
External Pressure	psig	**1.5**	**2.0 (Note 13)**	**N/A**	Min. Design Metal Temp.	°F	**40**
Temperature	°F	**140**	**215**	**N/A**			

Materials of Construction

Component	Material	Containment
Top Head	**SA 240 316 (Note 2)**	**Auxiliary (Note 1)**
Shell	**SA 240 316 (Note 2)**	**Primary (Note 1)**
Bottom Head	**SA 240 316 (Note 2)**	**Primary (Note 1)**
Support (Skirt)	**SA 240 304 (Note 2)**	**N/A**
Internals	**SA 240 316 / SA 479 316 (Note 2)**	**Thermocouples Primary (Note 1)**
Pipe	**SA 312 TP316 Smls (Notes 2 & 7)**	**Note 1**
Forgings/ Bar stock	**SA 182 F316 (Note 2)**	**N/A**

Miscellaneous Data

Orientation	**Vertical**	Support Type	**Skirt**
Insulation Function	**Not Applicable**	Insulation Material	**Not Applicable**
Insulation Thickness (inch)	**Not Applicable**	Internal Finish	**Note 4**
		External Finish	**Welds Descaled as Laid**

BECHTEL	**MECHANICAL DATA SHEET: VESSEL**	PLANT ITEM No. *24590-PTF-MV-FRP-VSL-00002D*

Notes/Remarks

Note 1: ***All welds forming part of the primary and auxiliary containments, including the nozzle attachment welds shall be subjected to 100% volumetric examination.***

Note 2: ***Maximum carbon content of 0.030% for all welded components.***

Note 3: ***Operating weight includes weight of liquid filled to top of overflow nozzle.***

Note 4: ***Descale all internal welds as laid, grind smooth and blend all starts/stops, high spots, and crevices, finish welds as required for NDE purposes.***

Note 5: ***Deleted.***

Note 6: ***Vessel volumes are approximated and do not account for manufacturing tolerances, nozzles, and displacement of internals.***

Note 7: ***Welded pipe may be used for 14" NPS PJM supports per 24590-WTP-SDDR-PROC-03-0154.***

Note 8: ***This vessel is located in a Black Cell.***

Note 9: ***Contents of this document are Dangerous Waste Permit affecting (internal use only).***

Note 10: ***Deleted.***

12 ***Note 11:*** ***Ensure that an additional 0.103" is available for erosion in the spherical portion of the bottom head and ensure an additional 0.054" is available for erosion on the lower portions of the PJM cone. The area affected on the bottom head by the PJM flow should be at least 78" in diameter centered under the nozzle of each PJM.***

12 ***Note 12:*** ***Deleted.***

Note 13: ***External design pressure of 2.0 psig is based on a normal operating pressure of -35 in WG (1.26 psig) with an additional margin (see 24590-PTF-M6C-PVP-00017).***

Note 14: ***Revised P&IDs, Calculations, and added Reports/Other Documents section. Revised Design data. Deleted Notes 5 and 10. Revised Note 11 and 13. Revised Cyclic data for parent vessel and PJMs. Added Hydrodynamic Loading requirements section, added multiple overblow requirements section, added nozzle loads, added Equipment Qualification.***

12 ***Note 15:*** ***Added Attachment 1 (for BNI purposes only). Revised Hydrodynamic Loads, Nozzle Loads and Equipment Qualification data.***

Seismic 12

Seismic analysis to be combined with operating conditions, single PJM overblow, and any sloshing loads imposed. Sloshing loads on vessel shell and internals are calculated per ASCE 4-98. Analysis to consider worst case seismic loads on the vessel proper and on the vessel internals.

BECHTEL	**MECHANICAL DATA SHEET: VESSEL**	PLANT ITEM No. ***24590-PTF-MV-FRP-VSL-00002D***

Equipment Cyclic Data Sheet - Parent Vessel 12

Plant Item Number:	***24590-PTF-MV-FRP-VSL-00002D***
Description	***Parent Vessel***

The information below is provisional and envelopes operational duty for fatigue assessment. It is not to be used as operational data.

Materials of Construction	***SA 240 316 with maximum carbon content of 0.030%***
Design Life	***40 years***
Component Function and Life Cycle Description	***This vessel receives and stores waste in a batch transfer from off-site tanks. It shall be designed to be filled to the maximum content level over a period of one day. Additionally, this vessel will be subjected to fluid dynamic forces from the operation of the pulse jet mixers during the process of suspending the solids in the waste feed. This vessel is washed down not more than once per year with nitric acid and water.***

Load Type		Range		Number of Cycles	Comment
Design Pressure	psig	*-2.5*	*15*	*10*	***Nominal assumption for testing, not to be used in conjunction with other design loads***
Operating Pressure	psig	*-1.5*	*0*	*7.0E6*	***PVP header pressure fluctuations***
Operating Pressure	psig	*-1.5*	*2.8*	*40*	***Loss of Power***
Operating Temperature	°F	*59*	*140*	*310*	
Contents Specific Gravity		*1.0*	*1.46*	*310*	***Assume vessel empty at beginning of cycle***
Contents Level	inch	*18*	*409*	*233*	***Liquid level measured from crown of bottom head***
Localized Features					
Supports		***Same as vessel***		***Number of cycles same as vessel***	

BECHTEL	**MECHANICAL DATA SHEET: VESSEL**	PLANT ITEM No. ***24590-PTF-MV-FRP-VSL-00002D***

Equipment Cyclic Data Sheet - PJMs 12

Component Plant Item Number:	***24590-PTF-MV-FRP-PJM-00005, 24590-PTF-MV-FRP-PJM-00006, 24590-PTF-MV-FRP-PJM-00007, 24590-PTF-MV-FRP-PJM-00008, 24590-PTF-MV-FRP-PJM-00009, 24590-PTF-MV-FRP-PJM-00010, 24590-PTF-MV-FRP-PJM-00011, 24590-PTF-MV-FRP-PJM-00012, 24590-PTF-MV-FRP-PJM-00013, 24590-PTF-MV-FRP-PJM-00014, 24590-PTF-FRP-MV-PJM-00015, 24590-PTF-MV-FRP-PJM-00016***
Component Description:	***Pulse Jet Mixer Vessels (PJM)***

The information below is provisional and envelopes operational duty for fatigue assessment. It is not to be used as operational data.

Materials of Construction	***SA 240 316 with maximum carbon content of 0.030%***
Design Life	***40 years***
Component Function and Life Cycle Description	***These PJMs are cyclically loaded using vacuum to fully fill the PJM with process liquid and compressed air to fully empty the PJM. The PJMs are contained within a parent vessel with varying liquid level. They shall be designed to cycle between the maximum pressure and the minimum pressure plus the external static head imposed by the parent vessel.*** ***The PJM supports shall be designed to cycle between the fully buoyant (parent vessel full and PJM empty) and fully loaded (parent vessel empty and PJM full) conditions.***

Load Type		Range		Number of Cycles	Comment
Design Pressure	psig	***FV***	***80***	***100***	
Operating Pressure	psig	***FV***	***47***	***4.2E6***	
Operating Temp	°F	***59***	***140***	***310***	***Same as parent vessel.***
Contents Specific Gravity		***1.0***	***1.46***	***4.2E6***	***Same as parent vessel.***
Contents Level	inch	***Empty***	***Flooded***	***4.2E6***	
PJM Thrust	lbf	***-420***	***420***	***4.2E6***	
Localized Features					
Supports		***Fully Buoyant***	***Fully Loaded***	***4.2E6***	

Notes

Cycle increase: The Seller must increase the numbers of operational cycles given above by 10% to account for commissioning duty unless otherwise noted.

Design Considerations for Loads Induced by Pulse Jet Mixers (PJMs) 12

Pulse Jet Mixers (PJMs) are designed to mix the vessel contents using a liquid jet discharge. PJMs are driven by compressed air. The mixing is required to enhance heat transfer, to break up hydrogen-containing particles, and to homogenize the solution. Normally, the PJMs are operated simultaneously within the parent vessel.

The PJMs operate in the following three cycles: Suction, Drive and Vent. During the suction cycle a vacuum is created in the PJM headspace and the level within the PJM rises to fill the PJM. During the drive cycle the PJM is pressurized and liquid is discharged. During the vent cycle, the pressure in the headspace approaches atmospheric and the level within the PJM is allowed to reach equilibrium.

Vessel components shall be designed to withstand loading induced by PJM operations as described herein.

Normal Operations: Liquid flows around internal structures within the parent vessel producing hydrodynamic loads such as drag and vortex shedding.

To mitigate the dynamic effects, the following pipe sizes dipped internal to the vessel are required to have a minimum first natural frequency that is double the vortex shedding frequency:

Nominal Pipe Size	Minimum First Natural Frequency
1 inch	14 Hz*
2 inch	8.0 Hz*
3 inch	5.0 Hz**

* See 24590-WTP-MVC-50-00001, Section 8.1.5.2
** By extrapolation from 1 inch and 2 inch

Overblow Condition: Occasionally the drive cycle lasts too long and compressed air is discharged from the PJM. Overblows can also occur during system calibration. One or multiple PJMs may overblow at any time. These conditions induce acoustic and bubble rise loads on structures.

All internal components shall be designed for the combination of normal operational hydrodynamic loads and overblow loads. Single overblows (SOB) are assumed to act concurrently with the seismic event, however multiple overblows (MOB) are not assumed to act concurrently with the seismic event. Figure 1 (below) provides the acoustic load intensity that encompasses both SOB and MOB.

Hydrodynamic Loads Due to PJM Operations 12

Normal operation imposes a cyclical load ranging between -0.06 and 0.12 psi in the radial direction and -0.03 to 0.1 psi in the vertical direction for 4.2E6 cycles. The hydrodynamic pressure applies across the projected area of the component. Positive hydrodynamic forces act in the radial, outward direction and the vertical, upward direction. Seller shall apply the radial load simultaneously in the radial direction and normal to the radial direction in the horizontal plane.

PJM Overblow Loads 12

Discussion: *During normal operation, pulse jet mixers (PJMs) mix the fluid by pulling in (suction) and pushing out (drive) fluid. During an upset condition, designated as an 'overblow', air is discharged following the drive cycle of one or more PJMs. The load consists of acoustic pressure (2Hz to 200Hz) developed in the first 200ms of the event and a load due to the bubble rising through the fluid.*

The acoustic load and the bubble load are design loads as defined by ASME B&PVC, Section 8, Division 1, UG-22, applied statically. The acoustic load is not added to the bubble rise load because they occur at different times during the overblow event.

Acoustic Load

- ***The acoustic design load in Figure 1 is applied to the visible (as viewed from the overblow origin) surface of cylindrical targets such as pipes, charge vessels, and PJMs. The load is applied in the direction normal to the principal axis of the target as illustrated in Figure 2. Note: The intended net effective load on the target is equal to the projected (i.e. cross-sectional) area of the object times the acoustic design load (psi) indicated in Figure 1.***
- ***Each target is considered independent of the surrounding targets: e.g. the surrounding targets do not impede the acoustic wave by casting a shadow, as illustrated in Figure 2.***
- ***The load is not applied to small supports such as gussets, brackets, tabs, clamps, and bolts because they are rigid and the pressure drop across the target is negligible.***
- ***When the vessel contains multiple PJMs, the load from one PJM is independent of the load from other PJMs. The loads are not additive for multiple overblows.***
- ***No internal components shall be placed within 5 PJM nozzle diameters (5 * 4 in = 20 in) of a spherical zone centered at any overblowing PJM nozzle.***

Figure 1: Acoustic Design Load

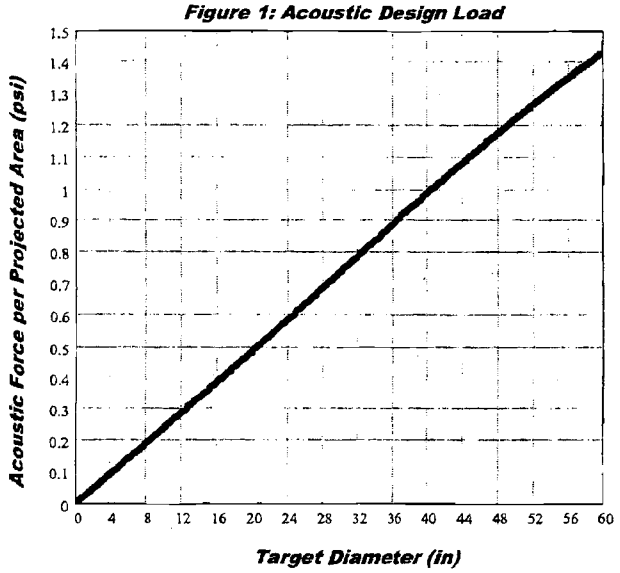

Figure 2: Load Application

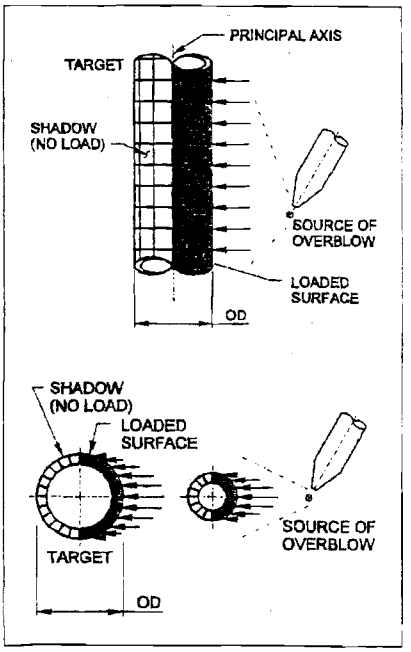

The following data is required to determine the load:

- ***Target Diameter***
- ***Target Principal Axis***
- ***Overblow Source Coordinates***

Number of Acoustic Cycles

1000 events X 40 cycles/event for a total of 40,000 acoustic cycles.

Bubble Rise Load

A vertical force per projected area of 1.7 psi is applied to the surfaces in the 36-inch diameter cylindrical zone centered at the overblowing PJM(s). The bubble can be at any elevation above the overblowing PJM and only affects one zone (36-inch diameter region) at a time. When there are multiple PJMs in a vessel (MOB), each PJM has it's own bubble. To simplify analysis the bubble can be applied in a continuous cylindrical zone above each PJM top head.

Number Bubble Rise Cycles

1000 events X 1 cycle/event

Nozzle Loads 12

Nozzle	Design Nozzle Press (psig) (Note E)	Design Nozzle Temp (°F) (Note E)	Size	Load Type	Loads - lbs			Moments - ft-lbs		
					Fx	Fy	Fz	Mx	My	Mz
N01	15	215	24"	Weight	Manway					
				Seismic						
				Thermal						
N02	400	215	3"	Weight	52	172	52	209	75	210
				Seismic	284	189	291	819	1227	1227
				Thermal	140	130	206	410	810	810
N03	15	215	6"	Weight	N03 is parent nozzle, nozzle loads are applied via N03A, N03B, N03C					
				Seismic						
				Thermal						
N03A (Note C)	115	215	1"	Weight	15	20	15	20	20	20
				Seismic	53	35	53	65	96	96
				Thermal	32	20	30	30	50	50
N03B (Note C)	115	215	1"	Weight	15	20	15	20	20	20
				Seismic	53	35	53	65	96	96
				Thermal	32	20	30	30	50	50
N03C (Note C)	115	215	1"	Weight	15	20	15	20	20	20
				Seismic	53	35	53	65	96	96
				Thermal	32	20	30	30	50	50
N08	22	215	8"	Weight	234	588	150	954	464	1434
				Seismic	936	625	1619	3766	10588	3768
				Thermal	3825	650	1516	4275	12750	1350
N10	15	215	6"	Weight	210	335	210	598	374	374
				Seismic	1160	775	1160	4240	6367	6367
				Thermal	600	530	800	2180	4350	4350
N11	15	215	8"	Weight	234	373	234	741	464	464
				Seismic	1285	858	1285	5159	7732	7732
				Thermal	730	650	970	2920	5830	5830
N18	15	215	2"OD	Weight	15	20	15	20	20	20
				Seismic	53	35	53	65	96	96
				Thermal	20	26	30	30	50	50
N19 spare	15	215	2"OD	Weight	15	20	15	20	20	20
				Seismic	53	35	53	65	96	96
				Thermal	20	20	30	30	50	50
N20	190	215	2"	Weight	50	64	50	75	75	80
				Seismic	186	123	186	277	415	415
				Thermal	96	70	100	110	210	210
N21 spare	15	215	2"OD	Weight	15	20	15	20	20	20
				Seismic	53	35	53	65	96	96
				Thermal	20	20	30	30	50	50

Nozzle	Design Nozzle Press (psig) (Note E)	Design Nozzle Temp (°F) (Note E)	Size	Load Type	Loads - lbs			Moments - ft-lbs		
					Fx	Fy	Fz	Mx	My	Mz
N22 spare	15	215	3"	Weight	52	84	52	119	75	75
				Seismic	284	189	284	819	1227	1227
				Thermal	140	130	190	410	810	810
N44	150	215	2"	Weight	50	60	50	75	75	75
				Seismic	186	123	186	277	415	415
				Thermal	70	177	179	374	210	210
N45	150	215	2"	Weight	50	60	50	75	75	75
				Seismic	186	123	186	277	415	415
				Thermal	70	177	179	374	210	210
N46	150	215	2"	Weight	50	60	50	75	75	75
				Seismic	186	131	186	438	415	415
				Thermal	70	70	100	166	210	210
N47	150	215	2"	Weight	50	60	50	75	75	75
				Seismic	186	131	186	438	415	415
				Thermal	70	70	100	166	210	210
N48	150	215	2"	Weight	50	60	50	75	75	75
				Seismic	186	131	186	438	415	415
				Thermal	70	70	100	166	210	210
N49	150	215	2"	Weight	50	60	50	75	75	179
				Seismic	186	123	186	277	415	415
				Thermal	70	70	100	110	210	210
N50	150	215	2"	Weight	50	63	50	75	75	75
				Seismic	186	123	186	277	415	415
				Thermal	70	70	100	346	210	210
N51	150	215	2"	Weight	50	60	50	75	75	75
				Seismic	186	123	186	277	415	415
				Thermal	116	93	100	110	210	210
N52	150	215	2"	Weight	50	60	50	75	75	75
				Seismic	186	123	186	277	415	415
				Thermal	155	177	100	221	210	210
N53	150	215	2"	Weight	50	60	50	75	75	75
				Seismic	186	123	186	277	415	415
				Thermal	70	70	100	110	210	210
N54	150	215	2"	Weight	50	60	50	75	75	75
				Seismic	186	123	186	277	415	415
				Thermal	70	70	100	110	210	210
N55	150	215	2"	Weight	50	60	50	75	75	75
				Seismic	186	123	186	277	415	415
				Thermal	70	70	100	132	210	210
N56	170	215	2"	Weight	50	71	50	75	75	128
				Seismic	186	123	194	541	415	415
				Thermal	70	70	100	110	210	210

Nozzle	Design Nozzle Press (psig) (Note E)	Design Nozzle Temp (°F) (Note E)	Size	Load Type	Loads - lbs			Moments - ft-lbs		
					Fx	Fy	Fz	Mx	My	Mz
N57	170	215	2"	Weight	50	60	50	75	75	75
				Seismic	186	123	186	427	415	415
				Thermal	70	70	100	110	210	210
N58	170	215	2"	Weight	50	70	50	75	75	75
				Seismic	196	116	175	408	394	543
				Thermal	70	70	100	110	210	210
N59	170	215	2"	Weight	50	104	50	75	75	75
				Seismic	186	123	186	277	415	415
				Thermal	70	149	134	513	210	210
N60	170	215	2"	Weight	50	60	50	75	75	75
				Seismic	186	123	186	277	415	415
				Thermal	70	70	100	110	210	210
N61	170	215	2"	Weight	50	95	50	89	75	75
				Seismic	186	147	186	586	415	415
				Thermal	70	70	100	110	210	210
N62	170	215	2"	Weight	50	95	50	89	75	75
				Seismic	186	147	186	586	415	415
				Thermal	70	70	100	110	210	210
N63	170	215	4"	Weight	87	140	292	216	1187	135
				Seismic	536	823	480	1537	2310	3460
				Thermal	240	220	320	770	1530	1530
N64	15	215	1 1/2"	Weight	35	35	35	40	40	40
				Seismic	135	70	105	159	240	245
				Thermal	41	40	60	60	120	120
N70	15	215	6"	Weight	N70 is parent nozzle, nozzle loads are applied via N70A, N70B, N70C					
				Seismic						
				Thermal						
N70A (Note C)	115	215	1"	Weight	15	20	15	20	20	20
				Seismic	53	35	53	65	96	96
				Thermal	32	20	30	30	50	50
N70B (Note C)	115	215	1"	Weight	15	20	15	20	20	20
				Seismic	53	35	53	65	96	96
				Thermal	32	20	30	30	50	50
N70C (Note C)	115	215	1"	Weight	15	20	15	20	20	20
				Seismic	53	35	53	65	96	96
				Thermal	32	20	30	30	50	50

Notes for Nozzle Loads

A. Direction of load application is per diagrams in 24590-WTP-3PS-MV00-T0001 Appendix A.

B. For nozzles in head: x = North/South, y = Vertical, and z = East/West - Vessel 0° defined as north.

C. Values provided at plate on top of parent nozzle.

D. Nozzle loads shown are to be used in place of those specified in 24590-WTP-3PS-MV00-T0001 – do not apply thermal reduction factors.

E. Design Temperatures and Pressures for qualification of nozzles only.

12 F. All Pretreatment RGM Seismic Piping Nozzles loads from Plant Design have a 1.75 load factor applied to all seismic loads to address coupling effects between the flexible vessels and piping in accordance with the Seismic Classification and Evaluation for the Pretreatment Facility Piping and Vessels, 24590-WTP-RPT-ENG-09-040. (BNI use only, see 24590-WTP-GPG-ENG-0150 for nozzle load management).

12 G. Nozzles temperatures that are equal or less than vessel design temperature shall use the vessel design temperature as the bounding temperature to perform the nozzle analysis. Nozzles temperatures that are greater than the vessel design temperature shall be used to analyze the hot nozzles.

EQUIPMENT QUALIFICATION DATASHEET (EQD)

Equipment Identification		
Full Component Tag Number or BNI Stock Code Number	24590-PTF-MV-FRP-VSL-00002D	Safety Classification ☒ SC ☐ SS ☐ APC-PAM
Equipment Datasheet Number	24590-PTF-MVD-FRP-00008	
Description	Waste Feed Receipt Process System (FRP) Vessel.	Seismic Category ☒ SC-I ☐ SC-II ☐ SC-III ☐ SC-IV ☐ SC-III Seismic Interaction only
Location (Facility / Building and Room No.)	PTF Building; located in Room P-0108C, Elev. 0'-00", column lines C/2.5	
Safety Function(s)	FRP-VSL-00002D (parent vessel) is considered a high active process vessel credited to prevent spills of large quantities of high activity process liquid and provide primary confinement for radioactive releases. Pulse Jet Mixers (PJMs) provide a mixing function in the vessel to prevent hydrogen accumulation. Reference: 24590-WTP-PSAR-ESH-01-002-02, Table 4A-1, Preliminary Documented Safety Analysis to Support Construction Authorization; PT Facility Specific Information.	
Equipment Safety Function Type	☒ Passive Mechanical ☐ Active Mechanical	☐ Electrical
Seismic Safety Function ☒ Yes ☐ No	Seismic Operability Requirements ☒ During Seismic Event ☒ After Seismic Event	☐ None

Equipment Environmental Qualification (EEQ)

(Parameter values stated in this section do not include process conditions or operation induced conditions)

Classification of Environment ☐ Mild ☒ Harsh

Qualified Life (years) ☒ 40 ☐ Other

Parameter Type/Units	Parameter Value	Parameter Duration (number)	Duration Units	WTP Source Document Number
Normal Ambients				
High Temperature (°F)	113	Note a	Years	24590-PTF-U0D-W16T-00001, E-Note 1
Low Temperature (°F)	59	Note b	N/A	24590-PTF-U0D-W16T-00001, E-Note 1
High Relative Humidity (%RH)	90	Note c	N/A	24590-PTF-U0D-W16T-00001, E-Note 1
Low Relative Humidity (%RH)	5	Note c	N/A	24590-PTF-U0D-W16T-00001, E-Note 1
High Pressure (in.-w.g.)	0 (E-Note 2)	Note d	N/A	24590-PTF-U0D-W16T-00001, E-Note 1
Low Pressure (in.-w.g.)	(-) 1.4 (E-Note 2)	Note d	N/A	24590-PTF-U0D-W16T-00001, E-Note 1
Radiation Dose Rate (mRad/hr)	761000 (E-Note 4)	40 (E-Note 3)	Years (Note e-1)	24590-PTF-U0D-W16T-00001, E-Note 1
Plant/Process Induced Vibration	☐ Yes ☒ No			

Equipment Environmental Qualification (EEQ) *(continued)*

Parameter Type/Units	Parameter Value	Parameter Duration (number)	Duration Units	WTP Source Document Number
Normal Ambients				
Additional Normal Ambient Information:	N/A			
Abnormal Ambients				
High Temperature (°F)	126	8	hours / year	24590-PTF-U0D-W16T-00001, E-Note 1
Low Temperature (°F)	40	Note b	N/A	24590-PTF-U0D-W16T-00001, E-Note 1
High Relative Humidity (%RH)	100c	Note c	N/A	24590-PTF-U0D-W16T-00001, E-Note 1
Low Relative Humidity (%RH)	6	Note c	N/A	24590-PTF-U0D-W16T-00001, E-Note 1
High Pressure (in.-w.g)	4 (E-Note 2)	Note d	N/A	24590-PTF-U0D-W16T-00001, E-Note 1
Low Pressure (in.-w.g)	(-) 7.3 (E-Note 2)	Note d	N/A	24590-PTF-U0D-W16T-00001, E-Note 1
Radiation Dose Rate (mR/hr)	761000 (E-Note 4)	0 (E-Note 3)	Years (Note e-1)	24590-PTF-U0D-W16T-00001, E-Note 1
Exposure to Wet Sprinkler System	☐ Yes ☒ No	N/A	hours	24590-PTF-U0D-W16T-00001, E-Note 1
Additional Abnormal Ambient Information	N/A			
Design Basis Events (DBE) Ambients				
High Temperature (°F)	137	1000	hours	24590-PTF-U0D-W16T-00001, E-Note 1
Low Temperature (°F)	40	Note b	N/A	24590-PTF-U0D-W16T-00001, E-Note 1
High Relative Humidity (%RH)	100c	40	hours	24590-PTF-U0D-W16T-00001, E-Note 1
Low Relative Humidity (%RH)	4	1000	hours	24590-PTF-U0D-W16T-00001, E-Note 1
High Pressure (in.-w.g)	4	8	hours	24590-PTF-U0D-W16T-00001, E-Note 1
Low Pressure (in.-w.g)	(-) 7.3 (E-Note 2)	1000	hours	24590-PTF-U0D-W16T-00001, E-Note 1
Radiation Dose Rate (mR/hr)	761000 (E-Note 4)	0 (E-Note 3)	hours	24590-PTF-U0D-W16T-00001, E-Note 1
Submergence	☐ Yes ☒ No	N/A	hours	24590-PTF-U0D-W16T-00001, E-Note 5
Chemical/Spray Exposure	☒ Yes ☐ No	12.5	hours	24590-PTF-U0D-W16T-00001, E-Note 1
Additional DBE Information	N/A			

DBE Chemical Exposure Details

DBE Chemical Exposure Details	
DBE Chemical Types / Concentrations	Process Rad Condensate Water Sodium Hydroxide (FEP21), 86°F, pH 15.5 Sodium Hydroxide (FRP02), 110°F, pH 14.5 Sodium Hydroxide (TCP05), 120°F, pH 15.0 Sodium Hydroxide (FRP14), 191°F, pH 15.0

Electrical Interfaces Supporting the Safety Function	
Power Supply Voltage (VAC, VDC)	N/A
Power Supply Frequency (Hz)	N/A
Power Connection Method	N/A
I/O Signals to/from Equipment	N/A
I/O Connection Method	N/A

Mechanical Interfaces	
Mounting Configuration (orientation)	Vertically Mounted
Mounting Method (bolts, welds, etc.)	Welded skirt to embed plates. Embed plate details per 24590-PTF-DD-S13T-00039, 24590-PTF-DD-S13T-00036, 24590-PTF-DD-S13T-00042
Auxiliary Devices	FRP-PJM-00005, FRP-PJM-00006, FRP-PJM-00007, FRP-PJM-00008, FRP-PJM-00009, FRP-PJM-00010, FRP-PJM-00011, FRP-PJM-00012, FRP-PJM-00013, FRP-PJM-00014, FRP-PJM-00015, FRP-PJM-00016

Equipment Seismic Qualification (ESQ)

Parameter	Title	Reference/Document Number	Version / Revision	Remarks
WTP Seismic Design Specification	Engineering Specification for Seismic Qualification of Seismic Category I/II Equipment and Tanks Engineering Specification for Seismic Qualification Criteria for Pressure Vessels	24590-WTP-3PS-SS90-T0001 24590-WTP-3PS-MV00-T0002	2 3	N/A
Specified Seismic Load Parameters	Seismic Analysis of Pretreatment Building - WSGM In-Structure Response Spectra (ISRS)	24590-PTF-S0C-S15T-00057	A	CCN: 185271; WSGM ISRS Curves: Figures 61 thru 66

Equipment Qualification Notes and Additional Information

Note a) For thermal aging, the high normal temperature shall be assumed to subsist for 40 years less the duration of the high abnormal temperature. For any lesser qualified life, the normal and abnormal condition durations shall be assigned proportionally. The abnormal temperature is stated to subsist for a certain number of hours per year. It shall be taken to subsist for this number of hours for each year of the qualified life.

Note b) The ability to provide the safety function at the low normal temperature, the low abnormal temperature or the low DBE temperature (whichever be the lowest) shall be established by test, analysis, or operating experience. The thermal aging at these respective low temperatures will be conservatively covered by the thermal aging per item a) above. Therefore, no duration is assigned for the low temperatures.

Note c) The ability to provide the safety function at the extremes of the normal and abnormal humidity conditions, taking into consideration the high and the low normal and high and low abnormal, shall be established by test, analysis, or operating experience. No duration is assigned for the normal and abnormal humidity conditions.

Note d) If the performance of the safety function of the equipment is affected by ambient pressure, the ability to provide the safety function at the extremes of the normal and abnormal pressure conditions, taking into consideration the high and the low normal and the high and low abnormal pressures, shall be established by test, analysis, or operating experience. No duration is assigned to the normal and abnormal pressure conditions.

Note e)
(1) If the abnormal radiation dose rate is the same as the normal radiation dose rate, the normal radiation dose rate shall be assumed to subsist for 40 years, or any lesser qualified life, and the duration of the abnormal radiation dose rate is "0."
(2) If the abnormal radiation dose rate is higher than the normal radiation dose rate, the abnormal radiation dose rate shall be assumed to subsist for 40 years, or any lesser qualified life, and the duration of the normal radiation dose rate is "0."

Note f) The DBE conditions shall be taken to subsist for the stated number of hours following the qualified life of the equipment.

Note g) Spray due to fire sprinkler actuation shall be taken to occur once over the entire qualified life duration for a period of 2 hours, even if the qualified life is a period less than 40 years. If spray qualification is provided for DBE conditions (whether for water or chemical spray), then separate qualification for the fire sprinkler spray need not be provided.

Note h) The values stated in this EQD are the ambients and do not include the thermodynamic and radiation conditions imposed by the process fluids, self-heating, etc. The data pertaining to process fluid and service induced parameters are to be taken into account where significant, such as in thermal aging analyses. These data can be obtained from the equipment data sheets or the Equipment Specification.

Note i) Equipment that is to be installed in inaccessible locations must be qualified to a 40-year life without the need for maintenance or replacement.

E-Note 1: BNI (BUYER) shall perform Equipment Environmental Qualification in accordance with 24590-WTP-DC-ENG-06-001, Design Criteria for Environmental and Natural Phenomena Hazard Qualification of Equipment.

E-Note 2: Where pressure is given in inches of water column (in-w.c.) in the source document, it is generally assumed that this is in reference to atmospheric pressure and is therefore equivalent to inches of water gage (in-w.g.).

E-Note 3: Normal, Abnormal, and DBE dose rates are the same, therefore, abnormal and DBE doses do not add to total integrated dose based on normal dose rates over 40 years.

E-Note 4: Radiation Dose Rates are for determining shielding requirements only for the black cell and are not at the source (vessel). Since the vessel is all metallic and the source has no neutron components for material embrittlement, the dose rates are of no concern on the vessel or its subcomponents.

E-Note 5: Flood height is 2.08 ft above the floor, bottom of vessel is above this level therefore, no submergence evaluation is required.

EQUIPMENT QUALIFICATION DATASHEET (EQD)

DOE Radioactive Materials Disclaimer:
Please note that source, special nuclear and byproduct materials, as defined in the Atomic Energy Act of 1954 (AEA), are regulated at the US Department of Energy (DOE) facilities exclusively by DOE acting pursuant to its AEA authority. DOE asserts, that pursuant to the AEA, it has sole and exclusive responsibility and authority to regulate source, special nuclear, and byproduct materials at DOE-owned nuclear facilities. Information contained herein on radionuclides is provided for process description purposes only.

Screening / Evaluation Required? If yes per 24590-WTP-GPP-SREG-002, E&NS signature required below	X	Yes		No

Approval

Rev	Description	System Engineer	Vessel Engineer	Checked	MET	E&NS	Approved	Date
0	Issue for Purchase	Y. Hovanski	R. Simmons	C. Slater/CEC	N/A	N/A	S. Kirk	04/18/02
1	Revised as Noted	Y. Hovanski	R. Simmons	C. Corriveau	N/A	N/A	S. Kirk	06/02/02
2	Revised Cyclical Data	Y. Hovanski	R. Simmons	C. Slater	N/A	N/A	S. Kirk	08/29/02
3	Revised as Noted, Deleted Charge Vessels	Y. Hovanski	R. Simmons	CS / JJ	N/A	N/A	M.Hoffmann	12/13/02
4	Revised per Note 5	Y. Hovanski	R. Simmons	CS / JJ	N/A	N/A	M.Hoffmann	05/16/03
5	Revised per Note 7	Y. Hovanski	R. Simmons	CS / JJ	N/A	N/A	M.Hoffmann	11/03/03
6	Added Black Cell Requirements	R. Rider	R. Simmons	YH/CS/JJ	N/A	N/A	M. Hoffmann	04/05/04
7	Added Material Specification for Internal Supports and Hydrodynamic Loads	R. Rider	R. Simmons	YH/RT/JJ D. Adler	N/A	N/A	M. Hoffmann	06/23/04
8	Revised Hydrodynamic Loading Criteria	R. Rider	R. Simmons	YH/CS/JJ	N/A	N/A	M. Hoffmann	07/13/04
9	Revised Hydrodynamic Loading Criteria	R. Rider	R. Simmons	CS/JJ	N/A	N/A	M. Hoffmann	07/20/04
10	Revised per Note 12 on sheet 2 of 5.	R. Rider	J. Polani	M. Seed C. Slater	D. Adler	N/A	J. Julyk	10/28/05
11	Revised per Note 14 and as noted by revision triangles. Supersedes 24590-PTF-MVD-FRP-P0008, Rev 4.	B Lindberg	M Seed	S Jain	D Adler	J Hinckley	J Julyk	05/14/09
12	Revised per Note 15 and as noted by revision triangles.	B Lindberg	D Harris	M Arulampalam	D Adler	G Hendricks	J Julyk	5/10/11

ATTACHMENT 1: Page 1 of 2
REFERENCES for Data Sheets: 24590-PTF-MVD-FRP-00005, 00006, 00007, and 00008, Rev 12 12
Vessel Tags: FRP-VSL-00002A/B/C/D

(For BNI Use only)

Data	Document #	Rev	Document Title
Quality Level	24590-PTF-M6-FRP-00001 24590-PTF-M6-FRP-00002	3 3	*P&ID PTF Waste Feed Receipt Vessels FRP-VSL-00002A and FRP-VSL-00002B* *P&ID PTF Waste Feed Receipt Vessels FRP-VSL-00002C and FRP-VSL-00002D*
Seismic Category	24590-PTF-M6-FRP-00001 24590-PTF-M6-FRP-00002	3 3	*P&ID PTF Waste Feed Receipt Vessels FRP-VSL-00002A and FRP-VSL-00002B* *P&ID PTF Waste Feed Receipt Vessels FRP-VSL-00002C and FRP-VSL-00002D*
Design Specific Gravity	24590-WTP-ICD-MG-01-019	4	*ICD 19 - Interface Control Document for Waste Feed* / Section 2.4.3.2, Table 6
Max Operating Volume	24590-PTF-MTC-FRP-00001	E	*Vessel Sizing Calculation FRP-VSL-00002A/B/C/D*
Total Volume	24590-PTF-MTC-FRP-00001	E	*Vessel Sizing Calculation FRP-VSL-00002A/B/C/D*
Inside Diameter	24590-PTF-MTC-FRP-00001	E	*Vessel Sizing Calculation FRP-VSL-00002A/B/C/D*
Length TL-TL	24590-PTF-MTC-FRP-00001	E	*Vessel Sizing Calculation FRP-VSL-00002A/B/C/D*
Operating Pressure (external)	24590-PTF-M6C-PVP-00017	A	*HADCRT Analysis of PTF PVP System at various Operating Scenarios / (see sheet 14 - the PVP scrubber inlet is controlled to 35 in-wg)* External pressure of 1.5 psig is based on a normal operating pressure of -35 in WG (1.26 psig) with an additional margin. (24590-PTF-M5-V17T-00021001 & 00021004 indicate the process flow diagrams)
Operating Pressure (internal)	24590-PTF-MVC-10-00003	C	*PTF Vessel Cyclic Datasheet Inputs*
Design Pressure (internal)	24590-WTP-DB-ENG-01-001	IP	*Basis of Design*
Design Pressure (external)	24590-PTF-M6C-PVP-00017	A	*HADCRT Analysis of PTF PVP System at various Operating Scenarios /* External design pressure of 2.5 psig is based on a normal operating pressure of -35 in WG (1.26 psig) with an additional margin
Operating Temp	24590-WTP-RPT-ENG-07-007	0A	*Process Stream Properties /* page 12 based on maximum of all FRP streams (max operating 140 F). (Note - FRP14 stream is not an input to these vessels per Section 4.1.6)
Design Temp	24590-WTP-RPT-ENG-07-007	0A	*Process Stream Properties /* maximum off normal temp per this report page 12
Corrosion Allowance, Erosion Allowance	24590-PTF-N1D-FRP-00001 24590-WTP-M0C-50-00004	7 E	*Corrosion Evaluation FRP-VSL-00002A/B/C/D* *Wear Allowance for WTP Waste Slurry Systems*
Materials of Construction	24590-PTF-N1D-FRP-00001	7	*Corrosion Evaluation FRP-VSL-00002A/B/C/D*
Design Pressure (PJM)	24590-PTF-MVC-10-00003 24590-PTF-M6-FRP-00005	C 3	*PTF Vessel Cyclic Datasheet Inputs* *P&ID PTF Waste Feed Receipt - PSA Rack /* ITS pressure regulator set at 75 psig plus a margin
Operating Pressure (PJM)	24590-PTF-MVC-10-00003	C	*PTF Vessel Cyclic Datasheet Inputs*
Operating Temperature (PJM)	N/A	N/A	same as parent vessel
Cyclic Data (Vessel)	24590-PTF-MVC-10-00003	C	*PTF Vessel Cyclic Datasheet Inputs* (24590-PTF-MVE-10-00008)
Cyclic Data (PJM)	24590-PTF-MVC-10-00003	C	*PTF Vessel Cyclic Datasheet Inputs* (24590-PTF-MVE-10-00012)

ATTACHMENT 1: Page 2 of 2
REFERENCES for Data Sheets: 24590-PTF-MVD-FRP-00005, 00006, 00007, and 00008, Rev 12 12 ***(For BNI Use only)***
Vessel Tags: FRP-VSL-00002A/B/C/D

Data	Document #	Rev	Document Title
Hydrodynamic Loads	24590-WTP-MVC-50-00001	A	*Hydrodynamic Loads for Normal PJM Operation in Vessels with Newtonian Fluids*
Single PJM Overblow Loads	24590-WTP-MVC-50-00001	A	*Hydrodynamic Loads for Normal PJM Operation in Vessels with Newtonian Fluids*
PJM Overblow Loads	24590-WTP-MVC-50-00011	B	*Pulse Jet Mixer Overblow Vessel Loads*
Single Overblow Cycles	24590-PTF-MVC-10-00003	C	*PTF Vessel Cyclic Datasheet Inputs (24590-PTF-MVE-10-00004)*
Multiple Overblow Cycles	24590-PTF-MVC-10-00003	C	*PTF Vessel Cyclic Datasheet Inputs (24590-PTF-MVE-10-00004)*
Nozzle Loads	CCN 125802	N/A	*Nozzle Design Loads for FRP-VSL-00002A*
	CCN 125803	N/A	*Nozzle Design Loads for FRP-VSL-00002D*
	CCN 125804	N/A	*Nozzle Design Loads for FRP-VSL-00002B*
	CCN 125805	N/A	*Nozzle Design Loads for FRP-VSL-00002C*
	CCN 198206	N/A	*Supplemental Design Nozzle Loads for FRP-VSL-00002C/D*
	CCN 230856	N/A	*Supplemental Nozzle Design Loads for FRP-VSL-00002A*
	CCN 230857	N/A	*Supplemental Nozzle Design Loads for FRP-VSL-00002B*
	CCN 230858	N/A	*Supplemental Nozzle Design Loads for FRP-VSL-00002C*
	CCN 230859	N/A	*Supplemental Nozzle Design Loads for FRP-VSL-00002D*
Nozzle Design Pressures and Temperatures (FRP-VSL-00002A)	24590-PTF-M6X-FRP-00007	3	*MS Line List for P&ID 24590-PTF-M6-FRP-00001, Rev 3*
	24590-PTF-M6X-FRP-00011	3	*MS Line List for P&ID 24590-PTF-M6-FRP-00005, Rev 3*
	24590-PTF-M6X-FRP-00027	3	*MS Line List for P&ID 24590-PTF-M6-FRP-00009, Rev 3*
	24590-PTF-M6X-FRP-00038	0	*MS Line List for P&ID 24590-PTF-M6-FRP-00017, Rev 0*
Nozzle Design Pressures and Temperatures (FRP-VSL-00002B)	24590-PTF-M6X-FRP-00007	3	*MS Line List for P&ID 24590-PTF-M6-FRP-00001, Rev 3*
	24590-PTF-M6X-FRP-00015	3	*MS Line List for P&ID 24590-PTF-M6-FRP-00006, Rev 3*
	24590-PTF-M6X-FRP-00027	3	*MS Line List for P&ID 24590-PTF-M6-FRP-00009, Rev 3*
	24590-PTF-M6X-FRP-00043	0	*MS Line List for P&ID 24590-PTF-M6-FRP-00018, Rev 0*
Nozzle Design Pressures and Temperatures (FRP-VSL-00002C)	24590-PTF-M6X-FRP-00009	3	*MS Line List for P&ID 24590-PTF-M6-FRP-00002, Rev 3*
	24590-PTF-M6X-FRP-00019	3	*MS Line List for P&ID 24590-PTF-M6-FRP-00007, Rev 3*
	24590-PTF-M6X-FRP-00031	3	*MS Line List for P&ID 24590-PTF-M6-FRP-00010, Rev 3*
	24590-PTF-M6X-FRP-00048	0	*MS Line List for P&ID 24590-PTF-M6-FRP-00019, Rev 0*
Nozzle Design Pressures and Temperatures (FRP-VSL-00002D)	24590-PTF-M6X-FRP-00009	3	*MS Line List for P&ID 24590-PTF-M6-FRP-00002, Rev 3*
	24590-PTF-M6X-FRP-00023	3	*MS Line List for P&ID 24590-PTF-M6-FRP-00008, Rev 3*
	24590-PTF-M6X-FRP-00031	3	*MS Line List for P&ID 24590-PTF-M6-FRP-00010, Rev 3*
	24590-PTF-M6X-FRP-00053	0	*MS Line List for P&ID 24590-PTF-M6-FRP-00020, Rev 0*
Equipment Qualification Datasheet	24590-PTF-U0D-W16T-00001	2	*PTF-Room Environment Datasheet* (24590-PTF-U0N-W16T-00007)
Nozzle Load Management	24590-WTP-GPG-ENG-0150	0	*Plant Design/Mechanical Systems Equipment Interfaces: Terminal End Equipment* / CCN 229865

Drawing Change Notice

CHANGE DOCUMENT NO.
24590-PTF-VDCN-MS-11-00003

JOB NO.	TITLE FOR CHANGE NOTICE
24590	PTF-FRP-VSL-00002A/B/C/D PJM SUPPORTS REDESIGN

DESIGN DOCUMENT NUMBER	REV	DESIGN DOCUMENT NUMBER	REV
24590-QL-SRA-MTF5-00001-14-14	G	24590-QL-SRA-MTF5-00001-14-16	G
24590-QL-SRA-MTF5-00001-14-19	F	24590-QL-SRA-MTF5-00001-14-20	G
24590-QL-SRA-MTF5-00001-14-21	G	24590-QL-SRA-MTF5-00001-14-22	I
24590-QL-SRA-MTF5-00001-14-23	G	24590-QL-SRA-MTF5-00001-14-24	F
24590-QL-SRA-MTF5-00001-14-25	G		

PART OF DESIGN CHANGE PACKAGE (DCP)? ☐ Yes ☒ No DCP No.: Rev:

JUSTIFICATION FOR CHANGE	CAUSE CODE
Based on the re-analysis of FRP-VSL-00002A/B/C/D, per calculation 24590-PTF-MVC-FRP-00003, for revised seismic conditions and design evolution, a redesign of the vessel is required.	01-23

Supersedes Change Document ☐ Yes ☒ No

ECN Needed ☐ Yes ☒ No

REQUIREMENTS REVIEW

Client Approval Required ☐ Yes ☒ No | Interface Resolution Required * ☐ Yes ☒ No

Address any "yes" answers in the description

DESCRIPTION OF CHANGE

Note: Components removed or deleted per this VDCN are to be removed from the actual vessel unless Otherwise noted.

1. **Affected Document: 24590-QL-SRA-MTF5-00001-14-14 (see Attachment 1, page 1 of this VDCN).**

   a) Bill of Materials block: Delete the following line Items:

   Line Item 4-1 form Vessel Assembly A

   Line Item 4-1 form Vessel Assembly B

   b) Bill of Materials block: Add Items 6-13 and 4-2 shown on Attachment 1, page 12 of this VDCN.

   c) Elevations A, B, & C: Add PJM Nozzle Guide Supports shown on Attachment 1, page 12 of this VDCN.

   d) Elevations A & B: Delete Item 4-1 and replace with Item 4-2 eccentric cone shown on Attachment 1, page 12 of this VDCN.

   e) Elevations A, B, & C: Move Section G.

   f) Add the following notes:
   2. WELDS SHOWN MAY BE FIELD-APPLIED AS NECESSARY TO SUPPORT INSTALLATION OF COMPONENTS.
   3. FABRICATION TOLERANCES FOR FIELD MODIFICATIONS SHALL BE PER 24590-WTP-MV-M59T-00001 (PRESSURE VESSEL TOLERANCES STANDARD DETAILS) AND PFI STANDARD ES-24 (PIPE BENDING METHODS, TOLERANCES, PROCESS AND MATERIAL REQUIREMENT). FOR TOLERANCES NOT SPECIFIED BY THESE STANDARDS, THE FOLLOWING SHALL APPLY, UNLESS OTHERWISE NOTED:

DIMENSION	TOLERANCE
LINEAR <12 IN	± 1/8 INCHES
LINEAR >=12 IN	± 1/4 INCHES
ANGULAR	± 2 DEGREES

Please note that source, special nuclear, and byproduct materials, as defined in the Atomic Energy Act of 1954 (AEA) are regulated at the U. S. Department of Energy (DOE) facilities exclusively by DOE acting pursuant to its AEA authority. DOE asserts that pursuant to AEA, it has sole and exclusive responsibility and authority to regulate source, special nuclear, and byproduct materials at DOE-owned nuclear facilities. Information contained herein on radionuclides is provided for process description purposes only.

   g) Add a HOLD LIST as follows:

   HOLD LIST
   1. INSTALLATION OF REVISED PJM NOZZLES ON OUTER PJMS IS ON HOLD PENDING RESOLUTION OF MIXING REQUIREMENTS.

Drawing Change Notice

CHANGE DOCUMENT NO.
24590-PTF-VDCN-MS-11-00003

JOB NO.	TITLE FOR CHANGE NOTICE
24590	PTF-FRP-VSL-00002A/B/C/D PJM SUPPORTS REDESIGN

DESCRIPTION OF CHANGE

2. **Affected Document: 24590-QL-SRA-MTF5-00001-14-16 (see Attachment 1, page 2 of this VDCN).**

   a) Section G: Add Notes and Nozzle hole with note.

   b) Joint D: Add Item 4-2 shown on Attachment 1, page 12 of this VDCN.

   c) Joint D Add Note on weld symbol.

3. **Affected Document: 24590-QL-SRA-MTF5-00001-14-19 (see Attachment 1, page 3 of this VDCN).**

   a) Elevations A & B: Replace Item 4-1 with Item 4-2 eccentric cone shown on Attachment 1, page 12 of this VDCN.

4. **Affected Document: 24590-QL-SRA-MTF5-00001-14-20 (see Attachment 1, page 4 of this VDCN).**

   a) SECTIONS A, B, AND C: Add PJM nozzle guide supports shown on Attachment 1, page 13, Section D-D of this VDCN.

   b) SECTIONS A, B, AND C: Add notes

5. **Affected Document: 24590-QL-SRA-MTF5-00001-14-21 (see Attachment 1, page 5 of this VDCN).**

   a) Elevation, Assemblies A & B: Add PJM nozzle guide supports with Item 13 shown on Attachment 1, page 12, Elevation, Assemblies A & B of this VDCN.

   b) Elevation, Assemblies A & B: Add dimensions on PJM nozzle guide supports shown on Attachment 1, page 12, Elevation, Assemblies A & B of this VDCN.

6. **Affected Document: 24590-QL-SRA-MTF5-00001-14-22 (see Attachment 1, page 6 of this VDCN).**

   a) Elevation, Assembly C: Add PJM nozzle guide supports with Item 13 shown on Attachment 1, page 12, Elevation, Assembly C of this VDCN.

   b) Elevation, Assembly C: Add dimensions on PJM nozzle guide supports shown on Attachment 1, page 12, Elevation, Assembly C of this VDCN.

   c) Add PJM nozzle guide support details shown on Attachment 1, page 13, Section D-D of this VDCN.

7. **Affected Document: 24590-QL-SRA-MTF5-00001-14-23 (see Attachment 1, page 7 of this VDCN).**

   a) Elevation and Plan View: Delete Elevation and Plan View and replace with Elevation and Sections A-A, B-B and C-C and Detail 1 shown on Attachment 1, pages 10, 11 and 12 of this VDCN.

   b) Bill of Materials block: Add Items 7-10 thru 7-30 shown on Attachment 1, page 10 of this VDCN.

   c) Internal Support Details: Add Items and Details shown on Attachment 1 page 13 of 13 of this VDCN.

   Item 29 Pipe Guide Strap

   Details 2 through 9

8. **Affected Document: 24590-QL-SRA-MTF5-00001-14-24 (see Attachment 1, page 8 of this VDCN).**

   a) Detail E: Delete and remove Items 6, 7, 8, and 9 beyond cut line shown on Attachment 1, page 13 of 13, Detail 7 of this VDCN.

9. **Affected Document: 24590-QL-SRA-MTF5-00001-14-25 (see Attachment 1, page 9 of this VDCN).**

   a) Detail B: Delete and remove Item 5 beyond cut line shown on Attachment 1, page 13 of 13, Detail 6 of this VDCN.

   b) Detail C: Delete and remove Item 5 beyond cut line shown on Attachment 1, page 13 of 13, Detail 6 of this VDCN.

Drawing Change Notice

CHANGE DOCUMENT NO.
24590-PTF-VDCN-MS-11-00003

JOB NO.	TITLE FOR CHANGE NOTICE
24590	PTF-FRP-VSL-00002A/B/C/D PJM SUPPORTS REDESIGN

DESCRIPTION OF CHANGE

ORIGINATOR	CHECKER
D. HARRIS	W. WILCOX

Reviews

CON - B. FOSTER	E&NS - J. HINCKLEY	CS&A - S. GERMAIN D. Harris sign for S. Germain over telecon	MET - J. DISNEY
MS&PE - B. LINDBERG	PD - L. LEYLAND	6/8/2011 3:45	

Approval(s)

PT EQUIP EGS - J. JULYK			

Date *(inserted by final approver)*: 6/8/11

CBI RECEIVED

SEP 23 2003

CBI RECEIVED

APR 05 2005

24590-PTF-VDCN-MS-11-00003
Attachment 1: Page 1 of 13

CBI 401

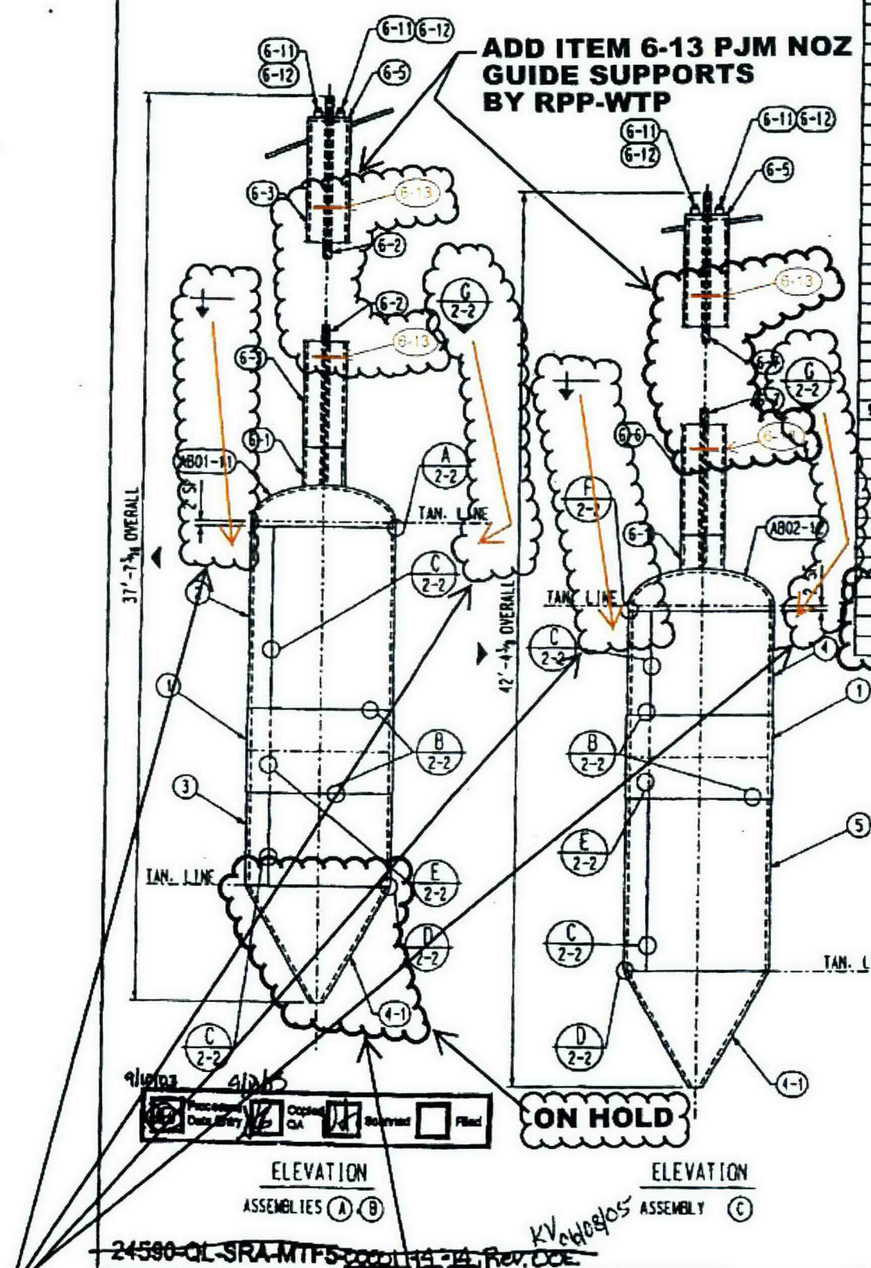

SHIP PC	MARK	ASSM PC	DESCRIPTION	LENGTH FT	LENGTH IN	SPEC	ID	EST WT
16	2-C		VESSEL ASSEMBLY C					143920
	2-1	16	PL 32 X 0.9 X SK ROLL	14	4 3/8	M1	A	23520
			(32 1/2 X 14'-4 31/32)					
	2-4	16	PL 39 5/16 X 5/8 X SK ROLL	14	3 1/2	M1	A	19968
			(39 13/16 X 14'-4 1/8)					
	2-5	16	PL 64 7/8 X 5/8 X SK ROLL	14	3 1/2	M1	A	32944
			(65 3/8 X 14'-4 1/8)					
	AB02-12	16	2:1 ASME ELLIPTICAL HEAD 54" ID X			M1	A	16752
			3/4" MIN THK A.F. X 2" SF					
			(W/F PL 67.5" X 0.9" X 22'-6)					
			U/C/U, FAB PER SPEC M6					
	4-1	48	PL SK X 5/8			M1	A	13152
			(52 7/8 X 25'-2) U/C/U					
	5-1	80	PL SK X 1/2 (CW 5-1 ASSY A)			M1	A	1520
	5-2	160	PL SK X 1/2 (CW 5-2 ASSY A)			M1	A	1440
	6-1	16	PIPE 14 DIA SCH XS WELDED SKBE	1	0	M8	A	1200
	6-6	16	PIPE 14 DIA SCH XS WELDED BBE	24	0	M8	A	29744
	6-5	16	PL 14 DIA X 1/2 X SK ID			M1	A	352
			(CW 6-5 ASSY A)					
	6-7	16	PIPE 2 DIA SCH 160S SMLS POE SKOE	26	5	M3	A	3296
	6-11	32	HALF CPLG 1 1/2 DIA 6000# SW			M7	A	32
96	6-12		PL 1 13/16 DIA (NOM) X 1 3/16			M1	A	96
			(CF FROM LEFT OVER PL OF WFR VESSEL					
			M1= SA240 316L CBI SPEC A-240-2404					
			M3= SA312 316L CBI SPEC A-312-2406					
			M6= CBI FAB SPEC A-FAB-2424					
			M7= SA403WP316L CBI SPEC A-403-2423					
			M8= SA312 316L (WELDED). CBI SPEC					
			A-312-2450					

ADD ITEM 6-13 AND 4-2 TO BOM LIST BY RPP-WTP

DELETE ITEM 4-1 & FROM BOM LIST BY RPP-WTP

SHIP PC	MARK	ASSM PC	DESCRIPTION	LENGTH FT	LENGTH IN	SPEC	ID	EST WT
16	2-A		VESSEL ASSEMBLY A					132192
	2-1	16	PL 32 X 0.9 X SK ROLL	14	4 3/8	M1	A	23520
			(32 1/2 X 14'-4 31/32)					
	2-2	16	PL 69 5/16 X 5/8 X SK ROLL	14	3 1/2	M1	A	35200
			(69 13/16 X 14'-4 1/8)					
	2-3	16	PL 34 7/8 X 5/8 X SK ROLL	14	3 1/2	M1	A	17712
			(35 3/8 X 14'-4 1/8)					
	AB01-11	16	2:1 ASME ELLIPTICAL HEAD 54" ID X			M1	A	11968
			5/16" MIN THK A.F. X 2" SF					
			(W/F PL 67.25" X 0.65" X 22'-5)					
			U/C/U, FAB PER SPEC M6					
	4-1	48	PL SK X 5/8			M1	A	13152
			(52 7/8 X 25'-2) U/C/U					
	4-2	64	PL SK X 1/2 (CF PL 96 X 40'-0)			M1	A	1216
	5-2	120	PL SK X 1/2 (CF 96 X 29'-0)			M1	A	1152
	6-1	16	PIPE 14 DIA SCH XS WELDED SKBE	1	0	M8	A	1200
	6-2	16	PIPE 2 DIA SCH 160S SMLS POE SKOE	21	7	M3	A	2688
	6-3	16	PIPE 14 DIA SCH XS WELDED BBE	19	10	M8	A	23904
	6-5	16	PL 14 DIA X 1/2 X SK ID			M1	A	352
			(CW 6-5 ASSY A)					
	6-11	32	HALF CPLG 1 1/2 DIA 6000# SW			M7	A	32
	7-3	32	PL SK X 1/2 (CW 5-1)			M1	A	64
	7-4	16	PL SK X 1/2 (CW 5-1)			M1	A	32
16	2-B		VESSEL ASSEMBLY B					131600
	2-1	16	PL 32 X 0.9 X SK ROLL	14	4 3/8	M1	A	23520
			(32 1/2 X 14'-4 31/32)					
	2-2	16	PL 69 5/16 X 5/8 X SK ROLL	14	3 1/2	M1	A	35200
			(69 13/16 X 14'-4 1/8)					
	2-3	16	PL 34 7/8 X 5/8 X SK ROLL	14	3 1/2	M1	A	17712
			(35 3/8 X 14'-4 1/8)					
	AB01-11	16	2:1 ASME ELLIPTICAL HEAD 54" ID X			M1	A	11968
			5/16" MIN THK A.F. X 2" SF					
			(W/F PL 67.25" X 0.65" X 22'-5)					
			U/C/U, FAB PER SPEC M6					
	4-1	48	PL SK X 5/8			M1	A	13152
			(52 7/8 X 25'-2) U/C/U					
	5-1	48	PL SK X 1/2 (CW 5-1 ASSY A)			M1	A	912
	5-2	96	PL SK X 1/2 (CW 5-2 ASSU A)			M1	A	864
	6-1	16	PIPE 14 DIA SCH XS WELDED SKBE	1	0	M8	A	1200
	6-2	16	PIPE 2 DIA 160S SMLS POE SKOE	21	7	M3	A	2688
	6-3	16	PIPE 14 DIA SCH XS WELDED BBE	19	10	M8	A	23904
	6-5	16	PL 14 DIA X 1/2 X SK ID			M1	A	352
			(CW 6-5 ASSY A)					
	6-11	32	HALF CPLG 1 1/2 DIA 6000# SW			M7	A	32
	7-3	32	PL SK X 1/2 (CW 5-1)			M1	A	64
	7-4	16	PL SK X 1/2 (CW 5-1)			M1	A	32

BILLED FOR 48 VESSELS, 48 VESSELS REQUIRED

DELETE ITEM 4-1 & REPLACE WITH ITEM 4-2 ECCENTRIC CONE BY RPP-WTP

NOTE:

1. ~~WORK THIS DRAWING WITH DWG'S 1, 3 THRU 7~~
2. WELDS SHOWN MAY BE FIELD-APPLIED AS NECESSARY TO SUPPORT INSTALLATION OF COMPONENTS
3. FABRICATION TOLERANCES FOR FIELD MODIFICATIONS SHALL BE PER 24590-WTP-MV-M59T-00001 (PRESSURE VESSEL TOLERANCES STANDARD DETAILS) AND PFI STANDARD ES-24 (PIPE BENDING METHODS, TOLERANCES, PROCESS AND MATERIAL REQUIREMENT). FOR TOLERANCES NOT SPECIFIED BY THESE STANDARDS, THE FOLLOWING SHALL APPLY UNLESS OTHERWISE NOTED

DIMENSION	TOLERANCE
LINEAR <12 IN	± 1/8 INCHES
LINEAR >=12 IN	± 1/4 INCHES
ANGULAR	± 2 DEGREES

▶ INDICATES CHANGE FROM PREVIOUS ISSUE

HOLD LIST

1. INSTALLATION OF REVISED PJM NOZZLES ON OUTER PJMS IS ON HOLD PENDING RESOLUTION OF MIXING REQUIREMENTS.

ADD NOTES 2-3 AND HOLD NOTE 1 BY RPP-WTP

CERTIFIED AS BUILT CONTRACT DRAWING
DATE: 4/5/05
SIGNED: B.L. Bakalos

CBI

GENERAL ELEVATION
VESSELS FRP-PJM-0001-36,& 0061-72
PULSE JET MIXERS
RICHLAND, WA

CUSTOMER'S NO ST TNX CHKD CST DATE 10/11/03
PRE/ B.A. ALCORN
ENGINEERING DATE
CONTRACT NO 137202E
PAG 2 SHT 1 REV 4

CAD FILE: 202020IE.DGN

24590-QL-SRA-MTFS-00001-14-14 REV 00E

14-14

R10242472

MOVE SECTION G-G DOWN BY RPP-WTP

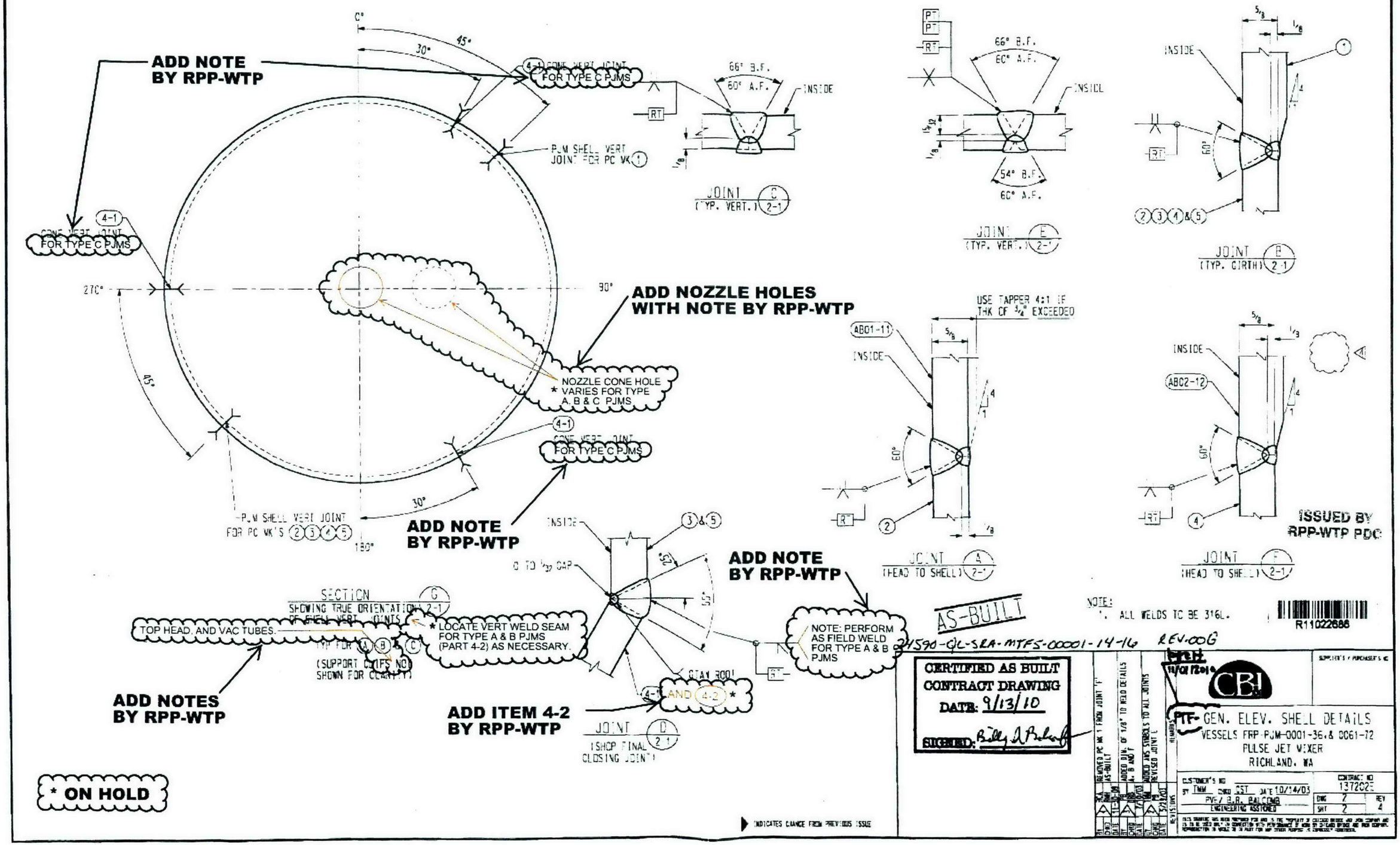
ADD NOTE BY RPP-WTP
FOR TYPE C PJMS
PJM SHELL VERT JOINT FOR PC WK 1
JOINT C (TYP. VERT.) 2-1
66° B.F.
60° A.F.
INSIDE
RT
PT
54° B.F.
JOINT E (TYP. VERT.) 2-1
JOINT B (TYP. GIRTH) 2-1
2 3 4 & 5
ADD NOZZLE HOLES WITH NOTE BY RPP-WTP
NOZZLE CONE HOLE
* VARIES FOR TYPE A, B & C PJMS
PJM SHELL VERT JOINT FOR PC WK'S 2 3 4 5
ADD NOTE BY RPP-WTP
USE TAPPER 4:1 IF THK OF 3/4" EXCEEDED
ABO1-11
JOINT A (HEAD TO SHELL) 2-1
ABO2-12
JOINT F (HEAD TO SHELL) 2-1
ISSUED BY RPP-WTP PDC
SECTION G SHOWING TRUE ORIENTATION OF EVEN VERT JOINTS 2-1
TOP HEAD, AND VAC TUBES.
TYP FOR A B & C
(SUPPORT CLIPS NOT SHOWN FOR CLARITY)
* LOCATE VERT WELD SEAM FOR TYPE A & B PJMS (PART 4-2) AS NECESSARY.
ADD NOTES BY RPP-WTP
ADD NOTE BY RPP-WTP
NOTE: PERFORM AS FIELD WELD FOR TYPE A & B PJMS
ADD ITEM 4-2 BY RPP-WTP
JOINT D (SHOP FINAL CLOSING JOINT) 2-1
* ON HOLD
AS-BUILT
NOTE:
1. ALL WELDS TO BE 316L.
R11022686
24590-QL-SRA-MTFS-00001-14-16 REV.00G
CERTIFIED AS BUILT CONTRACT DRAWING
DATE: 9/13/10
SIGNED:
CBI
PTF- GEN. ELEV. SHELL DETAILS
VESSELS FRP-PJM-0001-36 & 0061-72
PULSE JET MIXER
RICHLAND, WA
CONTRACT NO 137202E
DWG 2 REV 4
SHT 2
INDICATES CHANGE FROM PREVIOUS ISSUE
CAD FILE: 2020202E.DGN

APR 0 5 2005

24590-PTF-VDCN-MS-11-00003
Attachment 1: Page 3 of 13

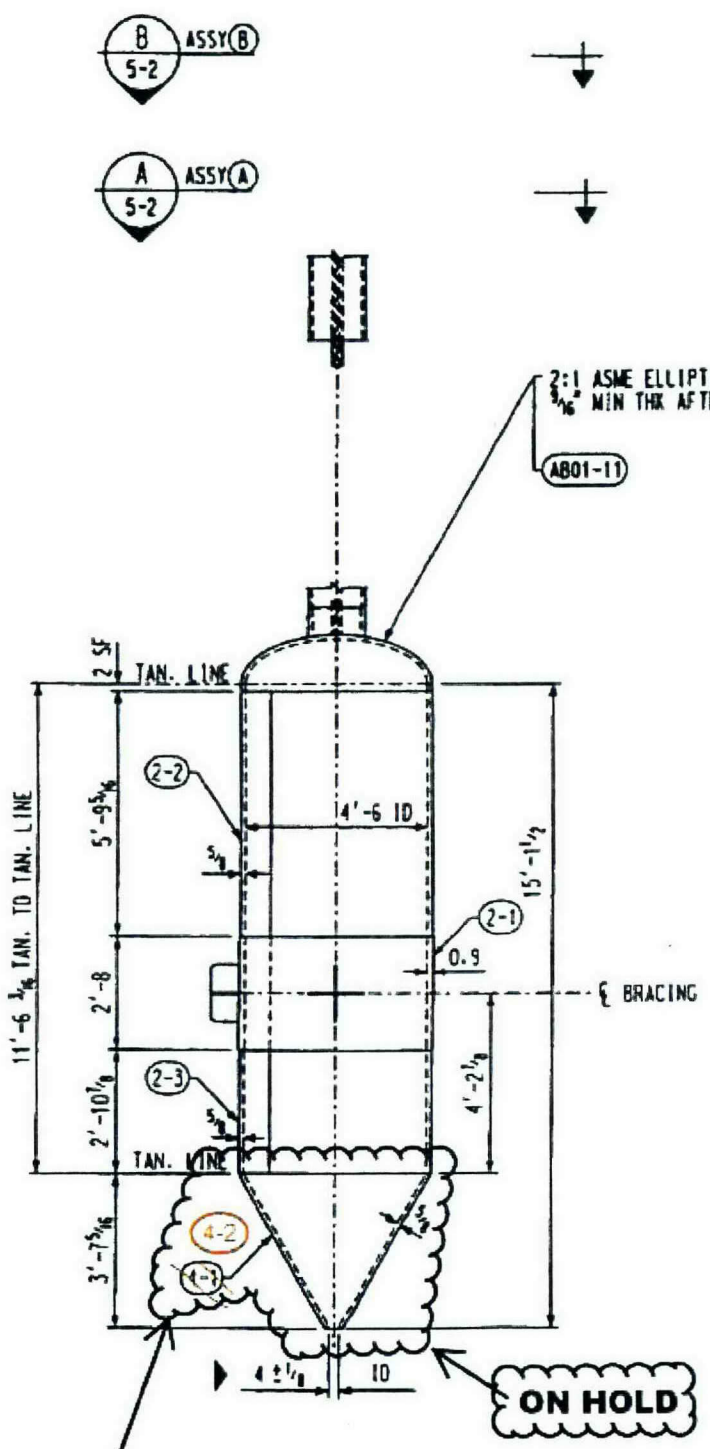

ELEVATION
ASSEMBLY A & B

DELETE ITEM 4-1 AND REPLACE WITH ITEM 4-2 BY RPP-WTP

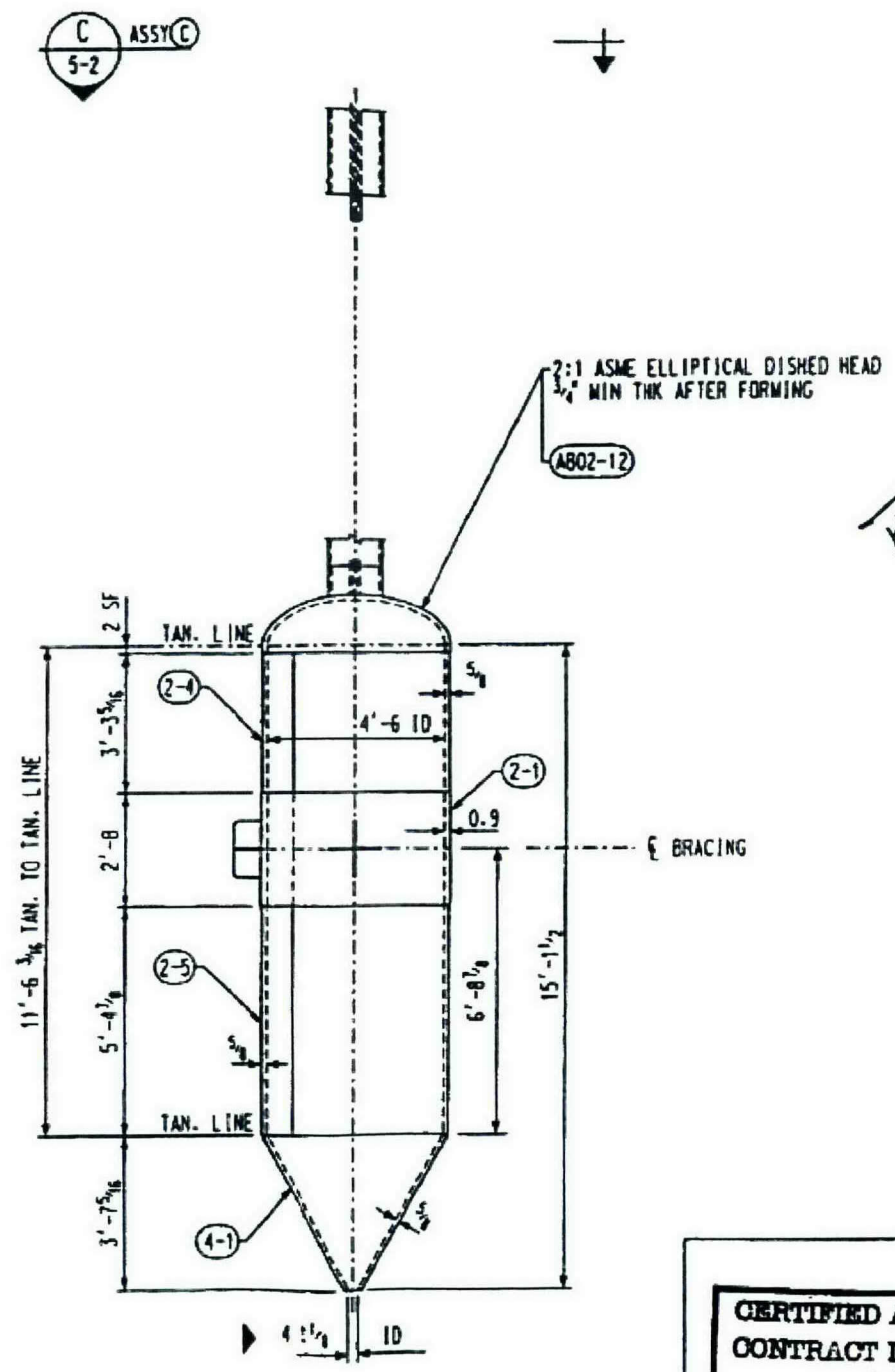

ELEVATION
ASSEMBLY C

▶ INDICATES CHANGE FROM PREVIOUS ISSUE

Bechtel National, Inc.
Job No. 24590

SUPPLIER DOCUMENT STATUS

1. [X] Work may proceed.
2. [ ] Revise and resubmit. Work may proceed subject to resolution of indicated comments.
3. [ ] Revise and resubmit. Work may not proceed.
4. [ ] Review not required. Work may proceed.

Permission to proceed does not constitute acceptance or approval of design details, calculations, analyses, test methods, or materials developed or selected by the supplier and does not relieve supplier from full compliance with contractual obligations.

REVIEWED

G-321 Document Category 1.3
[From Supplement A to G-321-E(E) or G-321-V (V), as applicable, or "N/A" if SSRS is used]

Supersedes BNI Document No. _____ Rev. _____
[When applicable]

Accepted by _____ Print Name _____ Signature _____ Date 11/13/03

Released by [When applicable] GREG DALTON _____ Print Name _____ Signature _____ Date 11/13/03

KV 040805

WTP FIELD SUBCONTRACTS
NOV 1 3 2003
RECEIVED

10/16/03 102303
Processed Data Entry | Copied QA | Scanned | Filed

~~24590-QL-SRA-MTF5-00001-14-19~~ KV 040805
~~RAWCOD~~

KC 2/8/05

R10242479

24590-QL-SRA-MTF5-00001-14-19
REV 00 KC 2/8/06

CERTIFIED AS BUILT CONTRACT DRAWING
DATE: 4/5/05
SIGNED: [signature]

REV	DATE	BY	CHK	REMARKS
1	10/11/03	TJM	CST	TOLERANCE ADDED AT 4" ID AS PER CUSTOMER REQUEST.
2	12/11/03			PER E-11 REQUIRED, RAY HOLES REQUIRED.
3	2/4/04			GENERAL REVISION PER CUSTOMER RE-DESIGN

CBI

SHELL ASSEMBLY
VESSELS FRP-PJM-0001-36.& 0061-72
PULSE JET MIXERS
RICHLAND, WA

CUSTOMER'S NO
BY TJM CHKD CST DATE 10/11/03
PYE/ A.B. RALCONB
ENGINEERING ASSIGNED

CONTRACT NO 137202E
DWG 5 SHT 1 REV 3

CAD FILE: 2020501E.DGN

14-19

APR 0 5 2005

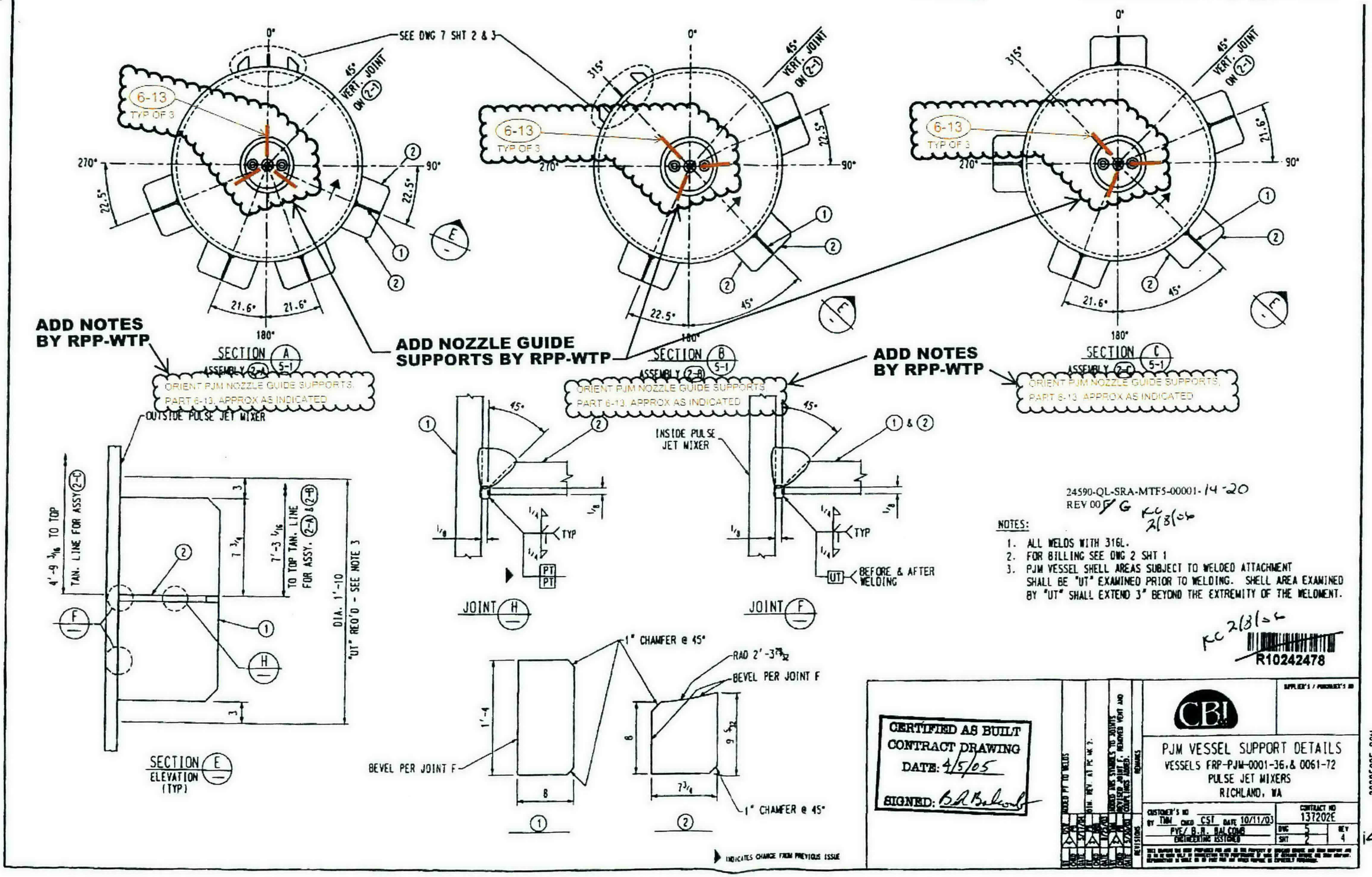

24590-QL-SRA-MTF5-00001-14-20
REV 00 ~~F~~ G KC 2/8/06

NOTES:

1. ALL WELDS WITH 316L.
2. FOR BILLING SEE DWG 2 SHT 1
3. PJM VESSEL SHELL AREAS SUBJECT TO WELDED ATTACHMENT SHALL BE "UT" EXAMINED PRIOR TO WELDING. SHELL AREA EXAMINED BY "UT" SHALL EXTEND 3" BEYOND THE EXTREMITY OF THE WELDMENT.

KC 2/8/06

R10242478

CERTIFIED AS BUILT
CONTRACT DRAWING
DATE: 4/5/05
SIGNED: B.R. Balcomb

CBI

PJM VESSEL SUPPORT DETAILS
VESSELS FRP-PJM-0001-36, & 0061-72
PULSE JET MIXERS
RICHLAND, WA

CUSTOMER'S NO
BY TMM CHKD CST DATE 10/11/03
PYE/ B.R. BALCOMB
ENGINEERING ASSIGNED

CONTRACT NO 137202E
DWG 5 SHT 2 REV 4

2020502E.DGN

14-20E

APR 05 2005

SEP 9 - 2003

BNI-CBI 380

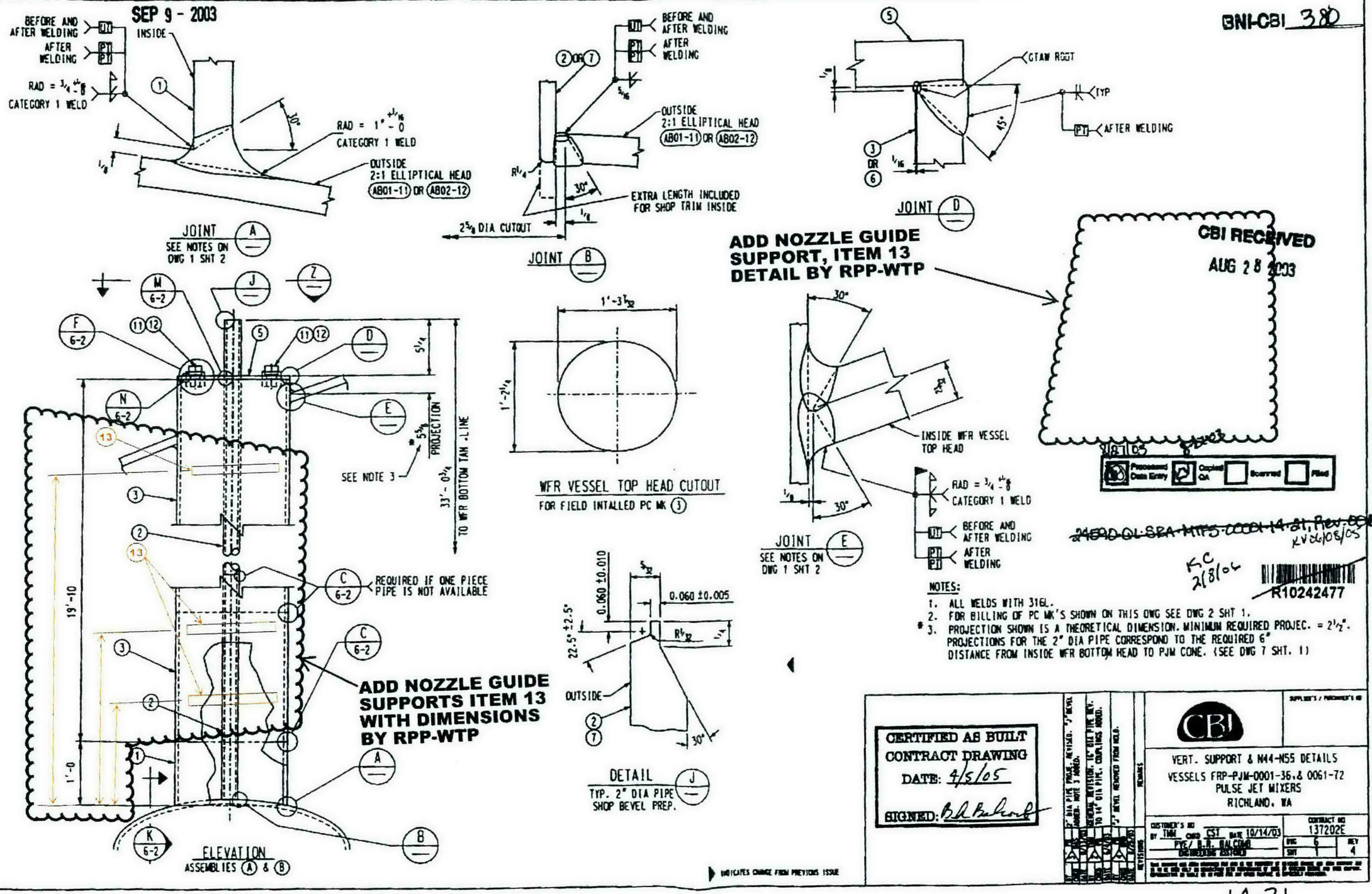

APR 1 4 2005

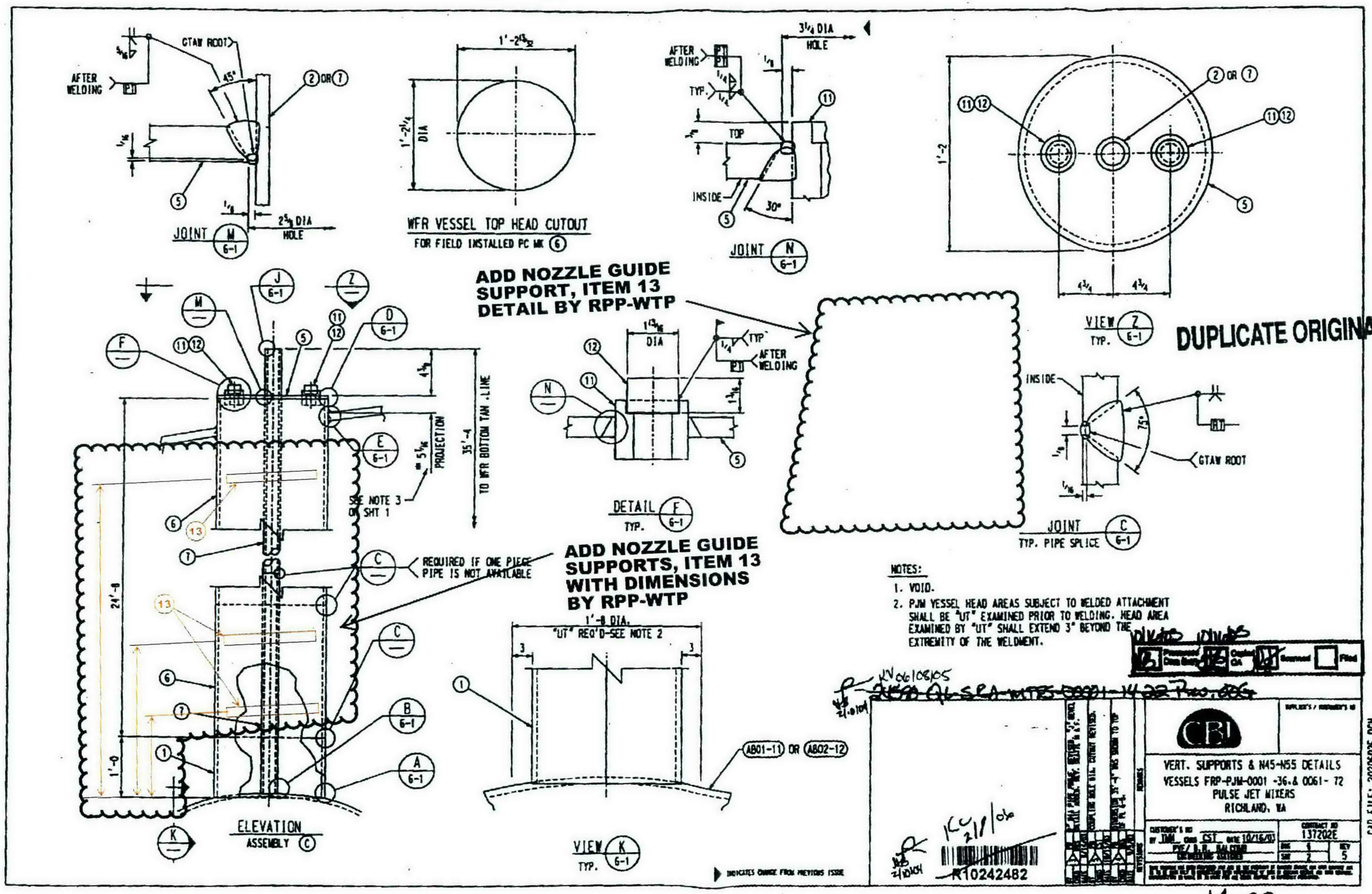

24590-QL-SRA-MTF5-00001-14-22
REV 0

14-22

CBI RECEIVED
APR 05 2005

CBI RECEIVED
SEP 9 - 2003

DELETE & REPLACE WITH PLAN & SECTIONS AND DETAIL BY RPP-WTP

SHOP PC	MARK	DESIGN PC	DESCRIPTION	LENGTH FT	LENGTH IN	SPEC	ID	EST WT
32	7-5		PIPE 6" DIA SCH80S SMLS POE SKOE	5	0 *	M3	A	4768
32	7-6		PL 11 3/16 X 1/2 X SK (CF 96X40'-0)	6	11 *	M1	A	4384
32	7-7		PL 7 3/16 X 1/2 X SK (CF 96X40'-0)	7	0 *	M1	A	2848
16	7-8		PL 7 3/16 X 1/2 X SK (CW 7-7)	4	2 *	M1	A	848
16	7-9		PL 7 3/16 X 1/2 X SK (CW 7-7)	3	8 *	M1	A	752
64	7-1		PL SK X 1/2 (CW 5-1)			M1	A	704
64	7-2		PL SK X 1/2 (CW 5-1)			M1	A	698
32	7-4		PL SK X 1/2 (CW 5-1)			M1	A	64
			M1=SA240 316L,CBI SPEC A-240-2404					
			M3=SA312 316L, CBI SPEC A-312-2406					
			* EXTRA LENGTH BILLED FOR					
			* FIELD ADDUSTMENT					

BILLED FOR (4) WASTE FEED RECEIPT VESSELS. (48 PJM VESSELS)

CBI RECEIVED
AUG 28 2003

ADD ITEMS 7-10 THRU 7-30 TO BILL OF MATERIAL LIST BY RPP-WTP

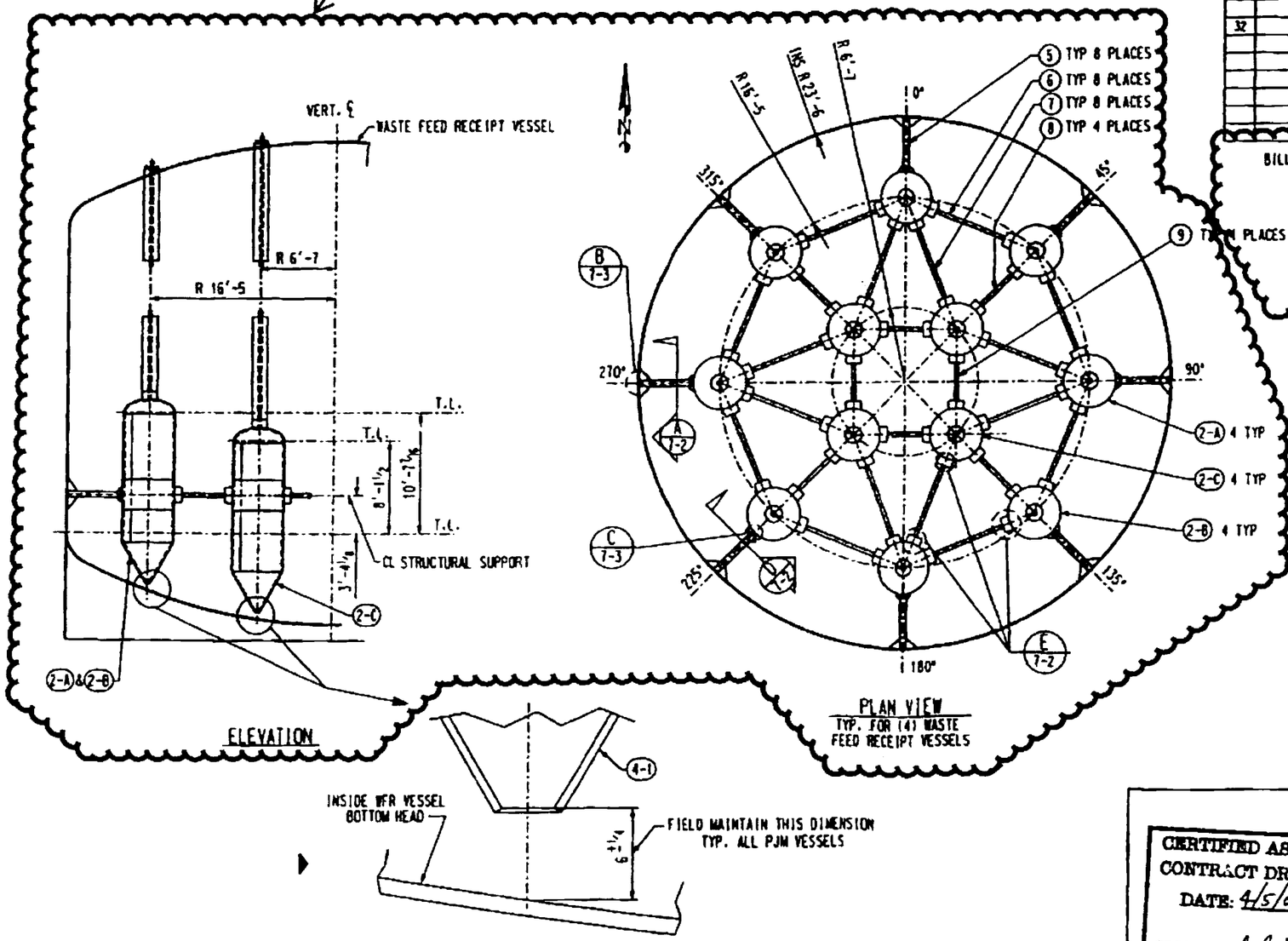

8/27/03

24590-QL-SRA-MTF5-00001-14-23
REV 00 KC 2/8/06

~~24590-QL-SRA-MTF5-00001-14-23, Rev. 00E~~

KC 2/8/06

R10242481

CERTIFIED AS BUILT CONTRACT DRAWING
DATE: 4/5/05
SIGNED: B.R. Balcomb

CBI

PULSE JET MIXER SUPPORTS
VESSELS FRP-PJM-0001-36 & 0061-72
PULSE JET MIXERS
RICHLAND, WA

CUSTOMER'S NO
BY TMM CHKD CST DATE 10/11/03
PVE/ B.R. BALCOMB
ENGINEERING ASSIGNED

CONTRACT NO 137202E
DWG 1 REV 3

2020701E.DGN

UNDICATES CHANGE FROM PREVIOUS ISSUE

1

14-23

CBI RECEIVED
SEP 9 - 2003

CBI RECEIVED
APR 0 5 2005

24590-PTF-VDCN-MS-11-00003
Attachment 1: Page 8 of 13

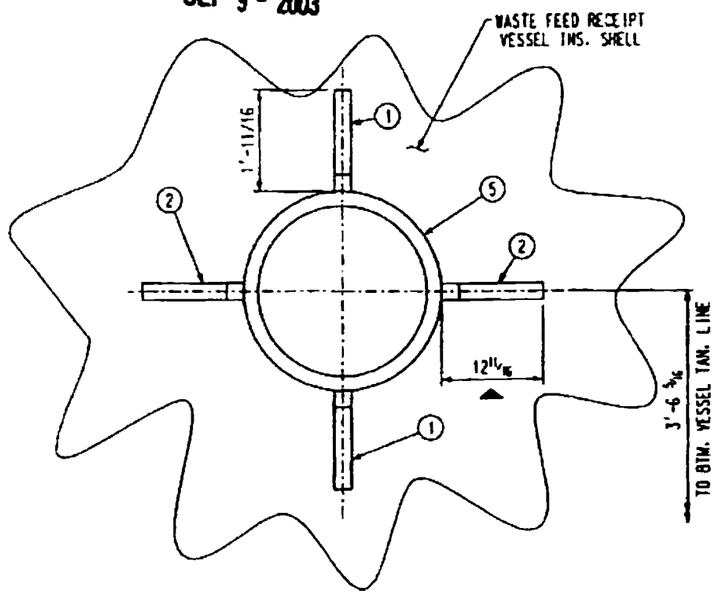

SECTION (A / 7-1)
(FIELD INSTALLED SUPPORTS)

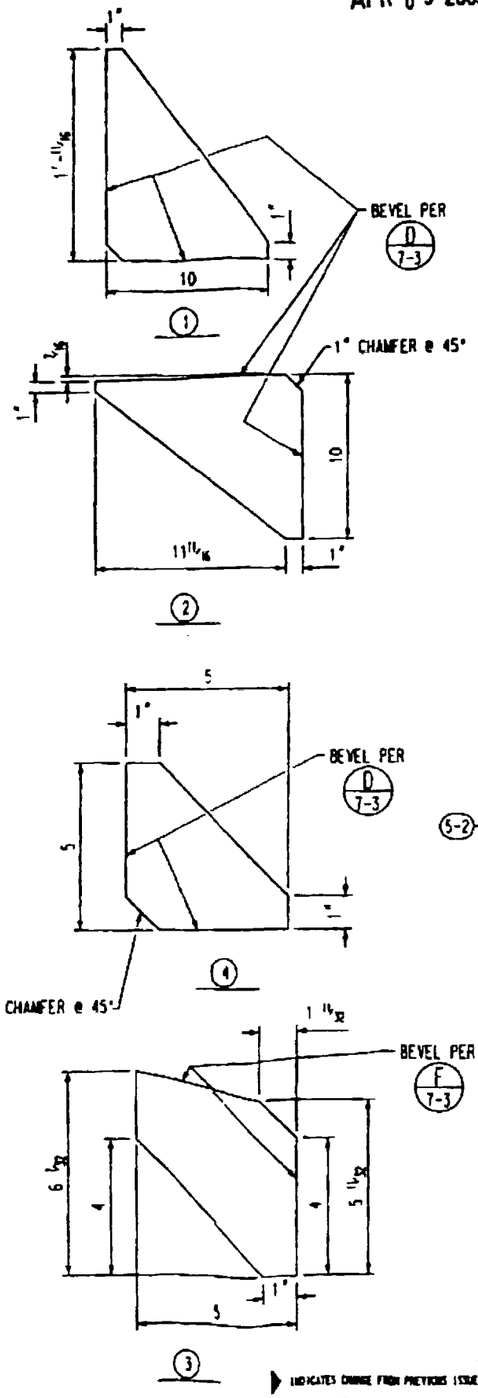

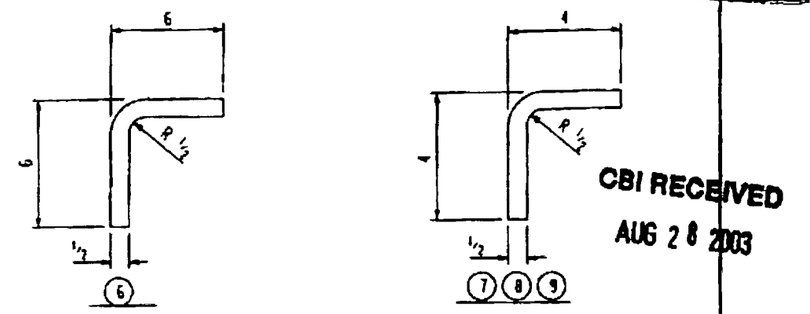

SHOP NOTE:
1. SHOP BEVEL ONE END OF PC MK (6) (7) (8) & (9) PER JOINT 'G' ON DWG 7 SHT 3. FIELD TO BEVEL OTHER END AFTER FINAL TRIM TO SUIT.

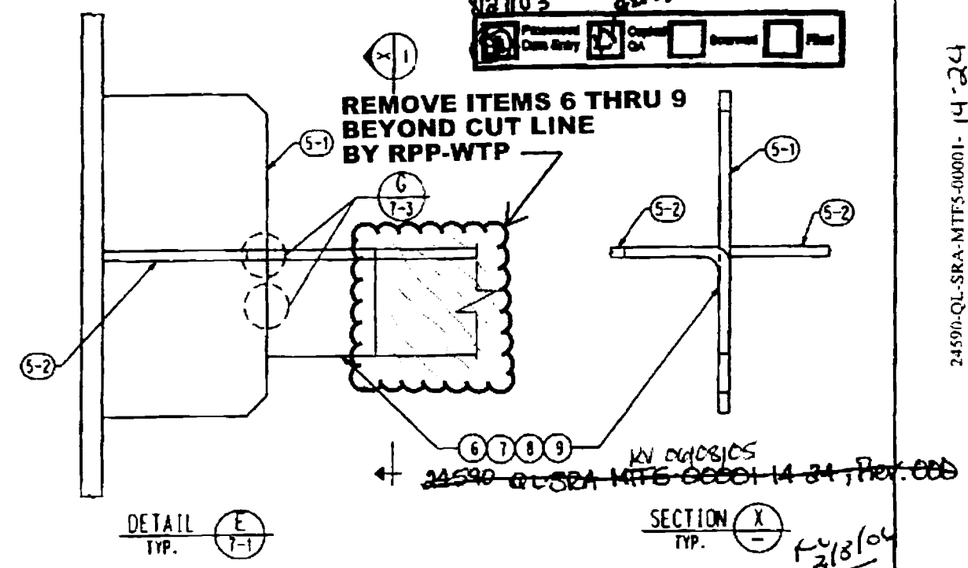

DETAIL (E / 7-1) TYP.

SECTION (X) TYP.

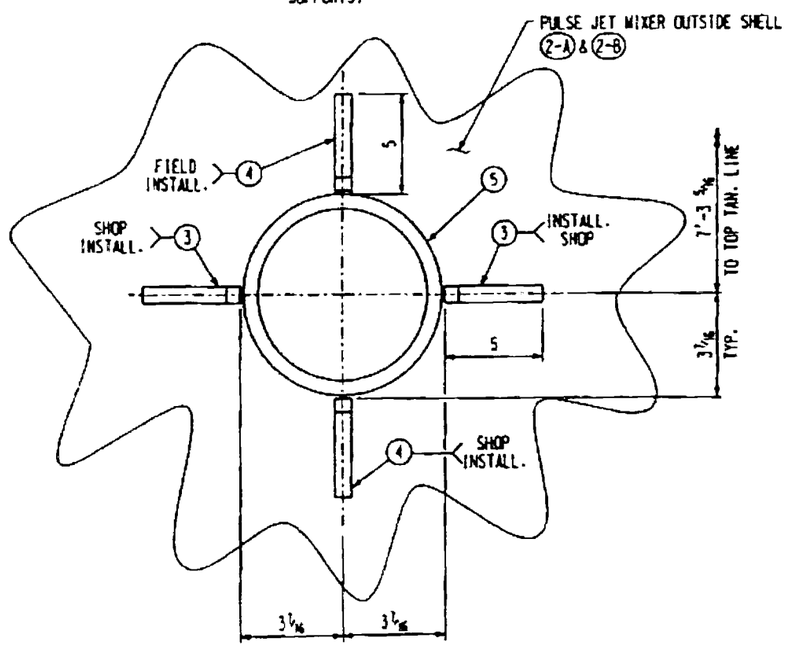

SECTION (D / 7-1)

NOTE:
1. FOR BILLING OF PC MK'S SHOWN ON THIS DWG SEE DWG 2 SHT 1.

R10242480

CERTIFIED AS BUILT CONTRACT DRAWING
DATE: 4/5/05
SIGNED:

CBI

PULSE JET MIXER SUPPORTS
VESSELS FRP-PJM-0001-36, & 0061-72
PULSE JET MIXERS
RICHLAND, WA

CONTRACT NO 137202E
DWG 7 SHT 2 REV 3

2020702E.DGN

24590-QL-SRA-MTF5-00001-14-24
REV (0)

14-24

APR 05 2005

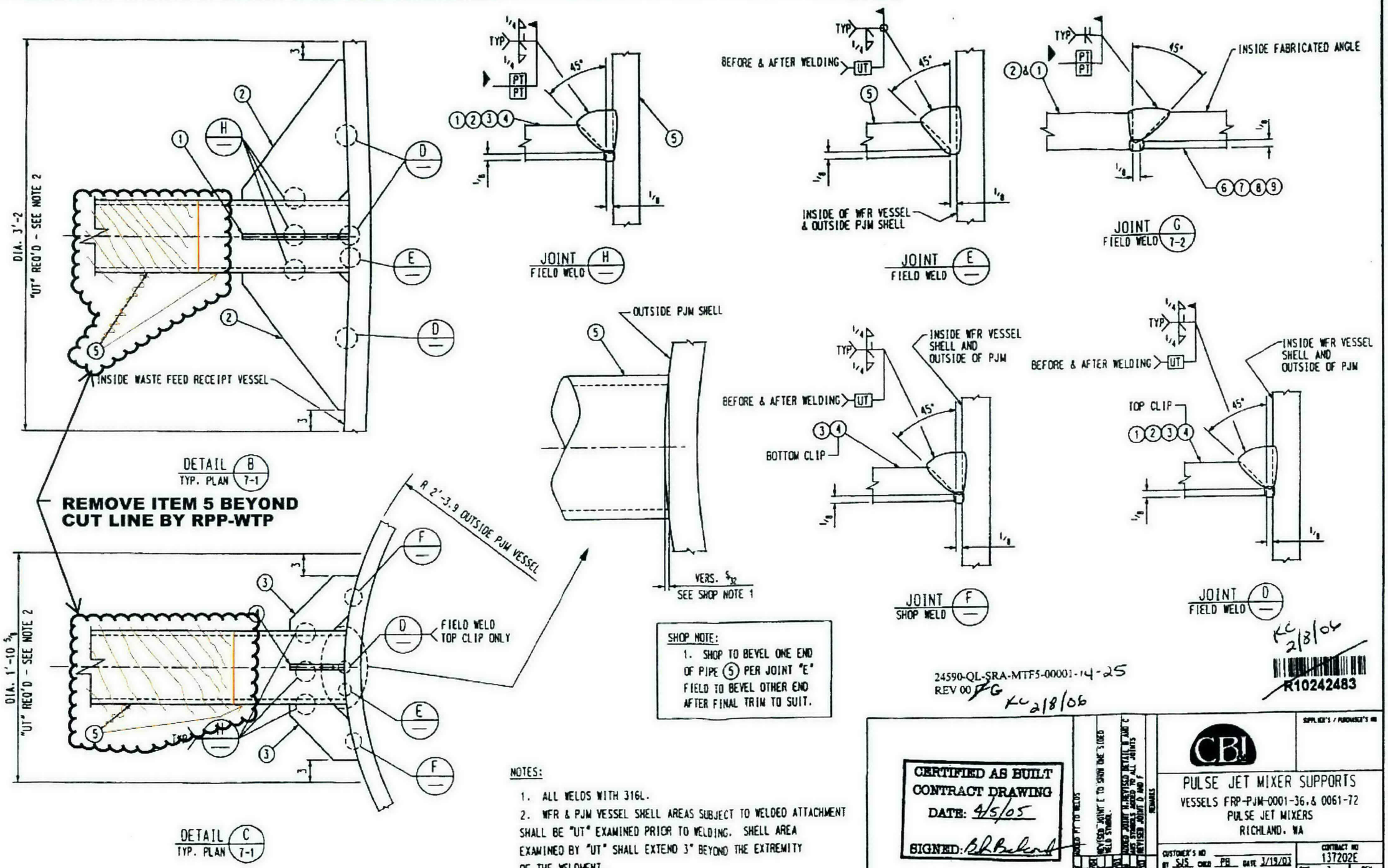

SHOP NOTE:
1. SHOP TO BEVEL ONE END OF PIPE (5) PER JOINT "E" FIELD TO BEVEL OTHER END AFTER FINAL TRIM TO SUIT.

NOTES:
1. ALL WELDS WITH 316L.
2. WFR & PJM VESSEL SHELL AREAS SUBJECT TO WELDED ATTACHMENT SHALL BE "UT" EXAMINED PRIOR TO WELDING. SHELL AREA EXAMINED BY "UT" SHALL EXTEND 3" BEYOND THE EXTREMITY OF THE WELDMENT.

▶ INDICATES CHANGE FROM PREVIOUS ISSUE

24590-QL-SRA-MTF5-00001-14-25
REV 00 FG KC 2/8/06

KC 2/8/06

R10242483

CERTIFIED AS BUILT
CONTRACT DRAWING
DATE: 4/5/05
SIGNED: B.R. Balcomb

CBI

PULSE JET MIXER SUPPORTS
VESSELS FRP-PJM-0001-36,& 0061-72
PULSE JET MIXERS
RICHLAND, WA

CUSTOMER'S NO
BY SJS CHKD PB DATE 3/19/03
PVE/ B.R. BALCOMB
ENGINEERING ASSIGNED

CONTRACT NO 137202E
DWG 7 SHT 3 REV 3

20207O3E.DGN

14-25E

ON REFERENCE DRAWING 24590-QL-SRA-MTF6-00001-14-23

SHIP PC	MARK	ASSY PC	DESCRIPTION	LENGTH FEET	LENGTH INCHES	SPEC	IC	LST WT
128	7-10		PIPE 12" SCHED 80S	7	8	MB		
84	7-11		PIPE 12" SCHED 80S	8	6	MB		
84	7-12		PIPE 12" SCHED 80S	8	7	MB		
32	7-13		PIPE 12" SCHED 80S	6	0	MB		
32	7-14		PIPE 12" SCHED 80S	5	4	MB		
48	7-15		PIPE 8" SCHED 80S	8	6	MB		
12	7-16		PIPE 8" SCHED 80S	9	4	MB		
12	7-17		PIPE 8" SCHED 80S	3	10	MB		
4	7-18		PIPE 8" SCHED 80S	8	10	MB		
4	7-19		PIPE 8" SCHED 80S	3	8	MB		
4	7-20		PIPE 8" SCHED 80S	1	2	MB		
20	7-21		PIPE 3" SCHED 80S	1	2	MB		
4	7-22		PIPE 3" SCHED 80S	0	8	MB		
60	7-23		PIPE 3" SCHED 80S	0	6	MB		
8	7-24		PIPE 3" SCHED 80S	0	5	MB		
8	7-25		PIPE 3" SCHED 80S	0	9	MB		
4	7-26		PLATE 6 5/8" DIA x 1/2" THK			MP		
4	7-27		PLATE 7" x 3" x 1/2" THK			MP		
32	7-28		PLATE 3 1/2" DIA x 1/2" THK			MP		
100	7-29		FLAT BAR 2" x 1/2" THK	0	3 23/32	MP		
40	7-30		PLATE 5" x 5" x 1/2" THK			MP		
			MP = ASME SA240 TP 316/316L					
			MB = ASME SA403 316L WPS					
			MB = ASME SA312 TP 316/316L					

1. THE FABRICATOR MAY LEAVE UP TO 1" OF THE PREVIOUS STEELWORK IN PLACE (I.E. CUT STEELWORK UP TO 1" AWAY FROM UNTOUCHED COMPONENTS) TO AVOID CUTTING/GRINDING INTO UNTOUCHED COMPONENTS (UNLESS OTHERWISE SPECIFICALLY INDICATED IN THIS DRAWING SET) WHERE THIS DRAWING SET INDICATES THAT SUPPORTS, FLANGES, BRACKETS, COMPONENTS, ETC. HAVE BEEN REMOVED BETWEEN THE CURRENT REVISION AND THE PREVIOUS REVISION.

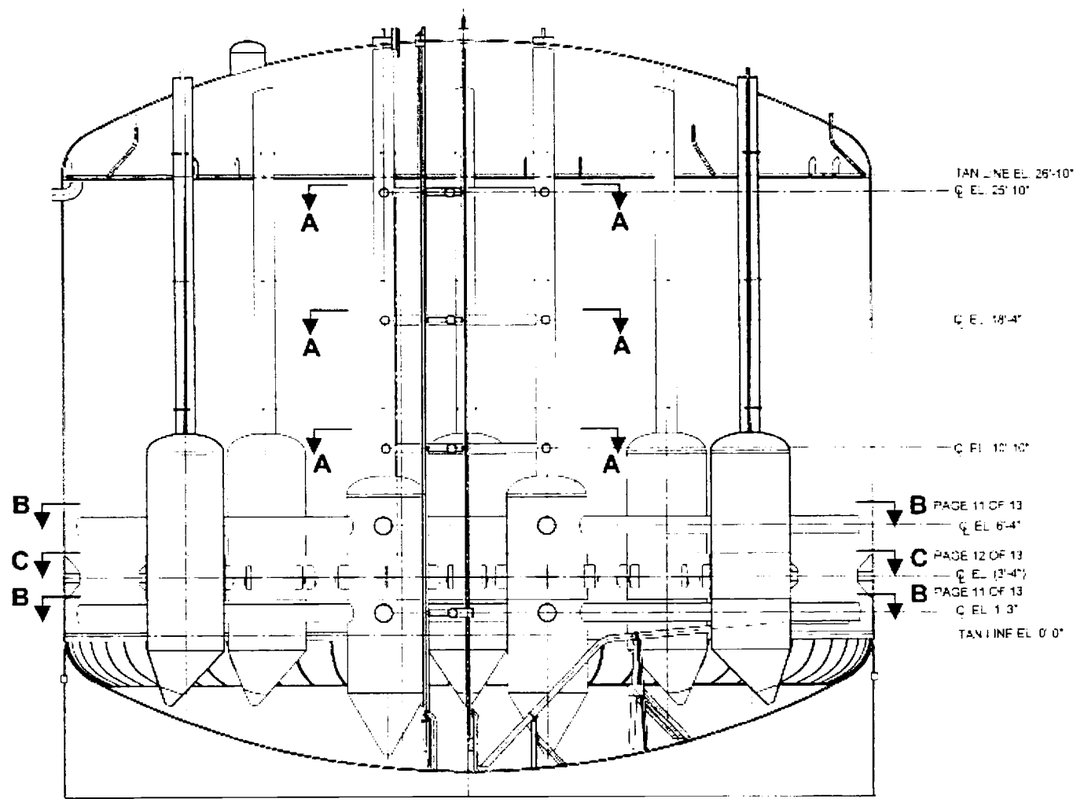

ELEVATION

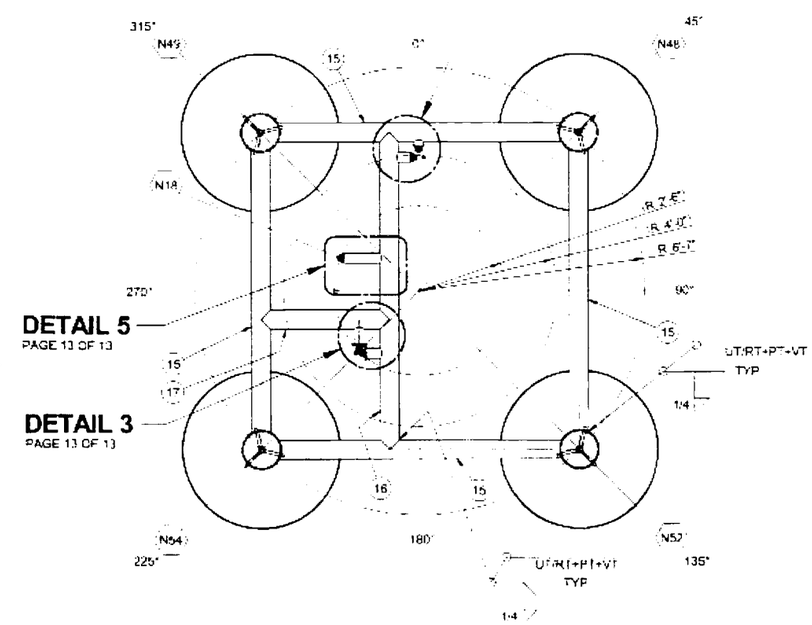

SECTION A-A

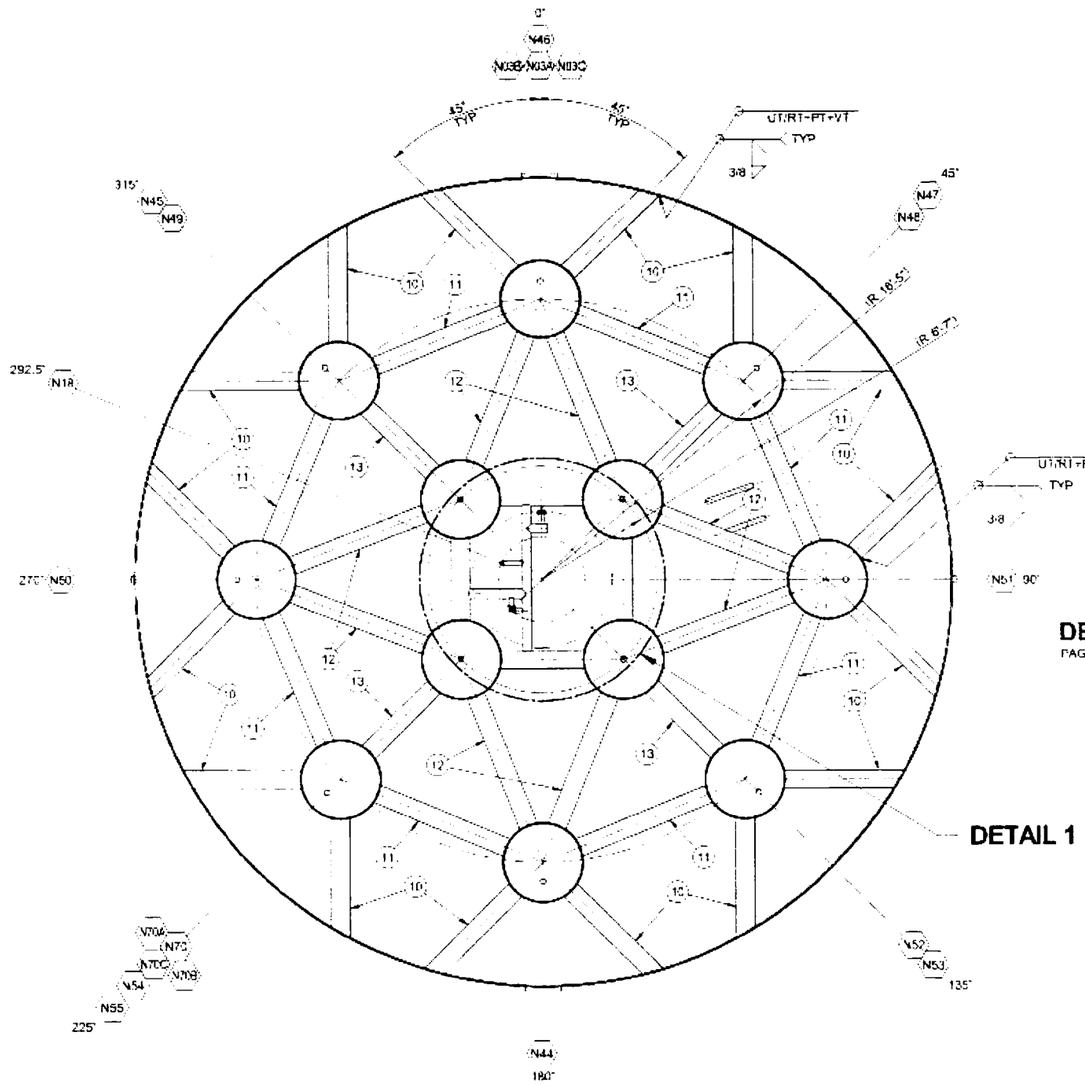

SECTION B-B

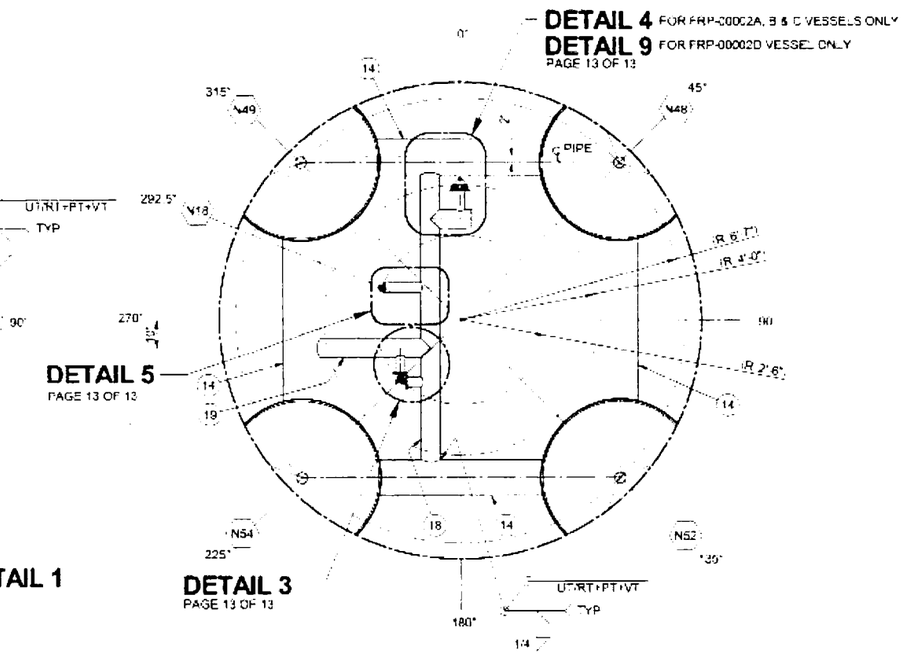

DETAIL 1

HOLD NOTE:
FINAL INSTALLATION OF PJM NOZZLE CONES TO PJM SHELL IS ON HOLD PENDING FINAL DESIGN RELEASE FROM BNI

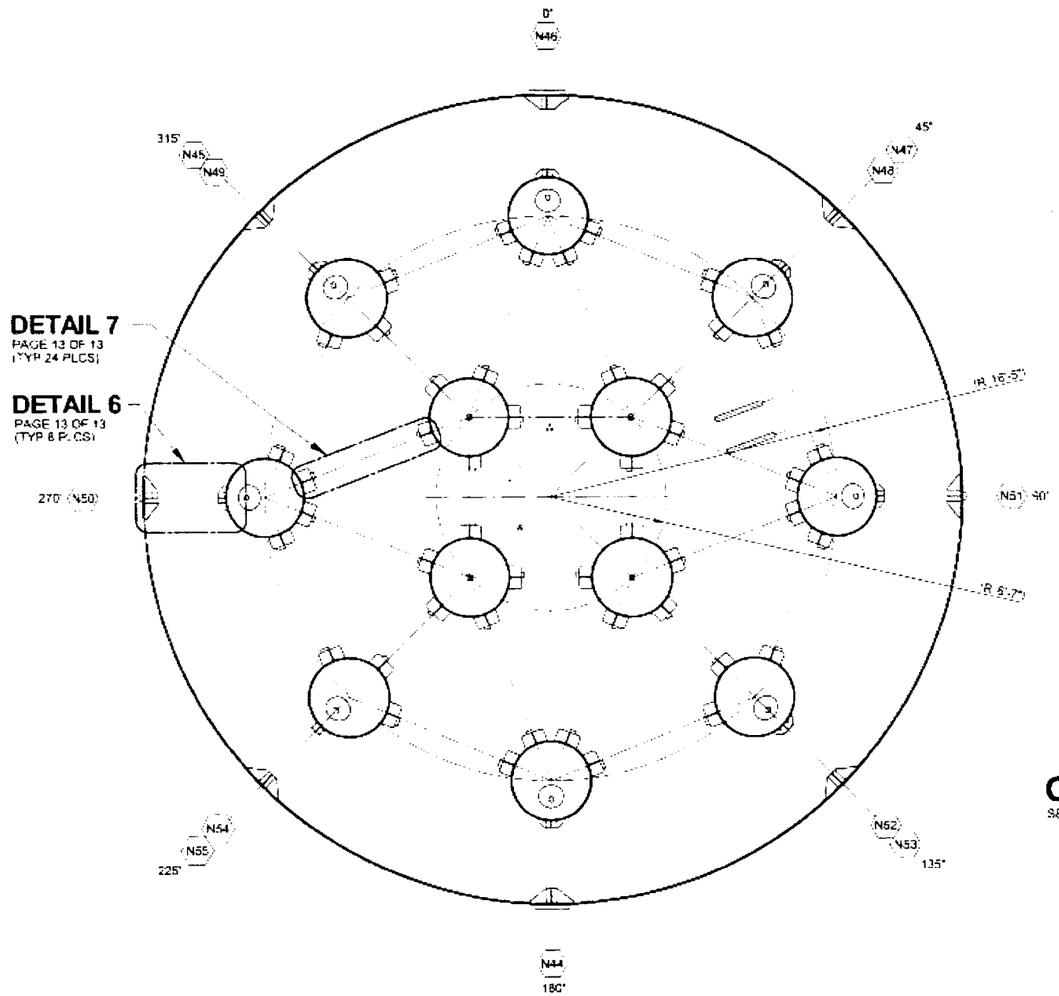

SECTION C-C

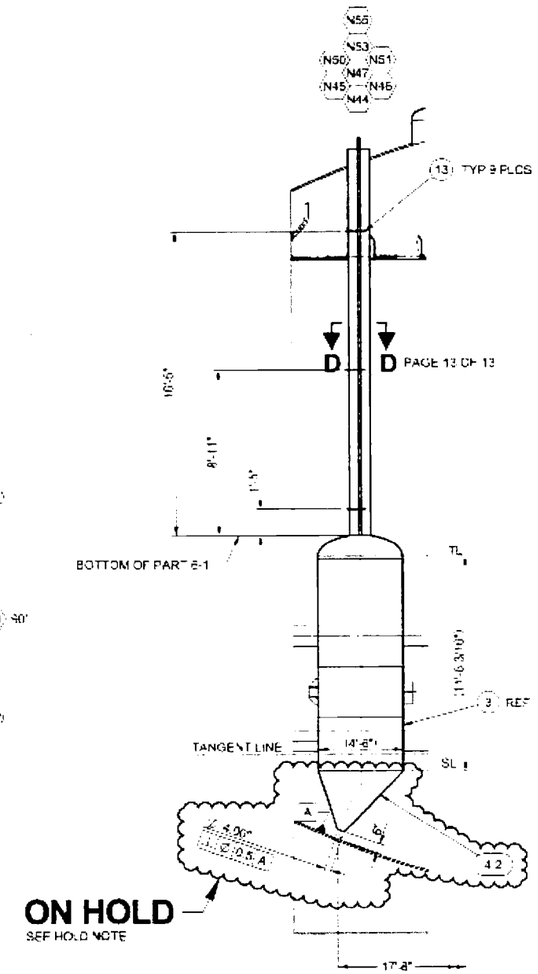

ELEVATION

ASSEMBLIES (A) (B)

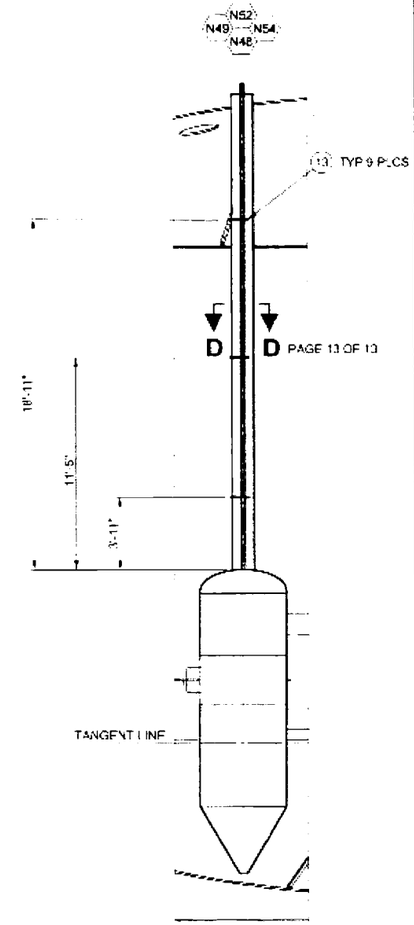

ELEVATION

ASSEMBLY (C)

ON REFERENCE DRAWING 24590-QL-SRA-MTF5-00001-14-14

SHIP PC	MARK	ASSY PC	DESCRIPTION	LENGTH FEET	LENGTH INCHES	SPEC.	D	EST WT
6X2	6-13		ROUND BAR 1" DIA x 7" L			M4		
2	4-2		PLATE 5/8" THK ROLLED			M1		
			M1 = ASME SA240 TP 316/316H					
			M4 = ASME SA479 TP 316/316L					

NOTES:

1 PIPE GUIDE STRAPS ARE WELDED AFTER CORRECTLY POSITIONING THE PIPE GUIDE STRAP SUPPORTS PIPE GUIDE STRAP SHALL MAINTAIN 1/16" DIAMETRAL CLEARANCE WITH PIPE

2 PLACE A SOFT MATERIAL 1/16" SPACER (E.G. ADHESIVE BACKED CORK) ONTO ENDS OF 1"X2" BARS (PART 6-13). INSERT BARS UNTIL THEY CONTACT PIPE (PART 6-2 OR 6-7) PRIOR TO PERFORMING WELD ON BAR (PART 6-13)

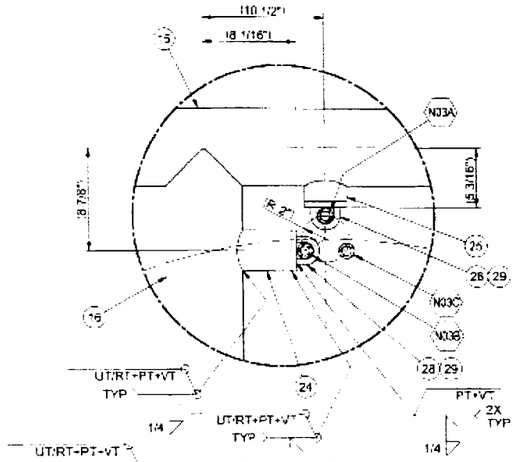

DETAIL 2

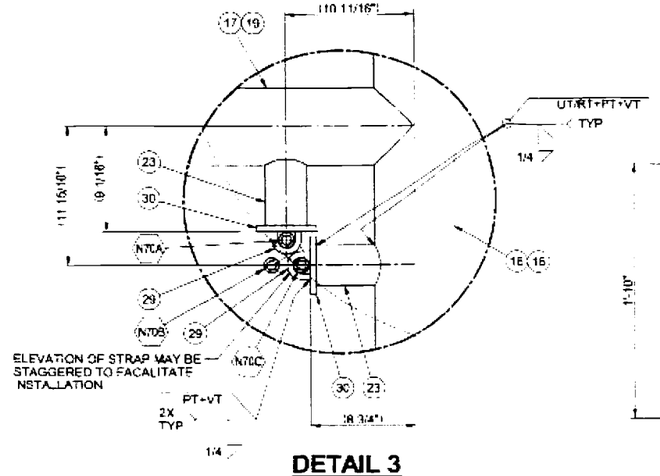

DETAIL 3

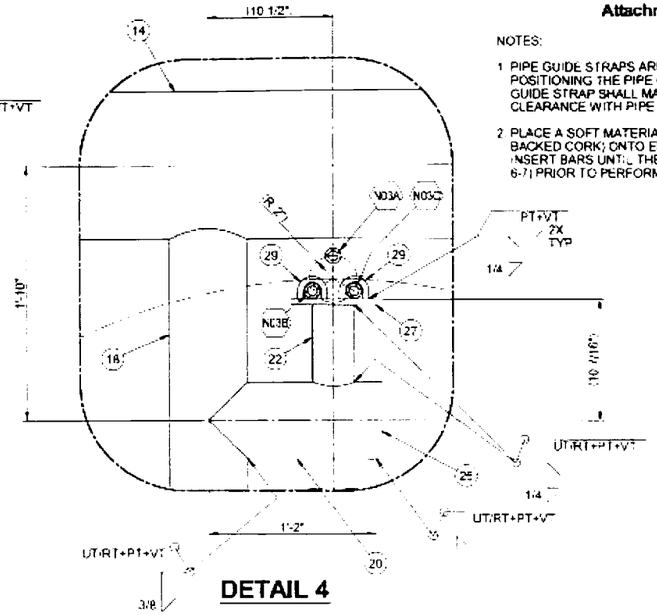

DETAIL 4

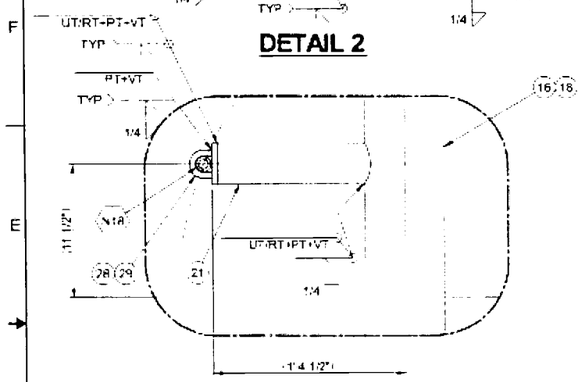

DETAIL 5

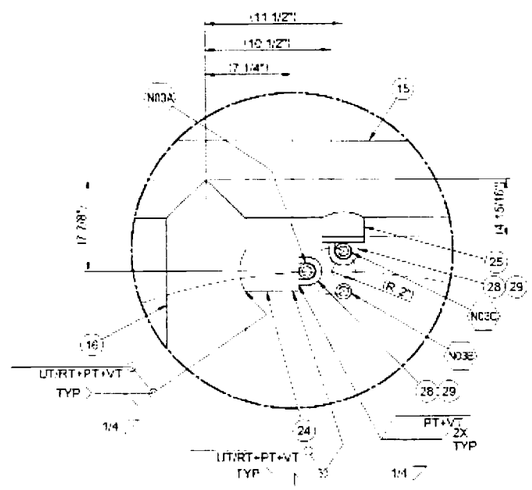

DETAIL 8

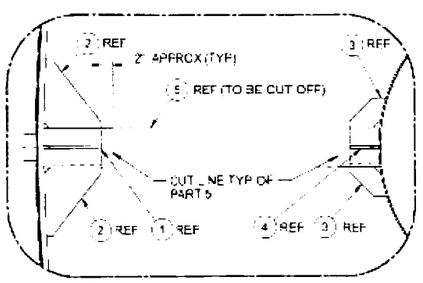

DETAIL 6

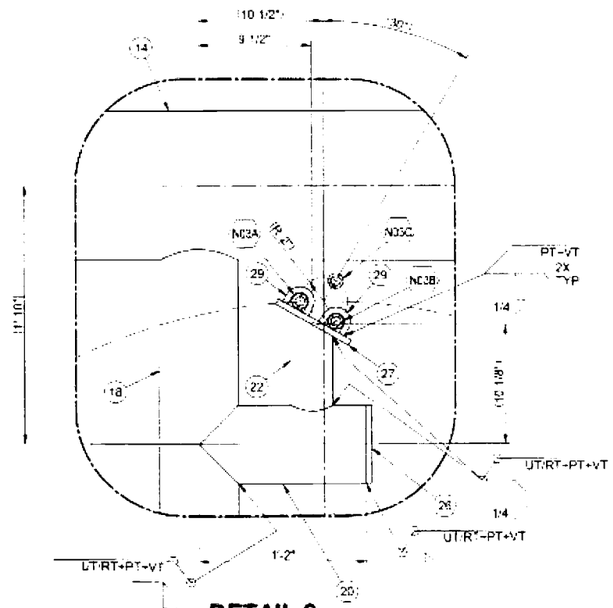

DETAIL 9

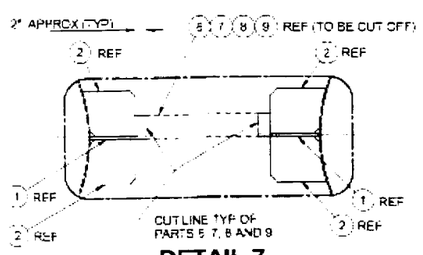

DETAIL 7

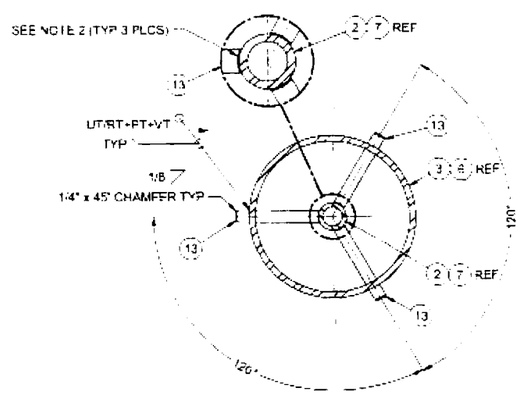

SECTION D-D

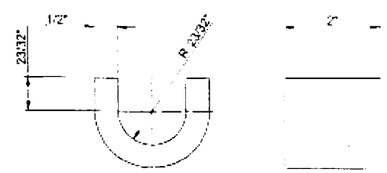

29 PIPE GUIDE STRAP

Drawing Change Notice

CHANGE DOCUMENT NO. 24590-PTF-VDCN-MS-11-00004

JOB NO.	TITLE FOR CHANGE NOTICE
24590	PTF-FRP-VSL-00002A VESSEL SUPPORTS REDESIGN

DESIGN DOCUMENT NUMBER	REV	DESIGN DOCUMENT NUMBER	REV
24590-QL-SRA-MTF5-00001-27-01	I	24590-QL-SRA-MTF5-00001-27-06	B
24590-QL-SRA-MTF5-00001-27-07	B	24590-QL-SRA-MTF5-00001-27-17	B
24590-QL-SRA-MTF5-00001-27-21	J	24590-QL-SRA-MTF5-00001-27-22	H
24590-QL-SRA-MTF5-00001-27-23	H	24590-QL-SRA-MTF5-00001-27-24	D
24590-QL-SRA-MTF5-00001-27-27	C	24590-QL-SRA-MTF5-00001-27-29	C
24590-QL-SRA-MTF5-00001-27-30	D	24590-QL-SRA-MTF5-00001-27-32	B
24590-QL-SRA-MTF5-00001-27-33	D	24590-QL-SRA-MTF5-00001-29-00070	C

PART OF DESIGN CHANGE PACKAGE (DCP)? ☐ Yes ☒ No DCP No.: Rev:

JUSTIFICATION FOR CHANGE	CAUSE CODE
Based on the re-analysis of FRP-VSL-00002A/B/C/D, per calculation 24590-PTF-MVC-FRP-00003, for revised seismic conditions and design evolution, a redesign of the vessel is required.	01-23

Supersedes Change Document ☐ Yes ☒ No

ECN Needed ☐ Yes ☒ No

REQUIREMENTS REVIEW

Client Approval Required ☐ Yes ☒ No | Interface Resolution Required * ☐ Yes ☒ No

Address any "yes" answers in the description

DESCRIPTION OF CHANGE

Note: Components removed or deleted per this VDCN are to be removed from the actual vessel unless Otherwise noted.

1. **Affected Document: 24590-QL-SRA-MTF5-00001-27-01 (see Attachment 1, page 1 of this VDCN).**

a) Bill of Materials block: Revise the following line Items.

Line Item N3 Elevation block: 35'-3" from 35'-6 5/8".

Line Item N3 Description / Service block: INSTRUMENTATION from SPARE CAPPED.

b) Bill of Materials block: Add the following line Items.

Line Item N03A

Line Item N03B

Line Item N03C

Please note that source, special nuclear, and byproduct materials, as defined in the Atomic Energy Act of 1954 (AEA) are regulated at the U. S. Department of Energy (DOE) facilities exclusively by DOE acting pursuant to its AEA authority. DOE asserts that pursuant to AEA, it has sole and exclusive responsibility and authority to regulate source, special nuclear, and byproduct materials at DOE-owned nuclear facilities. Information contained herein on radionuclides is provided for process description purposes only.

c) Elevations:

Delete Nozzle N3 bubble from N2 bubble column.

Add Nozzle bubble number N03, N03A, N03B and N03C to N70 bubbler column.

Add Knuckle Stiffener plates shown on Attachment 1, page 12 of this VDCN.

Revise Outer PJM nozzle cone to eccentric from concentric shown on 24590-PTF-VDCN-MS-00003, Attachment 1, page 12, Elevation Assemblies A & B.

d) Note: Add the following notes :

2. WELD SHOWN MAY BE FIELD-APPLIED AS NECESSARY TO SUPPORT INSTALLATION OF COMPONENTS

3. FABRICATION TOLERANCES FOR FIELD MODIFICATIONS SHALL BE PER 24590-WTP-MV-M59T-00001 (PRESSURE VESSEL TOLERANCES STANDARD DETAILS) AND PFI STANDARD ES-24 (PIPE BENDING METHODS, TOLERANCES, PROCESS AND

DESCRIPTION OF CHANGE

MATERIAL REQUIREMENT). FOR TOLERANCES NOT SPECIFIED BY THESE STANDARDS, THE FOLLOWING SHALL APPLY, UNLESS OTHERWISE NOTED:

DIMENSION	TOLERANCE
LINEAR <12 IN	± 1/8 INCHES
LINEAR >=12 IN	± 1/4 INCHES
ANGULAR	± 2 DEGREES

e) Add a HOLD LIST as follows:

HOLD LIST
1. KNUCKLE STIFFENER PLATES ARE ON HOLD PENDING CONFIRMATION OF VESSEL MAXIMUM OPERATING PRESSURE.
2. WASH RING PIPE SCHEDULE CHANGE IS ON HOLD PENDING CONFIRMATION OF VESSEL MAXIMUM OPERATING PRESSURE.
3. INSTALLATION OF REVISED PJM NOZZLES ON OUTER PJMS IS ON HOLD PENDING RESOLUTION OF MIXING REQUIREMENTS.

2. Affected Document: 24590-QL-SRA-MTF5-00001-27-06 (see Attachment 1, page 2 of this VDCN).

a) Bill of Materials block: Add Item 5-4 shown on Attachment 1, page 12 of this VDCN.

b) Plan View: Add Knuckle Stiffener plates shown on Attachment 1, page 12 of this VDCN.

c) View C-C: Add Knuckle Stiffener plates shown on Attachment 1, page 12 of this VDCN.

3. Affected Document: 24590-QL-SRA-MTF5-00001-27-07 (see Attachment 1, page 3 of this VDCN).

a) Bottom Head Details Drawing:

Add Knuckle Stiffener Plate, Item 4 shown on Attachment 1, page 12 of this VDCN.

Add Details D, E, and F shown on Attachment 1, page 12 of this VDCN.

4. Affected Document: 24590-QL-SRA-MTF5-00001-27-17 (see Attachment 1, page 4 of this VDCN).

a) Bill of Materials block: Delete the following line Item.

Line Item 12-2

b) Bill of Materials block: Add the following line Items shown on Attachment 1, page 13 of this VDCN.

Line Item 12-3

Line Item 12-4

Line Item 12-5

Line Item 12-6

Line Item 12-7

Line Item 12-8

Line Item 12-9

Line Item 12-10

Line Item 12-11

Line Item 12-12

Line Item 12-13

Line Item 12-14

Drawing Change Notice

CHANGE DOCUMENT NO.
24590-PTF-VDCN-MS-11-00004

JOB NO.	TITLE FOR CHANGE NOTICE
24590	PTF-FRP-VSL-00002A VESSEL SUPPORTS REDESIGN

DESCRIPTION OF CHANGE

Line Item 12-15

Line Item 12-16

Line Item 12-17

Line Item 12-18

c) Joint A: Replace Item 2 (Cap) with Item 6 (Plate), including updating depiction to show new instrument nozzle as shown on Attachment 1, page 13 of this VDCN.

d) Cross Section of Nozzle view: Delete the following shown on Attachment 1, page 13 of this VDCN.

Item 12-2

Dimensions

e) Cross Section of Nozzle view: Add Item, Dimension, and Dip Pipe supports shown on Attachment 1, page 13 of this VDCN.

Items 12-3 through 12-18

Dimensions

Dip Pipe Supports (phantom lines)

f) Title Block: Revise the Title as shown on Attachment 1, page 4 of this VDCN.

g) Nozzle N3 Assembly Drawing: Add View, Details, and Sections and Item shown on Attachment1, page 13 of this VDCN.

View A-A

Detail 1

Sections B-B, C-C, and D-D

Item 16 Pipe Guide Strap

5. Affected Document: 24590-QL-SRA-MTF5-00001-27-21 (see Attachment 1, page 5 of this VDCN).

a) Bill of Materials block: Delete the following line Items.

Line Item 18-8

Line Item 18-9

Line Item 18-22

Line Item 18-23

b) Bill of Materials block: Add the following line Items shown on Attachment 1, page 14 of this VDCN.

Line Item 18-24

Line Item 18-25

Line Item 18-26

Line Item 18-27

Line Item 18-28

Line Item 18-29

Line Item 18-30

Drawing Change Notice

CHANGE DOCUMENT NO.
24590-PTF-VDCN-MS-11-00004

JOB NO.	TITLE FOR CHANGE NOTICE
24590	PTF-FRP-VSL-00002A VESSEL SUPPORTS REDESIGN

DESCRIPTION OF CHANGE

c) Bill of Materials block: Revise the following line Items.

Line Item 18-5 ASSM PC block: 12 from 17.

d) Cross Section of Nozzle view: Delete the following Items and Detail view.

Items 18-8, 18-9, 18-22, 18-23 and 18-5 (from bell)

Joint G (View)

Dimensions on Support

Weld Symbol on Support

e) Notes: Delete the following note.

Note 3

f) Cross Section of Nozzle view: Add the following Section callout.

Section X

g) Cross Section of Nozzle view: Revise the following dimensions.

42'-1 3/4" from 41'-11 1/4"

38'-1 3/4" from 38'-11 1/4"

40'-10 3/4" from 41'-8 1/4"

35'-10 3/4" from 36'-8 1/4"

37'-7 3/4" from 38'-5 1/4"

42'-7 3/4" from 43'-5 1/4"

1'-0" from 2 1/2"

h) Cross Section of Nozzle view: Add the following Section, view, dimensions, and support shown on Attachment 1, page 14 of this VDCN.

Dimension on Bracing bars

Section N-N

Dip Pipe Support (Phantom lines)

i) Nozzle N70 Assembly Drawing: Add Detail, and Section and Item shown on Attachment1, page 14 of this VDCN.

Detail 1

Section N-N

Item 27 Pipe Guide Plate

6. Affected Document: 24590-QL-SRA-MTF5-00001-27-22 (see Attachment 1, page 6 of this VDCN).

a) Section E: Delete the following Items.

Items 8, 9, 14 and 15

Section P with arrows

b) N70 Pipe Assembly Drawing: Delete the following Sections, Items, and Details.

Sections P

Drawing Change Notice

CHANGE DOCUMENT NO.
24590-PTF-VDCN-MS-11-00004

JOB NO.	TITLE FOR CHANGE NOTICE
24590	PTF-FRP-VSL-00002A VESSEL SUPPORTS REDESIGN

DESCRIPTION OF CHANGE

Section S-S

Joint G

Items 9 and 15

c) Section J: Replace Item 5 (Plate 1/2") with Item 29 (Block Plate) as shown on Attachment 1, page 14, Section P-P of this VDCN.

d) Section M: Replace Item 5 (Plate 1/2") with Item 30 (Block Plate) as shown on Attachment 1, page 14, Section R-R of this VDCN

7. **Affected Document: 24590-QL-SRA-MTF5-00001-27-23 (see Attachment 1, page 7 of this VDCN).**

a) Bill of Materials block: Delete the following line Items.

Line Item 19-5

Line Item 19-6

Line Item 19-7

Line Item 19-8

Line Item 19-9

Line Item 19-10

Line Item 19-11

Line Item 19-12

Line Item 19-13

Line Item 19-14

Line Item 19-15

Line Item 19-16

Line Item 19-17

b) Bill of Materials block: Add the following line Items shown on Attachment 1, page 14 of this VDCN.

Line Item 19-18

Line Item 19-19

Line Item 19-20

Line Item 19-21

c) Elevation view: Add the following Items shown on Attachment 1, page 14 of this VDCN

Items 18, 19, 20 and 21

d) Elevation view: Delete the following Items.

Items 5, 6, 7, 8, 11, 14 and 15

e) N18 3/4" DIA Temperature Drawing: Delete the following Detail and Sections.

Detail F

Sections C and D

Drawing Change Notice

CHANGE DOCUMENT NO.
24590-PTF-VDCN-MS-11-00004

JOB NO.	TITLE FOR CHANGE NOTICE
24590	PTF-FRP-VSL-00002A VESSEL SUPPORTS REDESIGN

DESCRIPTION OF CHANGE

f) N18 3/4" DIA Temperature Drawing: Add the following Item.

Item 21 Pipe Guide Strap

8. Affected Document: 24590-QL-SRA-MTF5-00001-27-27, (see Attachment 1, page 8 of this VDCN).

a) Bill of Materials block: Delete the following line Items.

Line Item 22-1

b) Cross Section of Nozzle view: Delete the following Items and Detail view.

Item 22-1

Joint A

9. Affected Document: 24590-QL-SRA-MTF5-00001-27-29 (see Attachment 1, page 9 of this VDCN).

a) Bill of Materials block: Add the following line Items shown on Attachment 1, page 15 of this VDCN.

Line Item 30-9

Line Item 30-10

Line Item 30-11

Line Item 30-12

Line Item 30-13

b) Section A: Add the following Items shown on Attachment 1, page 15 of this VDCN

Items 9 thru 13

c) Section A and Nozzle N64 Plan View of Nozzle: Update depiction on PJM support to show new PJM lateral supports and PJM eccentric nozzle as shown on Attachment 1, page 7 of 24590-PTF-VDCN-MS-11-00003 document

10. Affected Document: 24590-QL-SRA-MTF5-00001-27-30 (see Attachment 1, page 10 of this VDCN).

a) Section E: Add the following Items shown on Attachment 1, page 15 of this VDCN

Items 9, 11 and 13

b) Detail F: Add the following Items shown on Attachment 1, page 15 of this VDCN

Items 10 and 12

c) N63 4" Dia Details Drawing: Add the following Sections, View and Items shown on Attachment 1, page 15 of this VDCN

Sections A-A, L-L and J-J

View K-K

Item 11 Bracket Plate

d) Section E: Delete the following

Weld leader

e) Item 4: Revise the following Diameter

R 2 5/16 to R 2 7/8"

Drawing Change Notice

CHANGE DOCUMENT NO.
24590-PTF-VDCN-MS-11-00004

JOB NO.	TITLE FOR CHANGE NOTICE
24590	PTF-FRP-VSL-00002A VESSEL SUPPORTS REDESIGN

DESCRIPTION OF CHANGE

11. Affected Document: 24590-QL-SRA-MTF5-00001-29-70 (see Attachment 1, page 11 of this VDCN).

a) Bill of Materials block: Delete the following line Items.

Line Item 18-5

Line Item 18-14

Line Item 18-15

Line Item 18-16

Line Item 18-17

Line Item 18-19

Line Item 18-20

Line Item 18-21

b) Drawing: Delete the following All Support Details and Items 18-5, 18-14 thru 18-21.

12. Affected Document: 24590-QL-SRA-MTF5-00001-27-24 (see Attachment 1, page 16 of this VDCN).

a) Drawing: Delete the following.

Items 5, 6, 12, 13, 14, 15, 16 and 17

Section X-X

13. Affected Document: 24590-QL-SRA-MTF5-00001-27-32 (see Attachment 1, page 17 of this VDCN).

a) Bill of Materials block: Revise the following line Items:

Line Item 35-1 Description block: Sch 40S to Sch 160S

Line Item 35-2 Description block: Sch 40S to Sch 160S

Line Item 35-3 Description block: Sch 40S to Sch 160

ORIGINATOR	CHECKER
D. HARRIS	W. WILCOX

Reviews

CON - B. FOSTER	E&NS - J. HINCKLEY	CS&A - S. GERMAIN D. Harris sign for S. Germain via telecon	MET - J. DISNEY
MS&PE - B. LINDBERG	PD - L. LEYLAND	6/8/11 3:45	

Approval(s)

PT EQUIP EGS - J. JULYK			

Date (*inserted by final approver*): 6/8/11

REVISE BY RPP-WTP

CBI RECEIVED
APR 05 2005

ADD NOZZLES BY RPP-WTP

DELETE NOZZLE BY RPP-WTP

CBI RECEIVED
MAR 17 2005

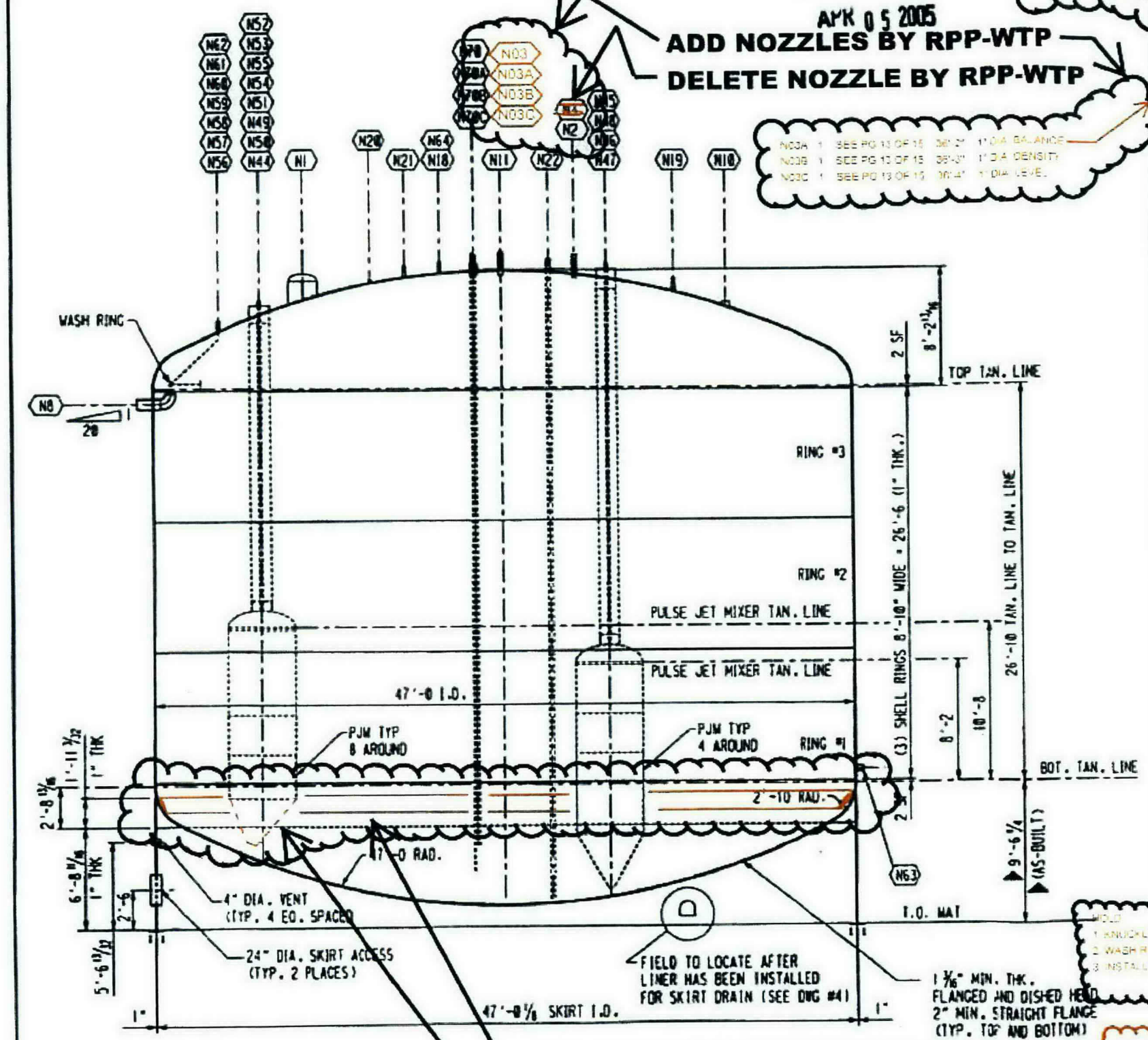

35'-3"

N03A 1 SEE PG 13 OF 15 36'-2" 1" DIA. BALANCE
N03B 1 SEE PG 13 OF 15 36'-2" 1" DIA. DENSITY
N03C 1 SEE PG 13 OF 15 36'-4" 1" DIA. LEVEL

FITTINGS FURNISHED & INSTALLED BY CBI

MARK	NO. REQ'D.	CBI MARK	AS-BUILT NOZZLE ELEVATIONS (SEE NOTE 1)	DESCRIPTION / SERVICE
N1	1	SEE DWG 11	34'-2 3/8"	24" DIA. MANWAY (CAPPED)
N2	1	SEE DWG 11	35'-6 9/16"	3" DIA. INLET
N3	1	SEE DWG 12	35'-6 3/4"	6" DIA. ~~SPARE (CAPPED)~~ INSTRUMENTATION
N8	1	SEE DWG 13	35'-0 7/8"	8" DIA. OVERFLOW
N10	1	SEE DWG 15	32'-8 1/4"	6" DIA. PASSIVE AIR INLET
N11	1	SEE DWG 16	35'-5 11/16"	8" DIA. VESSEL VENT
N18	1	SEE DWG 19	35'-6 11/16"	3/4" DIA. TEMPERATURE
N19	1	SEE DWG 20	34'-6 1/4"	1" DIA. SPARE (CAPPED)
N20	1	SEE DWG 21	34'-6 3/4"	2" DIA. CONCENTRATE RECYCLE INLET
N21	1	SEE DWG 22	35'-6 11/16"	1" DIA. SPARE WITH DIP PIPE (CAPPED)
N22	1	SEE DWG 23	35'-7 3/4"	3" DIA. SPARE WITH DIP PIPE (CAPPED)
N44	1	•	33'-2"	2"/14" DIA. AIR/VACUUM TO FRP-PJM-00061
N45	1	•	33'-1 1/8"	2"/14" DIA. AIR/VACUUM TO FRP-PJM-00062
N46	1	•	33'-1 1/2"	2"/14" DIA. AIR/VACUUM TO FRP-PJM-00063
N47	1	•	33'-1 3/8"	2"/14" DIA. AIR/VACUUM TO FRP-PJM-00064
N48	1	•	35'-5 5/8"	2"/14" DIA. AIR/VACUUM TO FRP-PJM-00065
N49	1	•	35'-4 15/16"	2"/14" DIA. AIR/VACUUM TO FRP-PJM-00066
N50	1	•	33'-1 5/8"	2"/14" DIA. AIR/VACUUM TO FRP-PJM-00067
N51	1	•	33'-0 11/16"	2"/14" DIA. AIR/VACUUM TO FRP-PJM-00068
N52	1	•	35'-4 3/4"	2"/14" DIA. AIR/VACUUM TO FRP-PJM-00069
N53	1	•	33'-1 5/8"	2"/14" DIA. AIR/VACUUM TO FRP-PJM-00070
N54	1	•	35'-5 1/8"	2"/14" DIA. AIR/VACUUM TO FRP-PJM-00071
N55	1	•	33'-1 5/8"	2"/14" DIA. AIR/VACUUM TO FRP-PJM-00072
N56	1	SEE DWG 35	30'-7 1/2"	2" DIA. INLET TO WASH RING
N57	1	SEE DWG 35	30'-7 1/4"	2" DIA. INLET TO WASH RING
N58	1	SEE DWG 35	30'-7 3/8"	2" DIA. INLET TO WASH RING
N59	1	SEE DWG 35	30'-7 1/16"	2" DIA. INLET TO WASH RING
N60	1	SEE DWG 35	30'-7 1/8"	2" DIA. INLET TO WASH RING
N61	1	SEE DWG 35	30'-7 3/8"	2" DIA. INLET TO WASH RING
N62	1	SEE DWG 35	30'-7 7/8"	2" DIA. INLET TO WASH RING
N63	1	SEE DWG 30	SEE DWG 30	4" DIA. OUTLET
N64	1	SEE DWG 31	35'-6 5/8"	1 1/2" DIA. FORCED PURGE AIR INLET
N70	1	SEE DWG 18	-	6" DIA. INSTRUMENTATION
N70A	1	SEE DWG 18	35'-8 5/8"	1" DIA. BALANCE
N70B	1	SEE DWG 18	35'-9 5/8"	1" DIA. DENSITY
N70C	1	SEE DWG 18	35'-10 1/4"	1" DIA. LEVEL

24590-QL-SRA-MTF5-00001-27-01
REV (H) I

R10391557

SEE PULSE JET MIXER CONTROL SCHEDULE FOR NOZZLE DETAILS AND OTHER ATTACHMENTS TO SHELL.

HOLD
1. KNUCKLE STIFFENER PLATES ARE ON HOLD PENDING CONFIRMATION OF VESSEL MAXIMUM OPERATING PRESSURE
2. WASH RING PIPE SCHEDULE CHANGE IS ON HOLD PENDING CONFIRMATION OF VESSEL MAXIMUM OPERATING PRESSURE
3. INSTALLATION OF REVISED PJM NOZZLES ON OUTER PJMS IS ON HOLD PENDING CONFIRMATION OF MIXING REQUIREMENTS

CERTIFIED AS BUILT
CONTRACT DRAWING
DATE: 4/5/05
BY: [illegible]

CBI

GENERAL ELEVATION
VESSEL FRP-VSL-00002A (Q)
WASTE FEED RECEIPT
RICHLAND, WA

CONTRACT NO 137202A
DWG 1 REV 11
SHT 1

CAD FILE: 202H01A.DGN

ADD NOTE
BY RPP-WTP

ADD KNUCKLE STIFFENERS BY RPP-WTP ON HOLD

REVISE PJM NOZZLE BY RPP-WTP ON HOLD

NOTES:

1. ALL ELEVATIONS ARE TO FACE OF FLANGE OR END OF PIPE AND FROM BOTTOM TANGENT LINE. ~~EXCEPT NOZZLES N1 & N63 WHICH ARE TO HORIZONTAL CENTERLINE OF NOZZLE FROM BOTTOM T/L.~~
2. WELD SHOWN MAY BE FIELD - APPLIED AS NECESSARY TO SUPPORT INSTALLATION OF COMPONENTS
3. FABRICATION TOLERANCES FOR FIELD MODIFICATIONS SHALL BE PER 24590-WTP-MV-M59T-00001 (PRESSURE VESSEL TOLERANCES STANDARD DETAILS) AND PFI STANDARD ES-24 (PIPE BENDING METHODS, TOLERANCES, PROCESS AND MATERIAL REQUIREMENT). FOR TOLERANCES NOT SPECIFIED

▶ INDICATES CHANGE FROM PREVIOUS ISSUE

~~24590-QL-SRA-MTF5-00001-27-01 REV 00H 27-01H~~ KY 6/13/05

24590-PTF-VDCN-MS-11-00004
Attachment 1: Page 2 of 17

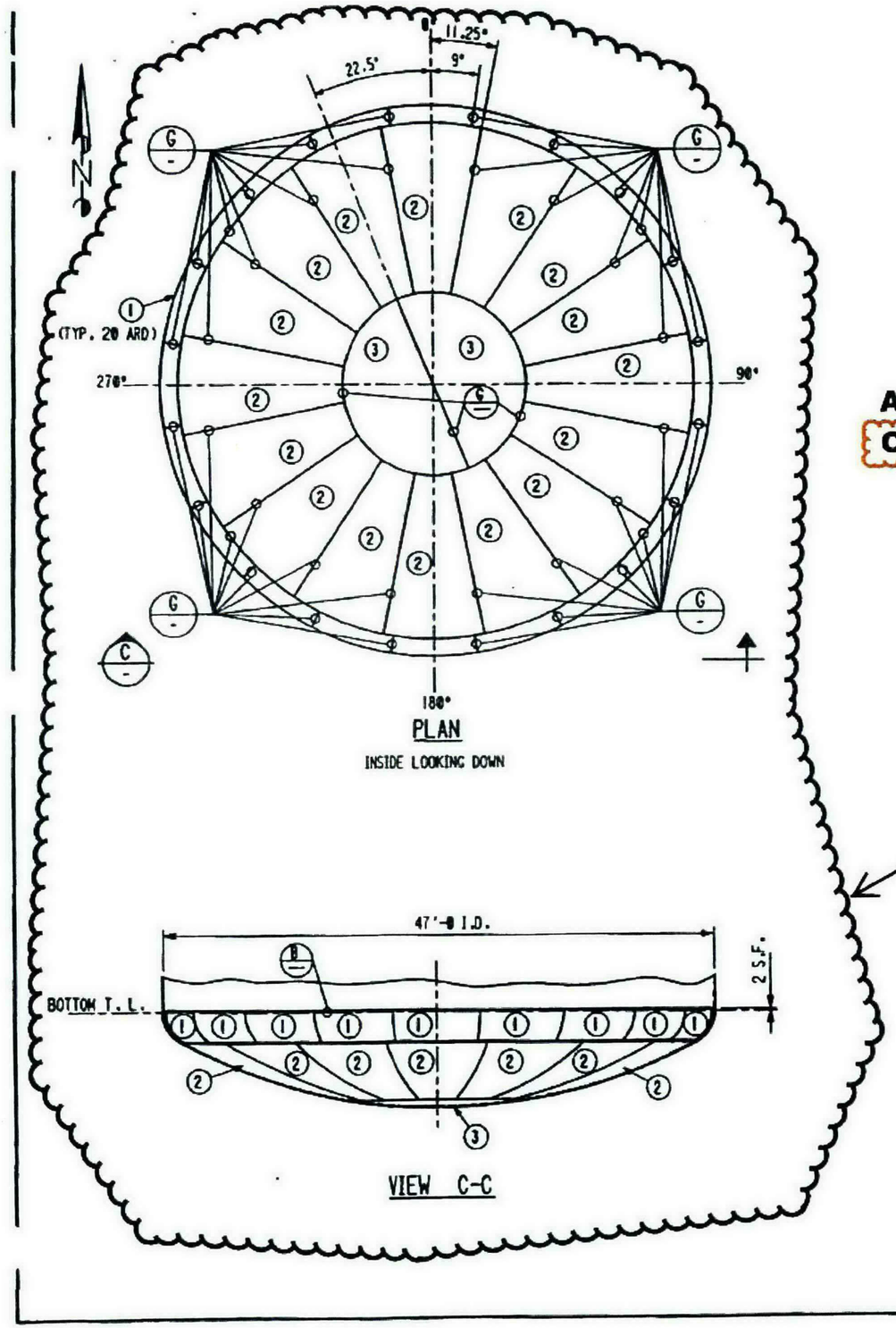

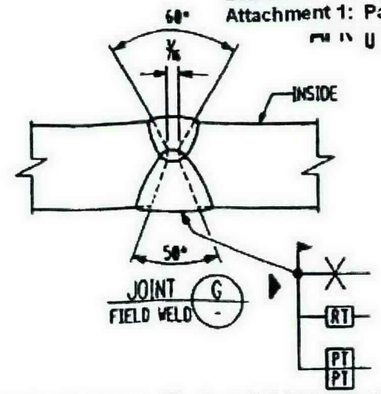

ADD ITEM 5-4 BY RPP-WTP

ON HOLD

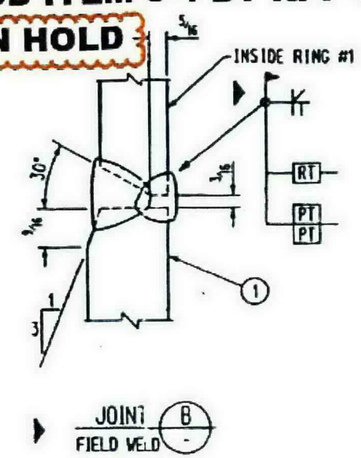

ADD KNUCKLE STIFFNER PLATES
BY RPP-WTP ON HOLD

SHIP PC	MARK	ASSM PC	DESCRIPTION	LENGTH FT	LENGTH IN	SPEC	ID	EST WT
20	5-1		PL SK x 1 3/16			M1	A	22710
			(45" x 1.2" x 7'-7)					
16	5-2		PL SK x 1 3/16			M1	A	72535
			(104 9/16 x 1.2 x 15'-3 5/16					
2	5-3		PL SK x 1 3/16			M1	A	9963
			(96 x 1.2 x 20'-0)					
			M1 = SA240 316L, CBI SPEC#A-240-240					

CBI RECEIVED
MAY - 1 2003

4/23/03 4-23-03
Processed/Data Entry | Copied/QA | Scanned | Filed
B
A 6/4/19/03
C UB 4/23/03

Bechtel Systems & Infrastructure, Inc.

JOB No 24590

SUPPLIER DOCUMENT STATUS
1. ☑ WORK MAY PROCEED
2. ☐ REVISE AND RESUBMIT. WORK MAY PROCEED SUBJECT TO RESOLUTION OF INDICATED COMMENTS
3. ☐ REVISE AND RESUBMIT. WORK MAY NOT PROCEED
4. ☐ REVIEW NOT REQUIRED. WORK MAY PROCEED

PERMISSION TO PROCEED DOES NOT CONSTITUTE ACCEPTANCE OR APPROVAL OF DESIGN DETAILS, CALCULATIONS, ANALYSES, TEST METHODS, OR MATERIALS DEVELOPED OR SELECTED BY THE SUPPLIER AND DOES NOT RELIEVE SUPPLIER FROM FULL COMPLIANCE WITH CONTRACTUAL OBLIGATIONS.

	M	P	ML	H	MH	E	C&I	CS&A	PD	PT	ESH
REVIEWED											

G-321 DOCUMENT CATEGORY 1.1
[From Supplement A to G-321-E (E) or G-321-V (V), as applicable]
RESPONSIBLE ENGINEER R. Simmons DATE 30 Apr 03

NOTES:
1. WORK THIS DWG. WITH DWG. #1, 2 & 5 SHT. 2 THRU 4
2. ALL WELDS TO BE 316L UNLESS NOTED OTHERWISE.

24590-QL-SRA-MTF5-00001-27-06
REV 00 B

R10391562

Processed/Data Entry | Copied/QA | Scanned | Filed

~~24590-QL-SRA-MTF5-00001-27-06 Rev 00A~~ KC 6/8/05

CERTIFIED AS BUILT
CONTRACT DRAWING
DATE: 4/5/05
SIGNED: B.A. Balcomb

CBI

BOTTOM HEAD ASSEMBLY
VESSEL FRP-VSL-00002A (Q)
WASTE FEED RECEIPT
RICHLAND, WA

CUSTOMER'S NO BY DU CHKD CSI DATE 8-29-02
PVE / B.A. BALCOMB
ENGINEERING ASSIGNED

CONTRACT NO 137202A
DWG 5 SHT 1 REV 3

INDICATES CHANGE FROM PREVIOUS ISSUE

CAD FILE: 2020501A.dgn

24590-PTF-VDCN-MS-11-00004
Attachment 1: Page 3 of 17

CBI RECEIVED
APR 0 5 2005

4/23/03 4-23-03
Processed/Data Entry | Copied/QA | Scanned | Filed
B
A 4/19/03
C 4/23/03

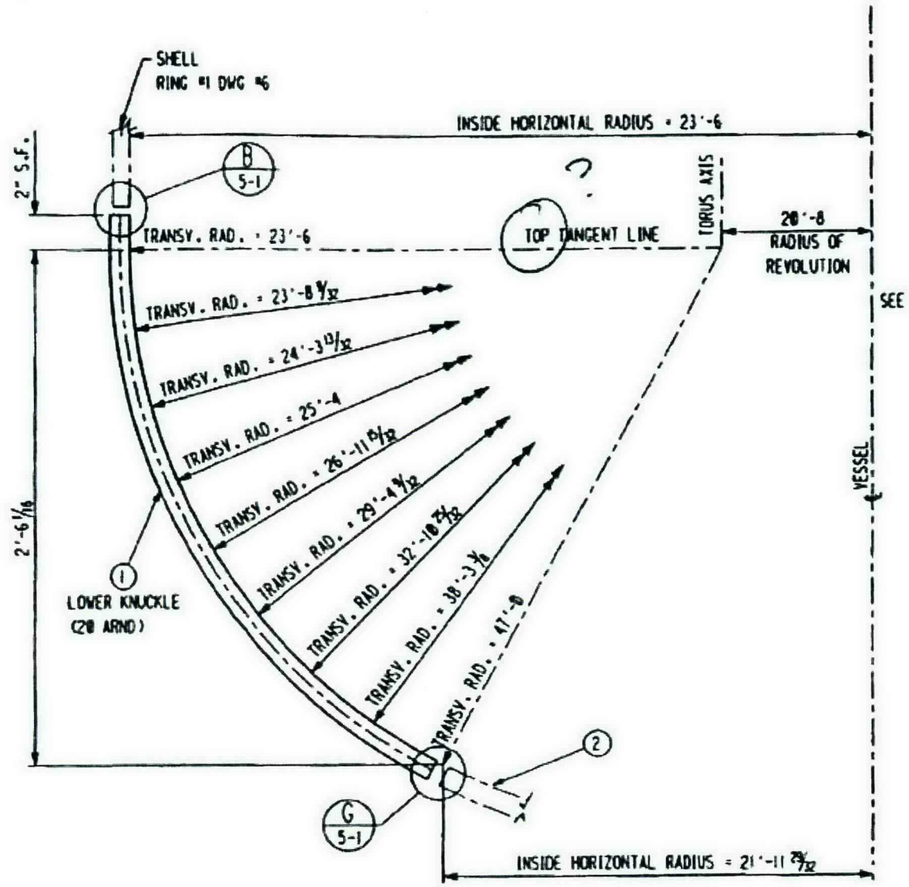

SECTIONAL ELEVATION

ADD KNUCKLE STIFFENER DETAILS BY RPP-WTP ON HOLD

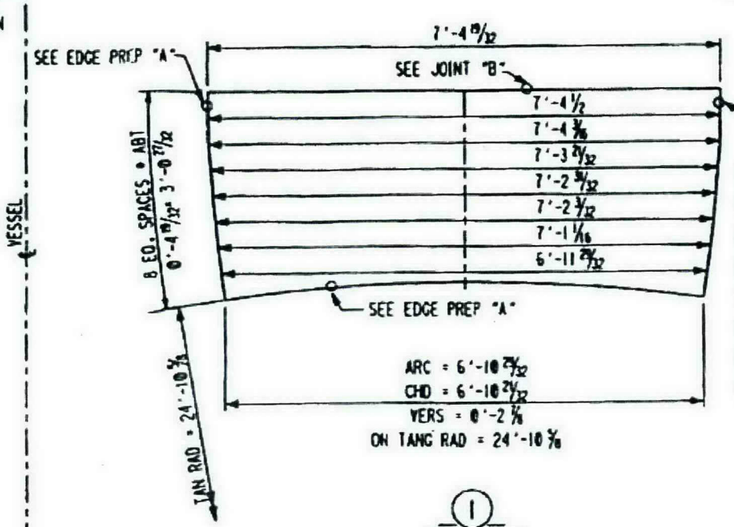

1
DISH NEAR SIDE
DEVELOPED INSIDE VIEW

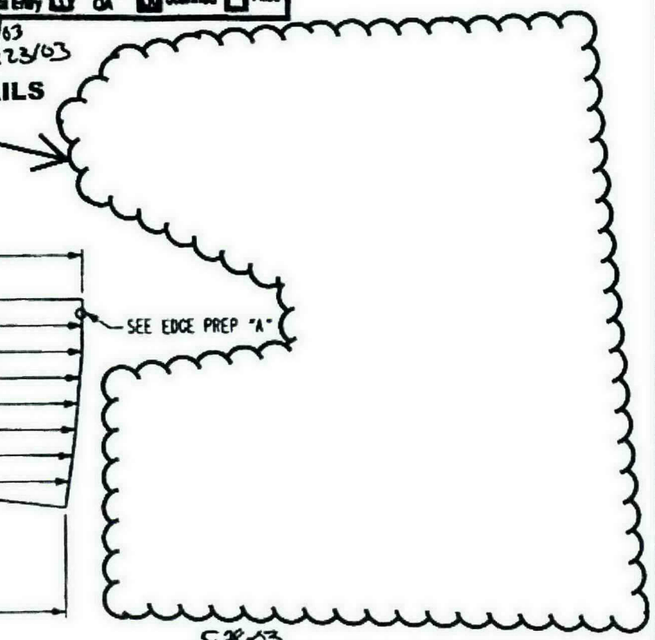

5-28-03
Processed/Data Entry | Copied/QA | Scanned | Filed
B
A 5/27/03
C 5/30/03

R10391563

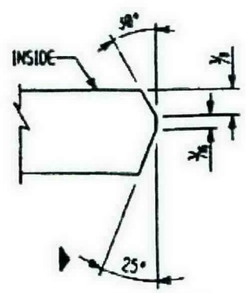

EDGE PREP A

24590-QL-SRA-MTF5-00001- 27-07
REV 00 B

KC 6/8/05

KC 6/8/05

Bechtel Systems & Infrastructure, Inc.

JOB No 24590

SUPPLIER DOCUMENT STATUS

1. ☑ WORK MAY PROCEED
2. ☐ REVISE AND RESUBMIT. WORK MAY PROCEED SUBJECT TO RESOLUTION OF INDICATED COMMENTS
3. ☐ REVISE AND RESUBMIT. WORK MAY NOT PROCEED
4. ☐ REVIEW NOT REQUIRED. WORK MAY PROCEED

PERMISSION TO PROCEED DOES NOT CONSTITUTE ACCEPTANCE OR APPROVAL OF DESIGN DETAILS, CALCULATIONS, ANALYSES, TEST METHODS, OR MATERIALS DEVELOPED OR SELECTED BY THE SUPPLIER AND DOES NOT RELIEVE SUPPLIER FROM FULL COMPLIANCE WITH CONTRACTUAL OBLIGATIONS.

	M	P	ML	H	MH	E	C&I	CS&A	PD	PT	ESH
REVIEWED	LOS										

G-321 DOCUMENT CATEGORY 1.1
[From Supplement A to G-321-E (E) or G-321-V (V), as applicable]
RESPONSIBLE ENGINEER R. Simmons DATE 2MAY03

INDICATES CHANGE FROM PREVIOUS ISSUE

CERTIFIED AS BUILT
CONTRACT DRAWING
DATE: 4/5/05
SIGNED: B.A. Balcomb

CBI

BOTTOM HEAD DETAILS
VESSEL FRP-VSL-00002A (Q)
WASTE FEED RECEIPT
RICHLAND, WA

CUSTOMER'S NO
BY DU CHKD CSI DATE 8-29-02
PVE / B.R. BALCOMB
ENGINEERING ASSIGNED

CONTRACT NO 137202A
DWG 5 REV 1
SHT 2

CAD FILE: 2020502A.dgn

24590-PTF-VDCN-MS-11-00004
Attachment 1: Page 4 of 17

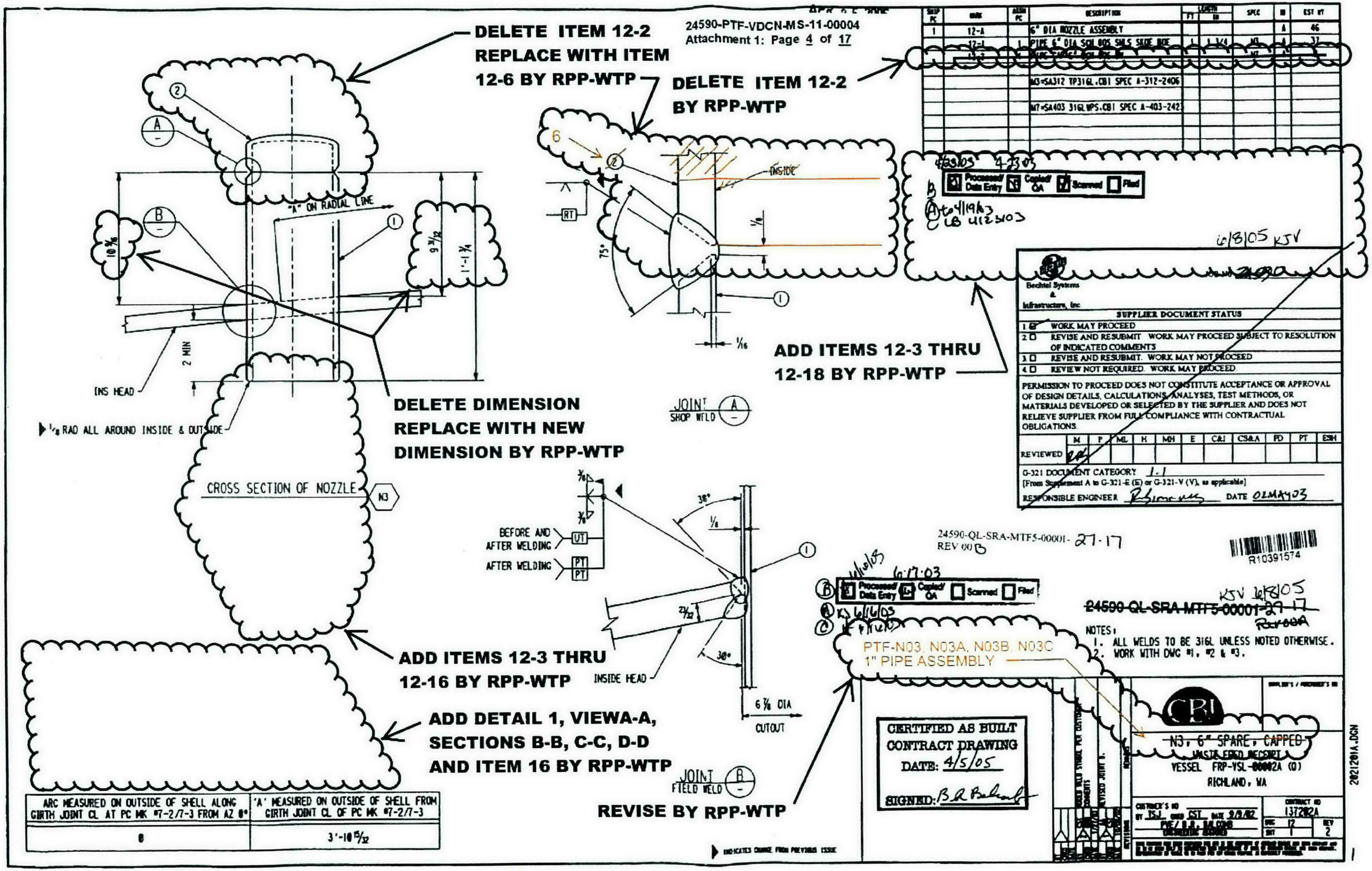

ARC MEASURED ON OUTSIDE OF SHELL ALONG GIRTH JOINT CL AT PC MK #7-2/7-3 FROM AZ 0°	'A' MEASURED ON OUTSIDE OF SHELL FROM GIRTH JOINT CL OF PC MK #7-2/7-3
0	3'-10 15/32

INDICATES CHANGE FROM PREVIOUS ISSUE

REVISE BY RPP-WTP

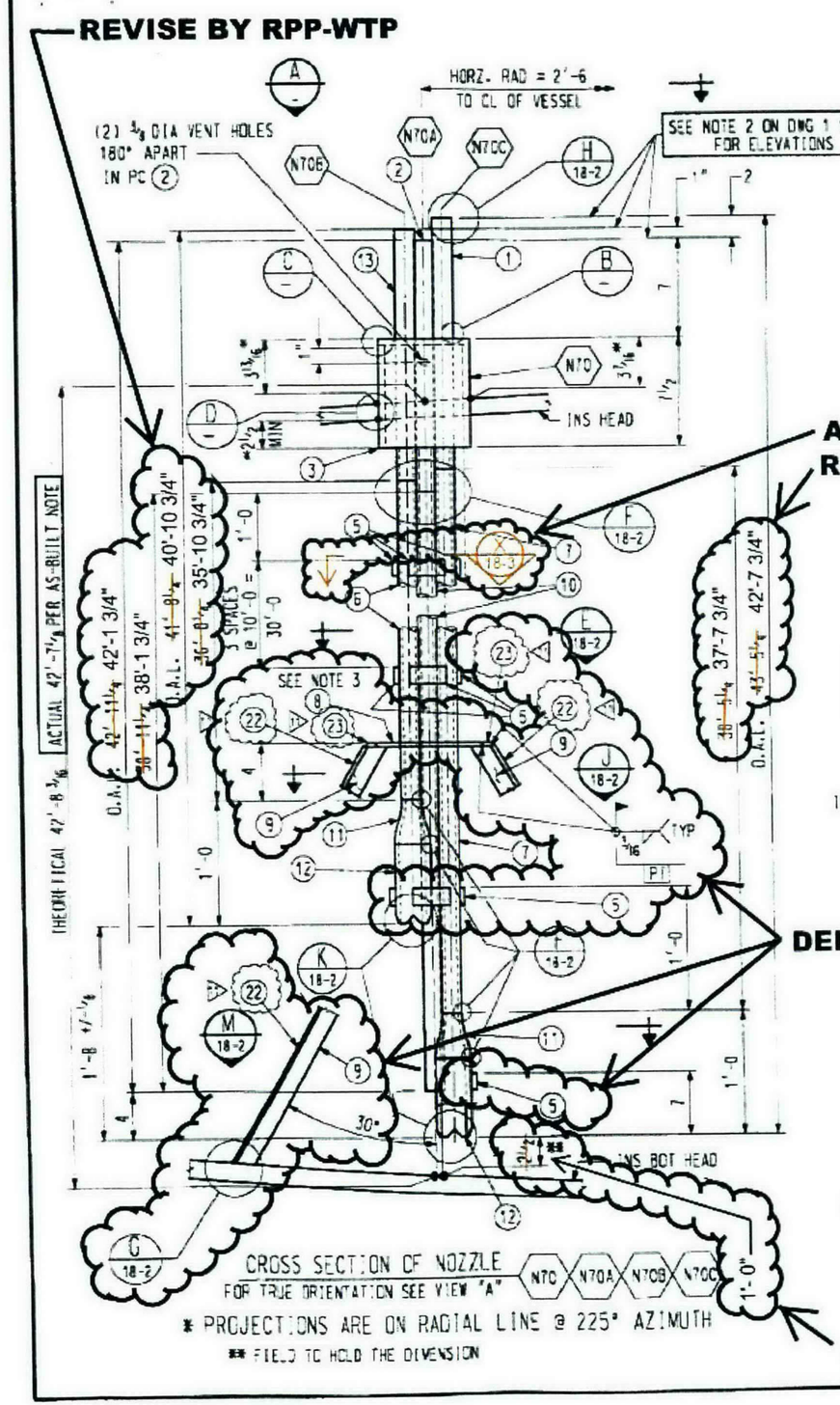

ADD BY RPP-WTP

REVISE BY RPP-WTP

DELETE BY RPP-WTP

REVISE BY RPP-WTP

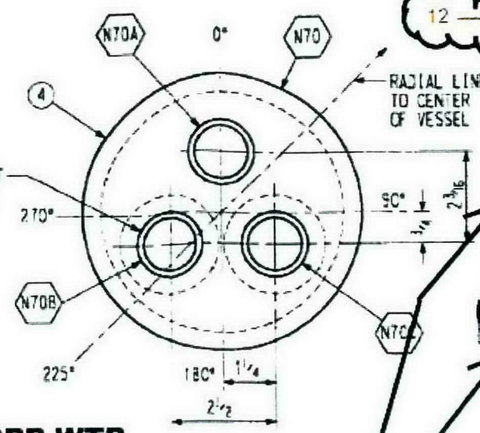

DELETE BY RPP-WTP

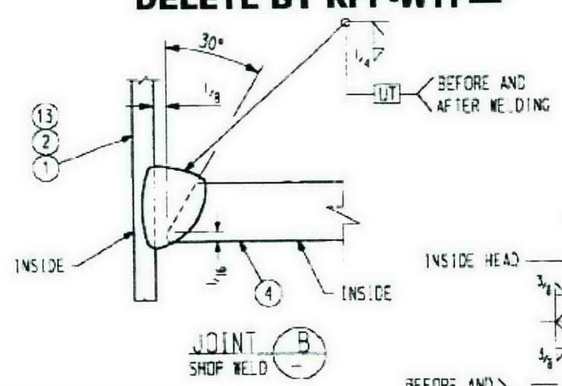

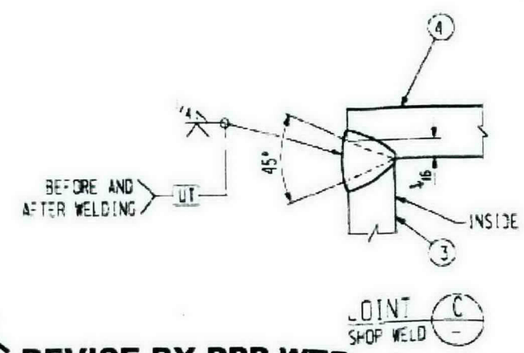

REVISE BY RPP-WTP

▶ INDICATES CHANGE FROM PREVIOUS ISSUE

REVISE BY RPP-WTP

SHIP PC	MARK	ASSM PC	DESCRIPTION	LENGTH	SPEC	ID	EST WT LBS
1	18-A		1" DIA NOZZLE ASSEMBLY				411
	18-1	1	PIPE 1 DIA. SCH 160S X SK	4'-0	M3	A	12
	18-2	1	PIPE 1 DIA. SCH 160S X SK	4'-0	M3	A	12
	18-3	1	PIPE 6 DIA. SCH 80S X SK	7 1/2	M3	A	17
	18-4	1	PL 5 23/32 O.D. X 1/2 X SK		M1	A	4
	18-5	4	PL 3 1/2 X 1/2 X SK	2 1/2	M1	A	16
	18-6	1	PIPE 1 DIA. SCH 160S BBE	36'-10 5/16	M3	A	110
	18-7		PIPE 6 DIA. SCH 160S BBE	18'-2 5/16	M3	A	110
	18-8		PL 5 5/8 O.D. X 1/2 X SK		M1	A	5
	18-9		PIPE 6 DIA. SCH 160S X SK	23 5/16	M3	A	140
	18-11	2	CONC REDUCER 2 X 1 SCH160S SMLS BW		M7	A	3
	18-12	2	PIPE 2 DIA. SCH 160S X SK	9	M3	A	0
	18-13	1	PIPE 1 DIA. SCH 160S X SK	4'-0	M3	A	0
1	18-21		PL 3 X 1/2 X SK	1'-0	M1	A	63
1	18-22		PL 3 X 1/2 X SK	1'-0	M1	A	63
1	18-23		PL 3 X 1/2 X SK	2 3/8	M1	A	3
			M1 = SA240 316L, CBI SPEC A240 2404				
			REV 1				
			M3=SA312 TP316L, CBI SPEC				
			A-312-2406 REV 2				
			M7=SA403 316L WPS, CBI SPEC				
			A-403-2423 REV 2				

AS-BUILT NOTE:

"ACTUAL" DIMENSION RECORDED FOR VARIATION OF AS-BUILT BOTTOM AND TOP HEADS.

ADD ITEMS 24 THRU 30 TO BOM BY RPP-WTP

AS-BUILT

ISSUED BY RPP-WTP PDC

DELETE BY RPP-WTP

NOTES:
1. ALL WELDS TO BE 316L UNLESS NOTED OTHERWISE.
2. WORK WITH DWG #1, #2, & #3
3. ~~SHOP SCIP ON PC MK 6 TO PC MK 6, 7, 8, 9 & 10~~
~~BEFORE WELDING PC MK 11 TO PC MK 6 & 7.~~

R11022687

24590-QL-SRA-MFRS-00001-27-27 REV.003

CERTIFIED AS BUILT CONTRACT DRAWING
DATE: 9/13/10
SIGNED: Billy Balcomb

REVISED PC MARKS 12 AND 18-15 TO 18-22 AND 18-23 RESPECTIVELY
ADD PC MK 14, 15, AND REVISE BILLING
ADDED PT TO WELDS
ADDED PT TO WELDS

REVISIONS

Matt Wellman CBI

PTF- N70,N70A,N70B,N70C
1" PIPE ASSEMBLY
WASTE FEED RECEIPT
VESSEL FRP-VSL-00002A 101
RICHLAND, WA

CUSTOMER'S NO
BY TSJ CHKD CST DATE 9/16/32
PYE/ R.R. BALCOMB
ENGINEERING ASSURED
CONTRACT NO 137202A
DWG 13 REV 1
SHT 1

2021801A.DGN

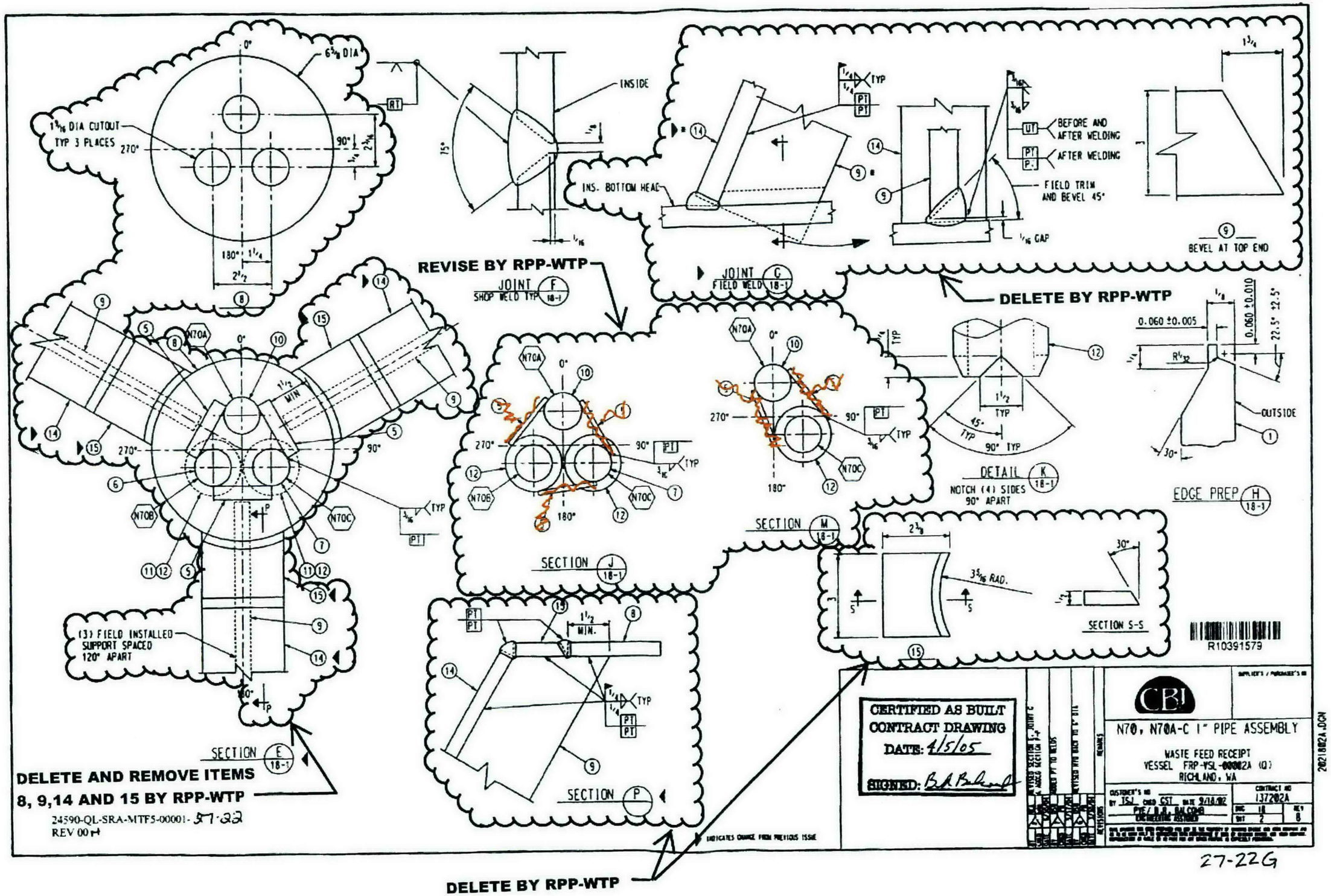
6 3/8 DIA
1 9/16 DIA CUTOUT TYP 3 PLACES
INSIDE
INS. BOTTOM HEAD
REVISE BY RPP-WTP
JOINT F SHOP WELD TYP 18-1
JOINT G FIELD WELD 18-1
DELETE BY RPP-WTP
BEFORE AND AFTER WELDING
AFTER WELDING
FIELD TRIM AND BEVEL 45°
1/16 GAP
BEVEL AT TOP END
DETAIL K 18-1
NOTCH (4) SIDES 90° APART
EDGE PREP H 18-1
OUTSIDE
SECTION J 18-1
SECTION M 18-1
SECTION S-S
3 5/16 RAD.
SECTION E 18-1
(3) FIELD INSTALLED SUPPORT SPACED 120° APART
SECTION P
DELETE AND REMOVE ITEMS 8, 9,14 AND 15 BY RPP-WTP
24590-QL-SRA-MTF5-00001-
REV 00
CERTIFIED AS BUILT CONTRACT DRAWING
DATE: 4/5/05
SIGNED:
CBI
N70, N70A-C 1" PIPE ASSEMBLY
WASTE FEED RECEIPT
VESSEL FRP-VSL-00002A (Q)
RICHLAND, WA
137202A
R10391579
DELETE BY RPP-WTP

27-22G

DELETE AND REPLACE WITH NEW SUPPORTS BY RPP-WTP

CBI RECEIVED
APR 0 3 2005

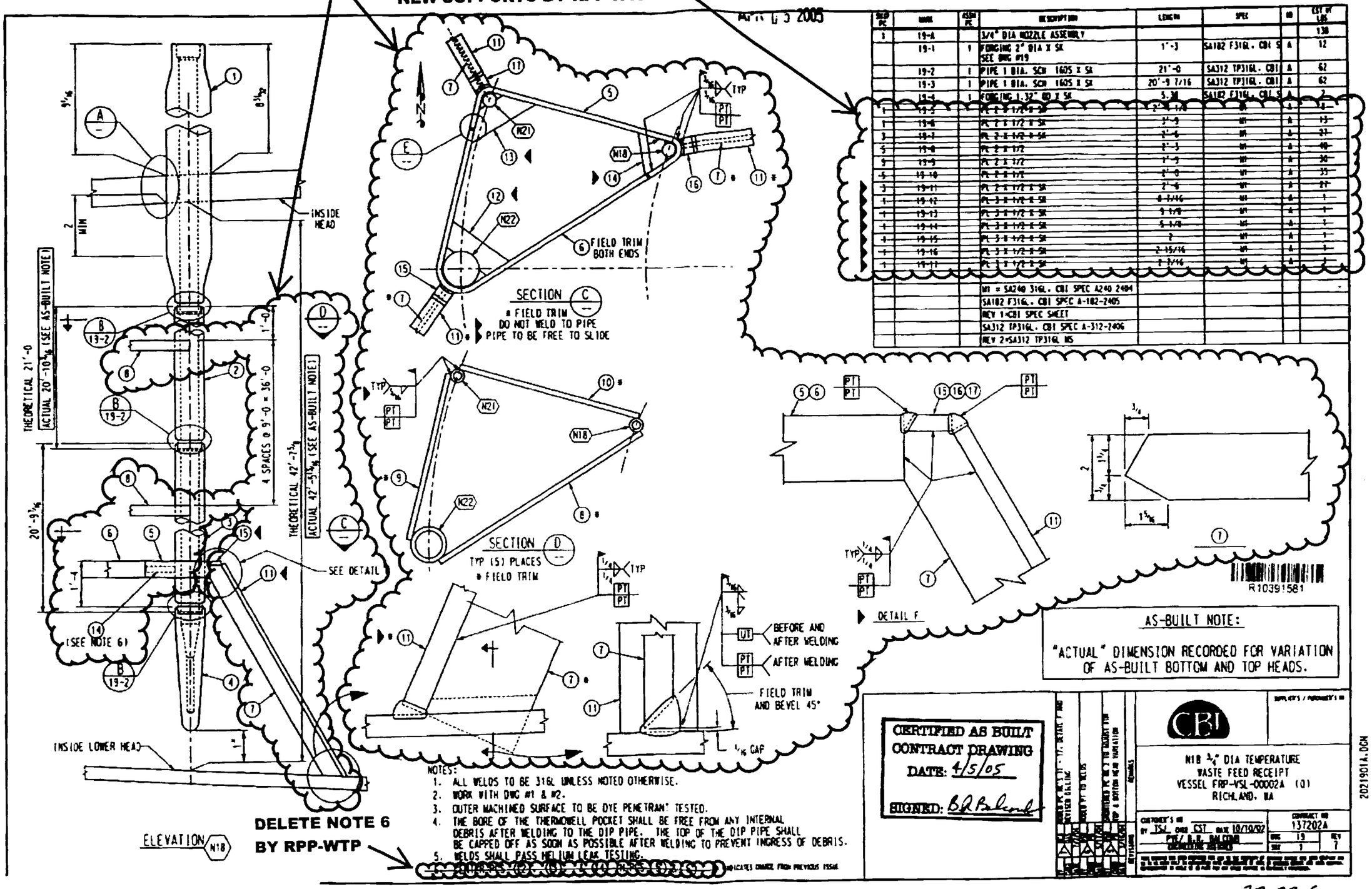

SHEET PC	MARK	ASSM PC	DESCRIPTION	LENGTH	SPEC	ID	EST WT LBS
1	19-A		3/4" DIA NOZZLE ASSEMBLY				138
	19-1	1	FORGING 2" DIA X SK SEE DWG #19	1'-3	SA182 F316L, CBI S	A	12
	19-2	1	PIPE 1 DIA. SCH 160S X SK	21'-0	SA312 TP316L, CBI	A	62
	19-3	1	PIPE 1 DIA. SCH 160S X SK	20'-9 7/16	SA312 TP316L, CBI	A	62
	19-4	1	FORGING 1.32" OD X SK	5.38	SA182 F316L, CBI S	A	2
1	19-5		PL 2 X 1/2 X SK	2'-4 1/8	M1	A	18
1	19-6		PL 2 X 1/2 X SK	3'-9	M1	A	13
3	19-7		PL 2 X 1/2 X SK	2'-6	M1	A	27
5	19-8		PL 2 X 1/2	2'-3	M1	A	40
5	19-9		PL 2 X 1/2	1'-9	M1	A	30
5	19-10		PL 2 X 1/2	2'-0	M1	A	35
3	19-11		PL 2 X 1/2 X SK	2'-6	M1	A	27
1	19-12		PL 3 X 1/2 X SK	8 7/16	M1	A	1
1	19-13		PL 3 X 1/2 X SK	9 1/8	M1	A	1
1	19-14		PL 3 X 1/2 X SK	5 1/8	M1	A	1
1	19-15		PL 3 X 1/2 X SK	2	M1	A	1
1	19-16		PL 3 X 1/2 X SK	2 15/16	M1	A	1
1	19-17		PL 3 X 1/2 X SK	2 7/16	M1	A	1
			M1 = SA240 316L, CBI SPEC A240 2404				
			SA182 F316L, CBI SPEC A-182-2405				
			REV 1=CBI SPEC SHEET				
			SA312 TP316L, CBI SPEC A-312-2406				
			REV 2=SA312 TP316L MS				

AS-BUILT NOTE:

"ACTUAL" DIMENSION RECORDED FOR VARIATION OF AS-BUILT BOTTOM AND TOP HEADS.

NOTES:
1. ALL WELDS TO BE 316L UNLESS NOTED OTHERWISE.
2. WORK WITH DWG #1 & #2.
3. OUTER MACHINED SURFACE TO BE DYE PENETRANT TESTED.
4. THE BORE OF THE THERMOWELL POCKET SHALL BE FREE FROM ANY INTERNAL DEBRIS AFTER WELDING TO THE DIP PIPE. THE TOP OF THE DIP PIPE SHALL BE CAPPED OFF AS SOON AS POSSIBLE AFTER WELDING TO PREVENT INGRESS OF DEBRIS.
5. WELDS SHALL PASS HELIUM LEAK TESTING.
6. [illegible] INDICATES CHANGE FROM PREVIOUS ISSUE

DELETE NOTE 6 BY RPP-WTP

CERTIFIED AS BUILT CONTRACT DRAWING
DATE: 4/5/05
SIGNED: B.R. Balcomb

CBI

N18 3/4" DIA TEMPERATURE WASTE FEED RECEIPT VESSEL FRP-VSL-00002A (0) RICHLAND, WA

CUSTOMER'S NO BY TSL CHKD CST DATE 10/10/02 PYE/ B.R. BALCOMB ENGINEERING ASSIGNED

CONTRACT NO 137202A
DWG 19 SHT 1 REV 7

2021901A.DGN

CB; RECEIVED
APR 0 5 2005

24590-PTF-VDCN-MS-11-00003
Attachment 1: Page ____ of ____

DELETE ITEM 22-1
BY RPP-WTP

SHEET PC	MARK	ASME PC	DESCRIPTION	TT	[illegible]	SPEC	[illegible]	CBI PT
1	22-1	1	[illegible]	[illegible]	[illegible]	[illegible]	[illegible]	[illegible]
	[illegible]	1	[illegible]	[illegible]	[illegible]	[illegible]	[illegible]	[illegible]
	[illegible]	1	[illegible]	[illegible]	[illegible]	[illegible]	[illegible]	[illegible]
	22-3	1	[illegible]	1	1	[illegible]	[illegible]	[illegible]
	22-4	1	[illegible]	[illegible]	[illegible]	[illegible]	[illegible]	[illegible]
			302-SA182 F316L.CBI SPEC A-182-2405					
			302-SA403 316L WPS.CBI SPEC A-403-2423					
			304-SA312 TP316L.CBI SPEC A-312-2406					

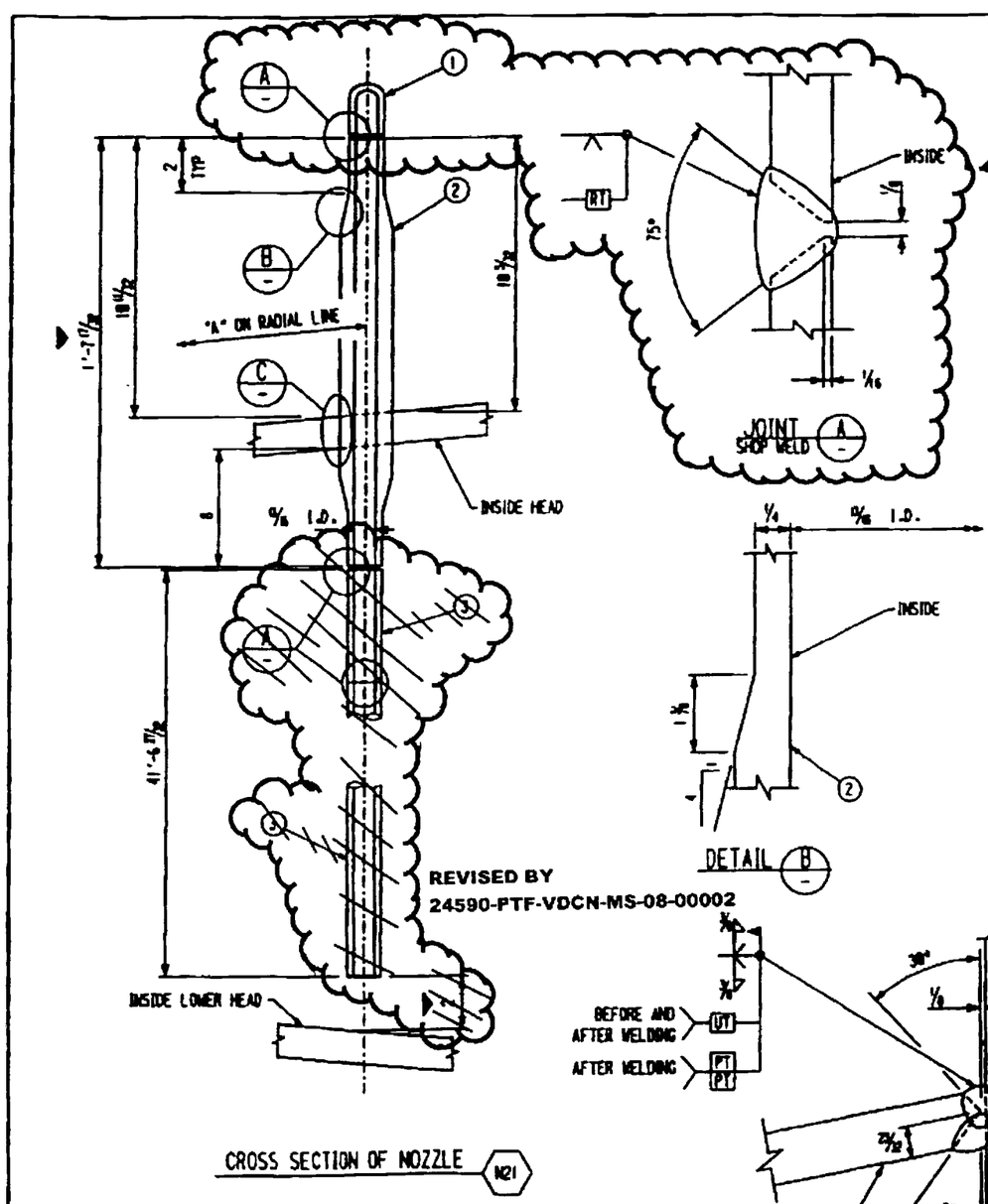

ARC MEASURED ON OUTSIDE OF SHELL ALONG GIRTH JOINT CL AT PC MK #7-2/7-3 FROM AZ 270°	"A" MEASURED ON OUTSIDE OF SHELL FROM GIRTH JOINT CL OF PC MK #7-2/7-3
2'-8 27/32	3'-10 15/32

24590-QL-SRA-MTF5-00001- 27-27
REV 00

9/3/05 9/3/05
9-4-05

24590-QL-SRA-MTF5-00001-27-27,
Rev.00B

R10391585

NOTES:
1. ALL WELDS TO BE 316L UNLESS NOTED OTHERWISE.
2. WORK WITH DWG #1, #2, & #3.
3. FIELD WORK THIS DWG WITH DWG #19 FOR PIPE SUPPORTS.

CERTIFIED AS BUILT
CONTRACT DRAWING
DATE: 4/5/05
SIGNED:

CBI

N21 1" DIA SPARE W/ DIP PIPE
WASTE FEED RECEIPT
VESSEL FRP-VSL-00002A (2)
RICHLAND, WA

CONTRACT'S ID 137282A
SHT 22 REV 3

27-27

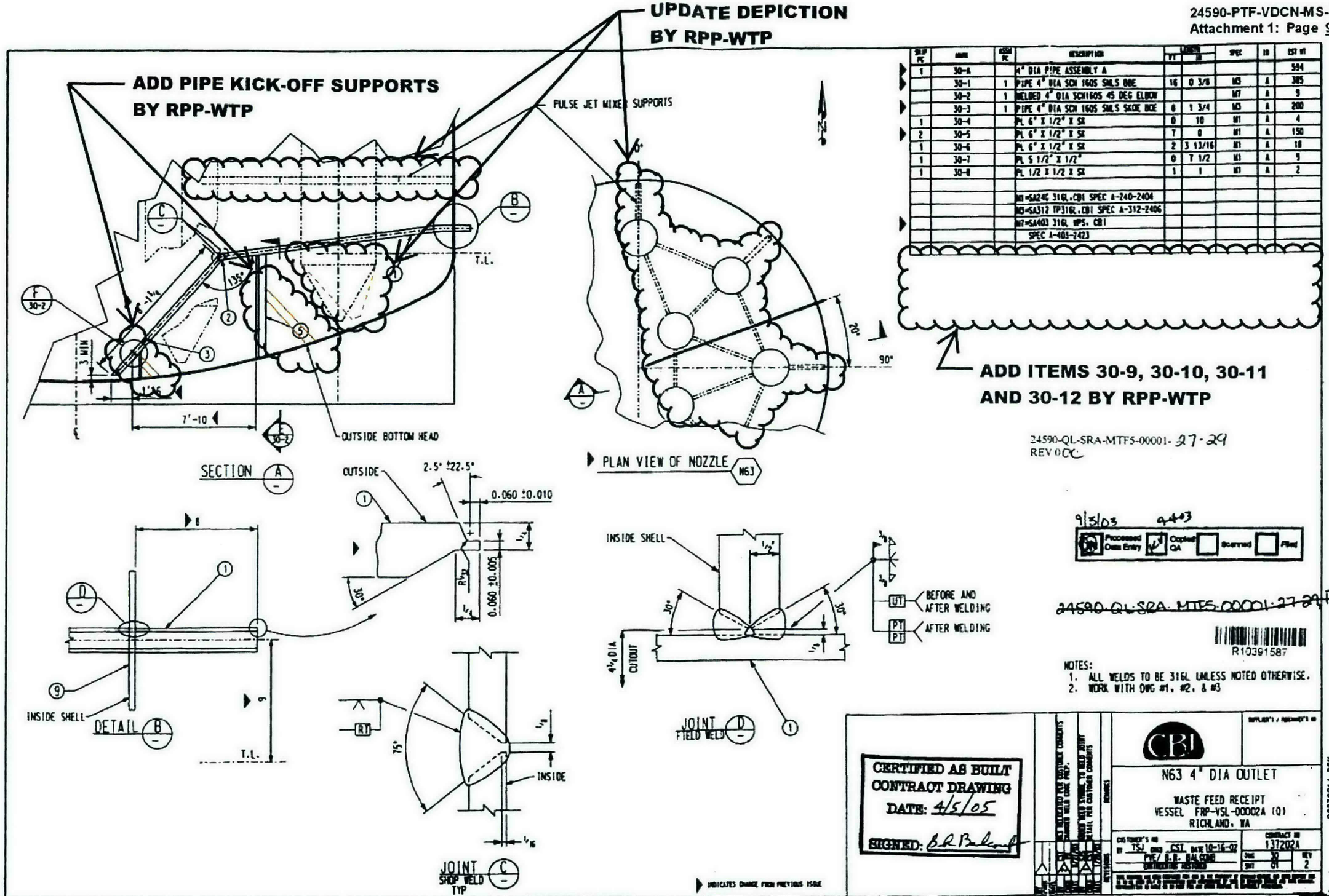

SHIP PC	NUMBER	ASSM PC	DESCRIPTION	LENGTH FT	LENGTH IN	SPEC	ID	EST WT
1	30-A		4" DIA PIPE ASSEMBLY A					594
	30-1	1	PIPE 4" DIA SCH 160S SMLS BBE	16	0 3/8	M3	A	385
	30-2	1	WELDED 4" DIA SCH160S 45 DEG ELBOW			M7	A	9
	30-3	1	PIPE 4" DIA SCH 160S SMLS SKOE BOE	8	1 3/4	M3	A	200
1	30-4		PL 6" X 1/2" X SK	0	10	M1	A	4
2	30-5		PL 6" X 1/2" X SK	7	0	M1	A	150
1	30-6		PL 6" X 1/2" X SK	2	3 13/16	M1	A	18
1	30-7		PL 5 1/2" X 1/2"	0	7 1/2	M1	A	9
1	30-8		PL 1/2 X 1/2 X SK	1	1	M1	A	2
			M1=SA240 316L,CBI SPEC A-240-2404					
			M3=SA312 TP316L,CBI SPEC A-312-2406					
			M7=SA403 316L WPS, CBI					
			SPEC A-403-2423					

27-29

ADD PIPE GUIDE SUPPORT BY RPP-WTP

DELETE BY RPP-WTP

CHANGE BY RPP-WTP

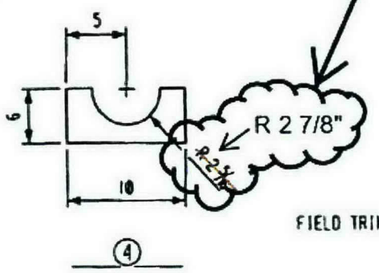

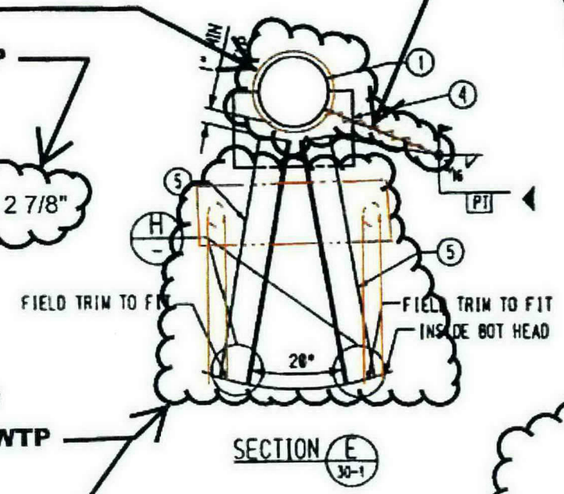

ADD PIPE KICKOFF SUPPORT BY RPP-WTP

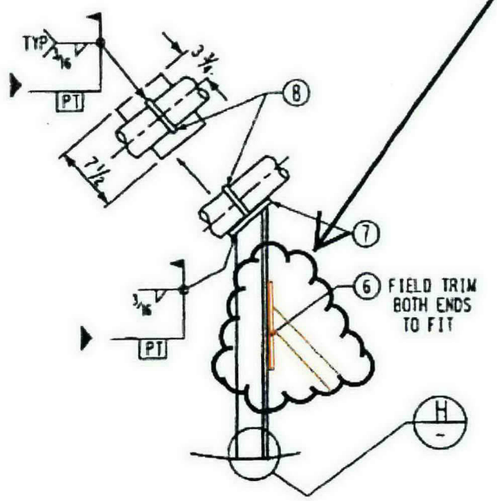

DETAIL F 30-1

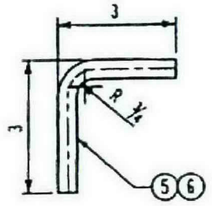

ADD PIPE SUPPORT DETAILS BY RPP-WTP

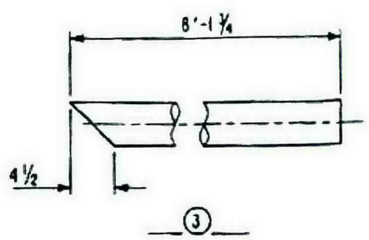

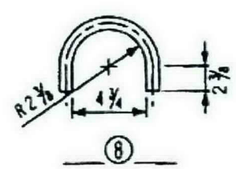

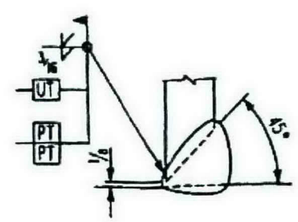

DETAIL H FIELD WELD

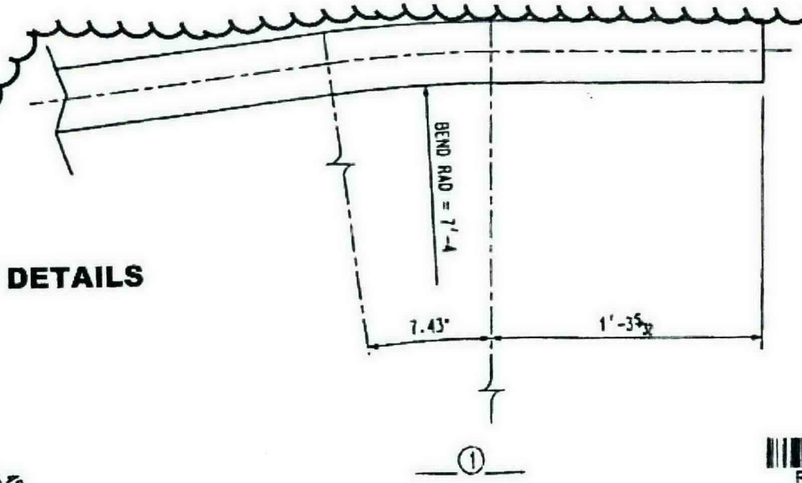

Bechtel National, Inc.

Job No. 24590

SUPPLIER DOCUMENT STATUS

1. [X] Work may proceed.
2. [ ] Revise and resubmit. Work may proceed subject to resolution of indicated comments.
3. [ ] Revise and resubmit. Work may not proceed.
4. [ ] Review not required. Work may proceed.

Permission to proceed does not constitute acceptance or approval of design details, calculations, analyses, test methods, or materials developed or selected by the supplier and does not relieve supplier from full compliance with contractual obligations.

REVIEWED

G-321 Document Category 1.3
[From Supplement A to G-321-E (E) or G-321-V (V), as applicable, or "N/A" if SSRS is used]

Supersedes BNI Document No. _____ Rev. _____
[When applicable]

Accepted by: R. Scammon — Print Name — Signature — Date 4/8/04

Released by: [When applicable] — Print Name — Signature — Date 4/9/04

KV 06/08/05

24590-QL-SRA-MTF5-00001-27-30
REV 00 D

R10391588

CERTIFIED AS BUILT CONTRACT DRAWING
DATE: 4/5/05
SIGNED: B.A. Blank

REVISIONS

CBI

N63 4" DIA DETAILS
WASTE FEED RECEIPT
VESSEL FRP-VSL-00002A
RICHLAND, WA

CUSTOMER'S NO
BY TSJ CHKD CST DATE 10-16-02
PVE/ B.R. BALCOM
ENGINEERING ASSIGNED

CONTRACT NO 137202A
DWG 30 SHT 02 REV 3

2023002A.DGN

27-30C

INDICATES CHANGE FROM PREVIOUS ISSUE

DELETE AND REPLACE WITH DIP PIPE SUPPORT DETAILS BY RPP-WTP IN CROSS HATCH AREA

	SHEET PC	MARK	ASSY PC	DESCRIPTION	LENGTH	SPEC	NO	LBS
	12	18-5		PL 2 1/2 X 1/2	2 1/2	M1	A	12
*	2	18-14		L 2 1/2 X 2 1/2 X 1/4	3'-6	M9	A	58
*	2	18-15		L 2 1/2 X 2 1/2 X 1/4	5'-0	M9	A	34
*	4	18-16		L 2 X 2 X 1/4	2'-8	M9	A	36
*	4	18-17		L 2 X 2 X 1/4	2'-6	M9	A	36
*	4	18-18		PL 2 1/2 X 1/2	3	M1	A	4
*	4	18-19		L 2 X 2 X 1/4	7	M9	A	12
*	4	18-20		L 2 X 2 X 1/4	2'-8	M9	A	40
*	2	18-21		L 2 X 2 X 1/4	4'-0	M9	A	26
				M1 = SA240 316L, CBI SPEC A240 2404				
				M1 = SA240 316L, CBI SPEC A240 2404				
				M9= SA479 316L CBI SPEC A-479 2570				

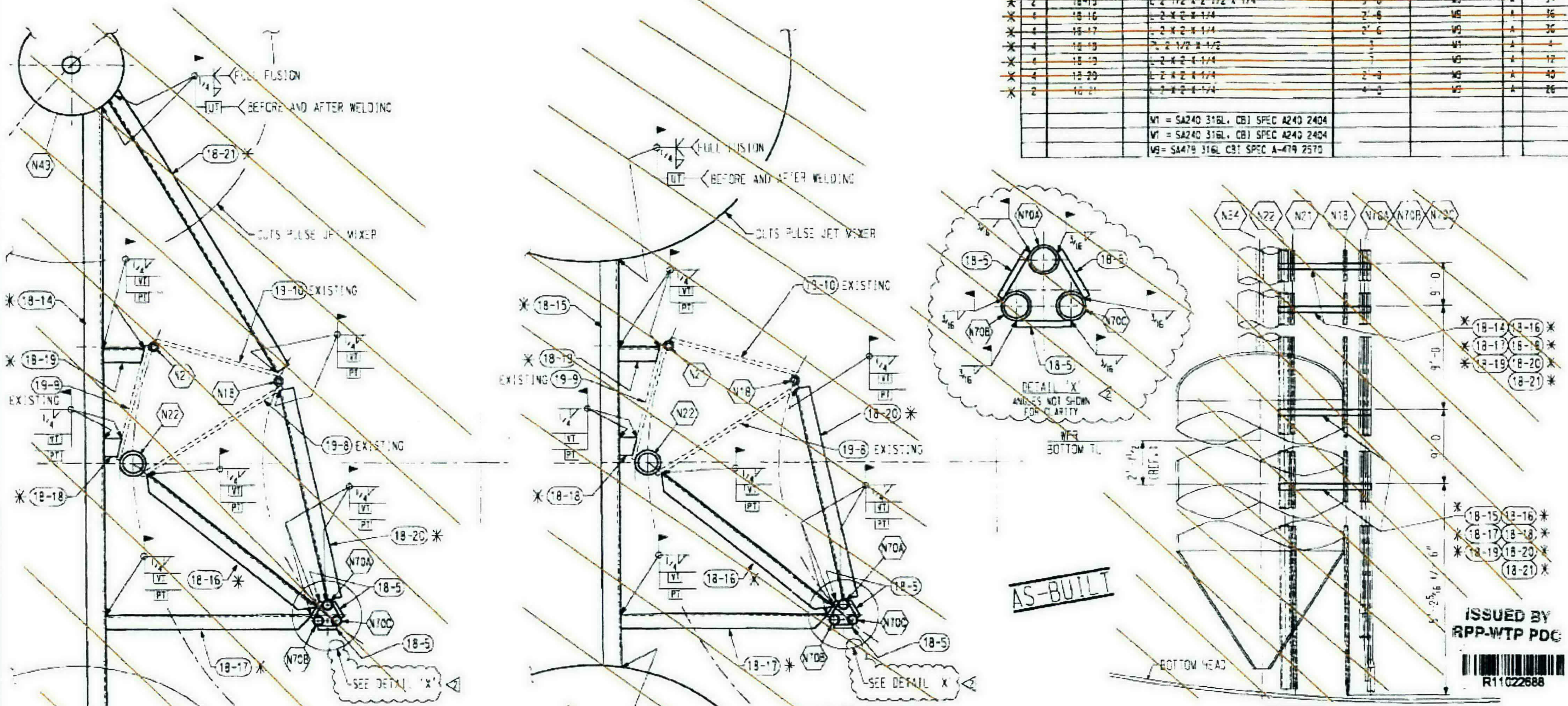

PLAN VIEW AT UPPER STABILIZER
(TYP 2 PLACES)
NOTE: INSTALL BRACING AT EXISTING BANDING ELEVATION

PLAN VIEW AT LOWER STABILIZER
(TYP 2 PLACES)
NOTE: INSTALL BRACING AT EXISTING BANDING ELEVATION

NOTES:
1. ALL WELDS TO BE 316L UNLESS NOTED OTHERWISE.
2. WORK WITH DWG #1 SHT 1, #2 SHT 1, #18 SHT 1, & 2, & #19 SHT 1 & 2.
* 3. BILLED WITH ADDED MATERIAL FOR FIELD TRIM.

ISSUED BY RPP-WTP PDC
R11022688

24590-QL-SRA-MTE5-00001-29-00070 REV.00C

CERTIFIED AS BUILT CONTRACT DRAWING
DATE: 9/13/10
SIGNED: Billy A. Balcomb

CBI

PTF- LATERAL SUPPORTS FOR DIP PIPE
WASTE FEED RECEIPT
VESSEL FRP-VSL-00002A (C)
RICHLAND, WA

CUSTOMER'S NO
BY RCA CHKD PB DATE 6/16/04
PVE/ B.R. BALCOMB
ENGINEERING ASSIGNED

CONTRACT NO 137202A
DWG 18 SHT 3 REV 2

2021803A.DCN

ON REFERENCE DRAWING 24590-QL-SRA-MTF5-00001-27 08

SHIP PC	MAHK	ASSY PC	DESCRIPTION	LENGTH	SPEC	ID	EST WT
* 64	5-4		PLATE SK 1" (26 3/16" x 1'-0" x 38 13/16")		M1		
			M1= ASME SA240 TP 316/316L				
			* NOMINALLY 64 PIECES				

1. TYPICAL 1" WELD SIZE MAY BE REDUCED WHEN BRIDGING WELDS DEPICTED IN DETAIL F
2. CONTOUR TO MATCH VESSEL BOTTOM HEAD. GAP BETWEEN STIFFENER PLATE AND VESSEL BOTTOM HEAD AS MEASURED THROUGH FILL AND VENT HOLES, SHALL NOT EXCEED 1/4"
   NOTE: WIDTH OF PLATES MAY BE ADJUSTED TO SHIFT WELD LOCATIONS OR TO CREAT LARGER PLATES TO REDUCE TOTAL NUMBER OF STIFFENERS PLATES. DETAIL F SEAMS SHALL NOT BE LOCATED CLOSER THAN 3" FROM SEAMS IN BOTTOM THAT RUN PARALLEL TO DETAIL F SEAMS.
3. LOCATE 1 FILL AND 1 VENT HOLE, APPROX. AS SHOWN. NOMINALLY 10" FROM CORNER OF STIFFENER PLATES PLATE (PART #5-4). FILL GAPS BEHIND STIFFENER PLATES (PART #5-4) WITH GROUT UNTIL GROUT BLEEDS FROM VENT HOLES. AFTER GROUT SETS, DRILL OUT GROUT FROM FILL AND VENT HOLES MIN. 3/4" DEEP. PLUG WELD HOLES CLOSED MIN. OF 1/2" DEEP. HOLES MAY BE SIZED/TAPPED AS NEEDED UP TO 1" Ø. TO FACILITATE INSTALLATION OF GROUT.

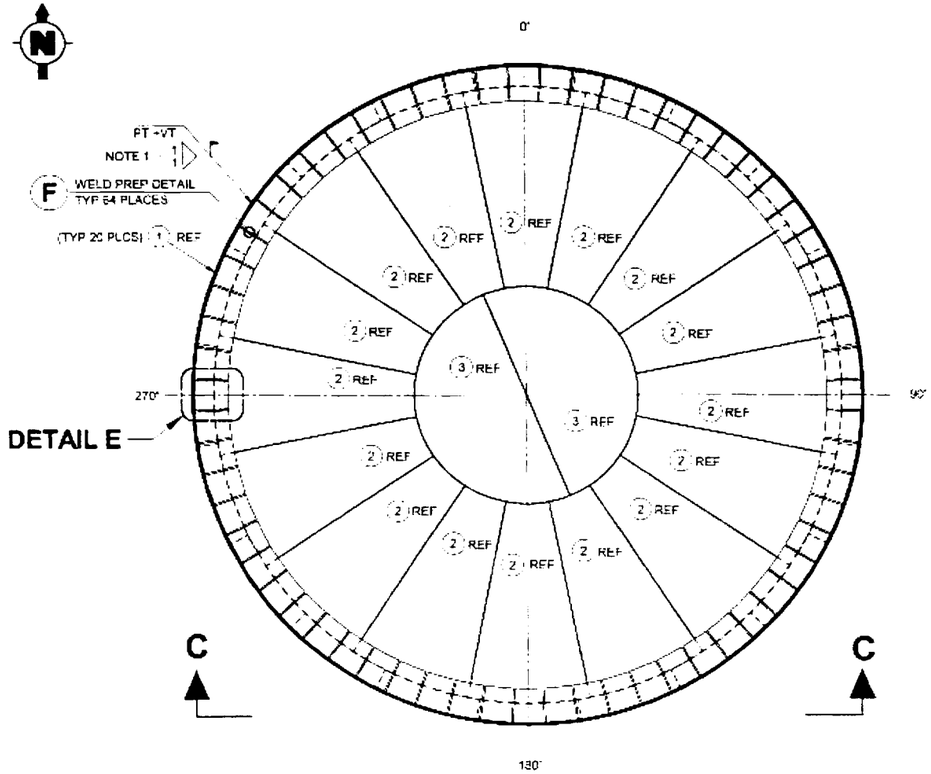

PLAN
INSIDE LOOKING DOWN

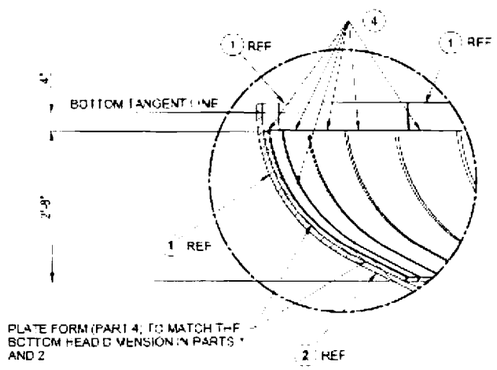

DETAIL D

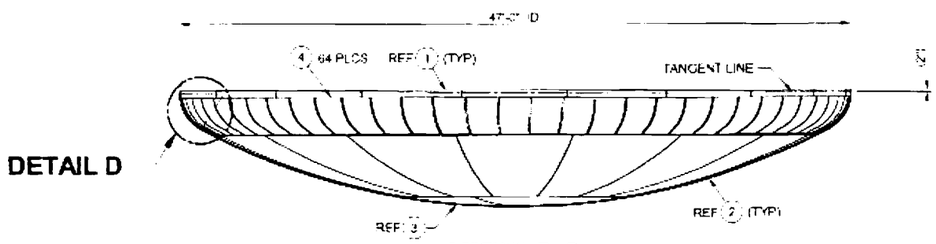

VIEW C-C

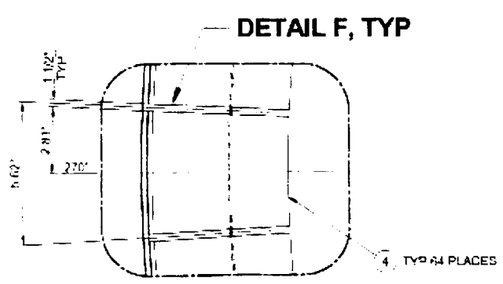

DETAIL E

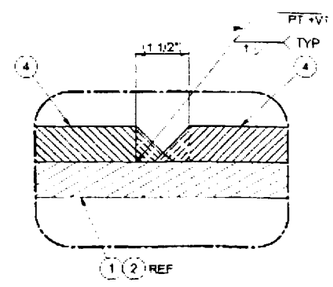

DETAIL F

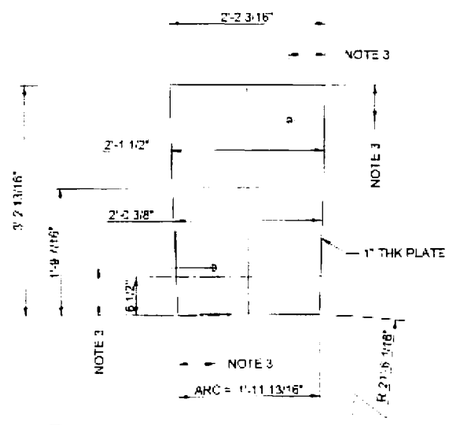

4 KNUCKLE STIFFENER PLATE
(FLAT PLATE BEFORE BEND)
(NOTE 2)

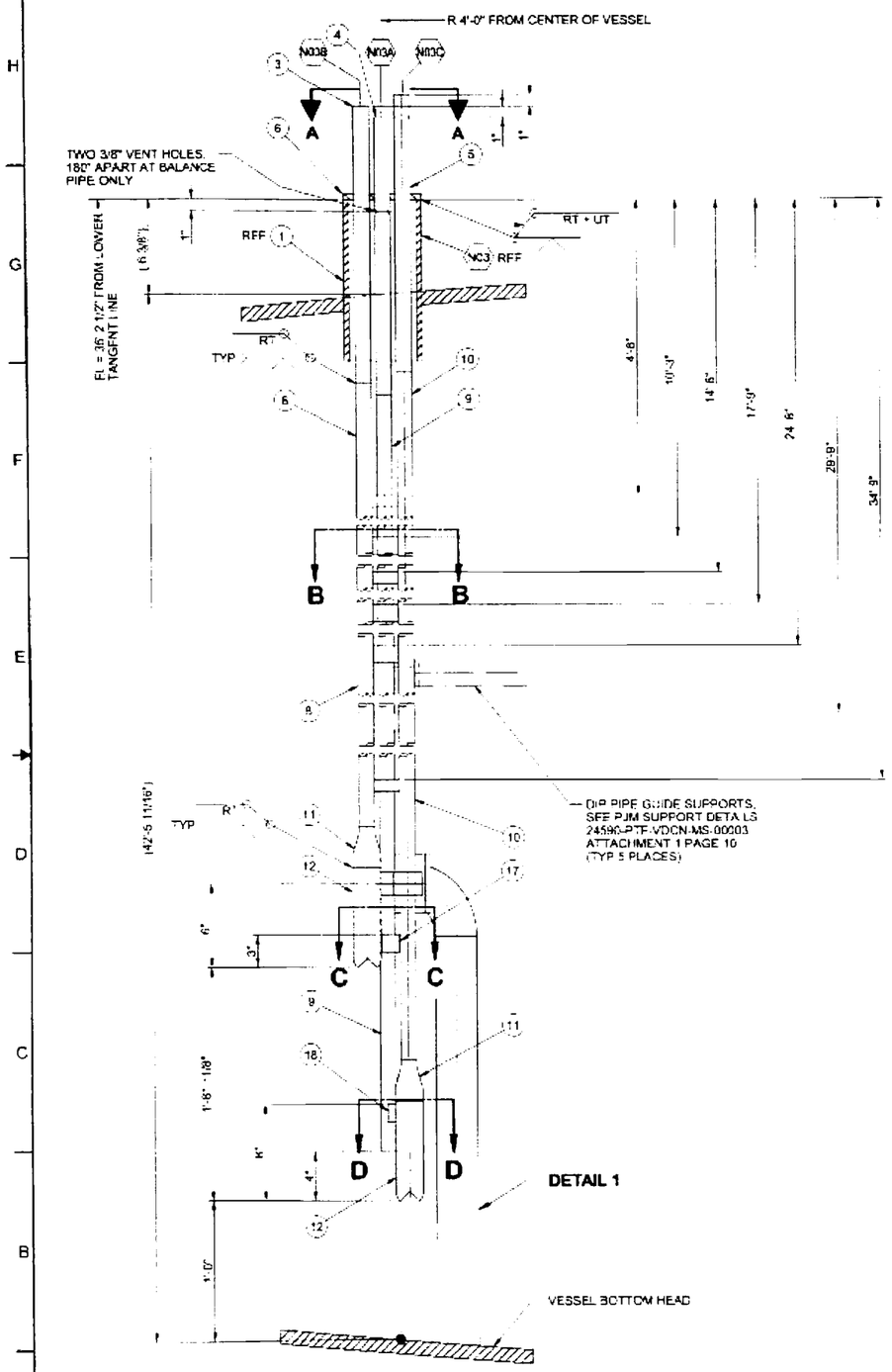

CROSS SECTION NOZZLE

FOR TRUE ORIENTATION SEE VIEW A-A

N03 N03A N03B N03C

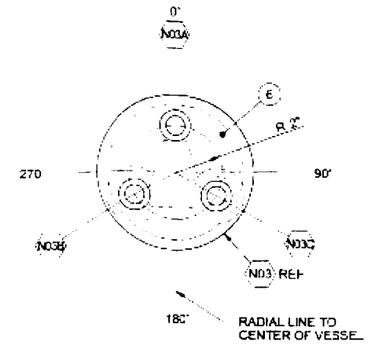

VIEW A-A

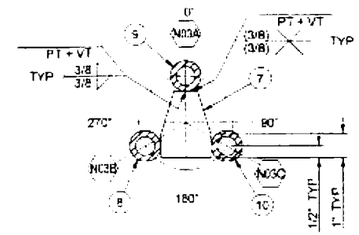

SECTION B-B

TYP 7 PLACES

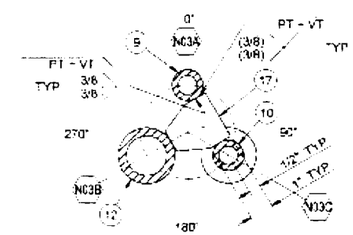

SECTION C-C

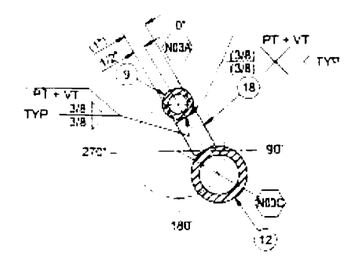

SECTION D-D

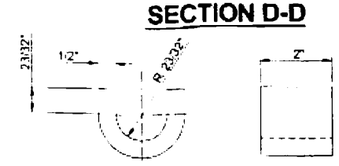

16 PIPE GUIDE STRAP

ON REFERENCE DRAWING 24590-QL-SRA-MTF5-00001-27-17

SHIP PC	MARK	ASSY PC	DESCRIPTION	LENGTH	SPEC	ID	EST WT
	12-3	1	PIPE 1" SCHED 160S	4'-0"	M3		
	12-4	1	PIPE 1" SCHED 160S	4'-0"	M3		
	12-5	1	PIPE 1" SCHED 160S	4'-0"	M3		
	12-6	1	PLATE 6 5/8" DIAMETER x 1/2" THK		M1		
	12-7	7	PLATE 1 1/2" THK	AS REQD	M1		
	12-8	1	PIPE 1" SCHED 160S	37'-4 1/8"	M3		
	12-9	1	PIPE 1" SCHED 160S	36'-7 1/8"	M3		
	12-10	1	PIPE 1" SCHED 160S	38'-1 1/8"	M3		
	12-11	2	CONC REDUCER 2" x 1" SCHED 160S SMLS BW		M2		
	12-12	2	PIPE 2" SCHED 160S	9"	M3		
	12-13	1	PIPE 3" SCHED 80S	2'-10 3/16"	M3		
	12-14	1	ELBOW 3" LR SCHED 80S SMLS BW		M2		
	12-15	1	PLATE 5" x 7" x 1/2" THK		M1		
	12-16	2	FLAT BAR 2" x 1/2" THK	3 23/32"	M1		
	12-17	1	PLATE 1 1/2" THK	AS REQD	M1		
	12-18	1	BAR 1" WIDE x 1 1/2" THK	AS REQD	M1		
			M1 = ASME SA240 TP 316/316L				
			M2 = ASME SA403 316L WPS				
			M3 = ASME SA312 TP 316/316L				

NOTES

1. PIPE GUIDE STRAPS ARE WELDED AFTER CORRECTLY POSITIONING THE PIPE GUIDE STRAP SUPPORTS. PIPE GUIDE STRAP SHALL MAINTAIN 1/16" DIAMETRICAL CLEARANCE WITH PIPE.
2. TOLERANCE ON STRAP ELEVATIONS (PART 12-7) IS ±2".

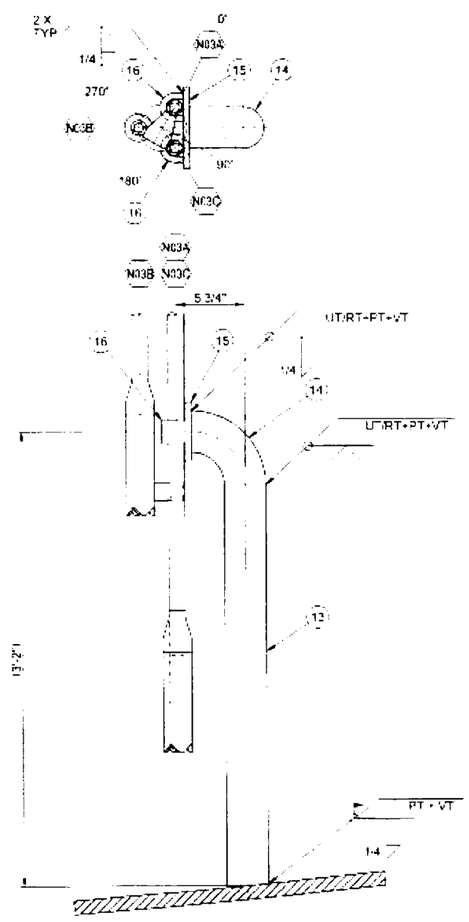

DETAIL 1

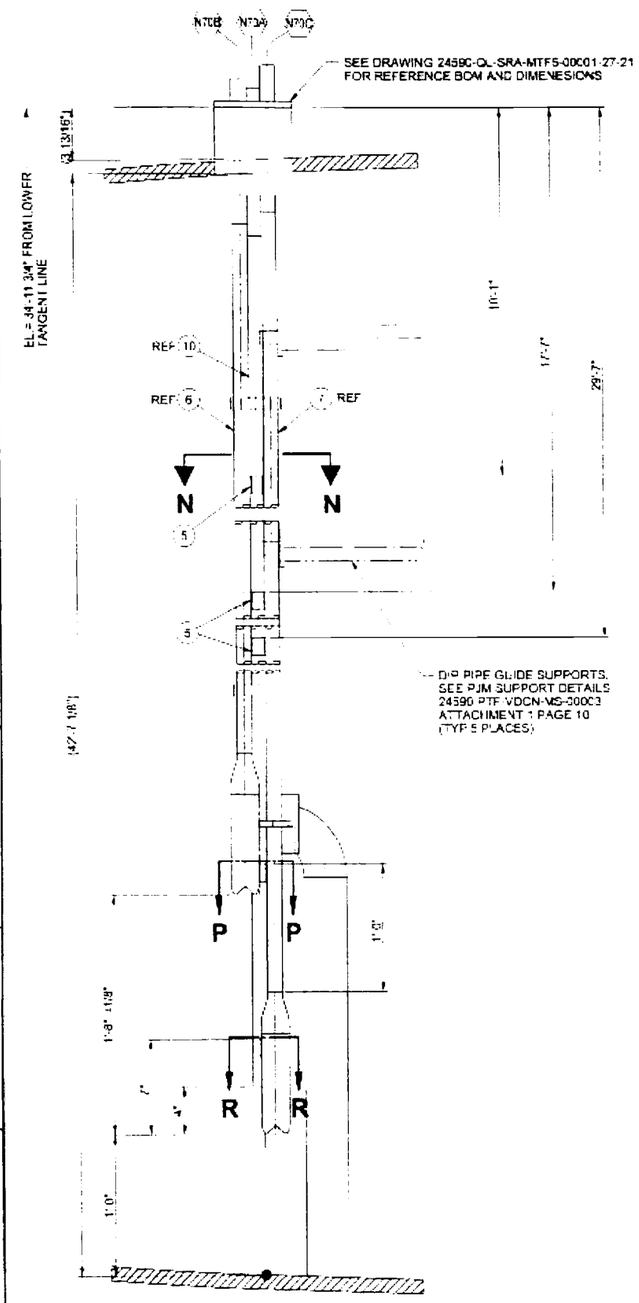

CROSS SECTION NOZZLE (N70 N70A N70B N70C) REF

FOR TRUE ORIENTATION SEE VIEW A-A

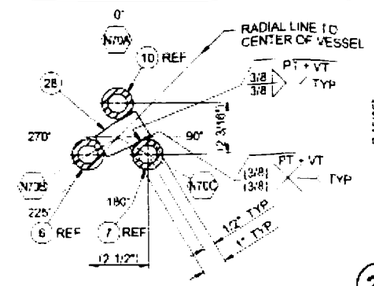

SECTION N-N

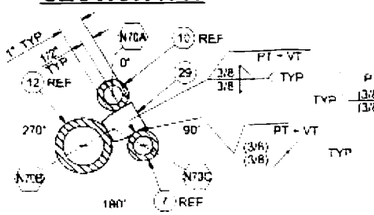

SECTION P-P

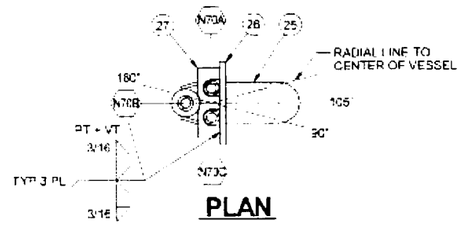

PLAN

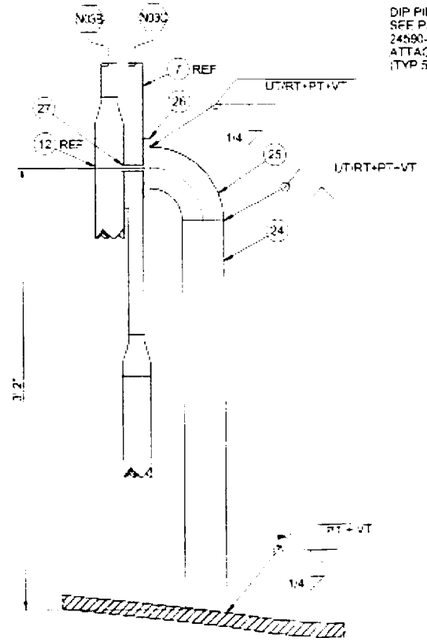

ELEVATION
DETAIL 1

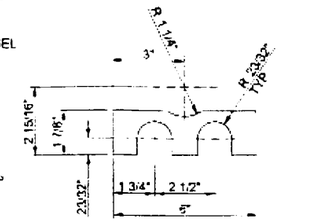

27 PIPE GUIDE PLATE

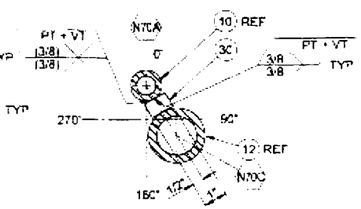

SECTION R-R

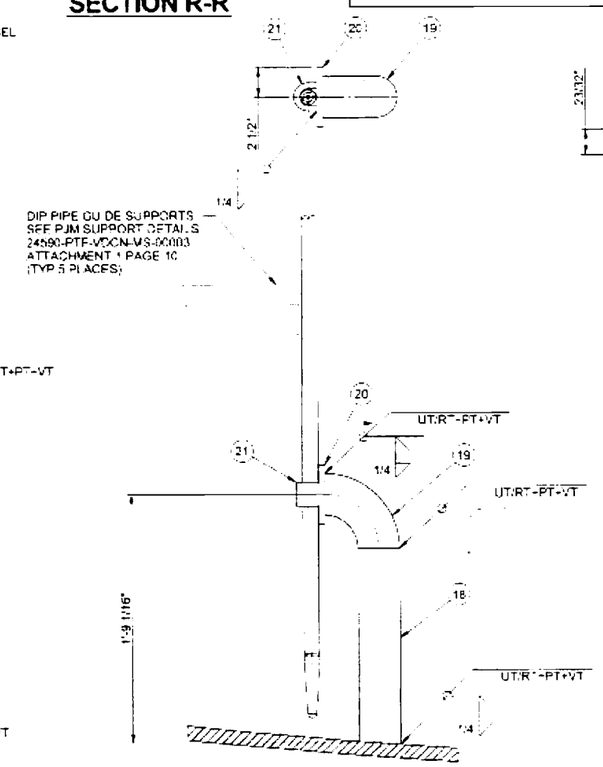

ELEVATION N18

ON REFERENCE DRAWING 24590-QL-SRA-MTF5-00001-Z7-21

SHIP PC	MARK	ASSY PC	DESCRIPTION	LENGTH	SPEC	ID	EST WT
	18-24	1	PIPE 3" SCHED 80S	2'-9 3/16"	M3		
	18-25	1	ELBOW 3" LR SCHED 80S SMLS BW		M2		
	18-26	1	PLATE 5" x 7" x 1/2" THK		M1		
	18-27	1	PLATE 1/2" THK	1 7/8" x 6"	M1		
	18-28	3	PLATE 1 1/2" THK	AS REQD			
	18-29	1	PLATE 1 1/2" THK	AS REQD			
	18-30	1	FLAT BAR 1" WIDE x 1 1/2" THK	AS REQD			
			M1 = ASME SA240 TP 316/316L				
			M2 = ASME SA403 316L WPS				
			M3 = ASME SA312 TP 316/316L				

NOTES:

1. PIPE GUIDE STRAPS AND PLATE ARE WELDED AFTER CORRECTLY POSITIONING THE PIPE GUIDE STRAP SUPPORTS PIPE GUIDE STRAP AND PLATE SHALL MAINTAIN 1/16" DIAMETRICAL CLEARANCE WITH PIPE.
2. THE FABRICATOR MAY LEAVE UP TO 1" OF THE PREVIOUS STEELWORK IN PLACE (I.E. CUT STEELWORK UP TO 1" AWAY FROM UNTOUCHED COMPONENTS) TO AVOID CUTTING/GRINDING INTO UNTOUCHED COMPONENTS (UNLESS OTHERWISE SPECIFICALLY INDICATED IN THIS DRAWING SET) WHERE THIS DRAWING SET INDICATES THAT SUPPORTS, FLANGES, BRACKETS, COMPONENTS, ETC. HAVE BEEN REMOVED BETWEEN THE CURRENT REVISION AND THE PREVIOUS REVISION.
3. TOLERANCE ON STRAP ELEVATION IS ±2".

ON REFERENCE DRAWING 24590-QL-SRA-MTF5-00001-Z7-23

SHIP PC	MARK	ASSY PC	DESCRIPTION	LENGTH	SPEC	ID	EST WT
	19-18	1	PIPE 3" SCHED 80S	1'-2 3/4"	M3		
	19-19	1	ELBOW 3" LR SCHED 80S SMLS BW		M2		
	19-20	1	PLATE 5" x 5" x 1/2" THK		M1		
	19-21	1	FLAT BAR 2" x 1/2" THK	3 23/32"	M1		
			M1 = ASME SA240 TP 316/316L				
			M2 = ASME SA403 316L WPS				
			M3 = ASME SA312 TP 316/316L				

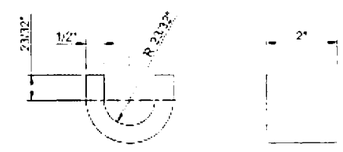

21 PIPE GUIDE STRAP

ON REFERENCE DRAWING 24590-QL-SRA-MTF5-00001-27-29

SHIP PC	MARK	ASSY PC	DESCRIPTION	LENGTH FEET	LENGTH INCHES	SPEC	ID	EST WT
2	30-9		PIPE 3" SCHED 80S *	4	2	M3		
1	30-10		PIPE 3" SCHED 40S *	2	8 1/2	M3		
1	30-11		PLATE 8" x 1/2" THK	2	0	M*		
1	30-12		PLATE 6" X 1/2" THK	0	9	M*		
1	30-13		FLAT BAR * 1/2" X 1/2" THK	2	5 1/8"	M*		
			M1 = ASME SA240 TP 316/316L					
			M3 = ASME SA312 TP 316/316L					
			* = LENGTH IS ESTIMATED CUT TO FIT					

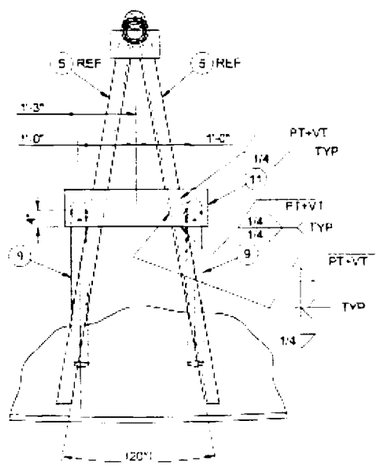

SECTION J-J

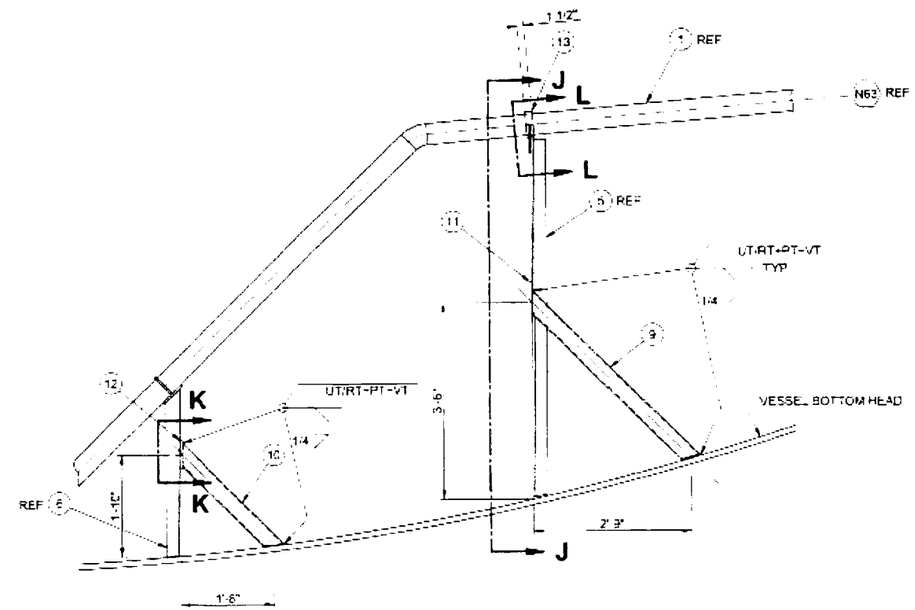

SECTION A
(SUPPORT MODIFICATION)

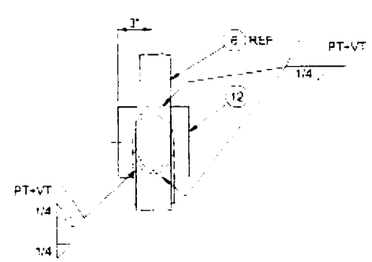

VIEW K-K

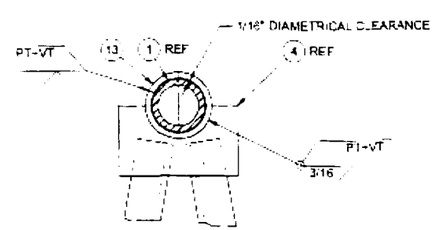

SECTION L-L

DELETE ITEMS 5, 6, 12, 13, 14, 15, 16 AND 17 BY RPP-WTP

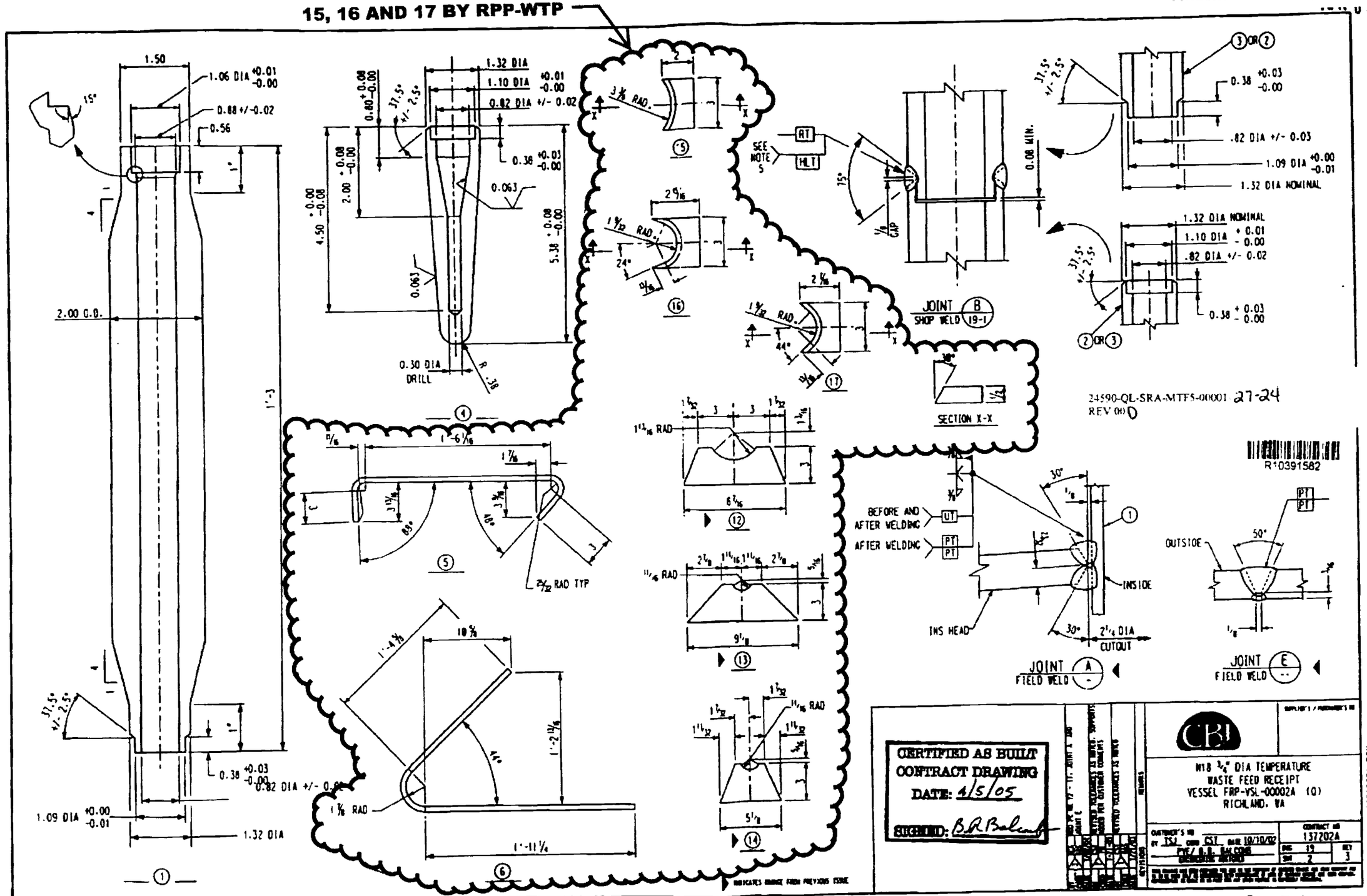

4/28/03 4/23/03
B Processed/Data Entry Checked/QA Scanned Filed
A 4/19/03
C 4/23/03

CBI RECEIVED
APR 05 2005

REVISE BY RPP-WTP ON HOLD 160S

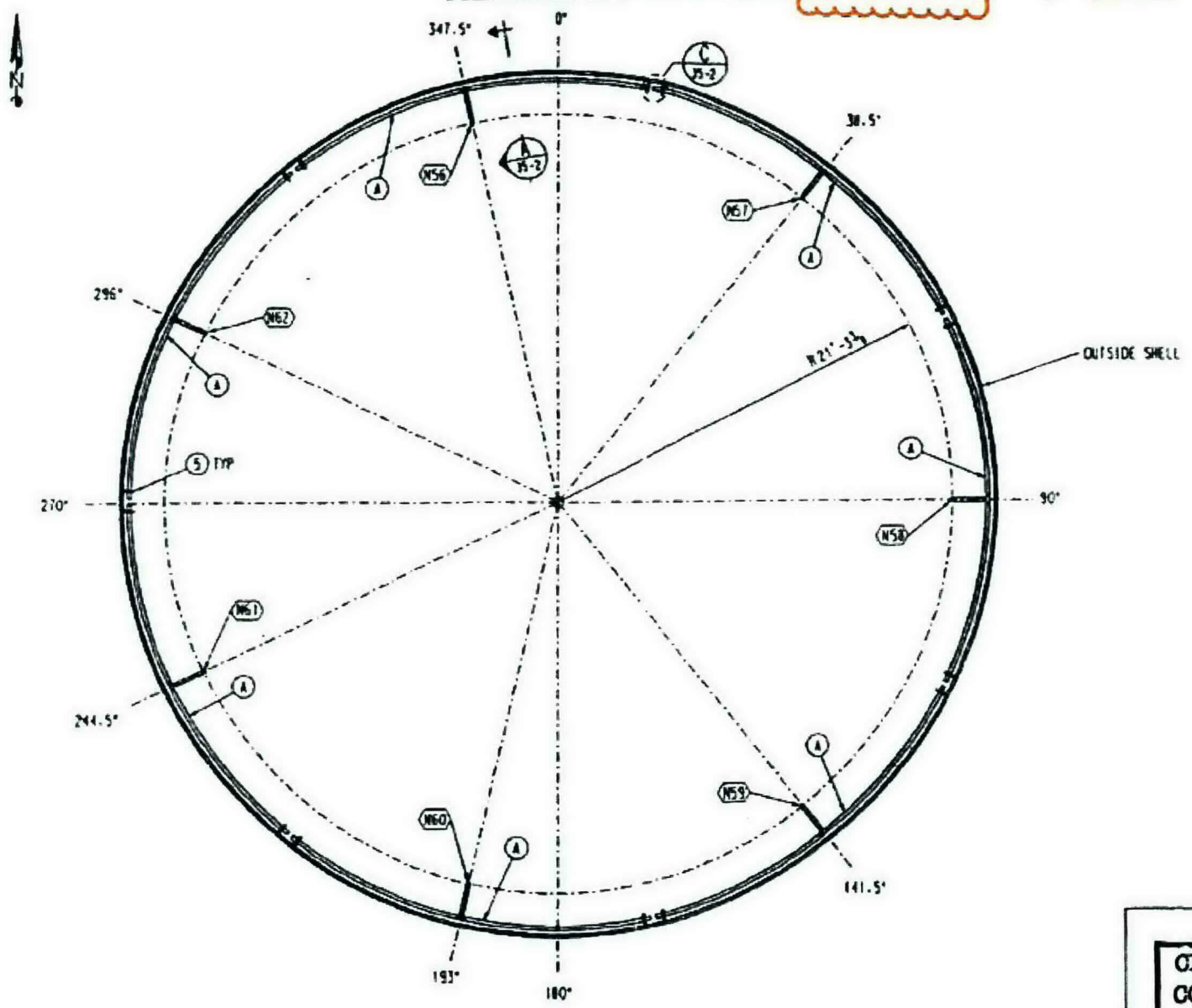

WASH RING PLAN VIEW
N56-N62

BMP PC	mark	alias PC	DESCRIPTION	QTY	LENGTH IN	SPEC	MT	EST WT
	35-1		2" DIA DASH RING ASSEMBLY					672
	35-2	7	PIPE 2" DIA SCH 160S SMLS	10	0 25/32	4	C	266
			SHEAR					
	35-3	7	PIPE 2" DIA SCH 160S SMLS	10	0 25/32	4	C	266
			SHEAR					
	35-3	7	STRAIGHT TEE 2 X 2 X 2			W1	A	28
	35-4	14	PL 2 1/16 DIA X 1/2			W1	C	7
	35-6	7	PIPE 2" DIA SCH 160S SMLS BOX SHAPE	4	2 3/32	W3	A	105
14	35-5		PL 3 1/16 X 1/2 X SR	1	3 3/32	W1	A	158
			W1=SA240 316L.CBI SPEC A-240-2404					
			W3=SA312 TP316L.CBI SPEC A-312-2406					
			W4=SA403 316LWPS-CBI SPEC A-403-2427					
			=SA312 TP316L					

NOTES:
1. ALL WELDS TO BE 316L UNLESS NOTED OTHERWISE.
2. WORK WITH DWG #1, #2, #3, & DWG #35 SHT'S 2 & 3.

24590-QL-SRA-MTF5-00001-27-32
REV 00 B

R10391590

KN 06-108/C5
~~24590-QL-SRA-MTF5-00001-27-32~~

CERTIFIED AS BUILT
CONTRACT DRAWING
DATE: 4/5/05
SIGNED: B.A. Bakal

CBI

N56 - N62 INLETS TO WASH RING
WASH RING
WASTE FEED RECEIPT
VESSEL FRP-VSL-00002A (D)
RICHLAND, WA

CONTRACT NO 13720-2A
REV 2

2023SHA.DGN

Drawing Change Notice

CHANGE DOCUMENT NO. 24590-PTF-VDCN-MS-11-00005

JOB NO.	TITLE FOR CHANGE NOTICE
24590	PTF-FRP-VSL-00002B REDESIGN

DESIGN DOCUMENT NUMBER	REV	DESIGN DOCUMENT NUMBER	REV
24590-QL-SRA-MTF5-00001-26-01	I	24590-QL-SRA-MTF5-00001-26-06	B
24590-QL-SRA-MTF5-00001-26-07	B	24590-QL-SRA-MTF5-00001-26-17	B
24590-QL-SRA-MTF5-00001-26-21	I	24590-QL-SRA-MTF5-00001-26-22	H
24590-QL-SRA-MTF5-00001-26-23	H	24590-QL-SRA-MTF5-00001-26-24	D
24590-QL-SRA-MTF5-00001-26-30	C	24590-QL-SRA-MTF5-00001-26-31	D
24590-QL-SRA-MTF5-00001-26-33	B	24590-QL-SRA-MTF5-00001-29-00071	C

PART OF DESIGN CHANGE PACKAGE (DCP)? ☐ Yes ☒ No DCP No.: Rev:

JUSTIFICATION FOR CHANGE	CAUSE CODE
Based on the re-analysis of FRP-VSL-00002A/B/C/D, per calculation 24590-PTF-MVC-FRP-00003, for revised seismic conditions and design evolution, a redesign of the vessel is required.	01-23

Supersedes Change Document ☐ Yes ☒ No

ECN Needed ☐ Yes ☒ No

REQUIREMENTS REVIEW

Client Approval Required ☐ Yes ☒ No | Interface Resolution Required * ☐ Yes ☒ No

Address any "yes" answers in the description

DESCRIPTION OF CHANGE

Note: Components removed or deleted per this VDCN are to be removed from the actual vessel unless Otherwise noted.

1. **Affected Document: 24590-QL-SRA-MTF5-00001-26-01 (see Attachment 1, page 1 of this VDCN).**

a) Bill of Materials block: Revise the following line Items:

Line Item N3 Elevation block: 35'-3" from 35'-4 11/16".

Line Item N3 Description / Service block: INSTRUMENTATION from SPARE CAPPED.

b) Bill of Materials block: Add the following line Items:

Line Item N03A

Line Item N03B

Line Item N03C

Please note that source, special nuclear, and byproduct materials, as defined in the Atomic Energy Act of 1954 (AEA) are regulated at the U. S. Department of Energy (DOE) facilities exclusively by DOE acting pursuant to its AEA authority. DOE asserts that pursuant to AEA, it has sole and exclusive responsibility and authority to regulate source, special nuclear, and byproduct materials at DOE-owned nuclear facilities. Information contained herein on radionuclides is provided for process description purposes only.

c) Elevations:

Delete Nozzle N3 bubble from N2 bubble column.

Add Nozzle bubble number N03, N03A, N03B and N03C to N70 bubbler column.

Add Knuckle Stiffener plates shown on Attachment 1, page 12 of this VDCN.

Revise Outer PJM nozzle cone to eccentric from concentric shown on 24590-PTF-VDCN-MS-00003, Attachment 1, page 12, Elevation Assemblies A & B.

d) Note: Add the following notes :

2. WELD SHOWN MAY BE FIELD-APPLIED AS NECESSARY TO SUPPORT INSTALLATION OF COMPONENTS

3. FABRICATION TOLERANCES FOR FIELD MODIFICATIONS SHALL BE PER 24590-WTP-MV-M59T-00001 (PRESSURE VESSEL TOLERANCES STANDARD DETAILS) AND PFI STANDARD ES-24 (PIPE BENDING METHODS, TOLERANCES, PROCESS AND

JOB NO.	TITLE FOR CHANGE NOTICE
24590	PTF-FRP-VSL-00002B REDESIGN

DESCRIPTION OF CHANGE

MATERIAL REQUIREMENT). FOR TOLERANCES NOT SPECIFIED BY THESE STANDARDS, THE FOLLOWING SHALL APPLY, UNLESS OTHERWISE NOTED:

DIMENSION	TOLERANCE
LINEAR <12 IN	± 1/8 INCHES
LINEAR >=12 IN	± 1/4 INCHES
ANGULAR	± 2 DEGREES

e) Add a HOLD LIST as follows:

HOLD LIST
1. KNUCKLE STIFFENER PLATES ARE ON HOLD PENDING CONFIRMATION OF VESSEL MAXIMUM OPERATING PRESSURE.
2. WASH RING PIPE SCHEDULE CHANGE IS ON HOLD PENDING CONFIRMATION OF VESSEL MAXIMUM OPERATING PRESSURE.
3. INSTALLATION OF REVISED PJM NOZZLES ON OUTER PJMS IS ON HOLD PENDING RESOLUTION OF MIXING REQUIREMENTS.

2. **Affected Document: 24590-QL-SRA-MTF5-00001-26-06 (see Attachment 1, page 2 of this VDCN).**

a) Bill of Materials block: Add Item 5-4 shown on Attachment 1, page 12 of this VDCN.

b) Plan View: Add Knuckle Stiffener plates shown on Attachment 1, page 12 of this VDCN.

c) View C-C: Add Knuckle Stiffener plates shown on Attachment 1, page 12 of this VDCN.

3. **Affected Document: 24590-QL-SRA-MTF5-00001-26-07 (see Attachment 1, page 3 of this VDCN).**

a) Bottom Head Details Drawing:

Add Knuckle Stiffener Plate, Item 4 shown on Attachment 1, page 12 of this VDCN.

Add Details D, E, and F shown on Attachment 1, page 12 of this VDCN.

4. **Affected Document: 24590-QL-SRA-MTF5-00001-26-17 (see Attachment 1, page 4 of this VDCN).**

a) Bill of Materials block: Delete the following line Item:

Line Item 12-2

b) Bill of Materials block: Add the following line Items shown on Attachment 1, page 13 of this VDCN.

Line Item 12-3

Line Item 12-4

Line Item 12-5

Line Item 12-6

Line Item 12-7

Line Item 12-8

Line Item 12-9

Line Item 12-10

Line Item 12-11

Line Item 12-12

Line Item 12-13

JOB NO.	TITLE FOR CHANGE NOTICE
24590	PTF-FRP-VSL-00002B REDESIGN

DESCRIPTION OF CHANGE

Line Item 12-14

Line Item 12-15

Line Item 12-16

Line Item 12-17

Line Item 12-18

c) Joint A: Replace Item 2 (Cap) with Item 6 (Plate), including updating depiction to new instrument nozzle as shown on Attachment 1, page 13 of this VDCN.

d) Cross Section of Nozzle view: Delete the following shown on Attachment 1, page 13 of this VDCN.

Item 12-2

Dimensions

e) Cross Section of Nozzle view: Add Item, Dimension, and Dip Pipe supports shown on Attachment 1, page 13 of this VDCN.

Items 12-3 through 12-18

Dimensions

Dip Pipe Supports (phantom lines)

f) Title Block: Revise the Title as shown on Attachment 1, page 4 of this VDCN.

g) Nozzle N3 Assembly Drawing: Add View, Details, and Sections and Item shown on Attachment1, page 13 of this VDCN.

View A-A

Detail 1

Sections B-B, C-C, and D-D

Item 16 Pipe Guide Strap

5. Affected Document: 24590-QL-SRA-MTF5-00001-26-21 (see Attachment 1, page 5 of this VDCN).

a) Bill of Materials block: Delete the following line Items:

Line Item 18-8

Line Item 18-9

Line Item 18-22

Line Item 18-23

b) Bill of Materials block: Add the following line Items shown on Attachment 1, page 14 of this VDCN.

Line Item 18-24

Line Item 18-25

Line Item 18-26

Line Item 18-27

Line Item 18-28

Line Item 18-29

Drawing Change Notice

CHANGE DOCUMENT NO.
24590-PTF-VDCN-MS-11-00005

JOB NO.	TITLE FOR CHANGE NOTICE
24590	PTF-FRP-VSL-00002B REDESIGN

DESCRIPTION OF CHANGE

Line Item 18-30

c) Bill of Materials block: Revise the following line Items:

Line Item 18-5 ASSM PC block: 12 from 17.

d) Cross Section of Nozzle view: Delete the following Items and Detail view:

Items 18-8, 18-9, 18-22, 18-23 and 18-5 (from bell)

Joint G (View)

Dimensions on Support

Weld Symbol on Support

e) Notes: Delete the following note.

Note 3

f) Cross Section of Nozzle view: Add the following Section callout:

Section X

g) Cross Section of Nozzle view: Revise the following dimensions:

42'-1 3/4" from 41'-11 1/4"

38'-1 3/4" from 38'-11 1/4"

40'-10 3/4" from 41'-8 1/4"

35'-10 3/4" from 36'-8 1/4"

37'-7 3/4" from 38'-5 1/4"

42'-7 3/4" from 43'-5 1/4"

1'-0" from 2 1/2"

h) Cross Section of Nozzle view: Add the following Section, view, dimensions, and support shown on Attachment 1, page 14 of this VDCN.

Dimension on Bracing bars

Section N-N

Dip Pipe Support (Phantom lines)

i) Nozzle N70 Assembly Drawing: Add Detail, and Section and Item shown on Attachment1, page 14 of this VDCN.

Detail 1

Section N-N

Item 27 Pipe Guide Plate

6. Affected Document: 24590-QL-SRA-MTF5-00001-26-22 (see Attachment 1, page 6 of this VDCN).

a) Section E: Delete the following Items:

Items 8, 9, 22 and 23

Section P with arrows

JOB NO.	TITLE FOR CHANGE NOTICE
24590	PTF-FRP-VSL-00002B REDESIGN

DESCRIPTION OF CHANGE

b) N70 Pipe Assembly Drawing: Delete the following Sections, Items, and Details:

Section P

Section S-S

Joint G

Items 9 and 23

c) Section J: Replace Item 5 (Plate 1/2") with Item 29 (Block Plate) as shown on Attachment 1, page 14, Section P-P of this VDCN.

d) Section M: Replace Item 5 (Plate 1/2") with Item 30 (Block Plate) as shown on Attachment 1, page 14, Section R-R of this VDCN.

7. Affected Document: 24590-QL-SRA-MTF5-00001-26-23 (see Attachment 1, page 7 of this VDCN).

a) Bill of Materials block: Delete the following line Items:

Line Item 19-5

Line Item 19-6

Line Item 19-7

Line Item 19-8

Line Item 19-9

Line Item 19-10

Line Item 19-11

Line Item 19-12

Line Item 19-13

Line Item 19-14

Line Item 19-15

Line Item 19-16

Line Item 19-17

b) Bill of Materials block: Add the following line Items shown on Attachment 1, page 14 of this VDCN.

Line Item 19-18

Line Item 19-19

Line Item 19-20

Line Item 19-21

c) Elevation view: Add the following Items shown on Attachment 1, page 14 of this VDCN.

Items 18, 19, 20 and 21

d) Elevation view: Delete the following Items:

Items 5, 6, 7, 8, 11, 14 and 15

JOB NO.	TITLE FOR CHANGE NOTICE
24590	PTF-FRP-VSL-00002B REDESIGN

DESCRIPTION OF CHANGE

e) N18 3/4" DIA Temperature Drawing: Delete the following Detail and Sections:

Detail F

Sections C and D

f) N18 3/4" DIA Temperature Drawing: Add the following Item:

Item 21 Pipe Guide Strap

8. Affected Document: 24590-QL-SRA-MTF5-00001-26-24 (see Attachment 1, page 8 of this VDCN).

a) Drawing: Delete the following:

Items 5, 6, 12, 13, 14, 15, 16 and 17

Section X-X

9. Affected Document: 24590-QL-SRA-MTF5-00001-26-30 (see Attachment 1, page 9 of this VDCN).

a) Bill of Materials block: Add the following line Items shown on Attachment 1, page 15 of this VDCN.

Line Item 30-9

Line Item 30-10

Line Item 30-11

Line Item 30-12

Line Item 30-13

b) Section A: Add the following Items shown on Attachment 1, page 15 of this VDCN.

Items 9 thru 13

c) Section A and Nozzle N64 Plan View of Nozzle: Update depiction on PJM support to show new PJM lateral supports and PJM eccentric nozzle as shown on Attachment 1, page 7 of 24590-PTF-VDCN-MS-11-00003 document.

10. Affected Document: 24590-QL-SRA-MTF5-00001-26-31 (see Attachment 1, page 10 of this VDCN).

a) Section E: Add the following Items shown on Attachment 1, page 15 of this VDCN.

Items 9, 11 and 13

b) Detail F: Add the following Items shown on Attachment 1, page 15 of this VDCN.

Items 10 and 12

c) N63 4" Dia Details Drawing: Add the following Sections, View, and Items shown on Attachment 1, page 15 of this VDCN.

Sections A-A, L-L and J-J

View K-K

Item 11 Bracket Plate

d) Section E: Delete the following:

Weld leader on items 1 and 4

Drawing Change Notice

CHANGE DOCUMENT NO.
24590-PTF-VDCN-MS-11-00005

JOB NO.	TITLE FOR CHANGE NOTICE
24590	PTF-FRP-VSL-00002B REDESIGN

DESCRIPTION OF CHANGE

e) Item 4: Revise the following Diameter

R 2 5/16 to R 2 7/8"

11. Affected Document: 24590-QL-SRA-MTF5-00001-29-71 (see Attachment 1, page 11 of this VDCN).

a) Bill of Materials block: Delete the following line items:

Line Item 18-5

Line Item 18-14

Line Item 18-15

Line Item 18-16

Line Item 18-17

Line Item 18-19

Line Item 18-20

Line Item 18-21

b) Drawing: Delete the following All Support Details and Items 18-5, 18-14 thru 18-21.

12. Affected Document: 24590-QL-SRA-MTF5-00001-26-33 (see Attachment 1, page 16 of this VDCN).

a) Bill of Materials block: Revise the following line items:

Line Item 35-1 Description block: Sch 40S to Sch 160S

Line Item 35-2 Description block: Sch 40S to Sch 160S

Line Item 35-3 Description block: Sch 40S to Sch 160S

ORIGINATOR	CHECKER
D. HARRIS	W. WILCOX

Reviews

CON - B. FOSTER	E&NS - J. HINCKLEY	CS&A - S. GERMAIN D. Harris sign for S. Germain via telecon 6/8/11 3:45	MET - J. DISNEY
MS&PE - B. LINDBERG	PD - L. LEYLAND		

Approval(s)

PT EQUIP EGS - J. JULYK			

Date *(inserted by final approver)*: 6/8/11

APR 0 5 2005

CBI RECEIVED
MAR 1 2005

ADD NOZZLES BY RPP-WTP

DELETE NOZZLE BY RPP-WTP

REVISE BY RPP-WTP

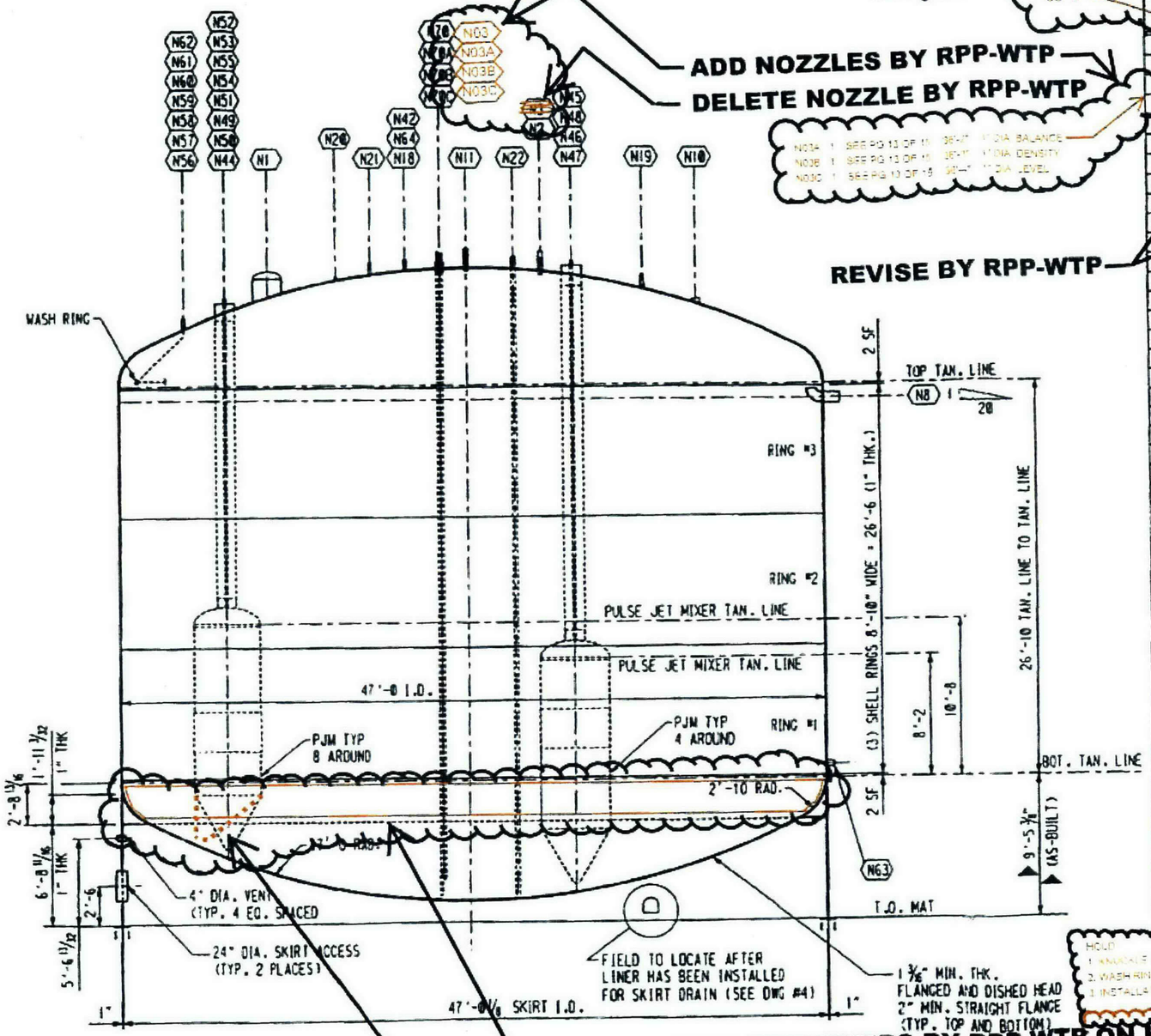

ELEVATION

ADD KNUCKLE STIFFENERS BY RPP-WTP ON HOLD

REVISE PJM NOZZLE BY RPP-WTP ON HOLD

ADD NOTE BY RPP-WTP

NOTES:

1. ALL ELEVATIONS ARE TO FACE OF FLANGE OR END OF PIPE AND FROM BOTTOM TANGENT LINE, EXCEPT NOZZLES N8 & N63 WHICH ARE TO HORIZONTAL CENTER LINE OF NOZZLE FROM BOTTOM T.L.
2. WELD SHOWN MAY BE FIELD - APPLIED AS NECESSARY TO SUPPORT INSTALLATION OF COMPONENTS
3. FABRICATION TOLERANCES FOR FIELD MODIFICATIONS SHALL BE PER 24590-WTP-MV-M59T-00001 (PRESSURE VESSEL TOLERANCES STANDARD DETAILS) AND PFI STANDARD ES-24 (PIPE BENDING METHODS TOLERANCES, PROCESS AND MATERIAL REQUIREMENTS) FOR TOLERANCES NOT SPECIFIED

▶ INDICATES CHANGE FROM PREVIOUS ISSUE

FITTINGS FURNISHED & INSTALLED BY CBI

MARK	NO. REQ'D	CBI MARK	AS-BUILT NOZZLE ELEVATIONS (SEE NOTE 1)	DESCRIPTION / SERVICE
N1	1	SEE DWG 9	34'-1 1/2"	24" DIA. MANWAY (CAPPED)
N2	1	SEE DWG 11	[illegible]	3" DIA. INLET
N3	1	SEE DWG 12	~~35'-4 7/16"~~	6" DIA. SPARE (CAPPED) INSTRUMENTATION
N8	1	SEE DWG 13	25'-9"	8" DIA. OVERFLOW
N10	1	SEE DWG 15	32'-7 1/4"	6" DIA. PASSIVE AIR INLET
N11	1	SEE DWG 16	33'-5 5/16"	8" DIA. VESSEL VENT
N18	1	SEE DWG 19	35'-5 3/16"	3/4" DIA. TEMPERATURE
N19	1	SEE DWG 20	34'-5 1/16"	1" DIA. SPARE (CAPPED)
N20	1	SEE DWG 21	34'-4 1/8"	2" DIA. CONCENTRATE RECYCLE INLET
N21	1	SEE DWG 22	35'-4 3/16"	1" DIA. SPARE WITH DIP PIPE (CAPPED)
N22	1	SEE DWG 23	35'-7 1/2"	3" DIA. SPARE WITH DIP PIPE (CAPPED)
N42	1	SEE DWG 26	35'-5 1/8"	3" DIA. SAMPLE RETURN
N44	1	•	33'-0 5/16"	2"/14" DIA. AIR/VACUUM TO FRP-PJM-00028
N45	1	•	33'-0 7/16"	2"/14" DIA. AIR/VACUUM TO FRP-PJM-00017
N46	1	•	35'-4 1/4"	2"/14" DIA. AIR/VACUUM TO FRP-PJM-00018
N47	1	•	33'-0 7/16"	2"/14" DIA. AIR/VACUUM TO FRP-PJM-00019
N48	1	•	35'-4 3/16"	2"/14" DIA. AIR/VACUUM TO FRP-PJM-00020
N49	1	•	33'-0 7/16"	2"/14" DIA. AIR/VACUUM TO FRP-PJM-00021
N50	1	•	33'-0 1/2"	2"/14" DIA. AIR/VACUUM TO FRP-PJM-00022
N51	1	•	35'-4 13/16"	2"/14" DIA. AIR/VACUUM TO FRP-PJM-00023
N52	1	•	33'-0 1/8"	2"/14" DIA. AIR/VACUUM TO FRP-PJM-00024
N53	1	•	35'-4 3/16"	2"/14" DIA. AIR/VACUUM TO FRP-PJM-00025
N54	1	•	33'-0 7/16"	2"/14" DIA. AIR/VACUUM TO FRP-PJM-00026
N55	1	•	33'-0 7/8"	2"/14" DIA. AIR/VACUUM TO FRP-PJM-00027
N56	1	SEE DWG 35	30'-6 3/16"	2" DIA. INLET TO WASH RING
N57	1	SEE DWG 35	30'-6 1/4"	2" DIA. INLET TO WASH RING
N58	1	SEE DWG 35	▶ 30'-6 3/16"	2" DIA. INLET TO WASH RING
N59	1	SEE DWG 35	30'-6"	2" DIA. INLET TO WASH RING
N60	1	SEE DWG 35	▶ 30'-6 7/16"	2" DIA. INLET TO WASH RING
N61	1	SEE DWG 35	30'-6"	2" DIA. INLET TO WASH RING
N62	1	SEE DWG 35	▶ 30'-6 5/16"	2" DIA. INLET TO WASH RING
N63	1	SEE DWG 30	SEE DWG 30	4" DIA. OUTLET
N64	1	SEE DWG 31	▶ 35'-4 15/16"	1 1/2" DIA. FORCED PURGE AIR INLET
N70	1	SEE DWG 18	-	6" DIA. INSTRUMENTATION
N70A	1	SEE DWG 18	35'-6 15/16"	1" DIA. BALANCE
N70B	1	SEE DWG 18	35'-7 15/16"	1" DIA. DENSITY
N70C	1	SEE DWG 18	▶ 35'-8 15/16"	1" DIA. LEVEL

* SEE PULSE JET MIXER CONTRACT N372020 FOR NOZZLE DETAILS AND OTHER ATTACHMENTS TO SHELL.

HOLD
1. KNUCKLE STIFFENER PLATES ARE ON HOLD PENDING CONFIRMATION OF VESSEL MAXIMUM OPERATING PRESSURE
2. WASH RING PIPE SCHEDULE CHANGE IS ON HOLD PENDING CONFIRMATION OF VESSEL MAXIMUM OPERATING PRESSURE
3. INSTALLATION OF REVISED PJM NOZZLES ON OUTER RUNS IS ON HOLD PENDING RESOLUTION OF MOUNTING REQUIREMENTS

GENERAL ARRANGEMENT
CONCURRENCE
DATE: 4/5/05
SIGNED:

CBI

GENERAL ELEVATION
VESSEL FRP-VSL-000028 (Q)
WASTE FEED RECEIPT
RICHLAND, WA

CUSTOMER'S NO. 00
BY CSI DATE 8-28-02
PYE / BR RM CONS
ENGINEERING REVISED
CONTRACT NO. 1372020
DWG 1 REV 11
SHT 1

CAD FILE: 2020101R.DGN

24590-QL-SRA-MTF5-00001-26-01
REV 00 I

R10391517

~~24590-QL-SRA-MTF5-00001~~ ~~26-01 H~~ 26-01 Rev 00 KW 6/8/05

APR 0 5 2005

SHIP PC	MARK	ASSM PC	DESCRIPTION	LOCTN FT	LOCTN IN	SPEC	NO	EST WT
20	5-1		PL SK x 1 3/16			M1	A	22718
			(45° x 1.2° x 7'-7)					
16	5-2		PL SK x 1 3/16			M1	A	72535
			(104 5/16 x 1.2 x 15'-3 5/16					
2	5-3		PL SK x 1 3/16			M1	A	9963
			(96 x 1.2 x 20'-0)					
			~~M1 SCS 316L 081 x (Lng 240-240)~~					

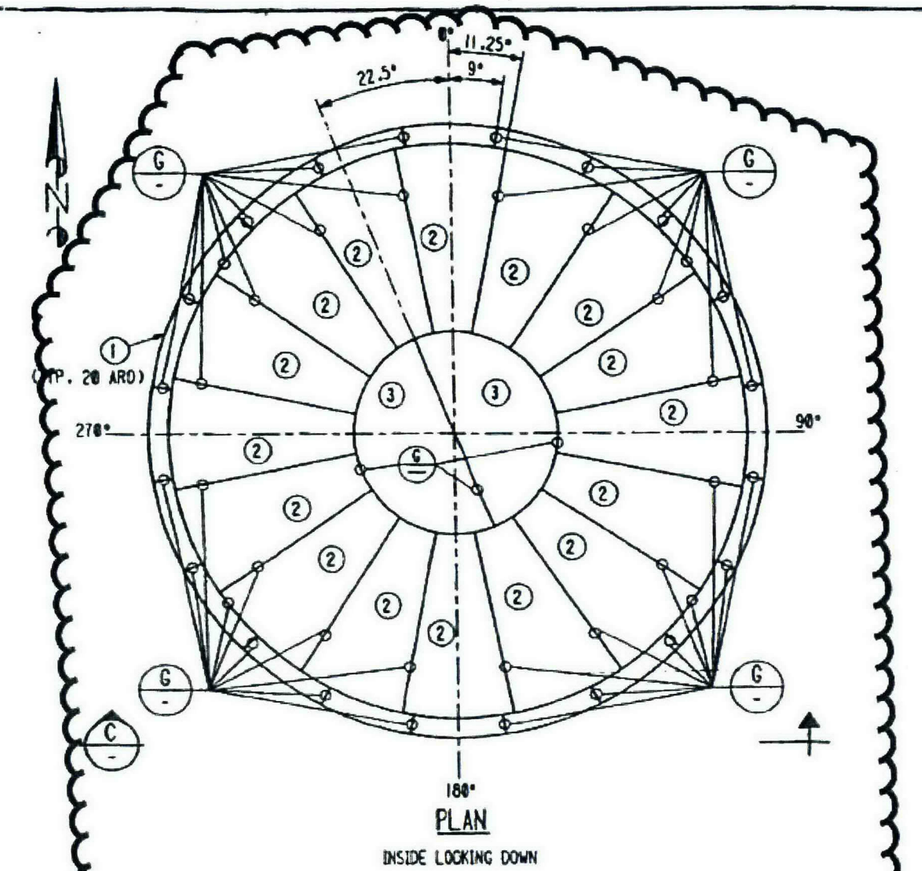

PLAN

INSIDE LOCKING DOWN

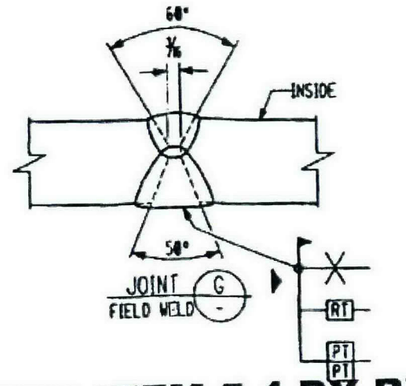

ADD ITEM 5-4 BY RPP-WTP

ON HOLD

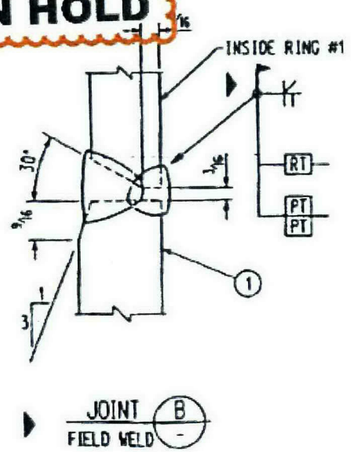

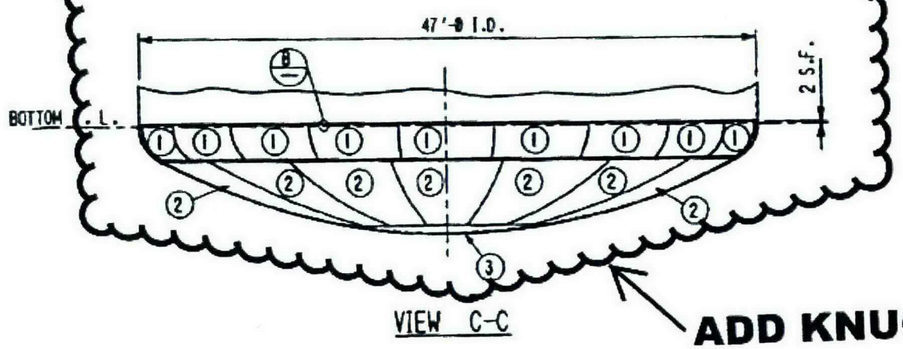

VIEW C-C

ADD KNUCKLE STIFFNER PLATES BY RPP-WTP ON HOLD

▶ INDICATES CHANGE FROM PREVIOUS ISSUE

Bechtel Systems & Infrastructure, Inc

JOB No. 24590

SUPPLIER DOCUMENT STATUS

1. ☒ WORK MAY PROCEED
2. ☐ REVISE AND RESUBMIT. WORK MAY PROCEED SUBJECT TO RESOLUTION OF INDICATED COMMENTS
3. ☐ REVISE AND RESUBMIT. WORK MAY NOT PROCEED
4. ☐ REVIEW NOT REQUIRED. WORK MAY PROCEED

PERMISSION TO PROCEED DOES NOT CONSTITUTE ACCEPTANCE OR APPROVAL OF DESIGN DETAILS, CALCULATIONS, ANALYSES, TEST METHODS, OR MATERIALS DEVELOPED OR SELECTED BY THE SUPPLIER AND DOES NOT RELIEVE SUPPLIER FROM FULL COMPLIANCE WITH CONTRACTUAL OBLIGATIONS.

	M	P	ML	H	MH	E	C&I	CS&A	PD	PT	ESH
REVIEWED											

G-321 DOCUMENT CATEGORY 1.1
[From Supplement A to G-321-E (E) or G-321-V (V), as applicable]
RESPONSIBLE ENGINEER DATE 30 APR 03

KC 6/8/05

NOTES:

1. WORK THIS DWG. WITH DWG. #1, 2 & 5 SHT. 2 THRU 4
2. ALL WELDS TO BE 316L UNLESS NOTED OTHERWISE.

24590-QL-SRA-MTF5-00001-26-06
REV 00B

CBI RECEIVED
MAY - 1 2003

R10391522

4/23/03 4/23/03
☒ Processed/Data Entry ☒ Copied/QA ☐ Scanned ☐ Filed

4/30/03
☒ Processed/Data Entry ☐ Copied/QA ☐ Scanned ☐ Filed

KC 6/8/05

~~24590-QL-SRA-MTF5-00001 - 26-06 Rev 00A~~

CERTIFIED AS BUILT
CONTRACT DRAWING
DATE: 4/5/05
SIGNED:

REV	DESCRIPTION	BY	CHK	DATE
3	ADDED CONTROL SYSTEM NOTE & SHT. 5			
2	REVISED JOINT & WELD DETAIL & JOINT C.			
1	ADDED RT AND PT			

REMARKS

CBI

SUPPLIER'S / PURCHASER'S NO

BOTTOM HEAD ASSEMBLY
VESSEL FRP-VSL-00002B (Q)
WASTE FEED RECEIPT
RICHLAND, WA

CUSTOMER'S NO
BY DU CHKD CST DATE 8-29-02
PVE / B.R. 84 COMB
ENGINEERING ASSIGNED

CONTRACT NO 1372028
DWG 5 SHT 1 REV 3

CAD FILE: 28205818.dgn

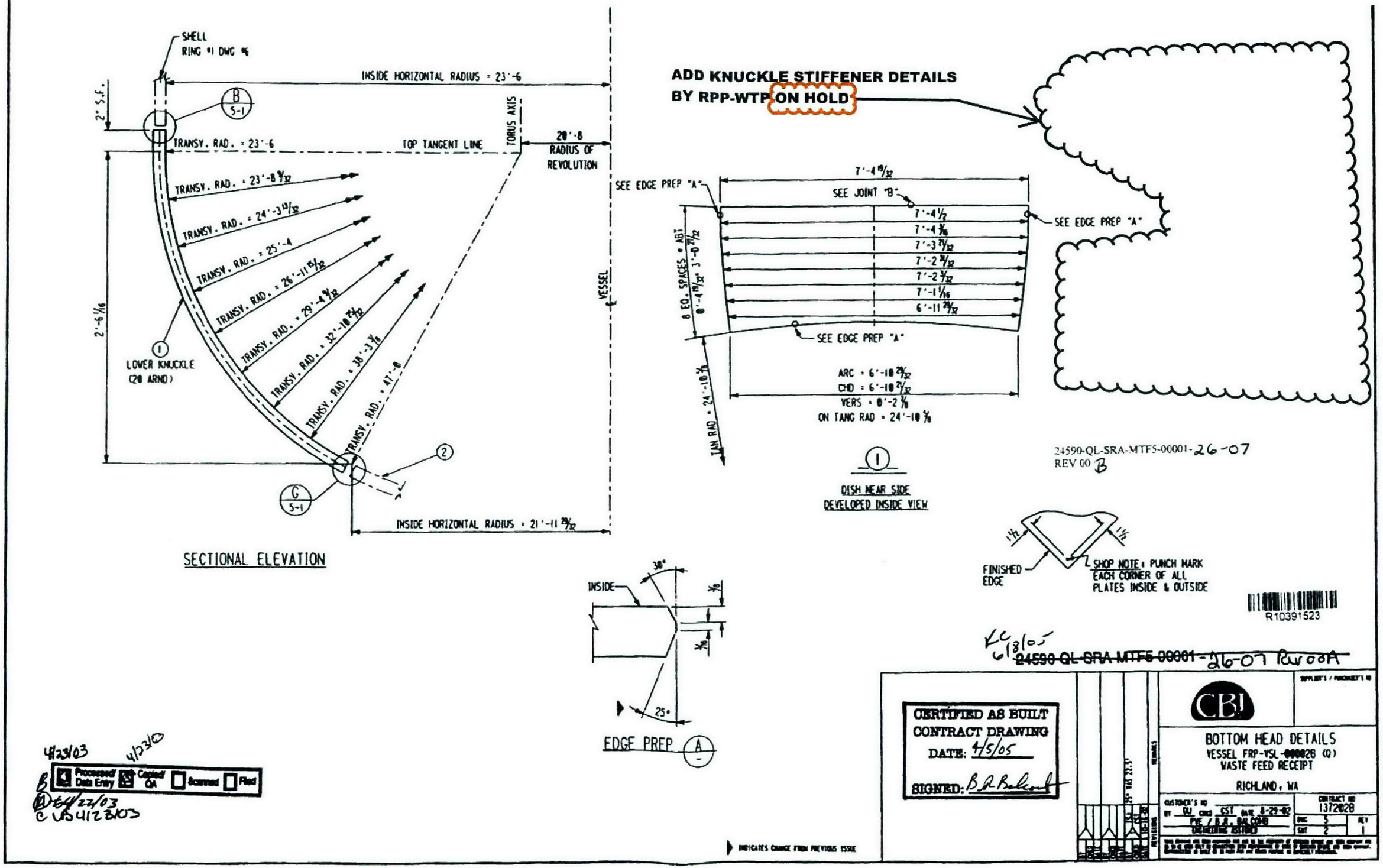
SHELL
RING #1 DWG #6
INSIDE HORIZONTAL RADIUS = 23'-6
2" S.F.
B 5-1
TRANSV. RAD. = 23'-6
TOP TANGENT LINE
TORUS AXIS
20'-8
RADIUS OF REVOLUTION
TRANSV. RAD. = 23'-8 9/32
TRANSV. RAD. = 24'-3 13/32
TRANSV. RAD. = 25'-4
TRANSV. RAD. = 26'-11 15/32
TRANSV. RAD. = 29'-4 9/32
TRANSV. RAD. = 32'-10 25/32
TRANSV. RAD. = 38'-3 3/8
TRANSV. RAD. = 47'-0
2'-6 1/16
1
LOWER KNUCKLE
(20 ARND)
2
G 5-1
INSIDE HORIZONTAL RADIUS = 21'-11 29/32
VESSEL
SECTIONAL ELEVATION
ADD KNUCKLE STIFFENER DETAILS
BY RPP-WTP ON HOLD
SEE EDGE PREP "A"
7'-4 19/32
SEE JOINT "B"
7'-4 1/2
7'-4 3/16
7'-3 21/32
7'-2 31/32
7'-2 3/32
7'-1 1/16
6'-11 29/32
SEE EDGE PREP "A"
8 EQ. SPACES @ ABT
0'-4 19/32 = 3'-0 27/32
SEE EDGE PREP "A"
ARC = 6'-10 29/32
CHD = 6'-10 21/32
VERS = 0'-2 7/8
ON TANG RAD = 24'-10 5/8
TAN RAD = 24'-10 5/8
1
DISH NEAR SIDE
DEVELOPED INSIDE VIEW
24590-QL-SRA-MTF5-00001-26-07
REV 00 B
1 1/2
1 1/2
FINISHED EDGE
SHOP NOTE: PUNCH MARK EACH CORNER OF ALL PLATES INSIDE & OUTSIDE
R10391523
INSIDE
30°
3/8
3/16
25°
EDGE PREP A
KC 6/8/05
~~24590-QL-SRA-MTF5-00001~~-26-07 Rev 00A
4/23/03
4/23/03
B Processed/ Data Entry
Copied/ QA
Scanned
Filed
4/22/03
C VB 4/23/03
CERTIFIED AS BUILT
CONTRACT DRAWING
DATE: 4/5/05
SIGNED: B.R. Balcomb
CBI
BOTTOM HEAD DETAILS
VESSEL FRP-VSL-00002B (Q)
WASTE FEED RECEIPT
RICHLAND, WA
CONTRACT NO 1372028
DWG 5
SHT 2
REV 1
INDICATES CHANGE FROM PREVIOUS ISSUE
CAD FILE: 20205028.dgn

CBI RECEIVED
APR 0 5 2005

SHIP PC	MARK	ASSM PC	DESCRIPTION	LENGTH FT	LENGTH IN	SPEC	NO	EST WT
1	12-A		6" DIA NOZZLE ASSEMBLY				A	46
	12-1	1	PIPE 6" DIA SCH 80S SMLS SIDE BOE	2	1 3/4	M3	A	32
	12-2		PIPE 6" DIA SCH 80S BW			M3		
			M3=SA312 TP316L.CBI SPEC A-312-2406					
			M7=SA403 316LWPS.CBI SPEC A-403-242					

DELETE ITEM 12-2
REPLACE WITH ITEM
12-6 BY RPP-WTP

DELETE ITEM 12-2
BY RPP-WTP

DELETE DIMENSION
REPLACE WITH NEW
DIMENSION BY RPP-WTP

ADD ITEMS 12-3 THRU
12-18 BY RPP-WTP

ADD ITEMS 12-3 THRU
12-16 BY RPP-WTP

ADD DETAIL 1, VIEWA-A,
SECTIONS B-B, C-C, D-D
AND ITEM 16 BY RPP-WTP

REVISE BY RPP-WTP

JOINT SHOP WELD (A)

JOINT FIELD WELD (B)

CROSS SECTION OF NOZZLE (N3)

▶ 1/8 RAD ALL AROUND INSIDE & OUTSIDE

ARC MEASURED ON OUTSIDE OF SHELL ALONG GIRTH JOINT CL AT PC MK #7-2/7-3 FROM AZ 0°	'A' MEASURED ON OUTSIDE OF SHELL FROM GIRTH JOINT CL OF PC MK #7-2/7-3
0	3'-10 15/32

▶ INDICATES CHANGE FROM PREVIOUS ISSUE

Bechtel Systems & Infrastructure — JOB No. 24590

SUPPLIER DOCUMENT STATUS
1 ☒ WORK MAY PROCEED
2 ☐ REVISE AND RESUBMIT. WORK MAY PROCEED SUBJECT TO RESOLUTION OF INDICATED COMMENTS
3 ☐ REVISE AND RESUBMIT WORK MAY NOT PROCEED
4 ☐ REVIEW NOT REQUIRED WORK MAY PROCEED

PERMISSION TO PROCEED DOES NOT CONSTITUTE ACCEPTANCE OR APPROVAL OF DESIGN DETAILS, CALCULATIONS, ANALYSES, TEST METHODS, OR MATERIALS DEVELOPED OR SELECTED BY THE SUPPLIER AND DOES NOT RELIEVE SUPPLIER FROM FULL COMPLIANCE WITH CONTRACTUAL OBLIGATIONS

	M	P	ML	H	MH	E	C&I	CS&A	PD	FT	ESH
REVIEWED											

G-321 DOCUMENT CATEGORY 1.1
[From Supplement A to G-321-E (E) or G-321-V (V), as applicable]
RESPONSIBLE ENGINEER D. Simmons DATE 26MAY03

KV 06/08/05

6-16-03 6-17-03
Processed/Data Entry ☒ Copied/QA ☐ Scanned ☐ Filed
10/6/06/03
11/6/16/03

R10391534

~~24590-QL-SRA-MTF5-00001-36~~ KV 06/08/05 R1 Rev00

4/23/03 4/23/03
Processed/Data Entry ☒ Copied/QA ☐ Scanned ☐ Filed
64/22/03
UB 4/23/03

NOTES:
1. ALL WELDS TO BE 316L UNLESS NOTED OTHERWISE.
2. WORK WITH DWG #1, #2 & #3.

PTF-N03, N03A, N03B, N03C
1" PIPE ASSEMBLY

CERTIFIED AS BUILT
CONTRACT DRAWING
DATE: 4/5/05
SIGNED: B.A. Baker

CBI
N3, 6" SPARE, CAPPED
WASTE FEED RECEIRT
VESSEL TRP-TSL-00002B (D)
RICHLAND, WA

CUSTOMER'S NO
BY ISJ CHKD CST DATE 9/9/02
PTF/B.B. BALCOMB
DETAILING ASSOCIATES
CONTRACT NO 137202B
DWG 12 REV 2
SHT 1

24590-QL-SRA-MTF5-00001-36-17
REV 00 B
20212018.DGN

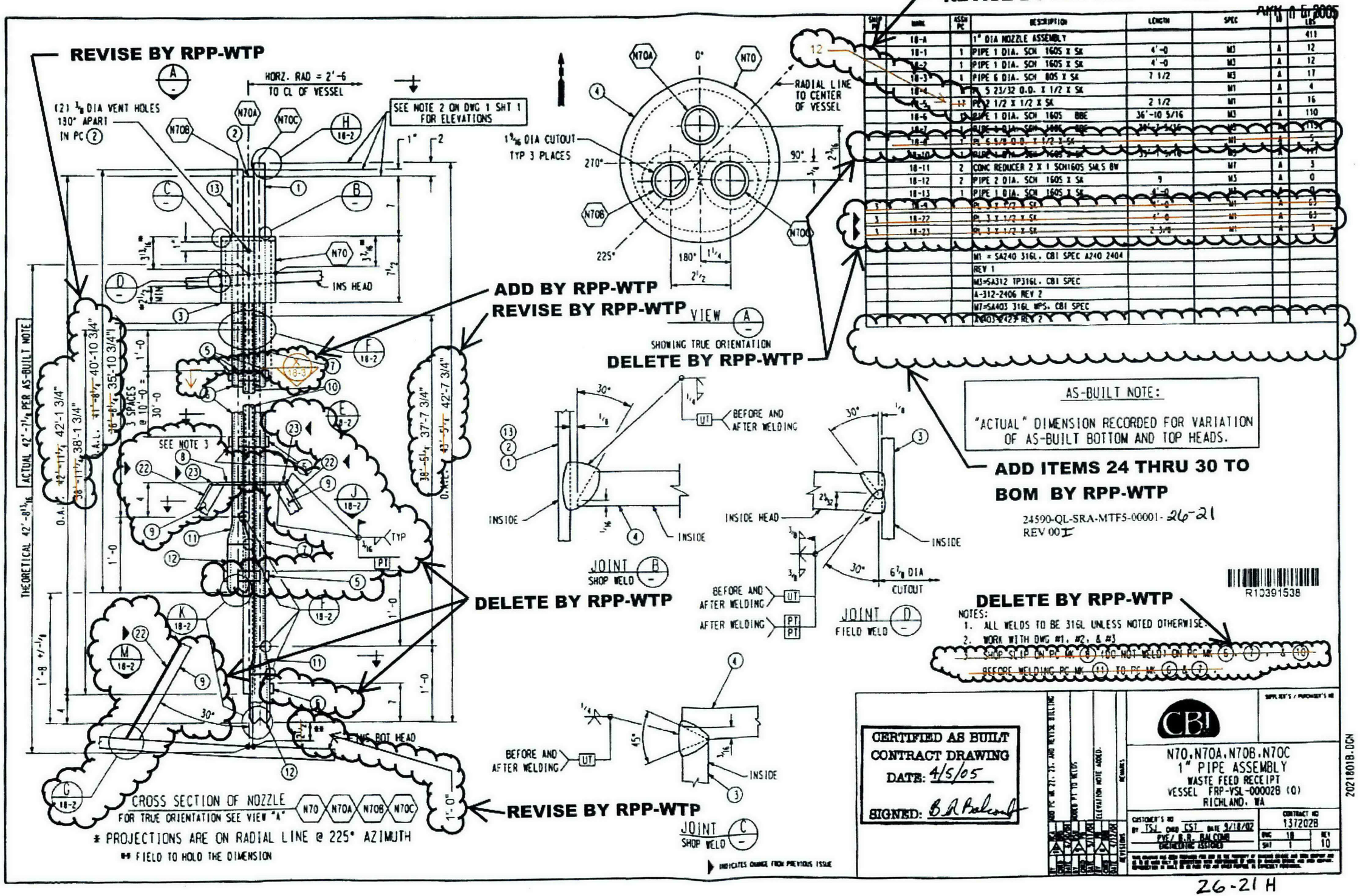

SHIP PC	MARK	ASSM PC	DESCRIPTION	LENGTH	SPEC	ID	LBS
	18-A		1" DIA NOZZLE ASSEMBLY				411
	18-1	1	PIPE 1 DIA. SCH 160S X SK	4'-0	M3	A	12
	18-2	1	PIPE 1 DIA. SCH 160S X SK	4'-0	M3	A	12
	18-3	1	PIPE 6 DIA. SCH 80S X SK	7 1/2	M3	A	17
	18-4	1	PL 5 23/32 O.D. X 1/2 X SK		M1	A	4
	18-5	17	PL 2 1/2 X 1/2 X SK	2 1/2	M1	A	16
	18-6	1	PIPE 1 DIA. SCH 160S BBE	36'-10 5/16	M3	A	110
	18-7	1	PIPE 1 DIA. SCH 160S BBE	36'-7 5/16	M3	A	115
	18-8	1	PL 6 5/8 O.D. X 1/2 X SK		M1	A	5
	18-10	1	PIPE 1 DIA. SCH 160S X SK	35'-1 5/16	M3	A	117
	18-11	2	CONC REDUCER 2 X 1 SCH160S SMLS BW		M7	A	3
	18-12	2	PIPE 2 DIA. SCH 160S X SK	9	M3	A	0
	18-13	1	PIPE 1 DIA. SCH 160S X SK	4'-0	M3	A	0
3	18-9		PL 3 X 1/2 X SK	4'-0	M1	A	63
3	18-22		PL 3 X 1/2 X SK	4'-0	M1	A	63
3	18-23		PL 3 X 1/2 X SK	2 3/8	M1	A	3
			M1 = SA240 316L, CBI SPEC A240 2404				
			REV 1				
			M3=SA312 TP316L, CBI SPEC				
			A-312-2406 REV 2				
			M7=SA403 316L WPS, CBI SPEC				
			A403-2423 REV 2				

26-21 H

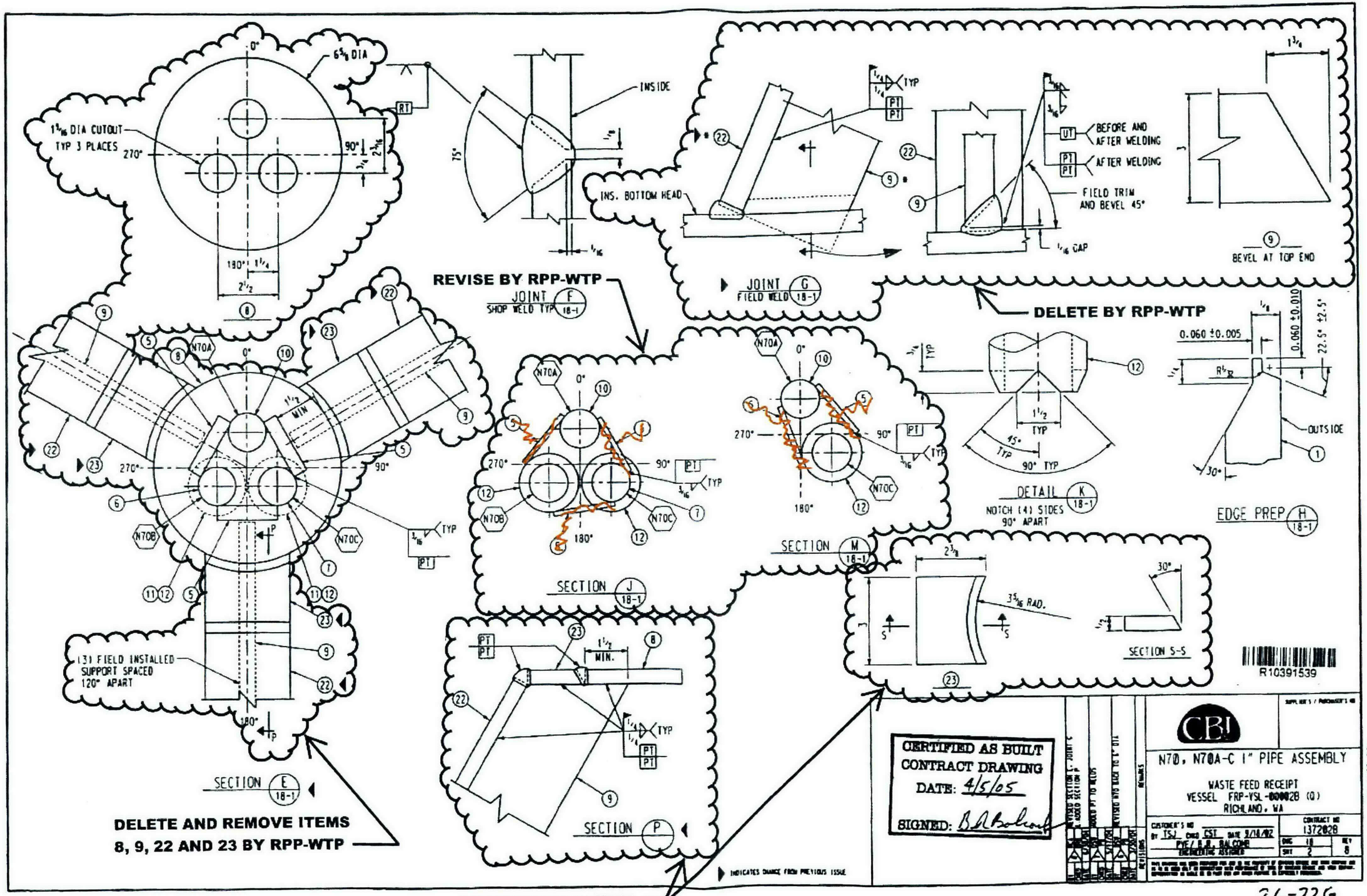
REVISE BY RPP-WTP
DELETE BY RPP-WTP
DELETE AND REMOVE ITEMS 8, 9, 22 AND 23 BY RPP-WTP
DELETE BY RPP-WTP
JOINT F SHOP WELD TYP 18-1
JOINT G FIELD WELD 18-1
DETAIL K 18-1 NOTCH (4) SIDES 90° APART
EDGE PREP H 18-1
SECTION E 18-1
SECTION J 18-1
SECTION M 18-1
SECTION P
SECTION S-S
(3) FIELD INSTALLED SUPPORT SPACED 120° APART
1 9/16 DIA CUTOUT TYP 3 PLACES
6 5/8 DIA
INSIDE
INS. BOTTOM HEAD
BEFORE AND AFTER WELDING
AFTER WELDING
FIELD TRIM AND BEVEL 45°
1/16 GAP
BEVEL AT TOP END
OUTSIDE
0.060 ±0.005
0.060 ±0.010
22.5° ±2.5°
3 5/16 RAD.
R10391539
CERTIFIED AS BUILT CONTRACT DRAWING
DATE: 4/5/05
SIGNED:
CBI
N70, N70A-C 1" PIPE ASSEMBLY
WASTE FEED RECEIPT
VESSEL FRP-VSL-00002B (Q)
RICHLAND, WA
CONTRACT NO 1372028
INDICATES CHANGE FROM PREVIOUS ISSUE
29218028.DGN

26-22G

CBI RECEIVED
APR 0 5 2005

DELETE AND REPLACE WITH NEW SUPPORTS BY RPP-WTP

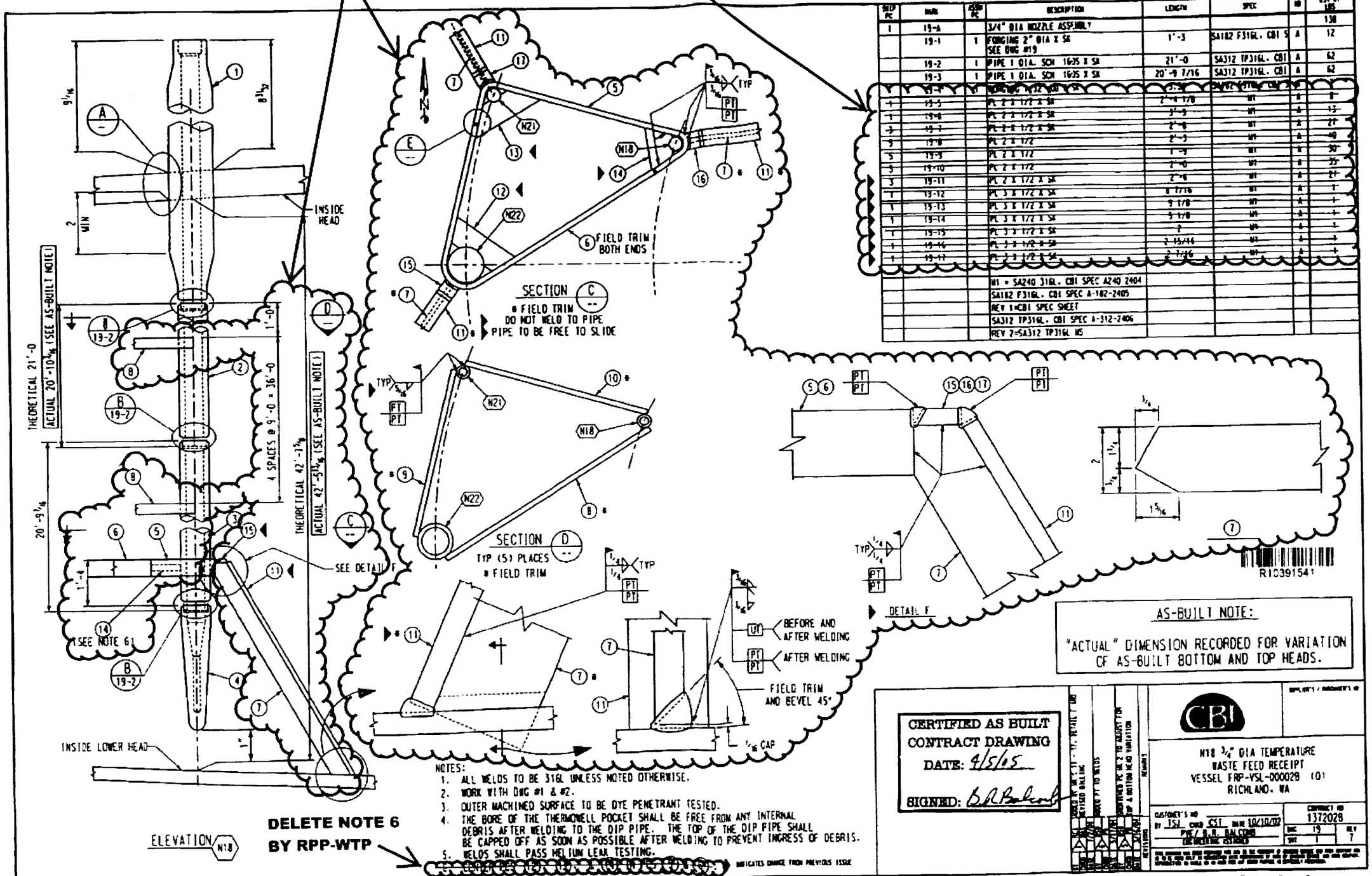

SHIP PC	MARK	ASSM PC	DESCRIPTION	LENGTH	SPEC	MD	EST WT LBS
1	19-A		3/4" DIA NOZZLE ASSEMBLY				138
	19-1	1	FORGING 2" DIA X SR SEE DWG #19	1'-3	SA182 F316L. CBI S	A	12
	19-2	1	PIPE 1 DIA. SCH 160S X SR	21'-0	SA312 TP316L. CBI	A	62
	19-3	1	PIPE 1 DIA. SCH 160S X SR	20'-9 7/16	SA312 TP316L. CBI	A	62
1	19-4	1	FORGING 2" DIA X SR	2'-3	SA182 F316L. CBI S	A	8
1	19-5		PL 2 X 1/2 X SR	2'-4 1/8	M1	A	8
1	19-6		PL 2 X 1/2 X SR	3'-3	M1	A	13
3	19-7		PL 2 X 1/2 X SR	2'-8	M1	A	21
3	19-8		PL 2 X 1/2	2'-3	M1	A	40
5	19-9		PL 2 X 1/2	1'-9	M1	A	30
3	19-10		PL 2 X 1/2	2'-10	M1	A	35
3	19-11		PL 2 X 1/2 X SR	2'-6	M1	A	21
1	19-12		PL 3 X 1/2 X SR	8 7/16	M1	A	1
1	19-13		PL 3 X 1/2 X SR	9 1/8	M1	A	1
1	19-14		PL 3 X 1/2 X SR	5 1/8	M1	A	1
1	19-15		PL 3 X 1/2 X SR	2	M1	A	1
1	19-16		PL 3 X 1/2 X SR	2 15/16	M1	A	1
1	19-17		PL 3 X 1/2 X SR	2 7/16	M1	A	1

M1 = SA240 316L. CBI SPEC A240 2404
SA182 F316L. CBI SPEC A-182-2405
REV 1=CBI SPEC SHEET
SA312 TP316L. CBI SPEC A-312-2406
REV 2=SA312 TP316L MS

AS-BUILT NOTE:

"ACTUAL" DIMENSION RECORDED FOR VARIATION OF AS-BUILT BOTTOM AND TOP HEADS.

NOTES:
1. ALL WELDS TO BE 316L UNLESS NOTED OTHERWISE.
2. WORK WITH DWG #1 & #2.
3. OUTER MACHINED SURFACE TO BE DYE PENETRANT TESTED.
4. THE BORE OF THE THERMOWELL POCKET SHALL BE FREE FROM ANY INTERNAL DEBRIS AFTER WELDING TO THE DIP PIPE. THE TOP OF THE DIP PIPE SHALL BE CAPPED OFF AS SOON AS POSSIBLE AFTER WELDING TO PREVENT INGRESS OF DEBRIS.
5. WELDS SHALL PASS HELIUM LEAK TESTING.

DELETE NOTE 6 BY RPP-WTP

INDICATES CHANGE FROM PREVIOUS ISSUE

CERTIFIED AS BUILT CONTRACT DRAWING
DATE: 4/5/05
SIGNED: B.R. Balcom

CBI

N18 3/4" DIA TEMPERATURE WASTE FEED RECEIPT VESSEL FRP-VSL-000028 (0)
RICHLAND, WA

CUSTOMER'S NO
BY TSJ CHKD CST DATE 10/10/02
PWE/ B.R. BALCOM
CONTRACT NO 1372028
DWG 19 REV 7
SHT 1

20219018.DGN

26-23G

BI RECEIVED
APR 0 5 2005

DELETE ITEMS 5, 6, 12, 13, 14, 15, 16, 17 AND SECTION X-X BY RPP-WTP

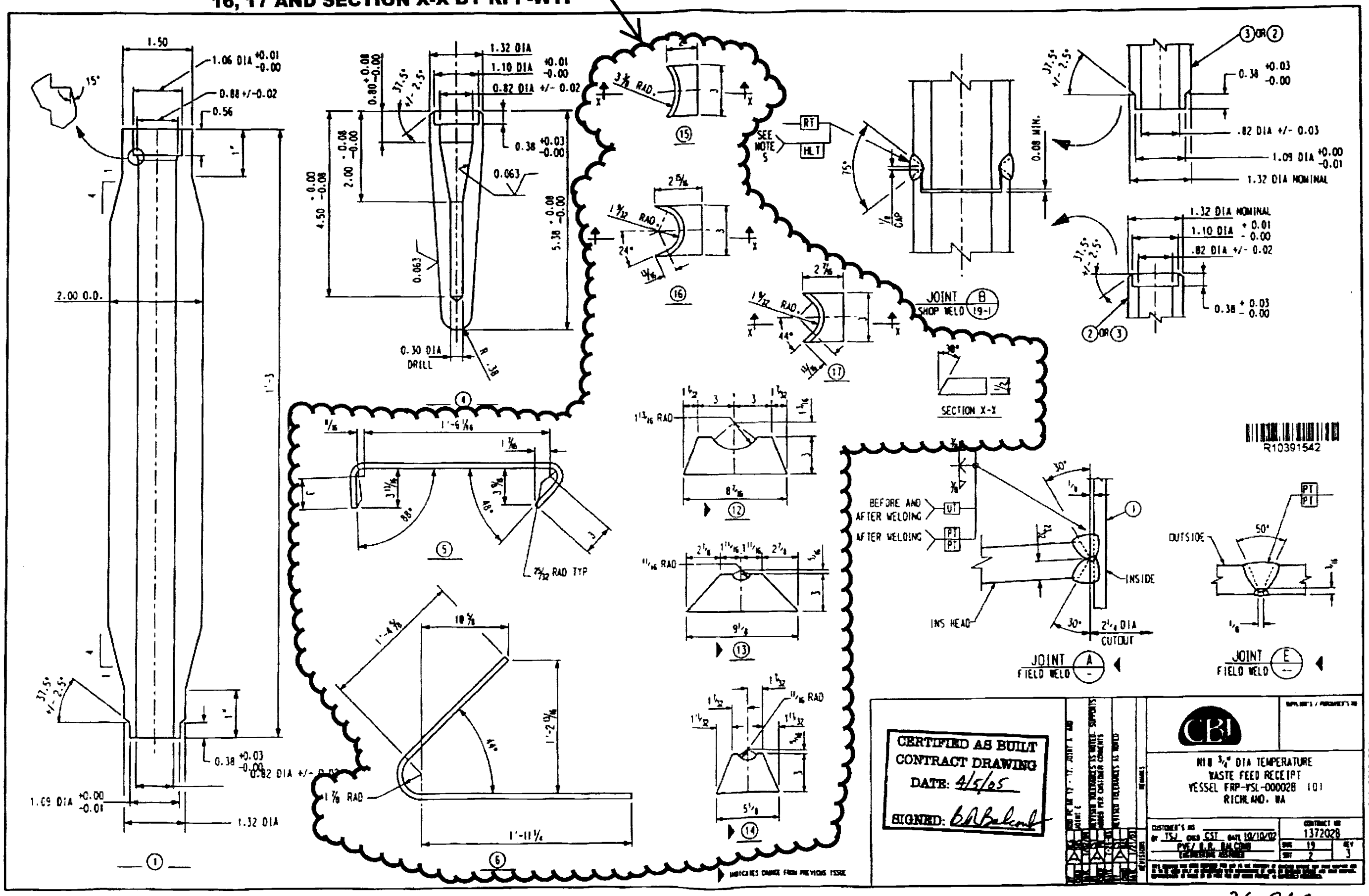

26-24 C

CBI RECEIVED
APR 05 2005

UPDATE DEPICTION BY RPP-WTP

ADD PIPE KICK-OFF SUPPORTS BY RPP-WTP

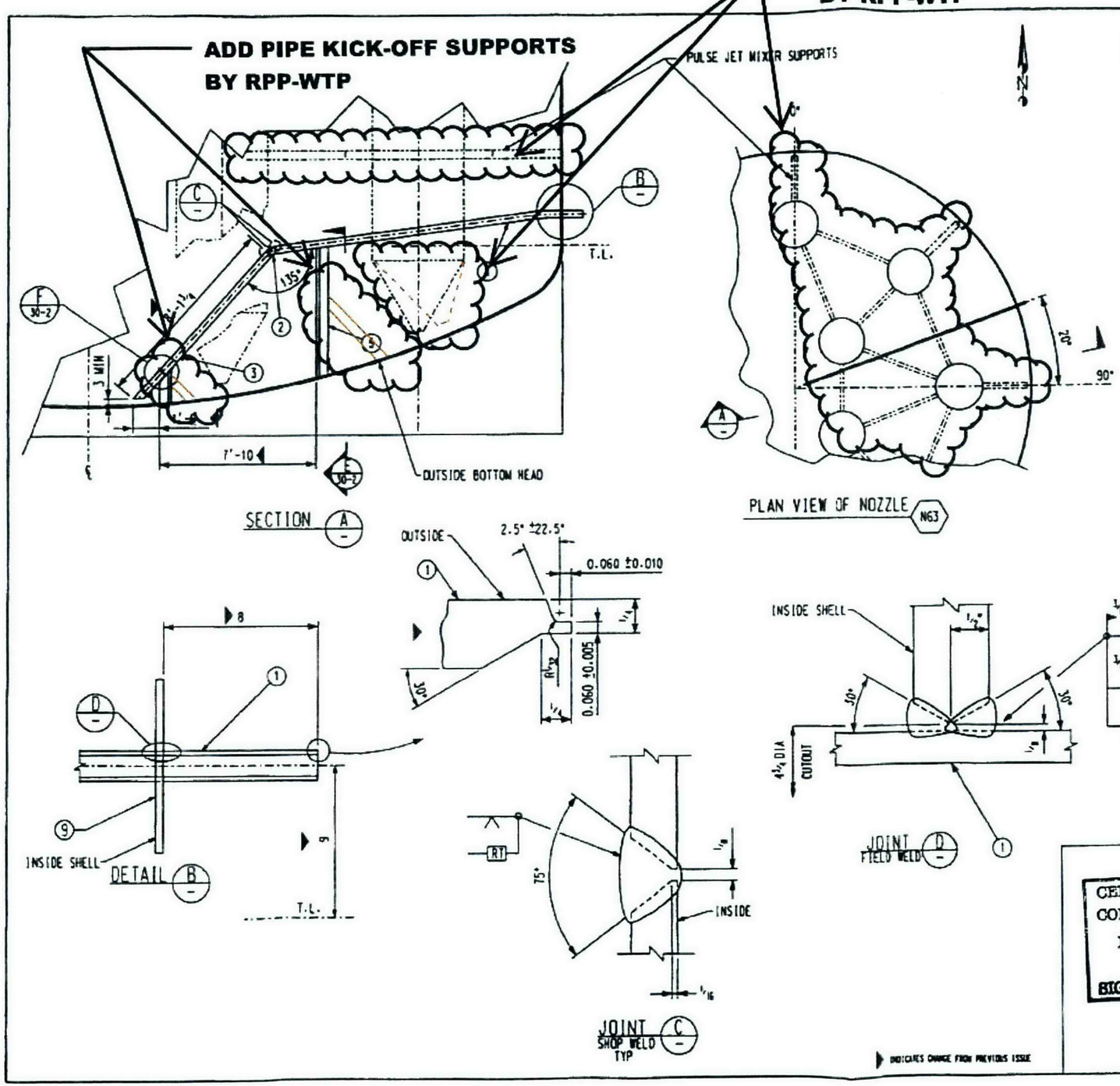

SHIP PC	MARK	ASSM PC	DESCRIPTION	LENGTH FT	LENGTH IN	SPEC	IN	EST WT
1	30-A		4" DIA PIPE ASSEMBLY A					594
	30-1	1	PIPE 4" DIA SCH 160S SMLS BOE	16	0 3/8	N3	A	385
	30-2	1	WELDED 4" DIA SCH160 45 DEG ELBOW			N7	A	9
	30-3	1	PIPE 4" DIA SCH160S SMLS SLOE BOE	8	1 3/4	N3	A	200
1	30-4		PL 6" X 1/2" X SK	0	10	N1	A	4
2	30-5		PL 6" X 1/2" X SK	7	0	N1	A	150
1	30-6		PL 6" X 1/2" X SK	2	3 13/16	N1	A	18
1	30-7		PL 5 1/2" X 1/2"	0	7 1/2	N1	A	9
1	30-8		PL 1/2 X 1/2 X SK	1	1	N1	A	2
			N1=SA240 316L,CBI SPEC A-240-2404					
			N3=SA312 TP316L,CBI SPEC A-312-2406					
			N7=SA403 316L WPS, CBI SPEC A-403-2423					

ADD ITEMS 30-9, 30-10, 30-11, 30-12 AND 30-13 BY RPP-WTP

24590-QL-SRA-MTF5-00001- 26-30
REV 00 C

9/30/03 9-4-03
Processed Data Entry | Copied QA | Scanned | Filed

~~24590-QL-SRA-MTF5-00001-26-30,~~
~~Rev.00~~ RV 04/08/05

R10391548

NOTES:
1. ALL WELDS TO BE 316L UNLESS NOTED OTHERWISE.
2. WORK WITH DWG #1, #2, & #3

CERTIFIED AS BUILT CONTRACT DRAWING
DATE: 4/5/05
SIGNED: B.R. Balcomb

REVISIONS: 1 ADD WELDS PER CUSTOMER COMMENTS; 2 CHANGED WELD EDGE PREP; 3 ADDED WELD SYMBOL TO FIELD JOINT DETAIL PER CUSTOMER COMMENTS.

CBI

N63 4" DIA OUTLET
WASTE FEED RECEIPT
VESSEL FRP-VSL-00002B (Q)
RICHLAND, WA

CUSTOMER'S NO TSL BY CBI CST DATE 10-16-02
PWC/B.R. BALCOMB
CONTRACT NO 1372028
DWG 30 SHT 01 REV 2

20230018.DGN

INDICATES CHANGE FROM PREVIOUS ISSUE

APR 05 2005

DELETE BY RPP-WTP

ADD PIPE GUIDE SUPPORT BY RPP-WTP

CHANGE BY RPP-WTP

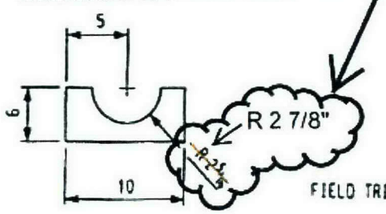

④

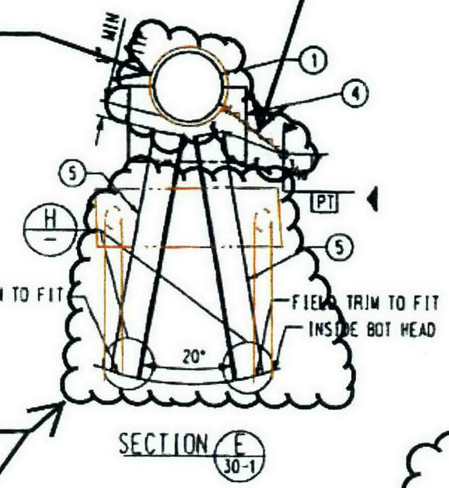

ADD PIPE KICKOFF SUPPORT BY RPP-WTP

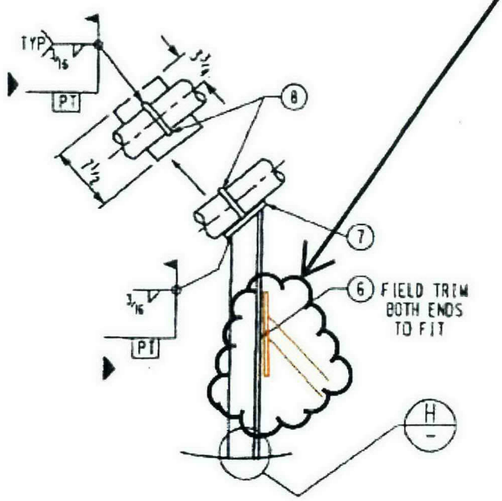

DETAIL F 30-1

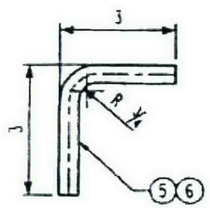

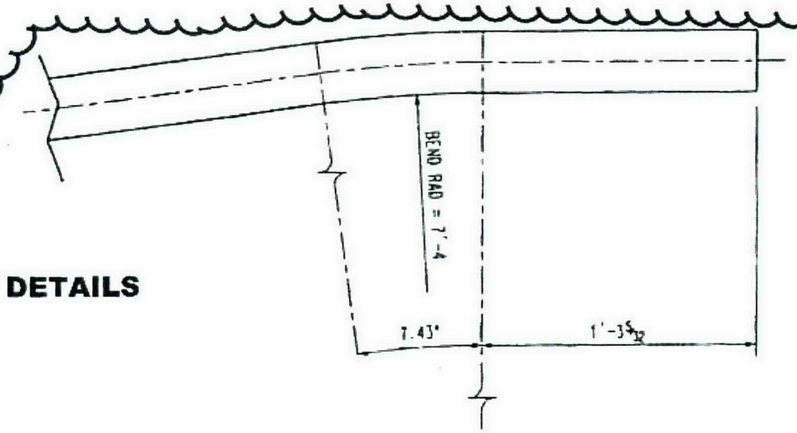

①

ADD PIPE SUPPORT DETAILS BY RPP-WTP

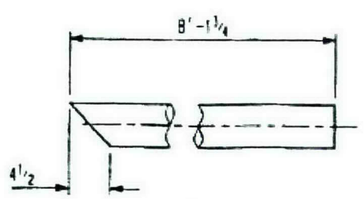

③

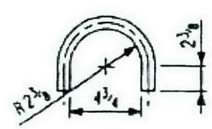

⑧

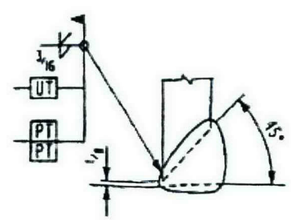

DETAIL H
FIELD WELD

▶ INDICATES CHANGE FROM PREVIOUS ISSUE

Bechtel National, Inc.

Job No. 24590

SUPPLIER DOCUMENT STATUS

1. ☑ Work may proceed.
2. ☐ Revise and resubmit. Work may proceed subject to resolution of indicated comments.
3. ☐ Revise and resubmit. Work may not proceed.
4. ☐ Review not required. Work may proceed.

Permission to proceed does not constitute acceptance or approval of design details, calculations, analyses, test methods, or materials developed or selected by the supplier and does not relieve supplier from full compliance with contractual obligations.

REVIEWED

G-321 Document Category: 1, 3
[From Supplement A to G-321-E (E) or G-321-V (V), as applicable, or "N/A" if SSRS is used]

Supersedes BNI Document No. _____ Rev. _____
[When applicable]

Accepted by: Robert Jones — 6/3/04

Released by: Gisi Dalton — 6/4/04
[When applicable]

HC 6/8/05

24590-QL-SRA-MTF5-00001- 26-31
REV 00 1

R10391549

CERTIFIED AS BUILT CONTRACT DRAWING
DATE: 4/5/05
SIGNED: B.R. Balcombe

REVISIONS	REMARKS
ADDED PT TO WELDS	
ADDED 1.43" @ PLOT NOZZLE PROJECTION WAS 1-1 5/32. DIMENSION WAS 9-11 1/4.	
REMOVED JOINT C.	

CBI

SUPPL. ICN'S / PURCHASER'S NO

N63 4" DIA DETAILS
WASTE FEED RECEIPT
VESSEL FRP-VSL-00002B (Q)
RICHLAND, WA

CUSTOMER'S NO
BY TSU CHKD CST DATE 10-16-02
PYE/ B.R. BALCOMB
ENGINEERING ASSOCIATES

CONTRACT NO 137202B
DWG 30 REV 3
SHT 02

20230028.DGN

26-31C

DELETE AND REPLACE WITH DIP PIPE SUPPORT DETAILS BY RPP-WTP IN CROSS HATCH AREA

SHIP PC	MARK	ASSM PC	DESCRIPTION				
12	18-5		PL 2 1/2 X 1/2	2 1/2	M1	A	12
2	18-14		L 2 1/2 X 2 1/2 X 1/4	8'-6	M9	A	4
2	18-15		L 2 1/2 X 2 1/2 X 1/4	5'-0	M9	A	34
4	18-16		L 2 X 2 X 1/4	2'-9	M9	A	36
4	18-17		L 2 X 2 X 1/4	2'-6	M9	A	36
4	18-18		PL 2 1/2 X 1/2	3	M1	A	4
4	18-19		L 2 X 2 X 1/4	7	M9	A	12
4	18-20		L 2 X 2 X 1/4	2'-9	M9	A	40
2	18-21		L 2 X 2 X 1/4	4'-0	M9	A	28

M1 = SA240 316L, CBI SPEC A240 2404
M1 = SA240 316L, CBI SPEC A240 2404
M9 = SA479 316L CBI SPEC A-479 2570

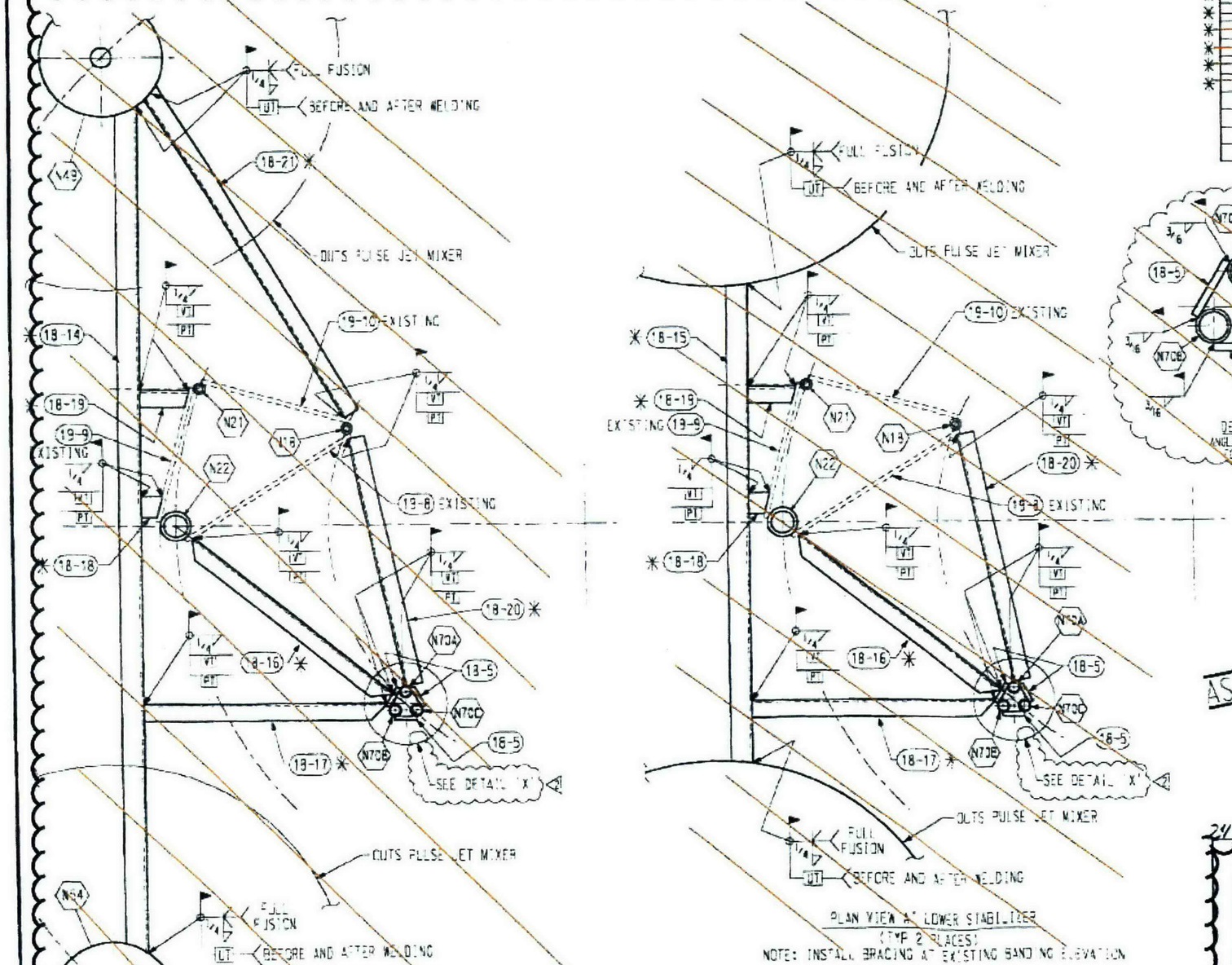

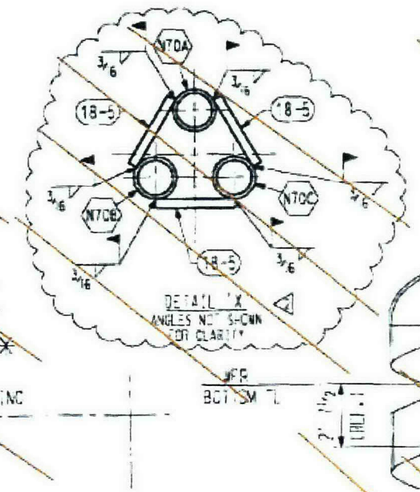

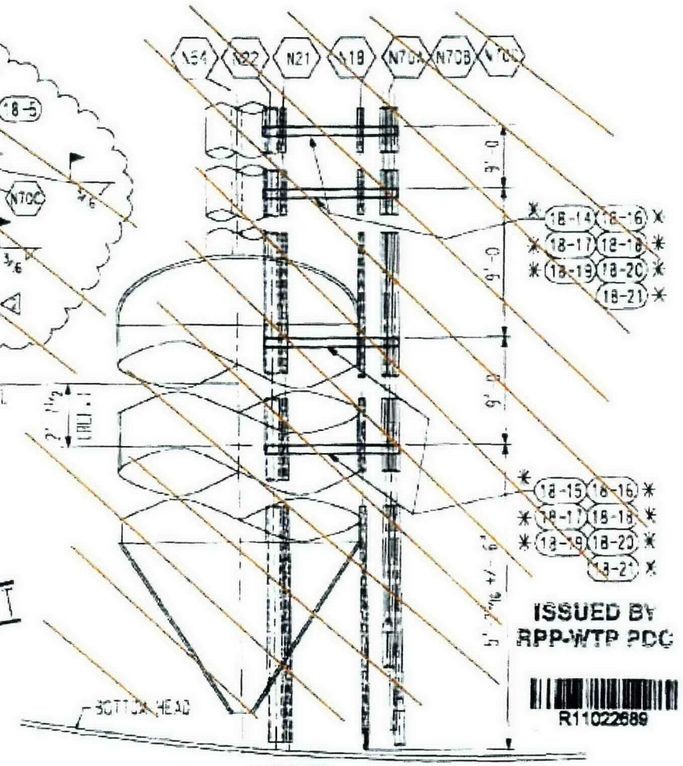

AS-BUILT

ISSUED BY RPP-WTP PDC

R11022689

24590-QL-SRA-MTFS-00001-29-00071 REV.00C

NOTES:
1. ALL WELDS TO BE 316L UNLESS NOTED OTHERWISE.
2. WORK WITH DWG #1 SHT 1, #2 SHT 1, #18 SHT 1, & 2, & #19 SHT 1 & 2.
3. BILLED WITH ADDED MATERIAL FOR FIELD TRIM.

INDICATES CHANGE FROM PREVIOUS ISSUE

CERTIFIED AS BUILT CONTRACT DRAWING
DATE: 9/13/10
SIGNED:

11/04/2010

CBI

PTF- LATERAL SUPPORTS FOR DIP PIPE
WASTE FEED RECEIPT
VESSEL FRP-VSL-00002B (C)
RICHLAND, WA

CUSTOMER'S NO
BY RCA DWG PB DATE 5/15/04
PVE/ B.R. BALCOMB
ENGINEERING ASSOCIATES

CONTRACT NO 1372028
DWG 19 REV
SHT 3 2

REVISIONS: ADDED DETAIL "X" AS BUILT; UNDER PC NOS 5 TO 30 & 18-21 REVISED WELD SIZE AND REVISED BILLING

20218038.DGN

ON REFERENCE DRAWING 24590-QL-SRA-MTF5-00001-26-06

SHIP PC	MARK	ASSY PC	DESCRIPTION	LENGTH	SPEC	ID	EST WT
*64	5-4		PLATE SK 1" (28 3/16" x 1 0" x 38 13/16")		M1		
			M1 = ASME SA240 TP 316/316L				
			* NOMINALLY 64 PIECES				

1. TYPICAL 1" WELD SIZE MAY BE REDUCED WHEN BRIDGING WELDS DEPICTED IN DETAIL F.
2. CONTOUR TO MATCH VESSEL BOTTOM HEAD. GAP BETWEEN STIFFENER PLATE AND VESSEL BOTTOM HEAD AS MEASURED THROUGH FILL AND VENT HOLES, SHALL NOT EXCEED 1/4".
   NOTE: WIDTH OF PLATES MAY BE ADJUSTED TO SHIFT WELD LOCATIONS OR TO CREAT LARGER PLATES TO REDUCE TOTAL NUMBER OF STIFFENERS PLATES. DETAIL F SEAMS SHALL NOT BE LOCATED CLOSER THAN 3" FROM SEAMS IN BOTTOM THAT RUN PARALLEL TO DETAIL F SEAMS.
3. LOCATE 1 FILL AND 1 VENT HOLE, APPROX. AS SHOWN, NOMINALLY 10" FROM CORNER OF STIFFENER PLATES PLATE (PART #5-4). FILL GAPS BEHIND STIFFENER PLATES (PART #5-4) WITH GROUT UNTIL GROUT BLEEDS FROM VENT HOLES. AFTER GROUT SETS DRILL OUT GROUT FROM FILL AND VENT HOLES MIN. 3/4" DEEP. PLUG WELD HOLES CLOSED MIN. OF 1/2" DEEP. HOLES MAY BE SIZED/TAPPED AS NEEDED UP TO 1" Ø. TO FACILITATE INSTALLATION OF GROUT.

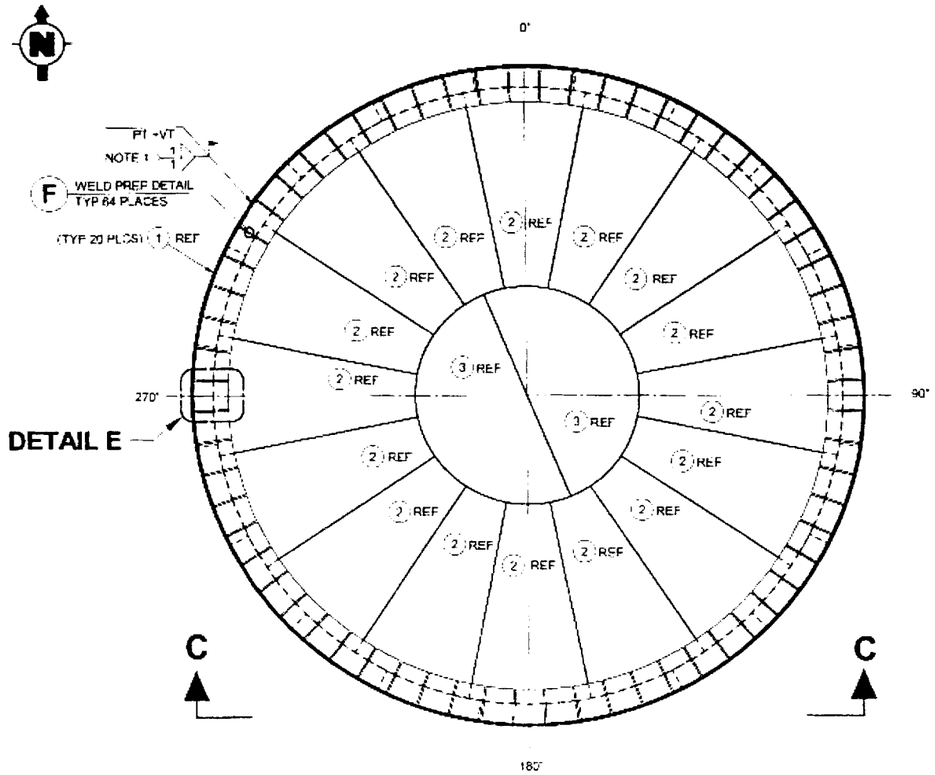

PLAN
INSIDE LOOKING DOWN

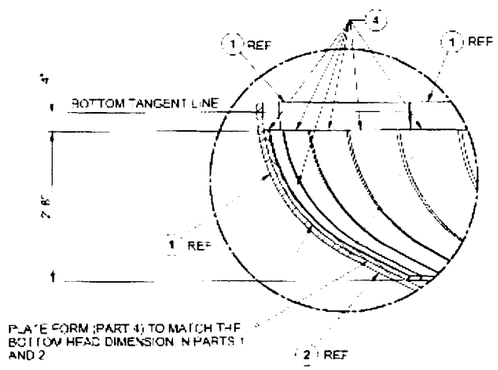

PLATE FORM (PART 4) TO MATCH THE BOTTOM HEAD DIMENSION IN PARTS 1 AND 2

DETAIL D

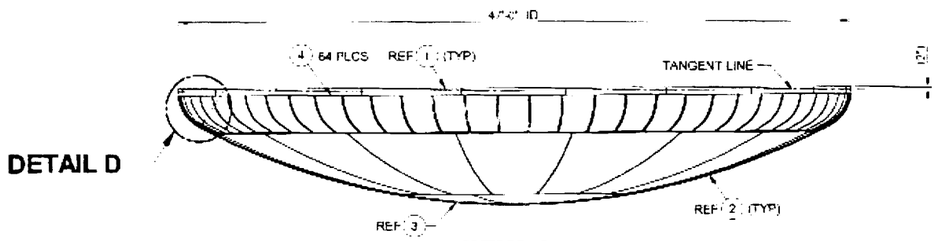

DETAIL D

VIEW C-C

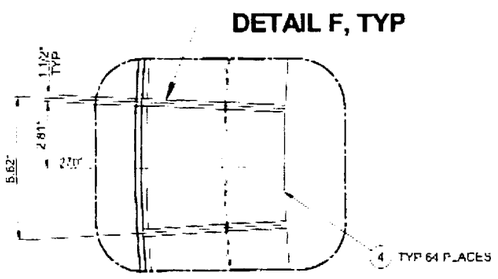

DETAIL E

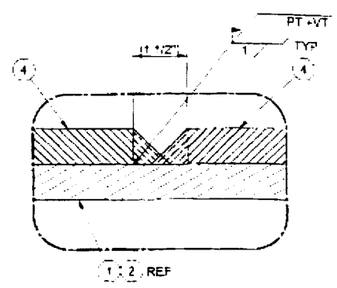

DETAIL F

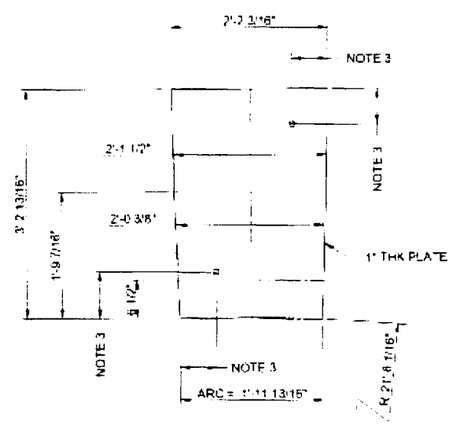

4 KNUCKLE STIFFENER PLATE
(FLAT PLATE BEFORE BEND)
(NOTE 2)

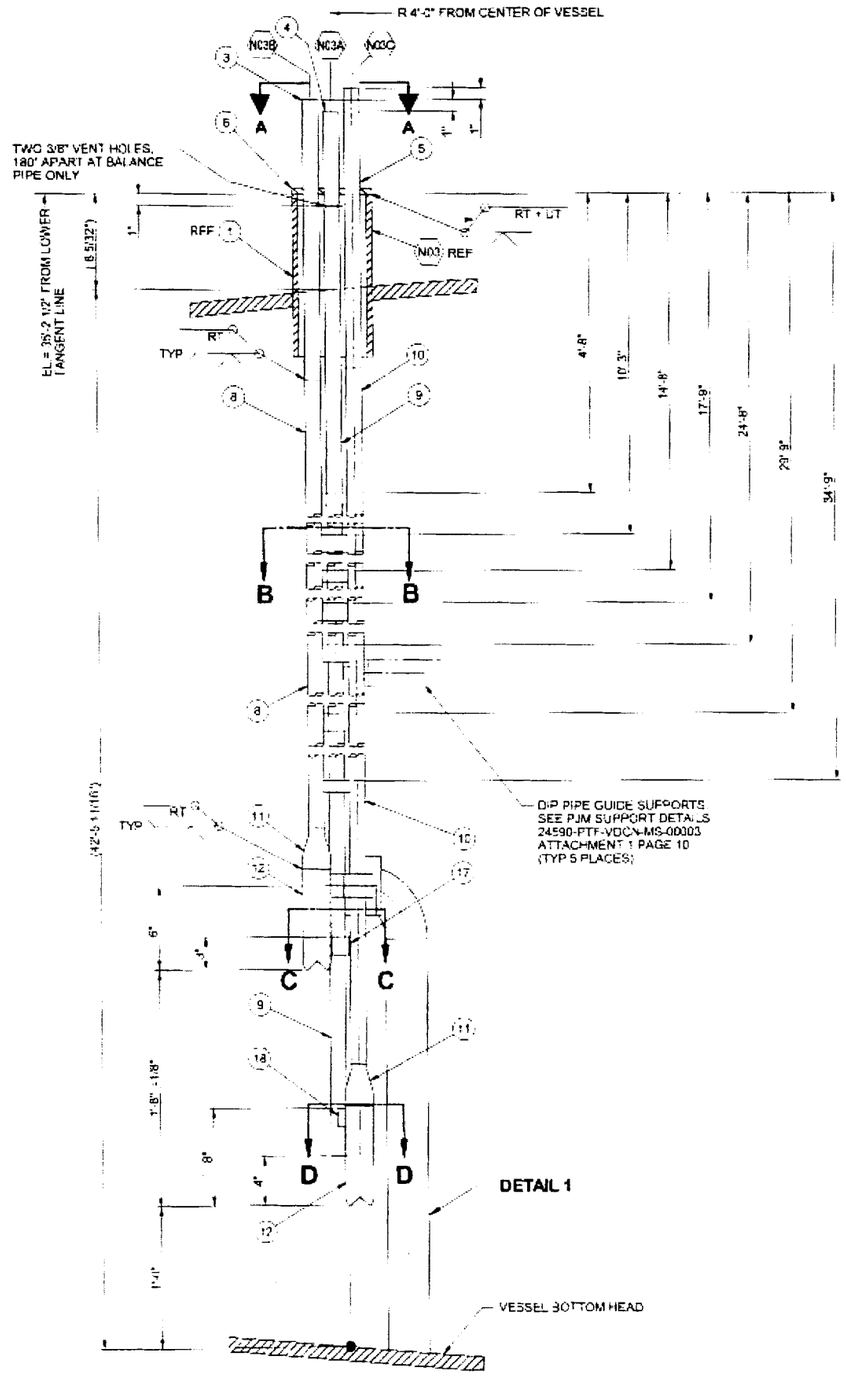

CROSS SECTION NOZZLE

FOR TRUE ORIENATION SEE VIEW A-A

N03 N03A N03B N03C

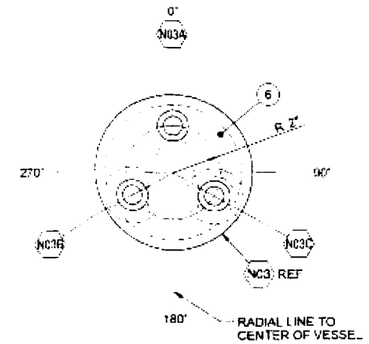

VIEW A-A

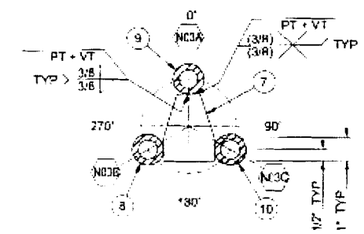

SECTION B-B

TYP 7 PLACES

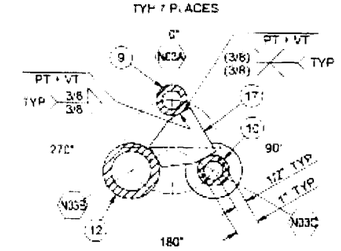

SECTION C-C

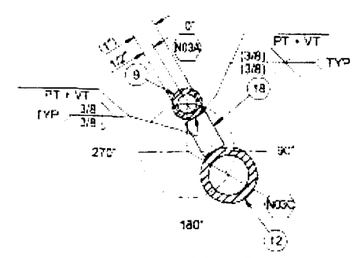

SECTION D-D

16 PIPE GUIDE STRAP

ON REFERENCE DRAWING 24590-QL-SRA-MTF5-00001-26-17

SHIP PC	MARK	ASSY PC	DESCRIPTION	LENGTH	SPEC	ID	EST WT
	12-3	1	PIPE 1" SCHED 160S	4'-0"	M3		
	12-4	1	PIPE 1" SCHED 160S	4'-0"	M3		
	12-5	1	PIPE 1" SCHED 160S	4'-0"	M3		
	12-6	1	PLATE 6 3/8" DIAMETER x 1/2" THK		M1		
	12-7	7	PLATE 1 1/2" THK	AS REQD	M1		
	12-8	1	PIPE 1" SCHED 160S	37'-4 1/8"	M3		
	12-9	1	PIPE 1" SCHED 160S	38'-7 1/8"	M3		
	12-10	1	PIPE 1" SCHED 160S	38'-1 1/8"	M3		
	12-11	2	CONC REDUCER 2" x 1" SCHED 160S SMLS BW		M2		
	12-12	2	PIPE 2" SCHED 160S	9"	M3		
	12-13	1	PIPE 3" SCHED 80S	2'-10 3/16"	M3		
	12-14	4	ELBOW 3" LR SCHED 80S SMLS BW		M2		
	12-15	1	PLATE 5" x 7" x 1/2" THK		M1		
	12-16	2	FLAT BAR 2" x 1/2" THK	3 23/32"	M1		
	12-17	1	PLATE 1 1/2" THK	AS REQD	M1		
	12-18	1	BAR 1" WIDE x 1 1/2" THK	AS REQD	M1		
			M1 = ASME SA240 TP 316/316L				
			M2 = ASME SA403 316L WPS				
			M3 = ASME SA312 TP 316/316L				

NOTES:

1. PIPE GUIDE STRAPS ARE WELDED AFTER CORRECTLY POSITIONING THE PIPE GUIDE STRAP SUPPORTS PIPE GUIDE STRAP SHALL MAINTAIN 1/16" DIAMETRICAL CLEARANCE WITH PIPE.
2. TOLERANCE ON STRAP ELEVATIONS (PART 12-7) ± 1/2"

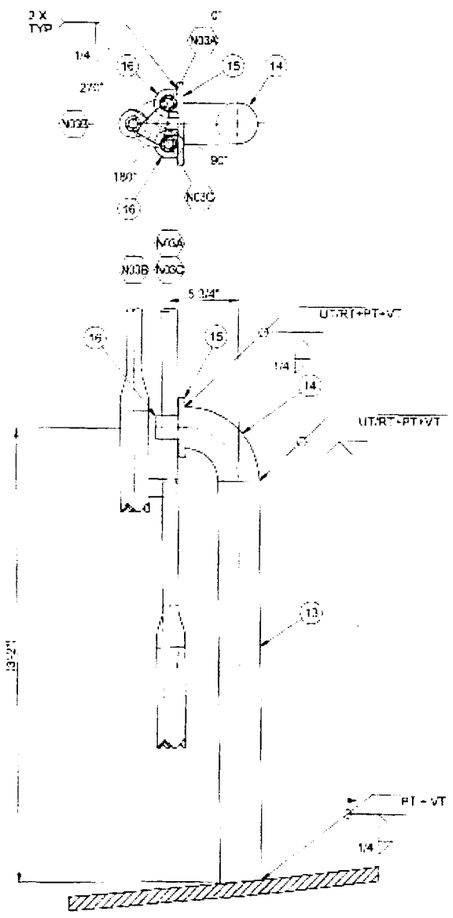

DETAIL 1

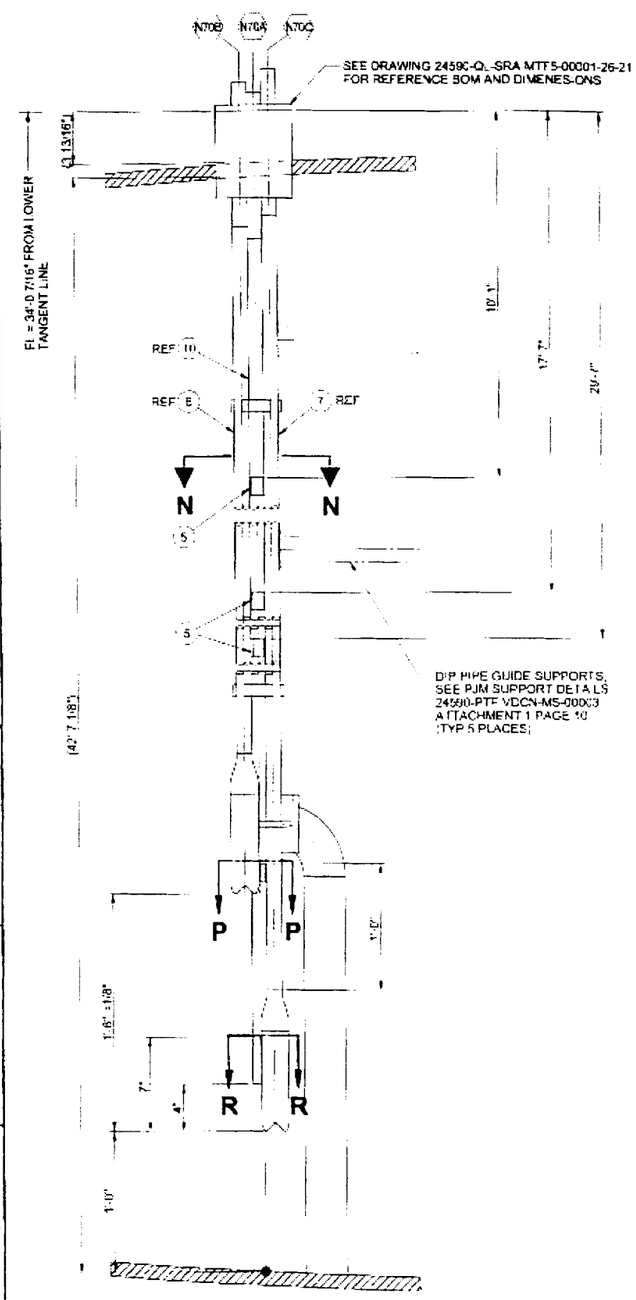

CROSS SECTION NOZZLE
FOR TRUE ORIENATION SEE VIEW A-A
N70 N70A N70B N70C REF

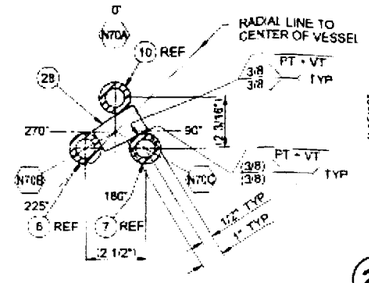

SECTION N-N

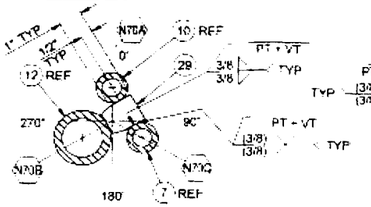

SECTION P-P

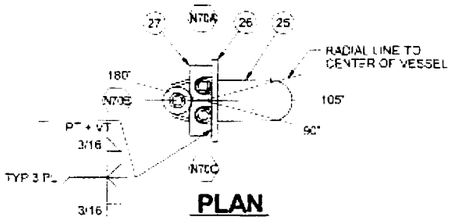

PLAN

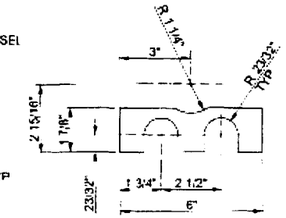

27 PIPE GUIDE PLATE

ON REFERENCE DRAWING 24590-QL-SRA-MTF5-00001-26-21

SHIP PC	MARK	ASSY PC	DESCRIPTION	LENGTH	SPEC	ID	EST WT
	18-24	1	PIPE 3" SCHED 80S	2'-9 3/16"	M3		
	18-25	1	ELBOW 3" LR SCHED 80S SMLS BW		M2		
	18-26	1	PLATE 5" x 7" x 1/2" THK		M1		
	18-27	1	PLATE 1/2" THK	1 7/8" x 6"	M1		
	18-28	3	PLATE 1 1/2" THK	AS REQD			
	18-29	1	PLATE 1 1/2" THK	AS REQD			
	18-30	1	FLAT BAR 1" WIDE x 1 1/2" THK	AS REQD			
			M1 = ASME SA240 TP 316/316L				
			M2 = ASME SA403 316L W/PS				
			M3 = ASME SA312 TP 316/316L				

NOTES:

1. PIPE GUIDE STRAPS AND PLATE ARE WELDED AFTER CORRECTLY POSITIONING THE PIPE GUIDE STRAP SUPPORTS.PIPE GUIDE STRAP AND PLATE SHALL MAINTAIN 1/16" DIAMETRICAL CLEARANCE WITH PIPE.

2. THE FABRICATOR MAY LEAVE UP TO 1" OF THE PREVIOUS STEELWORK IN PLACE (I.E. CUT STEELWORK UP TO 1" AWAY FROM UNTOUCHED COMPONENTS) TO AVOID CUTTING/GRINDING INTO UNTOUCHED COMPONENTS (UNLESS OTHERWISE SPECIFICALLY INDICATED IN THIS DRAWING SET) WHERE THIS DRAWING SET INDICATES THAT SUPPORTS, FLANGES, BRACKETS, COMPONENTS, ETC. HAVE BEEN REMOVED BETWEEN THE CURRENT REVISION AND THE PREVIOUS REVISION.

3. TOLERANCE ON STRAP ELEVATION IS ±2"

ON REFERENCE DRAWING 24590-QL-SRA-MTF5-00001-26-23

SHIP PC	MARK	ASSY PC	DESCRIPTION	LENGTH	SPEC	ID	EST WT
	19-18	1	PIPE 3" SCHED 80S	1'-2 3/4"	M3		
	19-19	1	ELBOW 3" LR SCHED 80S SMLS BW		M2		
	19-20	1	PLATE 5" x 5" x 1/2" THK		M1		
	19-21	1	FLAT BAR 2" x 1/2" THK	3 23/32"	M1		
			M1 = ASME SA240 TP 316/316L				
			M2 = ASME SA403 316L W/PS				
			M3 = ASME SA312 TP 316/316L				

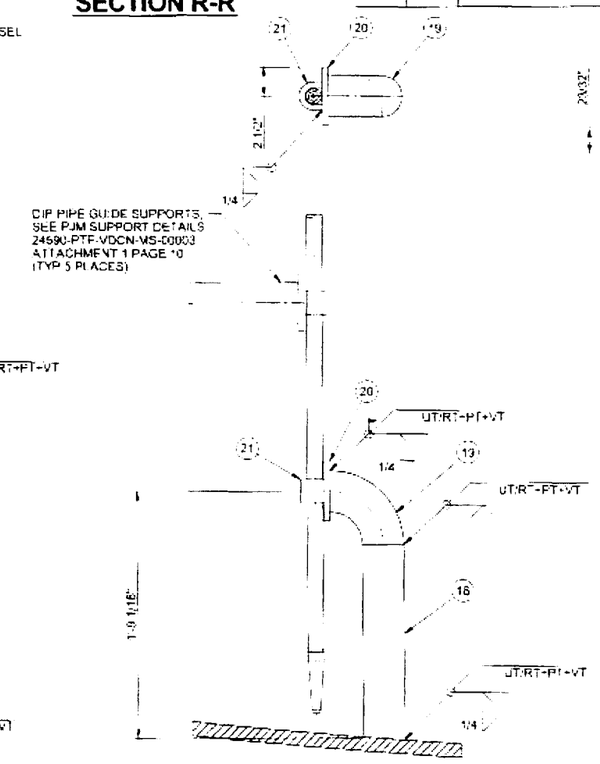

ELEVATION
N18

21 PIPE GUIDE STRAP

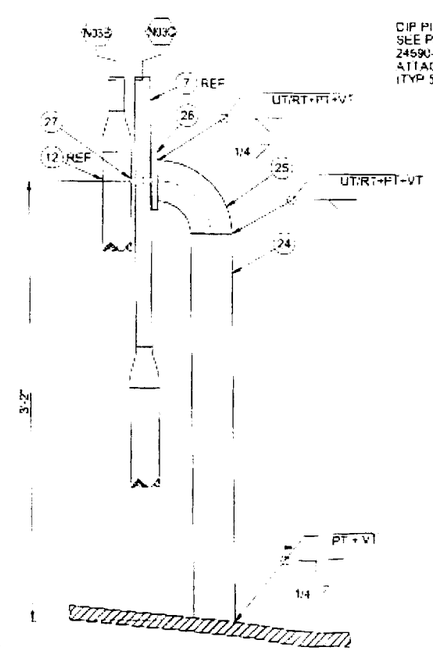

ELEVATION
DETAIL 1

ON REFERENCE DRAWING 24590-QL-SRA-MTT5-00001-26-30

SHIP PC	MARK	ASSY PC	DESCRIPTION	LENGTH FEET	LENGTH INCHES	SPEC	IC	EST WT
2	30-9		PIPE 3" SCHED 80S *	4	2	M3		
	30-10		PIPE 3" SCHED 80S *	2	8 1/2	M3		
1	30-11		PLATE 8" x 1/2" THK	2	6	M1		
1	30-12		PLATE 8" X 1/2" THK	0	5	M1		
1	30-13		FLAT BAR * 1/2" X 1/2" THK	2	5 1/8"	M1		
			M1 = ASME SA240 TP 316/316l					
			M3 = ASME SA312 TP 316/316l					
			* = LENGTH IS ESTIMATED, CUT TO FIT					

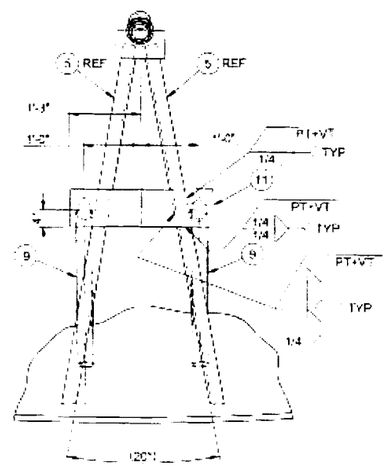

SECTION J-J

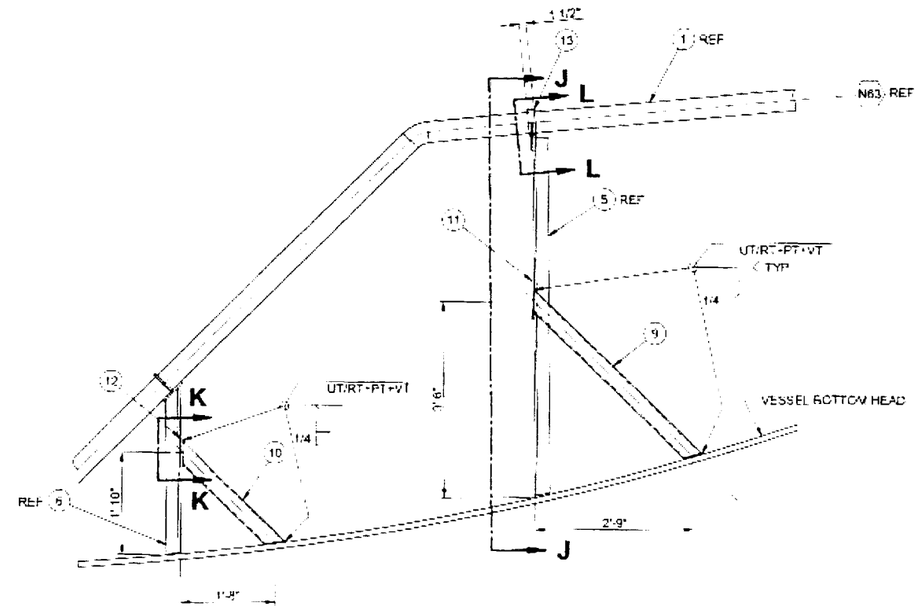

SECTION A
(SUPPORT MODIFICATION)

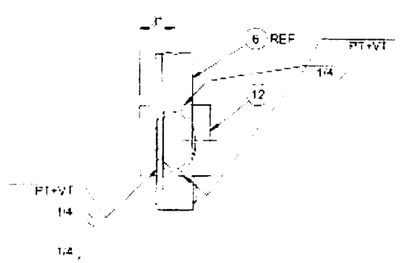

VIEW K-K

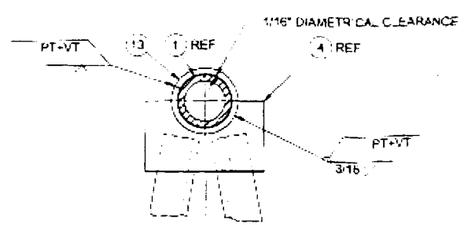

SECTION L-L

REVISE BY RPP-WTP ON HOLD → 160S

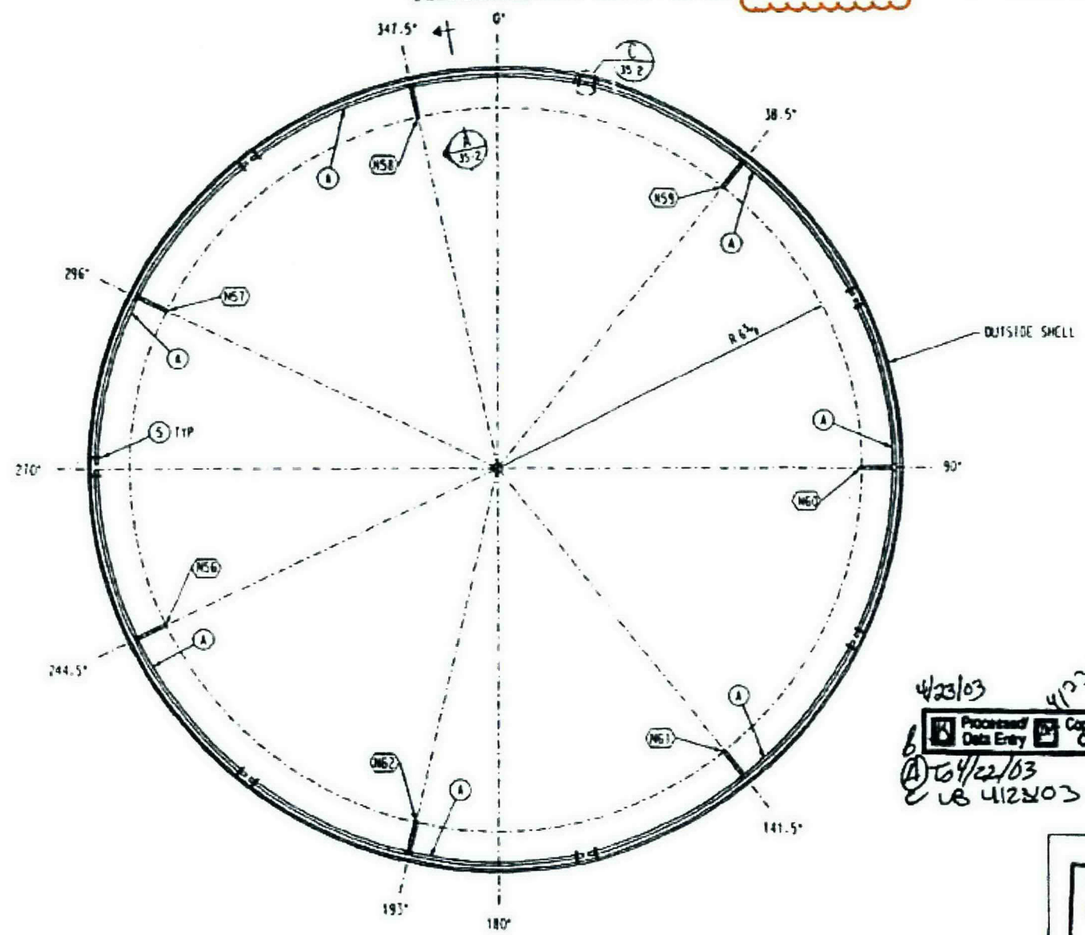

WASH RING PLAN VIEW
N56-N62

SHEET NO	ITEM	REVISION NO	DESCRIPTION	QTY	NOMINAL SIZE	SPEC	MATL	CODE
1	35-1		2" DIA WASH RING ASSEMBLY					672
	35-1	1	PIPE 2" DIA SCH 40S SMLS BOE SCHED 40S	10	0 25/32	A	C	266
			BOE POLISHED 3/4" FOR SHEAR					
	35-2	1	PIPE 2" DIA SCH 40S SMLS	10	0 25/32	A	C	266
			BOE POLISHED 3/4" FOR SHEAR					
	35-3	1	STRAIGHT TEE 2 X 2 X 2 SCH 40S			N7	A	28
	35-4	14	PL 2 1/16 DIA X 1/2			N1	C	7
	35-6	1	PIPE 2" DIA SCH 160S SMLS BOE SCHED	4	2 3/32	N3	A	105
14	35-5		PL 5 1/16 X 1/2 X SQ	1	3 3/32	N1	A	158
			N1:SA240 316L.CBI SPEC A-240-2404					
			N3:SA312 TP316L.CBI SPEC A-312-2406					
			N7:SA403 316LWPS.CBI SPEC A-403-2423					
			* A312 TP316L					

NOTES:
1. ALL WELDS TO BE 316L UNLESS NOTED OTHERWISE.
2. WORK WITH DWG #1, #2, #3, & DWG #35 SHT'S 2 & 3.

24590-QL-SRA-MTF5-00001- 26-33
REV 00B

R10391551

4/23/03 4/22/03
Processed/ Data Entry | Copied/ QA | Scanned | Filed
6 (A) 64/22/03
E UB 4/22/03

~~24590-QL-SRA-MTF5-00001-26-33~~ ~~Rev 00A~~ KV 04/05/05

CERTIFIED AS BUILT
CONTRACT DRAWING
DATE: 4/5/05
SIGNED: B.R. Bakemeier

CBI

N56 - N62 INLETS TO WASH RING
WASH RING
WASTE FEED RECEIPT
VESSEL FRP-VSL-000026 (D)
RICHLAND, WA

CONTRACT NO 1372825
DWG 35 REV 2

20235018.DGN

Drawing Change Notice

CHANGE DOCUMENT NO. 24590-PTF-VDCN-MS-11-00006

JOB NO.	TITLE FOR CHANGE NOTICE
24590	PTF-FRP-VSL-00002C REDESIGN

DESIGN DOCUMENT NUMBER	REV	DESIGN DOCUMENT NUMBER	REV
24590-QL-SRA-MTF5-00001-28-01	K	24590-QL-SRA-MTF5-00001-28-06	B
24590-QL-SRA-MTF5-00001-28-07	B	24590-QL-SRA-MTF5-00001-28-17	B
24590-QL-SRA-MTF5-00001-28-21	I	24590-QL-SRA-MTF5-00001-28-22	H
24590-QL-SRA-MTF5-00001-28-23	H	24590-QL-SRA-MTF5-00001-28-24	D
24590-QL-SRA-MTF5-00001-28-30	C	24590-QL-SRA-MTF5-00001-28-31	D
24590-QL-SRA-MTF5-00001-28-33	B	24590-QL-SRA-MTF5-00001-29-00072	C

PART OF DESIGN CHANGE PACKAGE (DCP)? ☐ Yes ☒ No DCP No.: Rev:

JUSTIFICATION FOR CHANGE

Based on the re-analysis of FRP-VSL-00002A/B/C/D, per calculation 24590-PTF-MVC-FRP-00003, for revised seismic conditions and design evolution, a redesign of the vessel is required.

CAUSE CODE

01-23

Supersedes Change Document ☐ Yes ☒ No

ECN Needed ☐ Yes ☒ No

REQUIREMENTS REVIEW

Client Approval Required ☐ Yes ☒ No | Interface Resolution Required * ☐ Yes ☒ No

Address any "yes" answers in the description

DESCRIPTION OF CHANGE

Note: Components removed or deleted per this VDCN are to be removed from the actual vessel unless Otherwise noted.

1. **Affected Document: 24590-QL-SRA-MTF5-00001-28-01 (see Attachment 1, page 1 of this VDCN).**

a) Bill of Materials block: Revise the following line Items:

Line Item N3 Elevation block: 35'-3" from 35'-4 3/4".

Line Item N3 Description / Service block: INSTRUMENTATION from SPARE CAPPED.

b) Bill of Materials block: Add the following line Items:

Line Item N03A

Line Item N03B

Line Item N03C

Please note that source, special nuclear, and byproduct materials, as defined in the Atomic Energy Act of 1954 (AEA) are regulated at the U. S. Department of Energy (DOE) facilities exclusively by DOE acting pursuant to its AEA authority. DOE asserts that pursuant to AEA, it has sole and exclusive responsibility and authority to regulate source, special nuclear, and byproduct materials at DOE-owned nuclear facilities. Information contained herein on radionuclides is provided for process description purposes only.

c) Elevations:

Delete Nozzle N3 bubble from N2 bubble column.

Add Nozzle bubble number N03, N03A, N03B and N03C to N70 bubbler column.

Add Knuckle Stiffener plates shown on Attachment 1, page 12 of this VDCN.

Revise Outer PJM nozzle cone to eccentric from concentric shown on 24590-PTF-VDCN-MS-00003, Attachment 1, page 12, Elevation Assemblies A & B.

d) Note: Add the following notes :

2. WELD SHOWN MAY BE FIELD-APPLIED AS NECESSARY TO SUPPORT INSTALLATION OF COMPONENTS

3. FABRICATION TOLERANCES FOR FIELD MODIFICATIONS SHALL BE PER 24590-WTP-MV-M59T-00001 (PRESSURE VESSEL TOLERANCES STANDARD DETAILS) AND PFI STANDARD ES-24 (PIPE BENDING METHODS, TOLERANCES, PROCESS AND

JOB NO.	TITLE FOR CHANGE NOTICE
24590	PTF-FRP-VSL-00002C REDESIGN

DESCRIPTION OF CHANGE

MATERIAL REQUIREMENT). FOR TOLERANCES NOT SPECIFIED BY THESE STANDARDS, THE FOLLOWING SHALL APPLY, UNLESS OTHERWISE NOTED:

DIMENSION	TOLERANCE
LINEAR <12 IN	± 1/8 INCHES
LINEAR >=12 IN	± 1/4 INCHES
ANGULAR	± 2 DEGREES

e) Add a HOLD LIST as follows:

HOLD LIST
1. KNUCKLE STIFFENER PLATES ARE ON HOLD PENDING CONFIRMATION OF VESSEL MAXIMUM OPERATING PRESSURE.
2. WASH RING PIPE SCHEDULE CHANGE IS ON HOLD PENDING CONFIRMATION OF VESSEL MAXIMUM OPERATING PRESSURE.
3. INSTALLATION OF REVISED PJM NOZZLES ON OUTER PJMS IS ON HOLD PENDING RESOLUTION OF MIXING REQUIREMENTS.

2. **Affected Document: 24590-QL-SRA-MTF5-00001-28-06 (see Attachment 1, page 2 of this VDCN).**

   a) Bill of Materials block: Add Item 5-4 shown on Attachment 1, page 12 of this VDCN.

   b) Plan View: Add Knuckle Stiffener plates shown on Attachment 1, page 12 of this VDCN.

   c) View C-C: Add Knuckle Stiffener plates shown on Attachment 1, page 12 of this VDCN.

3. **Affected Document: 24590-QL-SRA-MTF5-00001-28-07 (see Attachment 1, page 3 of this VDCN).**

   a) Bottom Head Details Drawing:

   Add Knuckle Stiffener Plate, Item 4 shown on Attachment 1, page 12 of this VDCN.

   Add Details D, E, and F shown on Attachment 1, page 12 of this VDCN.

4. **Affected Document: 24590-QL-SRA-MTF5-00001-28-17 (see Attachment 1, page 4 of this VDCN).**

   a) Bill of Materials block: Delete the following line Item:

   Line Item 12-2

   b) Bill of Materials block: Add the following line Items shown on Attachment 1, page 13 of this VDCN.

   Line Item 12-3

   Line Item 12-4

   Line Item 12-5

   Line Item 12-6

   Line Item 12-7

   Line Item 12-8

   Line Item 12-9

   Line Item 12-10

   Line Item 12-11

   Line Item 12-12

   Line Item 12-13

JOB NO.	TITLE FOR CHANGE NOTICE
24590	PTF-FRP-VSL-00002C REDESIGN

DESCRIPTION OF CHANGE

Line Item 12-14

Line Item 12-15

Line Item 12-16

Line Item 12-17

Line Item 12-18

c) Joint A: Replace Item 2 (Cap) with Item 6 (Plate), including updating depiction to new instrument nozzle as shown on Attachment 1, page 13 of this VDCN.

d) Cross Section of Nozzle view: Delete the following shown on Attachment 1, page 13 of this VDCN.

Item 12-2

Dimensions

e) Cross Section of Nozzle view: Add Item, Dimension, and Dip Pipe supports shown on Attachment 1, page 13 of this VDCN.

Items 12-3 through 12-18

Dimensions

Dip Pipe Supports (phantom lines)

f) Title Block: Revise the Title as shown on Attachment 1, page 4 of this VDCN.

g) Nozzle N3 Assembly Drawing: Add View, Details, and Sections and Item shown on Attachment1, page 13 of this VDCN.

View A-A

Detail 1

Sections B-B, C-C, and D-D

Item 16 Pipe Guide Strap

5. Affected Document: 24590-QL-SRA-MTF5-00001-28-21 (see Attachment 1, page 5 of this VDCN).

a) Bill of Materials block: Delete the following line Items:

Line Item 18-8

Line Item 18-9

Line Item 18-22

Line Item 18-23

b) Bill of Materials block: Add the following line Items shown on Attachment 1, page 14 of this VDCN.

Line Item 18-24

Line Item 18-25

Line Item 18-26

Line Item 18-27

Line Item 18-28

Line Item 18-29

JOB NO.	TITLE FOR CHANGE NOTICE
24590	PTF-FRP-VSL-00002C REDESIGN

DESCRIPTION OF CHANGE

Line Item 18-30

c) Bill of Materials block: Revise the following line Items:

Line Item 18-5 ASSM PC block: 12 from 17.

d) Cross Section of Nozzle view: Delete the following Items and Detail view:

Items 18-8, 18-9, 18-22, 18-23 and 18-5 (from bell)

Joint G (View)

Dimensions on Support

Weld Symbol on Support

e) Notes: Delete the following note:

Note 3

f) Cross Section of Nozzle view: Add the following Section callout:

Section X

g) Cross Section of Nozzle view: Revise the following dimensions:

42'-1 3/4" from 41'-11 1/4"

38'-1 3/4" from 38'-11 1/4"

40'-10 3/4" from 41'-8 1/4"

35'-10 3/4" from 36'-8 1/4"

37'-7 3/4" from 38'-5 1/4"

42'-7 3/4" from 43'-5 1/4"

1'-0" from 2 1/2"

h) Cross Section of Nozzle view: Add the following Section, view, dimensions, and support shown on Attachment 1, page 14 of this VDCN.

Dimension on Bracing bars

Section N-N

Dip Pipe Support (Phantom lines)

i) Nozzle N70 Assembly Drawing: Add Detail, and Section and Item shown on Attachment1, page 14 of this VDCN.

Detail 1

Section N-N

Item 27 Pipe Guide Plate

6. Affected Document: 24590-QL-SRA-MTF5-00001-28-22 (see Attachment 1, page 6 of this VDCN).

a) Section E: Delete the following Items:

Items 8, 9, 22 and 23

Section P with arrows

JOB NO.	TITLE FOR CHANGE NOTICE
24590	PTF-FRP-VSL-00002C REDESIGN

DESCRIPTION OF CHANGE

b) N70 Pipe Assembly Drawing: Delete the following Sections, Items, and Details:

Section P

Section S-S

Joint G

Items 9 and 23

c) Section J: Replace Item 5 (Plate 1/2") with Item 29 (Block Plate) as shown on Attachment 1, page 14, Section P-P of this VDCN.

d) Section M: Replace Item 5 (Plate 1/2") with Item 30 (Block Plate) as shown on Attachment 1, page 14, Section R-R of this VDCN.

7. **Affected Document: 24590-QL-SRA-MTF5-00001-28-23 (see Attachment 1, page 7 of this VDCN).**

a) Bill of Materials block: Delete the following line Items:

Line Item 19-5

Line Item 19-6

Line Item 19-7

Line Item 19-8

Line Item 19-9

Line Item 19-10

Line Item 19-11

Line Item 19-12

Line Item 19-13

Line Item 19-14

Line Item 19-15

Line Item 19-16

Line Item 19-17

b) Bill of Materials block: Add the following line Items shown on Attachment 1, page 14 of this VDCN.

Line Item 19-18

Line Item 19-19

Line Item 19-20

Line Item 19-21

c) Elevation view: Add the following Items shown on Attachment 1, page 14 of this VDCN.

Items 18, 19, 20 and 21

d) Elevation view: Delete the following Items:

Items 5, 6, 7, 8, 11, 14 and 15

JOB NO.	TITLE FOR CHANGE NOTICE
24590	PTF-FRP-VSL-00002C REDESIGN

DESCRIPTION OF CHANGE

e) N18 3/4" DIA Temperature Drawing: Delete the following Detail and Sections:

Detail F

Sections C and D

f) N18 3/4" DIA Temperature Drawing: Add the following Item:

Item 21 Pipe Guide Strap

8. Affected Document: 24590-QL-SRA-MTF5-00001-28-24 (see Attachment 1, page 8 of this VDCN).

a) Drawing: Delete the following:

Items 5, 6, 12, 13, 14, 15, 16 and 17

Section X-X

9. Affected Document: 24590-QL-SRA-MTF5-00001-28-30 (see Attachment 1, page 9 of this VDCN).

a) Bill of Materials block: Add the following line Items shown on Attachment 1, page 15 of this VDCN.

Line Item 30-9

Line Item 30-10

Line Item 30-11

Line Item 30-12

Line Item 30-13

b) Section A: Add the following Items shown on Attachment 1, page 15 of this VDCN.

Items 9 thru 13

c) Section A and Nozzle N64 Plan View of Nozzle: Update depiction on PJM support to show new PJM lateral supports and PJM eccentric nozzle as shown on Attachment 1, page 7 of 24590-PTF-VDCN-MS-11-00003 document.

10. Affected Document: 24590-QL-SRA-MTF5-00001-28-31 (see Attachment 1, page 10 of this VDCN).

a) Section E: Add the following Items shown on Attachment 1, page 15 of this VDCN.

Items 9, 11 and 13

b) Detail F: Add the following Items shown on Attachment 1, page 15 of this VDCN.

Items 10 and 12

c) N63 4" Dia Details Drawing: Add the following Sections, View and Items shown on Attachment 1, page 15 of this VDCN.

Sections A-A, L-L and J-J

View K-K

Item 11 Bracket Plate

d) Section E: Delete the following:

Weld leader on items 1 and 4

Drawing Change Notice

CHANGE DOCUMENT NO.
24590-PTF-VDCN-MS-11-00006

JOB NO.	TITLE FOR CHANGE NOTICE
24590	PTF-FRP-VSL-00002C REDESIGN

DESCRIPTION OF CHANGE

e) Item 4: Revise the following Diameter:

R 2 5/16 to R 2 7/8"

11. Affected Document: 24590-QL-SRA-MTF5-00001-29-72 (see Attachment 1, page 11 of this VDCN).

a) Bill of Materials block: Delete the following line Items:

Line Item 18-5

Line Item 18-14

Line Item 18-15

Line Item 18-16

Line Item 18-17

Line Item 18-19

Line Item 18-20

Line Item 18-21

b) Drawing: Delete the following All Support Details and Items 18-5, 18-14 thru 18-21.

12. Affected Document: 24590-QL-SRA-MTF5-00001-28-33 (see Attachment 1, page 16 of this VDCN).

a) Bill of Materials block: Revise the following line Items:

Line Item 35-1 Description block: Sch 40S to Sch 160S.

Line Item 35-2 Description block: Sch 40S to Sch 160S.

Line Item 35-3 Description block: Sch 40S to Sch 160S

ORIGINATOR	CHECKER
D. HARRIS	W. WILCOX

Reviews			
CON - B. FOSTER	E&NS - J. HINCKLEY	CS&A - S. GERMAIN Dan Harris Sign for S. Germain via telcon	MET - J. DISNEY
MS&PE - B. LINDBERG	PD - L. LEYLAND	6/8/11 3:45	

Approval(s)			
PT EQUIP EGS - J. JULYK			

Date (inserted by final approver): 6/8/11

CBI RECEIVED
MAR 17 2005

CBI RECEIVED
PR 05 2005

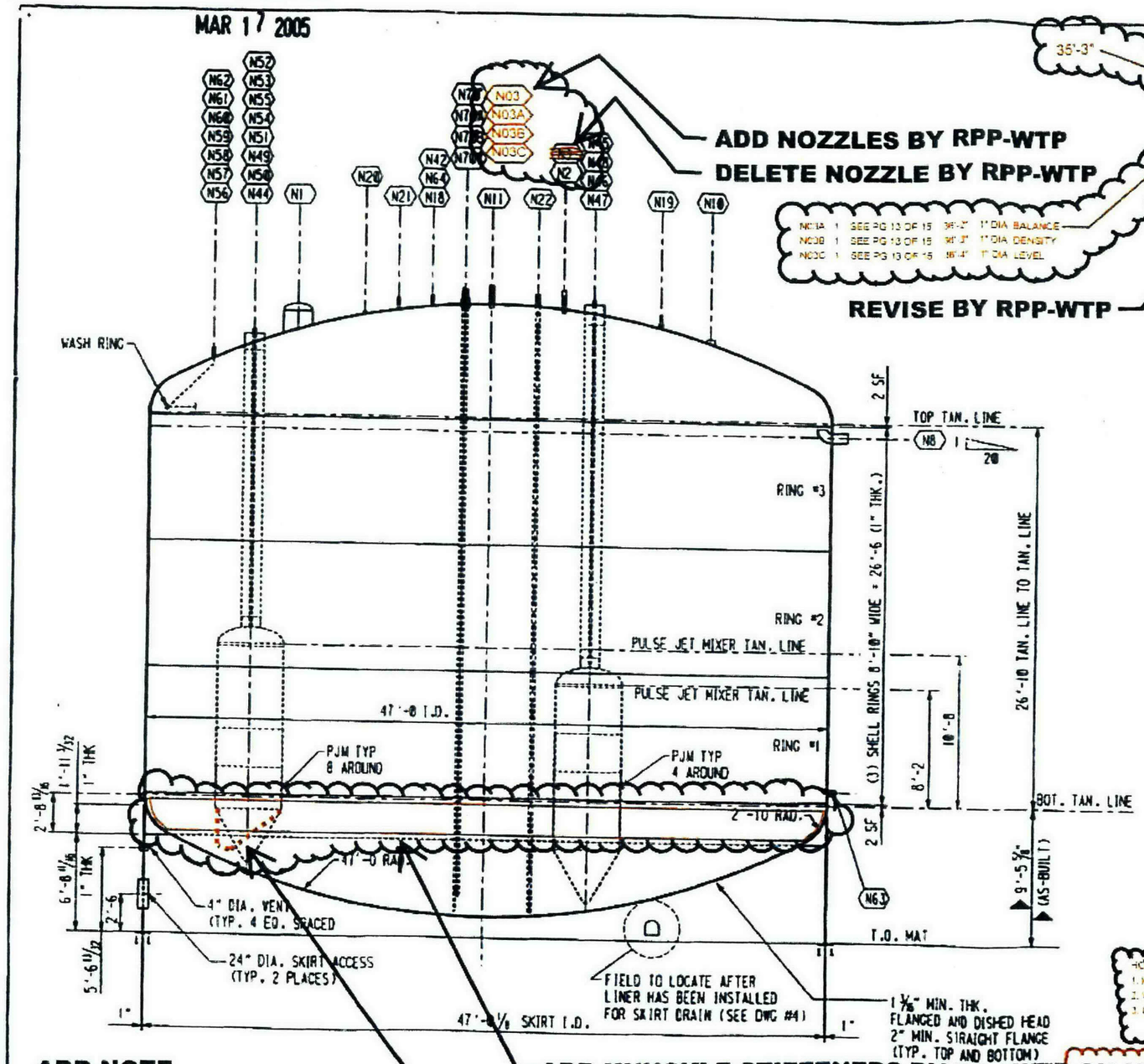

MARK	NO. REQ'D	CBI MARK	AS-BUILT NOZZLE ELEVATIONS (SEE NOTE 1)	DESCRIPTION / SERVICE
				FITTINGS FURNISHED & INSTALLED BY CBI
N1	1	SEE DWG 10	34'-0 11/16"	24" DIA. MANWAY (CAPPED)
N2	1	SEE DWG 10	35'-5 3/16"	3" DIA. INLET
N3	1	SEE DWG 12	35'-4 3/16"	6" DIA. SPARE (CAPPED) INSTRUMENTATION
N8	1	SEE DWG 13	25'-5 3/4"	8" DIA. OVERFLOW
N10	1	SEE DWG 15	32'-7 3/4"	6" DIA. PASSIVE AIR INLET
N11	1	SEE DWG 16	33'-5 1/4"	8" DIA. VESSEL VENT
N18	1	SEE DWG 19	35'-4 3/16"	3/4" DIA. TEMPERATURE
N19	1	SEE DWG 20	34'-5 3/16"	1" DIA. SPARE (CAPPED)
N20	1	SEE DWG 21	34'-4 11/16"	2" DIA. CONCENTRATE RECYCLE INLET
N21	1	SEE DWG 22	35'-4 3/4"	1" DIA. SPARE WITH DIP PIPE (CAPPED)
N22	1	SEE DWG 23	35'-8 1/16"	3" DIA. SPARE WITH DIP PIPE (CAPPED)
N42	1	SEE DWG 26	34'-5"	3" DIA. SAMPLE RETURN
N44	1	*	33'-0 11/16"	2"/14" DIA. AIR/VACUUM TO FRP-PJM-00004
N45	1	*	35'-4 3/4"	2"/14" DIA. AIR/VACUUM TO FRP-PJM-00029
N46	1	*	33'-0 3/16"	2"/14" DIA. AIR/VACUUM TO FRP-PJM-00030
N47	1	*	35'-4 3/16"	2"/14" DIA. AIR/VACUUM TO FRP-PJM-00031
N48	1	*	33'-0 1/16"	2"/14" DIA. AIR/VACUUM TO FRP-PJM-00032
N49	1	*	33'-0 11/16"	2"/14" DIA. AIR/VACUUM TO FRP-PJM-00033
N50	1	*	35'-4 11/16"	2"/14" DIA. AIR/VACUUM TO FRP-PJM-00034
N51	1	*	33'-0 3/16"	2"/14" DIA. AIR/VACUUM TO FRP-PJM-00035
N52	1	*	32'-11 3/16"	2"/14" DIA. AIR/VACUUM TO FRP-PJM-00036
N53	1	*	32'-11 3/16	2"/14" DIA. AIR/VACUUM TO FRP-PJM-00001
N54	1	*	33'-0 3/16"	2"/14" DIA. AIR/VACUUM TO FRP-PJM-00002
N55	1	*	35'-4 3/16"	2"/14" DIA. AIR/VACUUM TO FRP-PJM-00003
N56	1	SEE DWG 35	30'-6 1/4"	2" DIA. INLET TO WASH RING
N57	1	SEE DWG 35	30'-6 3/16"	2" DIA. INLET TO WASH RING
N58	1	SEE DWG 35	30'-5 11/16"	2" DIA. INLET TO WASH RING
N59	1	SEE DWG 35	30'-6 3/16"	2" DIA. INLET TO WASH RING
N60	1	SEE DWG 35	30'-5 3/4"	2" DIA. INLET TO WASH RING
N61	1	SEE DWG 35	30'-6"	2" DIA. INLET TO WASH RING
N62	1	SEE DWG 35	30'-5 11/16"	2" DIA. INLET TO WASH RING
N63	1	SEE DWG 30	SEE DWG 30	4" DIA. OUTLET
N64	1	SEE DWG 31	35'-5 1/16"	1 1/2" DIA. FORCED PURGE AIR INLET
N70	1	SEE DWG 18	-	6" DIA. INSTRUMENTATION
N70A	1	SEE DWG 18	35'-6 3/16"	1" DIA. BALANCE
N70B	1	SEE DWG 18	35'-7 3/16"	1" DIA. DENSITY
N70C	1	SEE DWG 18	35'-8 3/16"	1" DIA. LEVEL

24590-OL-SRA-MTF5-00001-28-01
REV 00 K

R10242261

ADD NOTE BY RPP-WTP

ADD KNUCKLE STIFFENERS BY RPP-WTP ON HOLD

REVISE PJM NOZZLE BY RPP-WTP ON HOLD

NOTES:

1. ALL ELEVATIONS ARE TO FACE OF FLANGE OR END OF PIPE AND FROM BOTTOM TANGENT LINE, EXCEPT NOZZLES N8 & N63 WHICH ARE TO HORIZONTAL CENTER LINE OF NOZZLE FROM BOTTOM T.L.
2. WELD SHOWN MAY BE FIELD - APPLIED AS NECESSARY TO SUPPORT INSTALLATION OF COMPONENTS.
3. FABRICATION TOLERANCES FOR FIELD MODIFICATIONS SHALL BE PER 24590-WTP-MV-M59T-00001 (PRESSURE VESSEL TOLERANCES STANDARD DETAILS) AND PFI STANDARD ES-24 (PIPE BENDING METHODS, TOLERANCES, PROCESS AND MATERIAL REQUIREMENT). FOR TOLERANCES NOT SPECIFIED

▶ INDICATES CHANGE FROM PREVIOUS ISSUE

HOLD
1. KNUCKLE STIFFENER PLATES ARE ON HOLD PENDING CONFIRMATION OF VESSEL MAXIMUM OPERATING PRESSURE.
2. WASH RING PIPE SCHEDULE CHANGE IS ON HOLD PENDING CONFIRMATION OF VESSEL MAXIMUM OPERATING PRESSURE.
3. INSTALLATION OF REVISED PJM NOZZLES ON OUTER RINGS IS ON HOLD PENDING REVISION OF MIXER ARRANGEMENT.

CERTIFIED AS BUILT
CONTRACT DRAWING
DATE: 4/5/05
SIGNED: B.A. Bakowski

CBI

GENERAL ELEVATION
VESSEL FRP-VSL-00002C (Q)
WASTE FEED RECEIPT
RICHLAND, WA

CUSTOMER'S NO OU
BY OU CHKD DATE 4/12/04
PVE / BD DR. CHKD
ENGINEERING ASSIGNED
CONTRACT NO 137202C
DWG 1 SHT 1 REV 13

CAD FILE: 20281010C.DCN

24590-OL-SRA-MTF5-00001-28-01 J

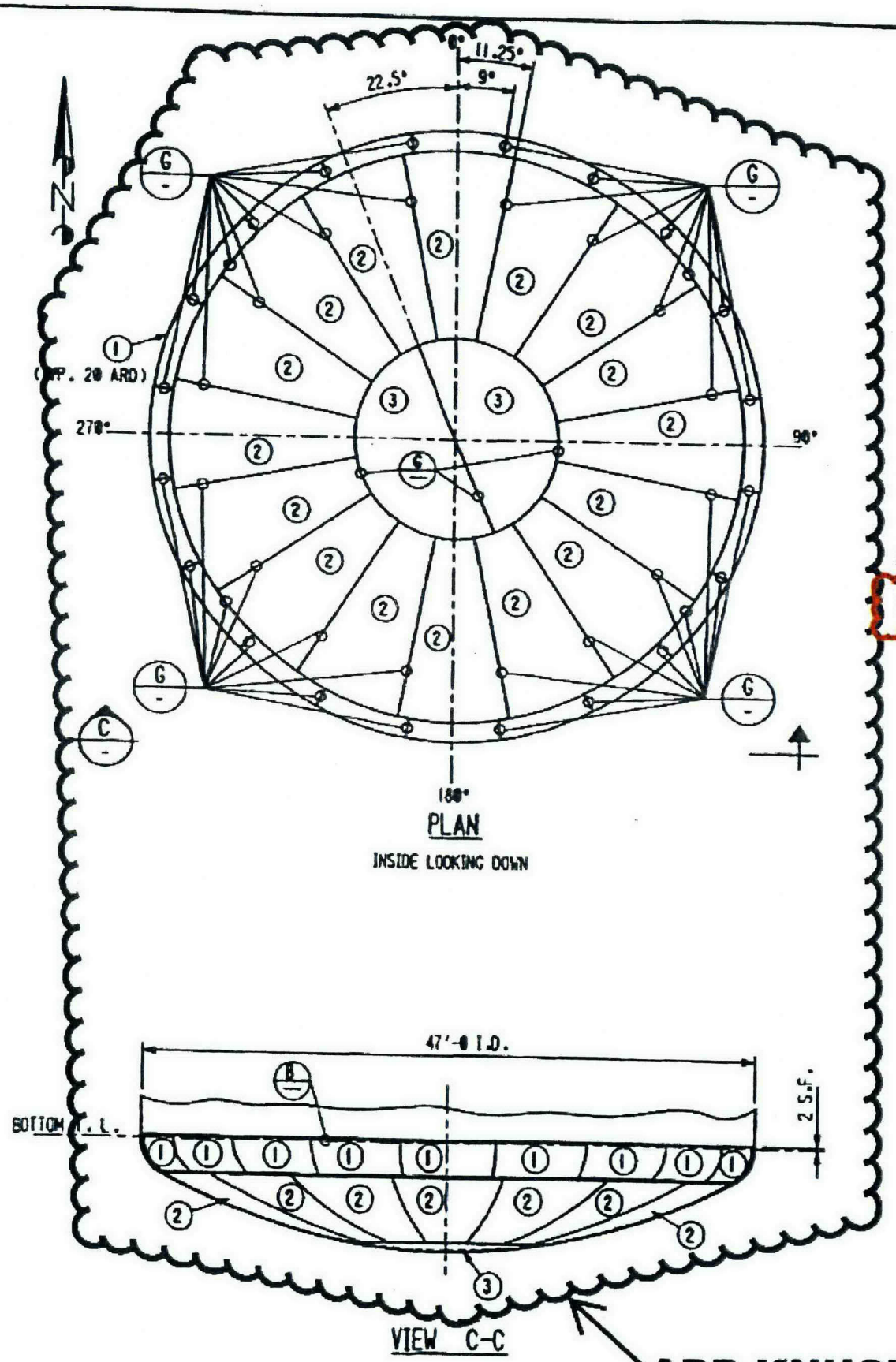

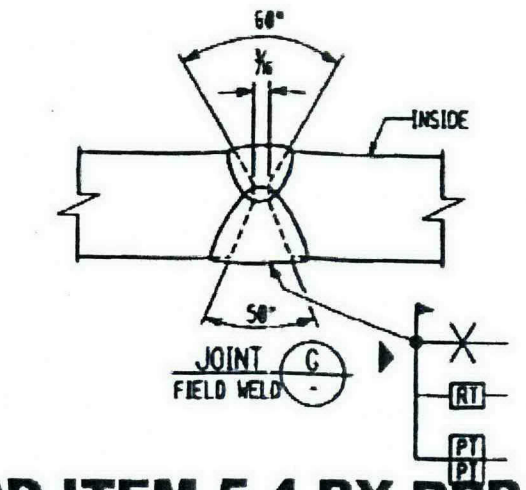

ADD ITEM 5-4 BY RPP-WTP

ON HOLD

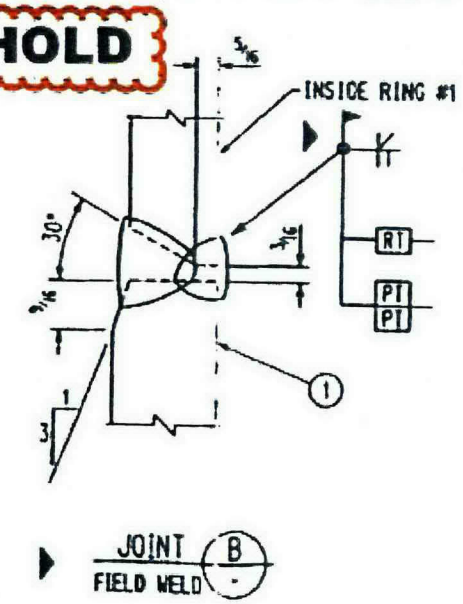

SHIP PC	MARK	ASSM PC	DESCRIPTION	LENGTH FT	LENGTH IN	SPEC	IN	EST WT
20	S-1		PL SX x 1 3/16			M1	A	22718
			(45° x 1.2° x 7'-7)					
16	S-2		PL SX x 1 3/16			M1	A	72535
			(104 9/16 x 1.2 x 15'-3 5/16					
2	S-3		PL SX x 1 3/16			M1	A	9963
			(96 x 1.2 x 20'-0)					
			M1 = SA240 316L. CBI SPECMA-240-240					

Bechtel Systems & Infrastructure, Inc.

JOB No. 21595

SUPPLIER DOCUMENT STATUS

1 ☒ WORK MAY PROCEED
2 ☐ REVISE AND RESUBMIT. WORK MAY PROCEED SUBJECT TO RESOLUTION OF INDICATED COMMENTS
3 ☐ REVISE AND RESUBMIT. WORK MAY NOT PROCEED
4 ☐ REVIEW NOT REQUIRED. WORK MAY PROCEED.

PERMISSION TO PROCEED DOES NOT CONSTITUTE ACCEPTANCE OR APPROVAL OF DESIGN DETAILS, CALCULATIONS, ANALYSES, TEST METHODS, OR MATERIALS DEVELOPED OR SELECTED BY THE SUPPLIER AND DOES NOT RELIEVE SUPPLIER FROM FULL COMPLIANCE WITH CONTRACTUAL OBLIGATIONS.

	M	P	ML	H	MH	E	C&I	CS&A	PD	PT	ESH
REVIEWED											

G-321 DOCUMENT CATEGORY D, I
[From Supplement A to G-321-E (E) of G-321-V (V), as applicable]
RESPONSIBLE ENGINEER DATE 05/04/05

FC 6/17/05

24590-QL-SRA-MTF5-00001-28- 06
REV 00 2

NOTES:

1. WORK THIS DWG. WITH DWG. #1, 2 & 5 SHT. 2 THRU 4
2. ALL WELDS TO BE 316L UNLESS NOTED OTHERWISE.

6/6/05 ☒ Processed Data Entry ☐ Copied QA ☐ Returned ☐ Filed

R10242264

KC 6-2-05 ~~24590-PTF-SRA-MTF5-00001-28 06 Rev 00A~~

4/23/03 4/28/03

☒ Processed Data Entry ☒ Copied QA ☒ Scanned ☐ Filed

4/23/03 Cd 4-23-03

CERTIFIED AS BUILT CONTRACT DRAWING
DATE: 4/5/05
SIGNED: B.A. Beland

REVISED WELD DETAILS TO JOINTS 5 & 6.
REVISED JOINT 5 WELD DETAIL & JOINT 6.
ADDED NDT AND PT
REVISIONS

CBI

SUPPLIER'S / PURCHASER'S NO

BOTTOM HEAD ASSEMBLY
VESSEL FRP-VSL-00002C (Q)
WASTE FEED RECEIPT
RICHLAND, WA

CUSTOMER'S NO
BY DU CHKD CSL DATE 8-29-02
PVC / B.S. BALCOM
DRAWING ISSUED

CONTRACT NO 137202C
DWG 5 SHT 1 REV 3

CAD FILE: 202050AIC.dgn

ADD KNUCKLE STIFFNER PLATES BY RPP-WTP ON HOLD

▶ INDICATES CHANGE FROM PREVIOUS ISSUE

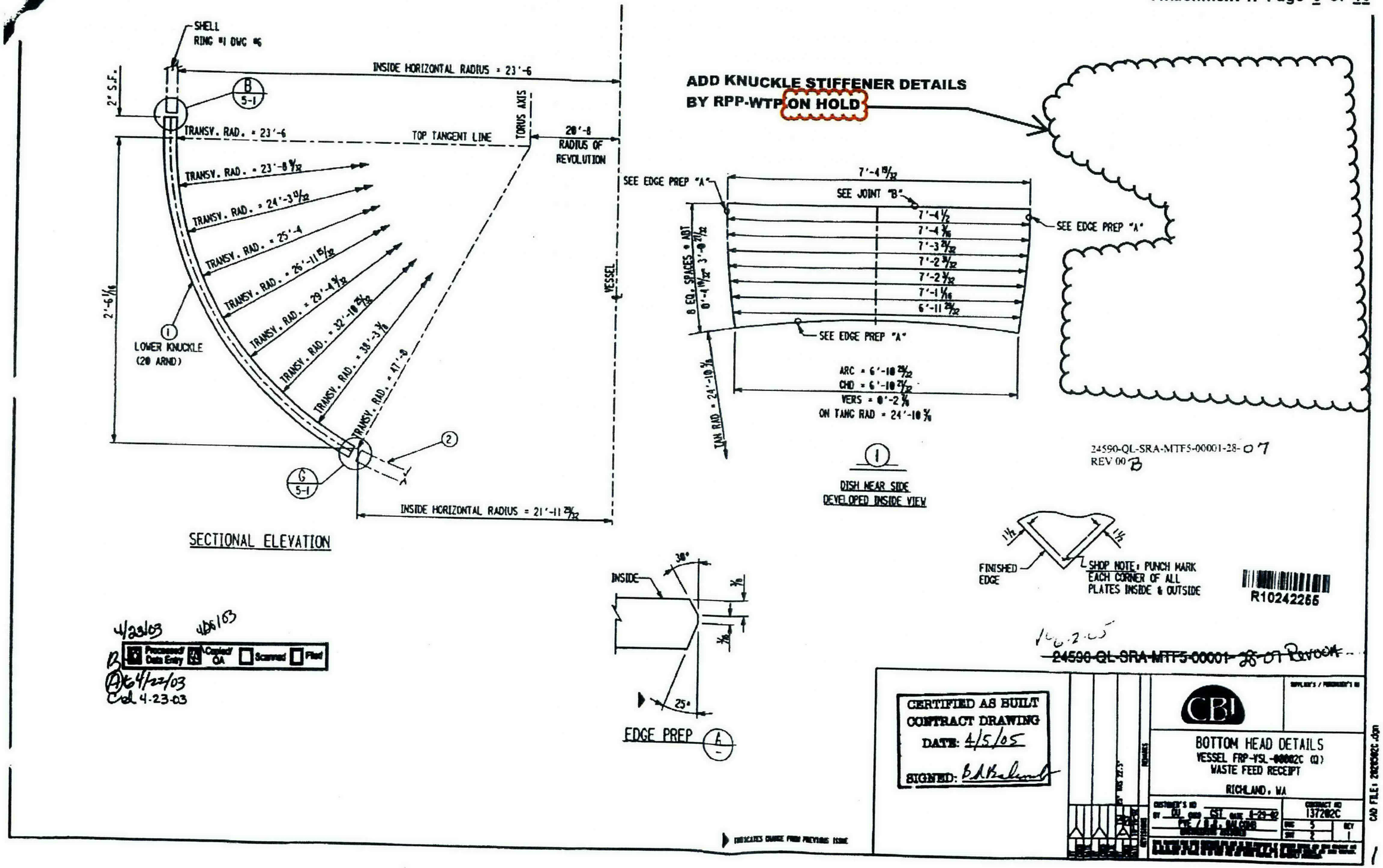
SHELL
RING #1 DWG #6
INSIDE HORIZONTAL RADIUS = 23'-6
2" S.F.
B
5-1
TRANSV. RAD. = 23'-6
TOP TANGENT LINE
TORUS AXIS
20'-8
RADIUS OF
REVOLUTION
TRANSV. RAD. = 23'-8 9/32
TRANSV. RAD. = 24'-3 13/32
TRANSV. RAD. = 25'-4
TRANSV. RAD. = 26'-11 15/32
TRANSV. RAD. = 29'-4 9/32
TRANSV. RAD. = 32'-10 25/32
TRANSV. RAD. = 38'-3 3/8
TRANSV. RAD. = 47'-0
2'-6 1/16
1
LOWER KNUCKLE
(20 ARND)
VESSEL
2
G
5-1
INSIDE HORIZONTAL RADIUS = 21'-11 23/32
SECTIONAL ELEVATION
ADD KNUCKLE STIFFENER DETAILS
BY RPP-WTP ON HOLD
SEE EDGE PREP "A"
7'-4 15/32
SEE JOINT "B"
7'-4 1/2
7'-4 3/16
7'-3 21/32
7'-2 31/32
7'-2 3/32
7'-1 1/16
6'-11 23/32
SEE EDGE PREP "A"
8 EQ. SPACES @ ABT
0'-4 19/32" 3'-0 21/32
SEE EDGE PREP "A"
ARC = 6'-10 29/32
CHD = 6'-10 21/32
VERS = 0'-2 7/8
ON TANG RAD = 24'-10 5/8
TAN RAD = 24'-10 5/8
1
DISH NEAR SIDE
DEVELOPED INSIDE VIEW
24590-QL-SRA-MTF5-00001-28-07
REV 00 B
1 1/2
1 1/2
FINISHED
EDGE
SHOP NOTE: PUNCH MARK
EACH CORNER OF ALL
PLATES INSIDE & OUTSIDE
R10242265
INSIDE
30°
3/8
3/16
25°
EDGE PREP A
4/23/03
4/26/03
Processed/ Data Entry
Copied/ OA
Scanned
Filed
B
A 4/22/03
Cal 4-23-03
CERTIFIED AS BUILT
CONTRACT DRAWING
DATE: 4/5/05
SIGNED:
CBI
BOTTOM HEAD DETAILS
VESSEL FRP-VSL-00002C (Q)
WASTE FEED RECEIPT
RICHLAND, WA
CONTRACT NO
137202C
DWG 5
SHT 2
REV 1
CAD FILE: 2020502C.dgn
INDICATES CHANGE FROM PREVIOUS ISSUE

CBI RECEIVED
APR 0 5 2005

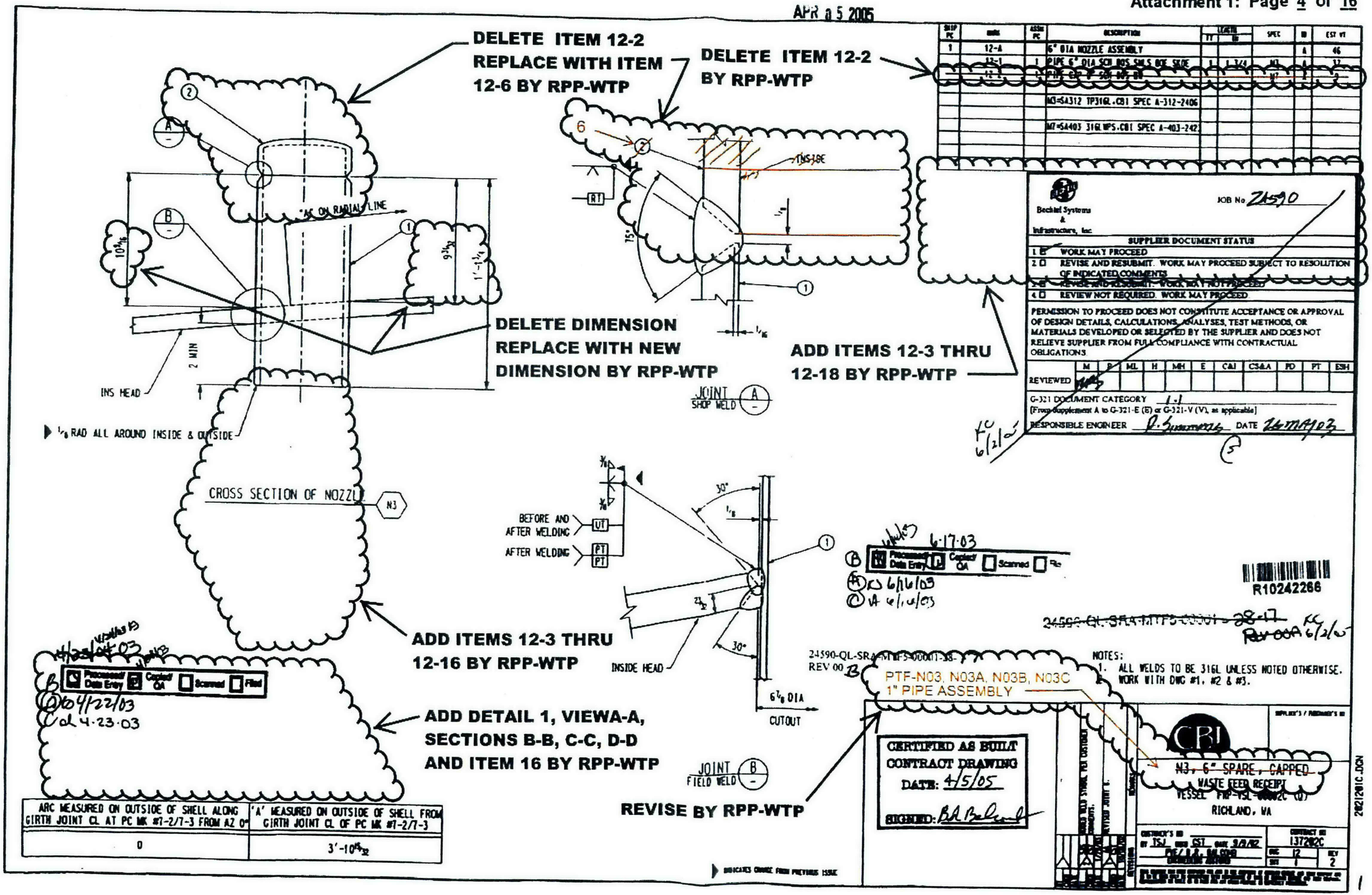

SHIP PC	MARK	ASSM PC	DESCRIPTION	LENGTH FT	LENGTH IN	SPEC	IN	EST WT
1	12-A		6" DIA NOZZLE ASSEMBLY				A	46
	12-1	1	PIPE 6" DIA SCH 80S SMLS BOE SBE	1	1 3/4	M3	A	37
	12-6	1	PIPE 6" DIA SCH 80S BOE BOE			M7	A	2
			M3=SA312 TP316L.CBI SPEC A-312-2406					
			M7=SA403 316LWPS.CBI SPEC A-403-2423					

ARC MEASURED ON OUTSIDE OF SHELL ALONG GIRTH JOINT CL AT PC MK #7-2/7-3 FROM AZ 0°	'A' MEASURED ON OUTSIDE OF SHELL FROM GIRTH JOINT CL OF PC MK #7-2/7-3
0	3'-10 15/32

CBI RECEIVED
APR 05 2005

24590-PTF-VDCN-MS-11-00006
Attachment 1: Page 5 of 16

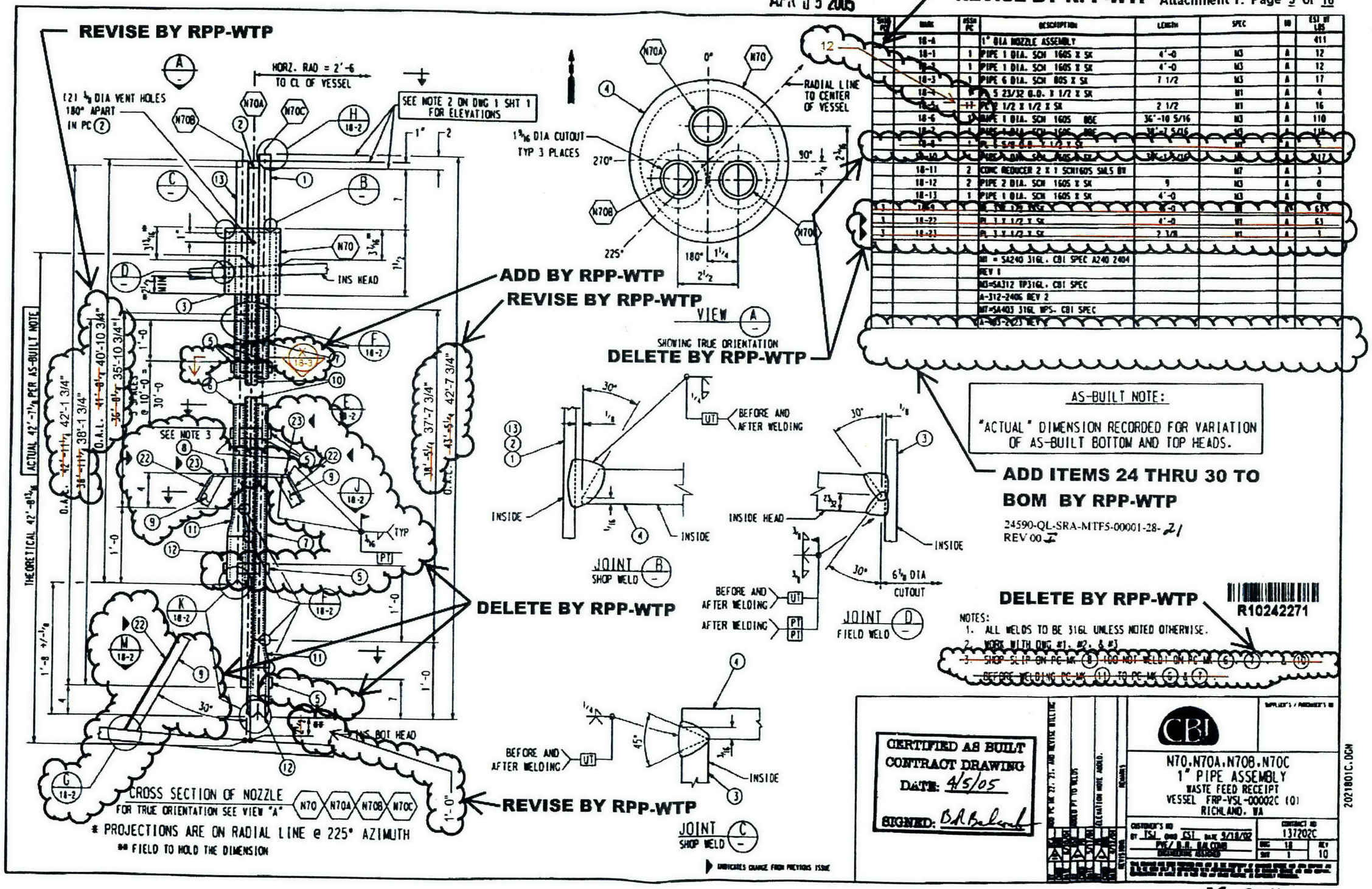

SHT PC	MARK	ASSM PC	DESCRIPTION	LENGTH	SPEC	ID	EST WT LBS
	18-A		1" DIA NOZZLE ASSEMBLY				411
	18-1	1	PIPE 1 DIA. SCH 160S X SK	4'-0	M3	A	12
	18-2	1	PIPE 1 DIA. SCH 160S X SK	4'-0	M3	A	12
	18-3	1	PIPE 6 DIA. SCH 80S X SK	7 1/2	M3	A	17
	18-4	1	PL 5 23/32 O.D. X 1/2 X SK		M1	A	4
	18-5	11	PL 2 1/2 X 1/2 X SK	2 1/2	M1	A	16
	18-6	1	PIPE 1 DIA. SCH 160S BBE	36'-10 5/16	M3	A	110
	18-7	1	PIPE 1 DIA. SCH 160S BBE	38'-7 5/16	M3	A	115
	18-8	1	PL 5 5/8 O.D. X 1/2 X SK		M1	A	5
	18-10	1	PIPE 1 DIA. SCH 160S X SK	38'-1 5/16	M3	A	117
	18-11	2	CONC REDUCER 2 X 1 SCH160S SMLS BW		M7	A	3
	18-12	2	PIPE 2 DIA. SCH 160S X SK	9	M3	A	0
	18-13	1	PIPE 1 DIA. SCH 160S X SK	4'-0	M3	A	0
3	18-19		PL 3 X 1/2 X SK	4'-0	M1	A	63
3	18-22		PL 3 X 1/2 X SK	4'-0	M1	A	63
3	18-23		PL 3 X 1/2 X SK	2 3/8	M1	A	3
			M1 = SA240 316L, CBI SPEC A240 2404 REV 1				
			M3=SA312 TP316L, CBI SPEC A-312-2406 REV 2				
			M7=SA403 316L WPS, CBI SPEC A-403-2423 REV 2				

28-21H

CBI RECEIVED
APR 05 2005

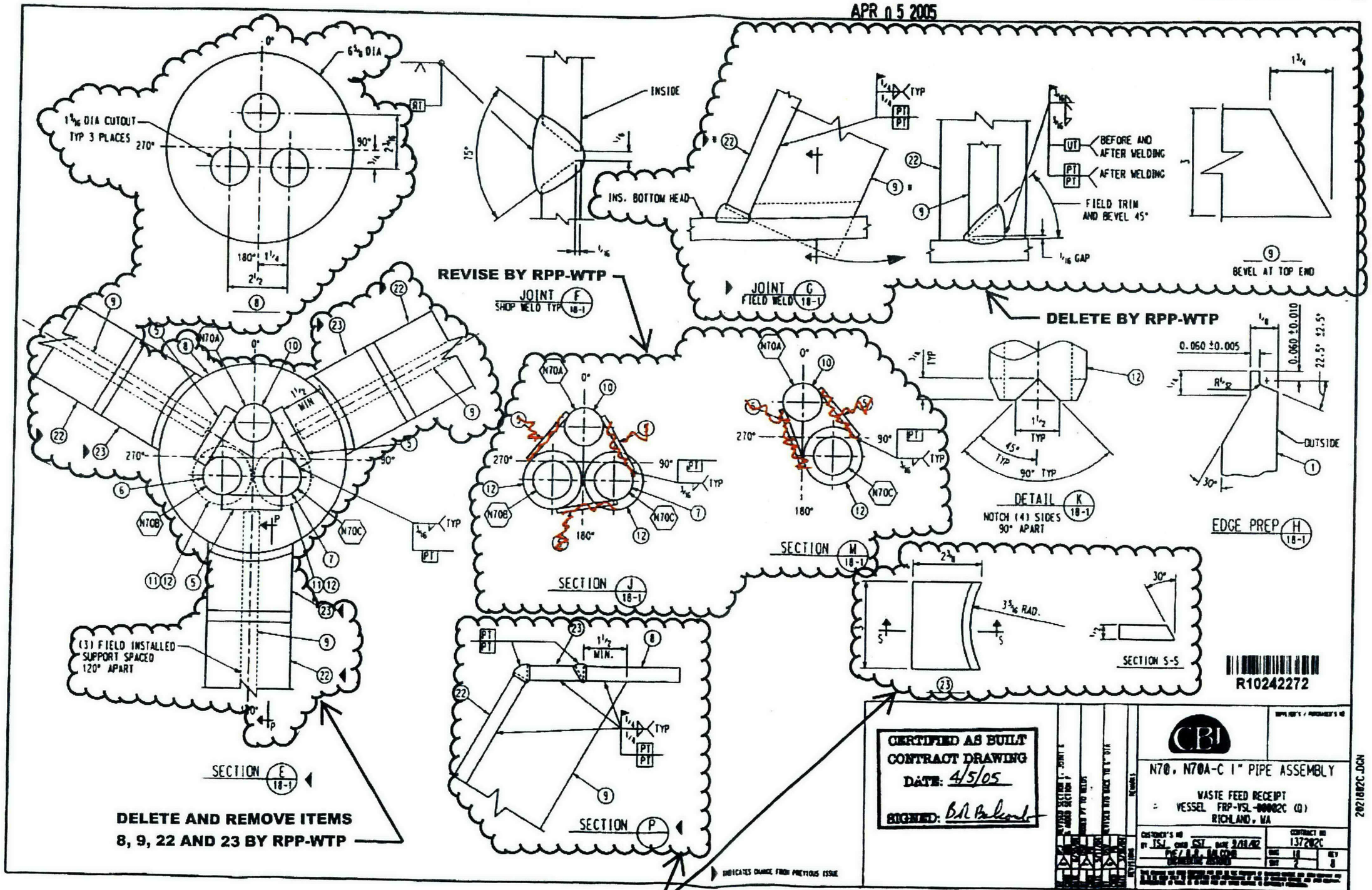

DELETE BY RPP-WTP

KC 6/1/05 ~~24590-QL-SRA-MTF5-00001-28-22~~

REV 00H

CBI RECEIVED
APR 0 5 2005

DELETE AND REPLACE WITH NEW SUPPORTS BY RPP-WTP

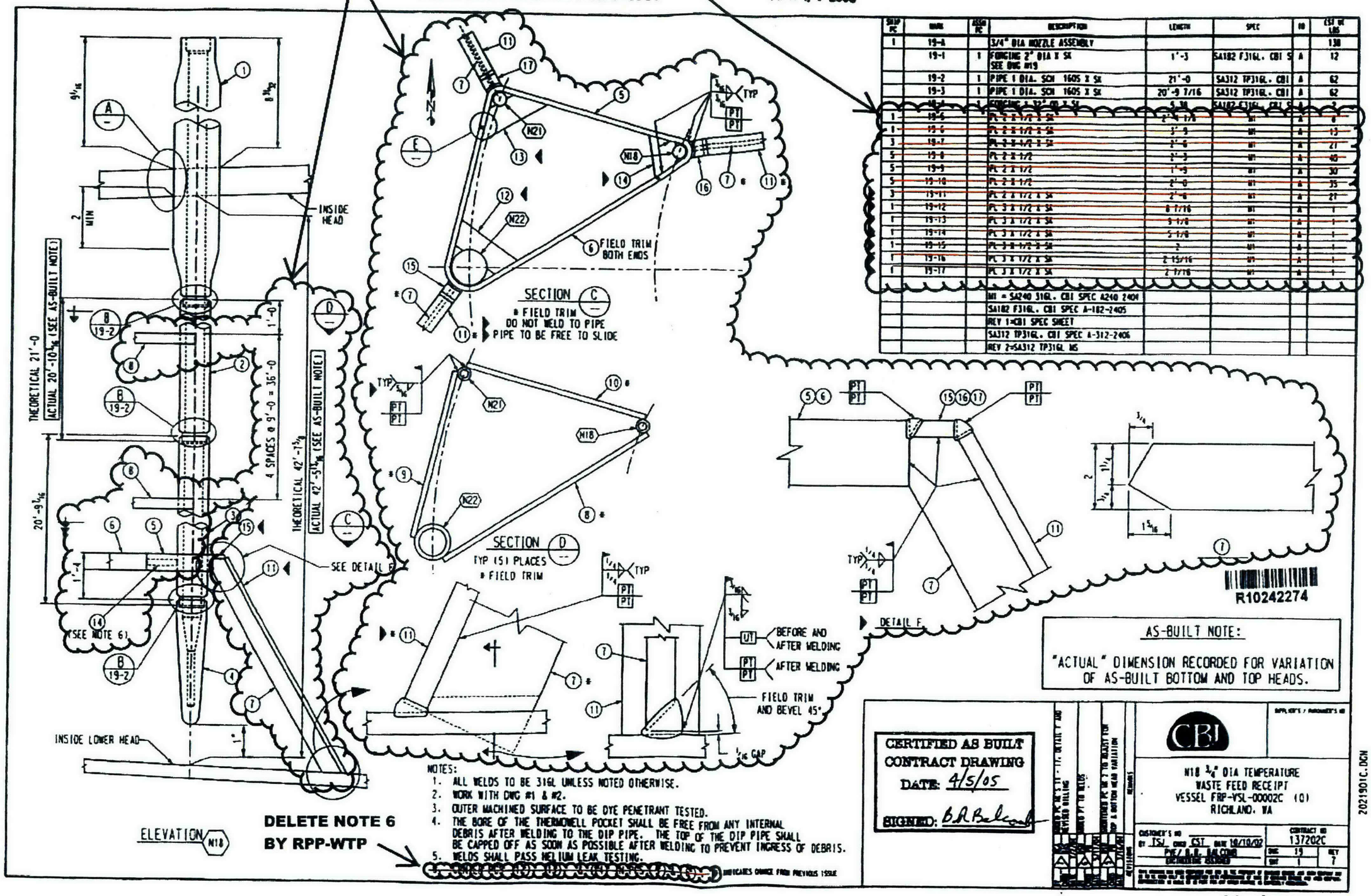

SHIP PC	MARK	ASSM PC	DESCRIPTION	LENGTH	SPEC	ID	EST WT LBS
1	19-A		3/4" DIA NOZZLE ASSEMBLY				138
	19-1	1	FORGING 2" DIA X SK SEE DWG #19	1'-3	SA182 F316L. CBI S	A	12
	19-2	1	PIPE 1 DIA. SCH 160S X SK	21'-0	SA312 TP316L. CBI	A	62
	19-3	1	PIPE 1 DIA. SCH 160S X SK	20'-9 7/16	SA312 TP316L. CBI	A	62
	19-4	1	FORGING 1 32" OD X SK	5 3/8	SA182 F316L. CBI S	A	2
1	19-5		PL 2 X 1/2 X SK	2'-4 1/8	M1	A	6
1	19-6		PL 2 X 1/2 X SK	3'-9	M1	A	13
3	19-7		PL 2 X 1/2 X SK	2'-6	M1	A	27
5	19-8		PL 2 X 1/2	2'-3	M1	A	40
5	19-9		PL 2 X 1/2	1'-9	M1	A	30
5	19-10		PL 2 X 1/2	2'-0	M1	A	35
3	19-11		PL 2 X 1/2 X SK	2'-6	M1	A	21
1	19-12		PL 3 X 1/2 X SK	8 7/16	M1	A	1
1	19-13		PL 3 X 1/2 X SK	9 1/8	M1	A	1
1	19-14		PL 3 X 1/2 X SK	5 1/8	M1	A	1
1	19-15		PL 3 X 1/2 X SK	2	M1	A	1
1	19-16		PL 3 X 1/2 X SK	2 15/16	M1	A	1
1	19-17		PL 3 X 1/2 X SK	2 7/16	M1	A	1
			M1 = SA240 316L. CBI SPEC A240 2404				
			SA182 F316L. CBI SPEC A-182-2405				
			REV 1=CBI SPEC SHEET				
			SA312 TP316L. CBI SPEC A-312-2406				
			REV 2=SA312 TP316L MS				

AS-BUILT NOTE:

"ACTUAL" DIMENSION RECORDED FOR VARIATION OF AS-BUILT BOTTOM AND TOP HEADS.

NOTES:
1. ALL WELDS TO BE 316L UNLESS NOTED OTHERWISE.
2. WORK WITH DWG #1 & #2.
3. OUTER MACHINED SURFACE TO BE DYE PENETRANT TESTED.
4. THE BORE OF THE THERMOWELL POCKET SHALL BE FREE FROM ANY INTERNAL DEBRIS AFTER WELDING TO THE DIP PIPE. THE TOP OF THE DIP PIPE SHALL BE CAPPED OFF AS SOON AS POSSIBLE AFTER WELDING TO PREVENT INGRESS OF DEBRIS.
5. WELDS SHALL PASS HELIUM LEAK TESTING.
6. [illegible] INDICATES CHANGE FROM PREVIOUS ISSUE

DELETE NOTE 6 BY RPP-WTP

CERTIFIED AS BUILT CONTRACT DRAWING
DATE: 4/5/05
SIGNED: B.R. Balcomb

CBI

N18 3/4" DIA TEMPERATURE
WASTE FEED RECEIPT
VESSEL FRP-VSL-00002C (0)
RICHLAND, WA

CUSTOMER'S NO
BY TSJ CHKD CST DATE 10/10/02
PVE/ B.R. BALCOMB
ENGINEERING ASSIGNED

CONTRACT NO 137202C
DWG 19 REV 7
SHT 1

24590-QL-SRA-MTF5-00001-28-23
REV 00 H

2021901C.DGN

28-23G

KC 6/2/05 ~~24590-QL-SRA-MTF5-00001-28-23~~
~~REV. 00G~~

DELETE ITEMS 5, 6, 12, 13, 14, 15, 16, 17 AND SECTION X-X BY RPP-WTP

CBI RECEIVED

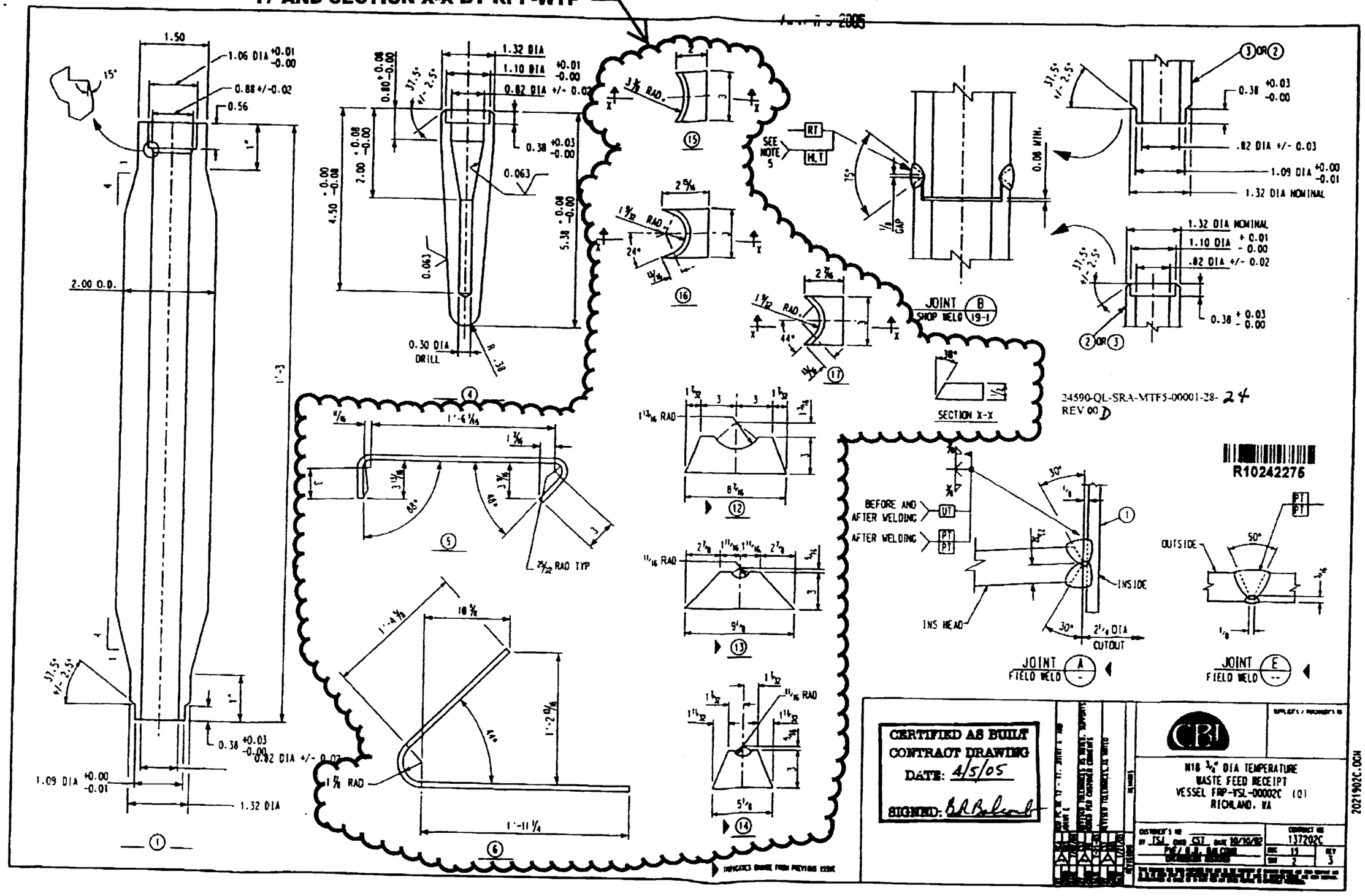

28-24C

CBI RECEIVED
APR 05 2005

UPDATE DEPICTION BY RPP-WTP

ADD PIPE KICK-OFF SUPPORTS BY RPP-WTP

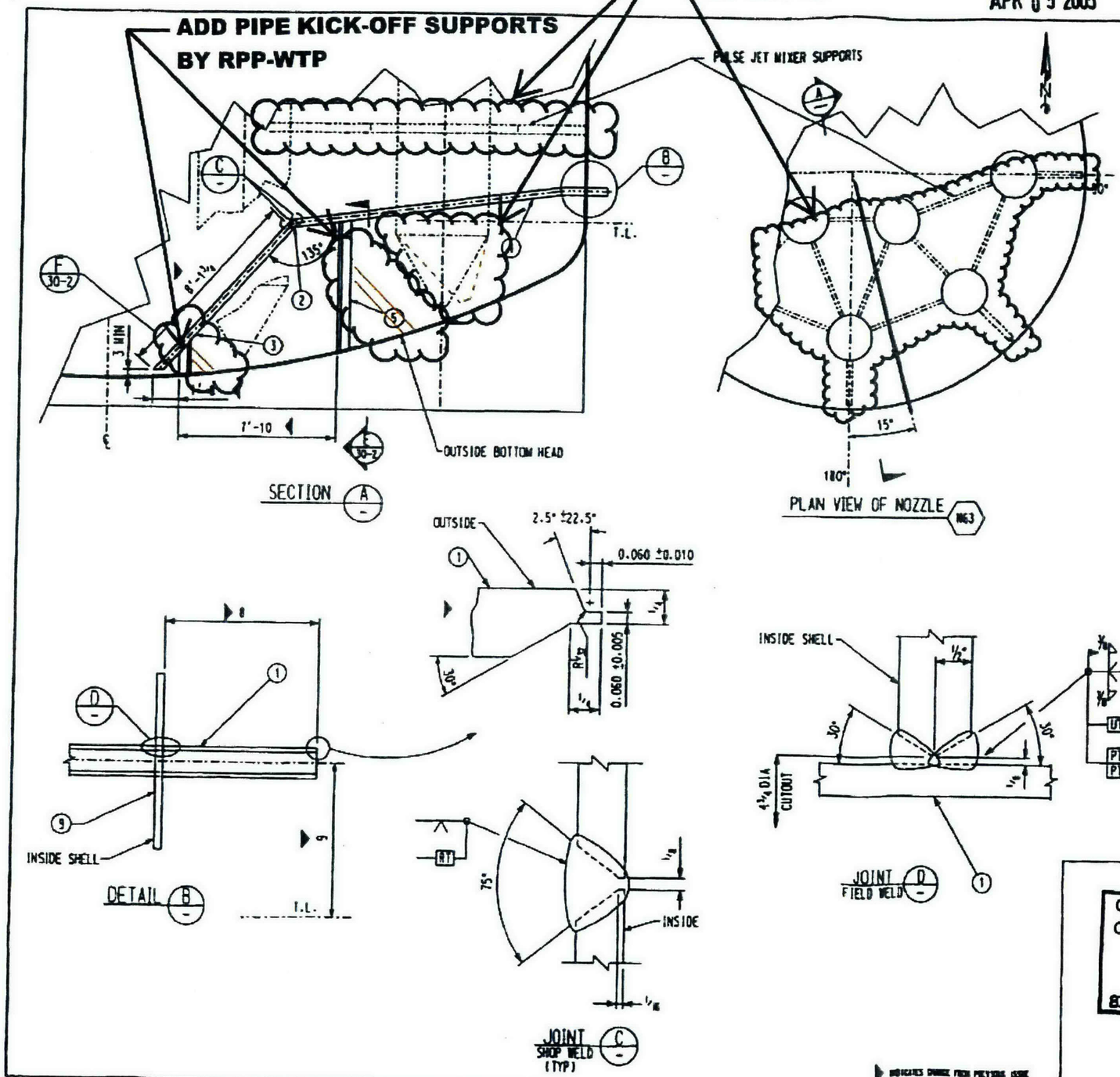

SHIP PC	NAME	ASSM PC	DESCRIPTION	LENGTH FT	LENGTH IN	SPEC	ID	CST WT
1	30-A		4" DIA PIPE ASSEMBLY A					594
	30-1	1	PIPE 4" DIA SCH 160S SMLS BBE	16	0 3/8	M3	A	385
	30-2	1	WELDED 4" DIA SCH160 45 DEG ELBOW			M7	A	9
	30-3	1	PIPE 4" DIA SCH 160S SMLS SKOE BOE	8	1 3/4	M3	A	200
1	30-4		PL 6" X 1/2" X SK	0	10	M1	A	4
2	30-5		PL 6" X 1/2" X SK	7	0	M1	A	150
1	30-6		PL 6" X 1/2" X SK	2	3 13/16	M1	A	18
1	30-7		PL 5 1/2" X 1/2"	0	7 1/2	M1	A	9
1	30-8		PL 1/2 X 1/2 X SK	1	1	M1	A	2
			M1=SA240 316L.CBI SPEC A-240-2404					
			M3=SA312 TP316L.CBI SPEC A-312-2406					
			M7=SA403 316L WPS. CBI					
			SPEC A-403-2423					

ADD ITEMS 30-9, 30-10, 30-11, 30-12 AND 30-13 BY RPP-WTP

9/4/03 9-4-03
Processed Data Entry | Copied CA | Scanned | Filed

24590-QL-SRA-MTF5-00001-28-30
REV 00 C

R10242379

NOTES:
1. ALL WELDS TO BE 316L UNLESS NOTED OTHERWISE.
2. WORK WITH DWG #1, #2, & #3

CERTIFIED AS BUILT
CONTRACT DRAWING
DATE: 4/5/05
SIGNED: B.R. Balcomb

CBI

N63 4" DIA OUTLET

WASTE FEED RECEIPT
VESSEL FRP-VSL-00002C (Q)
RICHLAND, WA

CUSTOMER'S NO TSJ DWN CST DATE 10-16-02
PHE/ B.R. BALCOMB
CONTRACT NO 137202C
DWG 30 SHT 01 REV 2

INDICATES CHANGE FROM PREVIOUS ISSUE

2023001C.DGN

28-30 000001

CBI RECEIVED
APR 05 2005

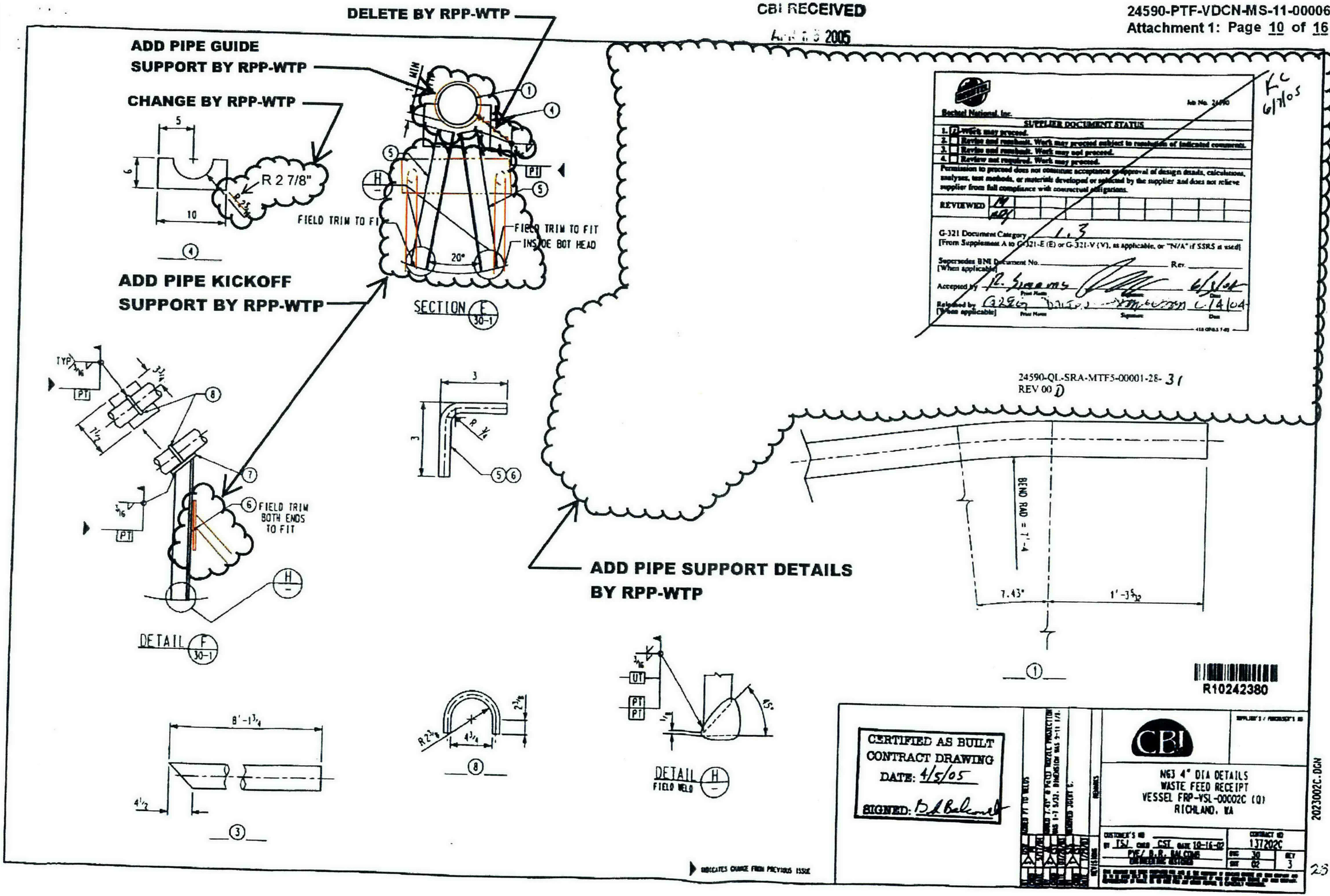

Bechtel National, Inc.
Job No. 24590
SUPPLIER DOCUMENT STATUS
1. [X] Work may proceed.
2. [ ] Revise and resubmit. Work may proceed subject to resolution of indicated comments.
3. [ ] Revise and resubmit. Work may not proceed.
4. [ ] Review not required. Work may proceed.
Permission to proceed does not constitute acceptance or approval of design details, calculations, analyses, test methods, or materials developed or selected by the supplier and does not relieve supplier from full compliance with contractual obligations.
REVIEWED
G-321 Document Category L3
[From Supplement A to G-321-E (E) or G-321-V (V), as applicable, or "N/A" if SSRS is used]
Supersedes BNI Document No. _____ Rev. _____
[When applicable]
Accepted by R. Stearns 6/3/04
Released by [When applicable] 6/14/04

KC 6/7/05

24590-QL-SRA-MTF5-00001-28-31
REV 00 D

L

24590-PTF-VDCN-MS-11-00006
Attachment 1: Page 11 of 16

DELETE AND REPLACE WITH DIP PIPE SUPPORT DETAILS BY RPP-WTP IN CROSS HATCH AREA

SHIP PC	MARK	ASSM PC	DESCRIPTION	LENGTH	SPEC	TYP	LBS
1	18-5		PL 1 1/8 X 1/2	2 1/8	M1	A	12
* 2	18-14		L 2 1/2 X 2 1/2 X 1/4	8'-6	M9	A	58
* 2	18-15		L 2 1/2 X 2 1/2 X 1/4	5'-0	M9	A	34
* 4	18-16		L 2 X 2 X 1/4	2'-8	M9	A	36
* 4	18-17		L 2 X 2 X 1/4	2'-6	M9	A	36
* 4	18-18		PL 2 1/2 X 1/2	3	M1	A	4
* 4	18-19		L 2 X 2 X 1/4	3	M9	A	12
* 4	18-20		L 2 X 2 X 1/4	2'-8	M9	A	40
* 2	18-21		L 2 X 2 X 1/4	4'-0	M9	A	26
			M1 = SA240 316L, CBI SPEC A240 2404				
			M1 = SA240 316L, CBI SPEC A240 2404				
			M9= SA479 316L CBI SPEC A-479 2570				

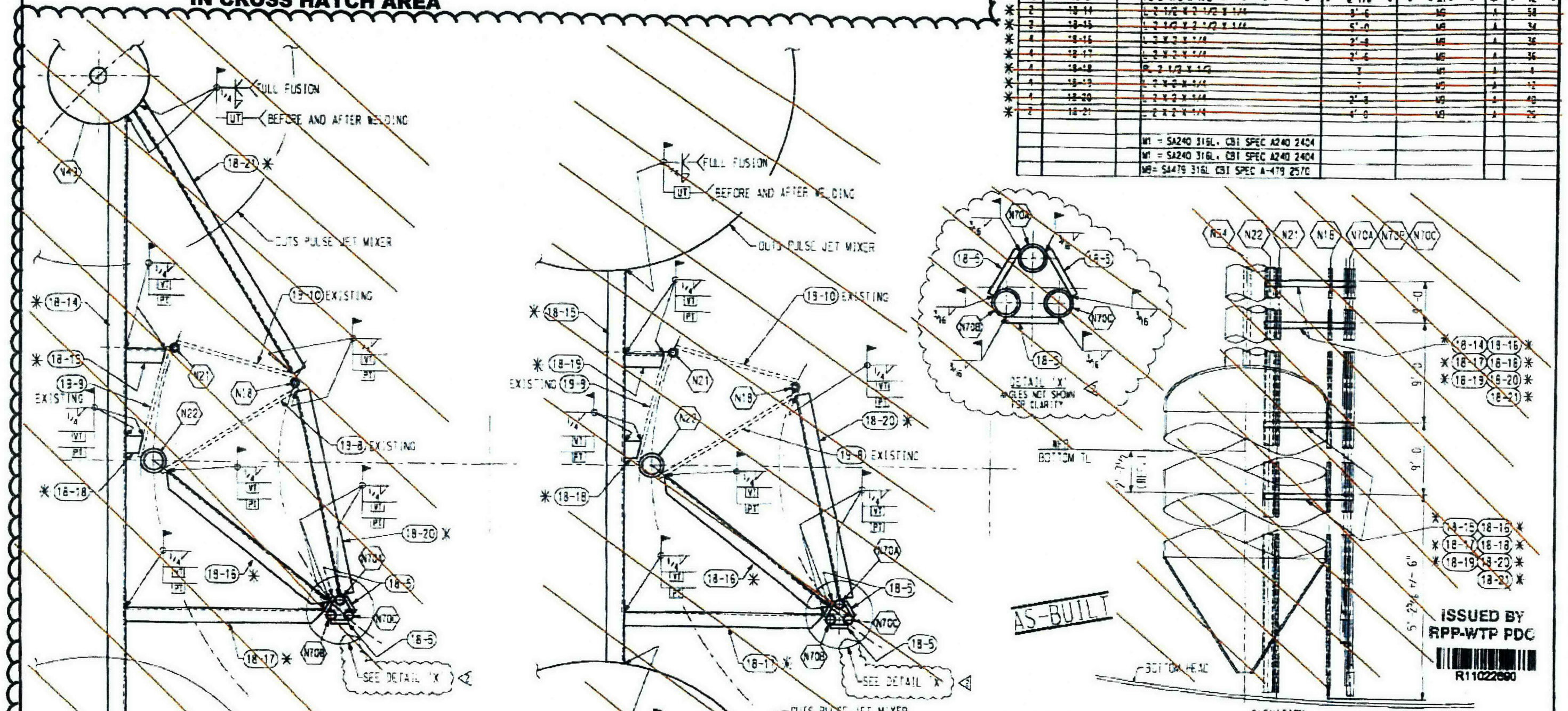

PLAN VIEW AT UPPER STABILIZER
(TYP 2 PLACES)
NOTE: INSTALL BRACING AT EXISTING BANDING ELEVATION

PLAN VIEW AT LOWER STABILIZER
(TYP 2 PLACES)
NOTE: INSTALL BRACING AT EXISTING BANDING ELEVATION

NOTES:
1. ALL WELDS TO BE 316L UNLESS NOTED OTHERWISE.
2. WORK WITH DWG #1 SHT 1, #2 SHT 1, #18 SHT 1, & 2, & #19 SHT 1 & 2.
* 3. BILLED WITH ADDED MATERIAL FOR FIELD TRIM.

INDICATES CHANGE FROM PREVIOUS ISSUE

24590-QL-SRA-MTFS-00001-29-00072 REV. 00C

CERTIFIED AS BUILT CONTRACT DRAWING
DATE: 9/13/10
SIGNED: Billy A Baker

CBI

PTF - LATERAL SUPPORTS FOR DIP PIPE
WASTE FEED RECEIPT
VESSEL FRP-VSL-00002C (C)
RICHLAND, WA

CUSTOMER'S NO
BY RCA CHKD PS DATE 6/16/04
PVE/ B.R. BALCOMB
ENGINEERING ASSIGNED

CONTRACT NO 137202C
DWG 18 REV 2
SHT 3

2021803C.DGN

ON REFERENCE DRAWING 24590-QL-SRA-MTF5-00001-28-06

SHIP PC	MARK	ASSY PC	DESCRIPTION	LENGTH	SPEC.	ID	EST WT
* 64	5-4		PLATE SK 1" x 29 3/16" x 1.0" x 38 13/16"		M1		
			M1= ASME SA240 TP 316/316L				
			* NOMINALLY 64 PIECES				

1. TYPICAL 1" WELD SIZE MAY BE REDUCED WHEN BRIDGING WELDS DEPICTED IN DETAIL F.
2. CONTOUR TO MATCH VESSEL BOTTOM HEAD, GAP BETWEEN STIFFENER PLATE AND VESSEL BOTTOM HEAD AS MEASURED THROUGH FILL AND VENT HOLES, SHALL NOT EXCEED 1/4"
   NOTE: WIDTH OF PLATES MAY BE ADJUSTED TO SHIFT WELD LOCATIONS OR TO CREAT LARGER PLATES TO REDUCE TOTAL NUMBER OF STIFFENERS PLATES. DETAIL F SEAMS SHALL NOT BE LOCATED CLOSER THAN 3" FROM SEAMS IN BOTTOM THAT RUN PARALLEL TO DETAIL F SEAMS.
3. LOCATE 1 FILL AND 1 VENT HOLE, APPROX. AS SHOWN, NOMINALLY 10" FROM CORNER OF STIFFENER PLATES PLATE (PART #5-4). FILL GAPS BEHIND STIFFENER PLATES (PART #5-4) WITH GROUT UNTIL GROUT BLEEDS FROM VENT HOLES. AFTER GROUT SETS, DRILL OUT GROUT FROM FILL AND VENT HOLES MIN. 3/4" DEEP. PLUG WELD HOLES CLOSED MIN. OF 1/2" DEEP. HOLES MAY BE SIZED/TAPPED AS NEEDED UP TO 1" Ø. TO FACILITATE INSTALLATION OF GROUT.

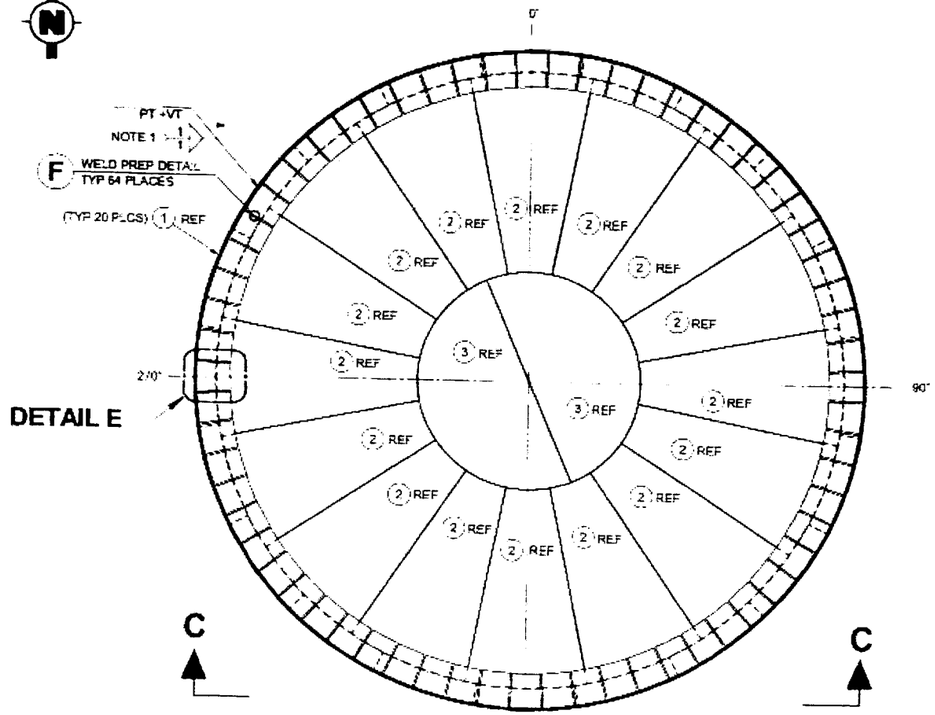

PLAN

INSIDE LOOKING DOWN

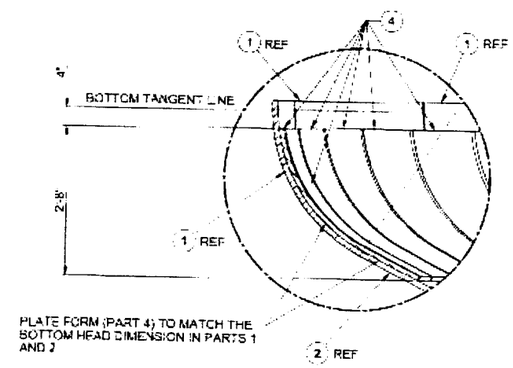

DETAIL D

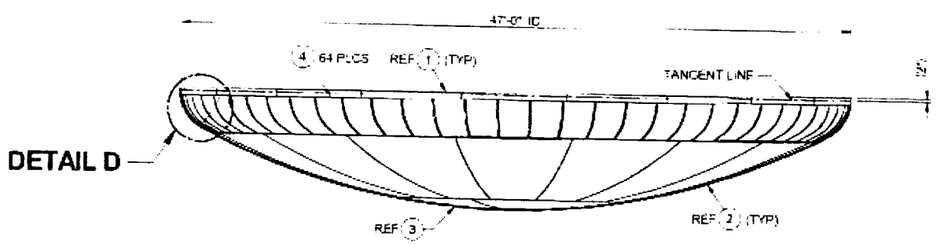

VIEW C-C

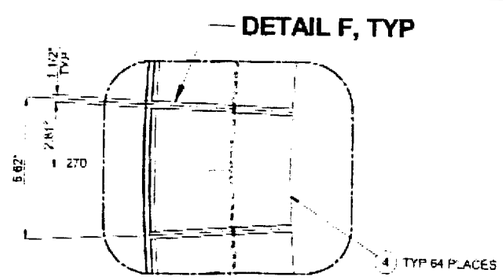

DETAIL E

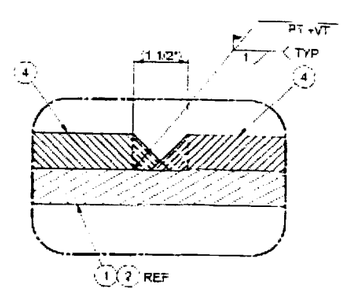

DETAIL F

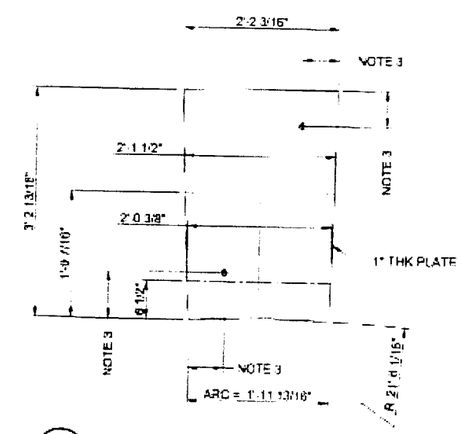

4 KNUCKLE STIFFENER PLATE

(FLAT PLATE BEFORE BEND)
(NOTE 2)

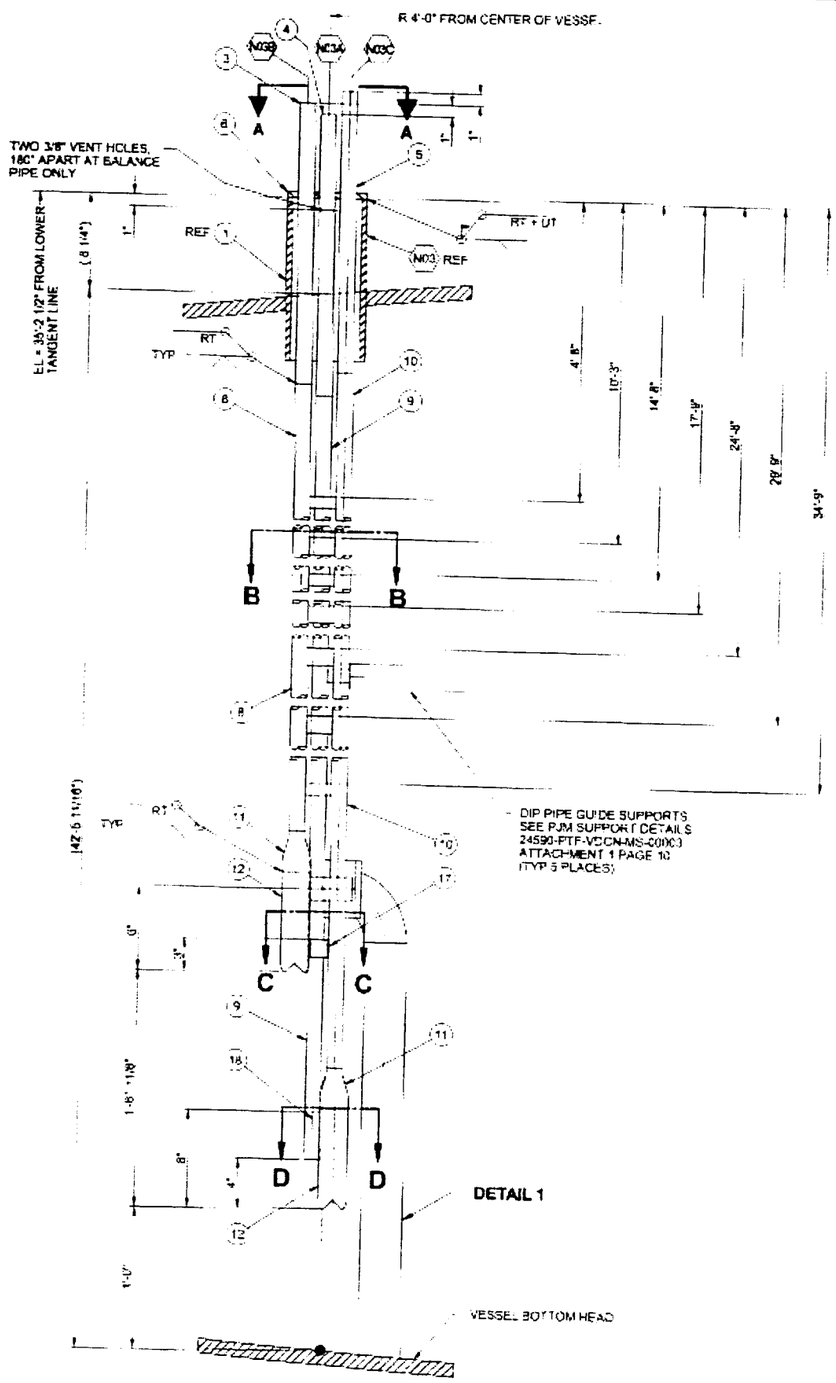

CROSS SECTION NOZZLE

FOR TRUE ORIENATION SEE VIEW A-A

N03 N03A N03B N03C

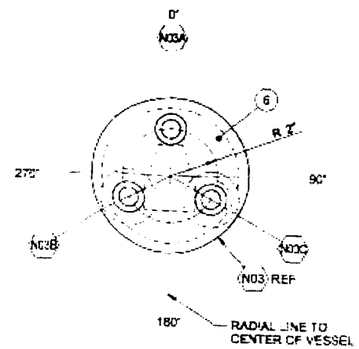

VIEW A-A

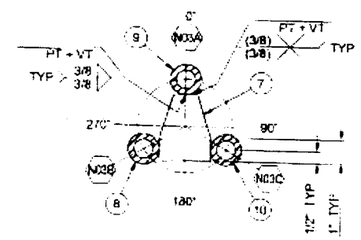

SECTION B-B

TYP 7 PLACES

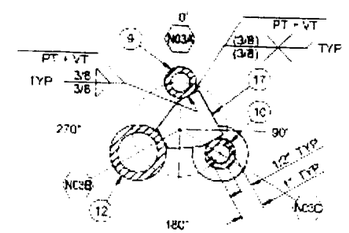

SECTION C-C

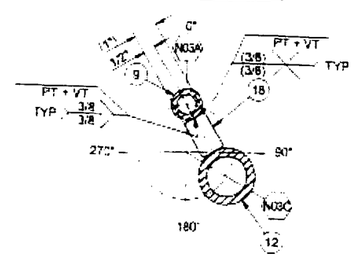

SECTION D-D

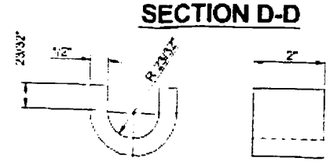

16 PIPE GUIDE STRAP

ON REFERENCE DRAWING 24590-QL-SRA MTF5-00001-28-17

SHIP PC	MARK	ASSY PC	DESCRIPTION	LENGTH	SPEC	ID	EST WT
	12-3	1	PIPE 1" SCHED 160S	4'-3"	M3		
	12-4	1	PIPE 1" SCHED 160S	4'-3"	M3		
	12-5	1	PIPE 1" SCHED 160S	4'-0"	M3		
	12-6	*	PLATE 6 5/8" DIAMETER x 1/2" THK		M1		
	12-7	7	PLATE 1 1/2" THK	AS REQD	M1		
	12-8	1	PIPE 1" SCHED 160S	37'-4 1/8"	M3		
	12-9	1	PIPE 1" SCHED 160S	36'-7 1/8"	M3		
	12-10	1	PIPE 1" SCHED 160S	36' 1 1/8"	M3		
	12-11	2	CONC REDUCER 2" x 1" SCHED 160S SMLS SW		M2		
	12-12	2	PIPE 2" SCHED 160S	3"	M3		
	12-13	1	PIPE 2" SCHED 80S	2'-10 3/16"	M3		
	12-14	1	ELBOW 2" LR SCHED 80S SMLS SW		M2		
	12-15	1	PLATE 2" x 1" x 1/2" THK		M1		
	12-16	2	FLAT BAR 2" x 1/2" THK	3 23/32"	M1		
	12-17	*	PLATE 1 1/2" THK	AS REQD	M1		
	12-18	1	BAR 1" WIDE x 1 1/2" THK	AS REQD	M1		
			M1 = ASME SA240 TP 316/316L				
			M2 = ASME SA403 316L WPS				
			M3 = ASME SA312 TP 316/316L				

NOTES:

1. PIPE GUIDE STRAPS ARE WELDED AFTER CORRECTLY POSITIONING THE PIPE GUIDE STRAP SUPPORTS PIPE GUIDE STRAP SHALL MAINTAIN 1/16" DIAMETRICAL CLEARANCE WITH PIPE.
2. TOLERANCE ON STRAP ELEVATIONS (PART 12-7) IS ±2".

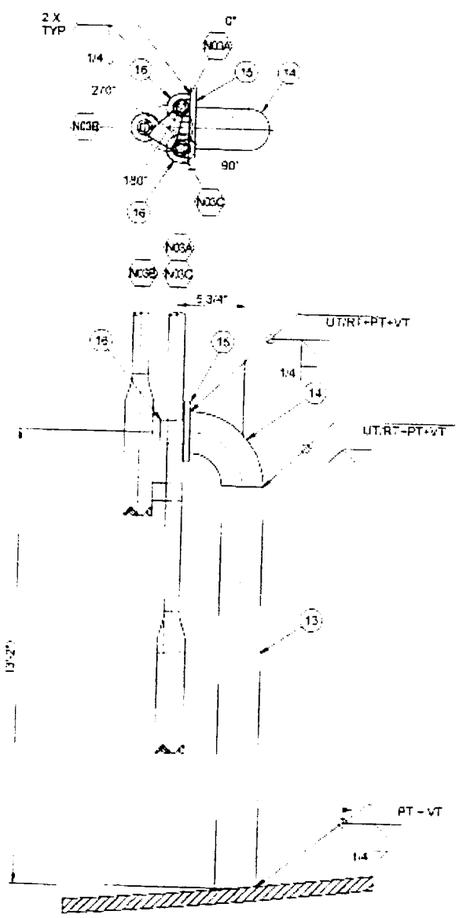

DETAIL 1

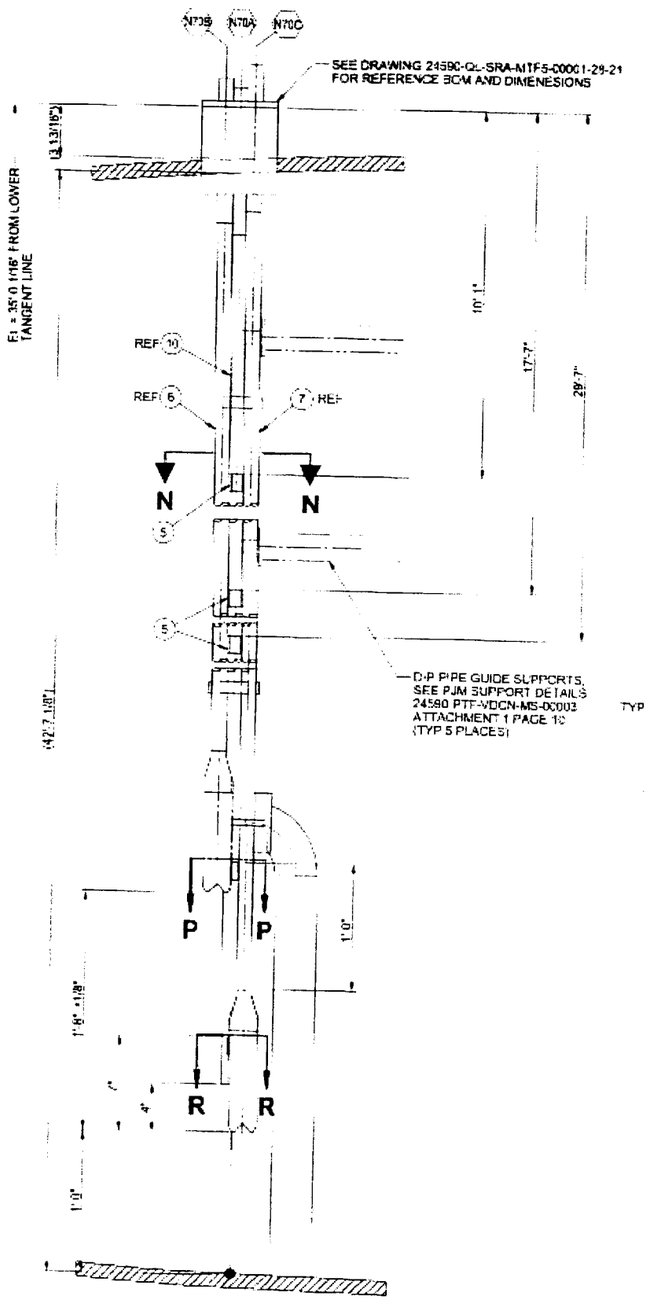

CROSS SECTION NOZZLE
FOR TRUE OR ENATION SEE VIEW A-A
N70 N70A N70B N70C REF

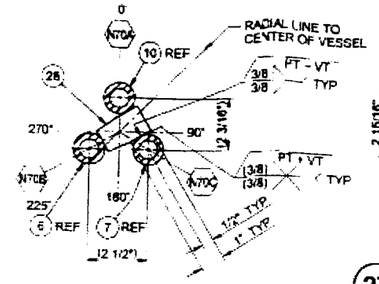

SECTION N-N

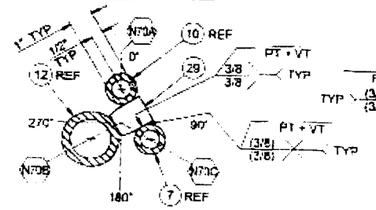

SECTION P-P

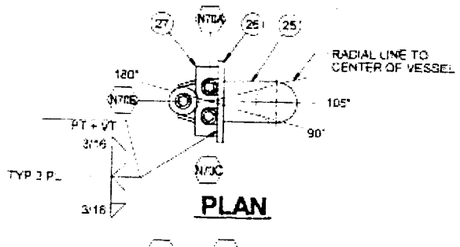

PLAN

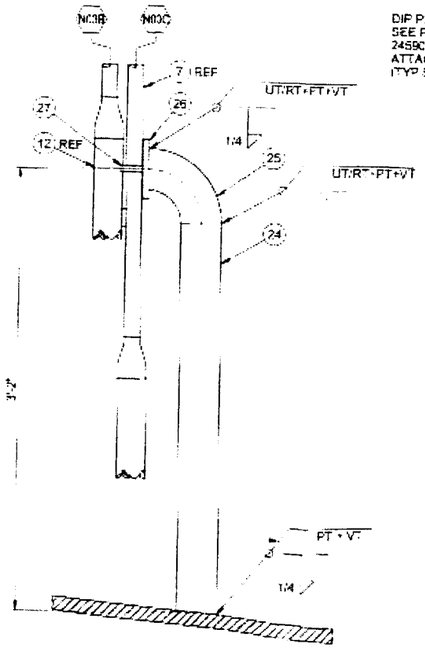

ELEVATION
DETAIL 1

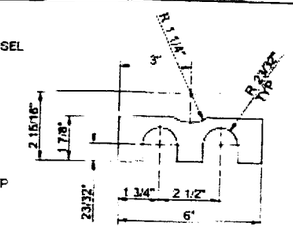

27 PIPE GUIDE PLATE

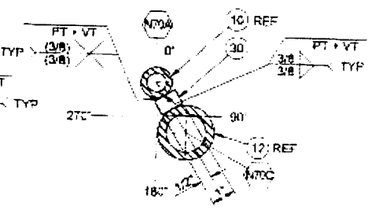

SECTION R-R

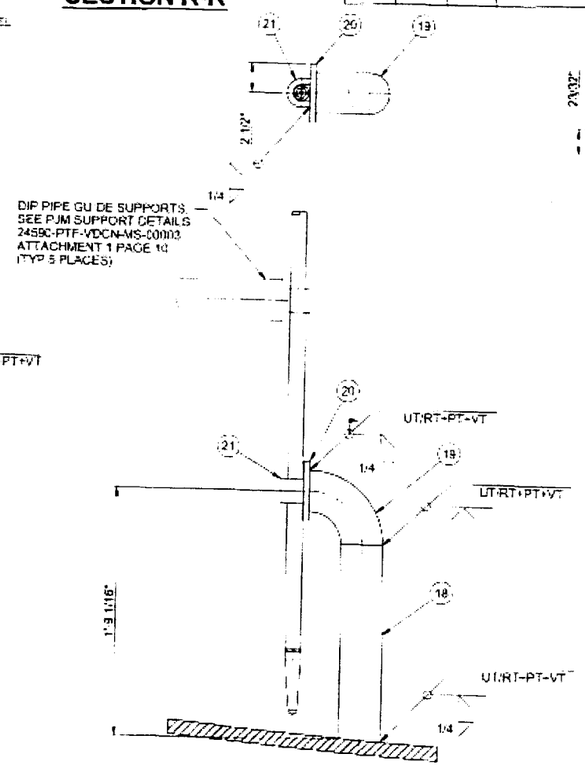

ELEVATION N18

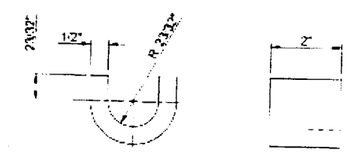

21 PIPE GUIDE STRAP

ON REFERENCE DRAWING 24590-QL-SRA-MTF5-00001-28-21

SHIP PC	MARK	ASSY PC	DESCRIPTION	LENGTH	SPEC	ID	EST WT
	18-24	1	PIPE 3" SCHED 80S	2'-3 3/16"	M3		
	18-25	1	ELBOW 3" LR SCHED 80S SMLS BW		M2		
	18-26	1	PLATE 5" x 7" x 1/2" THK		M1		
	18-27	1	PLATE 1/2" THK	1 7/8" x 5"	M1		
	18-28	3	PLATE 1 1/2" THK	AS REQD			
	18-29	*	PLATE 1 1/2" THK	AS REQD			
	18-30	*	FLAT BAR 1" WIDE x * 1/2" THK	AS REQD			
			M1 = ASME SA240 TP 316/316L				
			M2 = ASME SA403 316L WPS				
			M3 = ASME SA312 TP 316/316L				

NOTES:

1. PIPE GUIDE STRAPS AND PLATE ARE WELDED AFTER CORRECTLY POSITIONING THE PIPE GUIDE STRAP SUPPORTS.PIPE GUIDE STRAP AND PLATE SHALL MAINTAIN 1/16" DIAMETRICAL CLEARANCE WITH PIPE.
2. THE FABRICATOR MAY LEAVE UP TO 1" OF THE PREVIOUS STEELWORK IN PLACE (I.E. CUT STEELWORK UP TO 1" AWAY FROM UNTOUCHED COMPONENTS) TO AVOID CUTTING/GRINDING INTO UNTOUCHED COMPONENTS (UNLESS OTHERWISE SPECIFICALLY INDICATED IN THIS DRAWING SET) WHERE THIS DRAWING SET INDICATES THAT SUPPORTS, FLANGES, BRACKETS, COMPONENTS, ETC HAVE BEEN REMOVED BETWEEN THE CURRENT REVISION AND THE PREVIOUS REVISION
3. TOLERANCE ON STRAP ELEVATION IS ±2"

ON REFERENCE DRAWING 24590-QL-SRA-MTF5-00001-28-23

SHIP PC	MARK	ASSY PC	DESCRIPTION	LENGTH	SPEC	ID	EST WT
	19-18	1	PIPE 3" SCHED 80S	1'-2 3/4"	M3		
	19-19	1	ELBOW 3" LR SCHED 80S SMLS BW		M2		
	19-20	1	PLATE 5" x 5" x 1/2" THK		M1		
	19-21	1	FLAT BAR 2" x 1/2" THK	3 23/32"	M1		
			M1 = ASME SA240 TP 316/316L				
			M2 = ASME SA403 316L WPS				
			M3 = ASME SA312 TP 316/316L				

ON REFERENCE DRAWING 24590-QL-SRA-MTF5-00001-28-29

SHP PC	MARK	ASSY PC	DESCRIPTION	LENGTH FEET	LENGTH INCHES	SPEC	ID	EST WT
2	30-9		PIPE 3" SCHED 80S *	4	2	MS		
1	30-10		PIPE 3" SCHED 80S *	2	6 1/2	MS		
1	30-11		PLATE 6" x 1/2" SHK	2	8	M*		
1	30-12		PLATE 6" X 1/2" SHK	0	8	M*		
1	30-13		FLAT BAR 1 1/2" X 1/2" SHK	2	5 1/8"	M*		
			M* = ASME SA240 TP 316/316L					
			MS = ASME SA312 TP 316/316L					
			* = LENGTH IS ESTIMATED, CUT TO FIT					

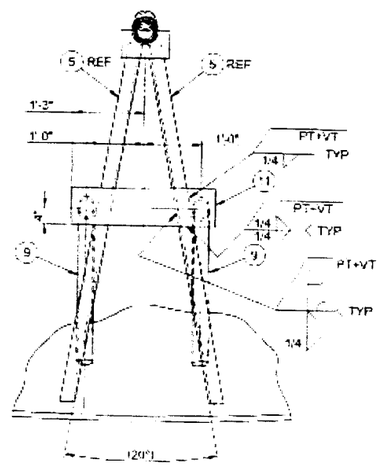

SECTION J-J

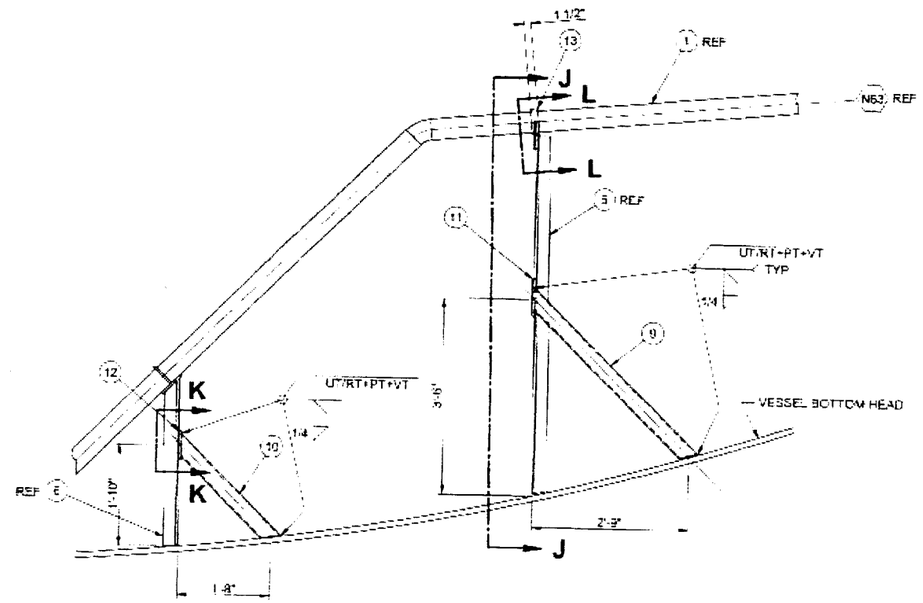

SECTION A
(SUPPORT MODIFICATION)

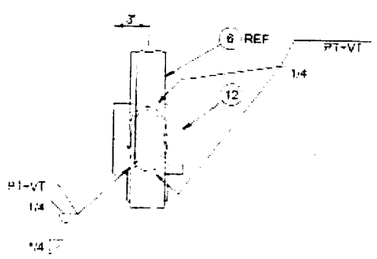

VIEW K-K

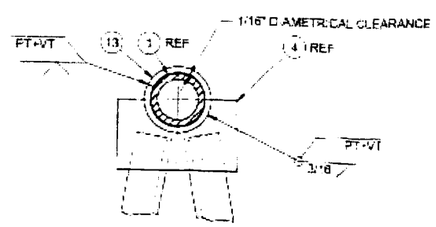

SECTION L-L

CBI RECEIVED
APR 05 2005

REVISE BY RPP-WTP ON HOLD → 160S

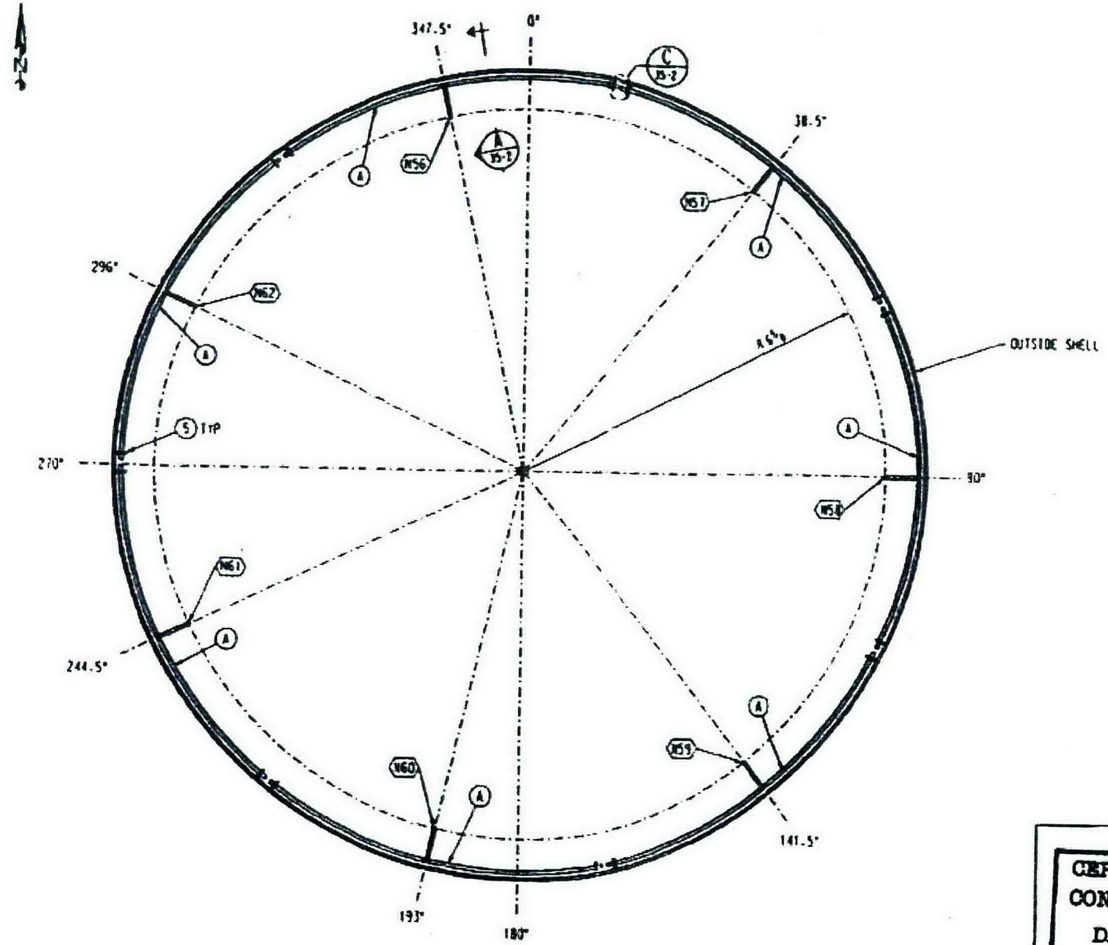

WASH RING PLAN VIEW
N56-N62

	35-3		2" DIA WASH RING ASSEMBLY						672
	35-5	7	PIPE 2" [illegible] SCH 160S	NO	0 25/32	N	C		266
			[illegible] SHEAR						
	35-6	7	PIPE 2" [illegible] SCH 160S	NO	0 25/32	N	C		266
			[illegible] SHEAR						
	35-3	7	STRAIGHT PIPE 2 X 2 X [illegible]			NF	A		20
	35-4	14	PL 2 1/16 DIA X 1/2			NI	C		7
	35-6	7	PIPE 2" DIA SCH 160S SMLS BOX SIDE	4	2 3/32	NO	A		105
14	35-5		PL 5 1/16 X 1/2 X SQ	1	3 3/32	NI	A		150
			NF=SA240 316L.CBI SPEC A-240-2404						
			NO=SA312 TP316L.CBI SPEC A-312-2406						
			NF=SA403 316LWPS.CBI SPEC A-403-242						
			= A312 TP316L						

NOTES:
1. ALL WELDS TO BE 316L UNLESS NOTED OTHERWISE.
2. WORK WITH DWG #1, #2, #3, & DWG #35 SHTS 2 & 3.

R10242382

24590-QL-SRA-MTF5-00001-28-33
REV 00 B

CERTIFIED AS BUILT
CONTRACT DRAWING
DATE: 4/5/05
SIGNED: B.R. Bel[illegible]

CBI

N56 - N62 INLETS TO WASH RING
WASH RING
WASTE FEED RECEPT
VESSEL FRP-VSL-00002C (D)
RICHLAND, WA

CONTRACT NO 137282C
REV 2

7823541C.DGN

4/23/03
Copied
QA
Scanned
Filed
4/22/03
4.23.03

1

Issued by RPP-WTP PDC

R50010720

Drawing Change Notice

CHANGE DOCUMENT NO. 24590-PTF-VDCN-MS-11-00007

JOB NO.	TITLE FOR CHANGE NOTICE
24590	PTF-FRP-VSL-00002D REDESIGN

DESIGN DOCUMENT NUMBER	REV	DESIGN DOCUMENT NUMBER	REV
24590-QL-SRA-MTF5-00001-29-01	K	24590-QL-SRA-MTF5-00001-29-06	B
24590-QL-SRA-MTF5-00001-29-07	B	24590-QL-SRA-MTF5-00001-29-17	B
24590-QL-SRA-MTF5-00001-29-21	I	24590-QL-SRA-MTF5-00001-29-22	H
24590-QL-SRA-MTF5-00001-29-23	H	24590-QL-SRA-MTF5-00001-29-24	D
24590-QL-SRA-MTF5-00001-29-29	C	24590-QL-SRA-MTF5-00001-29-30	D
24590-QL-SRA-MTF5-00001-29-32	B	24590-QL-SRA-MTF5-00001-29-00073	C

PART OF DESIGN CHANGE PACKAGE (DCP)? ☐ Yes ☒ No DCP No.: Rev:

JUSTIFICATION FOR CHANGE

Based on the re-analysis of FRP-VSL-00002A/B/C/D, per calculation 24590-PTF-MVC-FRP-00003, for revised seismic conditions and design evolution, a redesign of the vessel is required.

CAUSE CODE

01-23

Supersedes Change Document ☐ Yes ☒ No

ECN Needed ☐ Yes ☒ No

REQUIREMENTS REVIEW

Client Approval Required ☐ Yes ☒ No | Interface Resolution Required * ☐ Yes ☒ No

Address any "yes" answers in the description

DESCRIPTION OF CHANGE

Note: Components removed or deleted per this VDCN are to be removed from the actual vessel unless Otherwise noted.

1. **Affected Document: 24590-QL-SRA-MTF5-00001-29-01 (see Attachment 1, page 1 of this VDCN).**

a) Bill of Materials block: Revise the following line Items:

Line Item N3 Elevation block: 35'-3" from 35'-4 5/16".

Line Item N3 Description / Service block: INSTRUMENTATION from SPARE CAPPED.

b) Bill of Materials block: Add the following line Items:

Line Item N03A

Line Item N03B

Line Item N03C

Please note that source, special nuclear, and byproduct materials, as defined in the Atomic Energy Act of 1954 (AEA) are regulated at the U. S. Department of Energy (DOE) facilities exclusively by DOE acting pursuant to its AEA authority. DOE asserts that pursuant to AEA, it has sole and exclusive responsibility and authority to regulate source, special nuclear, and byproduct materials at DOE-owned nuclear facilities. Information contained herein on radionuclides is provided for process description purposes only.

c) Elevations:

Delete Nozzle N3 bubble from N2 bubble column.

Add Nozzle bubble number N03, N03A, N03B and N03C to N70 bubbler column.

Add Knuckle Stiffener plates shown on Attachment 1, page 12 of this VDCN.

Revise Outer PJM nozzle cone to eccentric from concentric shown on 24590-PTF-VDCN-MS-00003, Attachment 1, page 12, Elevation Assemblies A & B.

d) Note: Add the following notes :

2. WELD SHOWN MAY BE FIELD-APPLIED AS NECESSARY TO SUPPORT INSTALLATION OF COMPONENTS

3. FABRICATION TOLERANCES FOR FIELD MODIFICATIONS SHALL BE PER 24590-WTP-MV-M59T-00001 (PRESSURE VESSEL TOLERANCES STANDARD DETAILS) AND PFI STANDARD ES-24 (PIPE BENDING METHODS, TOLERANCES, PROCESS AND

JOB NO.	TITLE FOR CHANGE NOTICE
24590	PTF-FRP-VSL-00002D REDESIGN

DESCRIPTION OF CHANGE

MATERIAL REQUIREMENT). FOR TOLERANCES NOT SPECIFIED BY THESE STANDARDS, THE FOLLOWING SHALL APPLY, UNLESS OTHERWISE NOTED:

DIMENSION	TOLERANCE
LINEAR <12 IN	± 1/8 INCHES
LINEAR >=12 IN	± 1/4 INCHES
ANGULAR	± 2 DEGREES

e) Add a HOLD LIST as follows:

HOLD LIST
1. KNUCKLE STIFFENER PLATES ARE ON HOLD PENDING CONFIRMATION OF VESSEL MAXIMUM OPERATING PRESSURE.
2. WASH RING PIPE SCHEDULE CHANGE IS ON HOLD PENDING CONFIRMATION OF VESSEL MAXIMUM OPERATING PRESSURE.
3. INSTALLATION OF REVISED PJM NOZZLES ON OUTER PJMS IS ON HOLD PENDING RESOLUTION OF MIXING REQUIREMENTS.

2. **Affected Document: 24590-QL-SRA-MTF5-00001-29-06 (see Attachment 1, page 2 of this VDCN).**

a) Bill of Materials block: Add Item 5-4 shown on Attachment 1, page 12 of this VDCN.

b) Plan View: Add Knuckle Stiffener plates shown on Attachment 1, page 12 of this VDCN.

c) View C-C: Add Knuckle Stiffener plates shown on Attachment 1, page 12 of this VDCN.

3. **Affected Document: 24590-QL-SRA-MTF5-00001-29-07 (see Attachment 1, page 3 of this VDCN).**

a) Bottom Head Details Drawing:

Add Knuckle Stiffener Plate, Item 4 shown on Attachment 1, page 12 of this VDCN.

Add Details D, E, and F shown on Attachment 1, page 12 of this VDCN.

4. **Affected Document: 24590-QL-SRA-MTF5-00001-29-17 (see Attachment 1, page 4 of this VDCN).**

a) Bill of Materials block: Delete the following line Item:

Line Item 12-2

b) Bill of Materials block: Add the following line Items shown on Attachment 1, page 13 of this VDCN.

Line Item 12-3

Line Item 12-4

Line Item 12-5

Line Item 12-6

Line Item 12-7

Line Item 12-8

Line Item 12-9

Line Item 12-10

Line Item 12-11

Line Item 12-12

Line Item 12-13

Drawing Change Notice

CHANGE DOCUMENT NO.
24590-PTF-VDCN-MS-11-00007

JOB NO.	TITLE FOR CHANGE NOTICE
24590	PTF-FRP-VSL-00002D REDESIGN

DESCRIPTION OF CHANGE

Line Item 12-14

Line Item 12-15

Line Item 12-16

Line Item 12-17

Line Item 12-18

c) Joint A: Replace Item 2 (Cap) with Item 6 (Plate), including updating depiction to new instrument nozzle as shown on Attachment 1, page 13 of this VDCN.

d) Cross Section of Nozzle view: Delete the following shown on Attachment 1, page 13 of this VDCN.

Item 12-2

Dimensions

e) Cross Section of Nozzle view: Add Item, Dimension, and Dip Pipe supports shown on Attachment 1, page 13 of this VDCN.

Items 12-3 through 12-18

Dimensions

Dip Pipe Supports (phantom lines)

f) Title Block: Revise the Title as shown on Attachment 1, page 4 of this VDCN.

g) Nozzle N3 Assembly Drawing: Add View, Details, and Sections and Item shown on Attachment1, page 13 of this VDCN.

View A-A

Detail 1

Sections B-B, C-C, and D-D

Item 16 Pipe Guide Strap

5. Affected Document: 24590-QL-SRA-MTF5-00001-29-21 (see Attachment 1, page 5 of this VDCN).

a) Bill of Materials block: Delete the following line Items:

Line Item 18-8

Line Item 18-9

Line Item 18-22

Line Item 18-23

b) Bill of Materials block: Add the following line Items shown on Attachment 1, page 14 of this VDCN.

Line Item 18-24

Line Item 18-25

Line Item 18-26

Line Item 18-27

Line Item 18-28

Line Item 18-29

JOB NO.	TITLE FOR CHANGE NOTICE
24590	PTF-FRP-VSL-00002D REDESIGN

DESCRIPTION OF CHANGE

Line Item 18-30

c) Bill of Materials block: Revise the following line Items:

Line Item 18-5 ASSM PC block: 12 from 17

d) Cross Section of Nozzle view: Delete the following Items and Detail view:

Items 18-8, 18-9, 18-22, 18-23 and 18-5 (from bell)

Joint G (View)

Dimensions on Support

Weld Symbol on Support

e) Notes: Delete the following note:

Note 3

f) Cross Section of Nozzle view: Add the following Section callout:

Section X

g) Cross Section of Nozzle view: Revise the following dimensions:

42'-1 3/4" from 41'-11 1/4"

38'-1 3/4" from 38'-11 1/4"

40'-10 3/4" from 41'-8 1/4"

35'-10 3/4" from 36'-8 1/4"

37'-7 3/4" from 38'-5 1/4"

42'-7 3/4" from 43'-5 1/4"

1'-0" from 2 1/2"

h) Cross Section of Nozzle view: Add the following Section, view, dimensions, and support shown on Attachment 1, page 14 of this VDCN.

Dimension on Bracing bars

Section N-N

Dip Pipe Support (Phantom lines)

i) Nozzle N70 Assembly Drawing: Add Detail, and Section and Item shown on Attachment1, page 14 of this VDCN.

Detail 1

Section N-N

Item 27 Pipe Guide Plate

6. Affected Document: 24590-QL-SRA-MTF5-00001-29-22 (see Attachment 1, page 6 of this VDCN).

a) Section E: Delete the following Items:

Items 8, 9, 22 and 23

Section P with arrows

Drawing Change Notice

CHANGE DOCUMENT NO.
24590-PTF-VDCN-MS-11-00007

JOB NO.	TITLE FOR CHANGE NOTICE
24590	PTF-FRP-VSL-00002D REDESIGN

DESCRIPTION OF CHANGE

b) N70 Pipe Assembly Drawing: Delete the following Sections, Items, and Details:

Section P

Section S-S

Joint G

Items 9 and 23

c) Section J: Replace Item 5 (Plate 1/2") with Item 29 (Block Plate) as shown on Attachment 1, page 14, Section P-P of this VDCN.

d) Section M: Replace Item 5 (Plate 1/2") with Item 30 (Block Plate) as shown on Attachment 1, page 14, Section R-R of this VDCN.

7. Affected Document: 24590-QL-SRA-MTF5-00001-29-23 (see Attachment 1, page 7 of this VDCN).

a) Bill of Materials block: Delete the following line Items:

Line Item 19-5

Line Item 19-6

Line Item 19-7

Line Item 19-8

Line Item 19-9

Line Item 19-10

Line Item 19-11

Line Item 19-12

Line Item 19-13

Line Item 19-14

Line Item 19-15

Line Item 19-16

Line Item 19-17

b) Bill of Materials block: Add the following line Items shown on Attachment 1, page 14 of this VDCN.

Line Item 19-18

Line Item 19-19

Line Item 19-20

Line Item 19-21

c) Elevation view: Add the following Items shown on Attachment 1, page 14 of this VDCN.

Items 18, 19, 20 and 21

d) Elevation view: Delete the following Items:

Items 5, 6, 7, 8, 11, 14 and 15

JOB NO.	TITLE FOR CHANGE NOTICE
24590	PTF-FRP-VSL-00002D REDESIGN

DESCRIPTION OF CHANGE

e) N18 3/4" DIA Temperature Drawing: Delete the following Detail and Sections:

Detail F

Sections C and D

f) N18 3/4" DIA Temperature Drawing: Add the following Item:

Item 21 Pipe Guide Strap

8. Affected Document: 24590-QL-SRA-MTF5-00001-29-24 (see Attachment 1, page 8 of this VDCN).

a) Drawing: Delete the following:

Items 5, 6, 12, 13, 14, 15, 16 and 17

Section X-X

9. Affected Document: 24590-QL-SRA-MTF5-00001-29-29 (see Attachment 1, page 9 of this VDCN).

a) Bill of Materials block: Add the following line Items shown on Attachment 1, page 15 of this VDCN.

Line Item 30-9

Line Item 30-10

Line Item 30-11

Line Item 30-12

Line Item 30-13

b) Section A: Add the following Items shown on Attachment 1, page 15 of this VDCN.

Items 9 thru 13

c) Section A and Nozzle N64 Plan View of Nozzle: Update depiction on PJM support to show new PJM lateral supports and PJM eccentric nozzle as shown on Attachment 1, page 7 of 24590-PTF-VDCN-MS-11-00003 document.

10. Affected Document: 24590-QL-SRA-MTF5-00001-29-30 (see Attachment 1, page 10 of this VDCN).

a) Section E: Add the following Items shown on Attachment 1, page 15 of this VDCN.

Items 9, 11 and 13

b) Detail F: Add the following Items shown on Attachment 1, page 15 of this VDCN.

Items 10 and 12

c) N63 4" Dia Details Drawing: Add the following Sections, View and Items shown on Attachment 1, page 15 of this VDCN.

Sections A-A, L-L and J-J

View K-K

Item 11 Bracket Plate

d) Section E: Delete the following:

Weld leader on items 1 and 4

Drawing Change Notice

CHANGE DOCUMENT NO.
24590-PTF-VDCN-MS-11-00007

JOB NO.	TITLE FOR CHANGE NOTICE
24590	PTF-FRP-VSL-00002D REDESIGN

DESCRIPTION OF CHANGE

e) Item 4: Revise the following Diameter:

R 2 5/16 to R 2 7/8"

11. **Affected Document: 24590-QL-SRA-MTF5-00001-29-73 (see Attachment 1, page 11 of this VDCN).**

a) Bill of Materials block: Delete the following line items:

Line Item 18-5

Line Item 18-14

Line Item 18-15

Line Item 18-16

Line Item 18-17

Line Item 18-19

Line Item 18-20

Line Item 18-21

b) Drawing: Delete the following All Support Details and Items 18-5, 18-14 thru 18-21.

12. **Affected Document: 24590-QL-SRA-MTF5-00001-29-32 (see Attachment 1, page 16 of this VDCN).**

a) Bill of Materials block: Revise the following line items:

Line Item 35-1 Description block: Sch 40S to Sch 160S.

Line Item 35-2 Description block: Sch 40S to Sch 160S.

Line Item 35-3 Description block: Sch 40S to Sch 160S

ORIGINATOR	CHECKER
D. HARRIS	W. WILCOX

Reviews			
CON - B. FOSTER	E&NS - J. HINCKLEY	CS&A - S. GERMAIN D. Harris sign for S. Germain per telecon	MET - J. DISNEY
MS&PE - B. LINDBERG	PD - L. LEYLAND	6/8/11 3:45	

Approval(s)			
PT EQUIP EGS - J. JULYK			

Date *(inserted by final approver)*: 6/8/11

REVISE BY RPP-WTP

ADD NOZZLES BY RPP-WTP

DELETE NOZZLE BY RPP-WTP

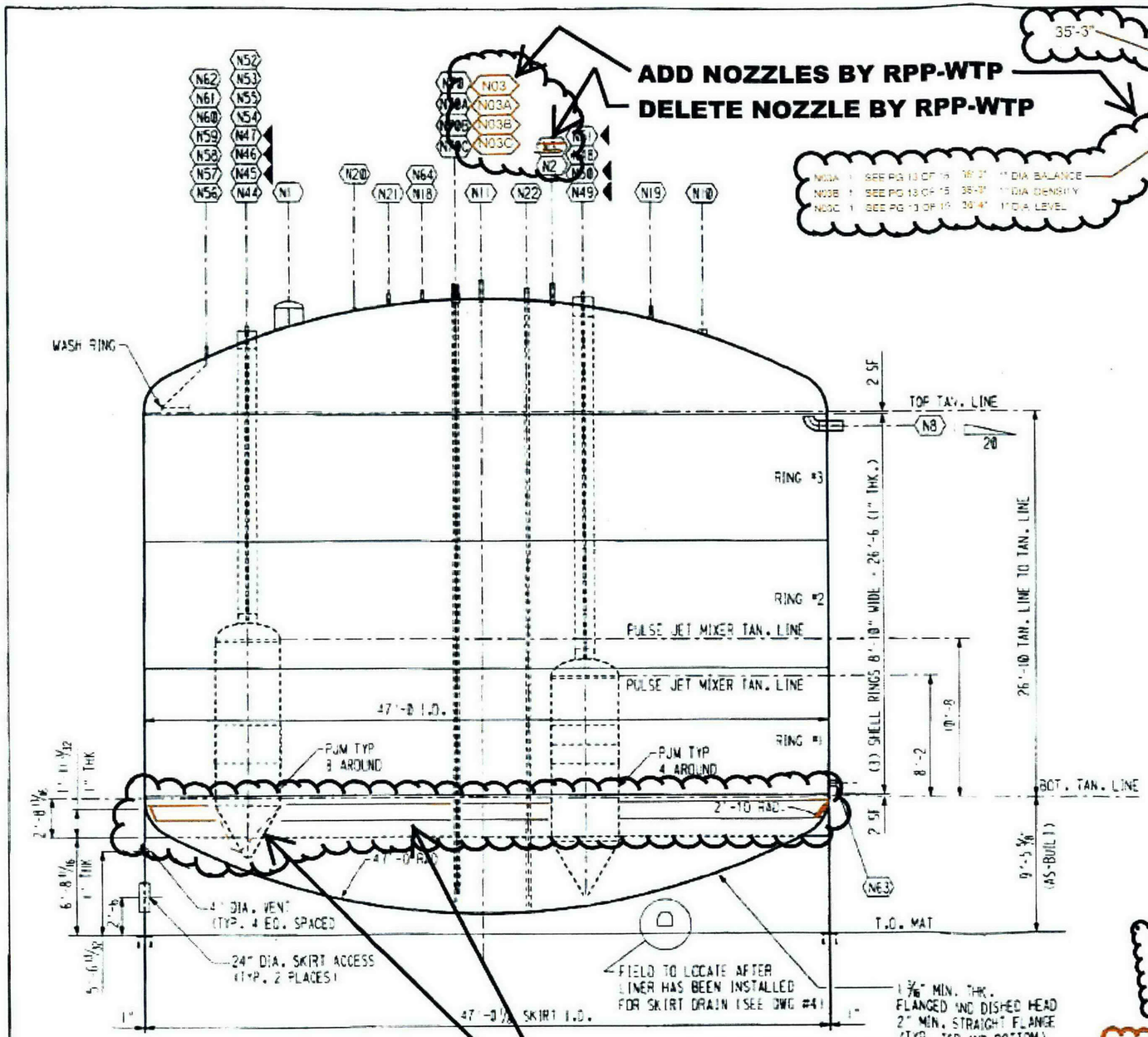

ADD KNUCKLE STIFFENERS BY RPP-WTP ON HOLD

REVISE PJM NOZZLE BY RPP-WTP ON HOLD

ADD NOTE BY RPP-WTP

NOTES:

1. ALL ELEVATIONS ARE TO FACE OF FLANGE OR END OF PIPE AND FROM BOTTOM TANGENT LINE. EXCEPT NOZZLES N8 & N63 WHICH ARE TO HORIZONTAL CENTER LINE OF NOZZLE FROM BOTTOM T.L.
2. WELD SHOWN MAY BE FIELD - APPLIED AS NECESSARY TO SUPPORT INSTALLATION OF COMPONENTS
3. FABRICATION TOLERANCES FOR FIELD MODIFICATIONS SHALL BE PER 24590-WTP-MV-M5-00001 REV. 00 K PRESSURE VESSEL TOLERANCES STANDARD DETAILS) AND PFI STANDARD ES-24 (PIPE BENDING METHODS, TOLERANCES, PROCESS AND MATERIAL REQUIREMENT). FOR TOLERANCES NOT SPECIFIED

24590-QL-SRA-MTF5-00001-39-01

FITTINGS FURNISHED & INSTALLED BY CBI

MARK	NO. REQ'D	CBI MARK	AS-BUILT NOZZLE ELEVATIONS (SEE NOTE 1)	DESCRIPTION / SERVICE
N1	1	SEE DWG 18	34'-1 5/8"	24" DIA. MANWAY (CAPPED)
N2	1	SEE DWG 11	35'-4 1/16"	3" DIA. INLET
N3	1	SEE DWG 12	~~35'-4 7/8"~~	6" DIA. ~~SPARE (CAPPED)~~ INSTRUMENTATION
N8	1	SEE DWG 13	35'-0 1/4"	8" DIA. OVERFLOW
N10	1	SEE DWG 15	32'-8 7/16"	6" DIA. PASSIVE AIR INLET
N11	1	SEE DWG 16	35'-4 13/16"	8" DIA. VESSEL VENT
N18	1	SEE DWG 19	35'-4 9/16"	3/4" DIA. TEMPERATURE
N19	1	SEE DWG 20	34'-0 9/16"	1" DIA. SPARE (CAPPED)
N20	1	SEE DWG 21	34'-4 9/16"	2" DIA. CONCENTRATE RECYCLE INLET
N21	1	SEE DWG 22	35'-4 3/4"	1" DIA. SPARE WITH DIP PIPE (CAPPED)
N22	1	SEE DWG 23	35'-8 1/16"	3" DIA. SPARE WITH DIP PIPE (CAPPED)
N44	1	*	32'-11 1/2"	2"/14" DIA. AIR/VACUUM TO FRP-PJM-00016
N45	1	*	32'-11 11/16"	2"/14" DIA. AIR/VACUUM TO FRP-PJM-00005
N46	1	*	33'-0 1/16"	2"/14" DIA. AIR/VACUUM TO FRP-PJM-00006
N47	1	*	33'-0 1/4"	2"/14" DIA. AIR/VACUUM TO FRP-PJM-00007
N48	1	*	35'-5 3/16"	2"/14" DIA. AIR/VACUUM TO FRP-PJM-00008
N49	1	*	35'-4 7/16"	2"/14" DIA. AIR/VACUUM TO FRP-PJM-00009
N50	1	*	35'-5 7/16"	2"/14" DIA. AIR/VACUUM TO FRP-PJM-00010
N51	1	*	35'-4 9/16"	2"/14" DIA. AIR/VACUUM TO FRP-PJM-00011
N52	1	*	32'-11 13/16"	2"/14" DIA. AIR/VACUUM TO FRP-PJM-00012
N53	1	*	32'-11 9/16"	2"/14" DIA. AIR/VACUUM TO FRP-PJM-00013
N54	1	*	33'-0 9/16"	2"/14" DIA. AIR/VACUUM TO FRP-PJM-00014
N55	1	*	33'-0 9/16"	2"/14" DIA. AIR/VACUUM TO FRP-PJM-00015
N56	1	SEE DWG 35	30'-5 13/16"	2" DIA. INLET TO WASH RING
N57	1	SEE DWG 35	30'-6 11/16"	2" DIA. INLET TO WASH RING
N58	1	SEE DWG 35	30'-6 11/16"	2" DIA. INLET TO WASH RING
N59	1	SEE DWG 35	30'-6 1/4"	2" DIA. INLET TO WASH RING
N60	1	SEE DWG 35	30'-6 3/16"	2" DIA. INLET TO WASH RING
N61	1	SEE DWG 35	30'-6 7/16"	2" DIA. INLET TO WASH RING
N62	1	SEE DWG 35	30'-6 1/16"	2" DIA. INLET TO WASH RING
N63	1	SEE DWG 30	SEE DWG 30	4" DIA. OUTLET
N64	1	SEE DWG 31	35'-5 7/16"	1 1/2" DIA. FORCED PURGE AIR INLET
N70	1	SEE DWG 18	-	6" DIA. INSTRUMENTATION
N70A	1	SEE DWG 18	35'-6 13/16"	1" DIA. BALANCE
N70B	1	SEE DWG 18	35'-7 11/16"	1" DIA. DENSITY
N70C	1	SEE DWG 18	35'-8 13/16"	1" DIA. LEVEL

FIELD
1. KNUCKLE STIFFENER PLATES ARE ON HOLD PENDING CONFIRMATION OF VESSEL MAXIMUM OPERATING PRESSURE
2. WASH RING PIPE SCHEDULE CHANGES ON HOLD PENDING CONFIRMATION OF VESSEL MAXIMUM OPERATING PRESSURE
3. INSTALLATION OF REVISED PJM NOZZLES ON OUTER RING IS ON HOLD PENDING RESOLUTION OF REQUIREMENTS

CBI

GENERAL ELEVATION
VESSEL FRP-VSL-00202D (D)
WASTE FEED RECEIPT
RICHLAND, WA

CUSTOMER'S NO
BY DU CHKD CSI DATE 8-26-02
PVE / BR BALCOMB
ENGINEERING ASSIGNED

CONTRACT NO 372020
DWG
SHT
REV 13

INDICATES CHANGE FROM PREVIOUS ISSUE

CAD FILE # 2022010D.DGN

24590-PTF-VDCN-MS-11-00007
Attachment 1: Page 2 of 16

CBI RECEIVED
... n 5 2005

CBI RECEIVED
JUN 2 3 2003
BNI-CBI- 314

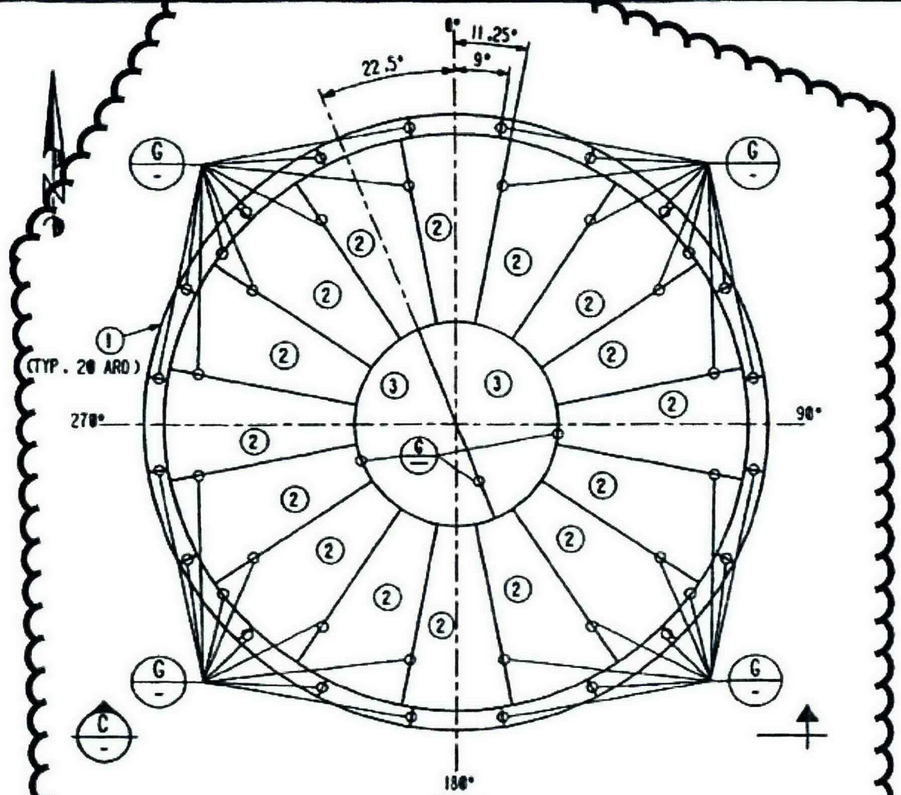

PLAN
INSIDE LOOKING DOWN

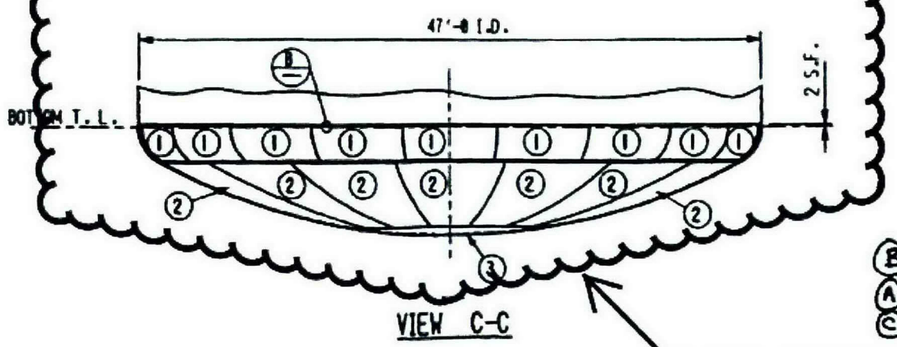

VIEW C-C

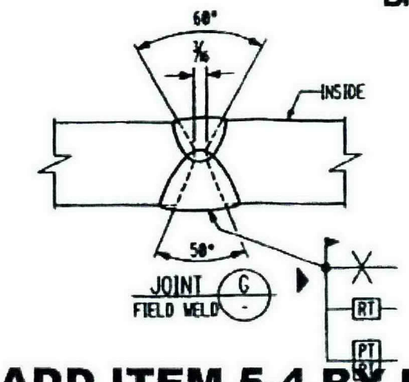

ADD ITEM 5-4 BY RPP-WTP

ON HOLD

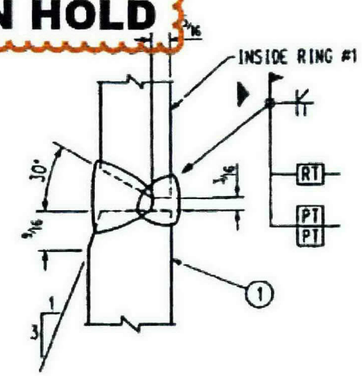

JOINT B
FIELD WELD

SHIP PC	MARK	ASSN PC	DESCRIPTION	LENGTH FT	LENGTH IN	SPEC	ID	EST WT
20	5-1		PL SK x 1 3/16			M1	A	22718
			(45" x 1.2" x 7'-7)					
16	5-2		PL SK x 1 3/16			M1	A	72535
			(104 9/16 x 1.2 x 15'-3 5/16					
2	5-3		PL SK x 1 3/16			M1	A	9963
			(96 x 1.2 x 20'-0)					
			M1 = SA240 316L, CBI SPEC#A-240-240					

Bechtel Systems & Infrastructure, Inc.

JOB No. [illegible]

SUPPLIER DOCUMENT STATUS

1. ☑ WORK MAY PROCEED
2. ☐ REVISE AND RESUBMIT. WORK MAY PROCEED SUBJECT TO RESOLUTION OF INDICATED COMMENTS
3. ☐ REVISE AND RESUBMIT. WORK MAY NOT PROCEED
4. ☐ REVIEW NOT REQUIRED. WORK MAY PROCEED.

PERMISSION TO PROCEED DOES NOT CONSTITUTE ACCEPTANCE OR APPROVAL OF DESIGN DETAILS, CALCULATIONS, ANALYSES, TEST METHODS, OR MATERIALS DEVELOPED OR SELECTED BY THE SUPPLIER AND DOES NOT RELIEVE SUPPLIER FROM FULL COMPLIANCE WITH CONTRACTUAL OBLIGATIONS.

	M	P	ML	H	MH	E	C&I	CS&A	PD	PT	ESH
REVIEWED	[illegible]										

G-321 DOCUMENT CATEGORY 1.1
[From Supplement A to G-321-E (E) or G-321-V (V), as applicable]
RESPONSIBLE ENGINEER [illegible] DATE 26MAY03

KV 26/08/05

NOTES:

1. WORK THIS DWG. WITH DWG. #1, 2 & 5 SHT. 2 THRU 4
2. ALL WELDS TO BE 316L UNLESS NOTED OTHERWISE.

6/17/03 6-18-03
(B) Processed/Data Entry ☑ Copied/CA ☐ Scanned ☐ Filed
(A) [illegible] 6-17-03
(C) [illegible] 6/17/03

R10242436

KV 26/08/05
~~24590-QL-SRA-MTF5-00001 29-06 [illegible]~~

4/23/03 4-29-03
(B) Processed/Data Entry ☑ Copied/CA ☐ Scanned ☐ Filed
(A) [illegible] 4/22/03
(C) [illegible] 4-23-03

ADD KNUCKLE STIFFNER PLATES
BY RPP-WTP ON HOLD

INDICATES CHANGE FROM PREVIOUS ISSUE

CERTIFIED AS BUILT
CONTRACT DRAWING
DATE: 4/5/05
SIGNED: [illegible]

REVISED PER CUSTOMER COMMENTS AND ADDED WELD DETAILS.
REVISED JOINT 8 WELD DETAIL & JOINT 6.
ADDED RT AND PT
REVISIONS
REMARKS

CBI

BOTTOM HEAD ASSEMBLY
VESSEL FRP-VSL-000020 (Q)
WASTE FEED RECEIPT
RICHLAND, WA

CUSTOMER'S NO
BY DU CHKD CST DATE 8-29-02
PVE / B.R. BALCOMB
ENGINEERING ASSIGNED

CONTRACT NO 1372020
DWG 5 SHT 1 REV 3

CAD FILE: 20205010.dgn

24590-QL-SRA-MTF5-00001- 29-06
REV 00 B

CBI RECEIVED
APR 8 5 2005

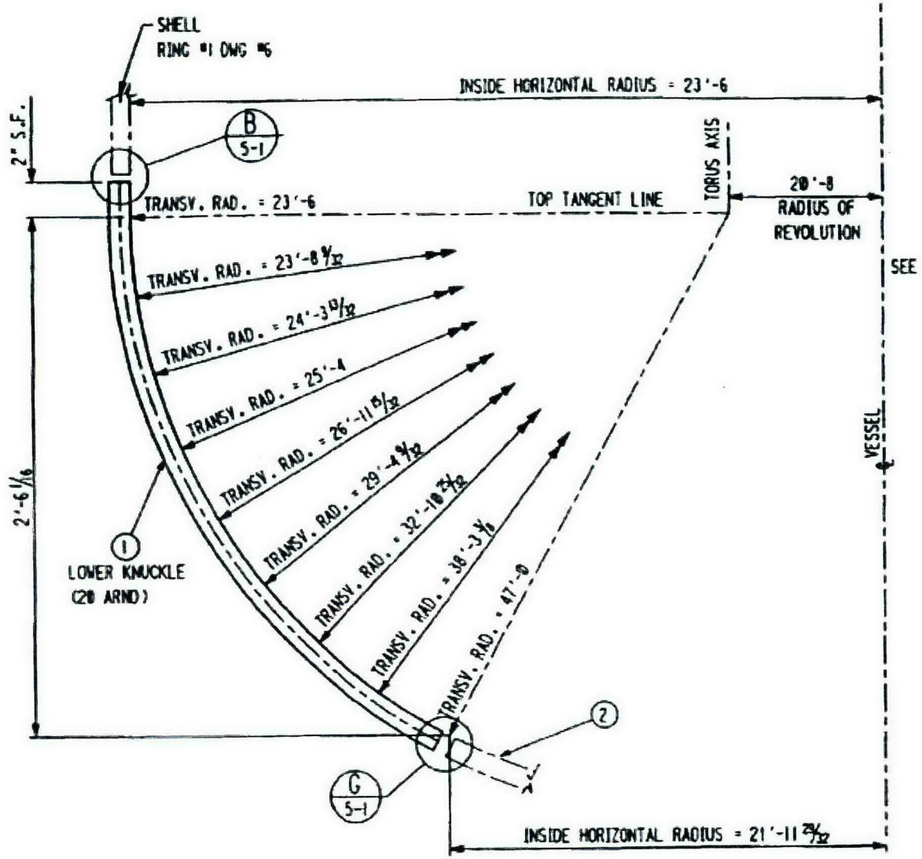

SECTIONAL ELEVATION

4/20/03 4-24-03
Processed Data Entry Copied QA Scanned Filed
4/22/03
4-23-03

ADD KNUCKLE STIFFENER DETAILS BY RPP-WTP ON HOLD

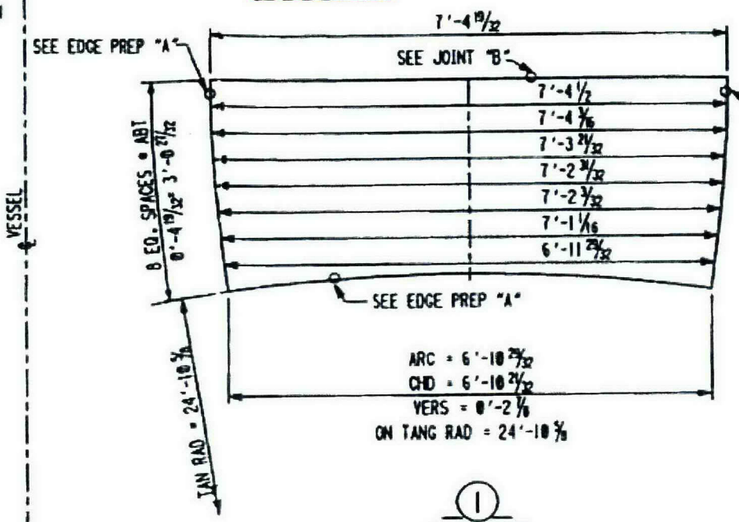

1

DISH NEAR SIDE
DEVELOPED INSIDE VIEW

5-28-03 6-2-03
Processed Data Entry Copied QA Scanned Filed
KJ 5/27/03
BNF 5/27/03

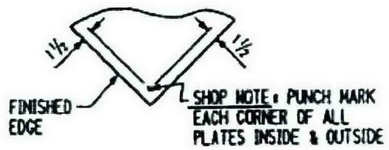

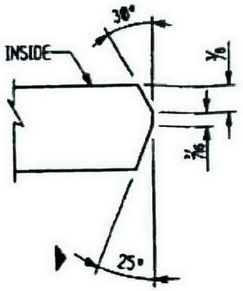

EDGE PREP A

R10242436

~~24590-QL-SRA-MTF5-00001-29-07~~ PKV 06/08/05

KJ 06/08/05

Bechtel Systems & Infrastructure, Inc.

JOB No 24590

SUPPLIER DOCUMENT STATUS	
1 ☒	WORK MAY PROCEED
2 ☐	REVISE AND RESUBMIT. WORK MAY PROCEED SUBJECT TO RESOLUTION OF INDICATED COMMENTS
3 ☐	REVISE AND RESUBMIT. WORK MAY NOT PROCEED
4 ☐	REVIEW NOT REQUIRED. WORK MAY PROCEED.

PERMISSION TO PROCEED DOES NOT CONSTITUTE ACCEPTANCE OR APPROVAL OF DESIGN DETAILS, CALCULATIONS, ANALYSES, TEST METHODS, OR MATERIALS DEVELOPED OR SELECTED BY THE SUPPLIER AND DOES NOT RELIEVE SUPPLIER FROM FULL COMPLIANCE WITH CONTRACTUAL OBLIGATIONS.

	M	P	ML	H	MH	E	CAI	CSAA	PO	PT	ESH
REVIEWED	✓										

G-321 DOCUMENT CATEGORY W
[From Supplement A to G-321-E (E) or G-321-V (V), as applicable]
RESPONSIBLE ENGINEER R. Simmons DATE 4/24/03

CERTIFIED AS BUILT
CONTRACT DRAWING
DATE: 4/5/05
SIGNED: B.A. Balcom

CBI

BOTTOM HEAD DETAILS
VESSEL FRP-VSL-000020 (Q)
WASTE FEED RECEIPT
RICHLAND, WA

CONTRACT NO 1372020
DWG 5 REV 1
SHT 2

24590-QL-SRA-MTF5-00001-29-07 REV 00A

CAD FILE: 20205020.dgn

24590-QL-SRA-MTF5-00001-29-07 REV 00 B

CBI RECEIVED
APR 05 2003

DELETE ITEM 12-2 BY RPP-WTP

CBI RECEIVED
JUN 23 2003

DELETE ITEM 12-2
REPLACE WITH ITEM
12-6 BY RPP-WTP

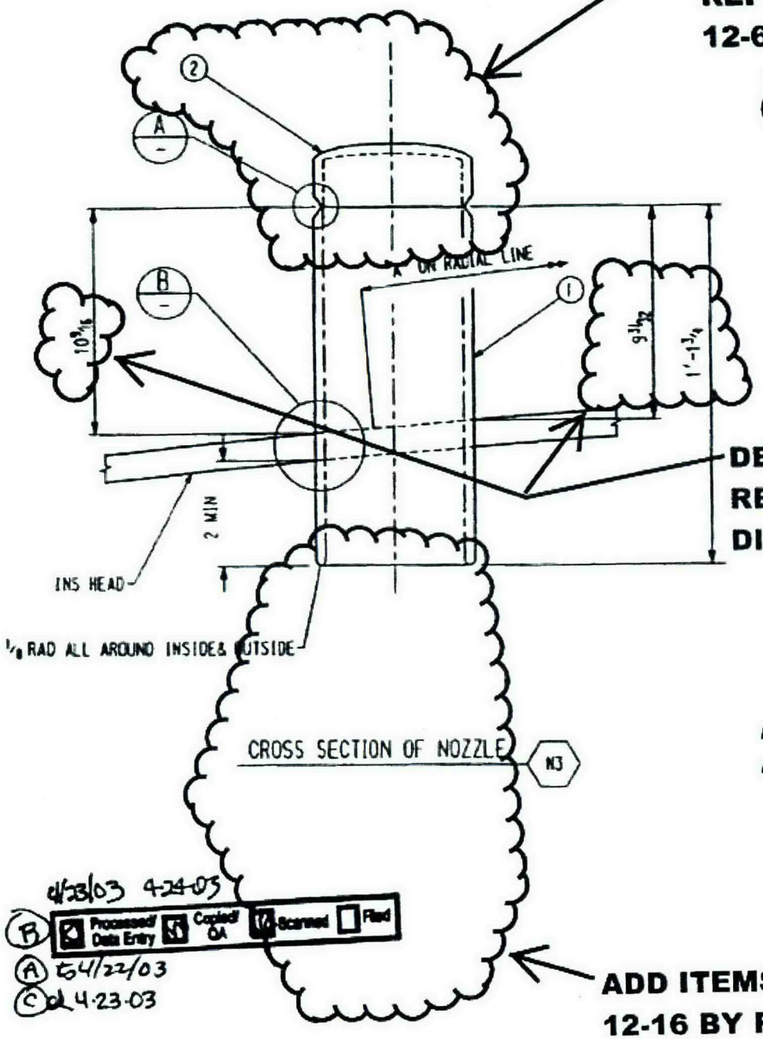

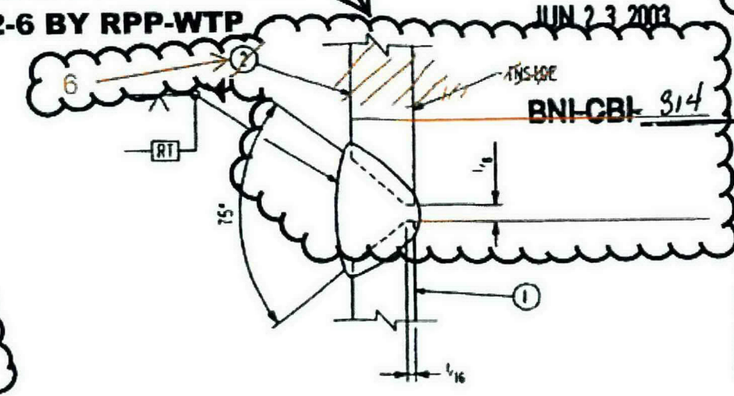

BNI-CBI 314

DELETE DIMENSION
REPLACE WITH NEW
DIMENSION BY RPP-WTP

JOINT SHOP WELD A

ADD ITEMS 12-3 THRU
12-18 BY RPP-WTP

SHIP PC	MARK	ASSM PC	DESCRIPTION	LENGTH FT	LENGTH IN	SPEC	NO	EST WT
1	12-A		6" DIA NOZZLE ASSEMBLY				A	46
	12-1	1	PIPE 6" DIA SCH 80S SMLS SCRD	1	1 3/4	N3	A	37
	12-2	1	PIPE CAP 6" SCH 80S BW			N7	A	3
			N3=SA312 TP316L,CBI SPEC A-312-2406					
			N7=SA403 316LWPS,CBI SPEC A-403-242					

Bechtel Systems & Infrastructure, Inc

JOB No 24590

SUPPLIER DOCUMENT STATUS

1 ☑ WORK MAY PROCEED
2 ☐ REVISE AND RESUBMIT. WORK MAY PROCEED SUBJECT TO RESOLUTION OF INDICATED COMMENTS
3 ☐ REVISE AND RESUBMIT. WORK MAY NOT PROCEED
4 ☐ REVIEW NOT REQUIRED. WORK MAY PROCEED

PERMISSION TO PROCEED DOES NOT CONSTITUTE ACCEPTANCE OR APPROVAL OF DESIGN DETAILS, CALCULATIONS, ANALYSES, TEST METHODS, OR MATERIALS DEVELOPED OR SELECTED BY THE SUPPLIER AND DOES NOT RELIEVE SUPPLIER FROM FULL COMPLIANCE WITH CONTRACTUAL OBLIGATIONS.

	M	P	ML	H	MH	E	C&I	CS&A	PD	PT	ESH
REVIEWED											

G-321 DOCUMENT CATEGORY E-1
(From Supplement A to G-321-E (E) or G-321-V (V), as applicable)
RESPONSIBLE ENGINEER DATE 26 MAY 03

KV 06/08/05

1/7/03 1.18.03
(B) Processed/Data Entry ☑ Copied/QA ☐ Scanned ☐ Filed
(A) 6-17-03
(C) 6/17/03

R10242448

24590-QL-SRA-MTF5-00001-29-1-1
REV 00B

4/23/03 4-24-03
(B) Processed/Data Entry ☑ Copied/QA ☑ Scanned ☐ Filed
(A) 4/22/03
(C) 4-23-03

BEFORE AND AFTER WELDING — UT
AFTER WELDING — PT, PT

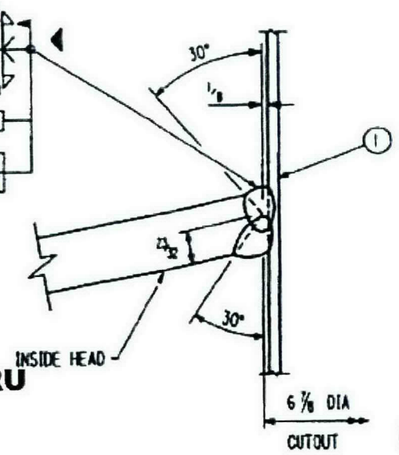

ADD ITEMS 12-3 THRU
12-16 BY RPP-WTP

~~24590-QL-SRA-MTF5-00001-29-1-1~~
RLCOOP
KV 06/08/05

NOTES:
1. ALL WELDS TO BE 316L UNLESS NOTED OTHERWISE.
2. WORK WITH DWG #1, #2 & #3.

PTF-N03, N03A, N03B, N03C
1" PIPE ASSEMBLY

ADD DETAIL 1, VIEWA-A,
SECTIONS B-B, C-C, D-D
AND ITEM 16 BY RPP-WTP

JOINT FIELD WELD B

REVISE BY RPP-WTP

ARC MEASURED ON OUTSIDE OF SHELL ALONG GIRTH JOINT CL AT PC MK #1-2/1-3 FROM AZ 0°	"A" MEASURED ON OUTSIDE OF SHELL FROM GIRTH JOINT CL OF PC MK #1-2/1-3
0	3'-10 5/32

CERTIFIED AS BUILT
CONTRACT DRAWING
DATE: 4/5/05
SIGNED: B.A. Bahnd

CBI

~~N3, 6" SPARE, CAPPED~~
WASTE FEED RECEIPT
~~VESSEL FIN-VS-00002-A~~
RICHLAND, WA

CUSTOMER'S NO
BY TSJ ORIG CST DATE 3/9/02
PYE/A.E. BALCOM
CONTRACT NO 1372020
DWG 12 SHT 1 REV 2

INDICATES CHANGE FROM PREVIOUS ISSUE

20212010.DGN

CBI RECEIVED
APR 05 2005

REVISE BY RPP-WTP

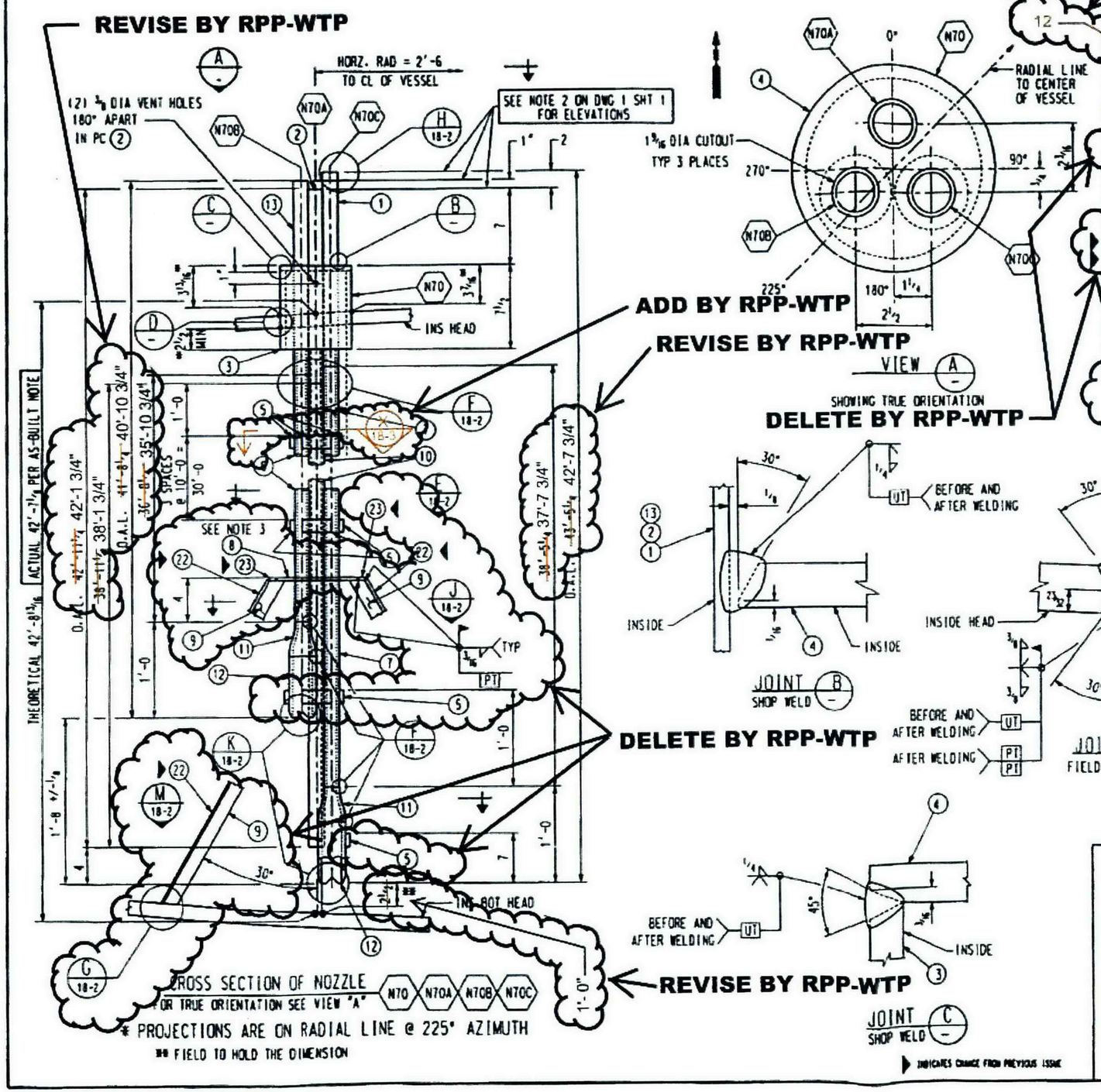

SHIP PC	MARK	ASSM PC	DESCRIPTION	LENGTH	SPEC	ID	EST WT LBS
1	18-A		1" DIA NOZZLE ASSEMBLY				411
	18-1	1	PIPE 1 DIA. SCH 160S X SK	4'-0	M3	A	12
	18-2	1	PIPE 1 DIA. SCH 160S X SK	4'-0	M3	A	12
	18-3	1	PIPE 6 DIA. SCH 80S X SK	7 1/2	M3	A	17
	18-4	1	PL 5 23/32 O.D. X 1/2 X SK		M1	A	4
	18-5	17	PL 8 1/2 X 1/2 X SK	2 1/2	M1	A	16
	18-6	1	PIPE 1 DIA. SCH 160S BBE	36'-10 5/16	M3	A	110
	18-7	1	PIPE 1 DIA. SCH 160S BBE	38'-7 5/16	M3	A	140
	18-8	1	PL 6 5/8 O.D. X 1/2 X SK		M1	A	5
	18-10	1	PIPE 1 DIA. SCH 160S X SK	38'-1 5/16	M3	A	117
	18-11	2	CONC REDUCER 2 X 1 SCH160S SMLS BW		M7	A	3
	18-12	2	PIPE 2 DIA. SCH 160S X SK	9	M3	A	0
	18-13	1	PIPE 1 DIA. SCH 160S X SK	4'-0	M3	A	0
3	18-9		PL 3 X 1/2 X SK	4'-0	M1	A	63
3	18-22		PL 3 X 1/2 X SK	4'-0	M1	A	63
3	18-23		PL 3 X 1/2 X SK	2 3/8	M1	A	3
			M1 = SA240 316L. CBI SPEC A240 2404				
			REV 1				
			M3=SA312 TP316L. CBI SPEC				
			A-312-2406 REV 2				
			M7=SA403 316L WPS. CBI SPEC				
			A-403-2423 REV 2				

AS-BUILT NOTE:

"ACTUAL" DIMENSION RECORDED FOR VARIATION OF AS-BUILT BOTTOM AND TOP HEADS.

ADD ITEMS 24 THRU 30 TO BOM BY RPP-WTP

24590-QL-SRA-MTF5-00001- 29-21
REV 00 I

DELETE BY RPP-WTP

R10242460

NOTES:
1. ALL WELDS TO BE 316L UNLESS NOTED OTHERWISE.
2. WORK WITH DWG #1, #2, & #3
3. SHOP SLIP ON PC MK 8 (DO NOT WELD) ON PC MK 6, 7, & 10 BEFORE WELDING PC MK 11 TO PC MK 6 & 7.

CERTIFIED AS BUILT CONTRACT DRAWING
DATE: 4/5/05
SIGNED: B.R. Balcomb

CBI

N70, N70A, N70B, N70C
1" PIPE ASSEMBLY
WASTE FEED RECEIPT
VESSEL FRP-VSL-00002A (D)
RICHLAND, WA

CUSTOMER'S NO
BY TSJ CHKD CST DATE 9/18/02
PVE/ B.R. BALCOMB
ENGINEERING ASSIGNED

CONTRACT NO 1372020
DWG 18 REV 10
SHT 1

20218010.DGN

29-21H

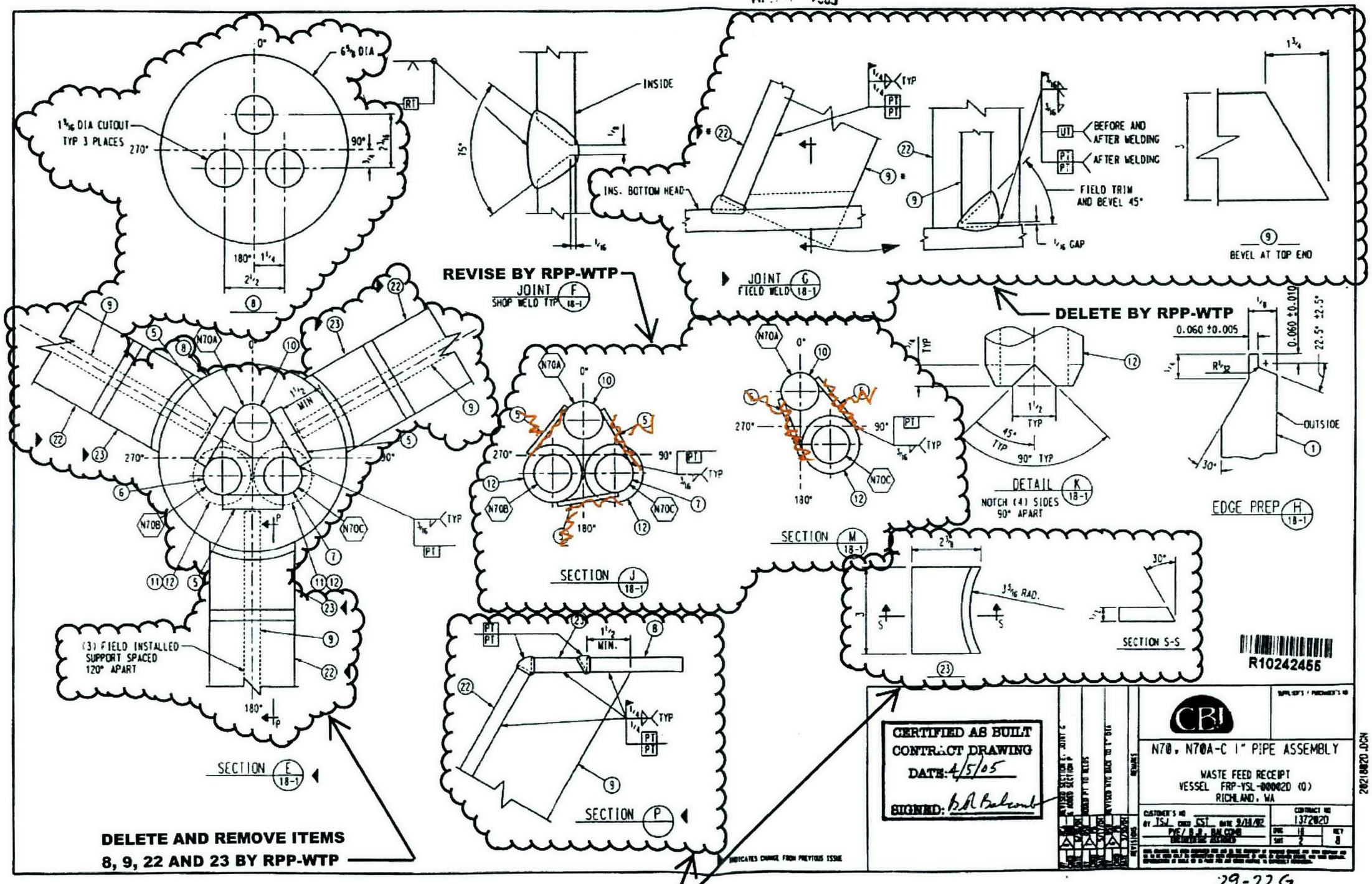

24590-QL-SRA-MTF5-00001- 29-22
REV 00 H

29-22 G

~~24590-QL-SRA-MTF5-00001~~ 29-22 KV
~~REV. 00G~~ 06/08/05

CBI RECEIVED
APR 05 2005

DELETE AND REPLACE WITH NEW SUPPORTS BY RPP-WTP

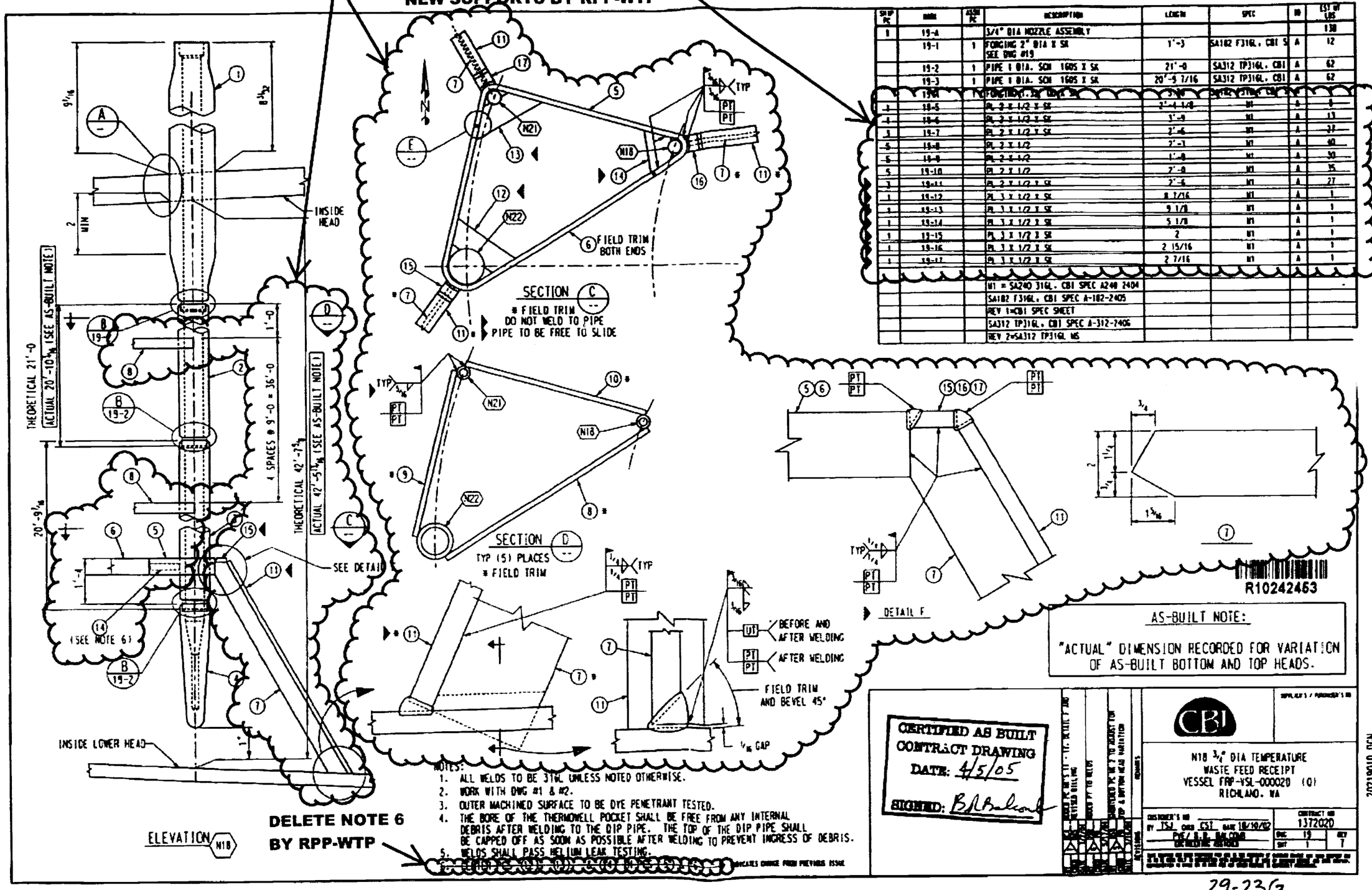

SHIP PC	MARK	ASSM PC	DESCRIPTION	LENGTH	SPEC	ID	EST WT LBS
1	19-A		3/4" DIA NOZZLE ASSEMBLY				138
	19-1	1	FORGING 2" DIA X SK SEE DWG #19	1'-3	SA182 F316L, CBI S	A	12
	19-2	1	PIPE 1 DIA. SCH 160S X SK	21'-0	SA312 TP316L, CBI	A	62
	19-3	1	PIPE 1 DIA. SCH 160S X SK	20'-9 7/16	SA312 TP316L, CBI	A	62
	19-4	1	FORGING 1.5" DIA X SK	3'-10	SA182 F316L, CBI	A	[illegible]
1	19-5		PL 2 X 1/2 X SK	2'-4 1/8	M1	A	8
1	19-6		PL 2 X 1/2 X SK	3'-9	M1	A	13
3	19-7		PL 2 X 1/2 X SK	2'-6	M1	A	27
5	19-8		PL 2 X 1/2	2'-3	M1	A	40
5	19-9		PL 2 X 1/2	1'-8	M1	A	30
5	19-10		PL 2 X 1/2	2'-0	M1	A	35
3	19-11		PL 2 X 1/2 X SK	2'-6	M1	A	27
1	19-12		PL 3 X 1/2 X SK	8 7/16	M1	A	1
1	19-13		PL 3 X 1/2 X SK	9 1/8	M1	A	1
1	19-14		PL 3 X 1/2 X SK	5 1/8	M1	A	1
1	19-15		PL 3 X 1/2 X SK	2	M1	A	1
1	19-16		PL 3 X 1/2 X SK	2 15/16	M1	A	1
1	19-17		PL 3 X 1/2 X SK	2 7/16	M1	A	1
			M1 = SA240 316L, CBI SPEC A240 2404				
			SA182 F316L, CBI SPEC A-182-2405				
			REV 1=CBI SPEC SHEET				
			SA312 TP316L, CBI SPEC A-312-2406				
			REV 2=SA312 TP316L MS				

NOTES:
1. ALL WELDS TO BE 316L UNLESS NOTED OTHERWISE.
2. WORK WITH DWG #1 & #2.
3. OUTER MACHINED SURFACE TO BE DYE PENETRANT TESTED.
4. THE BORE OF THE THERMOWELL POCKET SHALL BE FREE FROM ANY INTERNAL DEBRIS AFTER WELDING TO THE DIP PIPE. THE TOP OF THE DIP PIPE SHALL BE CAPPED OFF AS SOON AS POSSIBLE AFTER WELDING TO PREVENT INGRESS OF DEBRIS.
5. WELDS SHALL PASS HELIUM LEAK TESTING.
6. [illegible] INDICATES CHANGE FROM PREVIOUS ISSUE

DELETE NOTE 6 BY RPP-WTP

24590-QL-SRA-MTF5-00001-29-23
REV 00 H

29-23G

~~24590-QL-SRA-MTF5-00001-29-23~~
~~REV. 00G~~
KV 06/08/05

DELETE ITEMS 5, 6, 12, 13, 14, 15, 16, 17 AND SECTION X-X BY RPP-WTP

CBI RECEIVED
APR 0 5 2005

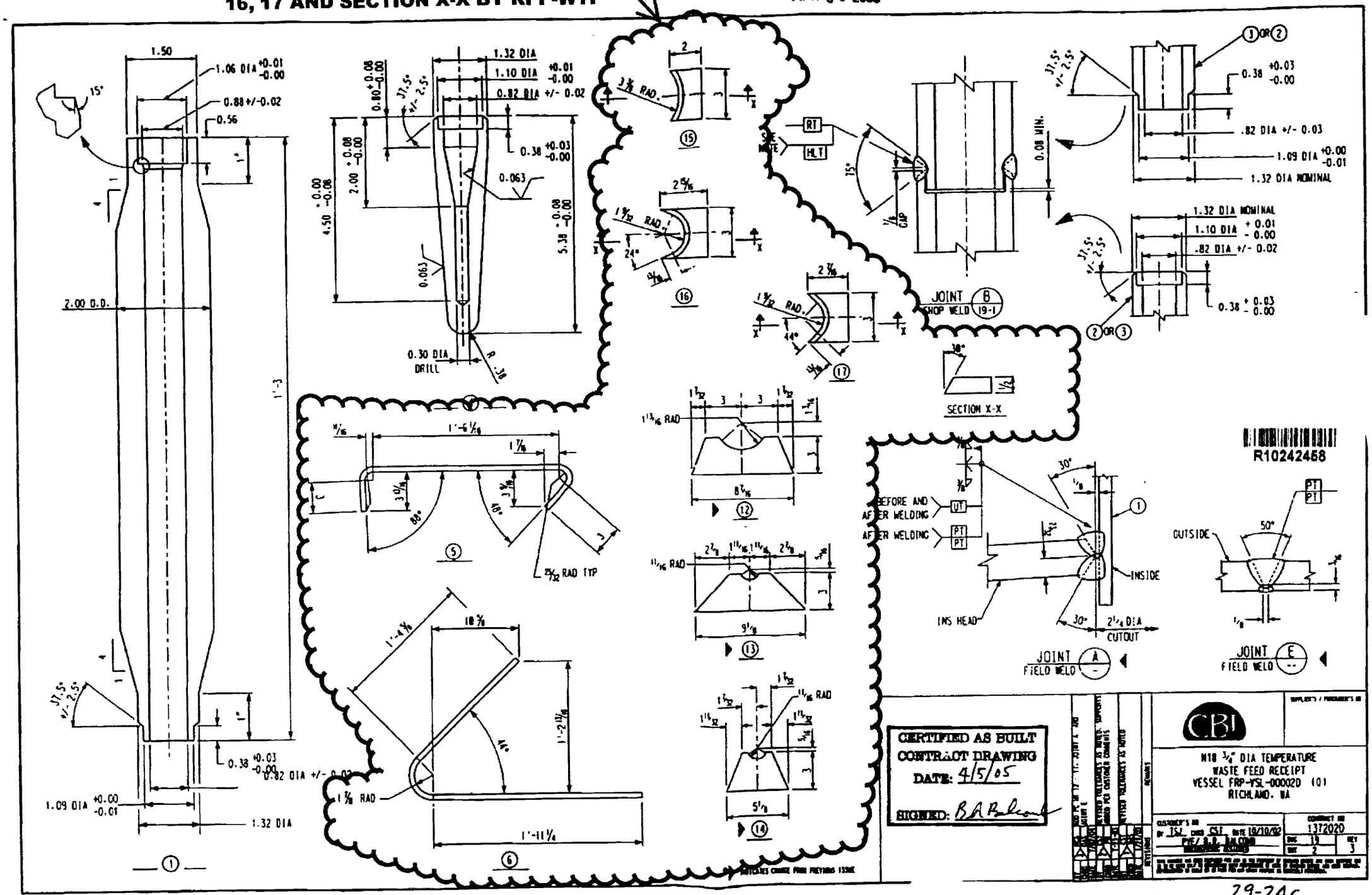

~~24590-QL-SRA-MTF5-00001: 29-24~~
~~REV. 00C~~ KV 06/08/05

29-24C

CBI RECEIVED
APR 05 2005

ADD PIPE KICK-OFF SUPPORTS BY RPP-WTP

UPDATE DEPICTION BY RPP-WTP

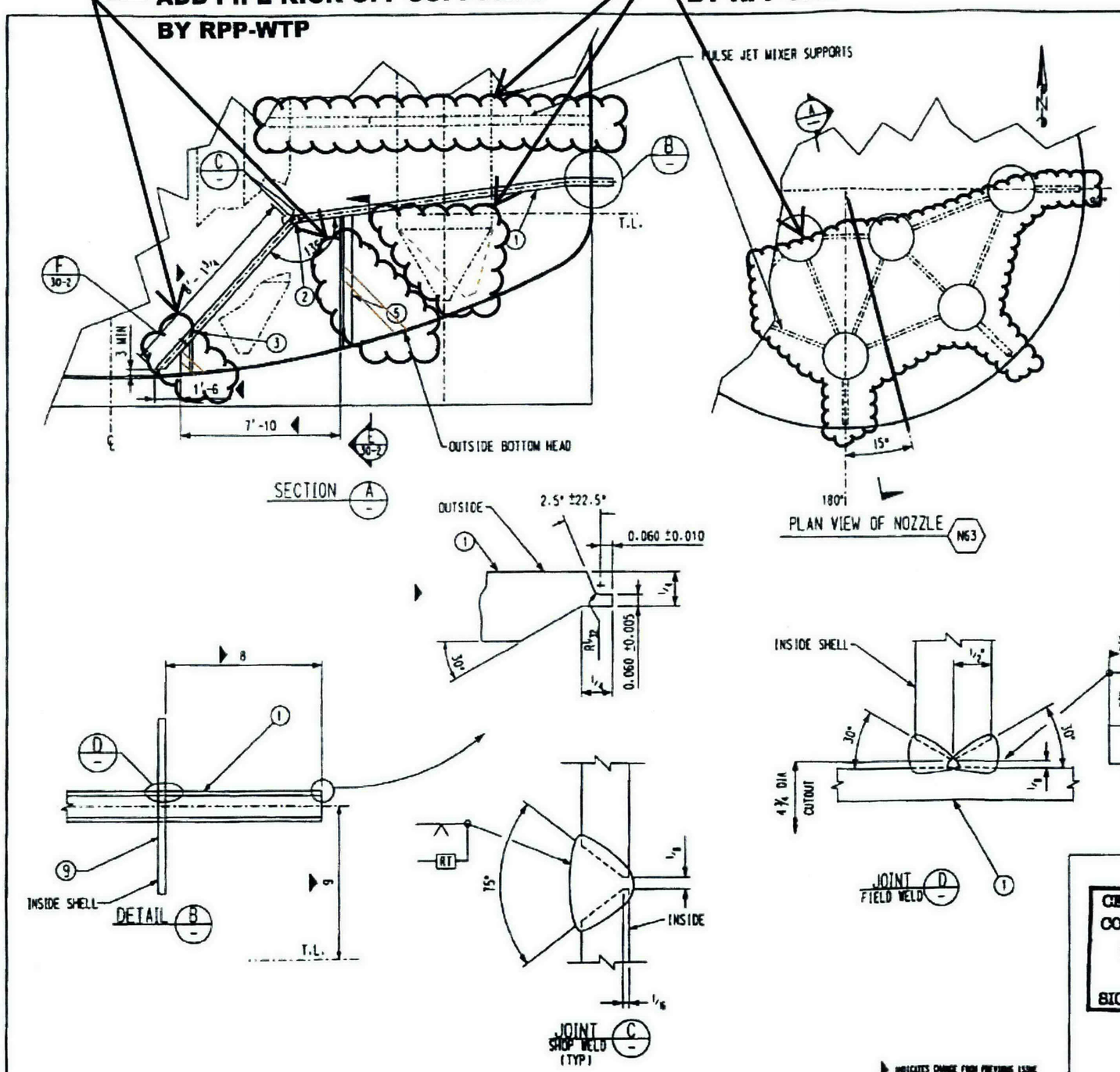

SHIP PC	NAME	MESH PC	DESCRIPTION	LENGTH FT	LENGTH IN	SPEC	IB	EST WT
1	30-A		4" DIA PIPE ASSEMBLY A					594
	30-1	1	PIPE 4" DIA SCH 160S SMLS BBE	16	0 3/8	M3	A	385
	30-2	1	WELDED 4" DIA SCH160S 45 DEG ELBOW			M7	A	9
	30-3	1	PIPE 4" DIA SCH 160S SMLS SKOB BOE	8	1 3/4	M3	A	200
1	30-4		PL 6" X 1/2" X SK	0	10	M1	A	4
2	30-5		PL 6" X 1/2" X SK	7	0	M1	A	150
1	30-6		PL 6" X 1/2" X SK	2	3 13/16	M1	A	18
1	30-7		PL 5 1/2" X 1/2"	0	7 1/2	M1	A	9
1	30-8		PL 1/2 X 1/2 X SK	1	1	M1	A	2
			M1=SA240 316L.CBI SPEC A-240-2404					
			M3=SA312 TP316L.CBI SPEC A-312-2406					
			M7=SA403 316L WPS. CBI					
			SPEC A403-2403					

ADD ITEMS 30-9, 30-10, 30-11, 30-12 AND 30-13 BY RPP-WTP

9/6/03 9-4-03
Processed Data Entry | Copied CA | Scanned | Filed

KJ 06/08/05

~~24590-QL-SRA-MTF5-00001-29-29, REV.000~~

R10242459

NOTES:
1. ALL WELDS TO BE 316L UNLESS NOTED OTHERWISE.
2. WORK WITH DWG #1, #2, & #3

CERTIFIED AS BUILT CONTRACT DRAWING
DATE: 4/5/05
SIGNED: B.A. Balcomb

REVISIONS

CBI

N63 4" DIA OUTLET

WASTE FEED RECEIPT
VESSEL FRP-VSL-000020 (2)
RICHLAND, WA

CUSTOMER'S NO TSJ ORDER CST DATE 10-16-02
DWG/P.E. BALCOMB
DRAWN BY
CONTRACT NO 1372020
ORIG 30 SHT 01 REV 2

▶ INDICATES CHANGE FROM PREVIOUS ISSUE

2023001D.DGN

24590-QL-SRA-MTF5-00001-29-29
REV 00C

29-29 000001

CBI RECEIVED
APR 05 2005

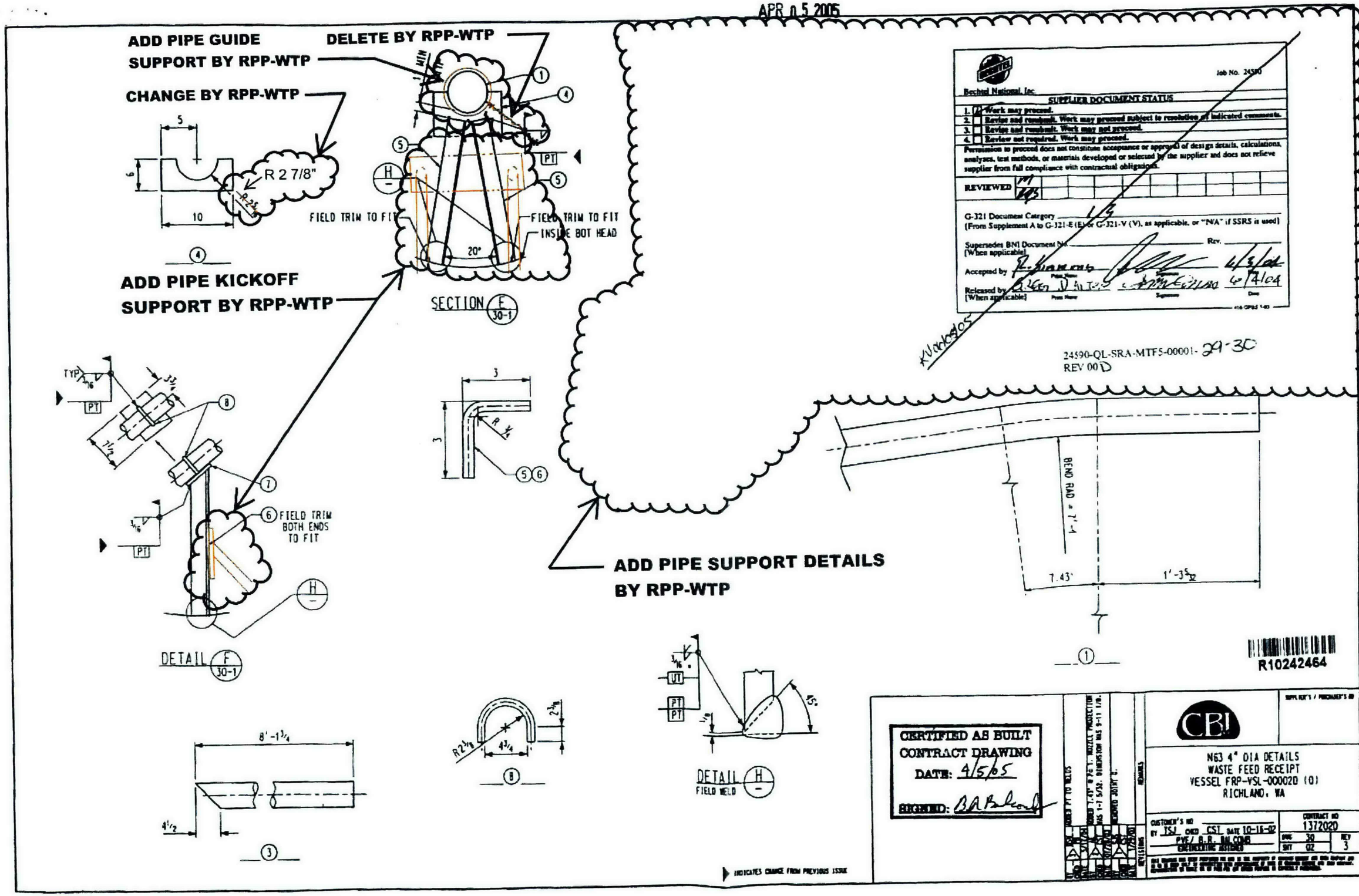

Bechtel National, Inc.
Job No. 24590

SUPPLIER DOCUMENT STATUS

1. [X] Work may proceed.
2. [ ] Revise and resubmit. Work may proceed subject to resolution of indicated comments.
3. [ ] Revise and resubmit. Work may not proceed.
4. [ ] Review not required. Work may proceed.

Permission to proceed does not constitute acceptance or approval of design details, calculations, analyses, test methods, or materials developed or selected by the supplier and does not relieve supplier from full compliance with contractual obligations.

REVIEWED

G-321 Document Category 1/3
(From Supplement A to G-321-E (E) or G-321-V (V), as applicable, or "N/A" if SSRS is used)

Supersedes BNI Document No. _____ Rev. _____
(When applicable)

Accepted by _____ Date 4/3/04

Released by _____ Date 6/4/04
(When applicable)

DELETE AND REPLACE WITH DIP PIPE SUPPORT DETAILS BY RPP-WTP IN CROSS HATCH AREA

SHT/PC	NAME	ASSM PC	DESCRIPTION	LENGTH	SPEC	CD	ESTIMAT LBS
12	18-3		PL 2 1/2 X 1/2	2 1/2	M1	A	12
* 2	18-14		L 2 1/2 X 2 1/2 X 1/4	8' 6	M9	A	58
* 2	18-15		L 2 1/2 X 2 1/2 X 1/4	5' 0	M9	A	34
* 4	18-16		L 2 X 2 X 1/4	2' 8	M9	A	36
* 4	18-17		L 2 X 2 X 1/4	2' 6	M9	A	33
* 4	18-18		PL 2 1/2 X 1/2	3	M1	A	4
* 4	18-19		L 2 X 2 X 1/4	7	M9	A	12
* 4	18-20		L 2 X 2 X 1/4	3' 9	M9	A	43
* 2	18-21		L 2 X 2 X 1/4	1' 0	M9	A	25
			M1 = SA240 316L, CBI SPEC A240 2404				
			M1 = SA240 316L, CBI SPEC A240 2404				
			M9= SA479 316L CBI SPEC A-479 2510				

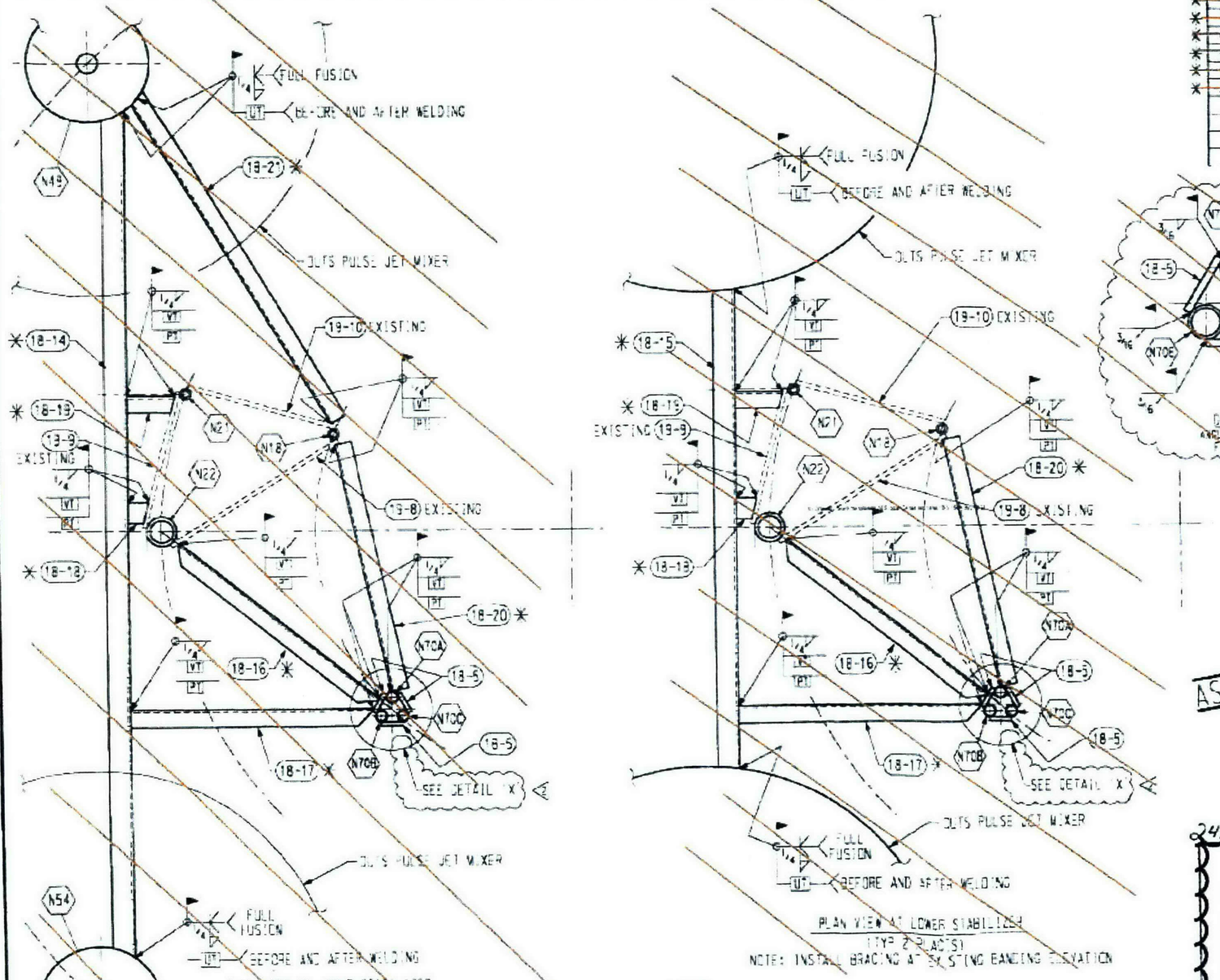

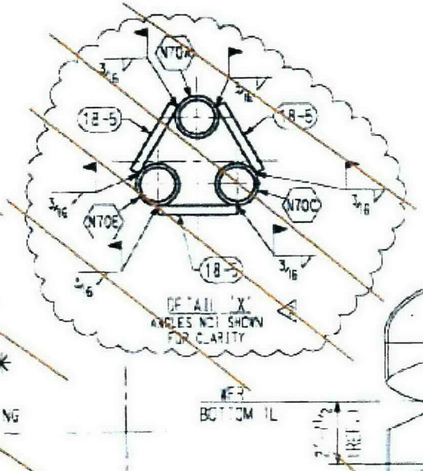

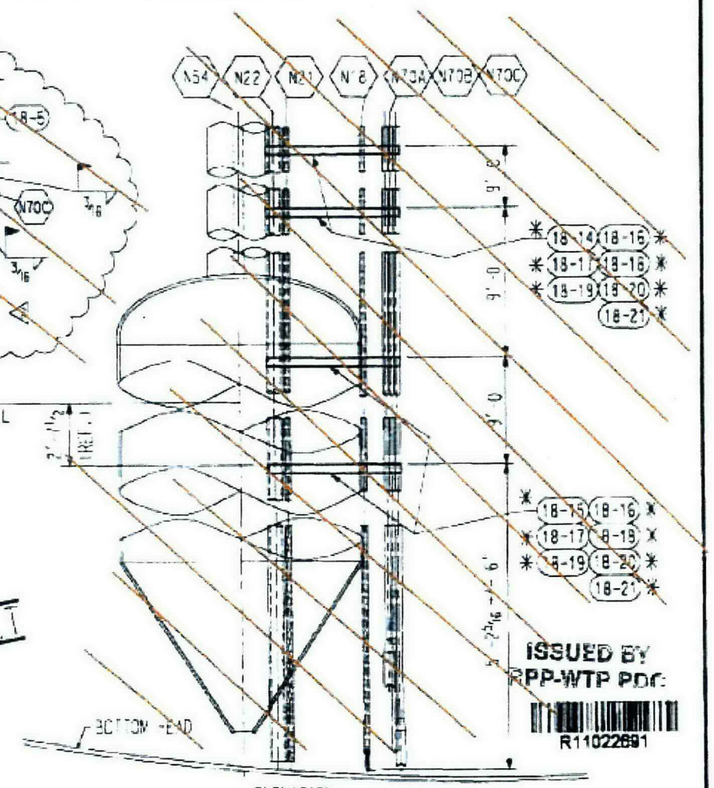

AS-BUILT

ISSUED BY RPP-WTP PDC
R11022691

NOTES:
1. ALL WELDS TO BE 316L UNLESS NOTED OTHERWISE.
2. WORK WITH DWG #1 SHT 1, #2 SHT 1, #18 SHT 1, & 2, & #19 SHT 1 & 2.
* 3. BILLED WITH ADDED MATERIAL FOR FIELD TRIM.

▶ INDICATES CHANGE FROM PREVIOUS ISSUE

24590-QL-SLA-00CS-00001-29-00073 REV 0

CERTIFIED AS BUILT CONTRACT DRAWING
DATE: 9/13/10
SIGNED: Billy J Balcomb

REVISED DETAIL "X" AS-BUILT
REVISED PER CWS TF-20 & TB-21, REVISED WELD SIZE AND REVISED BILL OF MAT'L

CBI

PTF - LATERAL SUPPORTS FOR DIP PIPE
WASTE FEED RECEIPT
VESSEL FRP-VSL-00002D (Q)
RICHLAND, WA

CUSTOMER'S NO
BY RCA CHKD PB DATE 6/16/04
PVE/ B.J. BALCOMB
ENGINEERING ASSIGNED
CONTRACT NO 13720CD
DWG 18 SHT 3 REV 2

20218D10.DGN

ON REFERENCE DRAWING 24590-QL-SRA-MTF5-00001-29-06

SHIP PC	MARK	ASSY PC	DESCRIPTION	LENGTH	SPEC	ID	EST WT
* 64	5-4		PLATE, SK 1" (26 3/16" x 1 0" x 38 13/16")		M1		
			M1= ASME SA240 TP 316/316L				
			* NOMINALLY 64 PIECES				

1. TYPICAL, 1" WELD SIZE MAY BE REDUCED WHEN BRIDGING WELDS DEPICTED IN DETAIL F
2. CONTOUR TO MATCH VESSEL BOTTOM HEAD. GAP BETWEEN STIFFENER PLATE AND VESSEL BOTTOM HEAD AS MEASURED THROUGH FILL AND VENT HOLES, SHALL NOT EXCEED 1/4".
   NOTE: WIDTH OF PLATES MAY BE ADJUSTED TO SHIFT WELD LOCATIONS OR TO CREAT LARGER PLATES TO REDUCE TOTAL NUMBER OF STIFFENERS PLATES DETAIL F SEAMS SHALL NOT BE LOCATED CLOSER THAN 3" FROM SEAMS IN BOTTOM THAT RUN PARALLEL TO DETAIL F SEAMS
3. LOCATE 1 FILL AND 1 VENT HOLE, APPROX. AS SHOWN, NOMINALLY 10" FROM CORNER OF STIFFENER PLATES PLATE (PART #5-4). FILL GAPS BEHIND STIFFENER PLATES (PART #5-4) WITH GROUT UNTIL GROUT BLEEDS FROM VENT HOLES. AFTER GROUT SETS, DRILL OUT GROUT FROM FILL AND VENT HOLES MIN. 3/4" DEEP. PLUG WELD HOLES CLOSED MIN. OF 1/2" DEEP. HOLES MAY BE SIZED/TAPPED AS NEEDED UP TO 1" Ø, TO FACILITATE INSTALLATION OF GROUT.

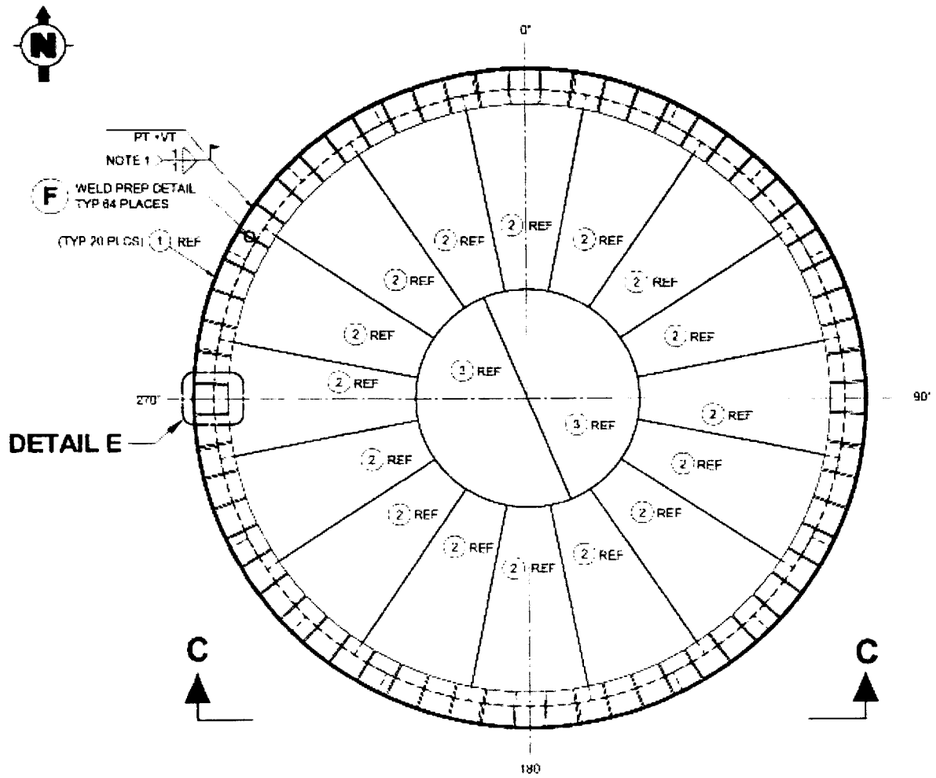

PLAN
INSIDE LOOKING DOWN

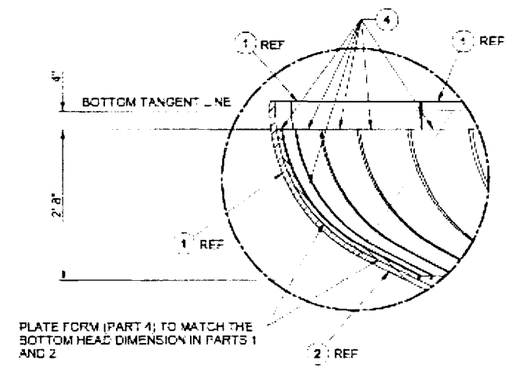

DETAIL D

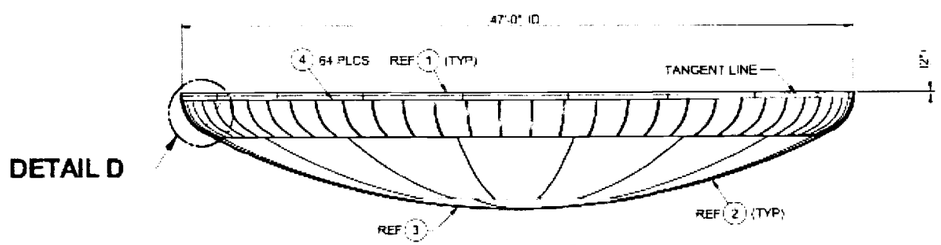

VIEW C-C

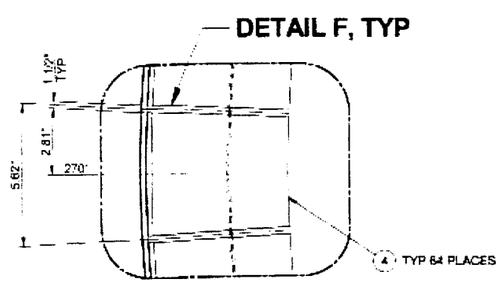

DETAIL E

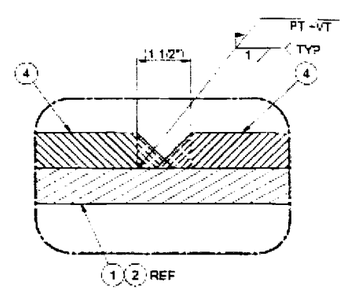

DETAIL F

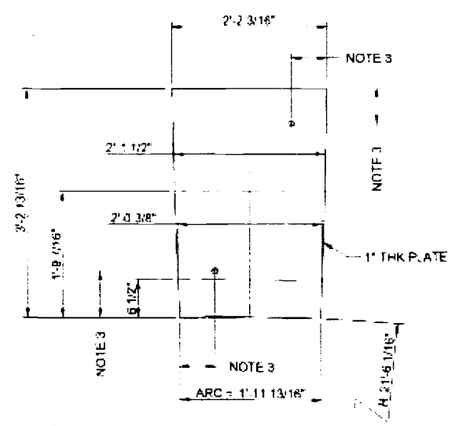

4 KNUCKLE STIFFENER PLATE
(FLAT PLATE BEFORE BEND)
(NOTE 2)

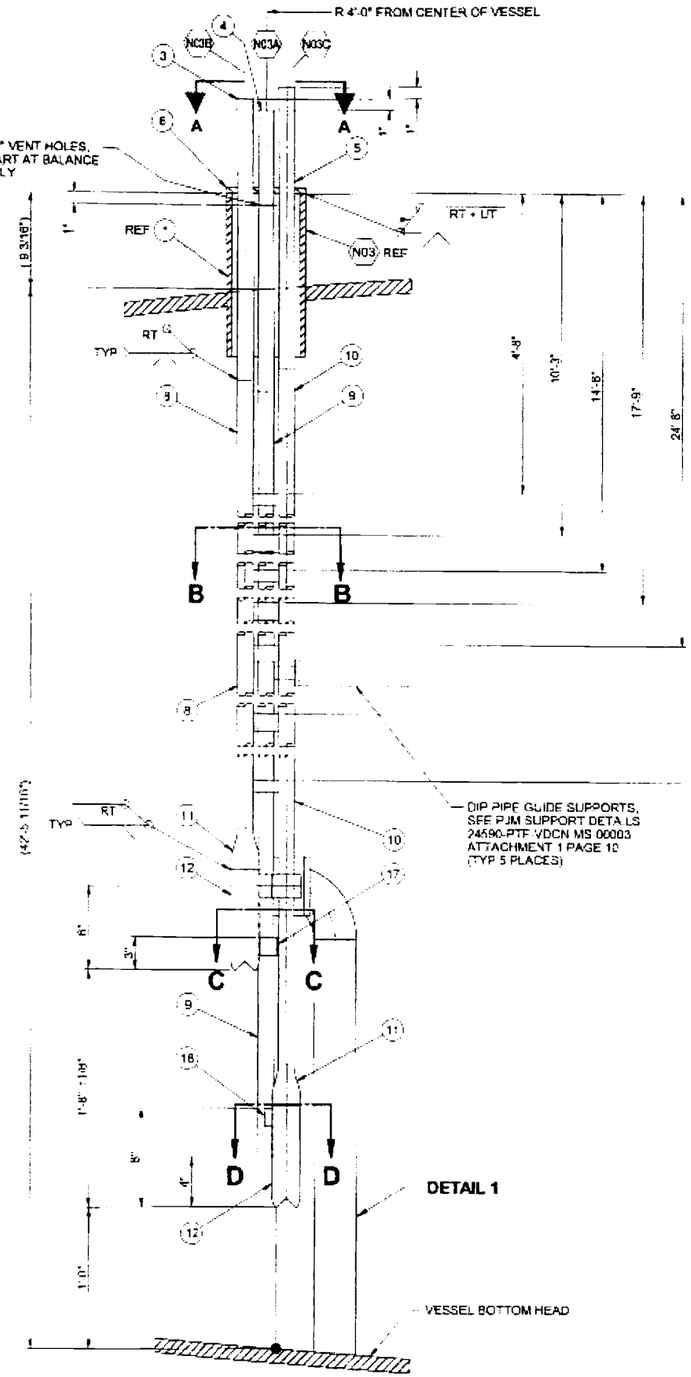

CROSS SECTION NOZZLE
FOR TRUE ORIENATION SEE VIEW A-A

N03 N03A N03B N03C

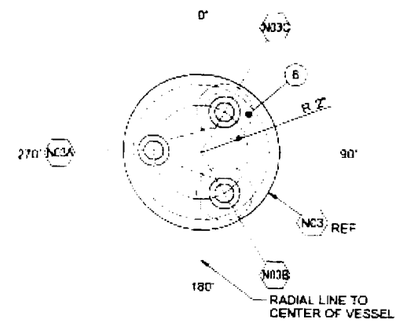

VIEW A-A

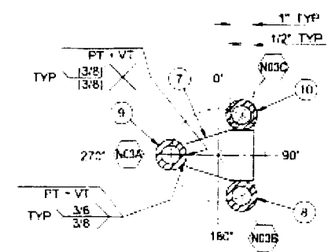

SECTION B-B

TYP 7 PLACES

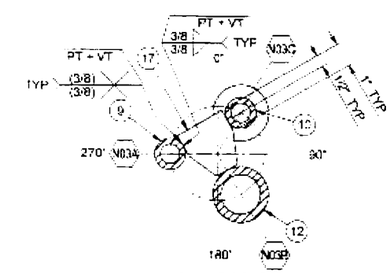

SECTION C-C

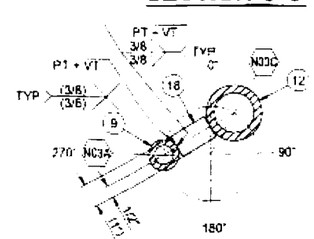

SECTION D-D

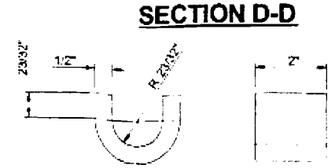

16 PIPE GUIDE STRAP

ON REFFRENCE DRAWING 24590-QL-SRA-MTF5-00001-29-17

SHIP PC	MARK	ASSY PC	DESCRIPTION	LENGTH	SPEC.	ID	EST WT.
	12-3	1	PIPE 1" SCHED 160S	4'-0"	M3		
	12-4	1	PIPE 1" SCHED 160S	4'-0"	M3		
	12-5	1	PIPE 1" SCHED 160S	4'-0"	M3		
	12-6	1	PLATE 8 5/8" DIAMETER x 1/2" THK		M1		
	12-7	7	PLATE 1 1/2" THK	AS REQD	M1		
	12-8	1	PIPE 1" SCHED 160S	37'-4 1/8"	M3		
	12-9	1	PIPE 1" SCHED 160S	38'-7 1/8"	M3		
	12-10	1	PIPE 1" SCHED 160S	38'-1 1/8"	M3		
	12-11	2	CONC REDUCER 2" x 1" SCHED 160S SMLS BW		M3		
	12-12	2	PIPE 2" SCHED 160S	9"	M3		
	12-13	1	PIPE 3" SCHED 80S	2'-10 3/16"	M3		
	12-14	1	ELBOW 3" LR SCHED 80S SMLS BW		M2		
	12-15	1	PLATE 5" x 7" x 1/2" THK		M1		
	12-16	2	FLAT BAR 2" x 1/2" THK	3 23/32"	M1		
	12-17	1	PLATE 1 1/2" THK	AS REQD	M1		
	12-18	1	BAR 1" WIDE x 1 1/2" THK	AS REQD	M1		
			M1 = ASME SA240 TP 316/316L				
			M2 = ASME SA403 316L WPB				
			M3 = ASME SA312 TP 316/316L				

NOTES.

1. PIPE GUIDE STRAPS ARE WELDED AFTER CORRECTLY POSITIONING THE PIPE GUIDE STRAP SUPPORTS PIPE GUIDE STRAP SHALL MAINTAIN 1/16" DIAMETRICAL CLEARANCE WITH PIPE.
2. TOLERANCE ON STRAP ELEVATIONS (PART 12-7) IS ±2".

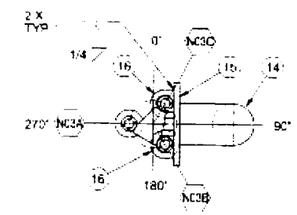

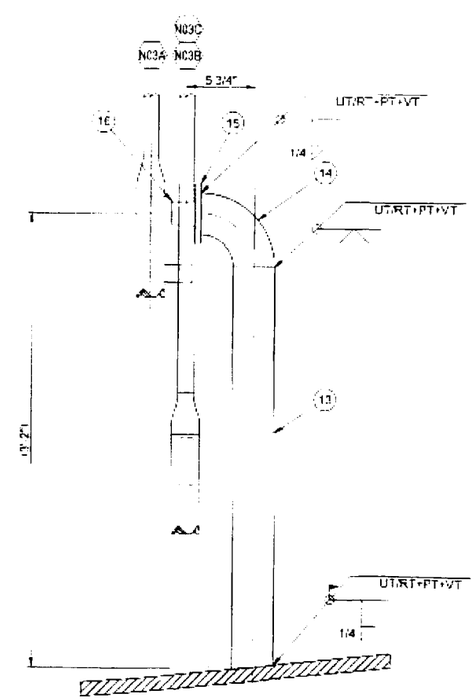

DETAIL 1

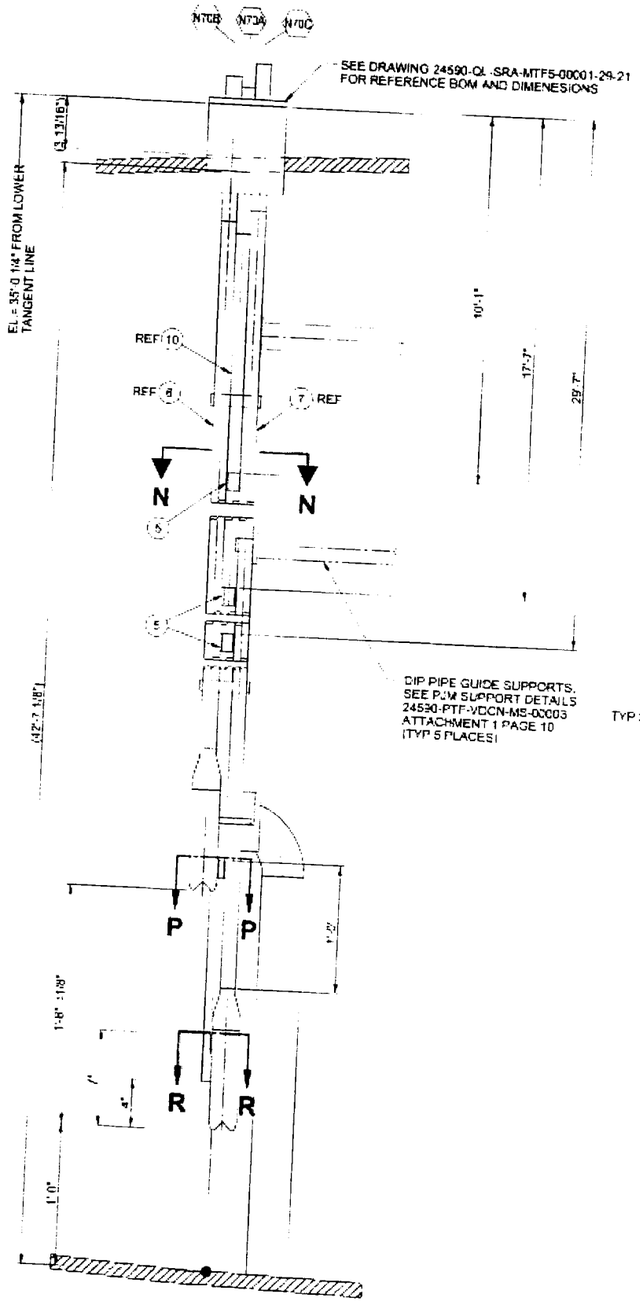

CROSS SECTION NOZZLE
FOR TRUE ORIENATION SEE VIEW A-A
N70 N70A N70B N70C REF

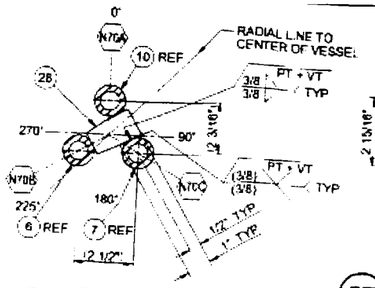

SECTION N-N

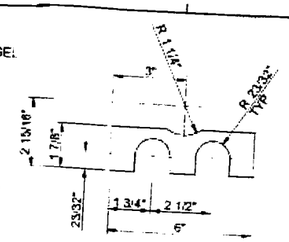

27 PIPE GUIDE PLATE

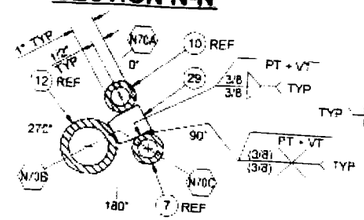

SECTION P-P

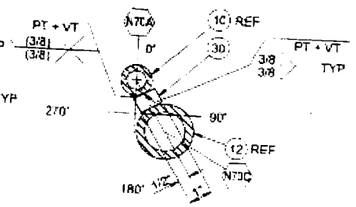

SECTION R-R

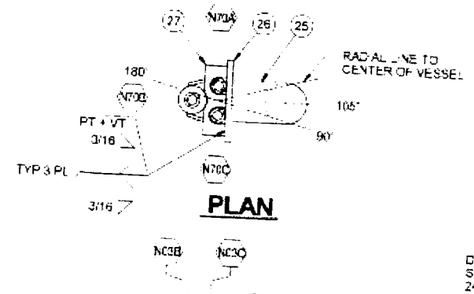

PLAN

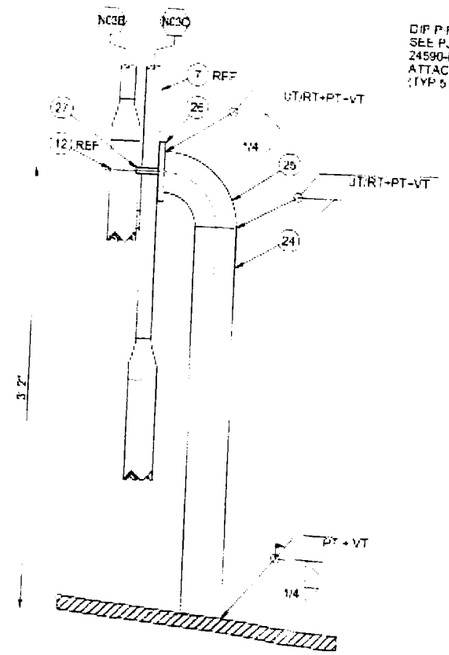

ELEVATION
DETAIL 1

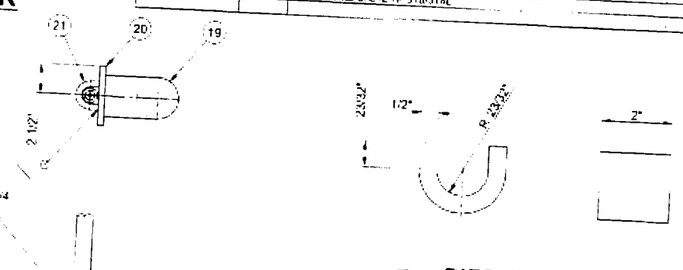

21 PIPE GUIDE STRAP

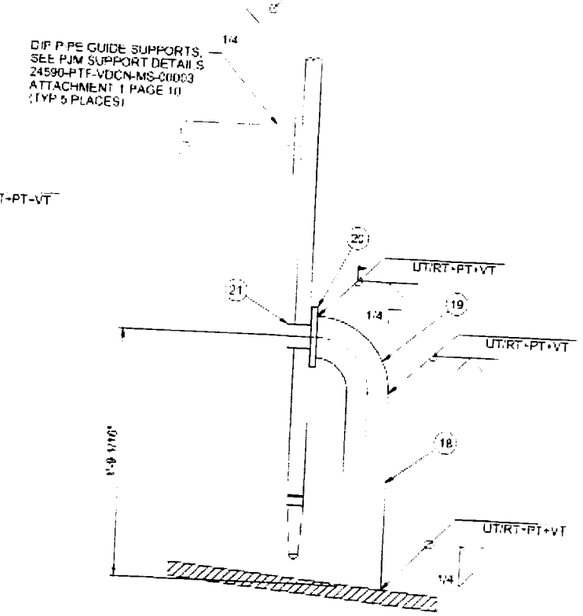

ELEVATION N18

ON REFERENCE DRAWING 24590-QL-SRA-MTF5-00001-29-21

SHIP PC	MARK	ASSY PC	DESCRIPTION	LENGTH	SPEC	ID	EST WT
	18-24	1	PIPE 3" SCHED 80S	2'-0 3/16"	M3		
	18-25	1	ELBOW 3" LR SCHED 80S SMLS BW		M2		
	18-26	1	PLATE 5" x 7" x 1/2" THK		M1		
	18-27	1	PLATE 1/2" THK	1 7/8" x 6"	M1		
	18-28	3	PLATE 1 1/2" THK	AS REQD			
	18-29	1	PLATE 1 1/2" THK	AS REQD			
	18-30	1	FLAT BAR 1" WIDE x 1 1/2" THK	AS REQD			
			M1 = ASME SA240 TP 316/316L				
			M2 = ASME SA403 316L WPS				
			M3 = ASME SA312 TP 316/316L				

NOTES:

1. PIPE GUIDE STRAPS AND PLATE ARE WELDED AFTER CORRECTLY POSITIONING THE PIPE GUIDE STRAP SUPPORTS. PIPE GUIDE STRAP AND PLATE SHALL MAINTAIN 1/16" DIAMETRICAL CLEARANCE WITH PIPE.
2. THE FABRICATOR MAY LEAVE UP TO 1" OF THE PREVIOUS STEELWORK IN PLACE (I.E. CUT STEELWORK UP TO 1" AWAY FROM UNTOUCHED COMPONENTS) TO AVOID CUTTING/GRINDING INTO UNTOUCHED COMPONENTS (UNLESS OTHERWISE SPECIFICALLY INDICATED IN THIS DRAWING SET) WHERE THIS DRAWING SET INDICATES THAT SUPPORTS, FLANGES, BRACKETS, COMPONENTS, ETC. HAVE BEEN REMOVED BETWEEN THE CURRENT REVISION AND THE PREVIOUS REVISION.
3. TOLERANCE ON STRAP ELEVATION IS ±2".

ON REFERENCE DRAWING 24590-QL-SRA-MTF5-00001-29-23

SHIP PC	MARK	ASSY PC	DESCRIPTION	LENGTH	SPEC	ID	EST WT
	19-18	1	PIPE 3" SCHED 80S	1'-2 3/4"	M3		
	19-19	1	ELBOW 3" LR SCHED 80S SMLS BW		M2		
	19-20	1	PLATE 5" x 5" x 1/2" THK		M1		
	19-21	1	FLAT BAR 2" x 1/2" THK	3 23/32"	M1		
			M1 = ASME SA240 TP 316/316L				
			M2 = ASME SA403 316L WPS				
			M3 = ASME SA312 TP 316/316L				

ON REFERENCE DRAWING 24590-QL-SRA-MTF5-00001-29-29

SHIP PC	MARK	ASSY PC	DESCRIPTION	LENGTH FEET	LENGTH INCHES	SPEC	ID	EST WT
2	30-9		PIPE 3" SCHED 80S *	4	2	M3		
1	30-10		PIPE 3" SCHED 80S *	2	6 1/2	M3		
1	30-11		PLATE 8" x 1/2" THK	2	8	M1		
1	30-12		PLATE 8" X 1/2" THK	0	8	M1		
1	30-13		FLAT BAR 1 1/2" X 1/2" THK	2	5 1/8"	M1		
			M1 = ASME SA240 TP 316/316L					
			M3 = ASME SA312 TP 316/316L					
			* = LENGTHS ESTIMATED. CUT TO FIT					

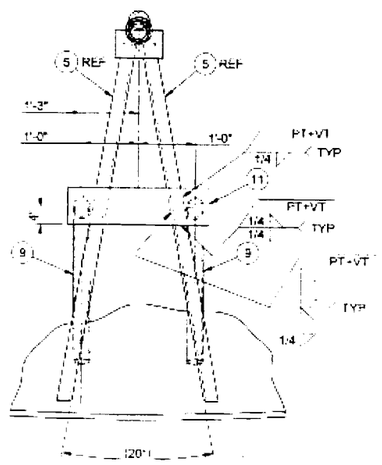

SECTION J-J

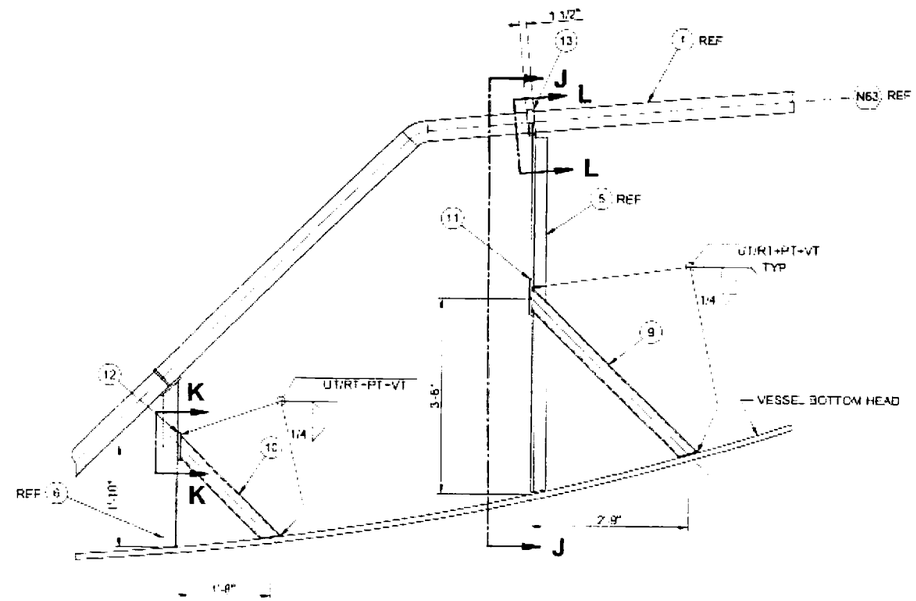

SECTION A
(SUPPORT MODIFICATION)

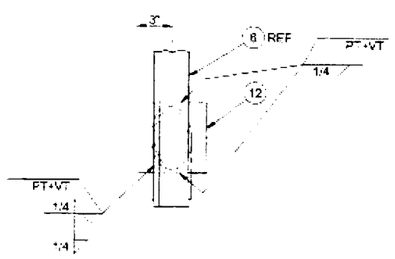

VIEW K-K

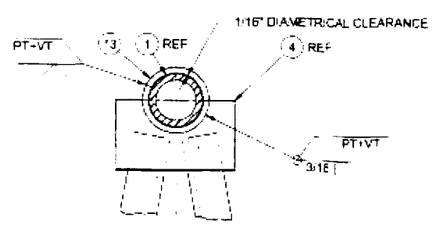

SECTION L-L

CBI RECEIVED
APR 0 5 2005

REVISE BY RPP-WTP ON HOLD → 160S

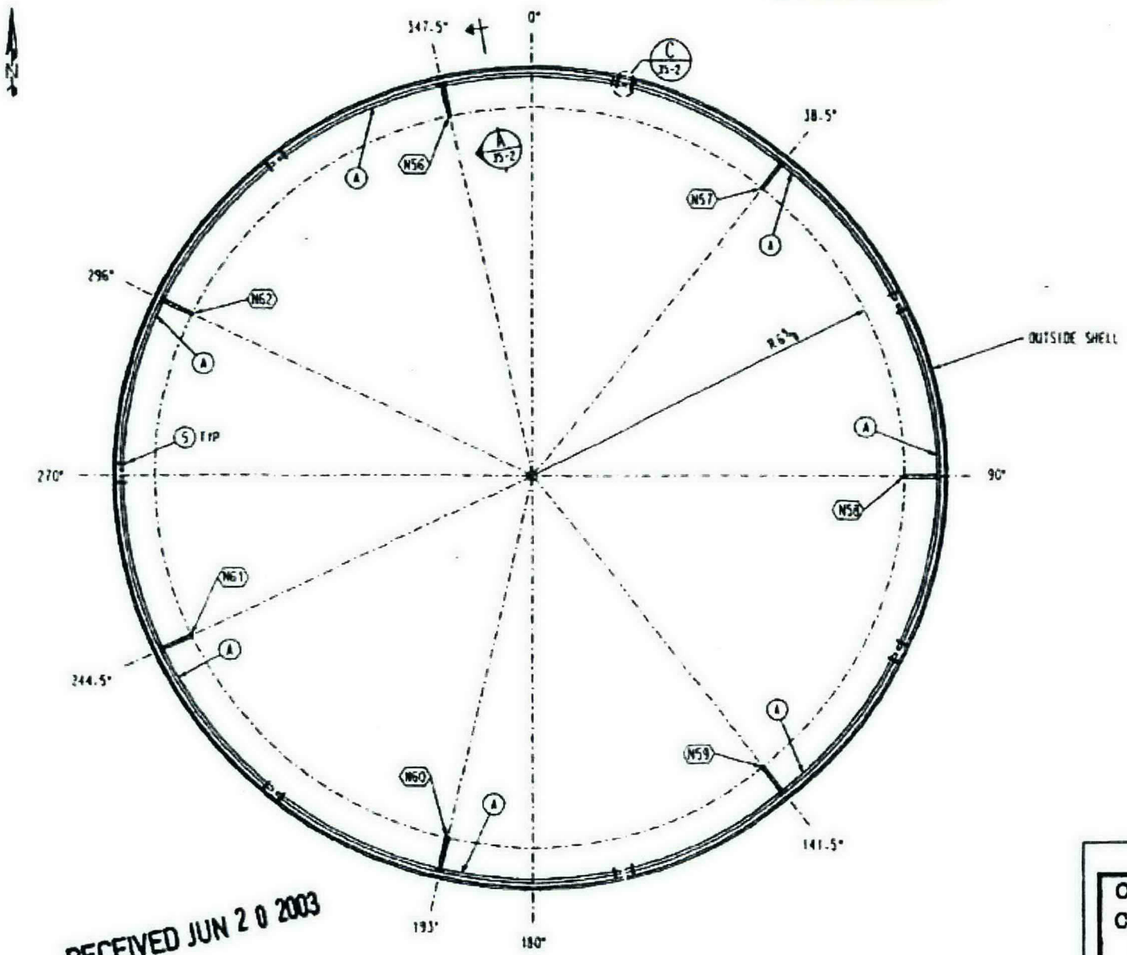

WASH RING PLAN VIEW
N56-N62

SHEET NO.	MARK	ASSM NO.	DESCRIPTION	LENGTH FT	LENGTH IN	SPEC	ID	EST WT
1	35-A		2" DIA WASH RING ASSEMBLY					672
	35-1	7	PIPE 2" [illegible] 405 X SK SMLS	10	0 25/32	*	C	266
			BOE PIPE [illegible] 3 -4 [illegible] SHEAR					
	35-2	7	PIPE 2" [illegible] 405 X SK SMLS	10	0 25/32	*	C	266
			BOE PIPE [illegible] 3 -4 [illegible] SHEAR					
	35-3	7	STRAIGHT TEE 2 X 2 [illegible] 405 [illegible]			M7	A	28
	35-4	14	PL 2 1/16 DIA X 1/2			M1	C	7
	35-6	7	PIPE 2" DIA SCH 160S SMLS BOE SADE	4	2 3/32	M3	A	105
14	35-5		PL 5 1/16 X 1/2 X SK	1	3 3/32	M1	A	158
			M1=SA240 316L.CBI SPEC A-240-2404					
			M3=SA312 TP316L.CBI SPEC A-312-2406					
			M7=SA403 316LWPS.CBI SPEC A-403-2472					
			* A312 TP316L					

NOTES:
1. ALL WELDS TO BE 316L UNLESS NOTED OTHERWISE.
2. WORK WITH DWG #1, #2, #3, & DWG #35 SHT'S 2 & 3.

RECEIVED JUN 2 0 2003

R10242462

24590-QL-SRA-MTF5-00001-29-32
REV 00 B

RECEIVED JUN 2 0 2003

CERTIFIED AS BUILT
CONTRACT DRAWING
DATE: 4/5/05
SIGNED: [signature]

CBI

N56 - N62 INLETS TO WASH RING
WASH RING
WASTE FEED RECEIPT
VESSEL FRP-VSL-[illegible] (0)
RICHLAND, WA

CONTRACT NO 1372820
REV 2

2023501D.DGN

4/23/03 4-29-03
Processed Data Entry
Copied/ QA
Scanned
Filed
(B) (A) 4/21/03
(C) ed 4-23-03

Attachment 2
11-ESQ-237
(2 Pages)

Bechtel National, Inc. and U.S. Department of Energy,
Office of River Protection Certification Statements

Bechtel National, Inc. Certification

The following certification statement is provided consistent with Contract No. DE-AC27-01RV14136, Section H.26, Environmental Permits, paragraph (g) for the submittal of the permit package PTF-009, Revision 2, *Supplemental Permit Package for FRP-VSL-00002A, FRP-VSL-00002B, FRP-VSL-00002C, and FRP-VSL-00002D Vessel Alterations.*

I certify under penalty of law that this document and all attachments were prepared under my direction or supervision in accordance with a system designed to assure that qualified personnel properly gather and evaluate the information submitted. Based on my inquiry of the person or persons who manage the system, or those persons directly responsible for gathering the information, the information submitted is, to the best of my knowledge and belief, true, accurate, and complete. I am aware that there are significant penalties for submitting false information, including the possibility of fine and imprisonment for knowing violations.

F. M. Russo
Project Director

9/12/11
Date

U.S. Department of Energy, Office of River Protection Certification

The following certification statement is provided for the submittal of permit package PTF-009, Revision 2, "Supplemental Permit Package for FRP-VSL-00002A, FRP-VSL-00002B, FRP-VSL-00002C, and FRP-VSL-00002D Vessel Alterations."

I certify under penalty of law that this document and all attachments were prepared under my direction or supervision in accordance with a system designed to assure that qualified personnel properly gather and evaluate the information submitted. Based on my inquiry of the person or persons who manage the system, or those persons directly responsible for gathering the information, the information submitted is, to the best of my knowledge and belief, true, accurate, and complete. I am aware that there are significant penalties for submitting false information, including the possibility of fine and imprisonment for knowing violations.

S. L. Samuelson, Manager U.S. Department of Energy Office of River Protection	9/29/11 Date