0032887
7067

U.S. DEPARTMENT OF ENERGY
Hanford Waste Vitrification Plant
Richland, Washington
DOE Contract DE-AC06-86RL10838

FLUOR DANIEL, INC.
Advanced Technology Division
Fluor Contract 8457

SECTION 16100
ELECTRICAL INSTALLATION
B-595-C-E350-16100

APPROVED FOR CONSTRUCTION

REVISION 1 PER CR-0690, CR-0854, CR-0884, CR-0859
ISSUE DATE 8/4/93

WAPA YES ___ NO X
QUALITY LEVEL I ___ II X
SAFETY CLASS 1__ 2__ 3X 4__

ORIGINATOR:

Charles Simpson 7-29-93
C. C. Simpson, Electrical Engineer Date

CHECKER:

M. Morrow 7/29/93
M. Morrow, Electrical Engineer Date

APPROVED BY:

K. A. Owrey
K. A. Owrey Lead Discipline Engineer

7-30-93
Date

SECTION 16100
ELECTRICAL INSTALLATION
B-595-C-E350-16100

TABLE OF CONTENTS

PART		PAGE
PART 1	**GENERAL**	1
1.1	SUMMARY	1
1.2	REFERENCES	1
1.3	RELATED REQUIREMENTS	2
1.4	DEFINITIONS	2
1.5	SYSTEM DESCRIPTION	2
1.6	SUBMITTALS	3
1.7	CLASSIFICATION OF SYSTEM AND COMPONENTS	3
1.8	PROJECT OR SITE ENVIRONMENTAL CONDITIONS	3
PART 2	**PRODUCTS**	4
2.1	MATERIALS AND EQUIPMENT	4
2.2	FABRICATION AND MANUFACTURE	4
PART 3	**EXECUTION**	4
3.1	INSTALLATION, APPLICATION AND ERECTION	4
3.2	FIELD QUALITY CONTROL	15
3.3	ADJUSTMENTS	15
3.4	CLEANING	15
3.5	PROTECTION	15
3.6	DEMONSTRATION	16
3.7	SCHEDULES	16

SECTION 16100
ELECTRICAL INSTALLATION

PART 1 GENERAL

1.1 SUMMARY

1.1.1 Seller shall furnish all labor, material, tools, and equipment necessary to perform installation of electrical equipment and systems for the Canister Storage Building as shown on the Contract Drawings and in accordance with the requirements of this section.

1.1.2 Seller shall be responsible for electrical installation of equipment wiring and conduit to components where not specifically defined on the Contract Drawings, or where purchased equipment differs from equipment defined on the Contract Drawings.

1.1.3 Seller shall provide and install locknuts, union fittings, conduit extensions, reducers, etc. as required to connect equipment.

1.1.4 Dimensional tolerance shall be ±1 inch unless otherwise specified on the Contract Drawings.

1.1.5 Seller shall be responsible for providing alternate installation for the as-purchased equipment if the as-purchased equipment differs from the detailed design on the Contract Drawings.

1.1.6 Prior to installation of the underground conduit and conduit stub-ups, the Seller shall verify MCC vendor drawings for the accuracy of conduit stub-ups location.

1.2 REFERENCES

The publications listed below form a part of this specification to the extent referenced. The publications are referred to in the text by the basic designation only.

AMERICAN SOCIETY FOR TESTING MATERIALS (ASTM)

ASTM D 2855	1990 Standard Practice for Making Solvent - Cemented Joints with Polyvinyl Chloride, PVC Pipe and Fittings

NATIONAL FIRE PROTECTION ASSOCIATION (NFPA)

NFPA 70	1990 National Electrical Code (NEC)
NFPA 78	1989 Lightning Protection Code

UNDERWRITER'S LABORATORIES (UL)

UL96A	1982 Installation Requirements for Lightning Protection Systems, Ninth Edition; July 6, 1990

1.3 **RELATED REQUIREMENTS**

Specification Section 16110	Electrical Materials and Devices
Specification Section 16111	Conduit/Cable Schedule
Specification Section 16143	Uninterruptible Power Supply System
Specification Section 16482	Motor Control Centers
Specification Section 16610	Electrical Requirements for Packaged Equipment
Specification Section 16905	Electrical Testing

1.4 **DEFINITIONS**

(Not Used)

1.5 **SYSTEM DESCRIPTION**

1.5.1 Power Supply

1.5.1.1 The power distribution systems within the Canister Storage Building shall be 480Y/277 V ac, 3 phase, 60 Hz, 4 wire and 208Y/120 V ac, 3 phase, 60 Hz, 4 wire normal power distribution systems.

1.5.1.2 The normal power distribution systems shall supply a 480Y/277 V ac, 3 phase, 60 Hz, 4 wire service to Motor Control Centers #MC-32A-205 and #MC-32B-205.

1.5.1.3 Deleted.

1.5.1.4 The 208Y/120 V ac, 3 phase, 60 Hz, 4 wire normal power distribution system shall be supplied from the Motor Control Center through a step down transformer.

1.5.1.5 The uninterruptible power supply systems (UPS) shall supply critical instrument loads as shown on the Contract Drawings.

1.5.1.6 The main incoming cables to MCCs, #MC-32A-205 and #MC-32B-205 are not included in the scope of this package.

1.5.1.7 Deleted.

1.5.1.8 Electrical control and instrumentation power shall be supplied from a 120 V ac, single phase, 60 Hz power source as shown on Contract Drawings.

1.6 **SUBMITTALS**

1.6.1 Submit the following in accordance with the Vendor Drawing and Data Requirements section of the subcontract:

A. As-Built Drawings

B. Lightning protection system installation requirements per Underwriter's Laboratories 96A.

1.7 **CLASSIFICATION OF SYSTEM AND COMPONENTS**

(Not Used)

1.8 **PROJECT OR SITE ENVIRONMENTAL CONDITIONS**

1.8.1 Climatic and Geographic Site Conditions

A. Site Elevation 714 feet above sea level

B. Barometric Pressure 14.3 psia

C. Outside Design Temperature

1) Maximum Design Temperature 110°F

2) Minimum Design Temperature -20°F

1.8.2 Operating Environment

A. Indoor Temperatures 55°F to 104°F

B. Indoor Vault Temperatures -27°F to 180°F

C. Relative Humidity

1) Offices 55% Maximum

2) FOS #5 Room 50% ± 5%

PART 2 PRODUCTS

2.1 MATERIALS AND EQUIPMENT

2.1.1 Seller shall install all Government Furnished Equipment (GFE) and Seller furnished equipment, to include MCC's, UPS system, all material, devices and equipment required to perform electrical installation work in accordance with the Contract Drawings and specifications.

2.1.2 Electrical material and devices shall be in accordance with Specification Section 16110, Electrical Materials and Devices.

2.2 FABRICATION AND MANUFACTURE

(Not Used)

PART 3 EXECUTION

3.1 INSTALLATION, APPLICATION AND ERECTION

3.1.1 Materials and devices shall be installed in accordance with the National Electrical Code, NFPA 70, Lighting Protection Code, NFPA 78, all applicable federal, state and local codes, regulations and ordinances, the Contract Drawings and manufacturer's instructions.

3.1.2 Conduit

3.1.2.1 Minimum above ground conduit size shall be 3/4 inch exposed or embedded.

3.1.2.2 Above ground conduit shall be intermediate grade conduit (IMC) unless noted otherwise on the Contract Drawings. Maximum IMC size shall be 4 inches.

3.1.2.3 Conduits installed below grade shall be polyvinyl chloride (PVC) Schedule 80, or rigid galvanized steel conduit as noted on the Contract Drawing. Minimum size shall be 2 inches.

3.1.2.4 Flexible connections shall be six feet or shorter except as noted on the Contract Drawings. Liquid-tight flexible conduit shall be used for final connections to all motors, field instruments, transformers and equipment junction boxes.

3.1.2.5 Conduit shall not be secured directly to piping. Minimum separation of conduit parallel to or crossing uninsulated hot water or steam pipes shall be 12 inches if parallel, or 6 inches if crossing. Conduit parallel to or crossing insulated water

lines must be separated from the insulation surface of the water lines in either direction by at least 3 inches.

3.1.2.6 Intermediate metal conduit and rigid galvanized steel conduit shall be cut square with a conduit cutter and threaded with a conduit threader. The ends shall be reamed of burrs and all metal shavings and cutting lubricants shall be removed before the conduit is connected to the conduit system.

3.1.2.7 Bends and offsets shall be avoided wherever possible; but where they are necessary, they shall be made with a bending device. In no case shall the radius of any conduit bend be less than the minimum specified in the National Electrical Code or less than the allowable bending radius of the installed conductors. Any conduit crushed or deformed in bending will be rejected. Concentric bends are not required; however, the Seller shall maintain identical spacing between adjacent conduit runs both at the beginning and after the bend.

3.1.2.8 Supports shall be erected square, and true to line and grade, with a minimum spacing of one support for every 10 feet of conduit length. Also, one support shall be provided within 3 feet of each conduit terminal fitting or box, except where details on the Contract Drawings require closer spacing.

3.1.2.9 Conduit shall be secured to walls, building framing, etc. by the use of malleable iron galvanized U bolts, conduit clamps, conduit straps or channel fittings where channel racks or supports are used. Conduit support hardware shall be installed per manufacturer's instructions and shall be tightened to the steel to provide maximum clamping action. Conduit shall be securely fastened to all outlet boxes with double locknuts and insulating bushings unless boxes with conduit hubs are provided.

3.1.2.10 Intermediate metal conduit whether concealed or exposed, shall be adequately supported in accordance with Section 345-12 of the National Electrical Code and the Contract Drawings.

3.1.2.11 Conduit openings into which dirt, plaster, mortar mix or debris may fall shall be closed with caps or tight-fitting plugs during the construction period. Conduits in which such material has accumulated shall be thoroughly cleaned. Where such accumulations cannot be readily removed, the conduit shall be replaced.

3.1.2.12 Vertical drops to equipment in open spaces shall be supported from the equipment foundation as shown on the Contract Drawings and/or as required by the National Electrical Code. Supporting of conduit from equipment is not allowed.

3.1.2.13 When not shown in detail on the Contract Drawings or when an installation interference exists, the exact locations and routing of conduit shall be determined by the Seller and approved by the Buyer.

3.1.2.14 Spacing between parallel conduit runs of different services shall be maintained as indicated below:

Voltage Level	Analog Signal <50 V	Analog Signal >50 V	Digital Signal
120 V	12"	9"	12"
480 V	12"	9"	12"

3.1.2.15 Fittings on conduit systems having threaded connections shall be made up tight, with full thread engagement, and with a minimum of wrench work in order to avoid wrench cuts. Running threads and slip joints are not permitted. Joints shall provide structural rigidity and low electrical resistance across the joints. All open conduit ends shall have bushings unless other terminations are shown on the Contract Drawings.

3.1.2.16 Installation procedures for making PVC conduit joints, using PVC primer and solvent cement shall be in accordance with ASTM D 2855.

3.1.2.17 Before making up conduit runs, the interiors of all conduit, conduit bends and fittings shall be inspected and cleaned of all dirt, cuttings and other foreign material.

3.1.2.18 Rigid steel conduit elbows shall be plastic wrapped and installed on all conduit stubup locations, through concrete floor slab penetration from the duct bank system.

3.1.3 Enclosures

3.1.3.1 Junction Boxes and Pull Boxes.

3.1.3.1.1 Junction boxes, pull boxes and conduit fittings required by the National Electrical Code or required to facilitate spreading and/or pulling conductors shall be furnished regardless of whether shown on the Contract Drawings or not.

3.1.3.1.2 Boxes shall be rigidly secured in position to building structures. Boxes, except on unfinished ceilings and walls, shall be set so that the front edge of the box or cover shall be flush with the finished surface.

3.1.3.1.3 Unused knockouts shall remain closed or shall be sealed with knockout closures or conduit plugs.

3.1.4 Conduit Support Devices and Hardware

3.1.4.1 Conduit supports and equipment racks shall be furnished and installed by the Seller as required by National Electrical Code and as shown on the Contract Drawings.

3.1.4.2 Fastenings to steel shall be by means of machine screws, hex head cap screws, bolts or Buyer approved welding method. The overall strength of fastening by any method for branch circuit panelboards and dry-type transformers, see Specification Section 16110, Attachments A and B for equipment numbers, shall be at least equal to four 3/8 inch diameter A-307 bolts. No wood or fiber plugs shall be permitted. Fastenings to concrete shall be in accordance with Specification Section 03252, Drill Anchors.

3.1.4.3 Seller shall drill, tap, or weld to structural steel as shown on the Contract Drawings to mount equipment and material.

3.1.4.4 Seller shall supply and install electrical supports where structural supports cannot be used or are not available.

3.1.5 Cables

3.1.5.1 Cables shall not be pulled until the conduit system is complete, from pull point to pull point.

3.1.5.2 Care shall be exercised while installing cable in conduits so as not to damage the conductor insulation. Pulling compounds may be used in pulling conductors and shall be used if cable is pulled by mechanical means.

3.1.5.3 Cable as it is pulled, shall be visually inspected by the Seller. If any abrasions, such as cuts in insulation, kinks or insulation defects are found, the Seller shall suspend pulling and report the cable's condition to the Buyer.

3.1.5.4 Suitable mandrel and swab shall be pulled through conduit prior to pulling cable into conduit. Lubricant may be blown into conduits to facilitate pulling of cables, but grease or other materials harmful to insulation shall not be used.

3.1.5.5 Pulling tension shall be monitored by a tension dynamometer or similar device whenever a mechanical or electrical wire puller is used. If pulling tensions exceed values recommended by cable manufacturer, Seller shall suspend pulling until further procedure has been approved by the Buyer.

3.1.5.6 Terminations shall generally be made using insulated ring tongue compression type lugs for all conductors other than for lighting circuits, where the wire shall be formed to the terminal connection. Connections at motor leads, transformers, and other

similar connections to insulated leads or busses, shall be covered and taped in a manner appropriate to the class of insulation originally on the conductor, with the taping extended over the terminal connector fitting and the terminal of the device to which the conductor is attached.

3.1.5.7 At panels and other enclosures, an allowance shall be made in conductor length to permit forming the conductors neatly within the enclosures. Where wiring troughs are not provided with the enclosures, the wiring shall be neatly cabled and adequately supported.

3.1.5.8 Power and control conductors shall be rung out before connections are made at terminals. Polarity, phasing and rotation shall be checked and changes made as required before terminal connections are made.

3.1.5.9 Control, alarm, and indication conductor terminations shall be made in accordance with the Contract Drawings.

3.1.5.10 Splices in power and control conductors shall not be permitted except where specifically indicated on the contract drawings or authorized in writing by Buyer. Splices shall be made by the Seller for each type of wire in accordance with instructions issued by wire manufacturer.

3.1.5.11 Conductors shall be pulled into conduit in such manner as to avoid sharply bending or kinking the conductor, or damaging or stressing insulation. Minimum cable bending radius shall not be smaller than that specified by the manufacturer.

3.1.5.12 Shields and drain wires shall be terminated (grounded) as shown on the Contract Drawings. Field end of shield and drain wire shall be insulated per details on the Contract Drawings to prevent accidental grounding.

3.1.5.13 Color Coding

3.1.5.13.1 Grounded, neutral conductors No. 2 AWG and smaller shall have pigmented insulation. Grounded conductors larger than No. 2 AWG shall be identified at all terminals or junction points by wrapping with self-adhesive, vinyl plastic electrical tape. Color coding shall be as described below. Sufficient length of cable nearest terminal or junction point shall be easily identifiable when covers of lighting panels, transformers, junction boxes, safety switches, etc., are removed.

3.1.5.13.2 Conductors for 480Y/277 volt three phase systems shall be color coded with pigmented insulation as follows: Phase A - Brown, Phase B - Orange, Phase C - Yellow, Grounded Neutral - Gray, Grounding Conductor - Green.

3.1.5.13.3 Conductors for 208Y/120 volt three phase systems shall be color coded with pigmented insulation as follows: Phase A - Black, Phase B - Red, Phase C - Blue, Grounded Neutral - White, Grounding Conductor - Green.

3.1.5.13.4 Any insulated conductor intended solely for grounding purposes shall be identified by a continuous green color.

3.1.5.13.5 Single conductor cable, when installed for control circuit, shall be black.

3.1.6 Splices, Taps and Connectors

3.1.6.1 Splices and taps shall be made in junction boxes or other National Electrical Code approved enclosures.

3.1.6.2 Compression connectors shall be installed in strict accordance with manufacturer's instructions, using properly sized and keyed connectors and dies.

3.1.7 Pull Lines and Cable Pulling Lubricant

3.1.7.1 A 240 pound tensile strength polypropylene pull line shall be installed in all conduits for which conductors are not installed by the Seller. A 10 inch length of the pull line shall extend out of each end of all conduits.

3.1.8 Identification

3.1.8.1 Equipment

3.1.8.1.1 Distribution panelboards, transformers, pull boxes, circuit breakers, motor controllers, 480 V power receptacles, and other similar electrical equipment shall be identified by means of phenolic laminated nameplates. The nameplate inscription shall include the equipment number as a minimum and shall be in accordance with the Contract Drawings or equipment specification. Nameplates shall be in accordance with Specification Section 16110 and the Contract Drawings.

3.1.8.1.2 Cardholders and directory cards shall be provided for circuit identification in panelboards. List of circuits shall be typewritten. Circuit description shall include equipment or areas served and/or location of equipment as described in the Contract Drawings.

3.1.8.2 Cables

3.1.8.2.1 Cables shall be identified in accordance with Conduit/Cable Schedule Specification Section 16111 applied with heat shrinkable plastic.

3.1.8.2.2 Cable numbers shall be applied at each cable termination and inside terminal enclosures.

3.1.8.3 Conduits

3.1.8.3.1 Conduits listed on the Conduit/Cable Schedules Specification Section 16111 shall be identified with self-adhesive vinyl cloth in accordance with Specification Section 16110.

3.1.8.3.2 Conduits shall be identified at the motor control center, entry and exit points of all junction or pullboxes, T-fittings, on both sides of any walls or floors which conduits penetrate and at equipment in which they terminate as shown on the Contract Drawings.

3.1.8.4 Junction Boxes

Identification number, where indicated on the Contract Drawings, shall be stencilled on the box cover and box side.

3.1.9 Lighting

3.1.9.1 Fixtures

3.1.9.1.1 Lighting fixtures shall be installed at locations shown on the Contract Drawings. Fixture installation shall be in accordance with the manufacturer's instructions or as detailed on the Contract Drawings and specifications.

3.1.9.1.2 Rows of fixtures shall be installed accurately as to line and level. Fastenings and supports shall be set so that the fixtures will not be distorted by handling during normal maintenance. All parts including lamps shall be secured to prevent falling or dislocation.

3.1.10 Receptacles and Switches

3.1.10.1 Switch and receptacle boxes shall be mounted vertically, unless otherwise noted on the Contract Drawings.

3.1.10.2 Switch and receptacle boxes concealed in the non-concrete construction shall be firmly secured in place, set true, square and flush with the finished surfaces for the application of the appropriate cover plate.

3.1.10.3 Unless shown otherwise on the Contract Drawings, outlets shall be located as listed below with measurements taken to the bottom of the outlets.

A. Receptacles - 18 inches above finished floor

B. Switches - 54 inches above finished floor

3.1.11 Grounding

3.1.11.1 The grounding system including underground duct banks, grounded electrical circuits, ground rods, lightning protection ground rods, instrument test grounding, etc., shall be in accordance with the Contract Drawings. In addition to the grounding specified herein or on the Contract Drawings, all ground connections required by the National Electrical Code shall be furnished and installed.

3.1.11.2 The enclosing cases, mounting frames, etc., of all switches, circuit breakers, control panels, motors and other electrical equipment shall be grounded by a grounding conductor from a ground bus established at the source of supply to the equipment to be grounded. This grounding conductor shall be run inside the raceway enclosing the power conductors supplying the equipment. When equipment power conductors are supplied by a multi-conductor cable, a grounding conductor shall be included in the cable.

3.1.11.3 Grounding conductors shall be copper. Routing shall be as shown on the Contract Drawings.

3.1.11.4 Equipment grounding conductors shall connect to the related equipment ground bus, if provided, or equipment frame/enclosure.

3.1.11.5 Before connections are made, all contact surfaces shall be clean of grease, dirt and debris. Apply approved anti-oxidizing compound to clean contact surfaces for pressure or clamp-on type ground connections.

3.1.11.6 Exothermic weld connections shall be made by the Cadweld process or equal. Grounding connections shall include but not be limited to, all cable to cable splices, tees, X's, cable to ground rods, copper to steel or cast iron and cable lug terminations as shown on the Contract Drawings.

3.1.11.7 Nonelectrical equipment, such as structural steel supports, and building rebar shall be grounded as shown on the Contract Drawings.

3.1.11.8 Grounding cables shall be protected against mechanical damage before and during backfill. Backfill material within 1'-0" of cables shall not contain rocks larger than 2" in diameter.

3.1.11.9 Instrumentation Grounding

3.1.11.9.1 Instrument cable shields shall be grounded at one end only.

3.1.11.9.2 Shield grounding of instrument signal, mA and mV, conductors shall be electrically and mechanically isolated from all other grounding conductors or grounded surfaces.

3.1.11.9.3 Isolated instrument ground bus, as shown on Contract Drawings shall be the only ground bus connection to which instrument ground conductors may be terminated.

3.1.11.9.4 Instrument test grounding shall be a separate and isolated grounding system. The insulated copper conductor shall be run in PVC conduit and stubup shall be in rigid steel conduit. Routing shall be as shown on the Contract Drawings.

3.1.11.10 Electrical Equipment Grounding

3.1.11.10.1 An insulated continuous ground conductor shall be run in all conduit with the circuit conductors.

3.1.12 Openings, Penetrations, and Inserts

3.1.12.1 The Seller shall provide all openings required for his work except for those openings identified specifically as shown on the Contract Drawings.

3.1.12.2 The Seller shall seal all penetrations passing through floors, fire rated walls and where specified on the Contract Drawings. Sealants shall be in accordance with Specification Section 07900 and installed as shown on Contract Drawings.

3.1.13 Heat Tracing

3.1.13.1 Installation shall be in accordance with the manufacturer's instructions, the Contract Drawings and the requirements included in this specification.

3.1.13.2 The surface on which the heater cable is to be installed shall be wiped clean of any loose foreign material, such as scale, rust, dirt, etc.

3.1.13.3 Heater cable shall be secured to the pipe with glass or aluminum tape as indicated on the Contract Drawings.

3.1.13.4 Power connection to the heater cable shall be made with connection kit supplied with heater cable.

3.1.13.5 Control and monitoring thermocouples shall be installed as indicated on the Contract Drawings.

3.1.13.6 Pilot light assembly shall be installed at both ends of each heat tracing run to indicate voltage continuity.

3.1.14 Motor Control Centers (GFE)

3.1.14.1 Installation of the MCC's shall be in accordance with manufacturer's instructions and the Contract Drawings.

3.1.14.2 Interconnections of vertical sections including power and ground buses shall be carefully remade and insulated as required. Power buses bolted or clamped joints shall be drawn up to torque values defined by manufacturer.

3.1.14.3 Motor Control Centers shall be anchored to the embedded mounting channel flush in concrete. The base of each vertical section, front and back, shall be welded to embedded channel with 3/16 inch fillet welds, minimum 3 inches long.

3.1.14.4 MCC's space heaters shall be energized during storage and construction per manufacturer's instructions to prevent accumulation of condensation.

3.1.15 Dry-Type Transformers

3.1.15.1 Transformers shall be mounted as indicated on the Contract Drawings. Location and method of securing transformers shall be done in accordance with this specification, manufacturer's instructions and the Contract Drawings.

3.1.15.2 Power, ground and neutral connections shall be made in accordance with manufacturer's instructions. Bolt-on clamped joints shall be drawn up to torque values, defined by the manufacturer.

3.1.16 Panelboards

3.1.16.1 Panelboard assemblies shall be installed with the position of the highest device not exceeding 6-1/2 feet above the floor. See the Contract Drawings for mounting. Cabinets shall have fronts straight and plumb.

3.1.16.2 Panelboards shall be factory assembled and tested.

3.1.16.3 UPS Distribution Panel "C", DA-34A-601, shall have a bonding jumper, 1 #2 green wire, from the isolated ground bus to the neutral bus.

3.1.17 Pull Boxes

Installation of pull boxes shall be in accordance with this specification and the Contract Drawings.

3.1.18 Underground Duct Banks

3.1.18.1 Underground duct banks shall consist of rigid galvanized steel or Schedule 80 PVC conduit and ground wire encased in concrete as shown on the Contract Drawings. Adjust final slopes on site to coordinate with other utilities. Joints in conduit shall be water-tight.

3.1.18.2 Minimum depth for duct banks shall be 2'-6" except as noted on the Contract Drawings.

3.1.18.3 Clean duct before installing. Plug conduit ends to prevent entry of dirt, concrete, mud and other foreign material during construction.

3.1.18.4 After underground conduit runs have been completed, pull a test mandrel and wire brush through each conduit to check alignment and remove foreign matter.

3.1.19 Uninterruptible Power Supply (UPS)

3.1.19.1 Handling, storage and installation of the UPS and battery cabinets shall be in accordance with manufacturer's instructions and the Contract Drawings.

3.1.19.2 Interconnections, including two power sources with ground buses, and battery cabinet shall be completely assembled, connected and anchored in place as shown on the Contract Drawings.

3.1.19.3 The UPS and battery unit shall be energized as required by the manufacturer's instructions. Maintenance shall be performed on the UPS batteries per manufacturer's instructions. Maintenance records shall be kept by the Seller.

3.1.20 HVAC Equipment, Health Protection System Vacuum Blowers, Telescopic Door, Magnetic Intrusion Door Alarm System and Sewage Lift Station.

3.1.20.1 Installation of electrical connections to HVAC equipment, vacuum blowers, telescopic door, magnetic intrusion door alarm system and sewage lift station shall be in accordance with manufacturer's instructions and the Contract Drawings.

3.1.21 Lightning Protection

3.1.21.1 Installation of the lightning protection shall be done in accordance with the requirements of NFPA 78, Lightning Protection Code, UL 96A, this specification and the Contract Drawings.

3.1.21.2 Installation of the lightning protection shall consist of a complete system of air terminals, stack and plenum ground, interconnect conductors, ground test wells, down conductors, ground terminals, ground loops and other connectors or fittings required to complete the system as shown on the Contract Drawings.

3.1.21.3 Drive ground rods two to six feet from the structure. Top of ground rod shall be 12 to 18 inches below grade level. Where two or more ground rods are shown at a grounding location on the Contract Drawings, each ground rod shall be ten feet apart.

3.2 **FIELD QUALITY CONTROL**

Electrical materials and equipment shall be inspected and tested in accordance with Specification Section 16905, Electrical Testing.

3.3 **ADJUSTMENTS**

(Not Used)

3.4 **CLEANING**

3.4.1 Clean and remove all debris, excess material and equipment from the job site after completion of installation.

3.4.2 Clean electrical parts with approved cleaner to remove conductive and deleterious materials. Remove dirt and debris from enclosures and fixtures.

3.4.3 Clean and repair all steel surfaces damaged during preparation, welding or installation with a approved galvanizing compound in accordance with manufacturer's recommendations and instructions.

3.5 **PROTECTION**

3.5.1 Seller shall be responsible for receiving, storing and site handling of all GFE and Seller furnished equipment and materials.

3.5.2 During installation Seller shall protect from damage all existing facilities, equipment and materials. Existing facilities, equipment or materials which are damaged during the installation shall be repaired at Seller's expense in accordance with contract terms and conditions.

3.5.3 Where the corrosion protective finish on any material or equipment is removed by machining, welding, or by accident, the original finish shall be restored by an application of compatible protective finish.

3.6 **DEMONSTRATION**

(Not Used)

3.7 **SCHEDULES**

(Not Used)

END OF SECTION

U.S. DEPARTMENT OF ENERGY
Hanford Waste Vitrification Plant
Richland, Washington
DOE Contract DE-AC06-86RL10838

FLUOR DANIEL, INC.
Advanced Technology Division
Fluor Contract 8457

SECTION 16110
ELECTRICAL MATERIALS AND DEVICES
B-595-C-E350-16110

APPROVED FOR CONSTRUCTION

REVISION	1 PER CR-0690, CR-0854, CR-0884, CR-0859	WAPA	YES ___	NO X	
ISSUE DATE	8/4/93	QUALITY LEVEL	I ___	II X	
		SAFETY CLASS	1__ 2__	3X 4__	

ORIGINATOR:

Charles Simpson 7-29-93
C. C. Simpson, Electrical Eng. Date

CHECKER:

M. Morrow 7/29/93
M. Morrow, Electrical Engineer Date

APPROVED BY:

K. A. Owrey
K. A. Owrey Lead Discipline Engineer

7-30-93
Date

SECTION 16110
ELECTRICAL MATERIALS AND DEVICES
B-595-C-E350-16110

TABLE OF CONTENTS

PART		PAGE
PART 1	**GENERAL**	1
1.1	SUMMARY	1
1.2	REFERENCES	1
1.3	RELATED REQUIREMENTS	4
1.4	DEFINITIONS	4
1.5	SYSTEM DESCRIPTION	4
1.6	SUBMITTALS	4
1.7	CLASSIFICATION OF SYSTEM AND COMPONENTS	7
1.8	PROJECT OR SITE ENVIRONMENTAL CONDITIONS	7
PART 2	**PRODUCTS**	8
2.1	MATERIALS AND EQUIPMENT	8
2.2	FABRICATION AND MANUFACTURE	30
PART 3	**EXECUTION**	30
3.1	PREPARATION	30
3.2	INSTALLATION, APPLICATION AND ERECTION	30
3.3	FIELD QUALITY CONTROL	30
3.4	ADJUSTMENTS	30
3.5	CLEANING	30
3.6	PROTECTION	30
3.7	DEMONSTRATION	30
3.8	SCHEDULES	31

ATTACHMENTS

ATTACHMENT	TITLE
A	DRY TYPE TRANSFORMERS
B	ELECTRICAL PANELBOARDS
C	E350-DS-1, EVAPORATOR COOLER PUMP MOTOR CONTROLLERS
D	E350-DS-2, PULL BOXES

SECTION 16110
ELECTRICAL MATERIALS AND DEVICES

PART 1 GENERAL

1.1 SUMMARY

This specification section defines the technical requirements for furnishing and delivery of electrical equipment, materials and devices for the Canister Storage Building.

1.2 REFERENCES

The publications listed below form a part of this specification section to the extent referenced. The publications are referred to in the text by the basic designation only.

AMERICAN ASSOCIATION OF STATE HIGHWAY AND TRANSPORTATION OFFICIALS (AASHTO)

AASHTO HB-14	1989 Standard Specification for Highway Bridges

AMERICAN NATIONAL STANDARDS INSTITUTE (ANSI)

ANSI C57.12.70	1978 Terminal Markings and Connections for Distribution and Power Transformers
ANSI C57.12.90	1987 Standard Test Code for Liquid-Immersed Distribution, Power, and Regulating Transformers and IEEE Guide for Short Circuit Testing of Distribution and Power Transformers
ANSI C78.388	1990 Electric Lamps - High Pressure Sodium Lamps
ANSI C78.41	1987 Standards for Electric Lamps - Low Pressure Sodium Lamps
ANSI C80.1	1990 Rigid Steel Conduit
ANSI C82.2	1984 Standards for Fluorescent Lamps Ballasts - Methods of Measurement
ANSI C82.9	1988 High Intensity Discharge and Low Pressure Sodium Lamps, Ballasts, and Transformers - Definitions

AMERICAN SOCIETY FOR TESTING AND MATERIALS (ASTM)

ASTM B3	1990 Standard Specification for Soft or Annealed Copper Wire
ASTM B8	1990 Standard Specification for Concentric-Lay-Stranded Copper Conductors, Hard, Medium-Hard, or Soft
ASTM B187	1986 Standard Specification for Copper Bus Bar, Rod and Shapes
ASTM D 2564	1991 Standard Specification for Solvent Cement for Polyvinyl Chloride, PVC Plastic Pipe and Fittings
ASTM F 656	1989 Standard Specification for Primers for Use in Solvent Cement Joints of Polyvinyl Chloride, PVC Plastic Pipe and Fittings

FEDERAL AVIATION ADMINISTRATION (FAA)

FAA AC 150/5345-43: L-864	1988 Specification for Obstruction Lighting Equipment

NATIONAL ELECTRICAL MANUFACTURERS ASSOCIATION (NEMA)

NEMA 250	1985 Enclosures for Electrical Equipment (1000 Volts Maximum) Revision 2 - 1988
NEMA AB1	1986 Molded Case Circuit Breakers and Molded Case Switches
NEMA ICS 2	1988 Industrial Control Devices, Controller and Assemblies
NEMA ICS 4	1983 Terminal Blocks for Industrial Use
NEMA OS1	1989 Sheet-Steel Outlet Boxes, Device Boxes, Covers and Box Supports
NEMA PB-1	1990 Panelboards
NEMA ST20	1986 Dry Type Transformers for General Applications

NEMA WC5	1973 Thermoplastic-Insulated Wire and Cable for the Transmission and Distribution of Electrical Energy
NEMA WC7	1988 Cross-Linked-Thermosetting-Polyethylene-Insulated Wire and Cable for the Transmission and Distribution of Electrical Energy
NEMA WD1	1983 General Requirements for Wiring Devices

NATIONAL FIRE PROTECTION ASSOCIATION (NFPA)

NFPA 70	1990 National Electrical Code (NEC)
NFPA 78	1989 Lightning Protection Code

UNDERWRITERS LABORATORIES, INC. (UL)

UL 6	1983 Rigid Metal Conduit,
UL 13	1990 Power-Limited Circuit Cables
UL 44	1983 Rubber-Insulated Wires and Cables, 12th Edition, January 29, 1990, Bulletin July 6, 1990, Bulletin July 10, 1990
UL 50	1990 Cabinets and Boxes, Ninth Edition
UL 67	1988 Panelboards
UL 96	1985 Lightning Protection Components, Third Edition, December 5, 1988
UL 360	1986 Liquid-Tight Flexible Steel Conduit, Third Edition
UL 467	1984 Grounding and Bonding Equipment
UL 486A	1989 Wire Connectors and Soldering Lugs for Use with Copper Conductors
UL 489	1986 Molded-Case Circuit Breakers and Circuit-Breaker Enclosures
UL 510	1986 Insulating Tape
UL 514B	1989 Fittings for Conduit and Outlet Boxes, Second Edition

UL 651	1989 Schedule 40 and 80 Rigid PVC Conduit
UL 1059	1988 Terminal Blocks, Second Edition - 1989
UL 1242	1983 Intermediate Metal Conduit, First Edition
UL 1561	1991 Dry-Type General Purpose and Power Transformers

1.3 **RELATED REQUIREMENTS**

Specification Section 01730 Operation and Maintenance Data

Specification Section 16100 Electrical Installation

Specification Section 16143 Uninterruptible Power Supply System

Specification Section 16111 Conduit/Cable Schedule

Specification Section 16905 Electrical Testing

1.4 **DEFINITIONS**

(Not Used)

1.5 **SYSTEM DESCRIPTION**

(Not Used)

1.6 **SUBMITTALS**

Submit the following in accordance with the Vendor Drawing and Data Requirements section of the Order/Subcontract.

1.6.1 Catalog and Manufacturer's Data

Catalog and manufacturer's data shall be submitted for the following:

A. Conduit

B. Enclosures

C. Conduit fittings

D. Conduit support devices and hardware

E. Cables

F. Copper conductor terminations

G. Terminal Blocks

H. Pull lines and cable pulling lubricant

I. Cables Ties

J. Identification

K. Lighting fixtures

L. Receptacles

M. Switches

N. Control Equipment

O. Grounding materials

P. Sealant

Q. Conduit anti-seize compounds

R. Anti-oxidizing compounds

S. Utility chain

T. Insulating tape

U. Heat tracing materials and devices

V. Lightning Protection Materials

W. PVC primer and solvent cement

1.6.2 Physical characteristics of cable including the following:

A. Details of construction for each different type of wire

B. Overall wire diameter

C. Insulation thickness (average minimum and average maximum)

D. Thickness and color of jacket

1.6.3 Cable manufacturer's installation instructions including the following:

A. Maximum sidewall pressure

B. Maximum pulling tension

C. Permanent/temporary bending and turning radius

D. Acceptable splicing methods and materials

E. Pulling lubricant compatibility

1.6.4 Data Sheets

Submit product data sheets and shop drawings for transformers, cable connectors, UPS cabinet, battery cabinet, panelboards and circuit breakers.

1.6.5 Shop Drawings

1.6.5.1 Shop drawings or equivalent catalog outline sheets and manufacturer's data sheets shall be submitted for the material and equipment. Shop drawings shall include general assembly and construction details of the equipment; elevations; height, width, and depth dimensions; anchor bolt locations; bus and phasing arrangement; material identification; weight; and complete connection diagrams with unique wire numbers.

1.6.5.2 Submit detailed shop drawings for panelboards. They shall include the following:

A. Dimensional plan, front and end view of each panelboard enclosure supporting frame structure and sheet metal thickness of enclosure

B. Conduit entrance locations and dimensions for both top and bottom entrance

C. Detail drawings showing typical mounting details and section view including wiring trough location and dimensions

D. Neutral and ground bus connections

E. Weight of each panelboard

F. Connection diagram of individual panelboards with location of each circuit breaker indicated

1.6.6 Test Reports

Submit Certified Factory Acceptance Test Reports for transformers in accordance with ANSI Standard C57.12.90.

1.6.7 Installation Instructions

1.6.7.1 Submit manufacturer's installation instructions for the following:

A. Panelboards

B. Light Fixtures

C. Transformers

D. Heat Tracing

E. UPS Cabinet

F. Battery Cabinet

1.6.8 Manufacturer's Drawings

1.6.8.1 Lighting fixture drawings shall include dimensions, effective projected area, accessories, and installation and construction details. Drawings shall also include photometric data, including zonal lumen data, and candlepower distribution data.

1.6.9 Operation and maintenance data in accordance with Specification Section 01730, Operation and Maintenance Data.

1.6.10 Submit statement that lightning protection materials and components conform to the requirements for UL 96, Master Labels.

1.7 **CLASSIFICATION OF SYSTEM AND COMPONENTS**

(Not Used)

1.8 **PROJECT OR SITE ENVIRONMENTAL CONDITIONS**

1.8.1 Climatic and Geographic Site Conditions

A. Site Elevation 714 feet above sea level

B. Barometric Pressure 14.3 psia

C. Outside Design Temperature

1) Maximum Design Temperature 110°F

2) Minimum Design Temperature -20°F

1.8.2 Operating Environment

A.	Indoor Temperatures	55°F to 104°F
B.	Indoor Vault Temperatures	-27°F to 180°F
C.	Relative Humidity	
1)	Offices	55% Maximum
2)	FOS #5 Room	50% ± 5%

PART 2 PRODUCTS

2.1 **MATERIALS AND EQUIPMENT**

2.1.1 General

2.1.1.1 When applicable, all electrical materials and equipment shall be listed by Underwriter's Laboratories and shall bear the UL label.

2.1.1.2 Deleted.

2.1.1.3 When two or more components of the same specifications are required, the components shall be identical, that is same manufacturer and catalog number.

2.1.2 Conduits

2.1.2.1 Intermediate Metal Conduit

2.1.2.1.1 Intermediate metal conduit shall be hot dipped galvanized in accordance with UL 1242.

2.1.2.2 PVC Conduit

2.1.2.2.1 PVC conduit shall be Schedule 80 in accordance with UL 651.

2.1.2.3 Liquid-Tight Flexible Metal Conduit

2.1.2.3.1 Liquid-tight flexible metal conduit shall be fabricated of galvanized steel flexible tubing with a synthetic polyvinyl chloride (PVC) jacket extruded over the tubing. Jacket shall be positively locked to steel tubing to prevent sleeving. Liquid-tight flexible metal conduit shall be in accordance with UL 360.

2.1.2.4 Rigid Steel Conduit Elbows

2.1.2.4.1 Rigid steel conduit elbows shall be rigid steel conduit, hot dipped galvanized in accordance with ANSI C80.1 and UL 6. Underground elbows shall be plastic wrapped in accordance with the Contract Drawings.

2.1.3 Enclosures

2.1.3.1 Junction and Pull Boxes

Junction boxes shall be sized as indicated on the Contract Drawings. Where not specifically sized on the Contract Drawings, all boxes shall be sized in accordance with the National Electrical Code. Pull boxes shall be sized as indicated on Attachment D. Boxes and box covers shall be fabricated from sheet steel of gauges defined by National Electrical Code. Boxes shall be in accordance with NEMA OS1 and UL 50.

2.1.3.2 Instrument ground test panel shall be a hinged screw corner fiberglass NEMA 4X enclosure with back panel and sized as indicated on the Contract Drawings. Hoffman Enclosure Catalog Number A-16148CHSCFG and Panel Catalog Number LA-16P14 or equal.

2.1.4 Conduit Fittings

2.1.4.1 Cast malleable iron or steel conduit fittings used with intermediate metal conduit shall be thoroughly coated with metallic zinc or cadmium inside and outside after all machine work is completed and in accordance with UL 514B. Covers shall be from the same materials as fittings, and shall be raised to allow additional wiring area. Appleton Form 35 or equal. LB type fittings for 1-1/2 inch and larger conduit shall be Appleton LBD, LBDN or equal.

2.1.4.2 Mogul fittings shall be malleable iron with cadmium finish. Covers shall be from the same material as fittings, and shall be raised to allow additional wiring area. Appleton Series Moguls or equal.

2.1.4.3 Fittings used with liquid-tight flexible metal conduit shall be malleable iron/steel construction, electro zinc plated inside and outside, furnished with nylon insulated throat, taper threaded hub, and an external ground lug as shown on Contract Drawings. Appleton Series STB or equal.

2.1.4.4 Nonmetallic insulating type bushings used on intermediate metal conduit shall be Appleton Type BBU or equal.

2.1.4.5 Metallic insulating type bushing used on intermediate metal conduit shall be Appleton Type BU or equal.

2.1.4.6 Conduit drains shall be stainless steel, standard type and in accordance with UL 514B. Appleton ECDB or equal.

2.1.4.7 Conduit union fittings shall be steel, 1/2 inch - 1 inch or steel alloy 1-1/4 inch - 6 inch, with zinc-electroplated finish and in accordance with UL 514B. Appleton UNY and UNF or equal.

2.1.4.8 Conduit reducers shall be steel or steel alloy with zinc-electroplated finish. Appleton RB or equal.

2.1.5 Conduit Support Devices and Hardware

2.1.5.1 Conduit shall be supported by clamps and/or straps in accordance with the Contract Drawings and the National Electrical Code.

2.1.5.2 Conduit supports unless otherwise noted on the Contract Drawings shall be fabricated of 12 gauge, 1-5/8 inch by 1-5/8 inch, metal framing channels: Unistrut P-1000, pre-dipped galvanized with Unistrut P-1000 series, electrogalvanized, pipe clamps or equal.

2.1.5.3 Conduit clamps shall be malleable iron type with hot-dipped galvanized finish. Appleton Series PC or equal.

2.1.5.4 Conduit straps shall be one hole malleable iron strap and clamp back for 1/2 inch to 1 inch. Appleton CL and CLB for IMC or equal. Two hole steel strap, heavy duty, 1-1/4 inches and up shall be Appleton Series CF or equal.

2.1.6 Cables

2.1.6.1 General Requirements

2.1.6.1.1 Cable supplied shall be new, shall be the product of an established manufacturer normally engaged in the production of cable with a minimum of 5 years documented experience, and shall be that manufacturer's newest product.

2.1.6.1.2 Cable on each reel shall be continuous. Factory splices or factory repairs are not acceptable in individual conductors. Cable shall be free of abrasions and/or abnormalities.

2.1.6.1.3 The surface of the insulation shall have a durable marking, at intervals not exceeding 24 inches, which shall consist of: manufacturer's name, trademark, or other distinctive marking which identifies the organization responsible for the product; the type letters, TC or XHHW; the wire size in AWG; maximum voltage, 300 or 600 volts; and UL marking.

2.1.6.1.4 Each reel shall have a weatherproof metal or plastic tag, firmly attached indicating manufacturer, conductor size, length, manufacturer's type, temperature rating, voltage class, and Seller's purchase order and item numbers.

2.1.6.2 600 Volt Power and Control Cables

Cable codes as designated on the Electrical Cable Schedule, Specification Section 16111 shall be as follows:

Cable code example:

A L

CABLE TYPE	CONDUCTOR SIZE (AWG/kcmil)
A = Single Conductor	K = #14
B = 2/C + Ground	L = #12
C = 3/C + Ground	M = #10
E = 4/C + Ground	N = #8
F = 6/C + Ground	O = #6
G = 8/C + Ground	P = #4
H = 12/C + Ground	Q = #2
J = 18/C + Ground	R = #1
K = 24/C + Ground	S = #1/0
L = 36/C + Ground	T = #2/0
	U = #3/0
	V = #4/0
	W = #250
	X = #350
	Y = #500
	Z = 750

2.1.6.2.1 Single Conductor Cable

A. Cable shall be single conductor, stranded copper with 600 volt insulation. Cables shall be UL listed type XHHW or THHN in accordance with the National Electrical Code, NFPA 70, Article 310 and UL 44. Cables shall be color coded in accordance with Specification Section 16100.

B. Conductors for power and lighting circuits shall not be smaller than No. 12 AWG. Conductors for control circuits shall not be smaller than No. 14 AWG.

C. The insulation shall be a flame-retardant, heat and moisture resistant type of cross-linked-polyethylene compound. The insulation shall be in accordance with Part 3 of NEMA WC7.

D. Nominal insulation thickness and maximum wire diameter shall be as follows:

CONDUCTOR SIZE (AWG/kcmil)	INSULATION THICKNESS MILS	MAXIMUM WIRE O.D. INCHES
14	30	0.14
12	30	0.16
10	30	0.18
8	45	0.24
6	45	0.28
4	45	0.33
2	45	0.39
1	55	0.45
1/0	55	0.49
2/0	55	0.54
3/0	55	0.59
4/0	55	0.65
250	65	0.72
350	65	0.82
500	65	0.96
750	65	1.18

2.1.6.3 Instrument Cable

The following cables refer to cable code designations in the Cable Schedule, Specification Section 16111 and the Contract Drawings:

2.1.6.3.1 600 Volt, 4-20 mA Signal Cable, Cable Code AD

A. Cable shall be a shielded single twisted pair, 600V, #16 AWG. Conductor shall be uncoated, annealed, bare copper wire in accordance with ASTM B3 and Class B, concentric stranded in accordance with ASTM B8.

B. Primary insulation shall be 15 mils nominal 90°C rated polyvinyl chloride (PVC) and 4 mils nylon.

C. Cable shall contain one black and one white conductor.

D. Cable shield shall provide 100 percent coverage by aluminum-mylar laminate tape shield, helically applied over the twisted pair with the aluminum on inside in continuous contact with drain wire.

E. Cable shall include a bare #18 AWG 7 strand tinned copper drain wire.

F. Overall Jacket shall be 45 mils nominal 90°C rated black polyvinyl chloride (PVC).

G. Overall cable diameter shall be maximum of 0.325 inches.

H. Cable shall be constructed in accordance with UL 13 and NEMA WC5. Dekoron 1C52-67000 or equal.

2.1.6.3.2 600 Volt, 24 V dc Signal Cable, Cable Code AC

A. Cable shall be 2 conductor, 600V, #14 AWG. Conductor shall be tin coated copper wire Class B, concentric stranded in accordance with ASTM B8.

B. Primary insulation shall be 32 mils nominal 105°C rated polyvinyl chloride (PVC).

C. Cable shall contain one black and one white conductor.

D. Overall Jacket shall be 63 mils nominal 105°C rated black polyvinyl chloride (PVC).

E. Overall cable diameter shall be maximum of 0.40 inches.

F. Cable shall be constructed in accordance with UL 13 and NEMA WC5. Alpha 5442 or equal.

2.1.6.3.3 600 Volt, Millivolt Signal Cable, Cable Code AF

A. Cable shall be a shielded single triad, 600V, #16 AWG. Conductor shall be uncoated, annealed, bare copper wire in accordance with ASTM B3 and Class B, concentric stranded in accordance with ASTM B8.

B. Primary insulation shall be 15 mils nominal 90°C rated polyvinyl chloride (PVC) and 4 mils nylon.

C. Cable shall contain one black, one white and one red conductor.

D. Cable shield shall provide 100 percent coverage by aluminum-mylar laminate tape shield, helically applied over the twisted triad with the aluminum on inside in continuous contact with drain wire.

E. Cable shall include a bare #18 AWG 7 strand tinned copper drain wire.

F. Overall Jacket shall be 45 mils nominal 90°C rated black polyvinyl chloride (PVC).

G. Overall cable diameter shall be maximum of .342 inches.

H. Cable shall be constructed in accordance with UL 13 and NEMA WC5. Dekoron 1C62-67000 or equal.

2.1.6.3.4 600 Volt, 120 V Signal Cable, Cable Code AG

A. Cable shall be 2 conductor, 600 V, #14 AWG with ground. Conductor shall be tin coated copper wire Class B, concentric stranded in accordance with ASTM B8.

B. Primary insulation shall be 32 mils nominal 105°C rated polyvinyl chloride (PVC).

C. Cable shall contain one black, one white and one green conductor.

D. Overall Jacket shall be 63 mils nominal 105°C rated black polyvinyl chloride (PVC).

E. Overall cable diameter shall be maximum of 0.43 inches.

F. Cable shall be constructed in accordance with UL 13 and NEMA WC5. Alpha 5443 or equal.

2.1.7 Copper Conductor Terminations

2.1.7.1 Termination of control and instrument conductors shall be made with tin plated, copper compression, ring tongue, nylon, self-insulated terminals. Terminals shall be in accordance with UL 486A. Thomas and Betts Series RA for #22-18 AWG, RB for #16-14 AWG or equal.

2.1.7.2 Termination of circuits with two or three conductors per phase shall be made with two or four hole copper alloy solderless lugs. Burndy Type Q2A and Q3A or equal.

2.1.7.3 Termination of instrument pigtail leads and splicing of control and ground wires shall be made with insulated pressure connectors. Thomas and Betts "Sta-Kon" or equal.

2.1.7.4 Termination of 600 volt power conductors, smaller than #8 AWG, shall be made with ring tongue compression type lugs, bolted and taped. Lugs shall be in accordance with UL 486A. Connection for conductors smaller than #8 AWG shall be made with Thomas and Betts "Sta-Kon" Series "C" for #12-10 AWG or equal.

2.1.7.5 Termination and/or splicing of lighting leads shall be made with hand twist type, crimp type joint with tapered spring lock and nylon insulator skirt. Terminals shall be in accordance with UL 486A. Thomas and Betts "Piggy" wire joints, Catalog Type PT or equal.

2.1.7.6 Termination of control leads on screw terminals shall be made with tin plated, copper compression ring tongue, nylon, self-insulated terminals. Terminals shall be in accordance with UL 486A. Thomas and Betts Series RA for #22-18 AWG, RB for #16-14 AWG or equal with bolt holes to suit application.

2.1.7.7 Splices and taps in 600 volt power conductors No. 8 AWG and larger and terminations in equipment lugs, i.e., molded case circuit breakers, shall be made with wrought copper compression connectors.

TYPE OF CONNECTION	TYPE OF CONNECTOR	THOMAS AND BETTS SERIES NO. OR EQUAL
Splice	Two-Way Connector	54500
Tap	"C" Tap	54700
Termination	One-Hole Lug (#8 - #1 AWG) Two-Hole Lug (#1/0 - 4/0) Two-Hole Lug (250 MCM and larger)	54100 54200 53210

2.1.8 Terminal Blocks

2.1.8.1 Terminal blocks shall be in accordance with NEMA ICS 4 and UL 1059.

2.1.8.2 Terminal blocks shall be channel mounting type, rated 600 volts and with screw type terminals on both sides. Buchanan P0721 or equal.

2.1.8.3 Terminal blocks shall have at least 20 percent spare terminals but not less than two spare terminals for each terminal strip.

2.1.9 Pull Lines and Cable Pulling Lubricant

2.1.9.1 Pull lines shall be a 240 pound tensile strength polypropylene pull line.

2.1.9.2 Cable pulling lubricant shall be Buchanan Quick-Slip Catalog Number BQS-55 or equal.

2.1.10 Cable Ties

2.1.10.1 Spiral wrapping for wiring across hinged doors and similar applications shall be flame retardant polyethylene. Panduit Part Number T12R, T25R, T50R or equal.

2.1.10.2 Cable ties for bundling of cables in panels, terminal cabinets wireways, etc., shall be fire retardant nylon, self-locking type. Thomas and Betts TY-RAP Series or equal.

2.1.11 Identification

2.1.11.1 Conduits

2.1.11.1.1 Identification of conduits shall be by means of self-sticking vinyl cloth, black identification on an orange background, as manufactured by Brady Catalog #B-502 or equal. Label length shall be as indicated below:

CONDUIT TRADE SIZE	BAND LENGTH	CHARACTER SIZE
3/4"	8"	1/2"
1-1/2" to 6"	8"	3/4"

2.1.11.2 Cable

2.1.11.2.1 Identification of instrument, control and power cables shall be by means of heat shrinkable, polyolefin with cables number identification by computer printed characters on white heat shrink sleeve; Brady Catalog Number B321 or equal.

2.1.11.2.2 Electrical tape for color coding of conductors shall be 3/4 inch wide, vinyl plastic and in accordance with UL 510. 3M Company Scotch 35 or equal.

2.1.11.3 Equipment

2.1.11.3.1 Equipment and devices that are connected to normal power source shall be identified with phenolic nameplates. Nameplates shall be white with black engraving. See Attachments A and B.

2.1.11.3.2 Equipment and devices that are connected to standby power source shall be identified with phenolic nameplates. Nameplates shall be orange with white engraving. See Attachments A and B.

2.1.11.3.3 Terminal boxes shall be identified with phenolic nameplates in accordance with the Contract Drawings. Nameplates shall be white with black engraving.

2.1.12 Lighting Fixtures

2.1.12.1 Fluorescent Lighting Fixtures

Fluorescent fixture shall be equipped with UL listed high power factor type, energy saving ballasts. Fixtures shall be suitable for through wiring in accordance with the National Electrical Code, Articles 410-11 and 410-31. Rapid start ballasts shall be in accordance with ANSI C82.2. Fluorescent lamps shall be cool white type.

A. Fixture #L12

Fixture shall be industrial type, open ventilated reflector, 4'-0" long, two 40 W lamps, 277 V, rapid start, emergency battery pack, chain mounted. Battery pack shall include a sealed electronic assembly, a nickel cadmium battery pack, a test button and a derangement signal light. Components shall be contained within the lighting fixture and provide 90 minutes of emergency light by illuminating one lamp. Prudential Lighting Catalog Number PEL-202-48RS-SR10/277V or equal.

B. Fixture #L21

Fixture shall be wraparound type surface mounted, energy saving ballast, with clear acrylic prismatic lens, 4'-0", two 40 W lamps, 277 V, rapid start. Holophane Catalog Number M710042A or equal.

C. Fixture #L22

Same as Fixture #L21 except three 40 W lamps. Holophane Catalog Number M740342A or equal.

D. Fixture #L24

Same as Fixture #L21 except four 40 W lamps and includes emergency battery pack as described in Fixture #L12. Holophane Catalog Number M740042A5 or equal.

E. Fixture #L27

Same as Fixture #L21 except four 40 W lamps. Holophane Catalog Number M740042A or equal.

F. Fixture #L28

Same as Fixture #L21 except three 40 W lamps and includes emergency battery pack as described in Fixture #L12. Holophane Catalog Number M740342A5 or equal.

2.1.12.2 Exit and Emergency Lighting Fixtures

A. Fixture #L30

Fixture shall be self-contained, 277 V with two heavy duty lampheads, par 36, 25 W lamps, surface mounted, constructed of 18 gauge steel. Battery shall be 90 minute minimum, sealed, rechargeable type. Holophane Catalog Number M-19-2H-SEIS-PT or equal.

B. Fixture #L41

Fixture #L41 shall be UL listed with universal mounting. Housing shall be die-formed, cast aluminum door and ends with white letters and arrows on green background. Fixture shall include emergency battery pack as described in Fixture #L12 and (2) 20 W T6Y2 lamps. Lithonia Catalog Number AP1WG-02 or equal.

2.1.12.3 High Pressure Sodium Light Fixtures

2.1.12.3.1 High pressure sodium light fixtures shall be high bay type, socket-ballast housing, reflector and lens. Ballasts shall be energy saving, high power factor type in accordance with ANSI C82.9. High pressure sodium lamps shall be clear type and in accordance with ANSI C78.388.

A. Fixture #L39

Fixture shall be industrial high bay type, 277 V, pendant mounted, 400 W lamp with integral energy saving ballast, prismatic glass reflector. Holophane Catalog Number PRSL40LHP27PDS40 or equal.

B. Fixture #L39Q

Same as Fixture #L39 except includes a 150 W tungsten halogen quartz lamp in a D.C. bayonet base to provide instant restrike. Holophane Catalog Number PRSL40LHP27PDS40-EM or equal.

C. Fixture #L40

Fixture shall be industrial low bay type, 277 V, pendant mounted, 100 W lamp with integral energy saving ballast, prismatic glass reflector with metal cover. Holophane Catalog Number BA-10DHP-27-P-M or equal.

2.1.12.4 Low Pressure Sodium Fixtures

2.1.12.4.1 Low pressure sodium lighting fixtures shall be in accordance with ANSI C78.41. Ballasts shall be high power factor type in accordance with ANSI C82.9.

A. Fixture #L20

Fixture shall be wall pack type, 277 V, 35 W lamp with integral ballast. Luminaire housing shall be a cast aluminum for outdoor installation. Lens shall be polycarbonate hi-impact plastic and gasketed. Voigt Lighting Industries, Inc. Catalog Number 0-36-277PI or equal.

B. Fixture #L44

Fixture shall be pole mounted type, 277 V, 35 W lamp with photo cell and integral ballast. Luminaire housing shall be cast aluminum suitable for outdoor installation. Lens shall be polycarbonate hi-impact plastic and gasketed. Voigt Lighting Industries, Inc. Catalog Number 0-40-277-MT-3 or equal.

2.1.12.5 Incandescent Fixtures

2.1.12.5.1 Aviation obstruction beacon shall be in accordance with FAA #AC 150/5345-43: L-864.

A. Fixture #L43

Fixture base and frame shall be cast aluminum with red glass fresnel lenses, Crouse-Hinds Catalog Number FCB-44389C-TH or equal. Each fixture shall use two 120 V, 620 W lamps. Each fixture requires a lowering system consisting of the following or equal:

Tower Junction Box	Crouse-Hinds Catalog Number 70022
Anchor Rod	Crouse-Hinds Catalog Number 70017-1
Tension Spring	Crouse-Hinds Catalog Number 70017
Turn Buckle	Crouse-Hinds Catalog Number 9340

Thimble 9320	Crouse-Hinds Catalog Number
Cable Clips (2) 9310	Crouse-Hinds Catalog Number
Stainless Steel Guide Cable	Lighting and Lowering Systems Catalog Number AEOB
Cable Guide and Lowering Cable	Lighting and Lowering Systems Catalog Number AECB
Contact Suspension with Adapter	Lighting and Lowering Systems Catalog Number SCU-1
Mounting Adapter with 20" Aluminum Arm	Lighting and Lowering Systems Catalog Number WAD-3
Conduit Clamps	Lighting and Lowering Systems Catalog Number CBC-169
Lowering Tool	Lighting and Lowering Systems Catalog Number LT-4
Security Lock Box	Lighting and Lowering Systems Catalog Number SLB-1

Fixtures shall be controlled by one obstruction lighting flasher controller, Crouse-Hinds Catalog Number 70008-N4 or equal.

2.1.13 Receptacles

2.1.13.1 Receptacles shall have NEMA configurations in accordance with NEMA WD1. Specific types of receptacles to be installed shall be as noted on the Contract Drawings.

2.1.13.2 Duplex Receptacles

A. Receptacle #R1

Receptacle shall be a duplex, grounded type, 125 volt, 20 ampere, ivory 3-wire, 2-pole NEMA 5-20R. Hubbell Catalog Number 5362-I or equal with ivory thermoplastic plate, Hubbell #P8 or #P82 or equal as required on Contract Drawings.

B. Receptacle #R2

Receptacle shall be a duplex, grounded type, ivory, 125 volt, 20 ampere, 3-wire, 2 pole, NEMA 5-20R. Hubbell Catalog No. 5362-I or equal with steel plate, Appleton #FSK-1DR or #FSK-2DR or equal as required on Contract Drawings.

C. Receptacle #R3

Receptacle shall be a duplex, grounded type, ivory, 125 volts, 20 ampere, 3-wire, 2 pole, NEMA 5-2DR. Hubbell Catalog 5362-I or equal with stainless steel plate, Hubbell #S8 or #S82 or equal as required on Contract Drawings.

D. Receptacle #R4

Receptacle shall be a duplex ground fault interrupter type, 125 volt, 20 ampere, ivory 3-wire, 2-pole, NEMA 5-20R. Hubbell Catalog Number GF-5362-I or equal with weatherproof, gasketed and self-closing cover. Hubbell #5221 or equal.

2.1.13.3 Power Receptacles

A. Receptacle #R14

Receptacle shall be 3-pole, 4-wire, circuit breaking, 480 volt, 3 phase, 60 ampere type weatherproof, grounding style 2. Appleton #ADRE-125 or equal.

2.1.14 Switches

2.1.14.1 Specific types of switches to be installed shall be as noted on the Contract Drawings.

2.1.14.1.1 Three-Way Toggle Switch #S14

A. Switch shall be an ivory toggle type, 3-way, 120 V/277 V, 20 ampere. Hubbell Catalog Number 1223-I or equal with thermoplastic plate, ivory, Hubbell #P1 or #P2 or equal as required on the Contract Drawing.

2.1.14.1.2 Single Pole Toggle Switch #S13

A. Switch shall be an ivory toggle type, single pole, 120 V/277 V, 20 ampere. Hubbell Catalog Number 1221-I or equal with thermoplastic plate, ivory, Hubbell #P1 or #P2 or equal as required on the Contract Drawing.

2.1.15 Control Equipment

2.1.15.1 Evaporator Cooler Pump Motor Controllers, #M7

Evaporator cooler pump motor controllers shall be a NEMA 12 enclosure in accordance with NEMA 250 and ICS 2, hinged door and mounting panel for electrical devices. Square "D" Class 9991, type SCA4 or equal. Controllers shall consist of the following components, completely assembled and wired in accordance with Attachment "C".

A. Motor starter, AC magnetic, 120 V coil, full voltage, 2 pole, single phase, fractional HP, NEMA size 0 with thermal unit and auxiliary contacts. Seller shall verify type, normally open/normally closed, and number of contacts for each motor starter from Attachment "C", Evaporator Cooler Pump Motor Elementary Diagrams. Square "D", Class 8536, Type SB01V02 or equal.

B. Selector switch, 3 position, "Maintenance-Local-Remote," 120 V with custom nameplate as shown on Attachment "C", Evaporator Cooler Pump Motor Controllers. Square "D", Class 9001, Type KS46B or equal.

C. "Stop" pushbutton, normally closed maintained contact, mushroom-button, 120 V ac and with custom nameplate as shown per Attachment "C", Evaporator Cooler Pump Motor Controller, Square "D", Class 9001, Type KR9RH13 or equal.

D. "Start" pushbutton, two normally closed and two normally open momentary contacts, 120 V with custom nameplate as shown per Attachment "C", Evaporator Cooler Pump Motor Controller, Square "D", Class 9001, Type KR1BH2 or equal.

E. Three heavy duty oil tight "Pilot Lights," 120 V ac with one red color cap with "RUN" legend plate; one green color cap with "OFF" legend plate and one amber color cap with "OVERLOAD TRIPPED" legend plate.

F. Terminal blocks shall be in accordance with Terminal Blocks section of this specification.

G. Wiring shall be in accordance with single conductor cable paragraph of this specification.

H. Nameplate shall be provided for the evaporator cooler pump motor controllers, PX-D5I-112 and PX-05I-113. Nameplates shall be machine-engraved, phenolic with 1/4 inch high black figures on white background and shall be firmly attached with stainless steel self-tapping screws. The nameplates shall read:

EVAPORATOR COOLER
PUMP MOTOR CONTROLLER
PX-05I-112

EVAPORATOR COOLER
PUMP MOTOR CONTROLLER
PX-05I-113

2.1.15.2 Magnetic Intrusion Door Alarm System

2.1.15.2.1 Specific types of devices to be installed shall be as noted on the Contract Drawings.

2.1.15.2.2 Magnetic Intrusion Switch #S25

A. Magnetic intrusion switch shall be a magnet and a switch assembly, single pole double throw with 125 V ac, 10 amps contact rating. Honeywell/Imperial Products Corporation Catalog Number IMPMG6 or equal.

2.1.15.2.3 Bell #S26

A. Bell shall be heavy duty vibrating and single stroke bell type, 6 inch, 120 V ac and beige color. Simplex Catalog Number 2090-9061 or equal.

2.1.16 Grounding Materials

2.1.16.1 Grounding Conductors

2.1.16.1.1 External building ground loop and bonded connection shall be #500 kcmil bare copper wire in accordance with ASTM B3. Wire shall be Class B concentric stranded in accordance with ASTM B8.

2.1.16.1.2 Internal building ground and bonded connections shall be bare copper wire in accordance with ASTM B3 sized as indicated on the Contract Drawings. Wire shall be Class B concentric stranded in accordance with ASTM B8.

2.1.16.1.3 Instrument test ground conductor shall be single conductor, stranded copper wire with green Type TW 600 volt insulation. Conductor shall be UL listed, in accordance with the National Electrical Code, NFPA 70 and sized as indicated on the Contract Drawings.

2.1.16.2 Ground Rods

2.1.16.2.1 Ground rods shall be copperbonded 5/8 inch diameter by 10 feet. Joslyn Number J8340 or equal.

2.1.16.2.2 Weld connections between ground conductors or between ground conductors to steel surfaces shall be by the exothermic process type. Cadweld or equal.

2.1.16.3 Ground Connections

2.1.16.3.1 Grounding connectors, screws, bolts or clamps shall be bronze or Everdur, unless specifically indicated otherwise on the Contract Drawings, and shall be in accordance with UL 467.

2.1.16.3.2 Connectors for grounding to flat metal surfaces shall have body of cast copper alloys with bolts, nuts, and lockwashers of silicon bronze. Type as indicated on the Contract Drawings.

2.1.16.3.3 Connections to ground buses and connections of grounding conductors to switch boxes, panelboards, cabinets, etc., shall be made with either bolted mechanical lugs, compression connectors or servit posts as shown on the Contract Drawings.

2.1.16.3.4 Ground connections to pipe shall be made with O.Z. Series Type ABG connectors or equal as shown on the Contract Drawings.

2.1.16.3.5 Conduit insulated ground bushings shall be galvanized with a mechanical connection for joining a ground wire to a conduit. O.Z. Type BLG or equal.

2.1.16.3.6 Bus bar shall be high conductivity, bare copper, in accordance with ASTM B187, 1/4 inch thick by 2 inches wide.

2.1.17 Sealant

2.1.17.1 Sealant for preventing moisture from entering conduits shall be a non-oxidizing and noncorrosive compound, Dow Corning 738 or equal.

2.1.18 Conduit Anti-Seize Compounds

2.1.18.1 Anti-seize compounds for threads of intermediate metal conduit shall be electrically conductive: Thomas and Betts Co. "Kopr-Shield" or equal.

2.1.19 Anti-Oxidizing Compound

2.1.19.1 Anti-oxidizing compound for connections of grounding connectors shall be electrically conductive, rust and corrosion inhibitive, Thomas and Betts "Kopr-Shield" or equal.

2.1.20 Utility Chain

2.1.20.1 Utility chain for hanging fixtures shall be end welded, zinc plated 14 gauge steel wire with 75 pound work load limit. McMasters-Carr Catalog Number 8951T15 or equal.

2.1.21 Insulating Tape

2.1.21.1 Insulating tape shall be vinyl insulating type with a continuous temperature rating of 105°C in accordance with UL 510. 3M Super 33+ Series or equal.

2.1.22 Heat Tracing Materials and Devices

2.1.22.1 Electric heat tracing materials shall consist of the following:

2.1.22.1.1 Cable shall be self limiting type. Construction shall consist of #16 stranded copper conductors with a core material of semi-conductive graphite network polyolefin insulation jacket and tinned copper shield.

2.1.22.1.2 Heat tracing cables shall meet the following criteria:

SERVICE VOLTAGE	MAX MAIN TEMP	MAX INTERMITTENT EXPOSURE	MIN WATT DENSITY	MAX FEET LENGTH	CHEMELEX OR EQUAL
120V	150°F	185°F	5W/FT @ 50°F	270	5BTV1-C
120V	150°F	185°F	8W/FT @ 50°F	200	8BTV1-C
120V	150°F	185°F	10W/FT @ 50°F	150	10BTV1-C

2.1.22.1.3 Electrical heating cables shall include power connection kits, grommets, pipe straps and end termination kits complete with tracing pilot. Chemelex Catalog Number PMK-J2LP and AM-L with AM-BC kit or equal.

2.1.22.1.4 Thermostats for electric heat tracing shall be ambient sensing type. Sensor exposure limits shall be -65°F to 160°F. Sensor range shall be 15 to 140°F and rating shall be 22 amps at 120 V ac. The enclosure shall be NEMA 4X in accordance with NEMA 250 Chemelex Catalog Number AMC-1A or equal.

2.1.22.1.5 Fiberglass tape used to attach the self limiting heater to the pipe, Chemelex Catalog Number GT66 or equal.

2.1.22.1.6 Stainless steel tie wire type 3021304, .051 in O.D., Chemelex Catalog Number HTTK-TW or equal.

2.1.22.1.7 Electric tracing warning signs, Chemelex Catalog Number ETL or equal.

2.1.23 Transformers

2.1.23.1 General

2.1.23.1.1 The transformers specified herein shall be general-purpose, ventilated, dry-type and totally enclosed.

2.1.23.1.2 Transformers shall comply with ANSI C57.12.70, NEMA ST20 and UL 1561.

2.1.23.2 Transformer, XT-32B-005 as shown on the Contract Drawings, shall be 30 kVA, 480 V Delta primary, 208Y/120 V Wye secondary, 3Ø, 4W, 60 Hz.

2.1.23.2.1 Transformer Enclosure

A. Transformers shall be suitable for indoor use. Space shall be provided within the transformer enclosure for making up the Seller's cable connections to the transformer winding terminals.

B. One or more openings shall be located and sized to permit ready access to the cable terminal connection lugs.

C. Enclosure grounding provisions shall consist of one grounding pad, welded on the base or on the enclosure near the base.

D. Transformer base shall have provisions to be anchored with a minimum of four 1/2 inch diameter bolts. Bolt holes shall be 11/16 inch diameter.

2.1.23.2.2 Transformer Taps

A. Full rated tap stubs shall be provided on the primary windings. Transformers shall have a minimum number of four (4) 2-1/2 percent full capacity above and below rated voltage.

2.1.23.2.3 Temperature Ratings

A. Transformer shall be designed and rated for a minimum 115°C rise above 40°C ambient.

2.1.23.3 Dry-Type Transformer with Panelboard, Power Center

2.1.23.3.1 Power Center, XT-33A-208, shall be a combination transformer and distribution panelboard, including transformer main and secondary circuit breakers. The transformer shall be rated 7.5 kVA, 480-

240/120 V, single phase. Quantity and rating of branch circuit breakers shall be in accordance with Contract Drawings. Square "D" MPZ7S40F or equal.

2.1.23.3.2 Full rated tap stubs shall be provided on the primary windings. Transformer shall have a minimum of two 5 percent full capacity below nominal primary voltage adjustment taps.

2.1.23.3.3 The Power Center shall have provisions to be anchored to steel channels with a minimum of four (4) 3/8 inch diameter bolts. Bolt holes shall be 9/16 inch diameter.

2.1.23.3.4 Power Center shall have a ground bus bolted to the frame and an isolated neutral bus. Ground and neutral buses shall have industry standard wire terminals for all incoming and branch circuit conductors.

2.1.23.3.5 Circuit breakers shall have 100 ampere minimum frame size complete with thermal magnetic non-interchangeable trip elements. Breakers shall be bolt-on, quick-make, quick-break, trip indicating type with solderless lugs in accordance with NEMA Standard AB1 and UL 489. Number of poles and trip rating for each circuit breaker shall be as defined on the Contract Drawing panelboard schedules.

2.1.23.3.6 A circuit directory frame and card with a clear plastic covering shall be provided on the inside of the door.

2.1.23.3.7 Circuit breakers shall be rated no less than: 22,000 amperes symmetrical rms for 120 V single phase.

2.1.23.4 Transformer Identification

2.1.23.4.1 Each transformer shall be identified by a permanently attached nameplate showing the following:

A. The identification "Transformer"

B. Number of phases

C. Frequency

D. kVA rating

E. Voltage rating

F. Temperature rise

G. Name of Manufacturer

H. Vector diagram

I. Tap voltages

J. Percent impedance

K. Connection diagram

L. Approximate total weight

2.1.23.4.2 Each transformer shall be identified by a laminated phenolic nameplate attached with screws showing the equipment number and description, see Attachment A. Nameplates shall have 1/4 inch high etched black lettering on white background.

2.1.24 Panelboards

2.1.24.1 General

2.1.24.1.1 Panelboards specified herein shall be factory assembled safety dead front type in accordance with NEMA PB-1 and UL67.

2.1.24.2 Enclosures

2.1.24.2.1 The panelboard assembly shall be enclosed in a surface mounted NEMA 1 steel cabinet per NEMA 250. Cabinets shall have wiring gutter on bottom, sides and top, without knockouts, with safety dead front and all line parts concealed. Square "D", Class 1630, Type NQOD, 208Y/120 Vac and Square "D", Class 1660, Type NEHB, 480Y/277 V ac or equal.

2.1.24.2.2 Fronts shall include doors and have flush tumbler-type locks. Locks shall be keyed alike. Each panelboard shall be supplied with a key.

2.1.24.2.3 Fronts shall have adjustable indicating trim clamps which shall be completely concealed when the doors are closed. Fronts shall not be removable with door in the locked position.

2.1.24.2.4 A circuit directory frame and card with a clear plastic covering shall be provided on the inside of the door.

2.1.24.2.5 Panelboards shall have a ground bus bolted to the frame and an isolated neutral bus. Ground and neutral buses shall have industry standard wire terminals for all incoming and branch circuit conductors.

2.1.24.2.6 UPS Distribution Panel "C", DA-34A-601, shall have the ground bus electrically isolated from the enclosure.

2.1.24.2.7 Each panelboard shall have provisions to be anchored with a minimum of four (4) 3/8 inch diameter bolts. Bolt holes shall be 9/16 inch diameter.

2.1.24.3 Circuit Breakers

2.1.24.3.1 Circuit breakers shall have 150 ampere minimum frame size complete with thermal magnetic non-interchangeable trip elements. Multi-pole breakers shall have common trip action. Breakers shall be bolt-on, quick-make, quick-break, trip indicating type with solderless lugs in accordance with NEMA Standard AB1 and UL 489. Number of poles and trip rating for each circuit breaker shall be as defined on the Contract Drawing panelboard schedules.

2.1.24.3.2 Circuit breakers shall be rated no less than: 65,000 amperes symmetrical rms for 208Y/120 V and 480Y/277 V.

2.1.24.3.3 The number of future circuit breaker spaces shall be as defined on the Contract Drawing.

2.1.24.4 Busing Assembly

2.1.24.4.1 Panelboard bus structure including main breaker or main lugs shall have current ratings as shown on the Contract Drawings.

2.1.24.4.2 The buses in all panels shall be copper. Neutral buses shall be of same capacity as main buses in each panel. Compression type copper lugs shall be provided on each panelboard bus. Lugs shall be arranged for top or bottom entry for panel feeders.

2.1.24.5 Identification

2.1.24.5.1 An engraved nameplate of laminated phenolic with 1/4 inch high etched black lettering on a white background shall be attached with screws, centered on the top trim of each panelboard and bear the equipment name and number, see Attachment B.

2.1.25 Uninterruptible Power Supply, UPS

2.1.25.1 The uninterruptible power supply system shall be in accordance with Specification Section 16143, Uninterruptible Power Supply System.

2.1.26 Lightning Protection

2.1.26.1 A lightning protection system as described and detailed by NFPA-78, NEC 250-86 and Contract Drawings shall provide positive lightning protection for Canister Storage Building.

2.1.26.2 The bonding required per NEC 250-86 and the NFPA-78 shall be bolted connections, air terminals, interconnecting conductors, down conductors, stack, ground loops, grounding electrodes and other connectors or fittings required to provide an effective low-resistance path to ground. The lightning protection

materials and components shall be in accordance with this specification and UL 96.

2.1.26.3 Air terminal shall be 3/8" x 24" solid copper with tapered point and threaded end. Heary Catalog Number HBSOL-310C or equal.

2.1.26.4 Air terminal base shall be copper adhesive, with pressure type cable connection. Heary Catalog Number HB23-C or equal.

2.1.26.5 Cable fastener shall be adhesive type. Heary Catalog Number HB117C or equal.

2.2 **FABRICATION AND MANUFACTURE**

(Not Used)

PART 3 EXECUTION

3.1 **PREPARATION**

(Not Used)

3.2 **INSTALLATION, APPLICATION AND ERECTION**

Materials and devices specified herein shall be installed in accordance with Specification Section 16100, Electrical Installation.

3.3 **FIELD QUALITY CONTROL**

Materials and devices specified herein shall be inspected and tested in accordance with Specification Section 16905, Electrical Testing.

3.4 **ADJUSTMENTS**

(Not Used)

3.5 **CLEANING**

(Not Used)

3.6 **PROTECTION**

(Not Used)

3.7 **DEMONSTRATION**

(Not Used)

3.8 SCHEDULES

(Not Used)

END OF SECTION

ATTACHMENT A
DRY-TYPE TRANSFORMERS

EQUIPMENT NUMBER	EQUIPMENT NAMEPLATE INSCRIPTION	kVA RATING	TEMPERATURE RISE (°C)	MAXIMUM OVERALL DIMENSIONS H x W x D (Inches)
XT-32B-004	XT-32B-004 480-240/120 V Transformer/Panel "F" Power Center	7.5	115°	32.7 x 12 x 11.9
XT-32B-005	XT-32B-005 480VΔ-208Y/120 V 3Ø, 4W Transformer	30	115°	23 x 21.5 x 15

ATTACHMENT B
ELECTRICAL PANELBOARDS

EQUIPMENT NUMBER	VOLTAGE AND PHASE	PANEL NAMEPLATE INSCRIPTION	MAXIMUM OVERALL PANEL DIM. (INCHES) (H x W x D)
LX-32A-215	480 Y/277 V 3Ø, 4W	LX-32A-215 480Y/277 V 3Ø, 4W Lighting Panel "A"	55.5 x 20 x 6
DA-32B-005	208 Y/120 V 3Ø, 4W	DA-32B-005 208Y/120 V 3Ø, 4W Distribution Panel "B"	32 x 20 x 6
DA-32B-006	480 Y/277 V 3Ø, 4W	DA-32B-006 480Y/277 V, 3Ø, 4W Distribution Panel "D"	55.5 x 20 x 6
DA-34A-601	208 Y/120 V 3Ø, 4W	DA-34A-601 208Y/120 V 3Ø, 4W UPS Distribution Panel "C"	32 x 20 x 6

ATTACHMENT D
E350-DS-2, PULL BOXES

Electrical Pull Box Schedule for Package Number E350

BOX NO.	USED FOR	LOCATION	BOX SIZE			NEMA TYPE	LOCATED ON DRAWING NO.
			H	W	D		
PB-05-B1	FOS	FOS #5, Rm 102	36"	30"	8"	1	H-2-122745-4
PB-05-X/B1	MUX	Clean Oper Off, Rm 100	36"	30"	8"	1	H-2-122745-4
PB-05-X/B2	FOS	FOS #5, Rm 102	36"	30"	8"	1	H-2-122745-4
PB-05-B2	MUX	Clean Oper Off, Rm 100	24"	20"	8"	1	H-2-122745-4
PB-05-B3	RE-620-724	FOS #5, Rm 102	8"	8"	4"	1	H-2-122745-4
PB-05-X3	RE-620-724	FOS #5, Rm 102	8"	8"	4"	1	H-2-122745-4
PB-05-B4	RE-620-721	Elec Equip Room, Rm 106	8"	8"	4"	1	H-2-122745-4
PB-05-X4	RE-620-721	Elec Equip Room, Rm 108	8"	8"	4"	1	H-2-122745-4
PB-05-B5	RE-620-303	Elec Equip Room, Rm 108	8"	8"	4"	1	H-2-122745-4
PB-05-X5	RE-620-303	Elec Equip Room, Rm 106	8"	8"	4"	1	H-2-122745-4
PB-05-B6	RE-620-309	Health Prot Off, Rm 104	8"	8"	4"	1	H-2-122745-4
PB-05-X6	RE-620-309	Health Prot Off, Rm 104	8"	8"	4"	1	H-2-122745-4
PB-05-B7	PM-620-751	Vestibule, Rm 124	8"	8"	4"	1	H-2-122745-4
PB-05-X7	PM-620-751	Corridor, Rm 106	8"	8"	4"	1	H-2-122745-4
PB-05-B8	RO-620-597	Health Prot Off, Rm 104	8"	8"	4"	1	H-2-122745-4

ATTACHMENT D
E350-DS-2, PULL BOXES

Electrical Pull Box Schedule for Package Number E350

BOX NO.	USED FOR	LOCATION	BOX SIZE			NEMA TYPE	LOCATED ON DRAWING NO.
			H	W	D		
PB-05-B9	RO-620-603	Mech Equip Room, Rm 136	8"	8"	4"	1	H-2-122745-3
PB-05-B10	RE-620-720;RE-620-725	Mech Equip Room, Rm 136	12"	12"	6"	1	H-2-122745-3
PB-05-X10	RE-620-720;RE-620-725	Mech Equip Room, Rm 136	8"	8"	4"	1	H-2-122745-3
PB-05-B11	RE-620-302	Mech Equip Room, Rm 136	8"	8"	4"	1	H-2-122745-3
PB-05-X11	RE-620-302	Mech Equip Room, Rm 136	8"	8"	4"	1	H-2-122745-3
PB-05-P/B15	RE-620-301	Canis Stor Oper Area, Rm 110	8"	8"	4"	12	H-2-122745-1
PB-05-X15	RE-620-301	Canis Stor Oper Area, Rm 110	8"	8"	4"	12	H-2-122745-1
PB-05-P/B16	RO-620-599	Canis Stor Oper Area, Rm 110	8"	8"	4"	12	H-2-122745-1
PB-05-P/B17	RE-620-305	Canis Stor Oper Area, Rm 110	8"	8"	4"	12	H-2-122745-2
PB-05-X17	RE-620-305	Canis Stor Oper Area, Rm 110	8"	8"	4"	12	H-2-122745-2
PB-05-P/B18	RO-620-601	Canis Stor Oper Area, Rm 110	8"	8"	4"	12	H-2-122745-2
PB-05-P/B19	RE-620-307	Canis Stor Oper Area, Rm 110	8"	8"	4"	12	H-2-122745-2
PB-05-X19	RE-620-307	Canis Stor Oper Area, Rm 110	8"	8"	4"	12	H-2-122745-2
PB-05-P/B20	RO-620-600	Canis Stor Oper Area, Rm 110	8"	8"	4"	12	H-2-122745-2
PB-05-P/B21	RO-620-598	Canis Stor Oper Area, Rm 110	8"	8"	4"	12	H-2-122745-1

ATTACHMENT C

FLUOR DANIEL

DATA SHEET

U.S. Department of Energy
Hanford Waste Vitrification Plant
Richland, Washington
DOE Contract DE-AC06-86RL10838

EVAPORATOR COOLER PUMP MOTOR CONTROLLERS

NO.	BY / DATE	REVISION
1	CCS 07/29/93	Add MCC Indicating Lights
△		
△		
△		
△		
△		

SHEET NO. E350-DS-1		REV 1
DATE 07-10-92	CONTRACT 845734	
ITEM NO. PX-051-112		
SECTION NO. 16110		
DEVICE NUMBER M7		
ORIG BY CCS	CHK'D AT	APPR'D

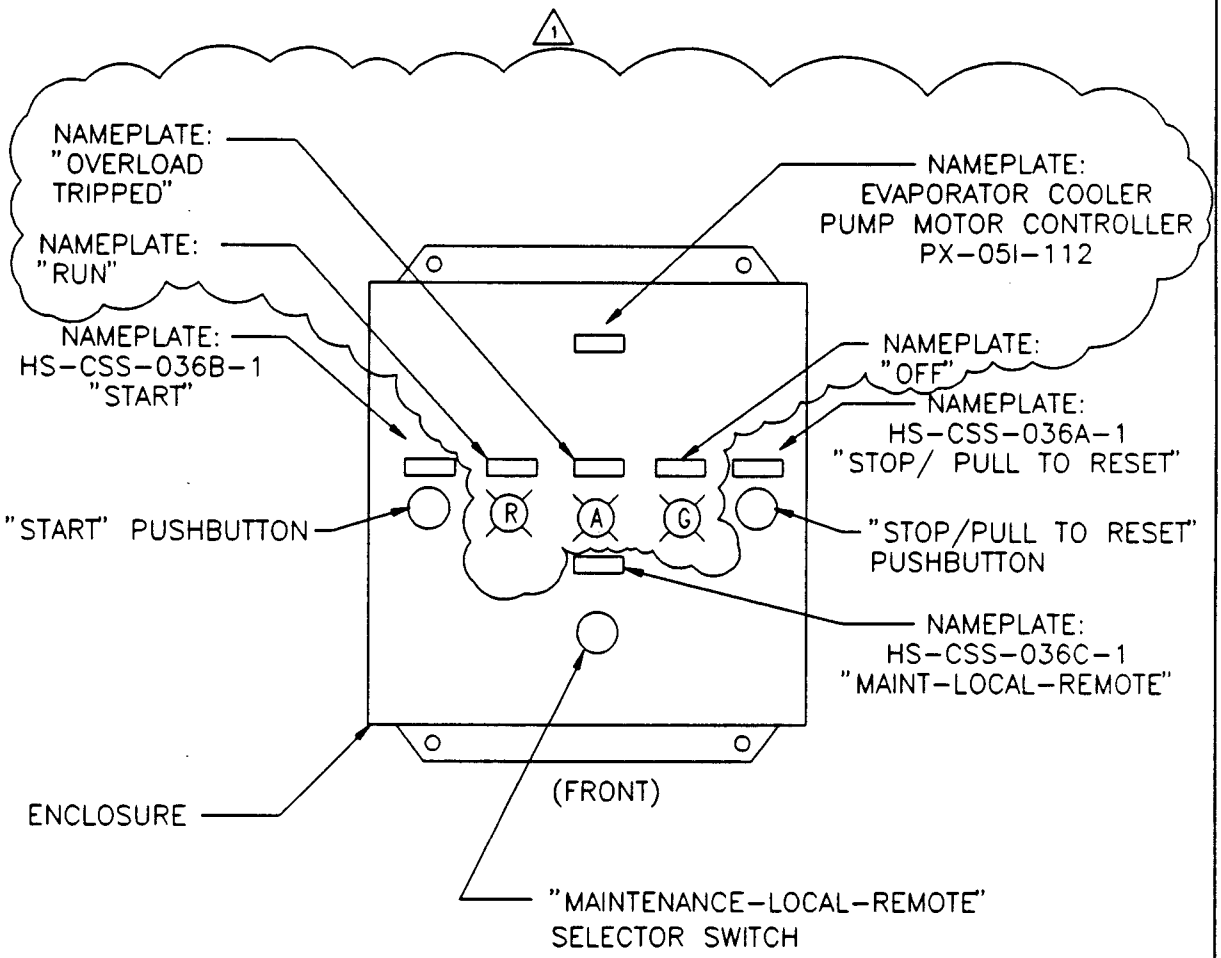

EVAPORATOR COOLER
PUMP MOTOR CONTROLLER
PX-051-112

SAFETY CLASSIFICATION 3
IMPACT LEVEL 3

FLUOR DANIEL

DATA SHEET

U.S. Department of Energy
Hanford Waste Vitrification Plant
Richland, Washington
DOE Contract DE-AC06-86RL10838

EVAPORATOR COOLER PUMP MOTOR CONTROLLERS

NO.	BY / DATE	REVISION
1	CCS 07/29/93	Add MCC Indicating Lights

SHEET NO.	E350-DS-2
REV.	1
DATE	07-10-92
CONTRACT	845734
ITEM NO.	PX-051-113
SECTION NO.	16110
DEVICE NUMBER	M7
ORIG BY	CCS
CHK'D	AT
APPR'D	

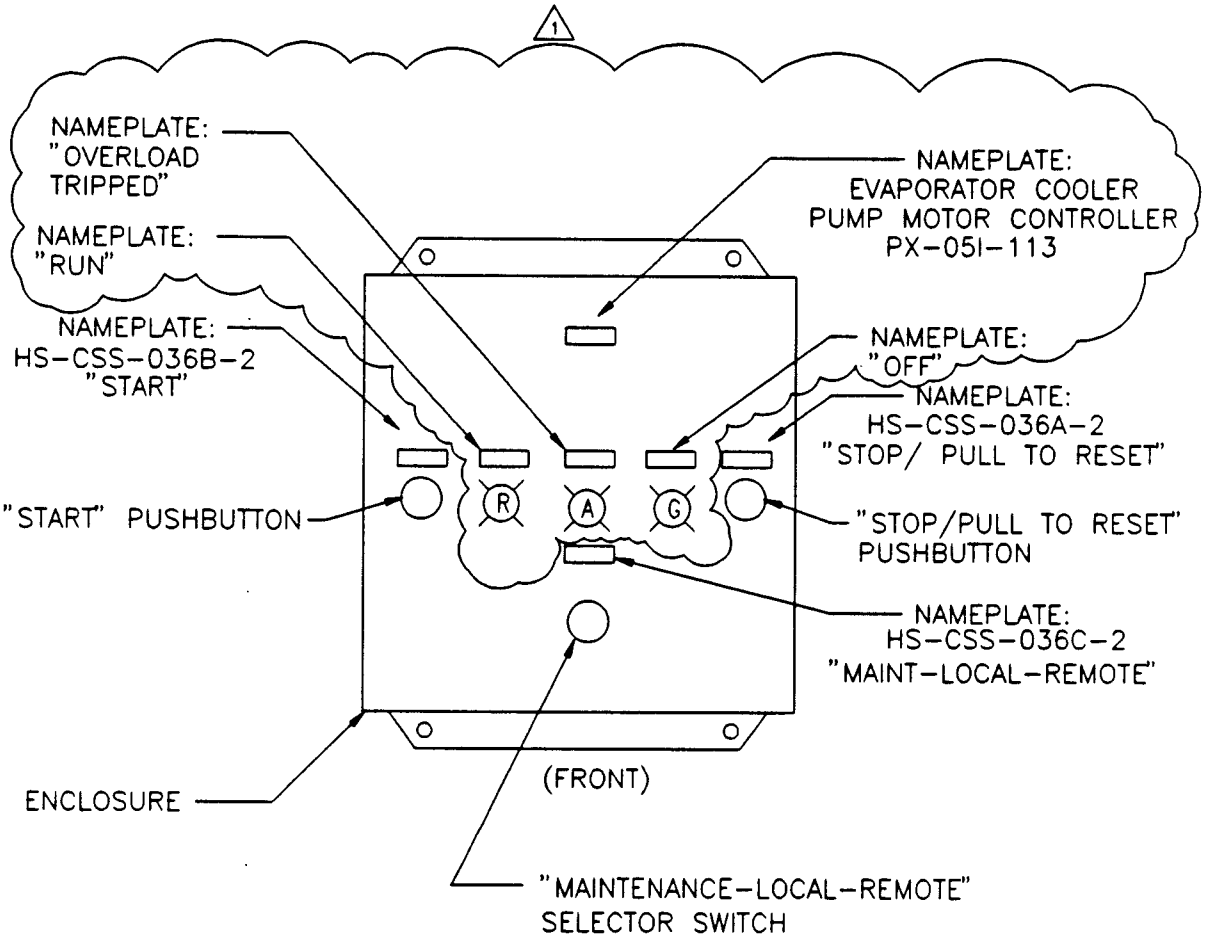

EVAPORATOR COOLER
PUMP MOTOR CONTROLLER
PX-051-113

SAFETY CLASSIFICATION 3
IMPACT LEVEL 3

ATTACHMENT C

FLUOR DANIEL

DATA SHEET

U.S. Department of Energy
Hanford Waste Vitrification Plant
Richland, Washington
DOE Contract DE-AC06-86RL10838

EVAPORATOR COOLER PUMP MOTOR SCHEMATIC DIAGRAM

NO.	BY / DATE	REVISION
1	CCS 07/29/93	Add MCC Indicating Lights

SHEET NO.	E350-DS-3
REV.	1
DATE	07-10-92
CONTRACT	845734
ITEM NO.	PX-051-112
SECTION NO.	16110
DEVICE NUMBER	M7
ORIG BY	CCS
CHK'D	AT
APPR'D	

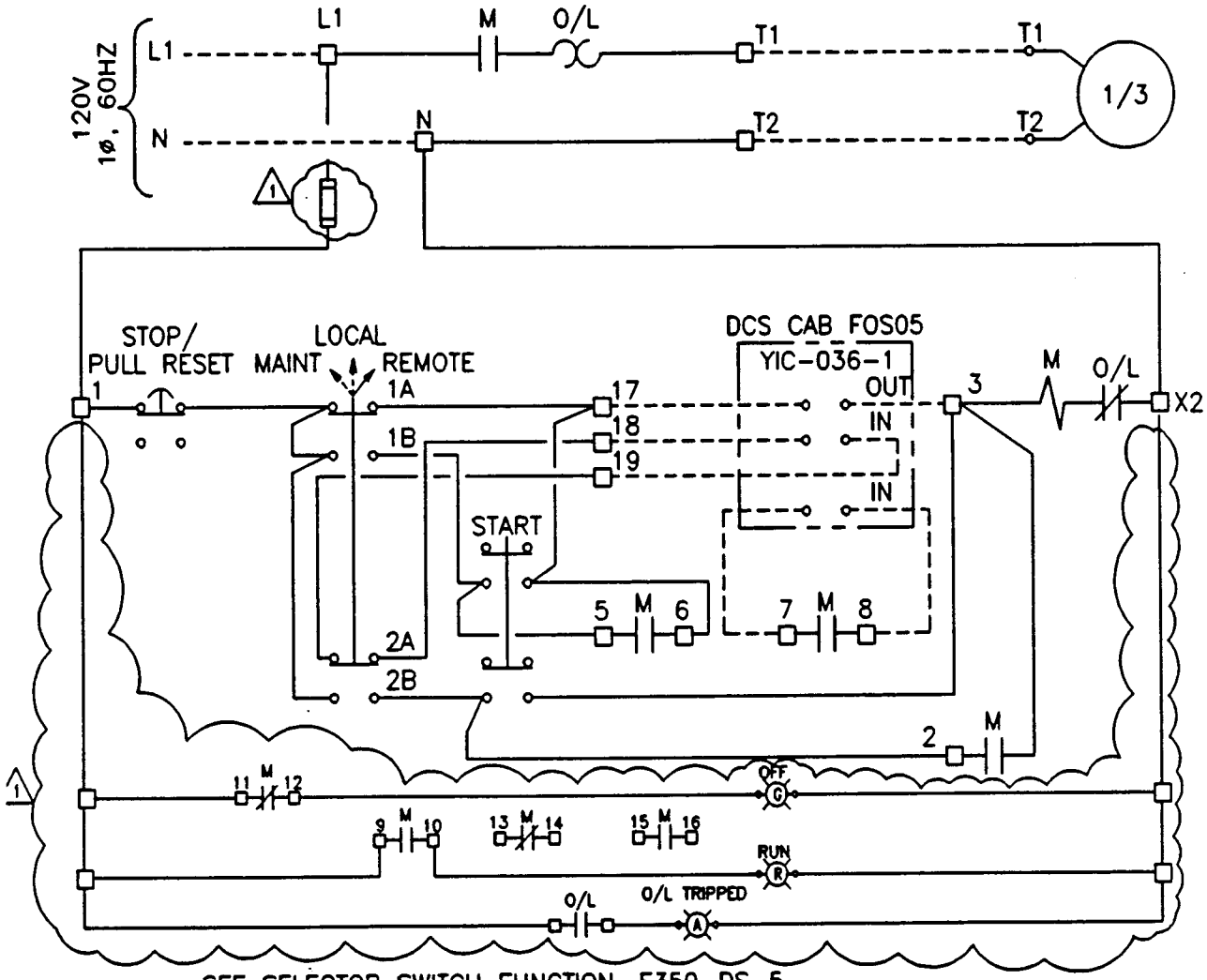

* SEE SELECTOR SWITCH FUNCTION, E350-DS-5.
- - DASH LINES MEAN FIELD WIRING OR FIELD DEVICE, BY OTHERS
—— SOLID LINES MEAN FACTORY WIRING.
□ TERMINAL BLOCK, LOCATED INSIDE STARTER ENCLOSURE, NUMBERED AS SHOWN

1 (R) PILOT LIGHTS WITH NAMEPLATE R=RED COLOR CAP, G=GREEN COLOR CAP, A=AMBER COLOR CAP

ELEMENTARY DIAGRAM FOR PX-051-112

SAFETY CLASSIFICATION 3
IMPACT LEVEL 3

ATTACHMENT C

FLUOR DANIEL

DATA SHEET

U.S. Department of Energy
Hanford Waste Vitrification Plant
Richland, Washington
DOE Contract DE-AC06-86RL10838

EVAPORATOR COOLER PUMP MOTOR SCHEMATIC DIAGRAM

NO.	BY / DATE	REVISION
1	CCS 07/29/93	Add MCC Indicating Lights

SHEET NO.	E350-DS-4
REV.	1
DATE	07-10-92
CONTRACT	845734
ITEM NO.	PX-051-113
SECTION NO.	16110
DEVICE NUMBER	M7
ORIG BY	CCS
CHK'D	AT
APPR'D	

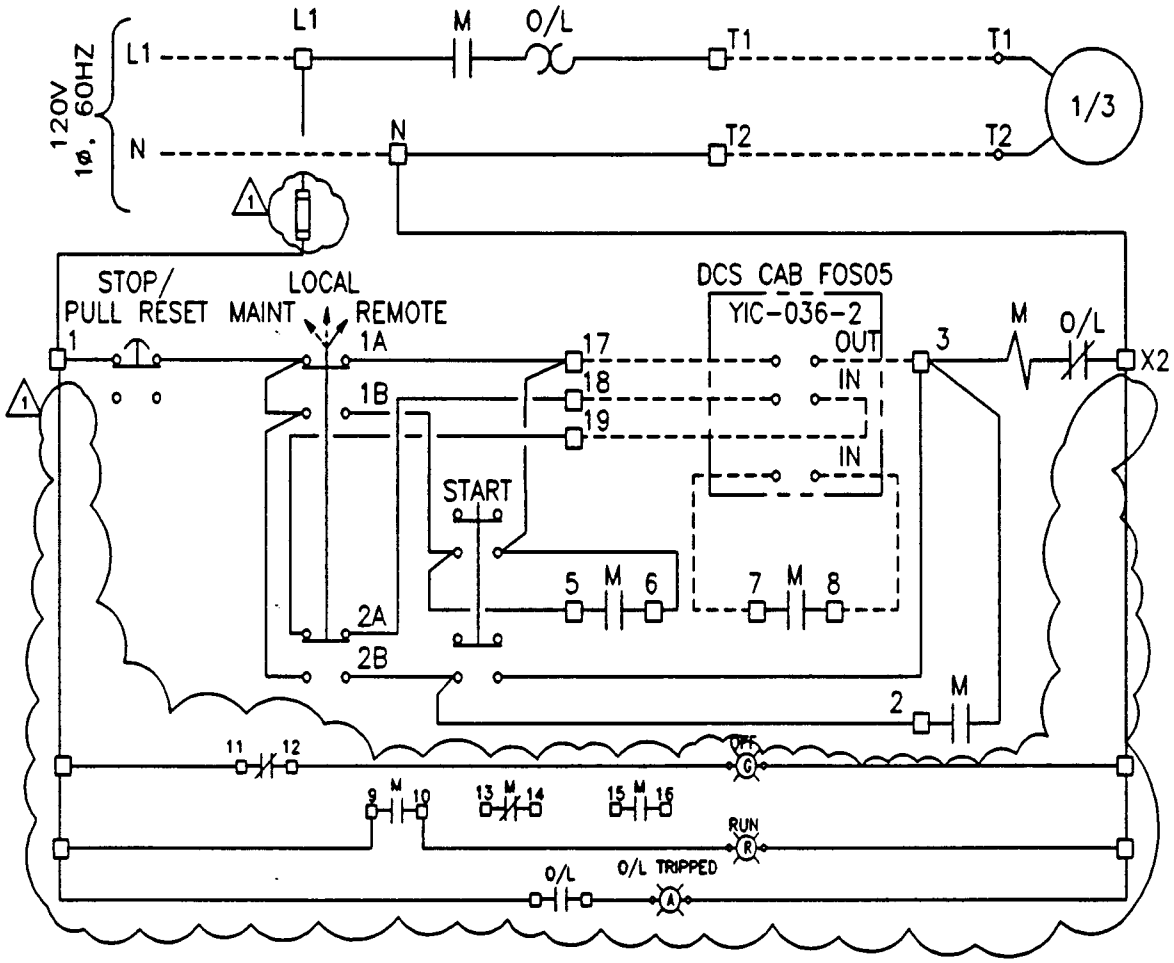

* SEE SELECTOR SWITCH FUNCTION, E350-DS-5.
- - DASH LINES MEAN FIELD WIRING OR FIELD DEVICE, BY OTHERS
—— SOLID LINES MEAN FACTORY WIRING.
□ TERMINAL BLOCK, LOCATED INSIDE STARTER ENCLOSURE, NUMBERED AS SHOWN

1 (R) PILOT LIGHTS WITH NAMEPLATE R=RED COLOR CAP, G=GREEN COLOR CAP, A=AMBER COLOR CAP

ELEMENTARY DIAGRAM FOR PX-051-113

SAFETY CLASSIFICATION 3
IMPACT LEVEL 3

FLUOR DANIEL

DATA SHEET

U.S. Department of Energy
Hanford Waste Vitrification Plant
Richland, Washington
DOE Contract DE-AC06-86RL10838

EVAPORATOR COOLER PUMP MOTOR SELECTOR SWITCH BLOCK DIAGRAM

NO.	BY / DATE	REVISION
1	CCS 07/29/93	No Change

SHEET NO.	E350-DS-5
REV.	1
DATE	07-10-92
CONTRACT	845734
ITEM NO.	PX-05I-112, PX-05I-113
SECTION NO.	16110
DEVICE NUMBER	M7
ORIG BY	CCS
CHK'D	AT
APPR'D	

SELECTOR SWITCH FUNCTION			
CONTACT LOCATION	MAINT POS 1 ↖	LOCAL POS 2 ↑	REMOTE POS 3 ↗
SIDE 1 A	O	O	X
B	O	X	O
SIDE 2 A	O	O	X
B	X	O	O

SAFETY CLASSIFICATION 3
IMPACT LEVEL 3

U.S. DEPARTMENT OF ENERGY
Hanford Waste Vitrification Plant
Richland, Washington
DOE Contract DE-AC06-86RL10838

FLUOR DANIEL, INC.
Advanced Technology Division
Fluor Contract 8457

SECTION 16111
CONDUIT/CABLE SCHEDULE
B-595-C-E350-16111

APPROVED FOR CONSTRUCTION

REVISION 1 PER CR-0690, CR-0854, CR-0884, CR-0859
ISSUE DATE 8/4/93

WAPA YES ___ NO X
QUALITY LEVEL I ___ II X
SAFETY CLASS 1__ 2__ 3X 4__

ORIGINATOR:

Charles Simpson 7-29-93
C. C. Simpson, Electrical Eng. Date

CHECKER:

M. Morrow 7/29/93.
M. Morrow, Electrical Engineer Date

APPROVED BY:

K. A. Owrey
K. A. Owrey Lead Discipline Engineer

7-30-93
Date

SECTION 16111
CONDUIT/CABLE SCHEDULE
B-595-C-E350-16111

TABLE OF CONTENTS

PART		PAGE
PART 1	**GENERAL**	1
1.1	SUMMARY	1
1.2	REFERENCES	1
1.3	RELATED REQUIREMENTS	1
1.4	DEFINITIONS	1
1.5	SYSTEM DESCRIPTION	1
1.6	SUBMITTALS	1
1.7	CLASSIFICATION OF SYSTEM AND COMPONENTS	1
1.8	PROJECT OR SITE ENVIRONMENTAL CONDITIONS	1
PART 2	**PRODUCTS**	2
2.1	MATERIALS AND EQUIPMENT	2
2.2	FABRICATION AND MANUFACTURE	2
PART 3	**EXECUTION**	2
3.1	PREPARATION	2
3.2	INSTALLATION, APPLICATION AND ERECTION	2
3.3	FIELD QUALITY CONTROL	2
3.4	ADJUSTMENTS	3
3.5	CLEANING	3
3.6	PROTECTION	3
3.7	DEMONSTRATION	3
3.8	SCHEDULES	3

ATTACHMENTS

ATTACHMENT	TITLE
A	ELECTRICAL CONDUIT SCHEDULE
B	ELECTRICAL CABLE SCHEDULE

SECTION 16111
CONDUIT/CABLE SCHEDULE

PART 1 GENERAL

1.1 SUMMARY

This section includes the conduit and cable schedules for construction power for the Canister Storage Building.

1.2 REFERENCES

(Not Used)

1.3 RELATED REQUIREMENTS

Specification Section 16100	Electrical Installation
Specification Section 16110	Electrical Materials and Devices
Specification Section 16905	Electrical Testing

1.4 DEFINITIONS

(Not Used)

1.5 SYSTEM DESCRIPTION

(Not Used)

1.6 SUBMITTALS

(Not Used)

1.7 CLASSIFICATION OF SYSTEM AND COMPONENTS

(Not Used)

1.8 PROJECT OR SITE ENVIRONMENTAL CONDITIONS

1.8.1 Climatic and Geographic Site Conditions

A.	Site Elevation	714 feet above sea level
B.	Barometric Pressure	14.3 psia

C. Outside Design Temperature

1) Maximum Design Temperature 110°F

2) Minimum Design Temperature -20°F

1.8.2 Operating Environment

A. Indoor Temperatures 55°F to 104°F

B. Indoor Vault Temperatures -27°F to 180°F

C. Relative Humidity

1) Offices 55% Maximum

2) FOS #5 Room 50% ± 5%

PART 2 PRODUCTS

2.1 MATERIALS AND EQUIPMENT

2.1.1 All material shall be supplied in accordance with Specification Section 16110.

2.1.2 Cable codes, as designated on the electrical cable schedule, are defined in Specification Section 16110.

2.2 FABRICATION AND MANUFACTURE

(Not Used)

PART 3 EXECUTION

3.1 PREPARATION

(Not Used)

3.2 INSTALLATION, APPLICATION AND ERECTION

3.2.1 Underground and aboveground conduits and cables shall be in accordance with Attachment A and Attachment B of this specification and Specification Section 16100, Electrical Installation.

3.3 FIELD QUALITY CONTROL

(Not Used)

3.4 **ADJUSTMENTS**

(Not Used)

3.5 **CLEANING**

(Not Used)

3.6 **PROTECTION**

(Not Used)

3.7 **DEMONSTRATION**

(Not Used)

3.8 **SCHEDULES**

(Not Used)

END OF SECTION

Electrical Conduit Schedule for Package Number E350

REV NO.	BLDG NO.	RACEWY NO.	FOR	FROM		TO		RACEWAY DATA			INCLUDED CABLE NOs.
				EQUIPMENT NUMBER OR LOCATION	PLAN DRAWING	EQUIPMENT NUMBER OR LOCATION	PLAN DRAWING	SIZE	TYPE	MATERIAL OF CONSTR	
1	05	A0001	ALARM	UP-34A-601	H-2-122745-4	PB-05-B1	H-2-122745-4	3/4"	COND	IMC	A0001
1	05	A0002	ALARM	A0003	H-2-122736-2	UG STUB OUT	H-2-122736-1	2"	COND	PVC	A0002
1	05	A0003	ALARM	A0002	H-2-122745-4	PB-05-B1	H-2-122745-4	3/4"	COND	IMC	A0002
1	05	B0001	SIGNAL	B0001A/G	H-2-122745-2	PB-05-X/B2	H-2-122745-4	2"	COND	IMC	B0001,2,3,4,5,6,7,8,9
1	05	B0001A	SIGNAL	B0001B/C	H-2-122745-2	B0001G/B0001	H-2-122745-2	1"	COND	IMC	B0007,8,9
1	05	B0001B	SIGNAL	TE-CSS-065-3	H-2-122745-2	B0001A/C	H-2-122745-2	1/2"	COND	FLEX	B0007
1	05	B0001C	SIGNAL	B0001D/E	H-2-122745-2	B0001A/B	H-2-122745-2	1"	COND	IMC	B0008,9
1	05	B0001D	SIGNAL	TE-CSS-066-3	H-2-122745-2	B0001C/E	H-2-122745-2	1/2"	COND	FLEX	B0008
1	05	B0001E	SIGNAL	TE-CSS-067-3	H-2-122745-2	B0001D/C	H-2-122745-2	3/4"	COND	FLEX	B0009
1	05	B0001F	SIGNAL	B0001G/K	H-2-122745-2	B0001/A	H-2-122745-2	1-1/2"	COND	IMC	B0001,2,3,4,5,6
1	05	B0001G	SIGNAL	B0001F/K	H-2-122745-2	B0001J/H	H-2-122745-2	1"	COND	IMC	B0005,6
1	05	B0001H	SIGNAL	TE-CSS-063-3	H-2-122745-2	B0001G/J	H-2-122745-2	1/2"	COND	FLEX	B0005
1	05	B0001J	SIGNAL	TE-CSS-064-3	H-2-122745-2	B0001H/J	H-2-122745-2	1/2"	COND	FLEX	B0006
1	05	B0001K	SIGNAL	B0001L/M	H-2-122745-2	B0001F/G	H-2-122745-2	1-1/2"	COND	IMC	B0001,2,3,4
1	05	B0001L	SIGNAL	TE-CSS-062-2	H-2-122745-2	B0001K/M	H-2-122745-2	1/2"	COND	FLEX	B0001
1	05	B0001M	SIGNAL	B0001P/N	H-2-122745-2	B0001K/L	H-2-122745-2	1"	COND	IMC	B0002,3,4
1	05	B0001N	SIGNAL	TE-CSS-063-2	H-2-122745-2	B0001P/M	H-2-122745-2	1/2"	COND	FLEX	B0002

Electrical Conduit Schedule for Package Number E350

REV NO.	BLDG NO.	RACEWY NO.	FOR	FROM		TO		RACEWAY DATA			INCLUDED CABLE NOs.
				EQUIPMENT NUMBER OR LOCATION	PLAN DRAWING	EQUIPMENT NUMBER OR LOCATION	PLAN DRAWING	SIZE	TYPE	MATERIAL OF CONSTR	
1	05	B0001P	SIGNAL	B0001R/Q	H-2-122745-2	B0001M/N	H-2-122745-2	1"	COND	IMC	B0003,4
1	05	B0001Q	SIGNAL	TE-CSS-062-3	H-2-122745-2	B0001P/R	H-2-122745-2	1/2"	COND	FLEX	B0004
1	05	B0001R	SIGNAL	TE-CSS-064-2	H-2-122745-2	B0001P/R	H-2-122745-2	1/2"	COND	FLEX	B0003
1	05	B0002	SIGNAL	B0002A/P	H-2-122745-1	PB-05-X/B2	H-2-122745-4	2"	COND	IMC	B0010,11,12,13,14,15,16,17,18
1	05	B0002A	SIGNAL	B0002B/L	H-2-122745-1	B0002/P	H-2-122745-1	1-1/2"	COND	IMC	B0010,11,12,13,14,15
1	05	B0002B	SIGNAL	B0002C/D	H-2-122745-1	B0002A/L	H-2-122745-1	1-1/2"	COND	IMC	B0010,13,14,15
1	05	B0002C	SIGNAL	TE-CSS-068-1	H-2-122745-1	B0002B/D	H-2-122745-1	1/2"	COND	FLEX	B0013
1	05	B0002D	SIGNAL	B0002E/F	H-2-122745-1	B0002B/C	H-2-122745-1	1"	COND	IMC	B0010,14,15
1	05	B0002E	SIGNAL	TE-CSS-069-1	H-2-122745-1	B0002D/F	H-2-122745-1	1/2"	COND	FLEX	B0014
1	05	B0002F	SIGNAL	B0002G/J	H-2-122745-1	B0002D/E	H-2-122745-1	1"	COND	IMC	B0010,15
1	05	B0002G	SIGNAL	B0002H	H-2-122745-1	B0002F/J	H-2-122745-1	3/4"	COND	IMC	B0015
1	05	B0002H	SIGNAL	TE-CSS-070-1	H-2-122745-1	B0002G/F	H-2-122745-1	1/2"	COND	FLEX	B0015
1	05	B0002J	SIGNAL	B0002K	H-2-122745-1	B0002G/F	H-2-122745-1	3/4"	COND	IMC	B0010
1	05	B0002K	SIGNAL	TE-CSS-068-2	H-2-122745-1	B0002J	H-2-122745-1	1/2"	COND	FLEX	B0010
1	05	B0002L	SIGNAL	B0002M/N	H-2-122745-1	B0002A/B	H-2-122745-1	1"	COND	IMC	B0011,12
1	05	B0002M	SIGNAL	TE-CSS-069-2	H-2-122745-1	B0002L/N	H-2-122745-1	1/2"	COND	FLEX	B0011

Electrical Conduit Schedule for Package Number E350

REV NO.	BLDG NO.	RACEWY NO.	FOR	FROM		TO		RACEWAY DATA			INCLUDED CABLE NOs.
				EQUIPMENT NUMBER OR LOCATION	PLAN DRAWING	EQUIPMENT NUMBER OR LOCATION	PLAN DRAWING	SIZE	TYPE	MATERIAL OF CONSTR	
1	05	B0002N	SIGNAL	TE-CSS-070-2	H-2-122745-1	B0002L/M	H-2-122745-1	1/2"	COND	FLEX	B0012
1	05	B0002P	SIGNAL	B0002Q/R	H-2-122745-2	B0002A/B0002	H-2-122745-4	1"	COND	IMC	B0016,17,18
1	05	B0002Q	SIGNAL	TE-CSS-068-3	H-2-122745-2	B0002P/R	H-2-122745-2	1/2"	COND	FLEX	B0016
1	05	B0002R	SIGNAL	B0002S/T	H-2-122745-2	B0002P/Q	H-2-122745-2	1"	COND	IMC	B0017,18
1	05	B0002S	SIGNAL	TE-CSS-069-3	H-2-122745-2	B0002R/T	H-2-122745-2	1/2"	COND	FLEX	B0017
1	05	B0002T	SIGNAL	TE-CSS-070-3	H-2-122745-2	B0002R/S	H-2-122745-2	3/4"	COND	FLEX	B0018
1	05	B0003	SIGNAL	B0003A/K	H-2-122745-1	PB-05-X/B2	H-2-122745-4	2"	COND	IMC	B0019,20,21,22,23,24,25,26,27
1	05	B0003A	SIGNAL	B0003/K	H-2-122745-1	B0003B/C/D	H-2-122745-1	1-1/2"	COND	IMC	B0022,23,24,25,26,27
1	05	B0003B	SIGNAL	TE-CSS-065-1	H-2-122745-1	B0003A/C/D	H-2-122745-1	1/2"	COND	FLEX	B0022
1	05	B0003C	SIGNAL	TE-CSS-065-2	H-2-122745-1	B0003A/B/D	H-2-122745-1	1/2"	COND	FLEX	B0025
1	05	B0003D	SIGNAL	B0003E/F/G	H-2-122745-1	B0003A/B/C	H-2-122745-1	1-1/2"	COND	IMC	B0023,24,26,27
1	05	B0003E	SIGNAL	TE-CSS-066-1	H-2-122745-1	B0003D/F/G	H-2-122745-1	1/2"	COND	FLEX	B0023
1	05	B0003F	SIGNAL	TE-CSS-066-2	H-2-122745-1	B0003D/E/G	H-2-122745-1	1/2"	COND	FLEX	B0026
1	05	B0003G	SIGNAL	B0003H/J	H-2-122745-1	B0003D/E/F	H-2-122745-1	1"	COND	IMC	B0024,27
1	05	B0003H	SIGNAL	TE-CSS-067-1	H-2-122745-1	B0003G/J	H-2-122745-1	1/2"	COND	FLEX	B0024
1	05	B0003J	SIGNAL	TE-CSS-067-2	H-2-122745-1	B0003G/H	H-2-122745-1	1/2"	COND	FLEX	B0027
1	05	B0003K	SIGNAL	B0003L/M	H-2-122745-1	B0003/A	H-2-122745-1	1"	COND	IMC	B0019,20,21

Electrical Conduit Schedule for Package Number E350

REV NO.	BLDG NO.	RACEWY NO.	FOR	FROM		TO		RACEWAY DATA			INCLUDED CABLE NOs.
				EQUIPMENT NUMBER OR LOCATION	PLAN DRAWING	EQUIPMENT NUMBER OR LOCATION	PLAN DRAWING	SIZE	TYPE	MATERIAL OF CONSTR	
1	05	B0003L	SIGNAL	TE-CSS-064-1	H-2-122745-1	B0003K/M	H-2-122745-1	1/2"	COND	FLEX	B0021
1	05	B0003M	SIGNAL	B0003N/P	H-2-122745-1	B0003K/L	H-2-122745-1	1"	COND	IMC	B0019,20
1	05	B0003N	SIGNAL	TE-CSS-062-1	H-2-122745-1	B0003M/P	H-2-122745-1	1/2"	COND	FLEX	B0019
1	05	B0003P	SIGNAL	TE-CSS-063-1	H-2-122745-1	B0003M/N	H-2-122745-1	1/2"	COND	FLEX	B0020
1	05	B0004	SIGNAL	B0004A/C	H-2-122745-1	PB-05-X/B1	H-2-122745-4	2"	COND	IMC	B0028,29,30,31,32,33,34,35
1	05	B0004A	SIGNAL	PB-05-P/B21	H-2-122745-1	B0004C/B0004	H-2-122745-1	1"	COND	IMC	B0034,35
1	05	B0004B	SIGNAL	PB-05-P/B21	H-2-122745-1	RO-620-598	H-2-122745-1	1"	COND	FLEX	B0034,35 & CKT C4 (2 #12)
1	05	B0004C	SIGNAL	B0004D/F	H-2-122745-2	B0004A/B0004	H-2-122745-1	1-1/2"	COND	IMC	B0028,29,30,31,32,33
1	05	B0004D	SIGNAL	RE-620-304	H-2-122745-2	B0004C/F	H-2-122745-2	1-1/2"	COND	IMC	B0030,31,32,33
1	05	B0004F	SIGNAL	PB-05-P/B20	H-2-122745-2	B0004C/D	H-2-122745-2	1"	COND	IMC	B0028,29
1	05	B0004G	SIGNAL	PB-05-P/B20	H-2-122745-2	RO-620-600	H-2-122745-2	1"	COND	FLEX	B0028,29, CKT C4 (2 #12)
1	05	B0005	SIGNAL	B0005A/C	H-2-122745-2	PB-05-X/B1	H-2-122745-4	2"	COND	IMC	B0036,37,38,39,40,41,42,43,44,45
1	05	B0005A	SIGNAL	PB-05-P/B17	H-2-122745-2	B0005C/B0005	H-2-122745-2	1-1/2"	COND	IMC	B0036,37,38,39
1	05	B0005B	SIGNAL	PB-05-P/B17	H-2-122745-2	RE-620-305	H-2-122745-2	1-1/2"	COND	IMC	B0036,37,38,39, CKT C4 (2 #12)
1	05	B0005C	SIGNAL	B0005D/F	H-2-122745-2	B0005A/B0005	H-2-122745-2	1-1/2"	COND	IMC	B0040,41,42,43,44,45
1	05	B0005D	SIGNAL	PB-05-P/B18	H-2-122745-2	B0005C/F	H-2-122745-2	1"	COND	IMC	B0040,41

Electrical Conduit Schedule for Package Number E350

REV NO.	BLDG NO.	RACEWY NO.	FOR	FROM		TO		RACEWAY DATA			INCLUDED CABLE NOs.
				EQUIPMENT NUMBER OR LOCATION	PLAN DRAWING	EQUIPMENT NUMBER OR LOCATION	PLAN DRAWING	SIZE	TYPE	MATERIAL OF CONSTR	
1	05	B0005E	SIGNAL	PB-05-P/B18	H-2-122745-2	RO-620-601	H-2-122745-2	1"	COND	FLEX	B0040,41, CKT C17 (2 #12)
1	05	B0005F	SIGNAL	PB-05-P/B19	H-2-122745-2	B0005C/D	H-2-122745-2	1-1/2"	COND	IMC	B0042,43,44,45
1	05	B0005G	SIGNAL	PB-05-P/B19	H-2-122745-2	RE-620-307	H-2-122745-2	1-1/2"	COND	FLEX	B0042,43,44,45, CKT C17 (2 #12)
1	05	B0006	SIGNAL	B0006A/C	H-2-122745-1	PB-05-B1	H-2-122745-4	1-1/2"	COND	IMC	B0097,98,99,100,101,102,103
1	05	B0006A	SIGNAL	B0006B	H-2-122745-1	B0006C	H-2-122745-1	3/4"	COND	IMC	B0097
1	05	B0006B	SIGNAL	TE-CSS-061	H-2-122745-1	B0006B	H-2-122745-1	1/2"	COND	FLEX	B0097
1	05	B0006C	SIGNAL	B0006D/E	H-2-122746-1	B0006A/B0006	H-2-122745-1	1-1/2"	COND	IMC	B0098,99,100,101,102,103
1	05	B0006D	SIGNAL	B0006F/C	H-2-122746-1	B0006E	H-2-122746-1	1"	COND	IMC	B0098,99,100
1	05	B0006E	SIGNAL	TE-CSE-011A,B,C	H-2-122746-1	B0006B/D	H-2-122746-1	1"	COND	FLEX	B0098,99,100
1	05	B0006F	SIGNAL	B0006G	H-2-122746-1	B0006C/D	H-2-122746-1	1"	COND	IMC	B0101,102,103
1	05	B0006G	SIGNAL	TE-CSE-013A,B,C	H-2-122746-1	B0006F	H-2-122746-1	1"	COND	FLEX	B0101,102,103
1	05	B0007	SIGNAL	B0007A/C	H-2-122745-1	PB-05-X/B1	H-2-122745-4	2"	COND	IMC	B0046,47,48,49,50,51
1	05	B0007A	SIGNAL	PB-05-P/B16	H-2-122745-1	B0007C/B0007	H-2-122745-1	1"	COND	IMC	B0046,47
1	05	B0007B	SIGNAL	PB-05-P/B16	H-2-122745-1	RO-620-599	H-2-122745-1	1"	COND	FLEX	B0046,47, CKT C17 (2 #12)
1	05	B0007C	SIGNAL	PB-05-P/B15	H-2-122745-1	B0007A/B0007	H-2-122745-1	1-1/2"	COND	IMC	B0048,49,50,51
1	05	B0007D	SIGNAL	PB-05-P/B15	H-2-122745-1	RE-620-301	H-2-122745-1	1-1/2"	COND	FLEX	B0048,49,50,51, CKT C4 (2 #12)
1	05	B0008	SIGNAL	B0008A/C	H-2-122745-4	PB-05-X/B1	H-2-122745-4	2"	COND	IMC	B0054,55,56,57,58,59,60,61

Electrical Conduit Schedule for Package Number E350

REV NO.	BLDG NO.	RACEWY NO.	FOR	FROM		TO		RACEWAY DATA			INCLUDED CABLE NOs.
				EQUIPMENT NUMBER OR LOCATION	PLAN DRAWING	EQUIPMENT NUMBER OR LOCATION	PLAN DRAWING	SIZE	TYPE	MATERIAL OF CONSTR	
1	05	B0008A	SIGNAL	PB-05-B6	H-2-122745-4	B0008C/B0008	H-2-122745-4	1-1/2"	COND	IMC	B0054,55,56,57
1	05	B0008B	SIGNAL	PB-05-B6	H-2-122745-4	RE-620-309	H-2-122745-4	1-1/2"	COND	FLEX	B0054,55,56,57, CKT C2 (2 #10)
1	05	B0008C	SIGNAL	PB-05-B11	H-2-122745-3	B0008A/B0008	H-2-122745-3	1-1/2"	COND	IMC	B0058,59,60,61
1	05	B0008D	SIGNAL	PB-05-B11	H-2-122745-3	RE-620-302	H-2-122745-3	1-1/2"	COND	FLEX	B0058,59,60,61, CKT C2 (2 #10)
1	05	B0009	SIGNAL	PB-05-B10	H-2-122745-3	PB-05-X/B1	H-2-122745-4	2"	COND	IMC	B0062,63,64,65,66,67,68
1	05	B0009A	SIGNAL	PB-05-B10	H-2-122745-3	RE-620-720	H-2-122745-3	2"	COND	FLEX	B0062,63,64,65,66,67,68 CKT C12 (2 #10)
1	05	B0010	SIGNAL	PB-05-B10	H-2-122745-3	PB-05-X/B1	H-2-122745-4	2"	COND	IMC	B0069,70,71,72,73,74,75
1	05	B0010A	SIGNAL	PB-05-B10	H-2-122745-3	RE-620-725	H-2-122745-3	2"	COND	FLEX	B0069,70,71,72,73,74,75 CKT C2 (2 #10)
1	05	B0011	SIGNAL	TIC-CSS-013	H-2-122745-4	B0011A	H-2-122745-3	3/4"	COND	IMC	B0076
1	05	B0011A	SIGNAL	B0011	H-2-122745-3	EH-05I-117	H-2-122745-3	1/2"	COND	FLEX	B0076
1	05	B0012	SIGNAL	TIC-CSS-011	H-2-122745-4	B0012A	H-2-122745-3	3/4"	COND	IMC	B0077
1	05	B0012A	SIGNAL	B0012	H-2-122745-3	EH-05I-115	H-2-122745-3	1/2"	COND	FLEX	B0077
1	05	B0013	SIGNAL	TIC-CSS-012	H-2-122745-4	B0013A	H-2-122745-3	3/4"	COND	IMC	B0078
1	05	B0013A	SIGNAL	B0013	H-2-122745-3	EH-05I-116	H-2-122745-3	1/2"	COND	FLEX	B0078
1	05	B0014	SIGNAL	B0014A/C	H-2-122745-4	PB-05-B2	H-2-122745-4	1-1/2"	COND	IMC	B0079,80,92,93,94
1	05	B0014A	SIGNAL	PB-05-B7	H-2-122745-4	B0014C/B0014	H-2-122745-4	1-1/2"	COND	IMC	B0092,93,94

Electrical Conduit Schedule for Package Number E350

REV NO.	BLDG NO.	RACEWY NO.	FOR	FROM		TO		RACEWAY DATA			INCLUDED CABLE NOs.
				EQUIPMENT NUMBER OR LOCATION	PLAN DRAWING	EQUIPMENT NUMBER OR LOCATION	PLAN DRAWING	SIZE	TYPE	MATERIAL OF CONSTR	
1	05	B0014B	SIGNAL	PB-05-B7	H-2-122745-4	PM-620-751	H-2-122745-4	1-1/2"	COND	FLEX	B0092,93,94, CKT C11 (2 #12)
1	05	B0014C	SIGNAL	PB-05-B9	H-2-122745-3	B0014A	H-2-122745-3	1"	COND	IMC	B0079,80
1	05	B0014D	SIGNAL	PB-05-B9	H-2-122745-3	RO-620-603	H-2-122745-3	1"	COND	FLEX	B0079,80, CKT C11 (2 #12)
1	05	B0015	CONTRL	B0015A/B	H-2-122745-3	PB-05-B1	H-2-122745-4	2"	COND	IMC	B0081,82,83,84,85,86
1	05	B0015A	CONTRL	IR-610-434	H-2-122745-3	B0015B	H-2-122745-3	1"	COND	IMC	B0081,B0082
1	05	B0015B	CONTRL	B0015C/D	H-2-122745-3	B0015A/B0015	H-2-122745-3	1-1/2"	COND	IMC	B0083,84,85,86
1	05	B0015C	CONTRL	IR-610-435	H-2-122745-3	B0015B/D	H-2-122745-3	1"	COND	IMC	B0085,86
1	05	B0015D	CONTRL	IR-610-436	H-2-122745-3	B0015B/C	H-2-122745-3	1"	COND	IMC	B0083,84
1	05	B0016	SIGNAL	B0016A/C	H-2-122745-3	PB-05-B1	H-2-122745-4	1-1/2"	COND	IMC	B0087,88,89,90,91
1	05	B0016A	SIGNAL	B0016B	H-2-122745-4	B0016C	H-2-122745-3	3/4"	COND	IMC	B0087
1	05	B0016B	SIGNAL	YSH-CSE-015	H-2-122745-4	B0016A	H-2-122745-4	3/4"	COND	FLEX	B0087
1	05	B0016C	SIGNAL	B0016D/F	H-2-122745-3	B0016A	H-2-122745-3	1-1/2"	COND	IMC	B0088,89,90,91
1	05	B0016D	SIGNAL	B0016E	H-2-122745-3	B0016C/F	H-2-122745-3	3/4"	COND	IMC	B0088
1	05	B0016E	SIGNAL	YSH-CSE-009	H-2-122745-3	B0016D	H-2-122745-3	3/4"	COND	FLEX	B0088
1	05	B0016F	SIGNAL	B0016G/J	H-2-122745-3	B0016C/D	H-2-122745-3	1-1/2"	COND	IMC	B0089,90,91
1	05	B0016G	SIGNAL	B0016H	H-2-122745-3	B0016F/J	H-2-122745-3	3/4"	COND	IMC	B0089
1	05	B0016H	SIGNAL	YSH-CSS-040-1	H-2-122745-3	B0016G	H-2-122745-3	3/4"	COND	FLEX	B0089

Electrical Conduit Schedule for Package Number E350

REV NO.	BLDG NO.	RACEWY NO.	FOR	FROM		TO		RACEWAY DATA			INCLUDED CABLE NOs.
				EQUIPMENT NUMBER OR LOCATION	PLAN DRAWING	EQUIPMENT NUMBER OR LOCATION	PLAN DRAWING	SIZE	TYPE	MATERIAL OF CONSTR	
1	05	B0016J	SIGNAL	B0016K/M	H-2-122745-3	B0016F/G	H-2-122745-3	1"	COND	IMC	B0090,91
1	05	B0016K	SIGNAL	B0016L	H-2-122745-3	B0016J/M	H-2-122745-3	3/4"	COND	IMC	B0090
1	05	B0016L	SIGNAL	YSH-CSS-040-2	H-2-122745-3	B0016K	H-2-122745-3	3/4"	COND	FLEX	B0090
1	05	B0016M	SIGNAL	B0016N	H-2-122745-3	B0016J/K	H-2-122745-3	3/4"	COND	IMC	B0091
1	05	B0016N	SIGNAL	YSH-CSE-045	H-2-122745-3	B0016M	H-2-122745-3	3/4"	COND	FLEX	B0091
1	05	B0017	SIGNAL	B0017A	H-2-122745-3	B0017B	H-2-122745-3	3/4"	COND	IMC	B0095
1	05	B0017A	SIGNAL	TE-VAX-333-1	H-2-122745-3	B0017	H-2-122745-3	1/2"	COND	FLEX	B0095
1	05	B0017B	SIGNAL	TIT-VAX-333-1	H-2-122745-3	B0017	H-2-122745-3	1/2"	COND	FLEX	B0095
1	05	B0018	SIGNAL	B0018A	H-2-122745-3	B0018B	H-2-122745-3	3/4"	COND	IMC	B0096
1	05	B0018A	SIGNAL	TE-VAX-333-2	H-2-122745-3	B0018	H-2-122745-3	1/2"	COND	FLEX	B0096
1	05	B0018B	SIGNAL	TIT-VAX-333-2	H-2-122745-3	B0018	H-2-122745-3	1/2"	COND	FLEX	B0096
1	05	B0019	CONTRL	B0019A/B	H-2-122745-4	PB-05-B1	H-2-122745-4	1"	COND	IMC	B0105,B0106
1	05	B0019A	CONTRL	B0019B,19	H-2-122745-4	B0020/20A	H-2-122745-4	3/4"	COND	IMC	B0106
1	05	B0019B	CONTRL	B0019A,19	H-2-122745-4	B0021/21A	H-2-122745-4	3/4"	COND	IMC	B0105
1	05	B0020	CONTRL	B0019A/B0020A	H-2-122745-4	B0020B	H-2-122745-4	3/4"	COND	IMC	B0108
1	05	B0020A	CONTRL	UIC-CSS-024	H-2-122745-4	B0020/B0019A	H-2-122745-4	1"	COND	IMC	B0108,B0106

Electrical Conduit Schedule for Package Number E350

REV NO.	BLDG NO.	RACEWY NO.	FOR	FROM		TO		RACEWAY DATA			INCLUDED CABLE NOs.
				EQUIPMENT NUMBER OR LOCATION	PLAN DRAWING	EQUIPMENT NUMBER OR LOCATION	PLAN DRAWING	SIZE	TYPE	MATERIAL OF CONSTR	
1	05	B0020B	CONTRL	B0020	H-2-122745-4	AC-05I-110B	H-2-122745-4	1/2"	COND	FLEX	B0108
1	05	B0021	CONTRL	B0019B/B0021A	H-2-122745-4	B0021B	H-2-122745-4	3/4"	COND	IMC	B0107
1	05	B0021A	CONTRL	UIC-CSS-021	H-2-122745-4	B0021/B0019B	H-2-122745-4	3/4"	COND	IMC	B0107,B0105
1	05	B0021B	CONTRL	B0021	H-2-122745-4	AC-05I-110A	H-2-122745-4	1/2"	COND	FLEX	B0107
1	05	B0022	SIGNAL	B0022A/C	H-2-122745-4	PB-05-B1	H-2-122745-4	2"	COND	IMC	B0109,B0110,111,112,113,114,115,116, 117,118
1	05	B0022A	SIGNAL	PB-05-B5	H-2-122745-4	B0022A/C	H-2-122745-4	1-1/2"	COND	IMC	B0116,117,118
1	05	B0022B	SIGNAL	PB-05-B5	H-2-122745-4	RE-620-303	H-2-122745-4	1-1/2"	COND	FLEX	B0116,117,118, CKT C2 (2 #10)
1	05	B0022C	SIGNAL	PB-05-B4	H-2-122745-4	B0022A/B0022	H-2-122745-4	2"	COND	IMC	B0109,B0110,111,112,113,114,115
1	05	B0022D	SIGNAL	PB-05-B4	H-2-122745-4	RE-620-721	H-2-122745-4	2"	COND	FLEX	B0109,B0110,111,112,113,114,115, CKT C2 (2 #10)
1	05	B0023	SIGNAL	PB-05-B3	H-2-122745-4	PB-05-X/B1	H-2-122745-4	2"	COND	IMC	B0119,B0120,121,122,123,124,125
1	05	B0023A	SIGNAL	PB-05-B3	H-2-122745-4	RE-620-724	H-2-122745-4	2"	COND	FLEX	B0119,B0120,121,122,123,124,125, CKT C14 (2 #12)
1	05	B0024	CONTRL	MC-32A-205	H-2-122745-4	PB-05-B1	H-2-122745-4	1"	COND	IMC	B0144 THRU B0149, B0156 THRU B0167 (19 #14)
1	05	B0025	CONTRL	MC-32B-205	H-2-122745-4	PB-05-B1	H-2-122745-4	3/4"	COND	IMC	B0126 THRU B0137, (12 #14)
1	05	B0026	CONTRL	PX-05I-112,113 STARTERS	H-2-122745-4 H-2-122740-4	PB-05-B1	H-2-122745-4	3/4"	COND	IMC	B0150 THRU B0155, B0138 THRU B0143 (11 #14)
1	05	B0027	SIGNAL	B0027A	H-2-122745-4	B0027B	H-2-122745-4	3/4"	COND	IMC	B0174
1	05	B0027A	SIGNAL	TE-CSE-014	H-2-122745-4	B0027	H-2-122745-4	3/4"	COND	FLEX	B0174
1	05	B0027B	SIGNAL	TIT-CSE-014	H-2-122745-4	B0027	H-2-122745-4	3/4"	COND	FLEX	B0174

Electrical Conduit Schedule for Package Number E350

REV NO.	BLDG NO.	RACEWY NO.	FOR	FROM		TO		RACEWAY DATA			INCLUDED CABLE NOs.
				EQUIPMENT NUMBER OR LOCATION	PLAN DRAWING	EQUIPMENT NUMBER OR LOCATION	PLAN DRAWING	SIZE	TYPE	MATERIAL OF CONSTR	
1	05	B0028	SIGNAL	PB-05-B8	H-2-122745-4	B0028A	H-2-122745-4	1"	COND	IMC	B0052,53
1	05	B0028A	SIGNAL	PB-05-B8	H-2-122745-4	RO-620-597	H-2-122745-4	1"	COND	FLEX	B0052,53, CKT C2 (2 #10)
1	05	B0029	SIGNAL	B0029A	H-2-122745-3	B0029B	H-2-122745-3	3/4"	COND	IMC	B0171
1	05	B0029A	SIGNAL	TE-CSS-039-2	H-2-122745-3	B0029	H-2-122745-3	3/4"	COND	FLEX	B0171
1	05	B0029B	SIGNAL	B0029	H-2-122745-3	TIT-CSS-039-2	H-2-122745-3	3/4"	COND	FLEX	B0171
1	05	B0030	SIGNAL	B0030A	H-2-122745-3	B0030B	H-2-122745-3	3/4"	COND	IMC	B0172
1	05	B0030A	SIGNAL	TE-CSS-039-1	H-2-122745-3	B0030	H-2-122745-3	3/4"	COND	FLEX	B0172
1	05	B0030B	SIGNAL	B0030	H-2-122745-3	TIT-CSS-039-1	H-2-122745-3	3/4"	COND	FLEX	B0172
1	05	B0031	SIGNAL	B0031A	H-2-122745-3	PB-05-B1	H-2-122745-4	3/4"	COND	IMC	B0173
1	05	B0031A	SIGNAL	B0031	H-2-122745-3	FSL-CSS-010	H-2-122745-3	1/2"	COND	FLEX	B0173
1	05	B0032	SIGNAL	B0032A	H-2-122745-3	B0032B	H-2-122745-3	3/4"	COND	IMC	B0175
1	05	B0032A	SIGNAL	TE-CSS-001	H-2-122745-3	B0032	H-2-122745-3	1/2"	COND	FLEX	B0175
1	05	B0032B	SIGNAL	TIT-CSS-001	H-2-122745-3	B0032	H-2-122745-3	1/2"	COND	FLEX	B0175
1	05	C0001	COMM	CLEAN OPER OFFICE	H-2-122736-2	UG STUB OUT	H-2-122736-1	4"	COND	PVC	(BY OTHERS)
1	05	C0002	COMM	CLEAN OPER OFFICE	H-2-122736-2	UG STUB OUT	H-2-122736-1	4"	COND	PVC	(BY OTHERS)
1	05	C0003	COMM	CLEAN OPER OFFICE	H-2-122736-2	UG STUB OUT	H-2-122736-1	4"	COND	PVC	(BY OTHERS)

Electrical Conduit Schedule for Package Number E350

REV NO.	BLDG NO.	RACEWY NO.	FOR	FROM		TO		RACEWAY DATA			INCLUDED CABLE NOs.
				EQUIPMENT NUMBER OR LOCATION	PLAN DRAWING	EQUIPMENT NUMBER OR LOCATION	PLAN DRAWING	SIZE	TYPE	MATERIAL OF CONSTR	
1	05	C0004	COMM	CLEAN OPER OFFICE	H-2-122736-2	UG STUB OUT	H-2-122736-1	4"	COND	PVC	(BY OTHERS)
1	05	C0005	COMM	COMM BACKBOARD	H-2-122736-2	UG STUB OUT	H-2-122736-1	4"	COND	PVC	(BY OTHERS)
1	05	C0006	COMM	COMM BACKBOARD	H-2-122736-2	UG STUB OUT	H-2-122736-1	4"	COND	PVC	(BY OTHERS)
1	05	C0007	COMM	COMM BACKBOARD	H-2-122736-2	UG STUB OUT	H-2-122736-1	4"	COND	PVC	(BY OTHERS)
1	05	C0008	COMM	CLEAN OPER OFFICE	H-2-122736-2	UG STUB OUT	H-2-122736-1	4"	COND	PVC	(BY OTHERS)
1	05	C0009	COMM	CLEAN OPER OFFICE	H-2-122736-2	UG STUB OUT	H-2-122736-1	4"	COND	PVC	(BY OTHERS)
1	05	C0010	COMM	COMM BACKBOARD	H-2-122736-2	UG STUB OUT	H-2-122736-1	4"	COND	PVC	(BY OTHERS)
1	05	C0011	COMM	COMM BACKBOARD	H-2-122736-2	UG STUB OUT	H-2-122736-1	4"	COND	PVC	(BY OTHERS)
1	05	C0012	COMM	COMM BACKBOARD	H-2-122736-2	UG STUB OUT	H-2-122736-1	4"	COND	PVC	(BY OTHERS)
1	05	C0013	COMM	COMM BACKBOARD	H-2-122736-2	UG STUB OUT	H-2-122736-1	4"	COND	PVC	(BY OTHERS)
1	05	C0014	COMM	COMM BACKBOARD	H-2-122736-2	UG STUB OUT	H-2-122736-1	4"	COND	PVC	(BY OTHERS)
1	05	P0001	POWER	MC-32A-205	H-2-122740-4	BL-05I-112	H-2-122740-3	3/4"	COND	IMC	P0001A,B,C,G
1	05	P0002	POWER	MC-32B-205	H-2-122740-4	P0090	H-2-122740-4	2"	COND	IMC	P0002A,B,C,G
1	05	P0004	POWER	AHU PUMP MOTOR CONTROLLER	H-2-122740-4	PX-05I-112	H-2-122740-3	3/4"	COND	IMC	P0019A,N,G
1	05	P0007	POWER	MC-32A-205	H-2-122740-4	BL-05I-111	H-2-122740-3	3/4"	COND	IMC	P0003A,B,C,G

Electrical Conduit Schedule for Package Number E350

REV NO.	BLDG NO.	RACEWY NO.	FOR	FROM		TO		RACEWAY DATA			INCLUDED CABLE NOs.
				EQUIPMENT NUMBER OR LOCATION	PLAN DRAWING	EQUIPMENT NUMBER OR LOCATION	PLAN DRAWING	SIZE	TYPE	MATERIAL OF CONSTR	
1	05	P0010	POWER	MC-32A-205	H-2-122740-4	CU-05I-111	H-2-122740-3	3/4"	COND	IMC	P0004A,B,C,G
1	05	P0012	POWER	MC-32A-205	H-2-122740-4	VP-620-003VA	H-2-122740-3	3/4"	COND	IMC	P0005A,B,C,G
1	05	P0015	POWER	MC-32A-205	H-2-122740-4	P0016	H-2-122740-3	3/4"	COND	IMC	P0006A,B,C,G
1	05	P0016	POWER	P0015	H-2-122740-3	EH-05I-115	H-2-122740-3	3/4"	COND	FLEX	P0006A,B,C
1	05	P0017	POWER	MC-32A-205	H-2-122740-4	P0018	H-2-122740-3	3/4"	COND	IMC	P0007A,B,C,G
1	05	P0018	POWER	P0017	H-2-122740-3	EH-05I-117	H-2-122740-3	3/4"	COND	FLEX	P0007A,B,C,G
1	05	P0019	POWER	MC-32A-205	H-2-122740-4	P0020	H-2-122740-3	3/4"	COND	IMC	P0008A,B,C,G
1	05	P0020	POWER	P0019	H-2-122740-3	UH-05I-119	H-2-122740-3	3/4"	COND	FLEX	P0008A,B,C,G
1	05	P0021	POWER	MC-32A-205	H-2-122740-4	P0022	H-2-122740-1	3/4"	COND	IMC	P0009A,B,C,G
1	05	P0022	POWER	P0021	H-2-122740-1	UH-05I-121	H-2-122740-1	3/4"	COND	FLEX	P0009A,B,C,G
1	05	P0023	POWER	MC-32A-205	H-2-122740-4	P0024	H-2-122740-1	3/4"	COND	IMC	P0010A,B,C,G
1	05	P0024	POWER	P0023	H-2-122740-1	UH-05I-123	H-2-122740-1	3/4"	COND	FLEX	P0010A,B,C,G
1	05	P0025	POWER	MC-32A-205	H-2-122740-4	P0026	H-2-122740-1	3/4"	COND	IMC	P0011A,B,C,G
1	05	P0026	POWER	P0025	H-2-122740-1	UH-05I-125	H-2-122740-1	3/4"	COND	FLEX	P0011A,B,C,G
1	05	P0027	POWER	MC-32A-205	H-2-122740-4	P0028	H-2-122740-2	3/4"	COND	IMC	P0012A,B,C,G
1	05	P0028	POWER	P0027	H-2-122740-2	UH-05I-127	H-2-122740-2	3/4"	COND	FLEX	P0012A,B,C,G
1	05	P0029	POWER	MC-32A-205	H-2-122740-4	P0030	H-2-122740-2	3/4"	COND	IMC	P0013A,B,C,G

Electrical Conduit Schedule for Package Number E350

REV NO.	BLDG NO.	RACEWY NO.	FOR	FROM		TO		RACEWAY DATA			INCLUDED CABLE NOs.
				EQUIPMENT NUMBER OR LOCATION	PLAN DRAWING	EQUIPMENT NUMBER OR LOCATION	PLAN DRAWING	SIZE	TYPE	MATERIAL OF CONSTR	
1	05	P0030	POWER	P0029	H-2-122740-2	UH-05I-129	H-2-122740-2	3/4"	COND	FLEX	P0013A,B,C,G
1	05	P0031	POWER	MC-32A-205	H-2-122740-4	P0032	H-2-122740-2	3/4"	COND	IMC	P0014A,B,C,G
1	05	P0032	POWER	P0031	H-2-122740-2	UH-05I-131	H-2-122740-2	3/4"	COND	FLEX	P0014A,B,C,G
1	05	P0033	POWER	MC-32A-205	H-2-122740-4	P0034	H-2-122740-2	3/4"	COND	IMC	P0015A,B,C,G
1	05	P0034	POWER	P0033	H-2-122740-2	UH-05I-133	H-2-122740-2	3/4"	COND	FLEX	P0015A,B,C,G
1	05	P0035	POWER	MC-32A-205	H-2-122740-4	BOX @DO-180-001	H-2-122740-1	3/4"	COND	IMC	P0016A,B,C,G
1	05	P0037	POWER	MC-32A-205	H-2-122741-2	LX-32A-215	H-2-122741-2	1-1/2"	COND	IMC	P0017A,B,C
1	05	P0038	POWER	MC-32B-205	H-2-122740-4	WELDG RCPT #2	H-2-122740-1	1"	COND	IMC	P0040A,B,C,G
1	05	P0039	POWER	MC-32B-205	H-2-122740-4	BL-05I-113	H-2-122740-3	3/4"	COND	IMC	P0026A,B,C,G
1	05	P0042	POWER	AHU PUMP MOTOR CONTROLLER	H-2-122740-4	PX-05I-113	H-2-122740-3	3/4"	COND	IMC	P0020B,N,G
1	05	P0043	POWER	MC-32A-205	H-2-122740-4	UP-34A-601	H-2-122740-4	3/4"	COND	IMC	P0043A,B,C,G
1	05	P0044	POWER	MC-32B-205	H-2-122740-4	UP-34A-601	H-2-122740-4	3/4"	COND	IMC	P0044A,B,C,G
1	05	P0045	POWER	MC-32B-205	H-2-122740-4	VP-620-003VB	H-2-122740-3	3/4"	COND	IMC	P0028A,B,C,G
1	05	P0047	POWER	MC-32B-205	H-2-122740-4	LX-32B-315	H-2-122740-4	1-1/2"	COND	IMC	P0047A,B,C,N,G
1	05	P0048	POWER	MC-32B-205	H-2-122740-4	P0049	H-2-122740-3	3/4"	COND	IMC	P0029A,B,C,G
1	05	P0049	POWER	P0048	H-2-122740-3	EH-05I-116	H-2-122740-3	3/4"	COND	FLEX	P0029A,B,C,G

Electrical Conduit Schedule for Package Number E350

REV NO.	BLDG NO.	RACEWY NO.	FOR	FROM		TO		RACEWAY DATA			INCLUDED CABLE NOs.
				EQUIPMENT NUMBER OR LOCATION	PLAN DRAWING	EQUIPMENT NUMBER OR LOCATION	PLAN DRAWING	SIZE	TYPE	MATERIAL OF CONSTR	
1	05	P0050	POWER	MC-32B-205	H-2-122740-4	P0051	H-2-122740-3	3/4"	COND	IMC	P0030A,B,C,G
1	05	P0051	POWER	P0050	H-2-122740-3	UH-05I-118	H-2-122740-3	3/4"	COND	FLEX	P0030A,B,C,G
1	05	P0052	POWER	MC-32B-205	H-2-122740-4	P0053	H-2-122740-1	3/4"	COND	IMC	P0031A,B,C,G
1	05	P0053	POWER	P0052	H-2-122740-1	UH-05I-120	H-2-122740-1	3/4"	COND	FLEX	P0031A,B,C,G
1	05	P0054	POWER	MC-32B-205	H-2-122740-4	P0055	H-2-122740-1	3/4"	COND	IMC	P0032A,B,C,G
1	05	P0055	POWER	P0054	H-2-122740-1	UH-05I-122	H-2-122740-1	3/4"	COND	FLEX	P0032A,B,C,G
1	05	P0056	POWER	MC-32B-205	H-2-122740-4	P0057	H-2-122740-1	3/4"	COND	IMC	P0033A,B,C,G
1	05	P0057	POWER	P0056	H-2-122740-1	UH-05I-124	H-2-122740-1	3/4"	COND	FLEX	P0033A,B,C,G
1	05	P0058	POWER	MC-32B-205	H-2-122740-4	P0059	H-2-122740-1	3/4"	COND	IMC	P0034A,B,C,G
1	05	P0059	POWER	P0058	H-2-122740-1	UH-05I-126	H-2-122740-1	3/4"	COND	FLEX	P0034A,B,C,G
1	05	P0060	POWER	MC-32B-205	H-2-122740-4	P0061	H-2-122740-2	3/4"	COND	IMC	P0035A,B,C,G
1	05	P0061	POWER	P0060	H-2-122740-2	UH-05I-128	H-2-122740-2	3/4"	COND	FLEX	P0035A,B,C,G
1	05	P0062	POWER	MC-32B-205	H-2-122740-4	P0063	H-2-122740-2	3/4"	COND	IMC	P0036A,B,C,G
1	05	P0063	POWER	P0062	H-2-122740-2	UH-05I-130	H-2-122740-2	3/4"	COND	FLEX	P0036A,B,C,G
1	05	P0064	POWER	MC-32B-205	H-2-122740-4	P0065	H-2-122740-2	3/4"	COND	IMC	P0037A,B,C,G
1	05	P0065	POWER	P0064	H-2-122740-2	UH-05I-132	H-2-122740-2	3/4"	COND	FLEX	P0037A,B,C,G
1	05	P0066	POWER	MC-32B-205	H-2-122740-4	XT-32B-005	H-2-122740-4	1"	COND	IMC	P0038A,B,C

Electrical Conduit Schedule for Package Number E350

REV NO.	BLDG NO.	RACEWY NO.	FOR	FROM		TO		RACEWAY DATA			INCLUDED CABLE NOs.
				EQUIPMENT NUMBER OR LOCATION	PLAN DRAWING	EQUIPMENT NUMBER OR LOCATION	PLAN DRAWING	SIZE	TYPE	MATERIAL OF CONSTR	
1	05	P0067	POWER	XT-32B-005	H-2-122740-4	DA-32B-005	H-2-122740-4	1"	COND	IMC	P0039A,B,C,N
1	05	P0068	POWER	MC-32B-205	H-2-122740-4	WELDG RCPT #1	H-2-122740-4	1"	COND	IMC	P0018A,B,C,G
1	05	P0069	POWER	DA-32B-006	H-2-122740-4	XT-32A-004	H-2-122742-2	3/4"	COND	IMC	P0041A,C,G (CKT 14)
1	05	P0070	POWER	UP-34A-601	H-2-122740-4	DA-34A-601	H-2-122740-4	1"	COND	IMC	P0042A,B,C,N,G
1	05	P0071	POWER	MC-32A-205	H-2-122736-2	UG STUB OUT	H-2-122736-1	4"	COND	PVC	(BY OTHERS)
1	05	P0072	POWER	MC-32A-205	H-2-122736-2	UG STUB OUT	H-2-122736-1	4"	COND	PVC	(BY OTHERS)
1	05	P0073	POWER	MC-32A-205	H-2-122736-2	UG STUB OUT	H-2-122736-1	4"	COND	PVC	(BY OTHERS)
1	05	P0074	POWER	MC-32A-205	H-2-122736-2	UG STUB OUT	H-2-122736-1	4"	COND	PVC	(BY OTHERS)
1	05	P0075	POWER	MC-32B-205	H-2-122736-2	UG STUB OUT	H-2-122736-1	4"	COND	PVC	(BY OTHERS)
1	05	P0076	POWER	MC-32B-205	H-2-122736-2	UG STUB OUT	H-2-122736-1	4"	COND	PVC	(BY OTHERS)
1	05	P0077	POWER	MC-32B-205	H-2-122736-2	UG STUB OUT	H-2-122736-1	4"	COND	PVC	(BY OTHERS)
1	05	P0078	POWER	MC-32B-205	H-2-122736-2	UG STUB OUT	H-2-122736-1	4"	COND	PVC	(BY OTHERS)
1	05	P0079	POWER	FOS NO. 5	H-2-122736-2	UG STUB OUT	H-2-122736-1	4"	COND	PVC	(BY OTHERS)
1	05	P0080	POWER	DA-32B-006	H-2-122736-2	UG STUB OUT	H-2-122736-1	4"	COND	PVC	(BY OTHERS)
1	05	P0081	POWER	FOS NO. 5	H-2-122736-2	UG STUB OUT	H-2-122736-1	4"	COND	PVC	(BY OTHERS)
1	05	P0082	POWER	DA-32B-006	H-2-122736-2	UG STUB OUT	H-2-122736-1	4"	COND	PVC	(BY OTHERS)

Electrical Conduit Schedule for Package Number E350

REV NO.	BLDG NO.	RACEWY NO.	FOR	FROM		TO		RACEWAY DATA			INCLUDED CABLE NOs.
				EQUIPMENT NUMBER OR LOCATION	PLAN DRAWING	EQUIPMENT NUMBER OR LOCATION	PLAN DRAWING	SIZE	TYPE	MATERIAL OF CONSTR	
1	05	P0085	POWER	ELECT EQUIP RM	H-2-122736-2	UG STUB OUT	H-2-122736-1	4"	COND	PVC	(BY OTHERS)
1	05	P0086	POWER	LX-32A-215	H-2-122740-4	P0087	H-2-122740-4	3/4"	COND	IMC	P0045C,N,G (CKT #11)
1	05	P0087	POWER	P0086	H-2-122740-4	AC-05I-110A	H-2-122740-4	3/4"	COND	FLEX	P0045C,N,G (CKT #11)
1	05	P0088	POWER	DA-32B-006	H-2-122740-4	P0089	H-2-122740-4	3/4"	COND	IMC	P0046B,N,G (CKT #3)
1	05	P0089	POWER	P0089	H-2-122740-4	AC-05I-110B	H-2-122740-4	3/4"	COND	FLEX	P0046B,N,G (CKT #3)
1	05	P0090	POWER	P0002	H-2-122736-2	UG STUB OUT	H-2-122736-1	2"	COND	PVC	P0002A,B,C,G
1	05	P0091	POWER	FOS NO. 5	H-2-122736-2	UG STUB OUT	H-2-122736-1	4"	COND	PVC	(BY OTHERS)
1	05	P0092	POWER	CLEAN OPER OFFICE	H-2-122736-2	UG STUB OUT	H-2-122736-1	4"	COND	PVC	(BY OTHERS)
1	05	P0093	POWER	CLEAN OPER OFFICE	H-2-122736-2	UG STUB OUT	H-2-122736-1	4"	COND	PVC	(BY OTHERS)
1	05	X0001	SIGNAL	X0001A/F	H-2-122745-1	PB-05-X/B2	H-2-122745-4	1-1/2"	COND	IMC	X0001,2,3,4,5
1	05	X0001A	SIGNAL	X0001B/D	H-2-122745-2	X0001F/X0001	H-2-122745-1	1"	COND	IMC	X0004,5
1	05	X0001B	SIGNAL	X0001C	H-2-122745-2	X0001A/D	H-2-122745-2	3/4"	COND	IMC	X0005
1	05	X0001C	SIGNAL	FY-CSE-012A/B	H-2-122745-2	X0001B	H-2-122745-2	1/2"	COND	FLEX	X0005
1	05	X0001D	SIGNAL	X0001E	H-2-122745-2	X0001A/B	H-2-122745-2	3/4"	COND	IMC	X0004
1	05	X0001E	SIGNAL	TIT-CSS-044	H-2-122745-2	X0001D	H-2-122745-2	1/2"	COND	FLEX	X0004
1	05	X0001F	SIGNAL	X0001G/J	H-2-122745-1	X0001A/X0001	H-2-122745-1	1"	COND	IMC	X0001,2,3

Electrical Conduit Schedule for Package Number E350

REV NO.	BLDG NO.	RACEWY NO.	FOR	FROM		TO		RACEWAY DATA			INCLUDED CABLE NOs.
				EQUIPMENT NUMBER OR LOCATION	PLAN DRAWING	EQUIPMENT NUMBER OR LOCATION	PLAN DRAWING	SIZE	TYPE	MATERIAL OF CONSTR	
1	05	X0001G	SIGNAL	X0001H	H-2-122745-1	X0001F/J	H-2-122745-1	3/4"	COND	IMC	X0002
1	05	X0001H	SIGNAL	TIT-CSS-042	H-2-122745-1	X0001G	H-2-122745-1	1/2"	COND	FLEX	X0002
1	05	X0001J	SIGNAL	X0001K/M	H-2-122745-1	X0001F/G	H-2-122745-1	3/4"	COND	IMC	X0001,3
1	05	X0001K	SIGNAL	X0001L	H-2-122745-1	X0001J/M	H-2-122745-1	3/4"	COND	IMC	X0001
1	05	X0001L	SIGNAL	TIT-CSS-041	H-2-122745-1	X0001K	H-2-122745-1	1/2"	COND	FLEX	X0001
1	05	X0001M	SIGNAL	X0001N	H-2-122745-2	X0001J/K	H-2-122745-1	3/4"	COND	IMC	X0003
1	05	X0001N	SIGNAL	TIT-CSS-043	H-2-122745-2	X0001M	H-2-122745-2	1/2"	COND	FLEX	X0003
1	05	X0002	SIGNAL	X0002A/F	H-2-122745-2	PB-05-X/B1	H-2-122745-4	2"	COND	IMC	X0006,7,8,9,10,11,12,13,14,15,16,17
1	05	X0002A	SIGNAL	X0002B/D	H-2-122745-2	X0002F/X0002	H-2-122745-1	1-1/2"	COND	IMC	X0012,13,14,15,16,17
1	05	X0002B	SIGNAL	X0002C	H-2-122745-2	X0002A/D	H-2-122745-2	1"	COND	IMC	X0012,13,14
1	05	X0002C	SIGNAL	PB-05-X17 @ RE-620-305	H-2-122745-2	X0002B	H-2-122745-2	1"	COND	FLEX	X0012,13,14
1	05	X0002D	SIGNAL	X0002E	H-2-122745-2	X0002A/B	H-2-122745-2	1"	COND	IMC	X0015,16,17
1	05	X0002E	SIGNAL	PB-05-X19 @ RE-620-307	H-2-122745-2	X0002D	H-2-122745-2	1"	COND	FLEX	X0015,16,17
1	05	X0002F	SIGNAL	X0002G/J	H-2-122745-1	X0002A/X0002	H-2-122745-1	1-1/2"	COND	IMC	X0006,7,8,9,10,11
1	05	X0002G	SIGNAL	X0002H	H-2-122745-1	X0002F/J	H-2-122745-1	1"	COND	IMC	X0009,10,11
1	05	X0002H	SIGNAL	PB-05-X15 @ RE-620-301	H-2-122745-1	X0002G	H-2-122745-1	1"	COND	FLEX	X0009,10,11
1	05	X0002J	SIGNAL	RE-620-304	H-2-122745-2	X0002G/F	H-2-122745-2	1"	COND	IMC	X0006,7,8

Electrical Conduit Schedule for Package Number E350

REV NO.	BLDG NO.	RACEWY NO.	FOR	FROM		TO		RACEWAY DATA			INCLUDED CABLE NOs.
				EQUIPMENT NUMBER OR LOCATION	PLAN DRAWING	EQUIPMENT NUMBER OR LOCATION	PLAN DRAWING	SIZE	TYPE	MATERIAL OF CONSTR	
1	05	X0003	SIGNAL	X0003A/E	H-2-122745-3	PB-05-X/B2	H-2-122745-4	2"	COND	IMC	X0018,19,20,21,22,23,24,25,26,27, 28,29
1	05	X0003A	SIGNAL	X0003B/D	H-2-122745-3	X0003/E	H-2-122745-3	1-1/2"	COND	IMC	X0023,24,25,26,27,28
1	05	X0003B	SIGNAL	X0003C	H-2-122745-3	X0003A/D	H-2-122745-3	3/4"	COND	IMC	X0028
1	05	X0003C	SIGNAL	TIT-CSS-039-2	H-2-122745-3	X0003B	H-2-122745-3	1/2"	COND	FLEX	X0028
1	05	X0003D	SIGNAL	IR-610-435	H-2-122745-3	X0003A/B	H-2-122745-3	1-1/2"	COND	IMC	X0023,24,25,26,27
1	05	X0003E	SIGNAL	X0003F/H	H-2-122745-3	X0003/A	H-2-122745-3	1-1/2"	COND	IMC	X0018,19,20,21,22,29
1	05	X0003F	SIGNAL	X0003G	H-2-122745-3	X0003E/H	H-2-122745-3	3/4"	COND	IMC	X0029
1	05	X0003G	SIGNAL	TIT-CSS-039-1	H-2-122745-3	X0003F	H-2-122745-3	1/2"	COND	FLEX	X0029
1	05	X0003H	SIGNAL	IR-610-436	H-2-122745-3	X0003E/F	H-2-122745-3	1-1/2"	COND	IMC	X0018,19,20,21,22
1	05	X0004	SIGNAL	X0004A/C	H-2-122745-4	PB-05-X/B2	H-2-122745-4	2"	COND	IMC	X0030,31,32,34,35,36,37,38,39,40, 41,42,43,44
1	05	X0004A	SIGNAL	X0004B	H-2-122745-4	X0004C/X0004	H-2-122745-4	3/4"	COND	IMC	X0030
1	05	X0004AA	SIGNAL	X0004AB	H-2-122745-4	X0004X/Y	H-2-122745-4	3/4"	COND	IMC	X0043
1	05	X0004AB	SIGNAL	PSH-VAX-324	H-2-122745-4	X0004AA	H-2-122745-4	1/2"	COND	FLEX	X0043
1	05	X0004B	SIGNAL	TIT-CSE-014	H-2-122745-4	X0004A	H-2-122745-4	1/2"	COND	FLEX	X0030
1	05	X0004C	SIGNAL	X0004D/K	H-2-122745-3	X0004A/X0004	H-2-122745-4	2"	COND	IMC	X0031,32,34,35,36,37,38,39,40,41, 42,43,44
1	05	X0004D	SIGNAL	X0004E/H	H-2-122745-3	X0004C/K	H-2-122745-3	1"	COND	IMC	X0031,32

Electrical Conduit Schedule for Package Number E350

REV NO.	BLDG NO.	RACEWY NO.	FOR	FROM		TO		RACEWAY DATA			INCLUDED CABLE NOs.
				EQUIPMENT NUMBER OR LOCATION	PLAN DRAWING	EQUIPMENT NUMBER OR LOCATION	PLAN DRAWING	SIZE	TYPE	MATERIAL OF CONSTR	
1	05	X0004E	SIGNAL	X0004G/F	H-2-122745-3	X0004D/H	H-2-122745-3	1"	COND	IMC	X0031,32
1	05	X0004F	SIGNAL	PDIT-VAX-330-2	H-2-122745-3	X0004E/G	H-2-122745-3	1/2"	COND	FLEX	X0032
1	05	X0004G	SIGNAL	TIT-VAX-333-2	H-2-122745-3	X0004E/F	H-2-122745-3	1/2"	COND	FLEX	X0031
1	05	X0004K	SIGNAL	X0004L/M	H-2-122745-3	X0004C/D	H-2-122745-3	2"	COND	IMC	X0034,35,36,37,38,39,40,41,42,43,44
1	05	X0004L	SIGNAL	II-610-434	H-2-122745-3	X0004K/M	H-2-122745-3	1-1/2"	COND	IMC	X0034,35,36,37,38
1	05	X0004M	SIGNAL	X0004N/T	H-2-122745-3	X0004K/L	H-2-122745-3	1-1/2"	COND	IMC	X0039,40,41,42,43,44
1	05	X0004N	SIGNAL	X0004P/R	H-2-122745-3	X0004M/T	H-2-122745-3	1"	COND	IMC	X0039,42
1	05	X0004P	SIGNAL	X0004Q	H-2-122745-3	X0004N/R	H-2-122745-3	3/4"	COND	IMC	X0042
1	05	X0004Q	SIGNAL	PDIT-VAX-323-2	H-2-122745-3	X0004P	H-2-122745-3	1/2"	COND	FLEX	X0042
1	05	X0004R	SIGNAL	X0004S	H-2-122745-3	X0004N/P	H-2-122745-3	3/4"	COND	IMC	X0039
1	05	X0004S	SIGNAL	PY-VAX-321	H-2-122745-3	X0004R	H-2-122745-3	1/2"	COND	FLEX	X0039
1	05	X0004T	SIGNAL	X0004U/X	H-2-122745-3	X0004M/N	H-2-122745-3	1"	COND	IMC	X0040,41,43,44
1	05	X0004U	SIGNAL	X0004T/X	H-2-122745-3	X0004V/W	H-2-122745-3	1"	COND	IMC	X0040,41
1	05	X0004V	SIGNAL	TIT-VAX-333-1	H-2-122745-3	X0004U/W	H-2-122745-3	1/2"	COND	FLEX	X0040
1	05	X0004W	SIGNAL	PDIT-VAX-330-1	H-2-122745-3	X0004U/V	H-2-122745-3	1/2"	COND	FLEX	X0041
1	05	X0004X	SIGNAL	X0004Y/AA	H-2-122745-3	X0004T/U	H-2-122745-3	1"	COND	IMC	X0043,44
1	05	X0004Y	SIGNAL	X0004Z	H-2-122745-3	X0004X/AA	H-2-122745-3	3/4"	COND	IMC	X0044

Electrical Conduit Schedule for Package Number E350

REV NO.	BLDG NO.	RACEWY NO.	FOR	FROM		TO		RACEWAY DATA			INCLUDED CABLE NOs.
				EQUIPMENT NUMBER OR LOCATION	PLAN DRAWING	EQUIPMENT NUMBER OR LOCATION	PLAN DRAWING	SIZE	TYPE	MATERIAL OF CONSTR	
1	05	X0004Z	SIGNAL	PDIT-VAX-323-1	H-2-122745-3	X0004Y	H-2-122745-3	1-1/2"	COND	FLEX	X0044
1	05	X0005	SIGNAL	X0005A/C	H-2-122745-4	PB-05-X/B1	H-2-122745-4	2"	COND	IMC	X0045,46,47,48,49,50,51,52,53,54, 55,56,57
1	05	X0005A	SIGNAL	X0005B	H-2-122745-4	X0005C/X0005	H-2-122745-4	3/4"	COND	IMC	X0045
1	05	X0005B	SIGNAL	PB-05-X7 @ PM-620-751	H-2-122745-4	X0005A	H-2-122745-4	1/2"	COND	FLEX	X0045
1	05	X0005C	SIGNAL	X0005D/F	H-2-122745-4	X0005A/X0005	H-2-122745-4	2"	COND	IMC	X0046,47,48,49,50,51,52,53,54,55, 56,57
1	05	X0005D	SIGNAL	PB-05-X5	H-2-122745-4	X0005C/F	H-2-122745-4	1"	COND	IMC	X0046,47,48
1	05	X0005E	SIGNAL	PB-05-X5	H-2-122745-4	RE-620-309	H-2-122745-4	1"	COND	FLEX	X0046,47,48
1	05	X0005F	SIGNAL	X0005G/L	H-2-122745-3	X0005C/D	H-2-122745-4	1-1/2"	COND	IMC	X0049,50,51,52,53,54,55,56,57
1	05	X0005G	SIGNAL	PB-05-X10	H-2-122745-3	X0005F/L	H-2-122745-3	1-1/2"	COND	IMC	X0049,50,51,52,53,54
1	05	X0005H	SIGNAL	PB-05-X10	H-2-122745-3	RE-620-720/725	H-2-122745-3	1"	COND	FLEX	X0049,50,51
1	05	X0005J	SIGNAL	PB-05-X10	H-2-122745-3	RE-620-720/725	H-2-122745-3	1"	COND	FLEX	X0052,53,54
1	05	X0005L	SIGNAL	PB-05-X11	H-2-122745-3	X0005F/G	H-2-122745-3	1"	COND	IMC	X0055,56,57
1	05	X0005M	SIGNAL	PB-05-X11	H-2-122745-3	RE-620-302	H-2-122745-3	1"	COND	FLEX	X0055,56,57
1	05	X0006	SIGNAL	X0006A/C	H-2-122745-3	PB-05-X/B2	H-2-122745-4	1"	COND	IMC	X0058,59,60,61
1	05	X0006A	SIGNAL	X0006B	H-2-122745-3	X0006/C	H-2-122745-3	3/4"	COND	IMC	X0058
1	05	X0006B	SIGNAL	TIT-CSS-001	H-2-122745-3	X0006B	H-2-122745-3	1/2"	COND	FLEX	X0058

Electrical Conduit Schedule for Package Number E350

REV NO.	BLDG NO.	RACEWY NO.	FOR	FROM		TO		RACEWAY DATA			INCLUDED CABLE NOs.
				EQUIPMENT NUMBER OR LOCATION	PLAN DRAWING	EQUIPMENT NUMBER OR LOCATION	PLAN DRAWING	SIZE	TYPE	MATERIAL OF CONSTR	
1	05	X0006C	SIGNAL	X0006D/G	H-2-122745-3	X0006/A	H-2-122745-3	1"	COND	IMC	X0059,60,61
1	05	X0006D	SIGNAL	X0006E/F	H-2-122745-3	X0006C/G	H-2-122745-3	3/4"	COND	IMC	X0059,60
1	05	X0006E	SIGNAL	PIT-VAX-321	H-2-122745-3	X0006D/F	H-2-122745-3	1/2"	COND	FLEX	X0059
1	05	X0006F	SIGNAL	FIT-VAX-320	H-2-122745-3	X0006D/E	H-2-122745-3	1/2"	COND	FLEX	X0060
1	05	X0006G	SIGNAL	X0006H	H-2-122745-3	X0006C/D	H-2-122745-3	3/4"	COND	IMC	X0061
1	05	X0006H	SIGNAL	TIT-CSS-051	H-2-122745-3	X0006G	H-2-122745-3	1/2"	COND	FLEX	X0061
1	05	X0007	SIGNAL	X0007A	H-2-122745-3	X0007B	H-2-122745-3		COND	IMC	FURNISHED CABLE
1	05	X0007A	SIGNAL	FE-VAX-320	H-2-122745-3	X0007	H-2-122745-3		COND	FLEX	FURNISHED CABLE
1	05	X0007B	SIGNAL	FT-VAX-320	H-2-122745-3	X0007	H-2-122745-3		COND	FLEX	FURNISHED CABLE
1	05	X0008	SIGNAL	X0008A	H-2-122746-1	X008B	H-2-122746-1	1"	COND	IMC	X0062,78,79
1	05	X0008A	SIGNAL	FT-CSE-012	H-2-122746-1	X0008	H-2-122746-1	1"	COND	FLEX	X0062,78,79
1	05	X0008B	SIGNAL	FY-CSE-012A/B	H-2-122746-1	X0008	H-2-122746-1	1"	COND	FLEX	X0062,78,79
1	05	X0009	SIGNAL	X0009A/C	H-2-122745-4	PB-05-X/B1	H-2-122745-4	1-1/2"	COND	IMC	X0063,64,65,66,67,68,69,70,71
1	05	X0009A	SIGNAL	PB-05-X3	H-2-122745-4	X0009/C	H-2-122745-4	1"	COND	IMC	X0063,64,65
1	05	X0009B	SIGNAL	PB-05-X3	H-2-122745-4	RE-620-724	H-2-122745-4	1"	COND	FLEX	X0063,64,65
1	05	X0009C	SIGNAL	X0009D/F	H-2-122745-4	X0009A/X0009	H-2-122745-4	1-1/2"	COND	IMC	X0066,67,68,69,70,71
1	05	X0009D	SIGNAL	PB-05-X5	H-2-122745-4	X0009C/F	H-2-122745-4	1"	COND	IMC	X0066,67,68

Electrical Conduit Schedule for Package Number E350

REV NO.	BLDG NO.	RACEWY NO.	FOR	FROM		TO		RACEWAY DATA			INCLUDED CABLE NOs.
				EQUIPMENT NUMBER OR LOCATION	PLAN DRAWING	EQUIPMENT NUMBER OR LOCATION	PLAN DRAWING	SIZE	TYPE	MATERIAL OF CONSTR	
1	05	X0009E	SIGNAL	PB-05-X5	H-2-122745-4	RE-620-303	H-2-122745-4	1"	COND	FLEX	X0066,67,68
1	05	X0009F	SIGNAL	PB-05-X4	H-2-122745-4	X0009D/C	H-2-122745-4	1"	COND	IMC	X0069,70,71
1	05	X0009G	SIGNAL	PB-05-X4	H-2-122745-4	RE-620-721	H-2-122745-4	1"	COND	FLEX	X0069,70,71
1	05	X0010	SIGNAL	X0010A/B	H-2-122745-4	PB-05-X/B2	H-2-122745-4	1"	COND	IMC	X0072,73
1	05	X0010A	SIGNAL	MIT-CSS-023	H-2-122745-4	X0010/B	H-2-122745-4	3/4"	COND	IMC	X0072
1	05	X0010B	SIGNAL	TIT-CSS-022	H-2-122745-4	X0010/A	H-2-122745-4	3/4"	COND	IMC	X0073
1	05	X0011	SIGNAL	X0011A/B	H-2-122745-4	PB-05-X/B2	H-2-122745-4	1"	COND	IMC	X0074,75,76,77
1	05	X0011A	SIGNAL	MC-32A-205	H-2-122745-4	X0011/B	H-2-122745-4	1"	COND	IMC	X0074,77
1	05	X0011B	SIGNAL	MC-32B-205	H-2-122745-4	X0011/A	H-2-122745-4	1"	COND	IMC	X0075,76

Electrical Cable Schedule for Package Number E350

REV NO.	BLDG NO.	CABLE NO.	FROM		TO		CABLE DATA				ONE LINE DIAGRAM NO.	VIA
			EQUIPMENT NUMBER OR LOCATION	CONNECTION DRAWING	EQUIPMENT NUMBER OR LOCATION	CONNECTION DRAWING	SYS VOLT	NO. COND	CABLE CODE	LENGTH		
1	05	A0001	UP-34A-601		PB-05-B1		24V dc	2	AC		H-2-122734-1	A0001
1	05	A0002	LP-510-001		PB-05-B1		24V dc	2	AC			A0002,A0003
1	05	B0001	TE-CSS-062-2	X16/H-2-122732-4	PB-05-X/B2		mV	3	AF			B0001,1F,1L,IK
1	05	B0002	TE-CSS-063-2	X16/H-2-122732-4	PB-05-X/B2		mV	3	AF			B0001,1F,1K,1M,1N
1	05	B0003	TE-CSS-064-2	X16/H-2-122732-4	PB-05-X/B2		mV	3	AF			B0001,1F,1K,1M,1P,1R
1	05	B0004	TE-CSS-062-3	X16/H-2-122732-4	PB-05-X/B2		mV	3	AF			B0001,1F,1K,1M,1P,1Q
1	05	B0005	TE-CSS-063-3	X16/H-2-122732-4	PB-05-X/B2		mV	3	AF			B0001,1F,1G,1H
1	05	B0006	TE-CSS-064-3	X16/H-2-122732-4	PB-05-X/B2		mV	3	AF			B0001,1F,1G,1J
1	05	B0007	TE-CSS-065-3	X16/H-2-122732-4	PB-05-X/B2		mV	3	AF			B0001,1A,1B
1	05	B0008	TE-CSS-066-3	X16/H-2-122732-4	PB-05-X/B2		mV	3	AF			B0001,1A,1C,1D
1	05	B0009	TE-CSS-067-3	X16/H-2-122732-4	PB-05-X/B2		mV	3	AF			B0001,1A,1C,1E
1	05	B0010	TE-CSS-068-2	X16/H-2-122732-4	PB-05-X/B2		mV	3	AF			B0002,2A,2B,2D,2F,2J,2K
1	05	B0011	TE-CSS-069-2	X16/H-2-122732-4	PB-05-X/B2		mV	3	AF			B0002,2A,2L,2M
1	05	B0012	TE-CSS-070-2	X16/H-2-122732-4	PB-05-X/B2		mV	3	AF			B0002,2A,2L,2N
1	05	B0013	TE-CSS-068-1	X16/H-2-122732-4	PB-05-X/B2		mV	3	AF			B0002,2A,2B,2C
1	05	B0014	TE-CSS-069-1	X16/H-2-122732-4	PB-05-X/B2		mV	3	AF			B0002,2A,2B,2D,2E
1	05	B0015	TE-CSS-070-1	X16/H-2-122732-4	PB-05-X/B2		mV	3	AF			B0002,2A,2B,2D,2F,2G,2H

Electrical Cable Schedule for Package Number E350

REV NO.	BLDG NO.	CABLE NO.	FROM		TO		CABLE DATA				ONE LINE DIAGRAM NO.	VIA
			EQUIPMENT NUMBER OR LOCATION	CONNECTION DRAWING	EQUIPMENT NUMBER OR LOCATION	CONNECTION DRAWING	SYS VOLT	NO. COND	CABLE CODE	LENGTH		
1	05	B0016	TE-CSS-068-3	X16/H-2-122732-4	PB-05-X/B2		mV	3	AF			B0002,2P,2Q
1	05	B0017	TE-CSS-069-3	X16/H-2-122732-4	PB-05-X/B2		mV	3	AF			B0002,2P,2S
1	05	B0018	TE-CSS-070-3	X16/H-2-122732-4	PB-05-X/B2		mV	3	AF			B0002,2P,2R,2T
1	05	B0019	TE-CSS-062-1	X16/H-2-122732-4	PB-05-X/B2		mV	3	AF			B0003,3K,3M,3N
1	05	B0020	TE-CSS-063-1	X16/H-2-122732-4	PB-05-X/B2		mV	3	AF			B0003,3K,3M,3P
1	05	B0021	TE-CSS-064-1	X16/H-2-122732-4	PB-05-X/B2		mV	3	AF			B0003,3G,3K,3L
1	05	B0022	TE-CSS-065-1	X16/H-2-122732-4	PB-05-X/B2		mV	3	AF			B0003,3A,3B
1	05	B0023	TE-CSS-066-1	X16/H-2-122732-4	PB-05-X/B2		mV	3	AF			B0003,3A,3D,3E
1	05	B0024	TE-CSS-067-1	X16/H-2-122732-4	PB-05-X/B2		mV	3	AF			B0003,3A,3D,3G,3H
1	05	B0025	TE-CSS-065-2	X16/H-2-122732-4	PB-05-X/B2		mV	3	AF			B0003,3A,3L
1	05	B0026	TE-CSS-066-2	X16/H-2-122732-4	PB-05-X/B2		mV	3	AF			B0003,3A,3D,3F
1	05	B0027	TE-CSS-067-2	X16/H-2-122732-4	PB-05-X/B2		mV	3	AF			B0003,3A,3D,3G,3J
1	05	B0028	RO-620-600		PB-05-X/B1		24V dc	2	AC			B0004,4C,4F,4G
1	05	B0029	RO-620-600		PB-05-X/B1		24V dc	2	AC			B0004,4C,4F,4G
1	05	B0030	RO-620-304		PB-05-X/B1		24V dc	2	AC			B0004,4C,4D,4E
1	05	B0031	RO-620-304		PB-05-X/B1		24V dc	2	AC			B0004,4C,4D,4E

Electrical Cable Schedule for Package Number E350

REV NO.	BLDG NO.	CABLE NO.	FROM		TO		CABLE DATA				ONE LINE DIAGRAM NO.	VIA
			EQUIPMENT NUMBER OR LOCATION	CONNECTION DRAWING	EQUIPMENT NUMBER OR LOCATION	CONNECTION DRAWING	SYS VOLT	NO. COND	CABLE CODE	LENGTH		
1	05	B0032	RO-620-304		PB-05-X/B1		24V dc	2	AC			B0004,4C,4D,4E
1	05	B0033	RO-620-304		PB-05-X/B1		24V dc	2	AC			B0004,4C,4D,4E
1	05	B0034	RO-620-598		PB-05-X/B1		24V dc	2	AC			B0004,4A,4B
1	05	B0035	RO-620-598		PB-05-X/B1		24V dc	2	AC			B0004,4A,4B
1	05	B0036	RE-620-305		PB-05-X/B1		24V dc	2	AC			B0005,5A,5B
1	05	B0037	RE-620-305		PB-05-X/B1		24V dc	2	AC			B0005,5A,5B
1	05	B0038	RE-620-305		PB-05-X/B1		24V dc	2	AC			B0005,5A,5B
1	05	B0039	RE-620-305		PB-05-X/B1		24V dc	2	AC			B0005,5A,5B
1	05	B0040	RO-620-601		PB-05-X/B1		24V dc	2	AC			B0005,5C,5D,5E
1	05	B0041	RO-620-601		PB-05-X/B1		24V dc	2	AC			B0005,5C,5D,5E
1	05	B0042	RE-620-307		PB-05-X/B1		24V dc	2	AC			B0005,5C,5F,5G
1	05	B0043	RE-620-307		PB-05-X/B1		24V dc	2	AC			B0005,5C,5F,5G
1	05	B0044	RE-620-307		PB-05-X/B1		24V dc	2	AC			B0005,5C,5F,5G
1	05	B0045	RE-620-307		PB-05-X/B1		24V dc	2	AC			B0005,5C,5F,5G
1	05	B0046	RO-620-599		PB-05-X/B1		24V dc	2	AC			B0007,7A,7B
1	05	B0047	RO-620-599		PB-05-X/B1		24V dc	2	AC			B0007,7A,7B

Electrical Cable Schedule for Package Number E350

REV NO.	BLDG NO.	CABLE NO.	FROM		TO		CABLE DATA				ONE LINE DIAGRAM NO.	VIA
			EQUIPMENT NUMBER OR LOCATION	CONNECTION DRAWING	EQUIPMENT NUMBER OR LOCATION	CONNECTION DRAWING	SYS VOLT	NO. COND	CABLE CODE	LENGTH		
1	05	B0048	RE-620-301		PB-05-X/B1		24V dc	2	AC			B0007,7C,7D
1	05	B0049	RE-620-301		PB-05-X/B1		24V dc	2	AC			B0007,7C,7D
1	05	B0050	RE-620-301		PB-05-X/B1		24V dc	2	AC			B0007,7C,7D
1	05	B0051	RE-620-301		PB-05-X/B1		24V dc	2	AC			B0007,7C,7D
1	05	B0052	RO-620-597		PB-05-X/B1		24V dc	2	AC			B0028,28A
1	05	B0053	RO-620-597		PB-05-X/B1		24V dc	2	AC			B0028,28A
1	05	B0054	RE-620-309		PB-05-X/B1		24V dc	2	AC			B0008,8A,8B
1	05	B0055	RE-620-309		PB-05-X/B1		24V dc	2	AC			B0008,8A,8B
1	05	B0056	RE-620-309		PB-05-X/B1		24V dc	2	AC			B0008,8A,8B
1	05	B0057	RE-620-309		PB-05-X/B1		24V dc	2	AC			B0008,8A,8B
1	05	B0058	RE-620-302		PB-05-X/B1		24V dc	2	AC			B0008,8C,8D
1	05	B0059	RE-620-302		PB-05-X/B1		24V dc	2	AC			B0008,8C,8D
1	05	B0060	RE-620-302		PB-05-X/B1		24V dc	2	AC			B0008,8C,8D
1	05	B0061	RE-620-302		PB-05-X/B1		24V dc	2	AC			B0008,8C,8D
1	05	B0062	RE-620-720		PB-05-X/B1		24V dc	2	AC			B0009,9A
1	05	B0063	RE-620-720		PB-05-X/B1		24V dc	2	AC			B0009,9A
1	05	B0064	RE-620-720		PB-05-X/B1		24V dc	2	AC			B0009,9A

Electrical Cable Schedule for Package Number E350

REV NO.	BLDG NO.	CABLE NO.	FROM		TO		CABLE DATA				ONE LINE DIAGRAM NO.	VIA
			EQUIPMENT NUMBER OR LOCATION	CONNECTION DRAWING	EQUIPMENT NUMBER OR LOCATION	CONNECTION DRAWING	SYS VOLT	NO. COND	CABLE CODE	LENGTH		
1	05	B0065	RE-620-720		PB-05-X/B1		24V dc	2	AC			B0009,9A
1	05	B0066	RE-620-720		PB-05-X/B1		24V dc	2	AC			B0009,9A
1	05	B0067	RE-620-720		PB-05-X/B1		24V dc	2	AC			B0009,9A
1	05	B0068	RE-620-720		PB-05-X/B1		24V dc	2	AC			B0009,9A
1	05	B0069	RE-620-725		PB-05-X/B1		24V dc	2	AC			B0010,10A
1	05	B0070	RE-620-725		PB-05-X/B1		24V dc	2	AC			B0010,10A
1	05	B0071	RE-620-725		PB-05-X/B1		24V dc	2	AC			B0010,10A
1	05	B0072	RE-620-725		PB-05-X/B1		24V dc	2	AC			B0010,10A
1	05	B0073	RE-620-725		PB-05-X/B1		24V dc	2	AC			B0010,10A
1	05	B0074	RE-620-725		PB-05-X/B1		24V dc	2	AC			B0010,10A
1	05	B0075	RE-620-725		PB-05-X/B1		24V dc	2	AC			B0010,10A
1	05	B0076	TIC-CSS-013		EH-05I-117		24V dc	2	AC			B0011
1	05	B0077	TIC-CSS-011		EH-05I-115		24V dc	2	AC			B0012
1	05	B0078	TIC-CSS-012		EH-05I-116		24V dc	2	AC			B0013
1	05	B0079	RO-620-603		PB-05-B2		24V dc	2	AC			B0014,14C,14D
1	05	B0080	RO-620-603		PB-05-B2		24V dc	2	AC			B0014,14C,14D

Electrical Cable Schedule for Package Number E350

REV NO.	BLDG NO.	CABLE NO.	FROM		TO		CABLE DATA				ONE LINE DIAGRAM NO.	VIA
			EQUIPMENT NUMBER OR LOCATION	CONNECTION DRAWING	EQUIPMENT NUMBER OR LOCATION	CONNECTION DRAWING	SYS VOLT	NO. COND	CABLE CODE	LENGTH		
1	05	B0081	IR-610-434 YY-CSS-016		PB-05-B1		120V ac	2	AG			B0015,15A
1	05	B0082	IR-610-434 YY-CSS-002		PB-05-B1		120V ac	2	AG			B0015,15A
1	05	B0083	IR-610-436 YY-CSS-046-1		PB-05-B1		120V ac	2	AG			B0015,15B,15D
1	05	B0084	IR-610-436 YY-CSS-031-1		PB-05-B1		120V ac	2	AG			B0015,15B,15D
1	05	B0085	IR-610-435 YY-CSS-046-2		PB-05-B1		120V ac	2	AG			B0015,15B,15C
1	05	B0086	IR-610-435 YY-CSS-031-2		PB-05-B1		120V ac	2	AG			B0015,15B,15C
1	05	B0087	YSH-CSE-015		PB-05-B1		24V dc	2	AC			B0016,16A,16B
1	05	B0088	YSH-CSE-009		PB-05-B1		24V dc	2	AC			B0016,16C,16D,16E
1	05	B0089	YSH-CSS-040-1		PB-05-B1		24V dc	2	AC			B0016,16C,16F,16G,16H
1	05	B0090	YSH-CSS-040-2		PB-05-B1		24V dc	2	AC			B0016,16C,16F,16J,16K, 16L
1	05	B0091	YSH-CSE-045		PB-05-B1		24V dc	2	AC			B0016,16C,16F,16J,16M, 16N
1	05	B0092	PM-620-751		PB-05-B2		24V dc	2	AC			B0014,14A,14B
1	05	B0093	PM-620-751		PB-05-B2		24V dc	2	AC			B0014,14A,14B
1	05	B0094	PM-620-751		PB-05-B2		24V dc	2	AC			B0014,14A,14B
1	05	B0095	TE-VAX-333-1	X16/H-2-122732-4	TIT-VAX-333-1		mV	3	AF			B0017,17A,17B
1	05	B0096	TE-VAX-333-2	X16/H-2-122732-4	TIT-VAX-333-2		mV	3	AF			B0018,18A,18B

Electrical Cable Schedule for Package Number E350

REV NO.	BLDG NO.	CABLE NO.	FROM		TO		CABLE DATA				ONE LINE DIAGRAM NO.	VIA
			EQUIPMENT NUMBER OR LOCATION	CONNECTION DRAWING	EQUIPMENT NUMBER OR LOCATION	CONNECTION DRAWING	SYS VOLT	NO. COND	CABLE CODE	LENGTH		
1	05	B0097	TE-CSS-061	X16/H-2-122732-4	PB-05-X/B2		mV	3	AF			B0006,6A,6B
1	05	B0098	TE-CSE-011A	X19/H-2-122732-4	PB-05-X/B2		mV	3	AF			B0006,6C,6D,6E
1	05	B0099	TE-CSE-011B	X19/H-2-122732-4	PB-05-X/B2		mV	3	AF			B0006,6C,6D,6E
1	05	B0100	TE-CSE-011C	X19/H-2-122732-4	PB-05-X/B2		mV	3	AF			B0006,6C,6D,6E
1	05	B0101	TE-CSE-013A	X19/H-2-122732-4	PB-05-X/B2		mV	3	AF			B0006,6C,6E,6F
1	05	B0102	TE-CSE-013B	X19/H-2-122732-4	PB-05-X/B2		mV	3	AF			B0006,6C,6E,6F
1	05	B0103	TE-CSE-013C	X19/H-2-122732-4	PB-05-X/B2		mV	3	AF			B0006,6C,6E,6F
1	05	B0105	UIC-CSS-021		PB-05-01		24V dc	2	AC			B0019,19B,21A
1	05	B0106	UIC-CSS-024		PB-05-01		24V dc	2	AC			B0019,19A,20A
1	05	B0107	UIC-CSS-021		AC-05I-110A		120V ac	2	AG			B0021,21A,21B
1	05	B0108	UIC-CSS-024		AC-05I-110B		120V ac	2	AG			B0020,20A,20B
1	05	B0109	RE-620-725		PB-05-X/B1		24V dc	2	AC			B0022,22C,22D
1	05	B0110	RE-620-725		PB-05-X/B1		24V dc	2	AC			B0022,22C,22D
1	05	B0111	RE-620-725		PB-05-X/B1		24V dc	2	AC			B0022,22C,22D
1	05	B0112	RE-620-725		PB-05-X/B1		24V dc	2	AC			B0022,22C,22D
1	05	B0113	RE-620-725		PB-05-X/B1		24V dc	2	AC			B0022,22C,22D
1	05	B0114	RE-620-725		PB-05-X/B1		24V dc	2	AC			B0022,22C,22D

Electrical Cable Schedule for Package Number E350

REV NO.	BLDG NO.	CABLE NO.	FROM		TO		CABLE DATA				ONE LINE DIAGRAM NO.	VIA
			EQUIPMENT NUMBER OR LOCATION	CONNECTION DRAWING	EQUIPMENT NUMBER OR LOCATION	CONNECTION DRAWING	SYS VOLT	NO. COND	CABLE CODE	LENGTH		
1	05	B0115	RE-620-725		PB-05-X/B1		24V dc	2	AC			B0022,22C,22D
1	05	B0116	RE-620-303		PB-05-X/B1		24V dc	2	AC			B0022,22A,22B
1	05	B0117	RE-620-303		PB-05-X/B1		24V dc	2	AC			B0022,22A,22B
1	05	B0118	RE-620-303		PB-05-X/B1		24V dc	2	AC			B0022,22A,22B
1	05	B0119	RE-620-724		PB-05-X/B1		24V dc	2	AC			B0023,23A
1	05	B0120	RE-620-724		PB-05-X/B1		24V dc	2	AC			B0023,23A
1	05	B0121	RE-620-724		PB-05-X/B1		24V dc	2	AC			B0023,23A
1	05	B0122	RE-620-724		PB-05-X/B1		24V dc	2	AC			B0023,23A
1	05	B0123	RE-620-724		PB-05-X/B1		24V dc	2	AC			B0023,23A
1	05	B0124	RE-620-724		PB-05-X/B1		24V dc	2	AC			B0023,23A
1	05	B0125	RE-620-724		PB-05-X/B1		24V dc	2	AC			B0023,23A
1	05	B0126	BL-05I-113 STR IN MC-32B-205		PB-05-01		120V ac	1	AK		H-2-122733-2	B0025
1	05	B0127	BL-05I-113 STR IN MC-32B-205		PB-05-B1		120V ac	1	AK		H-2-122733-2	B0025
1	05	B0128	BL-05I-113 STR IN MC-32B-205		PB-05-B1		120V ac	1	AK		H-2-122733-2	B0025
1	05	B0129	BL-05I-113 STR IN MC-32B-205		PB-05-B1		120V ac	1	AK		H-2-122733-2	B0025
1	05	B0130	BL-05I-113 STR IN MC-32B-205		PB-05-B1		120V ac	1	AK		H-2-122733-2	B0025

Electrical Cable Schedule for Package Number E350

REV NO.	BLDG NO.	CABLE NO.	FROM		TO		CABLE DATA				ONE LINE DIAGRAM NO.	VIA
			EQUIPMENT NUMBER OR LOCATION	CONNECTION DRAWING	EQUIPMENT NUMBER OR LOCATION	CONNECTION DRAWING	SYS VOLT	NO. COND	CABLE CODE	LENGTH		
1	05	B0131	BL-051-113 STR IN MC-32B-205		PB-05-B1		120V ac	1	AK		H-2-122733-2	B0025
1	05	B0132	VP-620-003VB STR MC-32B-205		PB-05-B1		120V ac	1	AK		H-2-122733-2	B0025
1	05	B0133	VP-620-003VB STR MC-32B-205		PB-05-B1		120V ac	1	AK		H-2-122733-2	B0025
1	05	B0134	VP-620-003VB STR MC-32B-205		PB-05-B1		120V ac	1	AK		H-2-122733-2	B0025
1	05	B0135	VP-620-003VB STR MC-32B-205		PB-05-B1		120V ac	1	AK		H-2-122733-2	B0025
1	05	B0136	VP-620-003VB STR MC-32B-205		PB-05-B1		120V ac	1	AK		H-2-122733-2	B0025
1	05	B0137	VP-620-003VB STR MC-32B-205		PB-05-B1		120V ac	1	AK		H-2-122733-2	B0025
1	05	B0138	PX-051-113 STARTER		PB-05-B1		120V ac	1	AK			B0026
1	05	B0139	PX-051-113 STARTER		PB-05-B1		120V ac	1	AK			B0026
1	05	B0140	PX-051-113 STARTER		PB-05-B1		120V ac	1	AK			B0026
1	05	B0141	PX-051-113 STARTER		PB-05-B1		120V ac	1	AK			B0026
1	05	B0142	PX-051-113 STARTER		PB-05-B1		120V ac	1	AK			B0026
1	05	B0143	PX-051-113 STARTER		PB-05-B1		120V ac	1	AK			B0026
1	05	B0144	BL-051-112 STARTER		PB-05-B1		120V ac	1	AK		H-2-122733-1	B0024
1	05	B0145	PX-051-113 STARTER		PB-05-B1		120V ac	1	AK		H-2-122733-1	B0024
1	05	B0146	PX-051-113 STARTER		PB-05-B1		120V ac	1	AK		H-2-122733-1	B0024

Electrical Cable Schedule for Package Number E350

REV NO.	BLDG NO.	CABLE NO.	FROM		TO		CABLE DATA				ONE LINE DIAGRAM NO.	VIA
			EQUIPMENT NUMBER OR LOCATION	CONNECTION DRAWING	EQUIPMENT NUMBER OR LOCATION	CONNECTION DRAWING	SYS VOLT	NO. COND	CABLE CODE	LENGTH		
1	05	B0147	PX-05I-113 STARTER		PB-05-B1		120V ac	1	AK		H-2-122733-1	B0024
1	05	B0148	PX-05I-113 STARTER		PB-05-B1		120V ac	1	AK		H-2-122733-1	B0024
1	05	B0149	PZ-05I-113 STARTER		PB-05-B1		120V ac	1	AK		H-2-122733-1	B0024
1	05	B0150	PX-05I-112 STARTER		PB-05-B1		120V ac	1	AK			B0026
1	05	B0151	PX-05I-112 STARTER		PB-05-B1		120V ac	1	AK			B0026
1	05	B0152	PX-05I-112 STARTER		PB-05-B1		120V ac	1	AK			B0026
1	05	B0153	PX-05I-112 STARTER		PB-05-B1		120V ac	1	AK			B0026
1	05	B0154	PX-05I-112 STARTER		PB-05-B1		120V ac	1	AK			B0026
1	05	B0155	PX-05I-112 STARTER		PB-05-B1		120V ac	1	AK			B0026
1	05	B0156	BL-05I-111 STARTER		PB-05-B1		120V ac	1	AK		H-2-122733-1	B0024
1	05	B0157	BL-05I-111 STARTER		PB-05-B1		120V ac	1	AK		H-2-122733-1	B0024
1	05	B0158	BL-05I-111 STARTER		PB-05-B1		120V ac	1	AK		H-2-122733-1	B0024
1	05	B0159	BL-05I-111 STARTER		PB-05-B1		120V ac	1	AK		H-2-122733-1	B0024
1	05	B0160	BL-05I-111 STARTER		PB-05-B1		120V ac	1	AK		H-2-122733-1	B0024
1	05	B0161	BL-05I-111 STARTER		PB-05-B1		120V ac	1	AK		H-2-122733-1	B0024
1	05	B0162	VP-620-003VA STR MC-32A-205		PB-05-B1		120V ac	1	AK		H-2-122733-1	B0024
1	05	B0163	VP-620-003VA		PB-05-B1		120V ac	1	AK		H-2-122733-1	B0024

Electrical Cable Schedule for Package Number E350

REV NO.	BLDG NO.	CABLE NO.	FROM		TO		CABLE DATA				ONE LINE DIAGRAM NO.	VIA
			EQUIPMENT NUMBER OR LOCATION	CONNECTION DRAWING	EQUIPMENT NUMBER OR LOCATION	CONNECTION DRAWING	SYS VOLT	NO. COND	CABLE CODE	LENGTH		
			STR MC-32A-205									
1	05	B0164	VP-620-003VA STR MC-32A-205		PB-05-B1		120V ac	1	AK		H-2-122733-1	B0024
1	05	B0165	VP-620-003VA STR MC-32A-205		PB-05-B1		120V ac	1	AK		H-2-122733-1	B0024
1	05	B0166	VP-620-003VA STR MC-32A-205		PB-05-B1		120V ac	1	AK		H-2-122733-1	B0024
1	05	B0167	VP-620-003VA STR MC-32A-205		PB-05-B1		120V ac	1	AK		H-2-122733-1	B0024
1	05	B0170	PX-05I-112,113 STARTERS		PB-05-B1		120V ac	1	AK			B0026
1	05	B0171	TE-CSS-039-2	X16/H-2-122732-4	TIT-CSS-039-2	X18/H-2-122732-4	mV	3	AF			B0029,29A,29B
1	05	B0172	TE-CSS-039-1	X16/H-2-122732-4	TIT-CSS-039-1	X18/H-2-122732-4	mV	3	AF			B0030,30A,30B
1	05	B0173	FSL-CSS-010	X02/H-2-122732-4	PB-05-B1		24V dc	2	AC			B0031,31A
1	05	B0174	TE-CSS-014	X16/H-2-122732-4	TIT-CSS-014	X18/H-2-122732-4	mV	3	AF			B0027,27A,27B
1	05	B0175	TE-CSS-001	X16/H-2-122732-4	TIT-CSS-001	X18/H-2-122732-4	mV	3	AF			B0032,32A,32B
1	05	G0001	MC-32A-205		PB-05-B1		120V ac	1	AK			B0024
1	05	G0002	MC-32B-205		PB-05-B1		120V ac	1	AK			B0026
1	05	G0003	MC-32B-205		PB-05-B1		120V ac	1	AK			B0025
1	05	P0001A	MC-32A-205		BL-05I-112		480V ac	1	AM		H-2-122733-1	P0001
1	05	P0001B	MC-32A-205		BL-05I-112		480V ac	1	AM		H-2-122733-1	P0001
1	05	P0001C	MC-32A-205		BL-05I-112		480V ac	1	AM		H-2-122733-1	P0001

Electrical Cable Schedule for Package Number E350

REV NO.	BLDG NO.	CABLE NO.	FROM		TO		CABLE DATA				ONE LINE DIAGRAM NO.	VIA
			EQUIPMENT NUMBER OR LOCATION	CONNECTION DRAWING	EQUIPMENT NUMBER OR LOCATION	CONNECTION DRAWING	SYS VOLT	NO. COND	CABLE CODE	LENGTH		
1	05	P0001G	MC-32A-205		BL-05I-112		480V ac	1	AM		H-2-122733-1	P0001
1	05	P0002A	MC-32B-205		LP-510-001		480V ac	1	AM		H-2-122733-2	P0002,90
1	05	P0002B	MC-32B-205		LP-510-001		480V ac	1	AM		H-2-122733-2	P0002,90
1	05	P0002C	MC-32B-205		LP-510-001		480V ac	1	AM		H-2-122733-2	P0002,90
1	05	P0002G	MC-32B-205		LP-510-001		480V ac	1	AM		H-2-122733-2	P0002,90
1	05	P0003A	MC-32A-205		BL-05I-111		480V ac	1	AL		H-2-122733-1	P0007
1	05	P0003B	MC-32A-205		BL-05I-111		480V ac	1	AL		H-2-122733-1	P0007
1	05	P0003C	MC-32A-205		BL-05I-111		480V ac	1	AL		H-2-122733-1	P0007
1	05	P0003G	MC-32A-205		BL-05I-111		480V ac	1	AL		H-2-122733-1	P0007
1	05	P0004A	MC-32A-205		CU-05I-111		480V ac	1	AL		H-2-122733-1	P0010
1	05	P0004B	MC-32A-205		CU-05I-111		480V ac	1	AL		H-2-122733-1	P0010
1	05	P0004C	MC-32A-205		CU-05I-111		480V ac	1	AL		H-2-122733-1	P0010
1	05	P0004G	MC-32A-205		CU-05I-111		480V ac	1	AL		H-2-122733-1	P0010
1	05	P0005A	MC-32A-205		VP-620-003VA		480V ac	1	AL		H-2-122733-1	P0012
1	05	P0005B	MC-32A-205		VP-620-003VA		480V ac	1	AL		H-2-122733-1	P0012
1	05	P0005C	MC-32A-205		VP-620-003VA		480V ac	1	AL		H-2-122733-1	P0012

Electrical Cable Schedule for Package Number E350

REV NO.	BLDG NO.	CABLE NO.	FROM		TO		CABLE DATA				ONE LINE DIAGRAM NO.	VIA
			EQUIPMENT NUMBER OR LOCATION	CONNECTION DRAWING	EQUIPMENT NUMBER OR LOCATION	CONNECTION DRAWING	SYS VOLT	NO. COND	CABLE CODE	LENGTH		
1	05	P0005G	MC-32A-205		VP-620-003VA		480V ac	1	AL		H-2-122733-1	P0012
1	05	P0006A	MC-32A-205		EH-051-115		480V ac	1	AL		H-2-122733-1	P0015,16
1	05	P0006B	MC-32A-205		EH-051-115		480V ac	1	AL		H-2-122733-1	P0015,16
1	05	P0006C	MC-32A-205		EH-051-115		480V ac	1	AL		H-2-122733-1	P0015,16
1	05	P0006G	MC-32A-205		EH-051-115		480V ac	1	AL		H-2-122733-1	P0015,16
1	05	P0007A	MC-32A-205		EH-051-117		480V ac	1	AL		H-2-122733-1	P0017,18
1	05	P0007B	MC-32A-205		EH-051-117		480V ac	1	AL		H-2-122733-1	P0017,18
1	05	P0007C	MC-32A-205		EH-051-117		480V ac	1	AL		H-2-122733-1	P0017,18
1	05	P0007G	MC-32A-205		EH-051-117		480V ac	1	AL		H-2-122733-1	P0017,18
1	05	P0008A	MC-32A-205		UH-051-119		480V ac	1	AM		H-2-122733-1	P0019,20
1	05	P0008B	MC-32A-205		UH-051-119		480V ac	1	AM		H-2-122733-1	P0019,20
1	05	P0008C	MC-32A-205		UH-051-119		480V ac	1	AM		H-2-122733-1	P0019,20
1	05	P0008G	MC-32A-205		UH-051-119		480V ac	1	AM		H-2-122733-1	P0019,20
1	05	P0009A	MC-32A-205		UH-051-121		480V ac	1	AL		H-2-122733-1	P0021,22
1	05	P0009B	MC-32A-205		UH-051-121		480V ac	1	AL		H-2-122733-1	P0021,22
1	05	P0009C	MC-32A-205		UH-051-121		480V ac	1	AL		H-2-122733-1	P0021,22
1	05	P0009G	MC-32A-205		UH-051-121		480V ac	1	AL		H-2-122733-1	P0021,22

Electrical Cable Schedule for Package Number E350

REV NO.	BLDG NO.	CABLE NO.	FROM		TO		CABLE DATA				ONE LINE DIAGRAM NO.	VIA
			EQUIPMENT NUMBER OR LOCATION	CONNECTION DRAWING	EQUIPMENT NUMBER OR LOCATION	CONNECTION DRAWING	SYS VOLT	NO. COND	CABLE CODE	LENGTH		
1	05	P0010A	MC-32A-205		UH-05I-123		480V ac	1	AL		H-2-122733-1	P0023,24
1	05	P0010B	MC-32A-205		UH-05I-123		480V ac	1	AL		H-2-122733-1	P0023,24
1	05	P0010C	MC-32A-205		UH-05I-123		480V ac	1	AL		H-2-122733-1	P0023,24
1	05	P0010G	MC-32A-205		UH-05I-123		480V ac	1	AL		H-2-122733-1	P0023,24
1	05	P0011A	MC-32A-205		UH-05I-125		480V ac	1	AL		H-2-122733-1	P0025,26
1	05	P0011B	MC-32A-205		UH-05I-125		480V ac	1	AL		H-2-122733-1	P0025,26
1	05	P0011C	MC-32A-205		UH-05I-125		480V ac	1	AL		H-2-122733-1	P0025,26
1	05	P0011G	MC-32A-205		UH-05I-125		480V ac	1	AL		H-2-122733-1	P0025,26
1	05	P0012A	MC-32A-205		UH-05I-127		480V ac	1	AL		H-2-122733-1	P0027,28
1	05	P0012B	MC-32A-205		UH-05I-127		480V ac	1	AL		H-2-122733-1	P0027,28
1	05	P0012C	MC-32A-205		UH-05I-127		480V ac	1	AL		H-2-122733-1	P0027,28
1	05	P0012G	MC-32A-205		UH-05I-127		480V ac	1	AL		H-2-122733-1	P0027,28
1	05	P0013A	MC-32A-205		UH-05I-129		480V ac	1	AL		H-2-122733-1	P0029,30
1	05	P0013B	MC-32A-205		UH-05I-129		480V ac	1	AL		H-2-122733-1	P0029,30
1	05	P0013C	MC-32A-205		UH-05I-129		480V ac	1	AL		H-2-122733-1	P0029,30
1	05	P0013G	MC-32A-205		UH-05I-129		480V ac	1	AL		H-2-122733-1	P0029,30

Electrical Cable Schedule for Package Number E350

REV NO.	BLDG NO.	CABLE NO.	FROM		TO		CABLE DATA				ONE LINE DIAGRAM NO.	VIA
			EQUIPMENT NUMBER OR LOCATION	CONNECTION DRAWING	EQUIPMENT NUMBER OR LOCATION	CONNECTION DRAWING	SYS VOLT	NO. COND	CABLE CODE	LENGTH		
1	05	P0014A	MC-32A-205		UH-05I-131		480V ac	1	AL		H-2-122733-1	P0031,32
1	05	P0014B	MC-32A-205		UH-05I-131		480V ac	1	AL		H-2-122733-1	P0031,32
1	05	P0014C	MC-32A-205		UH-05I-131		480V ac	1	AL		H-2-122733-1	P0031,32
1	05	P0014G	MC-32A-205		UH-05I-131		480V ac	1	AL		H-2-122733-1	P0031,32
1	05	P0015A	MC-32A-205		UH-05I-133		480V ac	1	AL		H-2-122733-1	P0033,34
1	05	P0015B	MC-32A-205		UH-05I-133		480V ac	1	AL		H-2-122733-1	P0033,34
1	05	P0015C	MC-32A-205		UH-05I-133		480V ac	1	AL		H-2-122733-1	P0033,34
1	05	P0015G	MC-32A-205		UH-05I-133		480V ac	1	AL		H-2-122733-1	P0033,34
1	05	P0016A	MC-32A-205		DO-180-001		480V ac	1	AL		H-2-122733-1	P0035
1	05	P0016B	MC-32A-205		DO-180-001		480V ac	1	AL		H-2-122733-1	P0035
1	05	P0016C	MC-32A-205		DO-180-001		480V ac	1	AL		H-2-122733-1	P0035
1	05	P0016G	MC-32A-205		DO-180-001		480V ac	1	AL		H-2-122733-1	P0035
1	05	P0017A	MC-32A-205		LX-32A-215		480V ac	1	AQ		H-2-122733-1	P0037
1	05	P0017B	MC-32A-205		LX-32A-215		480V ac	1	AQ		H-2-122733-1	P0037
1	05	P0017C	MC-32A-205		LX-32A-215		480V ac	1	AQ		H-2-122733-1	P0037
1	05	P0017G	MC-32A-205		LX-32A-215		480V ac	1	AN		H-2-122733-1	P0037

Electrical Cable Schedule for Package Number E350

REV NO.	BLDG NO.	CABLE NO.	FROM		TO		CABLE DATA				ONE LINE DIAGRAM NO.	VIA
			EQUIPMENT NUMBER OR LOCATION	CONNECTION DRAWING	EQUIPMENT NUMBER OR LOCATION	CONNECTION DRAWING	SYS VOLT	NO. COND	CABLE CODE	LENGTH		
1	05	P0017N	MC-32A-205		LX-32A-215		480V ac	1	AQ		H-2-122733-1	P0037
1	05	P0018A	MC-32A-205		WELDG RCPT #1		480V ac	1	AP		H-2-122733-1	P0068
1	05	P0018B	MC-32A-205		WELDG RCPT #1		480V ac	1	AP		H-2-122733-1	P0068
1	05	P0018C	MC-32A-205		WELDG RCPT #1		480V ac	1	AP		H-2-122733-1	P0068
1	05	P0018G	MC-32A-205		WELDG RCPT #1		480V ac	1	AM		H-2-122733-1	P0068
1	05	P0019A	PX-05I-112		PX-05I-112 STARTER		120V ac	1	AL		H-2-122733-1	P0004
1	05	P0019G	PX-05I-112		PX-05I-112 STARTER		120V ac	1	AL		H-2-122733-1	P0004
1	05	P0019N	PX-05I-112		PX-05I-112 STARTER		120V ac	1	AL		H-2-122733-1	P0004
1	05	P0020B	PX-05I-113		PX-05I-113 STARTER		120V ac	1	AL		H-2-122733-1	P0042
1	05	P0020G	PX-05I-113		PX-05I-113 STARTER		120V ac	1	AL		H-2-122733-1	P0042
1	05	P0020N	PX-05I-113		PX-05I-113 STARTER		120V ac	1	AL		H-2-122733-1	P0042
1	05	P0026A	MC-32B-205		BL-05I-113		480V ac	1	AM		H-2-122733-2	P0039
1	05	P0026B	MC-32B-205		BL-05I-113		480V ac	1	AM		H-2-122733-2	P0039
1	05	P0026C	MC-32B-205		BL-05I-113		480V ac	1	AM		H-2-122733-2	P0039
1	05	P0026G	MC-32B-205		BL-05I-113		480V ac	1	AM		H-2-122733-2	P0039
1	05	P0028A	MC-32B-205		VP-620-003VB		480V ac	1	AL		H-2-122733-2	P0045
1	05	P0028B	MC-32B-205		VP-620-003VB		480V ac	1	AL		H-2-122733-2	P0045

Electrical Cable Schedule for Package Number E350

REV NO.	BLDG NO.	CABLE NO.	FROM		TO		CABLE DATA				ONE LINE DIAGRAM NO.	VIA
			EQUIPMENT NUMBER OR LOCATION	CONNECTION DRAWING	EQUIPMENT NUMBER OR LOCATION	CONNECTION DRAWING	SYS VOLT	NO. COND	CABLE CODE	LENGTH		
1	05	P0028C	MC-32B-205		VP-620-003VB		480V ac	1	AL		H-2-122733-2	P0045
1	05	P0028G	MC-32B-205		VP-620-003VB		480V ac	1	AL		H-2-122733-2	P0045
1	05	P0029A	MC-32B-205		EH-05I-116		480V ac	1	AL		H-2-122733-2	P0048,49
1	05	P0029B	MC-32B-205		EH-05I-116		480V ac	1	AL		H-2-122733-2	P0048,49
1	05	P0029C	MC-32B-205		EH-05I-116		480V ac	1	AL		H-2-122733-2	P0048,49
1	05	P0029G	MC-32B-205		EH-05I-116		480V ac	1	AL		H-2-122733-2	P0048,49
1	05	P0030A	MC-32B-205		UH-05I-118		480V ac	1	AM		H-2-122733-2	P0050,51
1	05	P0030B	MC-32B-205		UH-05I-118		480V ac	1	AM		H-2-122733-2	P0050,51
1	05	P0030C	MC-32B-205		UH-05I-118		480V ac	1	AM		H-2-122733-2	P0050,51
1	05	P0030G	MC-32B-205		UH-05I-118		480V ac	1	AM		H-2-122733-2	P0050,51
1	05	P0031A	MC-32B-205		UH-05I-120		480V ac	1	AL		H-2-122733-2	P0052,53
1	05	P0031B	MC-32B-205		UH-05I-120		480V ac	1	AL		H-2-122733-2	P0052,53
1	05	P0031C	MC-32B-205		UH-05I-120		480V ac	1	AL		H-2-122733-2	P0052,53
1	05	P0031G	MC-32B-205		UH-05I-120		480V ac	1	AL		H-2-122733-2	P0052,53
1	05	P0032A	MC-32B-205		UH-05I-122		480V ac	1	AL		H-2-122733-2	P0054,55
1	05	P0032B	MC-32B-205		UH-05I-122		480V ac	1	AL		H-2-122733-2	P0054,55

Electrical Cable Schedule for Package Number E350

REV NO.	BLDG NO.	CABLE NO.	FROM		TO		CABLE DATA				ONE LINE DIAGRAM NO.	VIA
			EQUIPMENT NUMBER OR LOCATION	CONNECTION DRAWING	EQUIPMENT NUMBER OR LOCATION	CONNECTION DRAWING	SYS VOLT	NO. COND	CABLE CODE	LENGTH		
1	05	P0032C	MC-32B-205		UH-05I-122		480V ac	1	AL		H-2-122733-2	P0054,55
1	05	P0032G	MC-32B-205		UH-05I-122		480V ac	1	AL		H-2-122733-2	P0054,55
1	05	P0033A	MC-32B-205		UH-05I-124		480V ac	1	AL		H-2-122733-2	P0056,57
1	05	P0033B	MC-32B-205		UH-05I-124		480V ac	1	AL		H-2-122733-2	P0056,57
1	05	P0033C	MC-32B-205		UH-05I-124		480V ac	1	AL		H-2-122733-2	P0056,57
1	05	P0033G	MC-32B-205		UH-05I-124		480V ac	1	AL		H-2-122733-2	P0056,57
1	05	P0034A	MC-32B-205		UH-05I-126		480V ac	1	AL		H-2-122733-2	P0058,59
1	05	P0034B	MC-32B-205		UH-05I-126		480V ac	1	AL		H-2-122733-2	P0058,59
1	05	P0034C	MC-32B-205		UH-05I-126		480V ac	1	AL		H-2-122733-2	P0058,59
1	05	P0034G	MC-32B-205		UH-05I-126		480V ac	1	AL		H-2-122733-2	P0058,59
1	05	P0035A	MC-32B-205		UH-05I-128		480V ac	1	AL		H-2-122733-2	P0060,61
1	05	P0035B	MC-32B-205		UH-05I-128		480V ac	1	AL		H-2-122733-2	P0060,61
1	05	P0035C	MC-32B-205		UH-05I-128		480V ac	1	AL		H-2-122733-2	P0060,61
1	05	P0035G	MC-32B-205		UH-05I-128		480V ac	1	AL		H-2-122733-2	P0060,61
1	05	P0036A	MC-32B-205		UH-05I-130		480V ac	1	AL		H-2-122733-2	P0062,63
1	05	P0036B	MC-32B-205		UH-05I-130		480V ac	1	AL		H-2-122733-2	P0062,63

Electrical Cable Schedule for Package Number E350

REV NO.	BLDG NO.	CABLE NO.	FROM		TO		CABLE DATA				ONE LINE DIAGRAM NO.	VIA
			EQUIPMENT NUMBER OR LOCATION	CONNECTION DRAWING	EQUIPMENT NUMBER OR LOCATION	CONNECTION DRAWING	SYS VOLT	NO. COND	CABLE CODE	LENGTH		
1	05	P0036C	MC-32B-205		UH-051-130		480V ac	1	AL		H-2-122733-2	P0062,63
1	05	P0036G	MC-32B-205		UH-051-130		480V ac	1	AL		H-2-122733-2	P0062,63
1	05	P0037A	MC-32B-205		UH-051-132		480V ac	1	AL		H-2-122733-2	P0064,65
1	05	P0037B	MC-32B-205		UH-051-132		480V ac	1	AL		H-2-122733-2	P0064,65
1	05	P0037C	MC-32B-205		UH-051-132		480V ac	1	AL		H-2-122733-2	P0064,65
1	05	P0037G	MC-32B-205		UH-051-132		480V ac	1	AL		H-2-122733-2	P0064,65
1	05	P0038A	MC-32B-205		XT-32B-005		480V ac	1	AP		H-2-122733-2	P0066
1	05	P0038B	MC-32B-205		XT-32B-005		480V ac	1	AP		H-2-122733-2	P0066
1	05	P0038C	MC-32B-205		XT-32B-005		480V ac	1	AP		H-2-122733-2	P0066
1	05	P0038G	MC-32B-205		XT-32B-005		480V ac	1	AM		H-2-122733-2	P0066
1	05	P0039A	XT-32B-005		DA-32B-005		208V ac	1	AQ		H-2-122733-2	P0067
1	05	P0039B	XT-32B-005		DA-32B-005		208V ac	1	AQ		H-2-122733-2	P0067
1	05	P0039C	XT-32B-005		DA-32B-005		208V ac	1	AQ		H-2-122733-2	P0067
1	05	P0039G	XT-32B-005		DA-32B-005		208V ac	1	AN		H-2-122733-2	P0067
1	05	P0039N	XT-32B-005		DA-32B-005		208V ac	1	AQ		H-2-122733-2	P0067
1	05	P0040A	MC-32B-205		WELDG RCPT #2		480V ac	1	AP		H-2-122733-2	P0038
1	05	P0040B	MC-32B-205		WELDG RCPT #2		480V ac	1	AP		H-2-122733-2	P0038

Electrical Cable Schedule for Package Number E350

REV NO.	BLDG NO.	CABLE NO.	FROM		TO		CABLE DATA				ONE LINE DIAGRAM NO.	VIA
			EQUIPMENT NUMBER OR LOCATION	CONNECTION DRAWING	EQUIPMENT NUMBER OR LOCATION	CONNECTION DRAWING	SYS VOLT	NO. COND	CABLE CODE	LENGTH		
1	05	P0040C	MC-32B-205		WELDG RCPT #2		480V ac	1	AP		H-2-122733-2	P0038
1	05	P0040G	MC-32B-205		WELDG RCPT #2		480V ac	1	AM		H-2-122733-2	P0038
1	05	P0041A	LX-32B-315		XT-32A-208		480V ac	1	AY			P0069
1	05	P0041C	LX-32B-315		XT-32A-208		480V ac	1	AY			P0069
1	05	P0041G	LX-32B-315		XT-32A-208		480V ac	1	AY			P0069
1	05	P0042A	UP-34A-601		DA-34A-601		208V ac	1	AO		H-2-122734	P0070
1	05	P0042B	UP-34A-601		DA-34A-601		208V ac	1	AO		H-2-122734	P0070
1	05	P0042C	UP-34A-601		DA-34A-601		208V ac	1	AO		H-2-122734	P0070
1	05	P0042G	UP-34A-601		DA-34A-601		208V ac	1	AM		H-2-122734	P0070
1	05	P0042N	UP-34A-601		DA-34A-601		208V ac	1	AO		H-2-122734	P0070
1	05	P0043A	MC-32A-205		UP-34A-601		480V ac	1	AM		H-2-122734	P0083
1	05	P0043B	MC-32A-205		UP-34A-601		480V ac	1	AM		H-2-122734	P0083
1	05	P0043C	MC-32A-205		UP-34A-601		480V ac	1	AM		H-2-122734	P0083
1	05	P0043G	MC-32A-205		UP-34A-601		480V ac	1	AM		H-2-122734	P0083
1	05	P0044A	MC-32B-205		UP-34A-601		480V ac	1	AM		H-2-122734	P0084
1	05	P0044B	MC-32B-205		UP-34A-601		480V ac	1	AM		H-2-122734	P0084

Electrical Cable Schedule for Package Number E350

REV NO.	BLDG NO.	CABLE NO.	FROM		TO		CABLE DATA				ONE LINE DIAGRAM NO.	VIA
			EQUIPMENT NUMBER OR LOCATION	CONNECTION DRAWING	EQUIPMENT NUMBER OR LOCATION	CONNECTION DRAWING	SYS VOLT	NO. COND	CABLE CODE	LENGTH		
1	05	P0044C	MC-32B-205		UP-34A-601		480V ac	1	AM		H-2-122734	P0084
1	05	P0044G	MC-32B-205		UP-34A-601		480V ac	1	AM		H-2-122734	P0084
1	05	P0045B	LX-32A-215		AC-05I-110A		277V ac	1	AN			P0086,87
1	05	P0045G	LX-32A-215		AC-05I-110		277V ac	1	AM			P0086,87
1	05	P0045N	LX-32A-215		AC-05I-110A		277V ac	1	AN			P0086,87
1	05	P0046A	LX-32B-315		AC-05I-110B		277V ac	1	AN			P0088,89
1	05	P0046G	LX-32B-315		AC-05I-110B		277V ac	1	AM			P0088,89
1	05	P0046N	LX-32B-315		AC-05I-110B		277V ac	1	AN			P0088,89
1	05	P0047A	MC-32B-205		LX-32B-315		480V ac	1	AQ		H-2-122733-2	P0047
1	05	P0047B	MC-32B-205		LX-32B-315		480V ac	1	AU8		H-2-122733-2	P0047
1	05	P0047C	MC-32B-205		LX-32B-315		480V ac	1	AU9		H-2-122733-2	P0047
1	05	P0047G	MC-32B-205		LX-32B-315		480V ac	1	AU2		H-2-122733-2	P0047
1	05	X0001	TIT-CSS-041	X17/H-2-122732-4	PB-05-X/B2		4-20mA	2	AD			X0001,1F,1J,1K,1L
1	05	X0002	TIT-CSS-042	X17/H-2-122732-4	PB-05-X/B2		4-20mA	2	AD			X0001,1F,1G,1H
1	05	X0003	TIT-CSS-043	X17/H-2-122732-4	PB-05-X/B2		4-20mA	2	AD			X0001,1F,1J,1M,1N
1	05	X0004	TIT-CSS-044	X17/H-2-122732-4	PB-05-X/B2		4-20mA	2	AD			X0001,1A,1D,1E

Electrical Cable Schedule for Package Number E350

REV NO.	BLDG NO.	CABLE NO.	FROM		TO		CABLE DATA				ONE LINE DIAGRAM NO.	VIA
			EQUIPMENT NUMBER OR LOCATION	CONNECTION DRAWING	EQUIPMENT NUMBER OR LOCATION	CONNECTION DRAWING	SYS VOLT	NO. COND	CABLE CODE	LENGTH		
1	05	X0005	FY-CSE-012A/B	X17/H-2-122732-4	PB-05-X/B2		4-20mA	2	AD			X0001,1A,1B,1C
1	05	X0006	RE-620-304		PB-05-X/B1		4-20mA	2	AD			X0002,2F,2J,2K
1	05	X0007	RE-620-304		PB-05-X/B1		4-20mA	2	AD			X0002,2F,2J,2K
1	05	X0008	RE-620-304		PB-05-X/B1		4-20mA	2	AD			X0002,2F,2J,2K
1	05	X0009	RE-620-301		PB-05-X/B1		4-20mA	2	AD			X0002,2F,2G,2H
1	05	X0010	RE-620-301		PB-05-X/B1		4-20mA	2	AD			X0002,2F,2G,2H
1	05	X0011	RE-620-301		PB-05-X/B1		4-20mA	2	AD			X0002,2F,2G,2H
1	05	X0012	RE-620-305		PB-05-X/B1		4-20mA	2	AD			X0002,2A,2B,2C
1	05	X0013	RE-620-305		PB-05-X/B1		4-20mA	2	AD			X0002,2A,2B,2C
1	05	X0014	RE-620-305		PB-05-X/B1		4-20mA	2	AD			X0002,2A,2B,2C
1	05	X0015	RE-620-307		PB-05-X/B1		4-20mA	2	AD			X0002,2A,2D,2E
1	05	X0016	RE-620-307		PB-05-X/B1		4-20mA	2	AD			X0002,2A,2D,2E
1	05	X0017	RE-620-307		PB-05-X/B1		4-20mA	2	AD			X0002,2A,2D,2E
1	05	X0018	IR-620-436 TY-CSS-046-1		PB-05-X/B2		4-20mA	2	AD			X0003,3E,3H
1	05	X0019	IR-620-436 TY-CSS-031-1		PB-05-X/B2		4-20mA	2	AD			X0003,3E,3H
1	05	X0020	IR-620-436 TIT-CSS-032-1		PB-05-X/B2		4-20mA	2	AD			X0003,3E,3H
1	05	X0021	IR-620-436		PB-05-X/B2		4-20mA	2	AD			X0003,3E,3H

Electrical Cable Schedule for Package Number E350

REV NO.	BLDG NO.	CABLE NO.	FROM		TO		CABLE DATA				ONE LINE DIAGRAM NO.	VIA
			EQUIPMENT NUMBER OR LOCATION	CONNECTION DRAWING	EQUIPMENT NUMBER OR LOCATION	CONNECTION DRAWING	SYS VOLT	NO. COND	CABLE CODE	LENGTH		
			PDIT-CSS-035-1									
1	05	X0022	IR-620-436 PDIT-CSS-038-1		PB-05-X/B2		4-20mA	2	AD			X0003,3E,3H
1	05	X0023	IR-620-435 TY-CSS-046-2		PB-05-X/B2		4-20mA	2	AD			X0003,3A,3D
1	05	X0024	IR-620-435 TY-CSS-031-2		PB-05-X/B2		4-20mA	2	AD			X0003,3A,3D
1	05	X0025	IR-620-435 TIT-CSS-032-2		PB-05-X/B2		4-20mA	2	AD			X0003,3A,3D
1	05	X0026	IR-620-435 PDIT-CSS-035-2		PB-05-X/B2		4-20mA	2	AD			X0003,3A,3D
1	05	X0027	IR-620-435 PDIT-CSS-038-2		PB-05-X/B2		4-20mA	2	AD			X0003,3A,3D
1	05	X0028	TIT-CSS-039-2	X17/H-2-122732-4	PB-05-X/B2		4-20mA	2	AD			X0003,3A,3B,3C
1	05	X0029	TIT-CSS-039-1	X17/H-2-122732-4	PB-05-X/B2		4-20mA	2	AD			X0003,3E,3F,3G
1	05	X0030	TIT-CSS-014	X17/H-2-122732-4	PB-05-X/B2		4-20mA	2	AD			X0004,4A,4B
1	05	X0031	TIT-VAX-333-2	X18/H-2-122732-4	PB-05-X/B2		4-20mA	2	AD			X0004,4C,4D,4E,4G
1	05	X0032	PDIT-VAX-330-2	X03/H-2-122732-4	PB-05-X/B2		4-20mA	2	AD			X0004,4C,4D,4E,4F
1	05	X0034	IR-610-434 TY-CSS-016		PB-05-X/B2		4-20mA	2	AD			X0004,4C,4K,4L
1	05	X0035	IR-610-434 TY-CSS-002		PB-05-X/B2		4-20mA	2	AD			X0004,4C,4K,4L
1	05	X0036	IR-610-434 TIT-CSS-003		PB-05-X/B2		4-20mA	2	AD			X0004,4C,4K,4L
1	05	X0037	IR-610-434 PDIT-CSS-006		PB-05-X/B2		4-20mA	2	AD			X0004,4C,4K,4L
1	05	X0038	IR-610-434 PDIT-CSS-008		PB-05-X/B2		4-20mA	2	AD			X0004,4C,4K,4L

Electrical Cable Schedule for Package Number E350

REV NO.	BLDG NO.	CABLE NO.	FROM		TO		CABLE DATA				ONE LINE DIAGRAM NO.	VIA
			EQUIPMENT NUMBER OR LOCATION	CONNECTION DRAWING	EQUIPMENT NUMBER OR LOCATION	CONNECTION DRAWING	SYS VOLT	NO. COND	CABLE CODE	LENGTH		
1	05	X0039	PY-VAX-321	X07/H-2-122732-4	PB-05-X/B2		4-20mA	2	AD			X0004,4C,4K,4M,4N,4R,4S
1	05	X0040	TIT-VAX-333-1	X18/H-2-122732-4	PB-05-X/B2		4-20mA	2	AD			X0004,4C,4K,4M,4T,4U,4V
1	05	X0041	PDIT-VAX-330-1	X03/H-2-122732-4	PB-05-X/B2		4-20mA	2	AD			X0004,4C,4K,4M,4T,4U,4W
1	05	X0042	PDIT-VAX-323-2	X03/H-2-122732-4	PB-05-X/B2		4-20mA	2	AD			X0004,4C,4K,4M,4N,4P,4Q
1	05	X0043	PSH-VAX-030	X02/H-2-122732-4	PB-05-X/B2		4-20mA	2	AD			X0004,4C,4K,4M,4T,4X, 4AA,4AB
1	05	X0044	PDIT-VAX-323-1	X03/H-2-122732-4	PB-05-X/B2		4-20mA	2	AD			X0004,4C,4K,4M,4T,4X, 4Y,4Z
1	05	X0045	PM-620-751	X03/H-2-122732-4	PB-05-X/B1		4-20mA	2	AD			X0005,5A,5B
1	05	X0046	RE-620-309		PB-05-X/B1		4-20mA	2	AD			X0005,5C,5D,5E
1	05	X0047	RE-620-309		PB-05-X/B1		4-20mA	2	AD			X0005,5C,5D,5E
1	05	X0048	RE-620-309		PB-05-X/B1		4-20mA	2	AD			X0005,5C,5D,5E
1	05	X0049	RE-620-720		PB-05-X/B1		4-20mA	2	AD			X0005,5C,5F,5G,5H
1	05	X0050	RE-620-720		PB-05-X/B1		4-20mA	2	AD			X0005,5C,5F,5G,5H
1	05	X0051	RE-620-720		PB-05-X/B1		4-20mA	2	AD			X0005,5C,5F,5G,5H
1	05	X0052	RE-620-725		PB-05-X/B1		4-20mA	2	AD			X0005,5C,5F,5G,5J
1	05	X0053	RE-620-725		PB-05-X/B1		4-20mA	2	AD			X0005,5C,5F,5G,5J
1	05	X0054	RE-620-725		PB-05-X/B1		4-20mA	2	AD			X0005,5C,5F,5G,5J

Electrical Cable Schedule for Package Number E350

REV NO.	BLDG NO.	CABLE NO.	FROM		TO		CABLE DATA				ONE LINE DIAGRAM NO.	VIA
			EQUIPMENT NUMBER OR LOCATION	CONNECTION DRAWING	EQUIPMENT NUMBER OR LOCATION	CONNECTION DRAWING	SYS VOLT	NO. COND	CABLE CODE	LENGTH		
1	05	X0055	RE-620-302		PB-05-X/B1		4-20mA	2	AD			X0005,5C,5F,5L,5M
1	05	X0056	RE-620-302		PB-05-X/B1		4-20mA	2	AD			X0005,5C,5F,5L,5M
1	05	X0057	RE-620-302		PB-05-X/B1		4-20mA	2	AD			X0005,5C,5F,5L,5M
1	05	X0058	TIT-CSS-001	X18/H-2-122732-4	PB-05-X/B2		4-20mA	2	AD			X0006,6A,6B
1	05	X0059	PIT-VAX-321	X03/H-2-122732-4	PB-05-X/B2		4-20mA	2	AD			X0006,6C,6D,6E
1	05	X0060	FIT-VAX-320	X03/H-2-122732-4	PB-05-X/B2		4-20mA	2	AD			X0006,6C,6D,6F
1	05	X0061	TIT-CSS-051	X17/H-2-122732-4	PB-05-X/B2		4-20mA	2	AD			X0006,6C,6G,6H
1	05	X0062	FT-CSE-321		FY-CSE-012A/B		.2-.6A	2	AD			X0008,8A,8B
1	05	X0063	RE-620-724		PB-05-X/B1		4-20mA	2	AD			X0009,9A,9B
1	05	X0064	RE-620-724		PB-05-X/B1		4-20mA	2	AD			X0009,9A,9B
1	05	X0065	RE-620-724		PB-05-X/B1		4-20mA	2	AD			X0009,9A,9B
1	05	X0066	RE-620-303		PB-05-X/B1		4-20mA	2	AD			X0009,9C,9D,9E
1	05	X0067	RE-620-303		PB-05-X/B1		4-20mA	2	AD			X0009,9C,9D,9E
1	05	X0068	RE-620-303		PB-05-X/B1		4-20mA	2	AD			X0009,9C,9D,9E
1	05	X0069	RE-620-725		PB-05-X/B1		4-20mA	2	AD			X0009,9C,9F,9G
1	05	X0070	RE-620-725		PB-05-X/B1		4-20mA	2	AD			X0009,9C,9F,9G
1	05	X0071	RE-620-725		PB-05-X/B1		4-20mA	2	AD			X0009,9C,9F,9G

Electrical Cable Schedule for Package Number E350

REV NO.	BLDG NO.	CABLE NO.	FROM		TO		CABLE DATA				ONE LINE DIAGRAM NO.	VIA
			EQUIPMENT NUMBER OR LOCATION	CONNECTION DRAWING	EQUIPMENT NUMBER OR LOCATION	CONNECTION DRAWING	SYS VOLT	NO. COND	CABLE CODE	LENGTH		
1	05	X0072	MIT-CSS-023	X03/H-2-122732-4	PB-05-X/B2		4-20mA	2	AD			X0010,10A
1	05	X0073	TIT-CSS-022	X17/H-2-122732-4	PB-05-X/B2		4-20mA	2	AD			X0010,10B
1	05	X0074	BL-05I-113 STARTER		PB-05-X/B2		4-20mA	2	AD		H-2-122733-2	X0011,11A
1	05	X0075	VP-620-003VB STARTER		PB-05-X/B2		4-20mA	2	AD		H-2-122733-2	X0011,11B
1	05	X0076	BL-05I-112 STARTER		PB-05-X/B2		4-20mA	2	AD		H-2-122733-1	X0011,11B
1	05	X0077	VP-620-003VA STARTER		PB-05-X/B2		4-20mA	2	AD		H-2-122733-1	X0011,11A
1	05	X0078	FT-CSE-012		FY-CSE-012A/B		.2-.6A	2	AD			X0008A,B,C
1	05	X0079	FT-CSE-012		FY-CSE-012A/B		.2-.6A	2	AD			X0008A,B,C

U.S. DEPARTMENT OF ENERGY
Hanford Waste Vitrification Plant
Richland, Washington
DOE Contract DE-AC06-86RL10838

FLUOR DANIEL, INC.
Advanced Technology Division
Fluor Contract 8457

SECTION 16143
UNINTERRUPTIBLE POWER SUPPLY SYSTEM
B-595-C-E350-16143

APPROVED FOR CONSTRUCTION

REVISION 1 PER CR-0690, CR-0859
ISSUE DATE 8/4/93

WAPA YES ___ NO X
QUALITY LEVEL I ___ II X
SAFETY CLASS 1__ 2__ 3 X 4__

ORIGINATOR:

Charles Simpson 7-29-93
C. C. Simpson, Electrical Eng. Date

CHECKER:

M. Morrow 7/29/93
M. Morrow, Electrical Engineer Date

APPROVED BY:

K. A. Owrey
K. A. Owrey Lead Discipline Engineer

7-30-93
Date

7/28/93 1:11pm
106\VOL5...\SPECS\E350\16143-1.

SECTION 16143
UNINTERRUPTIBLE POWER SUPPLY SYSTEM
B-595-C-E350-16143

TABLE OF CONTENTS

PART		PAGE
PART 1	**GENERAL**	1
1.1	SUMMARY	1
1.2	REFERENCES	1
1.3	RELATED REQUIREMENTS	2
1.4	DEFINITIONS	2
1.5	SYSTEMS DESCRIPTION	2
1.6	SUBMITTALS	2
1.7	CLASSIFICATIONS OF SYSTEMS AND COMPONENTS	3
1.8	PROJECT OR SITE ENVIRONMENTAL CONDITIONS	3
PART 2	**PRODUCTS**	4
2.1	MATERIALS AND EQUIPMENT	4
2.2	FABRICATION AND CONSTRUCTION	12
2.3	INSPECTION AND TESTING	14
PART 3	**EXECUTION**	15

ATTACHMENTS

ATTACHMENT	TITLE
A	E350-DS-1 UNINTERRUPTIBLE POWER SUPPLY SYSTEM BLOCK DIAGRAM

SECTION 16143
UNINTERRUPTIBLE POWER SUPPLY SYSTEM

PART 1 GENERAL

1.1 SUMMARY

This specification covers the technical requirements for the design, fabrication, inspection, testing and delivery of a solid-state Uninterruptible Power Supply System (UPS), to be installed indoors, inside the Canister Storage Building, at Hanford Waste Vitrification Plant.

1.2 REFERENCES

The publications listed below form a part of this specification to the extent referenced. The publications are referred to in the text by the basic designation only.

AMERICAN NATIONAL STANDARDS INSTITUTE (ANSI)

ANSI C37.13	1990 Low-Voltage ac Power Circuit Breakers used in Enclosures
ANSI C57.12.50	1981 Requirements for Ventilated Dry-Type Distribution Transformer, 1 to 500 kVA, Single Phase, and 15 to 500 kVA, Three Phase, with high voltage 601 to 34500 volts, low voltage 120 to 600 volts.
ANSI Y32.2	1975 Graphic Symbols for Electrical and Electronic Diagrams, including Reference and Class Designation Letters. Revision-1989

INSTITUTE OF ELECTRICAL AND ELECTRONIC ENGINEERS (IEEE)

IEEE 446	1987 Recommended Practice for Emergency and Standby Power Systems for Industrial and Commercial Applications.
IEEE 519	1987 Guide for Harmonic Control and Reactive Compensation of Static Power Converters.

NATIONAL ELECTRICAL MANUFACTURERS ASSOCIATION (NEMA)

NEMA 250	1985 Enclosures for Electrical Equipment 1000 Volts Maximum, Revision 2-1988

NEMA ICS 6 — 1988 Enclosures for Industrial Control and Systems (Rev. 1 - March 1989)

NATIONAL FIRE PROTECTION ASSOCIATION (NFPA)

NFPA 70 — 1990 National Electrical Code (NEC)

1.3 **RELATED REQUIREMENTS**

Specification Section 01730 — Operation and Maintenance Data

1.4 **DEFINITIONS**

(Not Used)

1.5 **SYSTEMS DESCRIPTION**

1.5.1 The UPS shall be rated 15 kVA, 208/120 V ac, 3-Phase, 4-wire, 60 Hz output and 480 V ac, 3-Phase, 60 Hz input. The UPS shall supply reliable clean power to instrumentation loads in the Canister Storage Building.

1.5.2 The UPS system output; 208/120 V ac, 3-phase, 4-wire, 60 Hz; shall have an ungrounded neutral bus and a ground bus that is electrically isolated from the enclosure.

1.5.3 The space requirement for the overall assemblies shall not exceed 7'-0" wide, 2'-8" deep and 6'-0" high.

1.6 **SUBMITTALS**

Submit the following data and documents in accordance with the Vendor Drawing and Data Requirements section of the Order/ Subcontract:

1.6.1 System One-line Diagrams showing device function symbols and numbers in accordance with ANSI Y32.2.

1.6.2 Elementary Diagrams for all circuits.

1.6.3 Connection diagrams for all electrical equipment including terminal block identification and terminal point numbers for each wire, and grounding requirements.

1.6.4 Dimensional drawings for rectifier, inverter and battery cabinet showing plan and elevations of the equipment indicating outline dimensions and weight, conduit entrance locations, grounding connections, neutral connections, anchor bolt locations, and manufacturer's and equipment nameplate information.

1.6.5 Detailed bills of material including name of the manufacturers and catalog number of all components.

1.6.6 A list of manufacturer's recommended spare parts for one (1) years operation. Include sufficient data to permit procurement from the original manufacturer or any supplier.

1.6.7 Manufacturer's installation instructions.

1.6.8 Operation and maintenance data in accordance with Specification Section 01730, Operation and Maintenance Data.

1.6.9 Product data for major components, such as batteries, include catalog sheets and technical data sheets to indicate physical data and electrical performance.

1.6.10 Factory test procedures for the tests specified in the Inspection and Testing paragraph.

1.6.11 Recommended Field Test Procedures

1.6.12 Certified Test Reports on UPS after performing factory acceptance test as specified in the Inspection and Testing paragraph.

1.7 **CLASSIFICATIONS OF SYSTEMS AND COMPONENTS**

(Not Used)

1.8 **PROJECT OR SITE ENVIRONMENTAL CONDITIONS**

1.8.1 Climatic and Geographic Site Conditions

A.	Site Elevation	714 feet above sea level
B.	Barometric Pressure	14.3 psia
C.	Outside Design Temperature	
	1) Maximum Temperature	110°F
	2) Minimum Temperature	-20°F

1.8.2 Operating Environment

A. Indoor Temperature

1)	UPS Module	65°F to 104°F
2)	UPS Battery	70°F to 74°F

B. Relative Humidity 50% ± 5%

PART 2 PRODUCTS

2.1 **MATERIALS AND EQUIPMENT**

2.1.1 General

2.1.1.1 Electrical components and materials shall be in accordance with National Electrical Code, NFPA 70.

2.1.1.2 When applicable, all electrical materials and equipment shall be listed by Underwriters Laboratories and shall bear the UL label.

2.1.1.3 When two or more components of the same specifications are required, the components shall be identical, i.e. same manufacturer and catalog number.

2.1.1.4 The UPS shall be an integrated solid state design, and housed in sheet steel, hinged door enclosure(s). All major components except power transformers and inductors shall be easily accessible from the front.

2.1.1.5 The UPS shall consist of a Rectifier/Charger, battery and cabinet, inverter, static transfer switch, maintenance bypass switch, bypass transformer, synchronizing equipment, system control panel containing the UPS controls, ungrounded neutral bus, isolated ground bus, metering and alarms, protective devices and accessories as specified herein.

2.1.2 Rectifier/Charger Unit

2.1.2.1 The rectifier/charger unit shall be solid state and shall provide direct current to the inverter unit and for battery charging.

2.1.2.2 The rectifier/charger unit shall provide for input current limiting whereby the maximum input current shall be limited to 125 percent of the full input current rating. Current limit shall be adjustable from 100 percent to 125 percent. The limit shall be set at 115 percent at the factory.

2.1.2.3 The rectifier/charger unit shall provide features such that when the ac power is returned after the UPS has been operating on battery power or has been deenergized, the total initial power requirement at the input terminals shall not exceed 20 percent of normal at rated load, and the power shall gradually increase to 100 percent of normal rating over a predetermined period of time. This time interval shall be adjustable from 5 to 15 seconds.

2.1.2.4 Power semiconductors in the rectifier/charger shall be fused with fast acting fuses, so that loss of any one power semiconductor shall not cause cascading failures. All fuses shall be provided with a blown fuse indicator with an alarm indicator on the UPS control panel.

2.1.2.5 The rectifier/charger unit shall have an output filter to minimize ripple current into the battery. Under no conditions shall ripple current into the battery exceed 2 percent RMS. The filter shall be adequate to insure that the dc output of the rectifier/charger will meet the input requirements of the inverter. The UPS module shall be capable of having the inverter operated from the rectifier/charger with the battery disconnected.

2.1.2.6 In addition to supplying power for the load, the rectifier/charger shall be capable of recharging the battery as specified herein. The charging rate shall be sufficient to restore the battery from discharge to 95 percent charge within eight (8) hours. After the battery is recharged, the rectifier/charger shall maintain the battery at full charge until the next emergency operation.

2.1.2.7 Direct current (dc) overvoltage protection shall be provided so that if the dc voltage rises to the preset limit, the UPS module is to shut down automatically and the load is transferred to the static bypass line without interruption.

2.1.2.8 Protection shall be provided to prevent battery damage from discharging below the battery end voltage.

2.1.3 Inverter Unit

2.1.3.1 The inverter unit shall be a solid state device capable of accepting the output of the rectifier/charger or the unregulated voltage of the battery and provide regulated rated ac output within specified limits.

2.1.3.2 The output frequency of the inverter shall be controlled by an oscillator. The oscillator shall be temperature compensated and shall be adjustable to five percent of rated frequency to 0.1 percent for both steady state and transient conditions. Drift shall not exceed 0.1 percent during a 24-hour period. Total frequency deviation, including short time fluctuations and drift, shall not exceed 0.1 percent from the rated frequency.

2.1.3.3 The inverter output shall stay synchronized with the static bypass line provided the static bypass line remains within ±3 Hz of the nominal frequency. If the line frequency goes outside these limits, the inverter shall break sync with the lines and run on its internal frequency. When the line frequency returns, within limits, the inverter output shall automatically resynchronize with the line. The rate of change of frequency is not to exceed 0.1 Hz per second. The unit shall be provided with an internal switch so that the synchronizing frequency range can be changed from 3 Hz to 1 Hz or to 0.5 Hz.

2.1.3.4 The inverter shall be able to sustain an overload across its output terminals up to 150 percent load, while supplying any load within its rating, without reducing the output voltage. Loads greater than 150 percent shall be transferred to the static bypass line.

2.1.3.5 The inverter voltage regulator shall regulate each phase so that an unbalanced loading will not cause the output voltage to go outside the specified voltage unbalance or phase displacement.

2.1.3.6 An output ac filter shall be incorporated in the inverter unit to reduce the inverter output voltage harmonics to less than 5 percent RMS total, but not to exceed 3 percent for any single harmonic.

2.1.3.7 Power semiconductors in the inverter unit shall be fused with fast acting fuses, so that loss of any one power semiconductor will not cause cascading failures. All fuses shall be provided with a blown fuse indicator and an alarm indication on the control panel.

2.1.3.8 The inverter output specification shall meet or exceed the following requirements:

2.1.3.8.1 Voltage regulation = ±2 percent, 0-100 percent balanced load.

2.1.3.8.2 Power factor = 0.8 at rated output.

2.1.3.8.3 Transient response = maximum change of the output voltage is ±10 percent instantaneously for 100 percent step load application or removal and +5 percent after 200 milliseconds.

2.1.3.8.4 Voltage phase displacement three-phase = 115° to 125°.

2.1.3.8.5 Voltage phase unbalance, three-phase = 5 percent maximum with 50 percent load unbalance.

2.1.3.8.6 Frequency regulation = ±0.1 percent for steady state and transient conditions when on internal reference.

2.1.3.8.7 Overload = 125 percent for 10 minutes, 150 percent to 300 percent for 10 cycles.

2.1.3.8.8 Efficiency = as required to achieve overall minimum UPS efficiency of 85 percent at rated load.

2.1.3.8.9 Wave form = sine wave.

2.1.4 Static Transfer Switch

2.1.4.1 The static transfer switch, using solid state devices, shall be provided to transfer the load between the UPS module and the static bypass line without power interruption. Automatic static load transfers shall be initiated when a system fault or equipment malfunction has occurred.

2.1.4.2 If the static transfer was caused by an overload or branch fault, and this condition was cleared, then the static transfer switch shall automatically retransfer the load to the UPS module.

2.1.4.3 The static transfer switch shall be sized to provide minimum 100 percent rated load continuously. The switch shall also have an overload rating of 200 percent rated load for one second and 1000 percent rated load for two (2) cycles.

2.1.4.4 The control panel shall provide an indication that the load is on the static bypass line. An audible alarm shall sound after a ten-second delay. If the transfer was due to a momentary overload and automatically transferred back to the UPS module after the overload was removed, the alarm and indicator shall automatically reset.

2.1.4.5 All switching operations shall be accomplished without causing transients greater than specified in Inverter Unit paragraph of this section.

2.1.4.6 Manual load transfers between the UPS and the bypass line shall be initiated from the control panel.

2.1.5 Maintenance Bypass Switch

2.1.5.1 A manually operated maintenance bypass switch shall be incorporated into the UPS module cabinet that will connect the load to the alternate input ac power source bypassing the rectifier/charger, inverter, alternate static transfer switch.

2.1.5.2 All energized terminals shall be shielded to ensure that maintenance personnel do not inadvertently come in contact with energized parts or terminals. A means to de-energize the static transfer switch shall be provided when the UPS is in the maintenance bypass mode of operation.

2.1.5.3 While the load is on the maintenance bypass line, it shall be possible to check out the operation of the rectifier/charger, inverter, and static transfer switch. It shall also be possible to check the battery operation.

2.1.6 Battery

2.1.6.1 The batteries shall be of heavy-duty industrial type designed for stationary power service.

2.1.6.2 The battery cells shall be of lead-calcium type construction. The containers shall be impact resistant plastic of a design proven from field experience. Each cell is to be equipped with a safety vent.

2.1.6.3 The battery shall be designed for a 20-year life.

2.1.6.4 The battery shall be provided with the following accessories:

A. Intercell and intertier connectors

B. Special tool and fittings required to assemble the battery

C. Cell numerals

D. Battery cables for connecting to UPS module.

2.1.6.5 The battery shall have an ampere hour rating sufficient to supply direct current to the inverter for an outage period of 30 minutes, with the inverter operating at full rated output.

2.1.6.6 A battery cabinet shall be furnished for the battery bank. The cabinet shall be steel constructed, with plastic insulated rails at all points of contact with the battery case. The rest of the cabinet shall be painted with acid resistant paint.

2.1.7 Battery Circuit Breaker

2.1.7.1 The UPS shall be provided with a circuit breaker to disconnect the dc circuit between the battery and the UPS inverter input. The circuit breaker shall provide a positive means of isolating the battery from the rest of the system for maintenance or due to a fault in the battery system itself. The circuit breaker shall be equipped with an undervoltage release and an auxiliary switch.

The undervoltage release shall be used to open the battery circuit breaker upon activation of the emergency power off (EPO) push button located on the UPS status and control panel.

2.1.7.2 The battery circuit breaker shall be utilized for battery short circuit protection, low voltage protection and battery maintenance. Circuit breaker shall be in accordance with ANSI C37.13.

2.1.8 Bypass Transformer

2.1.8.1 A bypass transformer shall be provided inside the UPS enclosure. Transformer shall be dry-type and electrostatically shielded between the primary and the secondary windings to attenuate transients.

2.1.8.2 Transformer shall not be a current limiting type; thus reducing the effectiveness of the alternate source in clearing a branch circuit fault.

2.1.8.3 Transformer shall be rated to match the UPS unit rating. Transformer shall be 3-Phase, 480 V ac Delta connected primary winding, and 208/120 V ac, Wye connected, 4-wire secondary.

2.1.8.4 Transformer shall have 220°C insulation class, 150°C average winding temperature rise.

2.1.8.5 Transformer shall be provided with tap changers, for de-energized operation, on the primary side. Full capacity taps shall be provided per ANSI C57.12.50.

2.1.9 Control and Monitoring Panel

2.1.9.1 The UPS shall be provided with a system control section to provide monitoring and control of the complete UPS. The meters, alarms, controls and graphic panel shall be located on the control section door. The control logic shall be located in the control section, physically barriered and separated from all heat sources and high voltage hazards. The control fuses shall be located in a separate section behind a hinged door to minimize electrical shock hazards.

2.1.9.2 There shall be two power supplies for the logic and control circuits, one connected to the input ac power source and the other connected to the UPS module output. Battery operated power supplies for control shall not be permitted.

2.1.9.3 Graphic Panel

2.1.9.3.1 A graphic panel shall be provided on the UPS cabinet depicting a single line diagram of all major components of the UPS, including the static bypass transfer switches, bypass switches, fuses, batteries, major circuit breakers, alarms and indicators.

2.1.9.3.2 Operating instructions shall also be located on the front of the UPS cabinet, for the bypass, maintenance isolation switch and general UPS control.

2.1.9.4 Monitoring Instrumentation

The following instrumentation shall be displayed on the control and monitoring panel:

2.1.9.4.1 Input ac voltage line-to-line and line-to-neutral for each phase.

2.1.9.4.2 Input ac current for each phase.

2.1.9.4.3 Rectifier output dc current.

2.1.9.4.4 Battery voltage.

2.1.9.4.5 Battery charge/discharge current.

2.1.9.4.6 Output ac voltage line-to-line and line-to-neutral for each phase.

2.1.9.4.7 Output ac current for each phase.

2.1.9.4.8 Percent of rated load being supplied by the UPS.

2.1.9.4.9 Battery time left during battery operation.

2.1.9.4.10 Inverter Output Frequency

2.1.10 Alarm Indication

The following conditions shall be alarmed on the UPS cabinet. An alarm light, LED type, and an audible alarm shall be activated for each alarm. Two "common UPS alarm" contacts shall be provided and wired to terminal blocks for connection to Buyer's DCS alarm circuit. Common alarm contacts shall open to alarm.

2.1.10.1 Input power failed

2.1.10.2 Battery discharging

2.1.10.3 Low battery

2.1.10.4 Overload

2.1.10.5 Overload shutdown

2.1.10.6 Load on bypass

2.1.10.7 Equipment overtemperature

2.1.10.8 Overtemperature shutdown

2.1.10.9 Fan failure

2.1.10.10 DC overvoltage

2.1.10.11 Control power failed

2.1.10.12 Output over/undervoltage

2.1.10.13 Fuse open

2.1.10.14 Rectifier/charger failure

2.1.10.15 Static transfer switch failure

2.1.10.16 DC ground

2.1.11 Status Indication

The following operating conditions shall be displayed on the UPS cabinet:

2.1.11.1 On static bypass line

2.1.11.2 Synchronized with line

2.1.11.3 Not synchronized with line

2.1.11.4 Out of frequency range

2.1.11.5 Rectifier/charger in current limit

2.1.11.6 Battery circuit breaker open

2.1.12 UPS Protection

2.1.12.1 The UPS module shall have built-in self-protection against overvoltage power line surges, undervoltages and overcurrent introduced by the primary ac source, overvoltage and voltage surges introduced at the output terminals by paralleled sources, load switching and circuit breaker operation in the distribution system. The UPS module shall be self-protected against overcurrent, sudden changes in output load and short circuits at the output terminals.

2.1.12.2 The UPS module shall have built-in protection against permanent damage to itself and the connected load for all predictable types of failures within the UPS.

2.1.12.3 Fast-acting current limiting devices shall be used to protect against failure of solid state devices. Internal failures in a UPS module shall cause the module to trip off-line with minimum damage to the module and to provide maximum information to maintenance personnel regarding the reason for tripping. The load shall be automatically transferred to the bypass line uninterrupted for a UPS module internal failure. Open protective devices shall be indicated by appropriate lights, LED TYPE on the control and monitoring panel.

2.1.13 Nameplates

In addition to the manufacturer's standard equipment ratings nameplate, two machine-engraved, phenolic nameplates, with black figures on white background shall be provided and shall be firmly attached to the UPS and battery cabinets with stainless steel self-tapping screws. Nameplates description shall be as follows:

2.1.13.1 UPS Cabinet:

UP-34A-601
Canister Storage Building
UPS

2.1.13.2 Battery Cabinet:

BA-34A-601
Canister Storage Building
UPS Battery

2.2 FABRICATION AND CONSTRUCTION

2.2.1 General

2.2.1.1 The UPS shall be designed in accordance with IEEE Standards 446 and 519.

2.2.1.2 Audible noise level of the system equipment shall not exceed sound levels of 65 dBA measured at two (2) meters from the nearest surface.

2.2.1.3 The UPS shall be single assembly design, a front panel graphic diagram incorporating symbols of all the controls inside each assembly.

2.2.1.4 All materials and parts comprising the UPS shall be new, of current manufacture, of a high grade and free from all defects and imperfections and shall not have been in prior service, except as required during factory testing.

2.2.1.5 All active electronic devices shall be solid state. All semiconductor devices shall be hermetically sealed. Vacuum tubes shall not be used for any purposes.

2.2.2 Wiring

2.2.2.1 Access holes with cover plates are to be provided on the top and bottom of the UPS and battery cabinets for intercabinet wiring and Buyer installed wiring.

2.2.2.2 Wiring practices, materials and coding shall be in accordance with the requirements of the National Electrical Code.

2.2.2.3 All bolted connections of bus bars, lugs and cables shall be in accordance with requirements of the National Electrical Code. All electrical power connections shall be torqued to the required value and marked.

2.2.3 Construction and Mounting

2.2.3.1 The UPS cabinet shall be NEMA Type 1 metal enclosure per NEMA 250 and NEMA ICS6. The enclosure shall have leveling jacks. The UPS shall be structurally adequate and have provisions for hoisting, jacking and forklift handling.

2.2.3.2 Provisions shall be made to anchor the UPS and battery cabinets structural bases to the concrete floor with a minimum two (2) equally spaced 1/2 inch diameter bolts on each side, 4 bolts total. Bolt holes shall be 11/16 inch diameter.

2.2.3.3 Wire runs shall be protected in a manner which separates power and control wiring. Provisions shall be made in the cabinets to permit installation of input, output, and intercabinet cabling, using conduit. Incoming and outgoing conduits shall be top entry.

2.2.4 Ventilation

2.2.4.1 Adequate ventilation shall be provided to insure that all components are operated within their environmental ratings. All fans are to be equipped with wind vane sensors connected to an alarm in the module control panel.

2.2.4.2 Temperature sensors shall be provided to monitor temperature of critical components. Upon detection of temperatures in excess of component manufacturer's recommended ambient working temperature, the sensors shall cause audible and visual alarms to be sounded on the module control panel.

2.2.5 Finish

2.2.5.1 All steel structures and enclosures shall be cleaned, primed, and painted, according to Seller's standard practice.

2.2.5.2 Permanent nameplates shall be installed to identify each voltmeter, ammeter, switch, rheostat, relay and indicating light.

2.3 **INSPECTION AND TESTING**

2.3.1 General

2.3.1.1 Factory Testing

2.3.1.1.1 Factory Testing shall include, but not necessarily be limited to, the following items:

A. System rating, load sharing distortion, phase shift, regulation, efficiency and power factor.

B. Transient response with step load changes up to 100 percent of rated kVA load.

C. Inverter shall be tested for:

- Battery operation
- Frequency stability
- Alternate source synchronizing ability
- Overload tests
- Manual load transfer
- Input ac failure
- Internal inverter failure
- Output short circuit test
- Measurement of total transfer time including failure detection period
- Check all voltages and current wave shapes. Recorded oscillograph printouts shall be included in test reports.

D. Short circuit tests fuse blowing, must simulate actual installed conditions with respect to available short circuit current sources through alternate supply transformers.

Seller shall supply sufficient quantity of all required fuse sizes to run fuse blowing tests. This test shall be used to provide the coordination of protective and current limiting devices.

E. Bypass transformer tests per the requirements of ANSI C57.12.50.

PART 3 EXECUTION

(Not Used)

END OF SECTION

ATTACHMENT A

FLUOR DANIEL

DATA SHEET

U.S. Department of Energy
Hanford Waste Vitrification Plant
Richland, Washington
DOE Contract DE-AC06-86RL10838

UNINTERRUPTIBLE POWER SUPPLY SYSTEM BLOCK DIAGRAM

NO.	BY / DATE	REVISION
1	CCS 07/29/93	CR-0690
△		
△		
△		
△		
△		

SHEET NO. E350-DS-1		REV. 1
DATE 07-10-92	CONTRACT 845734	
ITEM NO.		
SECTION NO. 16143		
UPS NUMBER UP-34A-601		
ORIG BY CCS	CHK'D AT	APPR'D

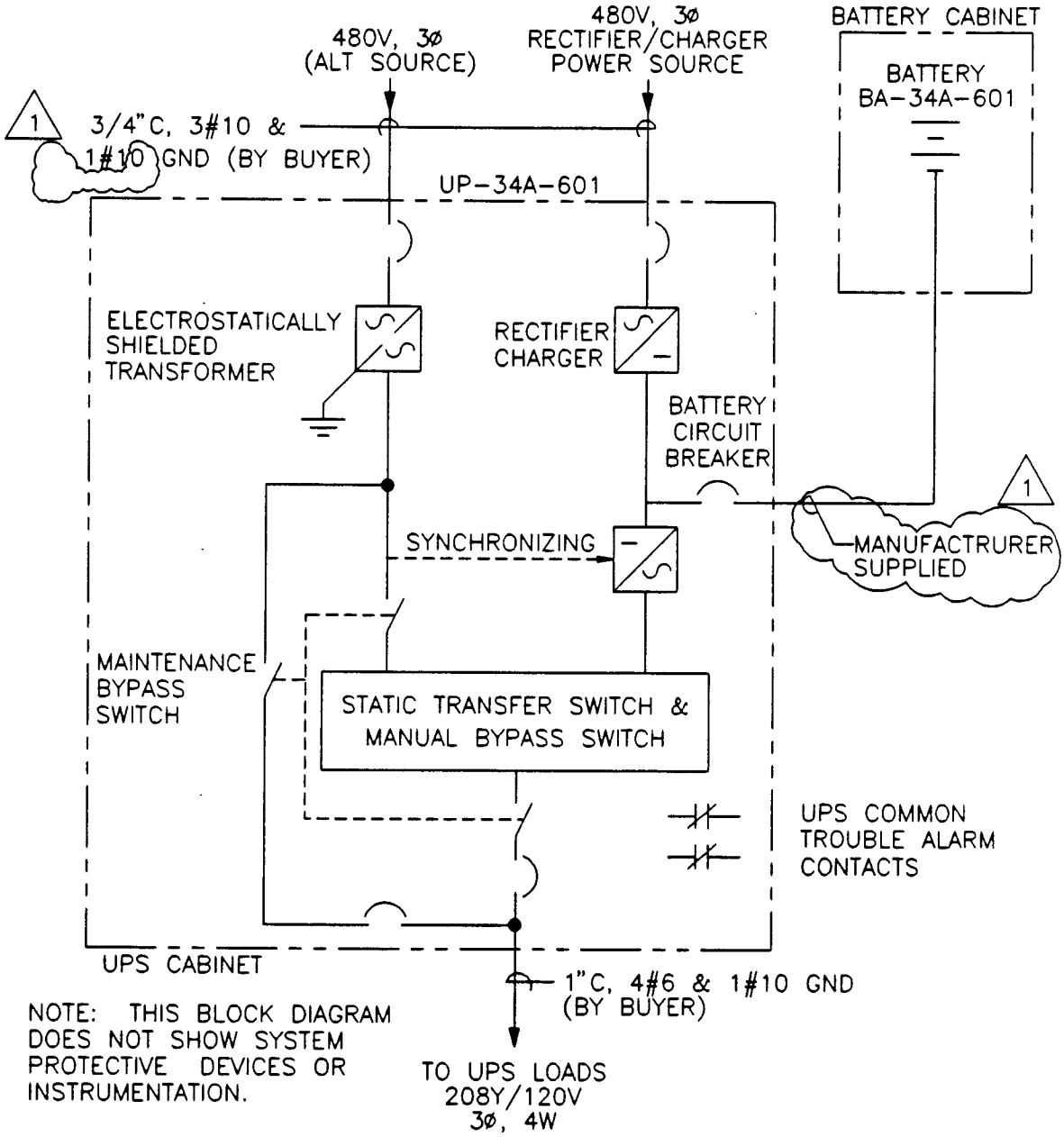

NOTE: THIS BLOCK DIAGRAM DOES NOT SHOW SYSTEM PROTECTIVE DEVICES OR INSTRUMENTATION.

SAFETY CLASSIFICATION 3
IMPACT LEVEL 3

U.S. DEPARTMENT OF ENERGY
Hanford Waste Vitrification Plant
Richland, Washington
DOE Contract DE-AC06-86RL10838

FLUOR DANIEL, INC.
Advanced Technology Division
Fluor Contract 8457

SECTION 16610
ELECTRICAL REQUIREMENTS FOR PACKAGED EQUIPMENT
B-595-C-E350-16610

APPROVED FOR CONSTRUCTION

REVISION 1 PER CR-0859
ISSUE DATE 8/4/93

WAPA YES ___ NO X
QUALITY LEVEL I ___ II X
SAFETY CLASS 1__ 2__ 3X 4__

ORIGINATOR:

Charles Simpson 7-29-93
C. C. Simpson, Electrical Eng. Date

CHECKER:

M. Morrow 7/29/93
M. Morrow, Electrical Engineer Date

APPROVED BY:

K. A. Owrey
K. A. Owrey Lead Discipline Engineer

7-30-93
Date

SECTION 16610
ELECTRICAL REQUIREMENTS FOR PACKAGED EQUIPMENT
B-595-C-E350-16610

TABLE OF CONTENTS

PART		PAGE
PART 1	**GENERAL**	1
1.1	SUMMARY	1
1.2	REFERENCES	1
1.3	RELATED REQUIREMENTS	1
1.4	DEFINITIONS	2
1.5	SYSTEMS DESCRIPTION	2
1.6	SUBMITTALS	4
1.7	CLASSIFICATION OF SYSTEM AND COMPONENTS	5
1.8	PROJECT OR SITE ENVIRONMENTAL CONDITIONS	5
PART 2	**PRODUCTS**	5
2.1	MATERIALS AND EQUIPMENT	5
2.2	FABRICATION AND MANUFACTURE	7
2.3	INSPECTION AND TESTING	8
PART 3	**EXECUTION**	9

SECTION 16610
ELECTRICAL REQUIREMENTS FOR PACKAGED EQUIPMENT

PART 1 GENERAL

1.1 SUMMARY

This specification covers the technical requirements for the fabrication, testing and inspection of the electrical equipment, materials and devices that are furnished as part of packaged equipment for Canister Storage Building.

1.2 REFERENCES

The publications listed below form a part of this specification to the extent referenced. The publications are referred to in the text by the basic designation only.

NATIONAL ELECTRICAL MANUFACTURERS ASSOCIATION (NEMA)

NEMA 250	1985 (Rev. 88) Enclosures for Electrical Equipment (1000 Volts Maximum)

NATIONAL FIRE PROTECTION ASSOCIATION (NFPA)

NFPA 70	1990 National Electrical Code (NEC)

UNDERWRITERS LABORATORIES (UL)

UL 1242	1983 Intermediate Metal Conduit, First Edition
UL 360	1986 Liquid-Tight Flexible Steel Conduit, Third Edition
UL 514B	1989 Fittings for Conduit and Outlet Boxes, Second Edition
UL 1059	1988 Terminal Blocks, Second Edition

1.3 RELATED REQUIREMENTS

Specification Section 01730	Operation and Maintenance Data
Specification Section 15760	Unit Heaters-Electric
Specification Section 15771	Air Conditioning Units
Specification Section 15782	Air Handling Units

Specification Section 15820 Vacuum Blowers

Specification Section 15832 Miscellaneous Fans (HVAC)

Specification Section 15836 Electric Duct Heaters

1.4 **DEFINITIONS**

(Not Used)

1.5 **SYSTEMS DESCRIPTION**

1.5.1 Power Supply

1.5.1.1 The available power distribution systems are 480Y/277 V ac, 3 phase, 60 Hz, 4 wire and 208Y/120 V ac, 3 phase, 60 Hz, 4 wire.

1.5.2 Electric Heaters, EH-05I-115, EH-05I-116 and EH-05I-117.

1.5.2.1 Buyer shall supply a 480 V, 3 phase, 3 wire with ground service to electric heaters.

1.5.2.2 Controller and control devices required for Electric Heaters, EH-05I-115, EH-05I-116 and EH-05I-117 shall be supplied by the Seller.

1.5.3 Unit Heaters, UH-05I-118 thru UH-05I-133.

1.5.3.1 Buyer shall supply a 480 V, 3 phase, 3 wire with ground service to unit heaters.

1.5.3.2 Controller and control devices required for Unit Heaters, UH-05I-118 thru UH-05I-133 shall be supplied by the Seller.

1.5.4 Air Conditioning Units, AH-05I-111/CU-05I-111, AC-05I-110A and AC-05I-110B.

1.5.4.1 Buyer shall supply a 480 V, 3 phase, 3 wire with ground service to Air Conditioning Unit and Condensing Unit, AH-05I-111/CU-05I-111.

1.5.4.2 Motor starter required for Air Conditioning Unit, AH-05I-111, shall be supplied by the Buyer.

1.5.4.3 Motor starter, contactors and control devices required for Condensing Unit, CU-05I-111, shall be supplied by the Seller.

1.5.4.4 Buyer shall supply a 277 volt, single phase, 2 wire with ground service to Air Conditioning Units AC-05I-110A and AC-05I-110B.

1.5.4.5 Motor starters, contactors and control devices required for Air Conditioning Units, AC-05I-110A and AC-05I-110B, shall be supplied by the Seller.

1.5.5 Air Handling Units, AH-05I-112/BL-05I-112/PX-05I-112 and AH-05I-113/BL-05I-113/PX-05I-113.

1.5.5.1 Buyer shall supply a 480 V, 3 phase, 3 wire with ground service to supply fans, BL-05I-112 and BL-05I-113.

1.5.5.2 Buyer shall supply a 120 V, single phase, 2 wire with ground service to pump motors, PX-05I-112 and PX-05I-113.

1.5.5.3 Motor starters required for Air Handling Units, supply fans and evaporative cooler pumps, AH-05I-112/BL-05I-112/PX-05I-112 and AH-05I-113/BL-05I-113/PX-05I-113, shall be supplied by the Buyer.

1.5.6 Vacuum Blowers, VP-620-003VA and VP-620-003VB

1.5.6.1 Buyer shall supply a 480 V, 3 phase, 3 wire with ground service to vacuum blower unit, VP-620-003VA and VP-620-003VB.

1.5.6.2 Motor starters required for vacuum blower units, VP-620-033VA and VP-620-003VB, shall be supplied by the Buyer.

1.5.7 Sewage Lift Station, LS-510-001

1.5.7.1 Buyer shall supply a 480 Vac, 3 phase, 3 wire with ground service to Sewage Lift Station, LS-510-001.

1.5.7.2 Motor starters and control devices required for Sewage Lift Station, LS-510-001, shall be supplied by the Buyer.

1.5.8 Electrical control and instrument power supplies shall be powered by 120 V ac, single phase, 60 Hz power source. If other voltages are required, Seller shall supply transformers with transformer protection. Seller shall provide all electrical equipment and material to form a complete, assembled and wired unit to operate from the single power source.

1.5.9 Package equipment controller(s), supplied by the Seller, shall be equipped with the following electrical devices, as a minimum, completely assembled, wired, housed in a terminal box and tested by the manufacturer supplying the self-contain package equipment.

A. Main circuit breaker or branch breakers shall have 150 ampere minimum frame size complete with thermal magnetic non-interchangeable trip elements. Multi-pole breakers shall have common trip action. Breakers shall be bolt-on type. Circuit breakers shall be rated for 65 KA interrupting rating. Number of poles and trip rating for

each circuit breaker shall be as defined by National Electrical Code, Articles 210-20 and 240, and by manufacturer's requirements for self-contained package equipment.

B. Fuses are not acceptable.

C. Motor starters and/or contactors shall not be smaller than NEMA size 1. Motor starters shall be full voltage non-reversing, FVNR. Motor starters and contactors shall be wired in accordance with National Electrical Code 430-53. Motor starters shall have bimetallic, eutectic alloy overload elements on all phase conductors. Overload relays shall be ambient-compensated and based on Table 430-150 of NFPA 70, the National Electrical Code.

D. Relays, when required, shall have 120 V ac or 24 V, 60 Hz rated coils and interchangeable contacts rated for 10 amps continuous at 120 V ac.

E. Control transformer shall be 480-120 volts or 480-24 volts. One side of the secondary winding shall be fused, and the other side of the secondary shall be grounded. Transformers shall have both primary winding fused.

1.5.10 Electric heaters, 2 kW and larger, shall be suitable for 480 V, 3 phase, 3 wire with ground, 60 Hz service.

1.6 **SUBMITTALS**

Submit the following in accordance with the Vendor Drawing and Data Requirements section of the Order/Subcontract:

1.6.1 Dimensional outline drawings showing the location of all major electrical equipment, including junction boxes, motors and conduit, with all applicable device ratings. Location and size of Buyer's conduit connections shall be shown.

1.6.2 Elementary diagrams for all circuits.

1.6.3 Connection diagrams for all electrical equipment. Diagrams shall include equipment ID numbers, terminal block location and identification and wire numbers.

1.6.4 Bill of materials to include the name of the manufacturer and catalog number of all electrical devices.

1.6.5 Receiving, storage and handling instructions to include inspection and checkout tests.

1.6.6 Operation and maintenance manual in accordance with Specification Section 01730, Operation and Maintenance Data.

1.6.7 Manufacturer's Installation Instructions.

1.6.8 Certified Test Reports for Factory Acceptance Tests per the requirements of Inspection and Testing of this specification.

1.6.9 Recommended spare parts list.

1.7 **CLASSIFICATION OF SYSTEM AND COMPONENTS**

(Not Used)

1.8 **PROJECT OR SITE ENVIRONMENTAL CONDITIONS**

1.8.1 Climatic and Geographic Site Conditions

A.	Site Elevation	714 feet above sea level
B.	Barometric Pressure	14.3 psia
C.	Outside Design Temperature	
	1) Maximum Design Temperature	110°F
	2) Minimum Design Temperature	-20°F

1.8.2 Operating Environment

A.	Indoor Temperatures	55°F to 104°F
B.	Relative Humidity	Not controlled

PART 2 PRODUCTS

2.1 **MATERIALS AND EQUIPMENT**

2.1.1 General

2.1.1.1 When two or more components of the same specifications are required the components shall be identical, that is same manufacturer and catalog number.

2.1.1.2 Electrical components and materials shall be in accordance with the National Electrical Code, NFPA 70.

2.1.1.3 When applicable, all electrical materials and equipment shall be listed by Underwriters Laboratories and shall bear the UL label.

2.1.2 Conduit

2.1.2.1 Conduit shall be intermediate hot dipped galvanized metal in accordance with UL 1242.

2.1.2.2 Liquid-tight flexible steel conduit shall be in accordance with UL 360.

2.1.2.3 Conduit fittings shall be galvanized steel and in accordance with UL 514B.

2.1.3 Cable

2.1.3.1 Power cables shall be single or multiconductor, stranded copper with 600 volt insulation. Cables shall be UL listed type XHHW or THHN in accordance with the National Electrical Code, NFPA 70, Article 310.

2.1.3.2 Conductors for power circuits shall not be smaller than No. 12 AWG. Conductors for control circuits shall not be smaller than No. 14 AWG.

2.1.3.3 Instrumentation cables shall be UL listed, twisted, shielded pair or triad, No. 16 AWG, stranded copper, with a copper drain wire, 300 volt rated PVC insulation and overall PVC jacket.

2.1.3.4 Thermocouple cables shall be UL listed, twisted, shielded pair, No. 16 AWG, solid conductors, with a copper drain wire, 300 volt rated PVC insulation and overall PVC jacket. Conductor material shall be the same as the thermocouple to which it is connected.

2.1.3.5 Identification of conductors shall be by means of heat shrinkable insulated tubing with conductor identification by heat impressed black on white characters, Thomas and Betts Catalog No. WHT-700 or approved equal.

2.1.4 Terminal Blocks

2.1.4.1 Terminal blocks shall be in accordance with UL 1059.

2.1.4.2 Terminal blocks shall be two-screw type and shall be rated 600 volts.

2.1.4.3 Terminal blocks shall have at least 20 percent spare terminals but not less than two spare terminals for each terminal strip.

2.1.5 Terminal Boxes

2.1.5.1 Terminal boxes shall be NEMA 12 and in accordance with NEMA 250 and shall have hinged doors and mounting panels for terminal blocks or electrical devices.

2.1.6 Nameplates

2.1.6.1 All electrical equipment and enclosures shall be identified with nameplates. Nameplates shall be machine-engraved, phenolic, with black figures on white background and shall be firmly attached with stainless steel self-tapping screws.

2.1.6.2 Additional nameplates shall be provided for the Air Handling Units, AH-05I-112 and AH-05I-113. Nameplates shall be machine-engraved, phenolic, with white figures on red background and shall be firmly attached with stainless steel self-tapping screws. The nameplate shall read:

CAUTION
THIS ENCLOSURE CONTAINS
120V AND 480V POWER

2.1.7 Grounding

2.1.7.1 All non-current carrying parts of electrical equipment shall be bonded together and made electrically continuous.

2.1.7.2 All conduits containing 120 volt or higher circuits shall have a ground wire in those conduits.

2.1.7.3 Furnish ground lugs in all terminal boxes to terminate ground wires from Buyer's conduits. Ground the terminal boxes to the equipment ground.

2.1.7.4 Furnish two ground pads on the outside frame of the packaged equipment for connection to Buyer's area grounding grid.

2.2 **FABRICATION AND MANUFACTURE**

2.2.1 The electrical installation shall be in accordance with the National Electrical Code, NFPA 70.

2.2.2 All wiring shall be continuous from terminal to terminal without splices.

2.2.3 All instrument, control device and non-motor loads wiring shall be terminated on terminal blocks in terminal boxes. Motor leads shall be spliced to Buyer's wiring in the motor junction box.

2.2.4 Separate conduit systems and boxes shall be used for each of the following systems:

A. 120 V power and control

B. 480V motor power, with its own 120 V control if applicable

C. Milliamp signals and dc circuits

2.2.5 Wiring between electrical components shall be routed in conduit.

2.2.6 No more than two wires, or one wire and one jumper strap, shall be terminated on any one terminal block terminal screw. Where more wires are required, additional terminals shall be used. No uninsulated, exposed conductors shall extend beyond the sides of the terminal block or its insulated barriers. Each terminal block shall have its own identification numbers. Furnish terminals for all ground wires, and for all drain wires in the instrument cables.

2.2.7 Conductors shall be identified at each end. Identification inscription shall be by individual and distinctive numbers for each conductor, i.e., 1, 2, 3, 4, ...

2.2.8 Exposed conduit shall be run vertically, horizontally, or parallel to the packaged equipment. Conduit fittings and junction boxes shall be supported independent of the conduit system. Whenever practical, horizontal conduits shall be sloped for drainage. Breather-drains shall be installed at the low points of the conduit systems. Minimum conduit size shall be 3/4 inch.

2.2.9 Flexible liquid-tight conduit shall be used to avoid transmission of vibration from vibrating equipment to the conduit system. Flexible conduit shall also be used to terminate equipment which is periodically removed such as motors and instruments.

2.2.10 Conduit connections to junction boxes shall be made using water-tight threaded hubs, or factory threaded hubs for NEMA 12 boxes and lock-nuts for NEMA 1 boxes.

2.2.11 Junction and terminal boxes shall be sized in accordance with the requirements of National Electrical Code, NFPA 70, Article 370.

2.3 INSPECTION AND TESTING

2.3.1 Factory Inspection

2.3.1.1 The equipment shall be inspected at the factory to assure compliance with the specifications, standards and codes and any additional requirements listed in this specification.

2.3.1.2 Inspection shall include, but not necessarily be limited to, the following items:

2.3.2 Wire and Cable Tests

2.3.2.1 Continuity Test

A. Test for continuity, correctness of wiring and verify correct identification on all conductors installed.

B. Test shall be made with an ohmmeter.

C. Ground continuity test shall be performed between the equipment ground bus and the equipment enclosure. The maximum acceptable resistance shall be 0.01 ohm.

2.3.2.2 Insulation Resistance Test

A. All conductors shall be given an insulation resistance test using a megohmmeter.

B. Test shall be made with the lugs in place and conductors disconnected at the equipment. Test shall be made between one conductor and ground with the other conductors grounded. Each conductor shall be tested in the same manner. The voltage shall be applied and readings taken every minute until three equal and consecutive readings are obtained.

C. Test voltages and minimum acceptable insulation resistance shall be as follows:

Insulation Voltage	Test Voltage	Min. Insulation Resistance
300 volt ac	500 Vdc	10 megohms
600 volt ac	1000 Vdc	10 megohms

PART 3 EXECUTION

(Not Used)

END OF SECTION

U.S. DEPARTMENT OF ENERGY
Hanford Waste Vitrification Plant
Richland, Washington
DOE Contract DE-AC06-86RL10838

FLUOR DANIEL, INC.
Advanced Technology Division
Fluor Contract 8457

SECTION 16905
ELECTRICAL TESTING
B-595-C-E350-16905

APPROVED FOR CONSTRUCTION

REVISION 1 PER CR-0859
ISSUE DATE 8/4/93

WAPA YES ___ NO X
QUALITY LEVEL I ___ II X
SAFETY CLASS 1__ 2__ 3X 4__

ORIGINATOR:

Charles Simpson 7-29-93
C. C. Simpson, Electrical Eng. Date

CHECKER:

M. Morrow 7/29/93
M. Morrow, Electrical Engineer Date

APPROVED BY:

K. A. Owrey
K. A. Owrey Lead Discipline Engineer

7-30-93
Date

SECTION 16905
ELECTRICAL TESTING
B-595-C-E350-16905

TABLE OF CONTENTS

PART		PAGE
PART 1	**GENERAL**	1
1.1	SUMMARY	1
1.2	REFERENCES	1
1.3	RELATED REQUIREMENTS	1
1.4	DEFINITIONS	2
1.5	SYSTEM DESCRIPTION	2
1.6	SUBMITTALS	2
1.7	CLASSIFICATION OF SYSTEM AND COMPONENTS	3
1.8	PROJECT OR SITE ENVIRONMENTAL CONDITIONS	3
PART 2	**PRODUCTS**	3
2.1	MATERIALS AND EQUIPMENT	3
2.2	FABRICATION AND MANUFACTURE	4
PART 3	**EXECUTION**	4
3.1	PREPARATION	4
3.2	INSTALLATION, APPLICATION AND ERECTION	4
3.3	FIELD QUALITY CONTROL	5
3.4	ADJUSTMENTS	12
3.5	CLEANING	12
3.6	PROTECTION	13
3.7	DEMONSTRATION	13
3.8	SCHEDULES	13

SECTION 16905
ELECTRICAL TESTING

PART 1 GENERAL

1.1 SUMMARY

1.1.1 This section of the specification defines the electrical tests checks, inspections and the Construction Acceptance Test (CAT) requirements for the acceptance of electrical components and/or systems furnished by the Seller or Government Furnished Equipment.

1.1.2 The purpose of the specified tests and inspections is to determine that each component is in compliance with the Contract Drawings and specifications.

1.1.3 It is the intent of these requirements to ensure that all workmanship, materials and the manner and method of erection and installation conform to manufacturer's instructions, Contract Drawings and specifications.

1.1.4 The Seller shall perform and supervise all tests, checks, inspections and the CATs unless specifically noted otherwise herein or on the Contract Drawings. The Seller shall furnish all test equipment required for the tests performed by him and shall be responsible for providing such safety measures as are required for each test.

1.1.5 Seller shall repair or replace and retest any components or installation which are damaged or have failed the initial tests.

1.1.6 If permanent power is not available at the time of testing, temporary constructed power shall be used to perform these tests.

1.2 REFERENCES

The publication listed below forms a part of this specification to the extent referenced. The publication is referred to in the text by the basic designation only.

NATIONAL FIRE PROTECTION ASSOCIATION (NFPA)

NFPA 70	1990 National Electrical Code (NEC)
NFPA 78	1977 National Lightning Protection Code

1.3 RELATED REQUIREMENTS

Specification Section 16100 Electrical Installation

Specification Section 16143	Uninterruptible Power Supply System
Specification Section 16110	Electrical Materials and Devices
Specification Section 16482	Motor Control Centers

1.4 **DEFINITIONS**

(Not Used)

1.5 **SYSTEM DESCRIPTION**

(Not Used)

1.6 **SUBMITTALS**

Submit the following in accordance with the Vendor Drawing and Data Requirements section of the Order/Subcontract.

1.6.1 Procedures, for Buyer's approval, of all tests, checks and inspection including procedures for Construction Acceptance Tests.

1.6.2 Certified Test Reports per the requirements of Field Quality Control of this Section.

1.6.3 The test reports shall contain as a minimum the following information:

1) Job title

2) Date of test

3) Equipment, system, or cable identification

4) Specific type of test

5) Description of test instrument and date of calibration

6) Section of specification defining test

7) Test results

8) Signature of person supervising test

9) Signature of Seller

10) Space for Buyer's signature

1.6.4 The Seller shall submit to the Buyer for approval, a complete listing of proposed calibrating and testing equipment, including calibration standards with current certification from the National Institute of Standards and Technology.

1.7 **CLASSIFICATION OF SYSTEM AND COMPONENTS**

(Not Used)

1.8 **PROJECT OR SITE ENVIRONMENTAL CONDITIONS**

1.8.1 Climatic and Geographic Site Conditions

A.	Site Elevation	714 feet above sea level
B.	Barometric Pressure	14.3 psia
C.	Outside Design Temperature	
	1) Maximum Design Temperature	110°F
	2) Minimum Design Temperature	-20°F

1.8.2 Operating Environment

A.	Indoor Temperature	55°F to 104°F
B.	Indoor Vault Temperature	-27°F to 180°F
C.	Relative Humidity	
	1) Offices	55% Maximum
	2) FOS #5 Room	50% ± 5%

PART 2 PRODUCTS

2.1 **MATERIALS AND EQUIPMENT**

2.1.1 Furnish all materials, power supply, and test equipment required to perform tests, checks, inspections and the CATs in accordance with this specification section.

2.1.2 The calibrating and testing equipment used for tests, checks, inspections and CATs shall be calibrated within six months prior to testing, and shall be calibrated every six months thereafter. Seller shall provide proof of calibration.

2.1.3 Furnish test equipment calibration traceable to standards of the National Institute of Standards and Technology Certification for all test equipment used in calibration. The calibration results shall be logged and available to the Buyer for inspection.

2.1.4 Equipment failing the standards test shall not be used until repaired and retested. All calibrating and testing equipment shall have valid calibration label affixed to the equipment during usage. The label shall be affixed in a prominent location. When the items requiring calibration are of such a size or configuration that affixing a label is not practical, the item shall be identified with a unique number that is traceable to the calibration sheet or record. The Buyer can, at his discretion, require the calibrating and testing equipment to be checked to the standards. Standard calibrating equipment must not be used as calibration and testing devices in the field.

2.1.5 The Seller shall be required, every six months, to verify the standards for the project to calibration standards which have current certification from the National Institute of Standards and Technology.

2.1.6 Seller shall be responsible for ensuring that the accuracy of the calibration equipment is equal to, or better than the accuracy of the equipment to be calibrated/tested.

2.1.7 Seller shall maintain a calibration log showing date, location, name of lab, if applicable, certification number and name of certifier. Log must be kept current and available to the Buyer for inspection.

2.2 **FABRICATION AND MANUFACTURE**

(Not Used)

PART 3 EXECUTION

3.1 **PREPARATION**

3.1.1 Seller shall submit all test procedures to Buyer for approval prior to testing.

3.1.2 All test voltages listed in this specification shall be checked against manufacturer's instructions and adjusted as applicable.

3.2 **INSTALLATION, APPLICATION AND ERECTION**

Refer to Specification Section 16100, Electrical Installation.

3.3 **FIELD QUALITY CONTROL**

3.3.1 General

3.3.1.1 Construction Acceptance Tests, verifications and inspections shall be performed in the Canister Storage Building, to demonstrate that the completed electrical installation and/or construction package meets the requirements of the Contract Drawings, specifications, the National Electrical Code and the Lightning Protection Code. The following specific sections of this specification are contained, as a minimum, in the procedures for Construction Acceptance Tests.

A. Section 3.3.3.2

B. Section 3.3.8.4

C. Section 3.3.11.8

D. Section 3.3.13.2-A

3.3.1.2 All wiring and connections shall be tested for continuity before fixtures, devices and equipment are connected.

3.3.2 Inspection

The Seller shall visually inspect the installation to verify conformance to this specification and the Contract Drawings. This inspection shall take into consideration, for example: proper equipment and conductor identification, verification of completeness, accurate placement, proper attachment to supports and tightness of connection.

3.3.3 Cable Tests

3.3.3.1 Continuity Test

A. Test for continuity, correctness of wiring and verify correct identification on all conductors installed.

B. Test shall be made with an ohmmeter.

C. Ground continuity test shall be performed between the equipment ground bus and the equipment enclosure. The maximum acceptable resistance shall be 0.01 ohm.

3.3.3.2 Insulation Resistance Test

A. All conductors shall be given an insulation resistance test using a megohmmeter.

B. Test shall be made with the lugs in place and conductors disconnected at the equipment. Test shall be made between one conductor and ground with the other conductors grounded. Each conductor shall be tested in the same manner. The voltage shall be applied and readings taken every minute until three equal and consecutive readings are obtained.

C. Test voltages and minimum acceptable insulation resistance shall be as follows:

Insulation Voltage	Test Voltage	Min. Insulation Resistance
300 volt ac	500 V dc	10 megohms
600 volt ac	1000 V dc	10 megohms

3.3.4 Grounding

3.3.4.1 Equipment Ground Buses

3.3.4.1.1 Equipment ground buses in electrical equipment, such as motor control centers, distribution panels, etc. shall be tested to assure low resistance bolted connection between bus and equipment enclosure.

3.3.4.1.2 A "Kelvin Bridge" shall be connected between the equipment ground bus and the equipment enclosure. Resistance readings shall be recorded. The maximum acceptable resistance shall be 0.01 ohm.

3.3.4.2 Equipment Ground Conductors

3.3.4.2.1 A "Kelvin Bridge" shall be connected between the equipment ground bus, to which the equipment ground conductor is connected, and the nearest building ground bus.

3.3.4.2.2 The readings taken will indicate the resistance between the equipment ground bus and the building ground. The maximum permissible resistance shall be 0.1 ohm.

3.3.5 Panelboards

3.3.5.1 Mechanical

A physical check of the panelboard interior shall be made to verify clearances between live electrical parts, isolation of phase, neutral and ground buses from the cabinet and tightness of all mechanical connections.

3.3.5.2 Trip Ratings

3.3.5.2.1 Check main and branch breaker trip element ratings for compliance with the panel schedule. Check all breakers for correct mechanical and electrical operation.

3.3.5.3 Wiring

Check that all wiring terminations and sizes of conductors are in accordance with the Contract Drawings and that all ground conductors terminate on the panelboard ground bus. Check that all wire connections are properly made and tightened. Check that all conductors have correct color code and circuit identification.

3.3.5.4 Phasing

Check phasing of incoming 3-phase feeder and branch circuit terminations. Correct phase identification shall be A-B-C clockwise, left to right, top to bottom and front to back, as viewed from the front of the equipment.

3.3.5.5 Circuit

Check out and test the operation of panelboards with associated loads. Tests shall include operation of remote circuit switches.

3.3.6 Lighting Fixtures

3.3.6.1 Check that only specified conductors are run inside lighting fixtures.

3.3.6.2 Lighting fixtures shall be given an operational test. Fixtures must operate from designated circuit breakers and/or switches. All lenses and louvers must be clean, and all local switches must function properly.

3.3.6.3 Check lighting with battery packs and exit signs for correct operation in normal and emergency modes.

3.3.7 Receptacles

3.3.7.1 120 Volt Receptacles

3.3.7.1.1 A check of ten percent of receptacles shall be made to ensure that neutral and ground wires are connected in accordance with the Contract Drawings.

3.3.7.1.2 Ten percent of 120 volt receptacles shall be given an equipment ground impedance test. The maximum allowable impedance shall be 1.0 ohms.

CAUTION: This test shall be performed at each receptacle with no loads plugged into other receptacles sharing the equipment ground conductor.

3.3.7.2 Power Receptacles

3.3.7.2.1 Three-phase, 4-wire power receptacles shall be connected so that phase sequence of the circuit is counterclockwise as viewed looking into the receptacle.

3.3.7.2.2 Phase sequence shall be checked by using a phase indicating meter.

3.3.8 Dry-Type Transformers

3.3.8.1 In setting up the testing equipment, special safety precautions should be taken regarding grounding of this equipment and the transformer to be tested. The test equipment and the transformer shall be grounded to the same ground.

3.3.8.2 Test reports shall include the following:

A. Complete identification of the transformer.

B. Megger readings.

C. Insulation resistance measurement.

3.3.8.3 Mechanical

Transformers shall be checked for tightness of external structural members and mechanical joints in order to minimize audible sound levels. All ground connections shall be verified.

3.3.8.4 Insulation Resistance

3.3.8.4.1 Transformers shall be given an "Insulation Resistance Test" using a megohmmeter.

3.3.8.4.2 The voltage shall be applied between: Each winding and ground, and each winding to winding. Test voltages shall be as shown below. The minimum resistance readings shall be per transformer manufacturer's recommendation. In the absence of manufacturer's recommendation, the minimum acceptable values shown below shall be obtained.

Equipment	Test Voltage	Minimum Reading
480 volt winding	1000	2 megohms
120/208 volt winding	1000	2 megohms

3.3.8.4.3 The voltage shall be applied for a minimum of one minute until the resistance reading reaches a constant value.

3.3.9 Rotating Equipment

Before terminating wires, determine motor rotation with phase rotation indicator, establish the plant phasing sequence and connect motor accordingly. Bump motor to verify correct rotation.

3.3.10 Uninterruptible Power Supply System, UPS

3.3.10.1 Before any tests are made on the UPS, ground buses shall pass all tests specified under "Grounding" of this section.

3.3.10.2 Inspection and testing the UPS system shall be in accordance with the manufacturer's instructions.

3.3.10.3 Verify that installation and wiring between battery cabinet, UPS module and UPS panel are in accordance with manufacturer's instructions and Contract Drawings.

3.3.11 Motor Control Centers, GFE

3.3.11.1 Motor Control Centers shall be inspected and tested in accordance with the manufacturer's instructions. All equipment shall be inspected for damage to insulators and other components, after shipping and setting. All equipment electrical and mechanical connections including relay terminals shall be checked in accordance with manufacturer's instructions.

3.3.11.2 All removable elements shall be checked for proper alignment and ease of insertion and withdrawal in accordance with manufacturer's instructions. All mechanical interlocks shall be checked for proper operation.

3.3.11.3 All moving elements shall be inspected for removal of all shipping blocks and for proper mobility. Inspect to insure all arc chutes, phase barriers, protective covers and shields are installed properly before energizing equipment. All installation debris shall be removed prior to energization.

3.3.11.4 Before energizing the equipment, the insulation resistance of each bus shall be measured from phase-to-phase and from phase-to-ground with circuit breaker open. Repeat measurements with circuit breaker closed but with control circuits and switching devices open.

3.3.11.5 Each starter shall be closed and open from its control switch and remote control station to test proper operation.

3.3.11.6 All overload units shall be verified against actual motor nameplate full load current and MCC manufacturer's data to assure proper sizing. Overload unit shall be replaced as required based on the motor nameplate full load current.

3.3.11.7 Before any tests are made on motor control centers, ground buses shall have passed all tests specified under "grounding" of this specification. The following checks shall be made.

A. A visual check of all starter locations, nameplates, etc.

B. A check of all wiring against manufacturer's and Contract Drawings.

C. Check ratings of and make final settings on all overcurrent protective devices.

D. An operational check of all control circuits.

E. A check for tightness of all connections.

F. Check phasing of buses. All buses shall be phased and identified so that the phase identification is A-B-C clockwise, left to right, top to bottom and front to back, as viewed from the front of the MCC.

3.3.11.8 Insulation Resistance Test

A. The main bus and all vertical buses in all low voltage motor control centers shall be given an "Insulation Resistance Test" using a 1000 volt "Megger." Each phase shall be meggered to ground, with the other two phases grounded, and phase to phase.

B. The voltage shall be applied for one minute and until the reading reaches a nearly constant value.

C. Minimum acceptable insulation resistance readings shall be 2 megohms.

3.3.11.9 Operational Tests

A. Mechanical and electrical operational tests shall be performed on all breakers and their starters and associated alarm and indicating devices. All interlock devices must be tested operationally.

B. Motor circuit protectors, MCP's and instantaneous elements of feeder circuit breakers shall be tested at or above minimum pickup value of vendor's calibration curve.

C. Devices must function properly and within its time-current curve.

D. Feeder circuit breaker overload element shall be tested at 300 percent of breaker ratings.

3.3.12 Electrical Heat Tracing

3.3.12.1 Insulation resistance testing shall be performed before and after the installation of the thermal insulation using a 500 Vdc "Megger." Minimum acceptable insulation resistance is 10 megohms.

3.3.13 Motor Run-In Tests

3.3.13.1 Motors, 200 horsepower and smaller, shall run uncoupled for a minimum period of 30 minutes before the driven equipment are placed in service. While running, motors shall be observed for any unusual conditions such as vibration, noise and excessive winding or bearing temperature rise.

3.3.13.2 Before starting motors, the following shall be completed:

A. Check motor insulation resistance. Recommended minimum values for motor insulation resistance are:

Equipment Voltage Class	Test Voltage	Resistance (Megohms)*
460 V	500 V dc	1.5

*Given at a standard 20°C operating temperature.

B. Check all bearings to see if they are properly filled with oil or grease.

C. Check coupling alignment and shaft end play.

3.3.13.3 During or immediately after starting motors, the following shall be checked:

A. Shaft rotation, to ensure proper rotation on all equipment.

B. Bearing lubrication and temperature.

C. Excessive vibration.

3.3.14 Operation Tests

Upon completion of work, the Seller shall demonstrate the operation of all electrical components and/or systems.

3.3.15 Lightning Protection

3.3.15.1 The lightning protection systems shall be inspected and tested following completion of Seller installation.

3.3.15.2 Inspection

3.3.15.2.1 Visual inspections are made to ascertain the following:

A. The system is in good repair.

B. There are no loose connections which might result in high resistance joints.

C. No part of the system has been weakened by corrosion or vibration.

D. All down conductors and ground terminals are intact, non-severed.

E. All conductors and system components are securely fastened to their mounting surfaces and are protected against accidental mechanical displacement as required.

F. There have not been additions or alterations to the protected structure which would require additional protection.

G. The distance from building steel/wall or other safety grounded metal to each ground rod is within two to six feet.

3.3.15.3 Testing

3.3.15.3.1 Perform tests to verify continuity of those parts of the system that were concealed, built-in, during the initial installation and that are not now available for visual inspection.

3.4 **ADJUSTMENTS**

(Not Used)

3.5 **CLEANING**

Clean and remove all debris and equipment from the job site after completion of testing.

3.6 **PROTECTION**

(Not Used)

3.7 **DEMONSTRATION**

(Not Used)

3.8 **SCHEDULES**

(Not Used)

END OF SECTION

U.S. DEPARTMENT OF ENERGY
Hanford Waste Vitrification Plant
Richland, Washington
DOE Contract DE-AC06-86RL10838

FLUOR DANIEL, INC.
Advanced Technology Division
Fluor Contract 8457

SECTION 17601
TEMPERATURE TRANSMITTERS - ELECTRONIC
B-595-C-E350-17601

APPROVED FOR CONSTRUCTION

REVISION 1 PER CR-0702
ISSUE DATE 8/4/93

WAPA YES ___ NO X
QUALITY LEVEL I ___ II X
SAFETY CLASS 1__ 2__ 3X 4__

ORIGINATOR:

A. L. Sanburg 7-29-93
A. L. Sanburg, Control Sys. Eng. Date

CHECKER:

B R Carlisle 7/29/93
B. R. Carlisle, Control Sys. Eng. Date

APPROVED BY:

J B Bunning
J. B. Bunning Lead Discipline Engineer

07/29/93
Date

SECTION 17601
TEMPERATURE TRANSMITTERS - ELECTRONIC
B-595-C-E350-17601

TABLE OF CONTENTS

PART		PAGE
PART 1	**GENERAL**	1
1.1	SUMMARY	1
1.2	REFERENCES	1
1.3	RELATED REQUIREMENTS	1
1.4	DEFINITIONS	1
1.5	SYSTEM DESCRIPTION	1
1.6	SUBMITTALS	2
1.7	CLASSIFICATION OF SYSTEMS AND COMPONENTS	2
1.8	PROJECT OR SITE ENVIRONMENTAL CONDITIONS	2
PART 2	**PRODUCTS**	3
2.1	MATERIALS AND EQUIPMENT	3
2.2	FABRICATION AND MANUFACTURE	4
2.3	FACTORY ACCEPTANCE TESTS (FAT)	4
2.4	PACKAGING AND SHIPPING	4
PART 3	**EXECUTION**	4
3.1	PREPARATION	4
3.2	INSTALLATION, APPLICATION AND ERECTION	4
3.3	FIELD QUALITY CONTROL	4
3.4	ADJUSTMENTS	5
3.5	CLEANING	5
3.6	PROTECTION	5
3.7	DEMONSTRATION	5
3.8	SCHEDULES	5

ATTACHMENTS

ATTACHMENT	TITLE
A	E350-DS-1 THROUGH E350-DS-6 DATA SHEETS, TEMPERATURE INSTRUMENTS

SECTION 17601
TEMPERATURE TRANSMITTERS - ELECTRONIC

PART 1 GENERAL

1.1 SUMMARY

This section defines the technical requirements for the supply, installation, inspection, and testing of electronic temperature transmitters for the Hanford Waste Vitrification Plant (HWVP).

1.2 REFERENCES

The publications listed below form a part of this specification to the extent referenced. The publications are referred to in the text by the basic designations only.

AMERICAN SOCIETY OF MECHANICAL ENGINEERS (ASME)

ANSI/ASME B1.20.1	1983 Pipe Threads, General Purpose (Inch)

NATIONAL ELECTRICAL MANUFACTURER'S ASSOCIATION (NEMA)

ANSI/NEMA 250	1985 Enclosures for Electrical Equipment (1000 Volts Maximum) Revision No. 1 - May 1986 Revision No. 2 - May 1988

1.3 RELATED REQUIREMENTS

Specification Section 01730	Operation and Maintenance Data
Specification Section 16100	Electrical Installation
Specification Section 17704	General Instrumentation Installation and Testing
Specification Section 17705	Instrument Calibration and Checkout

1.4 DEFINITIONS

CAT - Construction Acceptance Test

FAT - Factory Acceptance Test

1.5 SYSTEM DESCRIPTION

(Not Used)

1.6 **SUBMITTALS**

Submit the following in accordance with the Vendor Drawing and Data Requirements section of the Order/Subcontract.

(Deleted)

1.6.1 Catalog cuts describing each instrument and accessory.

1.6.2 Manufacturer's installation drawings and instructions.

1.6.3 Manufacturer's operation and maintenance manuals in accordance with Specification Section 01730.

1.6.4 Manufacturer's calibration instructions including calibration curves/tables.

1.6.5 FAT procedure.

1.6.6 Report confirming the FAT procedure was executed and the results.

1.6.7 CAT procedure, including the requirements in Paragraph 3.3.1.

1.6.8 Report confirming the CAT procedure was executed and the results.

1.7 **CLASSIFICATION OF SYSTEMS AND COMPONENTS**

(Not used)

1.8 **PROJECT OR SITE ENVIRONMENTAL CONDITIONS**

Climatic and Geographic Site Conditions

A.	Site Elevation	714 feet above sea level
B.	Barometric Pressure	14.3 psia
C.	Outside Design Temperature	
	1) Maximum Design Temperature	110°F
	2) Minimum Design Temperature	-20°F
	3) Wet Bulb Design Temperature	68°F

PART 2 PRODUCTS

2.1 MATERIALS AND EQUIPMENT

2.1.1 Provide electronic temperature transmitters in accordance with the data sheets. Include the features listed below unless otherwise specified in the data sheets:

A. Identical manufacturer and model number for components with the same specifications

B. ANSI/NEMA 250, Type 1 housing

C. Two-wire type

D. Ability to drive 550 ohm load under 24 Vdc loop power

E. Digital ("Smart") transmitters with 4-20 mAdc output signal

F. Selectable upscale or downscale indication of input or transmitter failure

G. 1/2 inch NPT conduit connections

H. Terminal strips for external connections

I. Accuracy of +/-0.5 percent of span

J. Maximum zero and span drift of 2.5% per 30°F

K. Threaded connections per ANSI/ASME B1.20.1

L. Integral indicator

M. Radio frequency interference from 20 to 1000 MHz with a field strength of 30 volts per meter shall not affect the transmitter, installed with a grounded conduit, by more than +/- 0.1 percent of span.

2.1.2 Labeling

Provide a stainless steel tag, 18 ga. minimum, with the instrument tag number and service description stamped or engraved, affixed to each instrument with stainless steel wire (preferred), stainless steel screws, or rivets. The service description is in the Buyer's Instrument Engineering Index, Attachment B to Specification Section 17704.

2.2 **FABRICATION AND MANUFACTURE**

(Not Used)

2.3 **FACTORY ACCEPTANCE TESTS (FAT)**

2.3.1 Prepare a Factory Acceptance Test (FAT) procedure and submit it to the Buyer for approval. Include:

A. Inspections/tests to demonstrate that the design, fabrication, and assembly of the materials and equipment meet the requirements of the design drawings and specifications.

B. (Deleted)

2.3.2 Inspect and test the instruments in accordance with the Buyer approved FAT procedure.

2.3.3 Submit a report confirming the FAT procedure has been completed and the results.

2.4 **PACKAGING AND SHIPPING**

Protect all shipped materials from moisture, vibration, shock, and heat damage while in transit or interim storage.

PART 3 EXECUTION

3.1 **PREPARATION**

Inspect and calibrate instruments in accordance with Paragraph 3.1 of Specification Section 17705.

3.2 **INSTALLATION, APPLICATION AND ERECTION**

Install instruments in accordance with Specification Sections 17704, 16100, and the manufacturer's installation instructions.

3.3 **FIELD QUALITY CONTROL**

3.3.1 Prepare a CAT procedure and submit it for approval. Include the requirements in Specification Section 17705.

3.3.2 Inspect and test the instrument installations according to the Buyer approved CAT procedure.

3.3.3 Submit a report confirming the CAT procedure has been completed and the results.

3.4 **ADJUSTMENTS**

(Not Used)

3.5 **CLEANING**

(Not Used)

3.6 **PROTECTION**

(Not Used)

3.7 **DEMONSTRATION**

(Not Used)

3.8 **SCHEDULES**

(Not Used)

END OF SECTION

ATTACHMENT A

FLUOR DANIEL INSTRUMENT SPECIFICATION TEMPERATURE INSTRUMENTS	NO	BY DATE	REVISION	SHEET NO.	REVISION
		ALS	MISC. REVISIONS.	E350-DS-1	1
	1	06/15/93		DATE 6/26/92	CONTRACT 845734
				MANUFACTURER ROSEMOUNT OR EQUAL	
				BY KCI / CHK'D BRC	APPRV'D JBB

ALL ITEMS SHALL COMPLY WITH GENERAL SPECIFICATION SHEETS: B-595-C-E350-17601

GENERAL

1. TAG NO. SEE DS-2 THROUGH DS-6
2. TYPE: RECORDER [ ] INDICATOR [X] CONTROLLER [ ] TRANSMITTER [X] BLIND [ ]
3. CASE: MFR. STD. [X] OTHER: NEMA 1; INTEGRAL INDICATOR
4. COLOR: CASE: MFR. STD. [X] OTHER ___ DIAL: MFR. STD. [X] OTHER ___
5. MOUNTING: FLUSH [ ] SURFACE [ ] YOKE (2") [X]
6. POWER SUPPLY: 24 VOLTS DC Hz
7. ELECTRICAL CLASSIFICATION: GENERAL PURPOSE

RECORDER / INDICATOR

8. NO. PTS: RECORDING ___ INDICATING ___
9. CHART TYPE: 12" CIRCULAR [ ] OTHER ___
10. CHART RANGE ___ NUMBER ___
11. CHART SPEED ___ DRIVE ___
12. INDICATOR SIZE & TYPE ___
13. INDIC. RANGE ___ NUMBER ___

CONTROLLER

14. TYPE: PNEUMATIC [ ] ELECTRIC [ ]
15. CONTROL MODES: PROP. ___ % RATE ___ AUTO RESET ___ MAN. RESET [ ] OTHER ___
16. OUTPUT: 3-15 PSI [ ] 4-20 mA [ ] OTHER ___
17. ON MEASUREMENT INCREASE: OUTPUT INCREASES [ ] OUTPUT DECREASES [ ]
18. AUTO-MAN. SWITCH: AUTO TRACKING [ ] MAN. BAL [ ]
19. SET POINT ADJUSTMENT: MANUAL: LOCAL [ ] REMOTE [ ] AUTO SET: 3-15 PSI [ ] 4-20 mA [ ] OTHER ___

TRANSMITTER

20. TYPE: PNEUMATIC [ ] ELECTRIC [X]
21. LINEAR OUTPUT: 3-15 PSI [ ] 4-20 mA [X] OTHER ___

FOR OUTLINE DIMENSIONS SEE:

[X] CATALOG
[ ] CERTIFIED PRINT
[ ] MFR. MODEL NUMBER ___

MEASUREMENT

22. FILLED SYSTEM TYPE [ ]
23. CLASS IA [ ] IB [ ] IIIA [ ] IIIB [ ] OTHER ___
24. BULB TYPE PLAIN [ ] UNION CONN. [ ] OTHER ___
25. EXTENSION BENDABLE [ ] OTHER ___
26. "U" DIMENSION, INCHES ___ BULB DIA. ___
27. BULB MATERIAL 316SS [ ] OTHER ___
28. BULB CONN. THREADED [ ] OTHER ___
29. BUSHING 1/2" NPT [ ] OTHER ___
30. CAPILLARY LENGTH ___
31. CAPILLARY TYPE ARMORED [ ] OTHER ___
32. CAPILLARY MATL. STNL. ST. [ ] OTHER ___
33. ARMOR MATL. STNL. ST. [ ] OTHER ___
34. PLASTIC OVER ARMOR [ ] ___
35. CONNECTION AT CASE BACK [ ] BOTTOM [ ]
36. OVERRANGE PROTECTION [ ]
37. THERMOCOUPLE TYPE [ ]
38. MATERIAL J(IC) [ ] K(CA) [ ] T(CC) [ ] OTHER ___
39. REFERENCE JUNCTION COMPENSATION [ ]
40. RADIATION TYPE ___
41. RESISTANCE BULB TYPE [X] ⚠
42. MATERIAL COPPER [ ] PLATINUM [X] OTHER ___
43. ELEMENT RESISTANCE 100 OHMS @ 32 DEG F
44. OTHER ___
45. TEMP. RANGE ___ TO ___ OTHER RANGE LISTED ON DS-2 THROUGH DS-6
46. ON ELEMENT FAILURE (BURN-OUT) OUTPUT FAILS: UPSCALE [X] DOWNSCALE [ ]

ACCESSORIES

47. FILTER & REGULATOR: ___
48. AIR SUPPLY GAUGE: ___
49. LOCAL INDICATOR: ___
50. CHARTS & INKSET [ ] 100 CHARTS [ ] OTHER ___
51. INTEGRATOR: ___
52. ELECTRIC SWITCH: ___

HERM. SEALED [ ] G.P. [ ] EX. P. [ ]

53. OTHER: ___

ATTACHMENT A

	NO	BY / DATE	REVISION	SHEET NO.	REVISION
FLUOR DANIEL		ALS	MISC. REVISIONS.	E350-DS-2	1
INSTRUMENT SPECIFICATION	1	06/15/93		DATE 6/26/92	CONTRACT 845734
				MANUFACTURER ROSEMOUNT OR EQUAL	
TEMPERATURE INSTRUMENTS				BY KCI / CHK'D BRC	APPRV'D JBB

ALL ITEMS SHALL COMPLY WITH GENERAL SPECIFICATION SHEETS: B-595-C-E350-17601

GEN'L	1	TAG NUMBER	TIT-CSS-001	TIT-CSS-014	TIT-CSS-022
	2	P&ID NUMBER / FRAME	H-2-129731-1	H-2-129731-1	H-2-129731-3
	3	SERVICE	AH-051-111 INLET DUCT	AH-051-111 RETURN PLENUM △1	FOS #5
	4				
	5				
	6				
	7				
MISCELLANEOUS	8				
	9	QUANTITY	1	1	1
	10				
	11	MINIMUM TEMPERATURE	-30 DEG F	40 DEG F	40 DEG F
	12	NORMAL TEMPERATURE	70 DEG F	75 DEG F	72 DEG F
	13	MAXIMUM TEMPERATURE	130 DEG F	90 DEG F	90 DEG F
	14				
	15	ELEMENT CONNECTIONS	3-WIRE RTD (SEE NOTE 1)	3-WIRE RTD (SEE NOTE 1)	3-WIRE RTD (SEE NOTE 2)
	16	CONDUIT CONNECTIONS	1/2 INCH NPT	1/2 INCH NPT	1/2 INCH NPT
	17				
	18				
	19				
	20				
	21				
	22				
	23				
	24				
	25				
	26				
MFR	27	MODEL NO.	3044C	3044C	3044C
	28				
	29				
	30				
	31				

NOTES

1. Input to TIT's are 3 wire RTD elements with the same loop number. See data sheet attachments in Specification Section B-595-C-E350-17612.

2. Provide 100 Ohm Platinum RTD sensor, Series 68, 2.0 inch in length, without a thermowell. △1 Tag RTD sensor with TE-CSS-(Tag number of TIT). Connect and mount RTD sensor to appropriate transmitter. Provide general purpose configuration, single element.

ATTACHMENT A

FLUOR DANIEL	NO	BY DATE	REVISION	SHEET NO.	REVISION
				E350-DS-3	1
INSTRUMENT SPECIFICATION				DATE 6/26/92	CONTRACT 845734
				MANUFACTURER ROSEMOUNT OR EQUAL	
TEMPERATURE INSTRUMENTS				BY KCI / CHK'D BRC	APPRV'D JBB

ALL ITEMS SHALL COMPLY WITH GENERAL SPECIFICATION SHEETS: B-595-C-E350-17601

GEN'L	1	TAG NUMBER	TIT-CSS-039-1	TIT-CSS-039-2	
	2	P&ID NUMBER / FRAME	H-2-129734-1	H-2-129734-2	
	3	SERVICE	AH-051-112 OUTLET DUCT	AH-051-113 OUTLET DUCT	
	4				
	5				
	6				
	7				
MISCELLANEOUS	8				
	9	QUANTITY	1	1	
	10				
	11	MINIMUM TEMPERATURE	40 DEG F	40 DEG F	
	12	NORMAL TEMPERATURE	75 DEG F	75 DEG F	
	13	MAXIMUM TEMPERATURE	90 DEG F	90 DEG F	
	14				
	15	ELEMENT CONNECTIONS	3-WIRE RTD (SEE NOTE 1)	3-WIRE RTD (SEE NOTE 1)	
	16	CONDUIT CONNECTIONS	1/2 INCH NPT	1/2 INCH NPT	
	17				
	18				
	19				
	20				
	21				
	22				
	23				
	24				
	25				
	26				
MFR	27	MODEL NO.	3044C	3044C	
	28				
	29				
	30				
	31				

NOTES

1. Input to TIT's are 3 wire RTD elements with the same loop number.
   See data sheet attachments in Specification Section B-595-C-E350-17612.

ATTACHMENT A

FLUOR DANIEL INSTRUMENT SPECIFICATION TEMPERATURE INSTRUMENTS	NO	BY DATE	REVISION	SHEET NO. E350-DS-4	REVISION 1
		ALS	MISC. REVISIONS.		
	1	06/15/93		DATE 6/26/92	CONTRACT 845734
				MANUFACTURER ROSEMOUNT OR EQUAL	
				BY KCI	CHK'D BRC / APPRV'D JBB

ALL ITEMS SHALL COMPLY WITH GENERAL SPECIFICATION SHEETS: B-595-C-E350-17601

GEN'L	1	TAG NUMBER	TIT-CSS-051	TIT-CSS-041	TIT-CSS-042
	2	P&ID NUMBER / FRAME	H-2-129734-3	H-2-129734-3	H-2-129734-3
	3	SERVICE	MECH. EQUIP. ROOM	CANISTER STORAGE OPERATING	CANISTER STORAGE OPERATING
	4			AREA #1	AREA #2
	5				
	6				
	7				
MISCELLANEOUS	8				
	9	QUANTITY	1	1	1
	10				
	11	MINIMUM TEMPERATURE	40 DEG F	30 DEG F	30 DEG F
	12	NORMAL TEMPERATURE	75 DEG F	85 DEG F	85 DEG F
	13	MAXIMUM TEMPERATURE	90 DEG F	130 DEG F	130 DEG F
	14				
	15	ELEMENT CONNECTIONS	3-WIRE RTD (SEE NOTE 1)	3-WIRE RTD (SEE NOTE 1)	3-WIRE RTD (SEE NOTE 1)
	16	CONDUIT CONNECTIONS	1/2 INCH NPT	1/2 INCH NPT	1/2 INCH NPT
	17				
	18				
	19				
	20				
	21				
	22				
	23				
	24				
	25				
	26				
MFR	27	MODEL NO.	3044C	3044C	3044C
	28				
	29				
	30				
	31				

NOTES

1. Provide 100 Ohm Platinum RTD sensor, Series 68, 2.0 inch in length, without a thermowell. △1 Tag RTD sensor with TE-CSS-(Tag number of TIT). Connect and mount RTD sensor to appropriate transmitter. Provide general purpose configuration, single element.

ATTACHMENT A

FLUOR DANIEL INSTRUMENT SPECIFICATION TEMPERATURE INSTRUMENTS	NO	BY DATE	REVISION	SHEET NO.	REVISION
		ALS	MISC. REVISIONS.	E350-DS-5	1
	1	06/15/93		DATE 6/26/92	CONTRACT 845734
				MANUFACTURER ROSEMOUNT OR EQUAL	
				BY KCI	CHK'D BRC / APPRV'D JBB

ALL ITEMS SHALL COMPLY WITH GENERAL SPECIFICATION SHEETS: B-595-C-E350-17601

GENL	1	TAG NUMBER	TIT-CSS-043	TIT-CSS-044	
	2	P&ID NUMBER FRAME	H-2-129734-3	H-2-129734-3	
	3	SERVICE	CANISTER STORAGE OPERATING	CANISTER STORAGE OPERATING	
	4		AREA #3	AREA #4	
	5				
	6				
	7				
MISCELLANEOUS	8	REV			
	9	QUANTITY	1	1	
	10				
	11	MINIMUM TEMPERATURE	30 DEG F	30 DEG F	
	12	NORMAL TEMPERATURE	85 DEG F	85 DEG F	
	13	MAXIMUM TEMPERATURE	130 DEG F	130 DEG F	
	14				
	15	ELEMENT CONNECTIONS	3-WIRE RTD (SEE NOTE 1)	3-WIRE RTD (SEE NOTE 1)	
	16	CONDUIT CONNECTIONS	1/2 INCH NPT	1/2 INCH NPT	
	17				
	18				
	19				
	20				
	21				
	22				
	23				
	24				
	25				
	26				
MFR	27	MODEL NO.	3044C	3044C	
	28				
	29				
	30				
	31				

NOTES

1. Provide 100 Ohm Platinum RTD sensor, Series 68, 2.0 inch in length, without a thermowell. ⚠ Tag RTD sensor with TE-CSS-(Tag number of TIT). Connect and mount RTD sensor to appropriate transmitter. Provide general purpose configuration, single element.

ATTACHMENT A

FLUOR DANIEL INSTRUMENT SPECIFICATION TEMPERATURE INSTRUMENTS	NO	BY DATE	REVISION	SHEET NO. E350-DS-6	REVISION 1
		ALS	RE-NO. PER CR-0702.		
	1	06/15/93		DATE 6/26/92	CONTRACT 845734
				MANUFACTURER ROSEMOUNT OR EQUAL	
				BY KCI	CHK'D BRC / APPRV'D JBB

ALL ITEMS SHALL COMPLY WITH GENERAL SPECIFICATION SHEETS: B-595-C-E350-17601

GEN'L	1	TAG NUMBER	TIT-VAX-333-1	TIT-VAX-333-2	
	2	P&ID NUMBER / FRAME	H-2-123370-5	H-2-123370-5	
	3	SERVICE	HPS VACUUM BLOWER A	HPS VACUUM BLOWER B	
	4		OUTLET	OUTLET	
	5				
	6				
	7				
MISCELLANEOUS	8	REV			
	9	QUANTITY	1	1	
	10				
	11	MINIMUM TEMPERATURE	85 DEG F	85 DEG F	
	12	NORMAL TEMPERATURE	307 DEG F	307 DEG F	
	13	MAXIMUM TEMPERATURE	350 DEG F	350 DEG F	
	14				
	15	ELEMENT CONNECTIONS	3-WIRE RTD (SEE NOTE 1)	3-WIRE RTD (SEE NOTE 1)	
	16	CONDUIT CONNECTIONS	1/2 INCH NPT	1/2 INCH NPT	
	17				
	18				
	19				
	20				
	21				
	22				
	23				
	24				
	25				
	26				
MFR	27	MODEL NO.	3044C	3044C	
	28				
	29				
	30				
	31				

NOTES

1. Input to TIT's are 3 wire RTD elements with the same loop number.
   See data sheet attachments in Specification Section B-595-C-E350-17612.

U.S. DEPARTMENT OF ENERGY
Hanford Waste Vitrification Plant
Richland, Washington
DOE Contract DE-AC06-86RL10838

FLUOR DANIEL, INC.
Advanced Technology Division
Fluor Contract 8457

SECTION 17605
ROOM THERMOSTATS - ELECTRONIC
B-595-C-E350-17605

APPROVED FOR CONSTRUCTION

REVISION 1
ISSUE DATE 8/4/93

WAPA YES ___ NO X
QUALITY LEVEL I ___ II X
SAFETY CLASS 1__ 2__ 3 X 4__

ORIGINATOR:

A. L. Sanburg 7-29-93
A. L. Sanburg, Control Sys. Eng. Date

CHECKER:

B R Carlisle 7/29/93
B. R. Carlisle, Con. Sys. Engineer Date

APPROVED BY:

J B Bunning
J. B. Bunning Lead Discipline Engineer

07/29/93
Date

7/27/93 9:14am
106\VOL5...\SPECS\E350\17605-1.

SECTION 17605
ROOM THERMOSTATS - ELECTRONIC
B-595-C-E350-17605

TABLE OF CONTENTS

PART		PAGE
PART 1	**GENERAL**	1
1.1	SUMMARY	1
1.2	REFERENCES	1
1.3	RELATED REQUIREMENTS	1
1.4	DEFINITIONS	1
1.5	SYSTEM DESCRIPTION	1
1.6	SUBMITTALS	1
1.7	CLASSIFICATION OF SYSTEMS AND COMPONENTS	2
1.8	PROJECT OR SITE ENVIRONMENTAL CONDITIONS	2
PART 2	**PRODUCTS**	2
2.1	MATERIALS AND EQUIPMENT	2
2.2	FABRICATION AND MANUFACTURE	3
2.3	FACTORY ACCEPTANCE TEST (FAT)	3
2.4	PACKAGING AND SHIPPING	3
PART 3	**EXECUTION**	4
3.1	PREPARATION	4
3.2	INSTALLATION, APPLICATION AND ERECTION	4
3.3	FIELD QUALITY CONTROL	4
3.4	ADJUSTMENTS	4
3.5	CLEANING	4
3.6	PROTECTION	4
3.7	DEMONSTRATION	4
3.8	SCHEDULES	4

ATTACHMENTS

ATTACHMENT	TITLE
A	E350-DS-1 AND E350-DS-2 DATA SHEETS, ROOM THERMOSTATS - ELECTRONIC

SECTION 17605
ROOM THERMOSTATS - ELECTRONIC

PART 1 GENERAL

1.1 SUMMARY

This section defines the technical requirements for the supply, installation, inspection, and testing of electronic room thermostats for the Hanford Waste Vitrification Plant (HWVP).

1.2 REFERENCES

The publications listed below form a part of this specification to the extent referenced. The publications are referred to in the text by the basic designations only.

NATIONAL ELECTRICAL MANUFACTURER'S ASSOCIATION (NEMA)

ANSI/NEMA 250	1985 Enclosures for Electrical Equipment (1000 Volts Maximum) Revision No. 1 - May 1986 Revision No. 2 - May 1988

1.3 RELATED REQUIREMENTS

Specification Section 01730	Operation and Maintenance Data
Specification Section 16100	Electrical Installation
Specification Section 17704	General Instrumentation Installation and Testing
Specification Section 17705	Instrument Calibration and Checkout

1.4 DEFINITIONS

CAT - Construction Acceptance Test

FAT - Factory Acceptance Test

1.5 SYSTEM DESCRIPTION

(Not Used)

1.6 SUBMITTALS

Submit the following in accordance with the Vendor Drawing and Data Requirements section of the Order/Subcontract:

(Deleted)

1.6.1 Catalog cuts describing each instrument and accessory.

1.6.2 Manufacturer's installation drawings and instructions.

1.6.3 Manufacturer's operation, and maintenance manuals in accordance with Specification Section 01730.

1.6.4 Manufacturer's calibration instructions including calibration curves/tables.

1.6.5 FAT procedure.

1.6.6 Report confirming the FAT procedure was executed and the results.

1.6.7 CAT procedure including the requirements in Paragraph 3.3.1.

1.6.8 Report confirming the CAT procedure was executed and the results.

1.7 **CLASSIFICATION OF SYSTEMS AND COMPONENTS**

(Not Used)

1.8 **PROJECT OR SITE ENVIRONMENTAL CONDITIONS**

Climatic and Geographic Site Conditions

A.	Site Elevation	714 feet above sea level
B.	Barometric Pressure	14.3 psia
C.	Outside Design Temperature	
1)	Maximum Design Temperature	110°F
2)	Minimum Design Temperature	-20°F
3)	Wet Bulb Design Temperature	68°F

PART 2 PRODUCTS

2.1 **MATERIALS AND EQUIPMENT**

2.1.1 Provide electronic room thermostats in accordance with the data sheets. Include the following features unless otherwise specified in the data sheets:

A. Identical manufacturer and catalog number for components with the same specifications.

B. Proportional control service

C. BALCO RTD type sensing element

D. RTD resistance 1000 Ohms ± 0.1% at 70°F

E. Set point dial range adjustment 55°F to 85°F

F. Operating range 40°F to 100°F

G. Temperature indication

H. ANSI/NEMA 250, Type 1 electrical enclosure

I. Wall-mounting

2.1.2 Labeling

Provide a stainless steel tag, 18 ga. minimum, with the instrument tag number and service description stamped or engraved, affixed to each instrument with stainless steel wire (preferred), stainless steel screws, or rivets. The service description is in the Buyer's Instrument Engineering Index, Attachment B to Specification Section 17704.

2.2 FABRICATION AND MANUFACTURE

(Not used)

2.3 FACTORY ACCEPTANCE TEST (FAT)

2.3.1 Prepare a Factory Acceptance Test (FAT) procedure and submit it to the Buyer for approval. Include:

A. Inspections/tests to demonstrate that the design, fabrication, and assembly of the materials and equipment meet the requirements of the design drawings and specifications.

B. (Deleted)

2.3.2 Inspect and test the instruments in accordance with the Buyer approved FAT procedure.

2.3.3 Submit a report confirming the FAT procedure has been completed and the results.

2.4 PACKAGING AND SHIPPING

Protect all shipped materials from moisture, vibration, shock, and heat damage while in transit or interim storage.

PART 3 EXECUTION

3.1 PREPARATION

Inspect and calibrate instruments in accordance with Paragraph 3.1 of Specification Section 17705.

3.2 INSTALLATION, APPLICATION AND ERECTION

Install instruments in accordance with Specification Sections 17704, 16100, and the manufacturers' installation instructions.

3.3 FIELD QUALITY CONTROL

3.3.1 Prepare a CAT procedure and submit it for approval. Include the requirements in Specification Section 17705.

3.3.2 Inspect and test the instrument installations according to the Buyer approved CAT procedure.

3.3.3 Submit a report confirming the CAT procedure has been completed and the results.

3.4 ADJUSTMENTS

(Not Used)

3.5 CLEANING

(Not Used)

3.6 PROTECTION

(Not Used)

3.7 DEMONSTRATION

(Not Used)

3.8 SCHEDULES

(Not Used)

END OF SECTION

ATTACHMENT A

NO	BY DATE	REVISION
1	ALS 06/15/93	MISC. REVISIONS.

FLUOR DANIEL

INSTRUMENT SPECIFICATIONS

ROOM THERMOSTATS – ELECTRONIC

SHEET NO.	REVISION
E350-DS-1	1
DATE 6/26/92	CONTRACT 845734
MANUFACTURER Barber Coleman or Equal	
BY FJM / CHK'D BRC	APPRV'D JBB

ALL ITEMS SHALL COMPLY WITH GENERAL SPECIFICATION SHEETS: B-595-C-E350-17605

GENERAL	1	TAG NUMBER	TIC/TE-CSS-011	TIC/TE-CSS-012
	2	P&ID / FRAME NUMBER	H-2-129731-2	H-2-129731-2
	3	SERVICE	HEALTH PROTECTION OFFICE, ROOM 104	ELEC. EQUIPMENT ROOM, ROOM 108
	4			
	5			
	6			
	7			
	8			
	9			
	10			
THERMOSTAT	11	TYPE	PROPORTIONAL ROOM THERMOSTAT	PROPORTIONAL ROOM THERMOSTAT
	12		WITH SETPOINT ADJUSTMENT	WITH SETPOINT ADJUSTMENT
	13			
	14	SENSING ELEMENT	BALCO RTD	BALCO RTD
	15	RTD RESISTANCE	1000 OHMS +/- 0.1% AT 70 DEG F	1000 OHMS +/- 0.1% AT 70 DEG F
	16	SET POINT DIAL RANGE	55 TO 85 DEG F	55 TO 85 DEG F
	17	INDICATOR	YES	YES
	18	CONNECTIONS	SCREW TERMINALS	SCREW TERMINALS
	19	ENCLOSURE	NEMA 1	NEMA 1
	20	MOUNTING	WALL MOUNT (NOTE 1) ⚠	WALL MOUNT (NOTE 1) ⚠
	21	COVER	PLASTIC (NOTE 2) ⚠	PLASTIC (NOTE 2) ⚠
	22			
SERVICE	23	MINIMUM TEMPERATURE	40 DEG F	40 DEG F
	24	NORMAL TEMPERATURE	75 DEG F	75 DEG F
	25	MAXIMUM TEMPERATURE	90 DEG F	90 DEG F
	26			
	27			
	28			
	29			
	30			
	31			
MFR	32	OUTLINE DIMENSIONS	CATALOG	CATALOG
	33	MFR. MODEL NO.	BARBER COLEMAN TS8111	BARBER COLEMAN TS8111
	34			

NOTES

1. Provide surface mounting base. ⚠
2. Provide digital thermometer cover kit with control dial cutout. ⚠

ATTACHMENT A

FLUOR DANIEL INSTRUMENT SPECIFICATIONS ROOM THERMOSTATS – ELECTRONIC	NO	BY DATE	REVISION	SHEET NO. E350-DS-2	REVISION 1
		ALS	MISC. REVISIONS.		
	1	06/15/93		DATE 7/9/92	CONTRACT 845734
				MANUFACTURER Barber Coleman or Equal	
				BY FJM	CHK'D BRC / APPRV'D JBB

ALL ITEMS SHALL COMPLY WITH GENERAL SPECIFICATION SHEETS: B-595-C-E350-17605

GENERAL	1	TAG NUMBER	TIC/TE-CSS-013	
	2	P&ID / FRAME NUMBER	H-2-129731-2	
	3	SERVICE	CLEAN OPER. OFFICE, ROOM 100	
	4			
	5			
	6			
	7			
	8			
	9			
	10			
THERMOSTAT	11	TYPE	PROPORTIONAL ROOM THERMOSTAT	
	12		WITH SETPOINT ADJUSTMENT	
	13			
	14	SENSING ELEMENT	BALCO RTD ⚠	
	15	RTD RESISTANCE	1000 OHMS +/- 0.1% AT 70 DEG F	
	16	SET POINT DIAL RANGE	55 TO 85 DEG F	
	17	INDICATOR	YES	
	18	CONNECTIONS	SCREW TERMINALS	
	19	ENCLOSURE	NEMA 1	
	20	MOUNTING	WALL MOUNT (NOTE 1) ⚠	
	21	COVER	PLASTIC (NOTE 2) ⚠	
	22			
SERVICE	23	MINIMUM TEMPERATURE	40 DEG F	
	24	NORMAL TEMPERATURE	75 DEG F	
	25	MAXIMUM TEMPERATURE	90 DEG F	
	26			
	27			
	28			
	29			
	30			
	31			
MFR	32	OUTLINE DIMENSIONS	CATALOG	
	33	MFR. MODEL NO.	BARBER COLEMAN TS8111	
	34			

NOTES

1. Provide surface mounting base. ⚠
2. Provide digital thermometer cover kit with control dial cutout. ⚠

U.S. DEPARTMENT OF ENERGY
Hanford Waste Vitrification Plant
Richland, Washington
DOE Contract DE-AC06-86RL10838

FLUOR DANIEL, INC.
Advanced Technology Division
Fluor Contract 8457

SECTION 17612
THERMOWELLS AND RESISTANCE TEMPERATURE DETECTORS
B-595-C-E350-17612

APPROVED FOR CONSTRUCTION

REVISION 1 PER CR-0702
ISSUE DATE 8/4/93

WAPA YES ___ NO X
QUALITY LEVEL I ___ II X
SAFETY CLASS 1__ 2__ 3 X 4__

ORIGINATOR:

A. L. Sanburg 7-12-93
A. L. Sanburg, Control Sys. Engineer Date

CHECKER:

B R Carlisle 7/12/93
B. R. Carlisle, Control Sys. Engr. Date

APPROVED BY:

J B Bunning
J. B. Bunning Lead Discipline Engineer

07/12/93
Date

SECTION 17612
THERMOWELLS AND RESISTANCE TEMPERATURE DETECTORS
B-595-C-E350-17612

TABLE OF CONTENTS

PART		PAGE
PART 1 GENERAL		1
1.1	SUMMARY	1
1.2	REFERENCES	1
1.3	RELATED REQUIREMENTS	1
1.4	DEFINITIONS	1
1.5	SYSTEM DESCRIPTION	2
1.6	SUBMITTALS	2
1.7	CLASSIFICATION OF SYSTEM AND COMPONENTS	2
1.8	PROJECT OR SITE ENVIRONMENTAL CONDITIONS	2
PART 2 PRODUCTS		3
2.1	MATERIALS AND EQUIPMENT	3
2.2	FABRICATION AND MANUFACTURE	4
2.3	FACTORY ACCEPTANCE TESTS (FAT)	4
2.4	PACKAGING AND SHIPPING	4
PART 3 EXECUTION		4
3.1	PREPARATION	4
3.2	INSTALLATION, APPLICATION AND ERECTION	4
3.3	FIELD QUALITY CONTROL	4
3.4	ADJUSTMENTS	5
3.5	CLEANING	5
3.6	PROTECTION	5
3.7	DEMONSTRATION	5
3.8	SCHEDULES	5

ATTACHMENTS

ATTACHMENT	TITLE
A	E350-DS-1 THROUGH E350-DS-3 DATA SHEETS, RESISTANCE TEMPERATURE DETECTORS

SECTION 17612
THERMOWELLS AND RESISTANCE TEMPERATURE DETECTORS

PART 1 GENERAL

1.1 SUMMARY

This section defines the technical requirements for the supply, installation, inspection, and testing of Thermowells and Resistance Temperature Detectors (RTDs) for the Hanford Waste Vitrification Plant (HWVP).

1.2 REFERENCES

The publications listed below form a part of this specification to the extent referenced. The publications are referred to in the text by the basic designation only.

AMERICAN SOCIETY OF MECHANICAL ENGINEERS (ASME)

ASME/ANSI B16.5	1988 Pipe Flanges and Flanged Fittings
ASME/ANSI B31.3	1990 Chemical Plant and Petroleum Refinery Piping; Addenda 1331.3A, 1990; Errata December 1990; Addenda B31.3B, 1991

AMERICAN SOCIETY FOR TESTING AND MATERIALS (ASTM)

A182/A182M	1991 Standard Specification for Forged and Rolled Alloy-Steel Pipe Flanges, Forged Fittings, and Valves and Parts for High Temperature Service

1.3 RELATED REQUIREMENTS

Specification Section 01730	Operation and Maintenance Data
Specification Section 16100	Electrical Installation
Specification Section 17704	General Instrumentation Installation and Testing
Specification Section 17705	Instrument Calibration and Checkout

1.4 DEFINITIONS

CAT - Construction Acceptance Test

CST - Canister Storage Vault

FAT - Factory Acceptance Test

1.5 **SYSTEM DESCRIPTION**

(Not Used)

1.6 **SUBMITTALS**

Submit the following in accordance with the Vendor Drawing and Data Requirements section of the Order/Subcontract.

(Deleted)

1.6.1 Catalog cuts describing each instrument and accessory.

1.6.2 Manufacturer's installation drawings and instructions.

1.6.3 Manufacturer's operation and maintenance manuals in accordance with Specification Section 01730.

1.6.4 Manufacturer's calibration instructions including calibration curves/tables.

1.6.5 FAT procedure.

1.6.6 Report confirming the FAT procedure was executed and the results.

1.6.7 CAT procedure, including the requirements in Paragraph 3.3.1.

1.6.8 Report confirming the CAT procedure was executed and the results.

1.7 **CLASSIFICATION OF SYSTEM AND COMPONENTS**

(Not Used)

1.8 **PROJECT OR SITE ENVIRONMENTAL CONDITIONS**

Climatic and Geographic Site Conditions

A.	Site Elevation	714 feet above sea level
B.	Barometric Pressure	14.3 psia
C.	Outside Design Temperature	
	1) Maximum Design Temperature	110°F
	2) Minimum Design Temperature	-20°F
	3) Wet Bulb Design Temperature	68°F

PART 2 PRODUCTS

2.1 MATERIALS AND EQUIPMENT

2.1.1 Provide thermowells in accordance with the data sheets. Include the features listed below unless otherwise specified on the data sheets:

A. Constructed for interchangeability among all standard applications including thermocouples, RTD assemblies, and bimetallic thermometers.

B. Materials in accordance with ASTM A182.

C. Machine from bar stock.

D. Polish process wetted surfaces to a 4-5 micro-inches rms finish.

E. Tapered body.

F. Designed in accordance with ASME/ANSI B31.3.

G. 1-1/2 inch Raised Face Flange (RF) process connection per ANSI B16.5.

H. Stainless steel cap; provide retaining chain welded to both body and cap of thermowell.

2.1.2 Provide RTDs in accordance with the data sheets. Include the features listed below unless otherwise specified in the data sheets:

A. Platinum element

B. Temperature/resistance coefficient .0021 ohms/ohm/°F with 0.1 percent interchangeability

C. Resistance 100.0 ± 0.2 ohms at 32°F

2.1.3 Labeling

Provide a stainless steel tag, 18 ga. minimum, with the instrument tag number stamped or engraved, affixed to each instrument with stainless steel wire (preferred), stainless steel screws, or rivets. If the instrument size or configuration prevents use of a separate tag, propose an alternate method of tagging such as engraving or stamping for Buyer's approval. The service description is in the Buyer's Instrument Engineering Index, Attachment B to Specification Section 17704.

2.2 **FABRICATION AND MANUFACTURE**

(Not Used)

2.3 **FACTORY ACCEPTANCE TESTS (FAT)**

2.3.1 Prepare a Factory Acceptance Test (FAT) procedure and submit it to the Buyer for approval. Include:

A. Inspections/tests to demonstrate that the design, fabrication, and assembly of the materials and equipment meet the requirements of the design drawings and specifications.

B. (Deleted)

2.3.2 Inspect and test the instruments in accordance with the Buyer approved FAT procedure.

2.3.3 Submit a report confirming the FAT procedure has been completed and the results.

2.4 **PACKAGING AND SHIPPING**

Protect all shipped materials from moisture, vibration, shock, and heat damage while in transit or interim storage.

PART 3 EXECUTION

3.1 **PREPARATION**

Inspect and calibrate instruments in accordance with Paragraph 3.1 of Specification Section 17705.

3.2 **INSTALLATION, APPLICATION AND ERECTION**

Install instruments in accordance with Specification Sections 17704, 16100, Attachment A, and the manufacturer's installation instructions.

3.3 **FIELD QUALITY CONTROL**

3.3.1 Prepare a CAT procedure and submit it for approval. Include the requirements in Specification Section 17705.

3.3.2 Inspect and test the instrument installations according to the Buyer approved CAT procedure.

3.3.3 Submit a report confirming the CAT procedure has been completed and the results.

3.4 **ADJUSTMENTS**

(Not Used)

3.5 **CLEANING**

(Not Used)

3.6 **PROTECTION**

(Not Used)

3.7 **DEMONSTRATION**

(Not Used)

3.8 **SCHEDULES**

(Not Used)

END OF SECTION

ATTACHMENT A

FLUOR DANIEL INSTRUMENT SPECIFICATIONS RESISTANCE TEMPERATURE DETECTORS	NO	BY DATE	REVISION	SHEET NO. E350-DS-1	REVISION 1
	1	ALS 06/15/93	MISC. REVISIONS.	DATE 6/26/92	CONTRACT 845734
				MANUFACTURER WEED OR EQUAL	
				BY KCI	CHK'D BRC / APPRV'D JBB

ALL ITEMS SHALL COMPLY WITH GENERAL SPECIFICATION SHEETS: B-595-C-E350-17612

HEAD

1 COVER: SCREWED [ ] CAP TYPE [X]
OTHER

2 MATERIAL: ALUMINUM [X] CAST IRON [ ]
OTHER

3 CONN. SIZE – INS NPT CONDUIT 3/4 TUBE 1/2

4 TERMINAL BLOCK: 2 TERM. [ ] 3 TERM. [X]

5 HEAD EXTENSION "A" 6 INCHES

UNION & NIPPLE [X] NIPPLE ONLY [ ]
MATERIAL: CS [ ] OTHER GALVANIZED STEEL

SHEATHED ELEMENT

6 MATERIAL: 304 SS [X] 316 SS [ ] OTHER

7 SHEATH DIAMETER: 1/4" [X] OTHER

8 MOUNTING: SCRD [ ] UNION [ ] OTHER N/A

UNION TYPE TO BE FIXED [ ] ADJUSTABLE [ ]
THREAD SIZE INS NPT. DESCRIPTION
IF SPECIAL HOLDER

9 CONNECTION: 2-WIRE [ ] 3-WIRE [X]
CABLE [ ] HEAD [X] TERM. BLOCK [X]
OTHER

RESISTANCE WINDING

10 MATERIAL: COPPER [ ] PLATINUM [X]
OTHER

11 CHARACTERISTIC CURVE:
MFR. STD. [ ] OTHER .0021 OHM/OHM/DEG F

12 RESISTANCE: 100 +/- 0.2 OHMS @ 32 DEG F

13 SENSITIVE AREA: TIP [X] STEM [ ] OTHER

PROTECTING WELL OR TUBE

14 MATERIAL: 304 SS [ ] 316 SS [ ]
OTHER

15 CONSTRUCTION: STRAIGHT [ ] TAPERED [ ]
REDUCED TIP [ ] OTHER

16 OUTSIDE DIMENSIONS: MFR. STD. [ ] OTHER

17 OVERALL LENGTH: (U + T + 1-3/4") INCHES

18 BORE SIZE 1/4" [ ] 3/8" [ ] OTHER

19 MALE THREAD SIZE 1" [ ] OTHER

20 FEMALE THREAD SIZE 1/2" [ ] OTHER

21 FLANGE: SIZE MATERIAL

22 MFR. MODEL NO.

NOTE: WELL I.D. TO PASS A PLUG GAGE 10" LONG OF .254" OR .379" O.D.

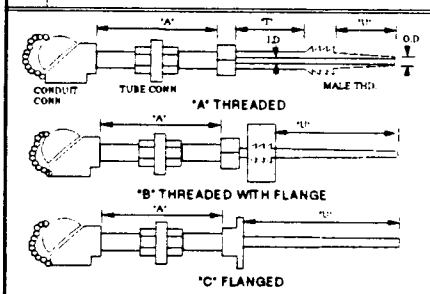

FIG. 1. DRILLED BAR STOCK WELLS COMPLETE ASS'Y

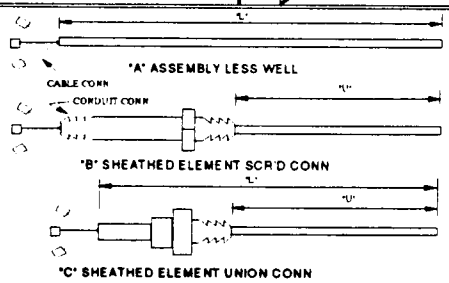

FIG. 2. SHEATHED ELEMENTS ONLY

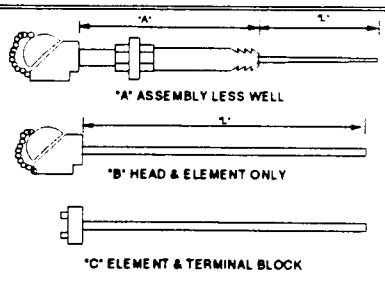

FIG. 3. PARTIAL ASSEMBLIES

TAG NUMBER	TE-CSS-001	TE-CSS-014	
P&ID NO. / FRAME	H-2-129731-1	H-2-129731-1	
SERVICE	AH-051-111 INLET DUCT	AH-051-111 RETURN DUCT	
I.S.A. FIG. NO.	FIG. 3A	FIG. 3A	
RANGE	-30 DEG F TO 130 DEG F	40 DEG F TO 90 DEG F	
"U" DIMENSION	---	---	
"T" DIMENSION	---	---	
"L" DIMENSION	21 INCHES	4 INCHES	
CONNECTION TYPE & RATING			
REV.			
QUANTITY	1	1	

NOTES
1) INSTRUMENTS ON THIS SHEET ARE MODEL # WEED 201 OR EQUAL.

FOR OUTLINE DIMENSIONS: SEE CATALOG [X] SEE CERTIFIED PRINT [ ] OTHER

ATTACHMENT A

FLUOR DANIEL INSTRUMENT SPECIFICATIONS RESISTANCE TEMPERATURE DETECTORS	NO	BY / DATE	REVISION	SHEET NO.	REVISION
		ALS	MISC. REVISIONS.	E350-DS-2	1
	1	06/15/93		DATE 6/26/92	CONTRACT 845734
				MANUFACTURER WEED OR EQUAL	
				BY KCI	CHK'D BRC / APPRV'D JBB

ALL ITEMS SHALL COMPLY WITH GENERAL SPECIFICATION SHEETS: B-595-C-E350-17612

HEAD

1 COVER: SCREWED [ ] CAP TYPE [X]
OTHER

2 MATERIAL: ALUMINUM [X] CAST IRON [ ]
OTHER

3 CONN. SIZE - INS NPT CONDUIT 3/4 TUBE 1/2

4 TERMINAL BLOCK: 2 TERM. [ ] 3 TERM. [X]

5 HEAD EXTENSION "A" 6 INCHES

UNION & NIPPLE [X] NIPPLE ONLY [ ]
MATERIAL: CS [ ] OTHER GALVANIZED STEEL

SHEATHED ELEMENT

6 MATERIAL: 304 SS [X] 316 SS [ ] OTHER

7 SHEATH DIAMETER: 1/4" [X] OTHER

8 MOUNTING: SCRD [ ] UNION [ ] OTHER N/A

UNION TYPE TO BE FIXED [ ] ADJUSTABLE [ ]
THREAD SIZE INS NPT. DESCRIPTION
IF SPECIAL HOLDER

9 CONNECTION: 2-WIRE [ ] 3-WIRE [X]
CABLE [ ] HEAD [X] TERM. BLOCK [X]
OTHER

RESISTANCE WINDING

10 MATERIAL: COPPER [ ] PLATINUM [X]
OTHER

11 CHARACTERISTIC CURVE:
MFR. STD. [ ] OTHER .0021 OHM/OHM/DEG F

12 RESISTANCE: 100 +/- 0.2 OHMS @ 32 DEG F

13 SENSITIVE AREA: TIP [X] STEM [ ] OTHER

PROTECTING WELL OR TUBE

14 MATERIAL: 304 SS [ ] 316 SS [ ]
OTHER

15 CONSTRUCTION: STRAIGHT [ ] TAPERED [ ]
REDUCED TIP [ ] OTHER

16 OUTSIDE DIMENSIONS: MFR. STD. [ ] OTHER

17 OVERALL LENGTH: (U + T + 1-3/4") INCHES

18 BORE SIZE 1/4" [ ] 3/8" [ ] OTHER

19 MALE THREAD SIZE 1" [ ] OTHER

20 FEMALE THREAD SIZE 1/2" [ ] OTHER

21 FLANGE: SIZE MATERIAL

22 MFR. MODEL NO.

NOTE: WELL I.D. TO PASS A PLUG GAGE 10" LONG OF .254" OR .379" O.D.

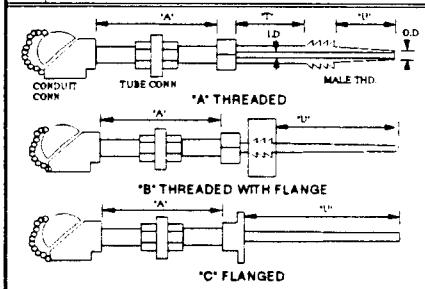

FIG. 1. DRILLED BAR STOCK WELLS COMPLETE ASS'Y

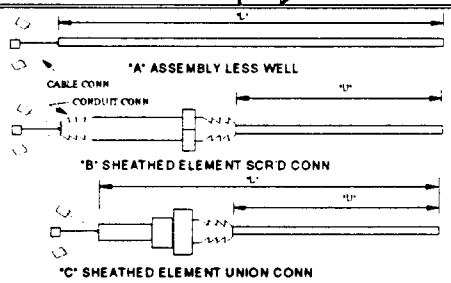

FIG. 2. SHEATHED ELEMENTS ONLY

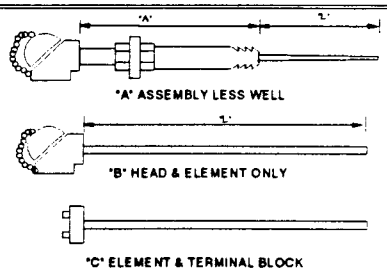

FIG. 3. PARTIAL ASSEMBLIES

TAG NUMBER	TE-CSS-039-1	TE-CSS-039-2	
P&ID NO. / FRAME	H-2-129734-1	H-2-129734-2	
SERVICE	AH-051-112 OUTLET DUCT	AH-051-113 OUTLET DUCT	
I.S.A. FIG. NO.	FIG. 3A	FIG. 3A	
RANGE	40 DEG F TO 90 DEG F	40 DEG F TO 90 DEG F	
"U" DIMENSION	---	---	
"T" DIMENSION	---	---	
"L" DIMENSION	26 INCHES	26 INCHES	
CONNECTION TYPE & RATING			
REV.			
QUANTITY	1	1	

NOTES
1) INSTRUMENTS ON THIS SHEET ARE MODEL # WEED 201 OR EQUAL.

FOR OUTLINE DIMENSIONS: SEE CATALOG [X] SEE CERTIFIED PRINT [ ] OTHER

ATTACHMENT A

FLUOR DANIEL INSTRUMENT SPECIFICATIONS RESISTANCE TEMPERATURE DETECTORS	NO	BY DATE	REVISION	SHEET NO.	REVISION
				E350-DS-3	1
	1	ALS 06/15/93	RE-NO. PER CR-0702 & MISC. REVISIONS.	DATE 6/26/92	CONTRACT 845734
				MANUFACTURER WEED OR EQUAL	
				BY KCI / CHK'D BRC	APPRV'D JBB

ALL ITEMS SHALL COMPLY WITH GENERAL SPECIFICATION SHEETS: B-595-C-E350-17612

HEAD

1 COVER: SCREWED [ ] CAP TYPE [X]
OTHER

2 MATERIAL: ALUMINUM [X] CAST IRON [ ]
OTHER

3 CONN. SIZE - INS NPT CONDUIT 3/4 TUBE 1/2

4 TERMINAL BLOCK: 2 TERM. [ ] 3 TERM. [X]

5 HEAD EXTENSION "A" 6 INCHES

UNION & NIPPLE [X] NIPPLE ONLY [ ]
MATERIAL: CS [ ] OTHER GALVANIZED STEEL

SHEATHED ELEMENT

6 MATERIAL: 304 SS [X] 316 SS [ ] OTHER

7 SHEATH DIAMETER: 1/4" [X] OTHER

8 MOUNTING: SCRD [X] UNION [ ] OTHER

UNION TYPE TO BE FIXED [ ] ADJUSTABLE [ ]
THREAD SIZE INS NPT. DESCRIPTION
IF SPECIAL HOLDER

9 CONNECTION: 2-WIRE [ ] 3-WIRE [X]
CABLE [ ] HEAD [X] TERM. BLOCK [X]
OTHER

RESISTANCE WINDING

10 MATERIAL: COPPER [ ] PLATINUM [X]
OTHER

11 CHARACTERISTIC CURVE:
MFR. STD. [ ] OTHER .0021 OHM/OHM/DEG F

12 RESISTANCE: 100 +/- 0.2 OHMS @ 32 DEG F

13 SENSITIVE AREA: TIP [X] STEM [ ] OTHER

PROTECTING WELL OR TUBE

14 MATERIAL: 304 SS [X] 316 SS [ ]
OTHER

15 CONSTRUCTION: STRAIGHT [ ] TAPERED [X]
REDUCED TIP [ ] OTHER

16 OUTSIDE DIMENSIONS: MFR. STD. [X] OTHER

17 OVERALL LENGTH: (U + T + 1-3/4") INCHES

18 BORE SIZE 1/4" [ ] 3/8" [ ] OTHER .260"

19 MALE THREAD SIZE 1" [ ] OTHER

20 FEMALE THREAD SIZE 1/2" [ ] OTHER

21 FLANGE: SIZE 1 1/2" MATERIAL 304 STAINLESS STEEL

22 MFR. MODEL NO. F260-U4

NOTE: WELL I.D. TO PASS A PLUG GAGE 10" LONG OF .254" OR .379" O.D.

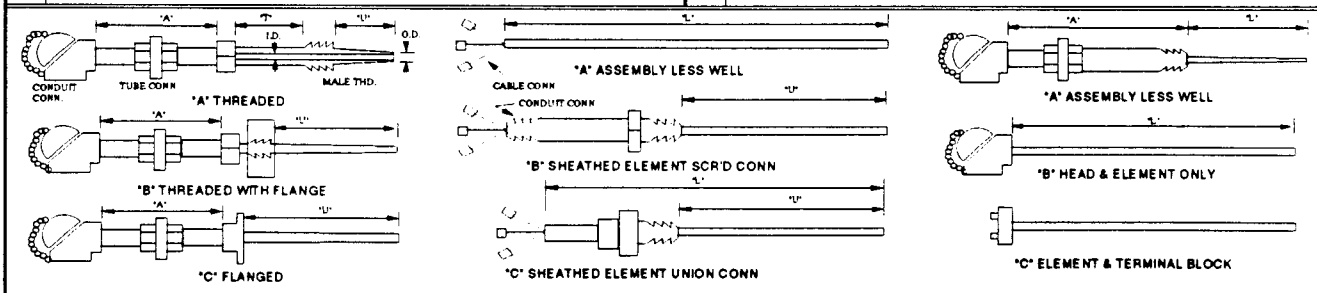

FIG. 1. DRILLED BAR STOCK WELLS COMPLETE ASS'Y — FIG. 2. SHEATHED ELEMENTS ONLY — FIG. 3. PARTIAL ASSEMBLIES

TAG NUMBER	TE-VAX-333-1	TE-VAX-333-2	
P&ID NO. / FRAME	H-2-123370-5	H-2-123370-5	
SERVICE	HPS VACUUM BLOWER A OUTLET	HPS VACUUM BLOWER B OUTLET	
TAG NUMBER - THERMOWELL	TW-VAX-333-1	TW-VAX-333-2	
I.S.A. FIG. NO.	FIG. 1C	FIG. 1C	
RANGE	85 DEG F TO 350 DEG F	85 DEG F TO 350 DEG F	
"U" DIMENSION	6 INCHES	6 INCHES	
"T" DIMENSION	---	---	
"L" DIMENSION	---	---	
CONNECTION TYPE & RATING	150# RF	150# RF	
REV.			
QUANTITY	1	1	

NOTES
1) INSTRUMENTS ON THIS SHEET ARE MODEL # WEED 305 OR EQUAL.

FOR OUTLINE DIMENSIONS: SEE CATALOG [X] SEE CERTIFIED PRINT [ ] OTHER

U.S. DEPARTMENT OF ENERGY
Hanford Waste Vitrification Plant
Richland, Washington
DOE Contract DE-AC06-86RL10838

FLUOR DANIEL, INC.
Advanced Technology Division
Fluor Contract 8457

SECTION 17612W
THERMOWELLS AND RESISTANCE TEMPERATURE DETECTORS
B-595-C-E350-17612W

APPROVED FOR CONSTRUCTION

REVISION 1 PER CR-0884
ISSUE DATE 8/4/93

WAPA YES X NO ___
QUALITY LEVEL I X II ___
SAFETY CLASS 1__ 2__ 3 X 4__

ORIGINATOR:

A. L. Sanburg 7-29-93
A. L. Sanburg, Control Sys. Engr. Date

CHECKER:

B. R. Carlisle 7/29/93
B. R. Carlisle, Control Sys. Engr. Date

APPROVED BY:

J. B. Bunning
J. B. Bunning Lead Discipline Engineer

07/29/93
Date

SECTION 17612W
THERMOWELLS AND RESISTANCE TEMPERATURE DETECTORS
B-595-C-E350-17612W

TABLE OF CONTENTS

PART		PAGE
PART 1	**GENERAL**	1
1.1	SUMMARY	1
1.2	REFERENCES	1
1.3	RELATED REQUIREMENTS	1
1.4	DEFINITIONS	2
1.5	SYSTEM DESCRIPTION	2
1.6	SUBMITTALS	2
1.7	CLASSIFICATION OF SYSTEM AND COMPONENTS	2
1.8	PROJECT OR SITE ENVIRONMENTAL CONDITIONS	2
PART 2	**PRODUCTS**	3
2.1	MATERIALS AND EQUIPMENT	3
2.2	FABRICATION AND MANUFACTURE	4
2.3	FACTORY ACCEPTANCE TESTS (FAT)	4
2.4	PACKAGING AND SHIPPING	5
PART 3	**EXECUTION**	5
3.1	PREPARATION	5
3.2	INSTALLATION, APPLICATION AND ERECTION	5
3.3	FIELD QUALITY CONTROL	5
3.4	ADJUSTMENTS	5
3.5	CLEANING	5
3.6	PROTECTION	5
3.7	DEMONSTRATION	6
3.8	SCHEDULES	6

ATTACHMENTS

ATTACHMENT	TITLE
A	E350-DS-1 THROUGH E350-DS-3 DATA SHEETS, RESISTANCE TEMPERATURE DETECTORS
B	THERMOWELL INSTALLATION DETAIL

SECTION 17612W
THERMOWELLS AND RESISTANCE TEMPERATURE DETECTORS

PART 1 GENERAL

1.1 SUMMARY

This section defines the technical requirements for the supply, installation, inspection, and testing of Thermowells and Resistance Temperature Detectors (RTDs) for the Hanford Waste Vitrification Plant (HWVP).

1.2 REFERENCES

The publications listed below form a part of this specification to the extent referenced. The publications are referred to in the text by the basic designation only.

AMERICAN SOCIETY OF MECHANICAL ENGINEERS (ASME)

ASME/ANSI B16.5	1988 Pipe Flanges and Flanged Fittings
ASME/ANSI B31.3	1990 Chemical Plant and Petroleum Refinery Piping; Addenda 1331.3A, 1990; Errata December 1990; Addenda B31.3B, 1991

AMERICAN SOCIETY FOR TESTING AND MATERIALS (ASTM)

A182/A182M	1991 Standard Specification for Forged and Rolled Alloy-Steel Pipe Flanges, Forged Fittings, and Valves and Parts for High Temperature Service

1.3 RELATED REQUIREMENTS

Specification Section 01730	Operation and Maintenance Data
Specification Section 16100	Electrical Installation
Specification Section 17704	General Instrumentation Installation and Testing
Specification Section 17705	Instrument Calibration and Checkout
Drawing H-2-119280-3	Structural CSB Oper. Flr. Reinf. Dets. and Intake Struct. Dets.
Drawing H-2-121202-1	Instrument Canister Storage Bldg Location Plan

1.4 **DEFINITIONS**

CAT - Construction Acceptance Test

CSV - Canister Storage Vault

FAT - Factory Acceptance Test

1.5 **SYSTEM DESCRIPTION**

(Not Used)

1.6 **SUBMITTALS**

Submit the following in accordance with the Vendor Drawing and Data Requirements section of the Order/Subcontract.

(Deleted)

1.6.1 Catalog cuts describing each instrument and accessory.

1.6.2 Manufacturer's installation drawings and instructions.

1.6.3 Manufacturer's operation and maintenance manuals in accordance with Specification Section 01730.

1.6.4 Manufacturer's calibration instructions including calibration curves/tables.

1.6.5 FAT procedure.

1.6.6 Report confirming the FAT procedure was executed and the results.

1.6.7 CAT procedure, including the requirements in Paragraph 3.3.1.

1.6.8 Report confirming the CAT procedure was executed and the results.

1.7 **CLASSIFICATION OF SYSTEM AND COMPONENTS**

(Not Used)

1.8 **PROJECT OR SITE ENVIRONMENTAL CONDITIONS**

Climatic and Geographic Site Conditions

A.	Site Elevation	714 feet above sea level
B.	Barometric Pressure	14.3 psia

C. Outside Design Temperature

1) Maximum Design Temperature 110°F

2) Minimum Design Temperature -20°F

3) Wet Bulb Design Temperature 68°F

PART 2 PRODUCTS

2.1 MATERIALS AND EQUIPMENT

2.1.1 Provide thermowells in accordance with the data sheets. Include the features listed below unless otherwise specified on the data sheets:

A. (Deleted)

B. Materials in accordance with ASTM A182.

C. Fabricate pipewells from 1 1/2 inch Schedule 40S pipe.

D. (Deleted)

E. (Deleted)

F. Designed in accordance with ASME/ANSI B31.3.

G. 2 inch Raised Face Flange (RF) process connection per ANSI B16.5.

H. Stainless steel cap; provide retaining chain welded to both body and cap of thermowell.

2.1.2 Provide RTDs in accordance with the data sheets. Include the features listed below unless otherwise specified in the data sheets:

A. Platinum element

B. Temperature/resistance coefficient .0021 ohms/ohm/°F with 0.1 percent interchangeability

C. Resistance 100.0 ± 0.2 ohms at 32°F

2.1.3 Labeling

Provide a stainless steel tag, 18 ga. minimum, with the instrument tag number stamped or engraved, affixed to each instrument with stainless steel wire (preferred), stainless steel screws, or

rivets. If the instrument size or configuration prevents use of a separate tag, propose an alternate method of tagging such as engraving or stamping for Buyer's approval. The service description is in the Buyer's Instrument Engineering Index, Attachment B to Specification Section 17704.

2.2 **FABRICATION AND MANUFACTURE**

(Not Used)

2.3 **FACTORY ACCEPTANCE TESTS (FAT)**

2.3.1 Prepare a Factory Acceptance Test (FAT) procedure and submit it to the Buyer for approval. Include:

A. Inspections/tests to demonstrate that the design, fabrication, and assembly of the materials and equipment meet the requirements of the design drawings and specifications.

B. Documentation showing the calibration of the RTDs was done by the manufacturer prior to delivery and will comply with the procurement specification.

C. (Deleted)

D. Acceptance criteria appropriate for these instruments, including:

Instruments shall not be subject to undetected failures.

E. Potential sources of testing uncertainty or error. State how testing organization will control them.

F. Manufacturer, model, serial number, precision, accuracy, and certifying agency of calibration and test equipment.

2.3.2 Inspect and test the instruments in accordance with the Buyer approved FAT procedure.

2.3.3 Submit a report confirming the FAT procedure has been completed and the results. Include:

A. Item tested

B. Date of test

C. Test equipment and calibrations

D. Tester or data recorder

E. Type of observation

F. Results and acceptability

G. Action taken in connection with any deviations noted

H. Person evaluating test results

2.4 **PACKAGING AND SHIPPING**

Protect all shipped materials from moisture, vibration, shock, and heat damage while in transit or interim storage.

PART 3 EXECUTION

3.1 **PREPARATION**

Inspect and calibrate instruments in accordance with Paragraph 3.1 of Specification Section 17705.

3.2 **INSTALLATION, APPLICATION AND ERECTION**

Install instruments in accordance with Specification Sections 17704, 16100, Attachment A, and the manufacturer's installation instructions.

3.3 **FIELD QUALITY CONTROL**

3.3.1 Prepare a CAT procedure and submit it for approval. Include the requirements in Specification Section 17705.

3.3.2 Inspect and test the instrument installations according to the Buyer approved CAT procedure.

3.3.3 Submit a report confirming the CAT procedure has been completed and the results.

3.4 **ADJUSTMENTS**

(Not Used)

3.5 **CLEANING**

(Not Used)

3.6 **PROTECTION**

(Not Used)

3.7 **DEMONSTRATION**

(Not Used)

3.8 **SCHEDULES**

(Not Used)

END OF SECTION

ATTACHMENT A

FLUOR DANIEL INSTRUMENT SPECIFICATIONS RESISTANCE TEMPERATURE DETECTORS	NO	BY DATE	REVISION	SHEET NO. E350-DS-1	REVISION 1
	1	ALS 06/15/93	MISC. REVISIONS.	DATE 8/24/92	CONTRACT 845734
				MANUFACTURER THERMO ELECTRIC OR EQUAL	
				BY KCI / CHK'D BRC	APPRV'D JBB

ALL ITEMS SHALL COMPLY WITH GENERAL SPECIFICATION SHEETS: B-595-C-E350-17612W

HEAD

1 COVER: SCREWED [ ] CAP TYPE [ ]
OTHER *NEMA 4X JUNCTION BOX*

2 MATERIAL: ALUMINUM [ ] CAST IRON [ ]
OTHER *304 STAINLESS STEEL*

3 CONN. SIZE - INS NPT CONDUIT *3/4"* TUBE *NOTE 1*

4 TERMINAL BLOCK: 2 TERM. [ ] 3 TERM. [ ] OTHER *9 TERM.*

5 HEAD EXTENSION "A" *6* INCHES

UNION & NIPPLE [X] NIPPLE ONLY [ ]
MATERIAL: CS [ ] OTHER *304 STAINLESS STEEL*

SHEATHED ELEMENT

6 MATERIAL: 304 SS [ ] 316 SS [X] OTHER
7 SHEATH DIAMETER: 1/4" [X] OTHER
8 MOUNTING: SCRD [ ] UNION [X] OTHER *NOTE 1*

UNION TYPE TO BE FIXED [ ] ADJUSTABLE [ ]
THREAD SIZE INS NPT. DESCRIPTION
IF SPECIAL HOLDER *NOTE 1*

9 CONNECTION: 2-WIRE [ ] 3-WIRE [X]
CABLE [ ] HEAD [ ] TERM. BLOCK [ ]
OTHER

RESISTANCE WINDING

10 MATERIAL: COPPER [ ] PLATINUM [X]
OTHER
11 CHARACTERISTIC CURVE:
MFR. STD. [ ] OTHER *.0021 OHM/OHM/DEG F*
12 RESISTANCE: *100 +/- 0.2* OHMS @ *32 DEG F*
13 SENSITIVE AREA: TIP [X] STEM [ ] OTHER

PROTECTING WELL OR TUBE

14 MATERIAL: 304 SS [X] 316 SS [ ]
OTHER *1 1/2" SCHEDULE 40S PIPE (NOTE 1)*
15 CONSTRUCTION: STRAIGHT [ ] TAPERED [ ]
REDUCED TIP [ ] OTHER *NOTE 1*
16 OUTSIDE DIMENSIONS: MFR. STD. [ ] OTHER *NOTE 1*
17 OVERALL LENGTH: *94 INCHES (NOTE 1)*
18 BORE SIZE 1/4" [ ] 3/8" [ ] OTHER *NOTE 1*
19 MALE THREAD SIZE 1" OTHER
20 FEMALE THREAD SIZE 1/2" [ ] OTHER
21 FLANGE: SIZE *2"* MATERIAL *304 STAINLESS STEEL*
22 MFR. MODEL NO.

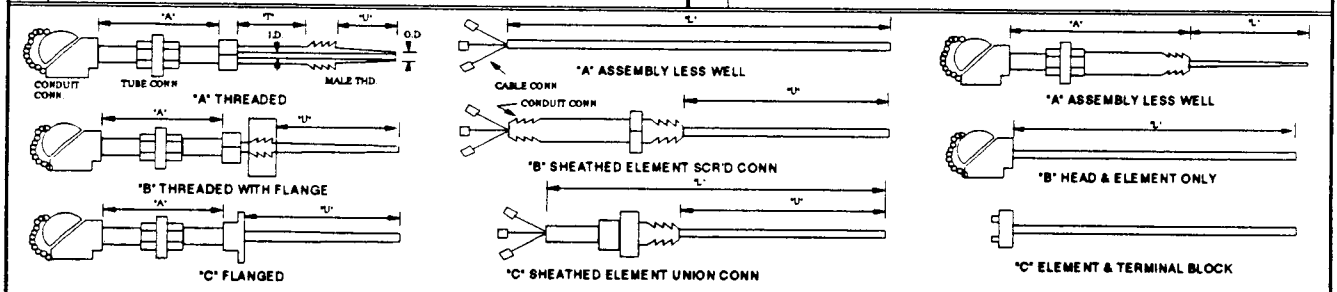

FIG. 1. DRILLED BAR STOCK WELLS COMPLETE ASS'Y FIG. 2. SHEATHED ELEMENTS ONLY FIG. 3. PARTIAL ASSEMBLIES

TAG NUMBER		TE-CSE-013A	TE-CSE-013B	TE-CSE-013C
P&ID NO.	FRAME	H-2-129738-1	H-2-129738-1	H-2-129738-1
SERVICE		UPPER OUTLET CSV STACK RTD1	UPPER OUTLET CSV STACK RTD2	UPPER OUTLET CSV STACK RTD3
I.S.A. FIG. NO.		NONE (NOTE 1)	NONE (NOTE 1)	NONE (NOTE 1)
RANGE		-30 DEG F TO 300 DEG F	-30 DEG F TO 300 DEG F	-30 DEG F TO 300 DEG F
"U" DIMENSION (NOTE 1)		27 INCHES	48 INCHES	69 INCHES
"T" DIMENSION		---	---	---
"L" DIMENSION		---	---	---
CONNECTION TYPE & RATING		150# RF	150# RF	150# RF
MODEL #				
REV.				
QUANTITY		1	1	1

NOTES ***1) Mount all RTDs on this sheet in a multicouple arrangement as detailed on Attachment B. The Seller shall provide the mechanism to mount the RTDs firmly in the pipewell. All RTDs shall be individually replaceable in the field without having to replace the entire multicouple assembly.***

FOR OUTLINE DIMENSIONS: SEE CATALOG [ ] SEE CERTIFIED PRINT [X] OTHER

ATTACHMENT A

FLUOR DANIEL INSTRUMENT SPECIFICATIONS RESISTANCE TEMPERATURE DETECTORS	NO	BY DATE	REVISION	SHEET NO. E350-DS-2	REVISION 1
		ALS	MISC. REVISIONS.		
	1	06/15/93		DATE 8/24/92	CONTRACT 845734
				MANUFACTURER THERMO ELECTRIC OR EQUAL	
				BY KCI	CHK'D BRC / APPRV'D JBB

ALL ITEMS SHALL COMPLY WITH GENERAL SPECIFICATION SHEETS: B-595-C-E350-17612W

HEAD

1 COVER: SCREWED [ ] CAP TYPE [ ]
OTHER NEMA 4X JUNCTION BOX

2 MATERIAL: ALUMINUM [ ] CAST IRON [ ]
OTHER 304 STAINLESS STEEL

3 CONN. SIZE - INS NPT CONDUIT 3/4" TUBE NOTE 1

4 TERMINAL BLOCK: 2 TERM. [ ] 3 TERM. [ ] OTHER 9 TERM.

5 HEAD EXTENSION "A" 6 INCHES

UNION & NIPPLE [X] NIPPLE ONLY [ ]
MATERIAL: CS [ ] OTHER 304 STAINLESS STEEL

SHEATHED ELEMENT

6 MATERIAL: 304 SS [ ] 316 SS [X] OTHER

7 SHEATH DIAMETER: 1/4" [X] OTHER

8 MOUNTING: SCRD [ ] UNION [X] OTHER NOTE 1

UNION TYPE TO BE FIXED [ ] ADJUSTABLE [ ]
THREAD SIZE INS NPT. DESCRIPTION
IF SPECIAL HOLDER NOTE 1

9 CONNECTION: 2-WIRE [ ] 3-WIRE [X]
CABLE [ ] HEAD [ ] TERM. BLOCK [ ]
OTHER

RESISTANCE WINDING

10 MATERIAL: COPPER [ ] PLATINUM [X]
OTHER

11 CHARACTERISTIC CURVE:
MFR. STD. [ ] OTHER .0021 OHM/OHM/DEG F

12 RESISTANCE: 100 +/- 0.2 OHMS @ 32 DEG F

13 SENSITIVE AREA: TIP [X] STEM [ ] OTHER

PROTECTING WELL OR TUBE

14 MATERIAL: 304 SS [X] 316 SS [ ]
OTHER 1 1/2" SCHEDULE 40S PIPE (NOTE 1)

15 CONSTRUCTION: STRAIGHT [ ] TAPERED [ ]
REDUCED TIP [ ] OTHER NOTE 1

16 OUTSIDE DIMENSIONS: MFR. STD. [ ] OTHER NOTE 1

17 OVERALL LENGTH: 176 INCHES (NOTE 1)

18 BORE SIZE 1/4" [ ] 3/8" [ ] OTHER NOTE 1

19 MALE THREAD SIZE 1" [ ] OTHER

20 FEMALE THREAD SIZE 1/2" [ ] OTHER

21 FLANGE: SIZE 2" MATERIAL 304 STAINLESS STEEL

22 MFR. MODEL NO.

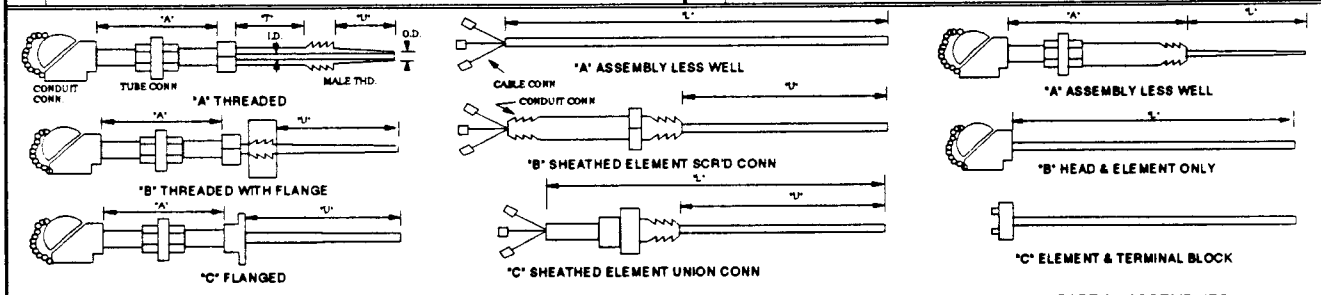

FIG. 1. DRILLED BAR STOCK WELLS COMPLETE ASS'Y FIG. 2. SHEATHED ELEMENTS ONLY FIG. 3. PARTIAL ASSEMBLIES

TAG NUMBER	TE-CSE-011A	TE-CSE-011B	TE-CSE-011C
P&ID NO. / FRAME	H-2-129738-1	H-2-129738-1	H-2-129738-1
SERVICE	LOWER OUTLET CSV STACK RTD1	LOWER OUTLET CSV STACK RTD2	LOWER OUTLET CSV STACK RTD3
I.S.A. FIG. NO.	NONE (NOTE 1)	NONE (NOTE 1)	NONE (NOTE 1)
RANGE	-30 DEG F TO 300 DEG F	-30 DEG F TO 300 DEG F	-30 DEG F TO 300 DEG F
"U" DIMENSION (NOTE 1)	55 INCHES	94 INCHES	133 INCHES
"T" DIMENSION	---	---	---
"L" DIMENSION	---	---	---
CONNECTION TYPE & RATING	150# RF	150# RF	150# RF
MODEL #			
REV.			
QUANTITY	1	1	1

NOTES 1) Mount all RTDs on this sheet in a multicouple arrangement as detailed on Attachment B. The Seller shall provide the mechanism to mount the RTDs firmly in the pipewell. All RTDs shall be individually replaceable in the field without having to replace the entire multicouple assembly.

FOR OUTLINE DIMENSIONS: SEE CATALOG [ ] SEE CERTIFIED PRINT [X] OTHER

ATTACHMENT A

FLUOR DANIEL INSTRUMENT SPECIFICATIONS RESISTANCE TEMPERATURE DETECTORS	NO	BY DATE	REVISION	SHEET NO.	REVISION
		ALS	REVISED PER CR-0884	E350-DS-3	1
	1	06/18/93		DATE 8/24/92	CONTRACT 845734
				MANUFACTURER WEED OR EQUAL	
				BY KCI / CHK'D BRC	APPRV'D JBB

ALL ITEMS SHALL COMPLY WITH GENERAL SPECIFICATION SHEETS: B-595-C-E350-17612W

HEAD

1 COVER: SCREWED [ ] CAP TYPE [X]
OTHER

2 MATERIAL: ALUMINUM [ ] CAST IRON [ ]
OTHER 304 STAINLESS STEEL

3 CONN. SIZE - INS NPT CONDUIT 3/4" TUBE NOTE 1

4 TERMINAL BLOCK: 2 TERM. [ ] 3 TERM. [X] OTHER

5 HEAD EXTENSION "A" 4" (NOTE 1) INCHES

UNION & NIPPLE [X] NIPPLE ONLY [ ]
MATERIAL: CS [ ] OTHER

SHEATHED ELEMENT

6 MATERIAL: 304 SS [X] 316 SS [ ] OTHER

7 SHEATH DIAMETER: 1/4" [X] OTHER NOTE 2

8 MOUNTING: SCRD [ ] UNION [ ] OTHER NOTE 2

UNION TYPE TO BE FIXED [ ] ADJUSTABLE [ ]
THREAD SIZE INS NPT. DESCRIPTION
IF SPECIAL HOLDER FLEXIBLE ELEMENT HOLDER

9 CONNECTION: 2-WIRE [ ] 3-WIRE [X]
CABLE [ ] HEAD [X] TERM. BLOCK [X]
OTHER

RESISTANCE WINDING

10 MATERIAL: COPPER [ ] PLATINUM [X]
OTHER

11 CHARACTERISTIC CURVE:
MFR. STD. [ ] OTHER .0021 OHM/OHM/DEG F

12 RESISTANCE: 100 +/- 0.2 OHMS @ 32 DEG F

13 SENSITIVE AREA: TIP [X] STEM [ ] OTHER

PROTECTING WELL OR TUBE

14 MATERIAL: 304 SS [ ] 316 SS [ ]
OTHER EMBEDDED PIPEWELL

15 CONSTRUCTION: STRAIGHT [ ] TAPERED [ ]
REDUCED TIP [ ] OTHER

16 OUTSIDE DIMENSIONS: MFR. STD. [ ] OTHER

17 OVERALL LENGTH: (EMBEDDED) 70 3/4 INCHES

18 BORE SIZE 1/4" [ ] 3/8" [ ] OTHER

19 MALE THREAD SIZE 1" [ ] OTHER 3/4 INCH

20 FEMALE THREAD SIZE 1/2" [ ] OTHER

21 FLANGE: SIZE MATERIAL

22 MFR. MODEL NO.

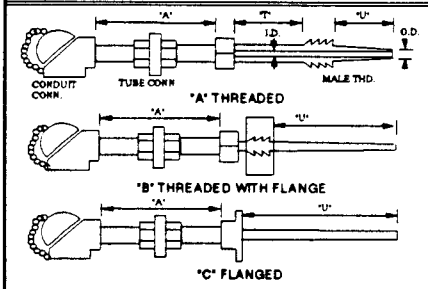

FIG. 1. DRILLED BAR STOCK WELLS COMPLETE ASS'Y

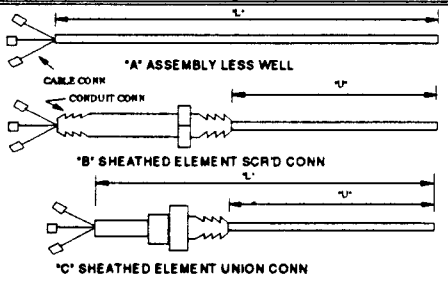

FIG. 2. SHEATHED ELEMENTS ONLY

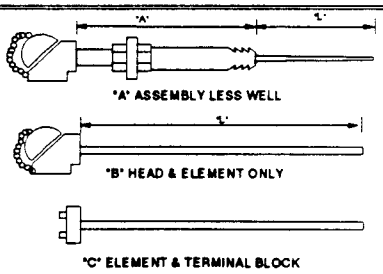

FIG. 3. PARTIAL ASSEMBLIES

TAG NUMBER		TE-CSS-061		
P&ID NO.	FRAME	H-2-129738-1		
SERVICE		INLET PLENUM TEMPERATURE		
I.S.A. FIG. NO.		NOTE 1		
RANGE		-30 DEG F TO 130 DEG F		
"U" DIMENSION		69 INCHES		
"T" DIMENSION		---		
"L" DIMENSION		---		
CONNECTION TYPE & RATING		3/4 " NPT		
MODEL #				
REV.				
QUANTITY		1		

NOTES
1) PROVIDE HEAD & UNION FOR CONNECTION TO EMBEDDED 3/4 INCH SCH.40S PIPEWELL (REF. DWG. H-2-121202-1).
2) PROVIDE FLEXIBLE RTD ELEMENT HOLDER TO BE INSERTED INTO OFFSET EMBEDDED PIPEWELL (REF. DWG. H-2-119280-3)

FOR OUTLINE DIMENSIONS: SEE CATALOG [ ] SEE CERTIFIED PRINT [X] OTHER

FILE: 17612W/B01-1

NOTE:

1. REFER TO DATA SHEETS DS-1 AND DS-2 FOR "U" DIMENSIONS.

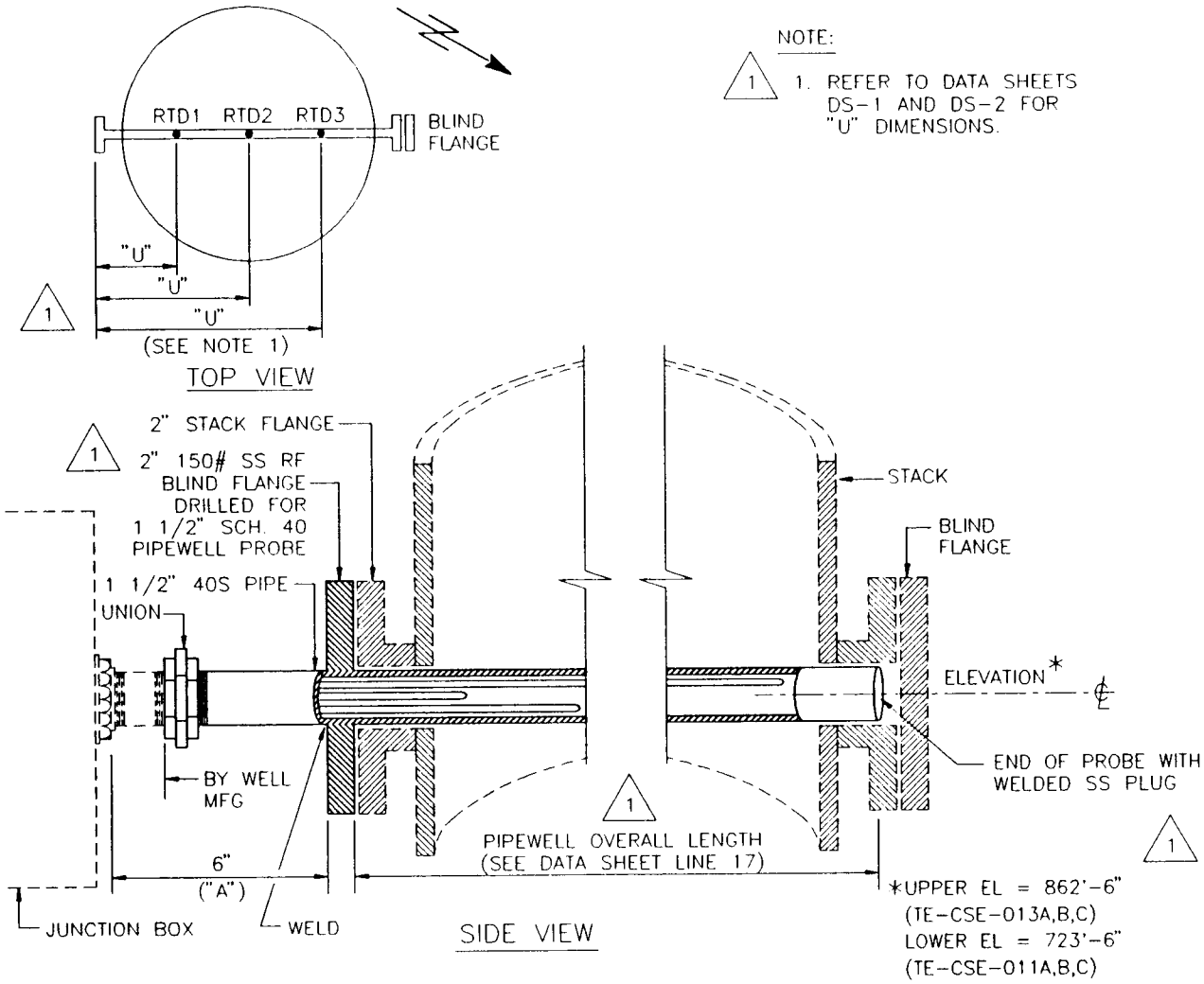

ATTACHMENT B
THERMOWELL – INSTALLATION DETAIL

REV. 1

E350 – 17612W

U.S. DEPARTMENT OF ENERGY
Hanford Waste Vitrification Plant
Richland, Washington
DOE Contract DE-AC06-86RL10838

FLUOR DANIEL, INC.
Advanced Technology Division
Fluor Contract 8457

SECTION 17614
THERMOWELLS AND RESISTANCE TEMPERATURE DETECTORS
CANISTER STORAGE BUILDING VAULT
B-595-C-E350-17614

APPROVED FOR CONSTRUCTION

REVISION 0 PER CR-0859
ISSUE DATE 8/4/93

WAPA YES ___ NO X
QUALITY LEVEL I ___ II X
SAFETY CLASS 1__ 2__ 3X 4__

ORIGINATOR:

A. L. Sanburg 7-29-93
A. L. Sanburg, Control Systems Eng. Date

CHECKER:

B R Carlisle 7/29/93
B. R. Carlisle, Control Systems Eng. Date

APPROVED BY:

J B Bunning
J. B. Bunning Lead Discipline Engineer

07/29/93
Date

07/27/93 8:31am
106\VOL5...\SPECS\E350\17614-0.

SECTION 17614
THERMOWELLS AND RESISTANCE TEMPERATURE DETECTORS
CANISTER STORAGE BUILDING VAULT
B-595-C-E350-17614

TABLE OF CONTENTS

PART		PAGE
PART 1	**GENERAL**	1
1.1	SUMMARY	1
1.2	REFERENCES	1
1.3	RELATED REQUIREMENTS	1
1.4	DEFINITIONS	2
1.5	SYSTEM DESCRIPTION	2
1.6	SUBMITTALS	2
1.7	CLASSIFICATION OF SYSTEM AND COMPONENTS	2
1.8	PROJECT OR SITE ENVIRONMENTAL CONDITIONS	3
PART 2	**PRODUCTS**	3
2.1	MATERIALS AND EQUIPMENT	3
2.2	FABRICATION AND MANUFACTURE	4
2.3	FACTORY ACCEPTANCE TESTS (FAT)	4
2.4	PACKAGING AND SHIPPING	4
PART 3	**EXECUTION**	4
3.1	PREPARATION	4
3.2	INSTALLATION, APPLICATION AND ERECTION	5
3.3	FIELD QUALITY CONTROL	5
3.4	ADJUSTMENTS	5
3.5	CLEANING	5
3.6	PROTECTION	5
3.7	DEMONSTRATION	5
3.8	SCHEDULES	6

ATTACHMENTS

ATTACHMENT	TITLE
A	E350-DS-1 DATA SHEET, RESISTANCE BULB
B	PIPEWELL TEST ROUTING

SECTION 17614
THERMOWELLS AND RESISTANCE TEMPERATURE DETECTORS
CANISTER STORAGE BUILDING VAULT

PART 1 GENERAL

1.1 SUMMARY

This section defines the technical requirements for the installation, inspection, and testing of Thermowells (temperature probe lines) and Resistance Temperature Detectors (RTDs) for the Hanford Waste Vitrification Plant (HWVP) Canister Storage Building Vault. The supply of the embed portion of the Thermowells (temperature probe lines) is also covered in this section. The supply of the vault portion is covered in Section 13099.

1.2 REFERENCES

The publications listed below form a part of this specification to the extent referenced. The publications are referred to in the text by the basic designation only.

AMERICAN SOCIETY OF MECHANICAL ENGINEERS (ASME)

ASME/ANSI B31.3	1990 Chemical Plant and Petroleum Refinery Piping; Addenda B31.3A, 1990; Errata December 1990; Addenda B31.3B, 1991

AMERICAN SOCIETY FOR TESTING AND MATERIALS (ASTM)

ASTM A312/A312M	1991 Standard Specification for Seamless and Welded Austenitic Stainless Steel Pipes

1.3 RELATED REQUIREMENTS

Specification Section 01730	Operation and Maintenance Data
Specification Section 13099	Canister/Overpack Storage Tube Installation
Specification Section 16100	Electrical Installation
Specification Section 17704	General Instrumentation Installation and Testing
Specification Section 17705	Instrument Calibration and Checkout
Drawing H-2-121202, Sheet 1 of 3	Instrument - Canister Storage Building Location Plan

1.4 DEFINITIONS

CAT	-	Construction Acceptance Test
CSV	-	Canister Storage Vault
FAT	-	Factory Acceptance Test
PSIA	-	Pounds Per Square Inch Absolute
RF	-	Raised Face
RFI	-	Radio Frequency Interference
RMS	-	Root Mean Square
RTD	-	Resistance Temperature Detector
TE	-	Temperature Element
TW	-	Thermowell (Temperature Probe Lines)

1.5 SYSTEM DESCRIPTION

Custom fabricated RTDs are required to measure the temperature of the CSV. The RTDs will be supplied by the Seller and shipped to the construction site for installation. The TWs will be fabricated at the construction site per the requirements of this specification.

1.6 SUBMITTALS

Submit the following in accordance with the Vendor Drawing and Data Requirements section of the Order/Subcontract.

(Deleted)

1.6.1 Catalog cuts describing each instrument and accessory.

1.6.2 Certified installation drawings for each instrument.

1.6.3 Manufacturer's operation and maintenance manuals in accordance with Specification Section 01730.

1.6.4 Manufacturer's calibration instructions including calibration curves/tables.

1.6.5 FAT procedure, including the requirements in Paragraph 2.3.

1.6.6 Report confirming the FAT procedure was executed and the results.

1.6.7 Construction Acceptance Test (CAT) procedure, including the requirements in Paragraph 3.3.1.

1.6.8 Report confirming the CAT procedure was executed and the results.

1.7 CLASSIFICATION OF SYSTEM AND COMPONENTS

(Not Used)

1.8 **PROJECT OR SITE ENVIRONMENTAL CONDITIONS**

1.8.1 Climatic and Geographic Site Conditions

A.	Site Elevation	714 feet above sea level
B.	Barometric Pressure	14.3 psia
C.	Outside Design Temperature	
	1) Maximum Design Temperature	110°F
	2) Minimum Design Temperature	-20°F
	3) Wet Bulb Design Temperature	68°F

1.8.2 Operating Environment

A.	Radiation Exposure	1×10^5 rads/hr gamma
B.	Relative Humidity	Not controlled
C.	Temperature	Minimum -20°F Maximum +190°F

PART 2 PRODUCTS

2.1 **MATERIALS AND EQUIPMENT**

2.1.1 Provide the embed portion of the TWs in accordance with Drawing H-2-121202 Instrument Canister Storage Building Location Plan. The vault portion of the TWs are covered in specification Section 13099 Canister/Overpack Storage Tube Installation. Design TWs in accordance with ASME/ANSI B31.3.

2.1.2 Provide RTDs in accordance with the data sheets. RTDs shall have the features listed below unless otherwise specified on the attached data sheets:

A. Platinum element rated for high radiation environment in 1.8.2

B. Temperature/resistance coefficient .0021 ohms/ohm/°F with 0.1 percent interchangeability

C. Resistance 100.0 ± 0.2 ohms at 32°F

D. Resistance temperature detector (RTD) assembly to withstand operating environment in 1.8.2

2.1.3 Labeling

Provide a stainless steel tag, 18 ga. minimum, with the instrument tag number stamped or engraved, affixed to each instrument with stainless steel wire (preferred), stainless steel screws, or rivets. If the instrument size or configuration prevents use of a separate tag, propose an alternate method of tagging such as engraving or stamping for Buyer's approval. The service description is in the Buyer's Instrument Engineering Index, Attachment B to Specification Section 17704.

2.2 **FABRICATION AND MANUFACTURE**

(Not Used)

2.3 **FACTORY ACCEPTANCE TESTS (FAT)**

2.3.1 Prepare a Factory Acceptance Test (FAT) procedure and submit it to the Buyer for approval. Include:

A. Inspections/tests to demonstrate that the design, fabrication, and assembly of the materials and equipment meet the requirements of the design drawings and specifications.

B. (Deleted)

2.3.2 Inspect and test the RTDs according to the Buyer approved FAT procedure.

2.3.3 Submit a report confirming that the inspection and testing has been completed and the results.

2.3.4 Documentation showing the calibration of the RTDs was done by the manufacturer prior to delivery and will comply with the procurement specification.

2.4 **PACKAGING AND SHIPPING**

2.4.1 Protect all shipped materials from moisture, vibration, shock, and heat damage while in transit or interim storage.

PART 3 EXECUTION

3.1 **PREPARATION**

Inspect and calibrate instruments in accordance with Specification Section 17705.

3.2 **INSTALLATION, APPLICATION AND ERECTION**

Install instruments in accordance with Specification Sections 17704, 16100, and the manufacturers' installation instructions.

3.2.1 Fabricate the embed portion of the TW pipe from ASTM A312/A312M Grade 304L stainless steel pipe. Embed shall be fabricated from minimum number of pipe sections to minimize welds. Field fabricate to the length required. See Contract Drawing H-2-121202 for installation details.

3.2.2 Attach the embed portion of the TW to the vault TW per the requirements of Specification Section 13099.

3.3 **FIELD QUALITY CONTROL**

3.3.1 Prepare a CAT procedure and submit it for approval. Include the requirements in specification Section 17705. Verify the RTDs will install into the TWs after each section of TW is welded to ensure welded joints will not impede installation of RTD.

3.3.2 Inspect and test the instrument installations according to the Buyer approved CAT procedure.

3.3.3 Submit a report confirming that the inspection and testing has been completed and the results.

3.4 **ADJUSTMENTS**

(Not Used)

3.5 **CLEANING**

3.5.1 The TW shall be thoroughly cleaned with manufacturer's recommended cleaner inside and out. Thoroughly clean and remove any debris from the inside of the TW prior to installing the cap (end piece). Install cap end piece per specification Section 13099.

3.5.2 No sand, oil, grit, grease, weld splatter, or other foreign material shall be present. All openings shall be capped or otherwise sealed, after cleaning, with a dust tight enclosure.

3.6 **PROTECTION**

(Not Used)

3.7 **DEMONSTRATION**

(Not Used)

3.8 SCHEDULES

(Not Used)

END OF SECTION

FLUOR DANIEL	NO	BY DATE	REVISION	SHEET NO.	REVISION
				E350-DS-1	0
INSTRUMENT SPECIFICATIONS				DATE 06/18/93	CONTRACT 845734
				MANUFACTURER	
DATA SHEET RESISTANCE BULB				BY KCI / CHK'D / APPRV'D	

ALL ITEMS SHALL COMPLY WITH GENERAL SPECIFICATION SHEETS: B-595-C-E350-17614

OVERVIEW

This data sheet defines requirements for the design, supply, and testing of the RTD assemblies to be installed in the Hanford Waste Vitrification Plant. The RTD assemblies shall consist of an RTD and lead wires sheathed in an outer casing. The assembly will be manually fished through a concrete embedded 3/4 inch Schedule 40S, 3O4L stainless steel pipewell.

REQUIREMENTS

Design RTD assemblies to include:

A. RTD characteristics:
- Platinum element
- 3-wire type
- 100 ohm +/- 0.2 ohms at 32 DEG F
- Characteristic curve 0.0021 ohm/ohm/DEG F
- Tip sensitive
- Element length of 1 inch
- One measurement point per assembly

B. Non-gumming materials for parts of the assembly in contact with the pipewell; If stainless steel is used for the sheath, specify a different grade from the pipewell

C. Radiation-resistant materials

D. 1/4 inch maximum assembly diameter

E. Field-adjustable transition between the RTD assembly and the lead wires going to the RTD head (i.e., the length of the assembly can be field shortened)

F. Pass the routing test described below with a Buyer representative present

G. List of all machines and materials required to pass routing test

H. RTD head specifications:
- Cap type cover with retaining chain
- 3/4 inch conduit connection
- Union connection
- 4 terminal connections
- Carbon Steel

ROUTING TEST

Provide a detailed test procedure and submit it for approval. Attachment B to Section 17614 shall be the test pipewell routing used. The pipewell details are as follows:

A. Schedule 40S, 304L stainless steel.

B. Inside diameter 0.824 inches

C. Routing geometry (Refer to Attachment B):
- Curves at A,B, and C are 90 degree bends with a 5 pipe diameter bend radius.
- L1 = 6 feet
- L2 = 16 feet
- L3 = 35 feet
- L4 = 90 feet
- ANGLE = 36 degrees

Construct the test pipewell and ensure that the assembly specified above can be manually fished through the pipewell with an insertion force of no more than 75 pounds. Ensure that the assembly can be removed with a pulling force of no more than 75 pounds. Any lubricants used in the fishing process shall not harden when exposed to radiation.

TAG #	LENGTH	SERVICE DESCRIPTION	TAG #	LENGTH	SERVICE DESCRIPTION	TAG #	LENGTH	SERVICE DESCRIPTION
TE-CSS-062-1	75'	CANISTER STORAGE VAULT LOW ELEVATION	TE-CSS-062-2	116'	CANISTER STORAGE VAULT MEDIUM ELEVATION	TE-CSS-062-3	68'	CANISTER STORAGE VAULT HIGH ELEVATION
TE-CSS-063-1	87'		TE-CSS-063-2	126'		TE-CSS-063-3	79'	
TE-CSS-064-1	99'		TE-CSS-064-2	138'		TE-CSS-064-3	91'	
TE-CSS-065-1	120'		TE-CSS-065-2	69'		TE-CSS-065-3	67'	
TE-CSS-066-1	130'		TE-CSS-066-2	79'		TE-CSS-066-3	77'	
TE-CSS-067-1	142'		TE-CSS-067-2	91'		TE-CSS-067-3	89'	
TE-CSS-068-1	71'		TE-CSS-068-2	121'		TE-CSS-068-3	67'	
TE-CSS-069-1	81'		TE-CSS-069-2	130'		TE-CSS-069-3	77'	
TE-CSS-070-1	93'		TE-CSS-070-2	142'		TE-CSS-070-3	89'	

ATTACHMENT B
PIPEWELL TEST ROUTING

REV. 0

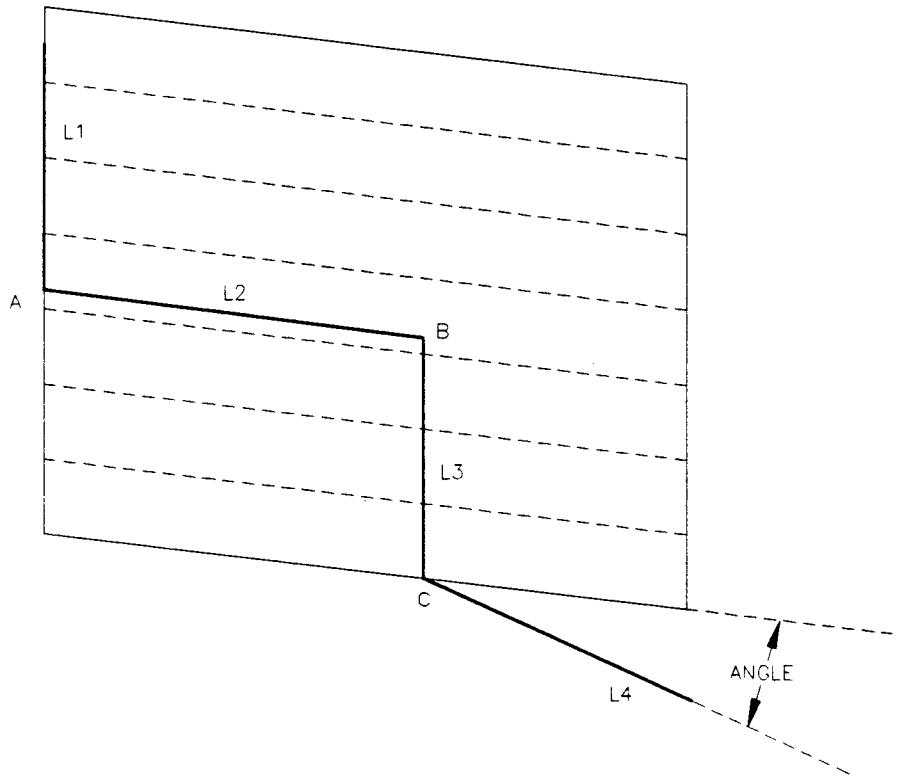

FILE: 17614/B01-0

U.S. DEPARTMENT OF ENERGY
Hanford Waste Vitrification Plant
Richland, Washington
DOE Contract DE-AC06-86RL10838

FLUOR DANIEL, INC.
Advanced Technology Division
Fluor Contract 8457

SECTION 17615
DIFFERENTIAL PRESSURE TRANSMITTERS - ELECTRONIC
B-595-C-E350-17615

APPROVED FOR CONSTRUCTION

REVISION 1 PER CR-0702
ISSUE DATE 8/4/93

WAPA YES ___ NO X
QUALITY LEVEL I ___ II X
SAFETY CLASS 1__ 2__ 3 X 4__

ORIGINATOR:

A. L. Sanburg 7-12-93
A. L. Sanburg, Control Sys. Eng. Date

CHECKER:

B. R. Carlisle 7/12/93
B. R. Carlisle, Control Sys. Eng. Date

APPROVED BY:

J. B. Bunning
J. B. Bunning Lead Discipline Engineer

07/12/93
Date

SECTION 17615
DIFFERENTIAL PRESSURE TRANSMITTERS - ELECTRONIC
B-595-C-E350-17615

TABLE OF CONTENTS

PART		PAGE
PART 1	**GENERAL**	1
1.1	SUMMARY	1
1.2	REFERENCES	1
1.3	RELATED REQUIREMENTS	1
1.4	DEFINITIONS	1
1.5	SYSTEM DESCRIPTION	2
1.6	SUBMITTALS	2
1.7	CLASSIFICATION OF SYSTEMS AND COMPONENTS	2
1.8	PROJECT OR SITE ENVIRONMENTAL CONDITIONS	2
PART 2	**PRODUCTS**	3
2.1	MATERIALS AND EQUIPMENT	3
2.2	FABRICATION AND MANUFACTURE	4
2.3	FACTORY ACCEPTANCE TESTS (FAT)	4
2.4	PACKAGING AND SHIPPING	4
PART 3	**EXECUTION**	4
3.1	PREPARATION	4
3.2	INSTALLATION, APPLICATION AND ERECTION	4
3.3	FIELD QUALITY CONTROL	5
3.4	ADJUSTMENTS	5
3.5	CLEANING	5
3.6	PROTECTION	5
3.7	DEMONSTRATION	5
3.8	SCHEDULES	5

ATTACHMENTS

ATTACHMENT	TITLE
A	E350-DS-1 AND E350-DS-2 DATA SHEETS, DIFFERENTIAL PRESSURE INSTRUMENTS

SECTION 17615
DIFFERENTIAL PRESSURE TRANSMITTERS - ELECTRONIC

PART 1 GENERAL

1.1 SUMMARY

This section defines requirements for the supply, installation, inspection, and testing of electronic differential pressure transmitters for the Hanford Waste Vitrification Plant (HWVP).

1.2 REFERENCES

The publications listed below form a part of this specification to the extent referenced. The publications are referred to in the text by the basic designations only.

AMERICAN SOCIETY OF MECHANICAL ENGINEERS (ASME)

ANSI/ASME B1.20.1	1983 Pipe Threads, General Purpose (Inch)

FACTORY MUTUAL (FM)

Directory	1991 Approval Guide

NATIONAL ELECTRICAL MANUFACTURERS ASSOCIATION (NEMA)

ANSI/NEMA 250	1985 Enclosures for Electrical Equipment (1000 Volts Maximum) Revision No. 1 - May 1986 Revision No. 2 - May 1988

1.3 RELATED REQUIREMENTS

Specification Section 01730	Operation and Maintenance Data
Specification Section 16100	Electrical Installation
Specification Section 17704	General Instrumentation Installation and Testing
Specification Section 17705	Instrument Calibration and Checkout

1.4 DEFINITIONS

CAT - Construction Acceptance Test

FAT - Factory Acceptance Test

1.5 **SYSTEM DESCRIPTION**

(Not Used)

1.6 **SUBMITTALS**

Submit the following in accordance with the Vendor Drawing and Data Requirements section of the Order/Subcontract.

(Deleted)

1.6.1 Catalog cuts describing each instrument and accessory.

1.6.2 Manufacturer's installation drawings and instructions.

1.6.3 Manufacturer's operation and maintenance manuals in accordance with Specification Section 01730.

1.6.4 Manufacturer's calibration instructions including calibration curves/tables.

1.6.5 FAT procedure.

1.6.6 Report confirming the FAT procedure was executed and the results.

1.6.7 CAT procedure including the requirements in Paragraph 3.3.1.

1.6.8 Report confirming the CAT procedure was executed and the results.

1.7 **CLASSIFICATION OF SYSTEMS AND COMPONENTS**

(Not Used)

1.8 **PROJECT OR SITE ENVIRONMENTAL CONDITIONS**

Climatic and Geographic Site Conditions

A.	Site Elevation	714 feet above sea level
B.	Barometric Pressure	14.3 psia
C.	Outside Design Temperature	
	1) Maximum Design Temperature	110°F
	2) Minimum Design Temperature	-20°F
	3) Wet Bulb Design Temperature	68°F

PART 2 PRODUCTS

2.1 MATERIALS AND EQUIPMENT

2.1.1 Provide electronic pressure transmitters in accordance with the data sheets. Include the following features unless otherwise specified in the data sheets:

A. Identical manufacturer and catalog number for components with the same specifications

B. Two-wire type

C. Ability to drive a 550 ohm load under 24 Vdc loop power

D. Digital ("Smart") transmitters with 4-20 Ma dc output signal

E. Selectable upscale or downscale indication of transmitter failure

F. Overpressure protection greater than 200 percent of full scale

G. Maximum zero and span variation of 0.01 percent full scale per volt change in the power supply

H. Maximum zero and span drift of 2 percent per 100°F

I. Accuracy of +/- 0.5 percent of full span

J. ANSI/NEMA 250, Type 1 electrical enclosures

K. Integral indicator

L. Terminal strips for external connection

M. 1/2 inch NPT electrical connections

N. 1/2 inch NPT process connections

O. ANSI/ASME B1.20.1 threaded connections

P. Stainless steel (316 SS) for parts exposed to the process

Q. Radio frequency interference (RFI) from 20 to 1000 MHz with a field strength of 30 Volts per meter shall not affect the output of a transmitter, installed with grounded conduit, by more than +/- 0.1 percent of the span.

2.1.2 Labeling

Provide a stainless steel tag, 18 ga. minimum, with the instrument tag number and service description stamped or engraved, affixed to each instrument with stainless steel wire (preferred), stainless steel screws, or rivets. The service description is in the Buyer's Instrument Engineering Index, Attachment B to Specification Section 17704.

2.2 **FABRICATION AND MANUFACTURE**

(Not Used)

2.3 **FACTORY ACCEPTANCE TESTS (FAT)**

2.3.1 Prepare a Factory Acceptance Test (FAT) procedure and submit it to the Buyer for approval. Include:

A. Inspections/tests to demonstrate that the design, fabrication, and assembly of the materials and equipment meet the requirements of the design drawings and specifications.

B. (Deleted)

2.3.2 Inspect and test the instruments in accordance with the Buyer approved FAT procedure.

2.3.3 Submit a report confirming the FAT procedure has been completed and the results.

2.4 **PACKAGING AND SHIPPING**

Protect all shipped materials from moisture, vibration, shock, and heat damage while in transit or interim storage.

PART 3 EXECUTION

3.1 **PREPARATION**

Inspect and calibrate instruments in accordance with Paragraph 3.1 of Specification Section 17705.

3.2 **INSTALLATION, APPLICATION AND ERECTION**

Install instruments in accordance with Specification Sections 17704, 16100, and the manufacturers' installation instructions.

3.3 **FIELD QUALITY CONTROL**

3.3.1 Prepare a CAT procedure and submit it for approval. Include the requirements in Specification Section 17705.

3.3.2 Inspect and test the instrument installations according to the Buyer approved CAT procedure.

3.3.3 Submit a report confirming the CAT procedure has been completed and the results.

3.4 **ADJUSTMENTS**

(Not Used)

3.5 **CLEANING**

(Not Used)

3.6 **PROTECTION**

(Not Used)

3.7 **DEMONSTRATION**

(Not Used)

3.8 **SCHEDULES**

(Not Used)

END OF SECTION

ATTACHMENT A

NO	BY / DATE	REVISION
1	ALS 06/15/93	RE-NO. PER CR-0702.

FLUOR DANIEL

INSTRUMENT SPECIFICATIONS

DIFFERENTIAL PRESSURE INSTRUMENTS

SHEET NO.	REVISION
E350-DS-1	1
DATE 6/26/92	CONTRACT 845734
MANUFACTURER Rosemount or Equal	
BY FJM	CHK'D BRC / APPRV'D JBB

ALL ITEMS SHALL COMPLY WITH GENERAL SPECIFICATION SHEETS: B-595-C-E350-17615

GENERAL	1	TAG NUMBER				PIT-VAX-321			PDIT-VAX-323-1			PDIT-VAX-323-2	
	2	P&ID AND FRAME NUMBER				H-2-123370-5			H-2-123370-5			H-2-123370-5	
	3	VESSEL OR EQUIPMENT NUMBER				FH-620-003A,B			FH-620-003A			FH-620-003B	
	4	SERVICE				HPS VACUUM SYSTEM HEPA FILTERS INLET			HPS VACUUM SYSTEM HEPA FILTER			HPS VACUUM SYSTEM HEPA FILTER	
	5												
	6												
	7												
TRANSDUCER	8	TYPE				DIFFERENTIAL (SEE NOTE 1)			DIFFERENTIAL			DIFFERENTIAL	
	9	OUTPUT				4-20 mA (2-WIRE)			4-20 mA (2-WIRE)			4-20 mA (2-WIRE)	
	10	CASE				MFR. STD.			MFR. STD.			MFR. STD.	
	11	MOUNTING				2" YOKE			2" YOKE			2" YOKE	
	12	POWER SUPPLY				24 VDC (LOOP POWERED)			24 VDC (LOOP POWERED)			24 VDC (LOOP POWERED)	
	13	CONDUIT CONNECTION SIZE				1/2" FNPT			1/2" FNPT			1/2" FNPT	
	14	ELECTRICAL CLASSIFICATION				GENERAL PURPOSE			GENERAL PURPOSE			GENERAL PURPOSE	
	15	ELECTRICAL ENCLOSURE RATING				NEMA 1			NEMA 1			NEMA 1	
PRESSURE ELEMENT	16	ELEMENT				DIAPHRAGM			DIAPHRAGM			DIAPHRAGM	
	17	ELEMENT MATERIAL				316 SS			316 SS			316 SS	
	18	BODY MATERIAL				316 SS			316 SS			316 SS	
	19	PROCESS CONNECTION SIZE				1/2" FNPT			1/2" FNPT			1/2" FNPT	
	20	VENT AND DRAIN				316 SS			316 SS			316 SS	
	21	ELEMENT RANGE				BY SELLER			0 - 0.83 TO 0 - 25 IN WC			0 - 0.83 TO 0 - 25 IN WC	
	22	CALIBRATED RANGE				0 - (-)14 PSIG			0 - 0.4 PSID			0 - 0.4 PSID	
	23												
	24												
ACCESSORIES	25	MOUNTING BRACKET				YES			YES			YES	
	26	LOCAL INDICATOR				YES (INTEGRAL)			YES (INTEGRAL)			YES (INTEGRAL)	
	27	DIAPHRAGM SEAL				---			---			---	
	28	SEAL MATERIAL				---			---			---	
	29	CAPILLARY TUBE				---			---			---	
	30	FILL FLUID				---			---			----	
	31												
	32												
	33												
PROCESS	34	FLUID				AIR			AIR			AIR	
	35	UP STREAM PRESS.	MAX.	NORM.	MIN.	---	---	---	0 PSIG	-9.7 PSIG	-10.1 PSIG	0 PSIG	-9.7 PSIG	-10.1 PSIG
	36	DOWN STREAM PRESS.	MAX.	NORM.	MIN.	---	---	---	0 PSIG	-9.8 PSIG	-10.3 PSIG	0 PSIG	-9.8 PSIG	-10.3 PSIG
	37	UP STREAM TEMP.	MAX.	NORM.	MIN.	---	---	----	85 DEG F	65 TO 85 DEG F	65 DEG F	85 DEG F	65 TO 85 DEG F	65 DEG F
	38	DOWN STREAM TEMP.	MAX.	NORM.	MIN.	---	----	----	85 DEG F	65 TO 85 DEG F	65 DEG F	85 DEG F	65 TO 85 DEG F	65 DEG F
	39	PRESSURE	MAX.	NORM.	MIN.	0 PSIG	-10.1 PSIG	-10.3 PSIG	---	---	---	---	---	---
	40	TEMPERATURE	MAX.	NORM.	MIN.	85 DEG F	65 - 85 DEG F	65 DEG F	---	---	---	---	---	---
	41	DIFFERENTIAL PRESS.	MAX.	NORM.	MIN.	---	---	--	0.2 PSID	0.1 PSID	0 PSID	0.2 PSID	0.1 PSID	0 PSID
	42												
MFR	43												
	44	OUTLINE DIMENSION				CATALOG			CATALOG			CATALOG	
	45	MFR. MODEL NUMBER				ROSEMOUNT "SMART" 3051CD			ROSEMOUNT "SMART" 3051CD			ROSEMOUNT "SMART" 3051CD	

NOTES

1. To measure negative gauge pressure, connect low pressure connection to process and vent high pressure connection to atmosphere such that 0 psig = 4mA and -14 psig = 20 mA.

ATTACHMENT A

FLUOR DANIEL INSTRUMENT SPECIFICATIONS DIFFERENTIAL PRESSURE INSTRUMENTS	NO	BY DATE	REVISION	SHEET NO.	REVISION
		ALS	RE-NO. PER CR-0702.	E350-DS-2	1
	1	06/15/93		DATE 6/26/92	CONTRACT 845734
				MANUFACTURER Rosemount or Equal	
				BY FJM / CHK'D BRC	APPRV'D JBB

ALL ITEMS SHALL COMPLY WITH GENERAL SPECIFICATION SHEETS: B-595-C-E350-17615

GENERAL	1	TAG NUMBER				PDIT-VAX-330-2			PDIT-VAX-330-1			
	2	P&ID AND FRAME NUMBER				H-2-123370-5			H-2-123370-5			
	3	VESSEL OR EQUIPMENT NUMBER				VP-620-003VB			VP-620-003VA			
	4	SERVICE				HPS VACUUM BLOWER			HPS VACUUM BLOWER			
	5											
	6											
	7											
TRANSDUCER	8	TYPE				DIFFERENTIAL			DIFFERENTIAL			
	9	OUTPUT				4-20 mA (2-WIRE)			4-20 mA (2-WIRE)			
	10	CASE				MFR. STD.			MFR. STD.			
	11	MOUNTING				2" YOKE			2" YOKE			
	12	POWER SUPPLY				24 VDC (LOOP POWERED)			24 VDC (LOOP POWERED)			
	13	CONDUIT CONNECTION SIZE				1/2" FNPT			1/2" FNPT			
	14	ELECTRICAL CLASSIFICATION				GENERAL PURPOSE			GENERAL PURPOSE			
	15	ELECTRICAL ENCLOSURE RATING				NEMA 1			NEMA 1			
PRESSURE ELEMENT	16	ELEMENT				DIAPHRAGM			DIAPHRAGM			
	17	ELEMENT MATERIAL				316 SS			316 SS			
	18	BODY MATERIAL				316 SS			316 SS			
	19	PROCESS CONNECTION SIZE				1/2" FNPT			1/2" FNPT			
	20	VENT AND DRAIN				316 SS			316 SS			
	21	ELEMENT RANGE				0 - 33.3 TO 0 - 1000 IN WC			0 - 33.3 TO 0 - 1000 IN WC			
	22	CALIBRATED RANGE				0 - 15 PSID			0 - 15 PSID			
	23											
	24											
ACCESSORIES	25	MOUNTING BRACKET				YES			YES			
	26	LOCAL INDICATOR				YES (INTEGRAL)			YES (INTEGRAL)			
	27	DIAPHRAGM SEAL				---			---			
	28	SEAL MATERIAL				---			---			
	29	CAPILLARY TUBE				---			---			
	30	FILL FLUID				---			---			
	31											
	32											
	33											
PROCESS	34	FLUID				AIR			AIR			
	35	UP STREAM PRESS.	MAX.	NORM.	MIN.	0 PSIG	-9.8 PSIG	-10.3 PSIG	0 PSIG	-9.8 PSIG	-10.3 PSIG	
	36	DOWN STREAM PRESS.	MAX.	NORM.	MIN.	0.5 PSIG	0.1 PSIG	0 PSIG	0.5 PSIG	0.1 PSIG	0 PSIG	
	37	UP STREAM TEMP.	MAX.	NORM.	MIN.	85 DEG F	65 to 85 DEG F	65 DEG F	85 DEG F	65 to 85 DEG F	65 DEG F	
	38	DOWN STREAM TEMP.	MAX.	NORM.	MIN.	350 DEG F	310 DEG F	65 DEG F	350 DEG F	310 DEG F	65 DEG F	
	39	PRESSURE	MAX.	NORM.	MIN.	---	---	---	---	---	---	
	40	TEMPERATURE	MAX.	NORM.	MIN.	---	---	---	---	---	---	
	41	DIFFERENTIAL PRESS.	MAX.	NORM.	MIN.	10.8 PSID	9.9 PSID	0 PSID	10.8 PSID	9.9 PSID	0 PSID	
	42											
MFR	43											
	44	OUTLINE DIMENSION				CATALOG			CATALOG			
	45	MFR. MODEL NUMBER				ROSEMOUNT "SMART" 3051CD			ROSEMOUNT "SMART" 3051CD			

NOTES

U.S. DEPARTMENT OF ENERGY
Hanford Waste Vitrification Plant
Richland, Washington
DOE Contract DE-AC06-86RL10838

FLUOR DANIEL, INC.
Advanced Technology Division
Fluor Contract 8457

SECTION 17626
PRESSURE GAUGES
B-595-C-E350-17626

APPROVED FOR CONSTRUCTION

REVISION 1 PER CR-0702
ISSUE DATE 8/4/93

WAPA YES ___ NO X
QUALITY LEVEL I ___ II X
SAFETY CLASS 1__ 2__ 3X 4__

ORIGINATOR:

A. L. Sanburg 7-29-93
A. L. Sanburg, Control Sys. Eng. Date

CHECKER:

B R Carlisle 7/29/93
B. R. Carlisle, Con. Sys. Eng. Date

APPROVED BY:

J B Bunning
J. B. Bunning Lead Discipline Engineer

07/29/93
Date

SECTION 17626
PRESSURE GAUGES
B-595-C-E350-17626

TABLE OF CONTENTS

PART		PAGE
PART 1 GENERAL		1
1.1	SUMMARY	1
1.2	REFERENCES	1
1.3	RELATED REQUIREMENTS	1
1.4	DEFINITIONS	1
1.5	SYSTEM DESCRIPTION	1
1.6	SUBMITTALS	1
1.7	CLASSIFICATION OF SYSTEMS AND COMPONENTS	2
1.8	PROJECT OR SITE ENVIRONMENTAL CONDITIONS	2
PART 2 PRODUCTS		2
2.1	MATERIALS AND EQUIPMENT	2
2.2	FABRICATION AND MANUFACTURE	3
2.3	FACTORY ACCEPTANCE TESTS (FAT)	3
2.4	PACKAGING AND SHIPPING	3
PART 3 EXECUTION		4
3.1	PREPARATION	4
3.2	INSTALLATION, APPLICATION AND ERECTION	4
3.3	FIELD QUALITY CONTROL	4
3.4	ADJUSTMENTS	4
3.5	CLEANING	4
3.6	PROTECTION	4
3.7	DEMONSTRATION	4
3.8	SCHEDULES	4

ATTACHMENTS

ATTACHMENT	TITLE
A	E350-DS-1 AND E350-DS-2 DATA SHEETS, PRESSURE GAUGES

SECTION 17626
PRESSURE GAUGES

PART 1 GENERAL

1.1 SUMMARY

This section defines the technical requirements for the supply, installation, inspection, and testing of pressure gauges for the Hanford Waste Vitrification Plant (HWVP).

1.2 REFERENCES

The publications listed below form a part of this specification to the extent referenced. The publications are referred to in the text by the basic designations only.

AMERICAN SOCIETY OF MECHANICAL ENGINEERS (ASME)

ANSI/ASME B1.20.1 1983 Pipe Threads, General Purpose (Inch)

1.3 RELATED REQUIREMENTS

Specification Section 01730	Operation and Maintenance Data
Specification Section 17704	General Instrumentation Installation and Testing
Specification Section 17705	Instrument Calibration and Checkout

1.4 DEFINITIONS

CAT - Construction Acceptance Test

FAT - Factory Acceptance Test

1.5 SYSTEM DESCRIPTION

(Not Used)

1.6 SUBMITTALS

Submit the following in accordance with the Vendor Drawing and Data Requirements section of the Order/Subcontract:

(Deleted)

1.6.1 Catalog cuts describing each instrument and accessory.

1.6.2 Manufacturer's installation drawings and instructions.

1.6.3 Manufacturer's operation and maintenance manuals in accordance with Specification Section 01730.

1.6.4 Manufacturer's calibration instructions including calibration curves/tables.

1.6.5 FAT procedure.

1.6.6 Report confirming the FAT procedure was executed and the results.

1.6.7 CAT procedure including the requirements in Paragraph 3.3.1.

1.6.8 Report confirming the CAT procedure was executed and the results.

1.7 **CLASSIFICATION OF SYSTEMS AND COMPONENTS**

(Not Used)

1.8 **PROJECT OR SITE ENVIRONMENTAL CONDITIONS**

Climatic and Geographic Site Conditions

A. Site Elevation 714 feet above sea level

B. Barometric Pressure 14.3 psia

C. Outside Design Temperature

1) Maximum Design Temperature 110°F

2) Minimum Design Temperature -20°F

3) Wet Bulb Design Temperature 68°F

PART 2 PRODUCTS

2.1 **MATERIALS AND EQUIPMENT**

2.1.1 Provide pressure gauges in accordance with the data sheets. Include the following features unless otherwise specified in the data sheets:

A. Identical manufacturer and catalog number for components with the same specifications

B. White, non-rusting, metal dials with black figures and graduations

C. Black pointers with micrometer adjustment

E. Weatherproof case

F. ANSI/ASME B1.20.1 threaded connections

G. Accuracy 1/2 percent of maximum scale

H. Element ratings and overpressure protection greater than 1.33 times the maximum scale reading

I. Rupture discs or blowout plugs for blowout protection

J. Black phenolic cases with a screwed ring or plastic turret with snap ring

2.1.2 Labeling

Provide a stainless steel tag, 18 ga. minimum, with the instrument tag number and service description stamped or engraved, affixed to each instrument with stainless steel wire (preferred), stainless steel screws, or rivets. The service description is in the Buyer's Instrument Engineering Index, Attachment B to Specification Section 17704.

2.2 FABRICATION AND MANUFACTURE

(Not Used)

2.3 FACTORY ACCEPTANCE TESTS (FAT)

2.3.1 Prepare a Factory Acceptance Test (FAT) procedure and submit it to the Buyer for approval. Include:

A. Inspections/tests to demonstrate that the design, fabrication, and assembly of the materials and equipment meet the requirements of the design drawings and specifications.

B. (Deleted)

2.3.2 Inspect and test the instruments in accordance with the Buyer approved FAT procedure.

2.3.3 Submit a report confirming the FAT procedure has been completed and the results.

2.4 PACKAGING AND SHIPPING

Protect all shipped materials from moisture, vibration, shock, and heat damage while in transit or interim storage.

PART 3 EXECUTION

3.1 PREPARATION

Inspect and calibrate instruments in accordance with Paragraph 3.1 of Specification Section 17705.

3.2 INSTALLATION, APPLICATION AND ERECTION

Install instruments in accordance with Specification Section 17704 and the manufacturer's installation instructions.

3.3 FIELD QUALITY CONTROL

3.3.1 Prepare a CAT procedure and submit it for approval. Include the requirements in Specification Section 17705.

3.3.2 Inspect and test the instrument installations according to the Buyer approved CAT procedure.

3.3.3 Submit a report confirming the CAT procedure has been completed and the results.

3.4 ADJUSTMENTS

(Not Used)

3.5 CLEANING

(Not Used)

3.6 PROTECTION

(Not Used)

3.7 DEMONSTRATION

(Not Used)

3.8 SCHEDULES

(Not Used)

END OF SECTION

ATTACHMENT A

FLUOR DANIEL INSTRUMENT SPECIFICATIONS PRESSURE GAUGES	NO	BY DATE	REVISION	SHEET NO.	REVISION
				E350-DS-1	1
	1	ALS 06/15/93	RE-NO. PER CR-0702 & MISC. REVISIONS.	DATE 6/26/92	CONTRACT 845734
				MANUFACTURER ⚠ Ashcroft or Equal	
				BY KN	CHK'D BRC / APPRV'D JBB

ALL ITEMS SHALL COMPLY WITH GENERAL SPECIFICATION SHEETS: B-595-C-E350-17626

GENERAL SPECIFICATIONS

1. TYPE INDICATING [X] RECEIVER [ ] OTHER
2. MOUNTING SURFACE [ ] LOCAL [X] FLUSH [ ]
3. DIAL SIZE: 4-1/2" DIA. [X] OTHER
4. DIAL COLOR WHITE [X] OTHER
5. CASE MATL. CAST IRON [ ] ALUMINUM [ ] PHENOL [X] OTHER
6. RING TYPE SCREWED [X] HINGED [ ] SLIP [ ] OTHER
7. ACCURACY +,- .5% x F.S. [ ] OTHER +,- 3% x F.S.
8. OVERRANGE PROTECTION 1.3 x F.S. [X] OTHER
9. BLOWOUT PROTECTION SIDE [ ] BACK [ ]
10. WEEP HOLE NONE
11. MFR. MODEL NUMBER Ashcroft 1188S
12. PRESS. ELEMENT BOURDON [ ] BELLOWS [X] OTHER
13. ELEMENT MATL. BRONZE [ ] STEEL [ ] TYPE 316 SS STNL. STEEL [X] OTHER
14. SOCKET MATL. BRONZE [ ] STEEL [ ] TYPE 316 SS STNL. STEEL [X] OTHER
15. CONNECTION-NPT 1/2" [X] OTHER BOTTOM [X] SIDE [ ]
16. MOVEMENT BRONZE [ ] HARDENED [ ] STNLS. STEEL [X] OTHER
17. DIAPHRAGM SEAL [ ] MFR TYPE WELDED [ ] OTHER
18. DIAPHRAGM MATERIAL TOP HOUSING MATL. LOWER HOUSING MATL.
19. CONNECTION GAUGE-1/2" NPT [ ] PROCESS-1" NPT [ ] OTHER
20. CLEAN OUT TYPE [ ] FILL CONNECTION [ ]
21. FILL FLUID
22. TEMP. RANGE

GENERAL NOTE:
1. DIAL FACES SHALL BE MARKED WITH THE WORDS "STEEL TUBE" OR "BRONZE TUBE", ETC., AND FURNISHED WITH A PLATE SHOWING TAG NO. (NOT REQUIRED ON 2" GAUGES).
2. WEEP HOLE IS NOT REQUIRED IF CONDENSATE CAN DRAIN AROUND SOCKET.

REV	QTY.	TAG NUMBER	RANGE ELEMENT (in. WC)	RANGE DIAL (in. WC)	OPER. PRESS. (in. WC) MIN	NORM.	MAX.	SERVICE	P & ID	MODEL NUMBER	NOTES
	1	PI-VAX-332-1	0-20	0-20	0	2.8	13.8	VACUUM PUMP DISCHARGE (VP-620-003VA)	H-2-123370-5	1188S	1
	1	PI-VAX-332-2	0-20	0-20	0	2.8	13.8	VACUUM PUMP DISCHARGE (VP-620-003VB)	H-2-123370-5	1188S	1

NOTES
1. OPERATING TEMPERATURES: MIN.: 65 DEG F; NORM.: 310 DEG F; MAX.: 350 DEG F

FOR OUTLINE DIMENSIONS: SEE CATALOG [X] CERTIFIED PRINT [ ] OTHER

ATTACHMENT A

FLUOR DANIEL INSTRUMENT SPECIFICATIONS PRESSURE GAUGES	NO	BY DATE	REVISION	SHEET NO.	REVISION
		ALS	RE-NO. PER CR-0702 &	E350-DS-2	1
	1	06/15/93	MISC. REVISIONS.	DATE 6/26/92	CONTRACT 845734
				MANUFACTURER Ashcroft or Equal	
				BY KN	CHK'D BRC / APPRV'D JBB

ALL ITEMS SHALL COMPLY WITH GENERAL SPECIFICATION SHEETS: B-595-C-E350-17626

GENERAL SPECIFICATIONS

1. TYPE INDICATING [X] RECEIVER [ ] OTHER
2. MOUNTING SURFACE [ ] LOCAL [X] FLUSH [ ]
3. DIAL SIZE: 4-1/2" DIA. [X] OTHER
4. DIAL COLOR WHITE [X] OTHER
5. CASE MATL. CAST IRON [ ] ALUMINUM [ ] PHENOL [X] OTHER
6. RING TYPE SCREWED [X] HINGED [ ] SLIP [ ] OTHER
7. ACCURACY +,- .5% x F.S. [X] OTHER
8. OVERRANGE PROTECTION 1.3 x F.S. [X] OTHER
9. BLOWOUT PROTECTION SIDE [ ] BACK [ ]
10. WEEP HOLE NONE
11. MFR. MODEL NUMBER Ashcroft 1279 SS ⚠
12. PRESS. ELEMENT BOURDON [X] BELLOWS [ ] OTHER
13. ELEMENT MATL. BRONZE [ ] STEEL [ ] TYPE 316 SS STNL. STEEL [X] OTHER
14. SOCKET MATL. BRONZE [ ] STEEL [ ] TYPE 316 SS STNL. STEEL [X] OTHER
15. CONNECTION-NPT 1/2" [X] OTHER BOTTOM [X] SIDE [ ]
16. MOVEMENT BRONZE [ ] HARDENED [ ] STNLS. STEEL [X] OTHER
17. DIAPHRAGM SEAL [ ] MFR TYPE WELDED [ ] OTHER
18. DIAPHRAGM MATERIAL TOP HOUSING MATL. LOWER HOUSING MATL.
19. CONNECTION GAUGE-1/2" NPT [ ] PROCESS-1" NPT [ ] OTHER
20. CLEAN OUT TYPE [ ] FILL CONNECTION [ ]
21. FILL FLUID
22. TEMP. RANGE

GENERAL NOTE:
1. DIAL FACES SHALL BE MARKED WITH THE WORDS "STEEL TUBE" OR "BRONZE TUBE", ETC., AND FURNISHED WITH A PLATE SHOWING TAG NO. (NOT REQUIRED ON 2" GAUGES).
2. WEEP HOLE IS NOT REQUIRED IF CONDENSATE CAN DRAIN AROUND SOCKET.

REV	QTY.	TAG NUMBER	RANGE ELEMENT (in. Hg)	RANGE DIAL (in. Hg)	OPER. PRESS. (in. Hg) MIN.	NORM.	MAX	SERVICE	P & ID	MODEL NUMBER	NOTES
	1	PI-VAX-328-1 ⚠	30-0	30-0	21	20	0	VACUUM PUMP SUCTION (VP-620-003VA)	H-2-123370-5	1279 SS ⚠	1
	1	PI-VAX-328-2 ⚠	30-0	30-0	21	20	0	VACUUM PUMP SUCTION (VP-620-003VB)	H-2-123370-5	1279 SS ⚠	1

NOTES
1. OPERATING TEMPERATURES: MIN.: 65 DEG F; NORM.: 65-85 DEG F; MAX.: 85 DEG F

FOR OUTLINE DIMENSIONS: SEE CATALOG [X] CERTIFIED PRINT [ ] OTHER

U.S. DEPARTMENT OF ENERGY
Hanford Waste Vitrification Plant
Richland, Washington
DOE Contract DE-AC06-86RL10838

FLUOR DANIEL, INC.
Advanced Technology Division
Fluor Contract 8457

SECTION 17630
MASS FLOWMETERS
B-595-C-E350-17630

APPROVED FOR CONSTRUCTION

REVISION 1 PER CR-0702
ISSUE DATE 8/4/93

WAPA YES ___ NO X
QUALITY LEVEL I ___ II X
SAFETY CLASS 1__ 2__ 3 X 4__

ORIGINATOR:

A. L. Sanburg 7-29-93
A. L. Sanburg, Control Sys. Engr. Date

CHECKER:

B R Carlisle 7/29/93
B. R. Carlisle, Control Sys. Engr. Date

APPROVED BY:

J B Bunning
J. B. Bunning Lead Discipline Engineer

07/29/93
Date

SECTION 17630
MASS FLOWMETERS
B-595-C-E350-17630

TABLE OF CONTENTS

PART		PAGE
PART 1	**GENERAL**	1
1.1	SUMMARY	1
1.2	REFERENCES	1
1.3	RELATED REQUIREMENTS	1
1.4	DEFINITIONS	2
1.5	SYSTEM DESCRIPTION	2
1.6	SUBMITTALS	2
1.7	CLASSIFICATION OF SYSTEMS AND COMPONENTS	2
1.8	PROJECT OR SITE ENVIRONMENTAL CONDITIONS	2
PART 2	**PRODUCTS**	3
2.1	MATERIALS AND EQUIPMENT	3
2.2	FABRICATION AND MANUFACTURE	4
2.3	FACTORY ACCEPTANCE TESTS (FAT)	4
2.4	PACKAGING AND SHIPPING	4
PART 3	**EXECUTION**	4
3.1	PREPARATION	4
3.2	INSTALLATION, APPLICATION AND ERECTION	4
3.3	FIELD QUALITY CONTROL	4
3.4	ADJUSTMENTS	5
3.5	CLEANING	5
3.6	PROTECTION	5
3.7	DEMONSTRATION	5
3.8	SCHEDULES	5

ATTACHMENTS

ATTACHMENT	TITLE
A	E350-DS-1 DATA SHEET, THERMAL MASS FLOWMETERS

SECTION 17630
MASS FLOWMETERS

PART 1 GENERAL

1.1 SUMMARY

This section defines the requirements for the supply, installation, inspection, and testing of mass flowmeters for the Hanford Waste Vitrification Plant (HWVP).

1.2 REFERENCES

The publications listed below form a part of this specification to the extent referenced. The publications are referred to in the text by the basic designations only.

AMERICAN SOCIETY OF MECHANICAL ENGINEERS (ASME)

ANSI/ASME B1.20.1	1983 Pipe Threads, General Purpose (Inch)
ASME/ANSI B16.5	1988 Pipe Flanges and Flanged Fittings; Errata - October 1988

FACTORY MUTUAL (FM)

Directory	1991 Approval Guide

NATIONAL ELECTRICAL MANUFACTURERS ASSOCIATION (NEMA)

ANSI/NEMA 250	1985 Enclosures for Electrical Equipment (1000 Volts Maximum) Revision No. 1 - May 1986 Revision No. 2 - May 1988

UNDERWRITERS LABORATORIES INC. (UL)

Directory	1991 Electric Appliance and Utilization Equipment Directory
Directory	1991 Recognized Component Directory

1.3 RELATED REQUIREMENTS

Specification Section 01730	Operation and Maintenance Data
Specification Section 16100	Electrical Installation

Specification Section 17704	General Instrumentation Installation and Testing
Specification Section 17705	Instrument Calibration and Checkout

1.4 **DEFINITIONS**

CAT - Construction Acceptance Test

FAT - Factory Acceptance Test

1.5 **SYSTEM DESCRIPTION**

(Not Used)

1.6 **SUBMITTALS**

Submit the following in accordance with the Vendor Drawing and Data Requirements section of the Order/Subcontract:

(Deleted)

1.6.1 Catalog cuts describing each instrument and accessory.

1.6.2 Manufacturer's installation drawings and instructions.

1.6.3 Manufacturer's operation and maintenance manuals in accordance with Specification Section 01730.

1.6.4 Manufacturer's calibration instructions including calibration curves/tables.

1.6.5 FAT procedure.

1.6.6 Report confirming the FAT procedure was executed and the results.

1.6.7 CAT procedure including the requirements in Paragraph 3.3.1.

1.6.8 Report confirming the CAT procedure was executed and the results.

1.7 **CLASSIFICATION OF SYSTEMS AND COMPONENTS**

(Not Used)

1.8 **PROJECT OR SITE ENVIRONMENTAL CONDITIONS**

Climatic and Geographic Site Conditions

A.	Site Elevation	714 feet above sea level
B.	Barometric Pressure	14.3 psia

C. Outside Design Temperature

1) Maximum Design Temperature 110°F

2) Minimum Design Temperature -20°F

3) Wet Bulb Design Temperature 68°F

PART 2 PRODUCTS

2.1 MATERIALS AND EQUIPMENT

2.1.1 Provide mass flowmeters in accordance with the data sheets. Include the following features unless otherwise specified in the data sheets:

A. Identical manufacturer and catalog number for components with the same specifications

B. UL Listed Devices, UL Recognized Components, or FM Approved Devices (refer to UL and FM directories)

C. 120 Vac, 60 Hz power, or 24 Vdc (loop) power input

D. Digital ("Smart") transmitters with 4-20 mAdc output signal

E. Stainless steel (316 SS) wetted parts

F. Accuracy +/- 3 percent of reading

G. Integral indicator

H. ASME/ANSI B16.5 flanged connections

I. ANSI/ASME B1.20.1 threaded connections

J. Radio frequency interference (RFI) from 20 to 1000 MHz with a field strength of 30 Volts per meter shall not affect the output of a transmitter, installed with grounded conduit, by more than +/- 0.1 percent of the span.

2.1.2 Labeling

Provide a stainless steel tag, 18 ga. minimum, with the instrument tag number and service description stamped or engraved, affixed to each instrument with stainless steel wire (preferred), stainless steel screws, or rivets. The service description is in the Buyer's Instrument Engineering Index, Attachment B to Specification Section 17704.

2.2 **FABRICATION AND MANUFACTURE**

(Not Used)

2.3 **FACTORY ACCEPTANCE TESTS (FAT)**

2.3.1 Prepare a Factory Acceptance Test (FAT) procedure and submit it to the Buyer for approval. Include:

A. Inspections/tests to demonstrate that the design, fabrication, and assembly of the materials and equipment meet the requirements of the design drawings and specifications.

B. (Deleted)

2.3.2 Inspect and test the instruments in accordance with the Buyer approved FAT procedure.

2.3.3 Submit a report confirming the FAT procedure has been completed and the results.

2.4 **PACKAGING AND SHIPPING**

Protect all shipped materials from moisture, vibration, shock, and heat damage while in transit or interim storage.

PART 3 EXECUTION

3.1 **PREPARATION**

Inspect and calibrate instruments in accordance with Paragraph 3.1 of Specification Section 17705.

3.2 **INSTALLATION, APPLICATION AND ERECTION**

Install instruments in accordance with Specification Sections 17704, 16100, and the manufacturer's installation instructions.

3.3 **FIELD QUALITY CONTROL**

3.3.1 Prepare a CAT procedure and submit it for approval. Include the requirements in Specification Section 17705.

3.3.2 Inspect and test the instrument installations according to the Buyer approved CAT procedure.

3.3.3 Submit a report confirming the CAT procedure has been completed and the results.

3.4 **ADJUSTMENTS**

(Not Used)

3.5 **CLEANING**

(Not Used)

3.6 **PROTECTION**

(Not Used)

3.7 **DEMONSTRATION**

(Not Used)

3.8 **SCHEDULES**

(Not Used)

END OF SECTION

ATTACHMENT A

NO	BY DATE	REVISION	SHEET NO.	REVISION
	ALS	RE-NO. PER CR-0702 &	E350-DS-1	1
1	06/15/93	MISC. REVISIONS.	DATE 6/26/92	CONTRACT 845734
			MANUFACTURER FCI or Equal	
			BY FJM	CHK'D BRC / APPRV'D JBB

FLUOR DANIEL

INSTRUMENT SPECIFICATIONS

THERMAL MASS FLOWMETERS

ALL ITEMS SHALL COMPLY WITH GENERAL SPECIFICATION SHEETS: B-595-C-E350-17630

GENERAL	1	TAG NUMBER			FE-VAX-320 ⚠		
	2	P&ID	FRAME NUMBER		H-2-123370-5		
	3	SERVICE			HPS VACUUM SYSTEM HEPA FILTER		
	4						
	5						
	6						
	7						
SERVICE CONDITIONS	8	PIPE I.D.	NOMINAL	ACTUAL	3"		3.068"
	9	PROCESS PIPE MATERIAL		SCHEDULE	CARBON STEEL		STD. WT.
	10	FLUID TYPE			AIR		
	11	FLUID PHASE			GAS		
	12	FLOW	MAXIMUM / NORMAL	MINIMUM	31.6 SCFM	25 SCFM	0 SCFM
	13	PRESSURE	MAXIMUM / NORMAL	MINIMUM	0 PSIG	-9.6 PSIG	-10.3 PSIG
	14	TEMPERATURE	MAXIMUM / NORMAL	MINIMUM	150 DEG F	85 DEG F	---
	15	VISCOSITY	@F.T.	@BASE COND.	---		---
	16	SP. GR.	@BASE COND.	@FLOWING COND.	1		0.31
	17	COMPRESSIBILITY	@BASE COND.	@FLOW COND.	---		0.97
	18	STEAM DENSITY	QUALITY		---		---
	19	BASE	PRESSURE	TEMPERATURE	14.7 PSIA		60 DEG F
	20						
SENSOR	21	TYPE			THERMAL (RTD)		
	22	PIPE ORIENTATION			HORIZONTAL		
	23	MOUNTING			SIDE OF PIPE		
	24	MATERIAL, ALL WETTED PARTS			316 SS		
	25	LINE CONNECTION SIZE	TYPE		3/4" MNPT		SCREWED
	26	UPSTREAM METER RUN			8' (32 DIAMETERS)		
	27	DOWNSTREAM METER RUN			3'(12 DIAMETERS)		
	28	INSERTION LENGTH "U" ⚠			5 INCHES (NOTE 2) ⚠		
	29						
	30						
	31						
TRANSDUCER	32	TAG NUMBER			FIT-VAX-320 ⚠		
	33	SIGNAL OUTPUT			4 - 20 mA		
	34	POWER INPUT	VOLTAGE	FREQUENCY	120 V		60 HZ
	35	FLOW RANGE	MINIMUM	MAXIMUM	0 SCFM		35 SCFM
	36	ZERO BASED			YES		
	37	ACCURACY			+/- 3% OF FULL SCALE		
	38	ENCLOSURE			REMOTE (SEE NOTE 1)		
	39	ENCLOSURE RATING			NEMA 1		
	40	FLOW INDICATOR	DISPLAY	UNITS	YES (INTEGRAL)		SCFM
	41	ELECTRICAL CONNECTION			1/2" FNPT		
	42						
	43						
MFR	44						
	45	OUTLINE DIMENSIONS			CATALOG		
	46	MODEL NO.			FCI "SMART" AF88		
	47						
	48						

NOTES

1. Provide 25 feet of manufacturer's standard cable to connect the flow element to the transducer.
2. Provide 9 inch flow element which has a field adjustable insertion length. ⚠

U.S. DEPARTMENT OF ENERGY
Hanford Waste Vitrification Plant
Richland, Washington
DOE Contract DE-AC06-86RL10838

FLUOR DANIEL, INC.
Advanced Technology Division
Fluor Contract 8457

SECTION 17630W
MASS FLOWMETERS
B-595-C-E350-17630W

APPROVED FOR CONSTRUCTION

REVISION 1
ISSUE DATE 8/4/93

WAPA YES X NO ___
QUALITY LEVEL I X II ___
SAFETY CLASS 1__ 2__ 3 X 4__

ORIGINATOR:

A. L. Sanburg 7-29-93
A. L. Sanburg, Control Sys. Engineer Date

CHECKER:

B R Carlisle 7/29/93
B. R. Carlisle, Control Sys. Engr. Date

APPROVED BY:

J B Bunning 07/29/93
J. B. Bunning Lead Discipline Engineer Date

SECTION 17630W
MASS FLOWMETERS
B-595-C-E350-17630W

TABLE OF CONTENTS

PART		PAGE
PART 1 GENERAL		1
1.1	SUMMARY	1
1.2	REFERENCES	1
1.3	RELATED REQUIREMENTS	1
1.4	DEFINITIONS	2
1.5	SYSTEM DESCRIPTION	2
1.6	SUBMITTALS	2
1.7	CLASSIFICATION OF SYSTEMS AND COMPONENTS	2
1.8	PROJECT OR SITE ENVIRONMENTAL CONDITIONS	2
PART 2 PRODUCTS		3
2.1	MATERIALS AND EQUIPMENT	3
2.2	FABRICATION AND MANUFACTURE	4
2.3	FACTORY ACCEPTANCE TESTS (FAT)	4
2.4	PACKAGING AND SHIPPING	5
PART 3 EXECUTION		5
3.1	PREPARATION	5
3.2	INSTALLATION, APPLICATION AND ERECTION	5
3.3	FIELD QUALITY CONTROL	5
3.4	ADJUSTMENTS	5
3.5	CLEANING	5
3.6	PROTECTION	5
3.7	DEMONSTRATION	6
3.8	SCHEDULES	6

ATTACHMENTS

ATTACHMENT	TITLE
A	E350-DS-1 DATA SHEET, THERMAL MASS FLOWMETERS

SECTION 17630W
MASS FLOWMETERS

PART 1 GENERAL

1.1 SUMMARY

This section defines the requirements for the supply, installation, inspection, and testing of mass flowmeters for the Hanford Waste Vitrification Plant (HWVP).

1.2 REFERENCES

The publications listed below form a part of this specification to the extent referenced. The publications are referred to in the text by the basic designations only.

AMERICAN SOCIETY OF MECHANICAL ENGINEERS (ASME)

ANSI/ASME B1.20.1	1983 Pipe Threads, General Purpose (Inch)
ASME/ANSI B16.5	1988 Pipe Flanges and Flanged Fittings; Errata - October 1988

FACTORY MUTUAL (FM)

Directory	1991 Approval Guide

NATIONAL ELECTRICAL MANUFACTURERS ASSOCIATION (NEMA)

ANSI/NEMA 250	1985 Enclosures for Electrical Equipment (1000 Volts Maximum) Revision No. 1 - May 1986 Revision No. 2 - May 1988

UNDERWRITERS LABORATORIES INC. (UL)

Directory	1991 Electric Appliance and Utilization Equipment Directory
Directory	1991 Recognized Component Directory

1.3 RELATED REQUIREMENTS

Specification Section 01730 Operation and Maintenance Data

Specification Section 16100 Electrical Installation

Specification Section 17704	General Instrumentation Installation and Testing
Specification Section 17705	Instrument Calibration and Checkout

1.4 **DEFINITIONS**

CAT - Construction Acceptance Test

FAT - Factory Acceptance Test

1.5 **SYSTEM DESCRIPTION**

(Not Used)

1.6 **SUBMITTALS**

Submit the following in accordance with the Vendor Drawing and Data Requirements section of the Order/Subcontract:

(Deleted)

1.6.1 Catalog cuts describing each instrument and accessory.

1.6.2 Manufacturer's installation drawings and instructions.

1.6.3 Manufacturer's operation and maintenance manuals in accordance with Specification Section 01730.

1.6.4 Manufacturer's calibration instructions including calibration curves/tables.

1.6.5 FAT procedure.

1.6.6 Report confirming the FAT procedure was executed and the results.

1.6.7 CAT procedure including the requirements in Paragraph 3.3.1.

1.6.8 Report confirming the CAT procedure was executed and the results.

1.7 **CLASSIFICATION OF SYSTEMS AND COMPONENTS**

(Not Used)

1.8 **PROJECT OR SITE ENVIRONMENTAL CONDITIONS**

Climatic and Geographic Site Conditions

A.	Site Elevation	714 feet above sea level
B.	Barometric Pressure	14.3 psia

C. Outside Design Temperature

1) Maximum Design Temperature 110°F

2) Minimum Design Temperature -20°F

3) Wet Bulb Design Temperature 68°F

PART 2 PRODUCTS

2.1 MATERIALS AND EQUIPMENT

2.1.1 Provide mass flowmeters in accordance with the data sheets. Include the following features unless otherwise specified in the data sheets:

A. Identical manufacturer and catalog number for components with the same specifications

B. UL Listed Devices, UL Recognized Components, or FM Approved Devices (refer to UL and FM directories)

C. 120 Vac, 60 Hz power, or 24 Vdc (loop) power input

D. Digital ("Smart") transmitters with 4-20 mAdc output signal

E. Stainless steel (316 SS) wetted parts

F. Accuracy +/- 3 percent of reading

G. Integral indicator

H. ASME/ANSI B16.5 flanged connections

I. ANSI/ASME B1.20.1 threaded connections

J. Radio frequency interference (RFI) from 20 to 1000 MHz with a field strength of 30 Volts per meter shall not affect the output of a transmitter, installed with grounded conduit, by more than +/- 0.1 percent of the span.

2.1.2 Labeling

Provide a stainless steel tag, 18 ga. minimum, with the instrument tag number and service description stamped or engraved, affixed to each instrument with stainless steel wire (preferred), stainless steel screws, or rivets. The service description is in the Buyer's Instrument Engineering Index, Attachment B to Specification Section 17704.

2.2 **FABRICATION AND MANUFACTURE**

(Not Used)

2.3 **FACTORY ACCEPTANCE TESTS (FAT)**

2.3.1 Prepare a Factory Acceptance Test (FAT) procedure and submit it to the Buyer for approval. Include:

A. Inspections/tests to demonstrate that the design, fabrication, and assembly of the materials and equipment meet the requirements of the design drawings and specifications.

B. Daily automatic electronic zero and span capability.

C. Automatic sensor out of calibration detection.

D. Documentation showing the individual sensors are factory calibrated in a National Institute of Standards and Technology (NIST) traceable wind tunnel in air referenced to standard temperature and pressure.

E. Documentation showing the mass-flow system which measures exhaust air in the exhaust air stack is factory calibrated in accordance with the procurement specification.

F. (Deleted)

G. Acceptance criteria appropriate for these instruments, including:

Instruments shall not be subject to undetected failures.

H. Potential sources of testing uncertainty or error. State how testing organization will control them.

I. Manufacturer, model, serial number, precision, accuracy, and certifying agency of calibration and test equipment.

2.3.2 Inspect and test the instruments in accordance with the Buyer approved FAT procedure.

2.3.3 Submit a report confirming the FAT procedure has been completed and the results. Include:

A. Item tested

B. Date of test

C. Test equipment and calibrations

D. Tester or data recorder

E. Type of observation

F. Results and acceptability

G. Action taken in connection with any deviations noted

H. Person evaluating test results

2.4 **PACKAGING AND SHIPPING**

Protect all shipped materials from moisture, vibration, shock, and heat damage while in transit or interim storage.

PART 3 EXECUTION

3.1 **PREPARATION**

Inspect and calibrate instruments in accordance with Paragraph 3.1 of Specification Section 17705.

3.2 **INSTALLATION, APPLICATION AND ERECTION**

Install instruments in accordance with Specification Sections 17704, 16100, and the manufacturer's installation instructions.

3.3 **FIELD QUALITY CONTROL**

3.3.1 Prepare a CAT procedure and submit it for approval. Include the requirements in Specification Section 17705.

3.3.2 Inspect and test the instrument installations according to the Buyer approved CAT procedure.

3.3.3 Submit a report confirming the CAT procedure has been completed and the results.

3.4 **ADJUSTMENTS**

(Not Used)

3.5 **CLEANING**

(Not Used)

3.6 **PROTECTION**

(Not Used)

3.7 **DEMONSTRATION**

(Not Used)

3.8 **SCHEDULES**

(Not Used)

END OF SECTION

ATTACHMENT A

	NO	BY / DATE	REVISION	SHEET NO.	REVISION
FLUOR DANIEL		ALS	MISC. REVISIONS.	E350-DS-1	1
INSTRUMENT SPECIFICATIONS	1	06/15/93		DATE 6/26/92	CONTRACT 845734
				MANUFACTURER KURZ or Equal	
THERMAL MASS FLOWMETERS				BY FJM / CHK'D BRC	APPRV'D JBB

ALL ITEMS SHALL COMPLY WITH GENERAL SPECIFICATION SHEETS: B-595-C-E350-17630W

GENERAL	1	TAG NUMBER				FE-CSE-012	
	2	P&ID		FRAME NUMBER		H-2-129738-1	
	3	SERVICE				CANISTER STORAGE NEUTRAL ZONE	
	4					STACK	
	5						
	6						
	7						
SERVICE CONDITIONS	8	PIPE I.D.	NOMINAL		ACTUAL	NA	6 FT. 11-1/4 IN. (NOTE 1) ⚠
	9	PROCESS PIPE MATERIAL			SCHEDULE	CARBON STEEL	STD. WT.
	10	FLUID TYPE				AIR	
	11	FLUID PHASE				GAS	
	12	FLOW	MAXIMUM	NORMAL	MINIMUM	120,000 SCFM	--- / 5,000 SCFM
	13	PRESSURE	MAXIMUM	NORMAL	MINIMUM	0.5 IN. WC	--- / -0.5 IN. WC
	14	TEMPERATURE	MAXIMUM	NORMAL	MINIMUM	200 DEG F	--- / -27 DEG F
	15	VISCOSITY	@F.T.		@BASE COND.	---	---
	16	SP. GR.	@BASE COND.		@FLOWING COND.	1	---
	17	COMPRESSIBILITY	@BASE COND.		@FLOW COND.	---	---
	18	STEAM DENSITY		QUALITY		---	---
	19	BASE	PRESSURE		TEMPERATURE	---	---
	20						
SENSOR	21	TYPE				THERMAL AVERAGING (NOTE 2)	
	22	PIPE ORIENTATION				VERTICAL	
	23	MOUNTING				SIDE OF STACK	
	24	MATERIAL, ALL WETTED PARTS				316 SS	
	25	LINE CONNECTION SIZE			TYPE	2 INCHES	150# RF
	26	UPSTREAM METER RUN				52 FT.	
	27	DOWNSTREAM METER RUN				30 FT.	
	28						
	29						
	30						
	31						
TRANSDUCER	32	TAG NUMBER				FY-CSE-012A,B	
	33	SIGNAL OUTPUT				4 - 20 mA	
	34	POWER INPUT		VOLTAGE	FREQUENCY	120 V	60 HZ
	35	FLOW RANGE		MINIMUM	MAXIMUM	1500 SCFM	150,000 SCFM
	36	ZERO BASED				YES	
	37	ACCURACY				+/- 3% OF FULL SCALE	
	38	ENCLOSURE				REMOTE	
	39	ENCLOSURE RATING				NEMA 4	
	40	FLOW INDICATOR		DISPLAY	UNITS	YES (INTEGRAL)	SCFM
	41	ELECTRICAL CONNECTION				3/4" FNPT	
	42					KURZ MODEL 155 ⚠	
	43						
MFR	44						
	45	OUTLINE DIMENSIONS				CATALOG	
	46	MODEL NO.				KURZ INSTRUMENTS SERIES 4500	
	47					"SMART" SYSTEM	
	48						

NOTES

1. *The exhaust stack has a 7 foot outer diameter with a 3/8 inch wall thickness and 2 inches of external insulation.* ⚠ *The stack center line is located 4'-0" from the mounting flange face. 2 inch support pipe is provided on the opposite side of the stack for the probe.*
2. *Provide a 7 foot 10 inch probe (Model No.: KURZ K-BAR 24 or equal) with a minimum of 3 platinum RTD sensing elements.* ⚠
3. *Provide a signal conditioner (Tag No.: FT-CSE-012) with NEMA 4 enclosure, integral to the flow element assembly, Model No.: KURZ 196 or equal.* ⚠

U.S. DEPARTMENT OF ENERGY
Hanford Waste Vitrification Plant
Richland, Washington
DOE Contract DE-AC06-86RL10838

FLUOR DANIEL, INC.
Advanced Technology Division
Fluor Contract 8457

SECTION 17642
ORIFICE PLATES AND RESTRICTION ORIFICES
B-595-C-E350-17642

APPROVED FOR CONSTRUCTION

REVISION 0 PER CR-0499
ISSUE DATE 8/4/93

WAPA YES ___ NO X
QUALITY LEVEL I ___ II X
SAFETY CLASS 1__ 2__ 3X 4__

ORIGINATOR:

A. L. Sanburg 7-29-93
A. L. Sanburg, Control Systems Eng. Date

CHECKER:

B R Carlisle 7/29/93
B. R. Carlisle, Control Systems Eng. Date

APPROVED BY:

J. B. Bunning
J. B. Bunning Lead Discipline Engineer

07/29/93
Date

07/27/93 9:42am
106\VOL5...\SPECS\E350\17642-0.

SECTION 17642
ORIFICE PLATES AND RESTRICTION ORIFICES
B-595-C-E350-17642

TABLE OF CONTENTS

PART		PAGE
PART 1 GENERAL		1
1.1	SUMMARY	1
1.2	REFERENCES	1
1.3	RELATED REQUIREMENTS	1
1.4	DEFINITIONS	1
1.5	SYSTEM DESCRIPTION	1
1.6	SUBMITTALS	1
1.7	CLASSIFICATION OF SYSTEMS AND COMPONENTS	2
1.8	PROJECT OR SITE ENVIRONMENTAL CONDITIONS	2
PART 2 PRODUCTS		2
2.1	MATERIALS AND EQUIPMENT	2
2.2	FABRICATION AND MANUFACTURE	3
2.3	FACTORY ACCEPTANCE TESTS (FAT)	3
2.4	PACKAGING AND SHIPPING	4
PART 3 EXECUTION		4
3.1	PREPARATION	4
3.2	INSTALLATION, APPLICATION AND ERECTION	4
3.3	FIELD QUALITY CONTROL	4
3.4	ADJUSTMENTS	4
3.5	CLEANING	4
3.6	PROTECTION	4
3.7	DEMONSTRATION	4
3.8	SCHEDULES	5

ATTACHMENTS

ATTACHMENT	TITLE
A	E350-DS-1 THROUGH E350-DS-4 DATA SHEETS, FLANGE TYPE RESTRICTION ORIFICE

SECTION 17642
ORIFICE PLATES AND RESTRICTION ORIFICES

PART 1 GENERAL

1.1 SUMMARY

This section includes the technical requirements for the supply, installation, inspection, and testing of orifice plates and restriction orifices for the Hanford Waste Vitrification Plant (HWVP).

1.2 REFERENCES

The publications listed below form a part of this specification to the extent referenced. The publications are referred to in the text by the basic designation only.

AMERICAN GAS ASSOCIATION (AGA)

AGA REPORT NO. 3	1985 Manual of Petroleum Measurement Standards Chapter 14 - Natural Gas Fluids Measurement Section 3 - Orifice Metering of Natural Gas and Other Related Hydrocarbon Fluids; Errata - 1985

AMERICAN SOCIETY FOR TESTING AND MATERIALS (ASTM)

ASTM A167	1990 Standard Specification for Stainless and Heat-Resisting Chromium-Nickel Steel Plate, Sheet, and Strip

1.3 RELATED REQUIREMENTS

Specification Section 01730 Operation and Maintenance Data

1.4 DEFINITIONS

CAT - Construction Acceptance Test

FAT - Factory Acceptance Test

1.5 SYSTEM DESCRIPTION

(Not Used)

1.6 SUBMITTALS

Submit the following in accordance with the Vendor Drawing and Data Requirements section of the Order/Subcontract.

1.6.1 Sizing calculations and equations including the name, manufacturer, and serial number of any computer programs used in the sizing.

1.6.2 FAT procedure.

1.6.3 Report confirming the FAT procedure was executed and the results.

1.6.4 CAT procedure including requirements in Paragraph 3.3.1.

1.6.5 Report confirming the CAT procedure was executed and the results.

1.7 **CLASSIFICATION OF SYSTEMS AND COMPONENTS**

(Not used)

1.8 **PROJECT OR SITE ENVIRONMENTAL CONDITIONS**

Climatic and Geographic Site Conditions

A.	Site Elevation	714 feet above sea level
B.	Barometric Pressure	14.3 psia
C.	Outside Design Temperature	
1)	Maximum Design Temperature	110°F
2)	Minimum Design Temperature	-20°F
3)	Wet Bulb Design Temperature	68°F

PART 2 PRODUCTS

2.1 **MATERIALS AND EQUIPMENT**

2.1.1 Provide the orifice plates and restriction orifices in accordance with the attached data sheets. Include the following features, unless specified otherwise on the data sheets.

2.1.1.1 General Requirements

A. Identical manufacturer and catalog number for components with the same specifications.

B. Plate dimensions conforming to the recommended dimensions table listed in AGA Report No. 3.

C. Provide sharp edged concentric type orifice plates and restriction orifices. Sharp and square inlet edge of the

orifice bore which does not reflect light when viewed without magnification.

D. Provide flange type restriction orifice plates with a paddle type handle.

E. Orifice plate bore tolerance of ±0.0005 x (bore dia. in inches) inch for all sizes.

F. Provide orifice beta ratio between 0.2 and 0.7.

G. Material:

ASTM A167, Grade F304 (stainless steel)

H. Restriction orifices sized based on total loss. Orifice plates sized based on meter loss.

2.1.2 **LABELING**

Provide the following information stamped on the plate handle (visible after installation):

Inlet side of plate -

TAG NUMBER
INLET
ORIF. I.D. _____ IN.
FLG. SIZE _____ IN.
PRESS. RATING
_____ PSIG

Outlet side of plate -

DIFF. _____ IN.
CAP. _____ (GPM, LBS/HR, OR SCFH)
PIPE I.D. _____ IN.

2.2 **FABRICATION AND MANUFACTURE**

(Not Used)

2.3 **FACTORY ACCEPTANCE TESTS (FAT)**

2.3.1 Prepare a Factory Acceptance Test (FAT) procedure and submit it to the Buyer for approval.

Include inspections/tests to demonstrate that the design, fabrication, and assembly of the materials and equipment meet the requirements of the design drawings and specifications.

2.3.2 Inspect and test the orifice plates and restriction orifices in accordance with the Buyer approved FAT procedure.

2.3.3 Submit a report confirming the FAT procedure has been completed and the results.

2.4 **PACKAGING AND SHIPPING**

Protect all shipped materials from moisture, vibration, shock, and heat damage while in transit or interim storage.

PART 3 EXECUTION

3.1 **PREPARATION**

Inspect orifice plates and restriction orifices to ensure that they have not been damaged in shipping and handling.

3.2 **INSTALLATION, APPLICATION AND ERECTION**

Install orifice plates and restriction orifices in accordance with the piping design drawings.

3.3 **FIELD QUALITY CONTROL**

3.3.1 Prepare a CAT procedure and submit it for approval.

3.3.2 Inspect the orifice plate and restriction orifice installations according to the Buyer approved CAT procedure.

3.3.3 Submit a report confirming the CAT procedure has been completed and the results.

3.4 **ADJUSTMENTS**

(Not Used)

3.5 **CLEANING**

(Not Used)

3.6 **PROTECTION**

(Not Used)

3.7 **DEMONSTRATION**

(Not Used)

3.8 SCHEDULES

(Not Used)

END OF SECTION

	NO	BY DATE	REVISION	SHEET NO.	REVISION
FLUOR DANIEL				*E350-DS-1*	*0*
INSTRUMENT SPECIFICATIONS				DATE *06/08/93*	CONTRACT *845734*
				MANUFACTURER *DANIEL OR EQUAL*	
FLANGE TYPE RESTRICTION ORIFICE				BY *A.G*	CHK'D / APPR'D

ALL ITEMS SHALL COMPLY WITH GENERAL SPECIFICATION SHEETS: B-595-C-E350-17642

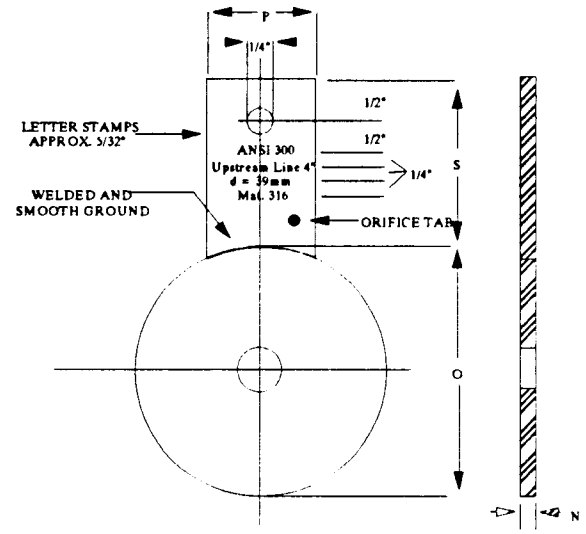

ALL DIMENSIONS IN INCHES

NOMINAL PIPE SIZE	S	P	N	O ANSI 150#	O ANSI 300#	O ANSI 600#	H
1/2	4	1	1/8	1 7/8	2 1/8	2 1/8	
3/4	4	1	1/8	2 1/4	2 5/8	2 5/8	
1	4	1	1/8	2 5/8	2 7/8	2 7/8	1/4
1 1/2	4	1	1/8	3 3/8	3 3/4	3 3/4	
2	4	1	1/8	4 1/8	4 3/8	4 3/8	
3	4	1 1/4	1/8	5 3/8	5 7/8	5 7/8	
4	4	1 1/4	1/8	6 7/8	7 1/8	7 5/8	
6	5	1 1/2	1/8	8 3/4	9 7/8	10 1/2	3/8
8	5	1 1/2	1/8	11	12 1/8	12 5/8	
10	6	1 1/2	1/4	13 3/8	14 1/4	15 3/4	
12	6	1 1/2	1/4	16 1/8	16 5/8	18	
14	6	1 1/2	1/4	17 3/4	19 1/8	19 3/8	
16	6	1 1/2	3/8	20 1/4	21 1/4	22 1/4	
18	6	1 1/2	3/8	21 1/2	23 3/8	24	1/2
20	6	1 1/2	3/8	23 3/4	25 5/8	26 3/4	
24	6	1 1/2	3/8	28 1/8	30 3/8	31	

TAG NUMBER		*FO-620-501*		*FO-620-502*		*FO-620-503*	
P & ID NUMBER	FRAME	*H-2-123370*	*SH.5*	*H-2-123370*	*SH.5*	*H-2-123370*	*SH.5*
LINE NUMBER		*VAX-3/4"-620-510-L*		*VAX-3/4"-620-511-L*		*VAX-3/4"-620-514-L*	
SERVICE		*HPS VAX-RAS RM 110*		*HPS VAX-RAS RM 110*		*HPS VAX-RAS RM 110*	
FLUID		*AIR*		*AIR*		*AIR*	
FLOWING QUANTITY		*132 SCFH*		*132 SCFH*		*132 SCFH*	
UPSTREAM PRESSURE		*13.7 PSIA*		*13.7 PSIA*		*13.7 PSIA*	
△ P		*7.6 PSI (NOTE 2)*		*7.6 PSI (NOTE 2)*		*7.6 PSI (NOTE 2)*	
FLOW TEMPERATURE		*85 DEG F*		*85 DEG F*		*85 DEG F*	
SP.GR. @BASE	@FLOW	---	---	---	---	---	---
SPECIFIC VOL CuFt/LB		---		---		---	
VISCOSITY @FLOW COND		*0.018 CP*		*0.018 CP*		*0.018 CP*	
MW OF GAS	Cp/Cv	*29*	*1.4*	*29*	*1.4*	*29*	*1.4*
COMPR @BASE	@FLOW	*1*	*1*	*1*	*1*	*1*	*1*
VAPOR PRESSURE		---		---		---	
STEAM QUALITY @FLOW		---		---		---	
BASE: TEMP.	PRESS.	*60 DEG F*	*14.7 PSIA*	*60 DEG F*	*14.7 PSIA*	*60 DEG F*	*14.7 PSIA*
PIPE DIAMETER	SCH.	*0.742" (I.D.)*	*80*	*0.742" (I.D.)*	*80*	*0.742" (I.D.)*	*80*
PIPE MATERIAL	CLASS	*CARBON STEEL*	*L*	*CARBON STEEL*	*L*	*CARBON STEEL*	*L*
BETA = d/D		*0.157*		*0.157*		*0.157*	
BORE SIZE		*0.117 INCHES*		*0.117 INCHES*		*0.117 INCHES*	
PLATE MATERIAL		*304 SS*		*304 SS*		*304 SS*	
FLANGE RATING		*3/4" - 150 # RF*		*3/4" - 150 # RF*		*3/4" - 150 # RF*	
FLANGE MATERIAL		*CARBON STEEL*		*CARBON STEEL*		*CARBON STEEL*	
FLANGE TYPE		*SOCKET WELD*		*SOCKET WELD*		*SOCKET WELD*	
MFR. MODEL NUMBER		*CATALOG #520 OR EQUAL*		*CATALOG #520 OR EQUAL*		*CATALOG #520 OR EQUAL*	

NOTES:

1) ORIFICE BORE SIZING IS PRELIMINARY. RESIZE AND SUBMIT CERTIFIED CALCULATIONS.

2)FLOW IS CRITICAL WHEN DOWNSTREAM PRESSURE IS 7.2 PSIA OR LESS.

	NO	BY DATE	REVISION	SHEET NO.	REVISION
FLUOR DANIEL				E350-DS-2	0
INSTRUMENT SPECIFICATIONS				DATE 06/08/93	CONTRACT 845734
				MANUFACTURER DANIEL OR EQUAL	
FLANGE TYPE RESTRICTION ORIFICE				BY A.G	CHK'D / APPRV'D

ALL ITEMS SHALL COMPLY WITH GENERAL SPECIFICATION SHEETS: B-595-C-E350-17642

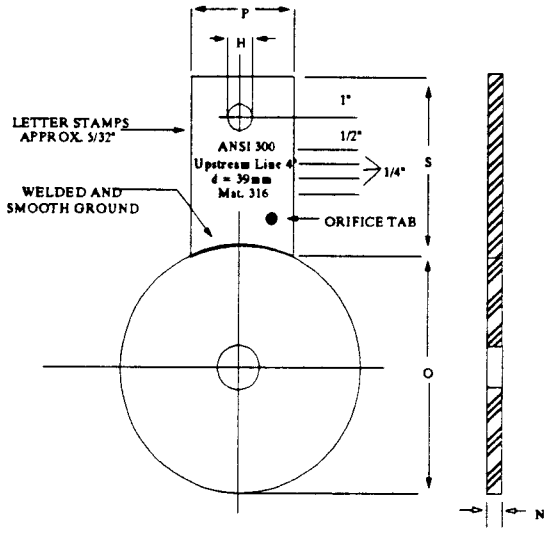

ALL DIMENSIONS IN INCHES

NOMINAL PIPE SIZE	S	P	N	O ANSI 150#	O ANSI 300#	O ANSI 600#	H
1/2	4	1	1/8	1 7/8	2 1/8	2 1/8	
3/4	4	1	1/8	2 1/4	2 5/8	2 5/8	
1	4	1	1/8	2 5/8	2 7/8	2 7/8	1/4
1 1/2	4	1	1/8	3 3/8	3 3/4	3 3/4	
2	4	1	1/8	4 1/8	4 3/8	4 3/8	
3	4	1 1/4	1/8	5 3/8	5 7/8	5 7/8	
4	4	1 1/4	1/8	6 7/8	7 1/8	7 5/8	
6	5	1 1/2	1/8	8 3/4	9 7/8	10 1/2	3/8
8	5	1 1/2	1/8	11	12 1/8	12 5/8	
10	6	1 1/2	1/4	13 3/8	14 1/4	15 3/4	
12	6	1 1/2	1/4	16 1/8	16 5/8	18	
14	6	1 1/2	1/4	17 3/4	19 1/8	19 3/8	
16	6	1 1/2	3/8	20 1/4	21 1/4	22 1/4	
18	6	1 1/2	3/8	21 1/2	23 3/8	24	1/2
20	6	1 1/2	3/8	23 3/4	25 5/8	26 3/4	
24	6	1 1/2	3/8	28 1/8	30 3/8	31	

TAG NUMBER		FO-620-504		FO-620-505		FO-620-506	
P & ID NUMBER	FRAME	H-2-123370	SH.5	H-2-123370	SH.5	H-2-123370	SH.5
LINE NUMBER		VAX-3/4"-620-507-L		VAX-3/4"-620-508-L		VAX-3/4"-620-506-L	
SERVICE		HPS VAX-RAS RM 110		HPS VAX-RAS RM 136		HPS VAX-B CAM RM 102	
FLUID		AIR		AIR		AIR	
FLOWING QUANTITY		132 SCFH		132 SCFH		132 SCFH	
UPSTREAM PRESSURE		13.7 PSIA		13.7 PSIA		13.7 PSIA	
△ P		7.6 PSI (NOTE 2)		7.6 PSI (NOTE 2)		7.6 PSI (NOTE 2)	
FLOW TEMPERATURE		85 DEG F		85 DEG F		85 DEG F	
SP.GR. @BASE	@FLOW	---	---	---	---	---	---
SPECIFIC VOL CuFt/LB		---		---		---	
VISCOSITY @FLOW COND		0.018 CP		0.018 CP		0.018 CP	
MW OF GAS	Cp/Cv	29	1.4	29	1.4	29	1.4
COMPR @BASE	@FLOW	1	1	1	1	1	1
VAPOR PRESSURE		---		---		---	
STEAM QUALITY @FLOW		---		---		---	
BASE: TEMP.	PRESS.	60 DEG F	14.7 PSIA	60 DEG F	14.7 PSIA	60 DEG F	14.7 PSIA
PIPE DIAMETER	SCH.	0.742" (I.D.)	80	0.742" (I.D.)	80	0.742" (I.D.)	80
PIPE MATERIAL	CLASS	CARBON STEEL	L	CARBON STEEL	L	CARBON STEEL	L
BETA = d/D		0.157		0.157		0.157	
BORE SIZE		0.117 INCHES		0.117 INCHES		0.117 INCHES	
PLATE MATERIAL		304 SS		304 SS		304 SS	
FLANGE RATING		3/4" - 150 # RF		3/4" - 150 # RF		3/4" - 150 # RF	
FLANGE MATERIAL		CARBON STEEL		CARBON STEEL		CARBON STEEL	
FLANGE TYPE		SOCKET WELD		SOCKET WELD		SOCKET WELD	
MFR. MODEL NUMBER		CATALOG #520 OR EQUAL		CATALOG #520 OR EQUAL		CATALOG #520 OR EQUAL	

NOTES:

1) ORIFICE BORE SIZING IS PRELIMINARY. RESIZE AND SUBMIT CERTIFIED CALCULATIONS.

2) FLOW IS CRITICAL WHEN DOWNSTREAM PRESSURE IS 7.2 PSIA OR LESS.

NO	BY DATE	REVISION	SHEET NO.	REVISION
			E350-DS-3	0
			DATE 06/08/93	CONTRACT 845734
			MANUFACTURER DANIEL OR EQUAL	
			BY A.G	CHK'D BRB / APPR'D

FLUOR DANIEL

INSTRUMENT SPECIFICATIONS

FLANGE TYPE RESTRICTION ORIFICE

ALL ITEMS SHALL COMPLY WITH GENERAL SPECIFICATION SHEETS: B-595-C-E350-17642

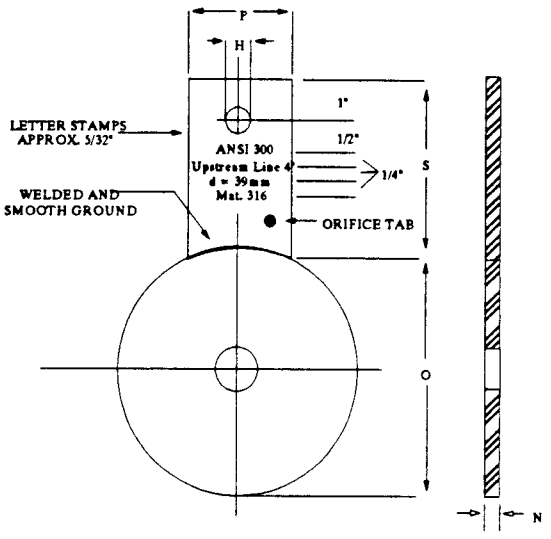

ALL DIMENSIONS IN INCHES

NOMINAL PIPE SIZE	S	P	N	O ANSI 150#	O ANSI 300#	O ANSI 600#	H
1/2	4	1	1/8	1 7/8	2 1/8	2 1/8	
3/4	4	1	1/8	2 1/4	2 5/8	2 5/8	
1	4	1	1/8	2 5/8	2 7/8	2 7/8	1/4
1 1/2	4	1	1/8	3 3/8	3 3/4	3 3/4	
2	4	1	1/8	4 1/8	4 3/8	4 3/8	
3	4	1 1/4	1/8	5 3/8	5 7/8	5 7/8	
4	4	1 1/4	1/8	6 7/8	7 1/8	7 5/8	
6	5	1 1/2	1/8	8 3/4	9 7/8	10 1/2	3/8
8	5	1 1/2	1/8	11	12 1/8	12 5/8	
10	6	1 1/2	1/4	13 3/8	14 1/4	15 3/4	
12	6	1 1/2	1/4	16 1/8	16 5/8	18	
14	6	1 1/2	1/4	17 3/4	19 1/8	19 3/8	
16	6	1 1/2	3/8	20 1/4	21 1/4	22 1/4	
18	6	1 1/2	3/8	21 1/2	23 3/8	24	1/2
20	6	1 1/2	3/8	23 3/4	25 5/8	26 3/4	
24	6	1 1/2	3/8	28 1/8	30 3/8	31	

TAG NUMBER		FO-620-507		FO-620-508		FO-620-509	
P & ID NUMBER	FRAME	H-2-123370	SH.5	H-2-123370	SH.5	H-2-123370	SH.5
LINE NUMBER		VAX-3/4"-620-505-L		VAX-3/4"-620-512-L		VAX-3/4"-620-601-L	
SERVICE		HPS VAX-B CAM RM 108		HPS VAX-RAS RM 104		HPS VAX-B CAM RM 136	
FLUID		AIR		AIR		AIR	
FLOWING QUANTITY		132 SCFH		132 SCFH		132 SCFH	
UPSTREAM PRESSURE		13.7 PSIA		13.7 PSIA		13.7 PSIA	
△ P		7.6 PSI (NOTE 2)		7.6 PSI (NOTE 2)		7.6 PSI (NOTE 2)	
FLOW TEMPERATURE		85 DEG F		85 DEG F		85 DEG F	
SP.GR. @BASE	@FLOW	---	---	---	---	---	---
SPECIFIC VOL CuFt/LB		---		---		---	
VISCOSITY @FLOW COND		0.018 CP		0.018 CP		0.018 CP	
MW OF GAS	Cp/Cv	29	1.4	29	1.4	29	1.4
COMPR @BASE	@FLOW	1	1	1	1	1	1
VAPOR PRESSURE		---		---		---	
STEAM QUALITY @FLOW		---		---		---	
BASE: TEMP.	PRESS.	60 DEG F	14.7 PSIA	60 DEG F	14.7 PSIA	60 DEG F	14.7 PSIA
PIPE DIAMETER	SCH.	0.742" (I.D.)	80	0.742" (I.D.)	80	0.742" (I.D.)	80
PIPE MATERIAL	CLASS	CARBON STEEL	L	CARBON STEEL	L	CARBON STEEL	L
BETA = d/D		0.157		0.157		0.157	
BORE SIZE		0.117 INCHES		0.117 INCHES		0.117 INCHES	
PLATE MATERIAL		304 SS		304 SS		304 SS	
FLANGE RATING		3/4" - 150 # RF		3/4" - 150 # RF		3/4" - 150 # RF	
FLANGE MATERIAL		CARBON STEEL		CARBON STEEL		CARBON STEEL	
FLANGE TYPE		SOCKET WELD		SOCKET WELD		SOCKET WELD	
MFR. MODEL NUMBER		CATALOG #520 OR EQUAL		CATALOG #520 OR EQUAL		CATALOG #520 OR EQUAL	

NOTES:

1) ORIFICE BORE SIZING IS PRELIMINARY. RESIZE AND SUBMIT CERTIFIED CALCULATIONS.

2) FLOW IS CRITICAL WHEN DOWNSTREAM PRESSURE IS 7.2 PSIA OR LESS.

NO	BY DATE	REVISION	SHEET NO.	REVISION
			E350-DS-4	0
			DATE 06/08/93	CONTRACT 845734
			MANUFACTURER DANIEL OR EQUAL	
			BY A.G	CHK'D BAB / APPRV'D JJB

FLUOR DANIEL

INSTRUMENT SPECIFICATIONS

FLANGE TYPE RESTRICTION ORIFICE

ALL ITEMS SHALL COMPLY WITH GENERAL SPECIFICATION SHEETS: B-595-C-E350-17642

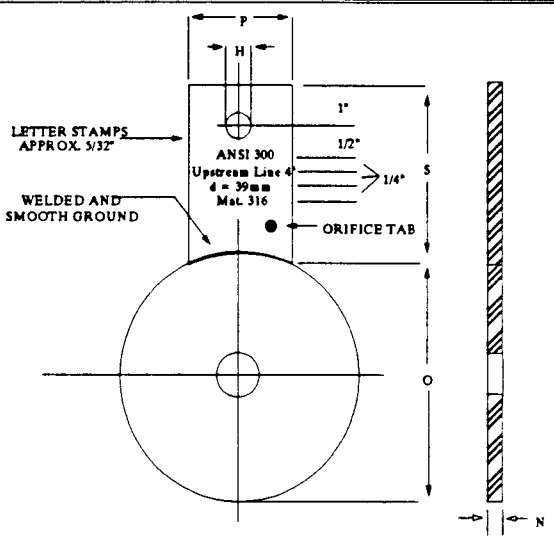

ALL DIMENSIONS IN INCHES

NOMINAL PIPE SIZE	S	P	N	O ANSI 150#	O ANSI 300#	O ANSI 600#	H
1/2	4	1	1/8	1 7/8	2 1/8	2 1/8	
3/4	4	1	1/8	2 1/4	2 5/8	2 5/8	
1	4	1	1/8	2 5/8	2 7/8	2 7/8	1/4
1 1/2	4	1	1/8	3 3/8	3 3/4	3 3/4	
2	4	1	1/8	4 1/8	4 3/8	4 3/8	
3	4	1 1/4	1/8	5 3/8	5 7/8	5 7/8	
4	4	1 1/4	1/8	6 7/8	7 1/8	7 5/8	
6	5	1 1/2	1/8	8 3/4	9 7/8	10 1/2	3/8
8	5	1 1/2	1/8	11	12 1/8	12 5/8	
10	6	1 1/2	1/4	13 3/8	14 1/4	15 3/4	
12	6	1 1/2	1/4	16 1/8	16 5/8	18	
14	6	1 1/2	1/4	17 3/4	19 1/8	19 3/8	
16	6	1 1/2	3/8	20 1/4	21 1/4	22 1/4	
18	6	1 1/2	3/8	21 1/2	23 3/8	24	1/2
20	6	1 1/2	3/8	23 3/4	25 5/8	26 3/4	
24	6	1 1/2	3/8	28 1/8	30 3/8	31	

TAG NUMBER		FO-620-510	
P & ID NUMBER	FRAME	H-2-123370	SH.5
LINE NUMBER		VAX-3/4"-620-529-L	
SERVICE		HPS VAX-B CAM RM 136	
FLUID		AIR	
FLOWING QUANTITY		132 SCFH	
UPSTREAM PRESSURE		13.7 PSIA	
△ P		7.6 PSI (NOTE 2)	
FLOW TEMPERATURE		85 DEG F	
SP.GR. @BASE	@FLOW	---	---
SPECIFIC VOL CuFt/LB		---	
VISCOSITY @FLOW COND		0.018 CP	
MW OF GAS	Cp/Cv	29	1.4
COMPR @BASE	@FLOW	1	1
VAPOR PRESSURE		---	
STEAM QUALITY @FLOW		---	
BASE: TEMP.	PRESS.	60 DEG F	14.7 PSIA
PIPE DIAMETER	SCH.	0.742" (I.D.)	80
PIPE MATERIAL	CLASS	CARBON STEEL	L
BETA = d/D		0.157	
BORE SIZE		0.117 INCHES	
PLATE MATERIAL		304 SS	
FLANGE RATING		3/4" - 150 # RF	
FLANGE MATERIAL		CARBON STEEL	
FLANGE TYPE		SOCKET WELD	
MFR. MODEL NUMBER		CATALOG #520 OR EQUAL	

NOTES:

1) ORIFICE BORE SIZING IS PRELIMINARY. RESIZE AND SUBMIT CERTIFIED CALCULATIONS.

2) FLOW IS CRITICAL WHEN DOWNSTREAM PRESSURE IS 7.2 PSIA OR LESS.

U.S. DEPARTMENT OF ENERGY
Hanford Waste Vitrification Plant
Richland, Washington
DOE Contract DE-AC06-86RL10838

FLUOR DANIEL, INC.
Advanced Technology Division
Fluor Contract 8457

SECTION 17656
GLOBE TYPE CONTROL VALVES
B-595-C-E350-17656

APPROVED FOR CONSTRUCTION

REVISION 1 PER CR-0702
ISSUE DATE 8/4/93

WAPA YES ___ NO X
QUALITY LEVEL I ___ II X
SAFETY CLASS 1__ 2__ 3 X 4__

ORIGINATOR:

A. L. Sanburg 7-29-93
A. L. Sanburg, Control Sys. Engineer Date

CHECKER:

B R Carlisle
B. R. Carlisle, Con. Sys. Eng. Date

APPROVED BY:

J. B. Bunning
J. B. Bunning Lead Discipline Engineer

07/29/93
Date

7/27/93 9:48am
106\VOL5...\SPECS\E350\17656-1.

SECTION 17656
GLOBE TYPE CONTROL VALVES
B-595-C-E350-17656

TABLE OF CONTENTS

PART		PAGE
PART 1	**GENERAL**	1
1.1	SUMMARY	1
1.2	REFERENCES	1
1.3	RELATED REQUIREMENTS	2
1.4	DEFINITIONS	2
1.5	SYSTEM DESCRIPTION	2
1.6	SUBMITTALS	2
1.7	CLASSIFICATION OF SYSTEMS AND COMPONENTS	3
1.8	PROJECT OR SITE ENVIRONMENTAL CONDITIONS	3
PART 2	**PRODUCTS**	3
2.1	MATERIALS AND EQUIPMENT	3
2.2	FABRICATION AND MANUFACTURE	5
2.3	FACTORY ACCEPTANCE TESTS (FAT)	5
2.4	PACKAGING AND SHIPPING	6
PART 3	**EXECUTION**	6
3.1	PREPARATION	6
3.2	INSTALLATION, APPLICATION AND ERECTION	6
3.3	FIELD QUALITY CONTROL	6
3.4	ADJUSTMENTS	6
3.5	CLEANING	6
3.6	PROTECTION	7
3.7	DEMONSTRATION	7
3.8	SCHEDULES	7

ATTACHMENTS

ATTACHMENT	TITLE
A	E350-DS-1 DATA SHEET, CONTROL VALVES

SECTION 17656
GLOBE TYPE CONTROL VALVES

PART 1 GENERAL

1.1 SUMMARY

This section includes the technical requirements for the supply, installation, inspection, and testing of globe type control valves for the Hanford Waste Vitrification Plant (HWVP).

1.2 REFERENCES

The publications listed below form a part of this specification to the extent referenced. The publications are referred to in the text by the basic designation only.

AMERICAN SOCIETY OF MECHANICAL ENGINEERS (ASME)

ANSI/ASME B1.20.1	1983 Pipe Threads, General Purpose (Inch)
ASME/ANSI B16.5	1988 Pipe Flanges and Flanged Fittings; Errata - October 1988
ASME/ANSI B16.10	1988 Face-to-Face and End-to-End Dimensions of Valves

AMERICAN SOCIETY FOR TESTING AND MATERIALS (ASTM)

ASTM A105/A105M	1990 Standard Specification for Forgings, Carbon Steel, for Piping Components
ASTM A182/A182M	1991 Standard Specification for Forged or Rolled Alloy-Steel Pipe Flanges, Forged Fittings, and Valves and Parts for High Temperature Service
ASTM A216/A216M	1989 Standard Specification for Steel Castings, Carbon, Suitable for Fusion Welding, for High Temperature Service
ASTM A351/A351M	1991 Standard Specification for Castings, Austenitic, Austenitic-Ferritic (Duplex), for Pressure-Containing Parts
ASTM B16	1985 Standard Specification for Free-Cutting Brass Rod, Bar, and Shapes for Use in Screw Machines

FLUID CONTROLS INSTITUTE, INC. (FCI)

FCI 70-2	1976 Control Valve Seat Leakage, Revision 1982

NATIONAL ELECTRICAL MANUFACTURERS ASSOCIATION (NEMA)

ANSI/NEMA 250	1985 Enclosures for Electrical Equipment (1000 Volts Maximum) Revision No. 1 - May 1986 Revision No. 2 - May 1988

1.3 **RELATED REQUIREMENTS**

Specification Section 01730	Operation and Maintenance Data
Specification Section 16100	Electrical Installation
Specification Section 17703	Instrument Piping Materials
Specification Section 17704	General Instrumentation Installation and Testing
Specification Section 17705	Instrument Calibration and Checkout

1.4 **DEFINITIONS**

CAT - Construction Acceptance Test
dB - Decibels (Sound Power Level)
FAT - Factory Acceptance Test
NPT - National Pipe Thread

1.5 **SYSTEM DESCRIPTION**

(Not Used)

1.6 **SUBMITTALS**

Submit the following in accordance with the Vendor Drawing and Data Requirements section of the Order/Subcontract.

(Deleted)

1.6.1 Catalog cuts describing each valve and each accessory.

1.6.2 Manufacturer's installation drawings and instructions.

1.6.3 Manufacturer's operation and maintenance manuals in accordance with Specification Section 01730.

1.6.4 Manufacturer's calibration instructions including calibration curves/tables.

1.6.5 Sizing calculations, noise calculations and equations including the name, manufacturer, and serial number of any computer programs used in the sizing.

1.6.6 FAT procedure.

1.6.7 Report confirming the FAT procedure was executed and the results.

1.6.8 CAT procedure including requirements in Paragraph 3.3.1.

1.6.9 Report confirming the CAT procedure was executed and the results.

1.7 **CLASSIFICATION OF SYSTEMS AND COMPONENTS**

(Not used)

1.8 **PROJECT OR SITE ENVIRONMENTAL CONDITIONS**

Climatic and Geographic Site Conditions

A.	Site Elevation	714 feet above sea level
B.	Barometric Pressure	14.3 psia
C.	Outside Design Temperature	
1)	Maximum Design Temperature	110°F
2)	Minimum Design Temperature	-20°F
3)	Wet Bulb Design Temperature	68°F

PART 2 PRODUCTS

2.1 **MATERIALS AND EQUIPMENT**

2.1.1 Provide the control valves including the actuators and the appropriate accessories in accordance with the attached data sheets. Include the following features, unless specified otherwise on the data sheets.

2.1.1.1 General Requirements

A. Identical manufacturer and catalog number for components with the same specifications.

B. Design for instrument air pressure of 60 to 150 psig, with a dewpoint of -40°F.

C. Flow direction clearly and permanently marked on the valve body.

D. Verification of valve and valve actuator sizing for the given service conditions to verify suitable valve performance.

E. Anticipated noise level calculated for the control valve at normal and maximum flow. If the noise measured 3 feet from the piping, 3 feet downstream of the valve is predicted to exceed 85 dBA, recommend methods for noise reduction.

F. Material:

Carbon Steel (CS)	Castings-ASTM A216, GR WCB Forgings-ASTM A105
Stainless Steel (SS)	Castings-ASTM A351, GR CF8M Forgings-ASTM A182, GR F316 Forgings-ASTM A182, GR F304

G. Seat leakage testing in accordance with FCI 70-2.

H. No asbestos

I. Threaded connections in accordance with ANSI/ASME B1.20.1.

2.1.1.2 Single Seated Globe Valve

A. Stem top and bottom or heavy top guided.

B. Bolted bonnet.

C. Bolted gland follower.

D. Seat rings threaded and lugs for removal. Use of the manufacturer's standard inert thread lubricant is permitted, but sealing compounds or welding is not permitted.

E. Flanged valve with face-to-face dimensions in accordance with ANSI B16.10.

2.1.1.3 Pneumatic Powered Actuator

A. Actuator sizing to handle the maximum differential pressure.

B. Valve stem position indication on a reversible scale with the words "OPEN" and "CLOSED" at the stem travel limits.

Scale graduated to indicate intermediate positions in relation to full stroke.

C. Stop with sufficient area to absorb the maximum force of the actuator in the opening direction.

D. Valve plug seated before the actuator reaches its travel limit when travelling towards the "CLOSED" position.

E. 1/4 inch NPT pneumatic piping connections, stainless steel material in accordance with Specification Section 17703, Material Class "ZJ".

2.1.1.4 Current/Pneumatic Converter

A. Current/pneumatic converter mounted and piped to the control valve.

B. Linear pressure signal output of 3-15 psig for an input signal of 4-20 mA. Output does not change more than 1 percent for a 5 psi change in supply pressure. Converter accurate to ±1 percent of output range.

C. Input resistance of the converter not to exceed 250 ohms.

D. Converter housing meets ANSI/NEMA 250, Type 1.

E. Zero and span adjustment concealed inside the cover and provided with means to lock these adjustments.

F. 1/4 inch NPT female supply and output pressure connections.

G. 1/2 inch NPT electrical conduit connection.

2.1.2 **LABELING**

Provide a stainless steel tag, 18 ga. minimum, with the instrument tag number stamped or engraved, affixed to each instrument with stainless steel wire (preferred), stainless steel screws, or rivets. The service description is in the Buyer's Instrument Engineering Index, Attachment B to Specification Section 17704.

2.2 **FABRICATION AND MANUFACTURE**

(Not Used)

2.3 **FACTORY ACCEPTANCE TESTS (FAT)**

2.3.1 Prepare a Factory Acceptance Test (FAT) procedure and submit it to the Buyer for approval. Include:

A. Inspections/tests to demonstrate that the design, fabrication, and assembly of the materials and equipment meet the requirements of the design drawings and specifications.

B. (Deleted)

2.3.2 Inspect and test the valves in accordance with the Buyer approved FAT procedure.

2.3.3 Submit a report confirming the FAT procedure has been completed and the results.

2.4 **PACKAGING AND SHIPPING**

Protect all shipped materials from moisture, vibration, shock, and heat damage while in transit or interim storage.

PART 3 EXECUTION

3.1 **PREPARATION**

Inspect and calibrate valves in accordance with Paragraph 3.1 of Specification Section 17705.

3.2 **INSTALLATION, APPLICATION AND ERECTION**

Install valves in accordance with Specification Sections 17704, 16100 and the manufacturer's installation instructions.

3.3 **FIELD QUALITY CONTROL**

3.3.1 Prepare a CAT procedure and submit it for approval. Include the requirements in Specification Section 17705.

3.3.2 Inspect and test the valve installations according to the Buyer approved CAT procedure.

3.3.3 Submit a report confirming the CAT procedure has been completed and the results.

3.4 **ADJUSTMENTS**

(Not Used)

3.5 **CLEANING**

(Not Used)

3.6 **PROTECTION**

(Not Used)

3.7 **DEMONSTRATION**

(Not Used)

3.8 **SCHEDULES**

(Not Used)

END OF SECTION

ATTACHMENT A

FLUOR DANIEL

INSTRUMENT SPECIFICATIONS

CONTROL VALVES

NO	BY DATE	REVISION
1	ALS 06/15/93	RE-NO. PER CR-0702 & RE-SIZE VALVE.

SHEET NO.	REVISION
E350-DS-1	1
DATE 6/26/92	CONTRACT 845734
MANUFACTURER Fisher or Equal	
BY FJM	CHK'D BRC / APPRV'D JBB

ALL ITEMS SHALL COMPLY WITH GENERAL SPECIFICATION SHEETS: B-595-C-E350-17656

				REV
GENERAL	1			
	2	TAG NUMBER	PV-VAX-321	△1
	3	P&ID FRAME NO.	H-2-123370-5	
	4	SERVICE	HPS VACUUM SYSTEM	
	5		FILTER (FH-620-003A)	
	6	LINE SIZE	2"	
	7	LINE SPEC	L	
	8	PIPE SCHEDULE	80	
	9			
BODY	10	BODY SIZE	1"	
	11	PORT SIZE	3/4"	
	12	CALCULATED Cv	4.64	△1
	13	SELECTED Cv	9.86	△1
	14	VALVE TYPE	GLOBE	
	15	MATERIAL	CARBON STEEL	
	16	END CONNECTIONS	150# RF	
	17	BONNET	PLAIN	
	18	PACKING OR SEAL	PTFE	
	19	GUIDE MATERIAL	17-4PH SS	
	20			
	21			
TRIM	22	NO. OF PORTS	1	
	23	PLUG FORM	MICRO-FORM (EQUAL %)	
	24	PLUG MATERIAL	416 SS HARDENED	△1
	25	SEAT MATERIAL	416 SS HARDENED	△1
	26			
	27			
ACTUATOR	28	TYPE	DIAPHRAGM	
	29	SIZE SELECTED	30	
	30	OPEN AT	15 PSIG	
	31	CLOSE AT	3 PSIG	
	32	FAILURE POSITION	CLOSED	
	33	HANDWHEEL	NONE	
	34	MODEL	FISHER 667	
	35			
POSITIONER	36	POSITIONER REQ'D	NO	
	37	TYPE	NA	
	38	OPEN AT	NA	
	39	CLOSE AT	NA	
	40	BYPASS	NA	
	41	MODEL	NA	
	42			
	43			
ACCESSORIES	44	I/P CONVERTER	YES (NOTE 1)	
	45	mA RANGE	4 - 20 mA	
	46	CONVERTER OUTPUT	3 - 15 PSIG	
	47	MODEL	FISHER 546	
	48			
	49			
	50			
	51			
	52			
	53			
MFR	54	OUTLINE DIMENSIONS	CATALOG	
	55	MFR. MODEL NUMBER	FISHER EZ	
	56			
	57			
	58			

				REV
SERVICE	59			
	60	FLUID TYPE	AIR	
	61			
	62	FLUID PHASE	GAS	
	63	FLOW UNITS	SCFM	
	64	QUANTITY SIZING	34.8	
	65	QUAN. MAX. ANTICIPATED	31.6	
	66	QUAN. NORMAL @F.T.	15.8	△1
	67	QUAN. MINIMUM	0	
	68	PRESS. MAX. IN	14.3 PSIA	
	69	PRESS. NORMAL IN	14.3 PSIA	
	70	△ P MAX.(SHUTOFF)	10.3 PSID	
	71	△ P @ MAX. ANT. FLOW	10.1 PSID	
	72	△ P NORMAL (SIZING)	10.1 PSID	
	73	△ P @ QUAN. MIN.	9.8 PSID	
	74	TEMP. MAX.	85 DEG. F	
	75	TEMP. NORMAL	65 TO 85 DEG. F	
	76	TEMP. MIN.	65 DEG. F	
	77	SP. GR. LIQ. @F.T.	---	
	78	SP. GR. GAS	1	
	79	VISCOSITY @F.T. CP	---	
	80	VAPOR PRESS. @F.T.	---	
	81	CRITICAL PRESS. (PSIA)	---	
	82	WEIGHT % FLASH	---	
	83	△ P SYSTEM (W/O VALVE)	---	
	84	TIGHT SHUTOFF REQ'D	YES (CLASS IV)	
	85	COMPRESSIBILITY @F.T.	0.97	
	86	SPEC. HEAT RATIO Cp/Cv	1.4	
	87	NOISE @ MIN. FLOW	---	
	88	NOISE @ NORMAL FLOW	---	
	89	NOISE @ MAX. ANTIC.	58 DBA	

NOTES:

1) Provide a filter regulator with gauge, Fisher Model # 67AFR or equal, for the I/P converter. The filter regulator and I/P converter (Tag No.: PY-VAX-321) shall be mounted △1 and piped (stainless steel).

U.S. DEPARTMENT OF ENERGY
Hanford Waste Vitrification Plant
Richland, Washington
DOE Contract DE-AC06-86RL10838

FLUOR DANIEL, INC.
Advanced Technology Division
Fluor Contract 8457

SECTION 17664
VACUUM RELIEF VALVES
B-595-C-E350-17664

APPROVED FOR CONSTRUCTION

REVISION 1 PER CR-0702
ISSUE DATE 8/4/93

WAPA YES ___ NO X
QUALITY LEVEL I ___ II X
SAFETY CLASS 1__ 2__ 3X 4__

ORIGINATOR:

A. L. Sanburg 7-12-93
A. L. Sanburg, Control Sys. Engineer Date

CHECKER:

B R Carlisle 7/12/93
B. R. Carlisle, Con. Sys. Eng. Date

APPROVED BY:

J B Bunning
J. B. Bunning Lead Discipline Engineer

07/12/93
Date

6/30/93 1:10pm
106\VOL5...\SPECS\E350\17664-1.

SECTION 17664
VACUUM RELIEF VALVES
B-595-C-E350-17664

TABLE OF CONTENTS

PART		PAGE
PART 1 GENERAL		
1.1	SUMMARY	1
1.2	REFERENCES	1
1.3	RELATED REQUIREMENTS	1
1.4	DEFINITIONS	1
1.5	SYSTEM DESCRIPTION	1
1.6	SUBMITTALS	1
1.7	CLASSIFICATION OF SYSTEM AND COMPONENTS	1
1.8	PROJECT OR SITE ENVIRONMENTAL CONDITIONS	2
PART 2 PRODUCTS		2
2.1	MATERIALS AND EQUIPMENT	3
2.2	FABRICATION AND MANUFACTURE	3
2.3	FACTORY ACCEPTANCE TEST (FAT)	3
2.4	PACKAGING AND SHIPPING	3
PART 3 EXECUTION		4
3.1	PREPARATION	4
3.2	INSTALLATION, APPLICATION AND ERECTION	4
3.3	FIELD QUALITY CONTROL	4
3.4	ADJUSTMENTS	4
3.5	CLEANING	4
3.6	PROTECTION	4
3.7	DEMONSTRATION	4
3.8	SCHEDULES	4
		5

ATTACHMENTS

ATTACHMENT	TITLE
A	E350-DS-1 DATA SHEET, TANK BREATHER VALVES AND VACUUM RELIEF VALVES

SECTION 17664
VACUUM RELIEF VALVES

PART 1 GENERAL

1.1 SUMMARY

This section defines the requirements for the supply, installation, inspection, and testing of vacuum relief valves for the Hanford Waste Vitrification Plant (HWVP).

1.2 REFERENCES

The publications listed below form a part of this specification to the extent referenced. The publications are referred to in the text by the basic designations only.

AMERICAN SOCIETY OF MECHANICAL ENGINEERS (ASME)

ASME/ANSI B16.5	1988 Pipe Flanges and Flanged; Errata - October 1988

1.3 RELATED REQUIREMENTS

Specification Section 01730	Operation and Maintenance Data
Specification Section 17704	General Instrumentation Installation and Testing
Specification Section 17705	Instrument Calibration and Checkout

1.4 DEFINITIONS

CAT - Construction Acceptance Test

FAT - Factory Acceptance Test

1.5 SYSTEM DESCRIPTION

(Not Used)

1.6 SUBMITTALS

Submit the following in accordance with the Vendor Drawing and Data Requirements section of the Order/Subcontract.

(Deleted)

1.6.1 Catalog cuts describing each valve and each accessory.

1.6.2 Manufacturer's installation drawings and instructions.

1.6.3 Manufacturer's operation, and maintenance manuals in accordance with Specification Section 01730.

1.6.4 Manufacturer's calibration instructions including calibration curves/tables.

1.6.5 Sizing calculations and equations including the name, manufacturer, and serial number of any computer programs used in the sizing.

1.6.6 FAT procedure.

1.6.7 Report confirming the FAT procedure was executed and the results.

1.6.8 CAT procedure including the requirements in Paragraph 3.3.1.

1.6.9 Report confirming the CAT procedure was executed and the results.

1.7 CLASSIFICATION OF SYSTEM AND COMPONENTS

(Not Used)

1.8 PROJECT OR SITE ENVIRONMENTAL CONDITIONS

Climatic and Geographic Site Conditions

A.	Site Elevation	714 feet above sea level
B.	Barometric Pressure	14.3 psia
C.	Outside Design Temperature	
	1) Maximum Design Temperature	110°F
	2) Minimum Design Temperature	-20°F
	3) Wet Bulb Design Temperature	68°F

PART 2 PRODUCTS

2.1 MATERIALS AND EQUIPMENT

2.1.1 Provide vacuum relief valves in accordance with the data sheets. Include the following features unless otherwise specified in the data sheets:

A. Identical manufacturer and catalog number for components with the same specifications

B. Carbon steel body

C. Stainless steel (316 SS) trim material

D. ASME/ANSI B16.5 flanged connections

E. Stainless steel (304 SS) inlet screen

F. Spring loaded pallet

G. Check of valve sizing for the given service conditions to verify suitable valve performance.

2.1.2 Labeling

Provide a stainless steel tag, 18 ga. minimum, with the instrument tag number and service description stamped or engraved, affixed to each instrument with stainless steel wire (preferred), stainless steel screws, or rivets. The service description is in the Buyer's Instrument Engineering Index, Attachment B to Specification Section 17704.

2.2 FABRICATION AND MANUFACTURE

(Not Used)

2.3 FACTORY ACCEPTANCE TEST (FAT)

2.3.1 Prepare a Factory Acceptance Test (FAT) procedure and submit it to the Buyer for approval. Include:

A. Inspections/tests to demonstrate that the design, fabrication, and assembly of the materials and equipment meet the requirements of the design drawings and specifications.

B. (Deleted)

2.3.2 Inspect and test the instruments in accordance with the Buyer approved FAT procedure.

2.3.3 Submit a report confirming the FAT procedure has been completed and the results.

2.4 **PACKAGING AND SHIPPING**

Protect all shipped materials from moisture, vibration, shock, and heat damage while in transit or interim storage.

PART 3 EXECUTION

3.1 **PREPARATION**

Inspect and calibrate valves in accordance with Paragraph 3.1 of Specification Section 17705.

3.2 **INSTALLATION, APPLICATION AND ERECTION**

Install valves in accordance with Specification Sections 17704 and the manufacturer's installation instructions.

3.3 **FIELD QUALITY CONTROL**

3.3.1 Prepare a CAT procedure and submit it for approval. Include the requirements in Specification Section 17705.

3.3.2 Inspect and test the valve installations according to the Buyer approved CAT procedure.

3.3.3 Submit a report confirming the CAT procedure has been completed and the results.

3.4 **ADJUSTMENTS**

(Not Used)

3.5 **CLEANING**

(Not Used)

3.6 **PROTECTION**

(Not Used)

3.7 **DEMONSTRATION**

(Not Used)

3.8 SCHEDULES

(Not Used)

END OF SECTION

ATTACHMENT A

	NO	BY DATE	REVISION	SHEET NO.	REVISION
FLUOR DANIEL		ALS	RE-NO. PER CR-0702.	E350-DS-1	1
INSTRUMENT SPECIFICATIONS	1	06/15/93		DATE 8/26/92	CONTRACT 845734
				MANUFACTURER Groth or Equal	
TANK BREATHER VALVES AND VACUUM RELIEF VALVES				BY FJM / CHK'D BRC	APPRV'D JBB

ALL ITEMS SHALL COMPLY WITH GENERAL SPECIFICATION SHEETS: B-595-C-E350-17664

GENERAL	1	TAG NUMBER				PSV-VAX-327-1 ⚠			PSV-VAX-327-2 ⚠			
	2	P&ID AND FRAME NUMBER				H-2-123370-5			H-2-123370-5			
	3	SERVICE				HPS VACUUM BLOWER			HPS VACUUM BLOWER			
	4					(VP-620-003VA)			(VP-620-003VB)			
	5											
	6	DESIGN TYPE				VACUUM BREAKER			VACUUM BREAKER			
	7	LINE	SIZE	SPEC.	SCHEDULE	2"	L	80	2"	L	80	
	8	PRESSURE SETTING				NA			NA			
	9	VACUUM SETTING				-10.3 PSIG			-10.3 PSIG			
	10											
	11											
BODY	12	MATERIAL				CARBON STEEL			CARBON STEEL			
	13	SIZE				2"			2"			
	14	CONNECTIONS				150# RF			150# RF			
	15	DESIGN PRESSURE				15 PSIG TO -10.3 PSIG			15 PSIG TO -10.3 PSIG			
	16											
	17											
MATERIAL	18	COVER				CARBON STEEL			CARBON STEEL			
	19	PALLETS				316 SS			316 SS			
	20	SEATS				316 SS			316 SS			
	21	GUIDE POSTS				316 SS			316 SS			
	22	SEAT DIAPHRAGM MATERIAL				MFR. STD.			MFR. STD.			
	23											
	24											
	25											
	26											
	27											
PROCESS	28	FLUID				AIR			AIR			
	29	TEMPERATURE	NORM.	MAX.		85 DEG F	150 DEG F		85 DEG F	150 DEG F		
	30	SP. GR. @ NORM. TEMP.				NA			NA			
	31	PRESSURE VENTING RATE				NA			NA			
	32	VACUUM RELIEF RATE				31.6 SCFM			31.6 SCFM			
	33	MAXIMUM OPERATING PRESSURE				14.3 PSIA			14.3 PSIA			
	34	BLANKETED				NA			NA			
	35											
	36											
ACCESSORIES	37	PRESSURE SCREEN				---			---			
	38	VACUUM SCREEN				304 SS			304 SS			
	39	FLAME SNUFFER				---			---			
	40	FLAME ARRESTOR				---			---			
	41											
	42											
	43											
	44	OUTLINE DIMENSIONS				CATALOG			CATALOG			
MFR	45	MFR. MODEL NUMBER				GROTH 1301			GROTH 1301			
	46											
	47											
	48											
	49											

NOTES

U.S. DEPARTMENT OF ENERGY
Hanford Waste Vitrification Plant
Richland, Washington
DOE Contract DE-AC06-86RL10838

FLUOR DANIEL, INC.
Advanced Technology Division
Fluor Contract 8457

SECTION 17667
PRESSURE SWITCHES
B-595-C-E350-17667

APPROVED FOR CONSTRUCTION

REVISION 1 PER CR-0702
ISSUE DATE 6/4/93

WAPA YES ___ NO X
QUALITY LEVEL I ___ II X
SAFETY CLASS 1__ 2__ 3 X 4__

ORIGINATOR:

A. L. Sanburg 7-29-93
A. L. Sanburg, Control Sys. Engineer Date

CHECKER:

B R Carlisle 7/29/93
B. R. Carlisle, Con. Sys. Eng. Date

APPROVED BY:

J B Bunning
J. B. Bunning Lead Discipline Engineer

07/29/93
Date

SECTION 17667
PRESSURE SWITCHES
B-595-C-E350-17667

TABLE OF CONTENTS

PART		PAGE
PART 1	**GENERAL**	1
1.1	SUMMARY	1
1.2	REFERENCES	1
1.3	RELATED REQUIREMENTS	1
1.4	DEFINITIONS	2
1.5	SYSTEM DESCRIPTION	2
1.6	SUBMITTALS	2
1.7	CLASSIFICATION OF SYSTEMS AND COMPONENTS	2
1.8	PROJECT OR SITE ENVIRONMENTAL CONDITIONS	2
PART 2	**PRODUCTS**	3
2.1	MATERIALS AND EQUIPMENT	3
2.2	FABRICATION AND MANUFACTURE	3
2.3	FACTORY ACCEPTANCE TESTS (FAT)	4
2.4	PACKAGING AND SHIPPING	4
PART 3	**EXECUTION**	4
3.1	PREPARATION	4
3.2	INSTALLATION, APPLICATION AND ERECTION	4
3.3	FIELD QUALITY CONTROL	4
3.4	ADJUSTMENTS	4
3.5	CLEANING	5
3.6	PROTECTION	5
3.7	DEMONSTRATION	5
3.8	SCHEDULES	5

ATTACHMENTS

ATTACHMENT	TITLE
A	E350-DS-1 DATA SHEET, PRESSURE SWITCHES

SECTION 17667
PRESSURE SWITCHES

PART 1 GENERAL

1.1 SUMMARY

This section defines the requirements for the supply, installation, inspection, and testing of pressure switches for the Hanford Waste Vitrification Plant (HWVP).

1.2 REFERENCES

The publications listed below form a part of this specification to the extent referenced. The publications are referred to in the text by the basic designations only.

AMERICAN SOCIETY OF MECHANICAL ENGINEERS (ASME)

ANSI/ASME B1.20.1	1983 Pipe Threads, General Purpose (Inch)

FACTORY MUTUAL (FM)

Directory	1991 Approval Guide

NATIONAL ELECTRICAL MANUFACTURERS ASSOCIATION (NEMA)

ANSI/NEMA 250	1985 Enclosures for Electrical Equipment (1000 Volts Maximum) Revision No. 1 - May 1986 Revision No. 2 - May 1988

UNDERWRITERS LABORATORIES INC. (UL)

Directory	1991 Electric Appliance and Utilization Equipment Directory
Directory	1991 Recognized Component Directory

1.3 RELATED REQUIREMENTS

Specification Section 01730	Operation and Maintenance Data
Specification Section 16100	Electrical Installation
Specification Section 17704	General Instrumentation Installation and Testing
Specification Section 17705	Instrument Calibration and Checkout

1.4 **DEFINITIONS**

CAT - Construction Acceptance Test

FAT - Factory Acceptance Test

1.5 **SYSTEM DESCRIPTION**

(Not Used)

1.6 **SUBMITTALS**

Submit the following in accordance with the Vendor Drawing and Data Requirements section of the Order/Subcontract.

(Deleted)

1.6.1 Catalog cuts describing each instrument and accessory.

1.6.2 Manufacturer's installation drawings and instructions.

1.6.3 Manufacturer's operation and maintenance manuals in accordance with Specification Section 01730.

1.6.4 Manufacturer's calibration instructions including calibration curves/tables.

1.6.5 FAT procedure.

1.6.6 Report confirming the FAT procedure was executed and the results.

1.6.7 CAT procedure including the requirements in Paragraph 3.3.1.

1.6.8 Report confirming the CAT procedure was executed and the results.

1.7 **CLASSIFICATION OF SYSTEMS AND COMPONENTS**

(Not Used)

1.8 **PROJECT OR SITE ENVIRONMENTAL CONDITIONS**

Climatic and Geographic Site Conditions

A.	Site Elevation	714 feet above sea level
B.	Barometric Pressure	14.3 psia
C.	Outside Design Temperature	
	1) Maximum Design Temperature	110°F

2) Minimum Design Temperature -20°F

3) Wet Bulb Design Temperature 68°F

PART 2 PRODUCTS

2.1 MATERIALS AND EQUIPMENT

2.1.1 Provide pressure switches in accordance with the data sheets. Include the following features unless otherwise specified in the data sheets:

A. Identical manufacturer and catalog number for components with the same specifications.

B. UL Listed Devices, UL Recognized, or FM Approved Devices (refer to UL and FM directories).

C. Two single-pole, double throw switches with contact ratings no less than 2.0 amps. at 120 Vac.

D. Set point actuation set prior to shipment.

E. Repeatability less than 1.0 percent of full scale.

F. Fixed set point differential (deadband) not to exceed 3.0 percent of the trip point setting.

G. NEMA 250, Type 1 electrical enclosures.

H. ANSI/ASME B1.20.1 threaded connections.

I. Proof pressure greater than 150 percent of the switch range.

2.1.2 Labeling

Provide a stainless steel tag, 18 ga. minimum, with the instrument tag number and service description stamped or engraved, affixed to each instrument with stainless steel wire (preferred), stainless steel screws, or rivets. The service description is in the Buyer's Instrument Engineering Index, Attachment B to Specification Section 17704.

2.2 FABRICATION AND MANUFACTURE

(Not Used)

2.3 **FACTORY ACCEPTANCE TESTS (FAT)**

2.3.1 Prepare a Factory Acceptance Test (FAT) procedure and submit it to the Buyer for approval. Include:

A. Inspections/tests to demonstrate that the design, fabrication, and assembly of the materials and equipment meet the requirements of the design drawings and specifications.

B. (Deleted)

2.3.2 Inspect and test the instruments in accordance with the Buyer approved FAT procedure.

2.3.3 Submit a report confirming the FAT procedure has been completed and the results.

2.4 **PACKAGING AND SHIPPING**

Protect all shipped materials from moisture, vibration, shock, and heat damage while in transit or interim storage.

PART 3 EXECUTION

3.1 **PREPARATION**

Inspect and calibrate instruments in accordance with Paragraph 3.1 of Specification Section 17705.

3.2 **INSTALLATION, APPLICATION AND ERECTION**

Install instruments in accordance with Specification Sections 17704, 16100, and the manufacturer's installation instructions.

3.3 **FIELD QUALITY CONTROL**

3.3.1 Prepare a CAT procedure and submit it for approval. Include the requirements in Specification Section 17705.

3.3.2 Inspect and test the instrument installations according to the Buyer approved CAT procedure.

3.3.3 Submit a report confirming the CAT procedure has been completed and the results.

3.4 **ADJUSTMENTS**

(Not Used)

3.5 **CLEANING**

(Not Used)

3.6 **PROTECTION**

(Not Used)

3.7 **DEMONSTRATION**

(Not Used)

3.8 **SCHEDULES**

(Not Used)

END OF SECTION

ATTACHMENT A

FLUOR DANIEL INSTRUMENT SPECIFICATIONS PRESSURE SWITCHES	NO	BY DATE	REVISION	SHEET NO. E350-DS-1	REVISION 1
	1	ALS 06/15/93	RE-NO. PER CR-0702 & MISC. REVISIONS.	DATE 6/26/92	CONTRACT 845734
				MANUFACTURER United Electric or Equal	
				BY FJM	CHK'D BRC / APPRV'D JBB

ALL ITEMS SHALL COMPLY WITH GENERAL SPECIFICATION SHEETS: B-595-C-E350-17667

GENERAL	1	TAG NUMBER		PSH-VAX-324 ⚠				
	2	P&ID AND FRAME NUMBER		H-2-123370-5				
	3	VESSEL OR EQUIPMENT NUMBER		VP-620-003A/B				
	4	SERVICE		HPS VACUUM BLOWER				
	5							
	6							
	7							
PRESSURE ELEMENT	8	TYPE		DIAPHRAGM				
	9	MATERIAL		BUNA-N				
	10	CONNECTION	SIZE / LOCATION	MFR STD.	BOTTOM			
	11	PROOF PRESURE		225 PSI				
	12							
	13							
	14							
	15							
	16							
	17							
	18							
	19							
	20							
SWITCH	21	TYPE		SNAP ACTION				
	22	QUANTITY	FORM	⚠ TWO	SPDT ⚠			
	23	ENCLOSURE		NEMA 1				
	24	CONDUIT SIZE AND TYPE		MFR. STD.				
	25	RATING: VOLTS	Hz OR DC	120 V	60 Hz			
⚠	26	AMPS / WATTS	HP	15 AMPS / ---	---			
	27	LOAD TYPE		RESISTIVE				
	28	DEADBAND		0.13 PSI				
	29	ADJUSTMENT		ADJUSTABLE TRIP POINT ⚠				
	30	CONTACTS: OPEN	ON / INCR.	X	X			
	31	CLOSE	PROCESS / DECR.					
	32							
	33							
	34							
PROCESS	35	PROCESS FLUID		AIR				
	36	TEMPERATURE	NORM. / MAX.	65 to 85 DEG F	85 DEG F			
	37	PRESSURE	NORM. / MAX.	-9.8 PSIG	0 PSIG			
	38	TRIP POINT		-4.3 PSIG ON INCREASE				
MFR	39	OUTLINE DIMENSION		CATALOG				
	40	MFR. MODEL NUMBER		UNITED ELECTRIC J402-450 ⚠				
	41							
	42							
	43							
	44							
	45							

NOTES

U.S. DEPARTMENT OF ENERGY
Hanford Waste Vitrification Plant
Richland, Washington
DOE Contract DE-AC06-86RL10838

FLUOR DANIEL, INC.
Advanced Technology Division
Fluor Contract 8457

SECTION 17669
FLOW SWITCHES
B-595-C-E350-17669

APPROVED FOR CONSTRUCTION

REVISION 1
ISSUE DATE 8/4/93

WAPA YES ___ NO X
QUALITY LEVEL I ___ II X
SAFETY CLASS 1__ 2__ 3 X 4__

ORIGINATOR:

A. L. Sanburg 7-29-93
A. L. Sanburg, Control Sys. Engineer Date

CHECKER:

B R Carlisle 7/29/93
B. R. Carlisle, Control Sys. Engr. Date

APPROVED BY:

J B Bunning
J. B. Bunning Lead Discipline Engineer

07/29/93
Date

7/27/93 9:58am
106\VOL5...\SPECS\E350\17669-1.

SECTION 17669
FLOW SWITCHES
B-595-C-E350-17669

TABLE OF CONTENTS

PART		PAGE
PART 1	**GENERAL**	1
1.1	SUMMARY	1
1.2	REFERENCES	1
1.3	RELATED REQUIREMENTS	1
1.4	DEFINITIONS	2
1.5	SYSTEM DESCRIPTION	2
1.6	SUBMITTALS	2
1.7	CLASSIFICATION OF SYSTEMS AND COMPONENTS	2
1.8	PROJECT OR SITE ENVIRONMENTAL CONDITIONS	2
PART 2	**PRODUCTS**	3
2.1	MATERIALS AND EQUIPMENT	3
2.2	FABRICATION AND MANUFACTURE	3
2.3	FACTORY ACCEPTANCE TESTS (FAT)	4
2.4	PACKAGING AND SHIPPING	4
PART 3	**EXECUTION**	4
3.1	PREPARATION	4
3.2	INSTALLATION, APPLICATION AND ERECTION	4
3.3	FIELD QUALITY CONTROL	4
3.4	ADJUSTMENTS	4
3.5	CLEANING	5
3.6	PROTECTION	5
3.7	DEMONSTRATION	5
3.8	SCHEDULES	5

ATTACHMENTS

ATTACHMENT	TITLE
A	E350-DS-1 DATA SHEET, FLOW SWITCH

SECTION 17669
FLOW SWITCHES

PART 1 GENERAL

1.1 SUMMARY

This section defines the requirements for the supply, installation, inspection, and testing of flow switches for the Hanford Waste Vitrification Plant (HWVP).

1.2 REFERENCES

The publications listed below form a part of this specification to the extent referenced. The publications are referred to in the text by the basic designations only.

AMERICAN SOCIETY OF MECHANICAL ENGINEERS (ASME)

ANSI/ASME B1.20.1	1983 Pipe Threads, General Purpose (Inch)

FACTORY MUTUAL (FM)

Directory	1991 Approval Guide

NATIONAL ELECTRICAL MANUFACTURERS ASSOCIATION (NEMA)

ANSI/NEMA 250	1985 Enclosures for Electrical Equipment (1000 Volts Maximum) Revision No. 1 - May 1986 Revision No. 2 - May 1988

UNDERWRITERS LABORATORIES INC. (UL)

Directory	1991 Electric Appliance and Utilization Equipment Directory
Directory	1991 Recognized Component Directory

1.3 RELATED REQUIREMENTS

Specification Section 01730	Operation and Maintenance Data
Specification Section 16100	Electrical Installation
Specification Section 17704	General Instrumentation Installation and Testing
Specification Section 17705	Instrument Calibration and Checkout

1.4 **DEFINITIONS**

CAT - Construction Acceptance Test

FAT - Factory Acceptance Test

NPT - National Pipe Thread

1.5 **SYSTEM DESCRIPTION**

(Not Used)

1.6 **SUBMITTALS**

Submit the following in accordance with the Vendor Drawing and Data Requirements section of the Order/Subcontract.

(Deleted)

1.6.1 Catalog cuts describing each instrument and accessory.

1.6.2 Manufacturer's installation drawings and instructions.

1.6.3 Manufacturer's operation and maintenance manuals in accordance with Specification Section 01730.

1.6.4 Manufacturer's calibration instructions including calibration curves/tables.

1.6.5 FAT procedure.

1.6.6 Report confirming the FAT procedure was executed and the results.

1.6.7 CAT procedure including requirements in Paragraph 3.3.1.

1.6.8 Report confirming the CAT procedure was executed and the results.

1.7 **CLASSIFICATION OF SYSTEMS AND COMPONENTS**

(Not Used)

1.8 **PROJECT OR SITE ENVIRONMENTAL CONDITIONS**

Climatic and Geographic Site Conditions

A.	Site Elevation	714 feet above sea level
B.	Barometric Pressure	14.3 psia

C. Outside Design Temperature

1)	Maximum Design Temperature	110°F
2)	Minimum Design Temperature	-20°F
3)	Wet Bulb Design Temperature	68°F

PART 2 PRODUCTS

2.1 MATERIALS AND EQUIPMENT

2.1.1 Provide flow switches in accordance with Data Sheet E350-DS-1. Include the following features unless otherwise specified in the data sheet:

A. Identical manufacturer and catalog number for components with the same specifications.

B. UL Listed Devices, UL Recognized Components, or FM Approved Devices (refer to UL and FM directories).

C. Two single-pole, double throw snap action switches with contact ratings no less than 2.0 amps at 120 Vac.

D. Set point actuation set prior to shipment.

E. Fixed set point differential (deadband) not to exceed 3.0 percent of the trip point setting.

F. ANSI/NEMA 250, Type 1 electrical enclosures.

G. 1/2 inch electrical connections.

H. ANSI/ASME B1.20.1 threaded connections.

I. Switch mounting in any position.

2.1.2 Labeling

Provide a stainless steel tag, 18 ga. minimum, with the instrument tag number stamped or engraved, affixed to each instrument with stainless steel wire (preferred), stainless steel screws, or rivets. The service description is in the Buyer's Instrument Engineering Index, Attachment B to Specification Section 17704.

2.2 FABRICATION AND MANUFACTURE

(Not Used)

2.3 **FACTORY ACCEPTANCE TESTS (FAT)**

2.3.1 Prepare a Factory Acceptance Test (FAT) procedure and submit it to the Buyer for approval. Include:

A. Inspections/tests to demonstrate that the design, fabrication, and assembly of the materials and equipment meet the requirements of the design drawings and specifications.

B. (Deleted)

2.3.2 Inspect and test the instruments in accordance with the Buyer approved FAT procedure.

2.3.3 Submit a report confirming the FAT procedure has been completed and the results.

2.4 **PACKAGING AND SHIPPING**

Protect all shipped materials from moisture, vibration, shock, and heat damage while in transit or interim storage.

PART 3 EXECUTION

3.1 **PREPARATION**

Inspect and calibrate instruments in accordance with Paragraph 3.1 of Specification Section 17705.

3.2 **INSTALLATION, APPLICATION AND ERECTION**

Install instruments in accordance with Specification Sections 17704, 16100, and the manufacturers' installation instructions.

3.3 **FIELD QUALITY CONTROL**

3.3.1 Prepare a CAT procedure and submit it for approval. Include the requirements in Specification Section 17705.

3.3.2 Inspect and test the instrument installations according to the Buyer approved CAT procedure.

3.3.3 Submit a report confirming the CAT procedure has been completed and the results.

3.4 **ADJUSTMENTS**

(Not Used)

3.5 **CLEANING**

(Not Used)

3.6 **PROTECTION**

(Not Used)

3.7 **DEMONSTRATION**

(Not Used)

3.8 **SCHEDULES**

(Not Used)

END OF SECTION

ATTACHMENT A

FLUOR DANIEL INSTRUMENT SPECIFICATIONS FLOW SWITCH	NO	BY DATE	REVISION	SHEET NO. E350-DS-1	REVISION 1
	1	ALS 06/18/93	MISC. REVISIONS.	DATE 6/26/92	CONTRACT 845734
				MANUFACTURER ITT McDonnell & Miller or Equal	
				BY RJL	CHK'D BRC / APPRV'D JBB

ALL ITEMS SHALL COMPLY WITH GENERAL SPECIFICATION SHEETS: B-595-C-E350-17669

GENERAL	1	TAG NUMBER		FSL-CSS-010		
	2	P&ID AND FRAME NUMBER		H-2-129731-1		
	3	VESSEL OR EQUIPMENT NUMBER		AH-05I-111		
	4	SERVICE		AIR HANDLING UNIT OUTLET		
	5					
	6					
	7					
BODY	8	MATERIAL		CORROSION RESISTANT		
	9	CONN. SIZE & RATING		SEE NOTE 1		
	10	CONNECTION ORIENTATION		SIDE		
	11	AIR SUPPLY		---		
	12	AIR SUPPLY CONN. SIZE		---		
	13					
SENSOR	14	TYPE		SWING VANE		
	15	PADDLE LENGTH/SENSOR LENGTH		7-1/8 INCHES		
	16	FLOAT DISC SIZE		---		
	17	SWING CHECK VALVE		---		
	18	MATERIAL		CORROSION RESISTANT		
	19	MTD. FACE TO PIPE CL DIM.		---		
	20					
SWITCH	21	TYPE		SNAP		
	22	QUANTITY	FORM	2	SPDT	
	23	ENCLOSURE		NEMA 1		
	24	CONDUIT SIZE AND TYPE		1/2" KNOCKOUT		
	25	RATING: VOLTS	Hz OR DC	120 V	60 Hz	
	26	AMPS	WATTS	15	---	
	27	LOAD TYPE		RESISTIVE		
	28	DEADBAND		50 FPM		
	29	ADJUSTMENT		220-1000 FPM		
	30	CONTACTS: OPEN	ON / INCR.	X		
	31	CLOSE	PROCESS / DECR.		X	
	32					
	33					
	34	WIRING CONNECTIONS		SCREW TERMINAL		
PROCESS	35	PROCESS FLUID		AIR		
	36	FLOW MIN.	NORM. / MAX.	0 FPM	950 FPM	1500 FPM
	37	TEMP MIN.	NORM. / MAX.	40 DEG F	75 DEG F	90 DEG F
	38	PRESS MIN.	NORM. / MAX.	0 PSIG	2 PSIG	4 PSIG
	39	SP. GR @ STD		1		
	40	VISCOSITY @ F.T. (CP)		---		
	41	TRIP POINT		650 FPM ON DECREASE		
	42	ACCURACY OF TRIP POINT		---		
MFR	43	OUTLINE DIMENSION		CATALOG		
	44	MFR. MODEL NUMBER		ITT McDONNELL & MILLER MODEL AF3-D		
	45					

NOTES

1) MOUNT ON THE SIDE OF DUCT 14 INCHES HIGH BY 20 INCHES WIDE.

U.S. DEPARTMENT OF ENERGY
Hanford Waste Vitrification Plant
Richland, Washington
DOE Contract DE-AC06-86RL10838

FLUOR DANIEL, INC.
Advanced Technology Division
Fluor Contract 8457

SECTION 17696
HUMIDITY TRANSMITTERS - ELECTRONIC
B-595-C-E350-17696

APPROVED FOR CONSTRUCTION

REVISION 1
ISSUE DATE 8/4/93

WAPA YES ___ NO X
QUALITY LEVEL I ___ II X
SAFETY CLASS 1__ 2__ 3 X 4__

ORIGINATOR:

A. L. Sanburg 7-29-93
A. L. Sanburg, Control Sys. Engineer Date

CHECKER:

B R Carlisle 7/29/93
B. R. Carlisle, Control Sys. Engr. Date

APPROVED BY:

J. B. Bunning
J. B. Bunning Lead Discipline Engineer

07/29/93
Date

SECTION 17696
HUMIDITY TRANSMITTERS - ELECTRONIC
B-595-C-E350-17696

TABLE OF CONTENTS

PART		PAGE
PART 1	**GENERAL**	1
1.1	SUMMARY	1
1.2	REFERENCES	1
1.3	RELATED REQUIREMENTS	1
1.4	DEFINITIONS	1
1.5	SYSTEM DESCRIPTION	2
1.6	SUBMITTALS	2
1.7	CLASSIFICATION OF SYSTEMS AND COMPONENTS	2
1.8	PROJECT OR SITE ENVIRONMENTAL CONDITIONS	2
PART 2	**PRODUCTS**	3
2.1	MATERIALS AND EQUIPMENT	3
2.2	FABRICATION AND MANUFACTURE	3
2.3	FACTORY ACCEPTANCE TESTS (FAT)	3
2.4	PACKAGING AND SHIPPING	4
PART 3	**EXECUTION**	4
3.1	PREPARATION	4
3.2	INSTALLATION, APPLICATION AND ERECTION	4
3.3	FIELD QUALITY CONTROL	4
3.4	ADJUSTMENTS	4
3.5	CLEANING	4
3.6	PROTECTION	4
3.7	DEMONSTRATION	5
3.8	SCHEDULES	5

ATTACHMENT

ATTACHMENT	TITLE
A	E350-DS-1 DATA SHEET, PHYSICAL PROPERTY ANALYZER (HUMIDITY TRANSMITTER)

SECTION 17696
HUMIDITY TRANSMITTERS - ELECTRONIC

PART 1 GENERAL

1.1 SUMMARY

This section defines the requirements for the supply, installation, inspection, and testing of humidity indicating transmitters for the Hanford Waste Vitrification Plant (HWVP).

1.2 REFERENCES

The publications listed below form a part of this specification to the extent referenced. The publications are referred to in the text by the basic designation only.

FACTORY MUTUAL (FM)

Directory	1991 Approval Guide

NATIONAL ELECTRICAL MANUFACTURER'S ASSOCIATION (NEMA)

ANSI/NEMA 250	1985 Enclosures for Electrical Equipment (1000 Volts Maximum) Rev No. 1 - May 1986 Rev No. 2 - May 1988

UNDERWRITER'S LABORATORIES (UL)

Directory 1991	Electric Appliance and Utilization Equipment Directory

1.3 RELATED REQUIREMENTS

Specification Section 01730	Operation and Maintenance Data
Specification Section 16100	Electrical Installation
Specification Section 17704	General Instrumentation Installation and Testing
Specification Section 17705	Instrument Calibration and Checkout

1.4 DEFINITIONS

CAT - Construction Acceptance Test

FAT - Factory Acceptance Test

NPT - National Pipe Threads

1.5 **SYSTEM DESCRIPTION**

(Not Used)

1.6 **SUBMITTALS**

Submit the following in accordance with the Vendor Drawing and Data Requirements section of the Order/Subcontract.

(Deleted)

1.6.1 Catalog cuts describing each instrument and accessory.

1.6.2 Manufacturer's installation drawings and instructions.

1.6.3 Manufacturer's operation and maintenance manuals in accordance with Specification Section 01730.

1.6.4 Manufacturer's calibration instructions including calibration curves/tables.

1.6.5 FAT procedure.

1.6.6 Report confirming the FAT procedure was executed and the results.

1.6.7 CAT procedure including the requirements in Paragraph 3.3.1.

1.6.8 Report confirming the CAT procedure was executed and the results.

1.7 **CLASSIFICATION OF SYSTEMS AND COMPONENTS**

(Not Used)

1.8 **PROJECT OR SITE ENVIRONMENTAL CONDITIONS**

Climatic and Geographic Site Conditions

A.	Site Elevation	714 feet above sea level
B.	Barometric Pressure	14.3 psia
C.	Outside Design Temperature	
	1) Maximum Design Temperature	110°F
	2) Minimum Design Temperature	-20°F
	3) Wet Bulb Design Temperature	68°F

PART 2 PRODUCTS

2.1 MATERIALS AND EQUIPMENT

2.1.1 Provide humidity transmitters in accordance with the data sheets. Include the following features unless otherwise specified in the data sheets:

A. Identical manufacturer and catalog number for components with the same specifications.

B. UL Listed, UL Recognized Components, or FM Approved Devices (refer to UL and FM directories).

C. 0 to 100 percent indicator.

D. 4-20 mA dc output.

E. Surface mount.

F. NEMA 250, Type 1 electrical enclosures.

G. ANSI/ASME B1.20.1 threaded connections.

H. Radio frequency interference from 20 to 1000 MHz with a field strength of 30 volts per meter shall not affect the output of a transmitter, installed with grounded conduit, by more than ±0.1% of the span.

2.1.2 Labeling

Provide a stainless steel tag, 18 ga. minimum, with the instrument tag number stamped or engraved, affixed to each instrument with stainless steel wire (preferred), stainless steel screws, or rivets. The service description is in the Buyer's Instrument Engineering Index, Attachment B to Specification Section 17704.

2.2 FABRICATION AND MANUFACTURE

(Not used)

2.3 FACTORY ACCEPTANCE TESTS (FAT)

2.3.1 Prepare a Factory Acceptance Test (FAT) procedure and submit it to the Buyer for approval. Include:

A. Inspections/tests to demonstrate that the design, fabrication, and assembly of the materials and equipment meet the requirements of the design drawings and specifications.

B. (Deleted)

2.3.2 Inspect and test the instruments in accordance with the Buyer approved FAT procedure.

2.3.3 Submit a report confirming the FAT procedure and testing has been completed and the results.

2.4 **PACKAGING AND SHIPPING**

Protect all shipped materials from moisture, vibration, shock, and heat damage while in transit or interim storage.

PART 3 EXECUTION

3.1 **PREPARATION**

Inspect and calibrate instruments in accordance with Paragraph 3.1 of Specification Section 17705.

3.2 **INSTALLATION, APPLICATION AND ERECTION**

Install instruments in accordance with Specification Sections 17704, 16100, and the manufacturer's installation instructions.

3.3 **FIELD QUALITY CONTROL**

3.3.1 Prepare a CAT procedure and submit it for approval. Include the requirements in Specification Section 17705.

3.3.2 Inspect and test the instrument installations according to the Buyer approved CAT procedure.

3.3.3 Submit a report confirming the CAT procedure has been completed and the results.

3.4 **ADJUSTMENTS**

(Not Used)

3.5 **CLEANING**

(Not Used)

3.6 **PROTECTION**

(Not Used)

3.7 **DEMONSTRATION**

(Not Used)

3.8 **SCHEDULES**

(Not Used)

END OF SECTION

ATTACHMENT A

FLUOR DANIEL INSTRUMENT SPECIFICATIONS	NO	BY DATE	REVISION	SHEET NO.	REVISION
		ALS	MISC. REVISIONS.	E350-DS-1	1
	1	06/15/93		DATE 6/26/92	CONTRACT 845734
				MANUFACTURER BEC Controls or Equal	
PHYSICAL PROPERTY ANALYZER (HUMIDITY TRANSMITTER)				BY RJL / CHK'D BRC	APPRV'D JBB

ALL ITEMS SHALL COMPLY WITH GENERAL SPECIFICATION SHEETS: B-595-C-E350-17696

GEN	1	TAG NUMBER	MIT-CSS-023						
	2	P&ID AND FRAME NUMBER	H-2-129731-3						
	3	LINE NO. OR VESSEL & SPEC.	RM. 102, FOS #5						
	4	ANALYZER DESCRIPTION	HUMIDITY TRANSMITTER WITH INTEGRAL INDICATOR						
	5	STREAM IDENTITY	AMBIENT AIR						
	6	ANALYZER HOUSE NO.	N/A						
	7								
ANYZ	8	UNITS OF MEASUREMENT	HUMIDITY - PERCENT						
	9	OUTPUT SIGNAL AND RANGE	4-20 mA DC						
	10								
	11	ANALYSIS CYCLE TIME:	CONTINUOUS		MINUTES: PREFERED		N/A		MINUTES
PROCESS		SAMPLE AT SAMPLE CONDITIONER:							
	12	INLET: PRESS. MAX	N/A		NORM. 14.3 PSIA			MIN. N/A	
		TEMP MAX.	90 DEG F		NORM. 72 DEG F			MIN. 40 DEG F	
	13	R. HUMIDITY % MAX	95		NORM. 50			MIN. 5	
	14	SP. GR. (NORM) @ 60 DEG. F	1		SP. GR. RANGE @ F.T.	N/A			
	15	VISCOSITY CP @	N/A	DEG. F	VISCOSITY	N/A	CP @	N/A	DEG. F
	16	POUR POINT	N/A	DEG. F	VAPOR PRESS.	N/A			
	17	TYPICAL IBP	N/A	DEG. F	DEW PT. /BUBBLE PT.	N/A			
	18	TYPICAL END PT.	N/A	DEG. F	TYPICAL	N/A			
	19	STREAM CONTAMINANTS: WATER	N/A	% FREE	N/A	PPM DISSOLVED			
	20	DISSOLVED SOLIDS	N/A		PARTICULATE RANGE	N/A			
	21	CORROSIVE MATERIALS	NONE						
	22	ADDITIONAL COMPONENTS DURING UPSET	NONE						
	23	COMPONENTS WHICH MAY: DECOMPOSE	N/A		POLYMERIZE	N/A		REACT N/A	
UTIL	24	ELECTRICAL: VOLTS	24V DC (2-WIRE LOOP POWERED)		WATTS	N/A		PHASE N/A	
	25	INSTRUMENT AIR: OPERATING PRESSURE	N/A		PSIG: OPERATING TEMP.			N/A	
	26	COOLING FLUID: SEA WATER	N/A		OR FRESH WATER			N/A	
	27	SUPPLY PRESSURE	N/A		PSIG: RETURN PRESSURE			N/A	
	28	SUPPLY TEMPERATURE	N/A		DEG. F: MAX. ALLOW. RETURN TEMP.			N/A	
	29	MECHANICAL DESIGN	N/A		PSIG @	N/A	DEG. F		
	30	STEAM: N/A PSIG @	N/A	DEG. F					
ENV									
	31	CLASSIFICATION @ ANALYZER: N.E.C.			GENERAL PURPOSE				
	32	AMBIENT AIR TEMP.: MAX.	90 DEG F		NORM. 72 DEG F			MIN. 40 DEG F	
	33	BAROMETRIC PRESSURE: HIGH	N/A		NORM. 14.3 PSIA			LOW N/A	
COND	34	LOCATION: ANALYZER	N/A		RECORDER	N/A			
	35	ANALYZER HOUSING	NEMA 1		DISTANCE, ANALYZER TO RECEIVER			N/A	
	36	ANALYZER MODEL NO.	BEC H322L-3A-1-B ⚠						
	37								

NOTES

1. ENCLOSURE TO INCLUDE WINDOW TO ALLOW VIEW OF HUMIDITY INDICATOR. ⚠
2. HUMIDITY TRANSMITTER ENCLOSURE TO MOUNT ON STANDARD SINGLE GANG SWITCH BOX. ⚠
3. ACCURACY: +/-2% (10-85% RH); +/-5% (<10% RH, >85% RH). ⚠
4. REPEATABILITY: +/-0.5% RH. ⚠

U.S. DEPARTMENT OF ENERGY
Hanford Waste Vitrification Plant
Richland, Washington
DOE Contract DE-AC06-86RL10838

FLUOR DANIEL, INC.
Advanced Technology Division
Fluor Contract 8457

SECTION 17697
SMOKE DETECTORS
B-595-C-E350-17697

APPROVED FOR CONSTRUCTION

REVISION 1 PER CR-0884
ISSUE DATE 8/4/93

WAPA YES ___ NO X
QUALITY LEVEL I ___ II X
SAFETY CLASS 1__ 2__ 3 X 4__

ORIGINATOR:

A. L. Sanburg 7-29-93
A. L. Sanburg, Control Sys. Engineer Date

CHECKER:

B. R. Carlisle 7/29/93
B. R. Carlisle, Control Sys. Engr. Date

APPROVED BY:

J. B. Bunning
J. B. Bunning Lead Discipline Engineer

07/29/93
Date

SECTION 17697
SMOKE DETECTORS
B-595-C-E350-17697

TABLE OF CONTENTS

PART		PAGE
PART 1	**GENERAL**	1
1.1	SUMMARY	1
1.2	REFERENCES	1
1.3	RELATED REQUIREMENTS	2
1.4	DEFINITIONS	2
1.5	SYSTEM DESCRIPTION	2
1.6	SUBMITTALS	2
1.7	CLASSIFICATION OF SYSTEMS AND COMPONENTS	2
1.8	PROJECT OR SITE ENVIRONMENTAL CONDITIONS	3
PART 2	**PRODUCTS**	3
2.1	MATERIALS AND EQUIPMENT	3
2.2	FABRICATION AND MANUFACTURE	5
2.3	FACTORY ACCEPTANCE TESTS (FAT)	5
2.4	PACKAGING AND SHIPPING	5
PART 3	**EXECUTION**	5
3.1	PREPARATION	5
3.2	INSTALLATION, APPLICATION AND ERECTION	5
3.3	FIELD QUALITY CONTROL	5
3.4	ADJUSTMENTS	6
3.5	CLEANING	6
3.6	PROTECTION	6
3.7	DEMONSTRATION	6
3.8	SCHEDULES	6

ATTACHMENTS

ATTACHMENT	TITLE
A	E350-DS-1 AND E350-DS-2 DATA SHEETS, SMOKE DETECTORS

SECTION 17697
SMOKE DETECTORS

PART 1 GENERAL

1.1 SUMMARY

This section defines the requirements for the supply, installation, inspection, and testing of area type smoke detectors and duct type smoke detectors for the Hanford Waste Vitrification Plant (HWVP).

1.2 REFERENCES

The publications listed below form a part of this specification to the extent referenced. The publications are referred to in the text by the basic designation only.

AMERICAN SOCIETY OF MECHANICAL ENGINEERS (ASME)

ANSI/ASME B1.20.1	1983 Pipe Threads, General Purpose (Inch)

FACTORY MUTUAL (FM)

Directory	1991 Approval Guide

NATIONAL ELECTRICAL MANUFACTURER'S ASSOCIATION (NEMA)

ANSI/NEMA 250	1985 Enclosures for Electrical Equipment (1000 Volts Maximum) Revision No. 1 - May 1986 Revision No. 2 - May 1988

UNDERWRITERS LABORATORIES INC. (UL)

Directory	1991 Electric Appliance and Utilization Equipment Directory
Directory	1991 Fire Protection Equipment Directory
Directory	1991 Recognized Component Directory
UL 268	1989 Safety Smoke Detectors for Fire Protective Signaling Systems Third Edition; May 2, 1989
UL 268A	1986 Safety Smoke Detectors for Duct Application First Edition; March 3, 1986

1.3 **RELATED REQUIREMENTS**

Specification Section 01730	Operation and Maintenance Data
Specification Section 15501	Automatic Wet Pipe Sprinkler System
Specification Section 16100	Electrical Installation
Specification Section 17704	General Instrumentation Installation and Testing
Specification Section 17705	Instrument Calibration and Checkout

1.4 **DEFINITIONS**

CAT - Construction Acceptance Test

FAT - Factory Acceptance Test

1.5 **SYSTEM DESCRIPTION**

(Not Used)

1.6 **SUBMITTALS**

Submit the following in accordance with the Vendor Drawing and Data Requirements section of the Order/Subcontract.

(Deleted)

1.6.1 Catalog cuts describing each instrument and accessory.

1.6.2 Manufacturer's installation drawings and instructions.

1.6.3 Manufacturer's operation and maintenance manuals in accordance with Specification Section 01730.

1.6.4 Manufacturer's calibration instructions including calibration curves/tables.

1.6.5 FAT procedure.

1.6.6 Report confirming the FAT procedure was executed and the results.

1.6.7 CAT procedure including requirements in Paragraph 3.3.1.

1.6.8 Report confirming the CAT procedure was executed and the results.

1.7 **CLASSIFICATION OF SYSTEMS AND COMPONENTS**

(Not used)

1.8 **PROJECT OR SITE ENVIRONMENTAL CONDITIONS**

Climatic and Geographic Site Conditions

A.	Site Elevation	714 feet above sea level
B.	Barometric Pressure	14.3 psia
C.	Outside Design Temperature	
(1)	Maximum Design Temperature	110°F
(2)	Minimum Design Temperature	-20°F
(3)	Wet Bulb Design Temperature	68°F

PART 2 PRODUCTS

2.1 **MATERIALS AND EQUIPMENT**

2.1.1 Provide duct type smoke detectors in accordance with the data sheets. Include the following features unless otherwise specified in the Data Sheets:

A. Identical manufacturer and catalog number for components with the same specifications.

B. UL Listed, UL Recognized Components, or FM Approved Devices (refer to UL and FM directories) and in compliance with UL 268A.

C. Rectangular duct mounting without adapter brackets

D. Integral filter system

E. Intelligent photoelectric detector type

F. Two single pole, double throw auxiliary relays rated 2A at 120 V ac, resistive, as a minimum, for alarm and trouble signals

G. Visual indication of alarm and power status on detector housing

H. Operate on 24 V dc power

I. No radioactive components

J. Provision of and terminals for a field-installed remote test station with reset and detector alarm test functions

K. ANSI/NEMA 250 Type 1 electrical enclosures

L. ANSI/ASME B1.20.1 threaded connections

M. Compatible with the fire alarm panel specified in Section 15501

2.1.2 Provide area type smoke detectors in accordance with the data sheets. Include the following features unless otherwise specified in the data sheets:

A. Identical manufacturer and catalog number for components with the same specifications.

B. UL Listed, UL Recognized Components, or FM Approved Devices (refer to UL and FM directories) and in compliance with UL 268.

C. Mounting base for standard domestic square or octagonal electrical box.

D. Integral insect-resistant screen.

E. Intelligent photoelectric detector type with integral thermal sensor.

F. Two single pole, double throw auxiliary relays rated 2A at 120 V ac, resistive, as a minimum, for alarm and trouble signals.

G. Visual indication of alarm and polling status on detector housing.

H. Operate on 24 V dc power.

I. No radioactive components.

J. Provision for field testing with a magnet.

K. ANSI/NEMA 250 Type 1 electrical enclosures.

L. Compatible with the fire alarm panel specified in Section 15501.

2.1.3 Labeling

Provide a stainless steel tag, 18 ga. minimum, with the instrument tag number stamped or engraved, affixed to each instrument with stainless steel wire (preferred), stainless steel screws, or rivets. The service description is in the Buyer's Instrument Engineering Index, Attachment B to Specification Section 17704.

2.2 **FABRICATION AND MANUFACTURE**

(Not used)

2.3 **FACTORY ACCEPTANCE TESTS (FAT)**

2.3.1 Prepare a Factory Acceptance Test (FAT) procedure and submit it to the Buyer for approval. Include:

A. Inspections/tests to demonstrate that the design, fabrication, and assembly of the materials and equipment meet the requirements of the design drawings and specifications.

B. (Deleted)

2.3.2 Inspect and test the instruments in accordance with the Buyer approved FAT procedure.

2.3.3 Submit a report confirming the FAT procedure has been completed and the results.

2.4 **PACKAGING AND SHIPPING**

Protect all shipped materials from moisture, vibration, shock, and heat damage while in transit or interim storage.

PART 3 EXECUTION

3.1 **PREPARATION**

Inspect and calibrate instruments in accordance with Paragraph 3.1 of Specification Section 17705.

3.2 **INSTALLATION, APPLICATION AND ERECTION**

Install instruments in accordance with Specification Sections 15501, 16100, 17704 and the manufacturer's installation instructions.

3.3 **FIELD QUALITY CONTROL**

3.3.1 Prepare a CAT procedure and submit it for approval. Include the requirements in Specification Section 17705.

3.3.2 Inspect and test the instrument installations according to the Buyer approved CAT procedure.

3.3.3 Submit a report confirming the CAT procedure has been completed and the results.

3.4 **ADJUSTMENTS**

(Not Used)

3.5 **CLEANING**

(Not Used)

3.6 **PROTECTION**

(Not Used)

3.7 **DEMONSTRATION**

(Not Used)

3.8 **SCHEDULES**

(Not Used)

END OF SECTION

ATTACHMENT A

FLUOR DANIEL INSTRUMENT SPECIFICATION SMOKE DETECTORS	NO	BY DATE	REVISION	SHEET NO. E350-DS-1	REVISION 1
		ALS	MISC. REVISIONS.		
	1	06/17/93		DATE 6/26/92	CONTRACT 845734
				MANUFACTURER Honeywell or Equal	
				BY RJL	CHK'D BRC / APPRV'D JBB

ALL ITEMS SHALL COMPLY WITH GENERAL SPECIFICATION SHEETS: B-595-C-E350-17697

GENERAL

1. TYPE IONIZATION [ ] PHOTOELECTRIC [X]
   OTHER DUCT TYPE DETECTOR ⚠
2. MOUNTING SEE NOTE 2 ⚠
3. POWER 24 VOLTS DC Hz
4. INTEGRATED FILTER [X]
5. MFR. MODEL NUMBER HONEYWELL TC806A DETECTOR WITH 14506873 HOUSING ⚠

SWITCH

6. QUANTITY 2 TYPE SPDT
7. RATING:
   120 VOLTS 60 Hz
   2 AMPS ⚠ --- WATTS
8. CONDUIT CONNECTION 3/4" NPT

ACCESSORIES

9. REMOTE TEST STATION YES

TAG NUMBER	P&ID NUMBER	SERVICE	MAX. DUCT FLOW	DUCT SIZE	NOTES
(DELETED) ⚠					
YSH-CSS-009	H-2-129731-1	AH-05I-111 OUTLET SMOKE DET.	1900 SCFM	20" X 14"	2,3,4
YSH-CSS-040-1	H-2-129734-1	AH-05I-112 OUTLET SMOKE DET.	12000 SCFM	52" X 24"	2,3,4
YSH-CSS-040-2	H-2-129734-2	AH-05I-113 OUTLET SMOKE DET.	12000 SCFM	52" X 24"	2,3,4
YSH-CSS-045	H-2-129734-2	RM 136, 110 RETURN SMOKE DET.	18000 SCFM	30" X 60"	2,3,4

NOTES

1) (DELETED) ⚠
2) RECTANGULAR DUCT MOUNTED
3) SIZE SAMPLING TUBES ACCORDING TO DUCT SIZE
4) SMOKE DETECTOR SENSITIVITY SHALL BE IN ACCORDANCE WITH MANUFACTURER'S RECOMMENDATIONS

ATTACHMENT A

FLUOR DANIEL INSTRUMENT SPECIFICATION SMOKE DETECTORS	NO	BY DATE	REVISION	SHEET NO.	REVISION
		ALS	DS-2 ADDED	E350-DS-2	1
	1	06/17/93		DATE 06/17/93	CONTRACT 845734
				MANUFACTURER Honeywell or Equal	
				BY ALS	CHK'D / APPRV'D

ALL ITEMS SHALL COMPLY WITH GENERAL SPECIFICATION SHEETS: B-595-C-E350-17697

GENERAL

1. TYPE IONIZATION [ ] PHOTOELECTRIC [X]
   OTHER *AREA TYPE DETECTOR*
2. MOUNTING *SEE NOTE 1*
3. POWER *24* VOLTS *DC* Hz
4. INTEGRATED FILTER [ ]
5. MFR. MODEL NUMBER *HONEYWELL TC806A (NOTE 3)*

SWITCH

6. QUANTITY *2* TYPE *SPDT*
7. RATING:
   120 VOLTS *60* Hz
   2 AMPS *---* WATTS
8. CONDUIT CONNECTION *NOTE 4*

ACCESSORIES

9. REMOTE TEST STATION *N/A*

TAG NUMBER	P&ID NUMBER	SERVICE	MAX. DUCT FLOW	DUCT SIZE	NOTES
YSH-CSS-015	H-2-129731-1	RETURN AIR CEILING PLENUM	NOT APPLICABLE	NOT APPLICABLE	1,2,3,4,5

NOTES

1) SURFACE MOUNTED
2) SMOKE DETECTOR SENSITIVITY SHALL BE IN ACCORDANCE WITH MANUFACTURER'S RECOMMENDATIONS
3) INTEGRAL THERMAL SENSOR
4) MOUNTING ON STANDARD DOMESTIC SQUARE OR OCTAGONAL ELECTRICAL BOX
5) PROVIDED WITH STANDARD DOMESTIC MOUNTING BASE

U.S. DEPARTMENT OF ENERGY
Hanford Waste Vitrification Plant
Richland, Washington
DOE Contract DE-AC06-86RL10838

FLUOR DANIEL, INC.
Advanced Technology Division
Fluor Contract 8457

SECTION 17704
GENERAL INSTRUMENTATION INSTALLATION AND TESTING
B-595-C-E350-17704

APPROVED FOR CONSTRUCTION

REVISION 1 PER CR-0499, CR-0702, CR-0859 AND CR-0884
ISSUE DATE 8/4/93

WAPA YES ___ NO X
QUALITY LEVEL I ___ II X
SAFETY CLASS 1__ 2__ 3 X 4__

ORIGINATOR:

A. L. Sanburg 7-29-93
A. L. Sanburg, Con. Sys. Eng. Date

CHECKER:

B R Carlisle 7/29/93
B. R. Carlisle, Con. Sys. Eng. Date

APPROVED BY:

J B Bunning
J. B. Bunning Lead Discipline Engineer

07/29/93
Date

SECTION 17704
GENERAL INSTRUMENTATION INSTALLATION AND TESTING
B-595-C-E350-17704

TABLE OF CONTENTS

PART		PAGE
PART 1	**GENERAL**	1
1.1	SUMMARY	1
1.2	REFERENCES	1
1.3	RELATED REQUIREMENTS	1
1.4	DEFINITIONS	2
1.5	SYSTEM DESCRIPTION	2
1.6	SUBMITTALS	2
1.7	CLASSIFICATION OF SYSTEMS AND COMPONENTS	2
1.8	PROJECT OR SITE ENVIRONMENTAL CONDITIONS	2
PART 2	**PRODUCTS**	3
2.1	MATERIALS AND EQUIPMENT	3
2.2	FABRICATION AND MANUFACTURE	3
PART 3	**EXECUTION**	3
3.1	PREPARATION	3
3.2	INSTALLATION, APPLICATION, AND ERECTION	3
3.3	FIELD QUALITY CONTROL	4
3.4	ADJUSTMENTS	4
3.5	CLEANING	4
3.6	PROTECTION	4
3.7	DEMONSTRATION	5
3.8	SCHEDULES	5

ATTACHMENTS

ATTACHMENT	TITLE
A	INSTALLATION INDEX
B	ENGINEERING INSTRUMENT INDEX

SECTION 17704
GENERAL INSTRUMENTATION INSTALLATION AND TESTING

PART 1 GENERAL

1.1 SUMMARY

This section defines the general requirements for the installation of instrumentation and directs the Seller to specific Contract Drawings and Specifications for each instrument.

The Seller's work shall conform to the paragraphs of this standard specification which apply to the Seller's scope of work defined in the Order/Subcontract.

1.2 REFERENCES

(Not Used)

1.3 RELATED REQUIREMENTS

Specification Section 16100	Electrical Installation
Specification Section 17601	Temperature Transmitters - Electronic
Specification Section 17605	Room Thermostats - Electronic
Specification Section 17612	Thermowells and Resistance Temperature Detectors
Specification Section 17612W	Thermowells and Resistance Temperature Detectors
Specification Section 17614	Thermowells and Resistance Temperature Detectors Canister Storage Building Vault
Specification Section 17615	Differential Pressure Transmitters - Electronic
Specification Section 17626	Pressure Gages
Specification Section 17630	Mass Flowmeters
Specification Section 17630W	Mass Flowmeters
Specification Section 17642	Orifice Plates and Restriction Orifices

Specification Section 17656	Globe Type Control Valves
Specification Section 17664	Vacuum Relief Valves
Specification Section 17667	Pressure Switches
Specification Section 17669	Flow Switches
Specification Section 17696	Humidity Transmitters - Electronic
Specification Section 17697	Smoke Detectors
Specification Section 17703	Instrument Piping Materials
Specification Section 17705	Instrument Calibration and Checkout
Specification Section 17708	Instrument Piping Pressure Testing
Specification Section 17864	Instruments Furnished with Mechanical Equipment Canister Storage Building

1.4 **DEFINITIONS**

DBE - Design Basis Earthquake

CAT - Construction Acceptance Test

1.5 **SYSTEM DESCRIPTION**

(Not Used)

1.6 **SUBMITTALS**

1.6.1 Construction Acceptance Test (CAT) procedure including the requirements in Paragraph 3.3.

1.6.2 Report confirming the CAT procedure was executed and the results.

1.7 **CLASSIFICATION OF SYSTEMS AND COMPONENTS**

(Not Used)

1.8 **PROJECT OR SITE ENVIRONMENTAL CONDITIONS**

1.8.1 Climatic and Geographic Site Conditions

A.	Site Elevation	714 feet above sea level
B.	Barometric Pressure	14.3 psia

C. Outside Design Temperature

1) Maximum Design Temperature 110°F

2) Minimum Design Temperature -20°F

3) Wet Bulb Design Temperature 68°F

PART 2 PRODUCTS

2.1 **MATERIALS AND EQUIPMENT**

2.1.1 Provide instruments in accordance with the Sections listed for each instrument in the Engineering Instrument Index, which is Attachment B to this specification section.

2.1.2 Provide mounting and piping material in accordance with Specification Section 17703 and the Contract Drawings.

2.2 **FABRICATION AND MANUFACTURE**

(Not Used)

PART 3 EXECUTION

3.1 **PREPARATION**

3.1.1 Inspect instruments to confirm they meet the requirements of the Section that specified them.

3.1.2 Bench calibrate the instruments as specified in Specification Section 17705.

3.2 **INSTALLATION, APPLICATION, AND ERECTION**

The Installation Index, Attachment A, lists the Contract Drawings which show location, mounting, piping, and wiring requirements for each instrument, or, refers to Contract Drawings.

3.2.1 Instrument Mounting

3.2.1.1 Locate instruments as shown on Contract Drawings. Horizontal position may be adjusted to avoid interferences. Maintain elevations specified.

3.2.1.2 Mount instruments in accordance with the manufacturers' instructions, the Installation Index, and the Contract Drawings.

3.2.1.3 Install instrument stands and column supports plumb and level.

3.2.2 Instrument Piping

3.2.2.1 Install air supply, pneumatic signal, and process sensing piping/ tubing in accordance with manufacturers' installation instructions, the Installation Index, and the Contract Drawings.

3.2.2.2 Use mounting materials identified on the Contract Drawings and specified in Specification Section 17703.

3.2.2.3 Install piping plumb and level except slope horizontal piping as specified on the Contract Drawings.

3.2.2.4 Support piping and tubing from the permanent plant structure except as specified otherwise on the Contract Drawings.

3.2.2.5 Provide 7 feet headroom clearance in walkways and maintenance accessways.

3.2.2.6 Locate pipe and tubing to make it inconvenient to use as a step or handhold.

3.2.3 Instrument Wiring

3.2.3.1 Install instrument wiring in accordance with manufacturers' installation instructions, the Installation Index, Specification Section 16100, and the Contract Drawings.

3.3 **FIELD QUALITY CONTROL**

3.3.1 Prepare a Construction Acceptance Test procedure and submit it for approval. Include the requirements in Specification Sections 16100, 17705, and 17708.

3.3.2 Inspect and test the instrument installation according to the Buyer approved CAT procedure.

3.3.3 Submit a report confirming that the CATs have been completed and the results.

3.4 **ADJUSTMENTS**

(Not Used)

3.5 **CLEANING**

(Not Used)

3.6 **PROTECTION**

(Not Used)

3.7 **DEMONSTRATION**

(Not Used)

3.8 **SCHEDULES**

(Not Used)

END OF SECTION

GENERAL NOTES

A. FOR INSTRUMENTS NOT LISTED IN THIS INSTALLATION INDEX, REFERENCE ENGINEERING INDEX (ATTACHMENT B).

B. INSTRUMENT PIPING SHALL CONFORM TO THE INDIVIDUAL INSTRUMENT INSTALLATION DETAILS REFERENCED IN THIS INDEX.

C. ALL DRAWING NUMBERS REFERENCED IN THIS INDEX ARE PRECEDED BY H-2-.

D. INSTRUMENT AIR HEADER PIPING SHALL BE INSTALLED AND SUPPORTED AS SHOWN ON PIPING DRAWING.

E. FOR IMPULSE AND PNEUMATIC TUBING SUPPORT REFER TO SPECIFICATION SECTION B-595-C-E350-17704.

F. INSTRUMENT PIPING SHALL BE PRESSURE TESTED IN ACCORDANCE WITH SPECIFICATION SECTION B595-C-E350-17708.

G. INSTRUMENTS MOUNTED AND PIPED WITH ANOTHER INSTRUMENT OR COMPONENT ARE IDENTIFIED BY LISTING W/*** IN THE APPROPRIATE ASSEMBLY COLUMN. IF THER IS NO TAG NUMBER, THE INSTRUMENT OR COMPONENT IS IN THE SAME LOOP.

H. ELECTRICAL ASSEMBLY NUMBERS REFERENCED IN THIS INDEX ARE PRECEDED BY H-2-122732-4.

I. BDG NO: HWVP BUILDING NUMBER. FOR THIS CONSTRUCTION PACKAGE THE APPLICABLE NUMBER IS:

BDG NO	BDG NAME
05	CANISTER STORAGE BUILDING

J. TEST PRESSURES ARE IN POUNDS PER SQUARE INCH GAUGE.

K. ABBREVIATIONS

BDG	BUILDING
DCS	DISTRIBUTED CONTROL SYSTEM
I/O	INPUT/OUTPUT
IAS	INSTUMENT AIR SUPPLY
INSTL	INSTALLATION
SHT	SHEET
RM	ROOM

L. THE DISTRIBUTED CONTROL SYSTEM (DCS) IS BY BUYER.

M. FOR ELECTRICAL AND HVAC INFORMATION PERTAINING TO INSTRUMENTS IN THIS INDEX, REFER TO DRAWING H-2-116004 SHEETS 1 AND 2, CANISTER STORAGE BUILDING DRAWING INDEX.

SPECIFIC NOTES:

1. DRAWINGS H-2-125153 & H-2-125154 ARE PIPING PLAN DRAWINGS.
2. DEVICE IS FURNISHED AND INSTALLED WITH SELLER PACKAGE.
3. DEVICE TERMINATED IN A SELLER FURNISHED TERMINAL BOX. TERMINATION POINTS TBD.
4. DEVICE IS FURNISHED AND SHIPPED LOOSE WITH SELLER PACKAGE.
5. DRAWING H-2-129396-1 AND 129398-1 ARE HVAC CANISTER STORAGE BLDG. OFFICE AREA SECTIONS.
6. DEVICE IS FURNISHED AND INSTALLED WITH MOTOR CONTROL CENTER.
7. DEVICE IS FURNISHED W/WET PIPE SPRINKLER SYSTEM REFERENCE SPECIFICATION SECTION B-595-C-E350-15501.
8. DEVICE IS FURNISHED AND INSTALLED WITH UPS.

U.S. DEPARTMENT OF ENERGY
HANFORD WASTE VITRIFICATION PLANT
RICHLAND, WASHINGTON
DOE CONTRACT DE-AC06-86RL10838

D=DIRECT
E=ELECTRICAL
P=INSTRUMENT PIPING
C=COMBINATION

INSTALLATION INDEX
SPECIFICATION SECTION 17704, ATTACHMENT A
07/08/93

REV	BDG	RM	P&ID NUMBER	SHT	INSTRUMENT TAG NUMBER	PNL \ RACK	INSTL TYPE	LOCATION PLAN DWG	INSTALLATION DETAIL DRAWINGS				ELECTRICAL	TEST PRESS	NOTES
									PROCESS	PNEUMATIC	IAS	SUPPORT	INSTL ASSY		
	05	136	123358	01	ZSL-FWX-313	NA	E	121202-2	---	---	---	---	X13	---	---
	05	136	123358	01	PI-FWX-314-1	NA	P	---	---	---	---	---	---	---	7
1	05	136	123358	01	PI-FWX-314-2	NA	P	---	---	---	---	---	---	---	7
1	05	136	123358	01	PSH-FWX-315	NA	C	---	---	---	---	---	---	---	---
1	05	136	123370	05	FO-VAX-277	NA	D	125154	---	---	---	---	---	---	1
1	05	136	123370	05	FO-VAX-279	NA	D	125154	---	---	---	---	---	---	1
1	05	136	123370	05	FO-VAX-303	NA	D	125153	---	---	---	---	---	---	1
1	05	136	123370	05	FO-VAX-305	NA	D	125153	---	---	---	---	---	---	1
1	05	136	123370	05	FO-VAX-307	NA	D	125153	---	---	---	---	---	---	1
1	05	136	123370	05	FO-VAX-309	NA	D	125153	---	---	---	---	---	---	1
1	05	136	123370	05	FO-VAX-311	NA	D	125154	---	---	---	---	---	---	1
1	05	136	123370	05	FO-VAX-313	NA	D	125154	---	---	---	---	---	---	1
1	05	136	123370	05	FO-VAX-315	NA	D	125154	---	---	---	---	---	---	1
1	05	136	123370	05	FO-VAX-317	NA	D	125154	---	---	---	---	---	---	1
1	05	136	123370	05	FE-VAX-320	NA	D	121202-2	---	---	---	---	---	---	---
1	05	136	123370	05	FIT-VAX-320	NA	C	121202-2	---	---	---	W/PIT	X03	---	---
	05	136	123370	05	PIT-VAX-321	NA	C	121202-2	121426/8	---	---	121381/2	X03	17	---
	05	136	123370	05	PV-VAX-321	NA	D	121202-2	---	---	---	---	---	---	---
	05	136	123370	05	PY-VAX-321	NA	C	121202-2	---	---	121425/6	---	X07	---	---
1	05	136	123370	05	PDIT-VAX-323-1	NA	C	121202-2	121426/9	---	---	121381/1	X03	17	---
1	05	136	123370	05	PDIT-VAX-323-2	NA	C	121202-2	121426/9	---	---	121381/1	X03	17	---
	05	136	123370	05	PSH-VAX-324	NA	C	121202-2	121426/12	---	---	---	X02	17	---
	05	136	123370	05	PSV-VAX-327-1	NA	D	125154-1	---	---	---	---	---	---	1
	05	136	123370	05	PSV-VAX-327-2	NA	D	125154-1	---	---	---	---	---	---	1
	05	136	123370	05	PI-VAX-328-1	NA	P	121202-2	121426/11	---	---	---	---	17	---

U.S. DEPARTMENT OF ENERGY
HANFORD WASTE VITRIFICATION PLANT
RICHLAND, WASHINGTON
DOE CONTRACT DE-AC06-86RL10838

D=DIRECT
E=ELECTRICAL
P=INSTRUMENT PIPING
C=COMBINATION

INSTALLATION INDEX
SPECIFICATION SECTION 17704, ATTACHMENT A
07/08/93

REV	BDG	RM	P&ID NUMBER	SHT	INSTRUMENT TAG NUMBER	PNL \ RACK	INSTL TYPE	LOCATION PLAN DWG	INSTALLATION DETAIL DRAWINGS				ELECTRICAL	TEST PRESS	NOTES
									PROCESS	PNEUMATIC	IAS	SUPPORT	INSTL ASSY		
	05	136	123370	05	PI-VAX-328-2	NA	P	121202-2	121426/11	---	---	---	---	17	---
	05	136	123370	05	PDIT-VAX-330-1	NA	C	121202-2	121426/10	---	---	121381/2	X03	17	---
1	05	136	123370	05	PDIT-VAX-330-2	NA	C	121202-2	121426/10	---	---	121381/2	X03	17	---
1	05	108	123370	05	IT-VAX-331-1	NA	E	---	---	---	---	---	---	---	6
1	05	108	123370	05	IT-VAX-331-2	NA	E	---	---	---	---	---	---	---	6
1	05	108	123370	05	HS-VAX-331A-1	NA	E	---	---	---	---	---	---	---	6
1	05	108	123370	05	II-VAX-331A-1	NA	E	---	---	---	---	---	---	---	6
1	05	108	123370	05	HS-VAX-331A-2	NA	E	---	---	---	---	---	---	---	6
1	05	108	123370	05	II-VAX-331A-2	NA	E	---	---	---	---	---	---	---	6
1	05	108	123370	05	HS-VAX-331B-1	NA	E	---	---	---	---	---	---	---	6
1	05	108	123370	05	HS-VAX-331B-2	NA	E	---	---	---	---	---	---	---	6
1	05	108	123370	05	HS-VAX-331C-1	NA	E	---	---	---	---	---	---	---	6
1	05	108	123370	05	HS-VAX-331C-2	NA	E	---	---	---	---	---	---	---	6
	05	136	123370	05	PI-VAX-332-1	NA	P	121202-2	121426/11	---	---	---	---	17	---
	05	136	123370	05	PI-VAX-332-2	NA	P	121202-2	121426/11	---	---	---	---	17	---
1	05	136	123370	05	TE-VAX-333-1	NA	E	121202-2	---	---	---	---	X16	---	---
	05	136	123370	05	TIT-VAX-333-1	NA	E	121202-2	---	---	---	W/PDIT-021-1	X18	---	---
	05	136	123370	05	TW-VAX-333-1	NA	D	W/TE	---	---	---	---	---	---	---
1	05	136	123370	05	TE-VAX-333-2	NA	E	121202-2	---	---	---	---	X16	---	---
1	05	136	123370	05	TIT-VAX-333-2	NA	E	121202-2	---	---	---	W/PDIT-021-2	X18	---	---
1	05	136	123370	05	TW-VAX-333-2	NA	D	W/TE	---	---	---	---	---	---	---
1	05	102	123370	05	XS-VAX-336	NA	E	121202-2	---	---	---	---	---	---	8
1	05	136	129731	01	TE-CSS-001	NA	E	121202-2	---	---	---	---	X16	---	---
	05	136	129731	01	TIT-CSS-001	NA	E	121202-2	---	---	---	121381/1	X18	---	---
1	05	136	129731	01	TV-CSS-002	NA	D	129398-1	---	---	---	---	---	---	2,5
1	05	136	129731	01	TY-CSS-002	IR-610-434	C	---	---	---	121425/7	---	---	---	2,3

D=DIRECT
E=ELECTRICAL
P=INSTRUMENT PIPING
C=COMBINATION

REV	BDG	RM	P&ID NUMBER	SHT	INSTRUMENT TAG NUMBER	PNL \ RACK	INSTL TYPE	LOCATION PLAN DWG	INSTALLATION DETAIL DRAWINGS				ELECTRICAL	TEST PRESS	NOTES
									PROCESS	PNEUMATIC	IAS	SUPPORT	INSTL ASSY		
1	05	136	129731	01	YY-CSS-002	IR-610-434	C	---	---	---	---	---	---	---	2,3
1	05	136	129731	01	TE-CSS-003	NA	E	129398-1	---	---	---	---	---	---	2,5
	05	136	129731	01	TIT-CSS-003	IR-610-434	E	---	---	---	---	---	---	---	2,3
	05	136	129731	01	PDI-CSS-004	NA	P	129398-1	---	---	---	---	---	---	2,5
	05	136	129731	01	PDI-CSS-005	NA	P	129398-1	---	---	---	---	---	---	2,5
	05	136	129731	01	PDIT-CSS-006	IR-610-434	C	129398-1	---	---	---	---	---	---	2,3,5
1	05	108	129731	01	HS-CSS-007A	NA	E	---	---	---	---	---	---	---	6
1	05	108	129731	01	HS-CSS-007B	NA	E	---	---	---	---	---	---	---	6
1	05	108	129731	01	HS-CSS-007C	NA	E	---	---	---	---	---	---	---	6
	05	136	129731	01	PDIT-CSS-008	IR-610-434	C	129398-1	---	---	---	---	---	---	2,3,5
	05	136	129731	01	YSH-CSS-009	NA	E	121202-2	---	---	---	---	---	---	---
	05	136	129731	01	FSL-CSS-010	NA	C	121202-2	---	---	---	---	X02	---	---
1	05	106	129731	01	TE-CSS-014	NA	E	121202-2	---	---	---	121381/4	X16	---	---
	05	106	129731	01	TIT-CSS-014	NA	E	121202-2	---	---	---	121381/1	X18	---	---
	05	106	129731	01	YSH-CSS-015	NA	E	121202-2	---	---	---	---	---	---	---
1	05	136	129731	01	TV-CSS-016	NA	D	129398-1	---	---	---	---	---	---	2,5
1	05	136	129731	01	TY-CSS-016	IR-610-434	C	---	---	---	W/TY-002	---	---	---	2,3
1	05	136	129731	01	YY-CSS-016	IR-610-434	C	---	---	---	---	---	---	---	2,3
	05	116	129731	02	HS-CSE-001	NA	E	121202-2	---	---	---	---	---	---	---
	05	136	129731	02	JC-CSS-011	NA	E	---	---	---	---	---	---	---	2
1	05	104	129731	02	TE-CSS-011	NA	E	121202-2	---	---	W/TIC	---	---	---	---
	05	104	129731	02	TIC-CSS-011	NA	E	121202-2	---	---	---	---	---	---	---
	05	136	129731	02	JC-CSS-012	NA	E	---	---	---	---	---	---	---	2
1	05	108	129731	02	TE-CSS-012	NA	E	121202-2	---	---	W/TIC	---	---	---	---
	05	108	129731	02	TIC-CSS-012	NA	E	121202-2	---	---	---	---	---	---	---
	05	136	129731	02	JC-CSS-013	NA	E	---	---	---	---	---	---	---	2

REV	BDG	RM	P&ID NUMBER	SHT	INSTRUMENT TAG NUMBER	PNL \ RACK	INSTL TYPE	LOCATION PLAN DWG	INSTALLATION DETAIL DRAWINGS				ELECTRICAL	TEST PRESS	NOTES
									PROCESS	PNEUMATIC	IAS	SUPPORT	INSTL ASSY		
1	05	100	129731	02	TE-CSS-013	NA	E	121202-2	---	---	W/TIC	---	---	---	---
	05	100	129731	02	TIC-CSS-013	NA	E	121202-2	---	---	---	---	---	---	---
	05	102	129731	03	UIC-CSS-021	NA	E	121202-2	---	---	---	121381/2	---	---	4
1	05	102	129731	03	TE-CSS-022	NA	E	121202-2	---	---	---	W/TIT	---	---	---
	05	102	129731	03	TIT-CSS-022	NA	E	121202-2	---	---	---	121381/2	X17	---	---
	05	102	129731	03	MIT-CSS-023	NA	E	121202-2	---	---	---	W/TIT-022	---	---	---
	05	102	129731	03	UIC-CSS-024	NA	E	121202-2	---	---	---	W/UIC-021	---	---	4
1	05	136	129734	01	TV-CSS-031-1	NA	D	129396-1	---	---	---	---	---	---	2,5
1	05	136	129734	01	TY-CSS-031-1	IR-610-436	C	---	---	---	121425/7	---	---	---	2,3
1	05	136	129734	01	YY-CSS-031-1	IR-610-436	C	---	---	---	---	---	---	---	2,3
1	05	136	129734	01	TE-CSS-032-1	NA	E	129396-1	---	---	---	---	---	---	2,5
	05	136	129734	01	TIT-CSS-032-1	IR-610-436	E	---	---	---	---	---	---	---	2,3
	05	136	129734	01	PDI-CSS-033-1	NA	P	129396-1	---	---	---	---	---	---	2,5
	05	136	129734	01	PDI-CSS-034-1	NA	P	129396-1	---	---	---	---	---	---	2,5
	05	136	129734	01	PDIT-CSS-035-1	IR-610-436	C	---	---	---	---	---	---	---	2,3
	05	108	129734	01	HS-CSS-036A-1	NA	E	---	---	---	---	---	---	---	6
	05	108	129734	01	HS-CSS-036B-1	NA	E	---	---	---	---	---	---	---	6
	05	108	129734	01	HS-CSS-036C-1	NA	E	---	---	---	---	---	---	---	6
1	05	108	129734	01	IT-CSS-037-1	NA	E	---	---	---	---	---	---	---	6
1	05	108	129734	01	HS-CSS-037A-1	NA	E	---	---	---	---	---	---	---	6
1	05	108	129734	01	II-CSS-037A-1	NA	E	---	---	---	---	---	---	---	6
1	05	108	129734	01	HS-CSS-037B-1	NA	E	---	---	---	---	---	---	---	6
1	05	108	129734	01	HS-CSS-037C-1	NA	E	---	---	---	---	---	---	---	6
	05	136	129734	01	PDIT-CSS-038-1	IR-610-436	C	129396-1	---	---	---	---	---	---	2,5
1	05	136	129734	01	TE-CSS-039-1	NA	E	121202-2	---	---	---	---	X16	---	---
	05	136	129734	01	TIT-CSS-039-1	NA	E	121202-2	---	---	---	121381/1	X18	---	---

REV	BDG	RM	P&ID NUMBER	SHT	INSTRUMENT TAG NUMBER	PNL \ RACK	INSTL TYPE	LOCATION PLAN DWG	INSTALLATION DETAIL DRAWINGS				ELECTRICAL	TEST PRESS	NOTES
									PROCESS	PNEUMATIC	IAS	SUPPORT	INSTL ASSY		
	05	136	129734	01	YSH-CSS-040-1	NA	E	121202-2	---	---	---	---	---	---	---
1	05	136	129734	01	TV-CSS-046-1	NA	D	129396-1	---	---	---	---	---	---	5
	05	136	129734	01	TY-CSS-046-1	IR-610-436	C	---	---	---	---	---	---	---	2,3
	05	136	129734	01	YY-CSS-046-1	IR-610-436	C	---	---	---	W/TY-031-1	---	---	---	2,3
1	05	136	129734	02	TV-CSS-031-2	NA	D	129396-1	---	---	---	---	---	---	2,5
1	05	136	129734	02	TY-CSS-031-2	IR-610-435	C	---	---	---	121425/6	---	---	---	2,5
1	05	136	129734	02	YY-CSS-031-2	IR-610-435	C	---	---	---	---	---	---	---	2,3
1	05	136	129734	02	TE-CSS-032-2	NA	E	129396-1	---	---	---	---	---	---	2,5
	05	136	129734	02	TIT-CSS-032-2	IR-610-435	E	---	---	---	---	---	---	---	2,3
	05	136	129734	02	PDI-CSS-033-2	NA	C	129396-1	---	---	---	---	---	---	2,5
	05	136	129734	02	PDI-CSS-034-2	NA	P	129396-1	---	---	---	---	---	---	2,5
	05	136	129734	02	PDIT-CSS-035-2	IR-610-435	C	---	---	---	---	---	---	---	2,3
	05	108	129734	02	HS-CSS-036A-2	NA	E	---	---	---	---	---	---	---	6
	05	108	129734	02	HS-CSS-036B-2	NA	E	---	---	---	---	---	---	---	6
	05	108	129734	02	HS-CSS-036C-2	NA	E	---	---	---	---	---	---	---	6
1	05	108	129734	02	IT-CSS-037-2	NA	E	---	---	---	---	---	---	---	6
1	05	108	129734	02	HS-CSS-037A-2	NA	E	---	---	---	---	---	---	---	6
1	05	108	129734	02	II-CSS-037A-2	NA	E	---	---	---	---	---	---	---	6
1	05	108	129734	02	HS-CSS-037B-2	NA	E	---	---	---	---	---	---	---	6
1	05	108	129734	02	HS-CSS-037C-2	NA	E	---	---	---	---	---	---	---	6
	05	136	129734	02	PDIT-CSS-038-2	IR-610-435	C	129396-1	---	---	---	---	---	---	2,3,5
1	05	136	129734	02	TE-CSS-039-2	NA	E	121202-2	---	---	---	---	X16	---	---
	05	136	129734	02	TIT-CSS-039-2	NA	E	121202-2	---	---	---	121381/1	X18	---	---
	05	136	129734	02	YSH-CSS-040-2	NA	E	121202-2	---	---	---	---	---	---	---
1	05	136	129734	02	TV-CSS-046-2	NA	D	129396-1	---	---	---	---	---	---	2,5
	05	136	129734	02	TY-CSS-046-2	IR-610-435	C	---	---	---	---	---	---	---	2,3

REV	BDG	RM	P&ID NUMBER	SHT	INSTRUMENT TAG NUMBER	PNL \ RACK	INSTL TYPE	LOCATION PLAN DWG	INSTALLATION DETAIL DRAWINGS				ELECTRICAL	TEST PRESS	NOTES
									PROCESS	PNEUMATIC	IAS	SUPPORT	INSTL ASSY		
	05	136	129734	02	YY-CSS-046-2	IR-610-435	C	---	---	---	---	---	---	---	2,3
1	05	110	129734	03	TE-CSS-041	NA	E	121202-1	---	---	---	W/TIT	---	---	---
	05	110	129734	03	TIT-CSS-041	NA	E	121202-1	---	---	---	121381/5	X17	---	---
1	05	110	129734	03	TE-CSS-042	NA	E	121202-1	---	---	---	W/TIT	---	---	---
	05	110	129734	03	TIT-CSS-042	NA	E	121202-1	---	---	---	121381/5	X17	---	---
1	05	110	129734	03	TE-CSS-043	NA	E	121202-1	---	---	---	W/TIT	---	---	---
	05	110	129734	03	TIT-CSS-043	NA	E	121202-1	---	---	---	121381/5	X17	---	---
1	05	110	129734	03	TE-CSS-044	NA	E	121202-1	---	---	---	W/TIT	---	---	---
	05	110	129734	03	TIT-CSS-044	NA	E	121202-1	---	---	---	121381/5	X17	---	---
1	05	136	129734	03	TE-CSS-051	NA	E	121202-2	---	---	---	W/TIT	---	---	---
	05	136	129734	03	TIT-CSS-051	NA	E	121202-2	---	---	---	121381/5	X17	---	---
1	05	NA	129738	01	TE-CSE-011A	NA	E	121202-1	---	---	---	---	---	---	---
1	05	NA	129738	01	TE-CSE-011B	NA	E	121202-1	---	---	---	---	---	---	---
1	05	NA	129738	01	TE-CSE-011C	NA	E	121202-1	---	---	---	---	---	---	---
1	05	NA	129738	01	FE-CSE-012	NA	E	121202-1	---	---	---	---	---	---	---
1	05	NA	129738	01	FT-CSE-012	NA	E	121202-1	---	---	---	---	X19	---	---
1	05	NA	129738	01	FY-CSE-012A	NA	E	121202-1	---	---	---	121381/1	X19	---	---
1	05	NA	129738	01	FY-CSE-012B	NA	E	121202-1	---	---	---	W/FY	X19	---	---
1	05	NA	129738	01	TE-CSE-013A	NA	E	121202-1	---	---	---	---	---	---	---
1	05	NA	129738	01	TE-CSE-013B	NA	E	121202-1	---	---	---	---	---	---	---
1	05	NA	129738	01	TE-CSE-013C	NA	E	121202-1	---	---	---	---	---	---	---
1	05	NA	129738	01	TE-CSS-061	NA	E	121202-1	---	---	---	---	X16	---	---
1	05	004	129738	01	TE-CSS-062-1	NA	E	121202-1	---	---	---	---	X16	---	---
1	05	006	129738	01	TE-CSS-062-2	NA	E	121202-1	---	---	---	---	X16	---	---
1	05	009	129738	01	TE-CSS-062-3	NA	E	121202-1	---	---	---	---	X16	---	---
1	05	004	129738	01	TE-CSS-063-1	NA	E	121202-1	---	---	---	---	X16	---	---

REV	BDG	RM	P&ID NUMBER	SHT	INSTRUMENT TAG NUMBER	PNL \ RACK	INSTL TYPE	LOCATION PLAN DWG	INSTALLATION DETAIL DRAWINGS				ELECTRICAL	TEST PRESS	NOTES
									PROCESS	PNEUMATIC	IAS	SUPPORT	INSTL ASSY		
1	05	006	129738	01	TE-CSS-063-2	NA	E	121202-1	---	---	---	---	X16	---	---
1	05	009	129738	01	TE-CSS-063-3	NA	E	121202-1	---	---	---	---	X16	---	---
1	05	004	129738	01	TE-CSS-064-1	NA	E	121202-1	---	---	---	---	X16	---	---
1	05	006	129738	01	TE-CSS-064-2	NA	E	121202-1	---	---	---	---	X16	---	---
1	05	009	129738	01	TE-CSS-064-3	NA	E	121202-1	---	---	---	---	X16	---	---
1	05	004	129738	01	TE-CSS-065-1	NA	E	121202-1	---	---	---	---	X16	---	---
1	05	006	129738	01	TE-CSS-065-2	NA	E	121202-1	---	---	---	---	X16	---	---
1	05	009	129738	01	TE-CSS-065-3	NA	E	121202-1	---	---	---	---	X16	---	---
1	05	004	129738	01	TE-CSS-066-1	NA	E	121202-1	---	---	---	---	X16	---	---
1	05	006	129738	01	TE-CSS-066-2	NA	E	121202-1	---	---	---	---	X16	---	---
1	05	009	129738	01	TE-CSS-066-3	NA	E	121202-1	---	---	---	---	X16	---	---
1	05	004	129738	01	TE-CSS-067-1	NA	E	121202-1	---	---	---	---	X16	---	---
1	05	006	129738	01	TE-CSS-067-2	NA	E	121202-1	---	---	---	---	X16	---	---
1	05	009	129738	01	TE-CSS-067-3	NA	E	121202-1	---	---	---	---	X16	---	---
1	05	004	129738	01	TE-CSS-068-1	NA	E	121202-1	---	---	---	---	X16	---	---
1	05	006	129738	01	TE-CSS-068-2	NA	E	121202-1	---	---	---	---	X16	---	---
1	05	009	129738	01	TE-CSS-068-3	NA	E	121202-1	---	---	---	---	X16	---	---
1	05	004	129738	01	TE-CSS-069-1	NA	E	121202-1	---	---	---	---	X16	---	---
1	05	006	129738	01	TE-CSS-069-2	NA	E	121202-1	---	---	---	---	X16	---	---
1	05	009	129738	01	TE-CSS-069-3	NA	E	121202-1	---	---	---	---	X16	---	---
1	05	004	129738	01	TE-CSS-070-1	NA	E	121202-1	---	---	---	---	X16	---	---
1	05	006	129738	01	TE-CSS-070-2	NA	E	121202-1	---	---	---	---	X16	---	---
1	05	009	129738	01	TE-CSS-070-3	NA	E	121202-1	---	---	---	---	X16	---	---

GENERAL NOTES:

A. FOR ADDITIONAL INFORMATION ON INSTRUMENTS LISTED IN THIS INDEX, REFERENCE INSTRUMENT INSTALLATION INDEX, ATTACHMENT A TO SPECIFICATION SECTION B-595-C-E350-17704.

B. ALL DRAWING NUMBERS REFERENCED IN THIS INDEX ARE PRECEDED BY H-2-.

C. EXPLANATION OF ENGINEERING INSTRUMENT INDEX FIELDS:

1. P&ID NUMBER AND SHEET: INDICATES REFERENCE PIPING AND INSTRUMENTATION DIAGRAM WHERE INSTRUMENT IS FOUND.

2. SFTY CLS: A "3" IN THIS FIELD INDICATES NO SPECIAL REQUIREMENTS.

3. INSTRUMENT TAG NUMBER: DEFINED ON P&ID LEGEND.

4. SERVICE DESCRIPTION: ABBREVIATED DESCRIPTION OF INSTRUMENT SERVICE.

5. DCS I/O: IDENTIFIES INSTRUMENT THAT IS CONNECTED TO THE HWVP DISTRIBUTED CONTROL SYSTEM (DCS). THE DCS IS BY BUYER.

6. PNL\RACK: IDENTIFIES THE INSTRUMENT RACK OF LOCAL CONTROL PANEL WHERE INSTRUMENT IS LOCATED. INSTRUMENTS THAT ARE NOT ON A RACK OR PANEL HAVE AN 'NA' IN THE FIELD.

7. BLDG NO: HWVP BUILDING NUMBER. FOR THIS CONSTRUCTION PACKAGE THE APPLICABLE NUMBERS ARE:

BLDG NO	BLDG NAME
05	CANISTER STORAGE BUILDING

8. ROOM NO: ROOM NUMBER IN THE INDICATED BUILDING.

9. SPEC SECT. NO: SECTION OF PACKAGE SPECIFICATION THAT COVERS THE INSTRUMENT. THE COMPLETE SPECIFICATION NUMBER IS B-595-C-E350-XXXXX, WHERE XXXXX IS THE SPECIFICATION SECTION NUMBER FOUND IN THE COLUMN.

10. CNST PKG: THE CONSTRUCTION PACKAGE IS E350.

11. CWBS: CONTRACT WORK BREAKDOWN STRUCTURE.

12. QUAL LEVEL: QUALITY LEVEL AS DEFINED BY APPLICABLE SPECIFICATION SECION.

13. INSTRUMENT TYPE: THIS AREA SHOWS INSTRUMENT DESCRIPTION FOR PHYSICAL INSTRUMENTS OR REFERENCES THE SCHEMATIC DRAWING FOR LOGIC.

14. SOME INSTRUMENTS ON P&ID 129738 SHEET 1 OF 1 ARE WASTE ACCEPTANCE PROCESS ACTIVITIES (WAPA) RELATED INSTRUMENTS.

P&ID NUMBER	P&ID SHT	SFTY CLS	INSTRUMENT TAG NUMBER	SERVICE DESCRIPTION	DCS I\O	PNL \ RACK	BLDG NO	ROOM NO.	SPEC NO	CNST PKG	CWBS	QUAL LEVEL	WAPA	INSTRUMENT TYPE	REV
123358	01	3	ZSL-FWX-313	FIRE WATER SPRINKLER VALVE POSITION	N	NA	05	136	15501	E350	E350	2	N	LIMIT SWITCH	
123358	01	3	PI-FWX-314-1	FIRE WATER PRESSURE	N	NA	05	136	15501	E350	E350	2	N	PRESS GAUGE	
123358	01	3	PI-FWX-314-2	FIREWATER PRESSURE	N	NA	05	136	15501	E350	E350	2	N	PRESS GAUGE	1
123358	01	3	PSH-FWX-315	FIREWATER FLOW TRIP	N	NA	05	136	15501	E350	E350	2	N	PRESS. SWITCH HIGH	1
123370	05	3	FO-VAX-277	HPS VACUUM COLLECTION	N	NA	05	136	17642	E350	E350	2	N	FLOW ORIFICE	1
123370	05	3	FO-VAX-279	HPS VACUUM COLLECTION	N	NA	05	136	17642	E350	E350	2	N	FLOW ORIFICE	1
123370	05	3	FO-VAX-303	HPS VACUUM COLLECTION	N	NA	05	136	17642	E350	E350	2	N	FLOW ORIFICE	1
123370	05	3	FO-VAX-305	HPS VACUUM COLLECTION	N	NA	05	136	17642	E350	E350	2	N	FLOW ORIFICE	1
123370	05	3	FO-VAX-307	HPS VACUUM COLLECTION	N	NA	05	136	17642	E350	E350	2	N	FLOW ORIFICE	1
123370	05	3	FO-VAX-309	HPS VACUUM COLLECTION	N	NA	05	136	17642	E350	E350	2	N	FLOW ORIFICE	1
123370	05	3	FO-VAX-311	HPS VACUUM COLLECTION	N	NA	05	136	17642	E350	E350	2	N	FLOW ORIFICE	1
123370	05	3	FO-VAX-313	HPS VACUUM COLLECTION	N	NA	05	136	17642	E350	E350	2	N	FLOW ORIFICE	1
123370	05	3	FO-VAX-315	HPS VACUUM COLLECTION	N	NA	05	136	17642	E350	E350	2	N	FLOW ORIFICE	1
123370	05	3	FO-VAX-317	HPS VACUUM COLLECTION	N	NA	05	136	17642	E350	E350	2	N	FLOW ORIFICE	1
123370	05	3	FE-VAX-320	HPS VACUUM SYSTEM TOTAL INLET FLOW	N	NA	05	136	17630	E350	E350	2	N	FLOW ELEMENT	1
123370	05	3	FIT-VAX-320	HPS VACUUM SYSTEM TOTAL INLET FLOW	1	NA	05	136	17630	E350	E350	2	N	INTEGRAL DP IND XMTR	1
123370	05	3	PIT-VAX-321	HPS VACUUM SYSTEM HEPA FILTER	N	NA	05	136	17615	E350	E350	2	N	PRESS IND XMTR	
123370	05	3	PV-VAX-321	HPS VACUUM SYSTEM HEPA FILTER	N	NA	05	136	17656	E350	E350	2	N	CONTROL VALVE	
123370	05	3	PY-VAX-321	HPS VACUUM SYSTEM HEPA FILTER	N	NA	05	136	17656	E350	E350	2	N	I/P CONVERTER	
123370	05	3	PDIT-VAX-323-1	HEPA FILTER 003A DIFFERENTIAL PRESSURE	1	NA	05	136	17615	E350	E350	2	N	DP IND XMTR	1
123370	05	3	PDIT-VAX-323-2	HEPA FILTER 003B DIFFERENTIAL PRESSURE	1	NA	05	136	17615	E350	E350	2	N	DP IND XMTR	1
123370	05	3	PSH-VAX-324	VACUUM PUMP INLET PRESSURE ALARM	1	NA	05	136	17667	E350	E350	2	N	PRESS SWITCH	
123370	05	3	PSV-VAX-327-1	VACUUM BREAKER PUMP 003VA	N	NA	05	136	17664	E350	E350	2	N	PRESS SAFETY VALVE	
123370	05	3	PSV-VAX-327-2	VACUUM BREAKER PUMP 003VB	N	NA	05	136	17664	E350	E350	2	N	PRESS SAFETY VALVE	
123370	05	3	PI-VAX-328-1	INLET PRESSURE PUMP 003VA	N	NA	05	136	17626	E350	E350	2	N	PRESS INDICATOR	
123370	05	3	PI-VAX-328-2	INLET PRESSURE PUMP 003VB	N	NA	05	136	17626	E350	E350	2	N	PRESS INDICATOR	
123370	05	3	PDIT-VAX-330-1	VACUUM PUMP 003VA DIFFERENTIAL PRESSURE	1	NA	05	136	17615	E350	E350	2	N	DP IND XMTR	

P&ID NUMBER	P&ID SHT	SFTY CLS	INSTRUMENT TAG NUMBER	SERVICE DESCRIPTION	DCS I\O	PNL \ RACK	BLDG NO	ROOM NO.	SPEC NO	CNST PKG	CWBS	QUAL LEVEL	WAPA	INSTRUMENT TYPE	REV
123370	05	3	PDIT-VAX-330-2	VACUUM PUMP 003VB DIFFERENTIAL PRESSURE	1	NA	05	136	17615	E350	E350	2	N	DP IND XMTR	1
123370	05	3	IT-VAX-331-1	MOTOR CURRENT PUMP 003VA	N	NA	05	108	16482	E350	P27A	2	N	CURRENT XMTR	1
123370	05	3	IT-VAX-331-2	MOTOR CURRENT PUMP 003VB	N	NA	05	108	16482	E350	P27A	2	N	CURRENT XMTR	1
123370	05	3	HS-VAX-331A-1	STOP PUMP 003VA	1	NA	05	108	16482	E350	P27A	2	N	HAND SWITCH STOP	1
123370	05	3	II-VAX-331A-1	MOTOR CURRENT PUMP 003VA	1	NA	05	108	16482	E350	P27A	2	N	CURRENT INDICATOR	1
123370	05	3	HS-VAX-331A-2	STOP PUMP 003VB	N	NA	05	108	16482	E350	P27A	2	N	HAND SWITCH STOP	1
123370	05	3	II-VAX-331A-2	MOTOR CURRENT PUMP 003VB	1	NA	05	108	16482	E350	P27A	2	N	CURRENT INDICATOR	1
123370	05	3	HS-VAX-331B-1	START PUMP 003VA	1	NA	05	108	16482	E350	P27A	2	N	HAND SWITCH START	1
123370	05	3	HS-VAX-331B-2	START PUMP 003VB	1	NA	05	108	16482	E350	P27A	2	N	HAND SWITCH START	1
123370	05	3	HS-VAX-331C-1	MAINT/ L / R PUMP 003VA	1	NA	05	108	16482	E350	P27A	2	N	HAND SW MAINT / L/R	1
123370	05	3	HS-VAX-331C-2	MAINT/ L / R PUMP 003VB	1	NA	05	108	16482	E350	P27A	2	N	HAND SW MAIN / L/R	1
123370	05	3	PI-VAX-332-1	DISCHARGE PRESSURE PUMP 003VA	N	NA	05	136	17626	E350	E350	2	N	PRESS INDICATOR	
123370	05	3	PI-VAX-332-2	DISCHARGE PRESSURE PUMP 003VB	N	NA	05	136	17626	E350	E350	2	N	PRESS INDICATOR	
123370	05	3	TE-VAX-333-1	HPS VACUUM SYSTEM CANISTER STORAGE BLDG	N	NA	05	136	17612	E350	E350	2	N	RTD	1
123370	05	3	TIT-VAX-333-1	DISCHARGE TEMPERATURE PUMP 003VA	1	NA	05	136	17601	E350	E350	2	N	TE-VAX-333-1R	1
123370	05	3	TW-VAX-333-1	DISCHARGE TEMPERATURE PUMP 003VA	N	NA	05	136	17612	E350	E350	2	N	THERMOWELL	1
123370	05	3	TE-VAX-333-2	HPS VACUUM SYSTEM CANISTER STORAGE BLDG	N	NA	05	136	17612	E350	E350	2	N	RTD	1
123370	05	3	TIT-VAX-333-2	DISCHARGE TEMPERATURE PUMP 003VB	1	NA	05	136	17601	E350	E350	2	N	TEMP IND XMTR	1
123370	05	3	TW-VAX-333-2	DISCHARGE TEMPERATURE PUMP 003VB	N	NA	05	136	17612	E350	E350	2	N	THERMOWELL	1
123370	05	3	XS-VAX-336	UPS COMMON TROUBLE SWITCH	1	NA	05	102	16143	E350	E350	2	N	TROUBLE SWITCH	1
129731	01	3	TE-CSS-001	INLET TEMPERATURE AH-05I-111	N	NA	05	136	17612	E350	E350	2	N	RTD	1
129731	01	3	TIT-CSS-001	INLET TEMPERATURE AH-05I-111	N	NA	05	136	17601	E350	E350	2	N	TEMP IND XMTR	
129731	01	3	TV-CSS-002	INLET AIR DAMPER AH-05I-111	N	NA	05	136	15861	E350	E350	2	N	DAMPER DN-05I-111A	1
129731	01	3	TY-CSS-002	INLET AIR DAMPER AH-05I-111	N	IR-610-434	05	136	17864	E350	E350	2	N	TEMP RELAY	1
129731	01	3	YY-CSS-002	INLET AIR DAMPER AH-05I-111	N	IR-610-434	05	136	17864	E350	E350	2	N	SOLENOID VALVE	1
129731	01	3	TE-CSS-003	INLET TEMPERATURE AH-05I-111 PLENUM	N	NA	05	136	17864	E350	E350	2	N	RTD	1
129731	01	3	TIT-CSS-003	AIR HANDLING UNIT AH-05I-111 PLENUM	N	IR-610-434	05	136	17864	E350	E350	2	N	TEMP IND XMTR	

P&ID NUMBER	P&ID SHT	SFTY CLS	INSTRUMENT TAG NUMBER	SERVICE DESCRIPTION	DCS I\O	PNL \ RACK	BLDG NO	ROOM NO.	SPEC NO	CNST PKG	CWBS	QUAL LEVEL	WAPA	INSTRUMENT TYPE	REV
129731	01	3	PDI-CSS-004	PREFILTER AH-05I-111	N	NA	05	136	17864	E350	E350	2	N	PRESS DIFF IND	
129731	01	3	PDI-CSS-005	HI EFFICIENCY FILTER AH-05I-111	N	NA	05	136	17864	E350	E350	2	N	PRESS DIFF IND	
129731	01	3	PDIT-CSS-006	FILTER PRESSURE AH-05I-111	N	IR-610-434	05	136	17864	E350	E350	2	N	PRESS DIFF IND XMTR	
129731	01	3	HS-CSS-007A	STOP AH-05I-111	N	NA	05	108	16482	E350	P27A	2	N	HAND SWITCH	1
129731	01	3	HS-CSS-007B	START AH-05I-111	N	NA	05	108	16482	E350	P27A	2	N	HAND SWITCH	1
129731	01	3	HS-CSS-007C	MAINT/ L/ R AH-05I-111	N	NA	05	108	16462	E350	P27A	2	N	HAND SWITCH	1
129731	01	3	PDIT-CSS-008	SUPPLY FAN PRESSURE BL-05I-111	N	IR-610-434	05	136	17864	E350	E350	2	N	PRESS DIFF IND XMTR	
129731	01	3	YSH-CSS-009	DISCHARGE SMOKE BL-05I-111	N	NA	05	136	17697	E350	E350	2	N	SMOKE DETECTOR	
129731	01	3	FSL-CSS-010	DISCHARGE FLOW BL-05I-111	N	NA	05	136	17669	E350	E350	2	N	FLOW SWITCH	
129731	01	3	TE-CSS-014	CEILING PLENUM RETURN AIR	N	NA	05	106	17612	E350	E350	2	N	RTD	1
129731	01	3	TIT-CSS-014	CEILING PLENUM RETURN AIR	N	NA	05	106	17601	E350	E350	2	N	TEMP IND XMTR	
129731	01	3	YSH-CSS-015	CEILING PLENUM RETURN AIR AH-05I-111	N	NA	05	106	17697	E350	E350	2	N	SMOKE DETECTOR	
129731	01	3	TV-CSS-016	RETURN AIR DAMPER AH-05I-111	N	NA	05	136	15861	E350	E350	2	N	DAMPER DN-05I-111B	1
129731	01	3	TY-CSS-016	RETURN AIR DAMPER AH-05I-111	N	IR-610-434	05	136	17864	E350	E350	2	N	TEMP RELAY	1
129731	01	3	YY-CSS-016	RETURN AIR DAMPER AH-05I-111	N	IR-610-434	05	136	17864	E350	E350	2	N	SOLENOID VALVE	1
129731	02	3	HS-CSE-001	TOILET ROOM 116 EXHAUST AIR CONTROL	N	NA	05	116	16110	E350	E350	2	N	HAND SWITCH	
129731	02	3	JC-CSS-011	HEALTH PROTECTION OFFICE HEATER	N	NA	05	136	17864	E350	E350	2	N	POWER CONTROLLER	
129731	02	3	TE-CSS-011	HEALTH PROTECTION OFFICE HEATER	N	NA	05	104	17605	E350	E350	2	N	RTD	1
129731	02	3	TIC-CSS-011	HEALTH PROTECTION OFFICE HEATER	N	NA	05	104	17605	E350	E350	2	N	TEMP IND CONTROLLER	
129731	02	3	JC-CSS-012	ELEC EQUIPMENT ROOM HEATER	N	NA	05	136	17864	E350	E350	2	N	POWER CONTROLLER	
129731	02	3	TE-CSS-012	ELEC EQUIPMENT ROOM HEATER	N	NA	05	108	17605	E350	E350	2	N	RTD	1
129731	02	3	TIC-CSS-012	ELEC EQUIPMENT ROOM HEATER	N	NA	05	108	17605	E350	E350	2	N	TEMP IND CONTROLLER	
129731	02	3	JC-CSS-013	CLEAN OPERATING OFFICE HEATER	N	NA	05	136	17864	E350	E350	2	N	POWER CONTROLLER	
129731	02	3	TE-CSS-013	CLEAN OPERATING OFFICE HEATER	N	NA	05	100	17605	E350	E350	2	N	RTD	1
129731	02	3	TIC-CSS-013	CLEAN OPERATING OFFICE HEATER	N	NA	05	100	17605	E350	E350	2	N	TEMP IND CONTROLLER	
129731	03	3	UIC-CSS-021	AIR CONDITIONER UNIT AC-05I-110A	N	NA	05	102	17864	E350	E350	2	N	MULTIVAR CONTROLLER	
129731	03	3	TE-CSS-022	F.O.S. OFFICE	N	NA	05	102	17601	E350	E350	2	N	RTD	1

P&ID NUMBER	P&ID SHT	SFTY CLS	INSTRUMENT TAG NUMBER	SERVICE DESCRIPTION	DCS I\O	PNL \ RACK	BLDG NO	ROOM NO.	SPEC NO	CNST PKG	CWBS	QUAL LEVEL	WAPA	INSTRUMENT TYPE	REV
129731	03	3	TIT-CSS-022	AIR CONDITIONER UNIT AC-05I-110A/B	N	NA	05	102	17601	E350	E350	2	N	TEMP IND XMTR	
129731	03	3	MIT-CSS-023	AIR CONDITIONER UNIT AC-05I-110A/B	N	NA	05	102	17696	E350	E350	2	N	MOISTURE IND XMTR	
129731	03	3	UIC-CSS-024	AIR CONDITIONER UNIT AC-05I-110B	N	NA	05	102	17864	E350	E350	2	N	MULTIVAR CONTROLLER	
129734	01	3	TV-CSS-031-1	INLET AIR DAMPER AH-05I-112	N	NA	05	136	15861	E350	E350	2	N	DAMPER DN-05I-112A	1
129734	01	3	TY-CSS-031-1	INLET AIR DAMPER AH-05I-112	N	IR-610-436	05	136	17864	E350	E350	2	N	TEMP RELAY	1
129734	01	3	YY-CSS-031-1	INLET AIR DAMPER AH-05I-112	N	IR-610-436	05	136	17864	E350	E350	2	N	SOLENOID VALVE	1
129734	01	3	TE-CSS-032-1	INLET TEMPERATURE PLENUM AH-05I-112	N	NA	05	136	17864	E350	E350	2	N	RTD	1
129734	01	3	TIT-CSS-032-1	INLET TEMPERATURE AH-05I-112	N	IR-610-436	05	136	17864	E350	E350	2	N	TEMP IND XMTR	
129734	01	3	PDI-CSS-033-1	PREFILTER AH-05I-112	N	NA	05	136	17864	E350	E350	2	N	PRESS DIFF IND	
129734	01	3	PDI-CSS-034-1	HI EFFICIENCY FILTER AH-05I-112	N	NA	05	136	17864	E350	E350	2	N	PRESS DIFF IND	
129734	01	3	PDIT-CSS-035-1	FILTER PRESSURE AH-05I-112	N	IR-610-436	05	136	17864	E350	E350	2	N	PDIT-CSS-035-1	
129734	01	3	HS-CSS-036A-1	STOP AH-05I-112	N	NA	05	108	16110	E350	E350	2	N	HAND SWITCH	
129734	01	3	HS-CSS-036B-1	START AH-05I-112	N	NA	05	108	16110	E350	E350	2	N	HAND SWITCH	
129734	01	3	HS-CSS-036C-1	MAINT/ L / R AH-05I-112	N	NA	05	108	16110	E350	E350	2	N	HAND SWITCH	
129734	01	3	IT-CSS-037-1	MOTOR CURRENT AH-05I-112	N	NA	05	108	16482	E350	P27A	2	N	CURRENT XMTR	1
129734	01	3	HS-CSS-037A-1	STOP AH-05I-112	N	NA	05	108	16482	E350	P27A	2	N	HAND SWITCH	1
129734	01	3	II-CSS-037A-1	MOTOR CURRENT AH-05I-112	N	NA	05	108	16482	E350	P27A	2	N	CURRENT IND	1
129734	01	3	HS-CSS-037B-1	START AH-05I-112	N	NA	05	108	16482	E350	P27A	2	N	HAND SWITCH	1
129734	01	3	HS-CSS-037C-1	MAINT/ L / R AH-05I-112	N	NA	05	108	16482	E350	P27A	2	N	HAND SWITCH	1
129734	01	3	PDIT-CSS-038-1	SUPPLY FAN BL-05I-112	N	IR-610-436	05	136	17864	E350	E350	2	N	PRESS DIFF IND XMTR	
129734	01	3	TE-CSS-039-1	DISCHARGE AH-05I-112	N	NA	05	136	17612	E350	E350	2	N	RTD	1
129734	01	3	TIT-CSS-039-1	DISCHARGE AH-05I-112	N	NA	05	136	17601	E350	E350	2	N	TEMP IND XMTR	
129734	01	3	YSH-CSS-040-1	DISCHARGE SMOKE AH-05I-112	N	NA	05	136	17697	E350	E350	2	N	SMOKE DETECTOR	
129734	01	3	TV-CSS-046-1	RETURN AIR DAMPER AH-05I-112	N	NA	05	136	15861	E350	E350	2	N	DAMPER DN-05I-112B	1
129734	01	3	TY-CSS-046-1	RETURN AIR DAMPER AH-05I-112	N	IR-610-436	05	136	17864	E350	E350	2	N	TEMP RELAY	
129734	01	3	YY-CSS-046-1	RETURN AIR DAMPER AH-05I-112	N	IR-610-436	05	136	17864	E350	E350	2	N	SOLENOID VALVE	
129734	02	3	TV-CSS-031-2	INLET AIR DAMPER AH-05I-113	N	NA	05	136	15861	E350	E350	2	N	DAMPER DN-05I-113A	1

P&ID NUMBER	P&ID SHT	SFTY CLS	INSTRUMENT TAG NUMBER	SERVICE DESCRIPTION	DCS I\O	PNL \ RACK	BLDG NO	ROOM NO.	SPEC NO	CNST PKG	CWBS	QUAL LEVEL	WAPA	INSTRUMENT TYPE	REV
129734	02	3	TY-CSS-031-2	INLET AIR DAMPER AH-05I-113	N	IR-610-435	05	136	17864	E350	E350	2	N	TEMP RELAY	1
129734	02	3	YY-CSS-031-2	INLET AIR DAMPER AH-05I-113	N	IR-610-435	05	136	17864	E350	E350	2	N	SOLENOID VALVE	1
129734	02	3	TE-CSS-032-2	INLET TEMPERATURE PLENUM AH-05I-113	N	NA	05	136	17864	E350	E350	2	N	RTD	1
129734	02	3	TIT-CSS-032-2	INLET TEMPERATURE AH-05I-113	N	IR-610-435	05	136	17864	E350	E350	2	N	TEMP IND XMTR	
129734	02	3	PDI-CSS-033-2	PREFILTER AH-05I-113	N	NA	05	136	17864	E350	E350	2	N	PRESS DIFF IND	
129734	02	3	PDI-CSS-034-2	HI EFFICIENCY FILTER AH-05I-113	N	NA	05	136	17864	E350	E350	2	N	PRESS DIFF IND	
129734	02	3	PDIT-CSS-035-2	FILTER PRESSURE AH-05I-113	N	IR-610-435	05	136	17864	E350	E350	2	N	PRESS DIFF IND XMTR	
129734	02	3	HS-CSS-036A-2	STOP AH-05I-113	N	NA	05	108	16110	E350	E350	2	N	HAND SWITCH	
129734	02	3	HS-CSS-036B-2	START AH-05I-113	N	NA	05	108	16110	E350	E350	2	N	HAND SWITCH	
129734	02	3	HS-CSS-036C-2	MAINT/ L / R AH-05I-113	N	NA	05	108	16110	E350	E350	2	N	HAND SWITCH	
129734	02	3	IT-CSS-037-2	MOTOR CURRENT AH-05I-113	N	NA	05	108	16482	E350	P27A	2	N	CURRENT XMTR	1
129734	02	3	HS-CSS-037A-2	STOP AH-05I-113	N	NA	05	108	16482	E350	P27A	2	N	HAND SWITCH	1
129734	02	3	II-CSS-037A-2	MOTOR CURRENT AH-05I-113	N	NA	05	108	16482	E350	P27A	2	N	CURRENT IND	1
129734	02	3	HS-CSS-037B-2	START AH-05I-113	N	NA	05	108	16482	E350	P27A	2	N	HAND SWITCH	1
129734	02	3	HS-CSS-037C-2	MAINT/ L / R AH-05I-113	N	NA	05	108	16482	E350	P27A	2	N	HAND SWITCH	1
129734	02	3	PDIT-CSS-038-2	SUPPLY FAN BL-05I-113	N	IR-610-435	05	136	17864	E350	E350	2	N	PRESS DIFF IND XMTR	
129734	02	3	TE-CSS-039-2	DISCHARGE AH-05I-113	N	NA	05	136	17612	E350	E350	2	N	RTD	1
129734	02	3	TIT-CSS-039-2	DISCHARGE AH-05I-113	N	NA	05	136	17864	E350	E350	2	N	TEMP IND XMTR	
129734	02	3	YSH-CSS-040-2	DISCHARGE SMOKE AH-05I-113	N	NA	05	136	17697	E350	E350	2	N	SMOKE DETECTOR	
129734	02	3	TV-CSS-046-2	RETURN AIR DAMPER AH-05I-113	N	NA	05	136	15861	E350	E350	2	N	DAMPER DN-05I-113B	1
129734	02	3	TY-CSS-046-2	RETURN AIR DAMPER AH-05I-113	N	IR-610-435	05	136	17864	E350	E350	2	N	TEMP RELAY	
129734	02	3	YY-CSS-046-2	RETURN AIR DAMPER AH-05I-113	N	IR-610-435	05	136	17864	E350	E350	2	N	SOLENOID VALVE	
129734	03	3	TE-CSS-041	CANISTER STORAGE OPERATING AREA	N	NA	05	110	17601	E350	E350	2	N	RTD	1
129734	03	3	TIT-CSS-041	CANISTER STORAGE OPERATING AREA	N	NA	05	110	17601	E350	E350	2	N	TEMP IND XMTR	
129734	03	3	TE-CSS-042	CANISTER STORAGE OPERATING AREA	N	NA	05	110	17601	E350	E350	2	N	RTD	1
129734	03	3	TIT-CSS-042	CANISTER STORAGE OPERATING AREA	N	NA	05	110	17601	E350	E350	2	N	TEMP IND XMTR	
129734	03	3	TE-CSS-043	CANISTER STORAGE OPERATING AREA	N	NA	05	110	17601	E350	E350	2	N	RTD	1

P&ID NUMBER	P&ID SHT	SFTY CLS	INSTRUMENT TAG NUMBER	SERVICE DESCRIPTION	DCS I\O	PNL \ RACK	BLDG NO	ROOM NO.	SPEC NO	CNST PKG	CWBS	QUAL LEVEL	WAPA	INSTRUMENT TYPE	REV
129734	03	3	TIT-CSS-043	CANISTER STORAGE OPERATING AREA	N	NA	05	110	17601	E350	E350	2	N	TEMP IND XMTR	
129734	03	3	TE-CSS-044	CANISTER STORAGE OPERATING AREA	N	NA	05	110	17601	E350	E350	2	N	RTD	1
129734	03	3	TIT-CSS-044	CANISTER STORAGE OPERATING AREA	N	NA	05	110	17601	E350	E350	2	N	TEMP IND XMTR	
129734	03	3	TE-CSS-051	MECHANICAL EQUIPMENT ROOM	N	NA	05	136	17601	E350	E350	2	N	RTD	1
129734	03	3	TIT-CSS-051	MECHANICAL EQUIPMENT ROOM	N	NA	05	136	17601	E350	E350	2	N	TEMP IND XMTR	
129738	01	3	TE-CSE-011A	CANISTER STORAGE NEUTRAL ZONE STACK	4	NA	05	NA	17612W	E350	E350	1	Y	RTD	1
129738	01	3	TE-CSE-011B	CANISTER STORAGE NEUTRAL ZONE STACK	4	NA	05	NA	17612W	E350	E350	1	Y	RTD	1
129738	01	3	TE-CSE-011C	CANISTER STORAGE NEUTRAL ZONE STACK	4	NA	05	NA	17612W	E350	E350	1	Y	RTD	1
129738	01	3	FE-CSE-012	CANISTER STORAGE NEUTRAL ZONE STACK	N	NA	05	NA	17630W	E350	E350	1	Y	FLOW ELEMENT	1
129738	01	3	FT-CSE-012	CANISTER STORAGE NEUTRAL ZONE STACK	N	NA	05	NA	17630W	E350	E350	1	Y	FLOW XMTR	1
129738	01	3	FY-CSE-012A	CANISTER STORAGE NEUTRAL ZONE STACK	N	NA	05	NA	17630W	E350	E350	1	Y	FLOW RELAY	1
129738	01	3	FY-CSE-012B	CANISTER STORAGE NEUTRAL ZONE STACK	N	NA	05	NA	17630W	E350	E350	1	Y	FLOW RELAY	1
129738	01	3	TE-CSE-013A	CANISTER STORAGE NEUTRAL ZONE STACK	4	NA	05	NA	17612W	E350	E350	1	Y	RTD	1
129738	01	3	TE-CSE-013B	CANISTER STORAGE NEUTRAL ZONE STACK	4	NA	05	NA	17612W	E350	E350	1	Y	RTD	1
129738	01	3	TE-CSE-013C	CANISTER STORAGE NEUTRAL ZONE STACK	4	NA	05	NA	17612W	E350	E350	1	Y	RTD	1
129738	01	3	TE-CSS-061	CANISTER STORAGE STACK	4	NA	05	NA	17612W	E350	E350	1	Y	RTD	1
129738	01	3	TE-CSS-062-1	CANISTER STORAGE VAULT	4	NA	05	004	17614	E350	E350	2	N	RTD	1
129738	01	3	TE-CSS-062-2	CANISTER STORAGE VAULT	4	NA	05	006	17614	E350	E350	2	N	RTD	1
129738	01	3	TE-CSS-062-3	CANISTER STORAGE VAULT	4	NA	05	009	17614	E350	E350	2	N	RTD	1
129738	01	3	TE-CSS-063-1	CANISTER STORAGE VAULT	4	NA	05	004	17614	E350	E350	2	N	RTD	1
129738	01	3	TE-CSS-063-2	CANISTER STORAGE VAULT	4	NA	05	006	17614	E350	E350	2	N	RTD	1
129738	01	3	TE-CSS-063-3	CANISTER STORAGE VAULT	4	NA	05	009	17614	E350	E350	2	N	RTD	1
129738	01	3	TE-CSS-064-1	CANISTER STORAGE VAULT	4	NA	05	004	17614	E350	E350	2	N	RTD	1
129738	01	3	TE-CSS-064-2	CANISTER STORAGE VAULT	4	NA	05	006	17614	E350	E350	2	N	RTD	1
129738	01	3	TE-CSS-064-3	CANISTER STORAGE VAULT	4	NA	05	009	17614	E350	E350	2	N	RTD	1
129738	01	3	TE-CSS-065-1	CANISTER STORAGE VAULT	4	NA	05	004	17614	E350	E350	2	N	RTD	1
129738	01	3	TE-CSS-065-2	CANISTER STORAGE VAULT	4	NA	05	006	17614	E350	E350	2	N	RTD	1

P&ID NUMBER	SHT	SFTY CLS	INSTRUMENT TAG NUMBER	SERVICE DESCRIPTION	DCS I\O	PNL \ RACK	BLDG NO	ROOM NO.	SPEC NO	CNST PKG	CWBS	QUAL LEVEL	WAPA	INSTRUMENT TYPE	REV
129738	01	3	TE-CSS-065-3	CANISTER STORAGE VAULT	4	NA	05	009	17614	E350	E350	2	N	RTD	1
129738	01	3	TE-CSS-066-1	CANISTER STORAGE VAULT	4	NA	05	004	17614	E350	E350	2	N	RTD	1
129738	01	3	TE-CSS-066-2	CANISTER STORAGE VAULT	4	NA	05	006	17614	E350	E350	2	N	RTD	1
129738	01	3	TE-CSS-066-3	CANISTER STORAGE VAULT	4	NA	05	009	17614	E350	E350	2	N	RTD	1
129738	01	3	TE-CSS-067-1	CANISTER STORAGE VAULT	4	NA	05	004	17614	E350	E350	2	N	RTD	1
129738	01	3	TE-CSS-067-2	CANISTER STORAGE VAULT	4	NA	05	006	17614	E350	E350	2	N	RTD	1
129738	01	3	TE-CSS-067-3	CANISTER STORAGE VAULT	4	NA	05	009	17614	E350	E350	2	N	RTD	1
129738	01	3	TE-CSS-068-1	CANISTER STORAGE VAULT	4	NA	05	004	17614	E350	E350	2	N	RTD	1
129738	01	3	TE-CSS-068-2	CANISTER STORAGE VAULT	4	NA	05	006	17614	E350	E350	2	N	RTD	1
129738	01	3	TE-CSS-068-3	CANISTER STORAGE VAULT	4	NA	05	009	17614	E350	E350	2	N	RTD	1
129738	01	3	TE-CSS-069-1	CANISTER STORAGE VAULT	4	NA	05	004	17614	E350	E350	2	N	RTD	1
129738	01	3	TE-CSS-069-2	CANISTER STORAGE VAULT	4	NA	05	006	17614	E350	E350	2	N	RTD	1
129738	01	3	TE-CSS-069-3	CANISTER STORAGE VAULT	4	NA	05	009	17614	E350	E350	2	N	RTD	1
129738	01	3	TE-CSS-070-1	CANISTER STORAGE VAULT	4	NA	05	004	17614	E350	E350	2	N	RTD	1
129738	01	3	TE-CSS-070-2	CANISTER STORAGE VAULT	4	NA	05	006	17614	E350	E350	2	N	RTD	1
129738	01	3	TE-CSS-070-3	CANISTER STORAGE VAULT	4	NA	05	009	17614	E350	E350	2	N	RTD	1

U.S. DEPARTMENT OF ENERGY
Hanford Waste Vitrification Plant
Richland, Washington
DOE Contract DE-AC06-86RL10838

FLUOR DANIEL, INC.
Advanced Technology Division
Fluor Contract 8457

SECTION 17705
INSTRUMENT CALIBRATION AND CHECKOUT
B-595-C-E350-17705

APPROVED FOR CONSTRUCTION

REVISION 1 PER CR-0702
ISSUE DATE 8/4/93

WAPA YES ___ NO X
QUALITY LEVEL I ___ II X
SAFETY CLASS 1__ 2__ 3 X 4__

ORIGINATOR:

A. L. Sanburg 7-12-93
A. L. Sanburg, Con. Sys. Eng. Date

CHECKER:

B. R. Carlisle 7/12/93
B. R. Carlisle, Con. Sys. Eng. Date

APPROVED BY:

J. B. Bunning
J. B. Bunning Lead Discipline Engineer

07/12/93
Date

SECTION 17705
INSTRUMENT CALIBRATION AND CHECKOUT
B-595-C-E350-17705

TABLE OF CONTENTS

PART		PAGE
PART 1	**GENERAL**	1
1.1	SUMMARY	1
1.2	REFERENCES	1
1.3	RELATED REQUIREMENTS	1
1.4	DEFINITIONS	1
1.5	SYSTEM DESCRIPTION	2
1.6	SUBMITTALS	2
1.7	CLASSIFICATION OF SYSTEMS AND COMPONENTS	2
1.8	PROJECT OR SITE ENVIRONMENTAL CONDITIONS	2
PART 2	**PRODUCTS**	2
PART 3	**EXECUTION**	3
3.1	PREPARATION	3
3.2	INSTALLATION, APPLICATION AND ERECTION	4
3.3	FIELD QUALITY CONTROL	4
3.4	ADJUSTMENTS	4
3.5	CLEANING	4
3.6	PROTECTION	4
3.7	DEMONSTRATION	4
3.8	SCHEDULES	4

ATTACHMENTS

ATTACHMENT	TITLE
A	PROCESS/ALARM SWITCH SETTINGS

SECTION 17705
INSTRUMENT CALIBRATION AND CHECKOUT

PART 1 GENERAL

1.1 SUMMARY

This section defines the requirements for bench calibration of instruments before installation and checkout of instrumentation systems after installation. See Specification Section 17704 for installation requirements.

The Seller's work shall conform to the paragraphs of this standard specification which apply to the Seller's scope of work defined in the Order/Subcontract.

1.2 REFERENCES

The publications listed below form a part of this specification to the extent referenced. The publications are referred to in the text by basic designation only.

INSTRUMENT SOCIETY OF AMERICA (ISA)

ANSI/ISA S51.1	1979 Process Control Terminology

1.3 RELATED REQUIREMENTS

Specification Section 17704	General Instrumentation Installation and Testing

1.4 DEFINITIONS

Calibration -- Refers to the operation to be performed on all instruments and control devices requiring testing and/or adjusting to ensure that they are functioning correctly and are accurate within the manufacturer's specifications.

Checkout -- Refers to the functions required to ensure that all instrumentation are per specification and installed correctly, properly calibrated, functionally operational, and ready for Buyer acceptance.

DBE -- Design Basis Earthquake
VDDR -- Vendor Drawing and Data Requirements
I&C -- Instrument and Control
RTD -- Resistance Temperature Detector

1.4.1 See also ANSI/ISA S51.1 1979 Process Control Terminology.

1.5 **SYSTEM DESCRIPTION**

(Not Used)

1.6 **SUBMITTALS**

Submit the following in accordance with the Vendor Drawing and Data Requirements section of the Order/Subcontract.

1.6.1 Calibration Test Equipment List per Paragraph 3.1.

1.6.2 Initial Inspection and Calibration procedure per Paragraph 3.1.

1.6.3 Construction Acceptance Test (CAT) procedure per Paragraph 3.1.

1.6.4 Calibration Log and Calibration Certificates.

1.6.5 Report confirming the CAT procedure was executed and the results.

1.7 **CLASSIFICATION OF SYSTEMS AND COMPONENTS**

(Not Used)

1.8 **PROJECT OR SITE ENVIRONMENTAL CONDITIONS**

1.8.1 Climatic and Geographic Site Conditions

A.	Site Elevation	714 feet above sea level
B.	Barometric Pressure	14.3 psia
C.	Outside Design Temperature	
	1) Maximum Design Temperature	110°F
	2) Minimum Design Temperature	-20°F
	3) Wet Bulb Design Temperature	68°F

PART 2 PRODUCTS

(Not Used)

PART 3 EXECUTION

3.1 PREPARATION

3.1.1 Test Equipment

3.1.1.1 Prepare the Calibration Test Equipment List. Include:

A. Type
B. Manufacturer
C. Serial number
D. Accuracy rating
E. Date it was last calibrated
F. Identification of person who calibrated
G. How its calibration is traced to the National Institute of Standards and Technology

3.1.2 Prepare Checkout Packages. Include for each instrument:

A. Specification data sheet
B. Manufacturer's calibration instruction
C. Calibration certificate filled out except calibration record
D. Installation details

3.1.3 Prepare an initial Inspection and Calibration procedure for each instrument type. Include:

A. Inspect instrument to confirm it conforms to the specification, is new and in good condition.

B. Calibrate in accordance with ANSI/ISA S51.1, Section 5.

C. Set switching devices actuated by process variables, electrical variables, or analog signals to the conditions shown on Attachment A.

3.1.4 Prepare a CAT procedure for each instrument type. Include:

A. Inspect installation to confirm installation is in accordance with Contract Drawings and correct instrument is installed.

B. Test wiring continuity.

C. Functional test, for example: Apply accurately measured pressure to a pressure transmitter, connect a calibrator at the terminals in the junction box, check at 5 points of the transmitter range, confirm that the calibration is within tolerance.

3.2 **INSTALLATION, APPLICATION AND ERECTION**

(Not Used)

3.3 **FIELD QUALITY CONTROL**

3.3.1 Initial inspection and calibration.

3.3.1.1 Perform the Buyer approved initial Inspection and Calibration procedure.

3.3.1.2 Prepare a Calibration Log to track initial inspection and calibration activity. Submit the log and calibration certificates periodically as required by the VDDR.

3.3.2 Construction Acceptance Testing

3.3.2.1 Perform the Buyer approved CAT procedure.

3.3.2.2 If calibration errors are found return the instrument to the shop for testing and recalibration.

3.3.2.3 Prepare a CAT report summarizing and including the checkout packages and confirming the CAT procedure was executed.

3.4 **ADJUSTMENTS**

(Not Used)

3.5 **CLEANING**

(Not Used)

3.6 **PROTECTION**

(Not Used)

3.7 **DEMONSTRATION**

(Not Used)

3.8 **SCHEDULES**

(Not Used)

END OF SECTION

ATTACHMENT A
PROCESS/ALARM SWITCH SETTINGS

Rev.	Alarm or Other Receiving Device Tag No.	Service	P&ID Location H -2-	Actuated By	Switch Opens On		Contacts at Process Normal		Alarm Point	Switch Reset Point Greater Than
					Proc Incr	Proc Decr	Open	Clsd	Process Condition	Process
1	PAH-VAX-324	VP-620-003A&B Inlet	123370 5/8	PSH-VAX-324	X			X	-4.3 psig	-4.4 psig
0										
0	YIC-CSS-007	BL-05I-111 Discharge	129731 1/3	FSL-CSS-010		X		X	650 fpm	700 fpm
0	YIC-CSS-007	BL-05I-111 Return Air	129731 1/3	YSH-CSS-015	X			X	NA	NA
0	YIC-CSS-007	BL-05I-111 Discharge	129731 1/3	YSH-CSS-009	X			X	NA	NA
0	YIC-CSS-046-1	BL-05I-112 Discharge	129734 1/3	YSH-CSS-040-1	X			X	NA	NA
0	YIC-CSS-046-2	BL-05I-113 Discharge	129734 2/3	YSH-CSS-040-2	X			X	NA	NA
0	YIC-CSS-046-2	RM 136, 110 Return Air	129734 2/3	YSH-CSS-045	X			X	NA	NA

U.S. DEPARTMENT OF ENERGY
Hanford Waste Vitrification Plant
Richland, Washington
DOE Contract DE-AC06-86RL10838

FLUOR DANIEL, INC.
Advanced Technology Division
Fluor Contract 8457

SECTION 17864
INSTRUMENTS FURNISHED WITH MECHANICAL EQUIPMENT
CANISTER STORAGE BUILDING
B-595-C-E350-17864

APPROVED FOR CONSTRUCTION

REVISION 1
ISSUE DATE 8/4/93

WAPA YES ___ NO X
QUALITY LEVEL I ___ II X
SAFETY CLASS 1__ 2__ 3X 4__

ORIGINATOR:

A. L. Sanburg 7-29-93
A. L. Sanburg, Control Sys. Engineer Date

CHECKER:

B R Carlisle 7/29/93
B. R. Carlisle, Con. Sys. Eng. Date

APPROVED BY:

J. B. Bunning
J. B. Bunning Lead Discipline Engineer

07/29/93
Date

7/27/93 8:22am
106\VOL5...\SPECS\E350\17864-1.

SECTION 17864
INSTRUMENTS FURNISHED WITH MECHANICAL EQUIPMENT
CANISTER STORAGE BUILDING
B-595-C-E350-17864

TABLE OF CONTENTS

PART — PAGE

PART 1 GENERAL 1
- 1.1 SUMMARY 1
- 1.2 REFERENCES 1
- 1.3 RELATED REQUIREMENTS 2
- 1.4 DEFINITIONS 2
- 1.5 SYSTEM DESCRIPTION 2
- 1.6 SUBMITTALS 2
- 1.7 CLASSIFICATION OF SYSTEMS AND COMPONENTS 3
- 1.8 PROJECT OR SITE ENVIRONMENTAL CONDITIONS 3

PART 2 PRODUCTS 3
- 2.1 MATERIAL AND EQUIPMENT 3
- 2.2 FABRICATION AND MANUFACTURE 7
- 2.3 FACTORY ACCEPTANCE TESTS (FAT) 8
- 2.4 PACKAGING AND SHIPPING 8

PART 3 EXECUTION 9
- 3.1 PREPARATION 9
- 3.2 INSTALLATION, APPLICATION AND ERECTION 9
- 3.3 FIELD QUALITY CONTROL 9
- 3.4 ADJUSTMENTS 9
- 3.5 CLEANING 9
- 3.6 PROTECTION 9
- 3.7 DEMONSTRATION 9
- 3.8 SCHEDULES 9

ATTACHMENTS

ATTACHMENT	TITLE
A	FURNISHED INSTRUMENTS - AIR HANDLING UNIT, AH-05I-111
B	FURNISHED INSTRUMENTS - ELECTRIC HEATER, EH-05I-115, 116, 117
C	FURNISHED INSTRUMENTS - AIR CONDITIONING UNIT, AC-05I-110A & 110B
D	FURNISHED INSTRUMENTS - AIR HANDLING UNIT, AH-05I-112
E	FURNISHED INSTRUMENTS - AIR HANDLING UNIT, AH-05I-113
F	FURNISHED INSTRUMENTS - RANGE AND OPERATING POINT

SECTION 17864
INSTRUMENTS FURNISHED WITH MECHANICAL EQUIPMENT
CANISTER STORAGE BUILDING

PART 1 GENERAL

1.1 SUMMARY

This section defines the requirements for the supply, installation, inspection, and testing of instruments furnished with mechanical equipment.

1.2 REFERENCES

The publications listed below form a part of this specification to the extent referenced. The publications are referred to in the text by the basic designation only.

AMERICAN SOCIETY OF MECHANICAL ENGINEERS (ASME)

ANSI/ASME B1.20.1	1983 Pipe Threads, General Purpose (Inch)

FACTORY MUTUAL (FM)

Directory	1991 Approval Guide

INSTRUMENT SOCIETY OF AMERICA (ISA)

ISA S20	1981 Specification Forms for Process Measurement and Control Instruments, Primary Elements and Control Valves

NATIONAL ELECTRICAL MANUFACTURERS ASSOCIATION (NEMA)

ANSI/NEMA 250	1985 Enclosures for Electrical Equipment (1000 Volts Maximum) Revision No. 1 - May 1986 Revision No. 2 - May 1988

UNDERWRITERS LABORATORIES INC. (UL)

Directory	1991 Electric Appliance and Utilization Equipment Directory
Directory	1991 Recognized Component Directory

1.3 **RELATED REQUIREMENTS**

Specification Section 16610	Electrical Requirements for Packaged Equipment
Specification Section 16100	Electrical Installation
Specification Section 01730	Operation and Maintenance Data
Specification Section 17703	Instrument Piping Materials
Specification Section 17704	General Instrumentation Installation and Testing
Specification Section 17705	Instrument Calibration and Checkout

1.4 **DEFINITIONS**

CAT - Construction Acceptance Test
FAT - Factory Acceptance Test
PSIA - Pounds per Square Inch Absolute
RTD - Resistance Temperature Detector

1.5 **SYSTEM DESCRIPTION**

(Not Used)

1.6 **SUBMITTALS**

Submit the following in accordance with the Vendor Drawing and Data Requirements section of the Order/Subcontract.

(Deleted)

1.6.1 Catalog cuts describing each instrument and accessory.

1.6.2 Manufacturers' installation drawings and instructions.

1.6.3 Manufacturers' operating and maintenance manuals in accordance with Specification Section 01730.

1.6.4 Manufacturers' calibration instructions including calibration curves/tables.

1.6.5 Instrument data sheets similar to ISA S20 completed in accordance with ISA S20 instructions.

1.6.6 Plan and elevation drawings with dimensioned locations for instrument and control devices, connections to the mechanical equipment, air supply connections, and terminal boxes

1.6.7 Process tubing detail drawings

1.6.8 Pneumatic tubing detail drawings

1.6.9 Terminal box layout drawings showing location and identification of terminals, conduit sizes and entrance locations.

1.6.10 Electrical connection diagrams (point to point wiring).

1.6.11 Instrument list showing tag number, service, manufacturer model number, range and setpoint if applicable.

1.6.12 FAT procedure.

1.6.13 Report confirming the FAT procedure was executed and the results.

1.6.14 CAT procedure including the requirements in Paragraph 3.3.1.

1.6.15 Report confirming the CAT was executed and the results.

1.7 **CLASSIFICATION OF SYSTEMS AND COMPONENTS**

(Not Used)

1.8 **PROJECT OR SITE ENVIRONMENTAL CONDITIONS**

1.8.1 Climatic and Geographic Site Conditions

A.	Site Elevation	714 feet above sea level
B.	Barometric Pressure	14.3 psia
C.	Outside Design Temperature	
	1) Maximum Design Temperature	110°F
	2) Minimum Design Temperature	-20°F
	3) Wet Bulb Design Temperature	68°F

PART 2 PRODUCTS

2.1 **MATERIAL AND EQUIPMENT**

2.1.1 General Requirements

2.1.1.1 Select instrumentation appropriate for the application, including correct range, pressure and temperature rating, and materials of construction to operate under the conditions of Paragraph 1.8.

2.1.1.2 Provide 24 Vdc loop powered ("Smart") transmitters with integral indicators and 4 to 20 mA dc output signal for all services for which they are available.

2.1.1.3 Radio frequency interference from 20 to 1000 MHz with a field strength of 30 volts per meter shall not affect the output of a transmitter, installed with grounded conduit, by more than +/- 0.01% of span.

2.1.1.4 Provide accessories, materials, and methods of fabrication not included in this specification, but which are necessary to complete the installation of the instrumentation.

2.1.1.5 When two or more components of the same specifications are required, the components shall be identical (same manufacturer and catalog number).

2.1.1.6 Electrical and electronic instruments, control devices and components which operate at voltages higher than 30 volts or energy greater than 100 VA shall be UL listed devices, UL recognized components, or FM approved devices (refer to FM and UL directories).

2.1.1.7 Instrument electrical enclosures shall be ANSI/NEMA 250, Type 1.

2.1.1.8 Pneumatic signals shall be 3 to 15 psig.

2.1.1.9 Electronic analog signals shall be 4 to 20 mA dc.

2.1.1.10 Discrete signals shall be 120 Vac.

2.1.1.11 Threaded connections shall be in accordance with ANSI/ASME B1.20.1.

2.1.2 Instruments provided by Seller shall include the features listed by instrument type below:

2.1.2.1 Differential Pressure Transmitters

2.1.2.1.1 See Attachments A, D, E and F for description and tag number of required instruments.

2.1.2.1.2 Selectable upscale or downscale indication of transmitter failure.

2.1.2.1.3 Accuracy of ± 0.5 percent of full span.

2.1.2.1.4 Overpressure protection greater than 200 percent of full scale.

2.1.2.1.5 Maximum zero and span drift of 2 percent per 100°F.

2.1.2.1.6 Stainless steel (316 SS) for parts exposed to the process.

2.1.2.1.7 Pressure connections 1/2 inch NPT.

2.1.2.1.8 Electrical conduit connection 1/2 inch NPT hub.

2.1.2.1.9 Terminal strips for wiring connections.

2.1.2.1.10 Mount on a rack per the sketches in Attachments A, D and E.

2.1.2.2 Differential Pressure Gauges

2.1.2.2.1 See Attachments A, D, E and F for description and tag number of required instruments.

2.1.2.2.2 Accuracy ± 0.5 percent of full scale.

2.1.2.2.3 Case size 4-1/2 inches.

2.1.2.2.4 Connection 1/2 inch MNPT.

2.1.2.2.5 Pressure elements 316 stainless steel.

2.1.2.2.6 Movements 316 stainless steel.

2.1.2.2.7 Rupture discs or blowout plugs for blowout protection.

2.1.2.2.8 Mount on air handling units (AHUs).

2.1.2.3 Current/Pneumatic Converter

2.1.2.3.1 Mount and pipe per the sketches in Attachments A, D and E.

2.1.2.3.2 Output signal 3 to 15 psig, linear with 4 to 20 mA input signal.

2.1.2.3.3 Output variation less than 1 percent for a 5 psi change in supply pressure.

2.1.2.3.4 Accuracy ±1 percent.

2.1.2.3.5 Input resistance 250 ohms or less.

2.1.2.3.6 Supply and output connections 1/4 inch NPT.

2.1.2.3.7 Conduit connections 1/2 inch NPT.

2.1.2.4 Solenoid Valves

2.1.2.4.1 Mount and pipe per the sketches in Attachments A, D and E.

2.1.2.4.2 Conduit connections 1/2 inch NPT.

2.1.2.4.3 Instrument port connection 1/4 inch NPT.

2.1.2.4.4 3-way switching valves, direct acting.

2.1.2.4.5 Electrical rating 120 Vac, 60 Hz.

2.1.2.4.6 Valves in on/off service rated for an instrument air supply pressure of 150 psig maximum.

2.1.2.5 Temperature Elements

2.1.2.5.1 Platinum type Resistance Temperature Detectors (RTDs).

2.1.2.5.2 Temperature/resistance coefficient 0.0021 ohms/ohm/°F, with 0.1 percent interchangeability.

2.1.2.5.3 Resistance 100.0 +0.2 ohms at 32°F.

2.1.2.5.4 Encased in stainless steel sheath with hard packed insulating material compatible with the operating temperature.

2.1.2.5.5 See Attachments A, D and E for description and tag number of require instruments.

2.1.2.5.6 Provide 3 wire RTDs to minimize effect of lead wire resistance.

2.1.2.6 Temperature Transmitters

2.1.2.6.1 Mount on a rack per the sketches in Attachments A, D, and E.

2.1.2.6.2 When supplied with 24 Vdc, transmitter shall have a load capability of at least 550 ohms.

2.1.2.6.3 See Attachments A, D, E and F for description and tag number of required instruments.

2.1.2.6.4 Accuracy of the instrument ± 0.5 percent of span, unless otherwise specified on the attached data sheets.

2.1.2.6.5 Conduit connections 1/2 inch NPT.

2.1.2.6.6 Terminal strips provided for all external connections.

2.1.2.7 Instrument Racks

2.1.2.7.1 Selected instruments mounted on racks per the sketches in Attachments A, D and E.

2.1.2.7.2 Filter-regulator airsets with integral output pressure gauge supplied, mounted and piped.

2.1.2.7.3 The unregulated instrument air supply pressure to the filter-regulator valve is a minimum of 60 psig and a maximum of 150 psig, with dewpoint -20°F.

2.1.2.7.4 Nameplates made of 1/16 inch thick laminated plastic stock with white surface and black core.

2.1.2.7.5 Instrument racks shipped to site separately and installed on air handling unit by Seller.

2.1.2.8 Indoor Control System Thermostat

2.1.2.8.1 See Attachments C and F for description and tag number of required instruments.

2.1.2.8.2 Microprocessor based unit.

2.1.2.8.3 Provide temperature and humidity set points, remote start/stop capability, time, and temperature displays.

2.1.2.8.4 Temperature, humidity, and alarm set points selected using touch sensitive buttons on the face of the unit.

2.1.2.8.5 Temperature accuracy ± 2°F of set point.

2.1.2.9 Electric Heater Controller

2.1.2.9.1 Control the Multi-Step Electric Heater based on inputs from an electronic room thermostat provided by Buyer.

2.1.2.9.2 See Attachments B and F for description and tag number of required instruments.

2.2 FABRICATION AND MANUFACTURE

2.2.1 Instrument Mounting

2.2.1.1 Instruments and equipment shall be mounted and supported to meet seismic requirements.

2.2.1.2 Adjustments shall be readily accessible and instruments and components shall be replaceable without disturbing wiring or other equipment.

2.2.1.3 Mount and support instruments in accordance with manufacturers' installation documents, contract drawings and Specification Section 17704.

2.2.1.4 Use materials specified in Specification Section 17703, except Paragraph 3.1.3 which does not apply.

2.2.2 Piping

2.2.2.1 Install the instrument piping components in accordance with manufacturers' installation documents, contract drawings and Specification Section 17704.

2.2.2.2 Use material specified in Specification Section 17703, except paragraph 3.1.3 which does not apply.

2.2.3 Wiring

2.2.3.1 Wiring material and installation methods shall comply with Specification Section 16610.

2.3 FACTORY ACCEPTANCE TESTS (FAT)

2.3.1 Prepare a Factory Acceptance Test (FAT) procedure and submit it to the Buyer for approval. Include:

A. Inspections/tests to demonstrate that the design, fabrication, and assembly of the materials and equipment meet the requirements of the design drawings and specifications.

B. (Deleted)

2.3.2 Inspect and test the instruments in accordance with the Buyer approved FAT procedure.

2.3.3 Submit a report confirming the FAT procedure has been completed and the results.

2.4 PACKAGING AND SHIPPING

2.4.1 Reinstall shipping stops which were removed for calibration and testing.

2.4.2 Repack loose instruments in the manufacturers' original packing materials. Accumulate these in a separate crate marked "INSTRUMENTS" for shipment. Crates and packages of instruments or components, which are shipped separately, shall be identified and marked to be traceable back to the main equipment component.

2.4.3 Protect all shipped materials from moisture, vibration, shock, and heat damage while in transit or interim storage.

PART 3 EXECUTION

3.1 PREPARATION

Inspect and calibrate instruments in accordance with Paragraph 3.1 of Specification Section 17705.

3.2 INSTALLATION, APPLICATION AND ERECTION

Install instruments in accordance with Specification Sections 17704, 16100, and the manufacturers' installation instructions.

3.3 FIELD QUALITY CONTROL

3.3.1 Prepare a CAT procedure and submit it for approval. Include the requirements in Specification Section 17705.

3.3.2 Inspect and test the instrument installations according to the Buyer approved CAT procedure.

3.3.3 Submit a report confirming that the inspection and testing has been completed and the results.

3.4 ADJUSTMENTS

(Not Used)

3.5 CLEANING

(Not Used)

3.6 PROTECTION

(Not Used)

3.7 DEMONSTRATION

(Not Used)

3.8 SCHEDULES

(Not Used)

END OF SECTION

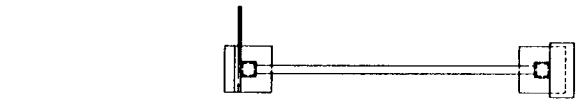

TOP VIEW

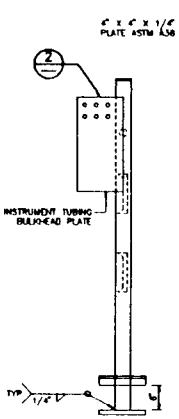

LEFT VIEW

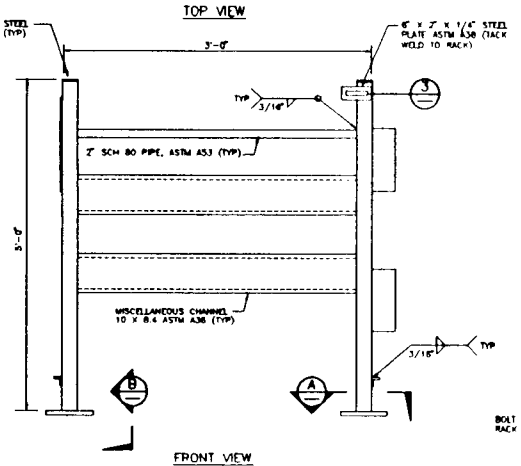

FRONT VIEW

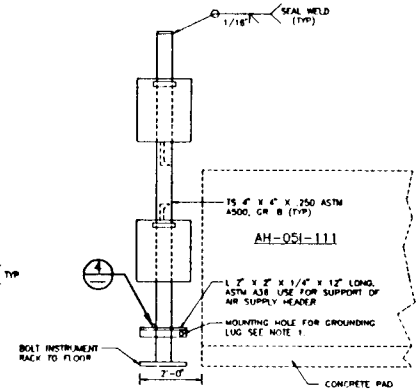

RIGHT VIEW

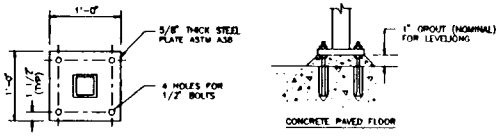

SECTION A
SCALE: NTS

SECTION B
SCALE: NTS

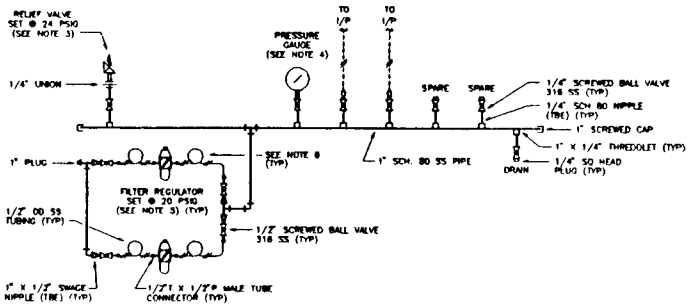

INSTRUMENT AIR SUPPLY PIPING
MATERIAL CLASS 3J

DETAIL 4
SCALE: NTS

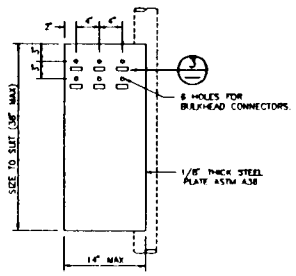

DETAIL 2
SCALE: NTS

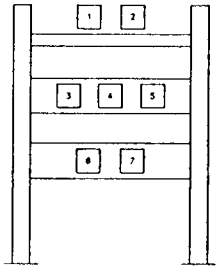

INSTRUMENT ARRANGEMENT

NO.	INSTRUMENT TAG NUMBERS
	AH-051-111
1	PDIT-CSS-008
2	PDIT-CSS-008
3	TIT-CSS-003
4	TY-CSS-016
5	TY-CSS-002
6	YY-CSS-016
7	YY-CSS-002

BULKHEAD NAMEPLATE DESCRIPTION
PDIT-CSS-008 (HP)
PDIT-CSS-008 (LP)
PDIT-CSS-008 (HP)
PDIT-CSS-008 (LP)
TY-CSS-016
YY-CSS-002

SEE ATTACHMENT A SHEET 2 FOR DESCRIPTION

TERMINAL BOXES

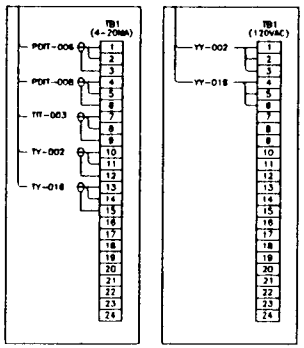

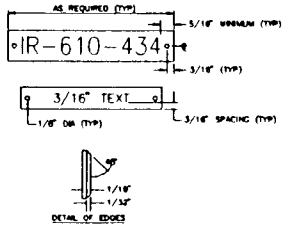

DETAIL 3
SCALE: NTS

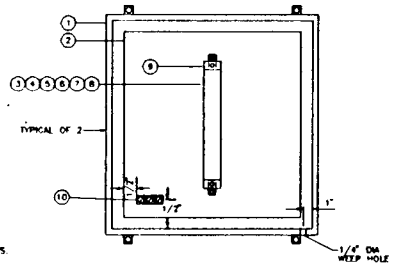

NOTES:

1. PROVIDE A GROUNDING LUG ON RACK STRUCTURE. AN ACCEPTABLE GROUNDING LUG IS THOMAS AND BETTS MODEL #35401
2. ARRANGE ORDER OF INSTRUMENTS AND BULKHEAD CONNECTIONS PER ACCESSIBILITY AND MAINTAINABILITY REQUIREMENTS.
3. AN ACCEPTABLE PRESSURE SAFETY RELIEF VALVE IS CIRCLE SEAL CONTROLS MODEL #M51321-2M-20. PRESSURE RANGE 18-25 PSI, 1/4" NPT
4. AN ACCEPTABLE PRESSURE GAUGE IS FISHER MODEL #1501. PRESSURE RANGE 0-30 PSIG, 1/4" NPT.
5. AN ACCEPTABLE FILTER REGULATOR IS FISHER MODEL #67 FGR, OUTLET PRESSURE RANGE, 5-35 PSIG
6. PROVIDE LOOP IN TUBING TO COMPENSATE FOR PIPE MOVEMENT. 6" MINIMUM DIAMETER FOR LOOP AND 1/4" MINIMUM DISTANCE BETWEEN TUBING.
7. INSTRUMENTS SHALL BE FURNISHED AND PIPED FROM INSTRUMENT TO EQUIPMENT CONNECTION.

MATERIAL LIST FOR EACH BOX

ITEM	DESCRIPTION
1	BOX, 20"X18"X8", NEMA 12, STEEL W/CONTINUOUS HINGE & LATCH
2	MOUNTING PANEL, STEEL, STANDARD FINISH
3	TERMINAL BLOCK, BODY, 22-10 AWG, SCREW TYPE (24 REQUIRED)
4	END SECTION, FOR USE WITH ITEM 3 ABOVE
5	END BRACKET, FOR USE WITH ITEM 3 ABOVE
6	MOUNTING CHANNEL, FOR USE WITH ITEM 3 ABOVE
7	MACHINE SCREW, 10-32X1/2", SELF TAPPING, ZINC PLATED
8	MARKING STRIP
9	TERMINAL GROUP MARKER
10	GROUND BUS-LOAD CENTER ACCESSORY EQUIPMENT GND KIT 8 TERMINAL FASTEN TO MOUNTING PANEL(DRILL AND TAP).

FURNISHED INSTRUMENTS

AIR HANDLING UNIT AH-051-111

SECTION 17864

ATTACHMENT A

PAGE 1 OF 2

REV 1

E350-17864

FILE A01-1 RR/29 JUL 93

ATTACHMENT A
FURNISHED INSTRUMENTS - AIR HANDLING UNIT AH-05I-111

SERVICE	TAG NUMBER
Prefilter Differential Pressure	PDI-CSS-004
High Efficiency Filter Differential Pressure	PDI-CSS-005
Prefilter/High Efficiency Diff. Pressure	PDIT-CSS-006
Blower Differential Pressure	PDIT-CSS-008
Return Air Damper Controls	YY-CSS-016
Inlet Air Damper Controls	YY-CSS-002
Inlet Air Temperature Element	TE-CSS-003
Inlet Air Temperature Transmitter	TIT-CSS-003
Return Air Damper Transducer	TY-CSS-016
Inlet Air Damper Transducer	TY-CSS-002

NOTE: Acceptable manufacturers and models for above instruments are:

PDI	Dwyer	Model 2000 or equal
PDIT	Dwyer	Model 650 or equal
YY	ASCO	Model 8300 or equal
TE	Rosemount	Model 68 or equal
TIT	Rosemount	Model 3044 or equal
TY	Fisher	Model 546 or equal

ATTACHMENT B
FURNISHED INSTRUMENTS - ELECTRIC HEATER EH-05I-115, 116, 117

SERVICE	TAG NUMBER
Health Protection Office	JC-CSS-011
Electrical Equipment Room	JC-CSS-012
Clean Operating Office	JC-CSS-013

ATTACHMENT C
FURNISHED INSTRUMENTS - AIR CONDITIONING UNIT AC-05I-110A & 110B

SERVICE	TAG NUMBER
Main Air Conditioning Unit To FOS #5	UIC-CSS-021
Standby Air Conditioning Unit FOS #5	UIC-CSS-024

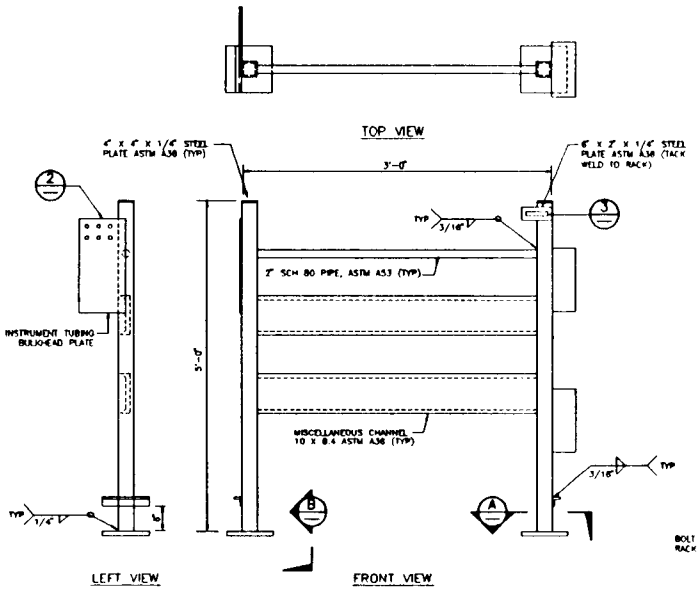

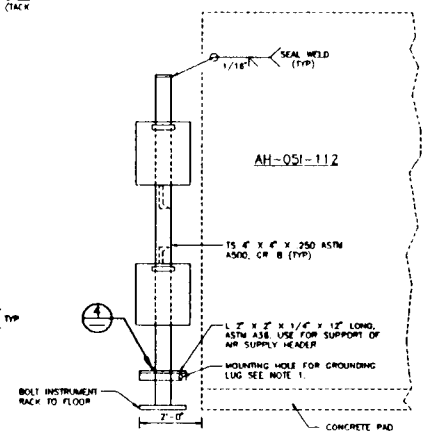

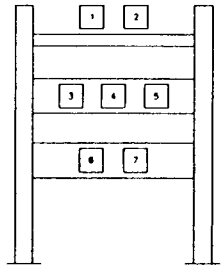

INSTRUMENT ARRANGEMENT

NO.	INSTRUMENT TAG NUMBERS
	AH-051-112
1	PDIT-CSS-035-1
2	PDIT-CSS-038-1
3	TIT-CSS-032-1
4	TY-CSS-031-1
5	TY-CSS-046-1
6	YY-CSS-031-1
7	YY-CSS-046-1

BULKHEAD NAMEPLATE DESCRIPTION
PDIT-CSS-035-1 (HP)
PDIT-CSS-035-1 (LP)
PDIT-CSS-038-1 (HP)
PDIT-CSS-038-1 (LP)
TY-CSS-031-1
YY-CSS-046-1

SEE ATTACHMENT D SHEET 2 FOR DESCRIPTION

TERMINAL BOXES

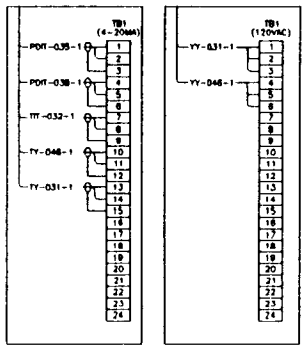

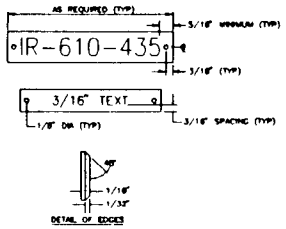

DETAIL 3
SCALE: NTS

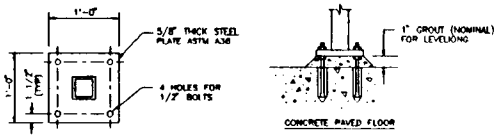

SECTION A
SCALE: NTS

SECTION B
SCALE: NTS

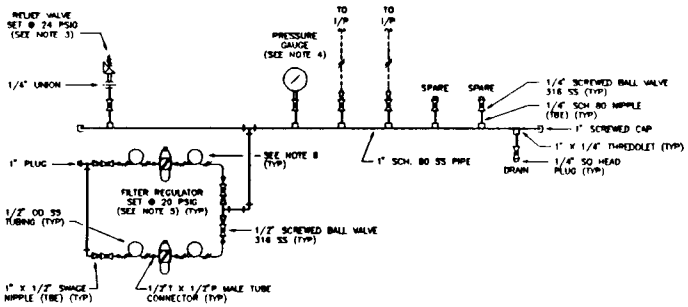

INSTRUMENT AIR SUPPLY PIPING
MATERIAL CLASS JJ

DETAIL 4
SCALE: NTS

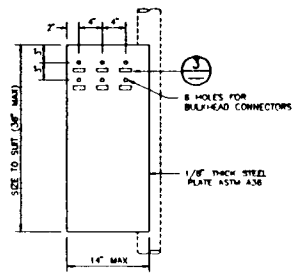

DETAIL 2
SCALE: NTS

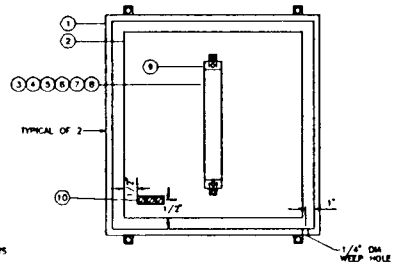

NOTES:

1. PROVIDE A GROUNDING LUG ON RACK STRUCTURE AN ACCEPTABLE GROUNDING LUG IS THOMAS AND BETTS MODEL #35401
2. ARRANGE ORDER OF INSTRUMENTS AND BULKHEAD CONNECTIONS PER ACCESSIBILITY AND MAINTAINABILITY REQUIREMENTS
3. AN ACCEPTABLE PRESSURE SAFETY RELIEF VALVE IS CIRCLE SEAL CONTROLS MODEL #N51327-2M-20, PRESSURE RANGE 18-25 PSI, 1/4" NPT
4. AN ACCEPTABLE PRESSURE GAUGE IS FISHER MODEL #2501, PRESSURE RANGE 0-30 PSIG, 1/4" NPT
5. AN ACCEPTABLE FILTER REGULATOR IS FISHER MODEL #67 FGR, OUTLET PRESSURE RANGE, 5-35 PSIG
6. PROVIDE LOOP IN TUBING TO COMPENSATE FOR PIPE MOVEMENT. 6" MINIMUM DIAMETER FOR LOOP AND 1/4" MINIMUM DISTANCE BETWEEN TUBING
7. INSTRUMENTS SHALL BE FURNISHED AND PIPED FROM INSTRUMENT TO EQUIPMENT CONNECTION.

MATERIAL LIST FOR EACH BOX

ITEM	DESCRIPTION
1	BOX, 20"X16"X8", NEMA 12, STEEL W/CONTINUOUS HINGE & LATCH
2	MOUNTING PANEL, STEEL, STANDARD FINISH
3	TERMINAL BLOCK, BODY, 22-10 AWG, SCREW TYPE (24 REQUIRED)
4	END SECTION, FOR USE WITH ITEM 3 ABOVE
5	END BREAKET, FOR USE WITH ITEM 3 ABOVE
6	MOUNTING CHANNEL, FOR USE WITH ITEM 3 ABOVE
7	MACHINE SCREW, 10-32x1/2", SELF TAPPING, ZINC PLATED
8	MARKING STRIP
9	TERMINAL GROUP MARKER
10	CRYSTAL BRIS LOAD CENTER ACCESSORY EQUIPMENT GND KIT 8 TERMINAL FASTEN TO MOUNTING PANEL(DRILL AND TAP)

FURNISHED INSTRUMENTS

AIR HANDLING UNIT AH-051-112

SECTION 17864

ATTACHMENT D

PAGE 1 OF 2

REV 1

E350-17864

FILE D01-1 RR/29 JUL 93

ATTACHMENT D
FURNISHED INSTRUMENTS - AIR HANDLING UNIT AH-05I-112

SERVICE	TAG NUMBER
Prefilter Differential Pressure	PDI-CSS-033-1
High Efficiency Filter Differential Pressure	PDI-CSS-034-1
Prefilter/High Efficiency Diff. Pressure	PDIT-CSS-035-1
Blower Differential Pressure	PDIT-CSS-038-1
Return Air Damper Controls	YY-CSS-046-1
Inlet Air Damper Controls	YY-CSS-031-1
Inlet Air Temperature Element	TE-CSS-032-1
Inlet Air Temperature Transmitter	TIT-CSS-032-1
Return Air Damper Transducer	TY-CSS-046-1
Inlet Air Damper Transducer	TY-CSS-031-1

NOTE: Acceptable manufacturers and models for above instruments are:

PDI	Dwyer	Model 2000 or equal
PDIT	Dwyer	Model 650 or equal
YY	ASCO	Model 8300 or equal
TE	Rosemount	Model 68 or equal
TIT	Rosemount	Model 3044 or equal
TY	Fisher	Model 546 or equal

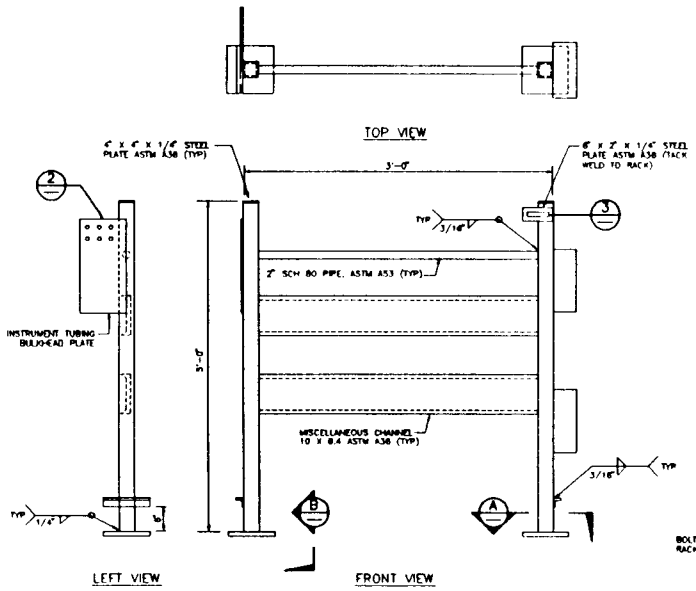

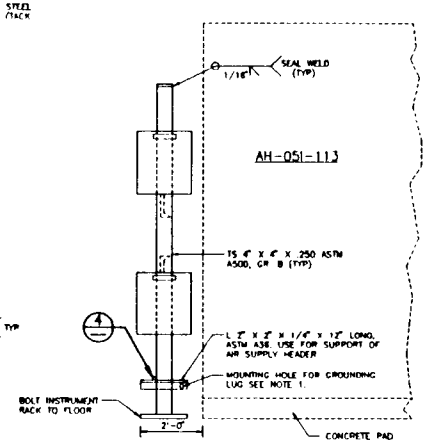

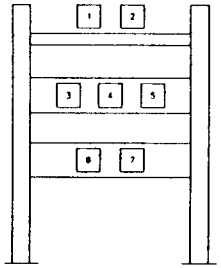

INSTRUMENT ARRANGEMENT

NO.	INSTRUMENT TAG NUMBERS
	AH-051-113
1	PDIT-CSS-035-2
2	PDIT-CSS-038-2
3	TIT-CSS-032-2
4	TY-CSS-031-2
5	TY-CSS-046-2
6	YY-CSS-031-2
7	YY-CSS-046-2

BULKHEAD NAMEPLATE DESCRIPTION
PDIT-CSS-038-2 (HP)
PDIT-CSS-004 (LP)
PDIT-CSS-038-2 (HP)
PDIT-CSS-038-2 (LP)
YY-CSS-031-2
YY-CSS-046-2

SEE ATTACHMENT A SHEET 2 FOR DESCRIPTION

TERMINAL BOXES

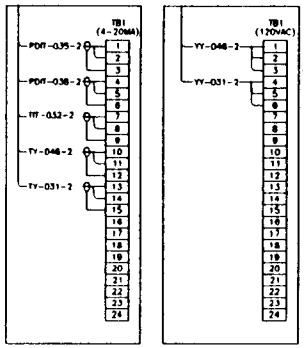

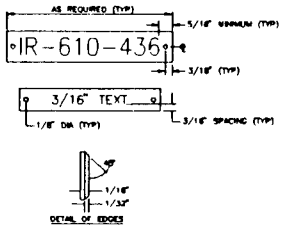

DETAIL 3
SCALE: NTS

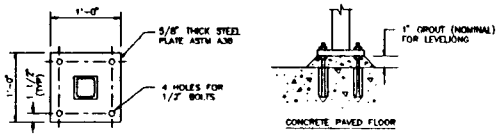

SECTION A
SCALE: NTS

SECTION B
SCALE: NTS

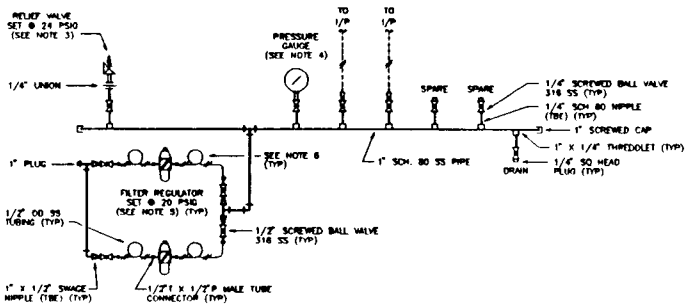

INSTRUMENT AIR SUPPLY PIPING
MATERIAL CLASS ZJ

DETAIL 4
SCALE: NTS

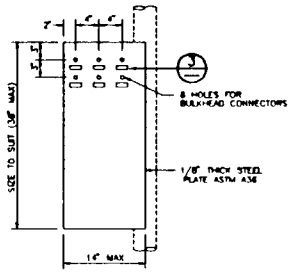

DETAIL 2
SCALE: NTS

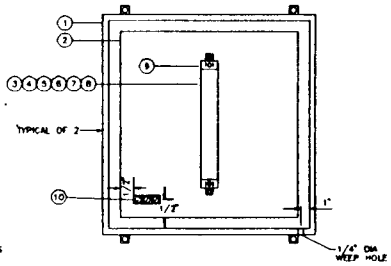

MATERIAL LIST FOR EACH BOX

ITEM	DESCRIPTION
1	BOX, 20"x18"x8", NEMA 12, STEEL W/CONTINUOUS HINGE & LATCH
2	MOUNTING PANEL, STEEL, STANDARD FINISH
3	TERMINAL BLOCK, 600V, 22-10 AWG, SCREW TYPE (24 REQUIRED)
4	END SECTION, FOR USE WITH ITEM 3 ABOVE
5	END BRACKET, FOR USE WITH ITEM 3 ABOVE
6	MOUNTING CHANNEL, FOR USE WITH ITEM 3 ABOVE
7	MACHINE SCREW, 10-32x1/2", SELF TAPPING, ZINC PLATED
8	MARKING STRIP
9	TERMINAL GROUP MARKER
10	OPEN IND BUS LOAD CENTER ACCESSORY EQUIPMENT GND KIT & TERMINAL FASTEN TO MOUNTING PANEL (DRILL AND TAP)

NOTES:

1. PROVIDE A GROUNDING LUG ON RACK STRUCTURE. AN ACCEPTABLE GROUNDING LUG IS THOMAS AND BETTS MODEL #35401.
2. ARRANGE ORDER OF INSTRUMENTS AND BULKHEAD CONNECTIONS PER ACCESSIBILITY AND MAINTAINABILITY REQUIREMENTS.
3. AN ACCEPTABLE PRESSURE SAFETY RELIEF VALVE IS CIRCLE SEAL CONTROLS MODEL #95137T-2M-20, PRESSURE RANGE 18-25 PSI, 1/4" NPT.
4. AN ACCEPTABLE PRESSURE GAUGE IS FISHER MODEL #5051, PRESSURE RANGE 0-30 PSIG, 1/4" NPT.
5. AN ACCEPTABLE FILTER REGULATOR IS FISHER MODEL #67 FOR, OUTLET PRESSURE RANGE, 5-35 PSIG.
6. PROVIDE LOOP IN TUBING TO COMPENSATE FOR PIPE MOVEMENT. 6" MINIMUM DIAMETER FOR LOOP AND 1/4" MINIMUM DISTANCE BETWEEN TUBING.
7. INSTRUMENTS SHALL BE FURNISHED AND PIPED FROM INSTRUMENT TO EQUIPMENT CONNECTION.

FURNISHED INSTRUMENTS

AIR HANDLING UNIT AH-051-113

SECTION 17864

ATTACHMENT E

PAGE 1 OF 2

REV 1

E350-17864

FILE: E01-1 PR/29 JUL 93

ATTACHMENT E
FURNISHED INSTRUMENTS - AIR HANDLING UNIT AH-05I-113

SERVICE	TAG NUMBER
Prefilter Differential Pressure	PDI-CSS-033-2
High Efficiency Filter Differential Pressure	PDI-CSS-034-2
Prefilter/High Efficiency Diff. Pressure	PDIT-CSS-035-2
Blower Differential Pressure	PDIT-CSS-038-2
Return Air Damper Controls	YY-CSS-046-2
Inlet Air Damper Controls	YY-CSS-031-2
Inlet Air Temperature Element	TE-CSS-032-2
Inlet Air Temperature Transmitter	TIT-CSS-032-2
Return Air Damper Transducer	TY-CSS-046-2
Inlet Air Damper Transducer	TY-CSS-031-2

NOTE: Acceptable manufacturers and models for above instruments are:

PDI	Dwyer	Model 2000 or equal
PDIT	Dwyer	Model 650 or equal
YY	ASCO	Model 8300 or equal
TE	Rosemount	Model 68 or equal
TIT	Rosemount	Model 3044 or equal
TY	Fisher	Model 546 or equal

ATTACHMENT F
FURNISHED INSTRUMENTS - RANGE AND OPERATING POINT

TAG NUMBER	RANGE MIN MAX	NORMAL OPER. POINT	UNITS	NOTES
PDI-CSS-004	0 To 2	0.3 To 1.0	In W.C.	AH-05I-111
PDI-CSS-005	0 To 3	0.3 To 1.5	In W.C.	
PDI-CSS-006	0 To 4	0.6 To 2.5	In W.C.	
PDI-CSS-008	0 To 6	2.0 To 4.0	In W.C.	
TIT-CSS-003	-30 To 130	9.0 To 101	Deg F	
PDI-CSS-033-1	0 To 2	0.3 To 1.0	In W.C.	AH-05I-112
PDI-CSS-034-1	0 To 3	0.3 To 1.5	In W.C.	
PDIT-CSS-035-1	0 To 4	0.6 To 2.5	In W.C.	
PDIT-CSS-038-1	0 To 6	2.0 To 4.0	In W.C.	
TIT-CSS-032-1	-30 To 130	40 To 101	Deg F	
PDI-CSS-033-2	0 To 2	0.3 To 1.0	In W.C.	AH-05I-113
PDI-CSS-034-2	0 To 3	0.3 To 1.5	In W.C.	
PDIT-CSS-035-2	0 To 4	0.6 To 2.5	In W.C.	
PDIT-CSS-038-2	0 To 6	2.0 To 4.0	In W.C.	
TIT-CSS-032-2	-30 To 130	40 To 101	Deg F	
JC-CSS-011	By Seller	By Seller	By Seller	Electric Heater EH-05I-115
JC-CSS-012	By Seller	By Seller	By Seller	Electric Heater EH-05I-116
JC-CSS-013	By Seller	By Seller	By Seller	Electric Heater EH-05I-117
UIC-CSS-021	20 To 80%	50%	R.H.	AC-05I-110A
UIC-CSS-021	40 To 90	72	Deg F	AC-05I-110A
UIC-CSS-024	20 To 80%	50%	R.H.	AC-05I-110B
UIC-CSS-024	40 To 90	72	Deg F	AC-05I-110B