Drawings and Documents

Operating Unit Group 10 – Appendix 10.4
High Level Waste Building
General Arrangement Drawings

The documents listed in the following table are incorporated by reference into this permit and are subject to the requirements set forth in Part I Standard Conditions, Part II General Facility Conditions, and Part III Operating Unit Group 10 Conditions. Upon request, copies of the documents can be viewed at the Nuclear Waste Program Resource Center located at 3100 Port of Benton Blvd. Richland, WA. Appointments for viewing can be scheduled by calling (509) 372-7950.

Drawing/Documents	***Description***
24590-HLW-P1-P01T-00001, Rev 9	General Arrangement Plan El. -21'
24590-HLW-P1-P01T-00002, Rev 7	General Arrangement Plan El. 0'
24590-HLW-P1-P01T-00003, Rev 8	General Arrangement Plan El. 14'
24590-HLW-P1-P01T-00004, Rev 7	General Arrangement Plan El. 37'
24590-HLW-P1-P01T-00005, Rev 6	General Arrangement Plan El. 58'
24590-HLW-P1-P01T-00008, Rev 11	General Arrangement Sections A-A, B-B, C-C
24590-HLW-P1-P01T-00009, Rev 11	General Arrangement Sections D-D, E-E, F-F
24590-HLW-P1-P01T-00010, Rev 11	General Arrangement Sections G-G, H-H
24590-HLW-P1-P01T-00011, Rev 11	General Arrangement Sections J-J, K-K
RESERVED	RESERVED

Source documents (which do not include a "P" in the last set of numbers, e.g. "-P0001," or "-TP001") should be used in conjunction with any document change notices issued against them.

We are currently transitioning from permit documents (which do include a "P" in the last set of numbers) to source documents. At the end of the transition period, permit submittals will contain source documents and will be incorporated into the permit as described in Ecology Publication # 07-05-006 (www.ecy.wa.gov/biblio/nwp.html).

This page intentionally left blank.

Drawings and Documents

Operating Unit Group 10 – Appendix 10.5
High Level Waste Building
Civil, Structural, and Architectural Criteria and Typical Design Details

The documents listed in the following table are incorporated by reference into this permit and are subject to the requirements set forth in Part I Standard Conditions, Part II General Facility Conditions, and Part III Operating Unit Group 10 Conditions. Upon request, copies of the documents can be viewed at the Nuclear Waste Program Resource Center located at 3100 Port of Benton Blvd. Richland, WA. Appointments for viewing can be scheduled by calling (509) 372-7950.

Drawing/Documents	***Description***
24590-HLW-PER-M-02-001, Rev 3	HLW Facility Sump Data
RESERVED	RESERVED

Source documents (which do not include a "P" in the last set of numbers, e.g. "-P0001," or "-TP001") should be used in conjunction with any document change notices issued against them.

We are currently transitioning from permit documents (which do include a "P" in the last set of numbers) to source documents. At the end of the transition period, permit submittals will contain source documents and will be incorporated into the permit as described in Ecology Publication # 07-05-006 (www.ecy.wa.gov/biblio/nwp.html).

This page intentionally left blank.

Drawings and Documents

Operating Unit Group 10 – Appendix 10.6
High Level Waste Building
Mechanical Drawings

The documents listed in the following table are incorporated by reference into this permit and are subject to the requirements set forth in Part I Standard Conditions, Part II General Facility Conditions, and Part III Operating Unit Group 10 Conditions. Upon request, copies of the documents can be viewed at the Nuclear Waste Program Resource Center located at 3100 Port of Benton Blvd. Richland, WA. Appointments for viewing can be scheduled by calling (509) 372-7950.

Drawing/Document	***Description***
24590-HLW-M0D-HDH-00021, Rev 3	Mechanical Handling Data Sheet: HDH-CRN-00005
24590-HLW-M0D-HEH-00021, Rev 5	Mechanical Handling Data Sheet: HEH-CRN-00001
24590-HLW-M0D-HEH-00025, Rev 4	Mechanical Handling Data Sheet: HEH-CRN-00003
24590-HLW-M0D-HMP-00001, Rev 2	Mechanical Data Sheet: HLW Melter 1
24590-HLW-M0D-HMP-00002, Rev 2	Mechanical Data Sheet: HLW Melter 2
24590-HLW-M0D-HPH-00063, Rev 3	Mechanical Handling Data Sheet: HPH-CRN-00002
24590-HLW-M0D-HPH-00064, Rev 3	Mechanical Handling Data Sheet: HPH-CRN-00001
24590-HLW-M0D-HSH-00013, Rev 4	Mechanical Handling Data Sheet: HSH-CRN-00001
24590-HLW-M0D-HSH-00181, Rev 4	Mechanical Handling Data Sheet: HSH-CRN-00014
24590-HLW-M0-HDH-P0012001, Rev 1	Equipment Assembly Drawing for HDH Canister Rinse Bogie
24590-HLW-M0-HDH-P0012002, Rev 1	Equipment Assembly Drawing for HDH Canister Rinse Bogie
24590-HLW-M0-HSH-P0072, Rev 1	Equipment Assembly Drawing: HLW-HSH-Design Proposal Drawing Decontamination Tank
24590-HLW-M7-HDH-00001005, Rev 2	HLW Vitrification System HDH Mechanical Handling Diagram Canister Decontamination Handling System
24590-HLW-M7-HEH-00001004, Rev 2	HLW Vitrification System HEH Mechanical Handling Diagram Canister Export Handling System

24590-HLW-M7-HEH-00001005, Rev 2	HLW Vitrification System HEH Mechanical Handling Diagram Canister Export Handling System
24590-HLW-M7-HPH-00001001, Rev 1	HLW Vitrification System HPH Mechanical Handling Diagram Canister Pour Handling Canister Handling Cave
24590-HLW-M7-HPH-00001002, Rev 1	HLW Vitrification System HPH Mechanical Handling Diagram Canister Pour Handling Canister Handling Cave
24590-HLW-M7-HSH-00001002, Rev 1	HLW Vitrification System HSH Mechanical Handling Diagram Melter Cave Support Handling Melter Cave 1
24590-HLW-M7-HSH-00002002, Rev 0	HLW Vitrification System HSH Mechanical Handling Diagram Melter Cave Support Handling Melter Cave 2
24590-HLW-MAD-HOP-00010, Rev 5	Mechanical Data Sheet: HOP-HEPA-00001A
24590-HLW-MAD-HOP-00011, Rev 5	Mechanical Data Sheet: HOP-HEPA-00002A
24590-HLW-MAD-HOP-00012, Rev 5	Mechanical Data Sheet: HOP-HEPA-00001B
24590-HLW-MAD-HOP-00013, Rev 5	Mechanical Data Sheet: HOP-HEPA-00002B
24590-HLW-MAD-HOP-00014, Rev 5	Mechanical Data Sheet: HOP-HEPA-00007A
24590-HLW-MAD-HOP-00015, Rev 5	Mechanical Data Sheet: HOP-HEPA-00008A
24590-HLW-MAD-HOP-00016, Rev 5	Mechanical Data Sheet: HOP-HEPA-00007B
24590-HLW-MAD-HOP-00017, Rev 5	Mechanical Data Sheet: HOP-HEPA-00008B
24590-HLW-MAD-HOP-00018, Rev 9	Centrifugal Multi-Stage Blower Data Sheets for HOP-FAN-00001A/B/C and HOP-FAN-00009A/B/C
24590-HLW-MAD-HOP-00038, Rev 5	Centrifugal Blower Data Sheet: HOP-FAN-00008A/B/C and HOP-FAN-00010A/B/C
24590-HLW-MAD-PJV-00004, Rev 8	Mechanical Data Sheet for PJV-HEPA-00004A
24590-HLW-MAD-PJV-00005, Rev 8	Mechanical Data Sheet for PJV-HE;A-00005A
24590-HLW-MAD-PJV-00006, Rev 8	Mechanical Data Sheet for PJV-HEPA-00004B
24590-HLW-MAD-PJV-00007, Rev 8	Mechanical Data Sheet for PJV-HEPA-00005B

24590-HLW-MED-HOP-00031, Rev 0	Mechanical Data Sheet for HOP-HX-00002 and HOP-HX-00004
24590-HLW-MED-HOP-00013, Rev 4	Mechanical Data Sheet for HOP-HTR-00001B/2A/5A/5B
24590-HLW-MED-PJV-00002, Rev 4	Mechanical Data Sheet for PJV-HTR-00002
24590-HLW-MF-HMP-00001, Rev. 0	HLW Melter Assembly HLW-MLTR-00001/00002 Isometric View
24590-HLW-MF-HMP-00002, Rev. 0	HLW Melter Assembly HLW-MLTR-00001/00002 Plan View, West and North Elevation Drawing
24590-HLW-MF-HMP-00003, Rev. 0	HLW Melter Assembly HLW-MLTR-00001/00002 Section A-A
24590-HLW-MKD-HOP-00014, Rev 6	Mechanical Data Sheet for HOP-ABS-00002
24590-HLW-MKD-HOP-00017, Rev 6	Mechanical Data Sheet for HOP-ABS-00003
24590-HLW-MKD-HOP-00016, Rev 13	Mechanical Data Sheet for HOP-SCB-00001/2
24590-HLW-MKD-HOP-00019, Rev. 10	Mechanical Data Sheet for HOP-SKID-00005/7
24590-HLW-MK-HOP-P0001001, Rev 0	Equipment Assembly Drawing for HOP-SCB-00001/2 Sheet 1 of 4
24590-HLW-MK-HOP-P0001002, Rev 0	Equipment Assembly Drawing for HOP-SCB-00001/2 Sheet 2 of 4
24590-HLW-MK-HOP-P0001003, Rev 0	Equipment Assembly Drawing for HOP-SCB-00001/2 Sheet 3 of 4
24590-HLW-MK-HOP-P0001004, Rev 0	Equipment Assembly Drawing for HOP-SCB-00001/2 Sheet 4 of 4
24590-HLW-MVD-HDH-00003, Rev 5	Mechanical Data Sheet for HDH-VSL-00003
24590-HLW-MVD-HDH-P0009, Rev 0	Mechanical Data Sheet for HDH-VSL-00001
24590-HLW-MVD-HDH-00006, Rev. 5	Mechanical Data Sheet for HLW Canister Decon Vessels 1 and 2 (HDH-VSL-00002 and HDH-VSL-00004
24590-HLW-MVD-HOP-00007, Rev 5	Mechanical Data Sheet for HOP-HEME-00001A/1B/2A/2B

24590-HLW-MVD-HOP-00015, Rev 3	Mechanical Data Sheet for HOP-ADBR-00001A/B
24590-HLW-MVD-HOP-00016, Rev 3	Mechanical Data Sheet for HOP-ADBR-00002A/B
24590-HLW–MVD-HOP-P0001, Rev 2	Mechanical Data Sheet for HOP-VSL-00903
24590-HLW–MVD-HOP-P0012, Rev 1	Mechanical Data Sheet for HOP-VSL-00904
24590-HLW-MVD-RLD-00005, Rev 9	Mechanical Data Sheet for RLD-VSL-00007
24590-HLW-MVD-RLD-00007, Rev 7	Mechanical Data Sheet for RLD-VSL-00008
24590-HLW-MVD-RLD-00008, Rev 4	Mechanical Data Sheet for RLD-VSL-00002
24590-HLW-MV-HDH-00003, Rev. 1	Equipment Assembly Drawing for HDH-VSL-00003
24590-HLW-MV-RLD-00025001, Rev 0	Equipment Assembly Acidic Waste Vessel RLD-VSL-00007
24590-HLW-MV-RLD-00025002, Rev 0	Equipment Assembly Acidic Waste Vessel RLD-VSL-00007 Sections and Details
24590-HLW-MV-RLD-00025003, Rev 0	Equipment Assembly Acidic Waste Vessel RLD-VSL-00007 Sections and Details
24590-HLW-MV-RLD-00025004, Rev 0	Equipment Assembly Acidic Waste Vessel RLD-VSL-00007 Sections and Details
24590-HLW-MV-HDH-00010001, Rev 1	Equipment Assembly Drawing for HDH-VSL-00002, Sheet 1 of 3
24590-HLW-MV-HDH-00010002, Rev 1	Equipment Assembly Drawing for HDH-VSL-00002, Sheet 2 of 3
24590- HLW-MV-HDH-00010003, Rev 1	Equipment Assembly Drawing for HDH-VSL-00002, Sheet 3 of 3
24590-HLW-MV-HDH-00011001, Rev 1	Equipment Assembly Drawing for HDH-VSL-00004, Sheet 1 of 3

24590-HLW-MV-HDH-00011002, Rev 1	Equipment Assembly Drawing for HDH-VSL-00004, Sheet 2 of 3
24590- HLW-MV-HDH-00011003, Rev 1	Equipment Assembly Drawing for HDH-VSL-00004, Sheet 3 of 3
24590-HLW–MV-HOP-P0001, Rev 2	Equipment Assembly Drawing for HOP-VSL-00903
24590-HLW-MV-HOP-P0002001, Rev 0	Equipment Assembly Drawing for HOP-HEME-00001A/1B Sheet 1 of 3
24590-HLW-MV-HOP-P0002002, Rev 0	Equipment Assembly Drawing for HOP-HEME-00001A/1B Sheet 2 of 3
24590-HLW-MV-HOP-P0002003, Rev 0	Equipment Assembly Drawing for HOP-HEME-00001A/1B Sheet 3 of 3
24590-HLW–MV-HOP-P0003, Rev 2	Equipment Assembly Drawing for HOP-VSL-00904
24590-HLW-MV-RLD-00002, Rev 2	Equipment Assembly Drawing for RLD-VSL-00002
24590-HLW-MV-RLD-P0003, Rev 0	Equipment Assembly Drawing for RLD-VSL-00007
24590-HLW-MV-RLD-00004, Rev 1	Equipment Assembly Plant Wash & Drains Vessel RLD-VSL-00008
24590-HLW-MV-RLD-00019, Rev 0	RLD-VSL-00008 Lower Seismic Guide/Support 0' – 6" Above Tangent Line of Bottom Head
24590-HLW-MV-RLD-00020, Rev 0	RLD-VSL-00008 Lower Side Wall Mounted Seismic Guide/Supports 0' – 6" Above Tangent Line of Bottom Head
24590-HLW-MV-RLD-00021, Rev 0	RLD-VSL-00008 Upper Seismic Guide/Support 9' – 3" Above Tangent Line of Bottom Head
24590-HLW-MV-RLD-00022, Rev 0	RLD-VSL-00008 Upper Side Wall Mounted Seismic Guide/Supports, 7' – 8" Above Tangent Line of Bottom Head
24590-HLW-MV-RLD-00024, Rev 0	RLD-VSL-00008 Mid-Span Seismic Guide Support 4' – 10" Above Tangent Line of Bottom Head
RESERVED	RESERVED

Source documents (which do not include a "P" in the last set of numbers, e.g. "-P0001," or "-TP001") should be used in conjunction with any document change notices issued against them.

We are currently transitioning from permit documents (which do include a "P" in the last set of numbers) to source documents. At the end of the transition period, permit submittals will contain source documents and will be incorporated into the permit as described in Ecology Publication # 07-05-006 (www.ecy.wa.gov/biblio/nwp.html).

This page intentionally left blank.

ISSUED BY
RPP-WTP PDC

INIT DATE

Please note that source, special nuclear, and byproduct materials, as defined in the Atomic Energy Act of 1954 (AEA) are regulated at the U. S. Department of Energy (DOE) facilities exclusively by DOE acting pursuant to its AEA authority. DOE asserts that pursuant to AEA, it has sole and exclusive responsibility and authority to regulate source, special nuclear, and byproduct materials at DOE-owned nuclear facilities. Information contained herein on radionuclides is provided for process description purposes only.

R11045787

RPP-WTP	DATA SHEET HIGH LEVEL WASTE MELTER 1	Data Sheet Number:	24590-HLW-M0D-HMP-00001
		Plant Item Number:	24590-HLW-ME-HMP-MLTR-00001
		Page:	1 of 1

System: HMP
Project: RPP-WTP
Project No: 24590
Site: Hanford
Function: Convert blended HLW slurry and glass formers into glass and deliver the glass to canisters
Quality Level: Q (see note 1)
Seismic Class: SCII
Environmental Qualification: ~~N/A~~ Yes - See Note 3
KFC 3/5/09

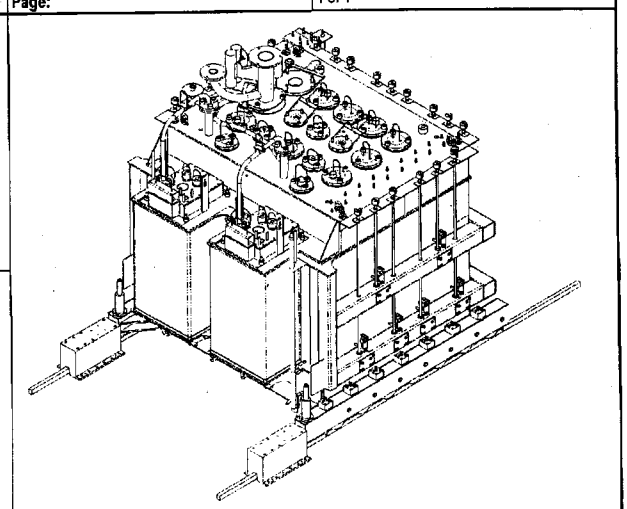

Reference Documents:
1. 24590-HLW-3PS-AE00-T0001 Rev 4, Engineering Specification for High Level Waste Melters
2. 24590-101-TSA-W000-0010-407-582, HLW Refractory Validation Model, CAL-WTP-21112 Rev 0
3. 24590-QL-HC4-W000-00011-04-00005 Rev 00A, HLW Melter Center of Gravity Calculation (CAL-WTP-2100 Rev 3)
4. 24590-HLW-RPT-E-03-001 Rev 0, Electrode Power Requirements for HLW Melter
5. 24590-HLW-RPT-E-03-002 Rev 1, Electrical Requirements for Startup and Discharge Heaters
6. 24590-HLW-RPT-PE-07-001 Rev 0, High Level Waste Vitrification Plant Capacity Enhancement Study
7. 24590-HLW-M6C-HMP-00017 Rev 0, Temperature Rise and Final Temperature for HLW melter Cooling Water Loops

MECHANICAL

	Units			Units	
Melter Design Life	years	5	Melter Base, Rail Center to Center Distance	inches	148.00
Maximum Outside Dimensions (L x W x H)	inches	172 x 164 x 146	Maximum Assembled Weight, Empty	pounds	174,000
Plant Elevation, top of rail	ft-in	2 - 11	Maximum Assembled Weight with Glass	pounds	198,000

PROCESS

	Units			Units	
Design Glass Production	MT/D	3.75	Thermal load to cave from melter (idle and feed modes)	kW	35 max
Glass Tank Volume	ft^3	144	Melter Cooling Water	GPM	45 (nominal)
Glass Tank Surface Dimensions (L x W)	inches	60 x 96	Melter Cooling Water	Delta T (°F)	25 (nominal)
Max Operating Glass Depth	inches	44			
Design Glass Operating Temperature (max)	°F	2200			

ELECTRICAL

	Units	
Electrode Power	kW	800 max
Start-up Heater Power	kW	183 total max
Discharge Chamber Heater Power	kW	56 max per chamber

CONTROLS AND INSTRUMENTATION

Engineering Specification for Melter Systems C&I Work Specification, 24590-WTP-3PS-J000-T0001, Rev 1
Software Functional Specification for HLW Melter Process (HMP) System, 24590-HLW-3PS-HMP-T0001, Rev A

MAJOR COMPONENTS - Materials

Melter Shell and Base	A500, A36, 304L, C276	Cooling Panels	C276, 316L
Melter and Discharge Chamber Lids	304L, Alloy 690	Discharge Chamber Trough and Dam	Alloy 690
Electrodes	Alloy 690	Film Cooler	Alloy 690

REPLACEABLE COMPONENTS

	Quantity	Design Life (months)		Quantity	Design Life (months)
Feed Nozzle	2	60	Discharge Chamber Lid Assembly	2	30
Film Cooler	1	60	Discharge Chamber Vent Line	2	60
Air Lift Lance	2	60	Discharge Chamber Vent Insert	2	60
Level Probe	1	12	Discharge Chamber Thermowell	4	60
Plenum/Glass Pool Thermocouple	2	4	Discharge Chamber Thermocouple	4	12
Plenum/Glass Pool Thermowell	2	9	Electrode Thermocouple Assembly	3	12
Refractory Thermocouple Assembly	2	12	Plenum View Camera	1	12
Bubblers	7	2	Start-up Heaters	5	3

NOTES
1. Replaceable components with the exception of the film cooler are CM.
2. The contents of this document are Dangerous Waste Permit Affecting.
3. See Equipment Qualification Data Sheet.
KFC 3/5/09

Date	Rev	Reason for Revision	Originator	Checker	E&NS	Reviewer	Approver
3/9/09	2	Added "Environmental Qualification" and "Quality Level/Seismic Classification" blocks, re-formatted data sheet, corrected process data Implemented Melter's scope of work for the HLW Capacity Enhancement Trend (BCP-24590-06-02470) and contract modification M083 (4/2007), incorporated 24590-WTP-M6N-M80T-00005	K. Clarke	L.Donovan	M. Hall	~~J. Julyk~~ KFC 3/5/09 Aaron Brunner	~~Janet Reth~~ KFC 3/5/09 John Julyk
10/13/2004	1	Design Evolution	M. Hall	L. Curtis	n/a	n/a	Will Eaton
10/9/2002	0	Issued for Design	M. Hall	M. Seed	n/a	n/a	Will Eaton

Please note that source, special nuclear, and byproduct materials, as defined in the Atomic Energy Act of 1954 (AEA) are regulated at the U. S. Department of Energy (DOE) facilities exclusively by DOE acting pursuant to its AEA authority. DOE asserts that pursuant to AEA, it has sole and exclusive responsibility and authority to regulate source, special nuclear, and byproduct materials at DOE-owned nuclear facilities. Information contained herein on radionuclides is provided for process description purposes only.

ISSUED BY
RPP-WTP PDC
INIT DATE

R11045799

RPP-WTP	DATA SHEET HIGH LEVEL WASTE MELTER 2	Data Sheet Number:	24590-HLW-M0D-HMP-00002
		Plant item Number:	24590-HLW-ME-HMP-MLTR-00002
		Page:	1 of 1

System: HMP
Project: RPP-WTP
Project No: 24590
Site: Hanford
Function: Convert blended HLW slurry and glass formers into glass and deliver the glass to canisters
Quality Level: Q (see note 1)
Seismic Class: SCII
Environmental Qualification: ~~N/A~~ Yes - See Note 3
KFC 3/5/09

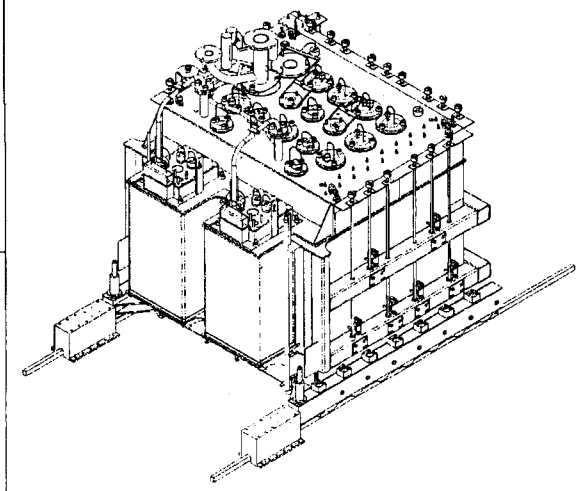

Reference Documents:
1. 24590-HLW-3PS-AE00-T0001 Rev 4, Engineering Specification for High Level Waste Melters
2. 24590-101-TSA-W000-0010-407-582, HLW Refractory Validation Model, CAL-WTP-21112 Rev 0
3. 24590-QL-HC4-W000-00011-04-00005 Rev 00A, HLW Melter Center of Gravity Calculation (CAL-WTP-2100 Rev 3)
4. 24590-HLW-RPT-E-03-001 Rev 0, Electrode Power Requirements for HLW Melter
5. 24590-HLW-RPT-E-03-002 Rev 1, Electrical Requirements for Startup and Discharge Heaters
6. 24590-HLW-RPT-PE-07-001 Rev 0, High Level Waste Vitrification Plant Capacity Enhancement Study
7. 24590-HLW-M6C-HMP-00017 Rev 0, Temperature Rise and Final Temperature for HLW melter Cooling Water Loops

MECHANICAL

	Units			Units	
Melter Design Life	years	5	Melter Base, Rail Center to Center Distance	inches	148.00
Maximum Outside Dimensions (L x W x H)	inches	172 x 164 x 146	Maximum Assembled Weight, Empty	pounds	174,000
Plant Elevation, top of rail	ft-in	2 - 11	Maximum Assembled Weight with Glass	pounds	198,000

PROCESS

	Units			Units	
Design Glass Production	MT/D	3.75	Thermal load to cave from melter (idle and feed modes)	kW	35 max
Glass Tank Volume	ft^3	144	Melter Cooling Water	GPM	45 (nominal)
Glass Tank Surface Dimensions (L x W)	inches	60 x 96	Melter Cooling Water	Delta T (°F)	25 (nominal)
Max Operating Glass Depth	inches	44			
Design Glass Operating Temperature (max)	°F	2200			

ELECTRICAL

	Units	
Electrode Power	kW	800 max
Start-up Heater Power	kW	183 total max
Discharge Chamber Heater Power	kW	56 max per chamber

CONTROLS AND INSTRUMENTATION

Engineering Specification for Melter Systems C&I Work Specification, 24590-WTP-3PS-J000-T0001, Rev 1
Software Functional Specification for HLW Melter Process (HMP) System, 24590-HLW-3PS-HMP-T0001, Rev A

MAJOR COMPONENTS - Materials

Melter Shell and Base	A500, A36, 304L, C276	Cooling Panels	C276, 316L
Melter and Discharge Chamber Lids	304L, Alloy 690	Discharge Chamber Trough and Dam	Alloy 690
Electrodes	Alloy 690	Film Cooler	Alloy 690

REPLACEABLE COMPONENTS

	Quantity	Design Life (months)		Quantity	Design Life (months)
Feed Nozzle	2	60	Discharge Chamber Lid Assembly	2	30
Film Cooler	1	60	Discharge Chamber Vent Line	2	60
Air Lift Lance	2	60	Discharge Chamber Vent Insert	2	60
Level Probe	1	12	Discharge Chamber Thermowell	4	60
Plenum/Glass Pool Thermocouple	2	4	Discharge Chamber Thermocouple	4	12
Plenum/Glass Pool Thermowell	2	9	Electrode Thermocouple Assembly	3	12
Refractory Thermocouple Assembly	2	12	Plenum View Camera	1	12
Bubblers	7	2	Start-up Heaters	5	3

NOTES
1. Replaceable components with the exception of the film cooler are CM.
2. The contents of this document are Dangerous Waste Permit Affecting.
3. See Equipment Qualification Data Sheet.
KFC 3/5/09

Date	Rev	Reason for Revision	Originator	Checker	E&NS	Reviewer	Approver
3/9/09	2	Added "Environmental Qualification" and "Quality Level/Seismic Classification" blocks, re-formatted data sheet, corrected process data Implemented Melter's scope of work for the HLW Capacity Enhancement Trend (BCP-24590-06-02470) and contract modification M083 (4/2007), incorporated 24590-WTP-MGN-MB0T-00005	K. Clarke	L Donovan	Mikulp	~~J. Julyk~~ KFC 3/5/09 Aaron Bronner	~~Janet Roth~~ KFC JOHN JULYK 3/5/09
10/13/2004	1	Design Evolution	M. Hall	L. Curtis	n/a	n/a	Will Eaton
10/9/2002	0	Issued for Design	M. Hall	M. Seed	n/a	n/a	Will Eaton

ISSUED BY
RPP-WTP PDC

R11204284

CENTRIFUGAL MULTI-STAGE BLOWER
Data Sheet:
24590-HLW-MAD-HOP-00018

MR No. 24590-QL-MRA-MACS-00004

Plant Item No. 24590-HLW-MA-HOP-FAN-00001A/B/C 24590-HLW-MA-HOP-FAN-00009A/B/C

Rev. No. 9

1	Project:	RPP-WTP		Bldg./Room #	HLW / H-B001C	Manufacturer	*
2	Project No:	24590		Supporting Calculations	24590-HLW-M4C-HOP-00011	Manufacturer Part No	*
3	Site:	DOE Hanford					
4	Safety Class	SS		Supporting Drawings	24590-HLW-M6-HOP-00003 24590-HLW-M6-HOP-20003	Quantity Required	6
5	Seismic Category (Note 26)	SC-III					
6	SSC Characteristic	Air Permit		System Description	24590-HLW-3YD-HOP-00001	Quality Level	Q
7	System No.	HOP					
8	Description: HLW Booster Extraction Fans - Note 15						
9	DESIGN CONDITIONS						
10	Indoor Design Temperature	Minimum	59 °F	Maximum	83 °F	Relative Humidity	10% (min)
11	Contamination Classification Area	C2				Elevation	661 ft above MSL
12	Environmental Qualification	(See Attachment 2)		Hanford Standard Atmospheric Pressure		398	inches WC
13	DESIGN OPERATING CONDITIONS						
14	Design Blower Capacity (Note 23)	1600	ACFM	Inlet Air Temperature at Design Conditions		160	°F
15	Design Static Pressure (Note 12)	85	inches WC	Inlet Air Density at Design Conditions		0.0471	lbs/ft³
16	Minimum Blower Efficiency at Design Conditions	60	%	Inlet Pressure at Design Conditions		11.3	psia
17	Blower Efficiency at Design Conditions	*	%	Power at Design Conditions		*	BHP
18	Blower Speed at Design Conditions (Note 24)	*	RPM	Equipment Design Temperature (Note 21)		*	°F
19	Max. Discharge Temp. at Design conditions	*	°F	Critical Speeds (Note 20)	*		RPM
20	CONSTRUCTION						
21	Blower Manufacturer	*		Blower Model Number		*	
22	AMCA Drive Arrangement	7		AMCA Inlet Box Position		360	
23	AMCA Motor Position	Direct Drive		AMCA Discharge		CW 360	
24	AMCA Rotation (Note 9)	CW		Blower Scroll Type		*	
25	Blower Motor Operating Weight	*	pounds	Assembly Weight (Mtr+ Blower + Base)		*	pounds
26	Overall Skid Dimensions (Note 5)	Width	*	Height	*	Length	*
27	Blower Bearing Type	Roller- Grease Lubricated		Blower Bearing Mfg.	*	Bearing Part #	*
28	Lubricant Mfg. *	Part #	*	Bearing Special Features (Notes 18 & 19)		L10 Life 100 khr	
29	Mechanical Coupling Mfg. *	Part #	*				
30	BLOWER WHEEL						
31	Blower Wheel Type (Note 4)	*		Blower Shaft Diameter		*	
32	Design Wheel Diameter	*		Actual Wheel Diameter		*	
33	Design Wheel Width	*		Actual Wheel Width		*	
34	Design Blower RPM	*		Actual Blower RPM		*	
35	Design Brake Horsepower	*		Actual Brake Horsepower		*	
36	BLOWER MATERIALS						
37	Housing (Note 14 & 27)	Cast Ductile Iron	Grade *	Blower Wheel	Stainless Steel	Grade	*
38		N/A	Grade N/A	Mounting Frame	Carbon Steel	Grade	*
39	Shaft	Stainless Steel	Grade *	Inlet Box / Transition Piece	Cast Ductile Iron	Grade	*
40	Inlet Vane	N/A	Grade N/A	Discharge Damper	N/A	Grade	N/A
41	Inlet Screen	N/A	Grade N/A	OSHA Compatible Safety Guards	Carbon Steel	Grade	*
42	BLOWER ACCESSORIES						
43	Flanged Inlet	Yes		Flanged Inlet Dimensions		*	
44	Flanged Discharge	Yes		Flanged Discharge Dimensions		*	
45	Flanged Discharge Evase	No		Flanged Discharge Evase Dimensions		N/A	
46	Split Housing	No		Split Housing Type		N/A	
47	Inlet Box	No		Inlet Box Type		N/A	
48	Inlet Damper	No		Inlet Damper Type		N/A	
49	Inlet Transition Piece	No		Inlet Transition Piece Flange Dimensions		N/A	
50	Inspection Door (Note 7)	Yes		Inspection Door Size (Note 7)		1" NPT	
51	Drain Connection (Note 7)	Yes		Drain Connection Size (Note 7)		1" NPT	
52	Shaft Seals	Yes		Seal Type		Double Carbon Ring w/ purge	
53	Isolation Base	No		Isolation Base Type		N/A	
54				Isolation Base Manufacturer		N/A	
55	Isolation Springs	No		Isolation Springs Mfr and Model No		N/A	
56				Isolation Springs Minimum Diameter		N/A	
57				Isolation Springs Deflection		N/A	
58				Isolation Springs Restraint Features		N/A	
59	Flexible Connection Inlet (Note 6 & 25)	Yes		Insulation (Note 22)	Yes		
60	Flexible Connection Inlet Type	Braided SSTL flexible hose					
61	Flexible Inlet Connection Material	316L SS		braid constructed with 304 SST			
62	Flexible Connection Manufacturer and Model No	*					
63	Flexible Connection Outlet (Note 6 & 25)	Yes					
64	Flexible Connection Outlet Type	Braided SSTL flexible hose					
65	Flexible Outlet Connection Material	316L SS		braid constructed with 304 SST			
66	Flexible Connection Manufacturer and Model No	*					

Please note that source, special nuclear, and byproduct materials, as defined in the Atomic Energy Act of 1954 (AEA) are regulated at the U. S. Department of Energy (DOE) facilities exclusively by DOE acting pursuant to its AEA authority. DOE asserts that pursuant to AEA, it has sole and exclusive responsibility and authority to regulate source, special nuclear, and byproduct materials at DOE-owned nuclear facilities. Information contained herein on radionuclides is provided for process description purposes only.

CENTRIFUGAL MULTI-STAGE BLOWER
Data Sheet:
24590-HLW-MAD-HOP-00018

MR No.
24590-QL-MRA-MACS-00004

Plant Item No.
24590-HLW-MA-HOP-FAN-00001A/B/C
24590-HLW-MA-HOP-FAN-00009A/B/C

Rev. No.
9

1	Project:	RPP-WTP	Bldg./Room #	HLW / H-B001C	Manufacturer	*
2	Project No:	24590	Supporting Calculations	24590-HLW-M4C-HOP-00011	Manufacturer Part No	*
3	Site:	DOE Hanford				
4	Safety Class	SS	Supporting Drawings	24590-HLW-M6-HOP-00003 24590-HLW-M6-HOP-20003	Quantity Required	6
5	Seismic Category (Note 26)	SC-III				
6	SSC Characteristic	Air Permit	System Description	24590-HLW-3YD-HOP-00001	Quality Level	Q
7	System No.	HOP				
8	Description: HLW Booster Extraction Fans - Note 15					
9	Inlet Screen	No				
10	Inlet Screen Features	N/A				
11	Blower Pedestal	Yes				
12	Blower Pedestal Description	Common mounting base for Blower, motor, and bearings				
13	Insulation Studs	No				
14	Silencer	No				

15 **MOTOR AND DRIVE REQUIREMENTS**

16 Driven Equipment / Motor / ASD relationship is as follows::

	Blower Tag Number	Motor Tag Number	ASD Tag Number
17			
18	HOP-FAN-00001A	HOP-MTR-00005A	HOP-ASD-00001A
19	HOP-FAN-00001B	HOP-MTR-00005B	HOP-ASD-00001B
20	HOP-FAN-00001C	HOP-MTR-00005C	HOP-ASD-00001C
21	HOP-FAN-00009A	HOP-MTR-00006A	HOP-ASD-00003A
22	HOP-FAN-00009B	HOP-MTR-00006B	HOP-ASD-00003B
23	HOP-FAN-00009C	HOP-MTR-00006C	HOP-ASD-00003C

24	Adjustable Speed Drive	Yes	Provided by others.
25	Special Drive Features	1. ASD to operate motor from 30% to 100% of required RPM within a 30 second time frame (max)	
26		2. Provides ASD programming for motor RPM to pass through any critical speed dead bands to avoid excessive vibration.	

27 **GAS COMPOSITION**

	Component	kg/hr	wt%
28			
29	N_2	2138	6.73E+01
30	O_2	655.2	2.06E+01
31	H_2O	324.6	1.02E+01
32	Ar	36.5	1.15E+00
33	CO_2	20.5	6.46E-01
34	NO	5.79E-01	1.82E-02
35	Hg	1.25E-01	3.94E-03
36	NO_2	9.66E-02	3.04E-03
37	CO	1.70E-02	5.35E-04
38	N_2O	1.25E-02	3.94E-04
39	SO_2	6.70E-03	2.11E-04
40	HCl	6.58E-03	2.07E-04
41	NH_3	4.37E-03	1.38E-04
42	HF	3.99E-03	1.26E-04
43	H_2	3.53E-03	1.11E-04
44	VOC	2.76E-03	8.69E-05
45	I_2	1.11E-03	3.50E-05
46	Particulate	4.34E-11	1.37E-12
55	Total	3175.66	100

56

57 **Source: 24590-HLW-M4E-HOP-00001 pages 14-16 row 35**

58

59 **Notes**

60 1) * Denotes data to be provided / verified by vendor.
61 2) N/A denotes "Not Applicable".
62 3) TBD denotes "To Be Determined".
63 4) The impeller shall be anti-surge design developing continuously rising SP from free delivery thru shutoff.
64 5) Bounding dimensions not to exceed 68" W x 60" H x 105" L (Blower, Motor and Baseplate).
65 6) Connections shall match Buyer's supply pipe: 10 inch diameter, 316L SS, Schedule 40S, w/ 150 lb, RF Flange.
66 7) See Specification 24590-WTP-3PS-MACS-T0005 Rev. 0, Section 3.8.2 for requirements.
67 8) Deleted
68 9) Rotation is listed as viewed from drive side.
69 10) Deleted
70 11) Deleted
71 12) The External Static Pressure at design operating condition includes 2 in. WC maximum drop through the inlet box.
72 The more conservative value of 85 inches WC was used rather than the minimum value 81 inches WC in 24590-HLW-M4C-HOP-00011 Rev. 1.
73 13) Deleted
74 14) Blower housing design pressure shall be -6 psi (-166 in WC).
75 15) Contents of this document are Dangerous Waste Permit affecting.
76 16) Deleted
77 17) Deleted
78 18) Provide each blower bearing with RTDs & 2 - directional (X and Y) vibration sensors for remote indication
79 19) Radial type roller bearings shall have labyrinth type seal.

CENTRIFUGAL MULTI-STAGE BLOWER
Data Sheet:
24590-HLW-MAD-HOP-00018

			MR No.	24590-QL-MRA-MACS-00004		
			Plant Item No.	24590-HLW-MA-HOP-FAN-00001A/B/C 24590-HLW-MA-HOP-FAN-00009A/B/C		Rev. No. 9
1	Project:	RPP-WTP	Bldg./Room #	HLW / H-B001C	Manufacturer	*
2	Project No:	24590	Supporting Calculations	24590-HLW-M4C-HOP-00011	Manufacturer Part No	*
3	Site:	DOE Hanford				
4	Safety Class	SS	Supporting Drawings	24590-HLW-M6-HOP-00003 24590-HLW-M6-HOP-20003	Quantity Required	6
5	Seismic Category (Note 26)	SC-III				
6	SSC Characteristic	Air Permit	System Description	24590-HLW-3YD-HOP-00001	Quality Level	Q
7	System No.	HOP				

8 Description: **HLW Booster Extraction Fans - Note 15**

9 20) Critical speeds within operating ranges to be blocked in ASD programming

10 21) This temperature is required for material selection and corrosion analysis. The value is the average temperature of the inlet temperature in line 14 of page 1 and the Discharge Temperature on Line 19 of page 1.

11 22) Blowers shall be insulated (except bearing housings) by Buyer and heat traced to maintain casing metal temperature above the acid dewpoint of the process gas.

12 23) Design blower capacity is the predicted capacity from calculation, 24590-HLW-M4C-HOP-00011 Rev 1 page A-10 cell Y-32 divided by 2 (two blower running at capacity) plus a 30 % contingency. 2461 ACFM/2*1.3 = 1600 ACFM

13 24) Shaft speed shall not exceed 3600 rpm unless approved by Buyer. Tip speed of rotating assembly shall not exceed 530 fps unless approved by Buyer.

14 25) See Specification 24590-WTP-3PS-MACS-T0005 rev. 0, section 3.8.1.6 for flexible connection requirements.

15 26) See Specification 24590-WTP-3PS-MACS-T0005 rev. 0, section 6.3 for seismic testing requirements.

16 27) Housing will be fabricated from ductile iron or high chromium cast iron (or better).

17

18

19 SAFETY SCREENING X Yes ___No

20 **Safety Screening / Evaluation Required? If yes per 24590-WTP-GPP-SREG-002, E&NS Signature required below.**

21

22

23

24

25

26

27

28

29

30

31

32

33

34

9	**Revised to incorporate new specification 24590-WTP-3PS-MACS-T0005, Rev. 0 to remove ASME AG-1 requirements. Other minor clarifications are as noted with revision bars. This data sheet is issued for quote.**	M.O.	M. Summers	C. Meng	AM	[illegible]	R E Stevens	5/12/10
8	Reissued for Purchase. Minor Change (Inclusion of pages 5 & 6 which were omitted in Rev. 7).	M. O'Neill	M. Summers	C. Meng	D.Lamberd	S. Kretzschmar	R. E. Stevens	7/22/2009
	Reissued for purchase. Minor revisions to format for clarity. Revised the Material Requisition number from 24590-QL-MRA-MACS-00002 to the new 24590-QL-MRA-MACS-00004. Corrected tag numbers and updated revision number. Changed title to Centrifugal Multi-stage Blowers. Removed reference to cancelled calculation 25490-HLW-MAC-HOP-00001. Added field for SSC Characteristic.							

CENTRIFUGAL MULTI-STAGE BLOWER
Data Sheet:
24590-HLW-MAD-HOP-00018

MR No. 24590-QL-MRA-MACS-00004

Plant Item No. 24590-HLW-MA-HOP-FAN-00001A/B/C, 24590-HLW-MA-HOP-FAN-00009A/B/C

Rev. No. 9

1	Project:	RPP-WTP	Bldg./Room #	HLW / H-B001C	Manufacturer	*
2	Project No:	24590	Supporting Calculations	24590-HLW-M4C-HOP-00011	Manufacturer Part No	*
3	Site:	DOE Hanford				
4	Safety Class	SS	Supporting Drawings	24590-HLW-M6-HOP-00003 24590-HLW-M6-HOP-20003	Quantity Required	6
5	Seismic Category (Note 26)	SC-III				
6	SSC Characteristic	Air Permit	System Description	24590-HLW-3YD-HOP-00001	Quality Level	Q
7	System No.	HOP				
8	Description: HLW Booster Extraction Fans - Note 15					

Rev	Reason for Revision	System Engineer	Responsible Engineer	E&NS	Checker	Reviewer	Approver	Date
7	Added reference to Note 15. Updated design inlet conditions, capacity, and external static pressure to align with 24590-HLW-M4C-HOP-00011 Rev.1 ECCN 24590-HLW-M4E-HOP-00001. Added field for Inlet Pressure at Design Conditions in place of Total Static Pressure (Max) field. Added field for required minimum efficiency at design conditions per CCN 199933. Retitled field for Maximum Discharge Temperature and deleted Note 16. Retitled field from Natural Frequencies to Critical Speeds for clarity. Removed normal and minimum design conditions for clarity. Revised AMCA Drive Arrangement from 8 to 7 to align with industry offering. Specified inlet box position to 360. Relocated Blower Motor Operating Weight and Assembly Weight fields and ad Specified Roller grease lubricated bearings, added fields for Mfg. and Part # for bearing, lubricant, and couple+B121r. Changed coupler to vendor specified. Revised specified materials for housing, shaft, blower wheel, mounting frame, and inlet box/transistion piece to align with industry offering. Material grades to be specified by vendor. Revised inspection door size and drain from vendor specified to 1"NPT per specification, 24590-WTP-3PS-MACS-T0004 Rev. 5. Revised Split Housing, Inlet Box, & Inlet Transition Piece fields to No. Specified seal type as Double Carbon Ring w/ purge. Added Note 1 to Special Drive Features field. Added Gas Composition and Acid Dew Point. Deleted Notes 8, 10, 13, 16, 17, and revised Notes 7,12, 14, 18, 19, 20, 21, & 22 Added Notes 23, 24, 25, and 26 Change Nuclear Radiation field on motor data sheet to agree with EQD. Revised Design Life on EQD from 5 years to 40 years. Added Note in Additional DBE Information field to clarify equipment is not expected to operate submerged.	M. O'Neill	S. E. Anderson	C. Meng	A. Moretta	S. Kretzschmar	R. E. Stevens	6/11/2009
6	Reissued for purchase. Addition of insulation requirement. Incorporation of Vendor exceptions and clarifications.	M. O'Neill	S. E. Anderson	C. Meng	C. Knauss	S. Kretzschmar	R. E. Stevens	9/29/2008
5	Re-issued with updated design conditions, reformatted mechanical datasheet for clarity, attached motor and EQ datasheets. This document supersedes 24590-HLW-MUD-HOP-00001	M. O'Neill	S. E. Anderson	C. Meng	C. Knauss	S. Kretzschmar	R. E. Stevens	3/26/2008
4	Re-issued for purchase, added Note 14, and updated design conditions.	Y. Nurdogan	G. Dunn	C. Meng	D. Reinemann	J. Rouse	J. Julyk	3/21/2007
3	Re-issued for purchase	J.Rewari	N/A	N/A	R. Tometczak	N/A	E. Isern	3/7/2005
2	Re-issued for purchase	J. Rewari	N/A	N/A	R. Tometczak	N/A	E. Isern	12/13/2004
1	Updated design conditions and re-issued for purchase, superseded 24590-HLW-MAD-HOP-00019, 00020, 00035, 00036, and 00037.	J. Rewari	N/A	N/A	J. Medina	N/A	E. Isern	8/12/2004
0	Issued for purchase	D. Green	N/A	N/A	M. Ordona	N/A	H. Jalali	11/17/2003

ATTACHMENT 1 24590-HLW-MAD-HOP-00018 ELECTRICAL DATA SHEET LOW VOLTAGE INDUCTION MOTOR	MR No. 24590-QL-MRA-MACS-00004	
	Plant Item No. 24590-HLW-EM-HOP-MTR-00005A/B/C 24590-HLW-EM-HOP-MTR-00006A/B/C	Rev No. 9

Motor Tag No.: 24590-HLW-EM-HOP-MTR-00005A/B/C and 24590-HLW-EM-HOP-MTR-00006A/B/C

Driven Equipment No.: 24590-HLW-MA-HOP-FAN-00001A/B/C and 24590-HLW-MA-HOP-FAN-00009A/B/C

Service: HLW Booster Extraction Fans

Refer to "Primary Specification": 24590-WTP-3PS-MACS-T0005

LINE NO.	DESCRIPTION	USER SPECIFIED	SUPPLIER FURNISHED	UNITS
	BASIC DATA:			
1	RATED HORSEPOWER	-	*	HP
2	SYNCHRONOUS SPEED	-	*	RPM
3	VOLTAGE	460	*	V
4	PHASE	3	*	-
5	FREQUENCY	60	*	Hz
6	INSULATION CLASS	F	*	-
7	TEMPERATURE RISE ABOVE 40°C AMBIENT	80	*	deg. C
8	NEMA DESIGN TYPE (B, C, OTHER)	B	*	-
9	EFFICIENCY (STANDARD, PREMIUM)	PREMIUM	*	-
10	ENCLOSURE TYPE (TEFC - SEVERE DUTY PER IEEE Std. 841, TENV, WP1I)	TEFC IEEE Std. 841	*	-
11	SERVICE FACTOR	1.15	*	-
12	COUPLED DRIVE (DIRECT, BELT, GEAR)	Direct	*	-
13	BEARING (ANTI-FRICTION, SLEEVE)	Anti-Friction	*	-
14	BEARING SEAL (ONE END, BOTH ENDS)	Both Ends	*	-
15	SPACE HEATER (FOR MOTORS > 20 HP)	Yes	*	W
16	RTD FOR SLEEVE BEARING : 1 per bearing for Belt drive only	N/A	*	Ω
17	TERMINAL BOX LOCATION		*	-
18	WARRANTY (2 YEARS, 3 YEARS, 5 YEARS)	see Terms and condition	*	-
19	SHOP TESTS			
	- MFR STANDARD TEST (Yes / No)	Yes	*	
	- ROUTINE TEST (Yes / No)	Yes	*	
	- FULL TEST (Yes / No)	No	*	
20	UNUSUAL SERVICE CONDITIONS:	Inverter Duty		
21	FLAMMABLE OR EXPLOSIVE GASES	No	*	
22	COMBUSTIBLE, EXPLOSIVE, ABRASIVE OR CONDUCTIVE DUST	No	*	
23	WET OR DRY OPERATING CONDITIONS	Dry	*	
24	NUCLEAR RADIATION	0.5 mrad/hr.		
25	SPECIAL PAINTING REQUIREMENTS PER IEEE Std. 841	(Note 5)	*	
26	OTHER (SC,SS, APC, Non-ITS)	SS	*	
27	OTHER (SEISMIC CATEGORY I , II, III or IV)	SC-III	*	

ATTACHMENT 1 24590-HLW-MAD-HOP-00018 ELECTRICAL DATA SHEET LOW VOLTAGE INDUCTION MOTOR	MR No. 24590-QL-MRA-MACS-00004	
	Plant Item No. 24590-HLW-EM-HOP-MTR-00005A/B/C 24590-HLW-EM-HOP-MTR-00006A/B/C	Rev No. 9

Motor Tag No.: 24590-HLW-EM-HOP-MTR-00005A/B/C and 24590-HLW-EM-HOP-MTR-00006A/B/C

Driven Equipment No.: 24590-HLW-MA-HOP-FAN-00001A/B/C and 24590-HLW-MA-HOP-FAN-00009A/B/C

Service: HLW Booster Extraction Fans

Refer to "Primary Specification": 24590-WTP-3PS-MACS-T0005

LINE NO.	DESCRIPTION	USER SPECIFIED	SUPPLIER FURNISHED	UNITS
28	MANUFACTURER	-	*	-
29	NEMA FRAME	-	*	-
30	MODEL NUMBER	-	*	-
31	SERIAL NUMBER / MANUFACTURER DATE	-	*	-
32				
33	FULL LOAD CURRENT	-	*	A
34	FULL LOAD TORQUE	-	*	ft-lb
35	POWER FACTOR : - @ 50 % LOAD	-	*	%
	- @ 75 % LOAD	-	*	%
	- @ 100 % LOAD	-	*	%
36	EFFICIENCY : - @ 50% LOAD	-	*	%
	- @ 75% LOAD	-	*	%
	- @ 100% LOAD	-	*	%
37	LOCKED ROTOR CURRENT @ 100 % of RATED VOLTAGE	-	*	A
38	LOCKED ROTOR CURRENT @ 80% of RATED VOLTAGE	-	*	A
39	ALLOWABLE STALL TIME @ FULL VOLTAGE	-	*	SEC
40	ALLOWABLE STALL TIME @ 80% of VOLTAGE	-	*	SEC
41	LOSSES @ FULL LOAD	-	*	W
42	ROTOR WK2 @ MOTOR SHAFT SPEED (For > 250 hp only)	-	*	lb-ft²
43	STARTING POWER FACTOR (For > 75 hp only)	-	*	-
44	SUB TRANSIENT REACTANCE AND X/R (For > 250 hp only)	-	*	-
45	WEIGHT	-	*	lbs
46	ROTATION (CW, CCW, BI-DIR.) FACING DRIVEN EQUIPMENT	-	*	-
47	MEAN TIME BETWEEN FAILURE (MOTOR 100 HP AND ABOVE)		*	
48	STARTING METHOD (FULL/REDUCED VOLTAGE, ASD APPLICATION)	ASD		-
49				
50	RECOMMENDED BEARING LUBRICANT	-	*	

NOTES:

(1) DELETED

(2) Motor should be applied within its rating based on service factor of 1.0.

(3) Data Sheet Line no. from 35 to 47 are applicable for motor 100 HP and above.

(4) The fan and motor are subjected to the same environmental conditions.

(5) See specifcation 24590-WTP-3PS-MACS-T0005, Attachment B, for requirements.

EQUIPMENT QUALIFICATION DATASHEET (EQD)

Equipment Identification

Component Tag Number	24590-HLW-MA-HOP-FAN-00001A/B/C 24590-HLW-MA-HOP-FAN-00009A/B/C 24590-HLW-EM-HOP-MTR-00005A/B/C 24590-HLW-EM-HOP-MTR-00006A/B/C	Safety Classification	☐ SC ☒ SS ☐ APC ☐ SDC ☐ SDS ☐ RRC
Manufacturer / Supplier	Note 4		
Requisition Number	24590-QL-MRA-MACS-00004		
Model	Note 4	Seismic Category	☐ SC-I ☐ SC-II ☒ SC-III ☐ SC-IV
Description (Include descriptive text [e.g., location, elevation])	HLW Booster Extraction Fans.		
Safety Function(s)	Provides negative pressure on HLW melters and primary off-gas system. In conjunction with Stack Extraction Fans, provides motive force for off-gas flow through all off-gas equipment up to and including discharge at stack.		

Seismic Safety Function	☒ Yes ☐ No	Room Number(s): H-B001C	
Maintenance Accessible	☒ Yes ☐ No	Method of Maintenance Access:	☐ Remote ☒ Hands On ☐ None
Seismic Operability Requirements:	☒ During Seismic Event	☒ After Seismic Event	
ITS Equipment Type:	☐ Passive Mechanical	☒ Active Mechanical	☒ Electrical

Equipment Environmental Qualification (EEQ)

Environment ☒ Mild ☐ Harsh Contamination Class: C2 Radiation Class: R2	Hi Rad Service ☐ Yes ☒ No	Design Life (yrs) ☒ 40 ☐ Other ____ with required maintenance

Parameter Type/Units	Parameter Value	Time Duration (number)	Time Units	WTP Document Number (BUYER)	Submittal Number (SELLER)
Normal					
Normal High Temperature (°F)	83	40	yr	24590-HLW-U0D-W16T-00001	Note 4
Normal Low Temperature (°F)	59	40	yr	24590-HLW-U0D-W16T-00001	Note 4
Normal High Relative Humidity (%RH)	100	40	yr	24590-HLW-U0D-W16T-00001	Note 4
Normal Low Relative Humidity (%RH)	10	40	yr	24590-HLW-U0D-W16T-00001	Note 4
Normal High Pressure (in.-w.g.)	0	40	yr	24590-HLW-U0D-W16T-00001	Note 4
Normal Low Pressure (in.-w.g.)	-0.1	40	yr	24590-HLW-U0D-W16T-00001	Note 4
Normal Radiation Dose Rate (mR/hr)	0.5	40	yr	24590-HLW-U0D-W16T-00001	Note 4
Vibration Magnitude (g)	N/A	40	yr	N/A	Note 4
Vibration Frequency (Hz)	N/A	40	yr	N/A	Note 4
Additional Normal Information:					

EQUIPMENT QUALIFICATION DATASHEET (EQD)

Equipment Environmental Qualification (EEQ) *(continued)*

Parameter Type/Units	Parameter Value	Time Duration (number)	Time units	WTP Document Number (BUYER)	Submittal Number (SELLER)
Abnormal					
Abnormal High Temperature (°F)	95	8	hr/yr	24590-HLW-U0D-W16T-00001	Note 4
Abnormal Low Temperature (°F)	59	8	hr/yr	24590-HLW-U0D-W16T-00001	Note 4
Abnormal High Relative Humidity (%RH)	95	8	hr/yr	24590-HLW-U0D-W16T-00001	Note 4
Abnormal Low Relative Humidity (%RH)	10	8	hr/yr	24590-HLW-U0D-W16T-00001	Note 4
Abnormal High Pressure (in.-w.g.)	4	8	hr/yr	24590-HLW-U0D-W16T-00001	Note 4
Abnormal Low Pressure (in.-w.g.)	-6.7	8	hr/yr	24590-HLW-U0D-W16T-00001	Note 4
Abnormal Radiation Dose Rate (mR/hr)	0.5	0	hr/yr	24590-HLW-U0D-W16T-00001	Note 4
Wet Sprinkler System Present	YES	2	hr/yr	24590-HLW-U0D-W16T-00001	Note 4
Additional Abnormal Information					
Design Basis Events (DBE)					
DBE High Temperature (°F)	95	1000	hr	24590-HLW-U0D-W16T-00001	Note 4
DBE Low Temperature (°F)	59	1000	hr	24590-HLW-U0D-W16T-00001	Note 4
DBE High Relative Humidity (%RH)	95	482	hr	24590-HLW-U0D-W16T-00001	Note 4
DBE Low Relative Humidity (%RH)	10	1000	hr	24590-HLW-U0D-W16T-00001	Note 4
DBE High Pressure (in.-w.g.)	4	1000	hr	24590-HLW-U0D-W16T-00001	Note 4
DBE Low Pressure (in.-w.g.)	-6.7	1000	hr	24590-HLW-U0D-W16T-00001	Note 4
DBE Radiation Dose Rate (mR/hr)	0.5	0	hr	24590-HLW-U0D-W16T-00001	Note 4
Flood Height (ft)	22	1000	hr	24590-HLW-U0D-W16T-00001	Note 4
Submergence (ft)	N/A**	N/A**	N/A	24590-HLW-U0D-W16T-00001	Note 4
Chemical/Spray Exposure	Yes	12.5	hr	24590-HLW-U0D-W16T-00001	Note 4
Additional DBE Information	Spray exposure is composed of water from fire suppression system. **Equipment is not expected to operate submerged or after a DBE flood event				

EQUIPMENT QUALIFICATION DATASHEET (EQD)

DBE Chemical Exposure Details	
DBE Chemical Types/Concentrations	NONE

Interfaces (Electrical)	
Power Supply Voltage (VAC, VDC)	460 VAC
Power Supply Frequency (Hz)	60
Power Connection Method	Note 3
I/O Signals to/from Equipment	Note 3
I/O Connection Method	Note 3

Interfaces (Mechanical)	
Mounting Configuration (orientation)	Note 3
Mounting Method (bolts, welds, etc.)	Isolation springs / base to be welded to existing embeds or anchored into concrete depending on the Seller's anchorage configuration
Auxiliary Devices	None

Equipment Seismic Qualification (ESQ)

Parameter	Title	Reference/Document Number	Version / Revision	Remarks
WTP Seismic Design Specification (BUYER)	ENGINEERING SPECIFICATION FOR STRUCTURAL DESIGN LOADS FOR SEISMIC CATEGORY III & IV EQUIPMENT AND TANKS	24590-WTP-3PS-FB01-T0001	Rev. 3	N/A
Specified Seismic Load (BUYER)	ENGINEERING SPECIFICATION FOR STRUCTURAL DESIGN LOADS FOR SEISMIC CATEGORY III & IV EQUIPMENT AND TANKS	24590-WTP-3PS-FB01-T0001	Rev. 3	N/A
Design Seismic Load (SELLER	N/A	N/A	N/A	To be provided by the Seller via the G-321-E submittal process. (Note 2)
Qualification Method (SELLER)	N/A	N/A	N/A	To be provided by the Seller via the G-321-E submittal process. (Note 2)
Qualification Report Number (SELLER)	N/A	N/A	N/A	To be provided by the Seller via the G-321-E submittal process. (Note 2)
Submittal Number (BUYER)	TBD	TBD	TBD	N/A

EQUIPMENT QUALIFICATION DATASHEET (EQD)

Notes and Additional Information

Note 1: Where pressure is given in inches of water column (in-w.c.) in the source document, it is generally assumed that this is in reference to atmospheric pressure and is therefore equivalent to inches of water gage (in-w.g.).

Note 2: Supplier (Seller) shall perform Equipment Seismic and Environmental Qualification in accordance with the listed parameters and the applicable specification requirements.

Note 3: To be provided by Seller.

Note 4: Data to be provided by Seller through the submittal process as required on the G-321-E form.

Please note that source, special nuclear, and byproduct materials, as defined in the Atomic Energy Act of 1954 (AEA) are regulated at the U. S. Department of Energy (DOE) facilities exclusively by DOE acting pursuant to its AEA authority. DOE asserts that pursuant to AEA, it has sole and exclusive responsibility and authority to regulate source, special nuclear, and byproduct materials at DOE-owned nuclear facilities. Information contained herein on radionuclides is provided for process description purposes only.

ISSUED BY
RPP-WTP PDC

R11204283

CENTRIFUGAL MULTI-STAGE BLOWER
Data Sheet:
24590-HLW-MAD-HOP-00038

MR No.
24590-QL-MRA-MACS-00004

Plant Item No.
24590-HLW-MA-HOP-FAN-00008A/B/C
24590-HLW-MA-HOP-FAN-00010A/B/C

Rev. No.
5

1	Project:		RPP-WTP	Bldg./Room #		HLW / H-0429	Manufacturer	*
2	Project No:		24590	Supporting Calculations		24590-HLW-M4C-HOP-00011	Manufacturer Part No	*
3	Site:		DOE Hanford					
4	Safety Class		SS	Supporting Drawings		24590-HLW-M6-HOP-00008	Quantity Required	6
5	Seismic Category	(Note 27)	SC-III			24590-HLW-M6-HOP-20008		
6	SSC Characteristic		Air Permit	System Description		24590-HLW-3YD-HOP-00001	Quality Level	Q
7	System No.		HOP					
8	Description: HLW Offgas Stack Extraction Blower - Note 14							
9	DESIGN CONDITIONS							
10	Indoor Design Temperature		Minimum	59 °F	Maximum	95 °F	Relative Humidity	10% (min)
11	Contamination Classification Area		C2/C3				Elevation	740 ft above MSL
12	Environmental Qualification		(see Attachment 2)		Hanford Standard Atmospheric Pressure		398	inches WC
13	DESIGN CONDITIONS							
14	Design Blower Capacity	(Note 22)	2211	ACFM	Inlet Air Temperature at Design Conditions		294	°F
15	Design Static Pressure	(Note 21)	82	inches WC	Inlet Air Density at Design Conditions		0.0408	lbs/ft³
16	Minimum Blower Efficiency at Design Conditions		60	%	Inlet Air Pressure at Design Conditions		12.1	psia
17	Blower Efficiency at Design Conditions		*	%	Power at Design Conditions		*	BHP
18	Blower Speed at Design Conditions (Note 25)		*	RPM	Equipment Design Temperature	(Note 18)	*	°F
19	Max. Discharge Temp. at Design Conditions		*	°F	Critical Speeds	(Note 17)	*	RPM
20	CONSTRUCTION							
21	Blower Manufacturer		*		Blower Model Number		*	
22	AMCA Drive Arrangement		7		AMCA Inlet Box Position		360	
23	AMCA Motor Position		Direct Drive		AMCA Discharge		CW 360	
24	AMCA Rotation	(Note 9)	CW		Blower Scroll Type		*	
25	Blower Motor Operating Weight		*	pounds	Assembly Weight (Mtr + Blower + Base)		*	pounds
26	Overall Skid Dimensions	(Note 5)	Width	*	Height	*	Length *	inches
27	Blower Bearing Type		Roller- Grease Lubricated		Blower Bearing Mfg.	*	Bearing Part #	*
28	Lubricant Mfg.	*	Part #	*	Bearing Special Features		(Notes 19 & 20)	L10 Life 100 khr
29	Mechanical Coupling Mfg.	*	Part #	*				
30	BLOWER WHEEL							
31	Blower Wheel Type	(Note 4)	*		Blower Shaft Diameter		*	
32	Design Wheel Diameter		*		Actual Wheel Diameter		*	
33	Design Wheel Width		*		Actual Wheel Width		*	
34	Design Blower RPM		*		Actual Blower RPM		*	
35	Design Brake Horsepower		*		Actual Brake Horsepower		*	
36	BLOWER MATERIALS							
37	Housing	(Note 12)	Cast Ductile Iron	Grade *	Blower Wheel		Stainless Steel	Grade *
38	Evase		N/A	Grade N/A	Mounting Frame		Carbon Steel	Grade *
39	Shaft		Stainless Steel	Grade *	Inlet Box / Transition Piece		Cast Ductile Iron	Grade *
40	Inlet Vane		N/A	Grade N/A	Discharge Damper		N/A	Grade N/A
41	Inlet Screen		N/A	Grade N/A	OSHA Compatible Safety Guards		Carbon Steel	Grade *
42	BLOWER ACCESSORIES							
43	Flanged Inlet		Yes		Flanged Inlet Dimensions		*	
44	Flanged Discharge		Yes		Flanged Discharge Dimensions		*	
45	Flanged Discharge Evase		No		Flanged Evase Dimensions		N/A	
46	Split Housing		No		Split Housing Type		N/A	
47	Inlet Box		No		Inlet Box Type		N/A	
48	Inlet Damper		No		Inlet Damper Type		N/A	
49	Inlet Transition Piece		No		Inlet Transition Piece Flange Dimensions		N/A	
50	Inspection Door	(Note 7)	Yes		Inspection Door Size	(Note 7)	1" NPT	
51	Drain Connection	(Note 7)	Yes		Drain Connection Size	(Note 7)	1" NPT	
52	Shaft Seals		Yes		Seal Type		Double Carbon Ring w/ purge	
53	Isolation Base		No		Isolation Base Type		N/A	
54					Isolation Base Manufacturer		N/A	
55	Isolation Springs		Yes		Isolation Springs Mfr and Model No		*	
56					Isolation Springs Minimum Diameter		*	
57					Isolation Springs Deflection		*	
58					Isolation Springs Restraint Features		*	

Please note that source, special nuclear, and byproduct materials, as defined in the Atomic Energy Act of 1954 (AEA) are regulated at the U. S. Department of Energy (DOE) facilities exclusively by DOE acting pursuant to its AEA authority. DOE asserts that pursuant to AEA, it has sole and exclusive responsibility and authority to regulate source, special nuclear, and byproduct materials at DOE-owned nuclear facilities. Information contained herein on radionuclides is provided for process description purposes only.

CENTRIFUGAL MULTI-STAGE BLOWER
Data Sheet:
24590-HLW-MAD-HOP-00038

MR No.
24590-QL-MRA-MACS-00004

Plant Item No.
24590-HLW-MA-HOP-FAN-00008A/B/C
24590-HLW-MA-HOP-FAN-00010A/B/C

Rev. No. 5

1	Project:	RPP-WTP	Bldg./Room #	HLW / H-0429	Manufacturer	*
2	Project No:	24590	Supporting Calculations	24590-HLW-M4C-HOP-00011	Manufacturer Part No	*
3	Site:	DOE Hanford				
4	Safety Class	SS	Supporting Drawings	24590-HLW-M6-HOP-00008	Quantity Required	6
5	Seismic Category (Note 27)	SC-III		24590-HLW-M6-HOP-20008		
6	SSC Characteristic	Air Permit	System Description	24590-HLW-3YD-HOP-00001	Quality Level	Q
7	System No.	HOP				
8	Description: HLW Offgas Stack Extraction Blower - Note 14					
9	Flexible Connection Inlet (Note 23 & 26)	Yes	Insulation (Note 24)	Yes		
10	Flexible Connection Inlet Type	Braided SSTL flexible hose				
11	Flexible Inlet Connection Material	316L SS	braid constructed with 304 SST			
12	Flexible Connection Manufacturer and Model No	*				
13	Flexible Connection Outlet (Note 23 & 26)	Yes				
14	Flexible Connection Outlet Type	Braided SSTL flexible hose				
15	Flexible Outlet Connection Material	316L SS	braid constructed with 304 SST			
16	Flexible Connection Manufacturer and Model No	*				
17	Inlet Screen	No				
18	Inlet Screen Features	N/A				
19	Blower Pedestal	Yes				
20	Blower Pedestal Description	Common mounting base for blower, motor, and bearings				
21	Insulation Studs	No				
22	Silencer	No				
23	MOTOR AND DRIVE REQUIREMENTS					
24	Driven Equipment / Motor / ASD relationship is as follows::					
25	Blower Tag Number	Motor Tag Number	ASD Tag Number			
26	HOP-FAN-00008A	HOP-MTR-00007A	HOP-ASD-00002A			
27	HOP-FAN-00008B	HOP-MTR-00007B	HOP-ASD-00002B			
28	HOP-FAN-00008C	HOP-MTR-00007C	HOP-ASD-00002C			
29	HOP-FAN-00010A	HOP-MTR-00008A	HOP-ASD-00004A			
30	HOP-FAN-00010B	HOP-MTR-00008B	HOP-ASD-00004B			
31	HOP-FAN-00010C	HOP-MTR-00008C	HOP-ASD-00004C			
32	Variable Speed Drive	Yes	Provided by others			
33	Special Drive Features	1. ASD to operate motor from 30% to 100% of required RPM within a 30 second time frame (max)				
34		2. Provides ASD programming for motor RPM to pass theough any critical speed dead bands to avoid excessive vibration				
35	GAS COMPOSITION					

36	Component	kg/hr	wt%
37	N_2	2540	6.74E+01
38	O_2	778.1	2.06E+01
39	H_2O	388.4	1.03E+01
40	Ar	43.3	1.15E+00
41	CO_2	20.7	5.49E-01
42	NO	2.89E-02	7.66E-04
43	NH_3	2.44E-02	6.47E-04
44	N_20	1.25E-02	3.32E-04
45	SO_2	6.70E-03	1.78E-04
46	NO_2	4.83E-03	1.28E-04
47	H_2	3.53E-03	9.36E-05
48	CO	8.52E-04	2.26E-05
49	VOC	1.38E-04	3.66E-06
50	Hg	1.25E-04	3.32E-06
51	HCl	6.58E-06	1.75E-07
52	HF	3.99E-06	1.06E-07
53	I_2	1.11E-06	2.94E-08
54	Particulate	4.34E-11	1.15E-12
55	Total	3770.58	100

56

57 Source: 24590-HLW-M4E-HOP-00001 pages 14-16 row 61

58

59

CENTRIFUGAL MULTI-STAGE BLOWER
Data Sheet:
24590-HLW-MAD-HOP-00038

				MR No. 24590-QL-MRA-MACS-00004		
				Plant Item No. 24590-HLW-MA-HOP-FAN-00008A/B/C 24590-HLW-MA-HOP-FAN-00010A/B/C		Rev. No. 5
1	Project:	RPP-WTP	Bldg./Room #	HLW / H-0429	Manufacturer	*
2	Project No:	24590	Supporting Calculations	24590-HLW-M4C-HOP-00011	Manufacturer Part No	*
3	Site:	DOE Hanford				
4	Safety Class	SS	Supporting Drawings	24590-HLW-M6-HOP-00008	Quantity Required	6
5	Seismic Category (Note 27)	SC-III		24590-HLW-M6-HOP-20008		
6	SSC Charateristic	Air Permit	System Description	24590-HLW-3YD-HOP-00001	Quality Level	Q
7	System No.	HOP				
8	Description: HLW Offgas Stack Extraction Blower - Note 14					

Notes

1) * Denotes data to be provided / verified by vendor.
2) N/A denotes "Not Applicable".
3) TBD denotes "To Be Determined".
4) The impeller shall be anti-surge design developing continuously rising SP from free delivery thru shutoff.
5) Bounding dimensions not to exceed 70" W x 76" H x 120" L (Blower, Motor and Baseplate).
6) Deleted
7) See Specification 24590-WTP-3PS-MACS-T0005 rev. 0, section 3.8.2.
8) Deleted
9) Rotation is listed as viewed from drive side.
10) Deleted
11) Deleted
12) Blower housing design pressure shall be -3 psi (-82 in WC).
13) Deleted
14) Contents of this document are Dangerous Waste Permit affecting.
15) Deleted
16) Deleted
17) Critical speeds within operating ranges to be blocked in ASD programming
18) This temperature is required for material selection and corrosion analysis. The value is the average temperature of the inlet temperature in line 14 of page 1 and the Discharge Temperature on Line 19 of page 1.
19) Provide each blower bearing with RTDs & 2 - directional (X and Y) vibration sensors for remote indication
20) Radial type roller bearings shall have labyrinth type seal.
21) The original, more conservative of 82 inches WC was retained rather than the minimum value 70 inches WC in 24590-HLW-M4C-HOP-00011 Rev. 2.
22) Design blower capacity is the predicted capacity from calculation, 24590-HLW-M4C-HOP-00011 Rev 1 Page A-10 Cell Y61, divided by 2 (two blowers running at capacity)
23) Connections shall match Buyer's supply pipe: 10 inch diameter, 316L SS, Schedule 40S, w/ 150 lb, RF Flange.
24) Blowers shall be insulated (except bearing housings) by Buyer and heat traced to maintain casing metal temperature above the acid dewpoint of the process gas.
25) Shaft speed shall not exceed 3600 rpm unless approved by Buyer. Tip speed of rotating assembly shall not exceed 530 fps unless approved by Buyer.
26) See Specification 24590-WTP-3PS-MACS-T0005 rev. 0, section 3.8.1.6 for flexible connection requirements.
27) See Specification 24590-WTP-3PS-MACS-T0005 rev. 0, section 6.3 for seismic testing requirements.

SAFETY SCREENING

Safety Screening/Evaluation Required? If yes per 24590-WTP-GPP-SREG-002, E&NS Signature required below. X Yes ___ No

CENTRIFUGAL MULTI-STAGE BLOWER
Data Sheet:
24590-HLW-MAD-HOP-00038

MR No.
24590-QL-MRA-MACS-00004

Plant Item No.
24590-HLW-MA-HOP-FAN-00008A/B/C
24590-HLW-MA-HOP-FAN-00010A/B/C

Rev. No.
5

1	Project:	RPP-WTP	Bldg./Room #	HLW / H-0429	Manufacturer	*
2	Project No:	24590	Supporting Calculations	24590-HLW-M4C-HOP-00011	Manufacturer Part No	*
3	Site:	DOE Hanford				
4	Safety Class	SS	Supporting Drawings	24590-HLW-M6-HOP-00008 24590-HLW-M6-HOP-20008	Quantity Required	6
5	Seismic Category (Note 27)	SC-III				
6	SSC Characteristic	Air Permit	System Description	24590-HLW-3YD-HOP-00001	Quality Level	Q
7	System No.	HOP				
8	Description: HLW Offgas Stack Extraction Blower - Note 14					

Rev.	Reason for Revision	System Engineer	Equipment Engineer	E&NS	Checker	Reviewer	Approver	Date
5	Revised to incorporate new specification 24590-WTP-3PS-MACS-T0005, Rev. 0 to remove ASME AG-1 requirements. Other minor clarifications are as noted with revision bars. This data sheet is issued for quote.	MOO.	M.Summers	C.Meng	AM.	R.Stevens	5/12/10
4	Reissued for Purchase. Minor change, (Inclusion of pages 5 & 6 which were omitted in rev. 3)	M. O'Neill	M.Summers	C. Meng	D.Lamberd	S. Kretzschmar	R. Stevens	7/22/2009
3	Reissued for purchase. Minor revisions to format for clarity. Revised the Material Requisition number from 24590-QL-MRA-MACS-00002 to the new 24590-QL-MRA-MACS-00004. Corrected tag numbers and updated revision number. Changed title to Centrifugal Multi-stage Blowers. Removed reference to cancelled calculation 25490-HLW-MAC-HOP-00001. Added field for SSC Characteristic. Added reference to Note 14. Updated design inlet conditions, capacity, and static pressure to align with 24590-HLW-M4C-HOP-00011 Rev.1 & ECCN 24590-HLW-M4E-HOP-00001. Added field for Inlet Pressure at Design Conditions in place of Total Static Pressure (Max) field. Added field for required minimum efficiency at design conditions per CCN 199933. Changed title of field for Maximum Discharge Temperature and deleted Note 16. Changed title of field from Natural Frequencies to Critical Speeds for clarity. Removed normal and minimum design conditions for clarity. Revised AMCA Drive Arrangement from 8 to 7 to align with industry offering. Specified inlet box position to 360. Changed AMCA Discharge from Upblast to CW 360 to allign with AMCA 99-2406-83. Relocated Blower Motor Operating Weight and Assembly Weight fields and added field for Overall Skid Dimensions. Specified Roller grease lubricated bearings, added fields for Mfg. and Part # for bearing, lubricant, and coupler. Changed coupler to vendor specified. Revised specified materials for housing, shaft, blower wheel, mounting frame, and inlet box/transition piece to align with industry offering. Material grades to be specified by vendor. Revised inspection door size and drain from vendor specified to 1"NPT per specification, 24590-WTP-3PS-MACS-T0004 Rev. 5. Specified seal type as Double Carbon Ring w/ purge. Added Note 2 to Special Drive Features field. Added Gas Composition. Deleted Notes 10, 13, 16 and revised Notes 17, 18, 19, 20, & 21. Added Notes 22, 23, 24, 25, 26, & 27	Mike O'Neill	Scott E. Anderson	C. Meng	A. Morretta	S. Kretzschmar	R. Stevens	6/11/2009
2	Re-issued with updated design conditions, reformatted mechanical datasheet for clarity, attached motor and EQ datasheets. This document supercedes 24590-HLW-MUD-HOP-00002.	Mike O'Neill	Scott E. Anderson	C. Meng	C. Knauss	S. Kretzschmar	R. Stevens	3/26/2008
1	Re-issued for purchase, added Note 12, and uptaded design conditions.	Y. Nurdogan	G. Dunn	C. Meng	D. Reinemann	J. Rouse	J. Julyk	3/21/2007
0	Issued for purchase	J. Rewari	N/A	N/A	J. Medina	N/A	E. Isern	8/12/2004

ATTACHMENT 1 24590-HLW-MAD-HOP-00038 ELECTRICAL DATA SHEET LOW VOLTAGE INDUCTION MOTOR	MR No. 24590-QL-MRA-MACS-00004	
	Plant Item No. 24590-HLW-EM-HOP-MTR-00007A/B/C 24590-HLW-EM-HOP-MTR-00008A/B/C	Rev No. 5

Motor Tag No.: 24590-HLW-EM-HOP-MTR-00007A/B/C and 24590-HLW-EM-HOP-MTR-00008A/B/C

Driven Equipment No.: 24590-HLW-MA-HOP-FAN-00008A/B/C and 24590-HLW-MA-HOP-FAN-00010A/B/C

Service: HLW Offgas Stack Extraction Fan

Refer to "Primary Specification": 24590-WTP-3PS-MACS-T0005

LINE NO.	DESCRIPTION	USER SPECIFIED	SUPPLIER FURNISHED	UNITS
	BASIC DATA:			
1	RATED HORSEPOWER	-	*	HP
2	SYNCHRONOUS SPEED	-	*	RPM
3	VOLTAGE	460	*	V
4	PHASE	3	*	-
5	FREQUENCY	60	*	Hz
6	INSULATION CLASS	F	*	-
7	TEMPERATURE RISE ABOVE 40°C AMBIENT	80	*	deg. C
8	NEMA DESIGN TYPE (B, C, OTHER)	B	*	-
9	EFFICIENCY (STANDARD, PREMIUM)	PREMIUM	*	-
10	ENCLOSURE TYPE (TEFC - SEVERE DUTY PER IEEE Std. 841, TENV, WP1I)	TEFC IEEE Std. 841	*	-
11	SERVICE FACTOR	1.15	*	-
12	COUPLED DRIVE (DIRECT, BELT, GEAR)	Direct	*	-
13	BEARING (ANTI-FRICTION, SLEEVE)	Anti-Friction	*	-
14	BEARING SEAL (ONE END, BOTH ENDS)	Both Ends	*	-
15	SPACE HEATER (FOR MOTORS > 20 HP)	Yes	*	W
16	RTD FOR SLEEVE BEARING : 1 per bearing for Belt drive only	N/A	*	Ω
17	TERMINAL BOX LOCATION		*	-
18	WARRANTY (2 YEARS, 3 YEARS, 5 YEARS)	see Terms and condition	*	-
19	SHOP TESTS			
	- MFR STANDARD TEST (Yes / No)	Yes	*	
	- ROUTINE TEST (Yes / No)	Yes	*	
	- FULL TEST (Yes / No)	No	*	
20	UNUSUAL SERVICE CONDITIONS:	Inverter Duty		
21	FLAMMABLE OR EXPLOSIVE GASES	No	*	
22	COMBUSTIBLE, EXPLOSIVE, ABRASIVE OR CONDUCTIVE DUST	No	*	
23	WET OR DRY OPERATING CONDITIONS	Dry	*	
24	NUCLEAR RADIATION	0.5 mrad/hr.		
25	SPECIAL PAINTING REQUIREMENTS PER IEEE Std. 841	(Note 5)	*	
26	OTHER (SC,SS, APC, Non-ITS)	SS	*	
27	OTHER (SEISMIC CATEGORY I, II, III or IV)	SC-III	*	

ATTACHMENT 1 24590-HLW-MAD-HOP-00038 ELECTRICAL DATA SHEET LOW VOLTAGE INDUCTION MOTOR	MR No. 24590-QL-MRA-MACS-00004	
	Plant Item No. 24590-HLW-EM-HOP-MTR-00007A/B/C 24590-HLW-EM-HOP-MTR-00008A/B/C	Rev No. 5

Motor Tag No.: 24590-HLW-EM-HOP-MTR-00007A/B/C and 24590-HLW-EM-HOP-MTR-00008A/B/C

Driven Equipment No.: 24590-HLW-MA-HOP-FAN-00008A/B/C and 24590-HLW-MA-HOP-FAN-00010A/B/C

Service: HLW Offgas Stack Extraction Fan

Refer to "Primary Specification": 24590-WTP-3PS-MACS-T0005

LINE NO.	DESCRIPTION	USER SPECIFIED	SUPPLIER FURNISHED	UNITS
28	MANUFACTURER	-	*	-
29	NEMA FRAME	-	*	-
30	MODEL NUMBER	-	*	-
31	SERIAL NUMBER / MANUFACTURER DATE	-	*	-
32				
33	FULL LOAD CURRENT	-	*	A
34	FULL LOAD TORQUE	-	*	ft-lb
35	POWER FACTOR : - @ 50 % LOAD	-	*	%
	- @ 75 % LOAD	-	*	%
	- @ 100 % LOAD	-	*	%
36	EFFICIENCY : - @ 50% LOAD	-	*	%
	- @ 75% LOAD	-	*	%
	- @ 100% LOAD	-	*	%
37	LOCKED ROTOR CURRENT @ 100 % of RATED VOLTAGE	-	*	A
38	LOCKED ROTOR CURRENT @ 80% of RATED VOLTAGE	-	*	A
39	ALLOWABLE STALL TIME @ FULL VOLTAGE	-	*	SEC
40	ALLOWABLE STALL TIME @ 80% of VOLTAGE	-	*	SEC
41	LOSSES @ FULL LOAD	-	*	W
42	ROTOR WK2 @ MOTOR SHAFT SPEED (For > 250 hp only)	-	*	lb-ft²
43	STARTING POWER FACTOR (For > 75 hp only)	-	*	-
44	SUB TRANSIENT REACTANCE AND X/R (For > 250 hp only)	-	*	-
45	WEIGHT	-	*	lbs
46	ROTATION (CW, CCW, BI-DIR.) FACING DRIVEN EQUIPMENT	-	*	-
47	MEAN TIME BETWEEN FAILURE (MOTOR 100 HP AND ABOVE)		*	
48	STARTING METHOD (FULL/REDUCED VOLTAGE, ASD APPLICATION)	ASD		-
49				
50	RECOMMENDED BEARING LUBRICANT	-	*	

NOTES:

(1) DELETED

(2) Motor should be applied within its rating based on service factor of 1.0.

(3) Data Sheet Line no. from 35 to 47 are applicable for motor 100 HP and above.

(4) The fan and motor are subjected to the same environmental conditions.

(5) See specifcation 24590-WTP-3PS-MACS-T0005 Attachment B, for requirements.

EQUIPMENT QUALIFICATION DATASHEET (EQD)

Equipment Identification

Component Tag Number	24590-HLW-MA-HOP-FAN-00008A/B/C 24590-HLW-MA-HOP-FAN-00010A/B/C 24590-HLW-EM-HOP-MTR-00007A/B/C 24590-HLW-EM-HOP-MTR-00008A/B/C	Safety Classification	☐ SC ☒ SS ☐ APC ☐ SDC ☐ SDS ☐ RRC
Manufacturer / Supplier	Note 4		
Requisition Number	24590-QL-MRA-MACS-00004		
Model	Note 4	Seismic Category	☐ SC-I ☐ SC-II ☒ SC-III ☐ SC-IV
Description (Include descriptive text [e.g., location, elevation])	HLW Offgas Stack Extraction Fans.		
Safety Function(s)	Provides negative pressure on HLW secondary off-gas system. In conjunction with Booster Extraction Fans, provides motive force for off-gas flow through all off-gas equipment up to and including discharge at stack.		

Seismic Safety Function	☒ Yes ☐ No	Room Number(s): H-0429	
Maintenance Accessible	☒ Yes ☐ No	Method of Maintenance Access:	☐ Remote ☒ Hands On ☐ None
Seismic Operability Requirements:	☒ During Seismic Event	☒ After Seismic Event	
ITS Equipment Type:	☐ Passive Mechanical	☒ Active Mechanical	☒ Electrical

Equipment Environmental Qualification (EEQ)

Environment ☒ Mild ☐ Harsh Contamination Class: C2/C3 Radiation Class: R2	Hi Rad Service ☐ Yes ☒ No	Design Life (yrs) ☒ 40 ☐ Other _ with required maintenance

Parameter Type/Units	Parameter Value	Time Duration (number)	Time Units	WTP Document Number (BUYER)	Submittal Number (SELLER)
Normal					
Normal High Temperature (°F)	95	40	yr	24590-HLW-U0D-W16T-00001	Note 4
Normal Low Temperature (°F)	59	40	yr	24590-HLW-U0D-W16T-00001	Note 4
Normal High Relative Humidity (%RH)	100	40	yr	24590-HLW-U0D-W16T-00001	Note 4
Normal Low Relative Humidity (%RH)	10	40	yr	24590-HLW-U0D-W16T-00001	Note 4
Normal High Pressure (in.-w.g.)	0	40	yr	24590-HLW-U0D-W16T-00001	Note 4
Normal Low Pressure (in.-w.g.)	-0.4	40	yr	24590-HLW-U0D-W16T-00001	Note 4
Normal Radiation Dose Rate (mR/hr)	0.5	40	yr	24590-HLW-U0D-W16T-00001	Note 4
Vibration Magnitude (g)	N/A	40	yr	N/A	Note 4
Vibration Frequency (Hz)	N/A	40	yr	N/A	Note 4

EQUIPMENT QUALIFICATION DATASHEET (EQD)

Equipment Environmental Qualification (EEQ) *(continued)*

Parameter Type/Units	Parameter Value	Time Duration (number)	Time units	WTP Document Number (BUYER)	Submittal Number (SELLER)
Additional Normal Information:					
Abnormal					
Abnormal High Temperature (°F)	95	8	hr	24590-HLW-U0D-W16T-00001	Note 4
Abnormal Low Temperature (°F)	59	8	hr	24590-HLW-U0D-W16T-00001	Note 4
Abnormal High Relative Humidity (%RH)	95	8	hr	24590-HLW-U0D-W16T-00001	Note 4
Abnormal Low Relative Humidity (%RH)	10	8	hr	24590-HLW-U0D-W16T-00001	Note 4
Abnormal High Pressure (in.-w.g.)	4	8	hr	24590-HLW-U0D-W16T-00001	Note 4
Abnormal Low Pressure (in.-w.g.)	-6.7	8	hr	24590-HLW-U0D-W16T-00001	Note 4
Abnormal Radiation Dose Rate (mR/hr)	0.5	0	hr	24590-HLW-U0D-W16T-00001	Note 4
Wet Sprinkler System Present	YES	2	hr	24590-HLW-U0D-W16T-00001	Note 4
Additional Abnormal Information					
Design Basis Events (DBE)					
DBE High Temperature (°F)	95	1000	hr	24590-HLW-U0D-W16T-00001	Note 4
DBE Low Temperature (°F)	59	1000	hr	24590-HLW-U0D-W16T-00001	Note 4
DBE High Relative Humidity (%RH)	95	1000	hr	24590-HLW-U0D-W16T-00001	Note 4
DBE Low Relative Humidity (%RH)	10	1000	hr	24590-HLW-U0D-W16T-00001	Note 4
DBE High Pressure (in.-w.g.)	4	1000	hr	24590-HLW-U0D-W16T-00001	Note 4
DBE Low Pressure (in.-w.g.)	-6.7	1000	hr	24590-HLW-U0D-W16T-00001	Note 4
DBE Radiation Dose Rate (mR/hr)	0.5	0	hr	24590-HLW-U0D-W16T-00001	Note 4
Flood Height (ft)	1.58	1000	hr	24590-HLW-U0D-W16T-00001	Note 4
Submergence (ft)	N/A**	N/A**	N/A	24590-HLW-U0D-W16T-00001	Note 4
Chemical/Spray Exposure	Yes	12.5	hr	24590-HLW-U0D-W16T-00001	Note 4
Additional DBE Information	Spray exposure is composed of water from fire suppression system. **Equipment is not expected to operate submerged or after a DBE flood event.				

EQUIPMENT QUALIFICATION DATASHEET (EQD)

DBE Chemical Exposure Details	
DBE Chemical Types/Concentrations	NONE

Interfaces (Electrical)	
Power Supply Voltage (VAC, VDC)	460 VAC
Power Supply Frequency (Hz)	60
Power Connection Method	Note 3
I/O Signals to/from Equipment	Note 3
I/O Connection Method	Note 3

Interfaces (Mechanical)	
Mounting Configuration (orientation)	Note 3
Mounting Method (bolts, welds, etc.)	Isolation springs / base to be welded to existing embeds or anchored into concrete depending on the Seller's anchorage configuration.
Auxiliary Devices	None

Equipment Seismic Qualification (ESQ)

Parameter	Title	Reference/Document Number	Version / Revision	Remarks
WTP Seismic Design Specification (BUYER)	ENGINEERING SPECIFICATION FOR STRUCTURAL DESIGN LOADS FOR SEISMIC CATEGORY III & IV EQUIPMENT AND TANKS	24590-WTP-3PS-FB01-T0001	3	N/A
Specified Seismic Load (BUYER)	ENGINEERING SPECIFICATION FOR STRUCTURAL DESIGN LOADS FOR SEISMIC CATEGORY III & IV EQUIPMENT AND TANKS	24590-WTP-3PS-FB01-T0001	3	N/A
Design Seismic Load (SELLER	N/A	N/A	N/A	To be provided by the Seller via the G-321-E submittal process. (Note 2)
Qualification Method (SELLER)	N/A	N/A	N/A	To be provided by the Seller via the G-321-E submittal process. (Note 2)
Qualification Report Number (SELLER)	N/A	N/A	N/A	To be provided by the Seller via the G-321-E submittal process. (Note 2)
Submittal Number (BUYER)	TBD	TBD	TBD	N/A

EQUIPMENT QUALIFICATION DATASHEET (EQD)

Notes and Additional Information
Note 1: Where pressure is given in inches of water column (in-w.c.) in the source document, it is generally assumed that this is in reference to atmospheric pressure and is therefore equivalent to inches of water gage (in-w.g.). Note 2: Supplier (Seller) shall perform Equipment Seismic and Environmental Qualification in accordance with the listed parameters and the applicable specification requirements. Note 3: To be provided by Seller. Note 4: Data to be provided by Seller through the submittal process as required on the G-321-E form.

Please note that source, special nuclear, and byproduct materials, as defined in the Atomic Energy Act of 1954 (AEA) are regulated at the U. S. Department of Energy (DOE) facilities exclusively by DOE acting pursuant to its AEA authority. DOE asserts that pursuant to AEA, it has sole and exclusive responsibility and authority to regulate source, special nuclear, and byproduct materials at DOE-owned nuclear facilities. Information contained herein on radionuclides is provided for process description purposes only.

ISSUED BY RPP-WTP PDC

R11298346

BECHTEL	**MECHANICAL DATA SHEET** **HOP HEPA PREHEATER**	**PLANT ITEM No.** **24590-HLW-ME-HOP-HTR-00002A** **24590-HLW-ME-HOP-HTR-00001B** **24590-HLW-ME-HOP-HTR-00005A** **24590-HLW-ME-HOP-HTR-00005B** **Data Sheet Number**: **24590-HLW-MED-HOP-00013** **Rev**: **4**

Project:	RPP-WTP	Description:	HOP HEPA Filter Preheaters
Project No:	24590	Specification:	24590-HLW-3PS-MEE0-T0001
Site:	Hanford, WA	P&ID:	24590-HLW-M6-HOP-00010 24590-HLW-M6-HOP-20010
Process flow diagram:	24590-HLW-M5-V17T-00003 24590-HLW-M5-V17T-20003	Calculation Ref. No's.	24590-HLW-MEC-HOP-00012 24590-HLW-M4C-HOP-00011 24590-HLW-Z0C-30-00035

Reference Data

	Offgas Pressure Boundary (Note 5)	C5 Cell Confinement Boundary (Note 6)	Heating Elements	Control Panel	Preheater Temperature Instruments (TE & TT)		
					Inlet Offgas	Outlet Offgas	Housing
Quality Level	Q	Q	Q (AP)	Q (AP)	Q (AP)	Q (AP)	Q
Seismic Category	SC-I	SC-I	SC-I	SC-I	SC-I	SC-I	SC-I
Performs Air Permit (AP) Function	Yes	Yes	Yes	Yes	Yes	Yes	Yes
Design Code	ASME VIII, Div 1 and ASME AG-1	See Specification	See Specification	See Specification	See Specification	See Specification	See Specification
Code Stamp	No	No	No	No	No	No	No
NB Registration	No	No	No	No	N/A	N/A	N/A
Temperature Sensor Type	N/A	N/A	Internal Thermocouple	N/A	RTD	RTD	RTD

Process Conditions Data

Fluid Name		HOP Offgas		
Process Data	Process Conditions	Minimum	Normal	Maximum
Mass Flow	lb/hr	4,894	6,081	6,955
Density @ Inlet / Outlet	lb/ft³	0.0615 / 0.0568	0.0567 / 0.0522	0.0523 / 0.0480
Viscosity @ Inlet / Outlet	cP	0.0184 / 0.0194	0.0187 / 0.0196	0.0188 / 0.0197
Vol. Flow Rate @ 68°F, 1 atm.	SCFM	1,103	1,393	1,635
Vol. Flow Rate @ Inlet / Outlet	ACFM	1,320 / 1,436	1,774 / 1,940	2,203 / 2,415
Pressure @ Inlet / Outlet	in-w.c.	345 / 343	334 / 332	326 / 323
Differential Pressure	in-w.g.	-1.3	-1.9	-2.4
Temperature @ Inlet / Outlet (min. ΔT = 36°F, see Note 8)	°F	84 / 120	105 / 141	124 / 160
Relative Humidity @ Inlet / Outlet	%	100 / 33.8	100 / 36.5	100 / 38.7
Inlet Velocity	ft/s	*	54 (calculated)	67
Heat Capacity	Btu/lb-°F	0.246	0.253	0.263
Thermal Conductivity @ Inlet / Outlet	Btu/hr-ft-°F	0.0149 / 0.0158	0.0153 / 0.0161	0.0155 / 0.0164
Heater Power Duty	kW (Btu/hr)	12.69 (43,306)	16.22 (55,340)	20 (68,304)

BECHTEL	**MECHANICAL DATA SHEET** **HOP HEPA PREHEATER**	**PLANT ITEM No.** **24590-HLW-ME-HOP-HTR-00002A** **24590-HLW-ME-HOP-HTR-00001B** **24590-HLW-ME-HOP-HTR-00005A** **24590-HLW-ME-HOP-HTR-00005B** **Data Sheet Number** / **Rev** **24590-HLW-MED-HOP-00013** / **4**

Mechanical / Process Design Data

Minimum Operating Pressure	psig	-6
Maximum Operating Pressure	psig	0
Maximum Operating Temperature	°F	167
Temperature Rise (ΔT Inlet-Outlet)	°F	36
Design Flow Rate (@ 68 °F, 1 atm.)	SCFM	2,000
Design Heater Duty	kW / (Btu/hr)	25 (85,000)
Maximum Operating Pressure Drop	in.-w.g.	5
Corrosion/Erosion Allowance	inch	0.04 over 40 years (for components in contact with the offgas)
Hydro/Pneumatic Test Pressure	psig	6.6*
Insulation Type		ASTM C 592 / ASTM C 612
Insulation Thickness	inch	1.5*
Heating Element Type		Cartridge*
Total Number of Heating Elements		45*
Max Element Surface Temperature	°F	500*
Max Element Pocket Surface Temperature	°F	500
Max Element Failure (Note 3)	%	25
Single Element Mean Time to Failure	hours	43,800*
Thermal Cycling, Min to max temp	cycles/year	6 (Note 7)
Fouling Resistance	hr-ft²-°F / Btu	None
Max Concrete Interface Temperature	°F	Note 4

Thermal Analysis Data

Room Temperature R5/C5 (normal high)	°F	113	Concrete Wall Thickness	inches	48
Room Temperature R2/C2 (normal high)	°F	80	Thermal Conductivity of Concrete Wall	W / m / K	1.8
Maximum Heat Loss to R5/C5 Room	kW	3	Maximum Heat Loss to R2/C2 Room	kW	2

Material Data

Plenum	316L Stainless Steel	In-Cast Liner	ASTM A 36 Carbon Steel
Element Pockets	316L Stainless Steel	Gaskets	ASTM D 1418 EPDM Rubber
Shield Plate	ASTM A 36 Carbon Steel	Heating Elements	Inconel / Incoloy Sheath
Mounting Frame	ASTM A 36 Carbon Steel	Insulation	Per 24590-WTP-3PS-NN00-T0001
Bolting	ASTM A 193 B8M / ASTM A 194 8M		

	MECHANICAL DATA SHEET HOP HEPA PREHEATER	PLANT ITEM No. 24590-HLW-ME-HOP-HTR-00002A 24590-HLW-ME-HOP-HTR-00001B 24590-HLW-ME-HOP-HTR-00005A 24590-HLW-ME-HOP-HTR-00005B	
		Data Sheet Number	Rev
		24590-HLW-MED-HOP-00013	4

Construction Data

(To be determined by the supplier when not specified by the buyer)

Inlet (Size/Connection Type)		inch	10" Sch 10S	Butt Weld	
Outlet (Size/Connection Type)		inch	12" Sch 10S	Butt Weld	
Size (L x W x H)*		inch	Note 2		
Available Element Pull Space		inch	48		
Weight	lb	20,700*	Shipping Weight	lb	22,700*

Notes

Note 1. Items identified with an asterisk * are determined by the Vendor, and to be verified by the Vendor.

Note 2. The bounding dimensions and nozzle locations shall be in accordance with the sketch on page 4 of this data sheet.

Note 3. The maximum element failure is the percent of total elements that can fail and still achieve maximum design heater duty without exceeding the maximum element pocket surface temperature.

Note 4. All heater components, in-cast liner, and mounting frame in contact with concrete shall not exceed 150 °F under any operating scenario. Concrete within 3 feet of the equipment shall not exceed 150 °F and 100 °F beyond three feet. Vendor is responsible for insulation design to comply with this requirement.

Note 5. The pressure boundary for the Preheater consists of the heater plenum, element pockets, and thermowells.

Note 6. The C5 Cell Confinement Boundary consists of the in-cast liner, mounting frame, and R5/C5 to R2/C2 radiation shielding.

Note 7. Thermal Cycling frequency basis is once every two (2) months throughout the 40 years life of the facility.

Note 8. Heater duty shall be rated such that a minimum inlet-outlet temperature differential of 36°F (20°C) will be achieved after the HOP offgas pass through the Preheater.

References

(1) 24590-HLW-M6-HOP-00010
(2) 24590-HLW-M6-HOP-20010
(3) 24590-HLW-MEC-HOP-00012
(4) 24590-HLW-M4C-HOP-00011
(5) 24590-QL-POA-MEE0-00001-02-00001
(6) 24590-HLW-MAC-C5V-00009
(7) 24590-HLW-U0D-W16T-00001
(8) 24590-HLW-M5-V17T-00003
(9) 24590-HLW-M5-V17T-20003
(10) 24590-HLW-Z0C-30-00035
(11) 24590-HLW-3PS-MEE0-T0001

	MECHANICAL DATA SHEET **HOP HEPA PREHEATER**	PLANT ITEM No. 24590-HLW-ME-HOP-HTR-00002A 24590-HLW-ME-HOP-HTR-00001B 24590-HLW-ME-HOP-HTR-00005A 24590-HLW-ME-HOP-HTR-00005B	
		Data Sheet Number	Rev
		24590-HLW-MED-HOP-00013	4

Sketch of HOP HEPA Filter Preheater

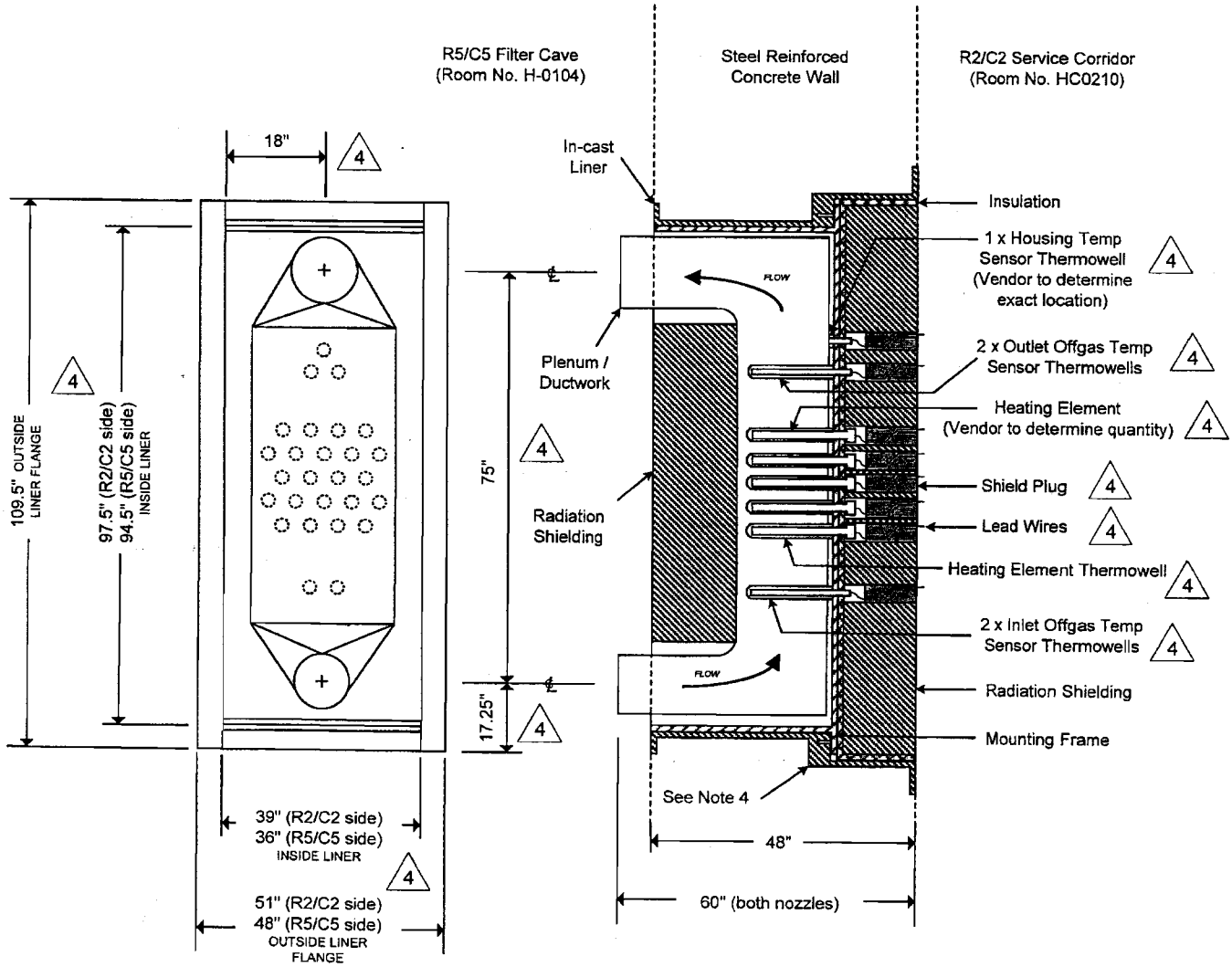

N.T.S.

Front View
(shielding removed)

Cross-Section View

	MECHANICAL DATA SHEET **HOP HEPA PREHEATER**	PLANT ITEM No. 24590-HLW-ME-HOP-HTR-00002A 24590-HLW-ME-HOP-HTR-00001B 24590-HLW-ME-HOP-HTR-00005A 24590-HLW-ME-HOP-HTR-00005B	
		Data Sheet Number	Rev
		24590-HLW-MED-HOP-00013	4

Sketch of Shield Plug

4

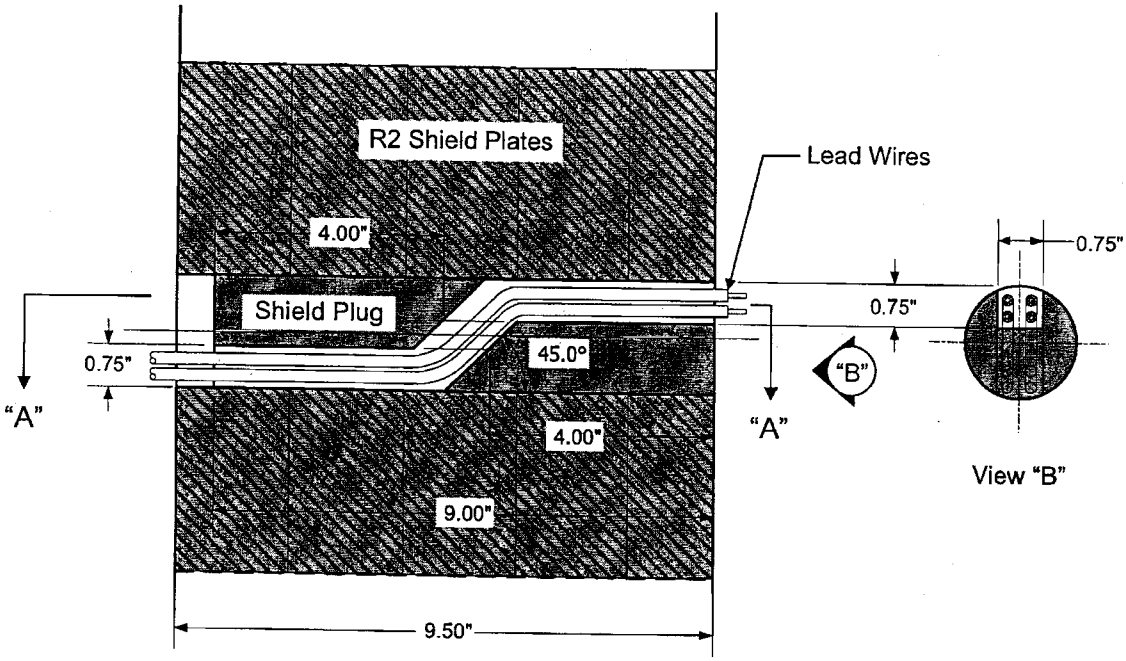

Elevation (Section)

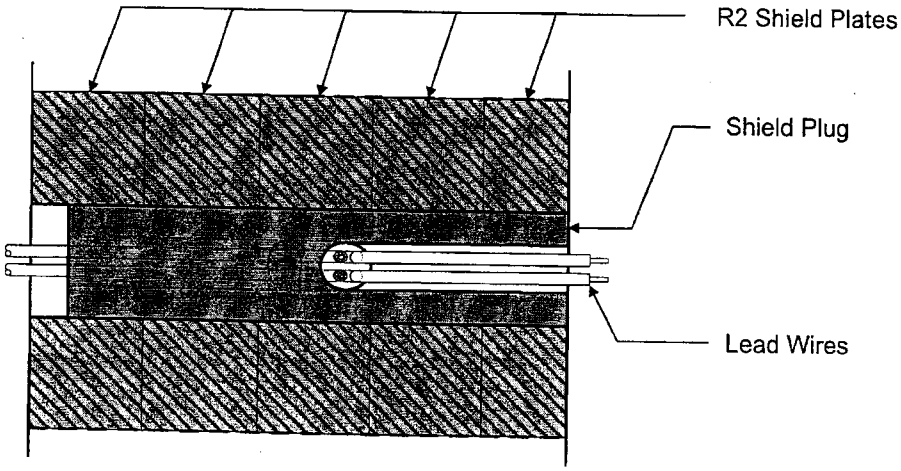

N.T.S.

Section "A - A"

EQUIPMENT QUALIFICATION DATASHEET (EQD)

Equipment Identification		
Full Component Tag Number or BNI Stock Code Number	24590-HLW-ME-HOP-HTR-00001B 24590-HLW-ME-HOP-HTR-00002A 24590-HLW-ME-HOP-HTR-00005A 24590-HLW-ME-HOP-HTR-00005B	Safety Classification ☒ SC ☒ SS ☐ APC-PAM
Equipment Datasheet Number	24590-HLW-MED-HOP-00013	
Description	HOP HEPA Preheaters Manufacturer / Supplier : Ellis & Watts International, Inc. Requisition No.: 24590-QL-MRA-MEE0-00001	Seismic Category ☒ SC-I ☐ SC-II ☐ SC-III ☐ SC-IV ☐ SC-III Seismic Interaction only See Page 1 - Mechanical Data Sheet
Location (Facility / Building and Room No.)	HLW Facility / @ EL. 14'-0"/ Preheaters located in filter cave wall between R5/C5 Filter Cave (Room No. H-0104) and R2/C2 Corridor (Room No. HC0210). Associated control panels located in the R2/C2 Corridor (Room No. HC0210). See Note 14, and Drawing No. 24590-HLW-P1-P23T-00208, *HLW Vitrification Building Equipment Location Plan EL. 14'-0" / Area 208*	

Safety Function(s) / PDSA Reference		
	1. Control and lower the relative humidity of the melter offgas, to protect the downstream HEPA filters from becoming saturated with moisture. (SS)	3.4.1.8, 4.4.3
	2. Provide primary confinement of radioactive materials during normal operations and accident conditions. The preheaters are part of the offgas pressure boundary. (SS)	3.4.1.8, 3.4.1.10, 4.4.3
	3. Provide secondary confinement of aerosols during normal, abnormal, and accident conditions. The preheaters are part of the C5 boundary. (SC)	3.4.2.1, 4.3.20
	4. Ensure the HEPA filters, filter housing, and the concrete around the preheater housing is not damaged and the preheater housing is not failed due to overheating. (SC)	3.3.5.4, 3.4.1.9, 4.3.4

Equipment Safety Function Type	☒ Passive Mechanical	☐ Active Mechanical	☐ Electrical
Seismic Safety Function ☒ Yes ☐ No	Seismic Operability Requirements ☐ During Seismic Event	☐ After Seismic Event	☒ None

Equipment Environmental Qualification (EEQ)

(Parameter values stated in this section do not include process conditions or operation induced conditions)

Classification of Environment ☒ Mild ☐ Harsh
Room No. HC0210 Contamination Class: C2 Radiation Class: R2
Room No. H-0104 Contamination Class: C5 Radiation Class: R5

Qualified Life (years) ☒ 40 ☐ Other

Parameter Type/Units	Parameter Value: Rm. No. HC0210	Parameter Value: Rm. No. H-0104	Parameter Duration (number)	Duration Units	WTP Source Document Number
Normal Ambients					
High Temperature (°F)	80	113	Note 18	Years	24590-HLW-U0D-W16T-00001
Low Temperature (°F)	66	59	Note 19	N/A	24590-HLW-U0D-W16T-00001
High Relative Humidity (%RH)	100	100	Note 20	N/A	24590-HLW-U0D-W16T-00001
Low Relative Humidity (%RH)	10	5	Note 20	N/A	24590-HLW-U0D-W16T-00001

EQUIPMENT QUALIFICATION DATASHEET (EQD)

Parameter Type/Units		Parameter Value Rm. No. HC0210	Parameter Value Rm. No. H-0104	Parameter Duration (number)	Duration Units	WTP Source Document Number
Normal Ambients						
High Pressure (in.-w.g.)		0	0	Note 21	N/A	24590-HLW-U0D-W16T-00001
Low Pressure (in.-w.g.)		-0.1	-1.4	Note 21	N/A	24590-HLW-U0D-W16T-00001
Radiation Dose Rate (mRad/hr)	Rm. No. HC0210	0.5	-	40	Years (Note 22)	24590-HLW-U0D-W16T-00001
	Rm. No. H-0104	-	35400	40		
Plant/Process Induced Vibration		☐ Yes ☒ No				
Additional Normal Ambient Information		N/A				
Abnormal Ambients						
High Temperature (°F)		148	126	8	hours / year	24590-HLW-MAC-C5V-00009
Low Temperature (°F)		40	40	Note 19	N/A	24590-HLW-U0D-W16T-00001
High Relative Humidity (%RH)		100	100	Note 20	N/A	24590-HLW-U0D-W16T-00001
Low Relative Humidity (%RH)		4	6	Note 20	N/A	24590-HLW-MAC-C5V-00009
High Pressure (in.-w.g)		4	4	Note 21	N/A	24590-HLW-U0D-W16T-00001
Low Pressure (in.-w.g)		-6.7	-6.7	Note 21	N/A	24590-HLW-U0D-W16T-00001
Radiation Dose Rate (mR/hr)	Rm. No. HC0210	0.5	-	0	Years (Note 22)	24590-HLW-U0D-W16T-00001
	Rm. No. H-0104	-	35400	0		
Exposure to Wet Sprinkler System	Rm. No. HC0210	Yes	-	2	hours	24590-HLW-U0D-W16T-00001
	Rm. No. H-0104	-	No	N/A		
Additional Abnormal Ambient Information		N/A				
Design Basis Events (DBE) Ambients						
High Temperature (°F)		115	135	1000	hours	24590-HLW-MAC-C5V-00009
Low Temperature (°F)		40	40	Note 19	N/A	24590-HLW-U0D-W16T-00001
High Relative Humidity (%RH)		100	100	1000	hours	24590-HLW-U0D-W16T-00001
Low Relative Humidity (%RH)		10	6	1000	hours	24590-HLW-MAC-C5V-00009
High Pressure (in.-w.g)		4	4	1000	hours	24590-HLW-U0D-W16T-00001
Low Pressure (in.-w.g)		-6.7	-6.7	1000	hours	24590-HLW-U0D-W16T-00001
Radiation Dose Rate (mR/hr)	Rm. No. HC0210	0.5	-	0	hours	24590-HLW-U0D-W16T-00001
	Rm. No. H-0104	-	35400	0		
Submergence	(see Note 17, flood height)	Yes	Yes	1000	hours	24590-HLW-U0D-W16T-00001
Chemical/Spray Exposure	Rm. No. HC0210	No	-	12.5	hours	24590-HLW-U0D-W16T-00001
	Rm. No. H-0104	-	No	N/A		
Additional DBE Information		N/A				

DBE Chemical Exposure Details	
DBE Chemical Types / Concentrations	None

EQUIPMENT QUALIFICATION DATASHEET (EQD)

Electrical Interfaces Supporting the Safety Function (see Note 13)	
Power Supply Voltage (VAC, VDC)	480V AC 3-Phase, 120V AC 1-Phase, and 120V AC 1-Phase (UPS)
Power Supply Frequency (Hz)	60 Hz
Power Connection Method	Fusible Disconnect in NEMA 4 Enclosure
I/O Signals to/from Equipment	Remote On/Off via discrete I/O. Inlet, outlet and housing temperature reading via 4-20 mA analog
I/O Connection Method	Terminal Blocks / Strip in NEMA 4 Enclosure

Mechanical Interfaces	
Mounting Configuration (orientation)	Vertical, thru-wall
Mounting Method (bolts, welds, etc.)	See Note 11
Auxiliary Devices	None

Equipment Seismic Qualification (ESQ)

Parameter	Title	Reference/Document Number	Version / Revision	Remarks
WTP Seismic Design Specification	Engineering Specification for Seismic Qualification of Seismic Category I/II Equipment and Tanks	24590-WTP-3PS-SS90-T0001	2	N/A
Specified Seismic Load Parameters	HLW Vitrification Building Seismic Analysis - In-Structure Response Spectra (ISRS)	24590-HLW-S0C-S15T-00009	E	use ISRS figure 46, 47, 48, 73, 74, and 75 per CCN 177700

Equipment Qualification Notes and Additional Information

Note 9. Qualification data to be provided by SELLER through the submittal process as required on G-321-E.

Note 10. Where pressure is given in inches of water column (in-w.c.) in the source document, it is generally assumed that this is in reference to atmospheric pressure and is therefore equivalent to inches of water gauge (in-w.g.).

Note 11. Liner cast into concrete wall. Plenum and shield plates are bolted to the liner.

Note 12. Not used.

Note 13. Electrical interfaces supporting the safety function provided in the R2/C2 corridor (Rm. No. HC0210) only. There is no electrical interface for the preheaters on the R5/C5 filter cave (Rm. No. H-0104) side.

Note 14. Through-wall equipment subject to HC0210 room environment on one side and H-0104 room environment on the other.

Note 15. Environment is "Mild" if equipment remains within manufacturer's rated environmental capability. If not, environment is "Harsh".

Note 16. Contents of this document are Dangerous Waste Permit affecting.

Note 17. Flood height is 1.58 ft. in Rm. No. H-0104 and HC0210 per 24590-HLW-U0D-W16T-00001. SELLER's design shall provide the option of connecting freestanding control panel enclosure to the concrete floor through a direct bolted connection using a steel transfer frame of 22" high, i.e. approximately 0.25 ft. above the flood height level. The purpose of the transfer frame is to allow up to 2" location tolerance of the attachment anchors/bolts to the building to prevent the cutting of rebar in the structure and to utilize existing steel embed in the floor. Seismic qualification including the transfer frame and anchors/ bolts shall be performed as required by the relevant specification in the Purchase Order.

Equipment Qualification Notes and Additional Information

Note 18. For thermal aging, the high normal temperature shall be assumed to subsist for 40 years less the duration of the high abnormal temperature. For any lesser qualified life, the normal and abnormal condition durations shall be assigned proportionally. The abnormal temperature is stated to subsist for a certain number of hours per year. It shall be taken to subsist for this number of hours for each year of the qualified life.

Note 19. The ability to provide the safety function at the low normal temperature, the low abnormal temperature or the low DBE temperature (whichever be the lowest) shall be established by test, analysis, or operating experience. The thermal aging at these respective low temperatures will be conservatively covered by the thermal aging per Note 18 above. Therefore, no duration is assigned for the low temperatures.

Note 20. The ability to provide the safety function at the extremes of the normal and abnormal humidity conditions, taking into consideration the high and the low normal and high and low abnormal, shall be established by test, analysis, or operating experience. No duration is assigned for the normal and abnormal humidity conditions.

Note 21. If the performance of the safety function of the equipment is affected by ambient pressure, the ability to provide the safety function at the extremes of the normal and abnormal pressure conditions, taking into consideration the high and the low normal and the high and low abnormal pressures, shall be established by test, analysis, or operating experience. No duration is assigned to the normal and abnormal pressure conditions.

Note 22. (1) If the abnormal radiation dose rate is the same as the normal radiation dose rate, the normal radiation dose rate shall be assumed to subsist for 40 years, or any lesser qualified life, and the duration of the abnormal radiation dose rate is "0."

(2) If the abnormal radiation dose rate is higher than the normal radiation dose rate, the abnormal radiation dose rate shall be assumed to subsist for 40 years, or any lesser qualified life, and the duration of the normal radiation dose rate is "0."

Note 23. The DBE conditions shall be taken to subsist for the stated number of hours following the qualified life of the equipment.

Note 24. Spray due to fire sprinkler actuation shall be taken to occur once over the entire qualified life duration for a period of 2 hours, even if the qualified life is a period less than 40 years. If spray qualification is provided for DBE conditions (whether for water or chemical spray), then separate qualification for the fire sprinkler spray need not be provided.

Note 25. The values stated in this EQD are the ambients and do not include the thermodynamic and radiation conditions imposed by the process fluids, self-heating, etc. The data pertaining to process fluid and service induced parameters are to be taken into account where significant, such as in thermal aging analyses. These data can be obtained from the equipment data sheets or the Equipment Specification.

Note 26. Equipment that is to be installed in inaccessible locations must be qualified to a 40-year life without the need for maintenance or replacement.

DOE Radioactive Materials Disclaimer:

Please note that source, special nuclear and byproduct materials, as defined in the Atomic Energy Act of 1954 (AEA), are regulated at the US Department of Energy (DOE) facilities exclusively by DOE acting pursuant to its AEA authority. DOE asserts, that pursuant to the AEA, it has sole and exclusive responsibility and authority to regulate source, special nuclear, and byproduct materials at DOE-owned nuclear facilities. Information contained herein on radionuclides is provided for process description purposes only.

EQUIPMENT QUALIFICATION DATASHEET (EQD)

Revision History

Rev	Description	System Engr	Equip Engr	Checked	Reviewed	E&NS	Approved	Date
4	Updated Mech Data Sheet Reference Data. Removed safety designations. Revised preheater sketch, added sensor thermowells and shield plugs. Added sketch of shield plug. Updated EQ Data Sheet using current EQD form (Rev 4). Added Notes 17 to 26. Re-issued for Purchase.	Mike O'Neill	Bernard Ip	James Krogness	Aaron Bronner	Chris Meng	Tom Hughes	11/11/10
3	General revision of Mech Data Sheet per updated References. Revised preheater sketch and added additional inlet/outlet thermowells. Added EQ Data Sheets. Incorporated 24590-WTP-M6N-M80T-00005. Re-issued for Purchase.	Mike O'Neill	Bernard Ip	James Krogness	Aaron Bronner	Chris Meng	John Julyk	8/5/09
2	Revised Quality Level for Offgas Pressure Boundary, Heating Elements & Control Panel to QL-1 and incorporated submittal 24590-QL-POA-MEE0-00001-02-00001	J Rouse	A. Cutrona	S Jain	Will Eaton	--	John Julyk	8/26/05
1	Issued for Flow & Thermal Analysis Data Revisions	J. Rewari	A. Cutrona	R. Tometczak	Jim Rouse	--	Eric Isern	3/8/05
0	Issued for Purchase	Jason Medina	A. Cutrona	Jagdish Rewari	D. Yarbrough	--	Eric Isern	5/26/04

R11308236

MECHANICAL SYSTEMS DATA SHEET: VESSEL

PLANT ITEM No.
24590-HLW-MV-RLD-VSL-00007

ISSUED BY RPP-WTP PDC

Project:	RPP-WTP	P&IDs:	24590-HLW-M6-RLD-00001 and 00006
Project No:	24590	Calculation:	Attachment 1
Project Site:	Hanford	Vessel Drawing	24590-HLW-MV-RLD-00025001/-00025002/-00025003/-00025004 (9)
Description:	Acidic Waste Vessel RLD-VSL-00007	Reports/Other Documents	Attachment 1

Reference Data

Charge Vessels (Tag Numbers)	RLD-VSL-00015A, RLD-VSL-00015B
Pulsejet Mixers / Agitators (Tag Numbers)	RLD-PJM-00005, RLD-PJM-00006, RLD-PJM-00007, RLD-PJM-00008
RFDs/Pumps (Tag Numbers)	RLD-RFD-00162A, RLD-RFD-00162B

Design Data

Quality Level		Q (Note 15)	Fabrication Specs	24590-WTP-3PS-MV00-T0001		
Seismic Category		SC-2	Design Code	ASME VIII Div 1		
Service/Contents		Radioactive Liquid	Code Stamp	Yes		
Design Specific Gravity		1.0	NB Registration	Yes		
Maximum Operating Volume	gal	15,758 (Note 3)	Weights (lbs)	Empty	Operating	Test
Total Volume	gal	18,145 (Note 3)	Estimated	43,000	186,000	194,000
Environmental Qualification		See EQ Sections				

Inside Diameter	inch	156			Wind Design	Not Required	
Length/Height (TL-TL)	inch	186			Snow Design	Not Required	
		Vessel Operating	Vessel Design	Coil/Jacket Design	Seismic Design	24590-WTP-3PS-MV00-T0002 24590-WTP-3PS-SS90-T0001	
Internal Pressure	psig	Atm	15	None			
External Pressure	psig	0.83	FV	None	Postweld Heat Treat	Not Required	
Temperature	°F	195	220 (Note 21)	None	Corrosion Allowance	inch	0.04 (Note 10 & 11)
Min. Design Metal Temp.	°F	40					

Materials of Construction

Component	Material	Minimum Thickness / Size	Containment
Top Head	SB 688 N08367	See Drawing	Auxiliary (Note 4)
Shell	SB 688 N08367	See Drawing	Primary (Note 4)
Bottom Head	SB 688 N08367	See Drawing	Primary (Note 4)
Support	SA 240 304 (Note 2)	See Drawing	N/A
Jacket/Coils/Half-Pipe Jacket	N/A	N/A	N/A
Internals (9)	SB 688 N08367 (for pulse jet mixers, charge vessels, & internal supports)	See Drawings & Note 22.	N/A
Pipe Seamless (9)	SB 690 N08367(for thermal sleeves & bubbler piping for N40A/B/C & N42A/B/C) / SB 622 N06022 (for all other internal piping, thermowells, and nozzles)	See Drawings & Note 22	Notes 1 and 4 ; thermowells are primary
Forgings/ Bar stock (9)	SB 564 N08367; SB 564 N06022 (for thermal nozzles, nozzles, & thermowells)	See Drawings & Note 22.	Thermal nozzles & thermowells are primary
Gaskets	N/A	N/A	N/A
Bolting	N/A	N/A	N/A

Miscellaneous Data

Orientation	Vertical	Support Type	Skirt
Insulation Function	Not Applicable	Insulation Material	Not Applicable
Insulation Thickness (inch)	Not Applicable	Internal Finish	Descaled as laid
		External Finish	Descaled as laid

Please note that source, special nuclear, and byproduct materials, as defined in the Atomic Energy Act of 1954 (AEA) are regulated at the U. S. Department of Energy (DOE) facilities exclusively by DOE acting pursuant to its AEA authority. DOE asserts that pursuant to AEA, it has sole and exclusive responsibility and authority to regulate source, special nuclear, and byproduct materials at DOE-owned nuclear facilities. Information contained herein on radionuclides is provided for process description purposes only.

Notes/Remarks

* To be determined by the vendor.

Note 1: *Nozzle necks below the high operating liquid level are Primary, others Auxiliary.*

Note 2: *Material shall have Carbon Content of 0.030% Max. Non-welded specialty items are excluded from this requirement.*

Note 3: *Vessel volumes are approximate and do not account for manufacturing tolerances, nozzles, and displacement of internals.*

Note 4: *All welds forming part of the primary and auxiliary containment including nozzle attachment welds shall be subjected to 100% volumetric examination.*

Note 5: *This vessel is located in a Black Cell.*

Note 6: *Contents of this document are Dangerous Waste Permit affecting.*

Note 7: *As a minimum, all welds on internal components and supports shall be dye-penetrant tested.*

Note 8: *Deleted.* 9

Note 9: *Deleted as per Report No. 24590-WTP-RPT-M-04-0007 Rev. 0 dated 29 Oct 2004.*

Note 10: *Seller shall ensure that an additional 0.10" is available for erosion in the bottom head and shall report the minimum thickness required for all specified loading conditions, exclusive of erosion and corrosion allowances.*

Note 11: *Seller shall ensure that an additional 0.05" is available for erosion in the interior conical surface of the pulse jet mixers.*

Note 12: *Deleted.*

Note 13: *This revision of the data sheet incorporates SDDR No. 24590-WTP-SDDR-PROC-04-00670 by reference.*

Note 14: *Required data for thermal stress analysis for the nozzle exposed to higher temperatures:*

- *Hot ejector transfers from vessel (Ejectors RLD-EJCTR-00008, -00050, -00056, & -00059):*
  - *a. Only one of the hot ejectors will be used at a time during transfers.*
  - *b. Transfer frequency = 1 transfer/24 hrs for 5.4 hrs; steam mass flow rate = 1423 lb/hr.*

Note 15: *Vessel to be designed, fabricated, tested to L-2 requirements defined in 24590-WTP-3PS-MV00-T0001.*

Note 16: *All hydrodynamic and overblow loads shall be included with the seismic analysis as per this data sheet.*

Note 17: *Please note that source, special nuclear and byproduct materials, as defined in the Atomic Energy Act of 1954 (AEA), are regulated at the U.S. Department of Energy (DOE) facilities exclusively by DOE acting pursuant to its AEA authority. DOE asserts, that pursuant to the AEA it has sole and exclusive responsibility and authority to regulate source, special nuclear, and byproduct materials at DOE-owned nuclear facilities. Information contained herein on radionuclides is provided for process description purposes only.*

Note 18: *The vessel design shall account for buoyancy effects due to the room flood height of 22 ft. assuming the vessel is empty (worst case).*

Note 19: *Revision 7 revises quality level, design specific gravity, operating & design temperature, operating external pressure, deleted weld overlay around ejector nozzles, added Notes 15 - 19, revised cyclic data, cyclic notes for parent vessel, hydrodynamic info, E&NS Safety Screen box, and added E&NS signature box. Added sections for MOB, revised Nozzle Loads, DOE Radioactive Materials Disclaimer (Note 17), Table of Nozzle Connections, and Equipment Qualification Datasheet.*

Note 20: *Revised Equipment Qualification data to new datasheet form and renumbered Equipment Qualification Notes for clarity. Revised Hydrodynamic Loading, PJM Overblow Loads, design pressures/temperatures for nozzles and Nozzle Loads.*

Note 21: *Design Guide 24590-WTP-GPG-M-050 states that design temperature shall be 25°F over maximum operating temperature.*

Note 22: *Materials are consistent with Calc. No. 24590-HLW-MVC-RLD-00009, Section 2.2.* 9

Seismic

Seismic Response Spectra curves: Figures 549, 550, and 552 from calculation 24590-HLW-S0C-S15T-00057 (See CCN 185273). Seismic analysis to be combined with operating conditions, single overblow, and any sloshing loads imposed. Sloshing loads on vessel internals are considered per ASCE 4-98. Analysis to consider worst case seismic loads on the vessel proper and on the vessel internals. The response curves and sloshing loads will be provided via the Material Requisition.

	MECHANICAL SYSTEMS DATA SHEET: VESSEL	PLANT ITEM No. 24590-HLW-MV-RLD-VSL-00007

Equipment Cyclic Data Sheet - Parent Vessel

Component Plant Item Number:	*24590-HLW-MV-RLD-VSL-00007*
Component Description	*Parent Vessel*

The information below is provisional and envelopes operational duty for fatigue assessment. It is not to be used as operational data.

Materials of Construction	*SB 688 N08367*
Design Life	*40 years*
Component Function and Life Cycle Description	*See Calculation 24590-HLW-MVC-11-00002.*

Load Type		Min	Max	Number of Cycles	Comment
Design Pressure	psig	*FV*	*15*	*10*	*Nominal assumption*
Operating Pressure	psig	*-6.0*	*0*	*3.8E7*	*Equipment Cyclic Data Sheet Note 3 (Parent Vessel)*
Operating Temperature	°F	*59*	*195*	*14,600*	*Equipment Cyclic Data Sheet Note 4 (Parent Vessel)*
Contents Specific Gravity		*1.0*	*1.0*	*N/A*	
Contents Level	inch	*Empty*	*Flooded*	*14,600*	*One cycle per day.*

Localized Features		
Nozzles	*Within 50°F of operating temperature range except as noted below*	*Normal operations will cause Superheated Steam at 358 °F design temperature to enter the vessel through the transfer ejectors (Nozzles N31, N32, N33 N39) once per day and through the emptying ejectors (Nozzles N13, N34, N35, N38) once per month.*
Air Inlet		
Delivery		
Supports		

Equipment Cyclic Data Sheet Notes - Parent Vessel

Note 1: *Cycle increase: The Seller must increase the numbers of operational cycles given above by 10% to account for commissioning duty unless otherwise noted.*

Note 2: *Perform fatigue assessment/analysis for the following nozzles and associated piping over 40 years from 0 psig at 59 °F to the pressure and temperature indicated in the Table of Nozzle Connections for the pressure/temperature cycles indicated (pressure cycles shall coincide with temperature cycles):*

a) *N27, N28, N31, N32, N33, N39 - 14,600 cycles*

b) *N13, N17, N18, N19, N34, N35, N38 - 480 cycles*

Note 3: *Values are bounding from Case 1 (-6.0 to 0.0 psig for 14,600 cycles) and Case 2 (-0.83 to -0.18 psig for 3.8E7 cycles) per 24590-HLW-MVC-30-00001, Appendix A, Sheet A-8.*

Note 4: *195°F value is conservative and used to provide design margin on 149°F minimum required value found in Reference 24590-HLW-MVC-30-00001, Rev B (24590-HLW-MVE-30-00001).*

Equipment Cyclic Data Sheet - PJMs

Component Plant Item Number:	*RLD-PJM-00005, RLD-PJM-00006, RLD-PJM-00007 & RLD-PJM-00008*
Component Description	*Pulse Jet Mixers*

The information below is provisional and envelopes operational duty for fatigue assessment. It is not to be used as operational data.

Materials of Construction	*SB 688 N08367*
Design Life	*40 years*
Component Function and Life Cycle Description	*This component is part of a mixing system. It repeatedly floods and empties. The action is caused by vacuum or air pressure being presented to the top nozzle. The surrounding parent vessel may contain any level of the fluid between the maximum operating level and the heel level. The PJM is subjected to buoyancy forces when immersed in the parent vessel contents. The internal vessel is in cyclic duty.*

Load Type		Min	Max	Number of Cycles	Comment
Design Pressure	psig	*FV*	*135*	*100*	*Nominal assumption*
Operating Pressure	psig	*F V*	*14*	*3.8E7*	*Max. Operating*
Operating Temperature	°F	*59*	*195*	*NA*	*Same as parent vessel*
Contents Specific Gravity		*1.0*	*1.0*	*NA*	*Same as parent vessel*
Contents Level	inch	*Empty*	*Flooded*	*3.8E7*	*Coincident with pressure cycles*
Thrust	lbf	*-262*	*262*	*3.8E7*	*See Note below*

Localized Features		
Nozzles		
Air Inlet		
Delivery		
Supports	*As above*	*As above with contents level changing coincident with pressure cycles.*

Equipment Cyclic Data Sheet Notes - PJMs

- ***Cycle increase: The Seller must increase the numbers of operational cycles given above by 10% to account for commissioning duty unless otherwise noted.***
- ***PJMs inside parent vessels shall have buoyancy effects considered. PJMs shall consider the liquid thrust effect. The PJM supports shall be designed to cycle between fully buoyant (PJM empty and parent vessel full) and fully loaded (PJM full and parent vessel empty) states. Thrust load shall be applied only to the fully buoyant state. Assume the parent vessel is full for 50% of the number of PJM cycles.***

BECHTEL	**MECHANICAL SYSTEMS DATA SHEET: VESSEL**	**PLANT ITEM No.** *24590-HLW-MV-RLD-VSL-00007*

Equipment Cyclic Data Sheet - Charge Vessels

Component Plant Item Number:	*RLD-VSL-00015A, RLD-VSL-00015B*
Component Description	*Charge Vessels*

The information below is provisional and envelopes operational duty for fatigue assessment. It is not to be used as operational data.

Materials of Construction	*SB 688 N08367*
Design Life	*40 years*
Component Function and Life Cycle Description	*This component is part of a pumping system. It repeatedly floods and empties. The action is caused by vacuum or air pressure being presented to the top nozzle. The surrounding parent vessel may contain any level of the fluid between the maximum operating level and the heel level. The charge vessel is subjected to buoyancy forces when immersed in the parent vessel contents. The vessel is in cyclic duty.*

Load Type		Min	Max	Number of Cycles	Comment
Design Pressure	psig	*FV*	*135*	*100*	*Nominal assumption*
Operating Pressure	psig	*FV*	*60*	*14,600*	
Operating Temperature	°F	*59*	*195*	*14,600*	*Same as parent vessel*
Contents Specific Gravity		*1.0*	*1.0*	*14,600*	*Same as parent vessel*
Contents Level	inch	*Empty*	*Flooded*	*14,600*	*Coincident with pressure cycles*

Localized Features		
Nozzles		
Air Inlet		
Delivery		
Supports	*buoyant to loaded*	*14,600 cycles*

Equipment Cyclic Data Sheet Notes - Charge Vessels

- ***Cycle increase: The Seller must increase the numbers of operational cycles given above by 10% to account for commissioning duty unless otherwise noted.***
- ***CVs inside parent vessels shall have buoyancy effects considered.***

Design Considerations for Loads Induced by Pulse Jet Mixers (PJMs)

Pulse Jet Mixers (PJMs) are designed to mix the vessel contents using a liquid jet discharge. PJMs are driven by compressed air. The mixing is required to enhance heat transfer, to break up hydrogen-containing particles, and to homogenize the solution. Normally, the PJMs are operated simultaneously within the parent vessel.

The PJMs operate in the following three cycles: Suction, Drive and Vent. During the suction cycle a vacuum is created in the PJM headspace and the level within the PJM rises to fill the PJM. During the drive cycle the PJM is pressurized and liquid is discharged. During the vent cycle, the pressure in the headspace approaches atmospheric and the level within the PJM is allowed to reach equilibrium.

Vessel components shall be designed to withstand loading induced by PJM operations as described herein.

Normal Operations: Liquid flows around internal structures within the parent vessel producing hydrodynamic loads such as drag and vortex shedding.

To mitigate the dynamic effects, the following pipe sizes dipped internal to the vessel are required to have a minimum first natural frequency that is double the vortex shedding frequency:

Nominal Pipe Size	Minimum First Natural Frequency
1 inch	13.2 Hz*
2 inch	7.4 Hz*
3 inch	5.0 Hz**

* See 24590-WTP-MVC-50-00001, Section 8.1.2.2 for vortex shedding frequency (4 PJM Class)

** By extrapolation from 1 inch and 2 inch

Overblow Condition: Occasionally the drive cycle lasts too long and compressed air is discharged from the PJM. Overblows can also occur during system calibration. One or multiple PJMs may overblow at any time. These conditions induce acoustic and bubble rise loads on structures.

All internal components shall be designed for the combination of normal operational hydrodynamic loads and overblow loads. Single overblows (SOB) are assumed to act concurrently with the seismic event, however multiple overblows (MOB) are not assumed to act concurrently with the seismic event. Figure 1 (below) provides the acoustic load intensity that encompasses both SOB and MOB.

Hydrodynamic Loads Due to Normal PJM Operations

Normal operation imposes a cyclical load as described in the following table:

4 PJM Class	Radial Direction		Axial Direction	
	Peak Positive (psi)	Peak Negative (psi)	Peak Positive (psi)	Peak Negative (psi)
Targets between vessel Center and PJM	0.3	-0.2	0.25	-0.2
Targets between PJM and vessel outer wall	0.8	-0.8	0.4	-0.8

The hydrodynamic pressure applies across the projected area of the component. Positive hydrodynamic forces act in the radial, outward direction and the vertical, upward direction. Seller shall apply the radial load simultaneously in the radial direction and normal to the radial direction in the horizontal plane.

PJM Overblow Loads

Discussion: *During normal operation, pulse jet mixers (PJMs) mix the fluid by pulling in (suction) and pushing out (drive) fluid. During an upset condition, designated as an 'overblow', air is discharged following the drive cycle of one or more PJMs. The load consists of acoustic pressure (2Hz to 200Hz) developed in the first 200ms of the event and a load due to the bubble rising through the fluid.*

The acoustic load and the bubble load are design loads as defined by ASME B&PVC, Section 8, Division 1, UG-22, applied statically. The acoustic load is not added to the bubble rise load because they occur at different times during the overblow event.

Acoustic Load

- ***The acoustic design load in Figure 1 is applied to the visible (as viewed from the overblow origin) surface of cylindrical targets such as pipes, charge vessels, and PJMs. The load is applied in the direction normal to the principal axis of the target as illustrated in Figure 2. Note: The intended net effective load on the target is equal to the projected (i.e. cross-sectional) area of the object times the acoustic design load (psi) indicated in Figure 1.***
- ***Each target is considered independent of the surrounding targets: e.g. the surrounding targets do not impede the acoustic wave by casting a shadow, as illustrated in Figure 2.***
- ***The load is not applied to small supports such as gussets, brackets, tabs, clamps, and bolts because they are rigid and the pressure drop across the target is negligible.***
- ***When the vessel contains multiple PJMs, the load from one PJM is independent of the load from other PJMs. The loads are not additive for multiple overblows.***
- ***No internal components shall be placed within 5 PJM nozzle diameters (5 * 4 in = 20 in) of a spherical zone centered at any overblowing PJM nozzle.***

Figure 1: Acoustic Design Load

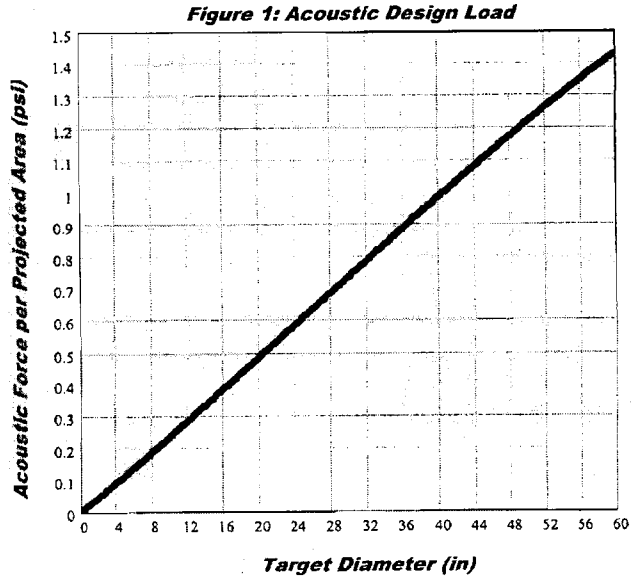

Figure 2: Load Application

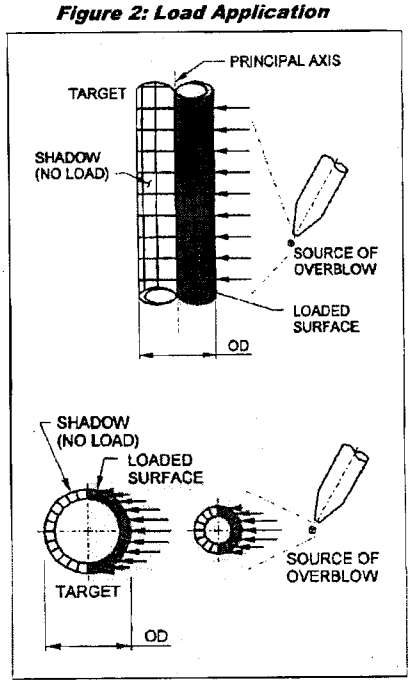

The following data is required to determine the load:

- ***Target Diameter***
- ***Target Principal Axis***

Overblow Source Coordinates

Number of Acoustic Cycles

1000 events X 40 cycles/event for a total of 40,000 acoustic cycles.

Bubble Rise Load

A vertical force per projected area of 1.7 psi is applied to the surfaces in the 36-inch diameter cylindrical zone centered at the overblowing PJM(s). The bubble can be at any elevation above the overblowing PJM and only affects one zone (36-inch diameter region) at a time. When there are multiple PJMs in a vessel (MOB), each PJM has it's own bubble. To simplify analysis the bubble can be applied in a continuous cylindrical zone above each PJM top head.

Number Bubble Rise Cycles

1000 events X 1 cycle/event

Nozzle Loads

Nozzle Number	Nozzle Size (in)	Orientation (V* / H**)	Load Case	Design Loads (Force in lbs, Moment in ft-lb)					
				Fx	Fy	Fz	Mx	My	Mz
N02	2	V	Weight	34	70	34	46	29	29
			Seismic	244	162	244	398	597	597
			Thermal	46	130	62	240	150	150
N03	2	V	Weight	34	56	34	46	29	29
			Seismic	244	162	244	398	597	597
			Thermal	46	41	62	75	150	150
N04	2	V	Weight	34	56	34	46	29	29
			Seismic	244	162	244	398	597	597
			Thermal	46	130	62	250	150	150
N05	2OD	V	Weight	34	56	34	46	29	29
			Seismic	244	162	244	398	597	597
			Thermal	46	41	62	75	150	150
N06	2OD	V	Weight	34	56	34	46	29	29
			Seismic	244	162	244	398	597	597
			Thermal	46	41	62	75	150	150
N07	1.5	V	Weight	20	32	20	26	16	16
			Seismic	138	92	138	228	342	342
			Thermal	80	170	130	200	86	160
N08	1.5	V	Weight	20	32	20	26	16	16
			Seismic	138	92	138	228	342	342
			Thermal	26	50	50	43	86	86
N09	2OD	V	Weight	34	56	34	46	29	29
			Seismic	244	162	244	398	597	597
			Thermal	46	220	62	100	150	150
N10	2	V	Weight	34	90	34	46	29	29
			Seismic	244	162	244	398	597	597
			Thermal	46	120	62	110	150	240
N11	2	V	Weight	34	56	34	46	29	29
			Seismic	244	162	244	398	597	597
			Thermal	120	70	62	110	150	290
N12	2	V	Weight	34	56	34	46	29	29
			Seismic	244	162	244	398	597	597
			Thermal	90	41	62	75	150	200
N13	2	V	Weight	34	100	34	46	29	29
			Seismic	244	162	244	398	597	597
			Thermal	90	520	150	270	150	240
N15	2	V	Weight	34	56	34	46	29	29
			Seismic	244	162	244	398	597	597
			Thermal	46	60	62	75	150	150
N16	2	V	Weight	34	56	34	46	29	29
			Seismic	244	162	244	398	597	597
			Thermal	70	41	62	75	150	210

Nozzle Number	Nozzle Size (in)	Orientation (V* / H**)	Load Case	Design Loads (Force in lbs, Moment in ft-lb)					
				Fx	Fy	Fz	Mx	My	Mz
N17	3	V	Weight	70	130	70	140	180	110
			Seismic	245	163	245	783	523	790
			Thermal	210	185	250	1080	222	665
N18	3	V	Weight	70	130	70	115	115	115
			Seismic	245	163	245	783	523	783
			Thermal	210	640	330	1270	222	665
N19	4	V	Weight	120	192	120	342	214	214
			Seismic	834	557	834	2960	4440	4440
			Thermal	159	550	212	563	1125	1125
N20	2OD	V	Weight	34	56	34	46	29	29
			Seismic	244	162	244	398	597	597
			Thermal	46	80	62	75	150	150
N21	2OD	V	Weight	34	56	34	46	29	29
			Seismic	244	162	244	398	597	597
			Thermal	46	41	62	100	150	150
N22	2	V	Weight	34	56	34	46	29	29
			Seismic	244	162	244	398	597	597
			Thermal	46	41	62	75	150	150
N23	2	V	Weight	34	100	34	46	29	29
			Seismic	244	162	244	398	597	597
			Thermal	46	41	62	150	150	150
N26	2	V	Weight	34	56	34	46	29	29
			Seismic	244	162	244	398	597	597
			Thermal	46	41	110	470	150	150
N27	2	V	Weight	34	80	34	46	29	29
			Seismic	244	162	244	398	597	597
			Thermal	46	170	160	550	150	150
N28	2	V	Weight	34	90	34	46	29	50
			Seismic	244	162	244	398	597	597
			Thermal	46	100	130	430	150	150
N31	2	V	Weight	34	80	34	46	29	29
			Seismic	244	162	244	398	597	597
			Thermal	46	310	200	780	150	150
N32	2	V	Weight	34	56	34	46	29	29
			Seismic	244	162	244	398	597	597
			Thermal	46	90	110	410	150	150
N33	2	V	Weight	34	56	34	46	29	29
			Seismic	244	162	244	398	597	597
			Thermal	46	280	170	600	150	150
N34	2	V	Weight	34	56	34	46	29	29
			Seismic	244	162	244	398	597	597
			Thermal	80	320	170	590	150	150

Nozzle Number	Nozzle Size (in)	Orientation (V* / H**)	Load Case	Design Loads (Force in lbs, Moment in ft-lb)					
				Fx	Fy	Fz	Mx	My	Mz
N35	2	V	Weight	34	56	34	46	29	29
			Seismic	244	162	244	398	597	597
			Thermal	46	310	190	710	150	150
N37	1.5	V	Weight	20	32	20	26	16	16
			Seismic	138	92	138	228	342	342
			Thermal	26	40	35	43	86	86
N38	2	V	Weight	34	110	34	46	29	29
			Seismic	244	162	244	398	597	597
			Thermal	46	210	62	180	150	150
N39	2	V	Weight	34	80	34	46	29	29
			Seismic	244	162	244	398	597	597
			Thermal	46	240	160	590	150	150
N41	8	H	Weight	310	500	310	490	615	615
			Seismic	325	325	325	786	1180	1180
			Thermal	1050	530	595	2070	2320	1920
N43	2	V	Weight	34	90	34	46	29	29
			Seismic	244	162	244	398	597	597
			Thermal	46	170	62	170	150	260
N48	1.5	V	Weight	20	60	20	26	16	16
			Seismic	138	92	138	228	342	342
			Thermal	26	140	90	190	86	86

Notes for Nozzle Loads

A. V = vertical head nozzle - values are x = North/South, y = vertical, z = East/West (global coordinates), Vessel defined as North.

B. H = horizontal shell nozzle - values are per axes shown in 24590-WTP-3PS-MV00-T0001, Appendix A (local coordinates).

C. Nozzle loads shown in the above table (CCN 177071) are to be used in place of those specified in 24590-WTP-3PS-MV00-T0001, Appendix A, – do not apply any thermal reduction factors.

D. Nozzle loads not listed in the above table are listed in 24590-WTP-3PS-MV00-T0001, Appendix A.

Table of Nozzle Connections

Internal vessel piping and nozzle design shall be compatible with the following **external** connection pipe size and pressure/temperature conditions outside the vessel:

Nozzle	Connecting Pipe Size	Design Pressure (psig)	Design Temperature (°F)
N01	2" - 40S	135	113
N02	2" - 40S	135	113
N03	2" - 40S	135	113
N04	2" - 40S	135	113
N05	1" - 40S	135	113
N06	1" - 40S	135	113
N07	1-1/2" - 40S	15	165
N08	1-1/2" - 40S	15	165
N09	1" - 40S	110	200
N10	2" - 40S	110	200

Nozzle	Connecting Pipe Size	Design Pressure (psig)	Design Temperature (°F)
N11	2" - 40S	109	358
N12	2" - 40S	109	358
N13	2" - 40S	109	358
N14	CAPPED	N/A	N/A
N15	2" - 40S	109	358
N16	2" - 40S	109	358
N17	3" - 40S	50	225
N18	3" - 40S	50	225
N19	4" - 40S	50	225
N20	1" - 40S	15	113
N21	1" - 40S	15	113
N22	2" - 40S	135	113
N23	2" - 40S	135	113
N24	DELETED	N/A	N/A
N25	DELETED	N/A	N/A
N26	2" - 40S	-14.7	200
N27	2" - 40S	109	358
N28	2" - 40S	109	358
N29	DELETED	N/A	N/A
N30	DELETED	N/A	N/A
N31	2" - 40S	109	358
N32	2" - 40S	135	358
N33	2" - 40S	135	358
N34	2" - 40S	135	358
N35	2" - 40S	135	358
N36	1-1/2" - 40S	15	165
N37	1-1/2" - 40S	15	165
N38	2" - 40S	109	358
N39	2" - 40S	109	358
N40	6" - 40S	Parent (Pressure and temperature is same as design (15 psig and 220°F)	
N40A	1/2" - 40S	15	113
N40B	1/2" - 40S	135	113
N40C	1/2" - 40S	135	113
N41	8" - 10S	50	200
N42	6" - 40S	Parent (Pressure and temperature is same as design (15 psig and 220°F)	
N42A	1/2" - 40S	15	113
N42B	1/2" - 40S	135	113
N42C	1/2" - 40S	135	113
N43	2" - 40S	110	200
N44	1" - 40S	110	200
N45	DELETED	N/A	N/A
N46	DELETED	N/A	N/A
N47	1/2" - 80S	-14.7	113
N48	1-1/2" - 80S	109	358

EQUIPMENT QUALIFICATION DATASHEET (EQD)

Equipment Identification		
Full Component Tag Number or BNI Stock Code Number	24590-HLW-MV-RLD-VSL-00007	Safety Classification ☐ SC ☒ SS ☐ APC-PAM
Equipment Datasheet Number	24590-HLW-MVD-RLD-00005	
Description	Radioactive Liquid Waste Disposal System (RLD) Acidic Waste Vessel.	Seismic Category ☐ SC-I ☒ SC-II ☐ SC-III ☐ SC-IV ☐ SC-III Seismic Interaction only
Location (Facility / Building and Room No.)	HLW Building; located in Room H-B014, Elev. (-) 21'-00", Column lines J/11.5.	
Safety Function(s)	The vessel provides primary confinement of the HLW process waste streams. Reference: 24590-WTP-PSAR-ESH-01-002-04, Section 4.4.16.2, Preliminary Documented Safety Analysis to Support Construction Authorization; HLW Facility Specific Information.	
Equipment Safety Function Type	☒ Passive Mechanical ☐ Active Mechanical ☐ Electrical	
Seismic Safety Function ☒ Yes ☐ No	Seismic Operability Requirements ☐ During Seismic Event ☐ After Seismic Event ☒ None	

Equipment Environmental Qualification (EEQ)

(Parameter values stated in this section do not include process conditions or operation induced conditions)

Classification of Environment ☒ Mild ☐ Harsh

Qualified Life (years) ☒ 40 ☐ Other

Parameter Type/Units	Parameter Value	Parameter Duration (number)	Duration Units	WTP Source Document Number
Normal Ambients				
High Temperature (°F)	113	Note a	Years	24590-HLW-U0D-W16T-00001, E-Note 1
Low Temperature (°F)	59	Note b	N/A	24590-HLW-U0D-W16T-00001, E-Note 1
High Relative Humidity (%RH)	100	Note c	N/A	24590-HLW-U0D-W16T-00001, E-Note 1
Low Relative Humidity (%RH)	5	Note c	N/A	24590-HLW-U0D-W16T-00001, E-Note 1
High Pressure (in.-w.g.)	0 (E-Note 2)	Note d	N/A	24590-HLW-U0D-W16T-00001, E-Note 1
Low Pressure (in.-w.g.)	(-) 1.1 (E-Note 2)	Note d	N/A	24590-HLW-U0D-W16T-00001, E-Note 1
Radiation Dose Rate (mRad/hr)	105000 (E-Note 4)	40 (E-Note 3)	Years (Note e-1)	24590-HLW-U0D-W16T-00001, E-Note 1
Plant/Process Induced Vibration	☐ Yes ☒ No			
Additional Normal Ambient Information:	N/A			

EQUIPMENT QUALIFICATION DATASHEET (EQD)

Equipment Environmental Qualification (EEQ) *(continued)*

Parameter Type/Units	Parameter Value	Parameter Duration (number)	Duration Units	WTP Source Document Number
Abnormal Ambients				
High Temperature (°F)	113	8	hours / year	24590-HLW-U0D-W16T-00001, E-Note 1
Low Temperature (°F)	40	Note b	N/A	24590-HLW-U0D-W16T-00001, E-Note 1
High Relative Humidity (%RH)	100c	Note c	N/A	24590-HLW-U0D-W16T-00001, E-Note 1
Low Relative Humidity (%RH)	10	Note c	N/A	24590-HLW-U0D-W16T-00001, E-Note 1
High Pressure (in.-w.g)	4 (E-Note 2)	Note d	N/A	24590-HLW-U0D-W16T-00001, E-Note 1
Low Pressure (in.-w.g)	(-) 6.7 (E-Note 2)	Note d	N/A	24590-HLW-U0D-W16T-00001, E-Note 1
Radiation Dose Rate (mR/hr)	105000 (E-Note 4)	0 (E-Note 3)	Years (Note e-1)	24590-HLW-U0D-W16T-00001, E-Note 1
Exposure to Wet Sprinkler System	☐ Yes ☒ No	N/A	hours	24590-HLW-U0D-W16T-00001, E-Note 1
Additional Abnormal Ambient Information	N/A			
Design Basis Events (DBE) Ambients				
High Temperature (°F)	123	1000	hours	24590-HLW-U0D-W16T-00001, E-Note 1
Low Temperature (°F)	40	Note b	N/A	24590-HLW-U0D-W16T-00001, E-Note 1
High Relative Humidity (%RH)	100c	40	hours	24590-HLW-U0D-W16T-00001, E-Note 1
Low Relative Humidity (%RH)	8	1000	hours	24590-HLW-U0D-W16T-00001, E-Note 1
High Pressure (in.-w.g)	4	8	hours	24590-HLW-U0D-W16T-00001, E-Note 1
Low Pressure (in.-w.g)	(-) 6.7 (E-Note 2)	1000	hours	24590-HLW-U0D-W16T-00001, E-Note 1
Radiation Dose Rate (mR/hr)	105000 (E-Note 4)	0 (E-Note 3)	hours	24590-HLW-U0D-W16T-00001, E-Note 1
Submergence	☐ Yes ☒ No	N/A	hours	24590-HLW-U0D-W16T-00001, E-Note 5
Chemical/Spray Exposure	☒ Yes ☐ No	12.5	hours	24590-HLW-U0D-W16T-00001, E-Note 1
Additional DBE Information	N/A			

DBE Chemical Exposure Details	
DBE Chemical Types / Concentrations	Nitric Acid 1M Sodium Hydroxide 5M

EQUIPMENT QUALIFICATION DATASHEET (EQD)

Electrical Interfaces Supporting the Safety Function	
Power Supply Voltage (VAC, VDC)	N/A
Power Supply Frequency (Hz)	N/A
Power Connection Method	N/A
I/O Signals to/from Equipment	N/A
I/O Connection Method	N/A

Mechanical Interfaces	
Mounting Configuration (orientation)	Vertically Mounted , Skirt
Mounting Method (bolts, welds, etc.)	Bolted Anchor Chairs
Auxiliary Devices	Charge Vessels RLD-VSL-00015A, RLD-VSL-00015B, Pulse Jet Mixers RLD-PJM-00005, RLD-PJM-00006, RLD-PJM-00007, RLD-PJM-00008, Reverse Flow Diverters RLD-RFD-00162A, RLD-RFD-00162B; all devices are internal to the parent vessel.

Equipment Seismic Qualification (ESQ)

Parameter	Title	Reference/Document Number	Version / Revision	Remarks
WTP Seismic Design Specification	Engineering Specification for Seismic Qualification of Seismic Category I/II Equipment and Tanks Engineering Specification for Seismic Qualification Criteria for Pressure Vessels	24590-WTP-3PS-SS90-T0001 24590-WTP-3PS-MV00-T0002	2 2	N/A
Specified Seismic Load Parameters	HLW Vitrification Building Seismic Analysis - WSGM In-Structure Response Spectre (ISRS)	24590-HLW-S0C-S15T-00057	A	CCN: 185273; WSGM ISRS Curves: Figures 549, 550, and 552

Equipment Qualification Notes and Additional Information

Note a) For thermal aging, the high normal temperature shall be assumed to subsist for 40 years less the duration of the high abnormal temperature. For any lesser qualified life, the normal and abnormal condition durations shall be assigned proportionally. The abnormal temperature is stated to subsist for a certain number of hours per year. It shall be taken to subsist for this number of hours for each year of the qualified life.

Note b) The ability to provide the safety function at the low normal temperature, the low abnormal temperature or the low DBE temperature (whichever be the lowest) shall be established by test, analysis, or operating experience. The thermal aging at these respective low temperatures will be conservatively covered by the thermal aging per item a) above. Therefore, no duration is assigned for the low temperatures.

Note c) The ability to provide the safety function at the extremes of the normal and abnormal humidity conditions, taking into consideration the high and the low normal and high and low abnormal, shall be established by test, analysis, or operating experience. No duration is assigned for the normal and abnormal humidity conditions.

Note d) If the performance of the safety function of the equipment is affected by ambient pressure, the ability to provide the safety function at the extremes of the normal and abnormal pressure conditions, taking into consideration the high and the low normal and the high and low abnormal pressures, shall be established by test, analysis, or operating experience. No duration is assigned to the normal and abnormal pressure conditions.

Note e) (1) If the abnormal radiation dose rate is the same as the normal radiation dose rate, the normal radiation dose rate shall be assumed to subsist for 40 years, or any lesser qualified life, and the duration of the abnormal radiation dose rate is "0."

(2) If the abnormal radiation dose rate is higher than the normal radiation dose rate, the abnormal radiation dose rate shall be assumed to subsist for 40 years, or any lesser qualified life, and the duration of the normal radiation dose rate is "0."

Note f) The DBE conditions shall be taken to subsist for the stated number of hours following the qualified life of the equipment.

Note g) Spray due to fire sprinkler actuation shall be taken to occur once over the entire qualified life duration for a period of 2 hours, even if the qualified life is a period less than 40 years. If spray qualification is provided for DBE conditions (whether for water or chemical spray), then separate qualification for the fire sprinkler spray need not be provided.

Note h) The values stated in this EQD are the ambients and do not include the thermodynamic and radiation conditions imposed by the process fluids, self-

EQUIPMENT QUALIFICATION DATASHEET (EQD)

Equipment Qualification Notes and Additional Information

heating, etc. The data pertaining to process fluid and service induced parameters are to be taken into account where significant, such as in thermal aging analyses. These data can be obtained from the equipment data sheets or the Equipment Specification.

Note i) Equipment that is to be installed in inaccessible locations must be qualified to a 40-year life without the need for maintenance or replacement.

E-Note 1: BNI (BUYER) shall perform Equipment Environmental Qualification in accordance with 24590-WTP-DC-ENG-06-001, Design Criteria for Equipment Seismic and Environmental Qualification.

E-Note 2: Where pressure is given in inches of water column (in-w.c.) in the source document, it is generally assumed that this is in reference to atmospheric pressure and is therefore equivalent to inches of water gage (in-w.g.).

E-Note 3: Normal, Abnormal, and DBE dose rates are the same, therefore, abnormal and DBE doses do not add to total integrated dose based on normal dose rates over 40 years.

E-Note 4: Radiation Dose Rates are for determining shielding requirements only for the black cell and are not at the source (vessel). Since the vessel is all metallic and the source has no neutron components for material embrittlement, the dose rates are of no concern on the vessel or its subcomponents.

E-Note 5: Flood height for room is 22 ft above the cell floor (cell floor is at -21' elevation), a buoyancy evaluation has to be performed where vessel is treated as fully submerged to verify anchorage is adequate for vessel retention.

EQUIPMENT QUALIFICATION DATASHEET (EQD)

Screening / Evaluation Required? If yes per 24590-WTP-GPP-SREG-002, E&NS signature required below	X	Yes		No

Approval

Rev	Description	System Engineer	Vessel Engineer	Checked	Reviewed/ MET	E&NS	Approved	Date
0	Issued for Purchase	R Rao	S.L. Lee	M Wright/ C Slater	N/A	N/A	M Hoffmann	09/03/03
1	Added black cell requirement	M Grindel	M Bala	C Slater/ M. Wright	N/A	N/A	C. Morley	02/05/04
2	Revised as Noted, Re-Issued for Purchase	M Grindel	S.L. Lee	T Galioto/ S Atri/ C Slater	N/A	N/A	M Hoffmann	06/03/04
3	Revised as Noted & added notes 9 - 13	T Galioto	S.L. Lee	D Adler/ C Slater	S Cross / E Isern	N/A	M Hoffmann	09/23/04
4	Revised to delete note 9	T Galioto	S.L. Lee	C Slater	S Cross / E Isern	N/A	M Hoffmann	11/18/04
5	Revised as Noted & added note 14	S Cross	S.L. Lee	C Slater / R Peters	E Isern / D Adler	N/A	M Hoffmann	04/18/05
6	Revised per Note 15 on sheet 2	R Peters	S.L. Lee	R Peters P Polani	D Adler / C Slater	N/A	J Julyk	10/28/05
7	Revised per Note 19 on sheet 2	R Gibbs	R Peters	M. Seed	C Figley	C Meng	J Julyk	08/13/08
8	Incorporated 24590-QL-MRG-MVA0-00002-T0001. Revised per Note 20 on page 2, and as noted by revision triangles.	R Gibbs	R Peters	W Wilcox	D Adler	C Meng	J Julyk	10/4/10
9	Revised Materials of Construction for vessel internals and piping	John Bennett R. PETERS FOR JOHN BENNETT PER EDR 24590-HLW--EDR-MS-10-0053 REV.0	R Peters RP MS PETERS	B Dunlap	D Adler	C Meng	J Julyk	1/14/11

INCORPORATES 24590-HLW-MVN-RLD-00029 RP 1/14/11

ATTACHMENT 1: Page 1 of 3
REFERENCES for Datasheet: 24590-HLW-MVD-RLD-00005, Rev 9
Vessel Tag: RLD-VSL-00007

Data	Document #	Rev	Document Title	Comments
Quality Level	24590-HLW-M6-RLD-00001	3	P&ID HLW - Radioactive Liquid Waste Disposal System Active Effluent Collection	See Note 12 on P&ID
Seismic Category	24590-HLW-M6-RLD-00001	3	P&ID HLW - Radioactive Liquid Waste Disposal System Active Effluent Collection	See Note 12 on P&ID
Design Specific Gravity	24590-HLW-MVC-11-00002	0	Process Information for Vessels, HOP-VSL-00903, HOP-VSL-00904 and RLD-VSL-00007	0.995 SG. See Input 18 of Calc. 24590-HLW-MVC-11-00002 Rev. 0.
Min./Max. Specific Gravity	24590-HLW-MVC-11-00002	0	Process Information for Vessels, HOP-VSL-00903, HOP-VSL-00904 and RLD-VSL-00007	0.994/0.995 SG. See Input 18 of Calc. 24590-HLW-MVC-11-00002 Rev. 0.
Max Operating Volume	24590-HLW-M6C-RLD-00002	C	HLW Acidic Waste Vessel RLD-VSL-00007 Sizing Calculation	Section 8
Total Volume	24590-HLW-M6C-RLD-00002	C	HLW Acidic Waste Vessel RLD-VSL-00007 Sizing Calculation	Section 8
Inside Diameter	24590-HLW-M6C-RLD-00002	C	HLW Acidic Waste Vessel RLD-VSL-00007 Sizing Calculation	Section 8
Length TL-TL	24590-HLW-M6C-RLD-00002	C	HLW Acidic Waste Vessel RLD-VSL-00007 Sizing Calculation	Section 8
Case 1: Operating Pressure (Min.)	24590-HLW-MVC-11-00002	0	Process Information for Vessels, HOP-VSL-00903, HOP-VSL-00904 and RLD-VSL-00007	-167 in WG (-6 psig). See Assumption 86 of Calc. 24590-HLW-MVC-30-00001 Rev. B. Values used in datasheet are bounding from Case 1 and Case 2 per 24590-HLW-MVC-30-00001, Appendix A, Sheet A-8.
Case 2: Operating Pressure (Min./Max.)	24590-HLW-MVC-11-00002	0	Process Information for Vessels, HOP-VSL-00903, HOP-VSL-00904 and RLD-VSL-00007	-23 in WG/-5 in WG (-0.83 psig/-0.18 psig). See Input 4 of Calc. 24590-HLW-MVC-11-00002 Rev. 0. Values used in datasheet are bounding from Case 1 and Case 2 per 24590-HLW-MVC-30-00001, Appendix A, Sheet A-8.
Operating Pressure (external)	24590-HLW-MVC-11-00002	0	Process Information for Vessels, HOP-VSL-00903, HOP-VSL-00904 and RLD-VSL-00007	-0.83 psig. See Input 14 of Calc. 24590-HLW-MVC-11-00002 Rev. 0.
Operating Pressure (internal)	24590-HLW-MVC-11-00002	0	Process Information for Vessels, HOP-VSL-00903, HOP-VSL-00904 and RLD-VSL-00007	0.0 in WG
Design Pressure (internal)	24590-WTP-DB-ENG-01-001	1P	Basis of Design	15 psig value is provided in Section 16
Design Pressure (external)	24590-WTP-GPG-M-050	2	Pressure Vessel and Heat Exchanger Design Guide	FV if appropriate
Jacket Design Pressure (internal)	N/A			N/A
Operating Temp (Min./Max.)	24590-HLW-MVC-11-00002	0	Process Information for Vessels, HOP-VSL-00903, HOP-VSL-00904 and RLD-VSL-00007	59 F/149 F 195°F value is conservative and used to provide design margin on 149°F maximum operating value found in Reference 24590-HLW-MVC-11-00002 (per 24590-HLW-MVE-11-00005).
Design Temp	24590-WTP-GPG-M-050	2	Pressure Vessel and Heat Exchanger Design	Design Guide states adding 25F to max operating.

ATTACHMENT 1: Page 2 of 3
REFERENCES for Datasheet: 24590-HLW-MVD-RLD-00005, Rev 9
Vessel Tag: RLD-VSL-00007

Data	Document #	Rev	Document Title	Comments
			Guide	220 F is used to account for any future changes and is conservative.
Jacket Design Temp	N/A			N/A
Corrosion Allowance	24590-HLW-N1D-RLD-00001	6	RLD-VSL-00007 (HLW) Acidic Waste Vessel, Corrosion Evaluation	
Materials of Construction	24590- HLW-N1D-RLD-00001 24590-HLW-MV-RLD-00003	6 1	RLD-VSL-00007 (HLW) Acidic Waste Vessel, Corrosion Evaluation Equipment Assembly Acidic Waste Vessel RLD-VSL-00007	
Design Pressure (PJM) - Min./Max.	24590-HLW-MVC-30-00001	B	HLW Vessel Cyclic Datasheet Inputs	FV/135 psig. Worst case air loading to PJMs if plugged
Operating Pressure (PJM) - Min./Max.	24590-HLW-MVC-30-00001	B	HLW Vessel Cyclic Datasheet Inputs	FV/14 psig.
Operating Temperature (PJM) - Min./Max.	24590-HLW-MVC-11-00002	0	Process Information for Vessels, HOP-VSL-00903, HOP-VSL-00904 and RLD-VSL-00007	Same value as the parent vessel
Specific Gravity (PJM)	24590-HLW-MVC-11-00002	0	Process Information for Vessels, HOP-VSL-00903, HOP-VSL-00904 and RLD-VSL-00007	Same as parent vessel.
Design Pressure (Charge Vessels) - Min./Max.	24590-HLW-MVC-30-00001	B	HLW Vessel Cyclic Datasheet Inputs	FV/135 psig. worst case air loading to charge vessels if RFD plugged
Operating Pressure (Charge Vessels) - Min./Max.	24590-HLW-MVC-30-00001	B	HLW Vessel Cyclic Datasheet Inputs	FV/60 psig.
Operating Temperature (Charge Vessels) - Min./Max.	24590-HLW-MVC-11-00002	0	Process Information for Vessels, HOP-VSL-00903, HOP-VSL-00904 and RLD-VSL-00007	Same values as parent vessel.
Specific Gravity (Charge Vessels)	24590-HLW-MVC-11-00002	0	Process Information for Vessels, HOP-VSL-00903, HOP-VSL-00904 and RLD-VSL-00007	Same as parent vessel.
Steam Ejector Mass Flow Rate	24590-HLW-M6C-RLD-00008	D	RLD Steam Ejector Sizing Calculation	
Cyclic Data (Vessel)	24590-HLW-MVC-30-00001	B	HLW Vessel Cyclic Datasheet Inputs	
Cyclic Data (PJM)	24590-HLW-MVC-30-00001	B	HLW Vessel Cyclic Datasheet Inputs	
Cyclic Data (Charge Vessels)	24590-HLW-MVC-30-00001	B	HLW Vessel Cyclic Datasheet Inputs	
Hydrodynamic Loads	24590-WTP-MVC-50-00001	A	Hydrodynamic Loads for Normal PJM Operation in Vessels with Newtonian Fluids	Section 8.2.1, Table 8 for 4 PJM class vessels
Single PJM Overblow Loads	24590-WTP-MVC-50-00001	A	Hydrodynamic Loads for Normal PJM Operation in Vessels with Newtonian Fluids	
Single Overblow Cycles	24590-HLW-MVC-30-00001	B	HLW Vessel Cyclic Datasheet Inputs	1000 cycles for single PJM Overblow, see 24590-HLW-MVE-30-00002
Multiple Overblow	24590-HLW-MVC-30-00001	B	HLW Vessel Cyclic Datasheet Inputs	24590-HLW-MVE-30-00001 (24590-HLW-MVE-30-00002)
Multiple Overblow Cycles	24590-HLW-MVC-30-00001	B	HLW Vessel Cyclic Datasheet Inputs	24590-HLW-MVE-30-00001 (24590-HLW-MVE-30-00002)

ATTACHMENT 1: Page 3 of 3
REFERENCES for Datasheet: 24590-HLW-MVD-RLD-00005, Rev 9
Vessel Tag: RLD-VSL-00007

Data	Document #	Rev	Document Title	Comments
Nozzle Loads	24590-WTP-3PS-MV00-T0001 177071	3 N/A	Pressure Vessel Design Specification Supplement Nozzle Design Loads for RLD-VSL-00007 & 00008 (Supersedes CCN 166594)	
Nozzle Design Pressure and Temperature	24590-HLW-M6X-RLD-00003 24590-HLW-M6X-RLD-00016	3 4	Line List for 24590-HLW-M6-RLD-00001, Rev 3 Line List for 24590-HLW-M6-RLD-00006, Rev 4	N19 (24590-HLW-M6N-RLD-00227). N40A, N40B, N40C, N42A, N42B, and N42C (24590-HLW-M6N-30-00026).
Connecting Pipe Size	24590-HLW-M6X-RLD-00003 24590-HLW-M6X-RLD-00016	3 4	Line List for 24590-HLW-M6-RLD-00001, Rev 3 Line List for 24590-HLW-M6-RLD-00006, Rev 4	N19 (24590-HLW-M6N-RLD-00227). N40A, N40B, N40C, N42A, N42B, and N42C (24590-HLW-M6N-30-00026).
Connecting Pipe Material Class	24590-WTP-3PB-P000-TN11E 24590-WTP-3PB-P000-TN11K 24590-WTP-3PB-P000-TS11B 24590-WTP-3PB-P000-TS11F 24590-WTP-3PB-P000-TS11P 24590-WTP-3PB-P000-TS11Y 24590-WTP-3PB-P000-TS14E	10 2 31 11 18 13 6	Piping Material classification Pipe Class N11E Piping Material classification Pipe Class N11K Piping Material classification Pipe Class S11B Piping Material classification Pipe Class S11F Piping Material classification Pipe Class S11P Piping Material classification Pipe Class S11Y Piping Material classification Pipe Class S14E	

ISSUED BY
RPP-WTP PDC

MECHANICAL DATA SHEET: VESSEL

PLANT ITEM No.
24590-HLW-MV-HDH-VSL-00002
24590-HLW-MV-HDH-VSL-00004

R1186358

Project:	RPP-WTP	P&ID:	24590-HLW-M6-HDH-00001 and 24590-HLW-M6-HDH-20001
Project No:	24590	Calculations:	See Attachment 1
Project Site:	Hanford	Vessel Drawing:	24590-HLW-MV-HDH-00010001, 00010002, 00010003, and 24590-HLW-MV-HDH-00011001, 00011002, 00011003
Description:	Canister Decon Vessel 1, 24590-HLW-MV-HDH-VSL-00002. Canister Decon Vessel 2, 24590-HLW-MV-HDH-VSL-00004.	Reports:	24590-HLW-N1D-HDH-00003, 24590-HLW-WSF-ENG-07-002

Reference Data

Charge Vessels (Tag Numbers)	Not Required
Pulsejet Mixers / Agitators (Tag Numbers)	Not Required
RFDs/Pumps (Tag Numbers)	Not Required

Design Data

Quality Level		CM (Note 6)		Fabrication Specs	24590-WTP-3PS-MV00-T0001		
Seismic Category		SC-III		Design Code	Per ASME VIII Div 1		
Service/Contents		Nitric Acid, Water, Ceric Nitrate		Code Stamp	No		
Design Specific Gravity		1.25		NB Registration	No		
Maximum Operating Volume	gal	214 with Canister in Vessel		Weights (lbs)	Empty	Operating	Test
Total Volume	gal	630 (Note 2)		Estimated	3400	21,200	21,200
Environmental Qualification		N/A					

Inside Diameter	inch	30			Wind Design	None	
Length/Height (TL-TL)	inch	220 (OAL)			Snow Design	None	
		Vessel Operating	Vessel Design	Coil/Jacket Design	Seismic Design	24590-WTP-3PS-MV00-T0002 24590-WTP-3PS-FB01-T0001	
Internal Pressure	psig	Atm	15	Note 1			
External Pressure	psig	1.5	Atm	Note 1	Postweld Heat Treat	None	
Temperature	°F	149	225	Note 1	Corrosion Allowance (Vessel)	Inch	0.04
Min. Design Metal Temp.	°F	40			Corrosion Allowance (Coil)	Inch	0.00

Materials of Construction

Component	Material	Minimum Thickness / Size	Containment
Lid Assembly / Hinge Block, & Lock Pin	B-265 2 / SA-479-304	See Drawing	N/A
Shell	B-265 2	See Drawing	N/A
Bottom Head	B-265 2	See Drawing	N/A
Support	B-265 2	See Drawing	N/A
Shaft	N/A	N/A	N/A
Bearings	N/A	N/A	N/A
Pipe/Elbow	B-861 2 Seamless/B-363 2	See Drawing	N/A
Tubing (Coil)	B-338 2W	See Drawing	N/A
Forgings / Bar stock	B-381 F2 / SB348-2 Note 5	See Drawing	N/A
Gaskets	Note 3	N/A	N/A
Bolting	A-193 B8 / A-194 8	N/A	N/A

Miscellaneous Data

Orientation	Vertical	Support Type	Collar
Insulation Function	Not Applicable	Insulation Material	Not Applicable
Insulation Thickness (inch)	Not Applicable	Internal Finish	Welds Descaled as Laid. Break sharp corners and smooth finish on canister guides.
External Finish	Welds Descaled as Laid		

BECHTEL	**MECHANICAL DATA SHEET: VESSEL**	**PLANT ITEM No.** ***24590-HLW-MV-HDH-VSL-00002*** ***24590-HLW-MV-HDH-VSL-00004***

Equipment Cyclic Data Sheet

Component Plant Item Number:	***24590-HLW-MV-HDH-VSL-00002 and 24590-HLW-MV-HDH-VSL-00004***
Component Description	***Canister Decon Vessels 1 & 2***

The information below is provisional and envelopes operational duty for fatigue assessment. It is not to be used as operational data.

Materials of Construction	***SB-265 2***
Design Life	***40 Years***
Component Function and Life Cycle Description	***A cycle consists of the following: (24590-HLW-3YD-HDH-00002)*** ***Acid Etch:*** • ***A 10,000 lb canister is loaded into the vessel and the lid closed.*** • ***The vessel will fill to the overflow with one-molar nitric acid and Cerium +4 solution.*** • ***The coil will be used to raise the temperature of the liquid from 73°F to 149°F. Coil hot water conditions: 180 °F inlet, 151 °F outlet, 29 psig pressure drop.*** 5 • ***The coil will maintain the temperature of the liquid at 149 °F (+/- 5°F) for 6 hours.*** • ***After the 6-hour decontamination period the liquid in the vessel is cooled to 104 °F. Coil cooling water conditions: 83 °F inlet, 119 °F outlet, 37 psig pressure drop.*** 5 • ***The nitric acid solution is then drained from the vessel.*** ***Acid Rinse:*** • ***The upper and lower spray rings will rinse the top of the canister with nitric acid (10 seconds).*** • ***Flow to the spray rings will stop, the lid will open, and the canister will be slowly removed from the vessel while the lower spray ring is utilized to rinse the canister.*** • ***The canister is raised until it is above the top spray ring. Total rinse volume is approximately 200 gallons.*** • ***The acid rinse is drained from vessel and the canister is lowered back into the vessel.*** ***Demineralized Water Rinse:*** • ***Repeat the steps for the Acid Rinse using demineralized water.*** • ***Water rinse volume is approximately 200 gallons.*** • ***The demineralized water rinse is drained from vessel, and the canister is lowered back into the vessel for drying.***

Vessel Contents

Load Type		Min	Max	Number of Cycles	Comment
Design Pressure	psig	***FV***	***15***	***10***	
Operating Pressure	psig	***-1.44***	***0***	***23,000***	
Operating Temperature	°F	***73*** ***149***	***149*** ***104***	***23,000*** ***23,000***	***Hot water heating process (24590-HLW-MEC-HDH-00001)*** ***Cooling water process (24590-HLW-MEC-HDH-00001)***
Contents Specific Gravity		***1.00***	***1.25***	***23,000***	
Contents Level	inch	***Empty***	***Full***	***69,000***	***Vessel is filled 3 times for each process cycle - see above description***
Localized Features					
Vessel and Supports		***Empty / Full Canister***		***69,000***	***Canister is lifted out of the vessel 3 times for each process cycle - see above description***

Cyclic Notes

- Cycle increase: The Seller must increase the numbers of operational cycles given above by 10% to account for commissioning duty unless otherwise noted.

- The Seller is to consider impact loading due to a full canister being loaded in the vessel with crane hoist slow speed of 5 feet per minute. 5

- Hot water outlet temp and cooling water outlet temp represent initial conditions which are the worst case thermal differential condition. 5

BECHTEL	**MECHANICAL DATA SHEET: VESSEL**	**PLANT ITEM No.** ***24590-HLW-MV-HDH-VSL-00002*** ***24590-HLW-MV-HDH-VSL-00004***

Notes and Additional Information

Note 1: Heating and Cooling Coil design pressure = 180 psig, design temperature = 210°F. Coil serves for either heating or cooling.

Note 2: Vessel volumes are approximate and do not account for manufacturing tolerances, nozzles, and displacement of internals.

Note 3: Body flange gasket shall be Garlock Helicoflex HN 208A seal configuration with titanium jacket.

Note 4: Contents of this document are Dangerous Waste Permit affecting.

Note 5: Bar SB348-2 is used for Spray Nozzles (Full Jet - Size 10) P/N 08D & 09D, Rollers and Roller Pins P/N 18C & 18D, Thermowells P/N 38A & 38C, Stabilizer bars P/N 19B, Lid Hold Downs P/N 28B & 31K. (See vendor dwgs for P/N).

Note 6: This vessel has passive WAI attributes. Quality level remains CM.

Note 7: Added DOE Radioactive Materials Disclaimer and Safety Screening statement. Renamed Remarks to, Notes and Additional Information and moved section. Added Note 6 (above). Revised Note 1 and equipment cyclic data. Equipment Qualification Datasheet (EQD) is not required for APC/SC-III equipment. Renamed Notes to "Cyclic Notes" for clarification of section. Clarified corrosion allowance for coil. Added reference calculations & report numbers. Added Attachment 1 for BNI use only. Included plant item number 24590-HLW-MV-HDH-VSL-00004, thus superseding previous data sheet.

Note 8: This document contains information pertinent to an accident analysis calculation and receives a screening from E&NS, in accordance with procedures, anytime the document is modified. *(Internal - For BNI Use Only)*

Note 9: Nozzle Loads are in accordance with 24590-WTP-3PS-MV00-T0001, Appendix A, Table A2, *Engineering Specification for Pressure Vessel Design and Fabrication.*

DOE Radioactive Materials Disclaimer: Please note that source, special nuclear and byproduct materials, as defined in the Atomic Energy Act of 1954 (AEA), are regulated at the US Department of Energy (DOE) facilities exclusively by DOE acting pursuant to its AEA authority. DOE asserts, that pursuant to the AEA, it has sole and exclusive responsibility and authority to regulate source, special nuclear, and byproduct materials at DOE-owned nuclear facilities. Information contained herein on radionuclides is provided for process description purposes only.

Screening / Evaluation Required? If yes per 24590-WTP-GPP-SREG-002, E&NS signature required below	X	Yes		No

Approval

Rev	Description	System Engineer	Vessel Engineer	Checked	MET	E&NS	Approved	Date
0	Issue for Purchase	D. Choi	R. Simmons	M. Staley C. Slater	M. Wright	N/A	M. Hoffmann	06/16/03
1	Revised as Indicated	G. Fenton	R. Simmons	T. Galioto C. Slater	D Yarbrough	N/A	M. Hoffmann	10/29/03
2	Issued to Incorporate 24590-WTP-SDDR-PROC-04-01079	R. Tometczak	Paul Polani	Steve Crow	Jeff Pullen	N/A	M. Hoffmann	1/21/05
3	Revised per Note 3 on sheet 1 of 2.	Ronda Russell	Bart Makadia	P Polani A.P. Pinto	Debbie Adler Cliff Slater	N/A	J Julyk	11/28/05
4	Revised per Note 7. This document Supersedes 24590-HLW-MVD-HDH-00012, Rev 3; 24590-HLW-MVD-HDH-P0006, Rev 3, and 24590-HLW-MVD-HDH-P0012, Rev 2. Incorporated and resolved the following: 24590-HLW-MVN-HDH-00009, 24590-WT6P-M6N-M80T-00002, and 24590-WTP-SDDR-MS-07-00046.	M. Kufahl	Bart Makadia	Mike Seed	Debbie Adler	Barb Dubiel	John Julyk	4/24/09
5	Add impact loading requirements and crane travel speed. Added note for hot water temp and cooling water temp initial conditions. Added reference for crane speed. revised hot water heating and cooling water conditions	M. Kufahl	Bart Makadia	Mike Seed	Debbie Adler	Matt Kulp	John Julyk	3/26/10

ATTACHMENT 1
REFERENCES for Data Sheet: 24590-HLW-MVD-HDH-00006, Rev 5 (For BNI Use only)
Vessel Tag Numbers: HDH-VSL-00002 and HDH-VSL-00004

Data	Document #	Rev	Document Title
Quality Level	24590-HLW-M6-HDH-00001	4	*P&ID HLW Canister Handling Decontamination System*
Seismic Category	24590-HLW-M6-HDH-00001	4	*P&ID HLW Canister Handling Decontamination System*
Design Specific Gravity	24590-HLW-MVC-HDH-00005	A	*HDH Vessel and Tank Process Data Calculation*
Max Operating Volume	24590-HLW-M6C-HDH-00008	C	*HLW HDH Canister Decontamination Vessel (HDH-VSL-00002 and HDH-VSL-00004)*
Total Volume	24590-HLW-M6C-HDH-00008	C	*HLW HDH Canister Decontamination Vessel (HDH-VSL-00002 and HDH-VSL-00004)*
Inside Diameter	24590-HLW-M6C-HDH-00008	C	*HLW HDH Canister Decontamination Vessel (HDH-VSL-00002 and HDH-VSL-00004)*
Length TL-TL	24590-HLW-M6C-HDH-00008	C	*HLW HDH Canister Decontamination Vessel (HDH-VSL-00002 and HDH-VSL-00004)*
Operating Pressure (external)	24590-HLW-MVC-HDH-00005	A	*HDH Vessel and Tank Process Data Calculation*
Operating Pressure (internal)	24590-HLW-MVC-HDH-00005	A	*HDH Vessel and Tank Process Data Calculation*
Design Pressure (internal)	24590-HLW-MVC-HDH-00005	A	*HDH Vessel and Tank Process Data Calculation*
Design Pressure (external)	24590-HLW-MVC-HDH-00005	A	*HDH Vessel and Tank Process Data Calculation*
Design Pressure Internal (Coil) 5	24590-HLW-M6C-HDH-00015 24590-HLW-M6E-HDH-00020	A N/A	*Design Pressure and Temperature Calculation for HLW Canister Decontamination Handling (HDH) System* *Amend HDH System Pressure and Temperature Calculation for Defined Set Pressure in Head Vessels*
Design Pressure External (Coil) 5	24590-HLW-M6C-HDH-00015 24590-HLW-M6E-HDH-00020	A N/A	*Design Pressure and Temperature Calculation for HLW Canister Decontamination Handling (HDH) System* *Amend HDH System Pressure and Temperature Calculation for Defined Set Pressure in Head Vessels*
Design Temperature (Coil) 5	24590-HLW-M6C-HDH-00015 24590-HLW-M6E-HDH-00020	A N/A	*Design Pressure and Temperature Calculation for HLW Canister Decontamination Handling (HDH) System* *Amend HDH System Pressure and Temperature Calculation for Defined Set Pressure in Head Vessels*
Operating Temp	24590-HLW-MVC-HDH-00005	A	*HDH Vessel and Tank Process Data Calculation*
Design Temp	24590-HLW-MVC-HDH-00005	A	*HDH Vessel and Tank Process Data Calculation*
Corrosion Allowance, Erosion allowance	24590-HLW-N1D-HDH-00003	6	*Corrosion Evaluation HDH-VSL-00002/4*
Materials of Construction	24590-HLW-N1D-HDH-00003	6	*Corrosion Evaluation HDH-VSL-00002/4*
Cyclic Data (Vessel)	24590-HLW-MVC-HDH-00006 24590-HLW-MVC-30-00001 24590-HLW-MEC-HDH-00001 24590-HLW-M6N-HDH-00021	0 B B N/A	*Heating and Cooling Cycles for HDH-VSL-00002/4* *HLW Vessel Cyclic Datasheet Inputs* *HDH-VSL-00002/4 Cooling and Heating Coils Process Information* / coil operating conditions, vessel operating conditions *HDH System Changes for Replacement of Steam heating with Hot water Heating System* / coil design pressure and temperature
Nozzle Loads	24590-WTP-3PS-MV00-T0001	3	Pressure Vessel Design and Fabrication Specification
Crane/Canister Travel Speed 5	24590-HLW-M0D-HDH-00021	4	*Mechanical Handling Data Sheet, Decontamination Swabbing and Monitoring Crane* - use crane hoist slow speed of 5 ft/min

BECHTEL	**MECHANICAL DATA SHEET: VESSEL**	**PLANT ITEM No.** ***24590-HLW-MV-HDH-VSL-00003***

Project:	***RPP-WTP***	P&ID:	***24590-HLW-M6-HDH-00002***
Project No:	***24590***	Vessel Drawing	***24590-HLW-MV-HDH-00003***
Project Site:	***Hanford***		
Description:	***Waste Neutralization Vessel***		

R11273761

Reference Data

Charge Vessels (Tag Numbers)	***N/A***	ISSUED BY
Pulsejet Mixers / Agitators (Tag Numbers)	***N/A***	RPP-WTP PDC
RFDs/Pumps (Tag Numbers)	***N/A***	

Design Data

Quality Level		***CM***	Fabrication Specs	***24590-WTP-3PS-MV00-T0001***		
Seismic Category		***SC-III***	Design Code	***ASME VIII Div 1***		
Service/Contents		***0.5 M Cerium Nitrate, 1M Nitric Acid, 30% Hydrogen Peroxide, 5M NaOH, Demin Water***	Code Stamp	***Yes***		
Design Specific Gravity		***1.03***	NB Registration	***Yes***		
Maximum Operating Volume	gal	***4650 (Note 4)***	Weights (lbs)	Empty	Operating	Test
Total Volume	gal	***5315 (Note 4) actual***	Estimated	***17,500***	***58,000***	***62,000***
Environmental Qualification		***N/A***	Actual *			

Inside Diameter	inch	***84***			Wind Design	***None***	
Length/Height (TL-TL)	inch	***204***			Snow Design	***None***	
		Vessel Operating	Vessel Design	Coil/Jacket Design	Seismic Design	***24590-WTP-3PS-MV00-T0002 24590-WTP-3PS-FB01-T0001***	
Internal Pressure	psig	***Atm***	***15***	***N/A***	Seismic Base Moment *	ft*lb	
External Pressure	psig	***5.8***	***FV***	***N/A***	Postweld Heat Treat	***None***	
Temperature	°F	5 ***122***	***237***	***N/A***	Corrosion Allowance	Inch	***0.04***
Min. Design Metal Temp.	°F	***59***			Hydrostatic Test Pressure *	psig	

Materials of Construction

Component	Material	Minimum Thickness / Size	Containment
Top Head	***SA-240 304 (Note 2)***	***See Drawing***	***Auxiliary***
Shell	***SA-240 304 (Note 2)***	***See Drawing***	***Primary***
Bottom Head	***SA-240 304 (Note 2)***	***See Drawing***	***Primary***
Support	***SA-240 304 (Note 2)***	***See Drawing***	***N/A***
Jacket/Coils/Half-Pipe Jacket	***SA-240 304 (Note 2)***	***See Drawing***	***N/A***
Internals	***SA-240 304 (Note 2)***	***See Drawing***	***Thermowells Primary***
Pipe	***SA-312 TP304 (Note 2)***	***See Drawing***	***Note 1***
Forgings/ Bar stock	***SA-182 F304 (Note 2)***	***See Drawing***	***N/A***
Bolting/Gaskets	***SA193 B8 CLASS 2, SPIRAL WOUND GRAPHITE FILLED***	***N/A***	***N/A***

Miscellaneous Data

Orientation	***Vertical***	Support Type	***Skirt***
Insulation Function	***Not Applicable***	Insulation Material	***Not Applicable***
Insulation Thickness (inch)	***Not Applicable***	Internal Finish	***Note 3***
		External Finish	***Note 3***

Please note that source, special nuclear, and byproduct materials, as defined in the Atomic Energy Act of 1954 (AEA) are regulated at the U. S. Department of Energy (DOE) facilities exclusively by DOE acting pursuant to its AEA authority. DOE asserts that pursuant to AEA, it has sole and exclusive responsibility and authority to regulate source, special nuclear, and byproduct materials at DOE-owned nuclear facilities. Information contained herein on radionuclides is provided for process description purposes only.

BECHTEL	**MECHANICAL DATA SHEET: VESSEL**	**PLANT ITEM No.** ***24590-HLW-MV-HDH-VSL-00003***

Remarks

**** To be determined by the vendor.***
Note 1: Nozzle necks below max. operating level are primary, others auxiliary.
Note 2: Maximum carbon content of 0.030% for all welded components.
Note 3: Welds descaled as laid.
Note 4: Vessel volumes are approximate and do not account for manufacturing tolerances, nozzles, and displacement of internals.
Notes 5 through 8: Deleted 5
Note 9: Contents of this document are dangerous waste permit affecting.
Note 10: Revision 5 Add radionuclide disclaimer and EN&S review check box. Updated heat transfer summary. 5

Equipment Cyclic Data Sheet

Component Plant Item Number:	***HDH-VSL-00003***
Component Description	***Parent Vessel***

The information below is provisional and envelopes operational duty for fatigue assessment. It is not to be used as operational data.

Materials of Construction	***SA-240-304 with 0.030 % carbon.***
Design Life	***40 Years***
Component Function and Life Cycle Description	***The parent vessel is cyclically loaded and discharged in batch operation. In each batch operation, 2,037 gallons of liquid content is loaded and discharged.***

Load Type		Min	Max	Number of Cycles	Comment
Design Pressure	psig	***FV***	***15***	***10***	***Nominal assumption***
Operating Pressure	psig	***-5.8***	***0***	***14600***	
Operating Temperature	°F	***59***	***212***	***14600***	
Contents Specific Gravity		***1.03***	***1.18***	***14600***	
Contents Level	inch	***14***	***192***	***14600***	
Localized Features					
Nozzles **N06/N06A, N07/N07A, N29/N29A, N30/N30A**		***59***	***212***	***Cycles: 87,600 (6 per day, 1 hour each cycle)*** ***Assume vessel temperature is at 59° F***	
Nozzle Loads				***Nozzles shall be designed or reinforced to meet the Loads in 24590-WTP-3PS-MV00-T0001, Table A-2***	

Notes for Cyclic Data

- ***Cycle Increase: The Seller must increase the numbers of operational cycles given above by 10% to account for commissioning duty unless otherwise noted.***
- ***Nozzles N06/N06A, N07/N07A, N29/N29A, N30/N30A, and associated piping connected to ejectors shall be fatigue assessed/analyzed for pressure/temperature cycles over 40 years from 0 psig at 59°F to 109 psig at 358°F temperature. The pressure cycles shall coincide with temperature cycles.***
- ***Nozzles N04, N32, are spares***
- ***Heat Transfer summary for vessel:*** 5
  - ***A. Cell Ambient Temperature: Min. 59° F, Max. 95° F***
  - ***B. Only one ejector can operate at a time due to system limitations, steam rack only supports one ejector.***

BECHTEL	**MECHANICAL DATA SHEET: VESSEL**	**PLANT ITEM No.** ***24590-HLW-MV-HDH-VSL-00003***

PLEASE NOTE THAT SOURCE , SPECIAL NUCLEAR AND BYPRODUCT MATERIALS, AS DEFINED IN THE ATOMIC ENERGY ACT OF 1954 (AEA), ARE REGULATED AT THE U.S. DEPARTMENT OF ENERGY (DOE) FACILITIES EXCLUSIVELY BY DOE ACTING PURSUANT TO ITS AEA AUTHORITY. DOE ASSERTS, THAT PURSUANT TO THE AEA, IT HAS SOLE AND EXCLUSIVE RESPONSIBILITY AND AUTHORITY TO REGULATE SOURCE, SPECIAL NUCLEAR, AND BYPRODUCT MATERIALS AT DOE-OWNED NUCLEAR FACILITIES. INFORMATION CONTAINED HEREIN ON RADIONUCLIDES IS PROVIDED FOR PROCESS DESCRIPTION PURPOSES ONLY.

5

Screening / Evaluation Required? If yes per 24590-WTP-GPP-SREG-002, E&NS signature required below	X	Yes		No

5

Approval

Rev	Description	Vessel Engr	Checker	System Engr	E&NS	Reviewer	Approval	Date
0	Issued for Purchase	C. Slater	T. Galioto/ C. Slater	K. Minton	N/A	D. Yarbrough	M. Hoffmann	01/22/04
1	Issued for Supplemental Information to Vendor	B. Balakrishnan	T. Galioto/ C. Slater	U. Olivas	N/A	J. Rouse/ E. Isern	M. Hoffmann	11/30/04
2	Issued for Supplemental Information to Vendor	S. L. Lee	S. Cross/ C. Slater	U. Olivas	N/A	R. Peters/ E. Isern/ D. Adler	M. Hoffmann	04/11/05
3	Revised as Noted	S. L. Lee	R. Peter	S. Cross	N/A	E. Isern	M. Hoffman	5/27/05
4	Revised as Noted Incorporated 24590-HLW-MVN-HDH-00009 24590-WTP-M6N-M80T-00002 24590-WTP-M6N-M80T-00005	R. Wight	M. Seed	M. Kufahl	B. Dubiel	J. Julyk	J. Julyk	10/26/10
5	Revised as Noted	R. Wight R. Wight	M. Seed M Seed	R. Peters R Peters	B. Dubiel B Dubiel	NA	D. Wilsey DJ Wilsey	5/6/11

Attachment 1: Page 1 of 2
REFERENCES for Data Sheet: 24590-HLW-MVD-HDH-00003, Rev. 5 *(For BNI Use Only)*
Component Tag No(s): 24590-HLW-MV-HDH-VSL-00003

Data	Document #	Rev	Document Title
Quality Level	24590-HLW-M6-HDH-00002	4	*P&ID HLW Canister Decontamination Handling System (CM)*
Seismic Category	24590-HLW-M6-HDH-00002 24590-WTP-PSAR-ESH-01-002-04	4 04S	*P&ID HLW Canister Decontamination Handling System (III)* *Preliminary Documented Safety Analysis; HLW Facility Specific Information (Table 3A-10)*
Design Specific Gravity	24590-HLW-M4C-HDH-00001 (See Note 2)	2	*HLW Canister Decontamination Mass and Heat Balance (1.03) - Table 8.6, Stream 20*
Total Volume	24590-CM-POA-MVA0-00018-01-00002	00D	*COMPRESS Pressure Vessel Design Calculations (5315 gallons) p. 206*
Operating Volume	24590-HLW-M6C-HDH-00001	C	*HLW Waste Neutralization Vessel HDH-VSL-00003 Sizing Calculation (4650 gal)*
Inside Diameter	24590-HLW-M6C-HDH-00001	C	*HLW Waste Neutralization Vessel HDH-VSL-00003 Sizing Calculation (7')*
Length TL-TL	24590-HLW-MV-HDH-00003	1	*Equipment Assembly Waste Neutralization Vessel HDH-VSL-00003*
Design Pressure (internal & external)	24590-HLW-MVC-30-00001	B	*HLW Vessel Cyclic Datasheet Inputs (internal 1: external FV)*
Operating Pressure (internal & external)	24590-HLW-MVC-HDH-00005	A	*HDH Vessel and Tank Process data (external -5.8 psi: internal ATM)*
Operating Temp	24590-HLW-M4C-HDH-00001	1	*HLW Canister Decontamination Mass and Heat Balance (122.3 dF)*
Design Temp (max)	24590-WTP-GPG-M-017 24590-HLW-MVC-30-00001	8 B	*Design Parameters & Test Pressures for Equipment & Piping (Section 3.2 Operating Temperature + 25°F is 237°F)* *HLW Vessel Cyclic Datasheet Inputs (internal 1: external FV)*
Design Temp (min)	24590-WTP-DB-ENG-01-001	1P	*Basis of Design (59°F)*
Corrosion Allowance, Erosion allowance	24590-HLW-N1D-HDH-00005	4	*Corrosion Evaluation (0.04)*
Materials of Construction	24590-HLW-N1D-HDH-00005	4	*Corrosion Evaluation (304, Max 0.030% C)*
Cyclic Data (Vessel)	24590-HLW-MVC-30-00001 (See Note 2)	B	*HLW Vessel Cyclic Datasheet Inputs*
Nozzle Loads	24590-WTP-3PS-MV00-T0001	4	Pressure Vessel Design and Fabrication, Section 3.7 and Table A-2
Nozzle Design Temperatures and Pressures	24590-HLW-MVC-30-00001 24590-HLW-M6X-HDH-00004	B 4	*HLW Vessel Cyclic Datasheet Inputs* *Line List for 24590-HLW-M6-HDH-00002, Rev. 4*
Process Chemicals	24590-HLW-MVC-HDH-00005	4	*HDH Vessel and Tank Process Data Calculation*
Ejector Transfers/Steam Rack	24590-HLW-J3-HDH-00001 thru 00015 and 01001 thru 01010	0	*HDH System Logic Diagrams*
Cell Ambient Temperature	24590-HLW-U0D-W16T-00001	1	*HLW Room EEQ Data*

(For BNI Use Only)

Notes:

Note 1: Wind and snow design do not apply. This vessel is located in room H-B035, at the -14' level of the High Level Waste Facility.

Note 2: The specific gravity for cyclic data is taken from the cyclic data calculation dated 2007. The value of 1.18 is conservative and will be used for cyclic evaluation. The Mass and heat balance for the system 24590-HLW-M4C-HDH-00001 dated December 2010 shows that 83 gallons of 5M sodium hydroxide at 1.19 specific gravity is added to 2000 gallons of neutralizing waste in the last process step, resulting in a specific gravity of 1.03. This more accurate number is used for design specific gravity.

	MECHANICAL DATA SHEET PJV HEPA PREHEATER	PLANT ITEM No. 24590-HLW-ME-PJV-HTR-00002	
		Data Sheet Number 24590-HLW-MED-PJV-00002	Rev 4

R11298347

Project:	RPP-WTP	Description:	PJV HEPA Filter Preheater
Project No:	24590	Specification:	24590-HLW-3PS-MEE0-T0001
Site:	Hanford, WA	P&ID:	24590-HLW-M6-PJV-00001
Process flow diagram:	24590-HLW-M5-V17T-00005	Calculation Ref. No:	24590-HLW-M4C-PJV-00001 24590-HLW-MAC-PJV-00001 24590-HLW-Z0C-30-00035

ISSUED BY RPP-WTP PDC

Reference Data

	Offgas Pressure Boundary (Note 5)	C5 Cell Confinement Boundary (Note 6)	Heating Elements	Control Panel	Preheater Temperature Instruments (TE & TT)		
					Inlet Offgas	Outlet Offgas	Housing
Quality Level	Q	Q	Q (AP)	Q (AP)	Q (AP)	Q (AP)	Q
Seismic Category	SC-III	SC-I	SC-III	SC-III	SC-I	SC-I	SC-I
Performs Air Permit (AP) Function	Yes	Yes	Yes	Yes	Yes	Yes	Yes
Design Code	ASME VIII, Div 1 and ASME AG-1	See Specification	See Specification	See Specification	See Specification	See Specification	See Specification
Code Stamp	No	No	No	No	No	No	No
NB Registration	No	No	No	No	N/A	N/A	N/A
Temperature Sensor Type	N/A	N/A	Internal Thermocouple	N/A	RTD	RTD	RTD

Process Conditions Data

Fluid Name		PJV Offgas		
Process Data	Process Conditions	Minimum	Normal	Maximum
Mass Flow	lb/hr	5,402	8,719	16,639
Density @ Inlet / Outlet	lb/ft³	0.072 / 0.071	0.068 / 0.067	0.065 / 0.064
Viscosity @ Inlet / Outlet	cP	0.0180 / 0.0183	0.0181 / 0.0184	0.0183 / 0.0187
Vol. Flow Rate @ 68°F, 1 atm.	SCFM	1,196	1,933	3,692
Vol. Flow Rate @ Inlet / Outlet	ACFM	1,247 / 1,270	2,134 / 2,181	4,264 / 4,376
Peak Vol. Flow Rate (due to PJV mixing action)	ACFM	3,000	5,100	7,500
Pressure @ Inlet / Outlet	in-w.c.	388 / 388	368 / 367	358 / 357
Differential Pressure	in-w.g.	-0.1	-0.5	-1
Temperature @ Inlet / Outlet (min. ΔT = 9°F, see Note 8)	°F	65 / 75	67 / 78	76 / 89
Relative Humidity @ Inlet / Outlet	%	5.6 / 3.9	21.4 / 14.7	23.7 / 15.6
Inlet Velocity	ft/s	*	*	*
Heat Capacity @ 80°F	Btu/lb-°F	0.25	0.25	0.25
Heater Power Duty	kW (Btu/hr)	*	*	*

	MECHANICAL DATA SHEET PJV HEPA PREHEATER	PLANT ITEM No. 24590-HLW-ME-PJV-HTR-00002	
		Data Sheet Number 24590-HLW-MED-PJV-00002	Rev 4

Mechanical / Process Design Data

Minimum Operating Pressure	psig	-1.4
Maximum Operating Pressure	psig	0
Maximum Operating Temperature	°F	90
Temperature Rise (ΔT Inlet-Outlet)	°F	9
Design Flow Rate (maximum peak)	ACFM	7,500
Design Heater Duty	kW / (Btu/hr)	20.5 (70,000)
Maximum Operating Pressure Drop	in-w.g.	1.0
Corrosion / Erosion Allowance	inch	0.04 over 40 years (for components in contact with the offgas)
Hydro/Pneumatic Test Pressure	psig	1.1 x Design Conditions (pneumatic)
Insulation Type		ASTM C 592 / ASTM C 612
Insulation Thickness	inch	1.5*
Heating Element Type		Cartridge*
Total Number of Heating Elements		54*
Max Element Surface Temperature	°F	500*
Max Element Pocket Surface Temp	°F	500
Max Element Failure (Note 3)	%	25
Single Element Mean Time to Failure	hours	*
Thermal Cycling, Min to max temp	cycles/year	6 (Note 7)
Fouling Resistance	hr-ft²-°F / Btu	None
Max Concrete Interface Temp (Note 4)	°F	Note 4

Thermal Analysis Data

Room Temperature R5/C5 (normal high)	°F	113	Concrete Wall Thickness	inches	48
Room Temperature R2/C2 (normal high)	°F	80	Thermal Conductivity of Concrete Wall	W / m / K	1.8
Maximum Heat Loss to R5/C5 Room	kW	3	Maximum Heat Loss to R2/C2 Room	kW	2

Material Data

Plenum	316L Stainless Steel	In-Cast Liner	ASTM A 36 Carbon Steel
Element Pockets	316L Stainless Steel	Gaskets	ASTM D 1418 EPDM Rubber
Shield Plate	ASTM A 36 Carbon Steel	Heating Elements	Inconel / Incoloy Sheath
Mounting Frame	ASTM A 36 Carbon Steel	Insulation	Per 24590-WTP-3PS-NN00-T0001
Bolting	ASTM A 193 B8M / ASTM A 194 8M		

Construction Data

(To be determined by the supplier when not specified by the buyer)

Inlet (Size/Connection Type)		inch	20" Sch 10S	Butt Weld
Outlet (Size/Connection Type)		inch	20" Sch 10S	Butt Weld
Size (L x W x H)*		inch	Note 2	
Available Element Pull Space		inch	48	
Weight	lb	20,700*	Shipping Weight lb	22,700*

Notes

Note 1. Items identified with an asterisk * are determined by the Vendor, and to be verified by the Vendor.

Note 2. The bounding dimensions and nozzle locations shall be in accordance with the sketch on page 4 of this data sheet.

Note 3. The maximum element failure is the percent of total elements that can fail and still achieve maximum design heater duty without exceeding the maximum element pocket surface temperature.

Note 4. All heater components, in-cast liner, and mounting frame in contact with concrete shall not exceed 150 °F under any operating scenario. Concrete within 3 feet of the equipment shall not exceed 150 °F and 100 °F beyond three feet. Vendor is responsible for insulation design to comply with this requirement.

Note 5. The pressure boundary for the Preheater consists of the heater plenum, element pockets, and thermowells.

Note 6. The C5 Cell Confinement Boundary consists of the in-cast liner, mounting frame, and R5/C5 to R2/C2 radiation shielding.

Note 7. Thermal Cycling frequency basis is once every two (2) months throughout the 40 years life of the facility.

Note 8. Heater duty shall be rated such that a minimum inlet-outlet temperature differential of 9 °F (5 °C) will be achieved after the PJV offgas pass through the Preheater.

References

(1) 24590-HLW-M6-PJV-00001
(2) 24590-HLW-MED-PJV-00001
(3) 24590-QL-POA-MEE0-00001-02-00002
(4) 24590-HLW-MAC-C5V-00009
(5) 24590-HLW-M4C-PJV-00001
(6) 24590-HLW-MAC-PJV-00001
(7) 24590-HLW-M5-V17T-00005
(8) 24590-HLW-U0D-W16T-00001
(9) 24590-HLW-Z0C-30-00035
(10) 24590-HLW-3PS-MEE0-T0001

	MECHANICAL DATA SHEET **PJV HEPA PREHEATER**	PLANT ITEM No. 24590-HLW-ME-PJV-HTR-00002	
		Data Sheet Number	Rev
		24590-HLW-MED-PJV-00002	4

Sketch of PJV HEPA Filter Preheater

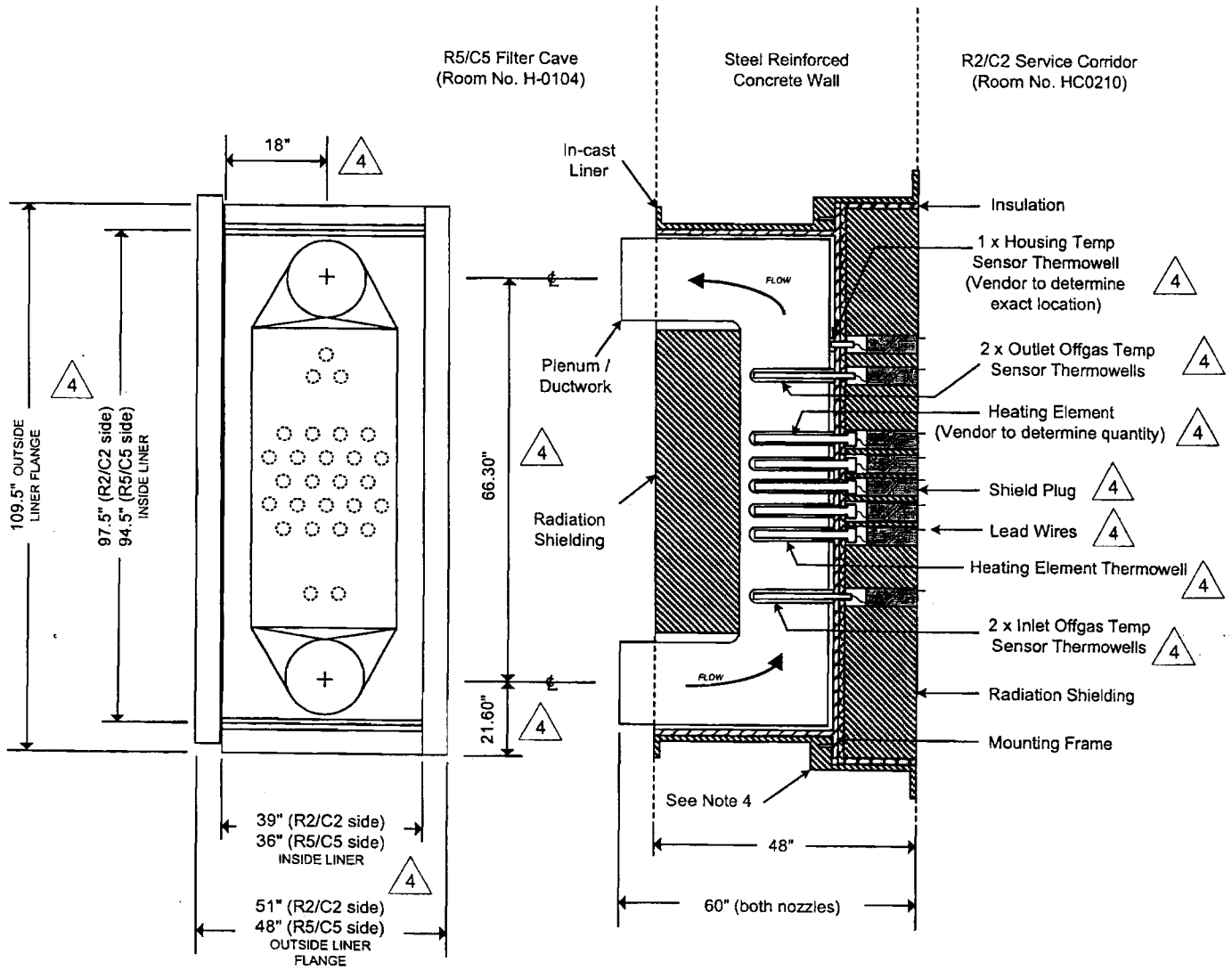

N.T.S.

Front View
(shielding removed)

Cross-Section
View

Sketch of Shield Plug

4

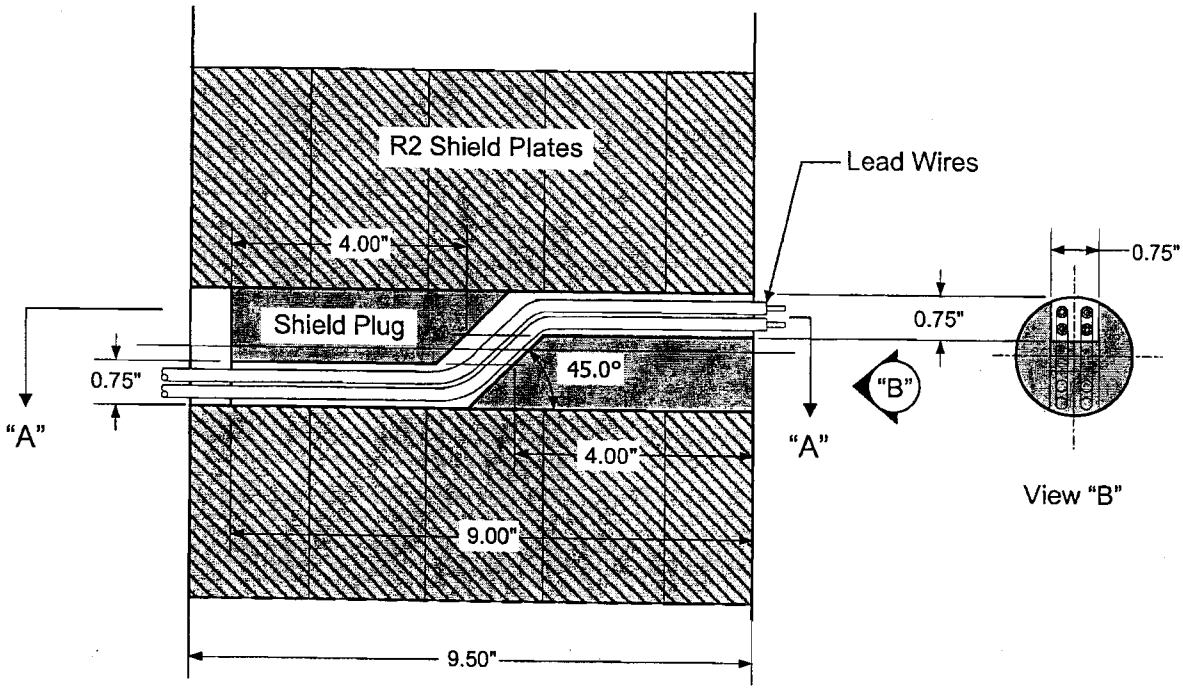

Elevation (Section)

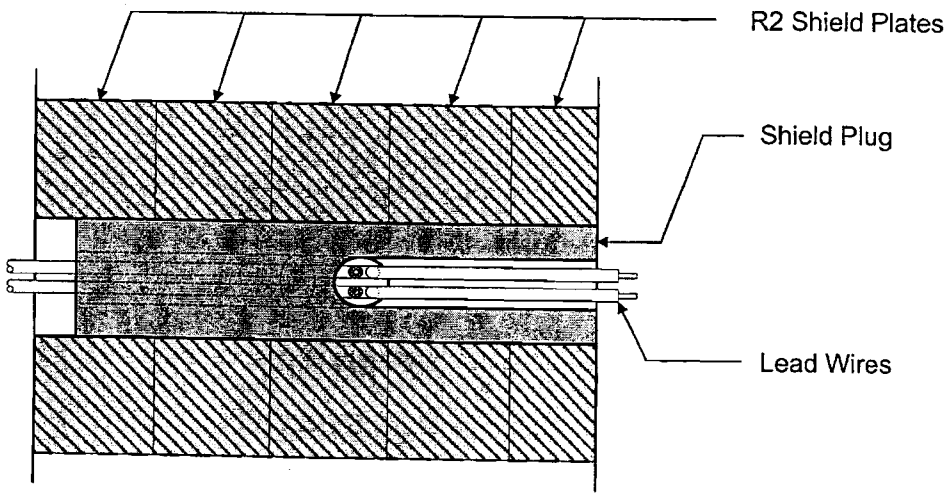

N.T.S.

Section "A - A"

EQUIPMENT QUALIFICATION DATASHEET (EQD)

Equipment Identification		
Full Component Tag Number or BNI Stock Code Number	24590-HLW-ME-PJV-HTR-00002	Safety Classification ☒ SC ☒ SS ☐ APC-PAM
Equipment Datasheet Number	24590-HLW-MED-PJV-00002	
Description	PJV HEPA Preheater Manufacturer / Supplier : Ellis & Watts International, Inc. Requisition No.: 24590-QL-MRA-MEE0-00001	Seismic Category ☒ SC-I ☐ SC-II ☒ SC-III ☐ SC-IV ☐ SC-III Seismic Interaction only See Page 1 - Mechanical Data Sheet, and Note 27 - EQ Datasheet
Location (Facility / Building and Room No.)	HLW Facility / @ EL. 14'-0" / Preheaters located in filter cave wall between R5/C5 Filter Cave (Room No. H-0104) and R2/C2 Corridor (Room No. HC0210). Associated control panels located in the R2/C2 Corridor (Room No. HC0210). See Note 14, and Drawing No. 24590-HLW-P1-P23T-00208, *HLW Vitrification Building Equipment Location Plan EL. 14'-0" / Area 208*	
Safety Function(s) / PDSA Reference	The preheater heats the exhaust air from the pulse jet mixers, to help maintain the flow path through the downstream HEPA filters by preventing the filters from becoming saturated with moisture. However, the heating function is only a defense in depth feature since the humidity range of the PJV system is well below 100%. Safety functions of the preheater are:	3.4.1.10, 4.4.18.1
	1. Provide primary confinement of radioactive materials during normal operations and accident conditions. The preheaters are part of the offgas pressure boundary. (SS)	3.4.1.8, 3.4.1.10, 4.4.3
	2. Provide secondary confinement of aerosols during normal, abnormal, and accident conditions. The preheaters are part of the C5 boundary. (SC)	3.4.2.1, 4.3.20
	3. Ensure the HEPA filters, filter housing, and the concrete around the preheater housing is not damaged and the preheater housing is not failed due to overheating. (SC)	3.3.5.4, 3.4.1.9, 4.3.4
Equipment Safety Function Type	☒ Passive Mechanical ☐ Active Mechanical ☐ Electrical	
Seismic Safety Function ☒ Yes ☐ No	Seismic Operability Requirements ☐ During Seismic Event ☐ After Seismic Event ☒ None	

Equipment Environmental Qualification (EEQ)

(Parameter values stated in this section do not include process conditions or operation induced conditions)

Classification of Environment ☒ Mild ☐ Harsh

Room No. HC0210 Contamination Class: C2 Radiation Class: R2

Room No. H-0104 Contamination Class: C5 Radiation Class: R5

Qualified Life (years) ☒ 40 ☐ Other

Parameter Type/Units	Parameter Value: Rm. No. HC0210	Parameter Value: Rm. No. H-0104	Parameter Duration (number)	Duration Units	WTP Source Document Number
Normal Ambients					
High Temperature (°F)	80	113	Note 18	Years	24590-HLW-U0D-W16T-00001
Low Temperature (°F)	66	59	Note 19	N/A	24590-HLW-U0D-W16T-00001
High Relative Humidity (%RH)	100	100	Note 20	N/A	24590-HLW-U0D-W16T-00001
Low Relative Humidity (%RH)	10	5	Note 20	N/A	24590-HLW-U0D-W16T-00001

EQUIPMENT QUALIFICATION DATASHEET (EQD)

Parameter Type/Units		Parameter Value: Rm. No. HC0210	Parameter Value: Rm. No. H-0104	Parameter Duration (number)	Duration Units	WTP Source Document Number
Normal Ambients						
High Pressure (in.-w.g.)		0	0	Note 21	N/A	24590-HLW-U0D-W16T-00001
Low Pressure (in.-w.g.)		-0.1	-1.4	Note 21	N/A	24590-HLW-U0D-W16T-00001
Radiation Dose Rate (mRad/hr)	Rm. No. HC0210	0.5	-	40	Years (Note 22)	24590-HLW-U0D-W16T-00001
	Rm. No. H-0104	-	35400	40		
Plant/Process Induced Vibration		☐ Yes ☒ No				
Additional Normal Ambient Information		N/A				
Abnormal Ambients						
High Temperature (°F)		148	126	8	hours / year	24590-HLW-MAC-C5V-00009
Low Temperature (°F)		40	40	Note 19	N/A	24590-HLW-U0D-W16T-00001
High Relative Humidity (%RH)		100	100	Note 20	N/A	24590-HLW-U0D-W16T-00001
Low Relative Humidity (%RH)		4	6	Note 20	N/A	24590-HLW-MAC-C5V-00009
High Pressure (in.-w.g)		4	4	Note 21	N/A	24590-HLW-U0D-W16T-00001
Low Pressure (in.-w.g)		-6.7	-6.7	Note 21	N/A	24590-HLW-U0D-W16T-00001
Radiation Dose Rate (mR/hr)	Rm. No. HC0210	0.5	-	0	Years (Note 22)	24590-HLW-U0D-W16T-00001
	Rm. No. H-0104	-	35400	0		
Exposure to Wet Sprinkler System	Rm. No. HC0210	Yes	-	2	hours	24590-HLW-U0D-W16T-00001
	Rm. No. H-0104	-	No	N/A		
Additional Abnormal Ambient Information		N/A				
Design Basis Events (DBE) Ambients						
High Temperature (°F)		115	135	1000	hours	24590-HLW-MAC-C5V-00009
Low Temperature (°F)		40	40	Note 19	N/A	24590-HLW-U0D-W16T-00001
High Relative Humidity (%RH)		100	100	1000	hours	24590-HLW-U0D-W16T-00001
Low Relative Humidity (%RH)		10	6	1000	hours	24590-HLW-MAC-C5V-00009
High Pressure (in.-w.g)		4	4	1000	hours	24590-HLW-U0D-W16T-00001
Low Pressure (in.-w.g)		-6.7	-6.7	1000	hours	24590-HLW-U0D-W16T-00001
Radiation Dose Rate (mR/hr)	Rm. No. HC0210	0.5	-	0	hours	24590-HLW-U0D-W16T-00001
	Rm. No. H-0104	-	35400	0		
Submergence (see Note 17, flood height)		Yes	Yes	1000	hours	24590-HLW-U0D-W16T-00001
Chemical/Spray Exposure	Rm. No. HC0210	No	-	12.5	hours	24590-HLW-U0D-W16T-00001
	Rm. No. H-0104	-	No	N/A		
Additional DBE Information		N/A				

DBE Chemical Exposure Details	
DBE Chemical Types / Concentrations	None

EQUIPMENT QUALIFICATION DATASHEET (EQD)

Electrical Interfaces Supporting the Safety Function (see Note 13)	
Power Supply Voltage (VAC, VDC)	480V AC 3-Phase, 120V AC 1-Phase, and 120V AC 1-Phase (UPS)
Power Supply Frequency (Hz)	60 Hz
Power Connection Method	Fusible Disconnect in NEMA 4 Enclosure
I/O Signals to/from Equipment	Remote On/Off via discrete I/O. Inlet, outlet and housing temperature reading via 4-20 mA analog
I/O Connection Method	Terminal Blocks / Strip in NEMA 4 Enclosure

Mechanical Interfaces	
Mounting Configuration (orientation)	Vertical, thru-wall
Mounting Method (bolts, welds, etc.)	See Note 11
Auxiliary Devices	None

Equipment Seismic Qualification (ESQ)

Parameter	Title	Reference/Document Number	Version / Revision	Remarks
WTP Seismic Design Specification	Engineering Specification for Seismic Qualification of Seismic Category I/II Equipment and Tanks	24590-WTP-3PS-SS90-T0001	2	N/A
Specified Seismic Load Parameters	HLW Vitrification Building Seismic Analysis - In-Structure Response Spectra (ISRS)	24590-HLW-S0C-S15T-00009	E	use ISRS figure 46, 47, 48, 73, 74, and 75 per CCN 177700

Equipment Qualification Notes and Additional Information

Note 9. Qualification data to be provided by SELLER through the submittal process as required on G-321-E.

Note 10. Where pressure is given in inches of water column (in-w.c.) in the source document, it is generally assumed that this is in reference to atmospheric pressure and is therefore equivalent to inches of water gauge (in-w.g.).

Note 11. Liner cast into concrete wall. Plenum and shield plates are bolted to the liner.

Note 12. Not used.

Note 13. Electrical interfaces supporting the safety function provided in the R2/C2 corridor (Rm. No. HC0210) only. There is no electrical interface for the preheaters on the R5/C5 filter cave (Rm. No. H-0104) side.

Note 14. Through-wall equipment subject to HC0210 room environment on one side and H-0104 room environment on the other.

Note 15. Environment is "Mild" if equipment remains within manufacturer's rated environmental capability. If not, environment is "Harsh".

Note 16. Contents of this document are Dangerous Waste Permit affecting.

Note 17. Flood height is 1.58 ft. in Rm. No. H-0104 and HC0210 per 24590-HLW-U0D-W16T-00001. SELLER's design shall provide the option of connecting freestanding control panel enclosure to the concrete floor through a direct bolted connection using a steel transfer frame of 22" high, i.e. approximately 0.25 ft. above the flood height level. The purpose of the transfer frame is to allow up to 2" location tolerance of the attachment anchors/bolts to the building to prevent the cutting of rebar in the structure and to utilize existing steel embed in the floor. Seismic qualification including the transfer frame and anchors/ bolts shall be performed as required by the relevant specification in the Purchase Order.

Equipment Qualification Notes and Additional Information

Note 18. For thermal aging, the high normal temperature shall be assumed to subsist for 40 years less the duration of the high abnormal temperature. For any lesser qualified life, the normal and abnormal condition durations shall be assigned proportionally. The abnormal temperature is stated to subsist for a certain number of hours per year. It shall be taken to subsist for this number of hours for each year of the qualified life.

Note 19. The ability to provide the safety function at the low normal temperature, the low abnormal temperature or the low DBE temperature (whichever be the lowest) shall be established by test, analysis, or operating experience. The thermal aging at these respective low temperatures will be conservatively covered by the thermal aging per Note 18 above. Therefore, no duration is assigned for the low temperatures.

Note 20. The ability to provide the safety function at the extremes of the normal and abnormal humidity conditions, taking into consideration the high and the low normal and high and low abnormal, shall be established by test, analysis, or operating experience. No duration is assigned for the normal and abnormal humidity conditions.

Note 21. If the performance of the safety function of the equipment is affected by ambient pressure, the ability to provide the safety function at the extremes of the normal and abnormal pressure conditions, taking into consideration the high and the low normal and the high and low abnormal pressures, shall be established by test, analysis, or operating experience. No duration is assigned to the normal and abnormal pressure conditions.

Note 22. (1) If the abnormal radiation dose rate is the same as the normal radiation dose rate, the normal radiation dose rate shall be assumed to subsist for 40 years, or any lesser qualified life, and the duration of the abnormal radiation dose rate is "0."

(2) If the abnormal radiation dose rate is higher than the normal radiation dose rate, the abnormal radiation dose rate shall be assumed to subsist for 40 years, or any lesser qualified life, and the duration of the normal radiation dose rate is "0."

Note 23. The DBE conditions shall be taken to subsist for the stated number of hours following the qualified life of the equipment.

Note 24. Spray due to fire sprinkler actuation shall be taken to occur once over the entire qualified life duration for a period of 2 hours, even if the qualified life is a period less than 40 years. If spray qualification is provided for DBE conditions (whether for water or chemical spray), then separate qualification for the fire sprinkler spray need not be provided.

Note 25. The values stated in this EQD are the ambients and do not include the thermodynamic and radiation conditions imposed by the process fluids, self-heating, etc. The data pertaining to process fluid and service induced parameters are to be taken into account where significant, such as in thermal aging analyses. These data can be obtained from the equipment data sheets or the Equipment Specification.

Note 26. Equipment that is to be installed in inaccessible locations must be qualified to a 40-year life without the need for maintenance or replacement.

Note 27. C5 Cell Confinement Boundary is SC-I. Offgas Pressure Boundary is SC-III. For simplicity PJV preheater shall be qualified as SC-I same as the HOP preheaters.

DOE Radioactive Materials Disclaimer:

Please note that source, special nuclear and byproduct materials, as defined in the Atomic Energy Act of 1954 (AEA), are regulated at the US Department of Energy (DOE) facilities exclusively by DOE acting pursuant to its AEA authority. DOE asserts, that pursuant to the AEA, it has sole and exclusive responsibility and authority to regulate source, special nuclear, and byproduct materials at DOE-owned nuclear facilities. Information contained herein on radionuclides is provided for process description purposes only.

EQUIPMENT QUALIFICATION DATASHEET (EQD)

Revision History

Rev	Description	System Engr	Equip Engr	Checked	Reviewed	E&NS	Approved	Date
4	Updated Mech Data Sheet Reference Data. Removed safety designations. Revised preheater sketch, added sensor thermowells and shield plugs. Added sketch of shield plug. Updated EQ Data Sheet using current EQD form (Rev 4). Added Notes 17 to 26. Re-issued for Purchase.	~~Mike O'Neill~~ VC Vitaliy Chernev	Bernard Ip 11/10/10	James Krogness	Aaron Bronner	Chris Meng	Tom Hughes	11/11/10
3	General revision of Mech Data Sheet per updated References. Revised preheater sketch and added additional inlet/outlet thermowells. Added EQ Data Sheets (first issue EQD for PJV HEPA preheater) Incorporated 24590-WTP-M6N-M80T-00005 Re-issued for Purchase.	Mike O'Neill	Bernard Ip	James Krogness	Aaron Bronner	Chris Meng	John Julyk	8/5/09
2	Re-Issued for Purchase Revised Sketch & Dimensions; Deleted Hold Notes; Incorporated 24590-WTP-SDDR-PROC-05-00068; Revised Quality Level and Notes 2 & 4; Added Notes 7 & 8	R. Tometczak	A. Cutrona	J. Rouse	S. Cross	--	E B Isern	5/16/05
1	Revised the data tables and note 4 as shown, added notes 5 & 6, and Issued for Purchase	R V Bullock	A. Cutrona	J. Medina	S. Cross	--	E B Isern	9/9/04
0	Issued for Purchase	R V Bullock	J K Rouse	J C Rewari	D M Yarbrough	--	E B Isern	6/15/04

ISSUED BY
RPP-WTP PDC

MECHANICAL SYSTEMS DATA SHEET: SBS

PLANT ITEM No.
24590-HLW-MK-HOP-SCB-00001
24590-HLW-MK-HOP-SCB-00002

R11224692

Project:	**RPP-WTP**	P&ID:	**24590-HLW-M6-HOP-00001,20001**
Project No:	**24590**	Process Data Sheet:	**24590-HLW-MKD-HOP-00006,00013**
Project Site:	**Hanford**	Vessel Drawing:	**24590-HLW-MK-HOP-00001001, 1002, 1003, 1004**
		Calculation:	**24590-HLW-MEC-HOP-00008, 24590-HLW-MEC-HOP-00009, 24590-HLW-MKC-HOP-00003, 24590-HLW-M4C-HOP-00011, 24590-HLW-M4C-30-00003, 24590-HLW-MVC-30-00001, 24590-HLW-N1D-HOP-00010**
Description:	**HLW Submerged Bed Scrubber**		

Please note that source, special nuclear, and byproduct materials, as defined in the Atomic Energy Act of 1954 (AEA) are regulated at the U. S. Department of Energy (DOE) facilities exclusively by DOE acting pursuant to its AEA authority. DOE asserts that pursuant to AEA, it has sole and exclusive responsibility and authority to regulate source, special nuclear, and byproduct materials at DOE-owned nuclear facilities. Information contained herein on radionuclides is provided for process description purposes only.

Reference Data

Charge Vessels (Tag Numbers)	**None**
Pulsejet Mixers / Agitators (Tag Numbers)	**None**
RFDs/Pumps (Tag Numbers)	**None**

Design Data

Quality Level		**Q**	Fabrication Specs	**24590-WTP-3PS-MV00-T0001: NDE requirements are L-1**		
Seismic Category		**SC-I**	Design Code	**ASME VIII Div 1**		
Service/Contents		**Radioactive Liquid**	Code Stamp	**Yes**		
Design Specific Gravity		**1.1**	NB Registration	**Yes**		
Maximum Operating Volume (not counting internals)	gal	**3,329**	Weights (lbs)	Empty	Operating	Test
Total Volume (not counting internals)	gal	**4,308**	Estimated	**50,790**	**81,900**	**88,490**
Environmental Qualification Requirements		**See Attachment 1**	Actual *			
Dangerous Waste Permit Affecting		**Yes**				

Inside Diameter	inch	**120**			Wind Design	**N/A**	
Length/Height (TL-TL)	inch	**69**			Snow Design	**N/A**	
		Vessel Operating	Vessel Design	Coil/Jacket Design	Seismic Design	**24590-WTP-3PS-MV00-T0002 24590-WTP-3PS-SS90-T0001**	
Internal Pressure	psig	**ATM**	**15**	**Note 15**	Seismic Base Moment *	ft*lb	
External Pressure	psig	**1.5**	**6.0 (Note 2)**	**-**	Postweld Heat Treat	**Per Code**	
Temperature	°F	**104 - 140 (Note 3)**	**237**	**237**	Corrosion Allowance	Inch	**0.08 (see Note 7)**
Min. Design Metal Temp.	°F	**41**			Hydrostatic Test Pressure *	psig	

Materials of Construction

Component	Material	Minimum Thickness / Size	Containment
Top Head	**SB575 N06022**	**See Drawing**	**Auxiliary**
Shell	**SB575 N06022**	**See Drawing**	**Primary**
Bottom Head	**SB575 N06022**	**See Drawing**	**Primary**
Support	**SA240 304 (Note 5)**	**See Drawing**	**N/A**
Internal Coils/External Jacket	**SB622 N06022/ SA312 304 (Note 5)**	**See Drawing**	**N/A**
Internals	**SB575 N06022 / SB622 N06022 (Note 6)**	**See Drawing**	**N/A**
Pipe	**SB622 N06022**	**See Drawing**	**Note 8**
Forgings/ Bar stock	**SB564 N06022**	**See Drawing**	**N/A**
Gaskets	**EPDM (Note 17)**	**N/A**	**N/A**
Bolting	**SA193 Grade B16**	**N/A**	**N/A**

Miscellaneous Data

Orientation	**Vertical**	Support Type	**Skirt**
Insulation Function	**None**	Insulation Material	**None**
Insulation Thickness (inch)	**None**	Internal Finish	**Welds descaled as laid**

		External Finish	**Welds descaled as laid**

Remarks

** To be determined by the vendor.*

Note 1 : Deleted.

Note 2 : Design of shell & head under jacket is to be based on 65 psig internal jacket pressure plus 6.0 psig internal vacuum on main vessel.

Note 3 : The vessel headspace minimum operating temperature is 104 °F, however, operating fluctuations can allow it to reach 212 °F maximum. 13

Note 4 : Deleted. 13

Note 5 : SA240 304 & SA312 304 stainless steel material shall have carbon content of 0.030% maximum. Non welded items are excluded from this requirement.

Note 6 : Internal fasteners shall be of alloy N06022 material.

Note 7 : Corrosion allowances:

o Shell and bottom head jacket: A corrosion allowance of 0.01" shall be applied to external surfaces of vessel shell & bottom head exposed to cooling water. A corrosion allowance of 0.04" shall be applied to the stainless steel wetted parts of the shell and bottom head jacket.

o Cooling Coils: The cooling coils shall be provided with a 0.08" external corrosion allowance and 0.01" internal corrosion allowance.

Note 8 : Nozzle necks below the high operating liquid level are primary, the others are auxiliary. 13

Note 9 : Deleted.

Note 10 : The internal coils maximum operating pressure is 98 psig and maximum operating temperature is 113 °F. 13

Note 11 : Deleted.

Note 12 : Deleted. 13

Note 13: Deleted.

Note 14: Deleted. 13

Note 15: The internal design pressure for the internal coils is 150 psig and the internal design pressure for the cooling jacket is 65 psig.

Note 16: Deleted.

Note 17: EPDM is qualified for the radiation (~ 1.0E6 Rads) and temperature environment (~ 250°F) in the melter cave.

Note 18: Data from 24590-HLW-MVC-30-00001.

Note 19: Deleted.

Note 20: Contents of this document are Dangerous Waste Permit affecting.

Note 21: Please note that source, special nuclear and byproduct materials, as defined in the Atomic Energy Act of 1954 (AEA), are regulated at the U.S. Department of Energy (DOE) facilities exclusively by DOE acting pursuant to its AEA authority. DOE asserts, that pursuant to the AEA it has sole and exclusive responsibility and authority to regulate source, special nuclear, and byproduct materials at DOE-owned nuclear facilities. Information contained herein on radionuclides is provided for process description purposes only.

Note 22: Deleted.

Note 23: Attachment 2 added for BNI use only.

Note 24: ***The following nozzle loads are to be used for N11, N12, and N13 per CCN 151558:***

Axis directions follow Global Axis Orientation: X = North, Y = Up, Z = East

N11 Design Loads						
	Flange Forces (Lbs)			**Flange Moments (Ft-Lbs)**		
Load Case	**Fx**	**Fy**	**Fz**	**Mx**	**My**	**Mz**
Weight	**348**	**1314**	**401**	**2748**	**0**	**2387**
Thermal (450 °F)	**14**	**208**	**128**	**1078**	**362**	**740**
Thermal (1000 °F)	**198**	**424**	**329**	**2485**	**326**	**1981**

Seismic	329	414	342	1469	1333	1346

N12 Design Loads						
	Flange Forces (Lbs)			Flange Moments (Ft-Lbs)		
Load Case	Fx	Fy	Fz	Mx	My	Mz
Weight	0	683	11	38	0	0
Thermal (165 °F)	314	616	259	945	549	1801
Seismic	293	468	340	1763	148	1630

N13 Design Loads						
	Flange Forces (Lbs)			Flange Moments (Ft-Lbs)		
Load Case	Fx	Fy	Fz	Mx	My	Mz
Weight	343	1291	386	3128	58	2600
Thermal (1000 °F)	143	420	307	2538	572	1897
Seismic	356	418	362	1751	1847	1553

The following nozzle loads due to HLW jumpers are applied at the jumper connection and are to be used per 24590-WTP-3PN-MV00-00027:

Jumper Pipe Size	Load Type	Forces			Moments		
		Fx (lb)	Fy (lb)	Fz (lb)	Mx (ft -lb)	My (ft-lb)	Mz (ft-lb)
2 in	Weight	30	150	30	100	20	100
	Seismic	100	140	100	225	200	225
	Thermal	200	80	200	250	200	250
3 in	Weight	170	490	170	300	280	300
	Seismic	430	290	430	600	400	600
	Thermal	610	360	610	1010	500	1010
4 in	Weight	500	800	500	950	500	950
	Seismic	550	500	550	650	650	650
	Thermal	1300	600	1300	1050	1000	1050
6 in	Weight	600	2000	600	2000	700	2000
	Seismic	1500	1500	1500	1500	1500	1500
	Thermal	2000	2000	2000	2000	2000	2000
8 in	Weight	1800	3600	1800	3100	1800	3100
	Seismic	3100	3100	3100	3600	3100	3600
	Thermal	3100	3100	3100	3100	3100	3100

Table of Nozzle Connections

Nozzle	Connecting Jumper Size	Design Pressure (psig)	Design Temperature (°F)
N01	Nozzle sizes are the same as those listed in the Nozzle Table of BNI Dwg 24590-HLW-MK-HOP-00001001 Rev. 1.	135	113
N02		-6/15	237
N03		-14.7	113
N04		-14.7	113
N05		-6/15	237
N06		135	113
N07		NA	NA
N08		110	165
N09		NA	NA
N10		-6/15	237
N11		-6/15	237
N12		-6/15	237
N13		-6/15	237
N14		-6/15	237
N15		150	113
N16		150	113
N17		150	113
N18		150	113
N19		150	113
N20		150	113
N21		-14.7	165
N22		-14.7	165
N23		110	165
N24		110	165
N25		-14.7	165
N26		-14.7	165
N27		-14.7	165
N28		65	113
N29		65	113

Equipment Cyclic Data Sheet

Component Plant Item Number:	**24590-HLW-MK-HOP-SCB-00001/-00002**
Component Description	**Vessel**

The Information below envelopes operational duty for fatigue assessment. It is not to be used as operational data. 13

Materials of Construction	**SB575 N06022 (Hastelloy C –22)**
Design Life	**40 years**

	MECHANICAL SYSTEMS DATA SHEET: SBS	PLANT ITEM No. 24590-HLW-MK-HOP-SCB-00001 24590-HLW-MK-HOP-SCB-00002

Component Function and Life Cycle Description	**The SBS is a vessel designed for aqueous scrubbing of entrained radioactive particulate from the melter offgas. It also serves to cool and condense the melter vapor emissions.** 13 **The inlet temperature ranges from 371°F to 764°F. Operating temperature of the SBS ranges from 104 - 140°F with nominal setpoint of 122°F. Cooling coils and a cooling jacket remove the heat from the inlet offgas stream.** 13 **Deleted.** 13 **Non-routine maintenance is expected to occur annually. During this period the SBS will be allowed to cool and remain at ambient temperature, from 59 to 113 °F.** 13 **Deleted.**

Load Type (see Note 18)		Min	Max	Number of Cycles	Comment
Design Pressure	psig	***-6.0***	***15***	***10***	***Nominal assumption***
Operating Pressure	psig	***-1.78***	***0***	***40***	***Assume an annual shutdown (40 cycles/life time).*** 13
Operating Temperature	°F	***104***	***140***	***40***	***Normal operating range***
Contents Specific Gravity		***1***	***1.1***	***40***	***Nominal operating is 1.1, assume annual flush out and replace with clean water. "Min" value per "Design Data" table, page 1 of this data sheet.***
Contents Level	inch	***0***	***57***	***120***	***Nominal operating is 57 inch, assume annual 3x flush out and replace with clean water.***

Localized Features	***Temperatures below are in °F.***	
Headspace temperature with inlet offgas flow through N11 only.	***Deleted***	***Assume normal mode is feeding with 40 cycles to upset (122 to 212) and back to idle (212 to 140).*** ***Assume normal mode is feeding with 2100 cycles to idle (122 to 140) and back to feeding (140 to 122).*** ***Assume mode is idle with 40 cycles to upset (140 to 212), and return to idle (212 to 140).*** ***Assume mode is idle with 40 cycles to off (140 to 59) and back to idle (59 to 140).*** 13
Headspace temperature with inlet offgas flow through N13 only.	***Deleted***	***Assume normal mode is stand-by, with 40 cycles to upset (104 to 212) and back to stand-by (212 to 104). [Unplanned activations].*** ***Assume mode is stand-by with 2100 cycles to upset (104 to 212), and return to stand-by (212 to 104). [Weekly surveillance tests]*** ***Assume mode is idle with 40 cycles to off (140 to 59) and back to idle (59 to 140).***
Cooling supply/returns	***(1) Maximum cooling jacket: 83 in, 89 out; minimum cooling jacket: 63 in, 69 out*** ***(2) Maximum cooling coils: 83 in, 101 out; minimum cooling coils: 63 in, 81 out***	***Assume annual cooling outage with inlet cooling jacket & cooling coil temperatures of 63 and outlet temperatures of 69 & 81, respectively, and SBS vessel temperature of 140 with ambient temperature of 59 (40 cycles). Assume annual cooling supply failure/isolation during operation, in=out=212 (40 cycles).*** 13

	MECHANICAL SYSTEMS DATA SHEET: SBS	PLANT ITEM No. 24590-HLW-MK-HOP-SCB-00001 24590-HLW-MK-HOP-SCB-00002

Notes

Cycle increase: The Seller must increase the numbers of operational cycles given above by 10% to account for commissioning duty unless otherwise noted.

The following off-gas temperatures are to be used for determining N11 & N13 vessel flange temperatures: 13

Temperature (°F)	Description
1,320	Bounding upper inlet bulk temperature of off-gas at maximum flow for N11
924	Pipe wall temperature @ bulk temperature of 1,320 °F for N11
497	Bounding lower bulk temperature while feeding for nominal feed case for N11 & N13

The maximum coincident local operating temperature at each jumper flange adjacent to N11 and N13 occurs at the lower bulk temperature (497°F) while feeding. The maximum non-coincident local operating temperature at each jumper flange at idle (1,320°F) for N11 and and the lower bulk temperature (497°F) while feeding for N13.

Safety Screening/Evaluation Required? If yes per 24590-WTP-GPP-SREG-002, E&NS Signature below	Yes	X	No	

Approval

Rev	Description	System Engr	Vessel Engr	Checked	E&NS	Approved	Date
0	**Issued For Purchase**	M.S.	D.H.	C.S. W.D.	N/A	M.H. W.E	01/25/03
1	**Issued For Purchase (Added Note 13)**	M.S.	M.A.	W.D., C.S.	N/A	M.H., W.E.	4/18/03
2	**Issued for Purchase**	R. Peters	M. Arampalam	M. Studd	N/A	J. Pullen	4/1/04
3	**Issued for Purchase**	R. Peters	M. Arampalam	J. Rouse	N/A	E. Isem	9/2/04
4	**Issued for Purchase**	R. Peters	M. Arampalam	J. Rouse	N/A	E. Isem	11/30/04
5	**Issued for Purchase**	R. Peters	M. Arampalam	J. Rouse	N/A	E. Isem	6/30/05
6	**Issued for Purchase**	J. Rouse	R. Peters	A. Benamou	N/A	J. Julyk	12/8/05
7	**Issued for Purchase (revised to SC-I from SC-III; revised nominal feed & upset temperatures; cooling water temps revised; EQ data updated)**	J. Rouse	R. Peters	N. Johnson	C. Meng	J. Julyk	3/6/07
8	**Updated EQ Data & added nozzle loads for N11, N12, & N13**	J. Rouse	R. Peters	P. Pinto/ R. Hills	C. Meng	J. Julyk	4/17/07
9	**Added jumper nozzle loads, Notes 20 & 21, & EQD**	M. O'Neil	R. Peters	W. Wilcox	M. Hinton	J. Julyk	6/24/08
10	**See Note 22.**	A. Coulam	R. Peters	M. Seed	C. Meng	J. Julyk	10/21/08
11	**Added Calc for HLW Vessel Cyclic Inputs & Deleted HPAV Loads**	M. Kufahl	R. Peters	M. Seed	C. Meng	J. Julyk	2/17/09
12	**Specified jumper load location; revised cooling water info; revised operating & total volumes, added corrosion allowance for vessel portion exposed to cooling water. Added nozzle temperatures**	M. O'Neill	R. Peters	M. Seed	C. Meng	J. Julyk	10/22/09

BECHTEL	**MECHANICAL SYSTEMS DATA SHEET: SBS**	**PLANT ITEM No.** **24590-HLW-MK-HOP-SCB-00001** **24590-HLW-MK-HOP-SCB-00002**

13	**Revised vessel headspace temperatures, added local jumper flange temperatures, and clarified fatigue cycles.**	M. O'Neill	Ray Peters RP	Rich Peters RDP	C. Meng	J. Julyk	6/16/10

RIVER PROTECTION PROJECT – WASTE TREATMENT PLANT

EQUIPMENT QUALIFICATION DATA SHEET

FOR

HLW Submerged Bed Scrubber (SBS)

Attachment 1

EQUIPMENT QUALIFICATION DATASHEET (EQD)

Equipment Identification

Component Tag Number	24590-HLW-MK-HOP-SCB-00001/00002	Safety Classification	☒ SC ☒ SS ☐ APC ☐ SDC ☐ SDS ☐ RRC The SBS is SS for gas confinement and SC for liquid confinement following a seismic event.
Manufacturer / Supplier	GE - Hitachi		
Requisition Number	24590-QL-MRA-MKAS-00004		
Model	N/A	Seismic Category	☒ SC-I ☐ SC-II ☒ SC-III ☐ SC-IV The SBS is SC-III for gas confinement and SC-I for liquid confinement following a seismic event. The entire SBS vessel, including internals, shall be designed as SC-1.
Description (Include descriptive text [e.g., location, elevation])	The Submerged Bed Scrubbers are located in the melter caves in rooms H-0106 and H-0117 at column lines K-9 and K-14, respectively (El. 0' - 0").		
Safety Function(s)	1. Safety Class Function - The SBS maintains its liquid level following a seismic DBE (24590-WTP-PSAR-ESH-01-002-04 Rev. 4m, Table 4A-1, page 4A-5). 2. Safety Significant Function - The SBS ensures confinement of radioactive materials during normal operations and accident conditions (24590-WTP-PSAR-ESH-01-002-04 Rev. 4m, Table 4A-2, page 4A-14).		

Seismic Safety Function	☒ Yes ☐ No	Room Number(s):	H-0106 & H-0117
Maintenance Accessible	☒ Yes ☐ No	Method of Maintenance Access:	☒ Remote ☐ Hands On ☐ None
Seismic Operability Requirements:	☒ During Seismic Event	☒ After Seismic Event	
ITS Equipment Type:	☒ Passive Mechanical	☐ Active Mechanical	☐ Electrical

Equipment Environmental Qualification (EEQ)

Environment ☒ Mild ☐ Harsh Contamination Class: C5 Radiation Class: R5	Hi Rad Service ☐ Yes ☒ No	Design Life (yrs) ☒ 40 ☐ Other ____

Parameter Type/Units	Parameter Value	Time Duration (number)	Time Units	WTP Document Number (BUYER)	Submittal Number (SELLER)
Normal					
Normal High Temperature (°F)	113	Continu-ous	yrs	24590-HLW-U0D-W16T-00001 Rev.0	TBD
Normal Low Temperature (°F)	59	Continu-ous	yrs	24590-HLW-U0D-W16T-00001 Rev.0	TBD
Normal High Relative Humidity (%RH)	100	Continu-ous	yrs	24590-HLW-U0D-W16T-00001 Rev.0	TBD
Normal Low Relative Humidity (%RH)	5	Continu-ous	yrs	24590-HLW-U0D-W16T-00001 Rev.0	TBD
Normal High Pressure (in.-w.g.)	0	Continu-ous	yrs	24590-HLW-U0D-W16T-00001 Rev.0	TBD
Normal Low Pressure (in.-w.g.)	-1.4	Continu-ous	yrs	24590-HLW-U0D-W16T-00001 Rev.0	TBD
Normal Radiation Dose Rate (mR/hr)	5.02E+04	40	yrs	Note 1	Note 5
Vibration Magnitude (g)	N/A	N/A	N/A	24590-HLW-U0D-W16T-00001 Rev.0	N/A
Vibration Frequency (Hz)	N/A	N/A	N/A	24590-HLW-U0D-W16T-00001 Rev.0	N/A

EQUIPMENT QUALIFICATION DATASHEET (EQD)

Equipment Environmental Qualification (EEQ) *(continued)*

Parameter Type/Units	Parameter Value	Time Duration (number)	Time units	WTP Document Number (BUYER)	Submittal Number (SELLER)
Additional Normal Information:	Note 1: CCN 177691				
Abnormal					
Abnormal High Temperature (°F)	170	N/A	N/A	24590-HLW-U0D-W16T-00001 Rev.0	TBD
Abnormal Low Temperature (°F)	40	N/A	N/A	24590-HLW-U0D-W16T-00001 Rev.0	TBD
Abnormal High Relative Humidity (%RH)	100	N/A	N/A	24590-HLW-U0D-W16T-00001 Rev.0	TBD
Abnormal Low Relative Humidity (%RH)	2	N/A	N/A	24590-HLW-U0D-W16T-00001 Rev.0	TBD
Abnormal High Pressure (in.-w.g.)	4	N/A	N/A	24590-HLW-U0D-W16T-00001 Rev.0	TBD
Abnormal Low Pressure (in.-w.g.)	-6.7	N/A	N/A	24590-HLW-U0D-W16T-00001 Rev.0	TBD
Abnormal Radiation Dose Rate (mR/hr)	1.52E+05	40	yrs	Note 2	Note 5
Wet Sprinkler System Present	Not required	N/A	N/A	24590-HLW-U0D-W16T-00001 Rev.0	N/A
Additional Abnormal Information	Note 2: CCN 177691				
Design Basis Events (DBE)					
DBE High Temperature (°F)	165	N/A	N/A	24590-HLW-U0D-W16T-00001 Rev.0	TBD
DBE Low Temperature (°F)	40	N/A	N/A	24590-HLW-U0D-W16T-00001 Rev.0	TBD
DBE High Relative Humidity (%RH)	100	N/A	N/A	24590-HLW-U0D-W16T-00001 Rev.0	TBD
DBE Low Relative Humidity (%RH)	2	N/A	N/A	24590-HLW-U0D-W16T-00001 Rev.0	TBD
DBE High Pressure (in.-w.g.)	4	N/A	N/A	24590-HLW-U0D-W16T-00001 Rev.0	TBD
DBE Low Pressure (in.-w.g.)	-6.7	N/A	N/A	24590-HLW-U0D-W16T-00001 Rev.0	TBD
DBE Radiation Dose Rate (mR/hr)	1.52E+05	0	yrs	Note 3	Note 5
Flood Height (ft)	3.80	1,000	hrs	24590-HLW-U0D-W16T-00001 Rev.0	N/A
Submergence (ft)	Note 4	N/A	N/A	N/A	N/A
Chemical/Spray Exposure	No	N/A	N/A	N/A	N/A
Additional DBE Information	Note 3: CCN 177691 Note 4: The SBS is not submerged during flood conditions.				

EQUIPMENT QUALIFICATION DATASHEET (EQD)

DBE Chemical Exposure Details	
DBE Chemical Types/Concentrations	1. There is no spray source present normally. 2. A nitric acid line is used for maintenance only and is normally inactive. 3. The SBS's are unaffected by glass formers since they are ~ 6 ft. from the feed vessel and separated from the feed vessels by a concrete wall.

Interfaces (Electrical)	
Power Supply Voltage (VAC, VDC)	N/A
Power Supply Frequency (Hz)	N/A
Power Connection Method	N/A
I/O Signals to/from Equipment	N/A
I/O Connection Method	N/A

Interfaces (Mechanical)	
Mounting Configuration (orientation)	Vertical vessel
Mounting Method (bolts, welds, etc.)	Anchor bolts
Auxiliary Devices	N/A

Equipment Seismic Qualification (ESQ)

Parameter	Title	Reference/Document Number	Version / Revision	Remarks
WTP Seismic Design Specification (BUYER)	Engineering Specification for Seismic Qualification of Seismic Category I/II Equipment and Tanks	24590-WTP-3PS-SS90-T0001	Rev. 1	N/A
Specified Seismic Load (BUYER)	HLW Vitrification Building Seismic Analysis - WSGM In-Structure Response Spectra (ISRS)	Calculation 24590-HLS-S0C-S15T-00057; ISRS Figures 554, 555, & 557; CCN 214807	Rev. 00A	N/A
Design Seismic Load (SELLER	TBD	TBD	TBD	N/A
Qualification Method (SELLER)	TBD	TBD	TBD	Dynamic Analysis
Qualification Report Number (SELLER)	TBD	TBD	TBD	N/A
Submittal Number (BUYER)	TBD	TBD	TBD	N/A

13

Notes and Additional Information

Note 5: BNI (BUYER) shall perform Equipment Environmental Qualification in accordance with 24590-WTP-DC-ENG-06-001, Design Criteria for Equipment Seismic and Environmental Qualification.

Attachment 2: References for Submerged Bed Scrubber Vesssels 24590-HLW-MK-HOP-SCB-00001/00002

Data Sheet: 24590-HLW-MKD-HOP-00016 Rev. 12

Data	Document #	Rev	Document Title	Comments
Quality Level	24590-HLW-M6-HOP-00001	5	P&ID - HLW Melter Offgas System Melter 1 Primary Offgas Scrubber	
Seismic Category	24590-HLW-M6-HOP-00001	5	P&ID - HLW Melter Offgas System Melter 1 Primary Offgas Scrubber	
Design Specific Gravity	24590-HLW-MVC-30-00001	B	HLW Vessel Cyclic Datasheet Inputs	
Max Operating Volume	24590-HLW-MKC-HOP-00003	0	Process Sizing of the HLW Submerged Bed Scrubber	volumes are approximations only
Total Volume	24590-HLW-MKC-HOP-00003	0	Process Sizing of the HLW Submerged Bed Scrubber	volumes are approximations only
Inside Diameter	24590-HLW-MKC-HOP-00003	0	Process Sizing of the HLW SubmergedBed Scrubber	
Length TL-TL	24590-HLW-MKC-HOP-00003	0	Process Sizing of the HLW Submerged Bed Scrubber	
Vessel Operating Pressure (Min./Max.)	24590-HLW-MVC-30-00001	B	HLW Vessel Cyclic Datasheet Inputs	
Vessel Operating Pressure (external)	24590-HLW-MVC-30-00001	B	HLW Vessel Cyclic Datasheet Inputs	
Vessel Operating Pressure (internal)	24590-HLW-MVC-30-00001	B	HLW Vessel Cyclic Datasheet Inputs	
Vessel Design Pressure (internal)	24590-HLW-MVC-30-00001	B	HLW Vessel Cyclic Datasheet Inputs	15 psig value is provided in Section 16
Vessel Design Pressure (external)	24590-HLW-MVC-30-00001	B	HLW Vessel Cyclic Datasheet Inputs	
Internal Cooling Coils Operating Pressure	24590-HLW-M6X-HOP-00001	5	Line List	
Cooling Jacket Operating Pressure	24590-HLW-M6X-HOP-00001	5	Line List	
Internal Cooling Coils Design Pressure	24590-HLW-M6X-HOP-00001	5	Line List for 24590-HLW-M6-HOP-00001	
Cooling Jacket Design Pressure	24590-HLW-M6X-HOP-00001	5	Line List for 24590-HLW-M6-HOP-00001	
Vessel Operating Temperature (Min./Max.)	24590-HLW-MVC-30-00001	B	HLW Vessel Cyclic Datasheet Inputs	
Vessel Design Temperature	24590-HLW-MKC-HOP-00003	0	Process Sizing of the HLW Submerged Bed Scrubber	Sht. 9. Design Temp = Max Op (212) + 25 = 237 F
Corrosion Allowance	24590-HLW-N1D-HOP-00010	4	Corrosion Evaluation HOP-SCB-00001/2 (HLW)	
Vessel Materials of Construction	24590-HLW-N1D-HOP-00010	4	Corrosion Evaluation HOP-SCB-00001/2 (HLW)	
Cyclic Data (Vessel)	24590-HLW-MVC-30-00001	B	HLW Vessel Cyclic Datasheet Inputs	
Cooling Water Cooling Coil Temperature (Min./Max.)	24590-HLW-MEC-HOP-00009	0	HLW Submerged Bed Scrubber Cooling Coils Effectiveness	
Cooling Water Jacket Temperature (Min./Max.)	24590-HLW-MEC-HOP-00008	0	HLW Submerged Bed Scrubber Cooling Jacket Effectiveness	
Nozzle Loads	24590-WTP-3PN-MV00-00027	NA	Jumper Nozzle Loads	N11, N12, and N13 per CCN 151558.
Max. EPDM Radiation	3DG N61 005	0	Bechtel Corporation - Nuclear Engineering Design Guide for Radiation Damage Thresholds for Organic and Inorganic Materials	
Min. Cooling Water Temperature	24590-HLW-M6C-PCW-00010	A	Design Pressure & Temperature Calculation for Process Cooling Water System	
[redacted]	[redacted]	[redacted]	[redacted]	[redacted]
[redacted]	[redacted]	[redacted]	[redacted]	[redacted]

Cooling supply/returns	(1) Maximum cooling jacket: 83 in, 89 out jacket: 63 in, 69 out Refs: (a) Max/min inlet temps per sht ii of Calc 24590-HLW-MEC-HOP-00008 Rev 0, SBS Cooling jacket Effectiveness (b) Outlet temps from (a) above, sht 20 (2) Maximum cooling coils: 83 in, 101 out; minimum cooling coils: 63 in, 81 out Refs: (a) Max/min inlet temps per sht ii of Calc 24590-HLW-MEC-HOP-00009 Rev 0, SBS Cooling jacket Effectiveness (b) Outlet temps from (a) above, sht 20	Assume annual cooling outage with inlet cooling jacket & cooling coil temperatures of 63 and outlet temperatures of 69 & 81, respectively, and SBS vessel temperature of 140 with ambient temperature of 59 (40 cycles). Assume annual cooling supply failure/isolation during operation, in = out = 212 (40 cycles). Ref: (a) 59 F is the bounding lower temp for normal conditions from EQ data sheet (b) Cooling water is at lowest operating temps and vessel is at highest operating condition, 140 F, to evaluate thermal stress (highest delta T)

Internal vessel piping and nozzle design shall be compatible with the following external connection pipe size and pressure/temperature conditions outside the vessel:

Nozzle	Connecting Jumper Size	Design Pressure (psig)	Design Temperature (°F)	Comments*
N01	Nozzle sizes are the same as those listed in the Nozzle Table of BNI Dwg 24590-HLW-MK-HOP-00001001 Rev. 1.	135	113	Line List 24590-HLW-M6X-HOP-00001 REV 5
N02		-6/15	237	Spare nozzle; Vessel design T & P
N03		-14.7	113	Line List 24590-HLW-M6X-HOP-00001 REV 5
N04		-14.7	113	Line List 24590-HLW-M6X-HOP-00001 REV 5
N05		-6/15	237	Spare nozzle; Vessel design T & P
N06		135	113	Line List 24590-HLW-M6X-HOP-00001 REV 5
N07		NA	NA	Thermocouple; Vessel design T & P
N08		110	165	Line List 24590-HLW-M6X-HOP-00001 REV 5
N09		NA	NA	Thermocouple; Vessel design T & P
N10		-6/15	237	Spare nozzle; Vessel design T & P
N11		-6/15	237	Jumper Data Sheet Unissued; Vessel design T & P; Upset condition 1,000 F per Assumption 83 of Calc 24590-HLW-MVC-30-00001
N12		-6/15	237	Jumper Data Sheet Unissued; Vessel design T & P
N13		-6/15	237	Jumper Data Sheet Unissued; Vessel design T & P; Upset condition 1,000 F per Assumption 83 of Calc 24590
N14		-6/15	237	Spare nozzle; Vessel design T & P
N15		150	113	Line List 24590-HLW-M6X-HOP-00001 REV 5
N16		150	113	Line List 24590-HLW-M6X-HOP-00001 REV 5
N17		150	113	Line List 24590-HLW-M6X-HOP-00001 REV 5
N18		150	113	Line List 24590-HLW-M6X-HOP-00001 REV 5
N19		150	113	Line List 24590-HLW-M6X-HOP-00001 REV 5
N20		150	113	Line List 24590-HLW-M6X-HOP-00001 REV 5
N21		-14.7	165	Line List 24590-HLW-M6X-HOP-00001 REV 5
N22		-14.7	165	Line List 24590-HLW-M6X-HOP-00001 REV 5
N23		110	165	Line List 24590-HLW-M6X-HOP-00001 REV 5
N24		110	165	Line List 24590-HLW-M6X-HOP-00001 REV 5
N25		-14.7	165	Line List 24590-HLW-M6X-HOP-00001 REV 5
N26		-14.7	165	Line List 24590-HLW-M6X-HOP-00001 REV 5
N27		-14.7	165	Line List 24590-HLW-M6X-HOP-00001 REV 5
N28		65	113	Line List 24590-HLW-M6X-HOP-00001 REV 5
N29		65	113	Line List 24590-HLW-M6X-HOP-00001 REV 5

Following are off-gas temperatures for determining the NI1 & NI3 flange temperatures:

Temperature (°F)	Description	Reference
[redacted]	[redacted]	[redacted]
924	[redacted]	[redacted]
497	[redacted]	[redacted]

River Protection Project Waste Treatment Plant	**MECHANICAL DATA SHEET** **HLW Catalytic Oxidizer / Reducer** ISSUED BY RPP-WTP PDC R11377941	**PLANT ITEM No.** 24590-HLW-MX-HOP-SKID-00005 24590-HLW-MX-HOP-SKID-00006 24590-HLW-MX-HOP-SKID-00007 24590-HLW-MX-HOP-SKID-00008 Data Sheet No. / Rev. 24590-HLW-MKD-HOP-00019 / 10

Project:	RPP-WTP	System Description	Thermal Catalytic Oxidizer/Selective Catalytic Reduction
Project No.:	24590		
System No.:	HOP	Reference Docs.	Specification: 24590-HLW-3PS-MBTV-T0002 Process Calc.: 24590-HLW-MKC-HOP-00010 Process Calc.: 24590-HLW-M4C-HOP-00011 Process Calc.: 24590-HLW-M6C-HOP-00013
Building:	HLW		
Quality Level	CM	Associated Dwgs.	24590-HLW-M5-V17T-20004, -00004 24590-HLW-M6-HOP-20008, -00008 24590-HLW-P1-P23T-00112, -00117
Safety Classification	SS		
Seismic Criteria	Category III		

ITEMS MARKED WITH * ARE TO BE PROVIDED BY VENDOR

Process Data (Buyer)

Offgas Inlet Conditions:

		Nominal	Maximum	Design
Vol. Flow	(acfm) (scfm)	2448 1465	3102 1750	N/A 2000 (Process Note 5)
Temperature	(°F)	330	330	355 (Process Note 5)
Pressure	(in. WG)	-39	-45	-82 / +84
Density	(lb/ft³)	0.0432	0.395	0.038
Allow. Diff. Pres.			(in. WG)	15

Offgas Inlet Composition:

		Nominal	Maximum
N_2	(% Volume)	69.5 %	63.7 %
O_2	(% Volume)	18.7 %	17.1 %
H_2O	(% Volume)	10.6 %	18.0 %
CO_2	(% Volume)	0.36 %	0.38 %
Ar	(% Volume)	0.83 %	0.76 %

Offgas Outlet Conditions:

		Nominal	Maximum	Design
Temperature	(°F)	*	*453 (Note 7)	Note 1
Maximum Ammonia Slip, ppm			50	50
Design Temperature (Process Note 1)				*1000 F

Minor Offgas Components (Process Note 5)	Maximum, kg/hour	Bounding, kg/hour
NH_3	4.37E-03	3.19E-02
NO	5.79E-01	1.88E+00
N_2O	1.25E-02	1.50E-01
NO_2	9.66E-02	2.25E+00
CO	1.70E-02	4.07E+00
SO_2	6.70E-03	2.05E-02
H_2	3.53E-03	8.79E-02
Hg	1.25E-04	2.57E-04
HCl	6.58E-06	1.77E-05
HF	3.99E-06	1.63E-05
I_2	1.11E-06	1.11E-06
Particulate	4.34E-11	2.11E-10
VOC/SVOC	2.76E-03	3.20E-03

Process Data Notes:

1. Seller's design outlet temperature based on the Thermal Catalytic Oxidizer/Selective Catalytic Reducer vessel and internal component temperatures using thermodynamic activities in the equipment. Design temperature per Seller = *1000 °F
2. Deleted
3. Deleted.
4. Maximum step changes in NO and NO_2 concentrations over a ten-minute period may be as high as 500 ppmv. Minimum NOx concentration is 0 ppmv.
5. Heater sizing for initial heat-up to system operating temperature shall not credit contribution from minor offgas components and specified design flow and temperature (inlet conditions).
6. Maximum SO_2 listed does not include transient spikes.
7. Based on heat exchanger efficiency of 70%. See vendor submittal 24590-CM-POA-MBT0-00002-03-00001 for verification of design temperature.

Ammonia Supply:

		Nominal	Maximum	Design
Temperature	(°F)	55	117	150
Internal Pressure	(psig)	16	45	300
Solids Content	(wt. %)	0 %	0 %	0%

Ammonia Dilution Air Supply:

		Nominal
Pressure	(psig)	110
Filtration	(microns)	3
Inlet Nozzle Size	(in)	2

Please note that source, special nuclear, and byproduct materials, as defined in the Atomic Energy Act of 1954 (AEA) are regulated at the U. S. Department of Energy (DOE) facilities exclusively by DOE acting pursuant to its AEA authority. DOE asserts that pursuant to AEA, it has sole and exclusive responsibility and authority to regulate source, special nuclear, and byproduct materials at DOE-owned nuclear facilities. Information contained herein on radionuclides is provided for process description purposes only.

Ammonia Note:

Buyer will supply anhydrous ammonia at Seller's specified flowrate to meet design conditions. Seller is responsible for flow control of anhydrous ammonia to meet performance requirements. Ammonia vaporizer assures nominal conditions.

Ammonia Dilution Air Note:

Buyer will supply ammonia dilution air at Seller's specified flowrate to meet design conditions. Seller is responsible for flow and pressure control of dilution air to meet performance requirements.

Ammonia Note:
Buyer will supply anhydrous ammonia at Seller's specified flow rate to meet design conditions. Seller is responsible for flow control of anhydrous ammonia to meet performance requirements. Ammonia vaporizer assures nominal conditions.

Ammonia Dilution Air Note:
Buyer will supply ammonia dilution air at Seller's specified flow rate to meet design conditions. Seller is responsible for flow and pressure control of dilution air to meet performance requirements.

The following Process Performance Requirements are the WTP permits performance requirements that shall be used by the Buyer to verify Seller's System Performance requirements are met:

1. The maximum achievable control technology (MACT) destruction removal efficiency (DRE) for volatile organic compounds (VOCs) and semi-volatile compounds (SVOCs) shall be greater than or equal to 95%. The principal organic dangerous constituents (PODCs) to be used in HLW performance testing are naphthalene (CAS 91-20-3) and 2-propene-1-ol (CAS 107-18-6). A DRE greater than 95% is preferred.
2. The NOx (defined as NO and NO_2) Selective Catalytic Reduction (SCR) unit shall perform with a reduction efficiency of 95%.
3. Dioxin and furan emissions at the outlet of the Thermal Catalytic Oxidizer/Reducers shall meet the MACT criteria of 0.2 ng/m^3 TEQ (Toxic Equivalent).
4. Maximum inlet loading 0.7 grams per minute naphthalene and 2.0 grams per minute allyl alcohol, and a minimum oxidation catalyst outlet temperature of 700°F shall be used as the basis for DRE determination. (General Note 9)
5. Carbon monoxide (CO) emission shall meet the MACT criteria of 100 parts per million (ppm) by volume, over an hourly rolling average, dry basis.
6. Hydrocarbon emission shall meet the MACT criteria of 10 parts per million (ppm) by volume, over an hourly rolling average dry basis and reported as propane.

Please note that source, special nuclear and byproduct materials, as defined in the Atomic Energy Act of 1954 (AEA), are regulated at the US Department of Energy (DOE) facilities exclusively by DOE acting pursuant to its AEA authority. DOE asserts, that pursuant to the AEA it has sole and exclusive responsibility and authority to regulate source, special nuclear, and byproduct materials at DOE-owned nuclear facilities. Information contained herein on radionuclides is provided for process description purposes only.

Safety Screening required?: Yes X No__ (If yes per 24590-WTP-GPP-SREG-002, E&NS signature required below)

River Protection Project Waste Treatment Plant	**MECHANICAL DATA SHEET** **HLW Catalytic Oxidizer / Reducer**	**PLANT ITEM No.** **24590-HLW-MX-HOP-SKID-00005** **24590-HLW-MX-HOP-SKID-00006** **24590-HLW-MX-HOP-SKID-00007** **24590-HLW-MX-HOP-SKID-00008** Data Sheet No. / Rev. **24590-HLW-MKD-HOP-00019** / **10**

Approvals

Rev	Reason for revision	Systems/ Process Eng.	Equipment Eng.	Checked	E&NS	EQ	MET	Approved	Date
10	Re instate 1750 (scfm) max flow rate. Fix typos and re instate general notes.	R Peters	D Rickettson	R. RICKENBACH ~~G Goolsby~~	C Meng	N/A	N/A	D Wilsey	6-3-11
9	Incorporate TCN 24590-CM-MRA-MBT0-00002-T0003, T0008, & T0009 and SDDR 24590-WTP-SDDR-MS-10-00022 & 00135	M. O'Neill	T. Henry	D. Rickettson	C Meng	N/A	D Adler	J Schneider	25-Feb-11
8	General Revision - Major revision. No revision triangle required.	M. O'Neill	T.Valenti	G. Goolsby	C. Meng	N/A	Steve Vail for R. Davis	J. Roth	9-Apr-09
7	Changed temperature for HLW-SCR-00001. Added 25 °F design margin per 24590-WTP-GPG-M-017. Added Ammonia Piping Material Type. Added MET as reviewer.	M. O'Neill	J. Wood	U. Sen	C. Meng	Phil Snyder for J. White	R. Davis	J. Julyk	17-Mar-08
6	Consolidated data sheets, this revision supersedes 24590-HLW-MKD-HOP-00020 Rev 5. Added safety classification. Revised process data note 2. Revised process performance requirement note 1. Added subcomponent IDs to Component table. Revised note 4. Includes new EEQ data. Includes HPAV screening and Dangerous waste permitting statement.	Mike O Neill	Josh Wood	Utpal Sen	Chris Meng	Dick Hills		John Julyk	14-Feb-08
5	Minor Change: Attachment 1, included on the EDR copy, was missing from the issued Rev 4 data sheet, this revision includes the missing attachment. Rev 4 triangles are kept for clarity to show changes from Rev 3.	Tom Galioto	Anthony Cutrona	Craig Knauss	Chris Meng	N/A		John Julyk	26-Jun-07
4	Updated quality level designator. Revised offgas inlet conditions and composition. Added Note 8 and Attachment 1. Added EQ data. Revised ammonia and dilution air supply conditions. Added Safety signature to Approval block. Updated Vendor data per 24590-CD-POA-MBT0-00002-07-00001.	Tom Galioto	Anthony Cutrona	Craig Knauss	Chris Meng	N/A		John Julyk	21-May-07
3	Revised housing material and system performance. Added NOx step change requirement and ammonia skid layout requirements.	Jim Rouse	David Pease	Chris Morley	N/A	N/A		Mark Hoffmann	31-Jul-05
2	Revised catalyst model number per SDDR 24590-WTP-SDDR-PROC-04-00879, and added dilution air, outlet piping, and ammonia skid requirements.	J. Rewari / J. Rouse	D. Pease	C. Morley	N/A	N/A		M. Hoffmann	8-Nov-04
1	Revised Seller Information	J. Medina / J. Rouse	D. Pease	C. Morley	N/A	N/A		M. Hoffmann	4-May-04
0	Issued for Purchase. This data sheet supercedes 24590-HLW-MKD-HOP-00015 R/1.	J. Medina / J. Rouse	D. Pease	D. Yarbrough C. Morley	N/A	N/A		M. Wright	8-Apr-04

River Protection Project Waste Treatment Plant	**MECHANICAL DATA SHEET** **HLW Catalytic Oxidizer / Reducer**	**PLANT ITEM No.** 24590-HLW-MX-HOP-SKID-00005 24590-HLW-MX-HOP-SKID-00006 24590-HLW-MX-HOP-SKID-00007 24590-HLW-MX-HOP-SKID-00008
		Data Sheet No. / Rev. 24590-HLW-MKD-HOP-00019 / 10

Mechanical Data (Buyer)

Construction Data:

Process Equipment Dimensions (L x W x H):

Sections (Applicable Only to the Catalytic Oxidizer/Reducer Skids)	17'-0" x 5'-0" x 10'-9"	ft
Overall	39'-6" x 5'-0" x 17'-6"	ft
Operating Weight	*70,830	lbf
Shipping Dimensions (L x W x H)	*18' 0" x 6' 10" x 12'	ft
Shipping Weight	*70,830	lbf

Ammonia Dilution Equipment (L x W x H):

Ammonia Dilution Skid dimensions	14'-6" x 5'-6" x 7'-6"	ft
Operating Weight	*~15,000	lbf
Shipping Dimensions (L x W x H)	15' x 6' x 7.5'	ft
Shipping Weight	*~15,000	lbf

Thermal Analysis Data:

Room Temperature	83	°F
Earth Temperature Under Base	70	°F
Maximum Heat Loss	15	Kw
Concrete Slab Base Thickness	3	ft
Thermal Conductivity of Concrete Slab	1.8	W / m / K

Thermal Cycling Frequency:
For design purposes, use a thermal cycle frequency of once every two (2) months for the life of the plant (40 years).

Nozzle Loading (Buyer, See Note 1)

Inlet:

Load Case	Fa (lb)	Fb (lb)	Fc (lb)	Ma (ft-lb)	Mb (ft-lb)	Mc (ft-lb)
Weight	400	-500	400	1000	3000	-1000
Thermal (+)	200	1000	200	2000	2000	2000
Thermal (-)	-4400	-1000	-1000	-7000	-15000	-25000
Seismic (+)	3500	3500	3500	11000	18000	18000
Seismic (-)	-3500	-3500	-3500	-11000	-18000	-18000
Normal (+)	600	500	600	3000	5000	1000
Normal (-)	-4000	-1500	-600	-6000	-12000	-26000
Occasional (+)	4100	4000	4100	14000	23000	19000
Occasional (-)	-7500	-5000	-4100	-17000	-30000	-44000

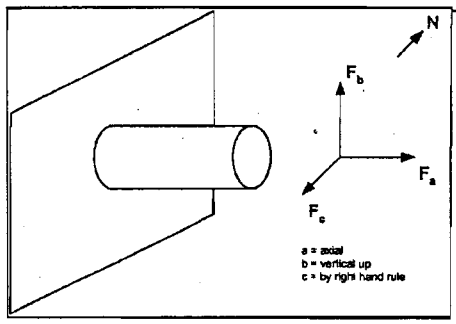

See supplier submittal 24590-CM-POA-MBT0-00002-05-00009 for nozzle movement values.

River Protection Project Waste Treatment Plant	**MECHANICAL DATA SHEET** **HLW Catalytic Oxidizer / Reducer**	**PLANT ITEM No.** **24590-HLW-MX-HOP-SKID-00005** **24590-HLW-MX-HOP-SKID-00006** **24590-HLW-MX-HOP-SKID-00007** **24590-HLW-MX-HOP-SKID-00008**
		Data Sheet No. / **Rev.** **24590-HLW-MKD-HOP-00019** / **10**

Outlet:

Load Case	Fa (lb)	Fb (lb)	Fc (lb)	Ma (ft-lb)	Mb (ft-lb)	Mc (ft-lb)
Weight	-1700	400	400	-200	-500	500
Thermal (+)	2000	1000	2000	100	13000	1000
Thermal (-)	-1300	-2000	-2000	-20000	-2000	-16000
Seismic (+)	4200	6600	6600	9500	75000	75000
Seismic (-)	-4200	-6600	-6600	-9500	-75000	-75000
Normal (+)	300	1400	2400	800	12500	1500
Normal (-)	-3000	-1600	-1600	-20200	-2500	-15500
Occasional (+)	4500	8000	9000	10300	87500	76500
Occasional (-)	-7200	-8200	-8200	-29700	-77500	-90500

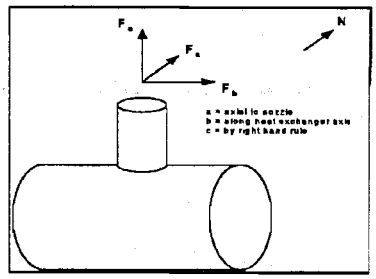

See supplier submittal 24590-CM-POA-MBT0-00002-05-00009 for nozzle movement values.

Notes:
1. Normal = Weight + Thermal
2. Occasional = Weight + Thermal + Seismic

River Protection Project Waste Treatment Plant	**MECHANICAL DATA SHEET** **HLW Catalytic Oxidizer / Reducer**	**PLANT ITEM No.** 24590-HLW-MX-HOP-SKID-00005 24590-HLW-MX-HOP-SKID-00006 24590-HLW-MX-HOP-SKID-00007 24590-HLW-MX-HOP-SKID-00008 **Data Sheet No.** / **Rev.** 24590-HLW-MKD-HOP-00019 / 10

System Performance (Seller, General Note 2)

Volatile Organic DRE	*95	%	Semi-Volatile Organic DRE		*95	%	
NOx Reduction	*95	%	Ammonia consumption, max		*15	lb/hr	
NOx emissions, max	*119	ppmvw	Ammonia entering injection chamber:	Pressure	*30	in-WG	
Ammonia slip, max	*10	ppmvw		Flow	*14.0	lb/hr	
Ammonia/NOx molar injection ratio	*			Temp.	*100	°F	
Pressure drop through Oxidizer unit	*10	in-WG	Dilution Air:	Pressure	*80	in-WG	
Minimum service life catalyst:				Flow	*200	scfm	
VOC Catalyst	*3	yrs (EST.)					
NOx Catalyst	*3	yrs (EST.)					

Recommended Catalyst replacement schedule: Replacement schedule could be 1-2 year intervals.

Components (Seller, General Note 2)

Catalyst:	**Organic: HOP-SCO-00001 & 00004**	**NOx: HOP-SCR-00001 & 00002**
Manufacturer	BASF (VOCat 300S) "Source Controlled"	*BASF NO_x CAT VNX-300
Number of reactors	1	1
Number of catalyst modules	*27	*27
Residence time (at standard conditions), sec	0.75 (General Note 9)	*
Arrangement	*3 High x 3 Wide	*3 High x 3 Wide
Total catalyst reactor vol. ft^3	*22.5	*22.5
Type	Precious metal - platinum	*Vanadium/Titanium Oxide
Material: base/substrate	Ceramic - cordierite	*Ceramic Cordierite
Total Number of layers per reactor	3	*3
Thickness of layer, in	*10	*10
Space provided between layers for remixing	Yes	*
Space for additional layer, in	No	*No
Is dummy layer provided	No	*No
Number of flow passages	*230 cpsi	*64
Flow passage, in. x in.	0.060" x 0.060"	*0.11" x 0.11"
Face velocity thru reactor, fpm	*427	*427
Outlet Offgas Temperature for site performance testing, °F	700 (Min) - 750 (Nominal)	*700 (Min) - 750 (Nominal)
Design Temperature, °F	*750	*750
Catalyst module Dimensions, (L x W x D)	*12" x 12" x 10"	*12" x 12" x 10"
Catalyst module weight, lb	*50	*50
Total weight of catalyst reactor, lb	*1,350	*1,350
Housing:		
Material Type	347 SS	347 SS
Material/Thickness, in	*3/8	*3/8
Number of Section	*1	*1
Weight of Heaviest Section, lb	*10,500	*10,000
Insulation Lining	*Microporous (Super G)	*Microporous (Super G)
Material/Thickness, in	*4	*4
Thermal Cond, Btu-in/hr ft^2 °F	*0.50 - 0.84	*0.50 - 0.84
Method of Attachment	*Studs with clips	*Studs with clips
Design pressure, psig	*see Offgas Inlet Conditions on pg. 1	
Operating pressure, psig	*see Offgas Inlet Conditions on pg. 1	
Design temperature, °F	*See General Note 10	
Corrosion Allowance	0.010 inch	0.010 inch
Erosion Allowance	None	None

River Protection Project Waste Treatment Plant	**MECHANICAL DATA SHEET** **HLW Catalytic Oxidizer / Reducer**	**PLANT ITEM No.** **24590-HLW-MX-HOP-SKID-00005** **24590-HLW-MX-HOP-SKID-00006** **24590-HLW-MX-HOP-SKID-00007** **24590-HLW-MX-HOP-SKID-00008** **Data Sheet No.** / **Rev.** **24590-HLW-MKD-HOP-00019** / **10**

Ducting:		
Material/Thickness, in	*347SS / 3/8	*347SS / 3/8
Cross Section, ft x ft	*Inlet = 18" x 24" / Outlet = 4' x 5'	*Inlet = 18" x 24" / Outlet = 4' x 5'
Duct Velocity, fpm	*Inlet = 1034 / Outlet = 200	*Inlet = 1034 / Outlet = 200
Design Temperature, °F	*See General Note 10	
Corrosion Allowance	0.010 inch	0.010 inch
Erosion Allowance	None	None
Electric Heater: HOP-HTR-00001 & 00007		
Manufacturer	*CCI Thermal	
Type	*Tubular Elements	
Number of Heat Zone	*24 Heating Elements / Zone	
Number of Zones	*5	
Watt Density, W/in^2	*8.6	
Power, kW	*	
Voltage/Current rating	*480v /	
Wetted Material Type	*347 SS	
Heating Element & Enclosure Material Type	*Incoloy 800	
High Temp. Surface Material Type	347 SS	
Design Temperatuer, °F	*1000	
Corrosion Allowance (Electric Heater Housing)	0.010" (does not include heater element components)	
Erosion Allowance	None	
Recuperative Heat Exchanger: HOP-HX-00001 & 00003		
Manufacturer	*Thermo Z / Munters - Deschamps	
Type	*Plate / Frame	
Cold Side Components & Enclosure Material Type	347 SS	
Hot Side Components/Tubes	347 SS / 439 SS	
Ht transfer coefficient, Btu/hr ft^2 °F	*3.20	
Heat exchange area, ft^2	*1,756	
ΔT (LMTD), °F	*122	
Heat Eexchanger duty, Btu/hr	*674,764	
Design Temperautre, °F	*See General Note 10	
Corrosion Allowance	0.010 inch, No corrosion allowance required for heat transfer surface	
Erosion Allowance	None	
Ammonia Injection Manifold: (Note 7)		
Type/Arrangement	*Spray Nozzle Grid	
Feed Inlet Dia. in	*2	
Supply Pressure/Temp (psi/°F)	*0.5 / 100	
Material Type	347 SS (Vessel Internals) 316L SS (External to Vessel)	
No. of nozzle bars per manifold	*4	
No. of nozzles per bar	*12	
Spacing between nozzles, in	*7.5 - 10	
Nozzle opening diameter, in	*0.0625	
Corrosion Allowance	0.010 inch	
Erosion Allowance	None	
Weight		
Shipping (Heaviest), lb	*5,470	
Installed, lb	*70,830 (Installed operating weight of the complete TCO/SCR skid)	
Shipping dimension (L x W x H), ft	*18' x 6' x 12'	*18' x 6' x 12'

Ammonia / Air Dilution Skid Layout (HOP-SKID-00006 and 00008)

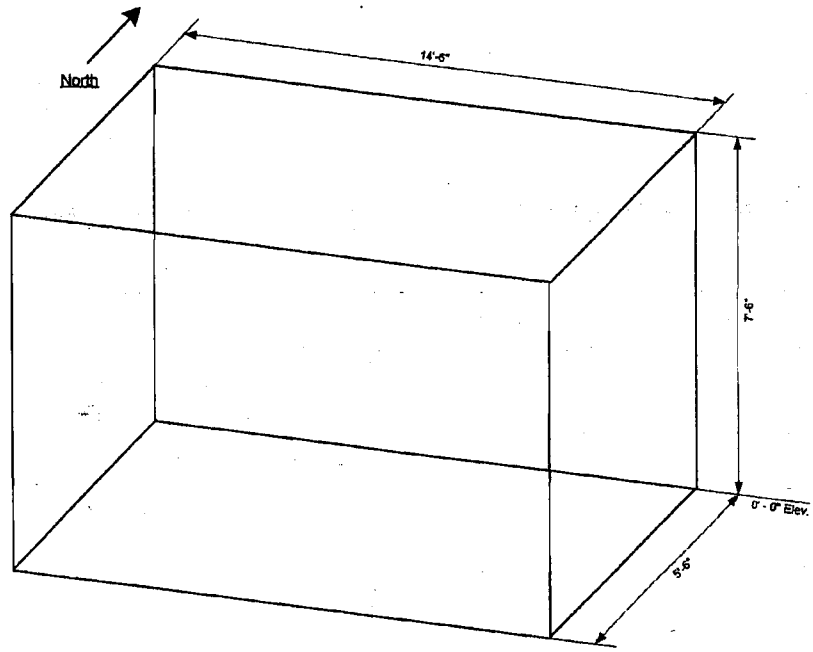

Ammonia / Air Dilution Skid Requirements:

1. All equipment and appurtenances including any platforms, ladders, etc. must fit within the space envelope.

HOP-SKID-00006 (Typical of HOP-SKID-00008)

Catalytic Oxidizer / Reducer Skid Layout (HOP-SKID-00005 and 00007)

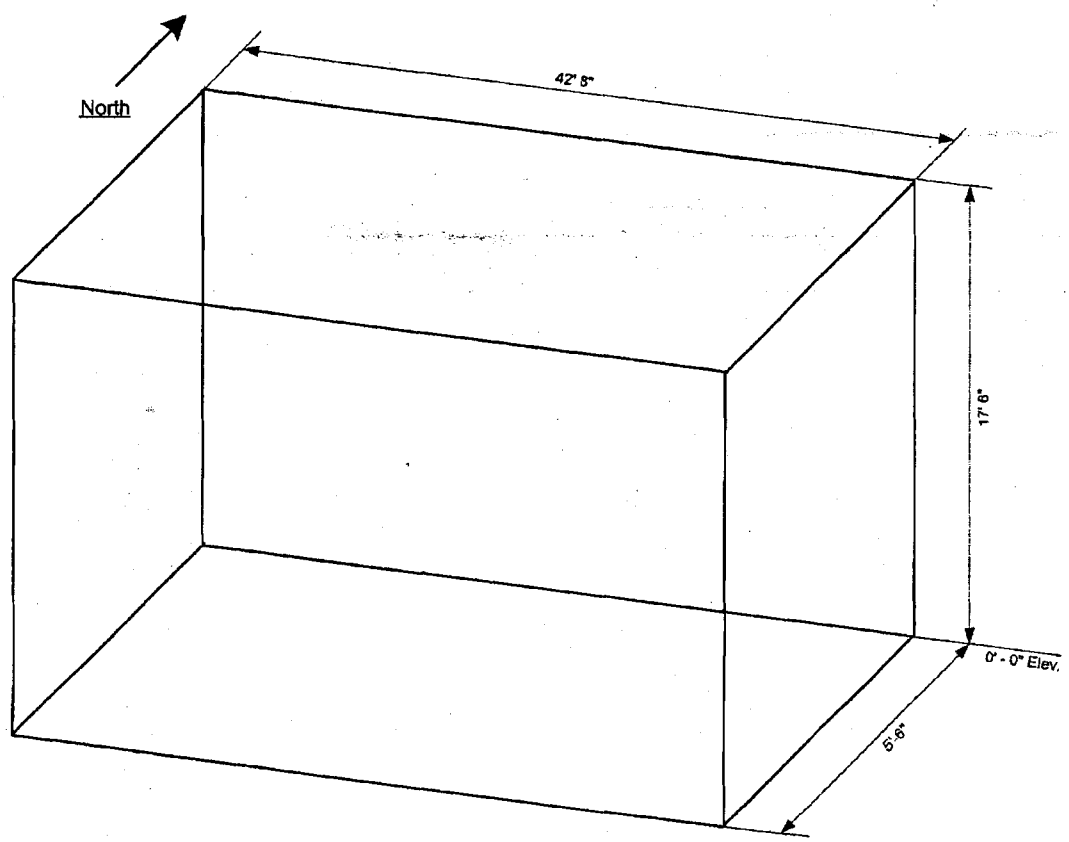

Catalytic Oxidizer / Reducer Skid Requirements:

1. All equipment and appurtenances including any platforms, ladders, etc. must fit within the space envelope.

2. Maximum allowable equipment dimensions are shown, except that the height for Heaters HOP-HTR-00001 / 00007 shall include space for maintenance access. If height is exceeded, heaters shall be moved to above structural steel at the 12'-9" elevation.

Notes

GENERAL NOTES:

1. Nozzle location and orientation shall be as shown on drawing 24590-CM-POA-MBT0-00002-04-00002. Nozzle location tolerance = ±1/2" (X,Y,Z).
2. Seller to confirm values.
3. Seller's data is rounded and based on preliminary engineering design.
4. Catalytic Skid and Sub component tag numbers follow:
   Melter 1: HOP-SKID-00005: HOP-HX-00001, HOP-HTR-00001, HOP-SCO-00001, HOP-SCR-00001
   Melter 2: HOP-SKID-00007: HOP-HX-00003, HOP-HTR-00007, HOP-SCO-00004, HOP-SCR-00002
5. Data marked with an asterisk is or will be provided by Seller.
6. Contents of this document are Dangerous Waste Permit Affecting.
7. Ammonia / Air Injection Manifold design shall be finalized after flow modeling results.
8. Equipment location is shown on Drawings 24590-HLW-P1-P23T-00112 and 24590-HLW-P1-P23T-00117.
9. Oxidation catalyst residence time is based on pilot plant performance at the Catholic University's Vitreous State Laboratory (VSL). Reference *Regulatory Off-Gas Emissions Testing on the DM1200 Melter System Using HLW and LAW Simulants*, 24590-101-TSA-W000-0009-166-00001. Offgas VOC content is based on *Small Scale Melter Testing for Allyl Alcohol Method Verification*, VSL-08R1390-1.
10. * Inlet at recuperative heat exchanger shall use a operating temperature of 355 ^{0}F (T_1). From the outlet of the recuperative heat exchanger to the inlet of the electric heater the operating temperature shall be 660 ^{0}F (T_2). The electric heater shall be designed for 1000 ^{0}F. The electric heater outlet pipe and SCO and SCR housings shall be designed using a 1000 ^{0}F temperature. Electric heater controls shall limit the offgas temperature to 750 ^{0}F to insure catalyst performance. Inlet of the recuperative heat exchanger (T_3) shall use operating temperature of 750 ^{0}F. Outlet of the recuperative heat exchanger (T_4) shall use a operating temperature of 490 ^{0}F.
    See vendor drawing numbers 24590-CM-POA-MBT0-00002-03-00038 and 24590-CM-POA-MBT0-00002-04-00030 for location of T1, T2, T3, and T4.

EQUIPMENT QUALIFICATION DATASHEET (EQD)

Equipment Identification		
Full Component Tag Number or BNI Stock Code Number	24590-HLW-MX-HOP-SKID-00005 24590-HLW-MX-HOP-SKID-00006 24590-HLW-MX-HOP-SKID-00007 24590-HLW-MX-HOP-SKID-00008	Safety Classification ☐ SC ☒ SS ☐ APC-PAM
Equipment Datasheet Number	24590-HLW-MKD-HOP-00019	
Description	HLW Thermal Catalytic Oxidizer/Reducer for HLW Secondary Offgas Treatment Manufacturer: IONEX	Seismic Category ☐ SC-I ☐ SC-II ☒ SC-III ☐ SC-IV ☐ SC-III Seismic Interaction only
Location (Facility / Building and Room No.)	HLW/H-A123	
Safety Function(s)	The following are the Safety Significant functions of the TCO credited for DBE: • Confinement of melter offgas • Catalyst skid electric heater (HOP-HTR-00001/00007) high temperature interlock. Heater to be shut down at a given high temperature set point to prevent over temperature condition. (Signal from TE 0514 / 2514 to JY 0520 / 2520) • Ammonia Piping - The ammonia piping shall provide confinement of ammonia. • Ammonia Air Addition (Dilution) - To dilute and maintain the TCO/SCR ammonia concentration below the Lower Flammable Limits (LFL), air must be injected in the ammonia supply. • Ammonia Supply Isolation Valve (YV 0504/2504) - The isolation valve for the ammonia supply to the TCO/SCR shall close upon detection of low or no air injection. • Low Temperature Interlock on SCR (Signal from TE 0336/2336) - The low temperature interlock on the selective catalytic reduction unit stops the injection of ammonia (Valves YV 0504/2504 are closed). • Protect ITS electrical components from damage by liquid sprays Reference: 24590-WTP-PSAR-ESH-01-002-04, Rev 4j, Section 4.4.3.3 and 4.4.24	

Equipment Safety Function Type	☒ Passive Mechanical	☒ Active Mechanical	☒ Electrical
	TCO Housing	Valves / Flow Meters YV 0504 / 2504 FT 0517 / 2517 FT 0518 / 2518	Temperature Element TE 0514 / 2514 TE 0336 / 2336

Seismic Safety Function	Seismic Operability Requirements		
☒ Yes ☐ No	☒ During Seismic Event	☒ After Seismic Event	☐ None

EQUIPMENT QUALIFICATION DATASHEET (EQD)

Equipment Environmental Qualification (EEQ)

(Parameter values stated in this section do not include process conditions or operation induced conditions)

Classification of Environment ☒ Mild ☐ Harsh	Qualified Life (years) ☐ 40 ☒ Other TCO Housing - 40 years Replacable Equipment: Less than 40 years Heaters Recuperative Heat Exchanger Catalyst

Parameter Type/Units	Parameter Value	Parameter Duration (number)	Duration Units	WTP Source Document Number
Normal Ambients				
High Temperature (°F)	83	Note 1a	Years	24590-HLW-U0D-W16T-00001
Low Temperature (°F)	59	Note 1a	N/A	24590-HLW-U0D-W16T-00001
High Relative Humidity (%RH)	100	Note 1a	N/A	24590-HLW-U0D-W16T-00001
Low Relative Humidity (%RH)	10	Note 1a	N/A	24590-HLW-U0D-W16T-00001
High Pressure (in.-w.g.)	0	Note 1a	N/A	24590-HLW-U0D-W16T-00001
Low Pressure (in.-w.g.)	-0.4	Note 1a	N/A	24590-HLW-U0D-W16T-00001
Radiation Dose Rate (mRad/hr)	0.5	40	Years (Note e1)	24590-HLW-U0D-W16T-00001
Plant/Process Induced Vibration	☐ Yes ☒ No			
Additional Normal Ambient Information:				
Abnormal Ambients				
High Temperature (°F)	137	8	hours / year	24590-HLW-U0D-W16T-00001
Low Temperature (°F)	40	Note 1a	N/A	24590-HLW-U0D-W16T-00001
High Relative Humidity (%RH)	100	Note 1a	N/A	24590-HLW-U0D-W16T-00001
Low Relative Humidity (%RH)	5	Note 1a	N/A	24590-HLW-U0D-W16T-00001
High Pressure (in.-w.g)	4	Note 1a	N/A	24590-HLW-U0D-W16T-00001
Low Pressure (in.-w.g)	-6.7	Note 1a	N/A	24590-HLW-U0D-W16T-00001
Radiation Dose Rate (mR/hr)	0.5	40 Note 4	Years (Note e1)	24590-HLW-U0D-W16T-00001
Exposure to Wet Sprinkler System	☒ Yes ☐ No	2 Note 5	hours	24590-HLW-U0D-W16T-00001
Additional Abnormal Ambient Information				
Design Basis Events (DBE) Ambients				
High Temperature (°F)	139	1000	hours	24590-HLW-U0D-W16T-00001
Low Temperature (°F)	40	Note 1a	N/A	24590-HLW-U0D-W16T-00001
High Relative Humidity (%RH)	100	482	hours	24590-HLW-U0D-W16T-00001

EQUIPMENT QUALIFICATION DATASHEET (EQD)

Low Relative Humidity (%RH)	5	1000	hours	24590-HLW-U0D-W16T-00001
High Pressure (in.-w.g)	4	1000	hours	24590-HLW-U0D-W16T-00001
Low Pressure (in.-w.g)	-6.7	1000	hours	24590-HLW-U0D-W16T-00001
Radiation Dose Rate (mR/hr)	0.5	0 Note 4	hours	24590-HLW-U0D-W16T-00001
Submergence	☒ Yes ☐ No 1.58'	1000	hours	24590-HLW-U0D-W16T-00001
Chemical/Spray Exposure	☐ Yes ☒ No	N/A	hours	N/A See Note 12
Additional DBE Information	Note 2 for pressure units			

DBE Chemical Exposure Details	
DBE Chemical Types / Concentrations	N/A

Electrical Interfaces Supporting the Safety Function	
Power Supply Voltage (VAC, VDC)	480 VAC
Power Supply Frequency (Hz)	60 Hz
Power Connection Method	3 Wired, solidly ground
I/O Signals to/from Equipment	BUYER
I/O Connection Method	BUYER

Mechanical Interfaces	
Mounting Configuration (orientation)	Horizontal
Mounting Method (bolts, welds, etc.)	Welded to embeds, See 24590-HLW-DD-S13T-00067
Auxiliary Devices	Lifting Lugs

Equipment Seismic Qualification (ESQ)

Parameter	Title	Reference/Document Number	Version / Revision	Remarks
WTP Seismic Design Specification	ENGINEERING SPECIFICATION FOR STRUCTURAL DESIGN LOADS FOR SEISMIC CATEGORY III & IV EQUIPMENT AND TANKS	24590-WTP-3PS-FB01-T0001	4	
Specified Seismic Load	ENGINEERING SPECIFICATION FOR	24590-WTP-3PS-FB01-	4	

EQUIPMENT QUALIFICATION DATASHEET (EQD)

Equipment Seismic Qualification (ESQ)				
Parameter	**Title**	**Reference/Document Number**	**Version / Revision**	**Remarks**
Parameters	STRUCTURAL DESIGN LOADS FOR SEISMIC CATEGORY III & IV EQUIPMENT AND TANKS	T0001		

EQUIPMENT QUALIFICATION DATASHEET (EQD)

Equipment Qualification Notes and Additional Information

1. General Notes:

a) For thermal aging, the high normal temperature shall be assumed to subsist for 40 years less the duration of the high abnormal temperature. For any lesser qualified life, the normal and abnormal condition durations shall be assigned proportionally. The abnormal temperature is stated to subsist for a certain number of hours per year. It shall be taken to subsist for this number of hours for each year of the qualified life.

b) The ability to provide the safety function at the low normal temperature, the low abnormal temperature or the low DBE temperature (whichever be the lowest) shall be established by test, analysis, or operating experience. The thermal aging at these respective low temperatures will be conservatively covered by the thermal aging per item a) above. Therefore, no duration is assigned for the low temperatures.

c) The ability to provide the safety function at the extremes of the normal and abnormal humidity conditions, taking into consideration the high and the low normal and high and low abnormal, shall be established by test, analysis, or operating experience. No duration is assigned for the normal and abnormal humidity conditions.

d) If the performance of the safety function of the equipment is affected by ambient pressure, the ability to provide the safety function at the extremes of the normal and abnormal pressure conditions, taking into consideration the high and the low normal and the high and low abnormal pressures, shall be established by test, analysis, or operating experience. No duration is assigned to the normal and abnormal pressure conditions.

e) (1) If the abnormal radiation dose rate is the same as the normal radiation dose rate, the normal radiation dose rate shall be assumed to subsist for 40 years, or any lesser qualified life, and the duration of the abnormal radiation dose rate is "0."

(2) If the abnormal radiation dose rate is higher than the normal radiation dose rate, the abnormal radiation dose rate shall be assumed to subsist for 40 years, or any lesser qualified life, and the duration of the normal radiation dose rate is "0."

f) The DBE conditions shall be taken to subsist for the stated number of hours following the qualified life of the equipment.

g) Spray due to fire sprinkler actuation shall be taken to occur once over the entire qualified life duration for a period of 2 hours, even if the qualified life is a period less than 40 years. If spray qualification is provided for DBE conditions (whether for water or chemical spray), then separate qualification for the fire sprinkler spray need not be provided.

h) The values stated in this EQD are the ambients and do not include the thermodynamic and radiation conditions imposed by the process fluids, self-heating, etc. The data pertaining to process fluid and service induced parameters are to be taken into account where significant, such as in thermal aging analyses. These data can be obtained from the equipment data sheets or the Equipment Specification.

i) Equipment that is to be installed in inaccessible locations must be qualified to a 40-year life without the need for maintenance or replacement.

2. Data to be provided by SELLER through the submittal process as required on the G-321-E form.

3. Where pressure is given in inches of water column (in-WC) in the source document, it is generally assumed that this is in reference to atmospheric pressure and is, therefore, equivalent to inches of water gage (in-WG).

4. Normal, abnormal, and DBE dose rates are the same; therefore, abnormal & DBE doses do not add to total integrated dose based on normal dose rate over 40 years.

5. Wet Fire Sprinkler system in room. Room wetted 2 hrs in 40 years via inadvertent actuation of fire sprinklers.

6. Fire Water spray is only spray present in the room.

7. Spray = Yes, if wet sprinklers or other liquid lines are present.

8. Vendor to determine impacts of submergence.

9. Environmental data provided is for room conditions only (does not reflect process conditions).

10. BUYER to assign doc number after receipt of seller submittal.

11. Deleted

12. Ammonia and nitric acid are listed in the HLW Room environment Data sheet, 24590-HLW-U0D-W16T-00001, Rev 1. The determination that the DBE exposure is N/A is as follows:

- The nitric acid pipe line identified in CCN 156336 is not located in room H-A123.
- Confinement of ammonia is achieved by designation of ammonia lines in HLW as SS and Seismic Category, SC-III. Additionally, circumferential breaks and leakage cracks need not be postulated in lines less than or equal to 1 inch nominal pipe size, per 24590-WTP-GPG-SANA-002, Section 3.3.3, Pipe Failures.

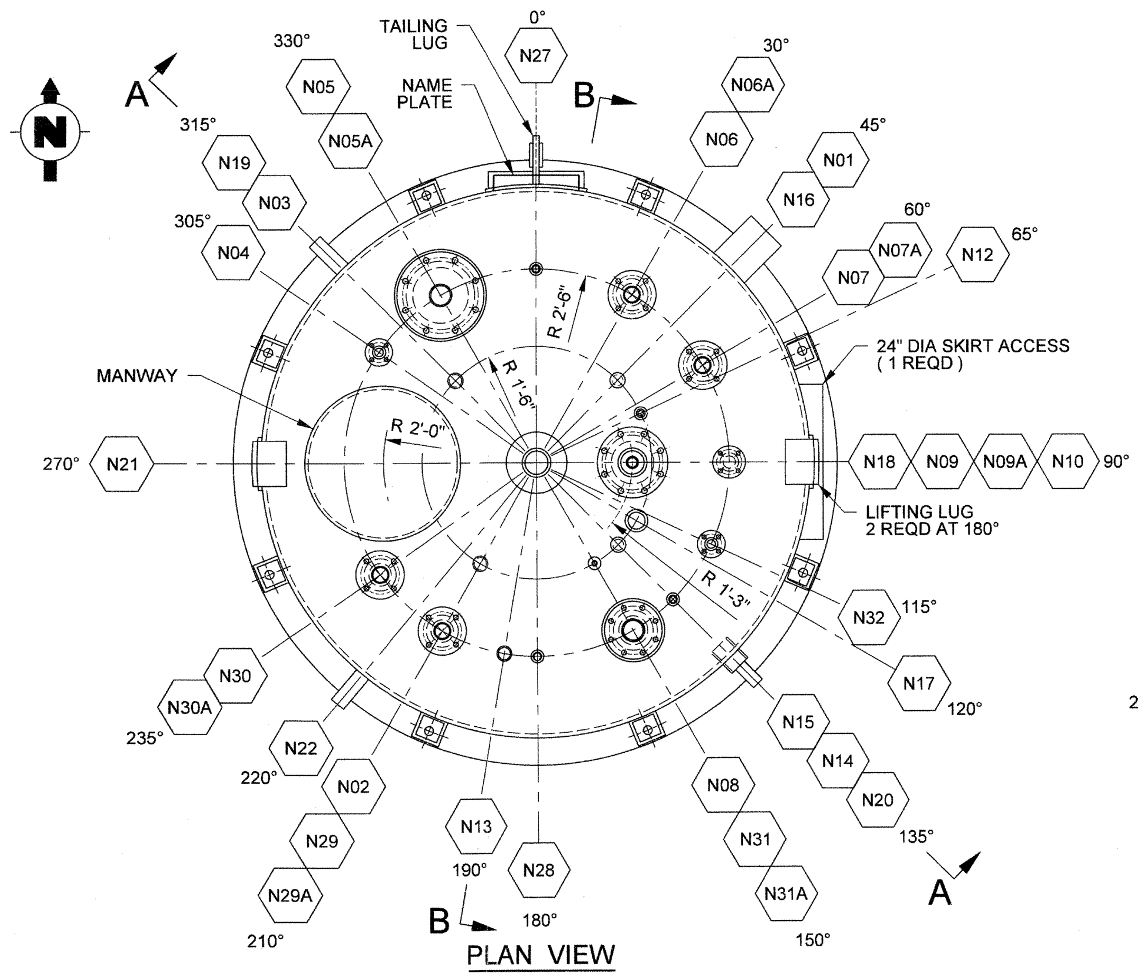

PLAN VIEW

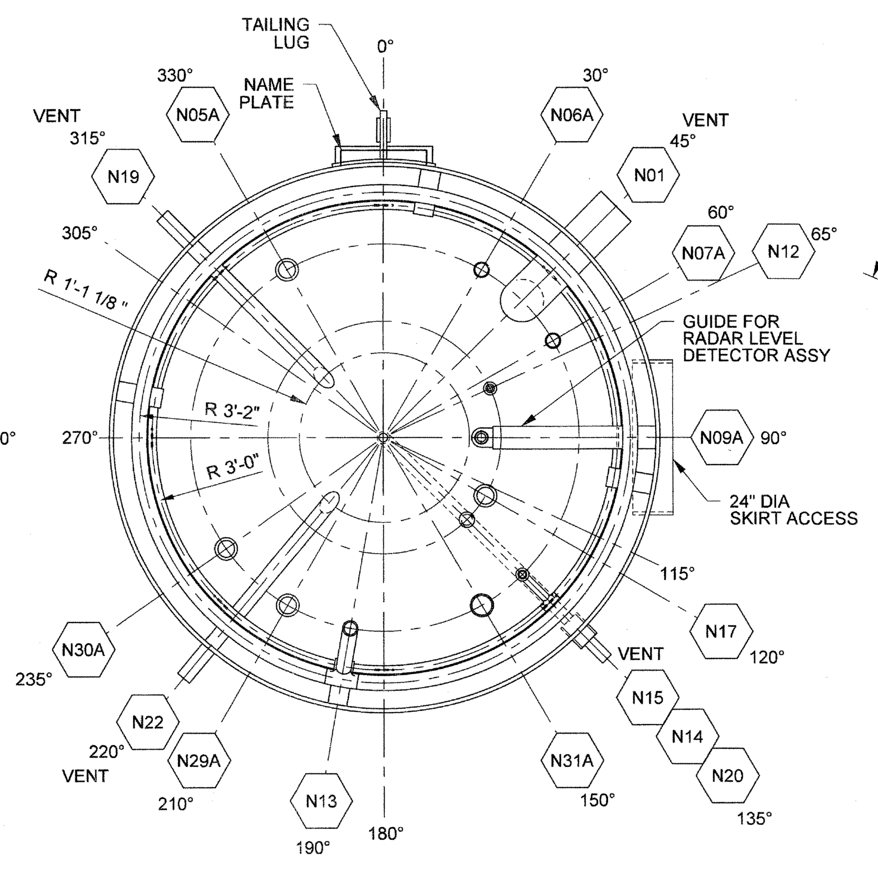

SECTION C - C

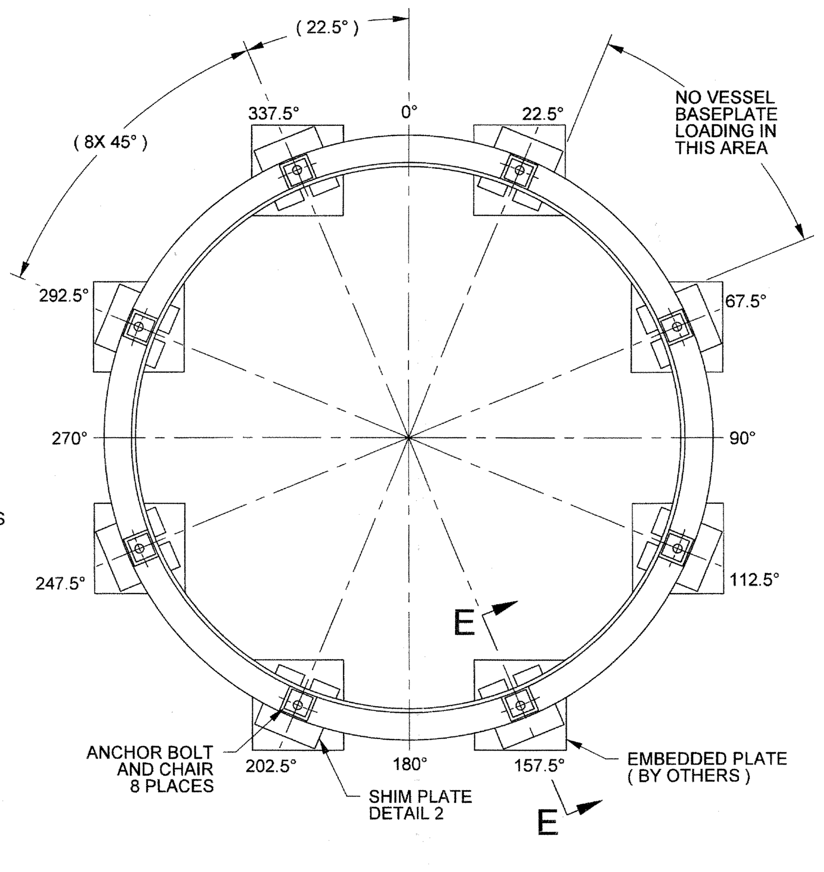

SECTION D - D

NOZZLE	SIZE	RATING	SERVICE / REMARKS	Z DIM	DETAIL / REFERENCE	CONNECTION
N01	6"	120S	OVERFLOW	16'-3"	24590-WTP-MV-M59T-00016001 DET 2	6" - 10S
N02	2"	80S	SPARE	18'-8"	24590-WTP-MV-M59T-00016001 DET 2	CAPPED
N03	2"	80S	SPARE	18'-8"	24590-WTP-MV-M59T-00016001 DET 2	CAPPED
N04	2" OD x 1"	MACH; 150 lb	SPARE	18'-8"	24590-WTP-MV-M59T-00016001 DET 5	CAPPED
N05	8"	150 lb	HDH-VSL-00002 OVERFLOW INLET	18'-8"	24590-WTP-MV-M59T-00016001 DET 9	8"-150 lb RF WN
N05A	3"	150 lb	N05 INSERT PIPE	19'-0"	DET 4; 24590-WTP-MV-M59T-00016001 DET 9	3"-150 lb RF WN
N06	3"	150 lb	INLET FROM EJECTOR 3A	18'-8"	24590-WTP-MV-M59T-00016001 DET 9	3"-150 lb RF WN
N06A	2"	150 lb	N06 INSERT PIPE	19'-2"	DET 4; 24590-WTP-MV-M59T-00016001 DET 9	2"-150 lb RF WN
N07	3"	150 lb	INLET FROM EJECTOR 3B	18'-8"	24590-WTP-MV-M59T-00016001 DET 9	3"-150 lb RF WN
N07A	2"	150 lb	N07 INSERT PIPE	19'-2"	DET 4; 24590-WTP-MV-M59T-00016001 DET 9	2"-150 lb RF WN
N08	2" OD x ½"	MACHINED	HYDROGEN PEROXIDE INLET	18'-8"	24590-WTP-MV-M59T-00016001 DET 5	½" - 40S
N09	6"	150 lb	RADAR LEVEL	19'-0"	DETAIL 6	6"-150 lb RF WN
N09A	1 1/2"	150 lb	N09 INSERT PIPE	19'-6"	DETAIL 6	6"-150 lb RF WN
N10	1/2"	150 lb	PRESSURE	18'-8"	24590-WTP-MV-M59T-00016001 DET 5	½" - 40S
N12	1"	MACHINED	TEMPERATURE	18'-8"	24590-WTP-MV-M59T-00007 ASSY 1 DET 5	1" - 40S
N13	2"	80S	NaOH; PL WASH; WASH RING	18'-8"	24590-WTP-MV-M59T-00016001 DET 3	2" - 40S
N14	2" OD x 1"	MACHINED	PL AIR INLET TO SPARGER	18'-8"	24590-WTP-MV-M59T-00016001 DET 5	1" - 40S
N15	2"	160S	SPARE	18'-8"	24590-WTP-MV-M59T-00016001 DET 2	CAPPED
N16	2"	160S	SPARE	18'-8"	24590-WTP-MV-M59T-00016001 DET 2	CAPPED
N17	3"	160S	INLET (DIP LEG)	18'-8"	24590-WTP-MV-M59T-00016001 DET 4	3" - 40S
N18	4"	120S	VESSEL VENT	18'-8"	24590-WTP-MV-M59T-00016001 DET 1	4" - 40S
N19	2"	160S	OUTLET TO RLD-EJCTR-00002A	0'-8"	24590-WTP-MV-M59T-00016001 DET 3	2" - 40S
N20	1 1/2"	160S	OUTLET TO RLD-EJCTR-00057	2'-6"	24590-WTP-MV-M59T-00016001 DET 1	1 ½" - 40S
N21	24"	PLATE	MANWAY	18'-8"	24590-WTP-MV-M59T-00017 DET 1	CAPPED
N22	2"	160S	OUTLET TO RLD-EJCTR-00002B	0'-8"	24590-WTP-MV-M59T-00016001 DET 3	2" - 40S
N23			DELETED			
N24			DELETED			
N25			DELETED			
N26			DELETED			
N27	2" OD x 1"	MACHINED	SPARE	18'-8"	24590-WTP-MV-M59T-00016001 DET 5	CAPPED
N28	2" OD x 1"	MACHINED	SPARE	18'-8"	24590-WTP-MV-M59T-00016001 DET 5	CAPPED
N29	3"	150 lb	INL FROM HDH-EJECTR-56B	18'-8"	DET 4; 24590-WTP-MV-M59T-00016001 DET 11	3"-150 lb RF WN
N29A	2"	150 lb	N29 INSERT PIPE	19'-2"	24590-WTP-MV-M59T-00016001 DET 11	2"-150 lb RF WN
N30	3"	150 lb	INL FROM HDH-EJECTR-56A	18'-8"	DET 4; 24590-WTP-MV-M59T-00016001 DET 11	3"-150 lb RF WN
N30A	2"	150 lb	N30 INSERT PIPE	19'-2"	24590-WTP-MV-M59T-00016001 DET 11	2"-150 lb RF WN
N31	4"	150 lb	HDH-VSL-00004 OVERFLOW	18'-8"	DET 4; 24590-WTP-MV-M59T-00016001 DET 9	4"-150 lb RF WN
N31A	3"	150 lb	N31 INSERT PIPE	19'-0"	24590-WTP-MV-M59T-00016001 DET 9	3"-150 lb RF WN
N32	2" OD x 1"	MACH; 150 lb	SPARE	18'-8"	24590-WTP-MV-M59T-00016001 DET 5	CAPPED

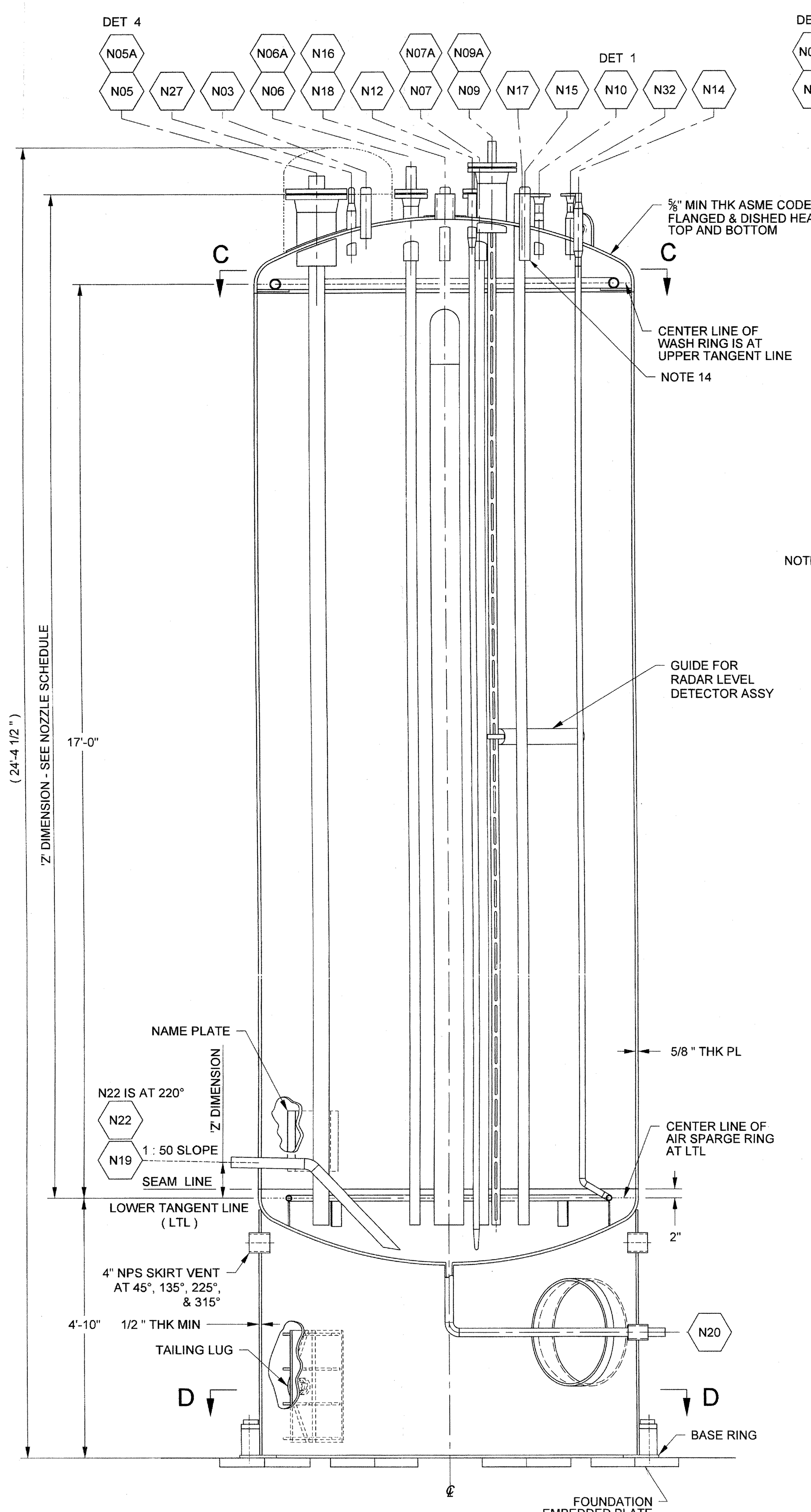

SECTION A - A

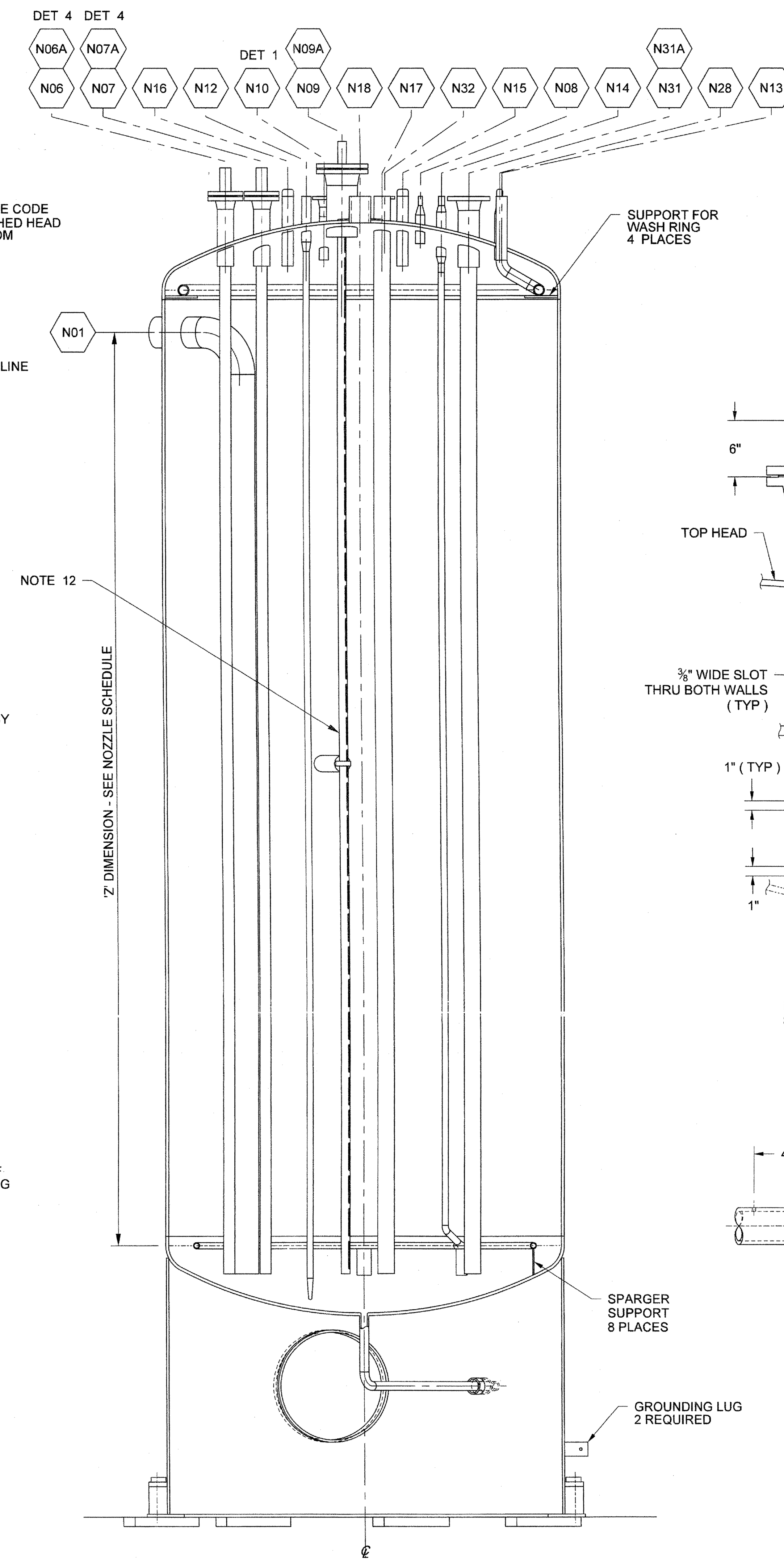

SECTION B - B

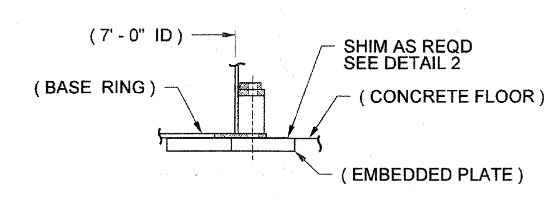

SECTION E - E

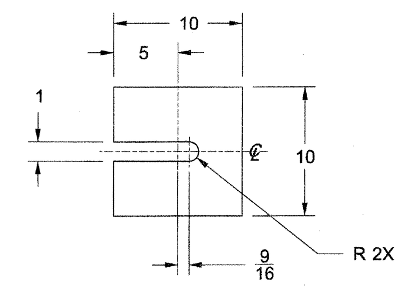

DETAIL 2

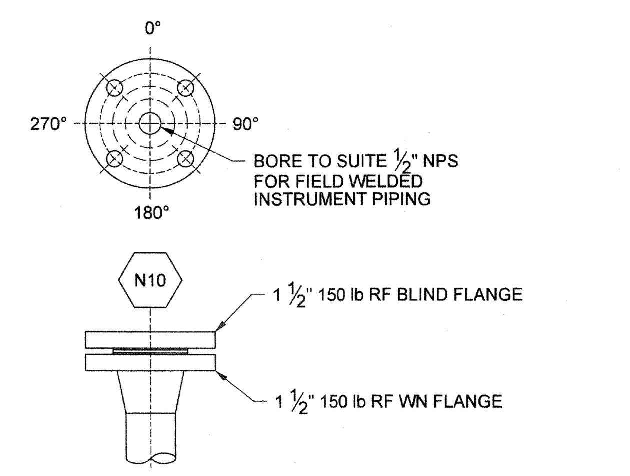

DETAIL 1

(NOZZLE 'N10')

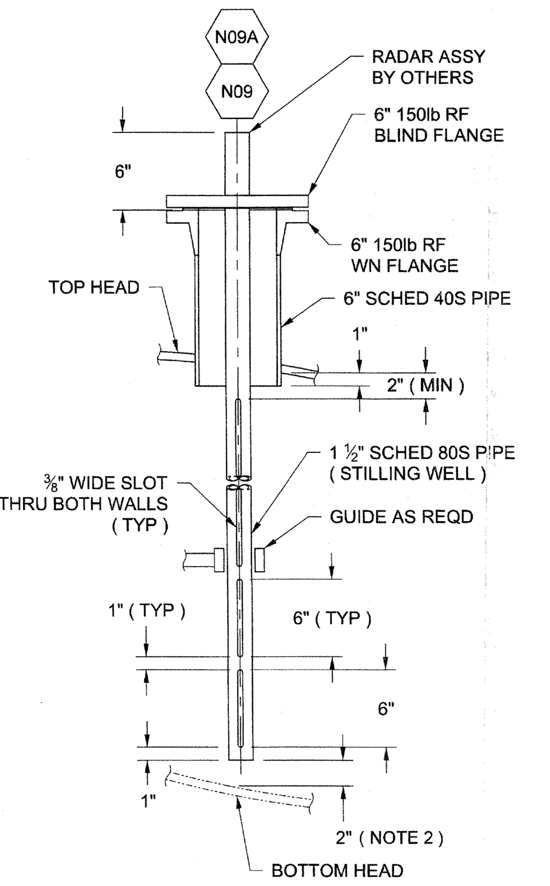

DETAIL 6

NOZZLE 'N09A' STILLING WELL

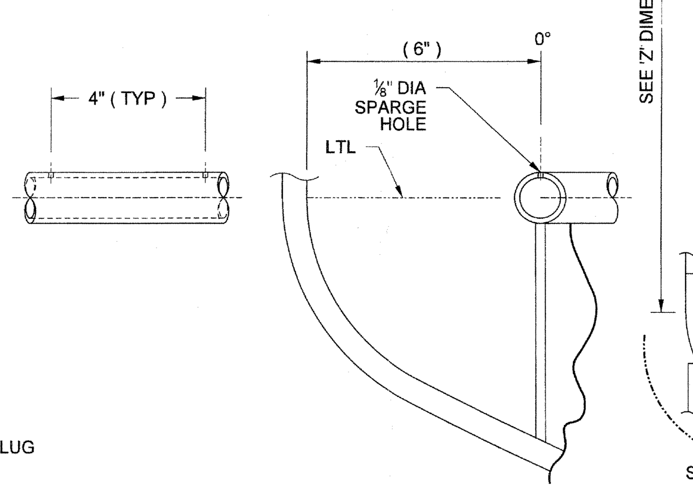

DETAIL 5

AIR SPARGER STANDOFF (SPARGE RING SUPPORT) (SEE NOTE 7)

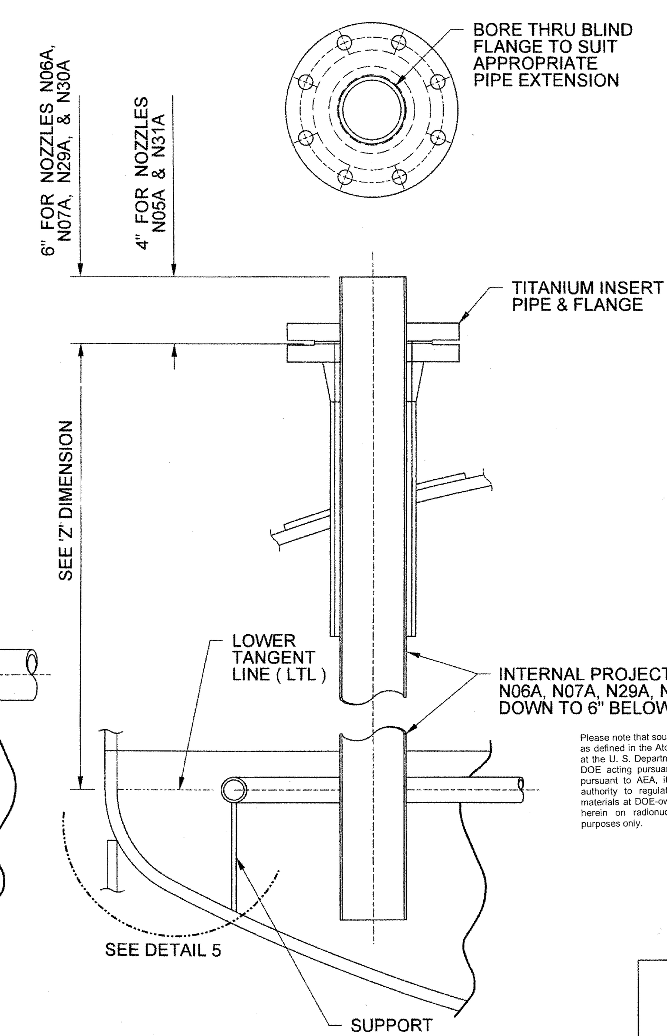

DETAIL 4

GENERAL NOTES (UNLESS OTHERWISE SPECIFIED)

1. ALL INTERNALS SHALL BE DESIGNED, PROVIDED, AND INSTALLED BY SELLER.
2. CLEARANCE OF DIP PIPES FROM BOTTOM HEAD IS 2".
3. 'Z' DIMS ARE MEASURED FROM THE LOWER TANGENT LINE (LTL). THE 'Z' DIMS OF SHELL (SIDE) NOZZLES ARE MEASURED FROM THE LTL TO THE CENTER OF THE NOZZLE FACE.
4. ALL FLANGES (EXCEPT BLIND FLANGES) ARE 150 lb RAISED FACE (RF) WELD NECK (WN). BLIND FLANGES ARE 150 lb RF. BOLT HOLES SHALL STRADDLE NORMAL VESSEL CENTER LINE.
5. SELLER SHALL PROVIDE (8) SHIM PACKS, EACH COMPRISING OF:
   (2) ¼" THICK PLATES
   (1) ⅛" THICK PLATE
   (2) 1/16" THICK PLATES
   THE SKIRT SHALL BE SUPPORTED BY THE SHIM PLATES SPACED PER THE EMBEDDED PLATE PLAN VIEW (SECTION D-D).
6. SELLER SHALL SIZE ANCHOR BOLTS & CHAIRS PER REF DWG 24590-WTP-MV-M59T-00026. BUYER SHALL PROVIDE & WELD ANCHOR BOLTS TO A240 304L PLATES EMBEDDED IN CONCRETE FLOOR. SELLER SHALL SIZE ANCHOR BOLTS USING MATERIAL PROPERTIES OF THE EMBEDDED PLATE.
7. HOLES SHALL BE DRILLED AFTER BENDING PIPE. SPARGE HOLES SHALL BE SPACED AT 4 HOLES PER FOOT. SPARGE RING SUPPORTS SHALL BE A MINIMUM WIDTH OF 2" USING FLAT BAR AT ¼" MINIMUM THICKNESS & TWICE THE CORROSION THICKNESS. PIPE SHALL BE 1" DIA (NPS) SCHED 40S. SUPPORTS SHALL BE SAME MATERIAL AS THE BOTTOM HEAD ON MECHANICAL DATA SHEET 24590-HLW-MVD-HDH-00003.
8. GROUNDING LUG DETAILS PER REF DWG 24590-WTP-MV-M59T-00012.
9. INCORPORATED THE FOLLOWING DOCUMENTS (CHANGE NOTICES): HLW-MVN-HDH-00005, HLW-MVN-HDH-00006, HLW-MVN-HDH-00007, WTP-M6N-M80T-00003.
10. REVISED / ADDED / DELETED:
    a) DECREASED THE INTERNAL PROJECTION OF NOZZLES N15 & N16 FROM 2" FROM THE INSIDE SURFACE OF THE BOTTOM HEAD TO 2" FROM THE INSIDE SURFACE OF THE TOP HEAD.
    b) ADDED SPARGER AND SPARGER SUPPORT INFORMATION TO DETAIL 4.
    c) ADDED RADAR LEVEL DETECTION SYSTEM TO NOZZLE N09 (SEE NOTE 12).
    d) UPDATED NOZZLE INFORMATION TO REFLECT ACTUAL.
    e) EXTENSIVE REVISION, NO CLOUDS REQUIRED.
    f) UPDATED NOZZLES N04 & N02 FROM CONDENSATE NOZZLES TO SPARES.
11. CONTENTS OF THIS DOCUMENT ARE DANGEROUS WASTE PERMIT AFFECTING.

NOTES 12-14 APPLY DIRECTLY TO POST-STAMPING VESSEL ALTERATIONS. USE OTHER NOTES AS APPLICABLE.

12. INSTALL STILLING WELL AS PART OF RADAR LEVEL DETECTION IN N09.
13. DRILL A ⅜" DIA HOLE IN THE DIP PIPES CONNECTED TO NOZZLES N06, N07, N17, N29, & N30. THIS HOLE SHALL BE LOCATED IN THE VESSEL HEAD SPACE ABOVE THE OVERFLOW LEVEL OF THE VESSEL. THESE ARE ANTI-SIPHON HOLES FOR THE HDH EJECTORS AND HDH-VSL-00001 DIP PIPE INLETS.
14. TERMINATE THE DIP LEGS OF NOZZLES 15 & 16 ABOVE THE VESSEL OVERFLOW LEVEL.

HOLDS

1. 1 - 7 DELETED

THIS DRAWING MUST BE READ IN CONJUNCTION WITH THE MECHANICAL DATA SHEET 24590-HLW-MVD-HDH-00003

REFERENCE DRAWINGS		
DRAWING NUMBER	REV	TITLE
24590-HLW-M6-HDH-00002	4	P&ID - HLW CANISTER DECONTN HANDLING
24590-WTP-MV-M59T-00001	4	PRESSURE VESSEL TOLERANCES STD DETAILS
24590-WTP-MV-M59T-00007	3	THERMOWELL CONNECTION STANDARD DETAILS
24590-WTP-MV-M59T-00011	2	WASH RINGS STANDARD DETAILS
24590-WTP-MV-M59T-00016001	3	VESSEL CONNECTIONS STD DETAILS SH 1 OF 3
24590-WTP-MV-M59T-00016002	2	VESSEL CONNECTIONS STD DETAILS SH 2 OF 3
24590-WTP-MV-M59T-00016003	1	VESSEL CONNECTIONS STD DETAILS SH 3 OF 3
24590-WTP-MV-M59T-00017	1	VESSEL INSPECTION MANWAY STANDARD DETAILS
24590-WTP-MV-M59T-00012	1	GROUNDING LUG STD DETAILS
24590-WTP-MV-M59T-00009	2	LIFTING LUG STANDARD DETAILS
24590-WTP-MV-M59T-00010	2	TAILING LUG STANDARD DETAILS
24590-HLW-MVD-HDH-00003	3	MECHANICAL DATA SHEET
24590-WTP-MV-M59T-00018	3	VESSEL NAMEPLATE STANDARD DETAILS
24590-WTP-MV-M59T-00026	1	ANCHOR BOLT CHAIR DETAILS FOR VERT VESSELS

Please note that source, special nuclear, and byproduct materials, as defined in the Atomic Energy Act of 1954 (AEA) are regulated at the U. S. Department of Energy (DOE) facilities exclusively by DOE acting pursuant to its AEA authority. DOE asserts that pursuant to AEA, it has sole and exclusive responsibility and authority to regulate source, special nuclear, and byproduct materials at DOE-owned nuclear facilities. Information contained herein on radionuclides is provided for process description purposes only.

(SEE NOTE 9) RW 11/2/10

REV	DESCRIPTION	ORG	CHKD	RVWD	APVD	DATE
1	EXTENSIVE REVISION, NO CLOUDS REQD	RW	MAS	JM	JJ	10/27/10
0	ISSUED FOR PURCHASE	MA-KM	TG-CS	MH	DW	1-22-2004

REVISION HISTORY

CM
QUALITY DESIGNATOR

ISSUED BY RPP-WTP PDC
ISSUE STAMP

PROJECT No.	24590
SITE	HANFORD
AREA	200E
BUILDING No.	30

RIVER PROTECTION PROJECT
WASTE TREATMENT PLANT
2435 STEVENS CENTER PLACE
RICHLAND, WA 99354

CONTRACT No: DE-AC27-01RV14136

	BY	DATE
ORIGINATOR	ARULAPALAM/MINTON	01-15-2004
CHECKER	GALIOTO/SLATER	01-21-2004
APPROVER	M. HOFFMAN	01-22-2004
REVIEWER	D. YARBROUGH	01-21-2004

EQUIPMENT ASSEMBLY
WASTE NEUTRALIZATION VESSEL
HDH-VSL-00003

CONTENT APPLICABLE TO ALARA? [X] YES [ ] NO
ADR NO. 24590-WTP-ADR-M-03-008 REV: 2
E&NS SCREENING REQUIRED? [ ] YES [X] NO E&NS INITIAL IF YES

SCALE: NONE
24590-HLW-MV-HDH-00003
REV 1

SCREENING IS REQUIRED FOR DRAWING TYPES IDENTIFIED IN 24590-WTP-GPP-SREG-002

'E' SIZE - 44x34
COMPUTER GENERATED - MANUAL DESIGN CHANGES NOT PERMITTED

R11296291

10/21/2010 7:57:17 AM

PLOTTED BY: ojpdomb C:\Work\ojpdomb\dms04105\HLWMVHDH00003.dgn

FORM E_SDN.DGN 02/2009

Please note that source, special nuclear, and byproduct materials, as defined in the Atomic Energy Act of 1954 (AEA) are regulated at the U. S. Department of Energy (DOE) facilities exclusively by DOE acting pursuant to its AEA authority. DOE asserts that pursuant to AEA, it has sole and exclusive responsibility and authority to regulate source, special nuclear, and byproduct materials at DOE-owned nuclear facilities. Information contained herein on radionuclides is provided for process description purposes only.

BILL OF MATERIALS			
ITEM	THICK/SIZE	DESCRIPTION	QTY
1	3" SCHED 80S	STRUCTURAL SUPPORT	A/R
2	2" SCHED 80S	STRUCTURAL SUPPORT	A/R
3	1" THK PLATE	PIPE SUPPORT	A/R
4	1 1/2" THK PLATE	PIPE SUPPORT	A/R
5	1/2" THK PLATE	END CAP	A/R
6	3" SCHED 80S	LONG RADIUS ELBOW, BUTT WELD	2

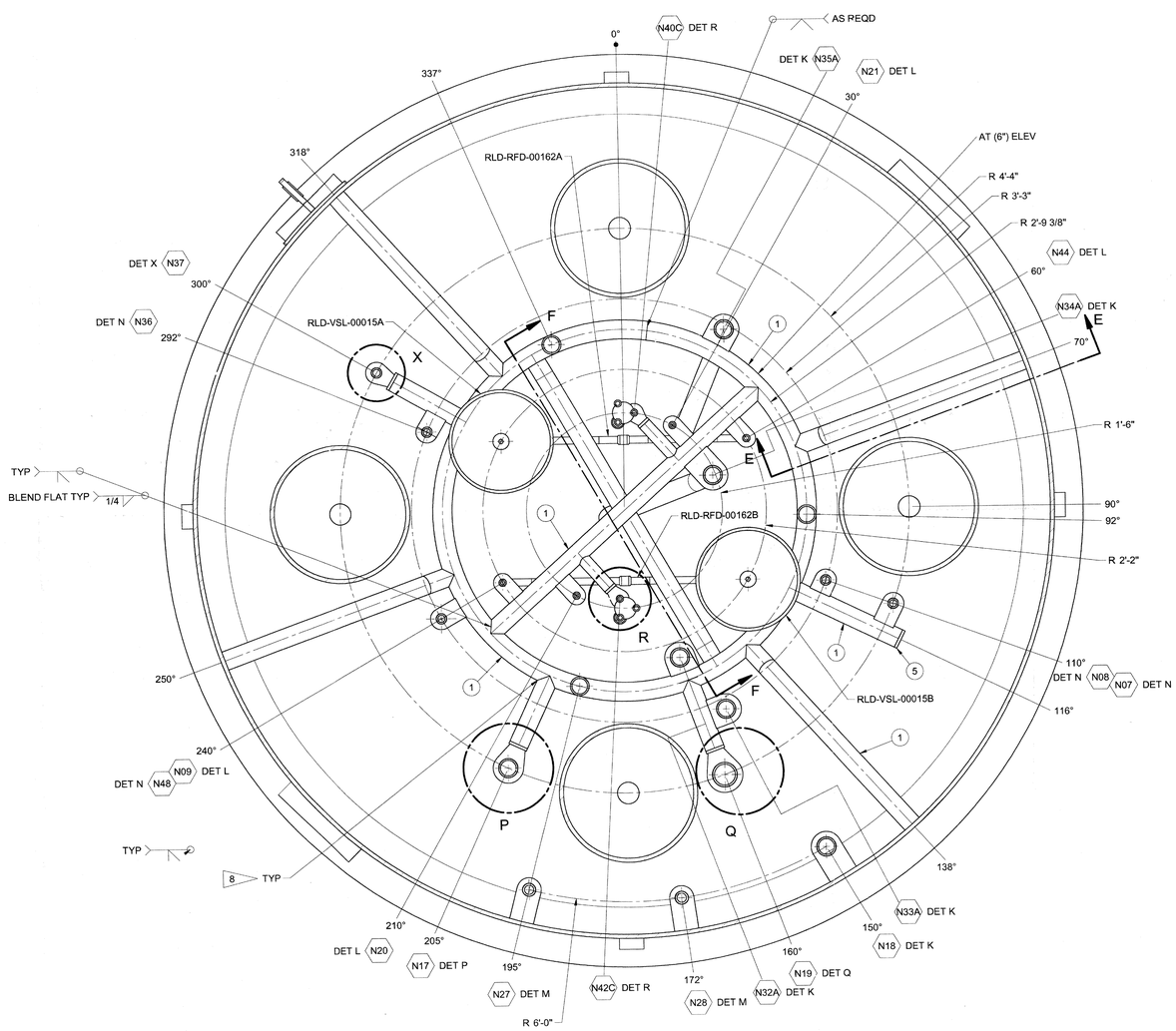

SECTION D-D

FROM 24590-HLW-MV-RLD-00025001

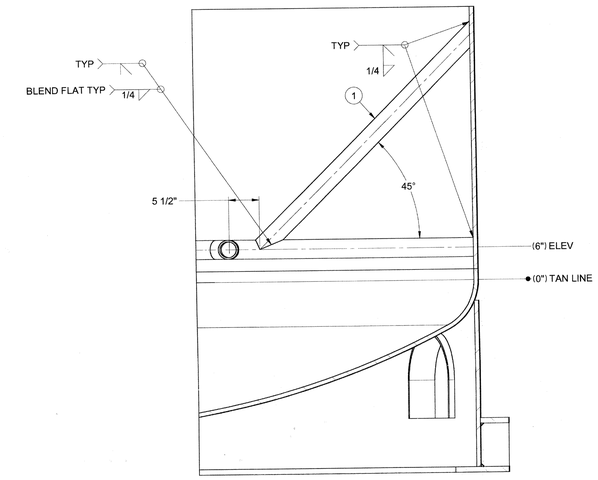

SECTION E-E

TYP 4 LOCATIONS 70°, 138°, 250° & 318°
SOME ITEMS OMITTED FOR CLARITY

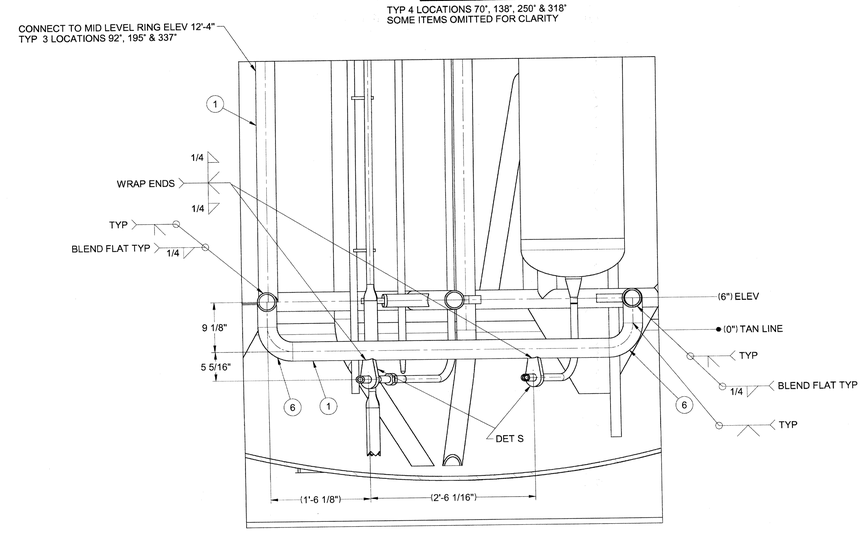

SECTION F-F

DRAWING INDEX	
DWG NO	TITLE
24590-HLW-MV-RLD-00025001	EQUIPMENT ASSEMBLY ACIDIC WASTE VESSEL RLD-VSL-00007
24590-HLW-MV-RLD-00025002	EQUIPMENT ASSEMBLY ACIDIC WASTE VESSEL RLD-VSL-00007 SECTIONS AND DETAILS
24590-HLW-MV-RLD-00025003	EQUIPMENT ASSEMBLY ACIDIC WASTE VESSEL RLD-VSL-00007 SECTIONS AND DETAILS
24590-HLW-MV-RLD-00025004	EQUIPMENT ASSEMBLY ACIDIC WASTE VESSEL RLD-VSL-00007 SECTIONS AND DETAILS

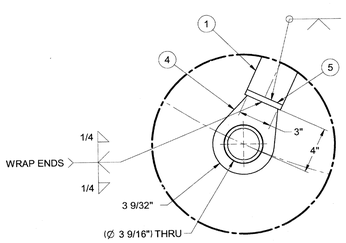

DETAIL P

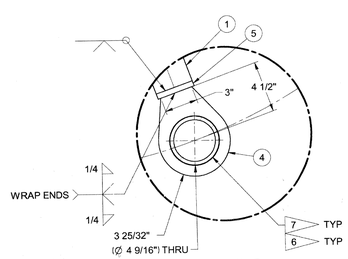

DETAIL Q

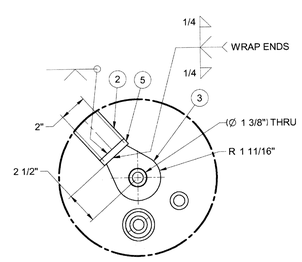

DETAIL R

INNER PIPE BRACE SUPPORT
NOT SHOWN FOR CLARITY

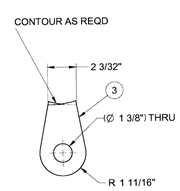

DETAIL S

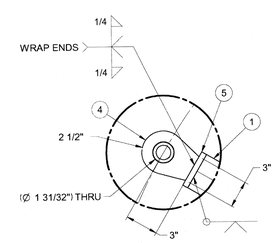

DETAIL X

PLEASE NOTE THAT SOURCE, SPECIAL NUCLEAR AND BYPRODUCT MATERIALS, AS DEFINED IN THE ATOMIC ENERGY ACT OF 1954 (AEA), ARE REGULATED AT THE U.S. DEPARTMENT OF ENERGY (DOE) FACILITIES EXCLUSIVELY BY DOE ACTING PURSUANT TO ITS AEA AUTHORITY. DOE ASSERTS, THAT PURSUANT TO THE AEA, IT HAS SOLE AND EXCLUSIVE RESPONSIBILITY AND AUTHORITY TO REGULATE SOURCE, SPECIAL NUCLEAR, AND BYPRODUCT MATERIALS AT DOE-OWNED NUCLEAR FACILITIES. INFORMATION CONTAINED HERE IN ON RADIONUCLIDES IS PROVIDED FOR PROCESS DESCRIPTION PURPOSES ONLY.

REV	DESCRIPTION	ORG	CHKD	RVWD	APVD	DATE
0	ISSUED FOR PURCHASE, ~~SEE NOTE 9~~ RP 11/5/10	RP				11/5/10

REVISION HISTORY

Q

ISSUED BY ~~RPP-WTP PDC~~

ISSUE STAMP

	BY	DATE
ORIGINATOR	RP Rodgers	11/5/10
CHECKER		5-May-10
APPROVER		11/5/10
REVIEWER		11/5/10

CONTENT APPLICABLE TO ALARA? [X] YES [ ] NO

ADR NO. 24590-WTP-ADR-M-03-008 REV. 2

E&NS SCREENING REQUIRED [X] YES [ ] NO E&NS INITIAL IF YES: BLD

PROJECT No.	24590
SITE	HANFORD
AREA	200E
BUILDING No.	30

BECHTEL

RIVER PROTECTION PROJECT
WASTE TREATMENT PLANT
2435 STEVENS CENTER PLACE
RICHLAND, WA 99354

CONTRACT No: DE-AC27-01RV14136

EQUIPMENT ASSEMBLY ACIDIC WASTE VESSEL RLD-VSL-00007 SECTIONS AND DETAILS

SCALE: NONE

24590-HLW-MV-RLD-00025003

REV 0

"E" SIZE - 44x34

COMPUTER GENERATED
MANUAL DESIGN CHANGES NOT PERMITTED

SCREENING IS REQUIRED FOR DRAWING TYPES IDENTIFIED IN 24590-WTP-OPI-SREQ-002

R11297462

FORM E_MASTER 03/2003

BILL OF MATERIALS			
ITEM	THICK/SIZE	DESCRIPTION	QTY
1	3" SCHED 80S	STRUCTURAL SUPPORT	A/R
2	2" SCHED 80S	STRUCTURAL SUPPORT	A/R
3	1" THK PLATE	PIPE SUPPORT	A/R
4	1 1/2" THK PLATE	PIPE SUPPORT	A/R
5	1/2" THK PLATE	END CAP	A/R

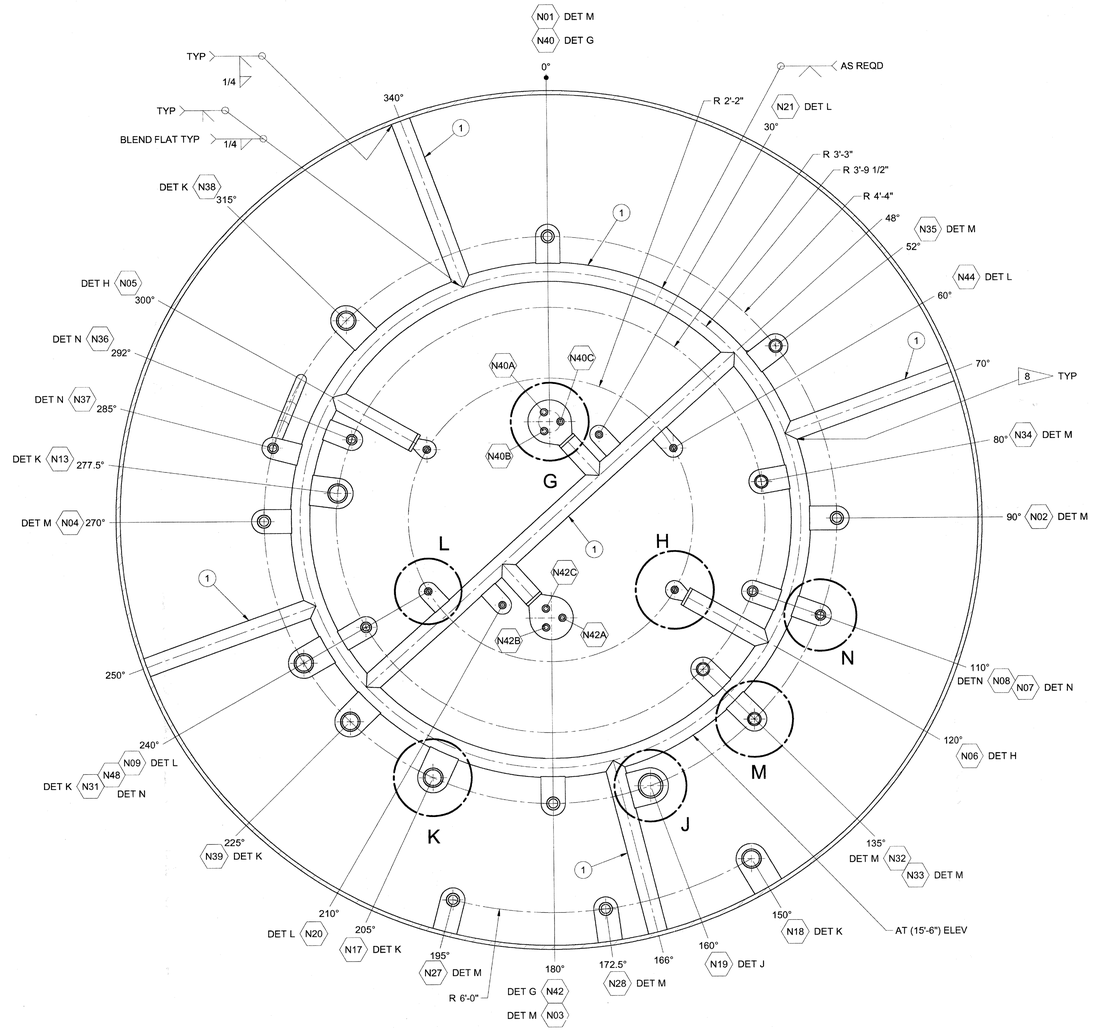

SECTION B-B
FROM 24590-HLW-MV-RLD-00025001

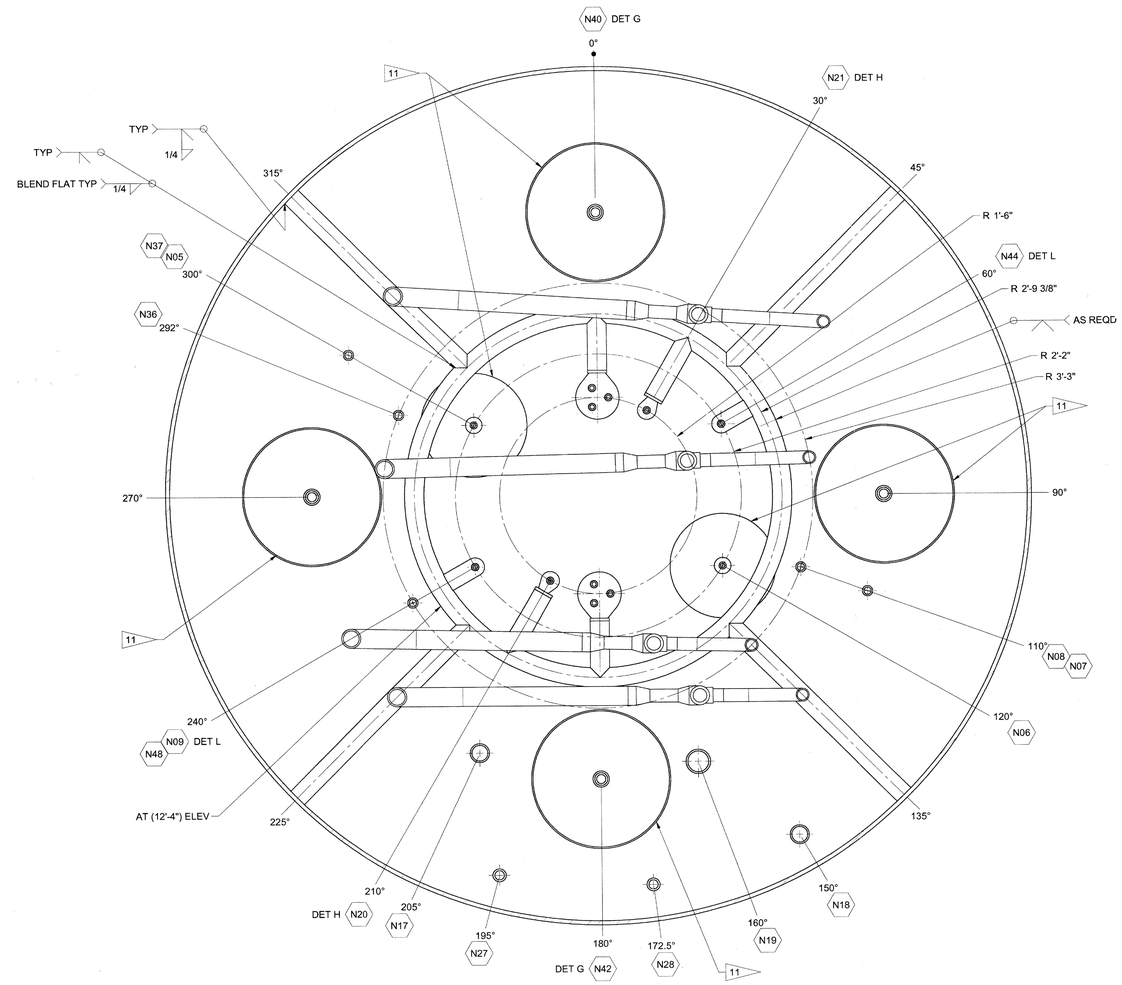

SECTION C-C
FROM 24590-HLW-MV-RLD-00025001

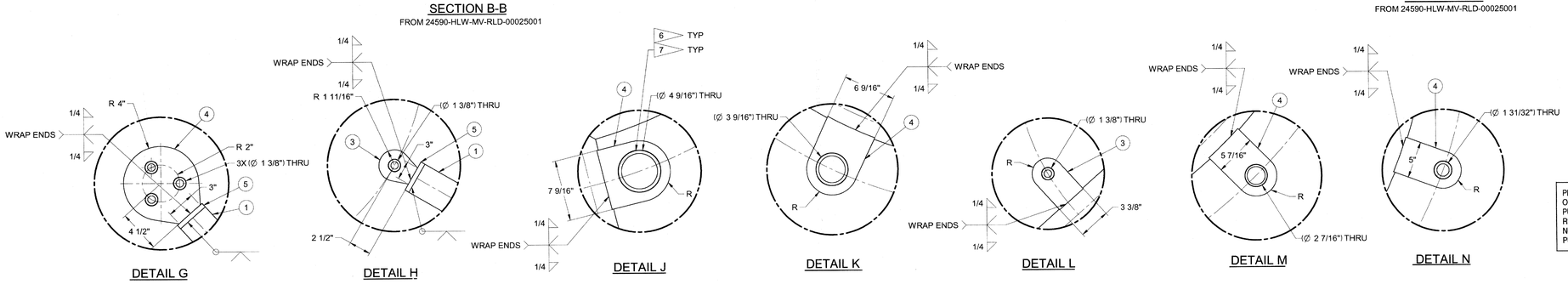

NOTE: TYP FOR INSTRUMENT SUPPORTS, ADJUST HOLE ORIENTATIONS AS INDICATED AT OTHER LOCATIONS

DRAWING INDEX	
DWG NO	TITLE
24590-HLW-MV-RLD-00025001	EQUIPMENT ASSEMBLY ACIDIC WASTE VESSEL RLD-VSL-00007
24590-HLW-MV-RLD-00025002	EQUIPMENT ASSEMBLY ACIDIC WASTE VESSEL RLD-VSL-00007
	SECTIONS AND DETAILS
24590-HLW-MV-RLD-00025003	EQUIPMENT ASSEMBLY ACIDIC WASTE VESSEL RLD-VSL-00007
	SECTIONS AND DETAILS
24590-HLW-MV-RLD-00025004	EQUIPMENT ASSEMBLY ACIDIC WASTE VESSEL RLD-VSL-00007
	SECTIONS AND DETAILS

PLEASE NOTE THAT SOURCE, SPECIAL NUCLEAR AND BYPRODUCT MATERIALS, AS DEFINED IN THE ATOMIC ENERGY ACT OF 1954 (AEA), ARE REGULATED AT THE U.S. DEPARTMENT OF ENERGY (DOE) FACILITIES EXCLUSIVELY BY DOE ACTING PURSUANT TO ITS AEA AUTHORITY. DOE ASSERTS, THAT PURSUANT TO THE AEA, IT HAS SOLE AND EXCLUSIVE RESPONSIBILITY AND AUTHORITY TO REGULATE SOURCE, SPECIAL NUCLEAR, AND BYPRODUCT MATERIALS AT DOE-OWNED NUCLEAR FACILITIES. INFORMATION CONTAINED HERE IN ON RADIONUCLIDES IS PROVIDED FOR PROCESS DESCRIPTION PURPOSES ONLY.

Q

REV	DESCRIPTION	ORG	CHKD	RVWD	APVD	DATE
0	ISSUED FOR PURCHASE. ~~SEE NOTE 9~~ RP 11/5/10	RP				11/5/10

REVISION HISTORY

Please note that source, special nuclear, and byproduct materials, as defined in the Atomic Energy Act of 1954 (AEA) are regulated at the U. S. Department of Energy (DOE) facilities exclusively by DOE acting pursuant to its AEA authority. DOE asserts, that pursuant to AEA, it has sole and exclusive responsibility and authority to regulate source, special nuclear, and byproduct materials at DOE-owned nuclear facilities. Information contained herein on radionuclides is provided for process description purposes only.

ISSUED BY		
~~PPP-WTP~~ PDC	PROJECT No.	24590
	SITE	HANFORD
	AREA	200E
ISSUE STAMP	BUILDING No.	30

	BY	DATE
ORIGINATOR	BY Burgess	11/5/10
CHECKER	[illegible]	5-Nov-10
APPROVER	[illegible]	11/6/10
REVIEWER	[illegible]	11/5/10

CONTENT APPLICABLE TO ALARA? [X] YES [ ] NO
ADR NO. 24590-WTP-ADR-M-03-008 REV: 2
E&NS SCREENING REQUIRED [X] YES [ ] NO E&NS INITIAL IF YES: [illegible]

SCREENING IS REQUIRED FOR DRAWING TYPES IDENTIFIED IN 24590-WTP-CPP-SREG-002

BECHTEL

RIVER PROTECTION PROJECT
WASTE TREATMENT PLANT
2435 STEVENS CENTER PLACE
RICHLAND, WA 99354

CONTRACT No: DE-AC27-01RV14136

EQUIPMENT ASSEMBLY ACIDIC WASTE VESSEL RLD-VSL-00007 SECTIONS AND DETAILS

SCALE: NONE

24590-HLW-MV-RLD-00025002

REV 0

E SIZE - 44x34

COMPUTER GENERATED
MANUAL DESIGN CHANGES NOT PERMITTED

R11297461

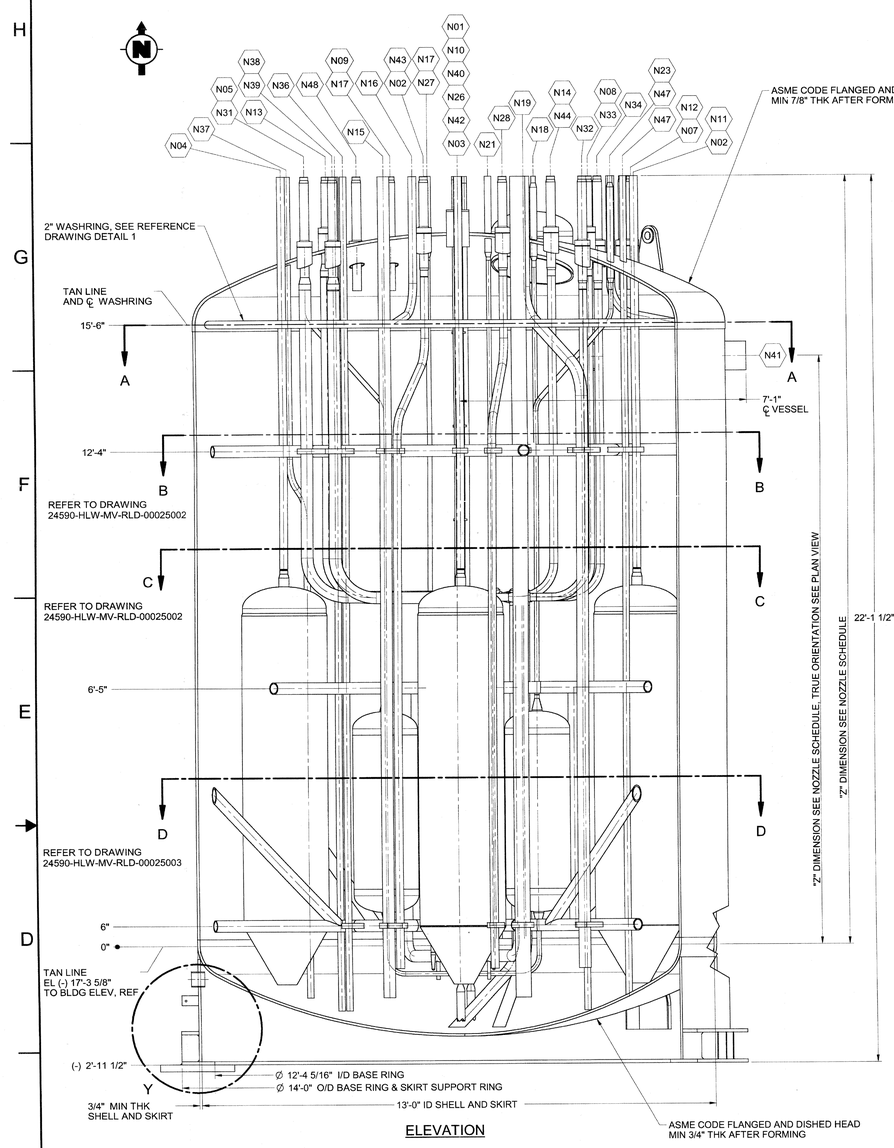

ELEVATION

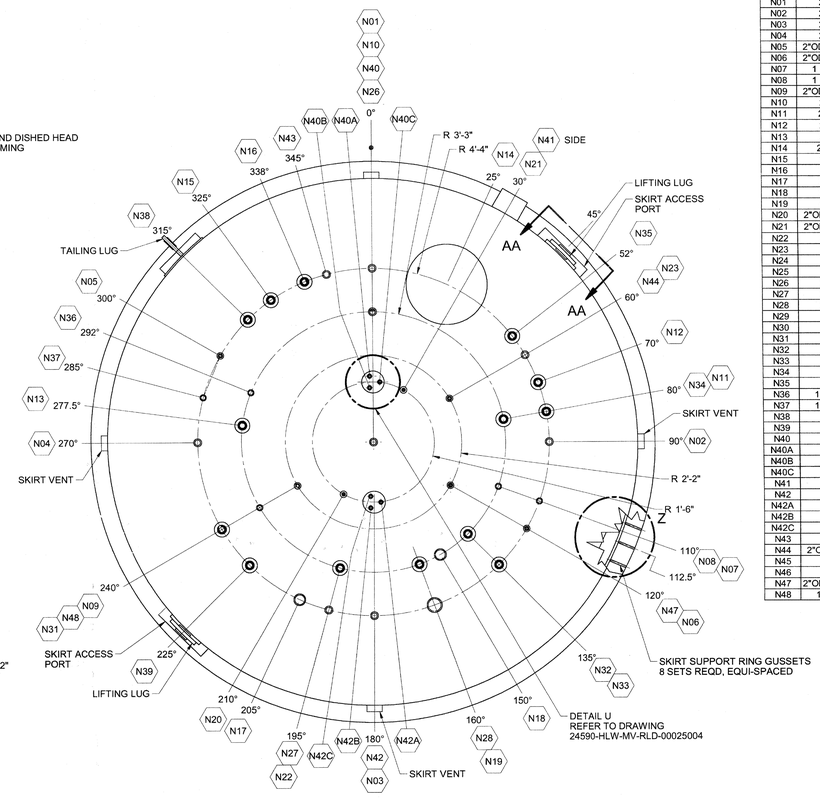

PLAN

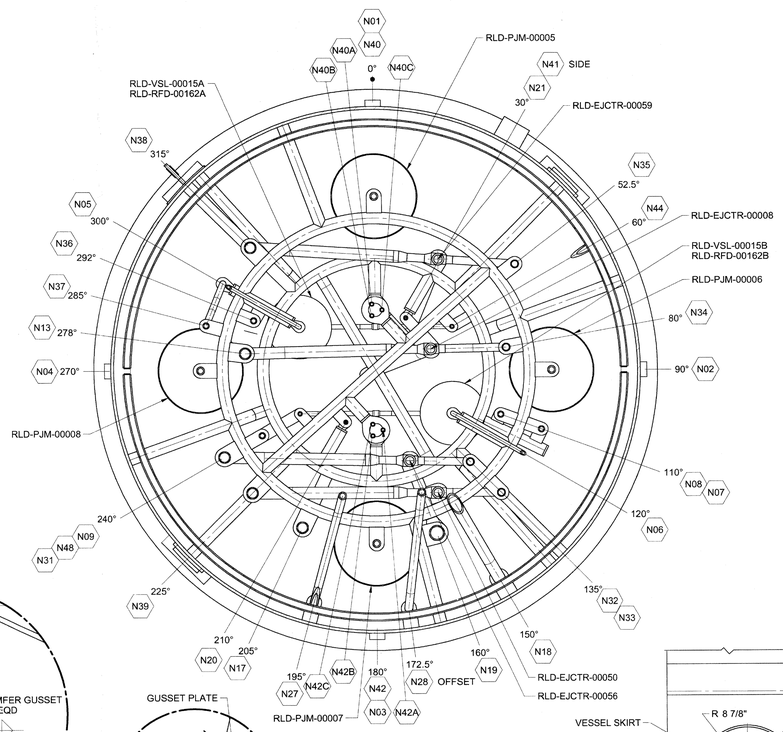

SECTION A-A

NOZZLE	SIZE	SCHED/WALL	SERVICE/REMARKS	"Z" DIM	REF DWG/DET	CONN PIPE SIZE/SCHED
N01	2"	160S	AIR/VAC TO RLD-PJM-00005	19'-2"	24590-WTP-MV-M59T-00016001 DET 3	2"-40S
N02	2"	160S	AIR/VAC TO RLD-PJM-00006	19'-2"	24590-WTP-MV-M59T-00016001 DET 3	2"-40S
N03	2"	160S	AIR/VAC TO RLD-PJM-00007	19'-2"	24590-WTP-MV-M59T-00016001 DET 3	2"-40S
N04	2"	160S	AIR/VAC TO RLD-PJM-00008	19'-2"	24590-WTP-MV-M59T-00016001 DET 3	2"-40S
N05	2"OD X 1"	SEE DETAIL	AIR/VAC TO RLD-VSL-00015A	19'-2"	24590-WTP-MV-M59T-00016001 DET 7	1"-40S
N06	2"OD X 1"	SEE DETAIL	AIR/VAC TO RLD-VSL-00015B	19'-2"	24590-WTP-MV-M59T-00016001 DET 7	1"-40S
N07	1 1/2"	160S	INLET FROM HOP-EJCTR-00053A	19'-2"	24590-WTP-MV-M59T-00016001 DET 4	1 1/2"-40S
N08	1 1/2"	160S	INLET FROM HOP-EJCTR-00053B	19'-2"	24590-WTP-MV-M59T-00016001 DET 4	1 1/2"-40S
N09	2"OD X 1"	SEE DETAIL	OUTLET FROM RLD-RFD-00162B	19'-2"	24590-WTP-MV-M59T-00016001 DET 7	1"-40S
N10	2"	160S	AUTOSAMPLER RETURN	19'-2"	24590-WTP-MV-M59T-00016001 DET 2	2"-40S
N11	2"	160S	OUTLET FROM HOP-EJCTR-3A	19'-2"	24590-HLW-MV-RLD-00025004 DET T	2"-40S
N12	2"	160S	OUTLET FROM HOP-EJCTR-3B	19'-2"	24590-HLW-MV-RLD-00025004 DET T	2"-40S
N13	3"	80S	OUTLET FROM RLD-EJCTR-00008	19'-2"	24590-HLW-MV-RLD-00025004 DET T	2"-40S
N14	24"	PLATE	MANWAY	17'-8"	24590-WTP-MV-M59T-00017 DET 1	CAPPED
N15	2"	160S	OUTLET FROM HOP-EJCTR-00929A	19'-2"	24590-HLW-MV-RLD-00025004 DET T	2"-40S
N16	2"	160S	OUTLET FROM HOP-EJCTR-00929B	19'-2"	24590-HLW-MV-RLD-00025004 DET T	2"-40S
N17	3"	80S	OVERFLOW FROM RLD-BRKPT-00007	19'-2"	24590-WTP-MV-M59T-00016001 DET 4	3"-40S
N18	3"	80S	OVERFLOW FROM RLD-BRKPT-00009	19'-2"	24590-WTP-MV-M59T-00016001 DET 4	3"-40S
N19	4"	80S	OVERFLOW FROM HEADER	19'-2"	24590-WTP-MV-M59T-00016001 DET 4	4"-40S
N20	2"OD X 1"	SEE DETAIL	TEMPERATURE	19'-2"	24590-WTP-MV-M59T-00007 ASSY 1, DET 5	1"-10S
N21	2"OD X 1"	SEE DETAIL	TEMPERATURE (SPARE)	19'-2"	24590-WTP-MV-M59T-00007 ASSY 1, DET 5	1"-10S
N22	2"	160S	INLET TO WASH RING	19'-2"	24590-WTP-MV-M59T-00016001 DET 3	2"-40S
N23	2"	160S	INLET TO WASH RING	19'-2"	24590-WTP-MV-M59T-00016001 DET 3	2"-40S
N24			NOT USED			
N25			NOT USED			
N26	2"	160S	VENT	19'-2"	24590-WTP-MV-M59T-00016001 DET 1	2"-40S
N27	2"	160S	INLET FROM HDH-EJCTR-00002B	19'-2"	24590-HLW-MV-RLD-00025004 DET T	2"-40S
N28	2"	160S	INLET FROM HDH-EJCTR-00002A	19'-2"	24590-HLW-MV-RLD-00025004 DET T	2"-40S
N29			NOT USED			
N30			NOT USED			
N31	3"	SEE DETAIL	OUTLET FROM RLD-EJCTR-00056	19'-2"	24590-HLW-MV-RLD-00025004 DET T	2"-40S
N32	2"	SEE DETAIL	STEAM TO RLD-EJCTR-00056	19'-2"	24590-HLW-MV-RLD-00025004 DET T	2"-40S
N33	2"	SEE DETAIL	STEAM TO RLD-EJCTR-00050	19'-2"	24590-HLW-MV-RLD-00025004 DET T	2"-40S
N34	2"	SEE DETAIL	STEAM TO RLD-EJCTR-00008	19'-2"	24590-HLW-MV-RLD-00025004 DET T	2"-40S
N35	2"	160S	STEAM TO RLD-EJCTR-00059	19'-2"	24590-HLW-MV-RLD-00025004 DET T	2"-40S
N36	1 1/2"	160S	OUTLET FROM HOP-EJCTR-00918A	19'-2"	24590-WTP-MV-M59T-00016001 DET 4	1 1/2"-40S
N37	1 1/2"	160S	OUTLET FROM HOP-EJCTR-00918B	19'-2"	24590-WTP-MV-M59T-00016001 DET 4	1 1/2"-40S
N38	3"	80S	OUTLET FROM RLD-EJCTR-00059	19'-2"	24590-HLW-MV-RLD-00025004 DET T	2"-40S
N39	3"	80S	OUTLET FROM RLD-EJCTR-00050	19'-2"	24590-HLW-MV-RLD-00025004 DET T	2"-40S
N40	6"	40S	INSTRUMENTATION	18'-2"	24590-HLW-MV-RLD-00025004	N/A
N40A	1"	160S	BALANCE	19'-0"	24590-HLW-MV-RLD-00025004	1"-40S
N40B	1"	160S	DENSITY	19'-1"	24590-HLW-MV-RLD-00025004	1"-40S
N40C	1"	160S	LEVEL	19'-2"	24590-HLW-MV-RLD-00025004	1"-40S
N41	8"	80S	OVERFLOW	14'-8"	24590-WTP-MV-M59T-00016001 DET 1	8"-10S
N42	6"	40S	INSTRUMENTATION	18'-2"	24590-HLW-MV-RLD-00025004	N/A
N42A	1"	160S	BALANCE	19'-0"	24590-HLW-MV-RLD-00025004	1"-40S
N42B	1"	160S	DENSITY	19'-1"	24590-HLW-MV-RLD-00025004	1"-40S
N42C	1"	160S	LEVEL	19'-2"	24590-HLW-MV-RLD-00025004	1"-40S
N43	2"	160S	AUTO SAMPLE RETURN	19'-2"	24590-WTP-MV-M59T-00016001 DET 2	2"-40S
N44	2"OD X 1"	SEE DETAIL	OUTLET FROM RLD-RFD-00162A	19'-2"	24590-WTP-MV-M59T-00016001 DET 7	1"-40S
N45			NOT USED			
N46			NOT USED			
N47	2"OD X 1/2"	SEE DETAIL	PRESSURE	19'-2"	24590-WTP-MV-M59T-00016001 DET 5	1/2"-40S
N48	1 1/2"	SEE DETAIL	INLET FROM RLD-EJCTR-00049A	19'-2"	24590-HLW-MV-RLD-00025004 DET T	1 1/2"-40S

GENERAL AND FLAG NOTES:

1. ALL 'Z' DIMENSIONS MEASURED FROM BOTTOM TANGENT LINE UNLESS OTHERWISE NOTED. FOR SHELL NOZZLE 'Z' DIMENSIONS MEASURED TO CENTER LINE OF NOZZLE FACE.
2. SELLER SHALL PROVIDE 8 SHIM PACKS COMPRISING OF THE FOLLOWING 10" SQUARE STAINLESS STEEL PLATES:
   - 2 PCS-1/4" THICK PLATES
   - 1 PCS-1/8" THICK PLATES
   - 2 PCS-1/16" THICK PLATES
3. FOR BASE SUPPORT, SEE REFERENCE DRAWING 24590-HLW-DD-S13T-00002007.
4. FOR TEMPERATURE NOZZLE (N20 & N21), THE DISTANCE OF THE DIP PIPE (LEGS) USE 1'-6" CLEARANCE.
5. CONTENTS OF THIS DOCUMENT ARE DANGEROUS WASTE PERMIT AFFECTING.

6 HOLE BORES SHALL MAINTAIN 1/16" DIAMETRICAL CLEARANCE AROUND THE NOMINAL SIZE OF PIPE BEING SUPPORTED.

7 PROVIDE MIN 1/8" CHAMFER TO HOLE BORE EDGES FOR ALL THRU-HOLES SUPPORTING PROCESS PIPES.

8 PIPE TEES OR WYES MAY BE USED FOR LATERAL AND VERTICAL PIPE TO RING CONNECTIONS, AND FOR RADIAL KNEE BRACES IN LIEU OF MITERED JOINTS.

9. THIS DRAWING SUPERSEDES 24590-HLW-MV-RLD-00003, REV 2.
10. TAILING LUG BY SELLER.

11 REFER TO DRAWING 24590-QL-POA-MVA0-00012-03-00006 REV.00B FOR PJM & CHARGE VESSEL SUPPORT CONFIGURATION.

12. PROVIDE A 3/8" DIAMETER ANTI-SIPHON HOLE, 8" ABOVE THE OVERFLOW LINE FOR NOZZLE N48.
13. WELD SIZES DEPICTED ARE MINIMUM UNLESS OTHERWISE NOTED.

HOLD NOTES:

1. WELD SIZE ON HOLD PENDING ISSUANCE OF ECCN.

DRAWING INDEX	
DWG NO	TITLE
24590-HLW-MV-RLD-00025001	EQUIPMENT ASSEMBLY ACIDIC WASTE VESSEL RLD-VSL-00007
24590-HLW-MV-RLD-00025002	EQUIPMENT ASSEMBLY ACIDIC WASTE VESSEL RLD-VSL-00007
	SECTIONS AND DETAILS
24590-HLW-MV-RLD-00025003	EQUIPMENT ASSEMBLY ACIDIC WASTE VESSEL RLD-VSL-00007
	SECTIONS AND DETAILS
24590-HLW-MV-RLD-00025004	EQUIPMENT ASSEMBLY ACIDIC WASTE VESSEL RLD-VSL-00007
	SECTIONS AND DETAILS

REFERENCE DRAWINGS	
DWG NO	TITLE
24590-HLW-M6-RLD-00001	P & ID
24590-HLW-M6-RLD-00006	P & ID
24590-WTP-MV-M59T-00001	PRESSURE VESSEL TOLERANCES STANDARD DETAILS
24590-WTP-MV-M59T-00004	PULSE JET MIXERS STANDARD DETAILS
24590-WTP-MV-M59T-00007	THERMOWELL CONNECTION STANDARD DETAILS
24590-WTP-MV-M59T-00009	LIFTING LUG STANDARD DETAILS
24590-WTP-MV-M59T-00011	WASH RINGS STANDARD DETAILS
24590-WTP-MV-M59T-00012	GROUNDING LUG STANDARD DETAILS
24590-WTP-MV-M59T-00013	CHARGE VESSEL STANDARD DETAILS
24590-WTP-MV-M59T-00014	RFD PUMPS DETAIL
24590-WTP-MV-M59T-00016001	VESSEL CONNECTIONS STANDARD DETAILS SHT 1 OF 3
24590-WTP-MV-M59T-00017	VESSEL INSPECTION MANWAY STANDARD DETAILS
24590-WTP-MV-M59T-00018	VESSEL NAME PLATE STANDARD DETAILS
24590-HLW-DD-S13T-00002007	HLW VITRIFICATION BLDG CONCRETE EQUIP SUPPORT DET EL (-) 21'-0"
24590-WTP-PW-P30T-00001	WTP END PREP DETAIL FOR FIELD BUTT WELDS
24590-QL-POA-MVA0-00012-03-00006	PJM & CV SUPPORT CONFIGURATION
	ACIDIC WASTE VESSEL

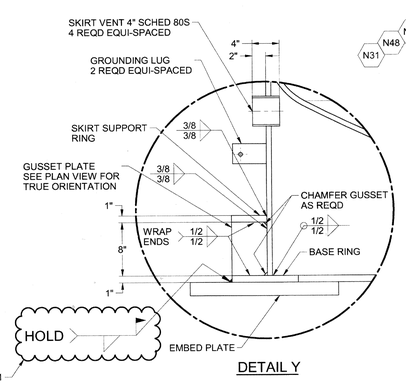

DETAIL Y

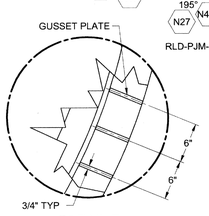

DETAIL Z

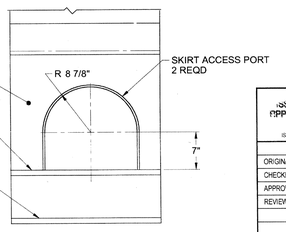

VIEW AA-AA

THIS DRAWING TO BE READ IN CONJUNCTION WITH THE MECHANICAL DATA SHEET NO 24590-HLW-MVD-RLD-00005

Please note that source, special nuclear, and byproduct materials, as defined in the Atomic Energy Act of 1954 (AEA) are regulated at the U. S. Department of Energy (DOE) facilities exclusively by DOE acting pursuant to its AEA authority. DOE asserts that pursuant to AEA, it has sole and exclusive responsibility and authority to regulate source, special nuclear, and byproduct materials at DOE-owned nuclear facilities. Information contained herein on radionuclides is provided for process description purposes only.

PLEASE NOTE THAT SOURCE, SPECIAL NUCLEAR AND BYPRODUCT MATERIALS, AS DEFINED IN THE ATOMIC ENERGY ACT OF 1954 (AEA), ARE REGULATED AT THE U.S. DEPARTMENT OF ENERGY (DOE) FACILITIES EXCLUSIVELY BY DOE ACTING PURSUANT TO ITS AEA AUTHORITY. DOE ASSERTS, THAT PURSUANT TO THE AEA, IT HAS SOLE AND EXCLUSIVE RESPONSIBILITY AND AUTHORITY TO REGULATE SOURCE, SPECIAL NUCLEAR, AND BYPRODUCT MATERIALS AT DOE-OWNED NUCLEAR FACILITIES. INFORMATION CONTAINED HERE IN ON RADIONUCLIDES IS PROVIDED FOR PROCESS DESCRIPTION PURPOSES ONLY.

Q

REV	DESCRIPTION	ORG	CHKD	RVWD	APVD	DATE
0	ISSUED FOR PURCHASE, SEE NOTE 9	RPP				11/5/10

REVISION HISTORY

ISSUED BY RPP-WTP PDC

PROJECT No.	24590	
SITE	HANFORD	
AREA	200E	
BUILDING No.	30	

	BY	DATE
ORIGINATOR	Roy Porges	11/5/10
CHECKER		5-Nov-10
APPROVER		11/5/10
REVIEWER		11/5/10

CONTENT APPLICABLE TO ALARA? [X] YES [ ] NO

ADR NO. 24590-WTP-ADR-M-03-008 REV. 2

EMS SCREENING REQUIRED [X] YES [ ] NO EMS INITIAL IF YES

SCREENING IS REQUIRED FOR DRAWING TYPES IDENTIFIED IN 24590-WTP-GPP-SREG-002

BECHTEL

RIVER PROTECTION PROJECT
WASTE TREATMENT PLANT
2435 STEVENS CENTER PLACE
RICHLAND, WA 99354

CONTRACT No: DE-AC27-01RV14136

EQUIPMENT ASSEMBLY ACIDIC WASTE VESSEL RLD-VSL-00007

SCALE: NONE

24590-HLW-MV-RLD-00025001

REV 0

"E" SIZE - 44x34

COMPUTER GENERATED - MANUAL DESIGN CHANGES NOT PERMITTED

R1297460

FORM E_MASTER 03/2003

ITEM	QTY	MATERIAL	DESCRIPTION
1	AR	SEE NOTE 7	1/2 (MIN) WALL X 1 1/2 LONG, ROUND BAR, GUIDE RING (NOTE 5)
2	AR	SEE NOTE 7	3/4 (MIN) X 3 (MIN) BAR, SPACER PLATE
3	AR	SEE NOTE 7	3" NPS SCHEDULE 80 SEAMLESS PIPE

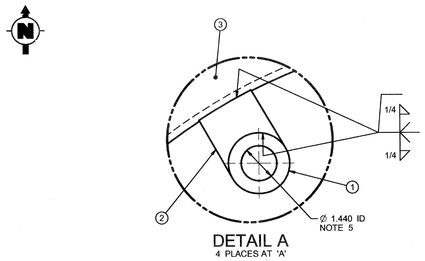

DETAIL A
4 PLACES AT 'A'

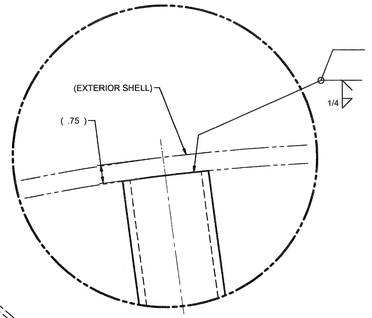

DETAIL D
4 PLACES

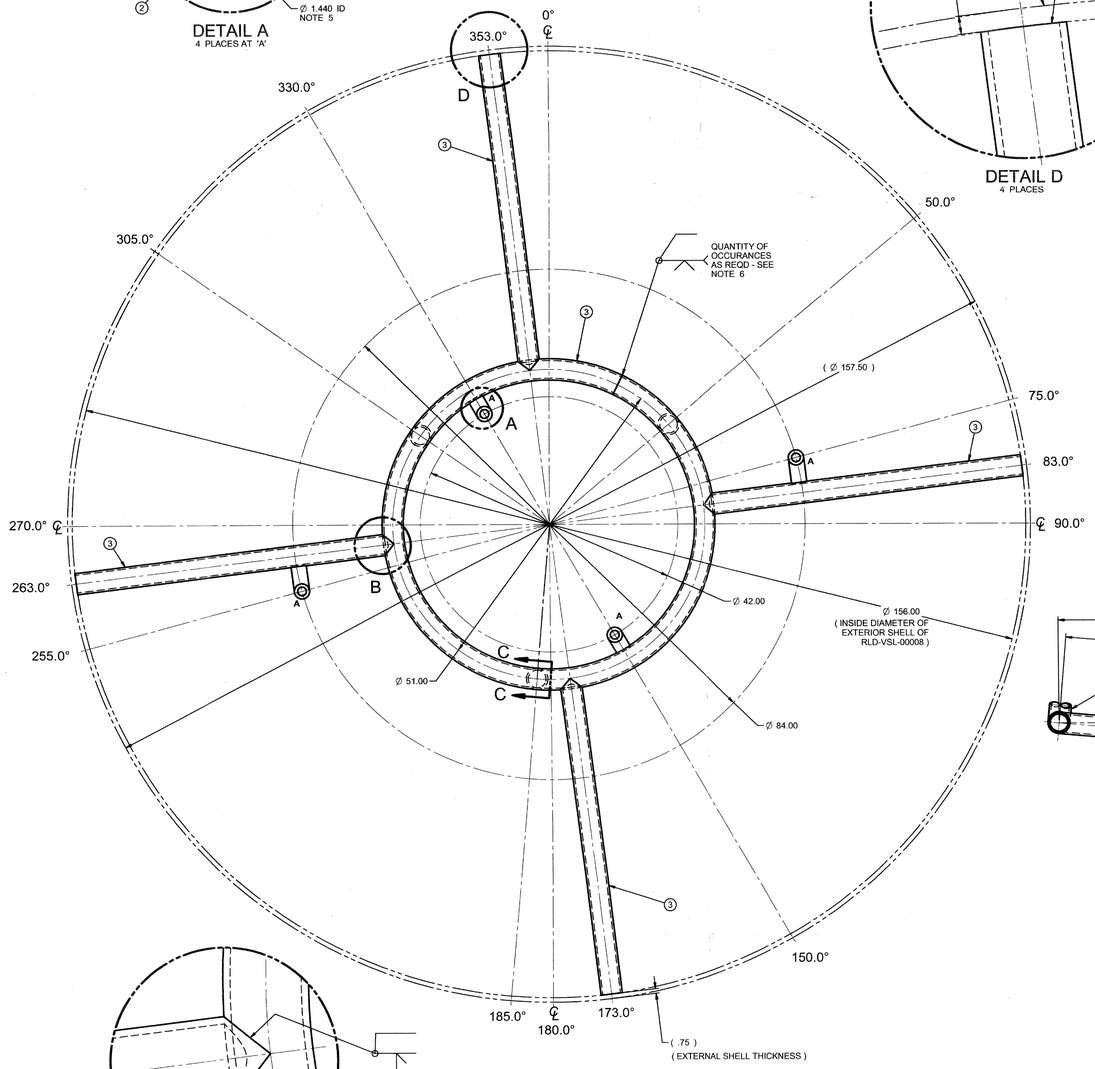

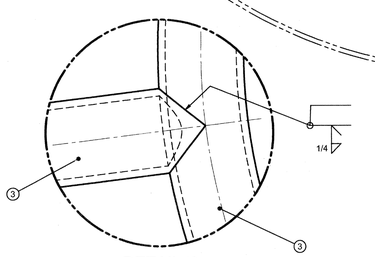

DETAIL B
7 PLACES

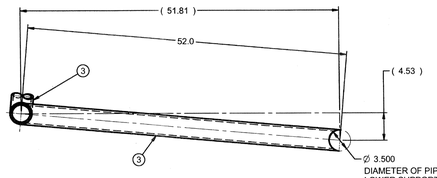

SECTION C-C
3 PLACES

PLEASE NOTE THAT SOURCE AND/OR SPECIAL NUCLEAR AND BYPRODUCT MATERIALS, AS DEFINED IN THE ATOMIC ENERGY ACT OF 1954 (AEA), ARE REGULATED AT THE U.S. DEPARTMENT OF ENERGY (DOE) FACILITIES EXCLUSIVELY BY THE DOE ACTING PURSUANT TO ITS AEA AUTHORITY. THE DOE ASSERTS THAT PURSUANT TO THE AEA, IT HAS SOLE AND EXCLUSIVE RESPONSIBILITY AND AUTHORITY TO REGULATE SOURCE, SPECIAL NUCLEAR, AND BYPRODUCT MATERIALS AT DOE-OWNED NUCLEAR FACILITIES. INFORMATION CONTAINED HEREIN ON RADIONUCLIDES IS PROVIDED FOR PROCESS DESCRIPTION PURPOSES ONLY.

GENERAL NOTES

1. DIMENSIONING AND TOLERANCING PER ASME Y14.5
2. THIS DRAWING PROVIDES INFORMATION TO PLACE ADDITIONAL SEISMIC GUIDE/SUPPORT STRUCTURE INSIDE OF HLW VESSEL RLD-VSL-00008 FOR ADDED INTERNAL STRUCTURAL SUPPORT.
3. WELDING AND NDE SHALL BE IN ACCORDANCE WITH VESSEL SPECIFICATION 24590-WTP-3PS-MV00-T0001.
4. CONTENTS OF THIS DOCUMENT ARE DANGEROUS WASTE PERMIT AFFECTING.
5. GUIDE RINGS ARE BORED TO MAINTAIN 1/16" (.063") MAX GAP ON A SIDE FOR 1/8" (.125") MAXIMUM DIAMETRAL CLEARANCE WITH PIPE.
6. CENTER SUPPORT RING MAY BE FABRICATED IN AS MANY SECTIONS AS NEEDED.
7. MATERIALS ARE PER THE FOLLOWING MECHANICAL SYSTEMS DATA SHEET: 24590-HLW-MVD-RLD-00007, AND ADDITIONALLY, BAR STOCK IS PER SA 479 TYPE 316 (.03% CARBON MAX)

REFERENCE DRAWINGS

DWG NO.	TITLE
24590-HLW-MV-RLD-00004	EQUIPMENT ASSEMBLY PLANT WASH & DRAINS VESSEL RLD-VSL-00008
24590-HLW-MV-RLD-00019	RLD-VSL-00008 LOWER SEISMIC GUIDE/SUPPORT 0'-6" ABOVE TANGENT LINE OF BOTTOM HEAD
24590-HLW-MV-RLD-00020	RLD-VSL-00008 LOW SIDE WALL MTD SEISMIC GUIDE/SPRTS 0'-6" ABOVE TAN LINE OF BOT HEAD
24590-HLW-MV-RLD-00021	RLD-VSL-00008 UPPER GUIDE/SUPPORT 9'-3" ABOVE TAN LINE OF BOTTOM HEAD
24590-HLW-MV-RLD-00022	RLD-VSL-00008 UP SIDE WALL MTD SEISMIC GUIDE/SPRTS 7'-9" ABOVE TAN LINE OF BOT HEAD

REVISION HISTORY

REV	DESCRIPTION	ORG	CHKD	RVWD	APVD	DATE
0	ISSUED FOR PURCHASE	AJP	BAD	RP	RP	9/17/09

Please note that source, special nuclear, and byproduct materials, as defined in the Atomic Energy Act of 1954 (AEA) are regulated at the U. S. Department of Energy (DOE) facilities exclusively by the DOE acting pursuant to its AEA authority. The DOE asserts that pursuant to AEA, it has sole and exclusive responsibility and authority to regulate source, special nuclear, and byproduct materials at DOE-owned nuclear facilities. Information contained herein on radionuclides is provided for process description purposes only.

Q

ISSUED BY RPM-WTP PDC

ISSUE STAMP

PROJECT No.	24590	
SITE	HANFORD	
AREA	200E	
BUILDING No.	30	
	BY	DATE
ORIGINATOR	A. J. Pettorossi	9-8-2009
CHECKER	Bryan Rudder	9-9-2009
APPROVER	Rick Rudder	9/9/09
REVIEWER	Bill Peters	9/9/09

THIRD ANGLE PROJECTION

TOLERANCES	
.00	±.50"
FRACTION	± 1/16"
ANGLE	± 5°

CONTENT APPLICABLE TO ALARA? [X] YES [ ] NO

ADR NO. 24590-WTP-ADR-M-03-008 REV: 2

SAFETY SCREEN REQUIRED? [ ] YES [X] NO E&HS INITIAL IF YES _____

BECHTEL

RIVER PROTECTION PROJECT
WASTE TREATMENT PLANT
2435 STEVENS CENTER PLACE
RICHLAND, WA 99354

CONTRACT No: DE-AC27-01RV14136

RLD-VSL-00008
MID-SPAN SEISMIC GUIDE/SUPPORT
4'-10" ABOVE TANGENT LINE OF BOTTOM HEAD

SCALE: NONE

24590-HLW-MV-RLD-00024

REV 0

"E" SIZE - 44x34

COMPUTER GENERATED - MANUAL DESIGN CHANGES NOT PERMITTED

WHEN REFERENCING DRAWING AND DIM NUMBERS IN DOCUMENTS, BE SURE TO INCLUDE DASHES BETWEEN ELEMENTS

03/04/2003 7:23 AM

FORM E_MASTER 03/2003

R11121709

ITEM	QTY	MATERIAL	DESCRIPTION
1	AR	SEE NOTE 6	1/2 (MIN) WALL X 1 1/2 LONG, ROUND BAR, GUIDE RING (NOTE 5)
2	AR	SEE NOTE 6	3/4 (MIN) X 3 (MIN) BAR, SPACER PLATE
3	AR	SEE NOTE 6	1/4 (MIN) PLATE, CAP
4	AR	SEE NOTE 6	1 1/2 (MIN) PLATE, GUIDE RING (NOTE 5)
5	AR	SEE NOTE 6	2" NPS SCHEDULE 160 SEAMLESS PIPE

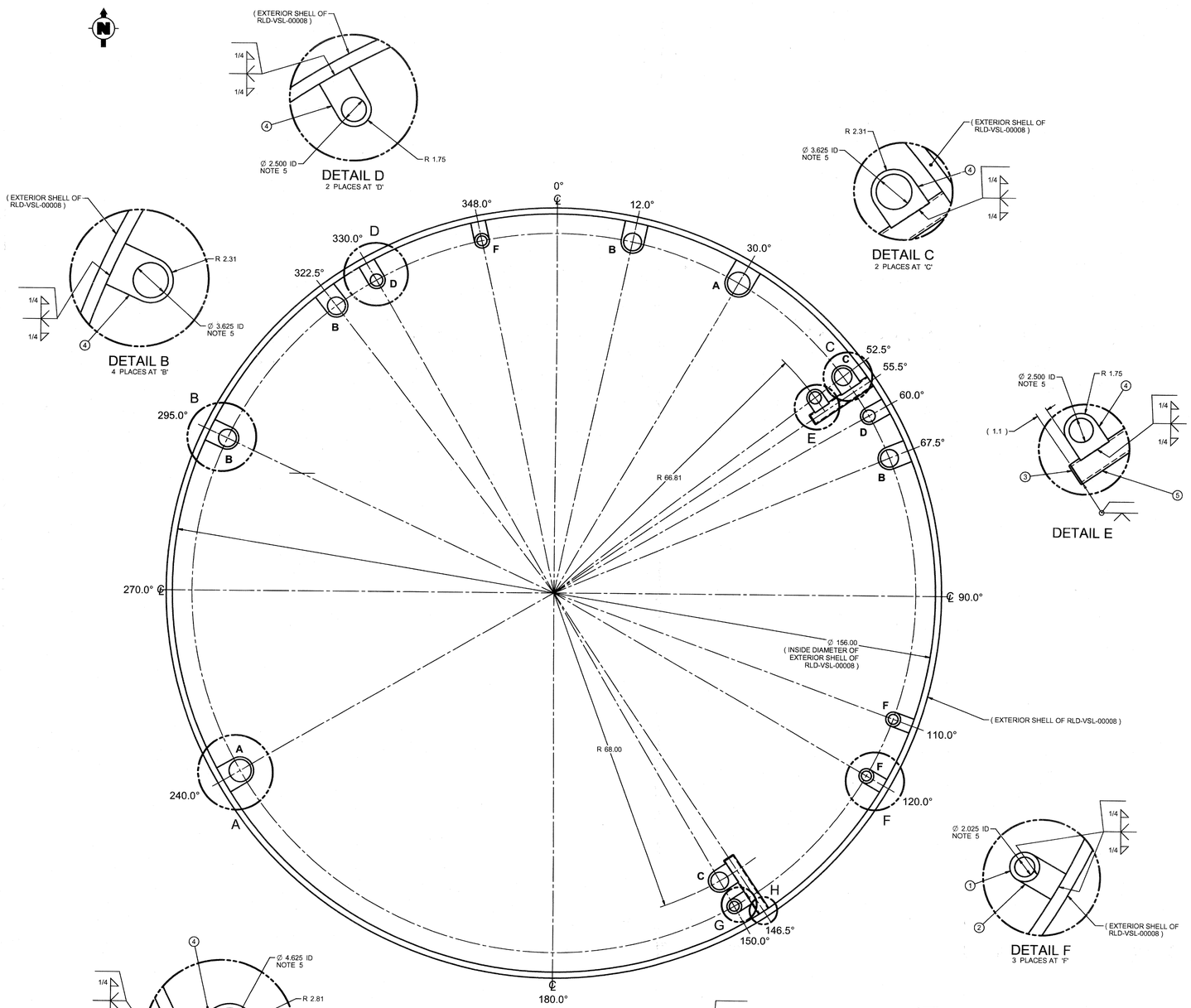

PLEASE NOTE THAT SOURCE AND/OR SPECIAL NUCLEAR AND BYPRODUCT MATERIALS, AS DEFINED IN THE ATOMIC ENERGY ACT OF 1954 (AEA), ARE REGULATED AT THE U.S. DEPARTMENT OF ENERGY (DOE) FACILITIES EXCLUSIVELY BY THE DOE ACTING PURSUANT TO ITS AEA AUTHORITY. THE DOE ASSERTS THAT PURSUANT TO THE AEA, IT HAS SOLE AND EXCLUSIVE RESPONSIBILITY AND AUTHORITY TO REGULATE SOURCE, SPECIAL NUCLEAR, AND BYPRODUCT MATERIALS AT DOE-OWNED NUCLEAR FACILITIES. INFORMATION CONTAINED HEREIN ON RADIONUCLIDES IS PROVIDED FOR PROCESS DESCRIPTION PURPOSES ONLY.

GENERAL NOTES

1. DIMENSIONING AND TOLERANCING PER ASME Y14.5
2. THIS DRAWING PROVIDES INFORMATION TO PLACE ADDITIONAL SEISMIC GUIDE/SUPPORT STRUCTURE INSIDE OF HLW VESSEL RLD-VSL-00008 FOR ADDED INTERNAL STRUCTURAL SUPPORT.
3. WELDING AND NDE SHALL BE IN ACCORDANCE WITH VESSEL SPECIFICATION 24590-WTP-3PS-MV00-T0001.
4. CONTENTS OF THIS DOCUMENT ARE DANGEROUS WASTE PERMIT AFFECTING.
5. GUIDE RINGS ARE BORED TO MAINTAIN 1/16" (.063") MAX GAP ON A SIDE FOR 1/8" (.125") MAXIMUM DIAMETRAL CLEARANCE WITH PIPE.
6. MATERIALS ARE PER THE FOLLOWING MECHANICAL SYSTEMS DATA SHEET: 24590-HLW-MVD-RLD-00007, AND ADDITIONALLY, BAR STOCK IS PER SA 479 TYPE 316 (.03% CARBON MAX).

REFERENCE DRAWINGS

DWG NO	TITLE
24590-HLW-MV-RLD-00004	EQUIPMENT ASSEMBLY ACIDIC WASTE VESSEL RLD-VSL-00008
24590-HLW-MV-RLD-00019	RLD-VSL-00008 LOW SEISMIC GUIDE/SUPPORT 0'-6" ABOVE TAN LINE OF BOT HEAD
24590-HLW-MV-RLD-00020	RLD-VSL-00008 LOW SIDE WALL MTD SEISMIC GUIDE/SPRTS, 0'-6" ABOVE TAN LINE OF BOT HEAD
24590-HLW-MV-RLD-00021	RLD-VSL-00008 UPPER GUIDE/SUPPORT 9'-3" ABOVE TAN LINE OF BOTTOM HEAD
24590-HLW-MV-RLD-00024	RLD-VSL-00008 MID-SPAN SEISMIC GUIDE/SPRT, 4'-10" ABOVE TAN LINE OF BOT HEAD

REV	DESCRIPTION	ORG	CHKD	RWWD	APVD	DATE
0	ISSUED FOR PURCHASE	AJP	DRD	RP	MM	9/17/09

REVISION HISTORY

Please note that source, special nuclear, and byproduct materials, as defined in the Atomic Energy Act of 1954 (AEA) are regulated at the U.S. Department of Energy (DOE) facilities exclusively by the DOE acting pursuant to its AEA authority. DOE asserts that pursuant to its AEA authority, DOE asserts that authority to regulate source, special nuclear, responsibility and duties on radionuclides in DOE-owned nuclear facilities, information contained materials at DOE-owned nuclear facilities, information contained herein on radionuclides is provided for process description purposes only.

ISSUED BY (BNI-WTP-PDC)

PROJECT No.	24590	
SITE	HANFORD	
AREA	200E	
BUILDING No.	30	
ISSUE STAMP		

	BY	DATE
ORIGINATOR	A. J. Pilcher	9-8-2009
CHECKER	[illegible]	9-9-2009
APPROVER	[illegible]	9/17/09
REVIEWER	Roy Peterson	9/9/09

THIRD ANGLE PROJECTION

TOLERANCES	
.00	± .50"
FRACTION	± 1/16"
ANGLE	± 5°

CONTENT APPLICABLE TO ALARA? [X] YES [ ] NO

ADR NO. 24590-WTP-ADR-MG3-008 REV: 2

SAFETY SCREEN REQUIRED? [ ] YES [X] NO E&NS INITIAL IF YES: ____

RIVER PROTECTION PROJECT
WASTE TREATMENT PLANT
2435 STEVENS CENTER PLACE
RICHLAND, WA 99354

CONTRACT No: DE-AC27-01RV14136

RLD-VSL-00008
UPPER SIDE WALL MOUNTED SEISMIC GUIDE/SUPPORTS, 7'-8" ABOVE TANGENT LINE OF BOTTOM HEAD

SCALE: NONE

24590-HLW-MV-RLD-00022

REV 0

B - SIZE - 44x34

COMPUTER GENERATED - MANUAL DESIGN CHANGES NOT PERMITTED

WHEN REFERENCING DRAWING AND DIM NUMBERS IN DOCUMENTS, BE SURE TO INCLUDE DASHES BETWEEN ELEMENTS

03/04/2003 7:23 AM

FORM E_MASTER 03/2003

R11121798

ITEM	QTY	MATERIAL	DESCRIPTION
1	AR	SEE NOTE 7	1/2 (MIN) WALL X 1 1/2 LONG, ROUND BAR, GUIDE RING (NOTE 5)
2	AR	SEE NOTE 7	3/4 (MIN) X 3 (MIN) BAR, BACKING PLATE
3	AR	SEE NOTE 7	1 1/2 (MIN) PLATE, GUIDE RING (NOTE 5)
4	AR	SEE NOTE 7	2" NPS SCHEDULE 160 SEAMLESS PIPE

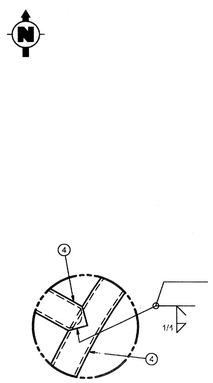

DETAIL D
6 PLACES

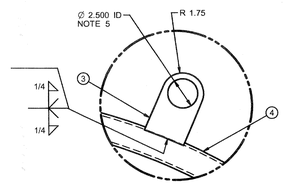

DETAIL B
8 PLACES AT 'B'

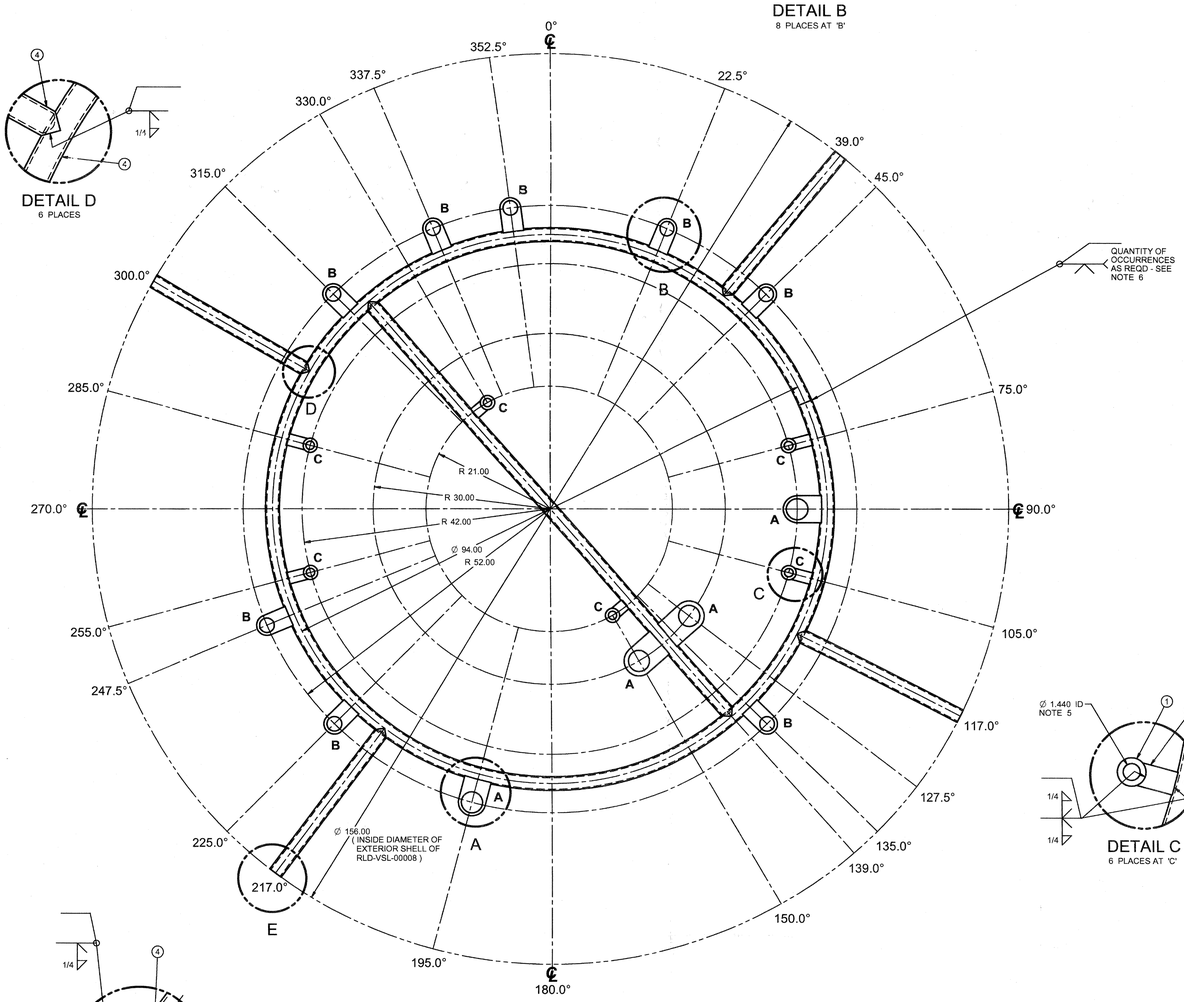

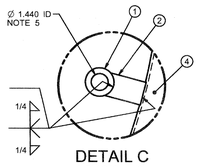

DETAIL C
6 PLACES AT 'C'

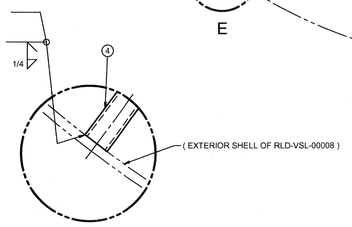

DETAIL E
4 PLACES

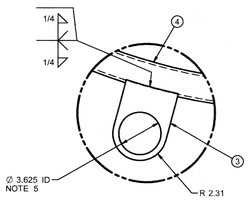

DETAIL A
4 PLACES AT 'A'

PLEASE NOTE THAT SOURCE AND/OR SPECIAL NUCLEAR AND BYPRODUCT MATERIALS, AS DEFINED IN THE ATOMIC ENERGY ACT OF 1954 (AEA), ARE REGULATED AT THE U.S. DEPARTMENT OF ENERGY (DOE) FACILITIES EXCLUSIVELY BY THE DOE ACTING PURSUANT TO ITS AEA AUTHORITY. THE DOE ASSERTS THAT PURSUANT TO THE AEA, IT HAS SOLE AND EXCLUSIVE RESPONSIBILITY AND AUTHORITY TO REGULATE SOURCE, SPECIAL NUCLEAR, AND BYPRODUCT MATERIALS AT DOE-OWNED NUCLEAR FACILITIES. INFORMATION CONTAINED HEREIN ON RADIONUCLIDES IS PROVIDED FOR PROCESS DESCRIPTION PURPOSES ONLY.

GENERAL NOTES

1. DIMENSIONING AND TOLERANCING PER ASME Y14.5
2. THIS DRAWING PROVIDES INFORMATION TO PLACE ADDITIONAL SEISMIC GUIDE/SUPPORT STRUCTURE INSIDE OF HLW VESSEL RLD-VSL-00008 FOR ADDED INTERNAL STRUCTURAL SUPPORT.
3. WELDING AND NDE SHALL BE IN ACCORDANCE WITH VESSEL SPECIFICATION 24590-WTP-3PS-MV00-T0001.
4. CONTENTS OF THIS DOCUMENT ARE DANGEROUS WASTE PERMIT AFFECTING.
5. GUIDE RINGS ARE BORED TO MAINTAIN 1/16" (.063") MAX GAP ON A SIDE FOR 1/8" (.125") MAXIMUM DIAMETRAL CLEARANCE WITH PIPE.
6. CENTER SUPPORT RING MAY BE FABRICATED IN AS MANY SECTIONS AS NEEDED.
7. MATERIALS ARE PER THE FOLLOWING MECHANICAL SYSTEMS DATA SHEET: 24590-HLW-MVD-RLD-00007, AND ADDITIONALLY, BAR STOCK IS PER SA 479 TYPE 316 (.03% CARBON MAX).

REFERENCE DRAWINGS	
DWG NO	TITLE
24590-HLW-MV-RLD-00004	EQUIPMENT ASSEMBLY PLANT WASH & DRAINS VESSEL RLD-VSL-00008
24590-HLW-MV-RLD-00019	RLD-VSL-00008 LOW SEISMIC GUIDE/SUPPORT 0'-6" ABOVE TAN LINE OF BOT HEAD
24590-HLW-MV-RLD-00020	RLD-VSL-00008 LOW SIDE WALL MTD SEISMIC GUIDE/SPRTS, 0'-6" ABOVE TAN LINE OF BOT HEAD
24590-HLW-MV-RLD-00022	RLD-VSL-00008 UP SIDE WALL MTD SEISMIC GUIDE/SPRTS, 7'-9" ABOVE TAN LINE OF BOT HEAD
24590-HLW-MV-RLD-00024	RLD-VSL-00008 MID-SPAN SEISMIC GUIDE/SPRT 4'-10" ABOVE TAN LINE OF BOT HEAD

Please note that source, special nuclear, and byproduct materials, as defined in the Atomic Energy Act of 1954 (AEA) are regulated at the U.S. Department of Energy (DOE) facilities exclusively by the DOE acting pursuant to its AEA authority. DOE asserts that pursuant to AEA, it has sole and exclusive responsibility and authority to regulate source, special nuclear, and byproduct materials at DOE-owned nuclear facilities. Information contained herein on radionuclides is provided for process description purposes only.

Q

REV	DESCRIPTION	ORG	CHKD	RVWD	APVD	DATE
0	ISSUED FOR PURCHASE	AJP	BED	RP	AJ	9/17/09

REVISION HISTORY

ISSUED BY
ISPP-WTP PDC

ISSUE STAMP

		BY	DATE
PROJECT No.	24590		
SITE	HANFORD		
AREA	200E		
BUILDING No.	30		
ORIGINATOR		A.J. Pedrick	9-8-2009
CHECKER		[illegible]	9-9-2009
APPROVER		[illegible]	9/17/09
REVIEWER		Bill Peterson	9/9/09

THIRD ANGLE PROJECTION

TOLERANCES	
.00	±.50"
FRACTION	± 1/16"
ANGLE	± 5°

CONTENT APPLICABLE TO ALARA? [X] YES [ ] NO
ADR NO. 24590-WTP-ADR-MI-03-009 REV: 2
SAFETY SCREEN REQUIRED? [ ] YES [X] NO E&NS INITIAL IF YES _____

RECHTEL

RIVER PROTECTION PROJECT
WASTE TREATMENT PLANT
2435 STEVENS CENTER PLACE
RICHLAND, WA 99354

CONTRACT No: DE-AC27-01RV14136

RLD-VSL-00008
UPPER SEISMIC GUIDE/SUPPORT
9'-3" ABOVE TANGENT LINE OF BOTTOM HEAD

SCALE: NONE

24590-HLW-MV-RLD-00021

REV: 0

'E' SIZE - 44x34
COMPUTER GENERATED - MANUAL DESIGN CHANGES NOT PERMITTED

WHEN REFERENCING DRAWING AND DM NUMBERS IN DOCUMENTS, BE SURE TO INCLUDE DASHES BETWEEN ELEMENTS

03/04/2003 7:23 AM

FORM F_MASTER 03/2003

R1112171/97

ITEM	QTY	MATERIAL	DESCRIPTION
1	AR	SEE NOTE 6	1/2 (MIN) WALL X 1 1/2 LONG, ROUND BAR, GUIDE RING (NOTE 5)
2	AR	SEE NOTE 6	3/4 (MIN) X 3 (MIN) BAR, SPACER
3	AR	SEE NOTE 6	1/4 (MIN) PLATE, CAP
4	AR	SEE NOTE 6	1 1/2 (MIN) PLATE, GUIDE RING (NOTE 5)
5	AR	SEE NOTE 6	2" NPS SCHEDULE 160 SEAMLESS PIPE

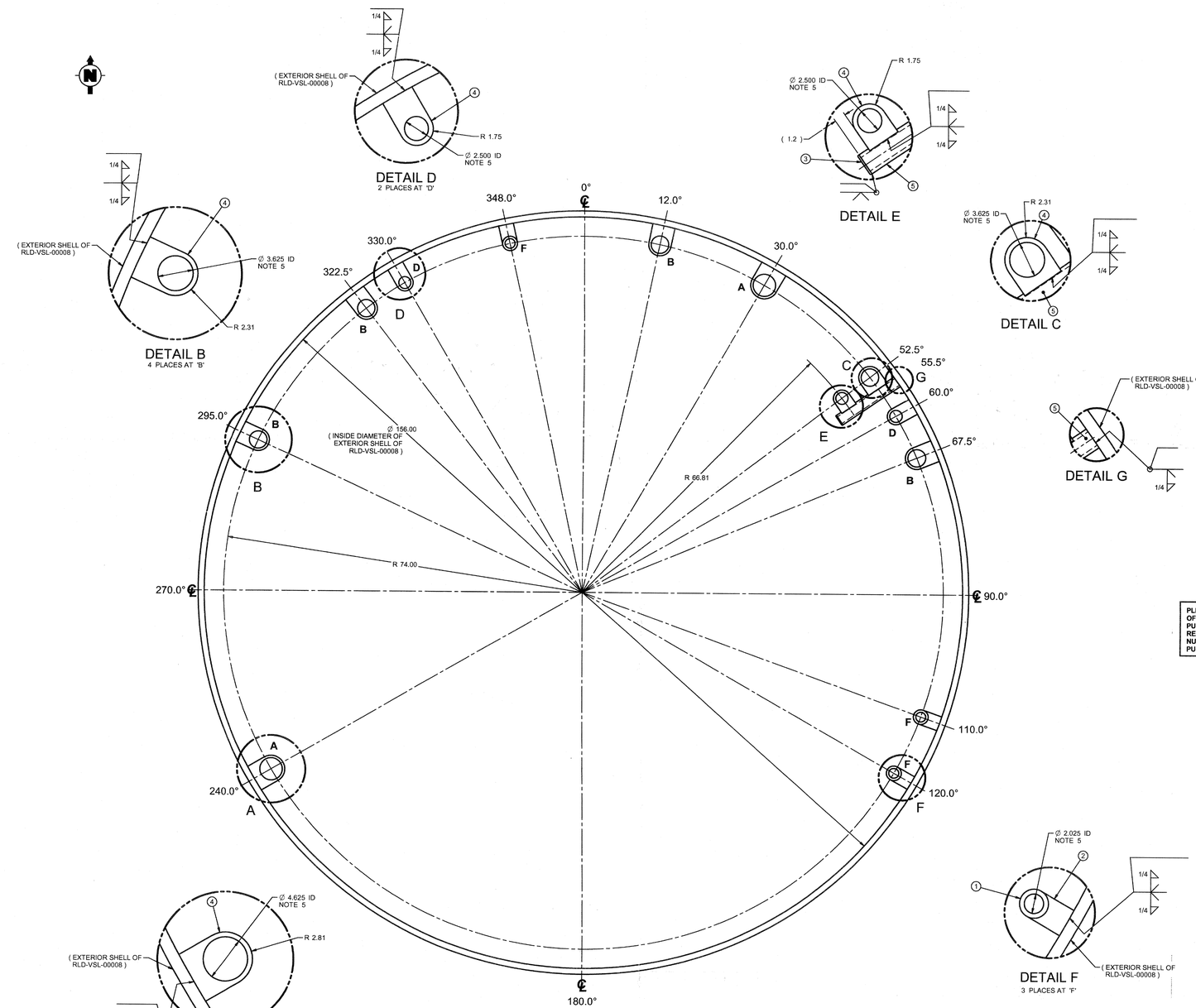

PLEASE NOTE THAT SOURCE AND/OR SPECIAL NUCLEAR AND BYPRODUCT MATERIALS, AS DEFINED IN THE ATOMIC ENERGY ACT OF 1954 (AEA), ARE REGULATED AT THE U.S. DEPARTMENT OF ENERGY (DOE) FACILITIES EXCLUSIVELY BY THE DOE ACTING PURSUANT TO ITS AEA AUTHORITY. THE DOE ASSERTS THAT PURSUANT TO THE AEA, IT HAS SOLE AND EXCLUSIVE RESPONSIBILITY AND AUTHORITY TO REGULATE SOURCE, SPECIAL NUCLEAR, AND BYPRODUCT MATERIALS AT DOE-OWNED NUCLEAR FACILITIES. INFORMATION CONTAINED HEREIN ON RADIONUCLIDES IS PROVIDED FOR PROCESS DESCRIPTION PURPOSES ONLY.

GENERAL NOTES

1. DIMENSIONING AND TOLERANCING PER ASME Y14.5
2. THIS DRAWING PROVIDES INFORMATION TO PLACE ADDITIONAL SEISMIC GUIDE/SUPPORT STRUCTURE INSIDE OF HLW VESSEL RLD-VSL-00008 FOR ADDED INTERNAL STRUCTURAL SUPPORT.
3. WELDING AND NDE SHALL BE IN ACCORDANCE WITH VESSEL SPECIFICATION 24590-WTP-3PS-MV00-T0001.
4. CONTENTS OF THIS DOCUMENT ARE DANGEROUS WASTE PERMIT AFFECTING.
5. GUIDE RINGS ARE BORED TO MAINTAIN 1/16" (.063") MAX GAP ON A SIDE FOR 1/8" (.125") MAXIMUM DIAMETRAL CLEARANCE WITH PIPE.
6. MATERIALS ARE PER THE FOLLOWING MECHANICAL SYSTEMS DATA SHEET: 24590-HLW-MVD-RLD-00007, AND ADDITIONALLY, BAR STOCK IS PER SA 479 TYPE 316 (.03% CARBON MAX).

REFERENCE DRAWINGS

DWG NO	TITLE
24590-HLW-MV-RLD-00004	EQUIPMENT ASSEMBLY PLANT WASH & DRAINS VESSEL RLD-VSL-00008
24590-HLW-MV-RLD-00019	RLD-VSL-00003 LOW SEISMIC GUIDE/SUPPORT 0'-6" ABOVE TAN LINE OF BOT HEAD
24590-HLW-MV-RLD-00021	RLD-VSL-00008 UPPER GUIDE/SUPPORT 9'-3" ABOVE TAN LINE OF BOTTOM HEAD
24590-HLW-MV-RLD-00022	RLD-VSL-00008 UP SIDE WALL MTD SEISMIC GUIDE/SPRTS, 7'-0" ABOVE TAN LINE OF BOT HEAD
24590-HLW-MV-RLD-00024	RLD-VSL-00008 MID-SPAN SEISMIC GUIDE/SPRT 4'-10" ABOVE TAN LINE OF BOT HEAD

Please note that source, special nuclear, and byproduct materials, as defined in the Atomic Energy Act of 1954 (AEA) are regulated at the U. S. Department of Energy (DOE) facilities exclusively by DOE acting pursuant to its AEA authority. DOE asserts that pursuant to the AEA, it has sole and exclusive responsibility and authority to regulate source, special nuclear, and byproduct materials at DOE-owned nuclear facilities. Information contained herein on radionuclides is provided for process description purposes only.

REV	DESCRIPTION	ORG	CHKD	RVWD	APVD	DATE
0	ISSUED FOR PURCHASE	AJP	BGD	RP	[illegible]	9/17/09

REVISION HISTORY

Q

ISSUED BY: ppp-WTP PDG

ISSUE STAMP

PROJECT No.	24590	
SITE	HANFORD	
AREA	2000	
BUILDING No.	30	
	BY	DATE
ORIGINATOR	[illegible]	9-8-2009
CHECKER	[illegible]	9-9-2009
APPROVER	[illegible]	9/17/09
REVIEWER	Ray Roberts	9/16/09

THIRD ANGLE PROJECTION

TOLERANCES	
.00	± .50"
FRACTION	± 1/16"
ANGLE	± 5°

CONTENT APPLICABLE TO ALARA? [X] YES [ ] NO

ADR NO. 24590-WTP-ADR-M-03-008 REV. 2

SAFETY SCREEN REQUIRED? [ ] YES [X] NO E&NS INITIAL IF YES

BECHTEL

RIVER PROTECTION PROJECT
WASTE TREATMENT PLANT
2435 STEVENS CENTER PLACE
RICHLAND, WA 99354

CONTRACT No: DE-AC27-01RV14136

RLD-VSL-00008
LOWER SIDE WALL MOUNTED SEISMIC GUIDE/SUPPORTS, 0'-6" ABOVE TANGENT LINE OF BOTTOM HEAD

SCALE: NONE

24590-HLW-MV-RLD-00020

REV 0

E. SIZE - 44x34

COMPUTER GENERATED - MANUAL DESIGN CHANGES NOT PERMITTED

WHEN REFERENCING DRAWING AND DWG NUMBERS IN DOCUMENTS, BE SURE TO INCLUDE DASHES BETWEEN ELEMENTS

03/04/2003 7:23 AM

FORM E_MASTER 03/2003

R11121798

ITEM	QTY	MATERIAL	DESCRIPTION
1	AR	SEE NOTE 7	1/2 (MIN) WALL X 1 1/2 LONG, ROUND BAR, GUIDE RING (NOTE 5)
2	AR	SEE NOTE 7	3/4 (MIN) X 3 (MIN) BAR, SPACER
3	AR	SEE NOTE 7	3/4 (MIN) X 2 (MIN) BAR, SPACER
4	AR	SEE NOTE 7	1/4 (MIN) PLATE, CAP
5	AR	SEE NOTE 7	1 1/2 (MIN) PLATE, GUIDE RING (NOTE 5) WIDTH AS REQUIRED
6	AR	SEE NOTE 7	3" NPS SCHEDULE 80 SEAMLESS PIPE
7	2	SEE NOTE 7	3" NPS SCHEDULE 80 LONG RADIUS ELBOW (BUTT WELD)

PLEASE NOTE THAT SOURCE AND/OR SPECIAL NUCLEAR AND BYPRODUCT MATERIALS, AS DEFINED IN THE ATOMIC ENERGY ACT OF 1954 (AEA), ARE REGULATED AT THE U.S. DEPARTMENT OF ENERGY (DOE) FACILITIES EXCLUSIVELY BY THE DOE ACTING PURSUANT TO ITS AEA AUTHORITY. THE DOE ASSERTS THAT PURSUANT TO THE AEA, IT HAS SOLE AND EXCLUSIVE RESPONSIBILITY AND AUTHORITY TO REGULATE SOURCE, SPECIAL NUCLEAR, AND BYPRODUCT MATERIALS AT DOE-OWNED NUCLEAR FACILITIES. INFORMATION CONTAINED HEREIN ON RADIONUCLIDES IS PROVIDED FOR PROCESS DESCRIPTION PURPOSES ONLY.

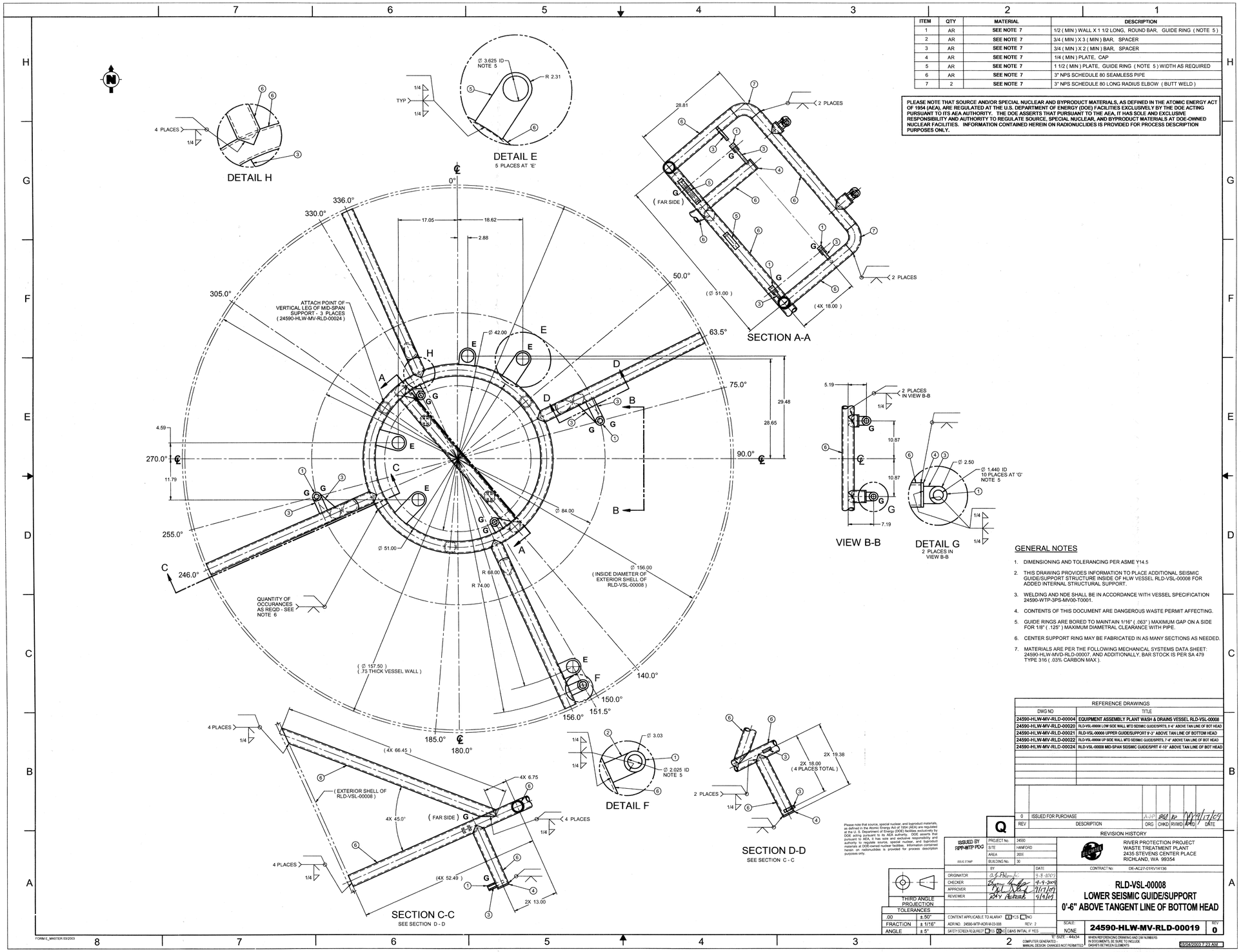

GENERAL NOTES

1. DIMENSIONING AND TOLERANCING PER ASME Y14.5
2. THIS DRAWING PROVIDES INFORMATION TO PLACE ADDITIONAL SEISMIC GUIDE/SUPPORT STRUCTURE INSIDE OF HLW VESSEL RLD-VSL-00008 FOR ADDED INTERNAL STRUCTURAL SUPPORT.
3. WELDING AND NDE SHALL BE IN ACCORDANCE WITH VESSEL SPECIFICATION 24590-WTP-3PS-MV00-T0001.
4. CONTENTS OF THIS DOCUMENT ARE DANGEROUS WASTE PERMIT AFFECTING.
5. GUIDE RINGS ARE BORED TO MAINTAIN 1/16" (.063") MAXIMUM GAP ON A SIDE FOR 1/8" (.125") MAXIMUM DIAMETRAL CLEARANCE WITH PIPE.
6. CENTER SUPPORT RING MAY BE FABRICATED IN AS MANY SECTIONS AS NEEDED.
7. MATERIALS ARE PER THE FOLLOWING MECHANICAL SYSTEMS DATA SHEET: 24590-HLW-MVD-RLD-00007, AND ADDITIONALLY, BAR STOCK IS PER SA 479 TYPE 316 (.03% CARBON MAX).

REFERENCE DRAWINGS

DWG NO	TITLE
24590-HLW-MV-RLD-00004	EQUIPMENT ASSEMBLY PLANT WASH & DRAINS VESSEL RLD-VSL-00008
24590-HLW-MV-RLD-00020	RLD-VSL-00008 LOW SIDE WALL MTD SEISMIC GUIDE/SPRTS, 5'-4" ABOVE TAN LINE OF BOT HEAD
24590-HLW-MV-RLD-00021	RLD-VSL-00008 UPPER GUIDE/SUPPORT 8'-3" ABOVE TAN LINE OF BOTTOM HEAD
24590-HLW-MV-RLD-00022	RLD-VSL-00008 UP SIDE WALL MTD SEISMIC GUIDE/SPRTS, 7'-4" ABOVE TAN LINE OF BOT HEAD
24590-HLW-MV-RLD-00024	RLD-VSL-00008 MID-SPAN SEISMIC GUIDE/SPRT 4'-10" ABOVE TAN LINE OF BOT HEAD

REVISION HISTORY

REV	DESCRIPTION	ORG	CHKD	RVWD	APPD	DATE
0	ISSUED FOR PURCHASE	AJP	BRD	RP	MM	11/17/09

Q

ISSUED BY RPP-WTP PDC

PROJECT No.	24590	
SITE	HANFORD	
AREA	200E	
BUILDING No.	30	
	BY	DATE
ORIGINATOR	A.J. Pilgrim Jr.	9-8-2009
CHECKER	[illegible]	9-9-2009
APPROVER	[illegible]	9/17/09
REVIEWER	[illegible]	9/9/09
CONTENT APPLICABLE TO ALARA?	YES NO	
ACR NO. 24590-WTP-ACR-M-03-008	REV: 2	
SAFETY SCREEN REQUIRED	YES NO	E&NS INITIAL IF YES

THIRD ANGLE PROJECTION

TOLERANCES	
.00	± 50"
FRACTION	± 1/16"
ANGLE	± 5°

RIVER PROTECTION PROJECT
WASTE TREATMENT PLANT
2435 STEVENS CENTER PLACE
RICHLAND, WA 99354

CONTRACT No: DE-AC27-01RV14136

RLD-VSL-00008
LOWER SEISMIC GUIDE/SUPPORT
0'-6" ABOVE TANGENT LINE OF BOTTOM HEAD

SCALE: NONE

24590-HLW-MV-RLD-00019

REV 0

E SIZE : 44x34

COMPUTER GENERATED - MANUAL DESIGN CHANGES NOT PERMITTED

WHEN REFERENCING DRAWING AND DM NUMBERS IN DOCUMENTS, BE SURE TO INCLUDE DASHES BETWEEN ELEMENTS

03/04/2003 7:23 AM

FORM E_MASTER 03/2003

R11121795

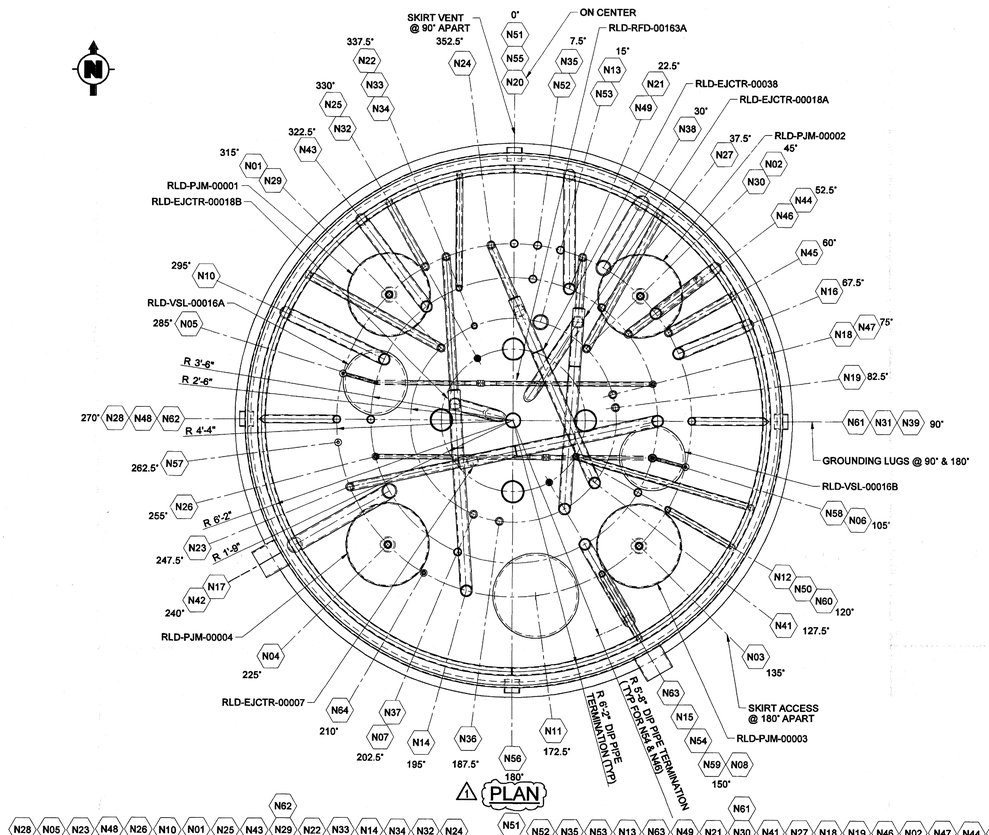

1 PLAN

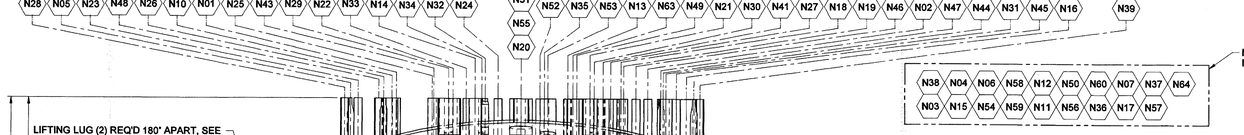

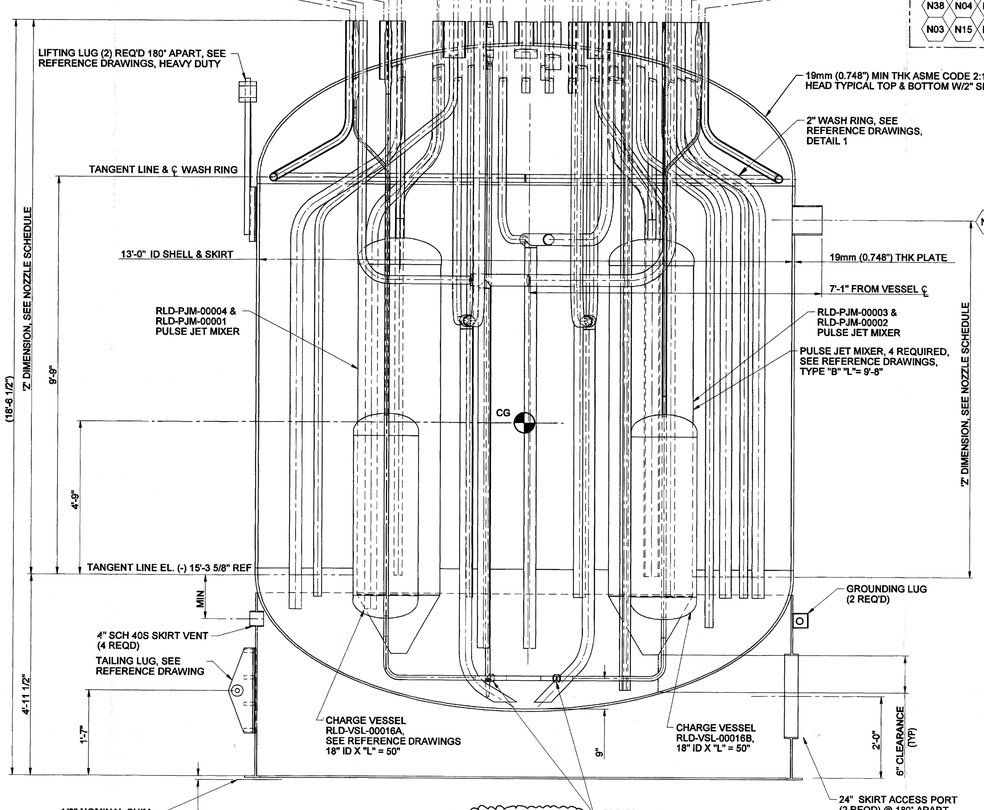

1 ELEVATION

FOR TRUE ORIENTATION SEE PLAN VIEW

GENERAL NOTES:

1. ALL ANCHOR BOLT HOLES SHALL STRADDLE NORMAL VESSEL CENTER LINE.
2. ALL 'Z' DIMENSIONS MEASURED FROM BOTTOM TANGENT LINE UNLESS OTHERWISE NOTED. FOR SHELL NOZZLE 'Z' DIMENSIONS MEASURED FROM CENTER LINE OF NOZZLE FACE.
3. FOR DISTANCE OF DIP PIPES (LEGS) TO BOTTOM HEAD USE 2" CLEARANCE, UNLESS OTHERWISE SPECIFIED.
4. ALL VESSEL THICKNESSES, SCHEDULE/WALL THICKNESS SHOWN ON NOZZLE TABLE ARE MINIMUM, SELLER TO CONFIRM THE ACTUAL SCHEDULE/WALL THICKNESS TO BE USED FOR NOZZLE CONNECTION.
5. SELLER TO PROVIDE NECESSARY SUPPORT/GUIDE FOR INTERNAL PIPING, CHARGE VESSELS, PULSE JET MIXERS.
6. RFD PUMPS AND EJECTORS SHALL BE PROVIDED BY BUYER FOR SELLER TO INSTALL, ALL OTHER INTERNALS SHALL BE DESIGNED, PROVIDED AND INSTALLED BY SELLER.
7. FOR NOZZLE N18 & N19, END OF DIP TUBE ROUTED TOWARD THE SUCTION AREA OF THE EJECTOR RLD-EJCTR-00018A & RLD-EJCTR-00018B.
8. SELLER SHALL PROVIDE 8 SHIM PACKS COMPRISING OF THE FOLLOWING 10" SQUARE STAINLESS STEEL PLATES:
   2 PCS-1/4" THICK PLATES
   1 PCS-1/8" THICK PLATES
   2 PCS-1/16" THICK PLATES
9. SELLER TO FURNISH 10 PIPE DIAMETERS OF STRAIGHT RUN PIPE ON THE DISCHARGE LINE OF THE EJECTOR BEFORE MAKING ANY BENDS.
10. FOR BASE SUPPORT AND ANCHORAGE REQUIREMENTS, SEE REFERENCE DRAWING 24590-HLW-DD-S13T-00002007.
11. FOR TEMPERATURE NOZZLE (N32 & N63), THE DISTANCE OF DIP PIPE (LEGS) TO BOTTOM HEAD USED 9" CLEARANCE.
12. NOZZLE MATERIAL FOR N08 SHALL BE UNS N08367.
13. NOZZLE N14, N15, N21, N22, N23, N24, N31 & N41 SHALL BE SB-622 N06022 MATERIAL.
14. REVISED:
    a) NOZZLE TABLE BASED ON P & ID REVISION.
    b) REFERENCE DRAWINGS REVISION.
    c) ADDED/REVISED 60° OFFSET DIP PIPES TO NOZZLES N10, N12, N16, N17, N25, N29, N30, N33, N38, N43, N44, N45, N46, N49, N54, N59 & N60.
    d) REVISED THE MATERIAL FOR EJECTOR PIPING AND NOZZLES AS SHOWN TO SB-622 N06022.
    e) ADD DETAIL FOR NOZZLE N21, N22, N23 & N24.

HOLDS

1. FINAL NOZZLE LOCATIONS, SIZE AND 'Z' DIMENSIONS PENDING CONFIRMATION BY PLANT DESIGN.
2. LOCATION FOR NAMEPLATE & BRACKET, ANCHOR BOLT CHAIR BASE PLATE DETAILS, SKIRT VENT AND SKIRT OPENING PENDING PIPING LOCATION BY PLANT DESIGN.
3. LOCATION FOR LIFTING LUGS & TAILING LUG PENDING REVIEW BY CONSTRUCTION.
4. INTERNALS PENDING CONFIRMATION BY FLUIDIC GROUP.

NOZZLE	SIZE	SCH/WALL	SERVICE/REMARKS	"Z" DIM	REF DWG/DET	CONN PIPE SIZE/SCHED
N 01	2"	160S	AIR/VACUUM TO RLD-PJM-00001	13' 7"	24590-WTP-MV-M59T-00016001 DET 3	2"-40S
N 02	2"	160S	AIR/VACUUM TO RLD-PJM-00002	13' 7"	24590-WTP-MV-M59T-00016001 DET 3	2"-40S
N 03	2"	160S	AIR/VACUUM TO RLD-PJM-00003	13' 7"	24590-WTP-MV-M59T-00016001 DET 3	2"-40S
N 04	2"	160S	AIR/VACUUM TO RLD-PJM-00004	13' 7"	24590-WTP-MV-M59T-00016001 DET 3	2"-40S
N 05	2"OD x 1/2"	SEE DETAIL	AIR/VACUUM TO RLD-VSL-00016A	13' 7"	24590-WTP-MV-M59T-00016001 DET 7	1/2"-40S
N 06	2"OD x 1/2"	SEE DETAIL	AIR/VACUUM TO RLD-VSL-00016B	13' 7"	24590-WTP-MV-M59T-00016001 DET 7	1/2"-40S
N 07	2"	80S	INLET FROM HSH-SUMP-00006	13' 7"	24590-WTP-MV-M59T-00016001 DET 2	2"-40S
N 08	8"	80S	INLET FROM RLD-VSL-00007 (NOTE 12)	8' 11"	24590-WTP-MV-M59T-00016001 DET 1	8"-10S
N 09			DELETED			
N 10	3"	80S	INLET	13' 7"	24590-WTP-MV-M59T-00016001 DET 4	3"-40S
N 11	24"	PLATE	MANWAY	12'-11"	24590-WTP-MV-M59T-00017 DET 1	CAPPED
N 12	1 1/2"	160S	OUTLET FROM RLD-EJCTR-00178	13' 7"	24590-WTP-MV-M59T-00016001 DET 4	1 1/2"-40S
N 13	2"	80S	SPARE	13' 7"	24590-WTP-MV-M59T-00016001 DET 2	CAPPED
N 14	3"	80S	OUTLET FROM RLD-EJCTR-00018B	13' 7"	24590-WTP-MV-M59T-00016001 DET 3	3"-80S
N 15	3"	80S	OUTLET FROM RLD-EJCTR-00018A	13' 7"	24590-WTP-MV-M59T-00016001 DET 3	3"-80S
N 16	3"	80S	INLET	13' 7"	24590-WTP-MV-M59T-00016001 DET 4	3"-40S
N 17	4"	80S	INLET	13' 7"	24590-WTP-MV-M59T-00016001 DET 4	4"-40S
N 18	2"	160S	INLET WASH LINES (DIP LEG)	13' 7"	24590-WTP-MV-M59T-00016001 DET 4	2"-40S
N 19	2"	160S	INLET WASH LINES (DIP LEG)	13' 7"	24590-WTP-MV-M59T-00016001 DET 4	2"-40S
N 20	4"	80S	VENT (SPARE)	13' 7"	24590-WTP-MV-M59T-00016001 DET 1	CAPPED
N 21	2"	160S	STEAM TO RLD-EJCTR-00018A	13' 7"	24590-WTP-MV-M59T-00016001 DET 3	2"-40S
N 22	2"	160S	STEAM TO RLD-EJCTR-00018B	13' 7"	24590-WTP-MV-M59T-00016001 DET 3	2"-40S
N 23	2"	160S	STEAM TO RLD-EJCTR-00007	13' 7"	24590-WTP-MV-M59T-00016001 DET 3	2"-40S
N 24	2"	160S	STEAM TO RLD-EJCTR-00038	13' 7"	24590-WTP-MV-M59T-00016001 DET 3	2"-40S
N 25	2"	160S	INLET FROM DRUM TRANSFER TUNNEL SUMPS	13' 7"	24590-WTP-MV-M59T-00016001 DET 4	2"-40S
N 26	2"OD x 1"	SEE DETAIL	OUTLET TO AUTOSAMPLER	13' 7"	24590-WTP-MV-M59T-00016001 DET 7	1"-40S
N 27	2"	80S	AUTOSAMPLER RETURN	13' 7"	24590-WTP-MV-M59T-00016001 DET 2	2"-40S
N 28	2"	160S	INLET WASH RING	13' 7"	24590-WTP-MV-M59T-00016001 DET 3	2"-40S
N 29	2"	160S	SPARE DIP LEG	13' 7"	24590-WTP-MV-M59T-00016001 DET 4	2"-40S
N 30	2"	160S	SPARE DIP LEG	13' 7"	24590-WTP-MV-M59T-00016001 DET 4	2"-40S
N 31	3"	80S	OUTLET FROM RLD-EJCTR-00007	13' 7"	24590-WTP-MV-M59T-00016001 DET 3	3"-40S
N 32	2"OD	SEE DETAIL	TEMPERATURE	13' 7"	24590-WTP-MV-M59T-00007 ASSY 1 DET 5	1"-40S
N 33	1 1/2"	160S	FROM HFP-SUMP-00002	13' 7"	24590-WTP-MV-M59T-00016001 DET 4	1 1/2"-40S
N 34	1 1/2"	160S	FROM HSH-SUMP-00003	13' 7"	24590-WTP-MV-M59T-00016001 DET 4	1 1/2"-40S
N 35	2"	80S	CRANE MAINTENANCE SUMP	13' 7"	24590-WTP-MV-M59T-00016001 DET 2	2"-40S
N 36	2"	80S	RLD-WBOX-00077	13' 7"	24590-WTP-MV-M59T-00016001 DET 2	2"80S
N 37	2"	80S	RLD-WBOX-00077	13' 7"	24590-WTP-MV-M59T-00016001 DET 2	2"80S
N 38	4"	80S	HFP-SUMP-00001	13' 7"	24590-WTP-MV-M59T-00016001 DET 4	4"-40S
N 39	2"	160S	INLET WASH RING	13' 7"	24590-WTP-MV-M59T-00016001 DET 3	2"-40S
N 40			DELETED			
N 41	3"	80S	OUTLET FROM RLD-EJCTR-00038	13' 7"	24590-WTP-MV-M59T-00016001 DET 3	3"-40S
N 42	8"	40S	OVERFLOW	8' 11"	24590-WTP-MV-M59T-00016001 DET 1	8"-10S
N 43	3"	80S	HEADER	13' 7"	24590-WTP-MV-M59T-00016001 DET 1	3"-40S
N 44	3"	80S	OVERFLOW FROM RLD-BRKPT-00004	13' 7"	24590-WTP-MV-M59T-00016001 DET 4	3"-40S
N 45	2"	160S	INLET	13' 7"	24590-WTP-MV-M59T-00016001 DET 4	2"-40S
N 46	2"	160S	INLET	13' 7"	24590-WTP-MV-M59T-00016001 DET 4	2"-40S
N 47	2"OD x 1"	SEE DETAIL	OUTLET TO AUTOSAMPLER	13' 7"	24590-WTP-MV-M59T-00016001 DET 7	1"-40S
N 48	2"	80S	AUTOSAMPLER RETURN	13' 7"	24590-WTP-MV-M59T-00016001 DET 2	2"-40S
N 49	3"	80S	INLET	13' 7"	24590-WTP-MV-M59T-00016001 DET 4	3"-40S
N 50	2"	80S	INLET FROM HFP-EJCTR-00001	13' 7"	24590-WTP-MV-M59T-00016001 DET 2	2"-80S
N 51	2"	80S	INLET FROM HFP-EJCTR-00002	13' 7"	24590-WTP-MV-M59T-00016001 DET 2	2"-80S
N 52	2"	80S	INLET FROM PCW-VSL-00007	13' 7"	24590-WTP-MV-M59T-00016001 DET 2	2"-40S
N 53	4"	80S	DRAIN HEADER	13' 7"	24590-WTP-MV-M59T-00016001 DET 2	4"-40S
N 54	3"	80S	INLET	13' 7"	24590-WTP-MV-M59T-00016001 DET 4	3"-40S
N 55	6"	40S	RADAR LEVEL INSTRUMENT	13' 7"	24590-WTP-MV-M59T-00016003 DET 24	1-1/2"-40S
N 56	6"	40S	RADAR LEVEL INSTRUMENT	13' 7"	24590-WTP-MV-M59T-00016003 DET 24	1-1/2"-40S
N 57	2"OD	SEE DETAIL	AIR INLET	13' 7"	24590-WTP-MV-M59T-00016001 DET 6	1/2"-40S
N 58	2"	80S	INLET FROM NLD-TK-00006	13' 7"	24590-WTP-MV-M59T-00016001 DET 2	2"-40S
N 59	1 1/2"	160S	INLET FROM RLD-EJCTR-00052A	13' 7"	24590-WTP-MV-M59T-00016001 DET 4	1 1/2"-40S
N 60	1 1/2"	160S	INLET FROM RLD-EJCTR-00052B	13' 7"	24590-WTP-MV-M59T-00016001 DET 4	1 1/2"-40S
N61	6"	40S	RADAR LEVEL INSTRUMENT	13' 7"	24590-WTP-MV-M59T-00016003 DET 24	1-1/2"-40S
N62	6"	40S	SPARE RADAR LEVEL INSTRUMENT	13' 7"	24590-WTP-MV-M59T-00016003 DET 24	1-1/2"-40S
N63	2"OD x 1"	SEE DETAIL	TEMPERATURE (SPARE)	13' 7"	24590-WTP-MV-M59T-00007 ASSY 1 DET 5	1"-40S
N64	2"OD	SEE DETAIL	PRESSURE	13' 7"	24590-WTP-MV-M59T-00016001 DET 5	1/2"-40S

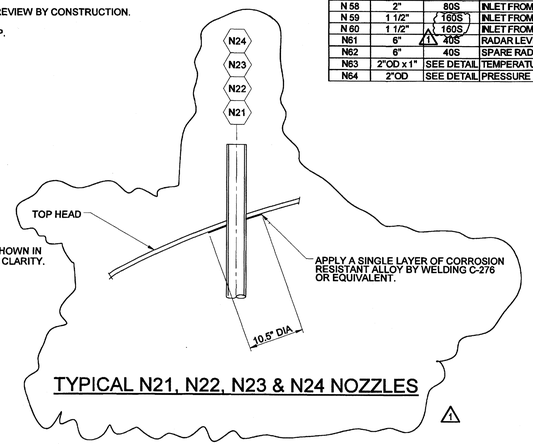

TYPICAL N21, N22, N23 & N24 NOZZLES

VESSEL COMPONENT QUALITY LEVELS	
COMPONENTS	QUALITY LEVEL
MAIN VESSEL AND NOZZLES	QL-1
SKIRT	QL-1
PULSE JET MIXERS AND ASSOCIATED PIPING	QL-1
CHARGE VESSEL AND ASSOCIATED PIPING	QL-1
EJECTORS & WASH RING ASSOCIATED PIPING	QL-2
RFD'S AND ASSOCIATED PIPING	QL-1
EJECTORS (BY OTHERS)	CM

THIS DRAWING TO BE READ IN CONJUNCTION WITH THE MECHANICAL DATA SHEET NO 24590-HLW-MVD-RLD-00007

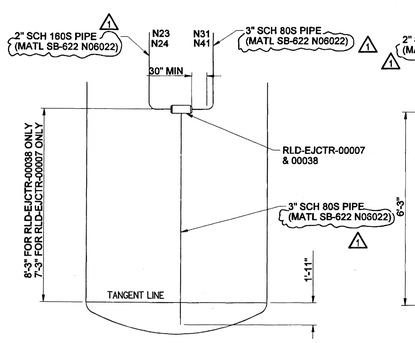

N24/N41 (RLD-EJCTR-00038)
N23/N31(RLD-EJCTR-00007)

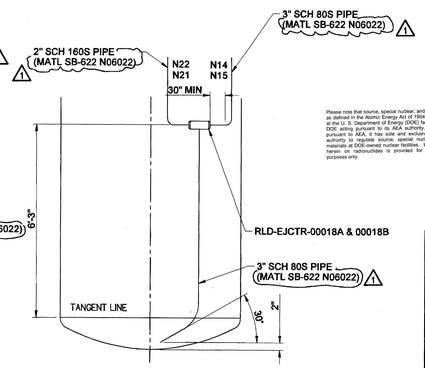

N21/N15 (RLD-EJCTR-00018A)
N22/N14(RLD-EJCTR-00018B)

REFERENCE DRAWINGS		
DWG NO	REV	TITLE
24590-HLW-M6-RLD-00002	1	P & ID
24590-HLW-M6-RLD-00007	1	P & ID
24590-WTP-MV-M59T-00001	3	PRESSURE VESSEL TOLERANCES STANDARD DETAILS
24590-WTP-MV-M59T-00004	1	PULSE JET MIXERS STANDARD DETAILS
24590-WTP-MV-M59T-00007	3	THERMOWELL CONNECTION STANDARD DETAILS
24590-WTP-MV-M59T-00009	2	LIFTING LUG STANDARD DETAILS
24590-WTP-MV-M59T-00010	2	TAILING LUG STANDARD DETAILS
24590-WTP-MV-M59T-00011	2	WASH RINGS STANDARD DETAILS
24590-WTP-MV-M59T-00012	1	GROUNDING LUG STANDARD DETAILS
24590-WTP-MV-M59T-00013	1	CHARGE VESSEL STANDARD DETAILS
24590-WTP-MV-M59T-00014	1	RFD PUMPS DETAIL
24590-WTP-MV-M59T-00016001	3	VESSEL CONNECTIONS STANDARD DETAILS SHT 1 OF 3
24590-WTP-MV-M59T-00016002	2	VESSEL CONNECTIONS STANDARD DETAILS SHT 2 OF 3
24590-WTP-MV-M59T-00016003	1	VESSEL CONNECTIONS STANDARD DETAILS SHT 3 OF 3
24590-WTP-MV-M59T-00017	1	VESSEL INSPECTION MANWAY STANDARD DETAILS
24590-WTP-MV-M59T-00018	2	VESSEL NAME PLATE STANDARD DETAILS
24590-HLW-DD-S13T-00002007	4	HLW VITRIFICATION BLDG CONCRETE EQUIP SUPPORT DET EL (-) 21'-0"
24590-WTP-PW-P30T-00001	0	WTP END PREP DETAIL FOR FIELD BUTT WELDS

Please note that source, special nuclear, and byproduct materials, as defined in the Atomic Energy Act of 1954 (AEA) are regulated at the U. S. Department of Energy (DOE) facilities exclusively by DOE acting pursuant to its AEA authority. DOE asserts that such AEA materials are not subject to regulation by others pursuant to regulatory source, special nuclear, and byproduct materials at DOE-owned nuclear facilities. Information contained herein on radionuclides is provided for process description purposes only.

REV	DESCRIPTION	ORG	CHKD	RVWD	APVD	DATE
1	REVISED AS NOTED, SEE NOTE 14					6/3/04
0	REVISED AS NOTED, SEE NOTE 13 & ISSUED FOR PURCHASE	RR/SL	CS	MW	MH	09/03/03

Q REVISION HISTORY

PROJECT No.	24590	
SITE	HANFORD	
AREA	200E	
BUILDING No.	30	
BY		DATE
ORIGINATOR	R. RAVULA / S. LEE	09/02/03
CHECKER	C. SLATER	09/02/03
APPROVER	M. HOFFMANN	09/03/03
REVIEWER	M. WRIGHT	09/03/03

ISSUED BY BECHTEL NATIONAL, INC. DATE ISSUE STAMP

CONTENT APPLICABLE TO ALARA? [X] YES [ ] NO
ADR NO. 24590-HLW-ADR-M-02-016 REV: 0

RIVER PROTECTION PROJECT
WASTE TREATMENT PLANT
2435 STEVENS CENTER PLACE
RICHLAND, WA 99352

CONTRACT No: DE-AC27-01RV14136

EQUIPMENT ASSEMBLY PLANT WASH & DRAINS VESSEL RLD-VSL-00008

SCALE: NONE

24590-HLW-MV-RLD-00004 REV 1

"E" SIZE - 44x34
COMPUTER GENERATED BY SOLID EDGE- MANUAL CHANGES NOT PERMITTED

WHEN REFERENCING DRAWING AND DIM NUMBERS IN DOCUMENTS, BE SURE TO INCLUDE DASHES BETWEEN ELEMENTS

06/03/2004 12:48:22 PM

R1031808

FORM E_MASTER 03/2003

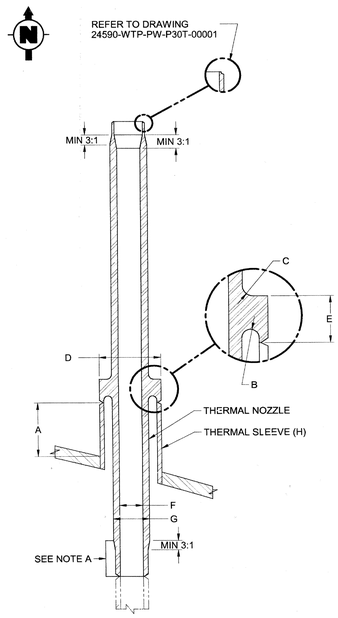

DETAIL T
FROM 24590-HLW-MV-RLD-00025001

THERMAL NOZZLE AND SLEEVE

DIMENSION		1 - 1/2"	2"	3"
A	SLEEVE	6" MINIMUM	6" MINIMUM	6" MINIMUM
B	NOZZLE	0.419" R	0.285" R	0.503" R
C	NOZZLE	0.375" R	0.375" R	0.375" R
D	NOZZLE	4.500"	4.500"	6.625"
E	NOZZLE	1.75"	1.75"	1.75"
F	NOZZLE	1.338"	1.687"	2.900"
G	NOZZLE	2.150"	2.687"	3.750"
H	SLEEVE	4" - 80S	4" - 80S	6" - 80S
EXTERNAL VESSEL PIPE CONNECTION		REFER TO NOZZLE SCHEDULE		
INTERNAL PIPE CONNECTION	1-1/2" - 40S	N48		
	2" - 160S		N11, N12, N15, N16, N27, N28, N32, N34, N33 & N35,	
	3" - 80S		N13, N31, N38, & N39 NOTE A	N10, N54

NOTE A: THE THERMAL NOZZLE IS MACHINED TO ACCOMODATE THE 3" TO 2" TRANSITION.

NOTE B: FOR UNDIPPED THERMAL NOZZLES N11, N12, N15 & N16 SEE TYPICAL UNDIPPED NOZZLE DETAIL.

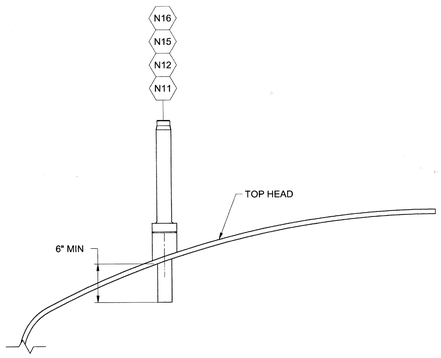

TYPICAL UNDIPPED NOZZLE DETAIL
N11, N12, N15 & N16

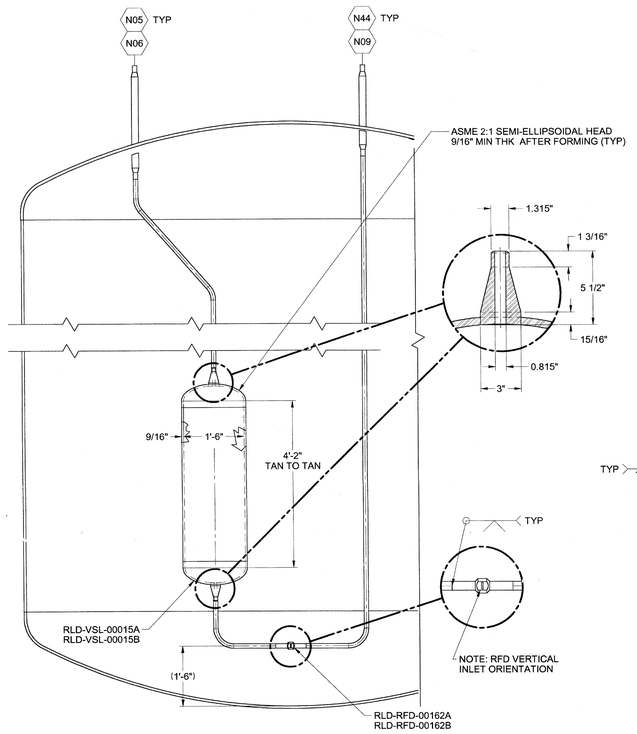

CHARGE VESSEL & RFD ASSEMBLY

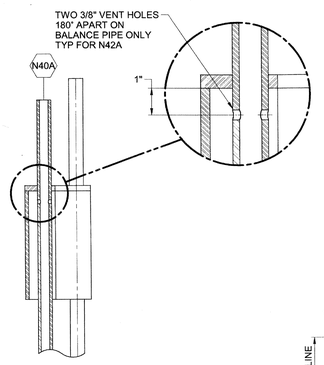

SECTION V-V

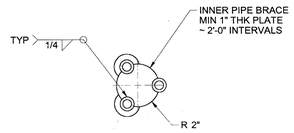

SECTION W-W

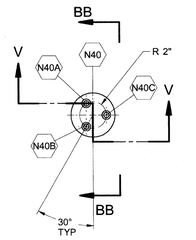

DETAIL U
FROM 24590-HLW-MV-RLD-00025001

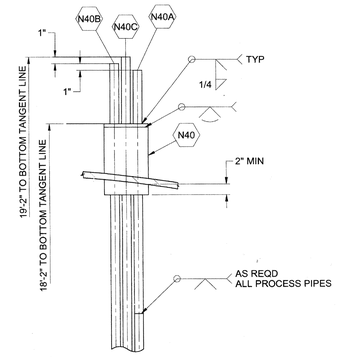

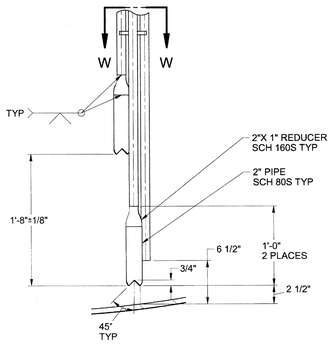

VIEW BB-BB
TYP FOR NOZZLE N42

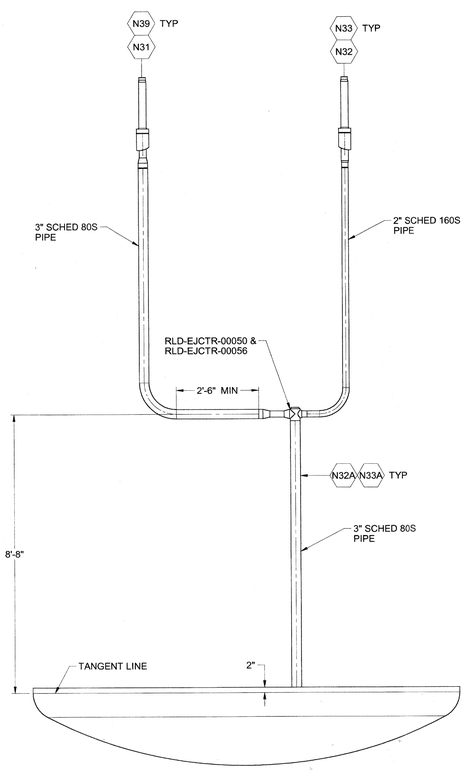

N33/N39 RLD-EJCTR-00050
N32/N31 RLD-EJCTR-00056

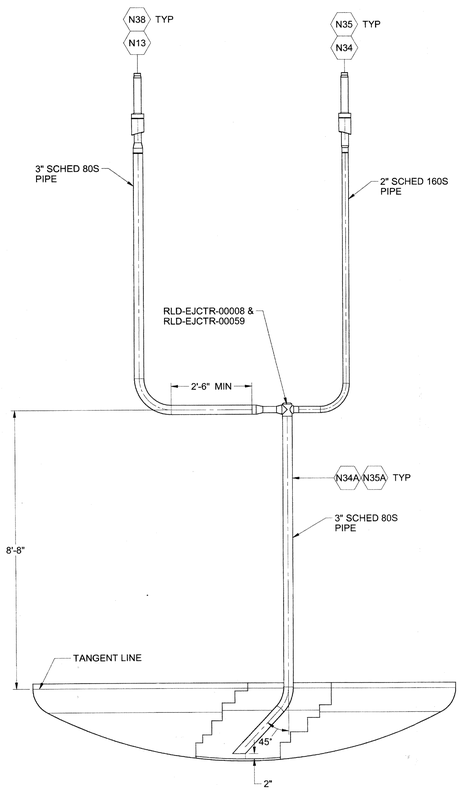

N34/N13 RLD-EJCTR-00008
N35/N38 RLD-EJCTR-00059

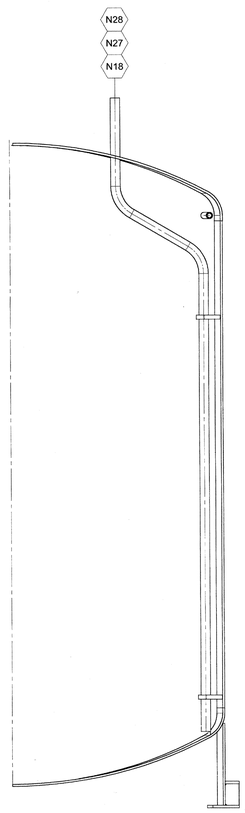

TYPICAL OFFSET NOZZLE DETAIL
N18, N27 & N28

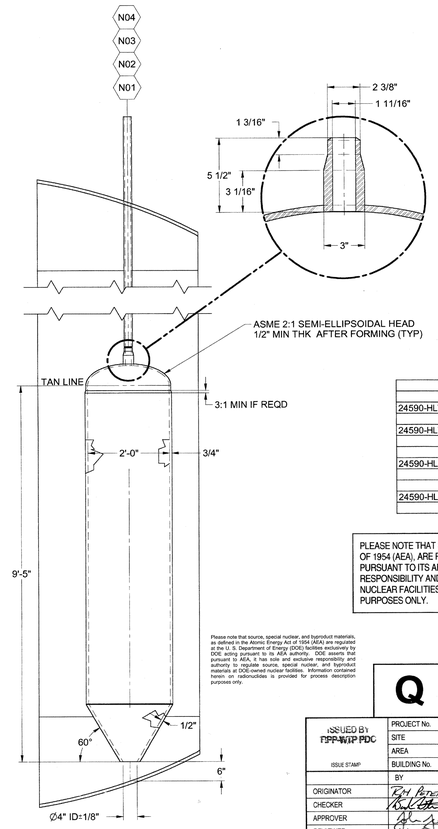

PULSE JET MIXER ASSEMBLY

DRAWING INDEX	
DWG NO	TITLE
24590-HLW-MV-RLD-00025001	EQUIPMENT ASSEMBLY ACIDIC WASTE VESSEL RLD-VSL-00007
24590-HLW-MV-RLD-00025002	EQUIPMENT ASSEMBLY ACIDIC WASTE VESSEL RLD-VSL-00007
	SECTIONS AND DETAILS
24590-HLW-MV-RLD-00025003	EQUIPMENT ASSEMBLY ACIDIC WASTE VESSEL RLD-VSL-00007
	SECTIONS AND DETAILS
24590-HLW-MV-RLD-00025004	EQUIPMENT ASSEMBLY ACIDIC WASTE VESSEL RLD-VSL-00007
	SECTIONS AND DETAILS

PLEASE NOTE THAT SOURCE, SPECIAL NUCLEAR AND BYPRODUCT MATERIALS, AS DEFINED IN THE ATOMIC ENERGY ACT OF 1954 (AEA), ARE REGULATED AT THE U.S. DEPARTMENT OF ENERGY (DOE) FACILITIES EXCLUSIVELY BY DOE ACTING PURSUANT TO ITS AEA AUTHORITY. DOE ASSERTS, THAT PURSUANT TO THE AEA, IT HAS SOLE AND EXCLUSIVE RESPONSIBILITY AND AUTHORITY TO REGULATE SOURCE, SPECIAL NUCLEAR, AND BYPRODUCT MATERIALS AT DOE-OWNED NUCLEAR FACILITIES. INFORMATION CONTAINED HERE IN ON RADIONUCLIDES IS PROVIDED FOR PROCESS DESCRIPTION PURPOSES ONLY.

Please note that source, special nuclear, and byproduct materials, as defined in the Atomic Energy Act of 1954 (AEA) are regulated at the U.S. Department of Energy (DOE) facilities exclusively by DOE acting pursuant to its AEA authority. DOE asserts that pursuant to AEA, it has sole and exclusive responsibility and authority to regulate source, special nuclear, and byproduct materials at DOE-owned nuclear facilities. Information contained herein on radionuclides is provided for process description purposes only.

Q

REV	DESCRIPTION	ORG	CHKD	RVWD	APVD	DATE
	RP 11/5/10					
0	ISSUED FOR PURCHASE, ~~SEE NOTE 9~~	RP				11/5/10

REVISION HISTORY

ISSUED BY: PTP-WTP PDC
ISSUE STAMP

PROJECT No.	24590	
SITE	HANFORD	
AREA	200E	
BUILDING No.	30	
	BY	DATE
ORIGINATOR	RP Pepas	11/5/10
CHECKER		5/4/10
APPROVER		11/5/10
REVIEWER		11/5/10

CONTENT APPLICABLE TO ALARA? [X] YES [ ] NO
ADR NO. 24590-WTP-ADR-M-03-008 REV. 2
E&NS SCREENING REQUIRED [X] YES [ ] NO E&NS INITIAL IF YES

RIVER PROTECTION PROJECT
WASTE TREATMENT PLANT
2435 STEVENS CENTER PLACE
RICHLAND, WA 99354

CONTRACT No: DE-AC27-01RV14136

EQUIPMENT ASSEMBLY
ACIDIC WASTE VESSEL
RLD-VSL-00007
SECTIONS AND DETAILS

SCALE: NONE
24590-HLW-MV-RLD-00025004
REV 0

SCREENING IS REQUIRED FOR DRAWING TYPES IDENTIFIED IN 24590-WTP-GPP-SREG-002

"E" SIZE - 44x34
COMPUTER GENERATED - MANUAL DESIGN CHANGES NOT PERMITTED

R11297463

FORM E_MASTER 03/2003