1221557

OFFICE OF RIVER PROTECTION
P.O. Box 450, MSIN H6-60
Richland, Washington 99352

SEP 1 1 2013

13-ECD-0073

RECEIVED
SEP 17 2013
EDMC

Ms. Jane A. Hedges, Program Manager
Nuclear Waste Program
Washington State
Department of Ecology
3100 Port of Benton Blvd.
Richland, Washington 99354

Ms. Hedges:

TRANSMITTAL OF CLASS 2 MODIFICATION TO THE HANFORD FACILITY RESOURCE CONSERVATION AND RECOVERY ACT (RCRA) PERMIT OPERATING UNIT GROUP 4, 242-A EVAPORATOR (TREATMENT, STORAGE, AND DISPOSAL UNIT: T-2-6) AND REQUEST FOR TEMPORARY AUTHORIZATION

The purpose of this letter is to transmit three Attachments in support of the U.S. Department of Energy, Office of River Protection's (ORP) request for a Class 2 permit modification and temporary authorization to complete readiness activities in order to support multiple Fiscal Year 2014 242-A Evaporator campaigns. A cold run is scheduled to commence the first quarter of Fiscal Year 2014. The 242-A Evaporator is located in the 200 East Area of the Hanford Site and is used for the storage and treatment of mixed waste.

Attachment 1 contains proposed Class 2 modifications to the Hanford Facility RCRA Permit for the 242-A Evaporator. Specifically, the Attachment is comprised of modification forms, a table of contents, and two revised permit chapters, in redline/strikeout format, as well as the same two revised permit chapters with all the proposed changes incorporated. Attachment 2 contains the information required when requesting a temporary authorization as identified in Washington Administrative Code (WAC) 173-303-830(4)(e)(ii)(B). Attachment 3 contains a certification statement signed by ORP as the owner and co-operator of the 242-A Evaporator and by Washington River Protection Solutions LLC (WRPS) as the co-operator of the 242-A Evaporator.

The modification request proposes to revise two chapters of the 242-A Evaporator Hanford Facility RCRA Permit by updating candidate feed tank sampling strategies in the Waste Analysis Plan and updating preparedness and prevention measures. A temporary authorization is necessary to prevent the disruption of ongoing dangerous waste management activities [WAC 173 303 830 (4)(e)(iii)(B)(III)].

If the Washington State Department of Ecology finds this temporary authorization request adequate, please respond by October 9, 2013, approving the temporary authorization. ORP requests that the temporary authorization be issued for the full 180-days.

If you have any questions, please contact either of us, or your staff may contact Lori A. Huffman, Director, ORP Environmental Compliance Division, (509) 376-0104, or Steven E. Killoy, Manager, Environmental Protection, WRPS, (509) 373-5075.

LA Olson

L. David Olson
President and Project Manager
Washington River Protection Solutions LLC

Stacy Charboneau for

Kevin W. Smith, Manager
Office of River Protection

ECD:MEB

Attachments: (3)

cc w/attachs:
J. J. Lyon, Ecology
A. Prignano, Ecology
K. Wold, Ecology
G. P. Bohnee, NPT
J. T. Hamilton, WRPS
S. E. Killoy, WRPS
A. G. Miskho, WRPS
R. E. Wilkinson, WRPS
R. Jim, YN
Administrative Record, H6-08 (242-A, TSD: T-2-6)
Environmental Portal, LMSI
WRPS Correspondence

Attachment 1
13-ECD-0073
(89 Pages)

Hanford Facility RCRA Permit Modification Notification Forms
Part III, Operating Unit 4
242-A Evaporator

Hanford Facility RCRA Permit Modification Notification Forms

Part III, Operating Unit 4

242-A Evaporator

Index

Page 2 of 4: Chapter 3 Justifications

Page 3 of 4: Chapter 3 Justifications

Page 4 of 4: Chapter 6 Justification

Submitted by Co-Operator:		Reviewed by ORP Program Office:	
	9/10/13		9/11/13
R.E. Wilkinson	Date	T.W. Fletcher	Date

Hanford Facility RCRA Permit Modification Notification Form

Unit:	Permit Part
Unit Name	**Part III, Operating Unit 4**

Description of Modification:

Chapter 3, Waste Analysis Plan

The following Class 2 permit modification justifications are as follows:

- A process is proposed to be added to Section 3.5 to address operational or maintenance waste or water additions to candidate feed tanks and the Evaporator feed tank after isolation. Operational and maintenance activities need to take place which can lead to additions to a candidate feed tank that already has been isolated and sampled. The process establishes an evaluation requirement to ensure that the waste acceptance criteria can still be met.
- The waste acceptance process will not involve estimating the concentration of critical analytes to determine the minimum number of feed tank samples needed for compliance. The concept of "critical analytes" was only used to estimate the number of samples that was required under the Environmental Protection Agency guidance (EPA, 2001, *Data Quality Objectives Decision Error Feasibility Trials*, EPA QA/G-4D, Version 4.0). This guidance is no longer being used because operating history showed that the number of required samples did not vary and a standard number of samples are being incorporated (see below).
- Ammonia emission limits will not be evaluated separately from other organics. Compliance with the air emission requirements within the permit, established pursuant to WAC 173-303-690 incorporating by reference 40 CFR 264 Subpart AA, does not require a specific ammonia emission limit.
- Four representative samples, from a single riser, will be taken from candidate feed tanks including one at the surface and three subsurface samples. Subsurface sampling depths will be based on professional judgment (e.g., depending on whether layering is suspected to exist). Table 3.3, "Candidate Feed Tank Sample Point Selection" provides sampling detail based on the presence or absence of layering. The new sampling approach was based on the operational history showing that estimating the number of samples was no longer necessary, as well as showing sampling from one riser was equivalent to sampling from two risers. Regarding the number of samples, historical pre sampling estimates determined 3 samples were necessary, where post sampling refinements through the 2001 EPA guidance resulted in only 2 samples. Therefore, in lieu of estimating sample numbers, four samples will be taken from each candidate feed tank. Regarding sampling of supernatant from one riser or two, one riser is adequately representative because lateral heterogeneity is not observed in tanks as convection currents keep the supernatant mixed laterally.

WAC 173-303-830 Modification Class [1] [2]	Class 1	Class '1	Class 2	Class 3
Please mark the Modification Class:			X	

Enter relevant WAC 173-303-830 WAC 173-303-830(4)(b), Class 2 Modifications.
WAC 173-303-830, Appendix I, B.1.d, Other changes to waste sampling and analysis methods.

Modification Approved: ☐ Yes ☐ No (state reason for denial)	Reviewed by Ecology:
Reason for denial:	S. L. Dahl-Crumpler Date

[1] Class 1 modifications requiring prior Agency approval.

[2] If the proposed modification does not match any modification listed in WAC 173-303-830 Appendix I, then the proposed modification should automatically be given a Class 3 status. This status may be maintained by the Department of Ecology, or down graded to a Class '1, if appropriate.

Hanford Facility RCRA Permit Modification Notification Form

Unit:	Permit Part
242A Evaporator	**Part III Operating Unit 4**

Description of Modification:

Chapter 3, Waste Analysis Plan (con't)

- A second statistical analysis to verify the number of samples necessary will no longer occur. With elimination of the 2001 EPA guidance, the second step in the old sampling number estimation process in no longer needed.
- Riser selection, for sampling purposes, will be determined using best professional judgment. The justification for this change is the same as what was described above for eliminating sampling from two risers.
- Clear sample bottles will be used in lieu of amber-colored sample bottles for surface samples to determine the existence of separable organics. This change will allow visual observation in the laboratory to determine layering.
- New test methods will be used for separable organics and ammonia. Separable organic determinations will use visual inspection, a percent water method, or a total carbon/total inorganic carbon method. Ammonia determinations will include an option to use an ion chromatography method
- Improved test methods will be used for total carbon and total inorganic carbon. The method numbers for coulometry that were awaiting approval have now been replaced with the approved method number.

WAC 173-303-830 Modification Class [1] [2]	Class 1	Class [1]1	Class 2	Class 3
Please mark the Modification Class:			X	

Enter relevant WAC 173-303-830: WAC 173-303-830(4)(b), Class 2 Modifications
WAC 173-303-830, Appendix I, B.1.d, Other changes to waste sampling and analysis methods

Modification Approved: ☐ Yes ☐ No (state reason for denial) Reason for denial:	Reviewed by Ecology:
	S. L. Dahl-Crumpler — Date

[1] Class 1 modifications requiring prior Agency approval.

[2] If the proposed modification does not match any modification listed in WAC 173-303-830 Appendix I, then the proposed modification should automatically be given a Class 3 status. This status may be maintained by the Department of Ecology, or down graded to a Class [1]1, if appropriate.

Hanford Facility RCRA Permit Modification Notification Form

Unit:	Permit Part
242A Evaporator	**Part III Operating Unit 4**

Description of Modification:

Chapter 6, Procedures to Prevent Hazards

A new section was added, Section 6.2.2.4, "Alternative Leak Detection during Electrical/Ventilation Outages." This section is needed because daily inspections cannot be performed when electrical/ventilation outages occur. The new section describes how a camera is used in the condenser room and how inspections will be suspended in the pump room, loadout and hot equipment storage room. The section also requires documentation to be maintained of the events.

WAC 173-303-830 Modification Class [1] [2]	Class 1	Class [1]1	Class 2	Class 3
Please mark the Modification Class:			X	

Enter relevant WAC 173-303-830: WAC 173-303-830(4)(b), Class 2 Modifications
WAC 173-303-830(4)(d), Other modifications. Class 3 modification requesting downgrade to Class 2.

Modification Approved: ☐ Yes ☐ No (state reason for denial) Reason for denial:	Reviewed by Ecology:
	S. L. Dahl-Crumpler Date

[1] Class 1 modifications requiring prior Agency approval.

[2] If the proposed modification does not match any modification listed in WAC 173-303-830 Appendix I, then the proposed modification should automatically be given a Class 3 status. This status may be maintained by the Department of Ecology, or down graded to a Class [1]1, if appropriate.

Remove and Replace the Following Sections:

Remove Chapter 3, Waste Analysis Plan, dated September 30, 2007, and replace it with the Chapter approved from the Class 2 Permit Modification Process.

Remove Chapter 6, Procedures to Prevent Hazards dated June 30, 2010, and replace it with the Chapter approved from the Class 2 Permit Modification Process.

3.0 WASTE ANALYSIS PLAN 3.1
3.1 INTRODUCTION 3.1
3.2 PURPOSE 3.1
3.3 SCOPE 3.1
3.4 242-A EVAPORATOR PROCESS DESCRIPTION 3.2
3.5 WASTE IDENTIFICATION 3.2
3.5.1 General Constituent Description 3.3
3.5.2 Classification of Waste 3.5
3.5.3 Dangerous Waste Numbers 3.5
3.6 WASTE ACCEPTANCE PROCESS ..... 3.6~~3.6~~
3.7 CANDIDATE FEED TANK WASTE ACCEPTANCE PROCESS 3.6
3.7.1 Selecting Candidate Feed Tanks 3.7
3.7.2 Candidate Feed Tank Sampling 3.7
3.7.3 Assessing Candidate Feed Tank Sampling and Analysis Results 3.8
3.8 SAMPLING PROCESS FOR DANGEROUS WASTES GENERATED FROM TREATMENT 3.9
3.8.1 Determining the Number of Process Condensate Samples 3.9
3.8.2 Assessing Process Condensate Sampling and Analysis Results 3.10
3.9 242-A EVAPORATOR WASTE ACCEPTANCE CRITERIA ..... 3.10~~3.9~~
3.9.1 Candidate Feed Tank Waste Acceptance Criteria 3.13
3.9.1.1 Exothermic Reactions 3.14
3.9.1.2 Compatibility 3.14
3.9.1.3 Separable Organics 3.14
3.9.1.4 Organic Constituents 3.14
3.9.2 Process Condensate Waste Acceptance Criteria 3.15
3.10 SAMPLE COLLECTION AND ANALYSIS 3.18
3.10.1 Sample Collection 3.18
3.10.1.1 Candidate Feed Tank Sample Collection 3.18
3.10.1.2 Candidate Feed Tank Sampling Quality Assurance and Quality Control 3.18
3.10.1.3 Deviations from Specified Sampling Practices 3.19
3.10.1.4 Process Condensate Sample Collection 3.20
3.10.1.5 Process Condensate Sampling Quality Assurance and Quality Control 3.20
3.10.2 Analyte Selection and Rationale 3.20
3.11 ANALYTICAL METHODS AND QUALITY ASSURANCE AND QUALITY CONTROL 3.22
3.11.1 Laboratory Selection 3.22
3.11.2 Analytical Methods 3.22
3.11.3 Laboratory Quality Assurance and Quality Control 3.22
3.12 REFERENCES 3.25
~~3.0 WASTE ANALYSIS PLAN ..... 3.1~~
~~3.1 INTRODUCTION ..... 3.1~~
~~3.2 PURPOSE ..... 3.1~~
~~3.3 SCOPE ..... 3.1~~
~~3.4 242-A EVAPORATOR PROCESS DESCRIPTION ..... 3.2~~

~~3.5 WASTE IDENTIFICATION ..... 3.2~~
~~3.5.1 General Constituent Description ..... 3.2~~
~~3.5.2 Classification of Waste ..... 3.4~~
~~3.5.3 Dangerous Waste Numbers ..... 3.4~~

~~3.6 WASTE ACCEPTANCE PROCESS ..... 3.4~~
~~3.6.1 Candidate Feed Waste Acceptance Process ..... 3.4~~
~~3.6.1.1 Selecting Candidate Feed Tanks ..... 3.5~~
~~3.6.1.2 Determining the Number of Candidate Feed Tank Samples ..... 3.5~~
~~3.6.1.3 Assessing Candidate Feed Tank Analysis ..... 3.6~~
~~3.6.2 Process Condensate Waste Sampling Process ..... 3.6~~
~~3.6.2.1 Determining the Number of Process Condensate Samples ..... 3.6~~
~~3.6.2.2 Assessing Process Condensate Analysis ..... 3.7~~

~~3.7 242-A EVAPORATOR ACCEPTANCE CRITERIA ..... 3.7~~
~~3.7.1 Candidate Feed Tank Waste Acceptance Criteria ..... 3.9~~
~~3.7.1 Candidate Feed Tank Waste Acceptance Criteria ..... 3.10~~
~~3.7.1.1 Exothermic Reactions ..... 3.10~~
~~3.7.1.2 Compatibility ..... 3.10~~
~~3.7.2 Process Condensate Acceptance Criteria ..... 3.11~~

~~3.8 SAMPLE COLLECTION AND ANALYSIS ..... 3.13~~
~~3.8.1 Sample Collection ..... 3.13~~
~~3.8.1.1 Candidate Feed Tank Sample Collection ..... 3.13~~
~~3.8.1.2 Candidate Feed Tank Sampling Quality Assurance and Quality Control ..... 3.13~~
~~3.8.1.3 Deviations from Specified Sampling Practices ..... 3.14~~
~~3.8.1.4 Process Condensate Sample Collection ..... 3.15~~
~~3.8.1.5 Process Condensate Sampling Quality Assurance and Quality Control ..... 3.15~~
~~3.8.2 Analyte Selection and Rationale ..... 3.15~~

~~3.9 ANALYTICAL METHODS AND QUALITY ASSURANCE AND QUALITY CONTROL 3.16~~
~~3.9.1 Laboratory Selection ..... 3.16~~
~~3.9.2 Analytical Methods ..... 3.16~~
~~3.9.3 Laboratory Quality Assurance and Quality Control ..... 3.17~~

~~3.10 REFERENCES ..... 3.19~~

Figures

Figure 3.1. 242-A Evaporator Simplified Schematic ..... 3.4~~3.3~~
Figure 3.2. Evaporator Waste Acceptance Process~~Strategy for Determining the Number of Candidate Feed Tank Samples~~. ..... 3.11~~3.8~~
~~Figure 3.3. Strategy for Verifying the Number of Candidate Feed Tank Samples~~. ..... 3.13~~3.9~~

Tables

Table 3.1. Waste Designation for Process Condensate. ..... 3.5~~3.4~~
Table 3.2. Candidate Feed Tank Limits for Vessel Vent Organic Discharge. ..... 3.16~~3.11~~
~~Table 3.3. Candidate Feed Tank Limits for LERF Liner Compatibility~~ [f] ..... 3.17~~3.12~~
Table 3.3~~4~~. Candidate Feed Tank Sample Point Selection. ..... 3.21~~3.16~~
Table 3.4~~5~~. Analytes for Candidate Feed Tanks ..... 3.21~~3.16~~
Table 3.5~~6~~. Analytical Methods for Candidate Feed Tank Stream Analytes. ..... 3.22~~3.17~~
Table 3.6~~7~~. Quality Assurance Requirements for Candidate Feed Tank Stream Analytes ..... 3.25~~3.19~~

GLOSSARY

ASTM	American Society for Testing and Materials
AWWA	American Water Works Association
CAS#	Chemical Abstract Service Number
CFR	Code of Federal Regulations
C_T	total carbon
DOE	U. S. Department of Energy
DQO	data quality objective
~~DQO/DEFT~~	~~data quality objective/decision error feasibility trials~~
DSC	differential scanning calorimeter
DST	Double-Shell Tanks
Ecology	Washington State Department of Ecology
EPA	U.S. Environmental Protection Agency
ETF	200 Area Effluent Treatment Facility
GC	gas ~~chromotography~~chromatography
HDPE	high-density polyethylene
~~HFFACO~~	~~Hanford Federal Facility Agreement and Consent Order~~
IC_T	total inorganic carbon
IR	~~infared~~infrared
~~LDR~~	~~land disposal restriction~~
LERF	Liquid Effluent Retention Facility
MS	mass spectrometry
N/A	not applicable
QA	quality assurance
QC	quality control
RCRA	*Resource Conservation and Recovery Act of 1976*
RPD	relative percent difference
~~TEDF~~	~~Treated Effluent Disposal Facility~~
~~TCLP~~	~~toxicity characteristic leaching procedure~~
TGA	Thermogravimetric analysis
TOC	total organic carbon
TSD	treatment, storage, and/or disposal
VOA	volatile organic analysis
WAC	Washington Administrative Code
WAP	waste analysis plan

METRIC CONVERSION CHART

Into metric units | Out of metric units

If you know	Multiply by	To get	If you know	Multiply by	To get
Length			**Length**		
inches	25.40	millimeters	millimeters	0.0393	inches
inches	2.54	centimeters	centimeters	0.393	inches
feet	0.3048	meters	meters	3.2808	feet
yards	0.914	meters	meters	1.09	yards
miles	1.609	kilometers	kilometers	0.62	miles
Area			**Area**		
square inches	6.4516	square centimeters	square centimeters	0.155	square inches
square feet	0.092	square meters	square meters	10.7639	square feet
square yards	0.836	square meters	square meters	1.20	square yards
square miles	2.59	square kilometers	square kilometers	0.39	square miles
acres	0.404	hectares	hectares	2.471	acres
Mass (weight)			**Mass (weight)**		
ounces	28.35	grams	grams	0.0352	ounces
pounds	0.453	kilograms	kilograms	2.2046	pounds
short ton	0.907	metric ton	metric ton	1.10	short ton
Volume			**Volume**		
fluid ounces	29.57	milliliters	milliliters	0.03	fluid ounces
quarts	0.95	liters	liters	1.057	quarts
gallons	3.79	liters	liters	0.26	gallons
cubic feet	0.03	cubic meters	cubic meters	35.3147	cubic feet
cubic yards	0.76456	cubic meters	cubic meters	1.308	cubic yards
Temperature			**Temperature**		
Fahrenheit	subtract 32 then multiply by 5/9ths	Celsius	Celsius	multiply by 9/5ths, then add 32	Fahrenheit
Force			**Force**		
pounds per square inch	6.895	kilopascals	kilopascals	0.14504	pounds per square inch

Source: *Engineering Unit Conversions,* M. R. Lindeburg, P.E., Second Ed., 1990, Professional Publications, Inc., Belmont, California.

3.0 WASTE ANALYSIS PLAN

3.1 INTRODUCTION

This waste analysis plan (WAP) addresses analysis necessary to manage the waste at the 242-A Evaporator according to ~~*Resource Conservation and Recovery Act* (RCRA)~~ requirements included in the *Hanford Facility* *Resource Conservation and Recovery Act, Dangerous Waste Portion,* ~~*RCRA*~~ *Permit,* WA7 89000 8967 (Permit), ~~*Hanford Federal Facility Agreement and Consent Order* (Tri-Party Agreement, Ecology et., al. 2003,~~ and Washington Administrative Code (WAC), Chapter 173-303~~, and Part 264 of the Code of Federal Regulations~~.

Modifications of the WAP require modifications of the Permit. Permit modifications are discussed in Permit Condition I.C and WAC 173-303-830.

Where information regarding treatment, management, and disposal of the radioactive source byproduct material and/or special nuclear components of mixed waste (as defined by the Atomic Energy Act of 1954 as amended) has been incorporated into this document, it is not incorporated for the purpose of regulating the radiation hazards of such components under the authority of this Permit or chapter 70.105 RCW and its implementing regulations but is provided for information purposes only.

3.2 PURPOSE

The purpose of the WAP is to ensure waste at the 242-A Evaporator is managed properly in accordance with WAC 173-303-300. To ensure the waste analysis is comprehensive, a data quality objectives (DQO) analysis was performed on all streams at the 242-A Evaporator. Sampling and analysis identified in the DQO analysis related to meeting RCRA requirements are included as an integral part of this WAP.

Regulatory and safety issues are addressed in the WAP by establishing boundary conditions for waste to be received and treated at the 242-A Evaporator. The boundary conditions are set by establishing limits for items such as reactivity, waste compatibility, and control of vessel vent organic emissions. Waste that exceeds the boundary conditions would not be acceptable for processing without further actions, such as blending with other waste. In some cases, individual waste streams not acceptable at the 242-A Evaporator may be pre-treated or blended with other compatible waste streams to meet the 242-A waste acceptance criteria. Such pre-treatment or blending, however, would occur at dangerous waste management unit(s) other than the 242-A Evaporator.

3.3 SCOPE

This WAP discusses ~~RCRA~~ sampling and analysis of ~~the~~ waste ~~in selected Double Shell Tank (DST) System tanks~~ to determine the acceptability of the waste in 'candidate feed tank(s)' for processing at the 242-A Evaporator and characterization of dangerous waste streams generated from the treatment process. A 'candidate feed tank(s)' means one or more tanks in the Double Shell Tank (DST) System, and is typically not the feed tank (241-AW-102). ~~Sampling and analysis of DST System waste for other reasons, such as preparation for tank-to-tank transfers, is included in the waste analysis plan for the DST System.~~ Refer to additional discussion in Section 3.5 for 'candidate feed tanks.'

- **Candidate Feed Tank Acceptance Process** – This process determines the acceptability of DST System waste at the 242-A Evaporator operating capabilities prior to acceptance of the waste at the 242-A Evaporator for treatment. Refer to Section 3.7.

- **Dangerous waste generated from the treatment process** – Sampling and analysis is used to characterize the process condensate waste stream generated from the treatment process. ~~RCRA sampling of t~~The process condensate is transferred to the Liquid Effluent Retention Facility (LERF). Sampling can be performed either at the 242-A Evaporator or at LERF. A discussion of process condensate sampling at the 242-A Evaporator is included in this WAP, while discussion of process condensate sampling at LERF is included in the Permit, Part III, Liquid Effluent Retention Facility and 200 Area Effluent Treatment Facility, *Waste Analysis Plan*. Refer to Section 3.8.

- Samples of other 242-A Evaporator waste streams, such as steam condensate, cooling water, and 242-A-81 back flush water, are taken as required for process control but are excluded from this plan because these streams have been previously characterized and determined to be nondangerous waste streams.

3.4 242-A EVAPORATOR PROCESS DESCRIPTION

The 242-A Evaporator, located in the 200 East Area of the Hanford Site, separates the incoming waste from the DST System into two mixed waste aqueous streams the slurry and the process condensate as described in the following paragraph. ~~Also associated with t~~The 242-A Evaporator also generates ~~are~~ utility waste streams such as cooling water and steam condensate, which do ~~are~~ not designate as dangerous waste. Description of the waste processed by the 242-A Evaporator is described in Section 3.4.

The 242-A Evaporator process uses a conventional forced-circulation, vacuum evaporation system to concentrate mixed waste solutions from the DST System tanks. The incoming stream is separated by evaporation into two liquid streams: a concentrated slurry stream and a process condensate stream. The slurry contains the majority of the radionuclides and inorganic constituents. After the slurry is concentrated to the desired amount, the slurry stream is pumped back to the DST System and stored for further treatment. Vapor from the evaporation process is condensed, producing process condensate~~, which is primarily water with trace amounts of organic material and a greatly reduced concentration of radionuclides~~. The process condensate is transferred to LERF for storage and treatment. Vacuum for the evaporator vessel is provided by two steam jet ejectors~~, producing a gaseous vessel vent exhaust~~. The 242-A Evaporator vessel vent stream is filtered and discharged through an exhaust stack. Figure 3.1 shows a simplified schematic of the 242-A Evaporator process. A more detailed description of the 242-A Evaporator process is provided in Chapter 4.0.

3.5 WASTE IDENTIFICATION

All of the waste accepted by the 242-A Evaporator is stored in the ~~comes from~~ DST System. ~~The waste in the DST System tanks is received from onsite generators, which characterize the waste before transfer to the DST System.~~ Waste characterization for a campaign is based on sampling and analysis results ~~analytical data~~ and/or process knowledge. Based on this information, ~~the waste in~~ certain DST System tanks are selected as 'candidates feed tanks' for processing in the 242-A Evaporator. The contents of these candidate feed tanks are subjected to closer scrutiny and evaluated against 242-A Evaporator waste acceptance criteria before the final tank selection is made. To meet waste acceptance criteria, the contents of several tanks could be blended together in the feed tank (241-AW-102) prior to processing. The 241-AW-102 tank is not typically considered a candidate feed tank but can become a candidate feel tank if waste is staged and sampling is performed there. Selection of candidate feed tank(s) for a campaign is outside the scope of this WAP and based on operational needs of the DST system.

Process knowledge is used to determine whether actions to add waste to a tank are acceptable after a candidate feed tank(s) or the 241-AW-102 feed tank has been isolated for a campaign. Operational and maintenance activities can occur at the 242-A Evaporator or the DST System which results in the

introduction of operational and maintenance additions into a candidate feed tank(s) or the 241-AW-102 feed tank. In most cases, operational and maintenance waste solution additions are anticipated. Prior to anticipated activities occurring, documentation will be placed in the Hanford Facility Operating Record, 242-A Evaporator unit-specific portion, to show waste acceptance criteria will still be met. The calculation(s) will use, as appropriate, candidate feed tank sampling and analysis results for the proposed campaign, candidate feed tank sampling and analysis results from the previous campaign for waste residing in the 241-AW-102 feed tank, coupled with information about the type and quantity of solutions to be introduced into the isolated waste. When the operational and maintenance waste solution addition occurs and is unanticipated, documentation will be prepared after the event and prior to processing and will be placed in the Hanford Facility Operating Record, 242-A Evaporator unit-specific portion, in a similar fashion to the anticipated event.

Anticipated or unanticipated water additions to isolated candidate feed tank(s) or the 241-AW-102 feed tank do not require documentation. Water additions will not affect whether the waste acceptance criteria will be met.

3.5.1 General Constituent Description

The only waste stream processed at the 242-A Evaporator is the DST System waste stream~~, which consists of mixed waste received from various Hanford Site activities~~. The mixed waste is an ~~radioactive~~ aqueous solution containing dissolved inorganic salts such as sodium, potassium, aluminum, hydroxides, nitrates, and nitrites. The mixed waste in some tanks has detectable levels of heavy metals such as lead, chromium, and cadmium. The radionuclide content includes fission products such as ~~the~~ Sr-90 and Cs-137, and actinide series elements such as uranium and plutonium. Small quantities of ammonia and organics, such as acetone, butanol, and tri-butyl phosphate, could ~~also~~ be present. Waste received in the DST System has been chemically adjusted to ensure the waste is compatible with materials used for construction of the waste tanks and the 242-A Evaporator. The physical consistency of the waste in the DST System ranges from liquid supernate to thick sludge. Waste fed to the 242-A Evaporator is supernate taken from the DST System; the sludge is not processed through the 242-A Evaporator.

The slurry, which results from treatment of DST System waste in the 242-A Evaporator, is an aqueous solution containing the same components as the feed stream with increased concentrations of non-volatile organic and inorganic constituents. The slurry may also contain solids precipitated due to the liquid volume reduction. Most of the volatile constituents in the feed are separated ~~evaporated and transferred~~ into the process condensate. The process condensate, a mixed waste, is a dilute aqueous solution with ammonia, volatile organics, and trace quantities of ~~radionuclides and inorganic~~ non-volatile constituents.

Figure 3.1. 242-A Evaporator Simplified Schematic

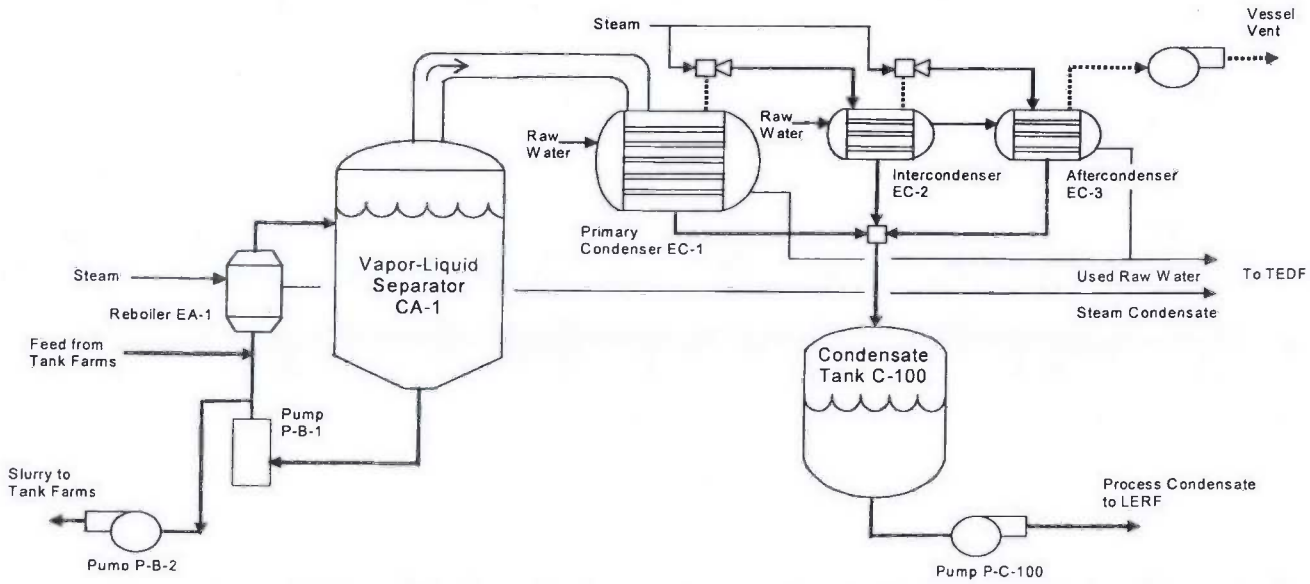

3.5.2 Classification of Waste

The waste processed at the 242-A Evaporator is classified as a mixed waste because it contains a radioactive components and a chemical component that designates ~~is~~ as a dangerous waste. The waste processed is designated and assigned dangerous waste codes for waste stored in the DST System as follows.

- Waste generated from the evaporation treatment process includes slurry and process condensate. The concentrated slurry and process condensate are mixed waste since they are derived from the treatment of the DST System listed dangerous waste due to waste codes F001 through F005. The two waste streams may also exhibit one or more dangerous waste characteristics (WAC 173-303-090).~~The concentrated slurry produced by the evaporation process is also a mixed waste because it contains the same mixed waste constituents as the waste feed. The process condensate is classified as a mixed waste because it contains radioactive components and is a listed waste. The process condensate is a listed waste because it is derived from a listed waste.~~

- Other 242-A Evaporator ~~Analysis of utility~~ waste streams ~~which~~ do not contact mixed waste solutions, such as cooling water and steam condensate~~, are conducted per the requirements of the 200 Area Treated Effluent Disposal Facility, which receives these streams~~. These waste streams ~~analyses~~ are not discussed in this WAP ~~plan~~ because these streams ~~are~~ do not designate as dangerous waste under WAC 173-303. Any waste sampling and analysis for purposes of designation would be conducted pursuant to WAC 173-303-170, outside the scope of this Permit.

3.5.3 Dangerous Waste Numbers

The 242-A Evaporator is specifically designed to accept DST System waste directly from feed tank 241-AW-102. Waste acceptable for transfer~~red~~ to the 242-A Evaporator could be assigned any of the dangerous waste numbers found in Chapter 1.0, Part A, Form (latest Revision). These numbers are identical to the ones in the Part A, Form (latest Revision) for the DST System. Process knowledge and historical data indicate that the slurry stream returning to the DST System contains the same dangerous waste constituents as the waste feed, so the same dangerous waste numbers are applicable to the feed and slurry.

Table 3.1 lists the dangerous waste numbers assigned to the process condensate. The process condensate is designated with the dangerous waste numbers F001 to F005 because the process condensate is derived from treatment of DST System waste assigned these numbers.

Table 3.1. Waste Designation for Process Condensate.

Waste number	Characteristic/Source	Basis for designation
F001	Spent halogenated solvents	Derived from F001 waste
F002	Spent halogenated solvents	Derived from F002 waste
F003	Spent nonhalogenated solvents	Derived from F003 waste
F004	Spent nonhalogenated solvents	Derived from F004 waste
F005	Spent nonhalogenated solvents	Derived from F005 waste
F039	Multi-source leachate from waste disposal operations	Future receipt of waste with the F039 number, derived from F001 through F005.

The slurry waste stream generated at the 242-A Evaporator is also a mixed waste, but the slurry waste is not stored at the 242-A Evaporator, as it is transferred back to the DST system, and therefore not subject to the WAP. In addition to the F001 –F005 dangerous waste numbers, the slurry waste may designate for one or more applicable characteristic dangerous waste numbers.

3.6 WASTE ACCEPTANCE PROCESS

This section describes the actions performed before every campaign to determine ~~if the~~candidate feed tank waste ~~in the DST System tanks~~ is acceptable for treatment at the 242-A Evaporator. Because initial acceptance of the process condensate at LERF is based on completion of a waste stream profile using candidate feed tank data, LERF waste acceptance criteria are also considered in the selection of a candidate feed tank. ~~This section also describes the procedures and processes for sampling the process condensate stream at the 242-A Evaporator, if required by the waste acceptance criteria for treatment at the 200 Area Effluent Treatment Facility (ETF).~~DST wastes are not accepted for treatment in the 242-A Evaporator unless the 242-A Evaporator waste acceptance criteria are satisfied, and the process condensate projected to be generated via treatment in the 242-A Evaporator satisfies LERF waste acceptance criteria.

The 242-A operates as a batch treatment system. Feed for each evaporator campaign must follow this waste acceptance process for waste verification and waste acceptance. Therefore, there is no need to periodically re-evaluate any waste stream.

Evaluation of data produced from the sampling and analysis of candidate feed tank waste for each campaign are documented in the campaign specific process control plan, process memo and associated engineering calculations, which are maintained in the Hanford Facility Operating Record, 242-A Evaporator, unit specific portion. Process control plans are prepared to describe and define the specific controls required for a planned campaign. Each process control plan includes the information described below:

- Waste Feed Description - describes the source, volume, and any potential mixing or blending data.
- Campaign Objectives – details the waste reduction volume estimates and specific gravities expected for each campaign.
- Candidate Feed Tank Sampling and Analysis Evaluation– describes the actual sampling and analysis data for each candidate feed tank for each campaign. This evaluation includes review of data to the 242-A Evaporator waste acceptance criteria, other health and safety controls beyond the scope of the Permit for operation of the 242-A Evaporator, and calculation of the expected process condensate constituent concentrations for review to the LERF waste acceptance criteria.
- Process Controls and Campaign Recommendations – describes the limits and conditions for each campaign based on the campaign objectives and candidate feed tank analytical data.

~~3.6.1~~3.7CANDIDATE FEED TANK WASTE ACCEPTANCE PROCESS

Once possible feed candidate tanks have been identified, the method for determining if the waste in a candidate feed tank is acceptable for processing is followed. This section describes the waste acceptance process.~~Candidate feed tank sampling performed for this WAP is done in the DST System before transfer of the waste to the 242-A Evaporator. Certain DST System tanks are selected as 'candidates' for waste to be processed in the 242-A Evaporator. This section describes the method for determining if the waste in a candidate feed tank is acceptable for processing.~~

The following activities are performed to determine if candidate waste feed will meet the 242-A ~~e~~Evaporator waste acceptance criteria.

- ~~Estimate concentrations of the eight Critical analytes to determine the minimum number of feed tank samples needed for compliance with the waste acceptance criteria. The eight Critical analytes are Ammonia, Nitrite, Nitrate, Hydroxide, Acetone, Pu-239/240, Cs-137, and Sr-90. The evaporator DQO also specifies that a boil down study be performed to evaluate the impacts of solid formation.~~Perform a boil down study to evaluate the impacts of solids formation as specified in the Evaporator DQO (Banning 2009).
-
- Evaluate Potential for Energetics/Uncontrolled Chemical Reactions: ~~The 242-A Evaporator Waste Analysis Plan (WAP, Ecology 2003) requires that~~ There must be no exothermic reaction of waste constituents that occur below 168°C (335°F), and the ratio of exotherm-to-endotherm energy be less than 1.
- Evaluate Potential for Separable Organic Phase: Prior to operation of the evaporator, the absence of separable organics in the feed must be verified or managed to preclude transfer to the 242-A Evaporator.
- ~~Evaluate Feed Ammonia Concentration: The concentration of ammonia in the feed stream is limited to 6800 mg/L and must be confirmed.~~
- Calculate Process Condensate Ammonia and Organic Concentrations: ~~Radionuclide, a~~Ammonia, and volatile organic concentrations are needed for the LERF waste profile sheet (refer to the Permit, Part III, LERF and 200 Area ETF, unit-specific conditions and Chapter 3.0, Waste Analysis Plan.)
- ~~Calculate Vessel Vent Ammonia Emissions: Ammonia monitoring is required by the Permit to determine that the ammonia emissions do not exceed 100 lbs per 24 hours.~~

~~3.6.1.2~~3.7.1 Selecting Candidate Feed Tanks

For each 242-A Evaporator campaign, DST System tanks are selected as candidate feed tanks based on process knowledge of chemical properties with respect to waste acceptance criteria (Section 3.6.1). The initial determination of possible candidate feed tanks is outside the scope of this WAP and is based on operational needs of the DST system.~~After a candidate tank is selected, the waste in the tank is sampled and analyzed and the data evaluated to confirm waste acceptability. Every candidate feed tank is sampled and analyzed to confirm waste acceptability.~~

~~3.6.1.3~~3.7.2 ~~Determining the Number of~~ Candidate Feed Tank Samplinges

After a candidate tank is selected, the waste in the tank is sampled and analyzed and the data evaluated to confirm waste acceptability. Every candidate feed tank is sampled and analyzed to confirm waste acceptability. Sampling of a candidate feed tank waste for treatment in the 242-A Evaporator is performed according to the requirements of this WAP. The WAP reflects the rationale for determining the number of samples in the DQO (Banning 2009). The waste is sampled in the DST System, prior to transfer and acceptance at the 242-A Evaporator.

Four (4) representative samples of aqueous candidate feed tank waste supernatant, from one tank riser, are required. These samples are adequate to ensure the resulting waste characterization data are of sufficient quality for the data's planned purposes. The data are compared to the 242-A Evaporator waste acceptance criteria, applied to the 242-A Evaporator Process Control Plan for purposes of predicting process condensate properties, and used for comparison to LERF waste acceptance criteria for liner compatibility. The rationale for this statement is that the estimates of the variability of DST System content wastes

properties is sufficiently defined and consistent that four (4) samples are sufficient. No solid samples are collected.

The four (4) samples will be collected from the following depths. One (1) surface sample to address the possible existence of a separable organic layer and three (3) subsurface samples are obtained from each waste candidate feed tank. The depths of the subsurface samples are determined by the Permittees based on best professional judgment (based on Table 3.3). In the event multiple candidate feed tanks are identified, sampling can occur after wastes are blended. The identified candidate feed tanks coupled with process knowledge of the feed tank (241-AW-102) provide a representative set of data for determining waste acceptance in the 242-A Evaporator. This is due to the consistency in the type of feed waste and the source of the waste. Waste in candidate feed tanks must first be accepted into the DST System by meeting the corresponding DST System waste acceptance criteria. Waste management in the DST System results in supernatant that is relatively homogeneous within each tank recognizing some concentration gradients may exist vertically within each tank caused by the transfer history and limited mixing actions within the DST System. Lateral stratification is not expected.~~The method for determining the number of feed tank samples is specified in the data quality objectives (DQO) (Banning et al. 2005) and this WAP, and uses power analysis software supplied by the U.S. Environmental Protection Agency (EPA) (EPA 2001). Estimated concentrations of eight critical analytes (Section 3.6.1) are used to determine the minimum number of samples, accounting for the desired confidence level and how close the estimated concentrations are to the waste acceptance limits a random number generator is then used to determine the sample locations in the tank, using constraints given in the WAP.~~

~~Figure 3.2 illustrates the decision logic used to determine the number of samples to be taken. Preliminary concentrations of critical analytes are compared to the waste acceptability limits statistically to determine the number of samples necessary to verify the composition of the waste. The statistical analysis accounts for how close the concentrations of critical analytes are to the limits and the desired confidence level. The closer the concentrations are to the limits, or the greater the desired confidence level, the more samples must be taken. For regulatory compliance, acetone is used as the critical analyte because it is often present at elevated levels. A 95% confidence level is specified for acetone. Critical analytes for process control are also assessed. Acetone analysis is usually not available from preliminary data, so process control analytes (such as nitrate and hydroxide) are often used. The statistical analysis includes the generation of power curve calculations using *Data Quality Objectives Decision Error Feasibility Trials* (EPA 2001 or current revision) software developed by the EPA. This software requires input of minimum and maximum expected values, action levels, mean sample results, standard deviations of sample results, and upper and lower confidence levels. The software outputs the minimum number of samples required. In general, three samples are taken as a minimum because taking two samples would require resampling if one sample should be lost or contaminated in the laboratory. A maximum of five samples generally is applied to minimize exposure to sampling personnel.~~

~~3.6.1.4~~3.7.3 Assessing Candidate Feed Tank Sampling and Analysis Results

~~When results of the sample analysis are available (and before the waste is processed), a second statistical analysis, similar to the first, is performed with the new analyte data to verify a sufficient number of samples were taken (Figure 3.3).~~

Candidate feed tank sampling and analysis, in conjunction with the waste acceptance criteria in Section 3.9~~6.1~~, are used to assess whether established limits (limits are defined in the 242 Evaporator DQO, Banning ~~2004~~ 2009 and Permit, Part III, LERF and 200 Area ETF, unit-specific conditions and Chapter 3.0, Waste Analysis Plan) would be exceeded. Based on the results, three ~~four~~ possible options are implemented:

- The waste is acceptable for processing at the 242-A Evaporator without further actions.

- The waste is unacceptable for processing as a single batch, but is acceptable if blended with other waste to be processed or the waste can be pre-treated as necessary to fully satisfy the 242-A Evaporator waste acceptance criteria.
- The waste is unacceptable for processing, and no acceptable pre-treatment or blending options can be identified.
- ~~Perform further evaluation to determine if action limit can be protected through mid-campaign monitoring/sampling and/or process adjustments.~~

~~If the waste is suitable for evaporation, it will be transferred to the feed tank (241-AW-102) for processing.~~

~~3.6.4~~3.8 ~~PROCESS CONDENSATE WASTE~~ SAMPLING PROCESS FOR DANGEROUS WASTES GENERATED FROM TREATMENT

Two mixed waste streams are generated as the result of the 242-A Evaporator process: process condensate and concentrated waste slurry. Sampling of the concentrated waste slurry is not necessary under this WAP in order to return the waste back to the DST System.

~~RCRA s~~Sampling of process condensate is required for confirmation that the waste meets the LERF waste acceptance criteria with respect to LERF liner compatibility.~~completed per the Permit, Part III, LERF and 200 Area ETF unit-specific conditions and Chapter 3.0, Waste Analysis Plan before treatment at the ETF.~~ Depending on programmatic needs, this sampling can be performed at the 242-A Evaporator during a campaign or at LERF after the campaign is completed.

Before the start of a 242-A Evaporator campaign, the decision whether process condensate sampling will be performed at the 242-A Evaporator or at LERF is documented in the process control plan, which is maintained in the Hanford Facility ~~o~~Operating ~~r~~Record, 242-A Evaporator Unit specific portion. Planning for process condensate sampling at the 242-A Evaporator (i.e., number of samples, when samples are taken, etc.) is completed before starting the campaign. Sampling at LERF is beyond the scope of this WAP.

~~3.6.4.13~~.8.1 Determining the Number of Process Condensate Samples

The purpose of sampling the process condensate stream at the 242-A Evaporator is to confirm that the stream is acceptable for treatment at the ETF. Before starting a 242-A Evaporator campaign where sampling will be performed at the 242-A Evaporator instead of LERF, characterization of the process condensate will be developed based on process knowledge. Process knowledge includes previous documented process condensate analysis, estimated concentrations based on documented candidate feed tank sampling and analysis, etc. ~~RCRA s~~Sampling of the process condensate stream at the 242-A Evaporator is performed during the campaign to confirm the characterization ~~is correct~~. Sampling frequency is determined using the following equation:

> Number of process condensate = N + 1 samples required (per campaign). Where N is the number of candidate feed tanks to be processed during the campaign.

For example, a campaign processing waste from only one candidate feed tank would require two samples, while a campaign processing waste from three candidate feed tanks would require four samples. Sampling is spread approximately evenly through the campaign, allowing for operational events such as unexpected shutdowns and planned maintenance outages. This sample frequency represents a confirmation rate of about one sample every 5 to 8 days of processing. This is reasonable based on the relatively homogeneous tank waste feed and the more or less steady state of evaporator operations.~~extensive database of previous process condensate analysis.~~ Therefore, the process condensate waste stream should also be relatively

homogeneous, and multiple samples are not necessary to document or account for waste stream variability. A minimum of two samples is taken to meet LERF waste acceptance criteria~~allow averaging of results~~.

~~3.6.4.2~~3.8.2 Assessing Process Condensate Sampling and Analysis Results

The process condensate sample and analysis results are assessed against the LERF waste acceptance criteria. ~~in the Permit, Part III, LERF and 200 Area ETF unit specific conditions and Chapter 3.0, Waste Analysis Plan. The discussion of the waste management decision process for process condensate sampling, including the reevaluation process, is also included in the Permit, Part III, LERF and 200 Area ETF unit specific conditions and Chapter 3.0, Waste Analysis Plan.~~

~~3.7~~3.9 242-A EVAPORATOR WASTE ACCEPTANCE CRITERIA

Waste a~~A~~cceptance criteria for the 242-A Evaporator have been established from regulatory requirements, operating experience, previous sample analyses, and engineering calculations. Processing criteria are maximum and/or minimum values of a waste analyte that, if exceeded, alert the operator that management of the waste requires further attention. The rationale for selecting a given analyte for inclusion in this WAP, as required by WAC 173-303-300, is indicated in this section for each test and/or analyte.

Additional analyses (such as specific gravity and radionuclide analysis) of the feed tanks, process condensate, and other streams are performed to ensure that the facility is operating within established parameters. This process control sampling and analysis is outside the scope of this plan because it is not used to assess compatibility of the waste with other waste and with the 242-A Evaporator tank systems.

Figure 3.2. 242-A Evaporator Waste Acceptance Process ~~Strategy for Determining the Number of Candidate Feed Tank Samples~~.

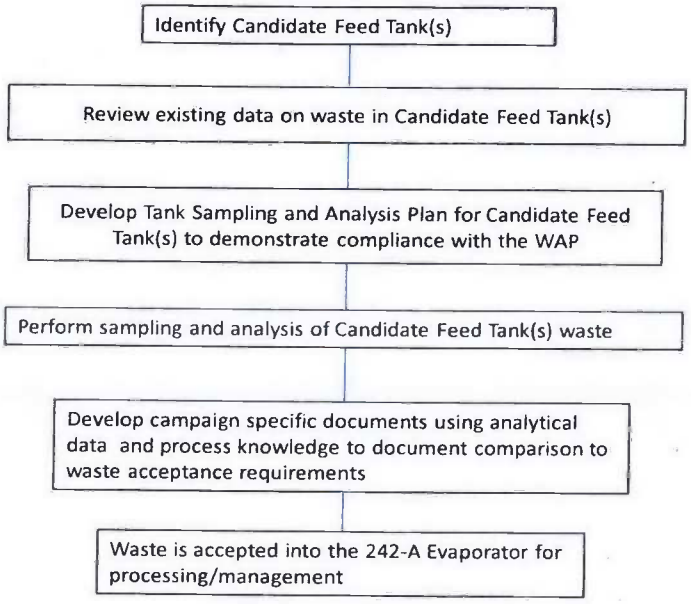

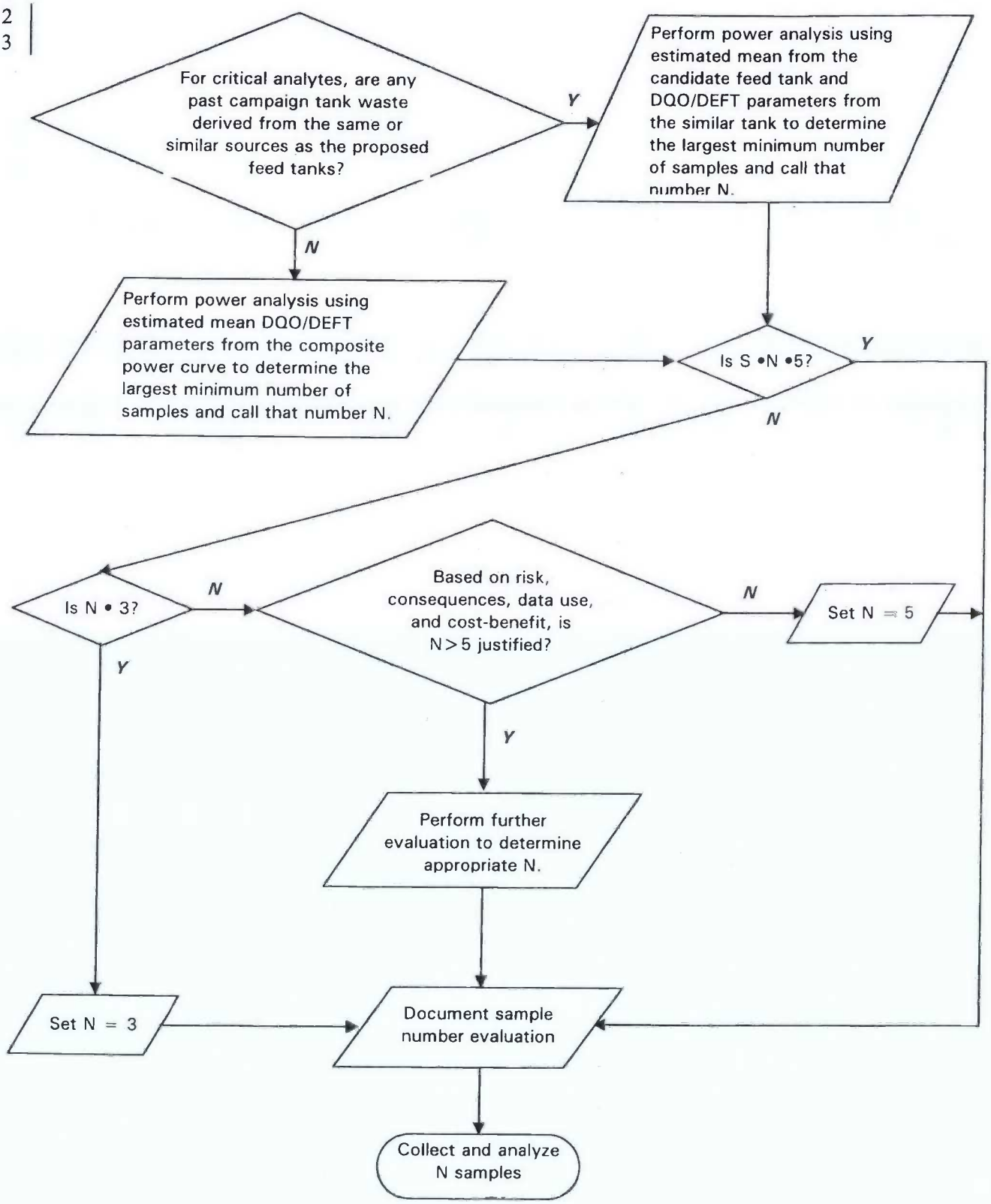
For critical analytes, are any past campaign tank waste derived from the same or similar sources as the proposed feed tanks?
Y
N
Perform power analysis using estimated mean from the candidate feed tank and DQO/DEFT parameters from the similar tank to determine the largest minimum number of samples and call that number N.
Perform power analysis using estimated mean DQO/DEFT parameters from the composite power curve to determine the largest minimum number of samples and call that number N.
Is S •N •5?
Y
N
Is N • 3?
N
Y
Based on risk, consequences, data use, and cost-benefit, is N>5 justified?
N
Y
Set N = 5
Perform further evaluation to determine appropriate N.
Set N = 3
Document sample number evaluation
Collect and analyze N samples

~~Figure 3.3. Strategy for Verifying the Number of Candidate Feed Tank Samples.~~

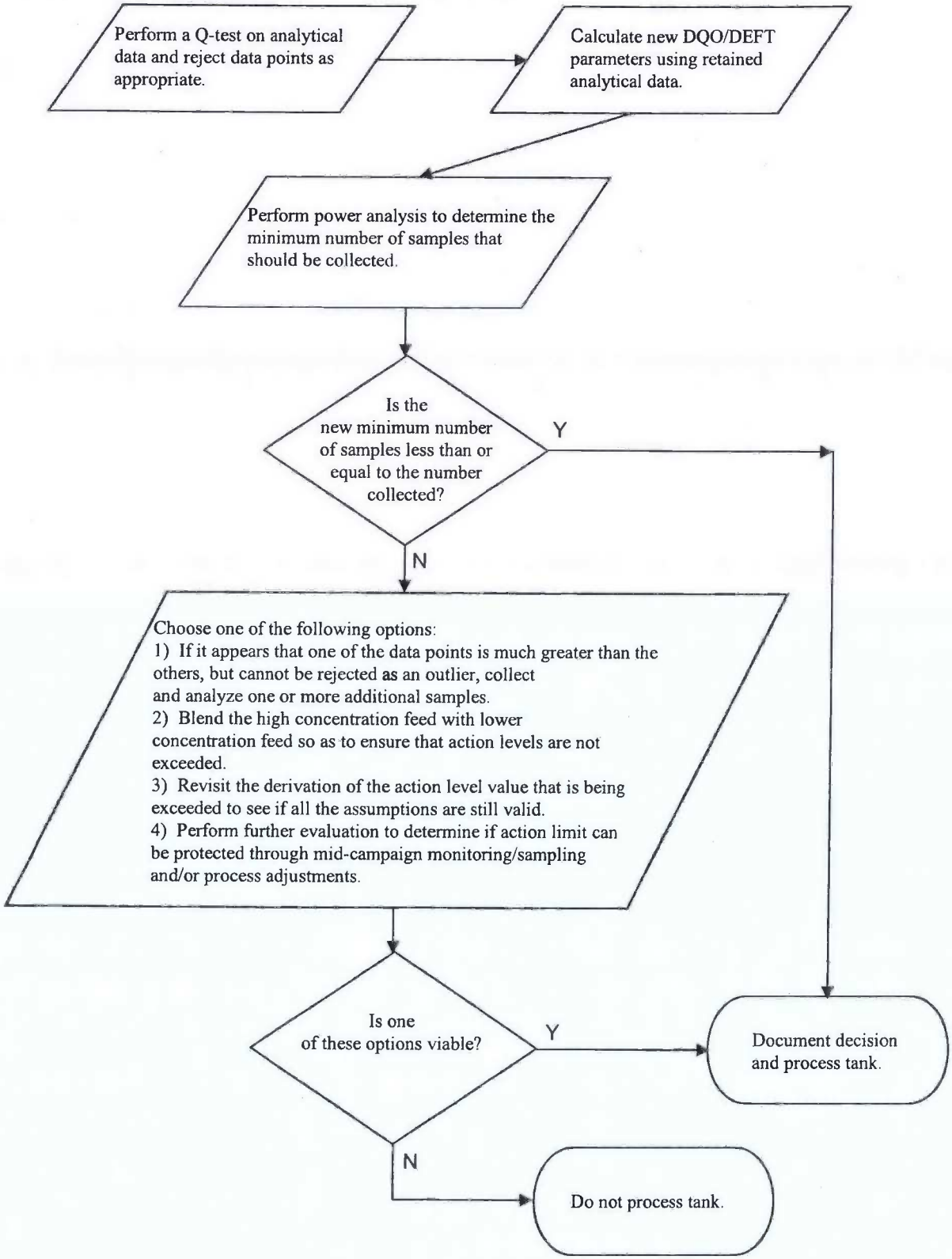

3.9~~7~~.1 Candidate Feed Tank Waste Acceptance Criteria

The following sections discuss waste acceptance criteria for candidate feed tanks to be processed in the 242-A Evaporator.

~~3.7.1.1~~3.9.1.1 Exothermic Reactions

WAC 173-303-395(1) requires waste handling be conducted to prevent an uncontrolled reaction that could damage the tank system structural integrity or threaten human health or the environment. To evaluate the possibility of an uncontrolled reaction at the elevated temperatures in the evaporator vessel, a differential scanning calorimeter (DSC) test is performed on samples of all candidate waste to be processed. DSC measures the amount of heat absorbed or released by a sample as the temperature is increased. Waste exhibiting exotherms below ~~168°C~~168 °C (335 °F), or with an absolute value of the exotherm-to-endotherm ratio greater than one, will not be processed in the 242-A Evaporator without further technical evaluation.

~~3.7.1.2~~3.9.1.2 Compatibility

WAC 173-303-640(10) and WAC 173-303-395(1) requires waste handling be conducted to prevent an uncontrolled reaction that could damage the 242-A Evaporator tank system structural integrity or threaten human health or the environment. To verify there will be no adverse affects because of mixing the contents of different ~~waste~~ candidate feed tanks in the feed tank (241-AW-102) and the 242-A ~~e~~Evaporator vessel (C-A-1), a compatibility evaluation is performed on waste in the candidate feed tanks. As samples from each of the planned waste sources are mixed, observations are made to note any changes in color, temperature, clarity, or ~~any~~ other visually determinable characteristic. This would indicate an unexpected chemical reaction that might have an impact on 242-A Evaporator operations. If such visible changes are observed when mixing samples, the waste would not be processed in the 242-A Evaporator without further technical evaluation.

3.9.1.3 Separable Organics

The waste surface layer sample collected from each candidate feed tank or combined feed in 241-AW-102 is visually inspected to determine whether separable organics are present in the waste and requires the waste feed to be rejected for processing or allows waste processing. In addition, testing of the sample is performed by either percent water to determine if the whole sample is organic and cannot be discerned visibly or by total carbon/total inorganic carbon. The action limit of 25% water will indicate if the sample is all organic. Results of the visual inspection and testing are used together to determine if the waste can be accepted at the 242-A Evaporator for processing. If there is a separate visible organic layer in the candidate feed tank samples then the waste transfer to 242-A Evaporator must incorporate engineering controls to eliminate (exclude) the organic layer during the transfer.

3.9.1.4 Organic Constituents

Because process condensate generated at the 242-A Evaporator is transferred only to the LERF, the 242-A Evaporator will not accept waste for treatment whose data review does not allow treatment and storage in LERF. Process condensate could contain trace quantities of chemicals that could cause degradation of the liner material if found to exceed specifications. To predict the concentrations expected in the process condensate, the candidate feed tank waste is sampled and analyzed for organics and the results are then used to predict the concentrations in the campaign specific process condensate. The level of volatile organics in the feed is limited to ensure organic constituents that transfer to the process condensate are compatible with the LERF liner as specified in the LERF waste acceptance criteria.

The 242-A Evaporator performs distillation of waste containing organic concentrations greater than 10 parts per million by weight; therefore, organic air emissions are subject to WAC 173-303-690 (which incorporates 40 CFR 264, Subpart AA, by reference). Organic emissions from TSD units on the Hanford Site subject to 40 CFR 264, Subpart AA are controlled to ensure emissions to do not exceed 1.4 kilograms per hour and 2,800 kilograms per year. To ensure these requirements are met, the levels of volatile organics in the 242-A Evaporator feed must be limited to prevent excessive organic emissions during processing. Engineering calculations were used to determine the feed limits given in Table 3.2. The limits include a modifier "(R-1)/R", which adjusts the limits based on the campaign's planned boiloff rate. R is the ratio of feed flow rate to slurry flow rate. Typically, R is between 1 to 2, making the range of (R-1)/R 0 to 0.5.

In addition, analysis of the individual components in Table 3.2, total carbon (C_T) and total inorganic carbon (IC_T) analysis are performed as a screening tool to account for other organic species that might be present in the waste. The value of C_T minus IC_T represents the total organic concentration in the waste. If the C_T minus IC_T limit is exceeded, additional volatile organic species might be present and a more detailed evaluation will be conducted to determine organic emissions out of the vessel vent. The limit for evaluation is 174.4 milligrams per liter, based on the conservative assumption that all organic species present in the waste are as volatile as acetone. Acetone was chosen because of its relatively high volatility and low percentage of carbon.

~~The level of volatile organics in the feed must also be limited to ensure organic constituents that transfer to the process condensate are compatible with the LERF liner. The high density polyethylene (HDPE) liner used at the LERF is exposed to process condensate that could contain trace quantities of chemicals that could cause degradation of the liner material.~~ Based on the liner manufacturer's compatibility data, waste acceptance criteria from the LERF will impose ~~the~~ concentration limits ~~in Table 3.3 are imposed on those~~ on classes of constituents that could potentially degrade the liner. To ensure that these limits are not exceeded in the process condensate, the concentration limits are applied to the candidate feed tanks as well, with the modifier "(R-1)/R". A C_T minus IC_T analysis, similar to the one described previously, is also applied to the LERF liner limits. The strictest limit for organic species ~~in Table 3.3~~ is 2,000 milligrams per liter. Assuming the organic is acetone (with its low percentage of carbon); this converts to a carbon value of 1,240 milligrams per liter.

The calculations in Tables 3.2 ~~and 3.3~~ require use of the ∋sum of the fractions∋ technique. A calculation is performed where the analysis of each constituent is divided by its associated limit to produce a fraction of the limit. If the sum of these fractions is less than 1, the waste meets the requirements in the tables.

~~3.7.23.9.2~~ Process Condensate Waste Acceptance Criteria

The waste acceptance criteria for process condensate sampling, including treatability, LERF liner compatibility, compatibility with other waste, etc., is given in the Permit, Part III, LERF and 200 Area ETF unit-specific conditions and Chapter 3.0, Waste Analysis Plan.

Table 3.2. Candidate Feed Tank Limits for Vessel Vent Organic Discharge[a].

Feed constituent	Limit (milligrams per liter) b, c
Acetone	174.4 ([R-1]/R)
1-Butanol	452 ([R-1]/R)
2-Butoxyethanol	190.4 ([R-1]/R)
2-Butanone	116 ([R-1]/R)
Tri-butyl phosphate	2.03E+4 ([R-1]/R)
Total carbon and Total inorganic carbon	(CT-ICT) < 174.4 ([R-1]/R) (as acetone)

[a] Limits are based on a maximum continuous operating time equivalent to 6 months per year. If total operating time is expected to exceed 6 months per year, the limits must be re-evaluated.

$$\sum_{n=1}^{i}\left(\frac{Conc_n}{LIMIT_n}\right) \leq 1$$

[b] The limits are applied using the sum of the fractions technique: where i is the number of organic constituents detected in analysis of the waste feed tank. Total carbon and total inorganic carbon analysis are not part of the summation.

[c] R is the ratio of feed flow rate to slurry flow rate (typically R = between 1 and 2).

1 ~~**Table 3.3. Candidate Feed Tank Limits for LERF Liner Compatibility**~~ [f]

~~Chemical family/parameter~~[a]	~~Current target compounds~~	~~Limit (milligrams per liter)~~[b,c]
~~Alcohol/glycol~~	~~1 Butanol~~	~~500,000 ([R-1]/R)~~
~~Alkanone~~ [d]	~~Sum of acetone, 2 butanone~~	~~200,000 ([R-1]/R)~~
~~Alkenone~~ [e]	~~None targeted~~	~~2,000 ([R-1]/R)~~
~~Aromatic/cyclic hydrocarbon~~	~~None targeted~~	~~2,000 ([R-1]/R)~~
~~Halogenated hydrocarbon~~	~~None targeted~~	~~2,000 ([R-1]/R)~~
~~Aliphatic hydrocarbon~~	~~None targeted~~	~~500,000 ([R-1]/R)~~
~~Ether~~	~~2 Butoxyethanol~~	~~2,000 ([R-1]/R)~~
~~Other hydrocarbons~~	~~Tri-butyl phosphate~~	~~2,000 ([R-1]/R)~~
~~Oxidizers~~	~~None targeted~~	~~1,000 ([R-1]/R)~~
~~Acids, bases, and salts~~	~~Ammonia~~	~~100,000 ([R-1]/R)~~
~~Total carbon and total inorganic carbon~~	~~Not applicable~~	~~(C_t-IC_t) < 1,240 ([R-1]/R) (as acetone)~~

2

~~a If a chemical fits in more than one chemical family, the more restrictive limit applies.~~

~~b The limits are applied using the sum of the fractions technique: where i is the number of constituents detected in analysis of the waste feed tank. Total carbon and total inorganic carbon analysis are not part of the summation.~~

$$\sum_{n=1}^{i}\left(\frac{Conc_n}{LIMIT_n}\right) \leq 1$$

~~c R is the ratio of feed flow rate to slurry flow rate (typically R = between 1 and 2).~~

~~d Ketone containing only saturated alkyl group(s)~~

~~e Ketone containing unsaturated alkyl group(s)~~

~~This table is used to ensure process condensate generated from candidate feed tank treatment is within LERF liner compatibility limits~~

~~3.8~~3.10 SAMPLE COLLECTION AND ANALYSIS

This section discusses sampling and analysis, including sampling procedures, sample collection points, sample quality assurance/quality control (QA/QC), and selection of analytes.

~~3.8.1~~3.10.1 Sample Collection

This section describes collection of candidate feed tank waste and process condensate samples ~~for RCRA analysis~~. Candidate feed tank waste is sampled and analyzed before the start of each 242-A Evaporator campaign. Process condensate samples are taken at the 242-A Evaporator only if the decision is made before the start of the campaign that sampling will be done at the 242-A Evaporator instead of LERF.

~~3.8.1.1~~3.10.1.1 Candidate Feed Tank Sample Collection

Candidate feed tank waste samples are obtained by using a grab sampling method (e.g. "bottle on a string method") specified in ASTM E300-86~~, *Standard Practices for Sampling Industrial Chemicals* (ASTM 1986)~~. The number of lateral sampling locations in candidate feed tanks is limited by the availability of tank risers providing access into the tank. Generally, only a few risers in each tank are actually available for sampling because the risers are dedicated to instrumentation or other uses. Sampling within a vertical column is generally limited only by the depth of waste in the tank. ~~The criteria in Table 3.4 are used when determining the specific sampling locations.~~

Riser selection is determined using best professional judgment.~~made by numbering the available risers that are at least 4.6 meters from each other and using a random number generator to select which risers will be used.~~ Previous waste feed tank sampling campaigns used two or more risers, and showed that negligible lateral variability exists in the DST System waste supernatants; therefore, only one riser will be used. Sample depths are determined depending on whether layering is suspected to exist and applying ~~by dividing the tank level into 1-foot increments and using a random number generator to determine a depth, which meets~~ the requirements ~~criteria~~ given in Table 3.~~3~~4.

~~3.8.1.2~~3.10.1.2 Candidate Feed Tank Sampling Quality Assurance and Quality Control

For each candidate feed tank waste sample, a sample solution is drawn from the sample riser using one or more sample bottles. ~~All s~~Sample bottles are precleaned, amber-colored glass bottles sealed with Teflon* caps or septum caps ~~and lined septums; however, the sample bottle for VOA must be sealed with septum cap and lined septum~~. The exceptions to the sample bottle requirements are: a clear bottle is used for the surface sample to determine the existence of separable organics and the bottle for VOA analysis must be sealed with a septum cap.

For candidate feed tank sampling quality control, one field blank, consisting of one or more sample bottles, is taken during the sample event. Field blanks are inserted at least 1-foot into the head space through ~~any one of~~ the sample risers used during the sample event. One trip blank, also consisting of one or more sample bottles, is taken during each sample event. Trip blanks are analyzed as independent samples for VOA. Field and trip blanks use the same types of sample bottles as the actual samples and are filled with reagent-grade water before shipment to the field.

---

*Teflon is a trademark of E.I. DuPont de Nemours & Company

Preservatives are not used with candidate feed tank samples because of concerns with high radiation exposure that would result from additional handling of sample solutions. It is not practical to refrigerate the bulky, shielded sample pigs and shipping containers. Biological activity, generally the largest problem in environmental samples, is unlikely in candidate feed tank samples because of the high salt content, pH, and radioactivity of the sample.

The chain of custody is documented on a data sheet that includes a unique sample number, date and time sample was taken, custody seal number, and signature of the sampler. When possession of the sample is transferred to other persons, such as the shipper or laboratory, the signature of the relinquisher and receiver are recorded, along with date and time of the transfer. The receiver at the laboratory also documents on the data sheet that the sample seal number is correct and the seal is intact. The chain-of-custody data sheets are included in the operating record.

~~3.8.1.3~~3.10.1.3 Deviations from Specified Sampling Practices

The WAP requires ASTM E 300 'bottle on a string procedure' for sampling (ASTM E300-86). Due to high radiation fields, some deviations to the standard have been necessary to implement safely the sampling practices in the field. These deviations are documented below.

- Requirement: The sampling apparatus be filled and allowed to drain before drawing the sample.

  Deviation: Sampling personnel lowers the sampling apparatus to the specified level and collects the sample. To pour the contents out and resample would encourage the spread of radiological contamination and additional whole body and extremity radiation exposure.

- Requirement: Bottles and jars may be made of clear or brown glass or polyethylene with necks shaped to receive glass stopper or a screw cap made of metal or plastic material.

  Deviation: Sampling personnel uses clear or amber glass with necks shaped to receive rubber stoppers. Glass stoppers were used at one time but resulted in broken sample bottles during the removal of the glass stoppers from the glass bottles.

- Requirement: Stopper and label bottles immediately after taking the samples and deliver them to the laboratory.

  Deviation: Sampling personnel screws on the bottle cap after the sample has been collected. Because of the alkalinity of the tank waste sample labels will not stay on bottles after samples are collected. Therefore, sample bottles are etched with the sample numbers before the samples are collected. The samples are shipped to the laboratory as soon as resources are available, within three days of sample collection.

- Requirement: Select wiping cloths so that lint is not introduced, contaminating the samples.

  Deviation: Sampling personnel uses damp cotton towels to wipe down sample bottles after the sample bottles have been capped. The intent is to remove any waste that may have been deposited on the bottle during the sampling event to minimize contamination and personnel exposure.

- Requirement: To prevent the loss of the liquid during shipment and to protect against moisture and dust, cover the closure of the glass bottle with plastic caps, which have been swelled in water, wiped dry, placed over the top of the stoppered bottle, and allowed to shrink tightly in place. Screw-top bottles are recommended. The cap should be lined with material inert to the sample. The screw caps should be secured by use of adhesive tape or similar material.

Deviation: Sampling personnel uses screw caps and 4-mil plastic bags. The cap is Teflon-lined which is inert to the sample. The sample bottle is placed inside a plastic bag, which is placed inside a steel pig (or sample pig). The steel pig is placed inside a shipping pig. The screw cap is not secured with adhesive tape. Securing the sample bottle caps with tape would present the laboratory with difficulty of removing the caps remotely (in the hot cell). If the sample leaks from the sample bottle, it is trapped in the plastic bag. The custody seal is placed on the shipping pig per procedure.

- Requirement: All sampling apparatus and closures shall be clean, dry, free of contaminants, and constructed of materials that are inert to the product to be sampled.

Deviation: Prior to sampling, sampling equipment such as the sample holder shall be cleaned using a procedure that is consistent with SW-846, *Test Methods for the Evaluation of Solid Waste, Physical/Chemical Methods*, sampling equipment cleaning protocol.~~The weldments are wiped down at the fabrication shop but are stored in open bins inside the warehouse. The stoppers are received in bags and are inspected for dirt and wiped down. By training, visual inspection is made of the sampling equipment to verify that the equipment does not contain any gross contamination. If any is found, the equipment is either replaced or wiped down.~~ The bottles with screw caps are washed and certified and are not opened until at the time of the sampling event. The bottles are opened when the previous ~~last~~ sample is completed so that only one bottle is opened at the time of sampling to insert the rubber stopper from the sample holder. The ~~weldments,~~ stopper~~,~~ and bottles are constructed from materials that are inert to the product to be sampled.

~~3.8.1.4~~3.10.1.4 Process Condensate Sample Collection

Process condensate samples, when performed at 242-A Evaporator instead of LERF, are taken from the process condensate transfer line in the condenser room of the 242-A Building. Grab sampling is performed during the campaign at the SAMP-RC3-2 sampler or other sample port by opening a valve and allowing a small volume of process condensate to flush valve and line/piping. The required volume of sample is collected into labeled bottles and chain of custody is maintained. Samples of process condensate are collected in a manner to produce a representative sample. Testing methods are used consistent with SW-846 procedures ~~(EPA 1986)~~ as listed in Table 3.4~~documented in sampling procedures, which are maintained and implemented by unit personnel~~.

~~3.8.1.5~~3.10.1.5 Process Condensate Sampling Quality Assurance and Quality Control

For information on process condensate sample collection, including the number and types of sample bottles, sampling QA/QC, etc., refer to the Permit, Part III, LERF and 200 Area ETF unit-specific conditions and Chapter 3.0, Waste Analysis Plan.

~~3.8.2~~3.10.2 Analyte Selection and Rationale

The DQO analysis for the 242-A Evaporator examined the data needs for sampling the candidate feed tanks and determined that the analyses in Table 3.4~~5~~ should be conducted to satisfy WAC 173-303-300 requirements. Table 3.4~~5~~ also contains the rationale for these parameters being selected. Section 3.7~~6~~ provides additional detail on the rationale.

For information on process condensate sample analyte selection and rationale, refer to the Permit, Part III, LERF and 200 Area ETF unit-specific conditions and Chapter 3.0, Waste Analysis Plan.

Table 3.34. Candidate Feed Tank Sample Point Selection.

Number of samples	Location of sample points
~~Two samples~~	~~One sample taken from the upper half of the waste from one riser and the other sample taken from the lower half of the waste from another riser.~~
~~Three samples~~	~~Two Samples taken from one riser (one from the top half and the other from the bottom half of the waste) and one sample from another riser~~
Four samples, no layering suspected	One surface sample to address the potential for a separable organic layer and three subsurface samples: one sample each obtained from the upper third (near the half way point), one sample in the middle third and one sample in the lower third (near the lower limit) of the supernatant layer.~~Two samples taken from each of two separate risers. One sample is to be taken from the top half of the waste and one from the bottom half of the waste from each of the selected risers.~~
Four samples, layering suspected	One sample taken from the waste surface to address the potential for a separable organic layer. Three samples targeting the expected midpoint of the suspected layers. If more than three layers are suspected, The larger layers have sampling priority.
~~Five samples~~	~~Same as for four samples except one sample from either the top or bottom half of the tank will be taken from a third riser~~

Table 3.45. Analytes for Candidate Feed Tanks

Parameter	Test technique	Analyte (CAS#)	Rationale
Exotherm	Differential scanning calorimeter	Temperature and energy	Verify the waste will not undergo an exothermic reaction (Section 3.96.1.12).
Compatibility test	Mixing and compatibility study	Visual physical changes	Verify the waste is chemically compatible (Section 3.69.1.23).
Separable Organics	Visual Inspection	Visual Inspection	Process control information needed to evaluate campaign parameters and status.(Section 3.9.1.3)
	TGA OR Carbon coulometric detector	Percent Water OR Total carbon, Total Inorganic carbon	Verify surface sample is not a single layer of homogeneous liquid (Section 3.9.1.3)
Organic compounds	Gas chromatograph/ mass spectrometer	Acetone (67-64-1), 1-Butanol (71-36-3), 2~~1~~-Butoxyethanol (111-76-2), 2~~1~~-Butanone (78-93-3), Tri-butyl phosphate (126-73-8)	Used in calculations to verify that vessel vent emissions will not exceed regulatory limits and to prevent compatibility problems with the LERF liner (Section 3.69.1.4).
	Carbon coulometric detector	Total carbon, Total inorganic carbon	Used in calculations to verify that vessel vent emissions will not exceed regulatory limits and to prevent compatibility problems with the LERF liner (Section 3.96.1.4).

Parameter	Test technique	Analyte (CAS#)	Rationale
Ammonia	Ion selective electrode or Ion chromatography	Ammonia (7664-41-7)	To prevent compatibility problems with the LERF liner (Section 3.9~~6~~.1.4~~5.1.3~~).
CAS#=Chemical Abstract Service Number LERF=Liquid Effluent Retention Facility TGA = Thermogravimetric analysis			

~~3.9~~3.11 ANALYTICAL METHODS AND QUALITY ASSURANCE AND QUALITY CONTROL

This section provides information on the analytical methods and QA/QC for candidate feed tank samples, including discussions concerning laboratory selection and analytical methods. For information on process condensate analytical methods and QA/QC, refer to the Permit, Part III, LERF and 200 Area ETF unit-specific conditions and Chapter 3.0, Waste Analysis Plan.

~~3.9.1~~3.11.1 Laboratory Selection

Because of the nature of the samples, it is anticipated that candidate feed tank waste sample testing ~~analyses~~ will be conducted at the 222-S Laboratory Complex. Other laboratories at the Hanford Facility could be used provided they are equipped to handle such samples. Laboratory selection depends on availability, analytical needs, and the ability of the laboratory to meet Permit and quality assurance requirements.

~~3.9.2~~3.11.2 Analytical Methods

The analytical methods that must be followed for ~~RCRA sampling of the~~ testing candidate feed tanks are included in Table 3.5~~6~~. Performance-based specifications rather than procedure-based specifications are used for determining the appropriate analytical methods. This allows for necessary adjustments to the methods for Hanford Facility-specific issues; related to high radioactivity of the sample matrix, while ensuring acceptable data quality. Because of the high radioactivity, the analytical method will in some cases deviate from those in national standards such as *Test Methods For Evaluating Solid Waste*, SW-846 (EPA 1986) and *Standard Methods for the Examination of Water and Waste Water* (AWWA 2005~~1989~~).

~~3.9.3~~3.11.3 Laboratory Quality Assurance and Quality Control

Candidate feed tank waste testing ~~analytical~~ and sampling methods conducted as part of this plan must meet the data quality requirements contained in Table 3.6~~7~~ to be considered acceptable for decision-making purposes. Quality control check samples (i.e., calibration samples and/or laboratory control samples) generally are performed once per sample event (e.g., once for all samples from one candidate feed tank). Matrix spike and duplicate analysis are performed once per sample event for all methods except differential scanning calorimetry (DSC). A duplicate analysis is performed for DSC analysis to determine method precision. Accuracy for DSC is evaluated by using the laboratory control standard.

The QA/QC program for sampling and analysis related to this unit must, at a minimum, comply with the applicable ~~Hanford Site standard requirements and the~~ regulatory requirements. All analytical data will be defensible and will be traceable to specific, related quality control samples and calibrations.

Table 3.5~~6~~. Analytical Methods for Candidate Feed Tank Stream Analytes.

Category	Analyte	Performance-based analytical methods	~~Basis for~~ ~~m~~Method	~~Equipment/Method~~
Organics	Acetone ~~2~~1-Butanol 2-Butanone	Purge and trap and GC/MS (VOA)	SW-846 Method 8260	~~A diluted sample is purged with nitrogen or helium and organic vapors are trapped in an adsorbent column. The column is desorbed at 180°C into a 30-m long wide- or narrow-bore capillary column. The GC column is heated/desorbed into an MS for analysis.~~

Category	Analyte	Performance-based analytical methods	~~Basis for~~ ~~m~~Method	~~Equipment/Method~~
	2-Butoxyethanol Tri-butyl Phosphate	Solvent extraction and GC/MS (semi-VOA)	SW-846 Method 3520B and 8270A	~~A diluted sample is adjusted to pH <2 (pH <6 in some cases) using sulfuric acid solution. The sample is placed in a continuous liquid-liquid extractor using methylene chloride as the extractant. The extractant is placed in an evaporator and volume is reduced. The extractant is injected into a GC/MS for analysis.~~
Inorganic	Ammonia	Ion selective electrode and Micro-distillation Ion Chromatography	AWWA Method 4500-NH3 and EPA method 300.7	~~The sample is preserved by the addition of hydrochloric acid solution to pH <2. For analysis, a diluted sample is made alkaline by sodium hydroxide solution. The ammonia is measured by an ammonia gas sensing electrode. A standard ammonium chloride solution is added and measured by the electrode in two stages. Based on the three readings, an ammonia concentration is calculated.~~
Other	Exotherm	Differential scanning calorimeter	~~N/A~~A sample is placed in the DSC unit and heated to 500° C (932° F). The differential heat flow between the sample and a reference pan is monitored by thermocouples.	~~A sample is placed in the DSC unit and heated to 500° C. The differential heat flow between the sample and a reference pan is monitored by thermocouples. A duplicate sample is run on the equipment.~~
	Mixing and compatibility study	Lab specific	~~N/A~~Solution from each sample are mixed and visually checked for gas evolution, heat generation, precipitation, dissolution of solids, color change, clarity, and any other observable characteristics.	~~Solution from each sample are mixed and visually checked for gas evolution, heat generation, precipitation, dissolution of solids, color change, clarity, and any other observable characteristics.~~
	Separable Organics	TGA OR Carbon coulometric detector	A small subsample (typically about 20 mg) is heated to approximately 500° C (932° F). The percent weight loss in the boiling range of water is reported as sample percent water. OR Coulometry: ASTM 5310	

Category	Analyte	Performance-based analytical methods	~~Basis for~~ ~~m~~Method	~~Equipment/Method~~
	Total carbon	Combustion with IC_T/C_T~~TOC~~ coulometric detection OR Persulfate oxidation with IC_T/TOC coulometric detection	Combustion and persulfate treatment: AWWA Method 5310 Coulometry: ASTM 5310~~D4129~~ ~~(AWWA approval pending)~~	~~A diluted sample is injected into a furnace heated to 800°C while purged with oxygen. The furnace converts carbon to carbon dioxide, which is carried by the oxygen. The gas sample passes through adsorbent columns to remove acid vapors, sulfur oxides and nitrogen oxides. The carbon dioxide is absorbed in an organic solution and measured with a coulometric carbon analyzer.~~ ~~OR:~~ ~~A diluted sample is acidified with sulfuric acid, converting inorganic carbon to carbon dioxide. The sample purged with oxygen, stripping the carbon dioxide. Then, persulfate is added to the sample to oxidize the organic carbon. The sample is again acidified with sulfuric acid and purged with oxygen. The gas samples from both steps pass through an adsorbent column to remove acid vapors, sulfur oxides and nitrogen oxides. The carbon dioxide is absorbed in an organic solution and measured with a coulometric carbon analyzer.~~
	Total Inorganic Carbon	Acidification with IC_T/TOC coulometric detection	Acidification: AWWA Method 5310. Coulometry: ASTM 5310~~D4129~~ ~~(AWWA approval pending)~~ ~~GC/MS—gas chromatography/mass spectrometry~~ ~~VOA—volatile organic analysis~~ ~~IC_T—total inorganic carbon~~ ~~TOC—total organic carbon~~	~~A diluted sample is acidified with sulfuric acid/sulfamic acid, converting inorganic carbon to carbon dioxide. The sample purged with oxygen, stripping the carbon dioxide. The gas sample passes through scrubbers to remove acid vapors, sulfur oxides and nitrogen oxides. The carbon dioxide is absorbed in an organic solution and measured with a coulometric carbon analyzer.~~

ASTM=American Society of Testing and Materials
AWWA=American Water Works Association
GC/MS=Gas Chromatograph/Mass Spectrometer
IC_T= Total Inorganic Carbon
TGA= Thermogravimetric analysis
TOC=Total Organic Carbon
VOA= Volatile Organic Analysis

Table 3.6~~7~~. Quality Assurance Requirements for Candidate Feed Tank Stream Analytes

Category	Analyte	Estimated quantitation limit (matrix specific)	Precision (RPD between duplicates), %	Accuracy (recovery of matrix spike[~~1~~]), %	Action level [~~2~~1]
Organics	Acetone	28 mg/L	<25	40-110	> 87 mg/L[~~3~~2]
	1-Butanol	20 mg/L	<25	30-110	> 226 mg/L[~~3~~2]
	2-Butoxyethanol	30 mg/L	<25	30-110	> 95.2 mg/L[~~3~~2]
	2-Butanone (methyl ethyl ketone)	18 mg/L	<25	40-110	> 58 mg/L[~~3~~2]
	Tri-butyl phosphate	50 mg/L	<25	40-125	> 1.015E+4 mg/L[~~3~~2]
Inorganic	Ammonia	400 ~~µ~~ug/ml	<20	75-125	> 50,000 mg/L
Other	Exotherm	None	<20[~~4~~3]	Not applicable [~~4~~3]	< 168 °C or absolute value of ratio of exotherm to endotherm > 1
	Mixing and compatibility study	Not applicable	Not Applicable	Not Applicable	Visual: unusual changes in color, temperature, clarity, etc.
	Total carbon	25 ~~µ~~ug/mL	<20	75-125	C_T-IC_T > 87 mg/L
	Total inorganic carbon	25 ~~µ~~ug/mL	<20	75-125	C_T-IC_T > 87 mg/L

~~Reserved.~~

1=In deriving the action levels, the ratio of feed flow rate to slurry flow rate (R) is assumed to be 2.

2=For organic species limits, sum of the fractions rule apply (refer Tables 3.2~~ and 3.3~~). Total carbon and total inorganic carbon are not included in the summation of organics.

3=Precision for this method is evaluated by the deviation between sample (unspiked) and sample replicate. Accuracy for DSC is evaluated by using the laboratory control standard.

RPD - relative percent difference C_T - total carbon IC_T - total inorganic carbon
~~M~~mg/L - milligram per liter ~~µ~~ug/L - microgram per liter

~~3.10~~3.12 REFERENCES

ASTM, 1986, *Standard Practice for Sampling Industrial Chemicals*, ASTM E300-86, American Society for Testing and Materials, West Conshohocken, Pennsylvania, updated periodically.

ASTM, 1988, *Total and Organic Carbon in Water by High Temperature Oxidation and Coulometric Detection*, ASTM D4129-88, American Society for Testing and Materials, West Conshohocken, Pennsylvania, updated periodically.

AWWA, 2005~~1989~~, *Standard Methods for the Examination of Water and Wastewater*, 17th edition, American Public Health Association/America Water Works Association, Washington, D.C., updated periodically.

Banning D.L., 2009~~2005~~, *242-A Evaporator Data Quality Objectives (DQO)*, SD-WM-DQO-014 (most current revision), CH2M HILL Hanford Group, Richland Washington.

~~DOE/RL, 1988, *Hanford Facility Dangerous Waste Part A Permit Application*, DOE/RL-88-21, U.S. Department of Energy Richland Field Office, Richland, Washington, updated periodically.~~

~~Ecology, 2004, *Hanford Facility Resource Conservation and Recovery Act Permit for the Treatment, Storage, and Disposal of Dangerous Waste,* Permit Number WA7 89000 8967, Washington State Department of Ecology, Olympia, Washington and U.S. Environmental Protection Agency Region 10, Seattle Washington.~~

~~Ecology, 2004, *Hanford Facility Resource Conservation and Recovery Act Permit for the Treatment, Storage, and Disposal of Dangerous Waste, Permit Number WA7 89000 8967, Part III, Liquid Effluent Retention Facility and 200 Area Effluent Treatment Facility,* Washington State Department of Ecology, Olympia, Washington and U.S. Environmental Protection Agency Region 10, Seattle Washington.~~

~~Ecology, EPA, and DOE, 1996, *Hanford Federal Facility Agreement and Consent Order*, as amended, Washington State Department of Ecology, Olympia, Washington, U.S. Environmental Protection Agency Region 10, Seattle, Washington, and U.S. Department of Energy Richland Operations Office, Richland, Washington.~~

EPA, 1986, *Test Methods for Evaluating Solid Waste Physical/Chemical Methods*, SW-846, U.S. Environmental Protection Agency, Washington, D.C., updated periodically.

EPA, 1994a, *Waste Analysis at Facilities that Generate, Treat, Store, and Dispose of Hazardous Wastes, A Guidance Manual*, PB94-963603, OSWER 9938.4-03, U.S. Environmental Protection Agency, Washington D.C.

~~EPA, 2001, *Data Quality Objectives Decision Error Feasibility Trials*, EPA QA/G-4D, Version 4.0, U.S. Environmental Protection Agency, Washington D.C.~~

~~Knight M. A., 2004, *Tank Farm waste Compatibility Program*, HNF-SD-WM-OCD-015 (most current revision) CH2M HILL Hanford Group, Richland Washington.~~

Chapter 3.0 **Waste Analysis Plan**

3.0 WASTE ANALYSIS PLAN 3.1
3.1 INTRODUCTION 3.1
3.2 PURPOSE 3.1
3.3 SCOPE 3.1
3.4 242-A EVAPORATOR PROCESS DESCRIPTION 3.2
3.5 WASTE IDENTIFICATION 3.2
3.5.1 General Constituent Description 3.3
3.5.2 Classification of Waste 3.5
3.5.3 Dangerous Waste Numbers 3.5
3.6 WASTE ACCEPTANCE PROCESS 3.5
3.7 CANDIDATE FEED TANK WASTE ACCEPTANCE PROCESS 3.6
3.7.1 Selecting Candidate Feed Tanks 3.7
3.7.2 Candidate Feed Tank Sampling 3.7
3.7.3 Assessing Candidate Feed Tank Sampling and Analysis Results 3.7
3.8 SAMPLING PROCESS FOR DANGEROUS WASTES GENERATED FROM TREATMENT 3.8
3.8.1 Determining the Number of Process Condensate Samples 3.8
3.8.2 Assessing Process Condensate Sampling and Analysis Results 3.8
3.9 242-A EVAPORATOR WASTE ACCEPTANCE CRITERIA 3.8
3.9.1 Candidate Feed Tank Waste Acceptance Criteria 3.9
3.9.1.1 Exothermic Reactions 3.9
3.9.1.2 Compatibility 3.10
3.9.1.3 Separable Organics 3.10
3.9.1.4 Organic Constituents 3.10
3.9.2 Process Condensate Waste Acceptance Criteria 3.11
3.10 SAMPLE COLLECTION AND ANALYSIS 3.12
3.10.1 Sample Collection 3.12
3.10.1.1 Candidate Feed Tank Sample Collection 3.12
3.10.1.2 Candidate Feed Tank Sampling Quality Assurance and Quality Control 3.12
3.10.1.3 Deviations from Specified Sampling Practices 3.13
3.10.1.4 Process Condensate Sample Collection 3.14
3.10.1.5 Process Condensate Sampling Quality Assurance and Quality Control 3.14
3.10.2 Analyte Selection and Rationale 3.14
3.11 ANALYTICAL METHODS AND QUALITY ASSURANCE AND QUALITY CONTROL 3.15
3.11.1 Laboratory Selection 3.16
3.11.2 Analytical Methods 3.16
3.11.3 Laboratory Quality Assurance and Quality Control 3.16
3.12 REFERENCES 3.18

Figures

Figure 3.1. 242-A Evaporator Simplified Schematic 3.4
Figure 3.2. 242-A Evaporator Waste Acceptance Process 3.9

Tables

Table 3.1. Waste Designation for Process Condensate. 3.55
Table 3.2. Candidate Feed Tank Limits for Vessel Vent Organic Discharge. 3.119
Table 3.3. Candidate Feed Tank Sample Point Selection. 3.155
Table 3.4. Analytes for Candidate Feed Tanks 3.155
Table 3.5. Analytical Methods for Candidate Feed Tank Stream Analytes. 3.17
Table 3.6. Quality Assurance Requirements for Candidate Feed Tank Stream Analytes 3.188

GLOSSARY

ASTM	American Society for Testing and Materials
AWWA	American Water Works Association
CAS#	Chemical Abstract Service Number
CFR	Code of Federal Regulations
C_T	total carbon
DOE	U. S. Department of Energy
DQO	data quality objective
DSC	differential scanning calorimeter
DST	Double-Shell Tanks
Ecology	Washington State Department of Ecology
EPA	U.S. Environmental Protection Agency
ETF	200 Area Effluent Treatment Facility
GC	gas chromatography
HDPE	high-density polyethylene
IC_T	total inorganic carbon
IR	infrared
LERF	Liquid Effluent Retention Facility
MS	mass spectrometry
N/A	not applicable
QA	quality assurance
QC	quality control
RCRA	*Resource Conservation and Recovery Act of 1976*
RPD	relative percent difference
TGA	Thermogravimetric analysis
TOC	total organic carbon
TSD	treatment, storage, and/or disposal
VOA	volatile organic analysis
WAC	Washington Administrative Code
WAP	waste analysis plan

METRIC CONVERSION CHART

Into metric units			Out of metric units		
If you know	Multiply by	To get	If you know	Multiply by	To get
Length			**Length**		
inches	25.40	millimeters	millimeters	0.0393	inches
inches	2.54	centimeters	centimeters	0.393	inches
feet	0.3048	meters	meters	3.2808	feet
yards	0.914	meters	meters	1.09	yards
miles	1.609	kilometers	kilometers	0.62	miles
Area			**Area**		
square inches	6.4516	square centimeters	square centimeters	0.155	square inches
square feet	0.092	square meters	square meters	10.7639	square feet
square yards	0.836	square meters	square meters	1.20	square yards
square miles	2.59	square kilometers	square kilometers	0.39	square miles
acres	0.404	hectares	hectares	2.471	acres
Mass (weight)			**Mass (weight)**		
ounces	28.35	grams	grams	0.0352	ounces
pounds	0.453	kilograms	kilograms	2.2046	pounds
short ton	0.907	metric ton	metric ton	1.10	short ton
Volume			**Volume**		
fluid ounces	29.57	milliliters	milliliters	0.03	fluid ounces
quarts	0.95	liters	liters	1.057	quarts
gallons	3.79	liters	liters	0.26	gallons
cubic feet	0.03	cubic meters	cubic meters	35.3147	cubic feet
cubic yards	0.76456	cubic meters	cubic meters	1.308	cubic yards
Temperature			**Temperature**		
Fahrenheit	subtract 32 then multiply by 5/9ths	Celsius	Celsius	multiply by 9/5ths, then add 32	Fahrenheit
Force			**Force**		
pounds per square inch	6.895	kilopascals	kilopascals	0.14504	pounds per square inch

Source: *Engineering Unit Conversions*, M. R. Lindeburg, P.E., Second Ed., 1990, Professional Publications, Inc., Belmont, California.

3.0 WASTE ANALYSIS PLAN

3.1 INTRODUCTION

This waste analysis plan (WAP) addresses analysis necessary to manage the waste at the 242-A Evaporator according to requirements included in the *Hanford Facility Resource Conservation and Recovery Act, Dangerous Waste Portion, Permit,* WA7 89000 8967 (Permit), and Washington Administrative Code (WAC), Chapter 173-303.

Modifications of the WAP require modifications of the Permit. Permit modifications are discussed in Permit Condition I.C and WAC 173-303-830.

Where information regarding treatment, management, and disposal of the radioactive source byproduct material and/or special nuclear components of mixed waste (as defined by the Atomic Energy Act of 1954 as amended) has been incorporated into this document, it is not incorporated for the purpose of regulating the radiation hazards of such components under the authority of this Permit or chapter 70.105 RCW and its implementing regulations but is provided for information purposes only.

3.2 PURPOSE

The purpose of the WAP is to ensure waste at the 242-A Evaporator is managed properly in accordance with WAC 173-303-300. To ensure the waste analysis is comprehensive, a data quality objectives (DQO) analysis was performed on all streams at the 242-A Evaporator. Sampling and analysis identified in the DQO analysis related to meeting RCRA requirements are included as an integral part of this WAP.

Regulatory and safety issues are addressed in the WAP by establishing boundary conditions for waste to be received and treated at the 242-A Evaporator. The boundary conditions are set by establishing limits for items such as reactivity, waste compatibility, and control of vessel vent organic emissions. Waste that exceeds the boundary conditions would not be acceptable for processing without further actions, such as blending with other waste. In some cases, individual waste streams not acceptable at the 242-A Evaporator may be pre-treated or blended with other compatible waste streams to meet the 242-A waste acceptance criteria. Such pre-treatment or blending, however, would occur at dangerous waste management unit(s) other than the 242-A Evaporator.

3.3 SCOPE

This WAP discusses sampling and analysis of waste to determine the acceptability of the waste in 'candidate feed tank(s)' for processing at the 242-A Evaporator and characterization of dangerous waste streams generated from the treatment process. A 'candidate feed tank(s)' means one or more tanks in the Double Shell Tank (DST) System, and is typically not the feed tank (241-AW-102). Refer to additional discussion in Section 3.5 for 'candidate feed tanks.'

- **Candidate Feed Tank Acceptance Process** – This process determines the acceptability of DST System waste at the 242-A Evaporator operating capabilities prior to acceptance of the waste at the 242-A Evaporator for treatment. Refer to Section 3.7.
- **Dangerous waste generated from the treatment process** – Sampling and analysis is used to characterize the process condensate waste stream generated from the treatment process. The process condensate is transferred to the Liquid Effluent Retention Facility (LERF). Sampling can be performed either at the 242-A Evaporator or at LERF. A discussion of process condensate sampling at the 242-A Evaporator is included in this WAP, while discussion of process condensate sampling at

LERF is included in the Permit, Part III, Liquid Effluent Retention Facility and 200 Area Effluent Treatment Facility, *Waste Analysis Plan*. Refer to Section 3.8.

- Samples of other 242-A Evaporator waste streams, such as steam condensate, cooling water, and 242-A-81 back flush water, are taken as required for process control but are excluded from this plan because these streams have been previously characterized and determined to be nondangerous waste streams.

3.4 242-A EVAPORATOR PROCESS DESCRIPTION

The 242-A Evaporator, located in the 200 East Area of the Hanford Site, separates the incoming waste from the DST System into two mixed waste aqueous streams the slurry and the process condensate as described in the following paragraph. The 242-A Evaporator also generates utility waste streams such as cooling water and steam condensate, which do not designate as dangerous waste. Description of the waste processed by the 242-A Evaporator is described in Section 3.4.

The 242-A Evaporator process uses a conventional forced-circulation, vacuum evaporation system to concentrate mixed waste solutions from the DST System tanks. The incoming stream is separated by evaporation into two liquid streams: a concentrated slurry stream and a process condensate stream. The slurry contains the majority of the radionuclides and inorganic constituents. After the slurry is concentrated to the desired amount, the slurry stream is pumped back to the DST System and stored for further treatment. Vapor from the evaporation process is condensed, producing process condensate. The process condensate is transferred to LERF for storage and treatment. Vacuum for the evaporator vessel is provided by two steam jet ejectors. The 242-A Evaporator vessel vent stream is filtered and discharged through an exhaust stack. Figure 3.1 shows a simplified schematic of the 242-A Evaporator process. A more detailed description of the 242-A Evaporator process is provided in Chapter 4.0.

3.5 WASTE IDENTIFICATION

All of the waste accepted by the 242-A Evaporator is stored in the DST System. Waste characterization for a campaign is based on sampling and analysis results and/or process knowledge. Based on this information, certain DST System tanks are selected as 'candidate feed tanks' for processing in the 242-A Evaporator. The contents of these candidate feed tanks are subjected to closer scrutiny and evaluated against 242-A Evaporator waste acceptance criteria before the final tank selection is made. To meet waste acceptance criteria, the contents of several tanks could be blended together in the feed tank (241-AW-102) prior to processing. The 241-AW-102 tank is not typically considered a candidate feed tank but can become a candidate feel tank if waste is staged and sampling is performed there. Selection of candidate feed tank(s) for a campaign is outside the scope of this WAP and based on operational needs of the DST system.

Process knowledge is used to determine whether actions to add waste to a tank are acceptable after a candidate feed tank(s) or the 241-AW-102 feed tank has been isolated for a campaign. Operational and maintenance activities can occur at the 242-A Evaporator or the DST System which results in the introduction of operational and maintenance additions into a candidate feed tank(s) or the 241-AW-102 feed tank. In most cases, operational and maintenance waste solution additions are anticipated. Prior to anticipated activities occurring, documentation will be placed in the Hanford Facility Operating Record, 242-A Evaporator unit-specific portion, to show waste acceptance criteria will still be met. The calculation(s) will use, as appropriate, candidate feed tank sampling and analysis results for the proposed campaign, candidate feed tank sampling and analysis results from the previous campaign for waste residing in the 241-AW-102 feed tank, coupled with information about the type and quantity of solutions to be introduced into the isolated waste. When the operational and maintenance waste solution addition occurs

and is unanticipated, documentation will be prepared after the event and prior to processing and will be placed in the Hanford Facility Operating Record, 242-A Evaporator unit-specific portion, in a similar fashion to the anticipated event.

Anticipated or unanticipated water additions to isolated candidate feed tank(s) or the 241-AW-102 feed tank do not require documentation. Water additions will not affect whether the waste acceptance criteria will be met.

3.5.1 General Constituent Description

The only waste stream processed at the 242-A Evaporator is the DST System waste stream. The mixed waste is an aqueous solution containing dissolved inorganic salts such as sodium, potassium, aluminum, hydroxides, nitrates, and nitrites. The mixed waste in some tanks has detectable levels of heavy metals such as lead, chromium, and cadmium. The radionuclide content includes fission products such as Sr-90 and Cs-137, and actinide series elements such as uranium and plutonium. Small quantities of ammonia and organics, such as acetone, butanol, and tri-butyl phosphate, could be present. Waste received in the DST System has been chemically adjusted to ensure the waste is compatible with materials used for construction of the waste tanks and the 242-A Evaporator. The physical consistency of the waste in the DST System ranges from liquid supernate to thick sludge. Waste fed to the 242-A Evaporator is supernate taken from the DST System; the sludge is not processed through the 242-A Evaporator.

The slurry, which results from treatment of DST System waste in the 242-A Evaporator, is an aqueous solution containing the same components as the feed stream with increased concentrations of non-volatile organic and inorganic constituents. The slurry may also contain solids precipitated due to the liquid volume reduction. Most of the volatile constituents in the feed are separated into the process condensate. The process condensate, a mixed waste, is a dilute aqueous solution with ammonia, volatile organics, and trace quantities of non-volatile constituents.

Figure 3.1. 242-A Evaporator Simplified Schematic

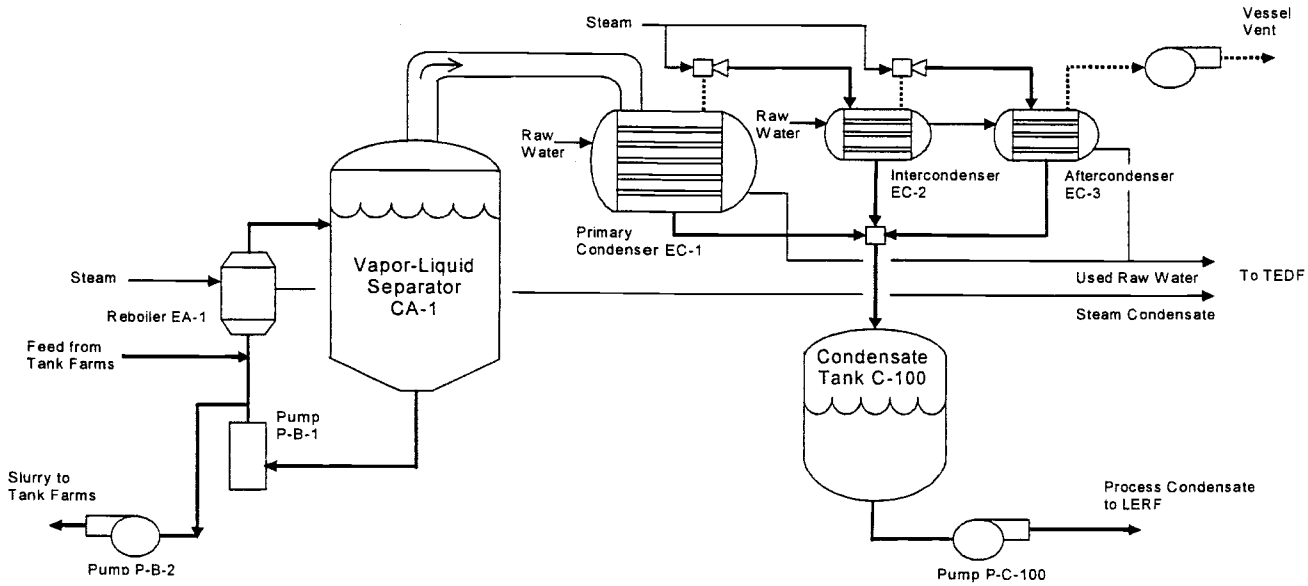

3.5.2 Classification of Waste

The waste processed at the 242-A Evaporator is classified as a mixed waste because it contains a radioactive component and a chemical component that designates as a dangerous waste. The waste processed is designated and assigned dangerous waste codes for waste stored in the DST System as follows.

- Waste generated from the evaporation treatment process includes slurry and process condensate. The concentrated slurry and process condensate are mixed waste since they are derived from the treatment of the DST System listed dangerous waste due to waste codes F001 through F005. The two waste streams may also exhibit one or more dangerous waste characteristics (WAC 173-303-090).

- Other 242-A Evaporator waste streams do not contact mixed waste solutions, such as cooling water and steam condensate. These waste streams are not discussed in this WAP because these streams do not designate as dangerous waste under WAC 173-303. Any waste sampling and analysis for purposes of designation would be conducted pursuant to WAC 173-303-170, outside the scope of this Permit.

3.5.3 Dangerous Waste Numbers

The 242-A Evaporator is specifically designed to accept DST System waste directly from feed tank 241-AW-102. Waste acceptable for transfer to the 242-A Evaporator could be assigned any of the dangerous waste numbers found in Chapter 1.0, Part A, Form (latest Revision). These numbers are identical to the ones in the Part A, Form (latest Revision) for the DST System. Process knowledge and historical data indicate that the slurry stream returning to the DST System contains the same dangerous waste constituents as the waste feed, so the same dangerous waste numbers are applicable to the feed and slurry.

Table 3.1 lists the dangerous waste numbers assigned to the process condensate. The process condensate is designated with the dangerous waste numbers F001 to F005 because the process condensate is derived from treatment of DST System waste assigned these numbers.

Table 3.1. Waste Designation for Process Condensate.

Waste number	Characteristic/Source	Basis for designation
F001	Spent halogenated solvents	Derived from F001 waste
F002	Spent halogenated solvents	Derived from F002 waste
F003	Spent nonhalogenated solvents	Derived from F003 waste
F004	Spent nonhalogenated solvents	Derived from F004 waste
F005	Spent nonhalogenated solvents	Derived from F005 waste
F039	Multi-source leachate from waste disposal operations	Future receipt of waste with the F039 number, derived from F001 through F005.

The slurry waste stream generated at the 242-A Evaporator is also a mixed waste, but the slurry waste is not stored at the 242-A Evaporator, as it is transferred back to the DST system, and therefore not subject to the WAP. In addition to the F001 –F005 dangerous waste numbers, the slurry waste may designate for one or more applicable characteristic dangerous waste numbers.

3.6 WASTE ACCEPTANCE PROCESS

This section describes the actions performed before every campaign to determine candidate feed tank waste is acceptable for treatment at the 242-A Evaporator. Because initial acceptance of the process condensate

at LERF is based on completion of a waste stream profile using candidate feed tank data, LERF waste acceptance criteria are also considered in the selection of a candidate feed tank. DST wastes are not accepted for treatment in the 242-A Evaporator unless the 242-A Evaporator waste acceptance criteria are satisfied, and the process condensate projected to be generated via treatment in the 242-A Evaporator satisfies LERF waste acceptance criteria.

The 242-A operates as a batch treatment system. Feed for each evaporator campaign must follow this waste acceptance process for waste verification and waste acceptance. Therefore, there is no need to periodically re-evaluate any waste stream.

Evaluation of data produced from the sampling and analysis of candidate feed tank waste for each campaign are documented in the campaign specific process control plan, process memo and associated engineering calculations, which are maintained in the Hanford Facility Operating Record, 242-A Evaporator, unit specific portion. Process control plans are prepared to describe and define the specific controls required for a planned campaign. Each process control plan includes the information described below:

- Waste Feed Description - describes the source, volume, and any potential mixing or blending data.
- Campaign Objectives – details the waste reduction volume estimates and specific gravities expected for each campaign.
- Candidate Feed Tank Sampling and Analysis Evaluation– describes the actual sampling and analysis data for each candidate feed tank for each campaign. This evaluation includes review of data to the 242-A Evaporator waste acceptance criteria, other health and safety controls beyond the scope of the Permit for operation of the 242-A Evaporator, and calculation of the expected process condensate constituent concentrations for review to the LERF waste acceptance criteria.
- Process Controls and Campaign Recommendations – describes the limits and conditions for each campaign based on the campaign objectives and candidate feed tank analytical data.

3.7 CANDIDATE FEED TANK WASTE ACCEPTANCE PROCESS

Once possible feed candidate tanks have been identified, the method for determining if the waste in a candidate feed tank is acceptable for processing is followed. This section describes the waste acceptance process.

The following activities are performed to determine if candidate waste feed will meet the 242-A Evaporator waste acceptance criteria.

- Perform a boil down study to evaluate the impacts of solids formation as specified in the Evaporator DQO (Banning 2009).
- Evaluate Potential for Energetics/Uncontrolled Chemical Reactions: There must be no exothermic reaction of waste constituents that occur below 168°C (335°F), and the ratio of exotherm-to-endotherm energy be less than 1.
- Evaluate Potential for Separable Organic Phase: Prior to operation of the evaporator, the absence of separable organics in the feed must be verified or managed to preclude transfer to the 242-A Evaporator.
- Calculate Process Condensate Ammonia and Organic Concentrations: Ammonia, and volatile organic concentrations are needed for the LERF waste profile sheet (refer to the Permit, Part III, LERF and 200 Area ETF, unit-specific conditions and Chapter 3.0, Waste Analysis Plan.)

3.7.1 Selecting Candidate Feed Tanks

For each 242-A Evaporator campaign, DST System tanks are selected as candidate feed tanks based on process knowledge of chemical properties with respect to waste acceptance criteria (Section 3.6.1). The initial determination of possible candidate feed tanks is outside the scope of this WAP and is based on operational needs of the DST system.

3.7.2 Candidate Feed Tank Sampling

After a candidate tank is selected, the waste in the tank is sampled and analyzed and the data evaluated to confirm waste acceptability. Every candidate feed tank is sampled and analyzed to confirm waste acceptability. Sampling of a candidate feed tank waste for treatment in the 242-A Evaporator is performed according to the requirements of this WAP. The WAP reflects the rationale for determining the number of samples in the DQO (Banning 2009). The waste is sampled in the DST System, prior to transfer and acceptance at the 242-A Evaporator.

Four (4) representative samples of aqueous candidate feed tank waste supernatant, from one tank riser, are required. These samples are adequate to ensure the resulting waste characterization data are of sufficient quality for the data's planned purposes. The data are compared to the 242-A Evaporator waste acceptance criteria, applied to the 242-A Evaporator Process Control Plan for purposes of predicting process condensate properties, and used for comparison to LERF waste acceptance criteria for liner compatibility. The rationale for this statement is that the estimates of the variability of DST System content wastes properties is sufficiently defined and consistent that four (4) samples are sufficient. No solid samples are collected.

The four (4) samples will be collected from the following depths. One (1) surface sample to address the possible existence of a separable organic layer and three (3) subsurface samples are obtained from each waste candidate feed tank. The depths of the subsurface samples are determined by the Permittees based on best professional judgment (based on Table 3.3). In the event multiple candidate feed tanks are identified, sampling can occur after wastes are blended. The identified candidate feed tanks coupled with process knowledge of the feed tank (241-AW-102) provide a representative set of data for determining waste acceptance in the 242-A Evaporator. This is due to the consistency in the type of feed waste and the source of the waste. Waste in candidate feed tanks must first be accepted into the DST System by meeting the corresponding DST System waste acceptance criteria. Waste management in the DST System results in supernatant that is relatively homogeneous within each tank recognizing some concentration gradients may exist vertically within each tank caused by the transfer history and limited mixing actions within the DST System. Lateral stratification is not expected.

3.7.3 Assessing Candidate Feed Tank Sampling and Analysis Results

Candidate feed tank sampling and analysis, in conjunction with the waste acceptance criteria in Section 3.9, are used to assess whether established limits (limits are defined in the 242 Evaporator DQO, Banning 2009 and Permit, Part III, LERF and 200 Area ETF, unit-specific conditions and Chapter 3.0, Waste Analysis Plan) would be exceeded. Based on the results, three possible options are implemented:

- The waste is acceptable for processing at the 242-A Evaporator without further actions.
- The waste is unacceptable for processing as a single batch, but is acceptable if blended with other waste to be processed or the waste can be pre-treated as necessary to fully satisfy the 242-A Evaporator waste acceptance criteria.
- The waste is unacceptable for processing, and no acceptable pre-treatment or blending options can be identified.

3.8 SAMPLING PROCESS FOR DANGEROUS WASTES GENERATED FROM TREATMENT

Two mixed waste streams are generated as the result of the 242-A Evaporator process: process condensate and concentrated waste slurry. Sampling of the concentrated waste slurry is not necessary under this WAP in order to return the waste back to the DST System.

Sampling of process condensate is required for confirmation that the waste meets the LERF waste acceptance criteria with respect to LERF liner compatibility. Depending on programmatic needs, this sampling can be performed at the 242-A Evaporator during a campaign or at LERF after the campaign is completed.

Before the start of a 242-A Evaporator campaign, the decision whether process condensate sampling will be performed at the 242-A Evaporator or at LERF is documented in the process control plan, which is maintained in the Hanford Facility Operating Record, 242-A Evaporator Unit specific portion. Planning for process condensate sampling at the 242-A Evaporator (i.e., number of samples, when samples are taken, etc.) is completed before starting the campaign. Sampling at LERF is beyond the scope of this WAP.

3.8.1 Determining the Number of Process Condensate Samples

The purpose of sampling the process condensate stream at the 242-A Evaporator is to confirm that the stream is acceptable for treatment at the ETF. Before starting a 242-A Evaporator campaign where sampling will be performed at the 242-A Evaporator instead of LERF, characterization of the process condensate will be developed based on process knowledge. Process knowledge includes previous documented process condensate analysis, estimated concentrations based on documented candidate feed tank sampling and analysis, etc. Sampling of the process condensate stream at the 242-A Evaporator is performed during the campaign to confirm the characterization. Sampling frequency is determined using the following equation:

> Number of process condensate = N + 1 samples required (per campaign). Where N is the number of candidate feed tanks to be processed during the campaign.

For example, a campaign processing waste from only one candidate feed tank would require two samples, while a campaign processing waste from three candidate feed tanks would require four samples. Sampling is spread approximately evenly through the campaign, allowing for operational events such as unexpected shutdowns and planned maintenance outages. This sample frequency represents a confirmation rate of about one sample every 5 to 8 days of processing. This is reasonable based on the relatively homogeneous tank waste feed and the more or less steady state of evaporator operations. Therefore, the process condensate waste stream should also be relatively homogeneous, and multiple samples are not necessary to document or account for waste stream variability. A minimum of two samples is taken to meet LERF waste acceptance criteria.

3.8.2 Assessing Process Condensate Sampling and Analysis Results

The process condensate sample and analysis results are assessed against the LERF waste acceptance criteria.

3.9 242-A EVAPORATOR WASTE ACCEPTANCE CRITERIA

Waste acceptance criteria for the 242-A Evaporator have been established from regulatory requirements, operating experience, previous sample analyses, and engineering calculations. Processing criteria are

maximum and/or minimum values of a waste analyte that, if exceeded, alert the operator that management of the waste requires further attention. The rationale for selecting a given analyte for inclusion in this WAP, as required by WAC 173-303-300, is indicated in this section for each test and/or analyte.

Additional analyses (such as specific gravity and radionuclide analysis) of the feed tanks, process condensate, and other streams are performed to ensure that the facility is operating within established parameters. This process control sampling and analysis is outside the scope of this plan because it is not used to assess compatibility of the waste with other waste and with the 242-A Evaporator tank systems.

Figure 3.2. 242-A Evaporator Waste Acceptance Process .

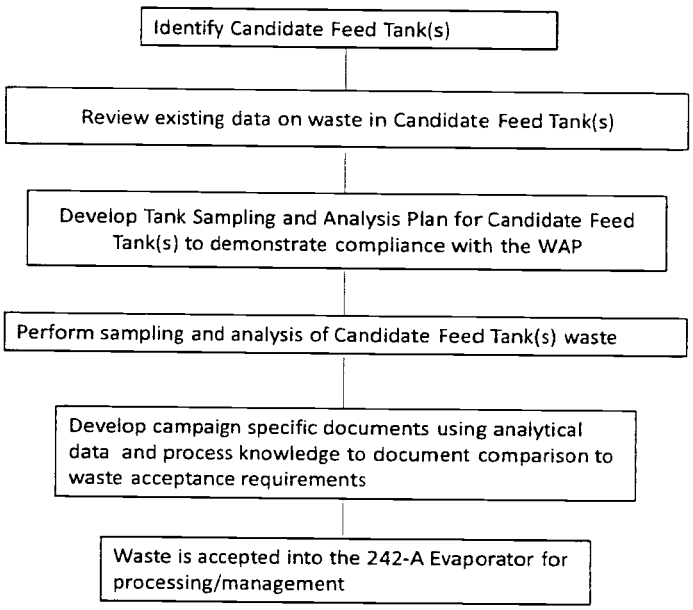

3.9.1 3.9.1 Candidate Feed Tank Waste Acceptance Criteria

The following sections discuss waste acceptance criteria for candidate feed tanks to be processed in the 242-A Evaporator.

3.9.1.1 Exothermic Reactions

WAC 173-303-395(1) requires waste handling be conducted to prevent an uncontrolled reaction that could damage the tank system structural integrity or threaten human health or the environment. To evaluate the possibility of an uncontrolled reaction at the elevated temperatures in the evaporator vessel, a differential scanning calorimeter (DSC) test is performed on samples of all candidate waste to be processed. DSC measures the amount of heat absorbed or released by a sample as the temperature is increased. Waste exhibiting exotherms below 168 °C (335 °F), or with an absolute value of the exotherm-to-endotherm ratio greater than one, will not be processed in the 242-A Evaporator without further technical evaluation.

3.9.1.2 Compatibility

WAC 173-303-640(10) and WAC 173-303-395(1) requires waste handling be conducted to prevent an uncontrolled reaction that could damage the 242-A Evaporator tank system structural integrity or threaten human health or the environment. To verify there will be no adverse affects because of mixing the contents of different candidate feed tanks in the feed tank (241-AW-102) and the 242-A Evaporator vessel (C-A-1), a compatibility evaluation is performed on waste in the candidate feed tanks. As samples from each of the planned waste sources are mixed, observations are made to note any changes in color, temperature, clarity, or other visually determinable characteristic. This would indicate an unexpected chemical reaction that might have an impact on 242-A Evaporator operations. If such visible changes are observed when mixing samples, the waste would not be processed in the 242-A Evaporator without further technical evaluation.

3.9.1.3 Separable Organics

The waste surface layer sample collected from each candidate feed tank or combined feed in 241-AW-102 is visually inspected to determine whether separable organics are present in the waste and requires the waste feed to be rejected for processing or allows waste processing. In addition, testing of the sample is performed by either percent water to determine if the whole sample is organic and cannot be discerned visibly or by total carbon/total inorganic carbon. The action limit of 25% water will indicate if the sample is all organic. Results of the visual inspection and testing are used together to determine if the waste can be accepted at the 242-A Evaporator for processing. If there is a separate visible organic layer in the candidate feed tank samples then the waste transfer to 242-A Evaporator must incorporate engineering controls to eliminate (exclude) the organic layer during the transfer.

3.9.1.4 Organic Constituents

Because process condensate generated at the 242-A Evaporator is transferred only to the LERF, the 242-A Evaporator will not accept waste for treatment whose data review does not allow treatment and storage in LERF. Process condensate could contain trace quantities of chemicals that could cause degradation of the liner material if found to exceed specifications. To predict the concentrations expected in the process condensate, the candidate feed tank waste is sampled and analyzed for organics and the results are then used to predict the concentrations in the campaign specific process condensate. The level of volatile organics in the feed is limited to ensure organic constituents that transfer to the process condensate are compatible with the LERF liner as specified in the LERF waste acceptance criteria.

The 242-A Evaporator performs distillation of waste containing organic concentrations greater than 10 parts per million by weight; therefore, organic air emissions are subject to WAC 173-303-690 (which incorporates 40 CFR 264, Subpart AA, by reference). Organic emissions from TSD units on the Hanford Site subject to 40 CFR 264, Subpart AA are controlled to ensure emissions to do not exceed 1.4 kilograms per hour and 2,800 kilograms per year. To ensure these requirements are met, the levels of volatile organics in the 242-A Evaporator feed must be limited to prevent excessive organic emissions during processing. Engineering calculations were used to determine the feed limits given in Table 3.2. The limits include a modifier "(R-1)/R", which adjusts the limits based on the campaign's planned boiloff rate. R is the ratio of feed flow rate to slurry flow rate. Typically, R is between 1 to 2, making the range of (R-1)/R 0 to 0.5.

In addition, analysis of the individual components in Table 3.2, total carbon (C_T) and total inorganic carbon (IC_T) analysis are performed as a screening tool to account for other organic species that might be present in the waste. The value of C_T minus IC_T represents the total organic concentration in the waste. If the C_T minus IC_T limit is exceeded, additional volatile organic species might be present and a more detailed evaluation will be conducted to determine organic emissions out of the vessel vent. The limit for

evaluation is 174.4 milligrams per liter, based on the conservative assumption that all organic species present in the waste are as volatile as acetone. Acetone was chosen because of its relatively high volatility and low percentage of carbon.

Based on the liner manufacturer's compatibility data, waste acceptance criteria from the LERF will impose concentration limits on classes of constituents that could potentially degrade the liner. To ensure that these limits are not exceeded in the process condensate, the concentration limits are applied to the candidate feed tanks as well, with the modifier "(R-1)/R". A C_T minus IC_T analysis, similar to the one described previously, is also applied to the LERF liner limits. The strictest limit for organic species is 2,000 milligrams per liter. Assuming the organic is acetone (with its low percentage of carbon); this converts to a carbon value of 1,240 milligrams per liter.

The calculations in Table 3.2 require use of the ɜsum of the fractionsɜ technique. A calculation is performed where the analysis of each constituent is divided by its associated limit to produce a fraction of the limit. If the sum of these fractions is less than 1, the waste meets the requirements in the tables.

3.9.2 Process Condensate Waste Acceptance Criteria

The waste acceptance criteria for process condensate sampling, including treatability, LERF liner compatibility, compatibility with other waste, etc., is given in the Permit, Part III, LERF and 200 Area ETF unit-specific conditions and Chapter 3.0, Waste Analysis Plan.

Table 3.2. Candidate Feed Tank Limits for Vessel Vent Organic Discharge[a].

Feed constituent	Limit (milligrams per liter) b, c
Acetone	174.4 ([R-1]/R)
1-Butanol	452 ([R-1]/R)
2-Butoxyethanol	190.4 ([R-1]/R)
2-Butanone	116 ([R-1]/R)
Tri-butyl phosphate	2.03E+4 ([R-1]/R)
Total carbon and Total inorganic carbon	(CT-ICT) < 174.4 ([R-1]/R) (as acetone)

[a] Limits are based on a maximum continuous operating time equivalent to 6 months per year. If total operating time is expected to exceed 6 months per year, the limits must be re-evaluated.

$$\sum_{n=1}^{i}\left(\frac{Conc_n}{LIMIT_n}\right) \leq 1$$

[b] The limits are applied using the sum of the fractions technique: where i is the number of organic constituents detected in analysis of the waste feed tank. Total carbon and total inorganic carbon analysis are not part of the summation.

[c] R is the ratio of feed flow rate to slurry flow rate (typically R = between 1 and 2).

3.10 SAMPLE COLLECTION AND ANALYSIS

This section discusses sampling and analysis, including sampling procedures, sample collection points, sample quality assurance/quality control (QA/QC), and selection of analytes.

3.10.1 Sample Collection

This section describes collection of candidate feed tank waste and process condensate samples. Candidate feed tank waste is sampled and analyzed before the start of each 242-A Evaporator campaign. Process condensate samples are taken at the 242-A Evaporator only if the decision is made before the start of the campaign that sampling will be done at the 242-A Evaporator instead of LERF.

3.10.1.1 Candidate Feed Tank Sample Collection

Candidate feed tank waste samples are obtained by using a grab sampling method (e.g. "bottle on a string method") specified in ASTM E300-86. The number of lateral sampling locations in candidate feed tanks is limited by the availability of tank risers providing access into the tank. Generally, only a few risers in each tank are actually available for sampling because the risers are dedicated to instrumentation or other uses. Sampling within a vertical column is generally limited only by the depth of waste in the tank.

Riser selection is determined using best professional judgment. Previous waste feed tank sampling campaigns used two or more risers, and showed that negligible lateral variability exists in the DST System waste supernatants; therefore, only one riser will be used. Sample depths are determined depending on whether layering is suspected to exist and applying the requirements given in Table 3.3.

3.10.1.2 Candidate Feed Tank Sampling Quality Assurance and Quality Control

For each candidate feed tank waste sample, a sample solution is drawn from the sample riser using one or more sample bottles. Sample bottles are precleaned, amber-colored glass bottles sealed with Teflon* caps or septum caps. The exceptions to the sample bottle requirements are: a clear bottle is used for the surface sample to determine the existence of separable organics and the bottle for VOA analysis must be sealed with a septum cap.

For candidate feed tank sampling quality control, one field blank, consisting of one or more sample bottles, is taken during the sample event. Field blanks are inserted at least 1-foot into the head space through the sample riser used during the sample event. One trip blank, also consisting of one or more sample bottles, is taken during each sample event. Trip blanks are analyzed as independent samples for VOA. Field and trip blanks use the same types of sample bottles as the actual samples and are filled with reagent-grade water before shipment to the field.

Preservatives are not used with candidate feed tank samples because of concerns with high radiation exposure that would result from additional handling of sample solutions. It is not practical to refrigerate the bulky, shielded sample pigs and shipping containers. Biological activity, generally the largest problem in environmental samples, is unlikely in candidate feed tank samples because of the high salt content, pH, and radioactivity of the sample.

---

*Teflon is a trademark of E.I. DuPont de Nemours & Company

The chain of custody is documented on a data sheet that includes a unique sample number, date and time sample was taken, custody seal number, and signature of the sampler. When possession of the sample is transferred to other persons, such as the shipper or laboratory, the signature of the relinquisher and receiver are recorded, along with date and time of the transfer. The receiver at the laboratory also documents on the data sheet that the sample seal number is correct and the seal is intact. The chain-of-custody data sheets are included in the operating record.

3.10.1.3 Deviations from Specified Sampling Practices

The WAP requires ASTM E 300 'bottle on a string procedure' for sampling (ASTM E300-86). Due to high radiation fields, some deviations to the standard have been necessary to implement safely the sampling practices in the field. These deviations are documented below.

- Requirement: The sampling apparatus be filled and allowed to drain before drawing the sample.

  Deviation: Sampling personnel lowers the sampling apparatus to the specified level and collects the sample. To pour the contents out and resample would encourage the spread of radiological contamination and additional whole body and extremity radiation exposure.

- Requirement: Bottles and jars may be made of clear or brown glass or polyethylene with necks shaped to receive glass stopper or a screw cap made of metal or plastic material.

  Deviation: Sampling personnel uses clear or amber glass with necks shaped to receive rubber stoppers. Glass stoppers were used at one time but resulted in broken sample bottles during the removal of the glass stoppers from the glass bottles.

- Requirement: Stopper and label bottles immediately after taking the samples and deliver them to the laboratory.

  Deviation: Sampling personnel screws on the bottle cap after the sample has been collected. Because of the alkalinity of the tank waste sample labels will not stay on bottles after samples are collected. Therefore, sample bottles are etched with the sample numbers before the samples are collected. The samples are shipped to the laboratory as soon as resources are available, within three days of sample collection.

- Requirement: Select wiping cloths so that lint is not introduced, contaminating the samples.

  Deviation: Sampling personnel uses damp cotton towels to wipe down sample bottles after the sample bottles have been capped. The intent is to remove any waste that may have been deposited on the bottle during the sampling event to minimize contamination and personnel exposure.

- Requirement: To prevent the loss of the liquid during shipment and to protect against moisture and dust, cover the closure of the glass bottle with plastic caps, which have been swelled in water, wiped dry, placed over the top of the stoppered bottle, and allowed to shrink tightly in place. Screw-top bottles are recommended. The cap should be lined with material inert to the sample. The screw caps should be secured by use of adhesive tape or similar material.

  Deviation: Sampling personnel uses screw caps and 4-mil plastic bags. The cap is Teflon-lined which is inert to the sample. The sample bottle is placed inside a plastic bag, which is placed inside a steel pig (or sample pig). The steel pig is placed inside a shipping pig. The screw cap is not secured with adhesive tape. Securing the sample bottle caps with tape would present the laboratory with difficulty

of removing the caps remotely (in the hot cell). If the sample leaks from the sample bottle, it is trapped in the plastic bag. The custody seal is placed on the shipping pig per procedure.

- Requirement: All sampling apparatus and closures shall be clean, dry, free of contaminants, and constructed of materials that are inert to the product to be sampled.

  Deviation: Prior to sampling, sampling equipment such as the sample holder shall be cleaned using a procedure that is consistent with SW-846, *Test Methods for the Evaluation of Solid Waste, Physical/Chemical Methods*, sampling equipment cleaning protocol. The bottles with screw caps are washed and certified and are not opened until at the time of the sampling event. The bottles are opened when the previous sample is completed so that only one bottle is opened at the time of sampling to insert the rubber stopper from the sample holder. The stopper and bottles are constructed from materials that are inert to the product to be sampled.

3.10.1.4 Process Condensate Sample Collection

Process condensate samples, when performed at 242-A Evaporator instead of LERF, are taken from the process condensate transfer line in the condenser room of the 242-A Building. Grab sampling is performed during the campaign at the SAMP-RC3-2 sampler or other sample port by opening a valve and allowing a small volume of process condensate to flush valve and line/piping. The required volume of sample is collected into labeled bottles and chain of custody is maintained. Samples of process condensate are collected in a manner to produce a representative sample. Testing methods are used consistent with SW-846 procedures as listed in Table 3.4.

3.10.1.5 Process Condensate Sampling Quality Assurance and Quality Control

For information on process condensate sample collection, including the number and types of sample bottles, sampling QA/QC, etc., refer to the Permit, Part III, LERF and 200 Area ETF unit-specific conditions and Chapter 3.0, Waste Analysis Plan.

3.10.2 Analyte Selection and Rationale

The DQO analysis for the 242-A Evaporator examined the data needs for sampling the candidate feed tanks and determined that the analyses in Table 3.4 should be conducted to satisfy WAC 173-303-300 requirements. Table 3.4 also contains the rationale for these parameters being selected. Section 3.7 provides additional detail on the rationale.

For information on process condensate sample analyte selection and rationale, refer to the Permit, Part III, LERF and 200 Area ETF unit-specific conditions and Chapter 3.0, Waste Analysis Plan.

Table 3.3. Candidate Feed Tank Sample Point Selection.

Number of samples	Location of sample points
Four samples, no layering suspected	One surface sample to address the potential for a separable organic layer and three subsurface samples: one sample each obtained from the upper third (near the half way point), one sample in the middle third and one sample in the lower third (near the lower limit) of the supernatant layer.
Four samples, layering suspected	One sample taken from the waste surface to address the potential for a separable organic layer. Three samples targeting the expected midpoint of the suspected layers. If more than three layers are suspected, The larger layers have sampling priority.

Table 3.4. Analytes for Candidate Feed Tanks

Parameter	Test technique	Analyte (CAS#)	Rationale
Exotherm	Differential scanning calorimeter	Temperature and energy	Verify the waste will not undergo an exothermic reaction (Section 3.9.1.1).
Compatibility test	Mixing and compatibility study	Visual physical changes	Verify the waste is chemically compatible (Section 3.9.1.2).
Separable Organics	Visual Inspection	Visual Inspection	Process control information needed to evaluate campaign parameters and status.(Section 3.9.1.3)
	TGA OR Carbon coulometric detector	Percent Water OR Total carbon, Total Inorganic carbon	Verify surface sample is not a single layer of homogeneous liquid (Section 3.9.1.3)
Organic compounds	Gas chromatograph/ mass spectrometer	Acetone (67-64-1), 1-Butanol (71-36-3), 2-Butoxyethanol (111-76-2), 2-Butanone (78-93-3), Tri-butyl phosphate (126-73-8)	Used in calculations to verify that vessel vent emissions will not exceed regulatory limits and to prevent compatibility problems with the LERF liner (Section 3.9.1.4).
	Carbon coulometric detector	Total carbon, Total inorganic carbon	Used in calculations to verify that vessel vent emissions will not exceed regulatory limits and to prevent compatibility problems with the LERF liner (Section 3.9.1.4).
Ammonia	Ion selective electrode or Ion chromatography	Ammonia (7664-41-7)	To prevent compatibility problems with the LERF liner (Section 3.9.1.4).

CAS#=Chemical Abstract Service Number
LERF=Liquid Effluent Retention Facility
TGA = Thermogravimetric analysis

3.11 ANALYTICAL METHODS AND QUALITY ASSURANCE AND QUALITY CONTROL

This section provides information on the analytical methods and QA/QC for candidate feed tank samples, including discussions concerning laboratory selection and analytical methods. For information on process

condensate analytical methods and QA/QC, refer to the Permit, Part III, LERF and 200 Area ETF unit-specific conditions and Chapter 3.0, Waste Analysis Plan.

3.11.1 Laboratory Selection

Because of the nature of the samples, it is anticipated that candidate feed tank waste sample testing will be conducted at the 222-S Laboratory Complex. Other laboratories at the Hanford Facility could be used provided they are equipped to handle such samples. Laboratory selection depends on availability, analytical needs, and the ability of the laboratory to meet Permit and quality assurance requirements.

3.11.2 Analytical Methods

The analytical methods that must be followed for testing candidate feed tanks are included in Table 3.5. Performance-based specifications rather than procedure-based specifications are used for determining the appropriate analytical methods. This allows for necessary adjustments to the methods for Hanford Facility-specific issues; related to high radioactivity of the sample matrix, while ensuring acceptable data quality. Because of the high radioactivity, the analytical method will in some cases deviate from those in national standards such as *Test Methods For Evaluating Solid Waste*, SW-846 (EPA 1986) and *Standard Methods for the Examination of Water and Waste Water* (AWWA 2005).

3.11.3 Laboratory Quality Assurance and Quality Control

Candidate feed tank waste testing and sampling methods conducted as part of this plan must meet the data quality requirements contained in Table 3.6 to be considered acceptable for decision-making purposes. Quality control check samples (i.e., calibration samples and/or laboratory control samples) generally are performed once per sample event (e.g., once for all samples from one candidate feed tank). Matrix spike and duplicate analysis are performed once per sample event for all methods except differential scanning calorimetry (DSC). A duplicate analysis is performed for DSC analysis to determine method precision. Accuracy for DSC is evaluated by using the laboratory control standard.

The QA/QC program for sampling and analysis related to this unit must, at a minimum, comply with the applicable regulatory requirements. All analytical data will be defensible and will be traceable to specific, related quality control samples and calibrations.

Table 3.5. Analytical Methods for Candidate Feed Tank Stream Analytes.

Category	Analyte	Performance-based analytical methods	Method
Organics	Acetone 1-Butanol 2-Butanone	Purge and trap and GC/MS (VOA)	SW-846 Method 8260
	2-Butoxyethanol Tri-butyl Phosphate	Solvent extraction and GC/MS (semi-VOA)	SW-846 Method 3520B and 8270A
Inorganic	Ammonia	Ion selective electrode and Micro-distillation Ion Chromatography	AWWA Method 4500-NH3 and EPA method 300.7
Other	Exotherm	Differential scanning calorimeter	A sample is placed in the DSC unit and heated to 500° C (932° F). The differential heat flow between the sample and a reference pan is monitored by thermocouples.
	Mixing and compatibility study	Lab specific	Solution from each sample are mixed and visually checked for gas evolution, heat generation, precipitation, dissolution of solids, color change, clarity, and any other observable characteristics.
	Separable Organics	TGA OR Carbon coulometric detector	A small subsample (typically about 20 mg) is heated to approximately 500° C (932° F). The percent weight loss in the boiling range of water is reported as sample percent water. OR Coulometry: ASTM 5310
	Total carbon	Combustion with IC_T/C_T coulometric detection OR Persulfate oxidation with IC_T/TOC coulometric detection	Combustion and persulfate treatment: AWWA Method 5310 Coulometry: ASTM 5310
	Total Inorganic Carbon	Acidification with IC_T/TOC coulometric detection	Acidification: AWWA Method 5310. Coulometry: ASTM 5310

ASTM=American Society of Testing and Materials
AWWA=American Water Works Association
GC/MS=Gas Chromatograph/Mass Spectrometer
IC_T= Total Inorganic Carbon
TGA= Thermogravimetric analysis
TOC=Total Organic Carbon
VOA= Volatile Organic Analysis

Table 3.6. Quality Assurance Requirements for Candidate Feed Tank Stream Analytes

Category	Analyte	Estimated quantitation limit (matrix specific)	Precision (RPD between duplicates), %	Accuracy (recovery of matrix spike), %	Action level [1]
Organics	Acetone	28 mg/L	<25	40-110	> 87 mg/L[2]
	1-Butanol	20 mg/L	<25	30-110	> 226 mg/L[2]
	2-Butoxyethanol	30 mg/L	<25	30-110	> 95.2 mg/L[2]
	2-Butanone (methyl ethyl ketone)	18 mg/L	<25	40-110	> 58 mg/L[2]
	Tri-butyl phosphate	50 mg/L	<25	40-125	> 1.015E+4 mg/L[2]
Inorganic	Ammonia	400 ug/ml	<20	75-125	> 50,000 mg/L
Other	Exotherm	None	<20[3]	Not applicable [3]	< 168 °C or absolute value of ratio of exotherm to endotherm > 1
	Mixing and compatibility study	Not applicable	Not Applicable	Not Applicable	Visual: unusual changes in color, temperature, clarity, etc.
	Total carbon	25 ug/mL	<20	75-125	C_T-IC_T > 87 mg/L
	Total inorganic carbon	25 ug/mL	<20	75-125	C_T-IC_T > 87 mg/L

1=In deriving the action levels, the ratio of feed flow rate to slurry flow rate (R) is assumed to be 2.
2=For organic species limits, sum of the fractions rule apply (refer Table 3.2). Total carbon and total inorganic carbon are not included in the summation of organics.
3=Precision for this method is evaluated by the deviation between sample (unspiked) and sample replicate. Accuracy for DSC is evaluated by using the laboratory control standard.
RPD - relative percent difference C_T - total carbon IC_T - total inorganic carbon
mg/L - milligram per liter ug/L - microgram per liter

3.12 REFERENCES

ASTM, 1986, *Standard Practice for Sampling Industrial Chemicals*, ASTM E300-86, American Society for Testing and Materials, West Conshohocken, Pennsylvania, updated periodically.

ASTM, 1988, *Total and Organic Carbon in Water by High Temperature Oxidation and Coulometric Detection*, ASTM D4129-88, American Society for Testing and Materials, West Conshohocken, Pennsylvania, updated periodically.

AWWA, 2005, *Standard Methods for the Examination of Water and Wastewater*, 17th edition, American Public Health Association/America Water Works Association, Washington, D.C., updated periodically.

Banning D.L., 2009, *242-A Evaporator Data Quality Objectives (DQO)*, SD-WM-DQO-014 (most current revision), CH2M HILL Hanford Group, Richland Washington.

EPA, 1986, *Test Methods for Evaluating Solid Waste Physical/Chemical Methods*, SW-846, U.S. Environmental Protection Agency, Washington, D.C., updated periodically.

EPA, 1994a, *Waste Analysis at Facilities that Generate, Treat, Store, and Dispose of Hazardous Wastes, A Guidance Manual*, PB94-963603, OSWER 9938.4-03, U.S. Environmental Protection Agency, Washington D.C.

6.0 PROCEDURES TO PREVENT HAZARDS 6.1
6.1 SECURITY 6.1
6.1.1 Waiver 6.1
6.2 INSPECTION PLAN 6.1
6.2.1 General Inspection Requirements 6.1
6.2.2 Tank System Inspections and Corrective Actions 6.2
6.2.3 Storage of Reactive and Ignitable Wastes ..... 6.4~~6.4~~~~6.3~~
6.2.4 Air Emissions Control and Detection Inspections 6.4
6.2.5 Inspection Logs 6.4
6.2.6 Schedule for Remedial Action for Problems Revealed ..... 6.5~~6.5~~~~6.4~~
6.3 PREPAREDNESS AND PREVENTION REQUIREMENTS ..... 6.5~~6.5~~~~6.4~~
6.3.1 Equipment Requirements ..... 6.5~~6.5~~~~6.4~~
6.3.2 Internal Communications 6.5
6.3.3 Spacing Requirement 6.6
6.4 PREVENTIVE PROCEDURES, STRUCTURES, AND EQUIPMENT 6.6
6.4.1 Loading and Unloading Operations ..... 6.7~~6.7~~~~6.6~~
6.4.2 Runoff ..... 6.7~~6.7~~~~6.6~~
6.4.3 Water Supplies ..... 6.7~~6.7~~~~6.6~~
6.4.4 Equipment and Power Failures 6.7
6.4.5 Personnel Exposure ..... 6.8~~6.8~~~~6.7~~
6.5 PREVENTION OF REACTION OF IGNITABLE, REACTIVE, AND INCOMPATIBLE WASTE 6.8
6.5.1 Precautions to Prevent Ignition or Reaction of Ignitable or Reactive Waste 6.8
6.5.2 Precautions for Handling Ignitable or Reactive Waste and Mixing of Incompatible Waste 6.9~~6.9~~~~6.8~~

Tables

Table 6.1. Visual Inspection Schedule for Tanks, Piping, and Rooms ..... 6.10~~6.9~~
Table 6.2. Inspection Schedule of Safety, Security, and Emergency Equipment ..... 6.11~~6.10~~
Table 6.3. Inspection Schedule for Alarm Monitoring ..... 6.12~~6.11~~
Table 6.4. Inspection Schedule for Maintenance and Other Inspections ..... 6.13~~6.12~~

This page intentionally left blank.

6.0 PROCEDURES TO PREVENT HAZARDS

This chapter discusses security, inspection schedules, preparedness and prevention requirements, preventive procedures, structures, and equipment, and prevention of reaction of ignitable, reactive, and incompatible waste for the 242-A Evaporator.

Where information regarding treatment, management, and disposal of the radioactive source, byproduct material, special nuclear material (as defined by the Atomic Energy Act of 1954, as amended) and/or the radionuclide component of mixed waste has been incorporated into this permit, it is not incorporated for the purpose of regulating the radiation hazards of such components under the authority of this permit or chapter 70.105 RCW.

6.1 SECURITY

Refer to Permit Attachment 33, §6.1 Security.

6.1.1 Waiver

A waiver of security procedures and equipment requirements is not requested for the 242-A Evaporator. Therefore, the waiver requirements outlined in WAC 173-303-310(1)(a) and (b) are not applicable.

6.2 INSPECTION PLAN

This section describes the method and schedule for inspections of the 242-A Evaporator. The purpose of inspections is to identify situations that might cause or lead to a release of mixed waste that could pose a threat to human health and the environment. Abnormal conditions identified by an inspection must be corrected on a schedule that prevents hazards to the public and environment.

6.2.1 General Inspection Requirements

This section provides an overview of inspections performed at the 242-A Evaporator. A copy of the inspection plan is kept in the 242-A Evaporator control room. There are three general classes of inspections at the 242-A Evaporator:

- Monitoring of remote instrumentations and alarms are performed by operating personnel in the 242-A Evaporator control room using the MCS computer.
- Visual inspections of tanks and equipment are performed by operating personnel. Other inspections of 242-A Evaporator equipment are performed as noted in Table 6.1 through Table 6.4.
- Preventive maintenance of equipment and calibration of instruments are performed by maintenance personnel. A computerized tracking system is used to identify and schedule preventive maintenance and calibration activities.

Preventive maintenance and instrument calibrations on certain equipment might not be possible when the 242-A Evaporator is operating. Because of the limited duration of 242-A Evaporator campaigns, these activities are scheduled during outages between campaigns to avoid interference with operating activities. Per Condition II.O.3 inspection of high radiation areas will be addressed on a case-by-case basis.

6.2.1.1 Types of Problems

The 242-A Evaporator inspections include, but are not limited to, the following:

- Condition of tanks and ancillary equipment
- Condition of secondary containment
- Evidence of leaks or overflows from tanks, piping, or transfer lines

- Condition of security equipment
- Condition of safety, communications, and emergency equipment.

A schedule of inspections, including items to be inspected, problems to look for, frequency of inspections and responsible organization are provided in Tables 6.1 through 6.4.

6.2.1.2 Frequency of Inspections

The frequency of inspections is based on the significance of a failure of the equipment and on regulatory requirements, Hanford Site and industry standards, and experience of the nature and frequency of equipment failures.

- The frequency of inspections for the 242-A Evaporator is given in Tables 6.1 through 6.4. Examples of frequencies include:
- Daily (at least every 24 hours) - visual inspections of tanks, piping and secondary containment.
- Weekly (at least every 7 days) - visual inspections of personal protective equipment, exterior lighting, and posted warning signs.
- Monthly (at least every 31 days) - inspections of emergency sirens, fire extinguishers, safety showers, emergency lighting and the spill control kit.
- Annually (at least every 365 days) - instrumentation calibrations, cathodic protection system testing, fire inspections.

Leak detectors are functionally checked within 92 days of the start of a campaign and every 92 days thereafter until the campaign is over. The frequency of some alarm monitoring is continuous. This means an operator must be present in the control room to monitor alarm instruments that continuously check for conditions such as leaks and high sump levels. Continuous monitoring is only required when the 242-A Evaporator is processing waste

6.2.2 Tank System Inspections and Corrective Actions

This section discusses the inspections performed on the two tank systems at the 242-A Evaporator: the vapor liquid separator, C-A-1, and the condensate collection tank, C-100. Inspections include secondary containment and leak and overfill prevention equipment.

6.2.2.1 Overfill Prevention

The vapor liquid separator, C-A-1, is equipped with instrumentation that alarms before the tank reaches a level where the tank could overflow or entrain liquid waste into the vacuum condenser system. The alarm annunciates in the control room allowing operating personnel to take immediate action to stop the vapor liquid separator from overfilling.

The condensate tank, C-100, was designed with an overflow line that routes waste to the feed tank, 241-AW-102. This design prevents tank overflow to the condenser room.

6.2.2.2 Visual Inspections

Visual inspections of tanks and secondary containments are performed to check for leaks, signs of corrosion or damage, and malfunctioning equipment. The following rooms containing dangerous waste are inspected:

- Condenser room
- Pump room
- Hot equipment storage room

In addition, the AMU and load out rooms are inspected when dangerous waste is present in the room.

The vapor liquid separator is located in the evaporator room, with a portion of the recirculation loop located in the pump room. Because of the high radiation dose in the evaporator room, visual inspections cannot be performed. Leaks in the evaporator room drain to the pump room sump; monitoring of the pump room sump instrumentation is performed to determine if leaks have occurred. Visual inspection of the pump room, hot equipment storage room, and load out room is performed through the shielding window on the AMU mezzanine to constrain personnel radiological exposure to levels that are as low as reasonably achievable (ALARA).

6.2.2.3 Leak Detectors

The sample enclosures in the load out and hot equipment storage room have leak detectors for both the feed and slurry samplers. For information on these systems and their secondary containment, refer to Chapter 4.0, §4.1.4.

During sampling or maintenance activities associated with the evaporator room, pump room, hot equipment storage room, or load out room, a radiological contamination control curtain may be extended over the load out room to reduce the likelihood of contaminants reaching the environment through the load out door. When extended, the contamination control curtain will limit visibility to the load out room from the shielding window on the AMU mezzanine while completing inspections. When this is the case, inspection forms will denote that the containment curtain was extended. Leaks in the evaporator room, pump room, hot equipment storage room, and load out room drain to the pump room sump. The sump high-level alarm serves as a leak detector for these rooms. For information on the rooms and their drain systems, refer to Chapter 4.0, §4.1.4.

There are conductivity probe leak detectors installed in the secondary containment of the feed transfer line, slurry line, and drain lines connecting the 242-A Evaporator to AW Tank Farm. However, these detectors are considered part of the DST System.

The PC-5000 transfer line may be continuously monitored during transfers by an electronic leak detection system (Chapter 4.0) or visually inspected at the encasement catch tank (TK-PC-101) in the LERF catch basin (242AL-43). The leak detection system alarms are monitored in the 242-A Evaporator Control Room on the Monitoring and Control System (§4.1.6.3.3). When necessary, visual inspections of the PC-5000 transfer line encasement are administratively controlled by the Shift Manager and occur at a minimum once every 24 hours during waste water transfers through the PC-5000 transfer line to ensure compliance with WAC 173-303-640(4)(c)(iii). Visual inspection for leaks from the PC-5000 transfer line are performed by 242-A Evaporator Operations, by looking for signs of any liquid not attributed to rain/precipitation at the encasement catch tank (TK-PC-101). If any liquid is observed the Shift Manager is notified to take corrective actions.

6.2.2.4 Alternative Leak Detection during Electrical/Ventilation Outages

As part of maintenance or system upgrades, the need to secure electrical power or ventilation to the 242-A Evaporator sometimes becomes necessary. This includes activities such as, but not limited to: cleaning and inspection of the motor control centers (MCCs) for distributing electrical power to the systems at the 242-A Evaporator, ventilation system maintenance and upgrades. Planned electrical or ventilation outages are performed during periods when Double Shell Tank System waste is not being processed.

During times when access is limited as a result of electrical or ventilation outages, performance of daily inspections specified in Table 6.1 may be impacted. When impacted, an alternative method of leak detection is implemented for the condenser room, and the inspections are suspended in the pump room, loudout and hot equipment storage room, and the loading room.

When impacted in the condenser room, a camera will be placed above the floor drain to detect the presence of leaks or spills. The process condensate collection tank (TK-C-100), located in the condenser room, is the only tank storing dangerous waste on a routine basis. It is not normal to allow personnel access into the condenser room during extended electrical or ventilation outages unless maintenance activities or upgrades require entry. If required, the camera and subsequent television monitor will be

provided electrical power via an alternative source. Operators will complete their daily observations for leaks or spills using this method for the condenser room. Facility personnel will document the use of this alternative method in the Hanford Facility Operating Record, 242-A Evaporator unit specific portion.

For the pump room, loadout and hot equipment storage room, and the loading room, these rooms do not have the capability for a camera so that inspections are suspended during maintenance activities affecting the electrical power supply to the overhead lighting. Performance of Table 6.1 daily inspections is not possible. Storage of mixed waste does not occur in these rooms because systems which manage mixed waste within the pump room and the loadout and hot equipment storage room are flushed and gravity drained to the extent possible after each campaign. Should any remaining liquid leak from primary containment; it is captured by the secondary containment system and routed to the pump room sump and ultimately to the 241-AW-102 DST System tank. Quantities of liquid sufficient to reach 241-AW-102 would cause a change in tank level. Facility personnel will document when inspections cannot be performed due to electrical outages in the Hanford Facility Operating Record, 242-A Evaporator unit specific portion.

The process described in the preceding paragraphs of this section may also be implemented when external events cause electrical or ventilation outages.

~~6.2.2.4~~6.2.2.5 Cathodic Protection

Cathodic protection is not required for the equipment within the 242-A facility boundaries. The only portion of the system, which is underground, is the PC-5000 transfer line. The PC-5000 line is constructed of fiberglass.

~~6.2.2.5~~6.2.2.6 Tank Assessments

The IAR was issued in 1998. The frequency and nature of these assessments are discussed in the IAR.

6.2.3 Storage of Reactive and Ignitable Wastes

A Fire Protection Engineer performs annual fire inspections of the 242-A Evaporator. The assessment includes the date and time of the inspection, the name of the professional inspector, a notation of the observations made, and any remedial actions which were taken as a result of the inspection. The completed fire protection facility assessment is included in the operating record.

6.2.4 Air Emissions Control and Detection Inspections

The process vent at the 242-A Evaporator is subject to 40 CFR 264, Subpart AA, which requires organic emissions be limited to 1.4 kilograms per hour, and 2.8 mega grams per year, or controls be installed to reduce organic emissions by 95 percent. Organic concentrations in the waste processed at the 242-A Evaporator are limited to ensure the values of 1.4 kilograms per hour and 2.8 mega grams per year are not exceeded. Therefore, no emission control devices are installed on the 242-A Evaporator vessel ventilation system and no inspections are required (Chapter 4.0, §4.2).

6.2.5 Inspection Logs

Visual inspections (refer to Tables 6.1-6.4) are performed using inspection log sheets (also called round sheets) that outline frequency, the components to inspect, operating conditions and ranges, and types of problems. Log sheets are kept in the 242-A Evaporator control room. Inspectors record the following information:

- Date and time of the visual inspection
- Printed name and signature of the person performing the inspection
- Notations of the observations made, including space for writing comments
- An account of spills or discharges in accordance with WAC 173-303-145.

Completed log sheets are reviewed and approved by the shift supervisor, collected, and stored for at least 5 years.

Maintenance inspections are performed as part of the maintenance job control system. After completion, the maintenance documentation is reviewed and signed.

6.2.6 Schedule for Remedial Action for Problems Revealed

If while performing a visual inspection (Table 6.1), a leak or spill is discovered, facility management responds immediately per Chapter 7.0, Contingency Plan. Action is taken to stop the leak and determine the cause. The waste is removed from the secondary containment within 24 hours or in a timely manner that prevents harm to human health and the environment. For spills that drain to the pump room sump, the sump must be jetted. The sump will be triple rinsed in accordance with WAC 173-303-160(2)(b) if the contents include acutely hazardous waste (WAC-173-303-040) or toxic extremely hazardous waste (WAC-173-303-100). Pesticides are not expected to enter this system (Chapter 4.0, §4.1.5).

If an alarm activates during inspections, an operator responds immediately and implements appropriate actions.

If an inspection identifies equipment that is missing, damaged, or not operating properly, the operator records the problem on a deficiency log in the 242-A Evaporator control room. Repair work is prioritized by facility management to mitigate health and environmental risks.

6.3 PREPAREDNESS AND PREVENTION REQUIREMENTS

The following sections document the preparedness and prevention measures taken at the 242-A Evaporator.

6.3.1 Equipment Requirements

The following sections describe the internal and external communications and emergency equipment located at the 242-A Evaporator that can be activated by the 242-A Evaporator BED. Hanford Facility-wide equipment is identified in Permit Attachment 4, *Hanford Emergency Management Plan* (DOE/RL-94-02).

6.3.2 Internal Communications

The 242-A Evaporator is equipped with internal communication systems to provide immediate emergency instruction to facility personnel. The onsite communication systems at the 242-A Evaporator include telephones, hand-held two-way radios, a public address system, and alarm systems. The telephone and radio systems provide for internal and external communication. Alarm systems allow facility personnel to appropriately respond to various emergencies, including building evacuations, take cover events, fires and/or explosions. The locations of telephones, public address systems, and alarms are given in the Chapter 7.0, Contingency Plan.

Immediate emergency instruction to personnel is provided by a public address system using speaker horns and speakers located throughout the 242-A and 242-AB Buildings and outside.

6.3.2.1 External Communications

The 242-A Evaporator is equipped with devices for summoning emergency assistance from the Hanford Fire Department, the Hazardous Materials Response Team, and/or Hanford Patrol, as necessary. External communication to summon emergency assistance is made by using a telephone communication system, fire alarm pull boxes, or hand-held radio as described in Permit Attachment 4, *Hanford Emergency Management Plan*, (DOE/RL-94-02). These devices are provided throughout the 242-A Evaporator.

During certain periods, only one operator may be available within the 200 East plateau. This operator has access to external communication using telephones located throughout the building.

6.3.2.2 Emergency Equipment

Emergency equipment is available throughout the 242-A Building. The locations of telephones, public address systems, and alarms are given in Chapter 7.0, Contingency Plan.

Major fire damage is unlikely at the 242-A Evaporator because of the concrete construction and because the amount of combustible material is minimized. Temperature activated water sprinkler systems, emergency lights, fire alarms pull boxes, and fire extinguishers are located throughout the facility. The 242-A Evaporator relies primarily on the Hanford Fire Department to respond to fires and other emergencies as described in Permit Attachment 4, *Hanford Emergency Management Plan*, (DOE/RL-94-02). The Hanford Fire Department is capable of providing rapid response to fires within the 200 East Area.

Safety showers are located in the areas where personnel are most likely to have direct exposure of hazardous materials: in the AMU room and on the first and fourth floors of the condenser room. Water for these devices is supplied from the sanitary water system.

Respirators are located in the PPE storage room near the entryway to the condenser room. Other PPE, such as hazardous material protective gear and special work procedure clothing, are located in cabinets in the survey area. If required, PPE is donned before entry into the rooms containing mixed waste. The level of personal protective equipment required depends on the level of contamination in the area being entered and the activity being performed.

A spill control kit is located in a cabinet near the door to the PPE storage room. An inventory of the equipment in the spill kit is included inside the cabinet. The spill kit cabinet door seal is checked monthly to ensure the kit has not been used. The kit inventory is inspected annually.

The 242-A Evaporator operating personnel are trained in the use of emergency equipment (Chapter 8.0).

6.3.2.3 Water for Fire Control

Water for fire protection is supplied from the 200 East Area raw water system. Columbia River water is supplied to the fire control system from the 282-E Water Supply Reservoir. The water distribution system is sized to provide adequate volume and pressure to supply fire fighting needs under normal and emergency conditions. A fire hydrant is located in the immediate proximity of the 242-A Building.

In the event that the sprinkler system at the 242-A Evaporator does not put out a fire, or the sprinkler system is damaged during an accident, the Hanford Fire Department fire station will provide equipment as described in Permit Attachment 4, *Hanford Emergency Management Plan (DOE/RL-94-02)*.

6.3.3 Spacing Requirement

Sufficient space is maintained on the exterior of the 242-A Evaporator to allow access of personnel and equipment responding to fires, spills, or other emergencies. Unobstructed fire lanes run from Fourth Street and Canton Avenue to the 242-A Building main entrance to allow emergency vehicle access to the main entrance and the nearby fire hydrant.

The 242-A Building interior space is designed to allow access by emergency response personnel while maintaining barriers to contain releases of gaseous or liquid waste and hazardous material. Exit (egress) paths in the rooms containing dangerous waste are checked daily to ensure the walkways have not been obstructed.

6.4 PREVENTIVE PROCEDURES, STRUCTURES, AND EQUIPMENT

The following sections describe preventive procedures, structures, and equipment.

6.4.1 Loading and Unloading Operations

The feed transfer and slurry lines between the 242-A Evaporator and AW Tank Farm are constructed of carbon steel piping with secondary containment and leak detection in a pipe-within-a-pipe arrangement. Although the regulations exempt systems that serve as secondary containment from requiring secondary containment, two of the drain lines from the 242-A Evaporator to AW Tank Farm also have outer encasement piping and leak detection (refer to Chapter 4.0, §4.1.4, for information on these lines).

Waste transfers within the 242-A Building are contained by the secondary containment walls, floors and drains (refer to Chapter 4.0, §4.1.4, for information on secondary containment at the 242-A Evaporator).

Mixed waste storage containers are not loaded or unloaded at the 242-A Evaporator. Unloading operations occur when equipment contaminated with mixed waste exits the facility. Such materials are fully sealed in plastic with absorbent material to absorb any free liquid present. Because of these requirements, the likelihood of a spill outside the 242-A Building during this operation is extremely low.

6.4.2 Runoff

Liquid waste handling at the 242-A Evaporator occurs within tank systems with secondary containment. Rooms containing mixed waste have drains that route to either the pump room sump or the feed tank, 241-AW-102. The pump room sump overflows to the feed tank as well. Therefore, run-off from a major leak, such as a break in a large water line within the 242-A Building, would be contained within the facility or drained to the feed tank (refer to Chapter 4.0, §4.1.4 for information on secondary containment and drain systems).

6.4.3 Water Supplies

Raw and sanitary Columbia River water are supplied to the 242-A Evaporator via separate underground lines from the 282-E Water Supply Reservoir. Raw water is filtered to prevent organisms and other debris from clogging valves, fire hydrants, and other equipment. Sanitary water is filtered and treated before distribution through a piping system separate from the raw water system.

The raw water supply to the 242-A Evaporator enters the 242-A-81 Water Service Building, passing through a strainer and backflow preventer before entering the facility. The backflow preventer ensures contaminated water cannot flow back into the raw water system. A second backflow preventer is installed in the 242-A Building on the raw water supply line connecting with the condensate recycle line. This system allows either raw water or process condensate to be used for the pump seal water and deentrainment pad spray water without risk of contamination of the raw water system.

The sanitary water system provides water to the lunchroom, drinking fountains, men's and women's change rooms, safety showers, and supply ventilation system air washers. There are no connections between sanitary water and any system or piping containing mixed waste.

6.4.4 Equipment and Power Failures

Backup power is provided by a diesel generator. The diesel motor starts automatically on loss of electrical power and has sufficient fuel to operate the generator, if needed, to safely shut down the evaporator process. An uninterruptible power supply system also is provided to allow continued operation of the MCS computer to ensure uninterrupted monitoring until the backup generator is fully on line.

The 242-A Evaporator is designed to mitigate the effects of failure of a major piece of equipment. In general, the evaporator process can be shut down and the vapor liquid separator gravity drained to the feed tank, 241-AW-102, in the event of equipment failure. The process condensate tank, TK-C-100, is

designed to overflow to feed tank 241-AW-102. This mitigates failure of the process condensate pump used to transfer the process condensate to LERF.

Response to equipment and power failures are discussed in more detail in Chapter 7.0, Contingency Plan.

6.4.5 Personnel Exposure

Facility design, administrative controls, and personal protective equipment are used at the 242-A Evaporator to prevent undue exposure of personnel to mixed waste and other hazardous materials.

The following features were incorporated into the 242-A Evaporator design to minimize personnel exposure.

- The facility is designed for remote operation of equipment containing highly radioactive solutions such as waste feed and slurry. These solutions usually are present only in the pump room and evaporator room, which are heavily shielded and routinely are not entered by operating personnel.
- The 242-A Building ventilation system is designed to provide air flow from uncontaminated zones to progressively more contaminated zones.
- Emergency lighting devices are located strategically throughout the 242-A Building.
- Eyewash stations and safety showers are located in rooms containing mixed waste or other hazardous materials that personnel routinely enter. For location of these, refer to Chapter 7.0, Contingency Plan.
- Continuous air monitors with audio and/or visual alarms to notify personnel of airborne radioactive contamination are provided in rooms that contain mixed waste and that routinely are entered.
- Methods for decontaminating vessels and equipment are available to reduce personnel exposure if entry for maintenance activity is required.
- Offices, control room, change rooms, and lunchroom are situated to minimize casual exposure of personnel.

All operations are conducted so employee exposure to mixed waste and other hazardous materials are maintained ALARA. Exposures are minimized by engineering or administrative controls with protective gear used where such controls are not practical. Before the start of any operation that might expose personnel to the risk of injury or contamination, a review of the operation is performed to ensure the nature of hazards that might be encountered are considered and that appropriate protective gear is selected. Administrative procedures dictate the level of protective clothing worn and depend on the location within the 242-A Building and the nature of the activity being performed. Personnel are trained to wear personal protective equipment in accordance with approved work procedures.

6.5 PREVENTION OF REACTION OF IGNITABLE, REACTIVE, AND INCOMPATIBLE WASTE

The following sections describe prevention of reaction of ignitable, reactive, and incompatible waste.

6.5.1 Precautions to Prevent Ignition or Reaction of Ignitable or Reactive Waste

Administrative procedures are designed to prevent the ignition or reaction of waste at the 242-A Evaporator. The precautions include the following.

- Analysis is performed on candidate waste in the DST System to check that there are no exothermic reactions when the waste is heated and that there will be no adverse affects due to mixing the contents of different waste tanks in the feed tank and evaporator vessel (refer to Chapter 3.0, for details on waste analysis).

- Sample analysis of the candidate waste in the DST System includes a surface sample to identify the presence of a separable organic phase that might be ignitable. If a separate organic phase is detected, the waste solution level in the feed tank is maintained above 2.54 meters to prevent transfer of the organic phase to the 242-A Evaporator.
- The condensate tank, C-100, is equipped with instrumentation to detect the presence of a separable organic phase. If a separate organic phase is detected, the tank is allowed to overflow, transferring the organic phase to the feed tank, 241-AW-102.
- The condensate tank, C-100 is overflowed to the DST System during each campaign to prevent the possibility of accumulating immiscible organics in the condensate waste tank.
- The vapor liquid separator and the condensate tank are drained and flushed before any welding is performed.
- Administrative safety controls have been established to control the use and quantities of combustibles materials, fuels, and gases. Hot work activities such as cutting, welding, and brazing are administratively controlled as part of the industrial safety program.

6.5.2 Precautions for Handling Ignitable or Reactive Waste and Mixing of Incompatible Waste

Waste received at the 242-A Evaporator is protected from materials or conditions that might cause the waste to ignite or react. Much of the waste handling is done remotely to reduce the risk to operating personnel. For precautions taken to prevent the ignition or reaction of waste, refer to Section 6.5.1.

The constituents in the waste received at the 242-A Evaporator that are ignitable or reactive are not very volatile. Therefore, the evaporation process renders the waste that is evaporated (i.e., the process condensate) neither ignitable nor reactive.

1 **Table 6.1. Visual Inspection Schedule for Tanks, Piping, and Rooms**

Item	Inspection	Frequency[1]
	Tank and Piping Inspection	
Condensate tank and piping	• Inspect piping for leaks or corrosion	Daily
	Room Inspections	
AMU room	• Inspect piping for leaks or corrosion • Inspect floor for spills or damage • Inspect for equipment malfunctions • Inspect for housekeeping	Daily[2]
Pump room	• Inspect piping for leaks or corrosion • Inspect floor for spills or damage • Inspect for equipment malfunctions • Inspect for housekeeping • Monitor pump room sump for overflow	Daily[3]
Hot equipment storage room	• Inspect piping for leaks or corrosion • Monitor pump room sump and inspect floor for spills or damage • Inspect for housekeeping	Daily[3]
Load out / Loading room	• Inspect for housekeeping • Monitor drains	Daily[2,3,4]
Condenser room	• Inspect tanks and piping for leaks or corrosion • Inspect floors for spills or damage • Inspect for equipment malfunctions • Inspect for housekeeping	Daily
IX column [5] room	• Inspect piping for leaks or corrosion • Inspect floor for spills or damage	Daily[6]

2

[1] Continuously: an operator must be present in the control room to respond to alarms when processing waste
Daily: at least every 24 hours
2 When dangerous waste is present
3 Use viewing window in AMU room to perform inspection
[4] Denote use of contamination control curtain when extended
[5] IX column was removed in 2003. The remaining piping has been drained and isolated.
[6] Surveillance is only required if the piping is returned to service and dangerous waste is reintroduced to the piping

1 **Table 6.2. Inspection Schedule of Safety, Security, and Emergency Equipment**

Item	Inspection	Frequency[1]
Security		
Building external doors	Verify external doors are closed and locked[2]	Daily
Posted warning signs	Verify signs are present, legible, and visible at 7.6 meters	Weekly
Communications		
Radios	Verify radios are operable and batteries are charged	Monthly
Telephones	Verify telephones are operable	Quarterly
Intercom/public address system	Verify systems are working properly	Quarterly
Emergency Equipment		
Safety showers/ eyewash station	Verify operability	Monthly
Emergency lighting	Verify operability	Monthly
Fire extinguishers	Verify fire extinguishers are in their proper location	Monthly
Spill response kit	Verify spill kit is present	Monthly
Personal protective clothing	Verify availability	Weekly
Respirators	Verify availability and shelf life	Monthly

2

[1] Continuously: an operator must be present in the control room to respond to alarms
Daily: at least every 24 hours
Weekly: at least every 7 days
Monthly: at least every 31 days
Quarterly: at least every 124 days
Annually: at least every 365 days

[2] Entrances to office areas are allowed to be unlocked

1 **Table 6.3. Inspection Schedule for Alarm Monitoring**

Item	Inspection	Frequency[1]
	Overfill Protection	
Vapor liquid separator: WFSH-CA11 WFSH-CA12	Monitor for vapor liquid separator high level. Surveillance required only when solution is in the vapor liquid separator.	Continuously
	Leak Detection	
Sampler lines: LDS-SMPL1 LDS-SMPL2	Monitor feed and slurry sampler lines for leaks. Surveillance required only during feed or slurry sampling.	Continuously
Pump room sump: WFI-SUMP1	Monitor for leaks in the evaporator room, pump room, load out and hot equipment storage room and loading room. These rooms drain to the pump room sump. Surveillance required only when waste solution is present in the rooms listed.	Continuously

[1] Continuously: an operator must be present in the control room to respond to alarms.

Table 6.4. Inspection Schedule for Maintenance and Other Inspections

Item	Inspection	Frequency[1]
Instrumentation Functional Checks and Calibrations		
Leak detectors	Perform leak detector functional checks.	Within 92 days of campaign startup and every 92 days thereafter until the campaign is over
Vapor liquid separator high level alarms: WFSH-CA11 WFSH-CA12	Perform calibrations of loop instruments.	Annually
Pump room sump level: WFI-SUMP1	Perform calibrations of loop instruments.	Annually
Backup Electrical Equipment		
Diesel generator	Verify operability.	Monthly
Uninterruptible power supply	Verify output voltage and inspect battery for signs of damage or tampering.	Annually
Fire Systems		
Fire suppressant and notification systems (i.e., sprinkler system and fire alarm pull boxes)	Water flow alarm tests of the sprinkler system to ensure the operation of a single sprinkler head will transmit an alarm, and that any of the manual fire alarm boxes will properly transmit an alarm signal.	Annually
Visual inspection of the physical condition of the sprinkler system, testing, and calibration of smoke detectors, and testing of heat detectors	A visual inspection of the sprinkler system to ensure system integrity as well as the required testing and calibration of detectors to ensure functionality. A flow test at the sprinkler system is performed to ensure proper flow to the system riser.	Biennial
Fire inspection	Inspect areas where ignitable or reactive wastes are stored per WAC 173-303-395(d).	Annually

[1] Continuously: an operator must be present in the control room to respond to alarms.
Monthly: at least every 31 days
Annually: at least every 365 days
Biennial every 730 days

Chapter 6.0 Procedures to Prevent Hazards

6.0 PROCEDURES TO PREVENT HAZARDS 6.1

6.1 SECURITY 6.1
6.1.1 Waiver 6.1

6.2 INSPECTION PLAN 6.1
6.2.1 General Inspection Requirements 6.1
6.2.2 Tank System Inspections and Corrective Actions 6.2
6.2.3 Storage of Reactive and Ignitable Wastes 6.4
6.2.4 Air Emissions Control and Detection Inspections 6.4
6.2.5 Inspection Logs 6.4
6.2.6 Schedule for Remedial Action for Problems Revealed 6.5

6.3 PREPAREDNESS AND PREVENTION REQUIREMENTS 6.5
6.3.1 Equipment Requirements 6.5
6.3.2 Internal Communications 6.5
6.3.3 Spacing Requirement 6.6

6.4 PREVENTIVE PROCEDURES, STRUCTURES, AND EQUIPMENT 6.6
6.4.1 Loading and Unloading Operations 6.7
6.4.2 Runoff 6.7
6.4.3 Water Supplies 6.7
6.4.4 Equipment and Power Failures 6.7
6.4.5 Personnel Exposure 6.8

6.5 PREVENTION OF REACTION OF IGNITABLE, REACTIVE, AND INCOMPATIBLE WASTE 6.8
6.5.1 Precautions to Prevent Ignition or Reaction of Ignitable or Reactive Waste 6.8
6.5.2 Precautions for Handling Ignitable or Reactive Waste and Mixing of Incompatible Waste 6.9

Tables

Table 6.1. Visual Inspection Schedule for Tanks, Piping, and Rooms 6.10
Table 6.2. Inspection Schedule of Safety, Security, and Emergency Equipment 6.11
Table 6.3. Inspection Schedule for Alarm Monitoring 6.12
Table 6.4. Inspection Schedule for Maintenance and Other Inspections 6.13

This page intentionally left blank.

6.0 PROCEDURES TO PREVENT HAZARDS

This chapter discusses security, inspection schedules, preparedness and prevention requirements, preventive procedures, structures, and equipment, and prevention of reaction of ignitable, reactive, and incompatible waste for the 242-A Evaporator.

Where information regarding treatment, management, and disposal of the radioactive source, byproduct material, special nuclear material (as defined by the Atomic Energy Act of 1954, as amended) and/or the radionuclide component of mixed waste has been incorporated into this permit, it is not incorporated for the purpose of regulating the radiation hazards of such components under the authority of this permit or chapter 70.105 RCW.

6.1 SECURITY

Refer to Permit Attachment 33, §6.1 Security.

6.1.1 Waiver

A waiver of security procedures and equipment requirements is not requested for the 242-A Evaporator. Therefore, the waiver requirements outlined in WAC 173-303-310(1)(a) and (b) are not applicable.

6.2 INSPECTION PLAN

This section describes the method and schedule for inspections of the 242-A Evaporator. The purpose of inspections is to identify situations that might cause or lead to a release of mixed waste that could pose a threat to human health and the environment. Abnormal conditions identified by an inspection must be corrected on a schedule that prevents hazards to the public and environment.

6.2.1 General Inspection Requirements

This section provides an overview of inspections performed at the 242-A Evaporator. A copy of the inspection plan is kept in the 242-A Evaporator control room. There are three general classes of inspections at the 242-A Evaporator:

- Monitoring of remote instrumentations and alarms are performed by operating personnel in the 242-A Evaporator control room using the MCS computer.
- Visual inspections of tanks and equipment are performed by operating personnel. Other inspections of 242-A Evaporator equipment are performed as noted in Table 6.1 through Table 6.4.
- Preventive maintenance of equipment and calibration of instruments are performed by maintenance personnel. A computerized tracking system is used to identify and schedule preventive maintenance and calibration activities.

Preventive maintenance and instrument calibrations on certain equipment might not be possible when the 242-A Evaporator is operating. Because of the limited duration of 242-A Evaporator campaigns, these activities are scheduled during outages between campaigns to avoid interference with operating activities. Per Condition II.O.3 inspection of high radiation areas will be addressed on a case-by-case basis.

6.2.1.1 Types of Problems

The 242-A Evaporator inspections include, but are not limited to, the following:

- Condition of tanks and ancillary equipment
- Condition of secondary containment
- Evidence of leaks or overflows from tanks, piping, or transfer lines

- Condition of security equipment
- Condition of safety, communications, and emergency equipment.

A schedule of inspections, including items to be inspected, problems to look for, frequency of inspections and responsible organization are provided in Tables 6.1 through 6.4.

6.2.1.2 Frequency of Inspections

The frequency of inspections is based on the significance of a failure of the equipment and on regulatory requirements, Hanford Site and industry standards, and experience of the nature and frequency of equipment failures.

- The frequency of inspections for the 242-A Evaporator is given in Tables 6.1 through 6.4. Examples of frequencies include:
- Daily (at least every 24 hours) - visual inspections of tanks, piping and secondary containment.
- Weekly (at least every 7 days) - visual inspections of personal protective equipment, exterior lighting, and posted warning signs.
- Monthly (at least every 31 days) - inspections of emergency sirens, fire extinguishers, safety showers, emergency lighting and the spill control kit.
- Annually (at least every 365 days) - instrumentation calibrations, cathodic protection system testing, fire inspections.

Leak detectors are functionally checked within 92 days of the start of a campaign and every 92 days thereafter until the campaign is over. The frequency of some alarm monitoring is continuous. This means an operator must be present in the control room to monitor alarm instruments that continuously check for conditions such as leaks and high sump levels. Continuous monitoring is only required when the 242-A Evaporator is processing waste

6.2.2 Tank System Inspections and Corrective Actions

This section discusses the inspections performed on the two tank systems at the 242-A Evaporator: the vapor liquid separator, C-A-1, and the condensate collection tank, C-100. Inspections include secondary containment and leak and overfill prevention equipment.

6.2.2.1 Overfill Prevention

The vapor liquid separator, C-A-1, is equipped with instrumentation that alarms before the tank reaches a level where the tank could overflow or entrain liquid waste into the vacuum condenser system. The alarm annunciates in the control room allowing operating personnel to take immediate action to stop the vapor liquid separator from overfilling.

The condensate tank, C-100, was designed with an overflow line that routes waste to the feed tank, 241-AW-102. This design prevents tank overflow to the condenser room.

6.2.2.2 Visual Inspections

Visual inspections of tanks and secondary containments are performed to check for leaks, signs of corrosion or damage, and malfunctioning equipment. The following rooms containing dangerous waste are inspected:

- Condenser room
- Pump room
- Hot equipment storage room

In addition, the AMU and load out rooms are inspected when dangerous waste is present in the room.

The vapor liquid separator is located in the evaporator room, with a portion of the recirculation loop located in the pump room. Because of the high radiation dose in the evaporator room, visual inspections cannot be performed. Leaks in the evaporator room drain to the pump room sump; monitoring of the pump room sump instrumentation is performed to determine if leaks have occurred. Visual inspection of the pump room, hot equipment storage room, and load out room is performed through the shielding window on the AMU mezzanine to constrain personnel radiological exposure to levels that are as low as reasonably achievable (ALARA).

6.2.2.3 Leak Detectors

The sample enclosures in the load out and hot equipment storage room have leak detectors for both the feed and slurry samplers. For information on these systems and their secondary containment, refer to Chapter 4.0, §4.1.4.

During sampling or maintenance activities associated with the evaporator room, pump room, hot equipment storage room, or load out room, a radiological contamination control curtain may be extended over the load out room to reduce the likelihood of contaminants reaching the environment through the load out door. When extended, the contamination control curtain will limit visibility to the load out room from the shielding window on the AMU mezzanine while completing inspections. When this is the case, inspection forms will denote that the containment curtain was extended. Leaks in the evaporator room, pump room, hot equipment storage room, and load out room drain to the pump room sump. The sump high-level alarm serves as a leak detector for these rooms. For information on the rooms and their drain systems, refer to Chapter 4.0, §4.1.4.

There are conductivity probe leak detectors installed in the secondary containment of the feed transfer line, slurry line, and drain lines connecting the 242-A Evaporator to AW Tank Farm. However, these detectors are considered part of the DST System.

The PC-5000 transfer line may be continuously monitored during transfers by an electronic leak detection system (Chapter 4.0) or visually inspected at the encasement catch tank (TK-PC-101) in the LERF catch basin (242AL-43). The leak detection system alarms are monitored in the 242-A Evaporator Control Room on the Monitoring and Control System (§4.1.6.3.3). When necessary, visual inspections of the PC-5000 transfer line encasement are administratively controlled by the Shift Manager and occur at a minimum once every 24 hours during waste water transfers through the PC-5000 transfer line to ensure compliance with WAC 173-303-640(4)(c)(iii). Visual inspection for leaks from the PC-5000 transfer line are performed by 242-A Evaporator Operations, by looking for signs of any liquid not attributed to rain/precipitation at the encasement catch tank (TK-PC-101). If any liquid is observed the Shift Manager is notified to take corrective actions.

6.2.2.4 Alternative Leak Detection during Electrical/Ventilation Outages

As part of maintenance or system upgrades, the need to secure electrical power or ventilation to the 242-A Evaporator sometimes becomes necessary. This includes activities such as, but not limited to: cleaning and inspection of the motor control centers (MCCs) for distributing electrical power to the systems at the 242-A Evaporator, ventilation system maintenance and upgrades. Planned electrical or ventilation outages are performed during periods when Double Shell Tank System waste is not being processed.

During times when access is limited as a result of electrical or ventilation outages, performance of daily inspections specified in Table 6.1 may be impacted. When impacted, an alternative method of leak detection is implemented for the condenser room, and the inspections are suspended in the pump room, loudout and hot equipment storage room, and the loading room.

When impacted in the condenser room, a camera will be placed above the floor drain to detect the presence of leaks or spills. The process condensate collection tank (TK-C-100), located in the condenser room, is the only tank storing dangerous waste on a routine basis. It is not normal to allow personnel access into the condenser room during extended electrical or ventilation outages unless maintenance activities or upgrades require entry. If required, the camera and subsequent television monitor will be

provided electrical power via an alternative source. Operators will complete their daily observations for leaks or spills using this method for the condenser room. Facility personnel will document the use of this alternative method in the Hanford Facility Operating Record, 242-A Evaporator unit specific portion.

For the pump room, loadout and hot equipment storage room, and the loading room, these rooms do not have the capability for a camera so that inspections are suspended during maintenance activities affecting the electrical power supply to the overhead lighting. Performance of Table 6.1 daily inspections is not possible. Storage of mixed waste does not occur in these rooms because systems which manage mixed waste within the pump room and the loadout and hot equipment storage room are flushed and gravity drained to the extent possible after each campaign. Should any remaining liquid leak from primary containment; it is captured by the secondary containment system and routed to the pump room sump and ultimately to the 241-AW-102 DST System tank. Quantities of liquid sufficient to reach 241-AW-102 would cause a change in tank level. Facility personnel will document when inspections cannot be performed due to electrical outages in the Hanford Facility Operating Record, 242-A Evaporator unit specific portion.

The process described in the preceding paragraphs of this section may also be implemented when external events cause electrical or ventilation outages.

6.2.2.5 Cathodic Protection

Cathodic protection is not required for the equipment within the 242-A facility boundaries. The only portion of the system, which is underground, is the PC-5000 transfer line. The PC-5000 line is constructed of fiberglass.

6.2.2.6 Tank Assessments

The IAR was issued in 1998. The frequency and nature of these assessments are discussed in the IAR.

6.2.3 Storage of Reactive and Ignitable Wastes

A Fire Protection Engineer performs annual fire inspections of the 242-A Evaporator. The assessment includes the date and time of the inspection, the name of the professional inspector, a notation of the observations made, and any remedial actions which were taken as a result of the inspection. The completed fire protection facility assessment is included in the operating record.

6.2.4 Air Emissions Control and Detection Inspections

The process vent at the 242-A Evaporator is subject to 40 CFR 264, Subpart AA, which requires organic emissions be limited to 1.4 kilograms per hour, and 2.8 mega grams per year, or controls be installed to reduce organic emissions by 95 percent. Organic concentrations in the waste processed at the 242-A Evaporator are limited to ensure the values of 1.4 kilograms per hour and 2.8 mega grams per year are not exceeded. Therefore, no emission control devices are installed on the 242-A Evaporator vessel ventilation system and no inspections are required (Chapter 4.0, §4.2).

6.2.5 Inspection Logs

Visual inspections (refer to Tables 6.1-6.4) are performed using inspection log sheets (also called round sheets) that outline frequency, the components to inspect, operating conditions and ranges, and types of problems. Log sheets are kept in the 242-A Evaporator control room. Inspectors record the following information:

- Date and time of the visual inspection
- Printed name and signature of the person performing the inspection
- Notations of the observations made, including space for writing comments
- An account of spills or discharges in accordance with WAC 173-303-145.

Completed log sheets are reviewed and approved by the shift supervisor, collected, and stored for at least 5 years.

Maintenance inspections are performed as part of the maintenance job control system. After completion, the maintenance documentation is reviewed and signed.

6.2.6 Schedule for Remedial Action for Problems Revealed

If while performing a visual inspection (Table 6.1), a leak or spill is discovered, facility management responds immediately per Chapter 7.0, Contingency Plan. Action is taken to stop the leak and determine the cause. The waste is removed from the secondary containment within 24 hours or in a timely manner that prevents harm to human health and the environment. For spills that drain to the pump room sump, the sump must be jetted. The sump will be triple rinsed in accordance with WAC 173-303-160(2)(b) if the contents include acutely hazardous waste (WAC-173-303-040) or toxic extremely hazardous waste (WAC-173-303-100). Pesticides are not expected to enter this system (Chapter 4.0, §4.1.5).

If an alarm activates during inspections, an operator responds immediately and implements appropriate actions.

If an inspection identifies equipment that is missing, damaged, or not operating properly, the operator records the problem on a deficiency log in the 242-A Evaporator control room. Repair work is prioritized by facility management to mitigate health and environmental risks.

6.3 PREPAREDNESS AND PREVENTION REQUIREMENTS

The following sections document the preparedness and prevention measures taken at the 242-A Evaporator.

6.3.1 Equipment Requirements

The following sections describe the internal and external communications and emergency equipment located at the 242-A Evaporator that can be activated by the 242-A Evaporator BED. Hanford Facility-wide equipment is identified in Permit Attachment 4, *Hanford Emergency Management Plan* (DOE/RL-94-02).

6.3.2 Internal Communications

The 242-A Evaporator is equipped with internal communication systems to provide immediate emergency instruction to facility personnel. The onsite communication systems at the 242-A Evaporator include telephones, hand-held two-way radios, a public address system, and alarm systems. The telephone and radio systems provide for internal and external communication. Alarm systems allow facility personnel to appropriately respond to various emergencies, including building evacuations, take cover events, fires and/or explosions. The locations of telephones, public address systems, and alarms are given in the Chapter 7.0, Contingency Plan.

Immediate emergency instruction to personnel is provided by a public address system using speaker horns and speakers located throughout the 242-A and 242-AB Buildings and outside.

6.3.2.1 External Communications

The 242-A Evaporator is equipped with devices for summoning emergency assistance from the Hanford Fire Department, the Hazardous Materials Response Team, and/or Hanford Patrol, as necessary. External communication to summon emergency assistance is made by using a telephone communication system, fire alarm pull boxes, or hand-held radio as described in Permit Attachment 4, *Hanford Emergency Management Plan*, (DOE/RL-94-02). These devices are provided throughout the 242-A Evaporator.

During certain periods, only one operator may be available within the 200 East plateau. This operator has access to external communication using telephones located throughout the building.

6.3.2.2 Emergency Equipment

Emergency equipment is available throughout the 242-A Building. The locations of telephones, public address systems, and alarms are given in Chapter 7.0, Contingency Plan.

Major fire damage is unlikely at the 242-A Evaporator because of the concrete construction and because the amount of combustible material is minimized. Temperature activated water sprinkler systems, emergency lights, fire alarms pull boxes, and fire extinguishers are located throughout the facility. The 242-A Evaporator relies primarily on the Hanford Fire Department to respond to fires and other emergencies as described in Permit Attachment 4, *Hanford Emergency Management Plan*, (DOE/RL-94-02). The Hanford Fire Department is capable of providing rapid response to fires within the 200 East Area.

Safety showers are located in the areas where personnel are most likely to have direct exposure of hazardous materials: in the AMU room and on the first and fourth floors of the condenser room. Water for these devices is supplied from the sanitary water system.

Respirators are located in the PPE storage room near the entryway to the condenser room. Other PPE, such as hazardous material protective gear and special work procedure clothing, are located in cabinets in the survey area. If required, PPE is donned before entry into the rooms containing mixed waste. The level of personal protective equipment required depends on the level of contamination in the area being entered and the activity being performed.

A spill control kit is located in a cabinet near the door to the PPE storage room. An inventory of the equipment in the spill kit is included inside the cabinet. The spill kit cabinet door seal is checked monthly to ensure the kit has not been used. The kit inventory is inspected annually.

The 242-A Evaporator operating personnel are trained in the use of emergency equipment (Chapter 8.0).

6.3.2.3 Water for Fire Control

Water for fire protection is supplied from the 200 East Area raw water system. Columbia River water is supplied to the fire control system from the 282-E Water Supply Reservoir. The water distribution system is sized to provide adequate volume and pressure to supply fire fighting needs under normal and emergency conditions. A fire hydrant is located in the immediate proximity of the 242-A Building.

In the event that the sprinkler system at the 242-A Evaporator does not put out a fire, or the sprinkler system is damaged during an accident, the Hanford Fire Department fire station will provide equipment as described in Permit Attachment 4, *Hanford Emergency Management Plan (DOE/RL-94-02)*.

6.3.3 Spacing Requirement

Sufficient space is maintained on the exterior of the 242-A Evaporator to allow access of personnel and equipment responding to fires, spills, or other emergencies. Unobstructed fire lanes run from Fourth Street and Canton Avenue to the 242-A Building main entrance to allow emergency vehicle access to the main entrance and the nearby fire hydrant.

The 242-A Building interior space is designed to allow access by emergency response personnel while maintaining barriers to contain releases of gaseous or liquid waste and hazardous material. Exit (egress) paths in the rooms containing dangerous waste are checked daily to ensure the walkways have not been obstructed.

6.4 PREVENTIVE PROCEDURES, STRUCTURES, AND EQUIPMENT

The following sections describe preventive procedures, structures, and equipment.

6.4.1 Loading and Unloading Operations

The feed transfer and slurry lines between the 242-A Evaporator and AW Tank Farm are constructed of carbon steel piping with secondary containment and leak detection in a pipe-within-a-pipe arrangement. Although the regulations exempt systems that serve as secondary containment from requiring secondary containment, two of the drain lines from the 242-A Evaporator to AW Tank Farm also have outer encasement piping and leak detection (refer to Chapter 4.0, §4.1.4, for information on these lines).

Waste transfers within the 242-A Building are contained by the secondary containment walls, floors and drains (refer to Chapter 4.0, §4.1.4, for information on secondary containment at the 242-A Evaporator).

Mixed waste storage containers are not loaded or unloaded at the 242-A Evaporator. Unloading operations occur when equipment contaminated with mixed waste exits the facility. Such materials are fully sealed in plastic with absorbent material to absorb any free liquid present. Because of these requirements, the likelihood of a spill outside the 242-A Building during this operation is extremely low.

6.4.2 Runoff

Liquid waste handling at the 242-A Evaporator occurs within tank systems with secondary containment. Rooms containing mixed waste have drains that route to either the pump room sump or the feed tank, 241-AW-102. The pump room sump overflows to the feed tank as well. Therefore, run-off from a major leak, such as a break in a large water line within the 242-A Building, would be contained within the facility or drained to the feed tank (refer to Chapter 4.0, §4.1.4 for information on secondary containment and drain systems).

6.4.3 Water Supplies

Raw and sanitary Columbia River water are supplied to the 242-A Evaporator via separate underground lines from the 282-E Water Supply Reservoir. Raw water is filtered to prevent organisms and other debris from clogging valves, fire hydrants, and other equipment. Sanitary water is filtered and treated before distribution through a piping system separate from the raw water system.

The raw water supply to the 242-A Evaporator enters the 242-A-81 Water Service Building, passing through a strainer and backflow preventer before entering the facility. The backflow preventer ensures contaminated water cannot flow back into the raw water system. A second backflow preventer is installed in the 242-A Building on the raw water supply line connecting with the condensate recycle line. This system allows either raw water or process condensate to be used for the pump seal water and deentrainment pad spray water without risk of contamination of the raw water system.

The sanitary water system provides water to the lunchroom, drinking fountains, men's and women's change rooms, safety showers, and supply ventilation system air washers. There are no connections between sanitary water and any system or piping containing mixed waste.

6.4.4 Equipment and Power Failures

Backup power is provided by a diesel generator. The diesel motor starts automatically on loss of electrical power and has sufficient fuel to operate the generator, if needed, to safely shut down the evaporator process. An uninterruptible power supply system also is provided to allow continued operation of the MCS computer to ensure uninterrupted monitoring until the backup generator is fully on line.

The 242-A Evaporator is designed to mitigate the effects of failure of a major piece of equipment. In general, the evaporator process can be shut down and the vapor liquid separator gravity drained to the feed tank, 241-AW-102, in the event of equipment failure. The process condensate tank, TK-C-100, is

designed to overflow to feed tank 241-AW-102. This mitigates failure of the process condensate pump used to transfer the process condensate to LERF.

Response to equipment and power failures are discussed in more detail in Chapter 7.0, Contingency Plan.

6.4.5 Personnel Exposure

Facility design, administrative controls, and personal protective equipment are used at the 242-A Evaporator to prevent undue exposure of personnel to mixed waste and other hazardous materials.

The following features were incorporated into the 242-A Evaporator design to minimize personnel exposure.

- The facility is designed for remote operation of equipment containing highly radioactive solutions such as waste feed and slurry. These solutions usually are present only in the pump room and evaporator room, which are heavily shielded and routinely are not entered by operating personnel.
- The 242-A Building ventilation system is designed to provide air flow from uncontaminated zones to progressively more contaminated zones.
- Emergency lighting devices are located strategically throughout the 242-A Building.
- Eyewash stations and safety showers are located in rooms containing mixed waste or other hazardous materials that personnel routinely enter. For location of these, refer to Chapter 7.0, Contingency Plan.
- Continuous air monitors with audio and/or visual alarms to notify personnel of airborne radioactive contamination are provided in rooms that contain mixed waste and that routinely are entered.
- Methods for decontaminating vessels and equipment are available to reduce personnel exposure if entry for maintenance activity is required.
- Offices, control room, change rooms, and lunchroom are situated to minimize casual exposure of personnel.

All operations are conducted so employee exposure to mixed waste and other hazardous materials are maintained ALARA. Exposures are minimized by engineering or administrative controls with protective gear used where such controls are not practical. Before the start of any operation that might expose personnel to the risk of injury or contamination, a review of the operation is performed to ensure the nature of hazards that might be encountered are considered and that appropriate protective gear is selected. Administrative procedures dictate the level of protective clothing worn and depend on the location within the 242-A Building and the nature of the activity being performed. Personnel are trained to wear personal protective equipment in accordance with approved work procedures.

6.5 PREVENTION OF REACTION OF IGNITABLE, REACTIVE, AND INCOMPATIBLE WASTE

The following sections describe prevention of reaction of ignitable, reactive, and incompatible waste.

6.5.1 Precautions to Prevent Ignition or Reaction of Ignitable or Reactive Waste

Administrative procedures are designed to prevent the ignition or reaction of waste at the 242-A Evaporator. The precautions include the following.

- Analysis is performed on candidate waste in the DST System to check that there are no exothermic reactions when the waste is heated and that there will be no adverse affects due to mixing the contents of different waste tanks in the feed tank and evaporator vessel (refer to Chapter 3.0, for details on waste analysis).

- Sample analysis of the candidate waste in the DST System includes a surface sample to identify the presence of a separable organic phase that might be ignitable. If a separate organic phase is detected, the waste solution level in the feed tank is maintained above 2.54 meters to prevent transfer of the organic phase to the 242-A Evaporator.
- The condensate tank, C-100, is equipped with instrumentation to detect the presence of a separable organic phase. If a separate organic phase is detected, the tank is allowed to overflow, transferring the organic phase to the feed tank, 241-AW-102.
- The condensate tank, C-100 is overflowed to the DST System during each campaign to prevent the possibility of accumulating immiscible organics in the condensate waste tank.
- The vapor liquid separator and the condensate tank are drained and flushed before any welding is performed.
- Administrative safety controls have been established to control the use and quantities of combustibles materials, fuels, and gases. Hot work activities such as cutting, welding, and brazing are administratively controlled as part of the industrial safety program.

6.5.2 Precautions for Handling Ignitable or Reactive Waste and Mixing of Incompatible Waste

Waste received at the 242-A Evaporator is protected from materials or conditions that might cause the waste to ignite or react. Much of the waste handling is done remotely to reduce the risk to operating personnel. For precautions taken to prevent the ignition or reaction of waste, refer to Section 6.5.1.

The constituents in the waste received at the 242-A Evaporator that are ignitable or reactive are not very volatile. Therefore, the evaporation process renders the waste that is evaporated (i.e., the process condensate) neither ignitable nor reactive.

1 **Table 6.1. Visual Inspection Schedule for Tanks, Piping, and Rooms**

Item	Inspection	Frequency[1]
	Tank and Piping Inspection	
Condensate tank and piping	• Inspect piping for leaks or corrosion	Daily
	Room Inspections	
AMU room	• Inspect piping for leaks or corrosion • Inspect floor for spills or damage • Inspect for equipment malfunctions • Inspect for housekeeping	Daily[2]
Pump room	• Inspect piping for leaks or corrosion • Inspect floor for spills or damage • Inspect for equipment malfunctions • Inspect for housekeeping • Monitor pump room sump for overflow	Daily[3]
Hot equipment storage room	• Inspect piping for leaks or corrosion • Monitor pump room sump and inspect floor for spills or damage • Inspect for housekeeping	Daily[3]
Load out / Loading room	• Inspect for housekeeping • Monitor drains	Daily[2,3,4]
Condenser room	• Inspect tanks and piping for leaks or corrosion • Inspect floors for spills or damage • Inspect for equipment malfunctions • Inspect for housekeeping	Daily
IX column [5] room	• Inspect piping for leaks or corrosion • Inspect floor for spills or damage	Daily[6]

2

[1] Continuously: an operator must be present in the control room to respond to alarms when processing waste
Daily: at least every 24 hours
2 When dangerous waste is present
3 Use viewing window in AMU room to perform inspection
[4] Denote use of contamination control curtain when extended
[5] IX column was removed in 2003. The remaining piping has been drained and isolated.
[6] Surveillance is only required if the piping is returned to service and dangerous waste is reintroduced to the piping

1 **Table 6.2. Inspection Schedule of Safety, Security, and Emergency Equipment**

Item	Inspection	Frequency[1]
Security		
Building external doors	Verify external doors are closed and locked[2]	Daily
Posted warning signs	Verify signs are present, legible, and visible at 7.6 meters	Weekly
Communications		
Radios	Verify radios are operable and batteries are charged	Monthly
Telephones	Verify telephones are operable	Quarterly
Intercom/public address system	Verify systems are working properly	Quarterly
Emergency Equipment		
Safety showers/ eyewash station	Verify operability	Monthly
Emergency lighting	Verify operability	Monthly
Fire extinguishers	Verify fire extinguishers are in their proper location	Monthly
Spill response kit	Verify spill kit is present	Monthly
Personal protective clothing	Verify availability	Weekly
Respirators	Verify availability and shelf life	Monthly

2

[1] Continuously: an operator must be present in the control room to respond to alarms
Daily: at least every 24 hours
Weekly: at least every 7 days
Monthly: at least every 31 days
Quarterly: at least every 124 days
Annually: at least every 365 days

[2] Entrances to office areas are allowed to be unlocked

1 **Table 6.3. Inspection Schedule for Alarm Monitoring**

Item	Inspection	Frequency[1]
	Overfill Protection	
Vapor liquid separator: WFSH-CA11 WFSH-CA12	Monitor for vapor liquid separator high level. Surveillance required only when solution is in the vapor liquid separator.	Continuously
	Leak Detection	
Sampler lines: LDS-SMPL1 LDS-SMPL2	Monitor feed and slurry sampler lines for leaks. Surveillance required only during feed or slurry sampling.	Continuously
Pump room sump: WFI-SUMP1	Monitor for leaks in the evaporator room, pump room, load out and hot equipment storage room and loading room. These rooms drain to the pump room sump. Surveillance required only when waste solution is present in the rooms listed.	Continuously

[1] Continuously: an operator must be present in the control room to respond to alarms.

Table 6.4. Inspection Schedule for Maintenance and Other Inspections

Item	Inspection	Frequency[1]
Instrumentation Functional Checks and Calibrations		
Leak detectors	Perform leak detector functional checks.	Within 92 days of campaign startup and every 92 days thereafter until the campaign is over
Vapor liquid separator high level alarms: WFSH-CA11 WFSH-CA12	Perform calibrations of loop instruments.	Annually
Pump room sump level: WFI-SUMP1	Perform calibrations of loop instruments.	Annually
Backup Electrical Equipment		
Diesel generator	Verify operability.	Monthly
Uninterruptible power supply	Verify output voltage and inspect battery for signs of damage or tampering.	Annually
Fire Systems		
Fire suppressant and notification systems (i.e., sprinkler system and fire alarm pull boxes)	Water flow alarm tests of the sprinkler system to ensure the operation of a single sprinkler head will transmit an alarm, and that any of the manual fire alarm boxes will properly transmit an alarm signal.	Annually
Visual inspection of the physical condition of the sprinkler system, testing, and calibration of smoke detectors, and testing of heat detectors	A visual inspection of the sprinkler system to ensure system integrity as well as the required testing and calibration of detectors to ensure functionality. A flow test at the sprinkler system is performed to ensure proper flow to the system riser.	Biennial
Fire inspection	Inspect areas where ignitable or reactive wastes are stored per WAC 173-303-395(d).	Annually

[1] Continuously: an operator must be present in the control room to respond to alarms.
Monthly: at least every 31 days
Annually: at least every 365 days
Biennial every 730 days

Attachment 2
13-ECD-0073
(3 Pages)

Temporary Authorization Requirements

The U.S. Department of Energy (DOE), Office of River Protection (ORP) and Washington River Protection Solutions LLC (WRPS) are requesting that the Washington State Department of Ecology (Ecology) grant a temporary authorization to approve the requested Class 2 modifications to the 242-A Evaporator Hanford Facility Resource Conservation and Recovery Act Permit, Dangerous Waste Portion (Permit), to allow for scheduled 242-A Evaporator campaign runs. This temporary authorization is requested pursuant to the Washington Administrative Code (WAC) 173-303-830(4)(e). This attachment reiterates the temporary authorization requirements outlined in the WAC and provides the required information. To support start of cold runs at the 242-A Evaporator, temporary authorization is requested by October 9, 2013.

DOE ORP and WRPS are requesting a temporary authorization for a full term of 180-days. The timing of the effective date of the temporary authorization is needed to support the cold run and will be needed for continued operations. If an additional temporary authorization is required to complete the activities, a separate request will be submitted to Ecology. Regulatory text is provided in **bold** as follows.

WAC 173-303-830(4)(e) Temporary authorizations.
(i) Upon request of the permittee, the director may, without prior public notice and comment, grant the permittee a temporary authorization in accordance with this subsection. Temporary authorizations must have a term of not more than one hundred eighty days.

(ii)(A) The permittee may request a temporary authorization for:
(I) Any Class 2 modification meeting the criteria in (e)(iii)(B) of this subsection

The Permittees (DOE ORP and WRPS) are requesting a temporary authorization request that meets the criteria of **WAC 173-303-830(e)(iii)(B)(III) to prevent disruption of ongoing waste management activities.** A temporary authorization to implement the requested Class 2 modifications to the Permit will allow Evaporator campaigns to commence to reduce the volume of waste in Hanford's double-shell tank (DST) System and to make additional DST System space available for future waste retrievals from other tanks.

(B) The temporary authorization request must include:
(I) A description of the activities to be conducted under the temporary authorization:

Mixed waste from the DST System will be transferred for evaporation to the 242-A Evaporator. In accordance with a written Process Control Plan, the DST System waste will be concentrated and the resulting slurry returned to the DST System. A mixed waste stream, the process condensate, is generated from evaporation of the DST System waste. The process condensate is transferred from the 242-A Evaporator to the Liquid Effluent

Retention Facility & 200 Area Effluent Treatment Facility, for storage, treatment, and compliant disposal.

A summary of the changes proposed in the Class 2 modification follows:
Chapter 3 - Waste Analysis Plan

- Process added to address waste additions to candidate feed tanks and feed tanks after isolation.
- The waste acceptance process will not involve estimating the concentration of critical analytes to determine the minimum number of feed tank samples needed for compliance.
- Ammonia emission limits will not be evaluated separately from other organics.
- Four representative samples, from a single riser, will be taken from candidate feed tanks including one at the surface and three subsurface samples. Subsurface sampling depths will be based on professional judgment (e.g., depending on whether layering is suspected to exist). Table 3.3, "Candidate Feed Tank Sample Point Selection" provides sampling detail based on the presence or absence of layering.
- A second statistical analysis to verify the number of samples necessary will no longer occur.
- Riser selection, for sampling purposes, will be determined using best professional judgment.
- Clear sample bottles will be used in lieu of amber-colored sample bottles for surface samples to determine the existence of separable organics.
- New test methods will be used for separable organics and ammonia.
- Improved test methods will be used for total carbon and total inorganic carbon.

Chapter 6 – Procedures to Prevent Hazards

A section for using alternate leak detection during ventilation outages and power outages is proposed to be added.

The changes proposed in Chapter 3 also include other lessor changes that will be managed as Class 2 changes. WAC 173-303-830(4)(a)(iii) allows the permittees to process Class 1 permit modifications as Class 2 modifications. Chapter 3 contains Class 1 changes and several additional changes which are considered "other modifications" according to WAC 173-303-830(4)(e) as they are not explicitly described in WAC 173-303-830 Appendix I. Therefore, the Permittees have also included "other modifications" requested to be evaluated as Class 2 modifications. No Class 3 modifications are included in the modification package.

(II) An explanation of why the temporary authorization is necessary

A temporary authorization is necessary in order to maintain scheduled 242-A Evaporator campaign runs to reduce the volume of mixed waste stored in the DST System and to make additional DST System space available for future waste retrievals from other tanks.

(III) Sufficient information to ensure compliance with the standards in WAC 173-303-280 through 173-303-395 and 173-303-600 through 173-303-680.

The 242-A Evaporator is a final status operating unit in the Permit. The 242-A Evaporator unit specific chapter of the Permit includes technical and regulatory information required by the Dangerous Waste Regulations, such as a waste analysis plan, contingency plan, and a closure plan. The Permit chapters provide the documentation demonstrating that planned activities comply with WAC 173-303-280 through 173-303-395 and 173-303-600 through 173-303-680, as applicable. The technical information provided in the Class 2 modification request, in combination with the Permit, provides the required regulatory information specific to the operational activities at the 242-A Evaporator.

(C) The permittee must send a notice about the temporary authorization request to all persons on the facility mailing list maintained by the director and to appropriate units of state and local governments as specified in WAC 173-303-840 (3)(e)(i)(D). This notification must be made within seven days of submission of the authorization request.

Permit Condition I.C.3 allows for the Tri-Party Agreement processes to be used at the Hanford Facility for temporary authorization notifications. The notice for the Class 2 modification and the temporary authorization will be made within 7-days after transmitting the request to Ecology.

Attachment 3
13-ECD-0073
(1 Page)

Certification for Class 2 Modification to the 242-A Evaporation Hanford Facility Resource Conservation and Recovery Act Permit

CERTIFICATION FOR CLASS 2 MODIFICATIONS TO THE 242-A EVAPORATION HANFORD FACILITY RESOURCE CONSERVATION AND RECOVERY ACT PERMIT

I certify under penalty of law that this document and all attachments were prepared under my direction or supervision in accordance with a system designed to assure that qualified personnel properly gather and evaluate the information submitted. Based on my inquiry of the person or persons who manage the system, or those persons directly responsible for gathering the information, the information is, to the best of my knowledge and belief, true, accurate, and complete. I am aware that there are significant penalties for submitting false information, including the possibility of fine and imprisonment for knowing violations.

LDOlson

L. D. Olson, President and Project Manager
Washington River Protection Solutions LLC

9/12/13
Date

Kevin W. Smith, Manager
U.S. Department of Energy
Office of River Protection

9/11/13
Date