START

003935

WHC-EP-0210
PREDECISIONAL DRAFT

Waste Characterization Plan (Waste Analysis Plan) for the Hanford Site Single-Shell Tanks

Predecisional Draft

W. I. Winters
L. Jensen
L. M. Sasaki
R. L. Weiss
Westinghouse Hanford Company

J. F. Keller
A. J. Schmidt
M. G. Woodruff
Pacific Northwest Laboratory

Predecisional Draft Date
February 22, 1989

9 2 1 2 5 5 3 0 0 0 2

Prepared for the U.S. Department of Energy
Assistant Secretary for Defense Programs

Westinghouse Hanford Company
P.O. Box 1970
Richland, Washington 99352

Hanford Operations and Engineering Contractor for the
U.S. Department of Energy under Contract DE-AC06-87RL10930

This page intentionally left blank.

9 2 1 2 6 5 3 0 0 0 3

LIST OF TERMS

AA	atomic absorption
ACSL	Analytical Chemistry Services Laboratory
AEA	Alpha Energy Analysis
ALARA	as low as is reasonably achievable
ASTM	American Society for Testing Materials
ATS	Automated Tracking System
$Bi(PO_4)$	Bismuth Phosphate
CERCLA	Comprehensive Environmental Response, Compensation, and Liability Act
CLP	Contract Laboratory Program
CLP-SOW	Contract Laboratory Program Statement of Work.
CMPO	octyl(phenyl)-N, N-dissobutylcarbamoylmethylphosphine oxide
CST	core sampling truck
CVAA	cold vapor atomic absorption
DMCG	Data Management Control Group
DNAAS	delayed neutron activation analysis system
DOE	U.S. Department of Energy
DSC	differential scanning calorimetry
DST	double-shell tank
DW	dangerous waste
Ecology	Washington State Department of Ecology
EDTA	ethylenediaminetetraacetic acid
EHW	extremely hazardous waste
EIS	environmental impact statement

9 2 1 2 6 6 3 0 0 4

EP	extraction procedure (test)
EPA	U.S. Environmental Protection Agency
ESM	Environmental Survey Manual
EOX	extractable organic halide
FIC	Food Instrument Corporation
FY	fiscal year
GC	gas chromatography
GC/MS	gas chromatography/mass spectrometry
GC/MSD	gas chromatography/mass selective detector
GEA	gamma energy analysis
GFAA	graphic furnace atomic absorption
HASL	DOE Environmental Measurement Laboratory procedures manual
HDEHP	di-2-ethlhexylphosphoric acid
HDW-EIS	Hanford Defense Waste-Environmental Impact Statement
HEDTA	hydroxylethylethylenediaminetriactic acid
HEPA	high efficiency particulate air filter
HH	halogenated hydrocarbons
HPLC	high performance liquid chromatography
HYAA	hydride atomic absorption
IARC	International Agency for Research on Cancer
IC	ion chromatography
ICP	inductively coupled plasma
LBRC	levels below regulatory concern
LCCS	Laboratory Customer Communication System
LICCB	Laboratory Instrumentation Calibration Control Board

9 2 1 2 5 5 3 0 0 5

LLW	low-level wastes
LMCS	laboratory measurement control system
LOW	liquid observation wells
MCL	maximum contaminant levels
MCLG	maximum contaminant level goals
MS	mass spectrometer
MW	mixed waste
NEPA	National Environmental Policy Act
NIOSH	National Institute of Occupational Safety and Health
NIR	near infrared spectroscopy
NPH	normal paraffin hydrocarbon
OSM	Office of Sample Management
PAH	polycyclic aromatic hydrocarbons
PCB	polychlorinated biphenyls
PCEL	Process Chemistry and Engineering Laboratories
PCL	Process Chemistry Laboratory
PFP	Plutonium Finishing Plant
PM	preventive maintenance
PNL	Pacific Northwest Laboratory
PUREX	Plutonium-Uranium Extraction (Plant)
QA	quality assurance
QAP	quality assurance plan
QAPP	quality assurance project plan
QC	quality control
RCRA	Resource Conservation and Recovery Act
REDOX	reduction/oxidation

9 2 1 2 6 5 3 0 0 0 6

RMW	radioactive mixed waste
SARP	Safety Analysis Report for Packaging
SDWA	Safe Drinking Water Act
SMCL	secondary maximum contaminant levels
SST	single-shell tank
SWL	saltwell liquid
TBP	tributyl phosphate
TFO	Tank Farm Operations
TGA	thermogravimetric analysis
TIC	total inorganic carbon
TOC	total organic carbon
TOX	total organic halide
TRAC	Track Radioactive Constituents
TRU	transuranic
TTA	thenoyltrifluroacetone
UV	ultraviolet
VOC	volatile organic compounds
VOST	volatile organic sampling train
WAC	Washington Administrative Code
WAP	Waste Analysis Plan
WCP	Waste Characterization Plan
WESF	Waste Encapsulation and Storage Facility
Westinghouse Hanford	Westinghouse Hanford Company
WTC	waste tank characterization

9 2 1 2 6 5 3 0 0 7

CONTENTS

1.0 Introduction 1-1
- 1.1 Objective 1-1
- 1.2 Outline 1-4
- 1.3 Approach to Phase I Sampling and Analysis 1-5
- 1.4 Data Requirements 1-6
- 1.5 Safety and Cost Considerations 1-11
- 1.6 Factors Affecting the Single-Shell Tank Waste Characterization Plan 1-13

2.0 Facilities and Waste Description 2-1
- 2.1 Facility Description 2-1
- 2.2 Waste Description 2-3

3.0 Sampling Plan and Procedures 3-1
- 3.1 Overall Sampling Plan 3-1
- 3.2 Sampling Procedures 3-7
- 3.3 Reference Sampling Plan 3-24
- 3.4 Other Sampling Considerations 3-30

4.0 Waste Analysis Parameters 4-1
- 4.1 Introduction 4-1
- 4.2 Approach to Waste Characterization 4-2
- 4.3 Chemical Testing Parameters 4-13
- 4.4 Radiochemical Test Parameters 4-36
- 4.5 Summary 4-49
- 4.6 Physical Testing Parameters 4-50
- 4.7 Summary of Tests on Specific Samples and the Associated Rationales 4-51

5.0 Analytical Test Procedures 5-1
- 5.1 Introduction 5-1
- 5.2 Waste Characterization Procedures 5-8
- 5.3 Chemical Procedures 5-13
- 5.4 Radionuclide Procedures 5-25
- 5.5 Physical Testing Procedures 5-36
- 5.6 Summary of SW-846 Analytical Methods 5-40

6.0 References 6-1

Appendices:
- A. Facilities and Waste Data A-1
- B. Field Sampling Data and Operations B-1
- C. Single-Shell Tank Development and Implementation Tasks C-1
- D. Quality Assurance/Quality Control Procedures D-1
- E. Analytical Procedure Information E-1

9 2 1 2 6 6 3 0 0 8

LIST OF FIGURES

1-1 Two-Phase Approach to Single-Shell Tank Waste Characterization 1-7

1-2 Makeup of Single-Shell Tank Core and Tank Composites 1-12

3-1 Single-Shell Tank Sampler and Cask Arrangement 3-14

3-2 Room 1E, 222-S Laboratory 3-18

3-3 Extruded Sample 3-20

3-4 Data Record Sheet 3-21

3-5 Reference Sampling Plan for Single-Shell Tank Characterization 3-27

5-1 Single-Shell Tank Analysis Flow for Reference Tank 5-3

9 2 1 2 6 5 3 0 0 0 9

LIST OF TABLES

3-1 Summary of Estimated Tank Contents for Tank 241-B-110 3-3

3-2 Summary of Estimated Tank Contents for Tank 241-B-107 3-3

3-3 Current Single-Shell Tank Sampling Milestones 3-6

3-4 SW-846 Holding Times for Single-Shell Tank Components 3-17

4-1 Preliminary Resource Conservation and Recovery Act Characterization Constituents for the Single-Shell Tanks 4-14

4-2 Constituents from Regulated Compounds that may be Present in the Single-Shell Tanks 4-21

4-3 Summary of Metals Selected for Analysis in Phase I 4-25

4-4 Summary of Anions Selected for Analysis in Phase I Testing 4-29

4-5 Radionuclides Included in TRAC System, Specified in Regulations, and that are Principal Contributors to Dose in Performance Assessment 4-37

4-6 Curium Isotope Data 4-40

4-7 Americium Isotope Data 4-41

4-8 Plutonium Isotopic Data 4-42

4-9 Uranium Isotopic Data 4-43

4-10 Thorium Isotopic Data 4-45

4-11 Summary of Radionuclide Data for Fission Products and Activation Products 4-48

4-12 Physical Waste Parameters and Rationale 4-52

4-13 Chemical Testing Parameter and Rationales 4-53

4-14 Single-Shell Tank Waste Characterization Plan Summary Table 4-57

5-1 Comparison of EP Toxicity Maximum Concentration with Inductively Coupled Plasma Detection Limits 5-12

5-2 Analytical Areas Where Deviations to SW-846 Procedures are Planned or Expected 5-41

9 2 1 2 6 5 3 0 0 1 0

This page intentionally left blank.

9 2 1 2 6 5 3 0 0 1 1

WASTE CHARACTERIZATION PLAN (WASTE ANALYSIS PLAN) FOR THE HANFORD SITE SINGLE-SHELL TANKS

1.0 INTRODUCTION

1.1 OBJECTIVE

This waste characterization plan (WCP) describes the first phase of a two-phase characterization program that will obtain information needed to assess and implement disposal options for the Hanford Site single-shell tank (SST) wastes.* The WCP is based on requirements for a waste analysis plan for characterizing hazardous waste under the Resource Conservation and Recovery Act (RCRA) and Washington's Hazardous Waste Management Act, and with requirements under the Atomic Energy Act that address radioactivity. The requirements of these acts are addressed in the WCP because the hazardous constituents of the SSTs are being regulated under RCRA and Washington State regulations. The WCP describes a broad range of information needed to assess and implement disposal options for the wastes, including data on the radioisotopic and physical properties of the wastes that are not addressed under RCRA. The WCP describes the sampling and analysis procedures to be used for characterizing the waste. Differences between those procedures and the U.S. Environmental Protection Agency (EPA)-approved sampling and analysis methods are also described.

---

*The SST waste refers to defense mixed wastes (MW) that are currently stored in 149 underground, carbon steel-lined concrete tanks on the Hanford Site. The wastes are considered MW until proven otherwise, but some wastes may not be hazardous.

The WCP is intended to contain elements necessary for compliance with RCRA interim status waste analysis plan (WAP) requirements (e.g., rationale for parameter selection, sampling, and analytical methodologies). The WCP will be expanded or modified as appropriate to more fully comply with these regulatory requirements as further waste characterization information is obtained. If necessary, a WAP that singularly addresses RCRA waste characterization can be provided from the WCP in a separate document for interim status compliance purposes. The WCP was developed using an approach that describes a broad range of regulatory and other requirements that are applicable or relevant to SST waste management decisions.

9 2 1 2 6 5 3 0 1 3

The WCP addresses all the applicable topics described in the requirements for WAPs as defined in Washington Administrative Code WAC-173-303-300. In addition, recommendations from the EPA documents EPA/530-SW-84-012, *Waste Analysis Plans (A Guidance Manual)*; PB87-155503, *Plans, Recordkeeping, Variances, and Demonstrations for Hazardous Waste Treatment, Storage, and Disposal Facilities Guidance Manual Interim Status Requirements*; and PB87-151064, *Permit Applicants Guidance Manual for the General Facility Standards of 40 CFR 264*, were also used to develop the present WCP. However, the SST WCP also contains additional information on radionuclide, performance assessment, and technology and process development areas that are not identified in these guides. Many of the regulatory WAP requirements are directed at operating facilities in which the composition of the waste streams are known. This is not the case for SST wastes. The WCP represents an all-purpose plan to identify analysis requirements for regulatory, performance assessment, and process development purposes.

An extensive SST waste characterization program is being conducted by Westinghouse Hanford Company (Westinghouse Hanford) for the U.S. Department of Energy (DOE). The objectives of the waste characterization program are as follows:

- Satisfy regulatory requirements for waste analysis.

- Classify the wastes based on criteria such as dangerous waste (DW) and extremely hazardous waste (EHW) content, radioactive constituent content, and water content to assist in determining the statutory and regulatory requirements that must be met by a chosen disposal option for the wastes.

- Obtain sufficient information about the chemical, radioactive, and physical properties of the wastes to support disposal decisions, based on health and safety performance assessments, regulatory, institutional, and technology-based criteria, which will protect human health and the environment. The information gathered during the first phase of characterization will focus on estimating the chemical and radiochemical inventories for tanks and the errors associated with those measurements.

This plan describes information about the wastes that is needed to meet these objectives, the rationale behind decisions on the types of information needed, and the methods by which information will be obtained. The WCP users will include regulatory agencies, individuals responsible for assessing and comparing disposal options, and individuals responsible for waste sampling and analysis. Collection of waste characterization data is consistent with the commitment in the Record of Decision for the *Final Environmental Impact Statement for the Disposal of Hanford Defense High-Level, Transuranic and Tank Wastes (HDW-EIS)* (53 FR 12449) to conduct additional development and evaluation to support preparation of a future supplemental EIS for SST waste disposal options. The results of this characterization will be published for review and comment in a supplement to that EIS.

Because of incomplete ongoing performance assessments, waste analysis criteria that are still under development, and limited experience with regulatory analytical procedures, uncertainty exists in some areas of the present WCP. The present WCP defines a large number of parameters to be measured. These parameters will change based on the results of performance assessment studies, as waste process technology needs become better defined, and as more experience is gained in analyzing SST wastes.

The SST waste characterization program is in its preliminary stages, and additional work is needed to specify all information needs and to define the ways in which the information will be obtained and used in decision making. This WCP describes the approach that will be taken to the initial phase (Phase I) of waste characterization. Additional technical details will be incorporated into the plan as it becomes available. Characterization beyond Phase I will be documented in an update to this plan or in a separate document in the future.

9 2 1 2 6 5 3 0 0 1 5

1.2 OUTLINE

The remainder of Chapter 1.0 provides an overview of the two-phase approach that is being used for SST waste characterization. Chapter 2.0 describes the SSTs and their associated wastes, and describes the background of the waste generation. Chapter 3.0 describes the current waste sampling plan and the approach that is being used for representative sampling. Potential variances from EPA-approved sampling procedures are identified. Chapter 4.0 provides a discussion of the chemicals, radioisotopes, and physical parameters that have been selected for analysis and the rationale for their selection. Screening tests that are being considered for use in making decisions on testing for specific constituents are also described. Chapter 5.0 describes the testing procedures that will be used to analyze the SST wastes and identifies areas where differences from EPA-approved procedures may be

necessary to obtain reliable testing results and to permit safe and efficient handling of radioactive wastes. A discussion of applicable Quality Assurance areas (Appendix D) and SST development tasks (Appendix C) are included in the appendices.

1.3 APPROACH TO PHASE I SAMPLING AND ANALYSIS

An underlying premise to this plan is that waste retrieval and disposal decisions will be based upon public health and safety considerations, with long-term performance assessment models providing the basis for these decisions.* The objective of Phase I characterization is to arrive at a preliminary sort of the SSTs into likely candidates for retrieval, likely candidates for in-place disposal, and those candidates about which no initial conclusions can be drawn. This sorting will allow Phase II characterization to focus on those tanks that are candidates for in-place disposal and those that cannot be categorized at this time. These tanks will require extensive sampling and analysis to evaluate the acceptability of in-place disposal options. Additional in-tank sampling of retrieval candidates to obtain information for technology and treatment evaluation is expected to be much less than that for in-place disposal. Thus, the two-phase characterization program minimizes the cost, time, and occupational hazard involved in SST characterization by limiting the in-depth sampling and analysis of retrieval candidates.

---

*Consistent with the National Environmental Policy Act (NEPA), these evaluations will also consider environmental protection, worker safety, short-term public health, and safety and costs.

Another objective of Phase I characterization is to determine the statistical variability of the sampling and analysis process to estimate the uncertainty in the tank constituent inventory and to define sampling requirements for the SST waste characterization program. This activity is referred to as the "reference sampling plan" in the WCP.

Figure 1-1 illustrates the two-phase characterization program. Criteria for use in performing the preliminary sort of the SSTs are under development. These criteria may change as regulations change (Section C.7.7, Appendix C).

9 2 1 2 6 5 3 0 0 1 7

1.4 DATA REQUIREMENTS

As described in Chapter 2.0, the composition of the SST wastes, which contain both radioactive and chemically hazardous constituents, is complex and uncertain. A complete understanding of the information needed to evaluate disposal options for the SST wastes is not yet possible. However, it is recognized that information needs fall into four categories: regulatory-related requirements, performance assessment, technology evaluation and development, and waste characteristic distribution.

1.4.1 Regulatory-Based Information Needs

Regulatory requirements will be important in determining which options for disposal of the SST waste meet current regulatory requirements. The disposal of chemically hazardous and radioactive wastes is governed by different sets of regulations. These regulatory distinctions can create

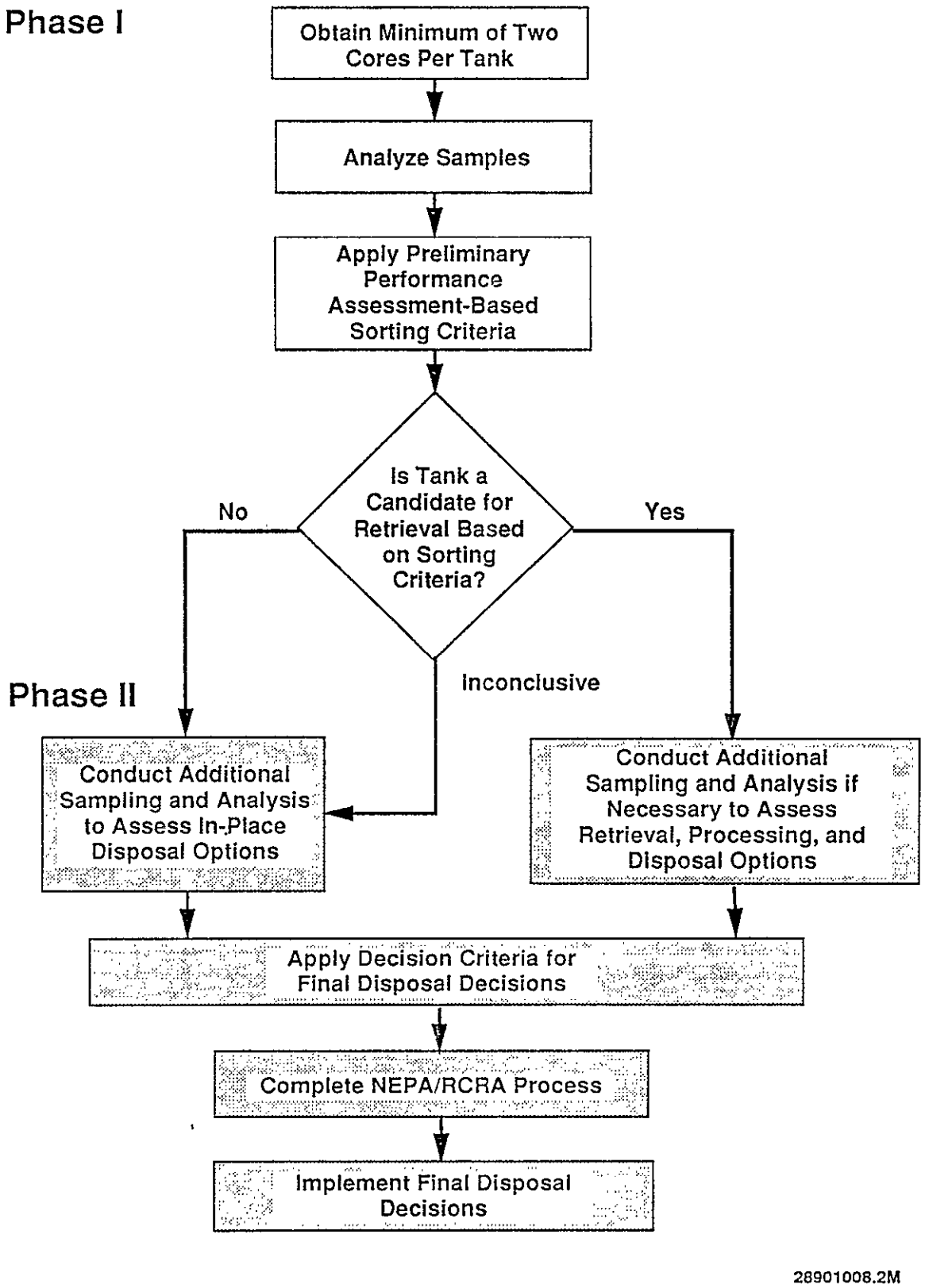

Figure 1-1. Two-Phase Approach to Single-Shell Tank Waste Characterization.

uncertainty about how to manage or dispose of MW. Often, regulations that cover hazardous wastes do not address the complications of radioactivity. Similarly, regulations governing radioactive waste disposal were not written to account for a variety of independently hazardous chemical substances. In addition, hazardous waste regulations were written primarily for cases in which the waste feed streams and waste generation processes are known and can be used to determine the composition of the wastes. Thus, the application of radioactive and chemically hazardous waste regulations to the SST waste is not straightforward.

The approach taken to regulatory-based information needs is to determine which waste constituents and parameters are of regulatory importance under key statutes and regulations relating to hazardous and radioactive waste disposal, as well as additional environmental pollution control statutes and regulations. These constituents and parameters include those needed to designate the SST wastes as DW, EHW, or not regulated under the Washington State's Dangerous Waste Regulations. These constituents and parameters are then evaluated for the feasibility of obtaining meaningful waste analysis data. The approach is described in Chapter 4.0, "Waste Analysis Parameters." Data that satisfy regulatory-based information needs will be collected during both Phase I and Phase II waste characterization.

9 2 1 2 6 5 3 0 0 1 9

1.4.2 Performance Assessment

Performance assessments require information on the physical, chemical, and radiological characteristics of the waste, as well as environmental data and other factors affecting contaminant release and transport. Those constituents that pose the greatest risk will be those that have a high solubility or mobility and also a high degree of toxicity to humans or the environment.

Ultimately SST disposal decisions will be based upon evaluations of the performance and impacts of various retrieval, pretreatments, treatment, and disposal technologies. These evaluations to be conducted at the end of Phase II, in the context of the supplemental EIS, will utilize detailed performance assessment computer codes plus SST inventories determined during characterization. In addition, performance assessments may be required subsequent to completion of the supplemental EIS to address compliance with regulatory-based performance requirements.

In the interim, performance assessment studies will be used to support preliminary technology evaluations and to aid in the design of the characterization program. Because it is not feasible to test the SST wastes for all potential constituents, preliminary performance assessment studies will be conducted before and during Phase I characterization (1) to help identify the constituents that are of most concern from a risk standpoint and (2) to provide the preliminary sort of SSTs at the end of Phase I.

Characterization of the environmental setting for SSTs, and model development efforts to refine the performance assessment codes, will also be ongoing during Phases I and II; however, such activities are not within the scope of this plan and will be separately addressed within other documentation.

Generic plans for the development and utilization of performance assessment computer codes are addressed in Davis (1988).

9 2 1 2 6 3 3 0 0 2 0

1.4.3 Technology Evaluation and Development

During SST characterization, data must be obtained that will facilitate the evaluation and development of technologies for retrieval of wastes from the SSTs, immobilization and in-place disposal of the waste form, pretreatment of retrieved wastes before disposal, and immobilization of pretreated waste for disposal. For example, both the physical characteristics of the waste and tank integrity will determine whether waste retrieval or in-place disposal schemes are feasible or whether additional methods need to be developed. Other characteristics will be important in the evaluation and development of specific treatment and pretreatment processes for technologies such as grouting or vitrification that may have design constraints on the type and amount of particular components in the feed streams. Almost all of these constraints can be accommodated by proper pretreatment.

Data to support technology evaluation and development will be collected during both Phase I and Phase II. Pretreatment and treatment studies have recently been initiated which will refine the associated inventory-related information and data needs to be satisfied during waste characterization.

9 2 1 2 6 5 3 0 0 2 1

1.4.4 Waste Characteristic Distribution

If data on the distribution (location) of a waste parameter or characteristic within a SST is required, the sample will be analyzed differently than for the case in which such data is not required. As described in Section 3.1, a minimum of two cores per tank will be obtained from each SST. The average tank core sample contains five 19-in-long waste segments; each sample segment contains about 250 mL if a full segment is obtained. The amount of waste (depth) in the tanks varies from a few inches to 346 in., and a core may contain from 1 (partial) to 19 segments. Depending upon the

need for distributional data, tests will be run on homogenized segments, core composites, tank composites, or tank farm composites. As shown in Figure 1-2, core composites are prepared by combining and homogenizing waste material from all segments in a core sample. Tank composites are prepared by combining and homogenizing waste material from all segments of the two core samples obtained from each tank. Occasionally, tests may be run on tank farm composites which will be prepared by combining and homogenizing tank composites from all tanks in a tank farm. Some physical and organic tests must be run on waste segments as received, before any homogenization is performed, since the homogenization process will alter the physical nature and volatile component (e.g., organics, water) concentration in the sample. As currently designed, the WCP includes analysis of segments for some physical properties but not for individual constituents. This will be reevaluated upon completion of ongoing performance-assessment sensitivity studies.

9 2 1 2 6 5 3 0 0 2 2

1.5 SAFETY AND COST CONSIDERATIONS

As described in Chapter 4.0, "Waste Analysis Parameters," the results of previous efforts to reconstruct the processes generating the wastes in the SSTs indicate that over 300 chemicals (Klem 1988) and over 65 radionuclides (Morgan 1988) may have been introduced into the SSTs. However, to test each tank for every potential chemical and radioactive constituent would be prohibitively expensive and time consuming and would result in unacceptably high radiation doses to field and laboratory workers for the information yielded. In addition, not all of these chemicals and radionuclides are significant due to their impact on health, safety, and the environment. Regulations promulgated under the Atomic Energy Act, mandate that worker exposure to radiation be kept to a level that is as low as is reasonably achievable (ALARA), taking social and economic factors into account. Minimizing worker exposure to radiation will be an important element in the waste characterization program.

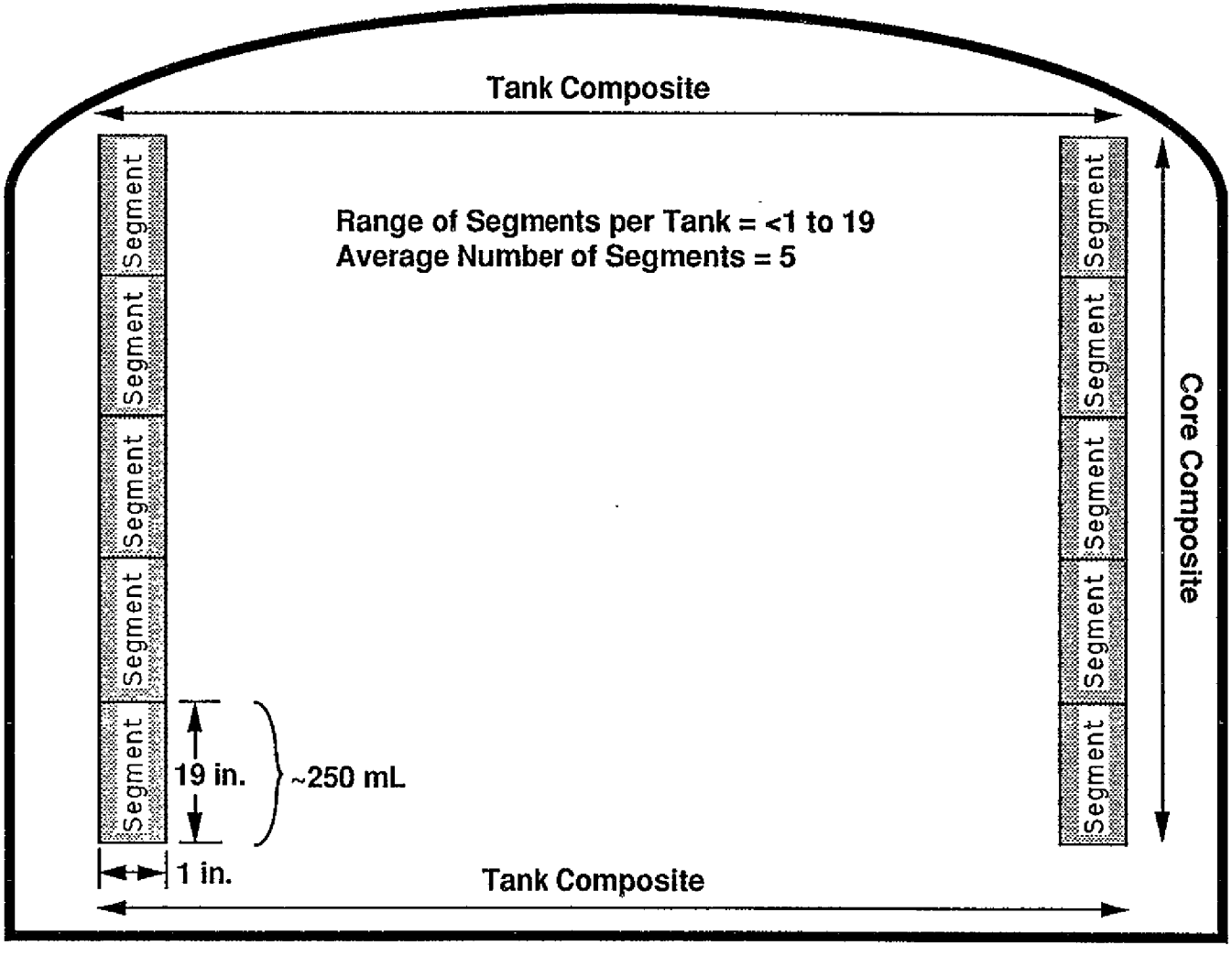

Figure 1-2. Makeup of Single-Shell Tank Core and Tank Composites.

The amount of worker exposure during waste analysis will depend on radioactivity levels in the sample, the number of samples taken, and the types of tests performed on each sample. The radioactive dose levels in SSTs will depend on the source of the waste (first-cycle reprocessing waste containing large amounts of beta-gamma isotopes versus plutonium processing waste containing mostly alpha isotopes) and the age of the waste. Older waste will have lower concentrations of short-half-life, beta-gamma-emitting isotopes. All SST samples will be introduced into hot-cell facilities where remote manipulators will be used to extrude the sample from the sampler, homogenize the sample, and prepare the composites. Performing analytical operations (e.g.,weighing, dissolving) in a hot cell is a time-consuming process. Whenever the dose rates from the sample are such that personnel exposure is low, these functions will be performed on a portion of the waste composite that has been transferred from the hot cell to shielded open-face hood facilities. Measurements requiring large sample sizes (10 g) such as the extraction procedure (EP) toxicity test and organic extractions will most likely be performed in hot cells. All hot-cell activities and shielded hood operations require more time than nonradioactive sample analysis. Another important element in the waste characterization program is minimizing costs and exposure by developing and implementing an efficient waste characterization plan that minimizes the total amount of required sampling and analysis. A time, cost, and exposure (ALARA) study that will allow better evaluation of safety and cost factors is being performed (Section C.7.1, Appendix C).

9 2 1 2 6 5 3 0 0 2 4

1.6 FACTORS AFFECTING THE SINGLE-SHELL TANK WASTE CHARACTERIZATION PLAN

As noted, the SST waste characterization program is in its early stages and the WCP will be updated as additional information from performance assessment studies, waste analysis, and technology development tasks become available. This information will include the results of

procedure trials that are being conducted in the PNL analytical laboratories at the Hanford Site using EPA-approved procedures (SW-846) (Section C.7.8, Appendix C). Deviations from these procedures that are required to obtain reliable data or allow radioactive sample handling for the SST wastes will be identified in this and future revisions of the WCP (Section C.7.3, Appendix C). Additional information on regulatory requirements and technology evaluation and development that results in changes to the SST characterization program will also be incorporated in future revisions of the WCP. The modification of the WCP is expected to be a continuing process, particularly in the early stages. After testing for the reference sampling plan is completed and evaluated and after Phase I is initiated, the plan will be changed as necessary to incorporate what was learned from these test results. This cycle of testing-evaluating-modifying will continue for the entire SST waste characterization program; however, as more experience and knowledge is gained, this cycle should become less frequent.

Westinghouse Hanford is responsible for maintaining and updating the WCP for the DOE. The plan will be reviewed at key points or at least annually to ensure that needed changes are incorporated.

9 2 1 2 6 5 3 0 2 5

2.0 FACILITIES AND WASTE DESCRIPTION

2.1 FACILITY DESCRIPTION

Between 1943 and 1964, 149 SSTs were built for the storage of radioactive wastes. These SSTs are located in 12 tank farms of 4 to 18 tanks each in the 200 West and 200 East Areas on the Hanford Site (Figures A-1 to A-6, Appendix A). No wastes have been added to the tanks since November 1980. However, water is added to two tanks for evaporative cooling purposes. Pumpable interstitial liquid and supernate wastes are removed from SSTs and transferred to double-shell tanks (DST). The DSTs are a tank-in-tank design and were placed into service beginning in 1971.

One hundred and thirty-three of the SSTs are 75 ft in diameter and 29.75 to 54 ft high (at their highest points) with nominal capacities of 500,000 to 1,000,000 gal. Sixteen of the tanks are smaller units of a similar design 20 ft in diameter and 25.5 ft high with capacities of 55,000 gal. Table A-1 (Appendix A) provides a listing of all SSTs, the year of construction, the year the tank was removed from service (no further waste added), and the operating capacity of the tank. Figure A-7 (Appendix A) shows the dimensions of various SSTs and Figure A-8 shows the equipment associated with a typical SST.

The SSTs are constructed of carbon steel, ASTM A283 Grade C or ASTM A201 Grade C (241-AX Tank Farm), lining the bottom and sides of a reinforced concrete shell. Typical features of these tanks are shown in Figure A-8 (Appendix A). The bottoms of most tanks are dished slightly. The tanks are below grade with at least 6 ft of soil cover which provides shielding and minimizes radiation exposure to operating personnel. Inlet and overflow lines are located near the top of the liner. Most of the 500,000- and 750,000-gal tanks were built in "cascades" of three or four tanks.

Waste was transferred to the first tank of the cascade and allowed to overflow into successive tanks of the cascade through piping in the side walls.

Access to the tanks is provided by risers penetrating the dome of the tanks. Risers vary in diameter from 4 to 42 in. The number of risers available for sampling varies from tank to tank depending on the number of risers on the tank, the location on the tank, and the equipment that may be in or around the riser. The number of potentially available risers ranges from 0 to 11, with the majority of tanks having only 3 to 5. However, the actual number of risers which can be used for sampling will be less; some of these risers are not suitable for sampling due to surrounding equipment or abandoned equipment inside the riser which may make the riser inaccessible for sampling equipment. Physical examination of the riser and surrounding area for these obstacles is required to determine if the riser may be used for sampling. If a tank does not have a sufficient number of risers to adequately sample the tank, alternatives, such as the addition of risers, will be implemented. Technology for adding the new risers must be developed (Section C.1.9, Appendix C).

Several methods are available for the determination of waste levels in SSTs. Manual tapes and automatic liquid level sensors [Food Instrument Corporation (FIC) gages] consist of a metal tape with a conductivity probe on a steel plummet. The plummet is lowered into the tank and the liquid or solid level is determined by electrical conductivity when the plummet contacts a moist solid or liquid surface. Liquid observation wells (LOW) have also been placed in some tanks. The LOWs are drywells (fiberglass or steel pipes, sealed at the lower ends) that extend to the bottom of the tank. Probes can be lowered into the drywells to detect liquid levels in the tanks. Other means of determining waste levels include sludge-level measurements (obtained by lowering a weight into the tank until the resistance of the sludge is met) and in-tank photographic evaluation. Waste-level measurements are obtained from specific locations in the tanks; therefore, because waste levels are

9 2 1 2 6 5 3 0 2 7

generally uneven, it can be difficult to determine the average waste level (or tank waste volume) using these methods.

The errors in measuring the total waste volume in a tank will be reflected in the total inventory estimate for a constituent. This error must be considered when evaluating the constituent analysis error requirements. Methods for improving total waste volume measurements need to be investigated (Section C.1.8, Appendix C).

Active ventilation currently provides cooling for 10 tanks containing high-heat wastes (Tanks 241-A-101, -C-105, -C-106, -SX-107, -SX-108, -SX-109, -SX-110, -SX-111, -SX-112, and -SX-114). Passive ventilation is provided for tanks that do not require cooling. The passive ventilation systems consist of "breather filters" installed on the tanks to allow air to flow into and out of the tanks in response to slight pressure changes. All air leaving the tanks passes through a high-efficiency particulate air (HEPA) filtration system.

2.2 WASTE DESCRIPTION

The majority of the wastes stored in SSTs were generated by the following chemical processing operations: the bismuth phosphate ($BiPO_4$) process, the reduction/oxidation (REDOX) process, the plutonium-uranium extraction (PUREX) process, the tributyl phosphate (TBP) process, and the B Plant waste fractionation process. The $BiPO_4$ process was a carrier-precipitation chemical-separation scheme for the recovery of plutonium from irradiated reactor fuels and the TBP solvent-extraction process was designed to recover uranium from waste generated by the $BiPO_4$ process. These were the first chemical processing operations at the Hanford Site. The REDOX and PUREX processes are the second- and third-generation chemical facilities that recovered plutonium,

uranium, and neptunium from irradiated reactor fuel. The REDOX process used solvent extraction with methyl isobutyl ketone (hexone) to separate uranium and plutonium from the reactor fuel. The PUREX process uses solvent extraction with TBP to separate uranium and plutonium. Both processes used various reducing and oxidizing agents (e.g., dichromate, ferrous sulfamate, hydroxylamine, hydrazine, nitrite) to control the valence state of the actinides. Early reactor fuels were clad with aluminum. The N Reactor fuels are clad with Zircaloy, a zirconium alloy. Chemical removal of the fuel cladding-produced decladding waste with high concentrations of these metals. The B Plant waste fractionation process separated strontium and cesium including the heat-generating ^{90}Sr and ^{137}Cs isotopes from the fuel reprocessing wastes. The strontium was separated using a di-2-ethylhexyl phosphoric acid solvent-extraction process. This process used various complexing agents [ethylenediaminetetraacetic acid (EDTA), hydroxyethylethylenediaminetriacetic acid (HEDTA), and citrate] to prevent transition metal extraction. The cesium isotope was purified by ion exchange. Both strontium and cesium were later converted to fluoride and chloride salts respectively and encapsulated in the Waste Encapsulation and Storage Facility (WESF). Before transfer to the SSTs, sodium hydroxide or sodium carbonate were added to make the wastes from these processes alkaline and minimize tank corrosion. Thus, the processing of the irradiated fuels and treatment of the resulting wastes has produced alkaline solids and liquids containing radionuclides and hazardous chemical constituents.

Other wastes that were sent to the SSTs in smaller volumes include research and development program wastes, facility and equipment decontamination wastes, laboratory wastes, and Plutonium Finishing Plant (PFP) wastes. The PFP uses a TBP solvent-extraction process to further purify the plutonium product from the PUREX Plant or from plutonium scrap. The TBP in the PFP process is diluted in carbon tetrachloride whereas the TBP in the PUREX process is diluted in normal paraffin hydrocarbon (NPH) which is similar to kerosene with C_{10} to C_{15} hydrocarbon chains.

Waste management operations have created a complex intermingling of the tank wastes. Nonradioactive chemicals have been added to the tanks while varying amounts of waste and heat-producing radionuclides have been removed. In addition, natural processes have caused settling, stratification, and segregation of waste components. Waste was also cascaded (allowed to gravity flow from one tank to another) through a series of tanks; cooling and precipitation of radionuclides and solids occurred in each tank of the cascade. As a result, it is very difficult to estimate precisely the character of the wastes contained in the tanks through operational records.

There are three general waste types in the SSTs: sludge, saltcake, and liquid. Sludge consists of the solids (hydrous metal oxides) precipitated from the neutralization of acid wastes before their transfer to the SSTs. Saltcake consists of the various salts formed from the evaporation of water from the waste. Liquid exist as supernate and interstitial liquid in the tanks. These waste types do not necessarily exists as clear-cut layers, but are intermingled to different degrees. Sludges and saltcake may contain interstitual liquids and be relatively soft. Other saltcakes and sludges may be drier and harder. These are general descriptions and do not imply that the waste does not contain any of the other waste forms.

The SSTs store a total of about 37 Mgal of waste. Of this waste, about 0.7 Mgal are supernate, 23.6 Mgal are classified as saltcake, and 12.7 Mgal are classified as sludge in WHC-EP-0182-5 (Thurman 1989). The saltcake and sludge contain interstitial liquid. The bulk of the interstitial liquid, about 5 Mgal, is contained in saltcake and is being pumped to DSTs. The amounts of supernate, sludge, and saltcake stored in each of the SST tank farms is given in Table A-2 (Appendix A).

The SST wastes consist primarily of sodium hydroxide; sodium salts of nitrate, nitrite, carbonate, aluminate, and phosphate; and hydrous oxides of iron and manganese. The radioactive components

consist primarily of fission product radionuclides such as ^{90}Sr, ^{137}Cs, and ^{129}I and actinide elements such as uranium, thorium, plutonium, and neptunium.

The SSTs contain mostly inorganic waste, although relatively small amounts of plant solvents were added during fuel reprocessing and water-soluble complexing agents and carboxylic acids were added in the B Plant fractionation process. A compilation of all nonradioactive chemicals known to have been used at production plants and support facilities that transferred waste to SSTs has been documented in WHC-EP-0172, *Inventory of Chemicals Used at Hanford Production Plants and Support Operations (1944-1980)* (Klem 1988). The document identifies nearly 300 chemicals that may have been added to the SSTs. The chemicals identified in this document were obtained from chemical process flowsheets, essential material consumption records, letters, reports, and other historical data. Chemical reaction (e.g., oxidation-reduction, neutralization, precipitation, radiolysis) has converted many of these chemicals into different compounds. Also, not all of the chemicals may have found their way into the SSTs. The quantities of these compounds identified vary widely.

The Track Radioactive Constituents (TRAC) computer code was developed for estimating the composition of the wastes in SSTs. The TRAC estimates waste inventories based upon nuclear fuels production models, reprocessing and waste management flowsheets, tank transfers, and radioactive decay calculations. The TRAC estimates the inventories of 65 radionuclides and 30 nonradioactive chemical constituents in each of the 149 SSTs. The TRAC code was used to generate estimates of the amounts and concentrations of radionuclides in each of the SSTs (Morgan 1988).

During fiscal years (FY) 1985 and 1986, waste in 15 SSTs was core sampled and analyzed. Although some chemical (metals and anions) and physical analyses were performed, the focus for the analysis was on radionuclides. A complete set of hazardous chemicals were not addressed because the samples were being taken to verify the TRAC program which focused on radionuclides . Some of the

results of the analyses are documented in RHO-WM-TI-1 P, *TY Tank Farm Waste Characterization Data* (Weiss 1986). Evaluation of these data against TRAC predictions (Adams 1986) resulted in the use of the TRAC code as a predictive tool to guide the selection of SSTs for sampling; the agreement between actual sample results and TRAC estimates was not adequate enough to allow the use of TRAC to characterize SST wastes (Morgan 1988).

Because TRAC provides both an indication of the location of some waste constituents and concentration estimates for all 149 SSTs, it was used to develop a preliminary sort of the SSTs. The TRAC data were used to classify wastes by their hazardous chemical and radionuclide content (Tables A-3 and A-4, Appendix A). Because of the limited capabilities and inaccuracies of the TRAC program, these classifications are not a formal regulatory classification but are used only to provide technical guidance until actual characterization data are available.

The SSTs are being interim stabilized and isolated. Interim stabilization involves the removal of supernate and interstitial liquid from the SSTs to minimize the spread of contamination if the tanks begin to leak. The liquid in the tanks is pumped out to the extent technically and economically feasible. After interim stabilization of an SST, no more than 50,000 gal of liquid remains in a tank. Isolation of an SST involves physical modifications to preclude the inadvertent addition of liquid to the tank.

9 2 1 2 6 5 3 0 0 3 2

This page intentionally left blank.

9 2 1 2 6 5 3 0 0 3 3

3.0 SAMPLING PLAN AND PROCEDURES

This chapter describes the overall sampling plan and schedule for Phase I sampling of the SSTs. Field (tank) sampling procedures are also described, along with some of the initial laboratory subsampling procedures. The reference sampling plan, which is designed to address the heterogeneity of the SST wastes and the variability of waste sampling and analysis is discussed.

3.1 OVERALL SAMPLING PLAN

As described in Chapter 1.0, the long-term plan for SST waste characterization involves a two-phase approach to tank sampling and analysis. Phase I sampling involves (1) obtaining up to eight core samples from each of at least two reference tanks to determine variability associated with SST sampling and analysis and (2) obtaining at least two core samples per tank from the remainder of the 149 SSTs. The number of tanks and cores were chosen to provide enough data for statistical analysis. These numbers may change after evaluation of data from the reference sampling plan. The need for additional sampling will also be determined after evaluating data from the initial analysis of tank samples. Phase II may require extensive characterization to make decisions concerning those tanks that are candidates for possible in-place disposal. Additional sampling of some retrieval candidates will also take place during Phase II. The sampling plan for Phase I is outlined in the following steps.

- Step 1--SST Sampling and Analysis for the "Reference Tanks"

  As discussed in Section 3.3, the reference sampling plan provides a means of determining the magnitude of various uncertainties involved in SST waste characterization. During Phase I

characterization, up to eight core samples will be obtained from each of two reference tanks. Using the sampling and analysis results, a statistical evaluation will be conducted to estimate the different components of variability associated with obtaining tank waste concentration data. The heterogeneity of the waste and the number of core samples required to sample the tanks in a representative way will be determined.

- Five tanks have been identified as candidates for reference sampling. The only tanks that met the criteria were Tanks 241-A-103, -B-110, -B-202, -C-107, and -S-104. The following criteria were used to select these tanks:

- All tanks have at least five potentially available risers.

- All tanks have sufficient amounts of waste to allow five to eight 19-in-long core segments to be obtained for each core.

- None of the tanks are thought to contain hard saltcake. The present sampler cannot penetrate the hard saltcake. The variability of the new sampler for hard saltcake will be determined after it is developed and implemented.

- All tanks are believed to contain transuranic (TRU) elements with concentrations >100 nCi/g.

Of these five tanks, Tanks 241-B-110 and -C-107 were selected for reference sampling in FY 1989. These two tanks were selected because physical examination showed that each had at least four risers accessible to core sampling equipment and the average distance between risers was the greatest.

9 2 1 2 6 3 3 0 0 3 5

Tank 241-B-110 has four risers available for sampling but one of these is only 4-in. in diameter; therefore, duplicate cores from this riser cannot be obtained. Tank 241-C-107 has four 12-in-diameter risers that will permit duplicate cores to be taken from each riser. This allows 8 samples to be taken from Tank 241-C-107 and 7 samples from Tank 241-B-110 for the reference sampling plan discussed in Section 3.3. The estimated waste contents for these tanks based on tank history are summarized in Table 3-1 and Table 3-2.

Table 3-1. Summary of Estimated Tank Contents for Tank 241-B-110.

Waste type added	Volume (Kgal)
Ion exchange waste	5
Fission product	5 to 6
Evaporator bottoms and B Plant LLW	80
First- and second-cycle waste	5 to 6
Evaporator bottoms and B Plant flush	161

Table 3-2. Summary of Estimated Tank Contents for Tank 241-B-107.

Waste type added	Volume (Kgal)
Noncomplexed waste	41
Strontium sludge	105
Mix[a]	191

[a]Mix includes ion exchange, N Reactor waste, Hanford laboratory operations, strontium semiworks, PNL waste, first-cycle waste, tributyl phosphate waste, coating waste, and hot semiworks wastes.

The evaporator bottoms in Tank 241-B-110 is a source of saltcake in these tanks. These tanks contain waste from a wide variety of sources.

- Step 2--Determine Sampling Order for Other Tanks

  - Using information on SST interim stabilization schedules, previous SST sampling, sampling logistics, and sampling capabilities, a recommended sampling order was developed for Phase I sampling of the SSTs. The recommended sampling order is given in Table A-4 (Appendix A).

    The sampling order was developed to make the most efficient use of the core sampling equipment. This involves the sampling of all the tanks within a tank farm before initiating sampling in another tank farm, thus minimizing the effort and cost required to relocate the core sampling truck (CST) and ancillary equipment. In addition, an attempt was made to support interim stabilization of SSTs by sampling tanks before their scheduled stabilization date. Other assumptions include the following:

  - Hard saltcake sampling capability will be available in FY 1991.

  - Ability to sample the bottom 3 in. of waste in the tanks will be available in FY 1991.

  - A second CST will be available in mid-FY 1992.

- Step 3--Core Sample all Remaining SSTs.

  - A minimum of two core samples will be obtained and analyzed for each of the SSTs. The SSTs will be core sampled per the selected sampling order. The purpose of this sampling is to

9 2 1 2 6 5 3 0 3 7

quickly provide characterization data on all the SSTs and to allow a preliminary sort of the tanks into candidates for retrieval and candidates for in-place disposal. The criteria for this sorting evaluation have not been developed at this time. However the key radionuclides and chemicals have been selected and analytical sensitivities specified to encompass regulatory, performance assessment, and process development needs.

Assumptions used to develop the SST sampling schedule are listed below.

- A second CST will become available in mid-FY 1992, allowing an increase in the sampling rate.
- The ability to sample hard saltcake will be developed by FY 1991. Tanks thought to have hard saltcake will not be sampled until this time.
- Ability to sample the bottom 3 in. of waste in the tanks will be available in FY 1991.
- Additional hot cells will be available in FY 1994.
- Adequate funding will be available to meet the sampling schedule.

The current sampling milestones are shown in Table 3-3.

In Phase II, some additional sampling of tanks identified as candidates for retrieval will be necessary to support retrieval and pretreatment technology design. All of the retrieval, pretreatment processes, and waste characterization criteria for these processes have not been defined at this time; therefore, additional sampling in Phase II will probably be needed to support these activities

(Section C.7.9, Appendix C). Physical measurements are expected to be important in designing these processes. Unfortunately, many of the physical measurements (viscosity, thermal conductivity) require large sample sizes which make it impossible to do both chemical and physical measurements in Phase I. Tanks that are candidates for in-place disposal will require more complete characterization in Phase II to ensure that the risks from this alternative are acceptable. Therefore Phase II sampling of tanks selected for in-place disposal will be required. The number of core samples to be obtained from each tank will be determined from the results of the reference sampling in Step 1. The analyses to be performed during Phase II are not within the scope of this WCP. More definitive sampling and analysis requirements for Phase II will be possible before completing Phase I.

9 2 1 2 6 5 3 0 0 3 9

Table 3-3. Current Single-Shell Tank Sampling Milestones.

Date	Milestone
September 1989[a]	Obtain 15 cores from 2 tanks.
September 1990	Obtain 12 cores from 6 tanks.
September 1991	Obtain 6 cores from 3 tanks.
September 1992	Obtain 26 cores from 13 tanks.
September 1993	Obtain 30 cores from 15 tanks.
September 1994	Obtain 44 cores from 22 tanks.
September 1995	Obtain 44 cores from 22 tanks.
September 1996	Obtain 44 cores from 22 tanks.
September 1997	Obtain 44 cores from 22 tanks.
September 1998	Obtain 44 cores from 22 tanks.

[a]Sampling in 1989 consists of 8 cores from Tank 241-C-107 and 7 cores from Tank 241-B-110 for reference sampling plan.

PST89-3095-3-1

This sampling plan has the advantage of providing some essential characterization data about all the SSTs. The sampling plan facilitates a preliminary sort of the SSTs into candidates for retrieval and candidates for in-place disposal and reduces overall sampling and analysis costs because retrieval candidate tanks will not require as extensive a characterization as candidates for in-place disposal.

3.2 SAMPLING PROCEDURES

Typical nonradioactive waste sampling operations as described in Volume 2 of SW-846 (EPA 1986) use some form of device (sampler) to recover an aliquot of the waste. The aliquot is transferred (at the site) to multiple prepared containers having differing preservatives (depending on analysis requested). Preservatives are not added for sampling of solids. Sampling at the location is continued until enough sample has been obtained for the desired analysis. Much preliminary data (e.g., sample appearance, pH) is obtained on the sample at that time. The sample containers are then transferred under a chain-of-custody to the laboratory for analysis. Samples taken for many analyses, such as organics, some anions, mercury, and Cr(VI), that are sensitive to temperature because of volatility or reactivity are transported in refrigerated containers to maintain sample temperatures at 4 °C.

The radioactive exposure and contamination in the SST wastes to be sampled requires changes to the normal SW-846 sampling procedures. The SSTs are sampled with specially designed equipment to protect operators from radiation exposure and contamination. No sample treatment can be performed in the field because of the radioactive materials in the samples. Methods of cooling the samples during transport to the laboratory and during storage are not available because of the size of shielded casks containing the samples. Samples are transferred from the shielded cask into a hot cell and removed from their containers (extrusion) using remote manipulators. Sample homogenization

and storage of the bulk of the sample is done in the hot cell. Although specific deviations from accepted SW-846 sampling procedures are addressed for both field (tank farm) sampling and laboratory subsampling, three major problems are present across all facets of the sampling procedure: (1) difficulty in maintaining any volatile components in the waste sample, (2) inability to cool and maintain samples at 4 °C, and (3) sample holding and preparation times which exceed SW-846 standards for some analyses.

The nature of the wastes (often of peanut butter-like consistency) and the need for remote handling make it impractical to provide zero-headspace sampling (no air above sample in containers) and storage, as required by SW-846. The presence of significant quantities of volatile organic components in these waste is not likely. Most of the wastes have been previously evaporated at elevated temperatures and have been in storage at ambient conditions or above (up to 200 °F for some tanks containing high-heat wastes) for 8 to 40 yr. Most tanks ventilate to the atmosphere through "breather" HEPA filtration systems and some are under forced ventilation. Work is underway to address headspace sampling (sampling atmosphere above the waste) of the tanks to determine the extent of volatile organic components in the waste. Other alternatives for volatile organic component analysis that may minimize volatile organic losses are being evaluated (Sections C.3.1.9, C.3.1.10, and C.3.1.11, Appendix C).

The requirement of remote handling of the samples (due to radiation exposure and contamination levels) essentially precludes cooling the samples. No facilities currently exist for cooling and holding sampler and shipping cask assemblies (total weight of about 350 lb) or storage jars within hot cells. Sample cooling is performed primarily to minimize loss of volatile organic components from the waste and to slow any chemical reactions that may change the waste composition. The expected lack of volatile organic components is discussed above. Because the waste has been stored in the tanks for at least 8 yr, no significant degradation in the chemical composition of the waste is expected in the short

9 2 1 2 6 5 3 0 0 4 1

time required for sampling and analysis. Handling and storage of the samples at ambient temperatures is not expected to affect the waste characteristics significantly.

The increased time requirements for sample handling and preparation are also a result of the need for remote handling of the wastes. Even simple tasks (e.g., capping and sealing a bottle) require significantly greater amounts of time than "hands-on" operations. It is unlikely that analyses for some components (Section 3.2.3, Laboratory Sample Handling) can be completed within the holding times required by SW-846. However, for the same reasons as stated above, no degradation of the sample is expected due to delay of analysis. Samples in the hot cell will be stored in sealed dark jars or bottles to minimize evaporation and light effects. Stability of synthetic samples will be evaluated (Section C.1.1, Appendix C). After samples have been dissolved or extracted they will be analyzed within the guidelines of SW-846.

9 2 1 2 6 6 3 0 0 4 2

3.2.1 Field Sampling Procedures

The physical and radioactive nature of the wastes stored in the SSTs makes selection of SW-846-recommended sampling equipment difficult. Table 9-7 of SW-846 gives the following statement for the waste types most similar to SST wastes:

> "This type of sampling situation can present significant logistical sampling problems, and sampling equipment must be specifically selected or designed based on site and waste conditions. No general statement about appropriate sampling equipment can be made."

The levels of radioactivity in the wastes further complicates sampling by requiring that most operations be performed remotely. The CST containing the drill bit and sampling system was

specifically developed for SST sampling and should provide superior recoveries of sample than more general equipment designs for sampling. Considerations in the design of the CST included the minimizing of radiation exposures and potential for releases, the physical properties of the waste, and the limited access to the SSTs.

Core sampling of SSTs is performed in accordance with approved Westinghouse Hanford procedures. Operating personnel are trained and certified to perform core sampling. During core sampling, a "Core Sampling Data Sheet" is filled out to document the operations (Figure B-1, Appendix B) and a "Chain-of-Custody Record" accompanies each sample from the field to the laboratory (Figure B-2, Appendix B). Any sampling problems or discrepancies will be recorded in a numbered field notebook maintained by the Operations Supervisor.

The core sampling equipment is mounted on a truck with a rotating platform. The truck is moved from tank to tank and is positioned over a tank riser for sampling. A portable exhauster is installed on tanks which do not have active ventilation. The current SST sampler is based on a modified core drilling design that is similar to the thief-and-trier-type samplers described in SW-846. A stainless steel sampler is used to withdraw a 19-in-long and 1-in-diameter (about 250 mL) cylindrical segment. The sample is trapped within the sampler by a rotary valve. Enough 19-in-long segments are taken to obtain a full core sample for the full depth of the waste in an SST. The sampling procedure is outlined in Figure B-3 (Appendix B).

After a segment is obtained in a sampler, it is sealed within a liner in a shipping cask. The cask is checked for contamination and radiation dose readings are taken and recorded. The sample and shipment number is recorded on a paper seal and the seal placed on the cask such that the seal must be broken in order to remove the sample. The chain-of-custody record is completed. The cask is then loaded onto a sample cask truck and transported to the laboratory.

9 2 1 2 6 3 3 0 0 4 3

There are several areas where the current CST and sampling methodology differ from the EPA SW-846 protocols. Differences from SW-846 procedures and deficiencies in sampling occur in the areas of sample preservation, sample integrity, sampler limitations, and sample containers.

Core samples are not preserved in the field by acidification, filtration, or other means. The sampler assemblies are shipped directly to the laboratory where preservation steps can be performed after extrusion and sample preparation. The radioactivity of the samples requires containment and remote handling of the samples, making acidification and filtration in the field impossible with present techniques without exposing personnel to excessive radioactive exposure and contamination. However, no significant sample degradation of the sample is expected since the samples are sealed and are not exposed to air or light. As noted above, samples are not preserved by refrigeration but are handled at ambient temperatures. Loss of volatiles or degradation of the sample is not expected since most of the SST waste has been subjected to elevated temperatures during processing and storage. The only preservation required for solid samples by SW-846 is cooling to 4 °C.

The sampler mechanism is lubricated and sealed using a high-viscosity silicon grease. During exchange of a full sampler for an empty one (each sampler recovering a 19-in-long section of the total core), kerosene-range hydrocarbons or freon are added to the drill string to form a hydrostatic seal at the bottom of the drill bit. Both of these practices could contaminate or extract components from the sample as it is being taken. In addition, the feasibility of separating the hydrocarbon from the solid portion of the sample has yet to be determined but will depend on the extent of contamination. Standard techniques using centrifugation or separatory funnels should be applicable to separating hydrocarbons from the aqueous phase of samples. The elimination and effect of these contamination sources are being investigated (Sections C.1.2 and C.1.3, Appendix C).

The current core sampling equipment has been used to sample liquids and some sludges and saltcake in SSTs but has not been effective as a means of sampling hard saltcake wastes or hard sludges. Sixty-five of the 149 SSTs have been identified as containing saltcake (Thurman 1989). However the number of these tanks which may contain hard saltcake is not known. The configuration of the sampler is such that the physical size of the drill bit and sampler valve preclude sampling in the bottom 3 in. of waste. For most tanks, this constraint is only significant if stratification of tank waste yielded a thin bottom layer substantially different from the rest of the waste in the sampled tank. There are three SSTs (Tanks 241-AX-104, -C-202, and -SX-115) with waste levels of 6 in. or less which may not be adequately sampled with the existing equipment. Modifications to sampling equipment will be required to sample hard saltcake and wastes at the bottoms of the tanks (Sections C.1.4 and C.1.5, Appendix C).

The CST uses stainless steel sampler assemblies rather than materials of glass, plastic, polypropylene, or teflon. Stainless steel is used because its structural integrity provides excellent sample containment, radiation shielding, and the assembly can be easily decontaminated for reuse. Because the samples are alkaline, corrosion and contamination of the sample from stainless steel is expected to be minimal. Only the chromium and nickel in the stainless steel would be environmentally important contaminants. Tests are planned to estimate the magnitude of this effect. Stainless steel is recommended in SW-846 for thief-and-trier-type samplers. While the stainless steel is not expected to compromise sample integrity, the possibility of using other materials will be examined (Section C.1.6, Appendix C).

9 2 1 2 6 6 3 0 0 4 5

3.2.2 Sample Transportation

Sample segments are shipped to the 222-S Laboratory in dedicated shielded transport casks. Packaging and shipping is carried out in accordance with applicable safety analysis and packaging requirements. The cask shipping configuration is shown in Figure 3-1. After the sampler has been sealed in the shipping cask, a seal tape is applied across the head and cap of the cask. The cask is then loaded into a dedicated truck and transported to the 222-S Laboratory. A chain-of-custody record (Figure B-2) accompanies the shipment. The core sampling data sheet (Figure B-1) and the chain-of-custody record are permanent records and will be retained in a master file in the Westinghouse Office of Sample Management (OSM).

3.2.3 Laboratory Sample Handling

All laboratory sampling work will be performed in the "hot cells" at the 222-S Laboratory or the hot-cell facility in the 325 Building at PNL. Systems and procedures for sampling handling and analysis of SST wastes for all components will be implemented at both Westinghouse Hanford and PNL. Selection of the laboratory will depend on availability and capability at the time of sampling. Laboratories will referee the results of the other laboratories. This document focuses on Westinghouse Hanford procedures, many of which are based on past experience. A SST Procedures Manual will be developed that includes both PNL and Westinghouse Hanford Procedures (Section C.7.5, Appendix C). Operations at the 222-S Laboratory are governed by general laboratory operating procedures and desk instructions. Laboratory sampling is performed by members of the Process Chemistry and Engineering Laboratories (PCEL) section who have met the requirements for operation of PCEL facilities in the 222-S Laboratory (e.g., hot-cell operation). Specific waste tank

9 2 1 2 6 6 3 0 0 4 7

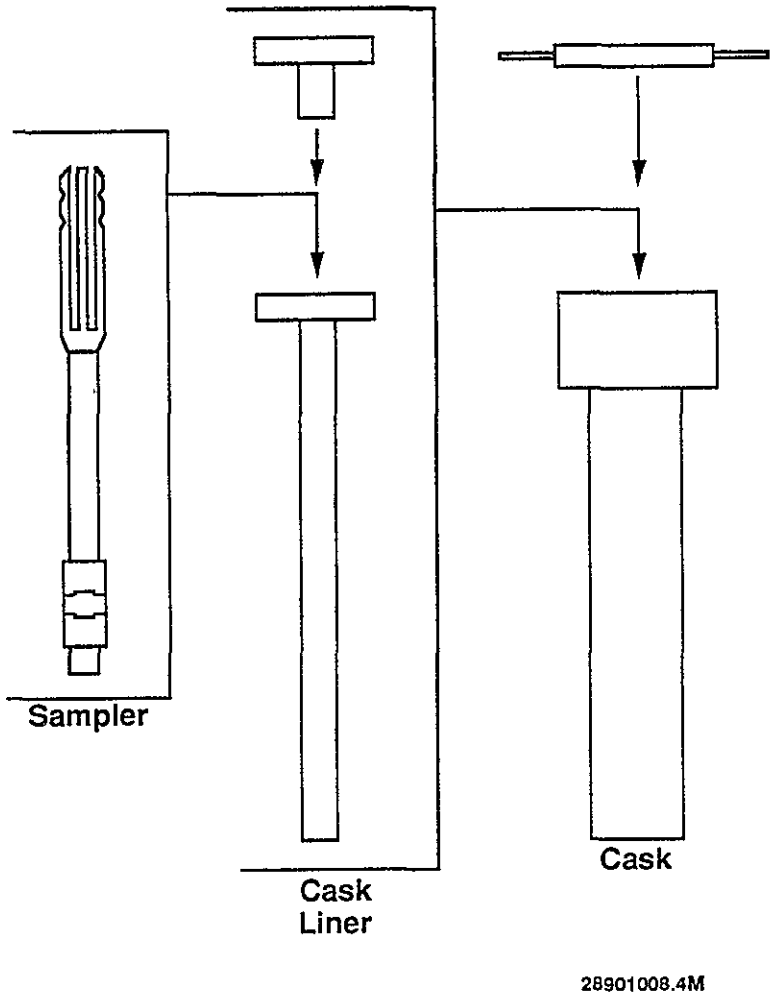

Figure 3-1. Single-Shell Tank Sampler and Cask Arrangement.

characterization (WTC) procedures for sample handling were developed for the 1985 SST sampling efforts. This sampling effort did not take into account requirements for hazardous waste sampling and analysis. Additionally, experience gained during previous sampling has resulted in modifications to existing procedures. Work is underway to reissue and update all procedures to reflect the needs of projected analysis requirements (Section C.2.3, Appendix C). A SST Quality Assurance Project Plan (Section C.7.11, Appendix C) is being developed and will be included as an appendix to this WCP when completed.

Sample casks are received at the 222-S Laboratory at the 9B loading dock. The weight and size of the cask (350 lb and 4 ft tall) require that overhead lifting devices be used to pick up and move them. The casks are logged in, surveyed for radiological control, and verified for cask seal integrity. Any additional observations are recorded on the chain-of-custody record. The casks are then placed into holding racks for storage before extrusion.

The sample segment are stored in the transportation casks until they are extruded from the sampler. Storage occurs at room temperature in a dedicated area of the 222-S Laboratory. Daily inspection of the cask seals will be made along with surveys for radiological contamination. Sample storage time will normally be less than 1 wk, but at times of high sampling activity, longer storage time may be required. The long-term effect of storage of the samples in the stainless steel sampler in potential contact with hydrostatic fluid and sealing grease is unknown at this time. These effects are being investigated by PNL using archived SST samples from FY 1985 and 1986 sampling efforts. Samples not extruded within a 30-d limit will be evaluated to determine if sampling an entire new core is necessary. Because sample degradation in the sampler is expected to be minimal, factors such as riser availability, exposure, and cost must be considered before resampling. Planned sample degradation studies may provide a better estimate of sample holding time limitations (Section C.1.1, Appendix C).

The holding times identified in SW-846 (Chapter 2, page 31 or Chapter 4, page 5) are summarized in Table 3-4. The holding times in the SW-846 table appear to address liquid samples since preservation reagents are also identified. The holding times (24 and 48 h) for Cr(VI), nitrate, nitrite, and orthophosphate are too short to be met in the SST analysis program. The 48-h holding time for nitrate and nitrite may not be as critical for SST solid waste as for environmental waters since nitrate and nitrite are usually major components in the waste and therefore degradation from biological or atmospheric conditions will not be as significant. The holding time requirements for components with 14-d limits may be exceeded if a tank has >5 segments per core because the time to collect, extrude, and composite the sample would make completing the analyses in 14 d difficult. Cyanide and organics would be the major components impacted by the cores with a large number of segments. Since organic analyses will initially be performed at PNL, additional packaging and shipping time (1 to 3 d) would be required. Breakdown of sampling or hot-cell equipment that would prevent collecting or compositing a complete core would also impact the holding times.

The radiation exposure levels in the wastes requires that handling of the bulk segment samples be performed using remote, shielded (hot cell) facilities (Room 1E, Figure 3-2). Sample extrusion is performed in the 1E-2 hot cell at the 222-S Laboratory. Each segment sampler, contained within the cask liner, is loaded into the hot cell through the air lock. The liner is then opened and the sampler withdrawn. Liquids recovered from the liner, if any, are measured for volume and retained for analysis, if adequate volume is obtained. Previous experience, based on immiscibility tests, has shown that liquid recovered from the liner is primarily hydrostatic fluid from sampling operations and has not been analyzed.

9 2 1 2 6 5 3 0 0 4 9

Table 3-4. SW-846 Holding Times for Single-Shell Tank Components.

Component	Holding Time
Alkalinity	14 d
Ammonia	28 d
Chloride	28 d
Cyanide	14 d
Fluoride	28 d
Chromium(VI)	24 h
Mercury	28 d
Metals [other than Hg, Chromium(VI)]	6 mo
Nitrate	48 h
Nitrite	48 h
Orthophosphate	48 h
Organic carbon	28 d
Sulfate	28 d
Volatile organics[a]	14 d
Semivolatile organics[a]	14 d
Radiochemical	6 mo

[a]Liquid samples must be extracted in 7 d and analyzed in 40 d.

9 2 1 2 6 5 3 0 0 5 0

On occasion partial segments have been obtained. The cause for the partial segment is not always evident (e.g., sampling error, poor seal, loss of liquid, air pocket in waste). If less than 75% of a full segment is obtained, the segment will be resampled. This approach assumes that the waste is fluid enough, that the segment volume will be refilled with waste. The analysis of two cores per riser in the reference sampling plan will provide an estimate of the sampling variability based on this

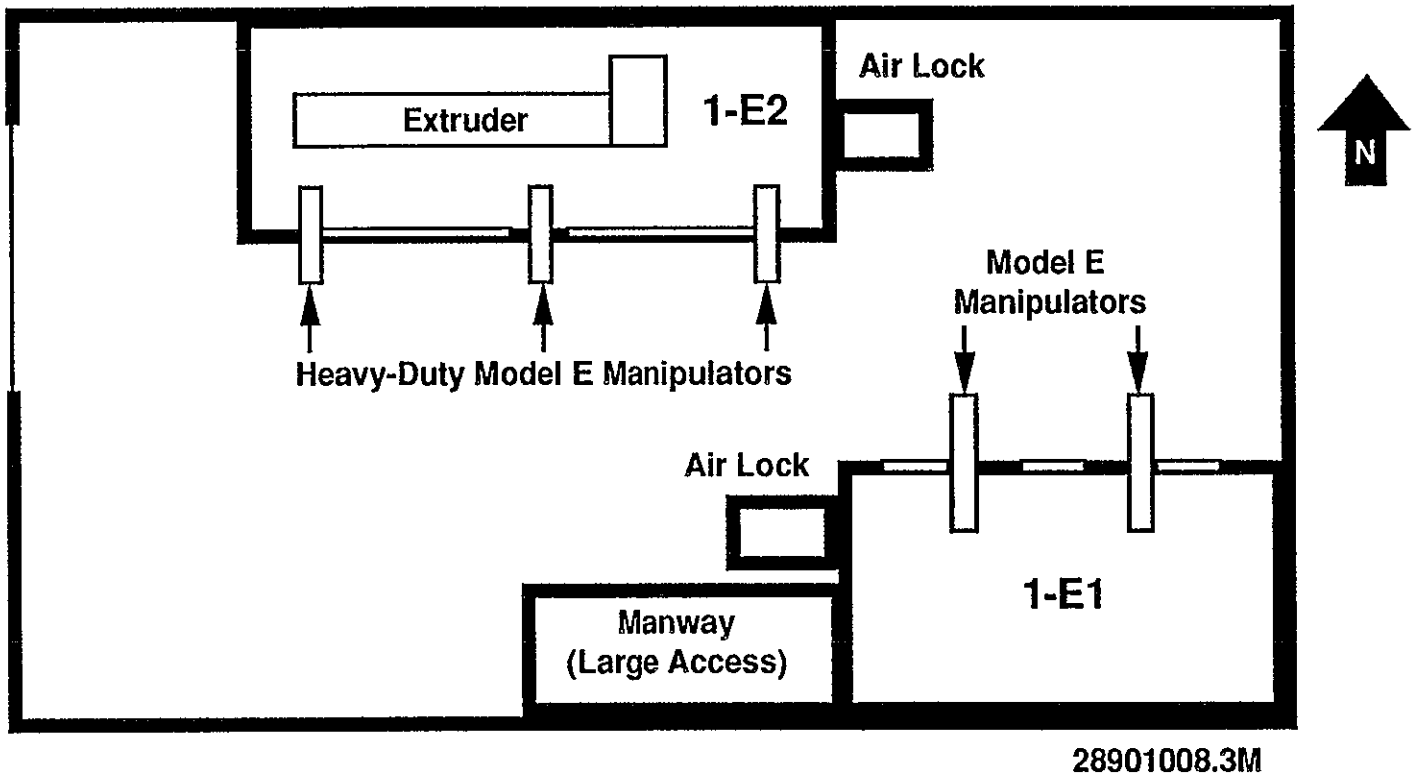

Figure 3-2. Room 1E, 222-S Laboratory.

assumption. The development of nondestructive testing methods to indicate the completeness of core filling using ultrasonic or X-ray interrogation could reduce sampling time and improve sampling reliability (Section C.1.10, Appendix C).

The sampler is then loaded onto the mechanical extruder for segment extrusion. The segment is removed from the sampler by driving an internal piston the length of the sampler body, extruding the waste onto a receiving tray. Any drainable liquid in the sample flows into a preweighed receiver at one end of the tray. The recovered waste is weighed, measured for length, photographed, and any observations regarding the waste and extrusion recorded. Figure 3-3 is a photograph of an extruded sample. A sample of the data record sheet for sample extrusion is shown in Figure 3-4. This record is a permanent record and will be retained in a master file in the Westinghouse Hanford OSM.

Each sample is then transferred to a sealed container for storage in the hot cell until all the segments from the entire core have been extruded. The samples are stored in containers meeting the strictest regulatory requirements for analysis (glass with Teflon-lined caps). Each sample segment is stored separately until compositing of the entire core can begin. For those analyses that must be performed before homogenization, an aliquot will be collected before storing the sample.

Sample extrusion and placement into storage jars currently takes about 2 h for each segment. During this time, the sample is exposed to high airflow rates in the hot cell. Although the presence of significant quantities of volatile organics is not likely, some organic losses would probably occur, if present, along with the loss of some water from the waste matrix. The loss of moisture from the sample will affect the percent water analysis and many of the physical measurements such as viscosity which vary with the water concentration. Because drainable liquid is one of the first

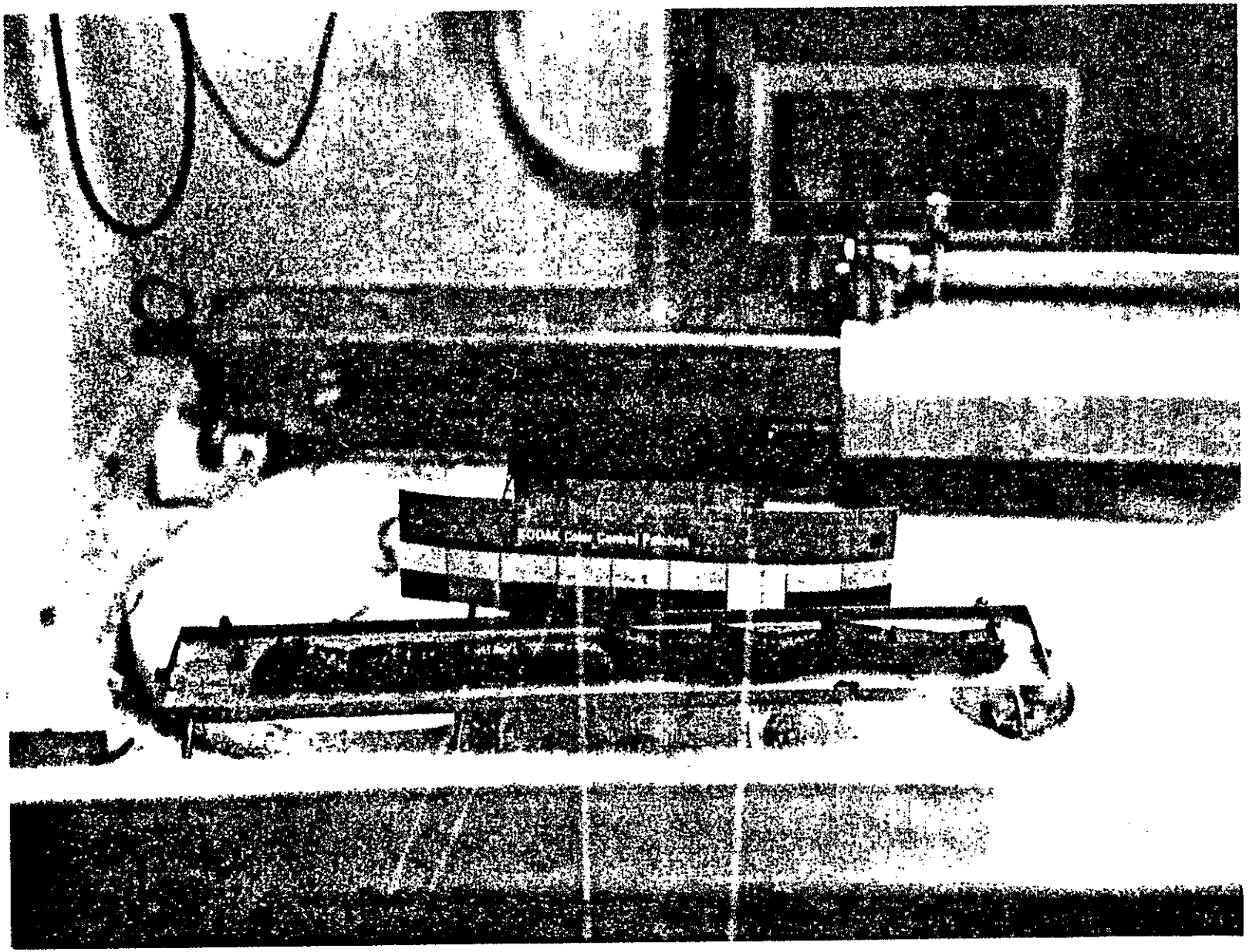

Figure 3-3. Extruded Sample.

Tank: _____ Core: _____ Segment: _____
Riser: _____ Date: _____

Sample Identification Code: _____

Drainable Liquid

Volume of Liquid in Liner (Estimate): _____ mL

Volume of Liquid in Sampler (Estimate): _____ mL

Sample Identification: _____

Bulk Solid Sample

Tare Weight of Extrusion Tray: _____ g

Tare Weight of Segment and Tray: _____ g

Weight of Segment: _____ g

Tare Weight of Sample Jar: _____ g

Length of Segment: _____ in.

Weight of Segment and Jar: _____ g

Weight of Segment: _____ g

Sample Jar Identification Number: _____

Sample Identification: _____

Visual Observations: Picture

Photograph Frame Number(s) _____

Work Done by _____

28901029.3M

Figure 3-4. Data Record Sheet.

measurements, it will be impacted the least by sample evaporation. Efforts are underway to minimize the time that this operation takes (Section C.2.1, Appendix C).

Storage is at room temperature and no preservatives are added to the wastes. The lack of refrigerated storage for these samples has already been discussed. No specific preservatives are added because no one preservative is applicable for all analyses expected to be performed. A preservative suitable for one analysis may compromise a different one. Preservatives are also not applicable to solid waste. No significant degradation is expected to occur during segment storage before formation of analytical composites since the jars are sealed and exposure to hot-cell atmosphere is minimal. Several days to greater than 1 wk may be required to extrude an entire core depending on the depth of waste in the tank.

After the entire core has been extruded, all portions of the core (liquid and solid) are transferred to the 1E-1 hot cell for preparation for analysis. If more than 10 mL of a segment (about 4.0 vol% for a full segment) is free liquid, it will be saved, composited, and analyzed separately from the solids. Liquid volumes less than 10 mL are returned to the solid before homogenization of the segment for analysis and compositing. The quantity of 10 mL was chosen because it was the minimum volume for which a significant number of analyses could be performed. Larger volumes may be difficult to blend back into the solids without phase separation. Further evaluation of this volume on actual samples will be needed (Section C.2.5, Appendix C). A small (a few milligrams) aliquot of the solid (minimal disturbance of the solids) is removed before homogenization of a segment for determination of particle size distributions. Samples for volatile headspace analysis are taken immediately. Penetrometer measurements are made at several segment locations.

After removal of the aliquot for particle size analysis, the segments are homogenized individually before further segment component analysis or composite formation. Techniques vary depending on

the nature of the waste recovered but include high shear, mortar and pestle, and small blenders and mixers. Homogenization may result in the loss of volatile organic from the wastes, if present, and additional drying of the sample. Efforts are made to minimize any sample loss and evaporation during preparation operation by minimizing preparation times and exposure to air. Improved homogenization techniques are being evaluated (Section C.2.3, Appendix C).

Two classes of composite samples are prepared from the segment samples. One composite is constructed from all segments of a single core, forming a core composite. A second composite is formed for all segments recovered from a single tank to form a tank composite. Composites are formed using weight fraction aliquots of the homogenized segments. For example, if a segment represents 10% of the total weight of a core, the core composite aliquot from the segment is 10% of the final weight of the composite. Composited materials are homogenized using similar techniques as for segment homogenization. Exact compositing procedures are being developed (Section C.2.3, Appendix C).

When all compositing and homogenization operations are complete, aliquots for analytical determinations are removed. Composite samples and residual segment material, if sufficient to allow recompositing, will be saved until results can be reviewed and validated. Small (10 g) samples of the segments, core, and drainable liquid may be saved for additional testing. Systems for conveniently storing these samples need to be designed and fabricated (Section C.2.4, Appendix C). Storage of large quantities of the samples are not planned because of shielded storage space limitations and personnel exposure problems. In addition the integrity of the sample after long storage times is questionable. Aliquots are taken for all analytical and quality assurance samples needed and removed from the hot cell for analytical sample preparation. If sample radiation exposure requires that initial preparation of samples be performed in a hot cell, work will be performed in 1E-1 of the 222-S Laboratory. All data, observations, and sample identification numbers resulting from

composite formation and aliquoting are recorded in dedicated laboratory notebooks. This record is a permanent record and will be retained in a master file by the OSM which will be responsible for collecting data for analyses from all the laboratories involved in analyzing the sample.

3.3 REFERENCE SAMPLING PLAN

This section describes a sampling plan that was developed to characterize the waste in a few SSTs. Results from this sampling plan are used for several efforts:

- Estimate the variability in concentration due to waste heterogeneity, core sampling, composite preparation, and analytical techniques.
- Provide the basis for designing sampling plans for characterizing the waste in the other SSTs.
- Provide estimates of average concentrations and inventory and associated errors for components of interest in the reference sampling tanks.

This sampling plan, to distinguish it from the sampling plan to characterize the waste in the remaining tanks, is called the reference sampling plan. The reference sampling plan will be applied to a limited number of tanks. It is used to quantify different sources of variability (error statements) encountered in characterizing SST wastes. Information on the magnitude of various sources of variability, obtained from the reference sampling plan, will be the reference values for judging the adequacy of waste characterization information obtained by using less extensive sampling plans.

9 2 1 2 6 5 3 0 0 5 7

The sources of variability in sampling and analyzing SST wastes are defined and the method used to measure them is described in this section. The implementation of the reference sampling plan described is based on present sampling procedures and equipment and the criteria described in Section 3.1, Step 1. Changes in sampling equipment and procedures to sample other waste types (hard saltcake) may require that the reference sampling plan be applied to additional SSTs.

3.3.1 Introduction to the Reference Sampling Plan

The reference sampling plan was developed to obtain the appropriate data for estimating concentrations and related confidence intervals used to determine the total quantity (inventory) of nuclear or hazardous chemical material (constituents) stored in a SST. Data collected according to this sampling plan is used to quantify and to test the significance of components of variability that contribute to the uncertainty in the final waste inventory estimates. These components of variability can also be used to develop "optional" (less extensive) sampling plans for characterizing waste stored in other SSTs.

Standard sampling plans, such as those described in the U.S. Environmental Protection Agency (EPA) SW-846, are based upon the assumption that a random sample of waste from the entire waste volume can be obtained. Without adding new risers, it is not possible to obtain a random sample of SST waste since wastes can only be sampled at fixed locations (existing risers) within the tank. Because there is no randomization in the choice of sampling locations within a tank, there is no assurance that the final estimates of concentration for a particular constituent are unbiased. On the other hand, there is no evidence to suggest that using existing risers to obtain core samples will introduce a significant bias.

The reference sampling plan for SSTs, described in WHC-SA-0348-FP (Jensen and Liebetrau 1988) is a balanced plan. It consists of the following steps:

1. Select multiple locations (risers) within the tank.

2. Obtain multiple complete core samples from each location.

3. Prepare multiple composite samples of each core for analysis.

4. Perform multiple chemical analyses on each composite.

Specifically, the reference sampling plan consists of performing duplicate chemical analyses on duplicate composite samples from duplicate complete core samples obtained from "a" locations within the tank. Each core segment is to be homogenized. A composite core sample representing the entire core is formed by homogenizing subsamples obtained from the homogenized core segment. The reference sampling plan will be applied to Tank 241-C-107. The number of sampling locations is four (a = 4).

A modification to the reference sampling plan will be implemented on Tank 241-B-110. In this tank, the number of sampling locations is also four. However, this modified plan is statistically unbalanced in that duplicate cores will be taken from some of risers and single cores will be taken from other risers. Some of the difficulties encountered in using an unbalanced sampling plan are described in the appendix to WHC-SA-0348-FP. The hierarchical structure in the balanced plan for one riser is presented in Figure 3-5.

9 2 1 2 6 6 3 0 0 5 9

Activity	Total Steps
Obtain Samples from "a" Risers	a
Duplicate Cores Per Riser	ax2
Duplicate Composite Preparations	ax2x2
Duplicate Chemical Analyses	ax2x2x2

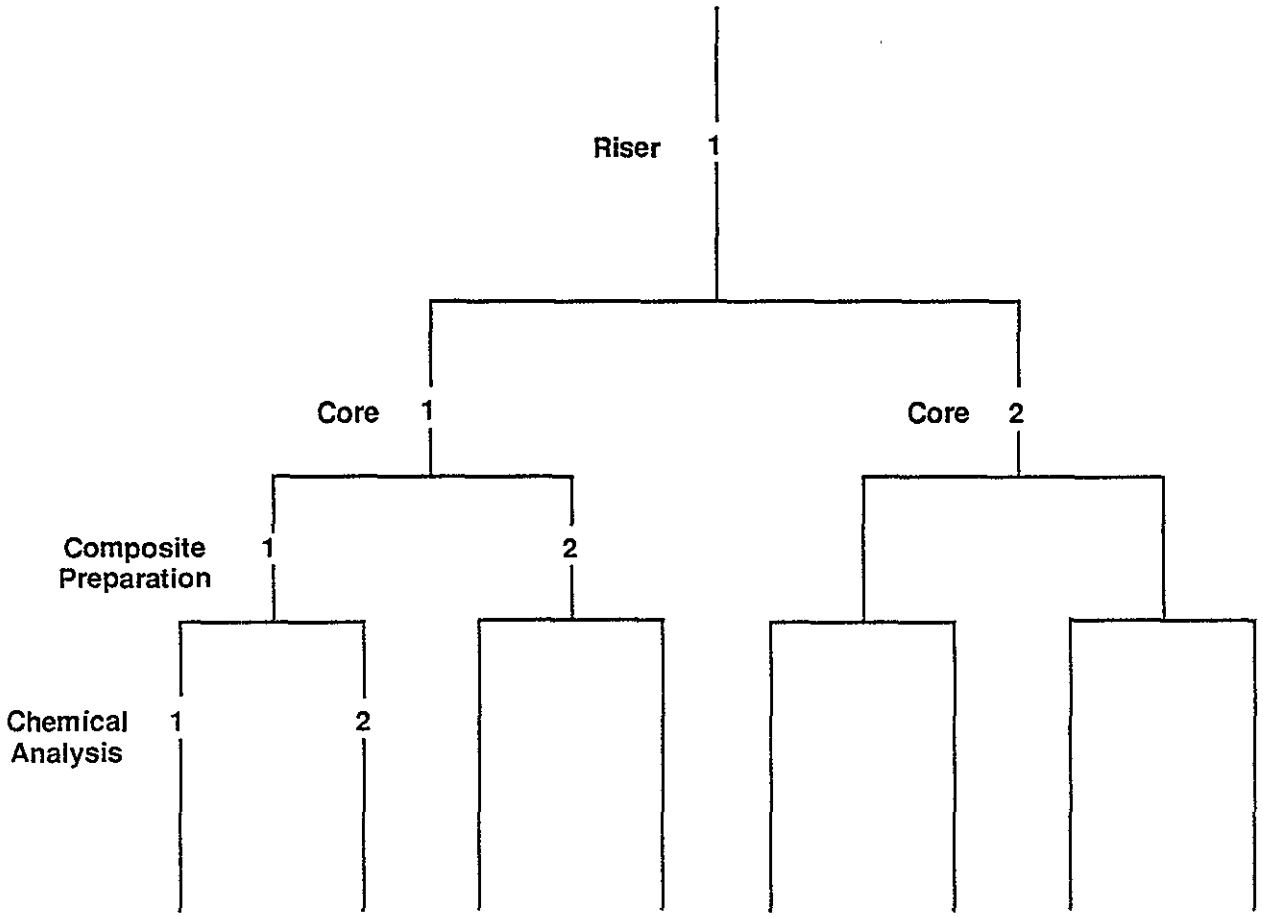

28901029.2M

Figure 3-5. Reference Sampling Plan for Single-Shell Tank Characterization.

The reference sampling plan (including any "optimal" sampling plans derived from it) and the analytical procedures are aimed at estimating the concentration and inventory of a constituent within a SST. The statistical and analytical methods are for estimating average values. The sampling plans and the analytical methods were not developed for estimating extreme values.

3.3.2 Sources of Variability

The reference sampling plan accounts for four sources of variability in the observations: location (riser), core samples, composite preparation, and the analytical error. Each source of variability is associated with a step in the sampling plan.

The first three sources of variability (location, core samples, and composite preparation) are measures of different types of heterogeneity within the waste. The variability due to location or riser is a "global" measure of heterogeneity; it is estimated from the observed differences in concentration among different risers. The variability, due to core samples within a riser, is a "local" measure of waste heterogeneity and also a measure of the variability of "taking" the sample. It is estimated from observed differences in concentrations from core samples within the same riser. This source of variability should be small compared to that due to riser location. If core samples are homogenized, the variability, due to composite preparation, is a measure of how well the core sample is mixed. If it is small, the core is well mixed; if it is large, the core is not well mixed.

The fourth source of variability, the analytical error, is estimated from observed differences among replicate chemical analyses. This source of variability is used to judge the significance of the other three sources. Statistical details associated with uses of these sources of variability are given in WHC-SA-0348-FP (Jensen 1988).

9 2 1 2 6 5 3 0 0 6 1

The reference sampling plan was designed to measure four sources of variability (risers, core samples, composite preparation, and analytical error) which are most likely to be statistically significant and of practical interest. However, there could be other significant sources of variability, such as vertical waste heterogeneity which are discussed in Section 3.4 (Other Sampling Considerations), that have not been incorporated into the reference sampling plan.

3.3.3 Parameters for Statistical Analysis

Applying statistical methods to determine the magnitude and significance of sources of variability for every constituent in the waste will not be done. The statistical methods associated with the reference sampling plan will only be applied to constituents that have a high enough concentration so that the analytical error is small; e.g., such as sodium, nitrate ions, or the ^{137}Cs isotope. The magnitude of sources of variability associated with key environmental and radiological components will be important in estimating errors in their concentration and tank inventories. However, if the concentration levels of these constituents are so low that only "less-than" values are obtained, the significance of the various sources of variability cannot easily be determined. The exact constituents to be used in evaluating the effectiveness of the reference sampling plan are not known at this time; they can only be determined after an evaluation of the analysis data obtained during the reference sampling plan.

3.3.4 Summary

The reference sampling plan will be implemented on two SSTs and core samples will be obtained from four locations (risers) within each tank. The selected Tanks are 241-C-107 and 241-B-110. Duplicate core samples will be obtained from four risers within Tank 241-C-107. From Tank 241-B-110, duplicate core samples can be obtained from three risers but only a single core sample can be obtained from another riser since it is 4-in. in diameter. Duplicate composite samples representing each core will be prepared from homogenized core segments for chemical analysis. The chemical analyses will be performed in duplicate from samples of the homogenized core composite. The sources of variability of interest are locations (risers), core samples, composite sample preparation, and the analytical error.

3.4 OTHER SAMPLING CONSIDERATIONS

3.4.1 Vertical Heterogeneity of the Waste

Differences in waste constituent concentration or other waste properties as a function of depth in the tank is a measure of the vertical heterogeneity of the waste. Since insoluble constituents (solids) would be expected to settle to the bottom of tanks and the more soluble constituents expected to remain on top as liquids or dried solids, the vertical heterogeneity of the tanks could be large depending on the types of waste,the amounts of waste, and the tank's process history. Because of their history, the tanks are unlikely to exist as pure layers of different types of waste, but as mixtures of different phases. The present sampling plan and analytical methods are for estimating the average concentration of a constituent. They are not aimed at estimating the concentration extremes nor at

9 2 1 2 6 5 3 0 0 6 3

estimating the vertical distribution of the constituent. However, vertical heterogeneity of the waste could be a significant factor in the composite preparation variability if homogenization techniques are not adequate.

The data requirements for vertical heterogeneity have not been defined. Knowing the constituents as a function of depth could provide information that might be useful to performance assessment models. However, the present models do not use concentration as a function of location within a tank. If processes for treating or retrieving the waste were based on tank depth parameters, then knowledge of vertical heterogeneity for those parameters would be valuable. Any waste remaining in a tank (such as the bottom few inches) would most likely have to be recharacterized after the waste in the tank was treated or processed. The recharacterization would determine if its composition changed or if it would be a candidate for in-place disposal. Any waste removed would also most likely be recharacterized before additional processing to ensure it was suitable for treatment. In addition, it would probably be easier and more accurate to sample and analyze retrieved waste than waste in the tank. In addition knowledge of the waste vertical heterogeneity does not necessarily improve the ability to estimate the average concentration or tank inventory for a given constituent.

3.4.2 Estimation of Vertical Waste Heterogeneity

The source of variability that can be attributed to vertical waste heterogeneity can be estimated by implementing either of the following methods.

a. Several segments of the core sample are to be individually homogenized, and duplicate composite samples prepared for chemical analysis. Two additional samples from the homogenized segment are to be used to form composite samples representing the entire core.

The analytical methods are applied in duplicate to the segments. The magnitude of the source of variability attributed to composite preparation is again controlled by the ability of the laboratory to homogenize core segments. Vertical heterogeneity is measured by computing the difference in concentrations between adjacent core segments: the between-segments heterogeneity. The alternative to Method a is Method b.

b. Form a composite sample by combining waste subsamples from randomly selected locations within a segment. The subsampling is performed in duplicate (two composite samples are prepared for chemical analysis). Two additional core composites, each representing the entire core, are also to be formed by subsampling the remainder of the core segment material.

In this method, the source of variability due to composite preparation is a direct measure of vertical waste heterogeneity within a core segment (heterogeneity as determined by the differences in concentration from combined random sampling within the core segment). Another estimate of vertical waste heterogeneity can also be obtained by computing the difference, as in Method a, in waste concentrations between adjacent core segments, that is, between segments heterogeneity. The approach given in Method b would be more difficult to implement for hot-cell operations and would be difficult to apply to samples containing both liquid and solid phases.

Determination of vertical heterogeneity based on these plans would significantly increase the number of required chemical analyses. If in the future vertical heterogeneity is identified as being needed, it will be important to define the number of cores and tanks required, and which parameters

9 2 1 2 6 3 0 0 6 5

that must be determined in order to implement a reasonable sample schedule and to control personnel radiation exposure.

The number and type of parameters that can be determined per core segment will be limited by the total quantity (about 250 mL) of sample in the core. Parameters requiring large sample sizes would reduce the amount of sample available for other analyses. The selection of a large number of parameters for measurement could require reducing the quality control (duplicate, spikes) factors for the measurement. Therefore, defining vertical heterogeneity parameter needs will be important in fully utilizing the sample. Ongoing performance assessments will be important in identifying parameters that are significant for vertical heterogeneity measurements.

The methods used to estimate vertical waste heterogeneity can be applied at any time during the SST waste characterization effort. Consequently, they need not be a separate step in the reference sampling plan. Before methods to estimate vertical waste heterogeneity are implemented it is necessary to determine how such information is to be used and the waste parameters to be measured.

A potential use of measured vertical waste heterogeneity would be in estimating the composition of missing core segment material. In addition, it may be possible to develop methods to estimate the composition of any material left in the bottom of a SST that cannot be sampled. The methods are a task for future development (Section C.8.1, Appendix C).

3.4.3 Use of Composite Samples

Composites of sample material is discussed in SW-846, Volume 2, Section 9.1.1.41. The major disadvantage, noted in SW-846, is that the use of composite samples reduces the number of analytical

measurements. The smaller number of observations make it more difficult to statistically decide if a contaminant is below a specified level. Another argument against the use of composite samples is that they may result in dilution of a component such that it is not seen or is deemed insignificant. However, it is also true that a small quantity of a high concentration component could result in the entire sample being declared significant when in actuality it was only a small portion. Compositing is aimed at providing an estimate of the weighted average composition and not to determine extreme concentrations. Since segments are homogenized and composited, the largest dilution factor for a single homogenized segment in a core composite would be 19, based on the tank with the maximum number of segments per core. This potential dilution must be considered when evaluating data for composite samples.

SW-846 also points out that compositing samples may minimize the variation between samples, thereby reducing the number of samples that must be collected from the wastes. This is an important advantage for sampling SST wastes which are highly radioactive. The use of sample composites allows the SST wastes to be characterized with fewer analyses and less radiation exposure to personnel.

9 2 1 2 6 5 3 0 0 6 7

3.4.4 Bias Introduced by Riser Location

As noted in 3.3.1, since there is no randomization in the choice of sampling locations within a tank, consequently there is no assurance that the final estimates of concentration for a particular constituent are unbiased. In order to determine that no significant bias is introduced by using existing risers to obtain core samples, it will be necessary to obtain core samples and analytical data from a SST using randomization procedures. Results from this data would then be compared to corresponding results obtained from core samples from existing risers. This test requires the

development of the technology to install new risers on tanks (Section C.1.9, Appendix C). Such a test will be considered when the technology is available.

3.4.5 Hard Saltcake and Sludge Sampling and Analysis

The present sampler design is not capable of providing reliable sampling of hard waste forms. In addition, laboratory homogenization techniques for hard crystalline waste will most likely be different than the techniques used for soft or wet wastes. New equipment is scheduled to be available in FY 1991 for sampling hard wastes (Section C.1.4, Appendix C). At this time the reference sampling plan will be implemented in additional SSTs to determine the variability due to the new equipment and new procedures.

3.4.6 Irregular Waste Surfaces in Tanks

Photographs of inside of tanks show irregular surfaces for the wastes in some SSTs. Waste levels near the edges of tanks may be significantly higher than the center or where the removal of liquids has resulted in waste slumping. These irregularities affect the estimates for the total volume of wastes in the tank. They will also create vertical and horizontal variability in core samples from tanks. The need for improved waste volume measurement technology has been identified (Section C.1.8, Appendix C).

This page intentionally left blank.

9 2 1 2 6 5 3 0 0 6 9

4.0 WASTE ANALYSIS PARAMETERS

4.1 INTRODUCTION

As described in Chapter 1.0, the SST wastes must be characterized to obtain the information needed to evaluate disposal options for the wastes. Disposal decisions will ultimately be based upon comparative technology evaluations utilizing the following performance-related discriminators:

- Long-term public health and safety
- Environmental protection
- Operational health and safety considerations (worker and public)
- Schedule considerations
- Cost.

This chapter describes the chemical, radionuclide, and physical parameters that will be included in Phase I sampling and analysis and explains the rationale behind decisions to look for particular characteristics of the SST waste.

9 2 1 2 6 5 3 0 0 7 0

4.2 APPROACH TO WASTE CHARACTERIZATION

The SSTs must be characterized to support waste designation, performance assessments, and technology assessment and development. This characterization will allow the wastes to be managed in accordance with the State of Washington Dangerous Waste Regulations (WAC 173-303) and provide information to make decisions and to take actions which will ultimately protect human health and the environment. This section describes in detail those chemical, radionuclide, and physical parameters that will be important to these activities. Because there are overlaps among the rationales (i.e., some parameters may be important to more than one activity), these parameters will be prioritized in future revisions of this WCP.

9 2 1 2 6 5 3 0 0 7 1

4.2.1 Waste Designation

This section describes the approach that will be taken to designating the SSTs in accordance with the State of Washington's Dangerous Waste Regulations (WAC 173-303), and summarizes the designation methods required by EPA and Ecology. A more detailed discussion of waste designation is being prepared. The usefulness of each of the methods for designation is evaluated, and methods that will be used are identified in this section. Figure 4-1 illustrates the approach to waste designation that will be taken in Phase I and Phase II waste characterization.

[Figure 4-1, and a more detailed discussion, will be provided in Revision 0.]

According to WAC 173-303-070, a waste can be designated as DW or as EHW by one of two methods: Lists, Mixtures and Characteristics or Criteria and Characteristics. The burden of regulatory compliance, including designation, is left to the generator. The generator must first check

the waste against the Dangerous Waste Lists, Mixtures and Characteristics (WAC 173-303-080 through -090). However, if the waste is not designated as DW or EHW by the Lists, Mixtures and Characteristics method, the Ecology may require the generator to check the waste against the Criteria and Characteristics requirements (WAC 173-303-101, -102, -103, and - 090). These two designation methods are summarized in the following four sections: Lists, Mixtures, Criteria, and Characteristics. It should be noted that the Characteristics section applies to both the Lists Mixtures and Characteristics method and the Criteria and Characteristics method.

4.2.1.1 Lists. A waste can be designated using the Lists method if the wastes are (1) Discarded Chemical Products, (2) Dangerous Waste Sources, or (3) Infectious Dangerous Wastes. A waste is considered a Discarded Chemical Product if it has been discarded in an unused form and appears on the moderately or acutely discarded dangerous chemical products lists (WAC 173-303-9903). If more than 1 kg of any combination of unused, acutely dangerous chemicals have been discarded into a tank, then all of the wastes in that tank must be designated as EHW. If more than 100 kg of any combination of moderately dangerous, unused chemicals have been discarded into a tank, the tank must be designated as DW; however, no existing records indicate that unused chemicals listed as moderately or acutely dangerous have been discarded into the SSTs. Therefore, the contents of the SSTs will not be checked against the Discarded Chemical Products List and will not be designated on this basis.

Dangerous Waste Sources are discussed in WAC 173-303-082 and presented in WAC 173-303-9904. Waste with dangerous waste numbers F020, F021, F022, F023, F026, and F027 in quantities greater than 1 kg must be designated as EHW. These wastes are associated with the production and industrial use of halogenated and nonhalogenated solvents (e.g., carbon tetrachloride, methylene chloride, acetone, ethyl ether) that may be associated with past or present operations at the Hanford Site. However, it is not known whether these chemicals were introduced in a spent solvent form. It is

possible that these chemicals could have been introduced into the SSTs not in a spent solvent form (e.g., reactants, components within a product).

Regulations have not been developed for infectious wastes. Moreover, there are no records or other indications that biological wastes were transferred to the SSTs. Consequently, no testing of the SST contents for infectious waste will be done.

4.2.1.2 Mixtures. Under Dangerous Waste Mixtures, wastes can be designated on the basis of mixture concentrations of toxic waste constituents, persistent constituents, and carcinogenic constituents. The process of designating a waste mixture based on toxic constituents is based on the concept of toxic equivalency. If the toxicities of the individual constituents of a mixture are known, the overall toxicity of the mixture (toxic equivalent concentration) can be determined. The toxic equivalent concentration is calculated by normalizing the toxicities of the constituents and then summing the normalized values (WAC 173-303-084). For the SST waste, any of the inorganic constituents in liquid phases will exist as individual cations and anions or soluble complexes rather than as compounds. Solid waste in the tanks will be in the form of compounds, most of which are inorganic salts or metal hydroxides that were formed by neutralization of nitric acid wastes from the processes described in Section 2.2 (Waste Description). Exact knowledge of the composition of the salts and metal hydroxides is not known but can be predicted from inorganic chemistry principles. Furthermore, chemical analysis of the waste will only provide data on anion and cation concentrations for the inorganic fraction of the waste, whether or not it exists in the form of compounds in the tanks. Because referenceable toxicities for individual constituents generally are found only for compounds, accurate toxic equivalent concentrations cannot be calculated from anion and cation data. Efforts have been made in the past to reconstruct the compounds that may exist in a waste from anion and cation data. However, for waste as complex as the SST wastes, attempting to reconstruct the actual compounds will produce uncertain estimates and could result in improperly

designating the waste. This reconstruction will not be performed in Phase I characterization; however, it will be further reviewed for usefulness during Phase II characterization (Sections C.6.1 and C.7.2, Appendix C).

Although organic compound concentrations can be analytically determined, it is not expected that toxic organic constituents exist in the SST waste in large enough quantities to properly designate the waste. Designation based on the organic fraction of the waste may result in under designation--that is, a waste that would have been designated as EHW if both the inorganic and organic toxic concentrations could be determined may be designated as DW if only the concentrations of the organic compounds are known. The toxic equivalent concentration method will not be used for the organic or inorganic fraction of the SST waste during Phase I characterization for designation purposes; however, this information will be further reviewed for usefulness during Phase II characterization. (Section C.6.1, Appendix C)

Under Dangerous Waste Mixtures (WAC 173-303-084), wastes may also be designated on the basis of persistent and carcinogenic constituents. The persistence of a waste can be evaluated by determining the weight percentage of halogenated hydrocarbons (HH) and polycyclic aromatic hydrocarbons (PAH) in the waste. For the SSTs, if the total concentration of either HH or PAH is greater than 1 wt%, the waste must be designated as EHW. Polycyclic aromatics hydrocarbons are defined as aromatic hydrocarbons with more than three rings and less than seven. Because there are no records (Klem 1988) or other indications that PAHs were used at facilities that may have contributed wastes to SSTs, no PAH testing will be conducted. Several HHs were used in facilities that transferred waste to the SSTs. These HHs include carbon tetrachloride, methylene chloride, and trichloroethane. Total organic halide (TOX) tests will be used to screen wastes for HHs. The concentrations of these compounds will be determined during Phase I testing, and the total HH concentration will be calculated and used in SST waste designation. However, as discussed in

subsequent sections, the HHs that will be tested for are volatile compounds, which will present difficulties in accurate sampling and analysis (see Section 4.3.4).

A waste must be designated as EHW if more than 1 wt% of the waste is an International Agency for Research on Cancer (IARC) positive carcinogen (animal or human). Lower quantities of carcinogens in the waste may result in a DW designation. Because some of the organic compounds that may be present in the SSTs are carcinogenic, Phase I testing will include a carcinogenicity determination as part of SST waste designation (Sections C.6.2 and C.7.6, Appendix C). This carcinogenic evaluation will be based on the HH results and a review of results by a qualified toxicologist.

4.2.1.3 Criteria. During Phase I characterization, the SST waste will not be designated using the Criteria methods. However, the appropriateness of using the criteria will be evaluated for use during Phase II based on Phase I testing (Sections C.6.1 and C.6.2, Appendix C). Therefore, the Criteria are discussed in this subsection.

The Criteria methods are used to designate wastes of unknown compositions and are based on a determination of the toxicity, persistent and carcinogenic content of mixed chemical wastes. Under the Criteria (WAC 173-303-101), two general methods are available for estimating the toxicity of a waste: toxic equivalency and bioassay testing. As described in the preceding paragraphs (Section 4.2.1.1), the toxic equivalency method is not appropriate for cation and anion data. However, if a method can be developed to accurately estimate compound concentrations from anion and cation data, it may be possible to calculate the toxic equivalency of the waste. Such a method will be evaluated for usefulness during Phase II characterization.

9 2 1 2 5 6 3 0 0 7 5

Bioassay testing can be used to designate a waste as EHW or DW based on the relative biological risk that a waste presents to human health and the environment. Briefly, the test consists of exposing a population of fish or rats to a quantity of the waste under carefully controlled conditions. The waste is then designated based on the survivability of the animals. It should be noted that the radioactive nature of the waste may mask the effects of chemical constituents during bioassay testing, limiting the test's usefulness for hazardous waste designation.

No bioassay testing will be conducted during Phase I characterization. However, if it is appropriate, Phase I waste analysis results may be evaluated, by toxicologists and radiation health physicists before Phase II. If the evaluation indicates that some or all of the waste would be toxic to animals, further bioassay testing will be unnecessary. However, if the outcome of the bioassay testing cannot be reliably predicted from the Phase I data evaluation, bioassay testing using new or archived SST waste samples may be conducted during Phase II characterization (Sections C.6.2 and C.7.6, Appendix C).

4.2.1.4 Characteristics. The Characteristics method of designating wastes is common to both the Lists, Mixtures and Characteristics and the Criteria and Characteristics methods. According to WAC 173-303-090, hazardous wastes can be designated on the basis of the following characteristics: ignitability, corrosivity, reactivity, and EP toxicity. Among these characteristics, only EP toxicity can result in the designation of a waste as EHW. The RCRA Part A permit submitted for the SSTs classified the wastes in the tanks as EHW (using the TRAC computer code); however, characterization data may show that the wastes in some tanks should be reclassified as DW or as nonhazardous waste since the accuracy of TRAC is questionable. An EP toxicity test will be performed on each tank composite sample. If the results of a test indicate that the waste in a tank is not EHW, redesignation of the tank's waste may be appropriate.

Ignitability tests will not be performed as a part of Phase I testing. Based on process history, the wastes in the SSTs are expected to be mostly inorganic, and should contain only small quantities of volatile organic compounds (VOC) or immiscible organics. Based on Chemical Testing Methods (Ecology 1982), ignitability tests are only applicable to liquids and aqueous solutions with alcohol contents greater than 24%. Solid wastes can be classified as ignitable if they can cause a fire by friction or chemical changes at standard temperatures and pressures. The SST solid wastes are not capable of this type of reaction based on their known chemical makeup, the lack of exotherms below 350 °C as determined by thermal analysis, and their 40-yr history. Each drainable liquid, however, will be tested to verify that there are no immiscible organics present. If immiscible organic is present, the density or other more specific test for organics will be determined to decide if it is from NPH in the drill string or from the wastes.

Corrosivity is indicated by extreme values of pH (pH $\leq$ 2 or pH $\geq$ 12.5) (WAC 173-303-090) or by the rate at which the waste corrodes steel (to be labeled as corrosive a waste must corrode SAE 1020 steel at a rate of more than 0.25 in/yr) at a test temperature of 130 °F as determined by NACE Test Standard TM-01-69 (WAC 173-303-090). Phase I testing will include a pH test of all core composites to test for potential corrosivity. Steel corrosion testing is only applicable to liquids (Ecology 1982). The volume of liquid waste expected to be found in SST waste is small compared to the solid fraction. Steel corrosion testing requires relatively large (0.5 to 5 L) volumes of liquid sample. Steel corrosivity tests are not planned for Phase I. As noted above, a waste cannot be designated as EHW based on corrosivity.

A waste is considered reactive and must be designated DW if it is unstable; if it reacts violently, forms potentially explosive mixtures, or generates toxic gases when mixed with water; if it contains cyanides or sulfides that, when exposed to extreme pH conditions, can generate toxic gases; if it is capable of detonation or explosive decomposition or reaction if subjected to a strong initiating force or

heated under confinement; or if it is readily capable of detonation or explosive decomposition or reaction at standard temperature and pressure. Because the waste originated from aqueous solutions, it is not expected to react violently with water. And because the waste has been neutralized, gases are not expected to be generated on the addition of water. As discussed in Section 5.4, each core composite will be subjected to a thermal analysis to determine whether exothermic reactions take place in the waste when heated.

Some of the SSTs are known to contain cyanides. Cyanides were introduced into the tanks as ferrocyanides $[Fe(CN_6)]^{-4}$ in a process to precipitate ^{137}Cs as $Cs_2NiFe(CN)_6$. The chemical form of the cyanide in the tanks today is uncertain. Cyanide forms very strong complexes with metals. Because SST waste contains significant quantities of metals, "free" (uncomplexed) cyanide is not expected. Recent cyanide analysis on archived SST samples indicates that most (>90%) of the cyanide is still present in a water-insoluble form such as $Cs_2NiFe(CN)_6$. Total cyanide analyses are planned for each SST core composite. Reactivity tests in SW-846 measure the rate of release of cyanide or sulfide as HCN or H_2S at a pH of 2. The release limits for the test are 250 mg/kg for cyanide and 500 mg/kg for sulfide. If the cyanide concentration in the waste is less than 250 mg/kg, a reactivity test will not be performed. If the cyanide concentration in the waste is greater than 250 mg/kg and other analyses have not resulted in the waste being designated as DW then the reactivity test will be performed.

There are no known processing sources for introducing sulfides into SST wastes. The nitric acid-based process systems used at Hanford will result in oxidation of sulfides to sulfur or sulfates unless they have formed stable insoluble sulfides such as zinc sulfide. Sulfamates and sulfates have been used in Hanford processes but are unlikely to be reduced to sulfide under normal tank conditions. Soluble sulfide salts and hydrogen sulfide are unstable (oxidized) in air. Another possible source of sulfide is biological reduction of sulfate. Any hydrogen sulfide generated in this process would be rapidly oxidized by air. Unique tank conditions (pH, reducing media) would be required to support

generation of hydrogen sulfides. Therefore, sulfide analyses are not planned on core composite samples. Sulfide analysis to verify the absence of insoluble sulfides may be performed on tank composites if a suitable method can be developed (Section C.3.1.7, Appendix C). The matrices of SSTs are expected to interfere with standard SW-846 methods. Reactivity tests based on hydrogen sulfide release are not planned.

The EP toxicity test is a SW-846 test to measure the toxic nature of the leachable fraction of the waste. The EP toxicity is the only waste characteristic that could cause the SST wastes to be categorized as EHW. Therefore, an EP toxicity test will be run on each tank composite. However, as described in Section 5.2.5, a variance from the EPA-approved procedure for the test will be required because of the limited amount of available sample material and the problems of handling large volumes in hot cells. (Section 5.2.5 discusses the specific parameters that will be measured during EP toxicity testing in more detail.)

Wastes that are introduced into containers must be determined to be compatible with the container material (WAC 173-303-395); however, incompatibility is not relevant to the SSTs because no new wastes will be introduced into the tanks. Although compatibility is briefly mentioned in this section, it is important to note that it is not a "characteristic" as defined in WAC 173-303. Because the SST waste is a neutralized aqueous waste, it is compatible with the neutralized aqueous in DST when it is transferred as saltwell liquid or in retrieval operations.

4.2.1.5 Waste Designation Summary. As described in Chapter 1.0, the SSTs will be characterized (and the wastes designated) in two phases. Phase I designation will focus on determining which SSTs contain wastes that will be designated as EHW based only on the Phase I designation tests. Phase II will involve a more thorough testing regime to determine which of the remaining tanks should be designated as EHW and which tanks can be designated as DW or nonhazardous.

9 2 1 2 6 5 3 0 7 9

Figure 4-1 (to be provided in Revision 0) illustrates the waste designation tests that will be performed as part of Phase I characterization and that are under consideration for Phase II. As shown, a series of initial tests will be conducted in Phase I, including EP toxicity, HH content, carcinogenicity, and corrosivity (pH). The SST wastes can be designated as EHW based on all but the corrosivity test. In addition to designation as EHW, however, there are other criteria, such as other regulatory characterization requirements and radionuclide content, that have to be considered in determining whether the waste in a given tank should be a candidate for retrieval. Tanks that are not preliminarily identified as retrieval candidates during Phase I Characterization based on EHW designation or other criteria will be subjected to EHW testing in Phase II characterization. Before Phase II, the usefulness of the Dangerous Waste Criteria to designate the SST waste based on Phase I data will be evaluated. If appropriate, a toxicological review of Phase I data will be performed, and biological testing may be initiated in Phase II. In addition, toxic equivalency calculations may be performed providing that accurate estimates of the chemical compounds in the tanks can be formulated.

9 2 1 2 6 6 3 0 0 8 0

4.2.2 Performance Assessments

Performance assessments of SST waste disposal systems require information on the physical, chemical, and radiological characteristics of the waste that may differ from the characteristics that are important to waste designation and technology evaluation and development.

The waste constituents of most concern from a performance assessment standpoint for in-place disposal will be those that are mobile, soluble, long-lived or that pose a threat to human health and the environment. A performance-assessment-sensitivity study is currently underway which will

provide priority rankings for waste characterization analytes, based on long-term public health and safety considerations. The results of this study will be utilized to evaluate which analytes are tested for within segments, core composites, and tank composites and will be reflected in the completed, Revision 0 version of this plan. Preliminary performance assessments during Phase I characterization will be used to determine which constituents have a high solubility or mobility and thus a higher probability of reaching a nearby population. More-detailed performance assessments will be used in support of a supplemental EIS and in Phase II to evaluate the adequacy of proposed disposal and retrieval options. Figure 4-2 illustrates this approach to performance assessments in SST characterization.

[Figure 4.2, and a more detailed discussion, will be provided in Revision 0.]

9 2 1 2 6 5 3 0 0 9 1

4.2.3 Technology Evaluation and Development

A wide variety of physical, chemical, and radioisotopic parameters of the SST waste must be known to evaluate and develop process technologies for waste retrieval, in-place disposal, treatment, and disposal. Many of these parameters differ from those that are important to waste designation and performance assessments. Figure 4-3 illustrates the approach that will be taken to evaluating the parameters that are of importance to technology evaluation and disposal. The processes to be used to support in-place disposal and retrieval of the wastes have not been determined. Therefore the technology and waste characterization requirements cannot be accurately specified at this time. Chemical and radiochemical testing will be more extensive for the in-place disposal of the waste than retrieval in order to adequately address health and environment questions regarding such action and because of regulatory and performance assessment concerns. Data on physical waste properties will be important in supporting both retrieval and in-place stabilization processes. Data from Phase I and Phase II testing is needed to evaluate the applicability of proposed processes.

Waste sluicing and mining have been proposed as possible waste retrieval processes. The waste solubility and hardness are parameters that are of interest to support these types of processes. The WCP includes numerous physical tests that have been identified in earlier studies (Appendix B, Morgan et al. 1988). Although these tests have been identified in the WCP, many of them will not be performed in Phase I because they use such large amounts of sample that there will be insufficient sample to support both chemical and physical characterization. These tests will require either a special sampling effort in Phase I or inclusion in later Phase II plans. The limitations of these physical tests are described in more detail in Section 5.5.

[Figure 4.3, and a more detailed discussion, will be provided in Revision 0.]

4.3 CHEMICAL TESTING PARAMETERS

During July of 1988, a report was published that contains a list of nonradioactive chemicals used by production plants and support operation activities at Hanford that may have been in wastes stored in the SSTs [*Inventory of Chemicals used at Hanford Production Plants and Support Operations (1944-1980)*, (Klem 1988)]. This report includes a table of about 300 chemicals and represents the most comprehensive collection of data on the chemical constituents that may be present in the SSTs. However, since many of the chemicals on the list in Klem (1988) will not be important to SST waste management decisions, it will not be necessary to test the contents of each SST for every chemical in the table. In addition, many of the starting chemicals have been converted to different compounds through the different process treatments discussed in Section 2.0 (Waste Description). In addition, as noted earlier, testing for every chemical would be expensive, time-consuming, and would result in unnecessarily high occupational radiation doses. Consequently, an analysis was performed to identify the chemicals that are of regulatory importance. This identification was based on an approach developed in earlier work. This final analysis provided a shorter compilation (Table 4-1)

Table 4-1. Preliminary Resource Conservation and Recovery Act Characterization Constituents for the Single-Shell Tanks.[a] (Sheet 1 of 6)

Chemical	RCRA/WAC hazardous/ dangerous constituents[b]	CERCLA hazardous substance[c]	Toxicity[d]	HDW-EIS 1987[e]	Detected in groundwater at Hanford[f]	Laboratory waste only[g]
Acetic acid	No	Yes	D	No	Not detected	No
Acetone[h]	Yes	Yes	D	No	Yes (CH_3CO_2H)	No
Aluminum nitrate	No	No	C[i]	Yes (Al, NO_3)	Yes (Al, NO_3)	No
Aluminum sulfate	No	Yes	D	Yes (Al, SO_4)	Yes (Al, SO_4)	Yes
Ammonia (anhydrous)	No	Yes	B	No	Yes (NH_3)	No
Ammonium acetate	No	Yes	D	No	Yes (NH_3)	Yes
Ammonium chloride	No	Yes	D	Yes (Cl)	Yes (NH_3, Cl)	Yes
Ammonium fluoride	No	Yes	B	Yes (F)	Yes (NH_3, F)	No
Ammonium hydroxide	No	Yes	C	No	Yes (NH_3)	Yes
Ammonium oxalate	No	Yes	D	No	Yes (NH_3)	Yes
Ammonium silicofluoride	No	Yes	C	Yes (F)	Yes (NH_3, F)	No
Ammonium sulfite	No	Yes	D	No	Yes (NH_3)	No
Ammonium thiosulfate	No	Yes	D	Yes (SO_4)	Yes (NH_3, SO_4)	Yes
Antimony chloride	Yes	Yes	C	Yes (Cl)	Yes (Cl) Sb not detected	Yes
Antimony nitrate	Yes	Yes	D	Yes (NO_3)	Yes (NO_3) Sb not detected	Yes
Arsenic trioxide	Yes[j]	Yes	D	No	Yes (As)	Yes
Barium nitrate	Yes	Yes	C[i]	Yes (NO_3)	Yes (Ba, NO_3)	Yes
Benzene	Yes[j]	Yes	C	No	Not detected	Yes
Beryllium	Yes[j,k]	Yes	X	No	Yes (Be)	No
Bromocresol purple	Yes	Yes	NTI[l]	No	No	Yes
Butanol[h]	Yes	Yes	D	No	Not tested	Yes
Cadmium nitrate	Yes	Yes	C[i]	Yes (Cd, NO_3)	Yes (Cd, NO_3)	No

Table 4-1. Preliminary Resource Conservation and Recovery Act Characterization Constituents for the Single-Shell Tanks.[a] (Sheet 2 of 6)

Chemical	RCRA/WAC hazardous/ dangerous constituents[b]	CERCLA hazardous substance[c]	Toxicity[d]	HDW-EIS 1987[e]	Detected in groundwater at Hanford[f]	Laboratory waste only[g]
Carbon tetrachloride[h]	Yes[i]	Yes	D	No	Yes (CCl_4)	No
Chromic acid	Yes[i]	Yes	C	Yes (Cr)	Yes (Cr)	Yes
Chromium nitrate	Yes	Yes	D[i]	Yes (Cr, NO_3)	Yes (Cr, NO_3)	No
Chromium sulfate	Yes	Yes	C	Yes (Cr, SO_4)	Yes (Cr, SO_4)	Yes
Copper nitrate	No	Yes	B	Yes (NO_3)	Yes (Cu, NO_3)	Yes
Copper sulfate	No	Yes	A	Yes (SO_4)	Yes (Cu, SO_4)	Yes
Ethylenediamine tetraacetic acid (EDTA)	No	Yes	D	No	Not tested	No
Ethyl ether[h]	Yes	Yes	B	No	Not tested	Yes
Ferric nitrate	No	Yes	C	Yes (Fe, NO_3)	Yes (Fe, NO_3)	Yes
Ferric sulfate	No	Yes	C	Yes (Fe, SO_4)	Yes (Fe, SO_4, NH_3)	Yes
Ferrous ammonium sulfate	No	Yes	C	Yes (Fe, SO_4)	Yes (Fe, SO_4)	No
Ferrous sulfate	No	Yes	C	Yes (Fe, SO_4)	Yes (Fe, SO4)	No
Formaldehyde	Yes[i]	Yes	C	No	Not detected	No
Hydrazine	Yes[i]	Yes	X	No	Not detected	No
Hydrochlorine acid	Yes	Yes	D	Yes (Cl)	Yes (Cl)	No
Hydrofluoric acid	Yes	Yes	B	Yes (F)	Yes (F)	No
Hydrogen sulfide	Yes[i]	Yes	B	No	Yes (H_2S)	Yes
Hydroxyquinoline	No	No	C[h]	No	No	No
Lead nitrate	Yes	Yes	B	Yes (Pb, NO_3)	Yes (Pb, NO_3)	No
Mercury	Yes	Yes	X	Yes (Hg)	Yes (Hg)	Yes

Table 4-1. Preliminary Resource Conservation and Recovery Act Characterization Constituents for the Single-Shell Tanks.[a] (Sheet 3 of 6)

Chemical	RCRA/WAC hazardous/ dangerous constituents[b]	CERCLA hazardous substance[c]	Toxicity[d]	HDW-EIS 1987[e]	Detected in groundwater at Hanford[f]	Laboratory waste only[g]
Mercuric nitrate	Yes	Yes	A	Yes (Hg, NO_3)	Yes (Hg, NO_3)	No
Mercuric thiocyanate	Yes	Yes	B[i]	Yes (Hg)	Yes (Hg)	Yes
Methanol[h]	Yes	Yes	D	No	Not tested	Yes
Methylene chloride[h]	Yes[j]	Yes	C	No	Yes (CCl_2H_2)	No
Methyl ethyl ketone[h]	Yes	Yes	D	No	Not detected	No
Methyl isobutyl ketone[h]	Yes	Yes	D	No	Not tested	No
Napthylamine	Yes	Yes	X	No	Yes ($C_{10}H_9N$)	Yes
Nickel	Yes[k]	Yes	X	Yes (Ni)	Yes (Ni)	Yes
Nickel ferrocyanide	Yes	Yes	NTI[l]	Yes [Ni, $Fe(CN)_6$]	Yes (Ni) CN not tested	No
Nickel nitrate	Yes	Yes	D	Yes (Ni, NO_3)	Yes (Ni, NO_3)	No
Nickel sulfate	Yes	Yes	D	Yes (Ni, SO_4)	Yes (Ni, SO_4)	No
Nitric acid	No	Yes	C	Yes (NO_3)	Yes (NO_3)	No
Oxalic acid	No	No	C[i]	No	No	No
Phosphoric acid	No	Yes	D	Yes (PO_4)	Yes (PO_4)	No
Potassium cyanide	Yes	Yes	A	No	Yes (K) CN not tested	Yes
Potassium dichromate	Yes	Yes	C	Yes (Cr)	Yes (K, Cr)	No
Potassium fluoride	No	No	C[i]	Yes (F)	Yes (K, F)	No
Potassium hydroxide	No	Yes	C	Yes (Na)	Yes (Na)	No
Potassium permanganate	No	Yes	B	Yes (Mn)	Yes (K, Mn)	No
Selenium chloride	Yes	Yes	NTI[l]	Yes (Cl)	Yes (Se, Cl)	Yes

Table 4-1. Preliminary Resource Conservation and Recovery Act Characterization Constituents for the Single-Shell Tanks.[a] (Sheet 4 of 6)

Chemical	RCRA/WAC hazardous/ dangerous constituents[b]	CERCLA hazardous substance[c]	Toxicity[d]	HDW-EIS 1987[e]	Detected in groundwater at Hanford[f]	Laboratory waste only[g]
Selenium nitrate	Yes	Yes	NTI[l]	Yes (NO_3)	Yes (Se, NO_3)	Yes
Silver	Yes[k]	Yes	C	No	Yes (Ag)	Yes
Silver chloride	Yes	Yes	NTI[l]	Yes (Cl)	Yes (Ag, Cl)	Yes
Silver nitrate	Yes	Yes	X	Yes (Ag, NO_3)	Yes (Ag, NO_3)	No
Silver oxide	Yes	Yes	D[i]	No	Yes (Ag)	Yes
Sodium	No	Yes	A	Yes (Na)	Yes (Na)	Yes
Sodium dichromate	Yes	Yes	B[i]	Yes (Na, Cr)	Yes (Na, Cr)	No
Sodium fluoride	No	Yes	C	Yes (Na, F)	Yes (Na, F)	No
Sodium hydroxide	No	Yes	C	Yes (Na)	Yes (Na)	No
Sodium hypochlorite	No	Yes	B	Yes (Na, Cl)	Yes (Na, Cl)	Yes
Sodium nitrite	No	Yes	B	Yes (Na, NO_x)	Yes (Na)	No
Sodium sulfide	No	No	C[i]	Yes (Na)	Yes (Na)	No
Sodium thiocyanate	Yes	Yes	D[i]	Yes (Na)	Yes (Na) CN not tested	Yes
Sulfuric acid	No	Yes	C	Yes (SO_4)	Yes (SO_4)	No
Toluene[h]	Yes[j]	Yes	C	No	Not detected	No
Titanium chloride	No	No	B[i]	Yes (Cl)	Yes (Cl)	Yes
Trichloroethane[h]	Yes[j]	Yes	X	No	Yes (CH_3CCl_3)	No
Vanadium pentoxide	Yes	Yes	C	No	Yes (Va)	Yes

Table 4-1. Preliminary Resource Conservation and Recovery Act Characterization Constituents for the Single-Shell Tanks.[a] (Sheet 5 of 6)

Chemical	RCRA/WAC hazardous/ dangerous constituents[b]	CERCLA hazardous substance[c]	Toxicity[d]	HDW-EIS 1987[e]	Detected in groundwater at Hanford[f]	Laboratory waste only[g]
Xylene[h]	Yes[j]	Yes	C	No	Not tested	Yes
Zinc amalgam	Yes	Yes	NTI[l]	Yes (Hg)	Yes (Zn, Hg)	Yes
Zinc chloride	No	Yes	C	Yes (Cl)	Yes (Zn, Cl)	Yes
Zinc nitrate	No	Yes	C	Yes (NO_3)	Yes (Zn, NO_3)	Yes
EP toxicity Constituents						
Arsenic	Yes	Yes	EP toxicity[m]	No	Yes (As)	Yes
Barium	Yes	Yes	EP toxicity[m]	No	Yes (Ba)	Yes
Cadmium	Yes	Yes	EP toxicity[m]	Yes (Cd)	Yes (Cd)	No
Chromium	Yes	Yes	EP toxicity[m]	Yes (Cr)	Yes (Cr)	No
Lead	Yes	Yes	EP toxicity[m]	Yes (Pb)	Yes (Pb)	No
Mercury	Yes	Yes	EP toxicity[m]	Yes (Hg)	Yes (Hg)	No
Selenium	Yes	Yes	EP toxicity[m]	No	Yes (Se)	Yes
Silver	Yes	Yes	EP toxicity[m]	No	Yes (Ag)	No
Endrin	Yes[j]	Yes	EP toxicity[m]	No	Not detected	No
Lindane	Yes[j]	Yes	EP toxicity[m]	No	Not detected	No
Methoxychlor	Yes[j]	Yes	EP toxicity[m]	No	Not detected	No
Toxaphene	Yes[j]	Yes	EP toxicity[m]	No	Not detected	No

Table 4-1. Preliminary Resource Conservation and Recovery Act Characterization Constituents for the Single-Shell Tanks.[a] (Sheet 6 of 6)

Chemical	RCRA/WAC hazardous/ dangerous constituents[b]	CERCLA hazardous substance[c]	Toxicity[d]	HDW-EIS 1987[e]	Detected in groundwater at Hanford[f]	Laboratory waste only[g]
EP toxicity Constituents (cont.)						
2,4-D	Yes[i]	Yes	EP toxicity[m]	No	Not detected	No
2,4,5-TP Silvex	Yes[i]	Yes	EP toxicity[m]	No	Not detected	No

[a]This table is to be used for planning purposes only. It presents very preliminary information and is not to be considered a comprehensive RCRA characterization constituent compilation for the SSTs.

[b]RCRA/WAC Hazardous/Dangerous Constituents--It has been noted if constituents on this list were found in 40 CFR 261.31, 261.32, 261.33, or Appendix VIII of 40 CFR 261; or WAC 173-303-9903, 173-303-9904, or 173-303-9905.

[c]CERCLA Hazardous Substances--It has been noted if constituents on this list were found on Table 302.4 of 40 CFR 302.4.

[d]Toxicity--Toxicity levels are designated as X, A, B, C or D, where X is the most toxic category, and D is the least toxic category.

[e]EIS--Volume 2 of the *Final Environmental Impact Statement: Disposal of Hanford Defense High-Level, Transuranic, and Tank Wastes*, contained a table (Table A-3) that identified chemical constituents associated with the SSTs. If a constituent included on the preliminary table was addressed in the HDW-EIS, it was noted.

[f]Constituents on the Preliminary Table that have been detected at the Hanford Site (PNL 1987) were noted but their presence in groundwater has not been linked to SST wastes.

[g]Laboratory Waste, Only--The draft copy, *Inventory of Chemicals Used at Hanford Production Plants and Support Operations (1944-1979)* included the chemical constituents by generation source. If the only source of a particular constituent was a laboratory source (indicating a smaller quantity than those constituents generated at production facilities), it was noted on this preliminary list.

[h]It is possible that these chemicals could have been introduced into the SSTs not in a spent solvent form (e.g., reactants, components within a product.).

[i]Toxicities determined from the NIOSH's *Registry of Toxic Effects of Chemical Substances*.

[j]Listed as an acutely dangerous chemical products and moderately dangerous chemical products from discarded chemical products lists (WAC 173-303-9903).

[k]These constituents are only regulated when the diameter of the solid metal is less than 100 µm.

[l]NTI = no toxicity information--no toxicity information has been found in CERCLA, RCRA, WAC, or the NIOSH Registry.

[m]The toxicities of the EP toxicity--Listed constituents appear in Table 4-2.

that includes about 100 chemicals from the primary list in Klem (1988) that may be of regulatory importance. Because of physical, budget, time, and occupational hazard constraints, it will not be feasible to test the SSTs for each constituent in Table 4-1. In addition it is not necessary to analyze for all of the components since they are not all significant to the various waste characterization requirements. Therefore, the constituents in Table 4-1 have been subjected to further scrutiny to identify specific constituents for Phase I characterization. This also provides the benefit of lower exposure and more rapid work off of the analyses for the tanks. The rationales for selecting constituents from Table 4-1 are presented in this section. In addition, other unregulated constituents that may be important from a processing or performance assessment perspective are identified. This table does not include regulated compounds that result from radiological and chemical reactions or chemicals from commercial products whose chemical composition is unknown.

Most of the constituents in Table 4-1 appear as compounds, since regulations under the RCRA and the Comprehensive Environmental Response, Compensation, and Liability Act (CERCLA) focus primarily on compounds. As discussed in Section 4.2.1, the concentrations of inorganic compounds cannot be determined analytically in a complex matrix. Therefore, the inorganic compounds in Table 4-1 have been sorted into their respective anions and cations, which are identified in Table 4-2. Because organic compounds (except for organic acids) generally do not dissociate into ions, the Table 4-1 organic compounds have been repeated in Table 4-2. Overall, the Table 4-1 compounds have been reduced to 22 metals, 16 anions, and 20 organic compounds.

In this analysis, regulatory-based rationales were provided for selecting the constituents identified in Table 4-1. Some of these rationales were based on compound properties and are not applicable to the anions and cations in Table 4-2. Consequently, the remaining portion of this section is focused on providing additional rationales for including Table 4-2 constituents in Phase I testing or

Table 4-2. Constituents from Regulated Compounds that may be Present in the Single-Shell Tanks.[a]

Metals	Anions	Organic compounds
Al	NO_3^-	Acetic acid
Si	SO_4^{-2}	Acetone
As	Cl^-	Ammonium acetate
Sb	F^-	Benzene
Ba	OH^-	Bromocresol purple
Be	$S_2O_3^{-2}$	Butanol
Cd	SiF_6^{-2}	Carbon tetrachloride
Cu	Sulfide (S^{-2})	Ethyl ether
Fe	SCN^-	Formaldehyde
Pb	$Fe(CN)_6^{-3}$	Hydroxquinoline
Ni	CN^-	Methanol
K	PO_4^{-3}	Methylene chloride
Mn	MnO_4^-	Methyl ethyl ketone
Se	NO_2^-	Methyl isobutyl ketone
Ag	ClO^-	Napthylamine
Na	$Cr_2O_4^{-2}(Cr^{+6})$	Oxalic acid
Ti		Toluene
V		Xylene
Zn		Ethylenediamine-Tetraacetic acid (EDTA)
Hg		
Cr		

[a]See Table 4-1.

PST89-3095-4-2

eliminating them from testing. Additional constituents and parameters that will be important in Phase I characterization that are not included in Table 4-2 are also identified.

Four general types of rationales are used in selecting and deciding the priority of the waste constituents and parameters that will be analyzed for in Phase I characterization: regulatory, technology development, performance assessment, and analytical capability. First, regulatory bases for testing SST wastes for particular constituents are identified. Although RCRA and CERCLA primarily identify compounds, some cations and anions are specifically regulated. Furthermore, for the organic compounds in Table 4-2, the regulatory rationales identified in earlier evaluations are still valid. In addition, if a constituent is regulated under the Safe Drinking Water Act (SDWA), this fact is noted as part of the rationale. It should also be noted that maximum contaminant levels (MCL), maximum contaminant level goals (MCLG), and secondary maximum contaminant levels (SMCL) for inorganic waste constituents apply to anions and cations.

As described in Section 4.2.3, the second type of rationale that is used in Phase I testing decisions is associated with technology evaluation and development requirements. If the consideration of a parameter or constituent must be known to evaluate the suitability of a technology for retrieving, treating, or stabilizing the SST waste, this information will be included as part of the rationale as it becomes available. Similarly, if specific testing results will assist in the development of new technology, it will be noted that the testing is required for development work.

As described in Section 4.2.1.2, the third type of rationale that will be used to support Phase I testing is performance assessment needs. If constituents and parameters must be analyzed to complete performance assessments, such information will be incorporated into the rationale as it becomes available. A performance assessment sensitivity study will be incorporated into Revision 0 of this document.

Finally, analytical testing capabilities and constraints are the fourth type of rationale that will influence Phase I testing decisions. Because the SST waste is radioactive, waste analysis must be

9 2 1 2 6 5 3 0 9 1

performed in hot cells and shielded hoods and it will not be feasible to perform all the tests on the wastes because of constraints on time, cost, occupational exposure, and worker availability. Performance assessment will be used to establish the relative significance of constituents. Less important tests that are time intensive may be performed on tank composites rather than core composites to verify that the constituent is not present in significant quantities. Tests that can be performed quickly and can simultaneously provide data on a number of constituents (i.e., inductively coupled plasma (ICP) optical emission spectroscopy analysis for metals, GEA analysis for radionuclides, and ion chromatography (IC) analysis for anions, described in Section 5.3.1) will normally be performed more frequently than tests that can only provide data on a single constituent.

4.3.1 Metals

The metals are major constituents in SSTs and are important in the characterization scheme. These include EP toxicity metals, metal ions of interest to RCRA groundwater monitoring programs, and metals that are regulated regardless of the compound in which they appear (e.g., barium nitrate). Metals in the SSTs will impact the designation of the waste, and may constrain disposal options. Furthermore, knowledge of metal concentrations will be necessary to evaluate treatment processes such as waste vitrification and grout.

The principal analytical method used for obtaining metal concentrations, ICP-optical emission spectroscopy, utilizes an instrument capable of simultaneously determining the concentrations of about 20 to 40 metals (see Section 5.3.1 for a more detailed discussion of ICP). Some of these metals are not of regulatory interest but may be important for determining the material balance of the analyses. The time, cost and exposure for obtaining the unregulated constituents is relatively

insignificant for simultaneous ICP instruments. Thus, this information will be obtained for those metals for which ICP channels are available.

The metals that have been selected for Phase I testing are shown in Table 4-3. Because of the regulatory importance of metals, these determinations will be made on both core and tank composites. For performance assessments and process development efforts, it is necessary to understand the distribution of metals within the SST waste. Consequently the metal determinations will be performed on the drainable liquid fraction, a water-soluble fraction, an acid-digested fraction, and a sample prepared by fusion and acid dissolution (see Section 5.3). The metals identified in Table 4-3 include metals from the EPA Contract Laboratory Program (CLP) target element requirements as well as uranium and thorium, which are important for radiochemical considerations (Section 4.4.1). Although thallium is not expected to be found in the SSTs, it is important to land ban regulations and will be included. Other metal ions may also be determined if they are part of a simultaneous ICP system. However, these elements are not specified at this time because they will change depending on the ICP instrument. The additional elements for two ICP systems are identified in Table E-1 in Appendix E. This table identifies those that must be done even if a sequential ICP is used.

The metals from Table 4-2 can be prioritized based on regulatory and performance assessment considerations. The prioritization scheme will be useful for making decisions on whether the precision of the ICP data is adequate and for assessing what will be important for regulatory, health, and safety considerations. When information from performance assessment and technology development becomes available, the prioritization scheme may be adjusted.

As described in Section 4.2.1.3, EP toxicity testing will also be performed for each SST tank composite sample to determine the toxic metals in accordance with WAC 173-303-090(8). In addition

9 2 1 2 6 3 3 0 0 9 3

Table 4-3. Summary of Metals Selected for Analysis in Phase I.

Metals selected for analysis
aluminum
antimony
arsenic
barium
beryllium
cadmium
chromium
cobalt
copper
iron
lead
manganese
mercury
nickel
potassium
selenium
silicon
silver
sodium
thallium
thorium
titanium
uranium
vanadium
zinc
Other metals[a]

[a]Other metals may be determined if they are reported by a simultaneous ICP system. These will vary between instruments.

PS89-3095-4-3

9 2 1 2 6 3 3 0 0 9 4

to appearing on the EP toxicity test, these metals (arsenic, barium, cadmium, chromium, mercury, selenium, and silver) appear as the metals and all their associated compounds on the Hazardous Constituents List under RCRA and the Hazardous Substance List under CERCLA. The metals are regulated regardless of the compounds in which they may exist. With the exception of arsenic, these metals and their compounds are also listed on the dangerous waste constituents list under WAC 173-303. Furthermore, all eight of these metals have MCLs for drinking water under the SDWA. Finally, specific RCRA groundwater monitoring requirements exist for these metals. It is apparent that these metals are very important from a regulatory perspective; consequently, determinations of the concentrations of these metals in all SST waste fractions will be performed.

The next group of metals that can be assigned regulatory priority are antimony, beryllium, and nickel. These metals and all of their associated compounds appear on the RCRA Hazardous Constituents List and the CERCLA Hazardous Substances List. Both beryllium and nickel, and all their associated compounds, are also included on the dangerous constituents list in WAC 173- 303.

Copper and zinc and all associated compounds appear on the CERCLA hazardous substances list. SMCLs have been established under SDWA for both copper and zinc.

Finally, the last group of metals that are specifically called out under either RCRA or CERCLA are iron, manganese, and sodium. Under RCRA interim status groundwater monitoring requirements, these metals must be monitored to establish groundwater quality [40 CFR 265.92(b)]. Furthermore, SMCLs have been established under SDWA for iron and manganese.

Other metals that appear in toxic compounds from Table 4-1, but are not specifically called out in the regulation as metals, are aluminum, silica, potassium, titanium, and vanadium. Vanadium and titanium are regulated metals but are not expected to be found in significant quantities in SST waste.

9 2 1 2 6 5 3 0 0 9 5

Aluminum, potassium, and silicon are important in establishing the material balance for a sample analysis because they can be major components. Concentrations of all these metals are obtainable with ICP.

4.3.2 Other Inorganics

In the normal pH range for SSTs (pH 7-10), ammonia equilibria will result in it being distributed between NH_4^+ and dissolved NH_3 forms. If the waste has been heated and processed under more basic conditions, ammonia would have been lost. The analytical method for ammonia converts all NH_4^+ to NH_3 by making the sample basic before distilling off NH_3 as a gas. Ammonia will be analyzed on tank composites because it may be important to process development and waste stabilization.

There are two inorganic constituents from the Table 4-2 that will not be specifically tested for in Phase I: the hydrogen cation and hydrazine. Testing for hydrazine will be unnecessary. Hydrazine is used as a holding reductant in the PUREX process. It was also used in small amounts at the PFP facility. It readily reacts with nitrite in acid systems. Before being discharged to the waste tanks the waste from PUREX is concentrated and sugar denitration is performed which further reduces the hydrazine concentration. Hydrazine is not stable in the presence of oxygen and will react to form nitrogen and hydrogen peroxide. Since the environment in the SSTs is oxidizing, hydrazine is not expected to exist.

Because the hydrogen ion concentration can be estimated from pH determinations, it is not necessary to perform a separate analysis for it. Additionally, since the SST wastes were neutralized before disposal, the hydrogen cation concentration will be very low.

4.3.3 Inorganic Anions

Although inorganic anions are generally not as important as metals from a regulatory perspective, some of the anions that may be present in the SSTs are regulated under RCRA groundwater monitoring provisions and under SDWA. For performance assessments, anion concentrations will be useful for predicting the migration rates of anions through soils. To determine the feasibility of treating SST waste with specific processes, anion data will also be necessary.

The anion concentrations will be determined for the core composite samples from the SSTs. Only the water-soluble and drainable liquid fractions of the waste will be tested for the anions. Table 4-4 lists the anions that have been selected for Phase I SST characterization testing.

Relative degrees of regulatory importance can be assigned to the anions. From a toxicity perspective, the cyanide and chromate ions receive the most regulatory attention. All soluble cyanide compounds and complexes are regulated under RCRA, CERCLA, and the State of Washington's Hazardous Waste Management Act. The method used to determine the cyanide concentration will measure all cyanides, including those complexed with iron. This could result in overestimating the cyanide hazard, since ferro- and ferri-cyanide anions are not toxic. Because cyanide forms strong complexes with all metals it may not be associated with only iron. If the total cyanide concentration in the SSTs is very high, it may be necessary to develop a test that can determine cyanide speciation or to implement the SW-846 test for cyanide amenable to chlorination (Section C.3.1.14, Appendix C).

Total chromium concentrations will be determined by ICP analysis. However, ICP cannot differentiate between trivalent and hexavalent chromium, and this difference is important because hexavalent chromium is the form of chromium that receives regulatory attention. In the chromate

9 2 1 2 6 5 3 0 0 9 7

Table 4-4. Summary of Anions Selected for Analysis in Phase I Testing.

Anions selected for analysis	Anions eliminated from further consideration
NO_3^-	$S_2O_3^{-2}$
NO_2^-	SiF_6^{-2}
SO_4^{-2}	SCN^-
PO_4^{-3}	MnO_4^-
Cl^-	ClO^-
F^-	$Fe(CN)_6^{-3,-4}$[a]
CN^-	S^{-2}[b]
OH^-	
CrO_4^{-2}	
CO_3^{-2}	

[a]Cyanide speciation and reactivity may be required if the concentration of total CN^- is high.
[b]Testing for S^{-2} may be done on the tank composite on a screening basis. Further development work on the analytical method will be necessary.

PST89-3095-4-4

anion, chromium exists in a hexavalent state. The ICP analysis of the water-soluble portion of a sample will give an indication of Cr(VI) concentrations because there are few insoluble chromates and Cr(III) will form water-insoluble hydroxides when neutralized. If the total chromium concentration as determined by this ICP analysis is above regulatory concern, it may be necessary to verify the hexavalent chromium concentration (see Section 5.3.2) using other techniques.

The hydroxide content in the SST waste can be accurately determined from pH measurements if the pH is < 13.5 and through titrations if the pH > 13.5. The pH can be used to determine if the waste will be designated DW on the basis of corrosivity. In addition, as an indirect measure of pH, hydroxide concentration is of regulatory importance in groundwater and drinking water monitoring.

Five anions (nitrate, nitrite, sulfate, chloride, and fluoride) are identified under RCRA groundwater monitoring requirements. Although nitrite is not specifically identified, it will be necessary to analyze the SST wastes for both nitrate and nitrite to determine the total nitrogen concentration, which is of regulatory interest. Under the SDWA, MCLs have been established for nitrate and fluoride. Similarly, SMCLs have been established for sulfate and chloride.

Although not specifically regulated, the phosphate concentration will also be determined because it is easily measured by IC analysis. As described later in this section, knowledge of the phosphate concentration is important for process development, performance assessments, and material balances.

Carbonate does not pose any threat to human health or the environment. However, it may be a major constituent in the SST waste, and will be important for process development and establishing material balances. Carbonate can lead to carbon dioxide gas generation under acid processing conditions. Consequently, a total inorganic carbon analysis will be performed to determine the carbonate concentration.

The following anions from Table 4-2 are being eliminated from further consideration: $S_2O_3^{-2}$, SiF_6^{-2}, SCN^-, $Fe(CN)_6^{-3,-4}$, MnO_4^-, and ClO^-. Thiosulfate ($S_2O_3^{-2}$), in the presence of air or other oxidizing waste components ,would be easily oxidized to sulfate and probably does not exits in the SSTs. Therefore, the SST waste will not be tested for thiosulfate anions.

Hexafluorosilicate (SiF_6^{-2}) was used at the Hanford Site in the form of ammonium hexafluorosilicate. The presence of the ammonium cation is the principle reason that the compound was identified as hazardous. The hexafluorosilicate anion could hydrolyze to $NaSiO_2$ (nonhazardous) and NaF in a basic environment. The fluoride concentration would be measured by IC. Because a

9 2 1 2 6 3 3 0 0 9 9

standard EPA test has not been developed for this ion, and because it is not expected to be present, the hexafluorosilicate ion concentration in the SST waste will not be determined. Thiocyanate (SCN^-) was only used in laboratory facilities (Klem 1988), and it is unlikely that large quantities were transferred to the SSTs. There is no EPA SW-846 testing method for thiocyanate and no thiocyanate testing is planned for SST characterization. However, if the thiocyanate ion dissociates, then any cyanide formed would be measured as part of the total cyanide determination.

Permanganate (MnO_4^-) ion is not stable with respect to its reduction by water (in high acid) and other reducing agents in the wastes such as nitrites. The age and contents of the wastes favor the formation of manganese dioxide which is not a hazardous compound. Consequently, it will not be necessary to test the SST for permanganate. Furthermore, the manganese content in the SSTs will be determined through ICP analysis.

Sodium hypochlorite, the active ingredient in household bleach, was used in the 325 Building developmental laboratory. It is unlikely that significant quantities of the hypochlorite anion (ClO^-) were transferred to the SSTs. Since hypochlorite decomposes to chloride and total chloride will be determined through IC analysis, no specific tests for hypochlorite will be conducted.

Because a total cyanide anion determination will be made, it may not be necessary to test the SST waste specifically for ferro- and ferri-cyanides. The lethal oral dose for rats resulting in 50% deaths, (LD_{50}), for potassium ferrocyanides is 6,400 mg/kg (NIOSH 1987). The oral rat LD_{50} of substances must be equal to or less than 5,000 mg/kg before it is considered toxic (WAC 173-303-084, *Toxic Category Table*). Therefore, potassium ferro-cyanide is not regulated as a toxic substance. No toxicity data could be found on other ferro- and ferri-cyanide compounds that were transferred to the SSTs, but the toxicities of those compounds, with the exception of nickel ferro-cyanide, should be similar. In the case of nickel ferro-cyanide, it is the nickel cation that would increase the toxicity of the

compound. Ferro- and ferri-cyanide anions should not present a significant health risk to the environment on the basis of toxicity. However, ferro-cyanide in the presence of sodium nitrate can create an explosion hazard when heated above 220 °C. If the total cyanide concentration is high, it may be necessary to determine how much of it is complexed with iron. If there is an explosive hazard associated with the SST wastes, differential scanning calorimetry (DSC) analysis of the waste should indicate exothermic reactions at elevated temperatures (see Section 5.2). No exotherms have been observed in the past thermal analyses.

Sulfides are not expected to be very important to SST characterization. There are no known large-quantity processes that transferred sulfides to the SSTs. However, it is feasible that biological reduction of sulfate in the SSTs could generate hydrogen sulfide under neutral pH conditions. Sulfides generated by this process would not be very stable in the SSTs under the expected oxidizing conditions (unless stabilized as insoluble metal sulfides), and would most likely be oxidized to sulfur. If it is decided to test the SSTs for sulfides on a screening basis on tank composites, further development of the analytical method will be necessary (see Section 5.0) (Section C.3.1.7, Appendix C).

9 2 1 2 6 5 3 0 1 0 1

4.3.4 Organic Compounds

The organic compounds that are the most important to SST characterization efforts are the volatile organics and the complexing and chelating agents. Solvents used in the production plants and in laboratories are the source of volatile organics that may have been transferred to the SSTs. Organic complexing and chelating agents were used to enhance the decontamination factors for radionuclides in various separation processes. Elevated temperatures and the high levels of radiation in some tanks may have caused some organic compounds and complexants to decompose forming

other compounds. Furthermore, it is feasible that volatile organic compounds could be generated by biological reduction, hydrolysis, and radiolytic processes.

About 20 organic compounds have been identified that are regulated under RCRA and CERCLA. The majority of these are volatile compounds. If present in the SSTs, water-soluble volatile organics such as acetone could be found in the aqueous phases. Less-polar organics such as carbon tetrachloride, CCl_4, could be entrapped in the solids. Volatile organics, if present, may also exist in the air above the waste. Since most of the liquids originally contained within the SSTs have either been transferred to the DSTs or removed through evaporation processes, significant quantities of the original volatile compounds should not be present. Additionally, heat generation from radioactive decay would accelerate the rate at which the organic volatile compounds are vaporized, and would thereby decrease the volatile organic concentration in the tanks. However, as already noted, radioactive decay and heat could result in the decomposition of complex organic compounds into volatile constituents. If volatile organics are generated in the tanks, they may or may not be of regulatory importance depending on the compound formed. Because it is unlikely that significant quantities will be present, extensive testing of the SSTs for volatile organic compounds should not be necessary.

Chemicals that have been used as complexing and chelating agents include hydroxyethylethylenediaminetriacetic acid (HEDTA), ethylenediaminetetraacetic acid (EDTA), citric acid, and hydroxyacetic acid. Of these compounds, only EDTA is regulated under CERCLA as a hazardous substance. However, because complexing and chelating agents increase the mobility of radionuclides, they will be important to performance assessments and will be tested for during Phase I characterization.

Screening tests can be performed to demonstrate the presence or absence of a specific group of organic constituents in a sample. By performing general screening tests, it may be possible to eliminate the need for performing more detailed analytical tests. One screening test that will be performed on the SST waste is a total organic carbon (TOC) analysis. The TOC analyses will be performed on the water-soluble fraction, the drainable liquid fraction and, if possible, on the direct sample from each SST composite core sample. The water-soluble and drainable liquid TOC analyses will provide an indication of the quantity of complexing and chelating agents that are present. The EDTA content of the SSTs will also be indicated by the TOC analyses. However, other unregulated organic compounds will also contribute to the TOC measurement as well as NPH introduced as part of the sampling. Therefore, it may be necessary to use other analytical techniques (such as high-performance liquid chromatography (HPLC) or gas chromatography/mass spectrometry (GC/MS) analysis of their derivatization products) for determining the EDTA and other complexant concentrations. If EDTA is determined to be a major contributor to the TOC analysis, EDTA analyses will be performed on tank composites. If other specific complexant concentrations are determined to be important to performance assessment, these analyses will also be performed on tank composites.

The TOC analysis is also important for determining the applicability of land disposal restrictions. If organic and carbonaceous waste comprises greater than 10% of the waste, then the land disposal restrictions will apply (WAC 173- 303-140).

[A discussion of land disposal restricted wastes will be included in Revision 0.]

Testing the SST waste for volatile organic compounds (VOC) will be difficult because of the high potential for loss of VOCs during sampling and during extrusion and sample preparation in the hot cell. Although it is likely that significant quantities of volatile compounds will not exist in the SST waste, several screening tests will be evaluated to ensure that VOC concentrations are below regulatory levels. One possible screening test would be to obtain a gas sample from the headspace

9 2 1 2 6 5 3 0 1 0 3

(atmosphere above the wastes) in the SSTs (see Section 5.3.3.1). If volatile organics are present or being generated in the SSTs, they should be detectable in the vapor phase above the waste. Gas samples from the headspace could be analyzed by gas chromatography (GC). If the GC analysis indicates the presence of volatile compounds, more extensive analytical tests could be used. A laboratory version of the headspace analysis will also be evaluated to determine the presence of VOCs in the waste. These methods are in development (Sections C.3.1.9, C.3.1.10, and C.3.1.11, Appendix C). However, all the techniques will be limited by the sampling and sample preparation methods. If volatile organics are determined to be critical parameters for SST characterization, then additional development work will be needed.

Several HHs were used at Hanford processing facilities and laboratories that transferred waste to the SSTs. However, the regulated HHs that appear in Klem (1988) (carbon tetrachloride, methylene chloride, and trichloroethane) are volatile compounds, and the same sampling problems that exist for the other volatile compounds will exist for the HHs. It should be possible to analyze HHs at the same time as other volatile organics using gas chromatography. The total organic halide (TOX) test can also provide a qualitative indication of HHs entrapped in the waste and other HHs such as halogenated pesticides and polychlorinated biphenyls (PCB) in the wastes. This test will be performed on tank composites to estimate TOX levels in the waste.

Although there is no indication in Klem (1988) that pesticides or herbicides have been transferred to the SSTs, screening tests or limited analysis of tank composites for these compounds will be performed. The six pesticides and herbicides that are included on the EP toxicity lists at WAC 173-303-090(8)(c) and 40 CFR 261.24 will not be included in Phase I testing unless they are found in tank composite samples. Because there is no indication of their presence in the SSTs, it may not be necessary to test each SST for pesticides and herbicides. If initial results on tank composites

show that no pesticides or herbicides are present, the frequency of analysis may be decreased and the analysis dropped or performed only on tank farm composites.

4.4 RADIOCHEMICAL TEST PARAMETERS

4.4.1 Introduction to Radiochemical Parameters

Radionuclide concentrations, like hazardous chemical concentrations, must be measured in SST wastes to classify the wastes as transuranic (TRU) waste or low-level waste (LLW), and to support performance assessments and process development. Sixty-eight radionuclides (Morgan 1988) were identified by the TRAC program. A regulatory assessment reduced the number of radionuclides to 42 which were determined to be important to regulatory and performance assessment concerns. Earlier performance studies (Morgan et al. 1988) identified 16 radionuclides that are important based on risk assessment. These radionuclide lists are shown in Table 4-5. A new performance assessment-sensitivity study is in progress that may alter the present radionuclide selection.

This section focuses on the rationales for further reducing the list of 42 radioisotopes identified in Table 4-5 that will be directly analyzed for in the laboratory. Some isotopes which are not analyzed for will be determined by calculations based on either ratioing to another isotope of the element or from known decay chains. The 42 isotopes that are important to different regulations are noted in Table 4-5. Other factors, such as performance assessment, use in Hanford environmental impact statement (EIS) risk assessments, and detection in Hanford groundwater for selection of these isotopes were also identified in the regulatory assessment. In general, long-lived isotopes with high

9 2 1 2 6 5 3 0 1 0 5

Table 4-5. Radionuclides Included in TRAC System, Specified in Regulations, and that are Principal Contributors to Dose in Performance Assessment. (Sheet 1 of 2)

TRAC isotopes	Regulatory isotopes	Comments for regulatory isotopes	Performance assessment isotopes
^{245}Cm	$^{245}Cm^{a,b}$	Calculated[f]	
^{244}Cm	$^{244}Cm^{a,d}$	Measured[g]	
^{242}Cm	$^{242}Cm^{a}$	Measured	
^{243}Am	$^{243}Am^{a,b,d}$	Calculated	
^{242m}Am	$^{242m}Am^{a,d}$	Calculated	
^{242}Am			
^{241}Am	$^{241}Am^{a,b,d}$	Measured	^{241}Am
	$^{242}Pu^{a,b,d}$	Calculated, nonroutine	
^{241}Pu	$^{241}Pu^{a}$	Calculated, nonroutine	^{241}Pu
^{240}Pu	$^{240}Pu^{a,b,d}$	Measured, calculated, nonroutine[e]	^{240}Pu
^{239}Pu	$^{239}Pu^{a,b,d}$	Measured	^{239}Pu
^{238}Pu	$^{238}Pu^{a,b,d}$	Measured	^{238}Pu
^{239}Np			
^{237}Np	$^{237}Np^{a,b}$	Measured	^{237}Np
^{238}U	$^{238}U^{a,b,d}$	Measured, calculated, nonroutine[e]	Total U
	$^{236}U^{a,b,d}$	Measured, calculated, nonroutine[e]	
^{235}U	$^{235}U^{a,b,d}$	Measured, calculated, nonroutine[e]	
^{234}U	$^{234}U^{a,b,d}$	Measured, calculated, nonroutine[e]	
^{233}U	$^{233}U^{a,b,d}$	Measured, calculated, nonroutine[e]	
^{234m}Pa			
^{233}Pa			
^{231}Pa	$^{231}Pa^{a,d}$	Nonroutine	
	$^{232}Th^{a,d}$	Measured	
^{234}Th			
^{233}Th			
^{232}Th			
^{231}Th			
^{230}Th	$^{230}Th^{a,b,d}$	Nonroutine	
^{229}Th	$^{229}Th^{a,b,d}$	Nonroutine	
^{227}Th			
	$^{227}Ac^{a,d}$	Nonroutine	
	$^{228}Ra^{a,c}$	Nonroutine	
	$^{226}Ra^{a,c}$	Nonroutine	
^{218}Po			
^{215}Po			
^{214}Po			
^{213}Po			
^{210}Po	$^{210}Po^{a,d}$	Nonroutine	
^{214}Bi			
^{213}Bi			
^{211}Bi			
^{210}Bi			
^{214}Pb			
^{211}Pb			

PST89-3095-4-5

Table 4-5. Radionuclides Included in TRAC System, Specified in Regulations, and that are Principal Contributors to Dose in Performance Assessment. (Sheet 2 of 2)

TRAC isotopes	Regulatory isotopes	Comments for regulatory isotopes	Performance assessment isotopes
^{210}Pb	$^{210}Pb^{a,d}$	Nonroutine	
^{209}Pb			
^{207}Tl			
^{151}Sm	^{151}Sm	Measured, calculated	^{151}Sm
^{137m}Ba			
^{135m}Ba			
^{137}Cs	$^{137}Cs^{a,b}$	Measured	^{137}Cs
^{135}Cs	$^{135}Cs^{b}$	Calculated, nonroutine	
^{129}I	$^{129}I^{b,d}$	Measured	^{129}I
^{126m}Sb			
^{126}Sb			
^{126}Sn	$^{126}Sn^{b}$	Measured	^{126}Sn
^{107}Pd			
^{106}Ru	^{106}Ru	Measured	
^{99}Tc	$^{99}Tc^{a,b}$	Measured	^{99}Tc
^{93m}Nb			
	$^{94}Nb^{a}$	Measured	
^{227}Ac			
^{225}Ac			
^{228}Ra			
^{226}Ra			
^{223}Ra			
^{223}Fr			
^{221}Fr			
^{217}At			
^{93}Zr	^{93}Zr	Measured	^{93}Zr
^{90}Y			
^{90}Sr	$^{90}Sr^{a,b,c}$	Measured	^{90}Sr
^{79}Se	^{79}Se	Measured	
^{63}Ni	$^{63}Ni^{a}$	Measured	^{63}Ni
^{59}Ni	$^{59}Ni^{a}$	Calculated, nonroutine	
	$^{60}Co^{a}$	Measured	
^{14}C	$^{14}C^{a,b}$	Measured	^{14}C
	$^{3}H^{a,c}$	Measured	
	Alpha emmiting $t_{1/2} > 5$ yr[a]		
	Total radionuclides $t_{1/2} < 5$ yr[a]		
	Other radionuclides $t_{1/2} > 20$ yr[b]		
	α other than Ra[d]		
	α other than U[c]		
	Beta-gamma activity[b]		

[a]Identified in 10 CFR 61.
[b]Identified in 10 CFR 191
[c]Identified in SDWA, MCLs.
[d]Identified in CERCLA.
[e]Total or combined isotopes may be measured. Individual isotopes calculated and nonroutinely checked by mass spectrometry (MS) analysis
[f]Calculated from ratio or decay chain.
[g]Measured directly in laboratory.

PST89-3095-4-5

solubility and mobility are important to performance assessment. Isotopes with short half-lives affect dose rates and waste temperatures and are more important to process development activities.

The isotopes can be further stratified based on their primary source of production (fission product, activation product, daughter product, reactor fuel), half-life, and type of radiation emitted (alpha, beta-gamma, and neutron). The type of radiation emitted is important in selecting the measurement procedure. The isotope concentrations in SST waste can be determined by direct measurement or from calculations based on direct measurement of other isotopes. The method used for an isotope depends on the concentration of the isotope in the waste, the limitations of the radiochemical methods available, and its systematic relationship to other easily quantified isotopes. These limitations and their effect on the selection process are described in the following section. Where feasible, calculated radiochemical results will be verified with limited direct sample analyses.

4.4.2 Radiochemical Measurement Limitations

Curium isotopes are produced by multiple neutron capture by uranium and other intermediates in reactor fuels. The curium isotopic concentrations are always much lower than plutonium and americium. Chemically, the Cm(III) and Am(III) behave almost identically, and may be separated together and determined using alpha energy analysis (AEA). Table 4-6 shows some of the properties of the curium isotopes and their activity ratio to ^{241}Am based on reactor code calculations of mixed N Reactor fuel with 9% burnup 10 yr after discharge. Curium isotopes ^{242}Cm, ^{243}Cm, and ^{244}Cm will be determined during the determination of ^{241}Am.

To analyze the minor isotopes of curium, particularly ^{245}Cm, using normal radiochemical counting methods, it would be necessary to use very large sample sizes, or very long counting times,

Table 4-6. Curium Isotope Data.

Isotope	$t_{1/2}$	^{241}Am/Curium	^{244}Cm/Curium
^{242}Cm	163 d	2.200 E+03	3.0 E+01
^{243}Cm	28.5 yr	1.85 E+04	2.8 E+02
^{244}Cm	18.1 yr	7.0 E+01	--
^{245}Cm	8,537 yr	3.8 E+06	5.8 E+04

PST89-3095-4-6

or both because of its low concentration. Even then, the errors would most likely be very large. In these cases, it will be more reasonable to estimate the isotopic concentration by calculation from analysis of another isotope such as ^{244}Cm or ^{241}Am if a value is needed for performance assessment analysis. Since the alpha energy from large quantities of ^{241}Am (5.49 Mev) would probably interfere with the ^{245}Cm (5.36 Mev) alpha energy, a complex americium-curium separation would be required. Even though ^{245}Cm eventually becomes the major curium isotope, direct measurement of ^{245}Cm and other minor curium isotopes is not planned since they represent only an extremely small fraction of the alpha isotopes with equivalent half-lives.

Americium isotopes are produced by multiple neutron capture by uranium in the reactor fuel. The ^{241}Am is also produced by the decay of ^{241}Pu, a short-lived beta-emitting plutonium isotope. The ^{241}Am is the major isotope of americium found in SSTs and is routinely determined by separation and alpha counting. Table 4-7 shows the activity ratio of other americium isotopes of interest to ^{241}Am based on reactor code calculations after 10 yr.

Table 4-7. Americium Isotope Data.

Isotope	$t_{1/2}$	^{241}Am/Americium	Decay mode
^{241}Am	432 yr	--	Alpha
^{242}Am	16 h	1.8 E+03	Beta
^{242m}Am	152 yr	1.8 E+03	Isomeric transition
^{243}Am	7,370 yr	1 E+04	Alpha

PST89-3095-4-7

The analysis of americium isotopes, other than ^{241}Am, has some of the same problems as the analysis of curium isotopes; however, the ^{241}Am concentration is about 100 times higher than the highest concentration of curium isotope, ^{244}Cm. In the short term (about 100 yr) this ratio will increase from the decay of ^{241}Pu to ^{241}Am. Although the ^{243}Am will eventually become the dominant americium isotope, its activity will always be at least 10,000 times less than the saturation level for the ^{241}Am activity. The ^{243}Am isotope is also used as a tracer for the ^{241}Am determination; therefore, samples would also have to be analyzed without a tracer to look for ^{243}Am. Without a tracer, the ^{243}Am analysis is subject to larger errors. The primary decay mode for ^{242m}Am (99%) is by isomeric transition that results in low-energy, low-intensity gamma rays that are difficult to detect using routine methods at the concentration levels expected. Because of these factors, the calculated estimates for ^{243}Am and ^{242m}Am (based on ^{241}Am measurements) may be more accurate than actual analysis. Therefore, routine analyses for americium isotopes, other than ^{241}Am, are not planned.

The plutonium isotopes are produced by activation of uranium in reactor fuels. They are also produced from alpha decay of curium isotopes. Routine plutonium analysis provides isotopic information for the combined $^{239/240}$Pu concentration and the ^{238}Pu concentration. The relationships of the plutonium isotopes are shown in Table 4-8.

Table 4-8. Plutonium Isotopic Data.

Isotope	$t_{1/2}$	^{239}Pu/Plutonium	Decay mode
^{238}Pu	87.7 yr	4	Alpha
^{239}Pu	2.4 E+04 yr	--	Alpha
^{240}Pu	6,570 yr	2.6	Alpha
^{241}Pu	14.3 yr	5. E−02	Beta
^{242}Pu	3.8 E+05 yr	1.5 E+04	Alpha

PST89-3095-4-8

Neptumium is also produced in the activation of uranium in reactor fuels. The ^{237}Np isotope is the only isotope of interest and will be determined by chemical separations and alpha counting procedures similar to those for plutonium isotopes.

The concentration levels of ^{242}Pu, compared to ^{239}Pu, are so low that it cannot be analyzed for using routine alpha counting methods. The ^{241}Pu activity level is greater than ^{239}Pu after 10 yr because of its very short half-life compared to ^{239}Pu. However, after 100 yr, the ^{239}Pu activity will be about 30 times greater than ^{241}Pu. After complete decay of the ^{241}Pu to ^{241}Am, the activity of ^{241}Am produced from ^{241}Pu will be about 3% of the original ^{241}Pu activity. Depending on the fuel burn up level, the ^{241}Am produced from ^{241}Pu in the waste will only be a fraction (up to about 60%) of the original ^{239}Pu activity. Analysis of ^{241}Pu is further complicated because it decays by beta emission. This requires highly efficient, time-consuming chemical separations to prevent contamination from other beta isotopes that are present at levels that are orders of magnitude greater than ^{241}Pu. Because of these factors, ^{241}Pu will not be determined on a routine basis.

The alpha energies of ^{239}Pu and ^{240}Pu are too close to permit resolution of their alpha energy spectra; therefore, a combined activity level is routinely reported. Individual ^{239}Pu and ^{240}Pu isotopic compositions can only be obtained by mass spectrometric (MS) analysis, by delayed neutron

fissile content measurement or by estimation from calculations based on the average ratio of $^{239,240}Pu$ isotopes produced at Hanford. The ratio present in the SSTs will depend on the type of fuel, the burnup factor, and the quantity of the different fuel types processed. Based on the TRAC program projections, this ratio is _____ ± _____ (__%) (to be filled in later after calculation). The MS determination of plutonium isotopes is not planned on a routine basis; however, the analysis may be done on tanks where significant quantities of plutonium are found, and if calculated results are not adequate for performance assessment. The delayed neutron and activation analysis system (DNAAS) that is being developed for fissile content measurement will be evaluated for use in Phase I testing (Section C.3.1.17, Appendix C).

The uranium isotopes originate from the initial reactor fuel and from activation and decay products. The uranium isotopic analyses have not been routinely run on SSTs. Based on mass, ^{238}U is the major isotope and makes up >99% of the total uranium by weight. Therefore, the total uranium analysis is essentially the ^{238}U concentration. The activity levels for the uranium isotopes are summarized in Table 4-9.

Table 4-9. Uranium Isotopic Data.

Isotope	$t_{1/2}$	^{238}U/Uranium	Average ^{238}U[a]/uranium	Decay mode
^{233}U	1.6 E+05 yr	1.9 E+05	TRAC[b]	Alpha
^{234}U	2.5 E+05 yr	8.0 E−01	TRAC[b]	Alpha
^{235}U	7.0 E+08 yr	1.9 E+01	TRAC[b]	Alpha
^{236}U	2.3 E+07 yr	7.5 E+00	TRAC[b]	Alpha
^{238}U	4.5 E+09 yr	--	TRAC[b]	Alpha

[a]Based on TRAC for all tanks.
[b]To be calculated from TRAC.

PST8-3095-4-9

Because of their long half-lives, the activity of the uranium isotopes may not be as significant as the plutonium activity unless uranium is present at reasonably high concentrations. The total uranium result may be used to determine when more extensive uranium isotopic analyses are required by using the estimates of the average uranium isotopic composition. If the calculated activity level exceeds the performance assessment criterion (not yet determined), uranium isotopic analyses will be performed. The projected uranium isotopic composition in tanks that contain waste from the PUREX thorium campaigns that produced ^{233}U could differ significantly from those in waste from plutonium-uranium campaigns. Tanks expected to contain these wastes would require uranium isotopic analysis. A routine method for uranium isotopic analysis uses AEA of separated uranium. At least one uranium isotopic analysis per tank based on AEA will be done to verify uranium isotopic composition. However, the alpha energy differences between $^{233,234}U$ and $^{234,236}U$ do not allow individual isotope determinations. Although this technique could identify tanks with unusual levels of ^{233}U, MS analysis will be required to measure individual isotopes. The MS analyses of uranium isotopes are not planned for routine SST characterization in Phase I testing and will only be used if AEA determination of the U isotopes shows unusual ratios.

Thorium isotopes have not been routinely analyzed for in SST samples. The ^{230}Th is the only thorium isotope identified on in Table 4-5 that appears in the reactor code and its activity is over a million times less than the ^{239}Pu level. Thorium-229, with a half-life of 7,340 yr, is the daughter of the ^{237}Np, ^{233}U chain. Thorium-229 could be estimated from these equilibria. If the parent isotopes are not present in significant quantities, it is unlikely that significant quantities of ^{229}Th will be found. Thorium-230, with a half-life of 75,000 yr, is the daughter of the ^{238}U. Thorium-230 will be present in natural uranium; however, if in the purification of the uranium for fuel, the ^{230}Th is removed, ^{230}Th will have to grow back in again and will take 100,000 yr to reach a maximum concentration before it begins decaying with the same decay rate as the ^{234}U parent. The ^{232}Th isotope is the naturally occurring isotope of thorium. Therefore, the total thorium results from ICP or

9 2 1 2 6 5 3 0 1 1 3

spectrophotometry is a good estimate of the ^{232}Th activity. The ^{232}Th was used as a fuel in reactors for ^{233}U production. These fuels, which were processed in two campaigns at REDOX and PUREX facilities, are the major sources of ^{232}Th in the SST wastes. Isotopic information for thorium is summarized in Table 4-10.

Table 4-10. Thorium Isotopic Data.

Isotope	$t_{1/2}$	Decay mode
^{229}Th	7.34 E+03 yr	Alpha
^{230}Th	8.0 E+04 yr	Alpha
^{232}Th	1.4 E+10 yr	Alpha

PST89-3095-4-8

The thorium isotopes may be measured by AEA after a lengthy chemical separation. Routine thorium isotopic analyses are not planned. The analysis may be performed if significant quantities of ^{233}U, ^{237}Np, or total thorium are found.

In addition to ^{229}Th and ^{230}Th, several other isotopes originate from the decay chains of either natural isotopes or isotopes produced in the reactor. Actinium-227 is primarily a beta emitter (99%) with a chemistry similar to americium. It is produced in the reactor fuel with an activity level that is about 10^8 times lower than that of ^{241}Am. The other source of ^{227}Ac is from the ^{235}U decay chain through ^{231}Pa. The ^{227}Ac level could be estimated at equilibrium based on the ^{235}U that is measured or calculated from the total uranium. The ^{227}Ac concentrations are not expected to be significant compared to other isotopes. In addition, its short (22 yr) half-life does not make it important to long-term management of the wastes. The determination of ^{227}Ac by beta counting would be difficult because of the required separation from other beta-emitting isotopes. Actinium may be determined by gamma energy analysis of its equilibrium daughters if present in high enough concentrations.

Special separations and analysis for ^{227}Ac is not planned unless other radiochemical measurements, gamma energy analysis (GEA), indicate it may be significant.

Isotopes ^{226}Ra and ^{228}Ra are not identified as being produced in the reactor code. Therefore, all the radium found in the waste will originate from the decay of ^{238}U and ^{232}Th, respectively. The ^{226}Ra is the longest lived isotope (1,602 yr), and decays by alpha emission. The ^{226}Ra will be found in uranium ore because it has reached equilibrium in the decay of ^{238}U. However, uranium used in reactor fuel is processed before fabrication which removes existing ^{226}Ra in the uranium ore and breaks the decay chain. The ^{226}Ra will require many years to attain the activity levels found in the natural ore. Therefore, significant quantities are not expected to be found in the waste. The final ^{226}Ra concentration can be estimated from the activity of the chain member ^{214}Bi and from an equilibrium calculation based on the total uranium value. The ^{228}Ra isotope is a short-lived isotope, (6.7 yr), that decays by beta emission. It is the daughter of the natural ^{232}Th isotope, which is not expected to be found in significant quantities in the SST wastes. Processing of the thorium ore before fuel fabrication will remove ^{228}Ra from the ore before it enters the Hanford fuel cycle. Determining low levels of ^{228}Ra activity by beta counting would be difficult because of the much higher levels of other beta emitters, particularly ^{90}Sr, which is chemically similar. However, ^{228}Ra can be calculated from the GEA of its daughter ^{228}Ac if concentrations are high enough to observe. The radium isotopes are probably included in regulatory guidelines because they are important waste isotopes generated in uranium mill tailings and uranium and thorium processing. They may also be found naturally in groundwater near uranium and thorium ore deposits. Routine analysis of radium isotopes is not planned, except for monitoring their levels from GEA analysis of other chain members, unless these analyses indicate significant quantities may be present.

Both ^{210}Pb and ^{210}Po are daughter products of the ^{238}U decay chain and ^{231}Pa is generated in the ^{235}U decay chain. These isotopes, like radium, are not produced in the reactor and are found

9 2 1 2 6 3 3 0 1 1 5

primarily in uranium ores. These isotopes are lost in ore processing, and with the exception of ^{231}Pa, require many years to reach full equilibrium levels once the chain is broken. The ^{210}Po, which decays by alpha emission, has a short half-life of 128 d. The ^{210}Pb also has a relatively short half-life of 20.4 yr, and decays by beta emission. These isotopes are not expected to be present in significant quantities compared to other alpha and beta emitters in SST waste. The determination of ^{210}Pb by beta counting presents the same problems as ^{228}Ra analysis. However, the activities of the decay chain sustained by ^{226}Ra (which includes ^{210}Pb and ^{210}Po) can be estimated assuming secular equilibrium and no losses of gaseous ^{222}Rn have occurred. Additional confirmation can be provided by GEA analysis of ^{214}Bi.

The ^{231}Pa is the decay product of ^{235}U, a minor (<1%) uranium isotope that decays by alpha emission. Highly enriched (^{235}U >3%) fuel has not been processed at Hanford. High concentrations of ^{231}Pa may be detected by gamma counting and the activities of shorter-lived daughters determined by GEA. However, significant quantities of ^{231}Pa are not expected. The concentration of these isotopes can also be estimated by equilibrium calculations based on the total uranium results. Routine analysis of these isotopes is not planned, except for monitoring their levels through GEA data, unless these analyses indicate that significant quantities will be present.

A large number of the remaining regulatory radionuclides in Table 4-5 are fission products that are generated in the fuel and are discharged in the waste during fuel reprocessing. The ^{90}Sr, ^{137}Cs, ^{99}Tc, ^{129}I, and ^{106}Ru are some of the major fission products that are routinely determined in the waste. The fission product radiological properties are summarized in Table 4-11. Methods for ^{79}Se, ^{93}Zr, ^{126}Sn, ^{135}Cs, and ^{151}Sm have not been tested extensively on SST wastes. Most of the fission products must be measured by direct analysis rather than calculation because there is not another major isotope that can be used in determining the ratio for each and the chemistry of the fission products differ resulting in different paths in the waste generation process. The ^{135}Cs isotope is one

Table 4-11. Summary of Radionuclide Data for Fission Products and Activation Products.

Isotope	$t_{1/2}$	Decay mode
^{79}Se	<6.5 E+04 yr	Beta
^{90}Sr	2.77 E+01 yr	Beta
^{93}Zr	1.5 E+06 yr	Beta
^{94}Nb	2.0 E+04 yr	Beta-gamma
^{99}Tc	2.1 E+05 yr	Beta
^{106}Ru	1.0 yr	Beta-gamma
^{126}Sn	~1 E+05 yr	Beta
^{129}I	1.7 E+07 yr	Beta-gamma
^{135}Cs	3.0 E+06 yr	Beta
^{137}Cs	3.0 E+01 yr	Beta-gamma
^{151}Sm	9.0 E+01 yr	Beta
^{63}Ni	9.2 E+01 yr	Beta
^{59}Ni	8 E+04 yr	Electron capture
^{60}Co	5.3 yr	Beta-gamma
^{14}C	5.73 E+03 yr	Beta
^{3}H	1.23 E+01 yr	Beta

PST89-3095-4-11

9 2 1 2 6 6 3 0 1 1 7

possible exception since there is another isotope, ^{137}Cs, that can be easily analyzed by gamma energy methods. The ^{135}Cs could then be calculated using the $^{137}Cs/^{135}Cs$ ratio determined from the reactor code. The ratio will need to be corrected for the relatively short half-life of ^{137}Cs compared with ^{135}Cs. Because both cesium isotopes emit beta particles, beta counting to determine ^{135}Cs with a much lower specific activity is not possible. The ^{135}Cs can only be determined by MS or possibly activation analysis. Because ^{135}Cs activity is much lower than that of many other fission products (^{90}Sr) and is difficult to determine, calculation of its concentration may be the most reasonable approach. Limited ^{135}Cs determinations will be performed to evaluate the calculation approach depending on its importance in performance assessments.

It may be possible to calculate ^{151}Sm concentrations from the analysis of other gamma-emitting rare earth isotopes such as ^{152}Eu or ^{154}Eu or from ^{241}Am or curium isotopic analysis since, chemically, these elements behave very similarly. However, the europium isotopes may be too low in activity to be measured in some wastes and significant quantities of the ^{241}Am may originate from decay of ^{241}Pu in the waste which is chemically different than the ^{241}Am. These ratios will be evaluated to determine if accurate estimates of ^{151}Sm may be possible. However, until a good correlation can be established, ^{151}Sm analyses will be planned. Other fission products identified in the regulatory assessment will be analyzed directly unless further evaluation or performance assessment indicate that they are present at levels below concern.

The remaining isotopes important to regulation in Table 4-5 can be classified as activation products that are produced from activation of fuel cladding materials or impurities in the uranium fuel. Both ^{59}Ni and ^{63}Ni are produced by neutron capture in stable ^{58}Ni and ^{62}Ni isotopes. Methods for measuring the nickel isotopes will require excellent separation from the other isotopes. It may be possible to estimate the ^{59}Ni, which decays by electron capture, from the ^{63}Ni result determined by beta counting. Mass spectometry may be required to measure the ^{59}Ni isotope. Although analyses for these isotopes are planned at this time, the number of analyses will be limited until method development is complete (Sections C.3.2.9 and C.3.2.11, Appendix C). The ^{14}C and ^{3}H isotopes are routinely determined by separation and liquid scintillation counting.

4.5 SUMMARY

Radionuclide analysis is one of the most manpower-intensive tasks in characterizing SST wastes, particularly for alpha- and beta-emitting isotopes that require lengthy chemical separations before

counting for measurement. The analysis of trace isotopes in the presence of much higher concentrations of other isotopes normally will increase the uncertainty in the analysis. More detailed evaluation of performance assessment models and preliminary characterization data may allow the elimination or reduction in frequency of analysis for some of the more minor isotopes. This will be important in controlling costs and radiation exposure to personnel. The development of new inductively coupled plasma/mass spectrometry technology for analyzing long-lived isotopes in highly radioactive samples in place of alpha and beta counting will reduce the time required for lengthy chemical separations and improve isotopic selectivity (Section C.3.2.13, Appendix C).

9 2 1 2 6 6 3 0 1 1 9

4.6 PHYSICAL TESTING PARAMETERS

Understanding the physical parameters of the SST wastes will be an essential element of the waste characterization program. The physical parameters, including density, free liquids and percentage of solids, will be important factors in decisions concerning how retrieval could be accomplished and what disposal technologies or processes might be used and what pretreatment may be needed.

The options for disposal of the wastes can be broadly separated into "in-place disposal" or "retrieval", with several important variations within each group. Variations of the in-place disposal alternative may permit dome filling and sealing the tanks or immobilizing the waste, dome filling, and sealing the tanks. Retrieving the wastes for out-of-tank pretreatment and immobilization for disposal will require hydraulic sluicing or dry mining removal (for solids). Slurry transfer of waste from the tanks will be easier than dry mining and packaging, but converting the solids in the tank to a slurry may be difficult.

The physical parameters shown in Table 4-12 will be evaluated for inclusion as necessary in the testing regime.

The first step in testing will be to visually inspect the sample though the inspection window of the hot cell, and a photograph will be taken for future reference. This inspection will provide information about the layers of material in the tank, and therefore an indication of the tank's heterogeneity. Subsequent physical tests will be conducted on segments, core composites, and tank composites according to as yet-undeveloped sorting criteria. Table 4-14 shows which of these tests will be performed on segments, core composites, and tank composites.

The portion of the waste used for the physical measurement depends on several factors. Test that are sensitive to loss of moisture or homogenization will be performed on segments. Tests that are not affected by compositing will be done on core of tank composites. Finally, if the tests require large volumes of unhomogenized waste, then a special sample is required. Limitations of these tests are described further in Section 5.5.

4.7 SUMMARY OF TESTS ON SPECIFIC SAMPLES AND THE ASSOCIATED RATIONALES

This section summarizes the selected parameters for analysis, the waste fractions to be analyzed, and the general rationales for choosing the parameters in Tables 4-13 and 4-14. The tests that will be performed on segments, core composites, and tank composites are shown in Table 4-14. Presently, analysis of the vertical distribution of components is not described for Phase I. This would be achieved by analyzing each segment for the parameter of interest.

Table 4-12. Physical Waste Parameters and Rationale.

Parameter	Rationale
Weight percent water	Regulatory (dry weight calculation), thermal modeling
Bulk density	Thermal modeling
Mass of segment and liquid	Solids density estimate, process design
Particle density	Retrieval and in-place disposal process design
Volume liquid	Regulatory, process design
Thermal output	In-place process design
Particle size distribution	Retrieval process design
Thermal conductivity	In-place process design
Specific heat	In-place process design
Viscosity	Retrieval process design
Penetrometer	Retrieval process design
Thermal analysis	Regulatory, in-place disposal design
Solids settling rate	Retrieval design
Volume percent solids	Retrieval design
Shear stress-shear rate rheogram	Retrieval design
Volume percent centrifuged solids	Retrieval design
Shear strength	Retrieval design
Miller number	Retrieval design

PST89-3095-4-12

9 2 1 2 6 5 3 0 1 2 1

Table 4-13. Chemical Testing Parameters and Rationales. (Sheet 1 of 4)

Testing parameters	Analyte	Significant under			Process evaluation importance				Importance to performance assessment[h]
		RCRA[a]	CERCLA[b]	SDWA[c]	Retrieval[d]	Vitrification[e]	Grout[f]	Other technologies[g]	
Inorganic cations	Al				TBD[n]	X		TBD[n]	
	Ag	X	X	X		X			
	As	X	X	X					
	Ba	X	X	X					
	Be	X	X						
	Ca								
	Cd	X	X	X		X			
	Cr	X	X	X		X			
	Cu		X	X					
	Fe	X		X		X			
	Hg	X	X	X					
	K								
	Mn	X		X					
	Na	X				X	X		
	Ni	X	X			X			
	Pb	X	X	X		X			
	Se	X	X	X					
	V					X			
	Zn		X	X					
	Sb	X	X						
	Si								
	Zr					X			
	P								
	S								
Additional ICP cations[i]									

PST-89-3095-4-13

Table 4-13. Chemical Testing Parameters and Rationales. (Sheet 2 of 4)

Testing parameters	Analyte	Significant under			Process evaluation importance				Importance to performance assessment[h]
		RCRA[a]	CERCLA[b]	SDWA[c]	Retrieval[d]	Vitrification[e]	Grout[f]	Other technologies[g]	
Inorganic anions	NO_3	X		X		X	X		
	SO_4	X		X		X	X		
	F	X		X		X	X		
	Cl	X		X		X			
	NO_2	X		X		X			
	PO_4					X			
	OH(pH)	X		X			X		X
	CN (soluble)	X	X			X			
	S								
	Cr (VI)	X	X	X					
	NH_3								
	CO_3					X			
Organic compounds	Acetone	X	X						
	Benzene[j]	X	X	X					
	Butanol	X	X						
	Carbon tetrachloride[j,k]	X	X	X					
	Ethyl ether	X	X						
	Methanol	X	X						
	Methylene[k] chloride	X	X						
	Methyl ethyl ketone	X	X						
	Methyl isobutyl ketone	X	X						
	Napthylamine	X	X						
	Toluene	X	X						
	Trichloroethane[j,k]	X	X	X					

PST-89-3095-4-13

Table 4-13. Chemical Testing Parameters and Rationales. (Sheet 3 of 4)

Testing parameters	Analyte	Significant under			Process evaluation importance				Importance to performance assessment[h]
		RCRA[a]	CERCLA[b]	SDWA[c]	Retrieval[d]	Vitrification[e]	Grout[f]	Other technologies[g]	
Organic compounds (cont.)	Xylene	X	X						
Pesticides/herbicides	Endrin	X	X	X					
	Lindane	X	X	X					
	Methoxy-chlor	X	X	X					
	Toxaphene	X	X	X					
	2,4-D	X	X	X					
	2,4,5-TP Silver	X	X	X					
PCBs Organic screening tests	Total Organic Carbon (TOC)	X		X		X	X		
	Total inorganic carbon (TIC)					X			
	Total organic halogen (TOX)	X				X			
	Volatile organics[1]	X	X	X					
	Semivolatile organics[1]	X	X	X					
EP Toxicity	As	X	X	X			X		
	Au	X	X	X					

PST89-3095-4-13

Table 4-13. Chemical Testing Parameters and Rationales. (Sheet 4 of 4)

Testing parameters	Analyte	Significant under			Process evaluation importance				Importance to performance assessment[h]
		RCRA[a]	CERCLA[b]	SDWA[c]	Retrieval[d]	Vitrification[e]	Grout[f]	Other technologies[g]	
	Ba	X	X	X	-		X		
	Cd	X	X	X		X			
	Cr	X	X	X		X			
	Hg	X	X	X					
	Pb	X	X	X		X			
	Se	X	X	X					
Corrosivity	pH	X							X
Physical tests[m]	Free-liquids	X			X				X
	Density				X			X	

[a]RCRA--Parameters and analytes that are regulated under RCRA at 40 CFR 261-265 or under Washington Dangerous Waste Regulations (WAC 173-303).

[b]CERCLA--Parameters and analytes that are regulated under CERCLA at 40 CFR 302.4.

[c]SDWA--Parameters and analytes that are regulated under SDWA at 40 CFR 141, 142, and 143.

[d]Retrieval--Parameters and analytes that are important for evaluating retrieval technologies. (Information on retrieval is forthcoming and will be incorporated into the table when it is available.)

[e]Vitrification--Parameters and analytes that are important for determining the suitability of vitrification processing.

[f]Grout--Parameters and analytes that are important for determining the suitability of grout processing. (Further information on grout is forthcoming and will be incorporated into the table when it becomes available.)

[g]Other Technologies--Parameters and analytes that are important for determining the suitability of other technologies for processing or stabilizing SST waste. (If information is found that indicates that specific analytes or parameters are important to other technologies, technologies will be identified in footnotes,then that information will be incorporated into this table.)

[h]Important to Performance Assessment--Parameters and analytes that are important to performance assessments. (Further information on performance assessments is forthcoming and will be incorporated into this table when it becomes available.

[i]Additional ICP Cations--The SST waste will be tested for some cations primarily because the ICP analytical instrument is capable of determining their concentrations with little addition time and exposure. These additional cations are B, B-, Co, Mg, Mo, Nd, Sn, Ta, Tl, W, and Zr. These will vary between Bi ICP instruments.

[j]Analyte has been identified as an IARC-positive or suspected carcinogen (animal or human). These will vary between instruments.

[k]Analyte has been identified as a halogenated hydrocarbon.

[l]Screening tests for volatile and semivolatile organic compounds will be evaluated to determine whether they can be incorporated into routine SST testing.

[m]Additional physical testing parameters and analytes will be incporated into this table as more information becomes available.

[n]TBD--to be determined.

PST-89-3095-4-13

Table 4-14. Single-Shell Tank Waste Characterization Plan Summary Table. (Sheet 1 of 3)

Parameter	Analyte	Composite type	Waste fraction	Primary method	Method number	Potential SW-846 deviations
Metals	Al, Ag, Ba, Co	Core	A, W, DL, F	ICP	6010	Smaller sample size
	Be, Ca, Cd, V	Core	A, W, DL, F	ICP	6010	
	Cr, Cu, Fe, Be	Core	A, W, DL, F	ICP	6010	
	K, Mg, Mn, Sb	Core	A, W, DL, F	ICP	6010	
	Na, Ni, Pb, Th	Core	A, W, DL, F	ICP	6010	
	Zn, Si, Ti, Tl	Core	A, W, DL, F	ICP	6010	
	Others	Core	A, W, DL, F	ICP	6010	Simultaneous ICP
	As	Core	A, W, DL	HYAA/GFAA	7060/7061	Westinghouse Hanford/HYAA different
	Se	Core	A, W, DL	HYAA/GFAA	7740/7741	Background correction
	Hg	Core	D	CVAA	7471	Modified method
	U	Core	A, W, DL, F	Fluorimeter	IM	
Anions	NO_3^-	Core	W, DL	Colorimetry	9200	Different method
	SO_4^{-2}	Core	W, DL	Colorimetry	9038	Different method
	PO_4^{-3}	Core	W, DL	IC	IM	
	F^-	Core	W, DL	IC	IM	
	Cl^-	Core	W, DL	IC	9250	Different method
	NO_2^-	Core	W, DL	Colorimetry	IM	
	pH/OH^-	Core	W, DL	pH/titration	9040	Smaller sample size
	CN^-	Core	D, DL	Distillation, color	9010	Modified method
	S^{-2} [a]	Tank	D, DL	Colorimetry	9030	Matrix problems/NRM
	Cr (VI)	Tank	W, DL	Color/AA	7197/7195	Different method ICP
	NH_3	Tank	W, DL	Distillation/ titration	IM	
	CO_3^{-2}	Core	W, DL	TIC	IM	
Organic screening tests	TOC	Core	D, W, DL	TOC	9060	
	EOX	Tank	D, DL	TOX	9020	Different extractant
	Volatile organic	Core/ segment	D, DL	GC	3820	For evaluation[b]
	Semivolatile	Core	D, DL	GC	CLP-SV-D26	For evaluation[b]
	Volatile organic	Segment	D, DL	GC/head space	3810	For evaluation[b]
Complete organic analysis	Volatile organics[a]	Tank/ segment	D, DL	GC/MSD	8240	Smaller sample size
	Semivolatiles[a]	Tank	D, DL	GC/MSD	8270	Smaller sample size
	Pesticides/ PCB[a]	Tank	D, DL	GC/ECD	8080	Smaller sample size
	Organic complexants	Tank	D, DL	HPLC	IM	

PST89-3095-4-14

Table 4-14. Single-Shell Tank Waste Characterization Plan Summary Table. (Sheet 2 of 3)

Parameter	Analyte	Composite type	Waste fraction	Primary method	Method number	Potential SW-846 deviations
Tank atmosphere isotopes	Volatile org/VOST	Tank	Gas	GC	5040/8240	Modified for SST/NRM
	Total Alpha	Core	W, DL, F	Alpha count	9310	Modified method
	Total Beta	Core	W, DL, F	Beta count	9310	Modified method
	Total Gamma	Core	W, DL, F	GEA	IM	
	$^{238, 239/240}Pu$	Core	W, DL, F	Sep./Alpha	IM	
	$^{241, 243}Am$	Core	W, DL, F	Sep./Alpha	IM	
	$^{242/244}Cm$	Core	W, DL, F	Sep./Alpha	IM	
	^{237}Np	Core	W, DL, F	Sep./Alpha	NRM	
	Uranium isotopes	Tank	W, DL, F	Sep./Alpha	NRM	$^{238, 233/234, 235/236}U$
	$^{229/230, 232}Th$	Tank	W, DL, F	Sep./Alpha	NRM	
	$^{227}Ac^{a}$	Tank	W, DL, F	Sep./Beta	NRM	
	$^{240, 241}Pu$	Tank	W, DL, F	Sep./MS	IM	
	$^{234.236}U$	Tank	W, DL, F	Sep./MS	IM	
	$^{226}Ra^{a}$	Tank	W, DL, F	Sep./Alpha	NRM	
	^{228}Ra	Tank	W, DL, F	Sep../Beta	NRM	
	$^{210}Po^{a}$	Tank	W, DL, F	Sep./Alpha	NRM	
	$^{210}Pb^{a}$	Tank	W, DL, F	Sep./Alpha	NRM	
	^{99}Tc	Core	W, DL, F	Sep./Beta	IM	
	^{14}C	Core	W, DL, F	Sept./Beta	IM	
	^{129}I	Core	W, DL, F	Sep./Beta	IM	
	^{90}Sr	Core	W, DL, F	Sep./Beta	IM	
	^{93}Zr	Core	W, DL, F	Sep./Beta	NRM	
	^{63}Ni	Core	W, DL, F	Sep./Beta	NRM	
	^{59}Ni	Tank	W, DL, F	Sep./MS	NRM	
	^{151}Sm	Core	W, DL, F	Sep./Beta	NRM	
	^{79}Se	Core	W, DL, F	Sep./Beta	IM	
	^{126}Sn	Core	W, DL, F	Sep./Beta	IM	
	^{135}Cs	Core	W, DL, F	Sep./MS	NRM	
	^{3}H	Core	W, DL	Sep./ Beta	IM	
EP toxicity	As, Ba, Cd, Cr, Pb, Ag, Se, Hg	Tank	D	Extract/ICP	1310	Smaller sample size
Corrosion	pH	Tank	D	pH	9040	Smaller sample size
DL	volume	Segment	D	Paint filter	9095	Different method
Reactivity	S, CN	Tank	D	CN, S	SW846-7.3	Not planned
Ignitibility	Flash point	Tank	DL	Seta point	1020	Not planned

PST89-3095-4-14

9 2 1 2 6 5 3 0 1 2 7

Table 4-14. Single-Shell Tank Waste Characterization Plan Summary Table. (Sheet 3 of 3)

Parameter	Analyte	Composite type	Waste fraction	Primary method	Method number	Potential SW-846 deviations
Physical measures	Length	Segment	D	Dimension		
	Weight	Segment	D	Balance		
	Volume	Segment	D	Calculated		
	DL weight	Segment	D	Balance		
	DL volume	Segment	D	Graduated cylinder		
	DL-SPG	Segment	D	Pipet/Balance	IM	
	Density solids	Segment	D	Calculated		
	Bulk density	Segment	D	Centrifuge volume	IM	
	Particle density	Seg/Tank	D	Centrifuge volume	IM	
	Particle size	Segment	D	Laser		
	TGA/DSC	Core	D	Thermal analysis	IM	
	Specific heat	Core	D	Thermal analysis	IM	
	Thermal output	Core	D	Calculated		
	Therm. conduc.	Special	D	NRM		
	Viscosity	Special	D			
	wt% Water	Core	D	Dry/weigh	CLP-D84	Sample size
	Penetrometer	Segment	D	Penetrometer	IM	
	Miller Number	Special	D			
	Shear stress/ rate	Special	D	Rheology	IM	
	Shear strength	Special	D	Rheology	IM	
	Solids setl. rate	Slurry	D		IM	
	Volume % solids	Slurry	D		IM	
	Volume % cent. solids	Slurry	D	Centrifuge	IM	

[a]Components not expected to be present in significant quantities because of waste chemistry or process knowledge.
[b]These procedures will be tested for evaluation purposes to determine if they provide worthwhile information or provide advantages over other techniques.

A – Acid-soluble fraction.
D – Direct sample.
DL – Drainable liquid.
F – Fused sample fraction.
IM – Internal Westinghouse Hanford or PNL method.
NRM – No routine method.
SPG – Specific gravity.
TGA/DSC – Thermogravimetric/differential scanning calorimetry.
W – Water-soluble fraction.

PST89-3095-4-14

Analyses for the vertical distribution of analytes will be evaluated before completion of the "Revision 0" version of this WCP, as results from the performance-assessment-sensitivity study are obtained and as estimates of worker dose and cost and schedule impacts are generated.

The core composite sample approach gives an estimate of horizontal variability in the waste, an estimate of the sampling and analysis errors, and an estimate of the entire tanks contents. Table 4-14 provides a summary of the chemical testing parameters and the rationales for selecting these parameters. This table presents information on whether the given parameter is significant for hazardous waste and drinking water regulations, and whether it is important for process evaluation or performance assessments. This summary will be used to prioritize for the chemical testing parameters. For example, if a given parameter is important under all three categories (regulations, process evaluation, and performance assessments), it will likely be given a high priority during waste characterization. The assigned priorities will then be used to determine, in cases in which sample sizes or other constraints limit the number of analyses that can be performed, those parameters that must be analyzed for, and those that may be omitted from the analysis.

9 2 1 2 6 5 3 0 1 2 9

5.0 ANALYTICAL TEST PROCEDURES

5.1 INTRODUCTION

This section identifies the procedures to measure the waste analytes and parameters described in Section 4.0. It is the general intention of this plan to use the EPA procedures, Test Methods for Evaluating Solid Waste (SW-846), or other nationally recognized procedures (e.g., ASTM, DOE, USGS) whenever possible. However, these procedures do not always describe methods for measuring specific radionuclides and some other components of the waste that are needed to support performance assessment or process development activities. The reference procedures may also not be directly applicable to Hanford Site waste matrices and may require modification or alternate methods for reliable results or to control radiological exposure and contamination. Both PNL and Westinghouse Hanford laboratories are in the process of implementing and testing SW-846 procedures on Hanford wastes. At this time, both laboratories have limited experience with these methods on the complex SST matrices. The PNL has only recently tested these procedures on an archived SST samples. Testing at PNL will identify procedural and operational problems and possible solutions. Limitations of the methods and development areas will be better defined. Some deviations from the SW-846 methods are expected because of the radiation levels or matrix interferences. Anticipated problem areas are identified in this section for the specific analytical determination.

The information on procedures is summarized in Table E-1 (Appendix E). The general category of the measurement is described under "Parameter" and the more specific component for determination under "Analyte." Specific determinations will be performed on either core segments, core composites, and tank composites as identified under "Composite Type." The portion of the waste sample analyzed

can be further categorized as the acid-soluble fraction, water-soluble fraction, drainable liquid fraction, or the fusion fraction. Where possible, reference sample preparation (Reference Preparation Method), procedures and reference analytical procedures, "Reference Analytical Method" are provided which identify the SW-846 procedure or other referenceable procedure on which the PNL and Westinghouse Hanford procedures may be based. Both Westinghouse Hanford and PNL maintain a set of analytical procedures. These methods may have procedure numbers different than those of the reference procedures. The table provides a "Reference Limit" as an indication of the performance requirements for a method. These limits are based on requirements from sources such as the EPA Contract Laboratory Program Statement of Work (CLP-SOW) (EPA 1986, 1987), the SW-846 Ground Water Measurement limits, or levels below regulatory concern (LBRC) criteria based on earlier performance assessment studies described in Morgan (1988). These limits may not be appropriate for SST waste but will be used as guides until more specific SST criteria are developed. An estimate of the methods detection limit is also provided. These limits are based on the detection limits for ideal samples after correcting for expected dilution factors through the procedure. Therefore, these are the detection limits for the original sample material, not those measured by the instrument. Because of the complex matrices of the wastes, actual measurement limits may be 5 to 10 times higher than the stated detection limits. The final two columns of the table summarize the rationale for performing the analysis, identify potential SW-846 variations, and identify problems and assumptions used to evaluate the method.

The overall sample analysis scheme for the reference tank is summarized in Figure 5-1. Samples are taken by Tank Farm Operations (TFO) according to procedures described in Section 3.2. The samples are then transported by TFO to either Westinghouse Hanford or PNL laboratories where the samples are logged in and stored. The core sample is next placed in the hot cell and extruded from the core sampler into the hot cell using the procedures described in Section 3.2.3. This is the first time

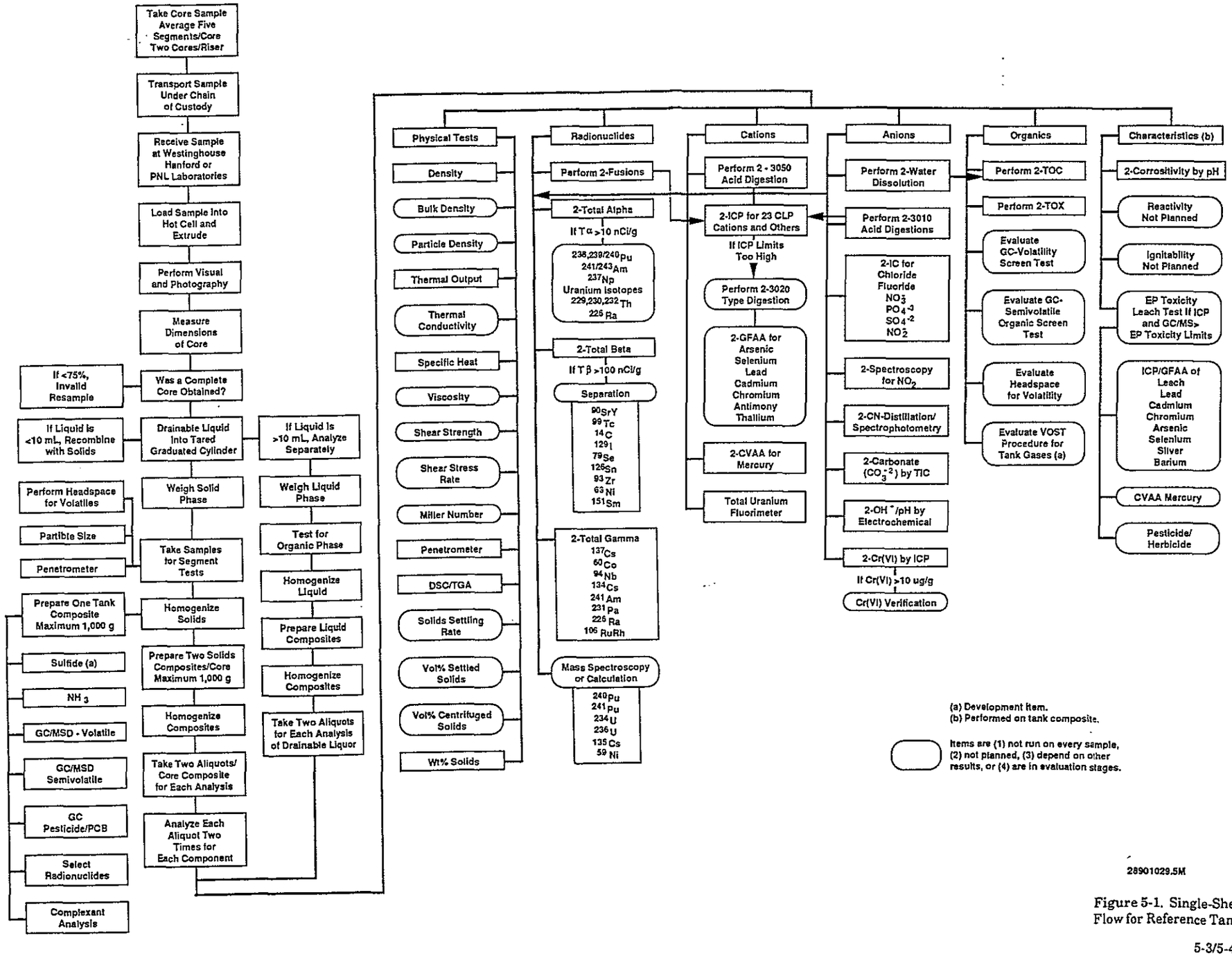

Figure 5-1. Single-Shell Tank Analysis Flow for Reference Tank.

THIS PAGE INTENTIONALLY
LEFT BLANK

that the sample can be visually observed. Dimensional measurement of the core gives an estimate of the success of the sampling effort. An incomplete core may indicate that the sampler did not operate properly and that the core should be resampled at that depth.

Any drainable liquor is collected for each segment in a graduated cylinder or bottle for weight and volume measurement. If the quantity of drainable liquor is >10 mL (about 4% of a full segment), the drainable liquor fraction will be combined with drainable liquors from other segments and analyzed separately from the solids. The "10-mL" criterion needs to be evaluated further. It is based on (1) the estimate that at least 10 mL of material is needed to perform most of the major analyses and (2) that <10 mL could be blended back into the solids without phase separation. If this latter condition cannot be achieved, then analysis of smaller (<10 mL) volumes of drainable liquor may be required with a subsequent decrease in the components analyzed, detection levels, and quality control. The final drainable liquor results will be weight averaged with the solids results to give an overall core composition.

Several of the physical tests are performed on the segments before homogenization because this operation will change the physical properties of the sample. After the waste in the core segment is homogenized, a portion of the material is taken for a core composite. Another portion of the homogenized solids is taken for a tank composite. This composite is analyzed after the tank sampling is complete. This operation is done for each segment in the core until the composite is complete. The final core composites for solids and drainable liquor are homogenized and sampled for the six major characterization categories noted. The tank composite is used to analyze for the specific components listed. These components are not expected to be present in significant quantities and are therefore analyzed less frequently. The tank composite analyses are used to verify the absence of these analytes.

Many of the physical tests will require additional sampling or method development before they can be performed and therefore are not run on every sample. Most radionuclides are performed on a fused portion of the sample to ensure they are in a soluble form. Specific isotope separations are required if total alpha and beta activity measurements exceed regulatory and performance assessment needs. These limits are estimated at 10 nCi/g alpha and 100 nCi/g beta in Figure 5-1, but may change with further performance assessment analysis. The ICP analysis is also done on the fused sample to obtain estimates of acid-insoluble components. If analysis of acid and fused fractions do not show significant differences for metals and radionuclides, the fusion preparation may be dropped.

The ICP is the primary technique for measuring metallic cations. Samples are prepared using SW-846 acid digestion techniques. However, if the detection limits for ICP are inadequate for performance assessment studies or regulatory requirements, then GFAA or hydride atomic absorption (HYAA) methods will be employed. Mercury will be done by cold vapor atomic absorption (CVAA) techniques on direct sample to ensure accurate measurements at regulatory levels.

Most of the anions are determined on the water-soluble fraction of the waste. This fraction, which is important to the performance assessment of the waste, is also analyzed for metals by ICP, TOC, and specific radionuclides if significant quantities are found in the fused sample and total alpha, beta, and gamma results are above performance assessment limits. Most of the anions are determined by IC. Cyanide analysis is done on direct sample to obtain a total CN^- result. Chromium(VI) is estimated by ICP analysis of total chromium in the water-soluble fraction. If this concentration is significant (>5 μg/mL), then the analysis may need to be verified by valence-specific methods. The limit of significance is arbitrarily set at the EP toxicity limit until better criteria from performance assessment are established.

9 2 1 2 5 3 0 1 3 4

Screening analyses are used to establish organic levels in the waste. The TOC analysis of the water fraction indicates the potential presence of organic complexants. Extractable organic halide (EOX) analysis of waste gives an indication of the concentration of organic halides such as CCl_4, PCBs, chlorinated pesticides, and herbicides. These are routine tests performed on a regular basis. Three of the other tests to be evaluated are aimed at obtaining better estimates of the volatile organic levels in the tanks. The other screening method for semivolatile organics is being evaluated to identify tanks that may contain plant solvents which may not be readily identifiable in other screening tests.

The final category of the tests are the "waste characteristics" tests used to help designate a waste as DW or EHW. Corrosivity is measured by determining the pH of the waste. Reactivity and ignitability measurements are not planned because waste components that lead to these characteristics are not expected to be present at significant levels. However the reactivity test may be performed if CN^- levels are >250 µg/g. The EP toxicity test for metals will be performed but tests for pesticides and herbicides will be performed only if they are found in the solid or drainable liquid analyses.

Aliquots for most of these tests will be weighed in shielded hoods after transferring a portion of the composite from the hot cell. This will improve hot-cell throughput which can become a bottleneck in completion of the work. Samples that are highly radioactive or require large (>1 g) sample sizes will probably still have to be prepared in the hot cell. Aliquots of samples for determination of metals by GFAA, organics by GC/MSD, and some physical tests not performed by Westinghouse Hanford will be packaged and shipped to PNL for analysis. This sample and analysis flow may change as more experience is gained in the preparation of composites and the analysis of the wastes. Individual procedures are discussed in greater detail in the following sections. Procedures identified in these sections are the currently practiced ones. Implementation of RCRA procedure protocols and new

instrumentation in Westinghouse Hanford laboratories will result in some procedure changes; however, the technical principles for the methods should be the same.

5.2 WASTE CHARACTERISTIC PROCEDURES

This section describes, where appropriate, the procedures that will be used for the hazardous waste characteristic of ignitability, corrosivity, reactivity, and EP toxicity.

5.2.1 Ignitability

The standard test for ignitability is the determination of the flash point at 60 °C as determined by Pensky-Martens Closed-Cup Tester or Seta flash* Closed-Cup Tester. Both of these testers use relatively large liquid sample sizes (100 mL and 2 mL respectively) which could result in excessive radiation exposure to personnel. The systems would also be difficult to adapt to hot cells and visual observation of a "flash" in the hot cell, through yellow lead glass windows would also not be easy. Westinghouse Hanford has a Pensky-Martens system and is evaluating a Seta flash system. These tests could be implemented if significant volumes of nonaqueous liquid waste are found. Drainable liquid volumes are expected to be small and organic volumes nonexistent. The density of the liquid phase and immiscibility testing will indicate if the phase is organic. Presently, ignitability tests are not planned for Phase I testing.

*Seta flash is a trademark of Stanhope-Seta Limited.

9 2 1 2 6 5 3 0 1 3 6

5.2.2 Reactivity

The SW-846 reactivity tests are based on determining the rate of release of HCN^- and/or H_2S after acidification to pH 2. If analyses for CN^- and S^{-2} are below the EPA releasable action levels (SW-846,7.3.3) of 250 mg CN^-/kg, 500 mg S^{-2}/kg, this test will not be required. The 10-g sample size for the method would probably have to be reduced to 1 g so that it could be performed more easily in a shielded hood rather than in a hot cell. As discussed in the anion section, sulfide is not expected to be present in significant concentrations and may be oxidized by other components in the waste. If the waste contains nitrite, some NO_x gas will be generated in the reactivity test which may oxidize any sulfide released or interfere with the final measurement method. This may require further modifications of the method. Because the waste originated from aqueous solutions, it is not expected to react violently with water. Gases are not expected to be generated on the addition of water since the waste has been neutralized. Thermal analysis, such as DSC, of the waste should indicate the thermal stability of the waste by showing exotherms at elevated temperatures if the waste is explosive or undergoes rapid reactions that generate heat. These reactivity tests are not planned on a routine basis but may be performed if CN^- levels exceed 250 mg/kg.

5.2.3 Corrosivity

The corrosivity of drainable liquid and solids will be based on pH measurements. The solids procedure described in Appendix B of WDOE 83-13 uses a 50-g sample. Aliquots will be reduced to 5 g or less for SST wastes to reduce personnel exposure and conserve sample. The laboratories normally use microcombination pH electrodes with low sodium error. Measurements will be performed in duplicate rather than triplicate to conserve sample. However if the pH is within ± 0.2 pH units of the limit (2.5 or 12.5 pH), the test will be repeated. Tests are normally done at room temperature.

Temperatures are not normally recorded in present Westinghouse Hanford routine procedures as specified in referenced pH methods. The Ecology method for corrosivity requires the pH to be corrected for temperature if the difference in sample and buffer temperature are >2 °C. Procedures will be modified to include consideration of the measurement temperature.

Corrosivity tests, based on the corrosion rate of SAE 1020 steel, are not planned. These tests require a large volume (0.5 to 5 L) of liquid wastes. These volumes of liquids are not expected to be found in the wastes. If these tests are required, special samples may be necessary to allow both chemical analysis and characteristics tests to be performed or the tests may have to be scaled down.

9 2 1 2 6 5 3 0 1 3 8

5.2.4 Extraction Procedure Toxicity Test (EP Toxicity)

The SW-846 EP toxicity procedure 1310 uses 100 g of waste and produces up to 2,000 mL of leachate. This procedure is unsuitable for SST radioactive wastes. The procedure of tumbling 100 g of waste in a jar containing 2,000 mL of solution is not easily adaptable to hot-cell operations and poses a significant risk for radioactive spills. In addition, the large sample size consumes a significant quantity of sample that may be required for other tests. The method used for SST waste will be similar to that used by Oak Ridge National Laboratory and PNL in which the test is scaled down by a factor of 10 and mixing is performed by magnetic or overhead stirring equipment (Tomkins and Caton 1987). In this manner, the intent of Method 1310--intimate contact of the solid and leach solution--is maintained, while minimizing the potential for radioactive spills and conserving valuable sample.

Performing EP toxicity tests on SST wastes is likely to encounter other problems. The method uses 0.5M acetic acid to adjust the pH to 5. No greater than 4 g of acetic acid solution per gram of

material being extracted should be used according to the procedure. This pH condition may not be achievable for SST wastes, which may be highly basic in nature, with the quantity of acid specified. Therefore EP toxicity leaching will be done at pH greater than 5 for many samples.

The EP toxicity method also requires that the solid waste pass through a 9.5-mm sieve. This requirement may be suitable for hard crystalline saltcakes, but is not applicable to the sludge with "peanut butter" -like consistency that is frequently found in SST wastes. This sludge will normally disperse into aqueous solutions. Saltcakes may contain large crystalline components but these should be broken up by the homogenization procedure. After the homogenization process is shown to provide particles <9.5-mm the sieving may be omitted. Sieving would increase the cleaning efforts in the hot cell and would increase the potential for cross contamination between samples.

If the concentration of the EP toxicity metals in the solid sample are below the required EP toxicity regulated limits (Table 5-1), performing the EP toxicity tests would not be worthwhile. Assuming a 1:20 dilution based on the SW-846 procedure using 100 g solid and 2,000 mL of leachant, these solid limits, with 100% leaching, are compared with ICP detection limits for the direct solids analysis in Table 5-1. The EP toxicity test does not need to be performed unless the concentration of at least one of the metals exceeds the limits. Initially, the EP toxicity test will be performed on each tank composite. However if ICP metal analyses can be completed before the EP toxicity test is initiated, it may be used to eliminate the EP toxicity test. Pesticides and herbicides identified in the EP toxicity test are not expected to be present and will not be routinely analyzed; however, if extensive GC-MSD analysis indicates they are present at significant levels, then they would be included in EP toxicity testing.

Table 5-1. Comparison of EP Toxicity Maximum Concentration with Inductively Coupled Plasma Detection Limits.

Metal	EP toxicity leachate limit (mg/L)	EP toxicity leachate limit in solid (1:20) (µg/g)	ICP detection limit (µg/g) (3050)
Arsenic	5	1,00	2.1
Barium	100	2,000	0.14
Cadmium	1	20	0.24
Chromium (VI)	5	100	0.54
Lead	5	100	1.1
Mercury	0.2	4	0.5
Selenium	1.0	20	5.8
Silver	5.0	100	0.3

PST89-3095-5-1

9 2 1 2 6 5 3 0 1 4 0

The EP toxicity extract of saltcake material will result in a highly buffered solution containing high concentrations of sodium and acetate. This matrix could be difficult to analyze accurately with the proposed methods. Chapter 2.0 of SW-846 identifies digestion Procedure 3010 and ICP Procedure 6010 as acceptable methods for measuring EP toxicity extractants for seven of the eight metals. The CLP digestion procedure will be used in place of 3010 because it is easier to control in a hot cell. Mercury will be analyzed by the cold vapor technique Procedure 7440. The EP toxicity procedure in WAC 83-13 and SW-846 identifies only atomic absorption (AA) methods for most determinations on EP toxicity extracts. Both ICP and AA methods may require the use of standard addition techniques for analysis of EP toxicity extractants if poor spike recoveries occur. The ICP methods will be used for this work unless matrix problems raise detection levels above those required by the EP toxicity criteria. Based on the detection limit estimates from Table E-1, the ICP should be adequate for all the metals except mercury and possibly selenium and arsenic. If larger dilutions are required for ICP analysis, then graphite furnace or HYAA techniques may be needed for some of the

metals. Standard addition techniques require an initial analysis followed by the analysis of multiple spikes based on the first analysis. If required, standard additions will significantly increase sample handling and analysis times over direct analysis of the leachant.

5.3 CHEMICAL PROCEDURES

5.3.1 Metal Procedures

Inorganic cations are a major component of SST wastes. The ICP optical emission spectroscopy is the primary method for measurement of the inorganic metal components. Solid samples are prepared according to SW-846 procedure 3050 in which the sample is digested with nitric acid (HNO_3), hydrogen peroxide (H_2O_2), and hydrochloric acid (HCl). Liquid samples such as the water-soluble fraction and drainable liquid are digested according to SW-846 procedure 3010. The PNL uses the CLP-SOW equivalent procedures for this determination because of difficulties encountered in the hot cell with SW-846 procedures where the sample must be evaporated to near dryness but must not dry. Westinghouse Hanford laboratories may also adopt the CLP procedures based on PNL experience. No major variations to SW-846 or CLP procedures are expected other than possibly the use of smaller sample sizes because of radiation dose rates or limited quantities of sample.

The digested samples are analyzed on the ICP equipment according to SW-846 procedure 6010. Both Westinghouse Hanford and PNL will probably use simultaneous ICP systems. The PNL may also use sequential ICP systems. Applied Research Laboratory ICP instruments, model ARL-3580, at Westinghouse Hanford and PNL, have torch box containment for control of radioactive offgases and liquid waste. These systems, which simultaneously analyze 20 to 40 elements at a time, can also be

used to analyze other elements sequentially. The sequential ICP mode consumes more sample and requires more time to complete the analysis. All the elements identified in Table E-1 will be analyzed on the Westinghouse Hanford simultaneous ICP except for beryllium, antimony, thallium, and vanadium which will require the sequential mode. The Table of Inorganic Cations is divided into the 23 metals required by the CLP-SOW and "others." The 23 CLP elements include all the metals specified for SST analysis in the regulatory assessments summarized in Table 4-2, except for silicon and titanium which are listed with "others." The number of elements analyzed in the "others" category will vary with the ICP system used. The elements and spectral lines for the Westinghouse Hanford simultaneous ARL 3580 ICP are provided in Table E-2 (Appendix E).

Present Westinghouse Hanford methods do not include SW-846 requirements. Procedures consistent with SW-846 are being implemented (Section C.3.1.3, Appendix C). The PNL uses CLP and SW-846 procedures directly from these documents. Westinghouse Hanford is tailoring the EPA procedures to conform with other laboratory operations and procedures without altering the intent of the original procedure. The detection limits provided are based on the performance of the new Westinghouse Hanford ARL-3580 instrument at the 3 sigma confidence level using elements in a simple acid matrix. The limits are also corrected for the expected dilutions required for analysis. Actual detection limits may increase significantly for high salt matrices that require further dilution or result in increased background and noise. Table E-1 will be updated as new procedures consistent with SW-846 protocols are implemented.

The SW-846 digestion procedures do not necessarily result in complete dissolution of the entire sample; therefore, the fused sample, primarily intended for radionuclide analysis, will also be analyzed on the ICP to look for acid-insoluble components such as silica, refractory oxides and insoluble fluorides, sulfates, and phosphates. Either a sodium peroxide (Na_2O_2), potassium hydroxide-potassium nitrate (KOH-KNO_3), or KOH fusion may be used. Fusions result in samples

9 2 1 2 6 5 3 0 1 4 2

dissolved in high salt matrices with contamination of zirconium or nickel from the crucible. Larger dilutions are required for fused samples to reduce the high salt concentrations before ICP analysis is performed. This results in higher detection limits for elements analyzed by this sample preparation method.

The metals in the water-soluble and drainable liquid fractions of the waste are also of interest for performance assessment analysis. The ICP will be used to analyze these fractions after acid digestion according to SW-846 procedure 3010 or CLP procedures. The analysis of the aqueous fraction for total chromium by ICP will provide an estimate of chromium (VI) levels and the solubility of other heavy metals in the wastes.

The ICP detection limit for several toxic elements is very near the reference limit; however, most are still below the LBRC criteria established in earlier studies (Morgan 1988). If the ICP sensitivity proves to be inadequate for performance assessment and classification of the waste, then GFAA or HYAA procedures will be required. The SW-846 procedures have been identified in Table E-1 for arsenic, cadmium, chromium, lead, selenium, antimony, and thallium. The GFAA procedures require a different acid digestion without the use of HCl, SW-846 procedure 3020. The Westinghouse Hanford laboratories presently do not have GFAA capability. They analyze for arsenic and selenium using HYAA techniques. The PNL GFAA system uses a deuterium lamp background correction system rather than the Zeeman or Smith-Hieftje systems recommended in SW-846. Both laboratories plan to add improved GFAA systems in the future. Although no other major variations in SW-846 procedures are expected, performance of GFAA methods may be affected by the high salt complex metal matrices of SST wastes if large dilutions cannot be made. Some differences exist between SW-846 and Westinghouse Hanford HYAA procedures for arsenic and selenium. Nitrate is not removed by fuming in H_2SO_4 in Westinghouse Hanford procedures; however, cations are removed by ion

exchange before analysis. Spikes are routinely used on Westinghouse Hanford HYAA procedures to check system performance.

Analysis for mercury requires the use of the CVAA procedure to meet the low regulatory limits. Mercury may not be seen by ICP if it precipitates as $HgCl_2$ in the 3050 digestion procedure; therefore, direct solid samples must be analyzed by CVAA. Both Westinghouse Hanford and PNL have experienced difficulties with the standard CVAA mercury method. Work at Westinghouse Hanford indicated that the use of a gold amalgam concentrator on the CVAA system permits the use of smaller sample sizes that may improve the results by reducing interference effects. Development work on this project is still in progress at Westinghouse Hanford (Section C.3.1.6, Appendix C). Some modifications to the SW-846 mercury procedure are expected.

Hanford laboratories may also use other techniques for measuring inorganic cations. The ICP sensitivity for uranium may be inadequate. In the case of PNL, a uranium channel is not installed on the spectrometer. In these cases, uranium will be determined by laser fluorometry which is much more sensitive. The ICP measurements may also be backed up using flame AA spectroscopy and various colorimetric procedures when instrument or procedural problems are encountered. Although plutonium may be detected on the Westinghouse Hanford ICP, its sensitivity is expected to be similar to that for uranium and therefore radiochemical analysis is the preferred procedure. The ICP analysis is the preferred method for total thorium since spectrophotometric methods are subject to numerous interferences and radiochemical methods require lengthy separations from other alpha-emitting isotopes.

The procedure recommended for cleaning glass or plastic ware for metal analyses in SW-846 uses detergent, tapwater, 1:1 nitric acid, tapwater, 1:1 hydrochloric acid, tapwater, and Type II water. Initially, procedures at Westinghouse Hanford will not include the large quantities of HCl because

9 2 1 2 6 6 3 0 1 4 4

waste disposal and hood systems are not designed for high HCl usage. Use of large quantities of concentrated HCl will result in rapid deterioration of laboratory equipment and facilities. Increased maintenance of these systems will increase exposure and risks to maintenance personnel. Blanks and standards will be used to evaluate effectiveness of cleaning procedures. Teflon beakers which clean easier than glass may be used to reduce the potential of cross contamination. The use of disposable containers will also be evaluated. If tests indicate cleaning methods are inadequate, procedures and systems to handle HCl will need to be developed (Appendix C).

5.3.2 Inorganic Anion Procedures

Because several of the anions of interest may be lost or interfered with by acid or fusion dissolutions, the bulk of the anions are determined on the water-soluble fraction of the sample. Because cyanide and sulfide would probably be present as water-insoluble compounds, these determinations will be performed on direct (solid) samples if radiation exposure levels are not excessive. Drainable liquid samples will be filtered and diluted in deionized water before analysis of most anions.

Most of the major anions (NO_3^-, SO_4^{-2}, PO_4^{-3}, F^-, and Cl^-) will be determined using IC. This method is based on the same technology as the EPA-300 method for determining inorganic anions in water. The SW-846 manual does not have procedures identified for F^-, PO_4^{-3}, NO_2^-, CO_3^{-2}, or NH_3. The SW-846 procedures for NO_3^-, SO_4^{-2}, and Cl^- are based on colorimetric methods that require longer analysis times and have potential interferences from other waste components. The referenced Environmental Survey Manual (ESM) (DOE 1987) Ion Chromatography Procedure (ESM-D449) describes a solids preparation procedure in which 0.25 g of sample is dissolved in 20 mL of the carbonate-bicarbonate eluent used for IC determinations. Because the water-soluble fraction of an

SST sample is used for carbonate determinations and other cation and radionuclides analyses to support performance assessment studies, the SST water-soluble fraction is prepared by washing up to 10 g of waste with 100 mL of deionized water. This improves the method sensitivity for the minor components of the sample and is more consistent with performance assessment models. The IC analyses could be run on smaller 1-g samples dissolved in 100 mL. The nitrite ion may also be measured by IC and is done in this manner by PNL.

The reference limits for the anions are based on SW-846 groundwater limits. The detection limits for IC are based on the limits specified in EPA-300 corrected for the dilution factors noted in Table E-1. Although the detection limits for anions in drainable liquid approach or exceed the drinking water limits, the IC limits for NO_3^- and F^- are below the LBRC criteria. The water-soluble fraction of saltcake-type samples will be high in sodium nitrate or other anions. High nitrate may cause chromatographic interference with low sulfate concentration determinations. This problem is overcome by using a "nitrate" column in which nitrate is eluted after other less concentrated anions. Soluble aluminates can also impact column performance and may require further sample pretreatment using ion exchange. The Westinghouse Hanford ICP can also be used to verify SO_4^{-2} and PO_4^{-3} IC results by determination of total sulfur and phosphorus.

Nitrite determinations at Westinghouse Hanford laboratories are routinely performed using a colorimetric method based on the reaction of nitrous acid with an organic amino compound to produce a diazonium salt, that when coupled with an organic amine, produces a colored azo dye. The PNL uses IC for nitrite analysis. Alternate methods based on specific ion electrodes and colorimetric methods are also available for analyzing SST waste anions if problems with IC procedures are encountered.

The reference Ecology procedure for determining pH (or hydroxide) mixes 50 g of sample with an equivalent weight of water and determines the pH of the sample (Ecology 1982). For SST hydroxide determinations, the sample size is reduced to about 5 g or less to conserve the sample. This test will be performed on only two aliquots of sample rather than the three used in the Ecology procedure unless the pH is within ± 0.2, a pH unit of the limits of pH 2.5 and pH 12.5. If the pH is >13.5, a titration for hydroxide analysis will be performed to determine the uncomplexed hydroxide concentration. Estimates of hydroxide concentrations from pH >13 may be subject to relatively large errors. Titrations of low (0.1M) concentrations of hydroxide in high aluminate matrices are also subject to inaccuracies.

The reference SW-846 cyanide (CN^-) method is based on the distillation of HCN from a highly acidified sample. It is designed for analysis of large-volume (500 mL) water samples.
A Westinghouse Hanford evaluation of cyanide methods for analysis of Hanford waste showed that the expected high nitrate or nitrite levels in some of the waste would result in large CN^- losses after the sample was acidified. This loss is presumably caused by the oxidization of CN^- to cyanate (CNO^-). Efforts to eliminate the nitrate effect with reducing agents was not successful. A new method using a distillation system that was scaled down a factor of 10 and a distillation medium comprised of a pH 4 acetate buffer and EDTA complexant produced good CN^- recoveries in the presence of nitrite and nitrate. The scaled-down system also reduces the volume of highly radioactive waste generated for each analysis. This method will be used by Westinghouse Hanford laboratories in place of the reference technology. The PNL also experienced low CN^- spike recoveries in their analysis of a SST sample using standard SW-846 techniques.

Sulfide analysis in SST wastes creates some special problems. If sulfide is present, it would most likely be present as a stable insoluble metal sulfide, or is being produced by biological activity on sulfate. In the latter case, the sulfide would probably be oxidized by air or the waste matrices before it

could be analyzed. In the reference method, sulfide is removed by precipitating sulfide as zinc sulfide, at pH >9. The large quantities of aluminum in many SST samples, which also precipitates, makes this approach ineffective. Distillation of H_2S in a manner similar to the SW-846 reactivity test (SW-846-7.3.4.2) may be possible. However, any nitrite in the sample will probably generate NO_x gas on acidification which may oxidize the H_2S. It may be possible to minimize the nitrite effect by using sulfamic acid to reduce the NO_2^- to N_2. Neither Westinghouse Hanford nor PNL have demonstrated an acceptable procedure for analyzing sulfides in SST waste. Further development efforts are needed to ensure reliable results (Sections C.3.1.7 and C.5.5, Appendix C).

Chromium(VI) analysis on SST wastes will be performed only on the water-soluble and drainable liquid fractions of the sample. Acid digestion and fusion may alter the chromium valence state. Because the SST waste is basic, any chromium found in the aqueous phase is most likely in the Cr(VI) state since Cr(III) will form insoluble hydroxides unless it is in a complexed form. The ICP analysis for total chromium in these two fractions should be a good indication of Cr(VI) levels. If the ICP chromium levels are >5 mg/L, the presence of Cr(VI) could possibly be confirmed using SW-846 methods 7197 or 7195. Inconsistent Cr(VI) results have been encountered at Westinghouse Hanford using the diphenylcarbazide colorimetric method on some waste samples. The AA method (7197) requires acidification of the sample to pH 2.4, which could produce nitrous acid (HNO_2), reducing Cr(VI) to Cr(III). Development of differential pulse polarography or IC techniques may be required for reliable Cr(VI) determinations (Section C.3.1.8, Appendix C).

Ammonia (NH_3) is determined in Westinghouse Hanford laboratories by the standard NH_3 distillation/boric acid titration procedure described in *Standard Methods for the Examination of Water and Waste Water* (MXW) (APHA 1985). The PNL uses the specific ion electrode procedure described in the same reference.

Carbonate is determined as total inorganic carbon (TIC) before the TOC analysis by measuring the CO_2 gas evolved after acidification of the sample. The TOC systems at Westinghouse Hanford measure the CO_2 using infrared detectors or coulometric titrations.

5.3.3 Organic Screening Procedures

The purpose of these tests is to screen the SST wastes for those that have significant quantities of organic components and identify when further analysis of organics is needed. The TOC analyses are run routinely on waste using several types of TOC equipment. The Westinghouse Hanford laboratories use chemical oxidation systems with and without ultraviolet (UV) light and high-temperature oxidation systems. The TOC determinations on direct sample provides an estimate of the total water-insoluble and -soluble organics. However, direct analysis of samples may be limited by radiation exposure levels and the accessibility and maintainability of the reaction vessel. The TOC analysis of the water-soluble and drainable liquor fractions will provide estimates of the water-soluble organics such as organic complexants, acetone, and water-soluble alcohols.

The SW-846 reference method for total organic halides removes organic halides on activated carbon, and then combusts the carbon and analyzes the halide by coulometry. The Ecology procedure extracts the HH in ethyl ether or isopropyl alcohol/ether mix (Ecology 1982). This extract is oxidized in a "Parr"* bomb and analyzed for specific halogens using colorimetric or specific ion electrode procedures. The PNL laboratory extracts the HH into ethyl acetate which is then injected into a Dohrman** TOX analyzer where the sample is combusted and the halides (all except fluoride)

---

*The Parr Instrument Company, 211 Fifty-Third Street, Roline, Illinois.

**Dohramn Company, 3240 Scott Boulevard, Santa Clara, California.

measured coulometrically. This extraction is done on 1 g of solid sample using ultrasonic sonication for mixing the phases. The Westinghouse Hanford laboratories are planning to use a method similar to the Ecology method, but without individual halide determination.

Several other screening methods may be evaluated to determine their applicability. Before analyzing a sample for semivolatile organics using GC/MSD, it is worthwhile to perform a preliminary extraction with methylene chloride and screening using GC. This screening test could provide information on organics in the waste and possibly identify the presence of process solvents without full GC/MSD analysis. If this test proves useful, it could be used routinely to evaluate organic components of SST waste samples.

A similar screening test is available to establish the levels of volatile organics before GC/MSD analysis. In this test the volatile organics are extracted with hexadecane and analyzed by GC. If volatile organics are tightly occluded in the waste, the procedure may give an indication of their presence. However, as discussed in the next section, the sampling method and handling of SST samples may not permit accurate volatile organic analyses. Evaluation of the test on some actual samples is needed to establish the effectiveness of the method. Most of this evaluation will be done during Phase I.

Another volatile screening method that may be evaluated is the SW-846 headspace procedure 3810. In this procedure, a portion of the sample is placed in a sealed septum vial and heated to 90 °C. A gas sample of the headspace above the vial is withdrawn by syringe and analyzed by GC or GC/MSD. This test could identify the presence of occluded VOCs, or, if performed again after allowing the sample to stand for a long time, indicate if volatile organics are being generated within the sample. This test would be similar to the volatile organic sample train (VOST) test described in the next section, except on a laboratory scale. This test, like the previous two tests, must

9 2 1 2 6 5 3 0 1 5 0

be evaluated before it is accepted as a routine method. Screening test results need to be correlated with more extensive organic analyses to allow their use for reducing the number of more comprehensive tests.

5.3.3.1 Volatile Organic Analyses. The SW-846 and CLP reference procedures for the analysis of VOCs is the purge and trap method. This method would be acceptable, assuming no volatiles are lost during sampling, sample breakdown, and homogenization procedures in the hot cell. Because of the high radioactivity and sampling system design, it is not possible to maintain the tight temperature and atmospheric controls defined in SW-846 procedures. The extent of volatile organic loss during sampling needs to be evaluated. The analysis of the air space above the waste in the tank using a procedure similar to SW-846 procedure 5040, VOST analysis, is an alternative method for evaluating volatile organic concentrations in the tank. The VOST is designed to collect and analyze incinerator stack gases. The VOST method collects volatile organics on Tenax or Tenax/Charcoal absorbent. The volatile organics are thermally desorbed from the absorbent column and analyzed by purge and trap methods. Cryogenic sample collection is also being evaluated at Westinghouse Hanford as a total collection system that is affected less by collection time and conditions. Specific procedures to evaluate these approaches for SST waste tanks need to be developed (Section C.1.1, Appendix C).

Initially, the volatile organics on the CLP target compounds (Table E-3, Appendix E) will be measured by PNL laboratories using EPA or CLP procedures. Westinghouse Hanford presently does not have routine purge and trap with GC/MSD analysis capabilities, but systems are planned to be implemented within the next year (Section C.3.1.11, Appendix C). If sample radiation levels are too high, a remote purge-and-trap system may need to be developed for hot-cell operations or sample sizes will have to be reduced to permit hood operations. The reference limits are based on the CLP quantitation limits in Table E-5.

5.3.3.2 Semivolatile Organic Analyses. The SW-846 and CLP reference procedures for the analysis of semivolatile organics in waste uses methylene chloride extraction with gel permeation chromatography clean up (SW-846-3640) of the extract before GC/MSD analysis (SW-846-3270). The sonication extraction procedure (SW-846-3550) is the preferred method for extracting semivolatile organics from radioactive solid samples because it can be more easily adapted to hot-cell operations. The continuous liquid-liquid extraction procedure is the preferred extraction approach for liquid samples because the use of separatory funnels with radioactive materials can lead to higher personnel exposures and spread of contamination. The PNL laboratories will analyze for the CLP target compounds (Table E-4) for semivolatiles using EPA or CLP-SOW procedures. Sample sizes will probably be limited to 10 g or less because of radiation levels and sample availability. The initial extractions will need to be done in a hot cell, but subsequent cleanup and concentrations can be done in hoods. Reduction of liquid sample sizes to permit liquid-liquid extractions in hoods will eliminate handling complex fragile glassware in the hot cell. The reference limit is based on the CLP quantitation limit.

5.3.3.3 Pesticide/Polychlorinated Biphenyl Analyses. The SW-846 and CLP reference procedures differ in their extraction and cleanup conditions for quantitation of PCBs and pesticides. The PNL laboratories will use the CLP procedure in which the solid sample is extracted with a 1:1 mixture of methylene chloride/acetone using an ultrasonic probe. The extract is cleaned up using an optional gel permeation column and a microalumina column before measurement on a GC system with an electron capture detector. The concentration of these compounds is expected to be very low in SSTs; therefore, the low-level CLP procedures should be followed. However, because of radiation levels and limited sample quantities, the sample sizes will probably have to be reduced to 10 g or less. The reference limits for pesticides and PCBs is based on the CLP quantitation limits. These CLP limits are for guidance only since they are highly matrix-dependent and may not always be achievable.

5.3.3.4 Organic Complexants. Organic complexing agents concentrations such as EDTA, HEDTA, and citrate are important to performance assessments. The TOC analysis on the water-soluble fraction will give an indication if significant quantities of complexing agent are present. The complexants will be tested for on tank composites using either existing HPLC methods for EDTA and HEDTA or derivatization techniques followed by gas chromatography. Development of ion chromatography techniques may be more efficient and provide more information than HPLC and GC methods and should be explored (Section C.3.1.16, Appendix C).

5.4 RADIONUCLIDE PROCEDURES

5.4.1 Alpha Radionuclide Procedures

A total alpha determination is performed to indicate the total activity of alpha-emitting radionuclides. The major alpha-emitting radionuclides in the waste are from man-made TRU actinides, natural uranium and thorium and their decay products. The procedures used by PNL and Westinghouse Hanford are based on drying an aliquot of the sample on a stainless steel plate, flaming the mount to remove volatile salts and to fix its activity on the plate and then measuring the alpha activity with gas flow proportional or scintillation detectors. The reference methods are designed for analysis of surface or groundwaters and require measuring the milligram per square centimeter of solids on the alpha mount to correct for alpha absorption. The PNL and Westinghouse Hanford procedures rely on sample dilution of the waste to reduce absorption effects. If the solids on the mount is <200 µg, the absorption effects will be $<5\%$. This can be achieved by making a thousand-fold dilution of most waste matrices. The beta discrimination capability of the counter is also important

for total alpha analysis of SST waste. For most alpha detector systems, the total beta activity on the mount must be $<10^8$ dis/min to avoid beta interference.

The chloride levels in the dissolved samples may also corrode the mounting plate. This causes additional alpha absorption not accounted for by weight of solids in the sample. To avoid these effects the sample must be diluted or converted to nitrates. The reference limit is based on the LBRC limits in earlier studies (Morgan 1988). The detection limit for the method depends on sample size, count time, and background of the counter. The range provided is based on typical laboratory counting practices.

Individual isotopic analysis for alpha emitters will not be required if the total alpha determination is <10 nCi/g or some other value as determined by performance assessment requirements. If the total alpha activity is greater than this value, then chemical separations of individual alpha-emitting elements will be required. The following factors make plutonium, americium, and curium isotopes of particular interest: (1) they have a high probability of being present in measurable quantities, (2) they have long half-lives, and (3) they are important in classifying the waste with respect to TRU content.

Reference procedures for specific radionuclides are not well established and tend to vary significantly between laboratories depending on the sample matrices. The ESM reference methods for plutonium are designed for water or soil analyses and use a coprecipitation concentration step, followed by ion exchange separation of plutonium. Both PNL and Westinghouse Hanford procedures use solvent extraction with thenoyltrifluoroacetone (TTA) to separate plutonium as Pu(IV) before analysis of plutonium isotopes by alpha counting and AEA. If a sample is highly caustic and contains large amounts of aluminates, accurate acid adjustment for the TTA procedure may be difficult; in this case Westinghouse Hanford laboratories uses a nitrate anion exchange separation of the plutonium.

9 2 1 2 6 5 3 0 1 5 4

Because the quantitative separation of plutonium may be affected by acid conditions, valence state adjustments, and complexing agents, known spikes of either ^{236}Pu or ^{242}Pu are used to correct for plutonium recoveries in varying waste matrices. The AEA of separated plutonium provides quantification of ^{238}Pu and combined $^{239/240}Pu$ isotopes. If ^{241}Am is a contaminate on the plutonium mount it will interfere in the AEA analysis of ^{238}Pu. The AEA detector resolution is inadequate to separate ^{239}Pu and ^{240}Pu alpha energies. The plutonium separations are planned for only the fused fraction of the waste because plutonium may be present in some tanks as refractory oxides or other acid-insoluble compounds (e.g., fluorides, phosphates). However, if experience shows that the total alpha, beta, and gamma results of the fusion are not significantly different than the acid-soluble fraction, the fusion sample preparation may be omitted. The resolution of the AEA spectra is affected by the amount of solids on the mount. Electrode position mounting techniques may be used if resolution problems occur.

Plutonium-241 is a beta (β) emitter with a 14.7-yr half-life. The ^{240}Pu and ^{241}Pu concentrations may be estimated from calculations based on historical ratios of these isotopes determined by reactor code or MS. However, if these calculations are inadequate, and if these isotopic concentrations are important to performance assessment, plutonium isotopic determinations by thermal ionization MS may be required. This is a time-consuming analysis requiring a lengthy separation before the MS measurement. The ^{242}Pu isotope is not expected to be present in concentrations high enough (see Section 4.4) to measure using normal counting techniques, but would be detected by the MS if plutonium concentrations were high enough.

Americium-241 is the other major alpha-emitting isotope that normally contributes significantly to the TRU level in the waste. Because of their chemical similarity, curium isotopes can be separated and analyzed at the same time as americium using AEA to distinguish between them. The reference

method in Table E-1 (Appendix E) for water samples uses solvent extraction with a quaternary amine followed by an acid strip and a final extraction into TTA. The Westinghouse Hanford method is designed for samples where the acid can be adjusted to low concentrations by dilution. It is based on the extraction of ^{241}Am into di-2-ethylhexylphosphoric acid (HDEHP), followed by stripping the americium into a higher acid. For highly caustic samples, where acid adjustments are difficult, the americium is extracted from the high nitric acid effluent of the plutonium ion exchange procedure using a mixture of octyl(phenyl)-N,N-diisobutyl carbamoylmethylphosphine oxide (CMPO)/tri-n-butyl phosphate (TBP). The extracted americium is stripped into an acetate buffer and re-extracted into TTA for alpha analysis. Americium-243 is used as a tracer to correct for recoveries. If ^{243}Am analyses are required, no spike is used. The ^{242}Cm and ^{244}Cm may be determined from the AEA using the ^{243}Am yield factor. The ^{243}Am and ^{241}Am will probably interfere with the identification of ^{245}Cm; however, no significant quantities of ^{245}Cm are expected.

Neptunium-237 is normally found in the waste in significantly lower quantities than plutonium and americium. The Westinghouse Hanford laboratory method is based on the extraction of Np(IV) into tri-iso-octylamine, followed by an acid strip and reextraction into TTA before mounting and alpha counting. Neptunium-239, a gamma emitter, is used as a tracer for yield correction. The ^{237}Np may also be analyzed in the plutonium eluent fraction of the plutonium ion exchange procedure. The plutonium ion exchange procedure may be used to determine plutonium, americium, curium, and neptunium isotopes on a single sample.

Uranium isotopes (233, 234, 235, 236, and 238) may also contribute to the total alpha activity. The long half-lives and low specific activity of ^{238}U, ^{236}U, and ^{235}U makes these isotopes less significant contributors, unless they are present in high concentrations. The concentration of specific uranium isotopes may be estimated based on the total uranium analysis and historical uranium

isotopic ratios. If these calculations are inadequate for performance assessment and waste classification purposes, then uranium isotopic analyses using alpha spectrometry or MS will be required. Both methods require a chemical separation before analysis. Alpha spectrometry will not separate $^{233/234}U$ and $^{235/236}U$ isotopes. The Westinghouse Hanford laboratories have not implemented a routine alpha spectrometry method for uranium (Section C.3.2.1, Appendix C). However, the 3M nitric acid wash from the plutonium ion exchange method could be used if uranium isotopic analysis is required. The PNL has an alpha spectrometry method available. The ESM reference method uses a nitrate anion exchange separation of uranium followed by a hexone extraction before mounting and counting. The isotope ^{232}U is used as a spike to make yield corrections.

The Westinghouse Hanford laboratories have not implemented a routine separation and alpha spectrometry procedure for measuring thorium isotopes. The ^{229}Th and ^{230}Th, which are daughters of ^{233}U and ^{234}U, have a much higher specific activity than natural ^{232}Th. Calculation of thorium isotope concentrations from total thorium may have greater uncertainty because of the sources for these isotopes and less historical information. The reference ESM method separates thorium as a nitrate complex on an anion exchange resin. The thorium is then eluted with HCl and co-precipitated with praseodymium first as a hydroxide and then as a fluoride. The final purification is done with a TTA extraction which is mounted and counted. The ^{234}Th isotope is used as a tracer. The PNL laboratories have a thorium alpha spectrometry procedure available. Routine isotopic analysis of thorium isotopes is not planned for Phase I testing.

Radium isotopes, ^{226}Ra and ^{228}Ra, are found in the decay chain of ^{238}U and ^{232}Th, respectively. The half-life of the alpha-emitting ^{226}Ra isotope is 1,600 yr and is more important for evaluation of the long-term management of SST waste than the 5.8-yr beta-emitting ^{228}Ra isotope. Equilibrium concentrations of these isotopes could be calculated from total uranium and thorium analyses. If

these calculated values are inadequate for performance assessment studies, then radium separation and radiochemical analyses may be required. The reference method is based on alpha counting of radium isotopes separated as insoluble sulfates using barium and lead sulfate carriers. This method may need evaluation and modification before applying to SST waste (Section C.3.2.3, Appendix C). Westinghouse Hanford laboratories have not implemented routine methods for these isotopes at this time. Routine analysis of radium isotopes is not planned for Phase I testing.

Other alpha-emitting isotopes identified in the regulatory assessment of radionuclides are decay products of the ^{235}U or ^{238}U chain whose equilibrium values may be estimated from total uranium analyses. If this is unacceptable, procedures for analysis of these isotopes (^{227}Ac, ^{231}Pa, ^{210}Pb, and ^{210}Po) in SST waste will have to be developed. Routine analysis of these isotopes during Phase I are not planned. However, PNL is investigating the applicability of some nonroutine procedures for these isotopes to SST matrices (Section C.3.2.5, Appendix C).

9 2 1 2 6 3 0 1 5 8

5.4.2 Beta Radionuclide Procedures

Total beta procedures are similar to total alpha procedures except the mounts are not flamed to remove salts and they are counted with flow proportional counters adjusted to count only beta activity. The energy of the betas from each isotope vary over a wide range; therefore, the detector counting efficiency will also be different for each isotope. The reference SW-846 method uses a detector efficiency for ^{90}Sr-Y as the basis for calculating total beta results. The method also recommends heating the mount to red heat to remove hygroscopic salts, although some radionuclides (^{129}I and ^{137}Cs) will be lost. The referenced method also uses calibrations corrected for the weight of solids on the mount. The Westinghouse Hanford total beta methods are based on the counting efficiency for ^{60}Co beta with a maximum beta energy of 0.3 Mev. The counting efficiency for ^{90}SrY is

about twice that for ^{60}Co; therefore, Westinghouse Hanford total beta results would be about two times higher than the reference method. The ^{60}Co was chosen as a reference because its beta energy is about mid-range for all isotopes. The ^{137}Cs is a major isotope in many Hanford Site wastes, therefore, flaming the mounts will not be performed and ^{60}Co efficiency will continue to be used. In addition, flaming can alter the flatness of some counting planchets, which affects the counting efficiency. Westinghouse does not correct beta results for solid self-absorption, but attempts to minimize this effect by dilution. Making large dilutions is not a problem for measuring normal SST waste beta activity levels. The background for beta counters is higher than alpha systems and this results in higher detection limits for beta isotopes. The reference limits are based on LBRC criteria.

The total beta activity of most SST wastes will probably exceed the reference limit; thus, the wastes will require individual isotopic analysis. The ^{90}Sr-Y isotopes are major beta-emitting isotopes found in most SST tanks. The reference methods separate ^{90}Sr through multiple precipitations as carbonate, nitrate, and finally as oxalate. The PNL method separates strontium by cation exchange before beta counting. The ^{90}Sr concentration is distinguished from ^{89}Sr by the growth of ^{90}Y into the sample. The Westinghouse Hanford ^{90}Sr method is based on separation of strontium first as a carbonate, and then a nitrate. The ^{90}Y is removed as a hydroxide. The ^{90}Sr is finally precipitated and mounted as a carbonate. The weight of a nonradioactive strontium carrier is used to correct for procedure yields. Because of their short half-lives, radioactive barium isotopes are not expected and no provision is made to remove them. The Westinghouse procedure determines total ^{89}Sr and ^{90}Sr. The ^{89}Sr activity can be determined on separated strontium if required by successive counting at timed intervals and calculation.

Several other beta-emitting isotopes (^{99}Tc, ^{14}C, ^{129}I, ^{79}Se, and ^{126}Sn) are of interest to performance assessment because of their long half-life and potential for forming mobile anions. The determination of low concentrations of these isotopes in the presence of high concentrations of other beta isotopes (^{90}Sr, ^{137}Cs) requires separations with high decontamination factors and excellent laboratory techniques to prevent cross-contamination. Because of the potential mobility of these isotopes, their concentrations in the water-soluble and -drainable liquid fractions of the waste are of interest. However, if an isotope cannot be found in the dissolved fusion fraction or direct sample, the analysis of the water fractions will not be required.

The reference ^{99}Tc procedure oxidizes technetium to the VII valence state and precipitates other impurities as hydroxides with an iron carrier. The supernatant is analyzed for ^{99}Tc by liquid scintillation counting. This method is not applicable to SST wastes because of interferences from strontium and cesium isotopes. A HASL-300 procedure uses anion exchange with ^{95m}Tc tracer followed by electrodeposition and beta counting (DOE 1984). The PNL laboratory uses cation ion exchange to remove other beta isotopes before extracting the tetraphenylarsonium pertechnetate into hexone and mounting for beta counting. The Westinghouse Hanford procedure is based on the extraction of Tc(VII) into a quaternary amine before analysis by liquid scintillation. The chemical yield of the method is determined by analyzing a second aliquot spiked with a known amount of ^{99}Tc.

Carbon-14 can be present in the waste either as an inorganic carbonate or as a more complex organic molecule. The Westinghouse Hanford procedure is based on the acid-persulfate oxidation of organics to carbon dioxide to separate both inorganic and organic forms of ^{14}C. The ^{14}C is trapped in ethanolamine and counted by liquid scintillation. Tests with ^{14}C labeled long chain aliphatic hydrocarbons indicate that oxidation is not complete; however, the probability of finding ^{14}C in this form is considered very low since there is no readily identifiable source. Because ^{14}C will be lost in both the acid and fusion sample preparations, the oxidation should be done on the direct solid sample

9 2 1 2 6 3 0 1 6 0

if radiation dose rates permit. If this is not possible, analysis should be done in the water-soluble and -drainable liquid fractions. The PNL method is based on a similar technique using a commercial UV persulfate oxidation TOC system.

Iodine-129 is a long-lived beta-emitting fission product that may be analyzed using a low-energy gamma ray that is emitted with the beta. The reference procedures in Standard Methods (MXW) separate iodine using (1) precipitation as AgI and PdI_2, (2) anion exchange and solvent extraction with CCl_4 and PdI_2 precipitation, or (3) distillation and PdI_2 precipitation (APHA 1985). All of these procedures use beta counting for the final measurement and weight of PdI_2 to correct for iodine recovery. The PNL procedure uses a cation exchanger to remove other isotopes and purifies the effluent containing the iodine by distillation and AgI precipitation. The precipitate is then counted on a low energy lithium-drifted germanium (GeLi) gamma detector to determine ^{129}I. The other PNL procedure uses a CCl_4 extraction of I_2 in place of the cation exchange separation for samples with high salt concentrations. The Westinghouse Hanford method incorporates oxidation state adjustments and the same separation technology as the PNL carbon tetrachloride procedure. The quantity of other gamma-emitting isotopes must be very low, or detection limits for ^{129}I will increase because of higher backgrounds at the low-energy ^{129}I gamma peak.

Tritium analysis at Westinghouse Hanford is performed by separating ^{3}H by distillation and measuring the activity by liquid scintillation counting. The Westinghouse Hanford method is designed for large water samples and may need to be modified for small solid and liquid SST samples. The PNL method is based on similar principles (Section C.3.2.15, Appendix C).

Selenium-79 is another low-energy beta-emitting fission product. The PNL ^{79}Se procedure separates interfering cationic isotopes with ion exchange. The ^{79}Se is distilled from hydrobromic acid and precipitated as metal by reduction with hydroxylamine hydrochloride. The metallic selenium is dissolved in nitric acid and ^{79}Se measured by liquid scintillation. The Westinghouse Hanford laboratories do not have a routine method for ^{79}Se analysis. A recent method has been developed for the analysis ^{79}Se in effluents, but it has not been tested on SST waste matrices (Section C.3.2.7, Appendix C).

Tin-126 (^{126}Sn) is another long-lived beta-emitting fission product isotope for which Westinghouse Hanford laboratories have not implemented a routine procedure. However, it may be determined by GEA analysis of its ^{126}Sb daughter (Section C.3.2.6, Appendix C).

Several other long-lived beta isotopes (^{93}Zr, ^{63}Ni, ^{151}Sm) are not likely to form anionic compounds. The Westinghouse Hanford laboratories have not implemented routine methods for any of these isotopes. A high-performance liquid chromatographic (HPLC) method applicable to the separation of rare earth isotopes (^{147}Pm, ^{151}Sm) is being developed. Individual rare earths must be separated cleanly to analyze for ^{151}Sm without interference from other rare earth isotopes. This is a lengthy procedure when using classical cation exchange techniques. The PNL does not have a procedure in place that has been tested on SST matrices for the determination of ^{151}Sm activity. The PNL will test and evaluate some of these methods on SST matrices in FY 1989 (Sections C.3.2.8, C.3.2.9, and C3.2.10, Appendix C).

The PNL has developed procedures for ^{63}Ni and ^{93}Zr. The ^{63}Ni determination requires separation of nickel _____. [More information will be provided in Revision 0 of this document.]

9 2 1 2 6 5 3 0 1 6 2

Nickel-59 (^{59}Ni) decays by electron capture and cannot be measured by beta or gamma techniques. The ^{59}Ni isotope may be detected by the X-rays emitted from the capture of the K-shell electrons. The ^{135}Cs isotope is a long-lived beta isotope that cannot be determined by beta counting because of the presence of beta emissions from ^{137}Cs. It may be possible to estimate ^{135}Cs levels from reactor fission yield calculations. If required, these isotopes could probably be determined by MS. New inductively coupled plasma-mass spectrometry (ICP-MS) systems could provide more rapid analysis of some of these long-lived beta isotopes. Both Westinghouse Hanford and PNL laboratories plan to add radioactive ICP-MS capabilities in the future (Section C.3.2.13, Appendix C).

5.4.3 Gamma Radionuclide Procedures

Chemical separation of gamma isotopes is not normally required because of their penetrating properties and distinct differences in energy. However, if a gamma isotope is present in very low concentrations in the presence of other higher concentrations of other gamma-emitting isotopes, then separations may be used to concentrate the isotope or to separate it from the others to improve its detectability. Liquid samples are normally pipetted into specific vials or bottles that have been calibrated for the GEA detection systems used. Most gamma detectors used at PNL and Westinghouse Hanford for routine analyses are either intrinsic germanium or GeLi. These systems have the highest energy resolution for gamma radiation. Gamma isotopes are determined from their peak heights measured on a multichannel analyzer system. Isotopes are identified by computerized peak search of their channel location which is a function of their energy. The efficiency of each gamma energy is determined by calibration procedures. Detection limits will vary depending on the GEA detection system configuration and the intensities and energies of other gamma isotopes in the sample. Cesium-137 is one of the major gamma-emitting isotopes in the SST wastes. The ^{60}Co, ^{94}Nb, ^{134}Cs, ^{241}Am, ^{231}Pa, ^{226}Ra, and $^{106}RuRh$ are other isotopes of interest that may be seen if present in

significant quantities. The GEA systems will identify all isotopes above background that are positively identified in their search libraries. In addition, "less than" values are provided for isotopes based on backgrounds and counting statistics for all the isotopes in the library present below quantifiable levels. A compilation of the gamma-emitting isotopes presently being analyzed on Westinghouse Hanford GEA systems is provided in Table E-6 (Appendix E).

5.5 PHYSICAL TESTING PROCEDURES

9 2 1 2 6 3 3 0 1 6 4

In many cases, tests for physical properties are not highly precise, but are aimed at establishing a range of values for these properties of the wastes.

Instant and negative-based color-corrected photographs are taken of each waste sample in the hot cell. Filters are attached to the camera to remove the yellow tint of the lead glass in the cubicle. Standard color cards are photographed with the samples to "fine-tune" the color during the printing process. These photographs provide a permanent record of the physical form of the waste and its textural and color homogeneity. These photographs are supplemented with written visual observations to record color, number of phases, and other unique characteristics.

The density of the core is estimated from a dimensional determination of the volume and the weight measured on a balance in the hot cell. The mass and volume of both the drainable liquid and solids is determined. The density of the drainable liquid is determined by weighing a 1-mL aliquot of the material. Bulk density (ratio of mass to volume) may also be determined on solid waste samples. In this procedure, a known mass of representative sample is centrifuged to remove air pockets and the volume of sample is determined from the graduated centrifuge cone.

Particle size will be determined on small (milligram) samples of the waste taken before it is homogenized. Since homogenization may alter the particle size, analyses will be done on core segments before compositing. This is an "apparent" particle size which may actually be measuring agglomerates. The particle size distribution will be measured on either a Brinkmann Laser Particle* Size Analyzer, or a ELZONE** Particle Measurement System. Particle density may also be determined on some samples. Since this analysis is done on dry samples, it may be performed on archived materials. Particle density is determined by adding a known quantity (mass and volume) of NPH to the dried sample (to correct for void volume), centrifuging the sample, and measuring the mass-to-volume ratio.

Eight of the SST waste tanks contain sufficient radionuclides to generate measurable heat. For these tanks, measurements of thermal output, thermal conductivity, and specific heat (heat capacity) are desirable. The thermal output can be calculated from the radiological analysis of the tank. It could also be determined by calorimetry. Technology and procedures for this latter method are not available at this time (Section C.4.1, Appendix C). Development work is in progress to develop a technique for measuring thermal conductivity of waste materials (Section C.4.2, Appendix C). This method may require a relatively large sample size which may necessitate a separate core sampling effort. Specific heat is determined by DSC techniques.

*Brinkman Instruments Inc., Westbury, New York.

**Particle Data Inc., Elmhurst, Illinois.

Viscosity may be determined directly on samples of the solid and drainable liquid waste. The Haake Viscometer System requires about 10-mL of sample. Since this equipment is not in a hot cell, the measurement may be limited to less radioactive waste. The PNL has hot-cell viscometer capability if required. Past experience has shown that some of the solid waste samples may have viscosities greater than the upper limit attainable using the existing viscometer instruments. Shear strength and shear stress-shear rate rheograms are other rheological properties important in the design of waste retrieval systems. These are determined by hot-cell rheological systems at PNL. Systems for Westinghouse Hanford need to be developed (Section C.4.3, Appendix C). The Miller number measurement evaluates erosion and corrosion affects on pumps and transfer piping and is important to the development of retrieval processes. Large sample sizes needed for these latter three measurements may require a special core sample for their determination or development of specialized equipment and therefore they will not be included in Phase I testing. Systems to measure the Miller number need to be implemented at Westinghouse Hanford (Section C.4.5, Appendix C).

Penetrometer tests will be performed directly on the segment sample without impacting other measurements to evaluate sludge cohesive-dilatent properties. This technology needs to be acquired at Westinghouse Hanford (Section C.4.5, Appendix C). Thermal analysis techniques such as differential scanning calorimetry and thermogravimetric analysis will be used to determine thermal properties of the waste such as the softening point, the identification of endothermic and exothermic phase changes or decompositions, and the amount of water lost at various temperatures. These analyses can be performed using small (milligram) quantities of the homogenized sample.

If the sample is a slurry rather than a sludge, determinations for solids-settling rate, volume-percent settled solids and volume-percent centrifuged solids will be required.

Weight-percent water is required by SW-846 and CLP procedures for solids analysis to allow reporting in terms of dry weight of sample. The CLP procedures dry 5 to 10 g of sample at 103 to 105 °C for 12 to 24 h. If less than 12-h drying times are used, it must be shown that constant weight (±0.01 g) has been obtained by reweighing after heating for at least an additional hour. The present Westinghouse Hanford procedure dries samples at 120 °C ± 3 °C for 18 ± 3 h. This procedure includes a constant weight check to ±0.25% of the total weight. The higher temperature, 120 °C, is used to remove water from hydrated aluminum compounds. Smaller sample sizes (e.g., 1 g) will be required for SST wastes to reduce personnel exposure. The radiation dose of samples containing large amounts of beta activity can increase significantly after being dried. Weight-percent water may also be determined by thermogravimetric analysis (TGA) of 10 to 25 mg samples, if radiation exposure is a problem. A comparison of TGA and gravimetric methods will be performed (Section C.3.1.18, Appendix C).

5.5.1 Drainable Liquid

The SW-846 drainable liquid test requires 100 g of representative sample. The sample is placed in a conical paint filter and allowed to drain for 5 min. If any liquid collects in a graduated cylinder, the sample is considered to contain drainable liquid. The filter media on paint filters have been observed to separate from the filter cone on exposure to alkaline media. This indicates a reaction with the filter is taking place that could contaminate the solid or liquid sample and therefore it could not be reused for analysis. Any free-flowing liquid in the SST wastes should separate when the waste is extruded in the hot cell. This liquid is drained from the stainless steel extrusion pan into a tared graduated cylinder or bottle for measurement of weight and volume. This test should be as sensitive or more sensitive to drainable liquid as the reference method, since their are no restrictions to liquid flow. Taking 100-g aliquots from the 250 mL segment sample could impact the preparation of

accurate composites. The drainable liquid is measured on each segment of the core because it could be lost in the homogenization and compositing process. The large contaminated filters from paint filter testing would increase the volume of high-level solid waste from hot cells. The paint filter drainable liquid test as described in SW-846 will not be done during Phase I testing, but drainable liquid on each segment of the waste will be determined using existing methods.

5.6 SUMMARY OF SW-846 ANALYTICAL METHODS

The potential differences between Westinghouse Hanford and PNL and SW-846 methods are summarized in Table 5-2. Some of the methods are still being evaluated; therefore, the table may change in future editions.

9 2 1 2 6 5 3 0 1 6 8

Table 5-2. Analytical Areas Where Deviations to SW-846 Procedures are Planned or Expected. (Sheet 1 of 2)

Parameter	Method	Potential differences	Justification
Metals (ICP)	3050 3010 3020	Use CLP digestion 200.7. May need smaller sample size (0.25 to 0.5 g)	CLP does not require evaporation to near dryness. Increase dose from dry samples. Improve throughput with CLP. Easier to control CLP in hot cell.
Arsenic (As)	7060 7061	Westinghouse Hanford HYAA method pretreatment is different. PNL GFAA does not have Zeeman background.	Spikes and testing show Westinghouse Hanford method works. Upgraded GFAA capability planned.
Selenium (Se)	7740 7741	Same as arsenic.	Same as arsenic.
Mercury (Hg)	7471	Westinghouse Hanford CVAA method pretreatment is different. Westinghouse Hanford uses gold amalgam concentrator. PNL uses hot-cell Mercury separation before CVAA. Samples are not cooled to 4 °C.	Spikes and testing show that method works. Methods reduce radiation exposure.
General		Glassware cleaning procedures may vary.	Waste handling problems. Verify with blanks.
Anions	General	Sample preservation. Samples not cooled to 4 °C.	
Nitrate	9200	Use IC for nitrate analysis. Also obtain nitrite.	Reduce exposure. Improve throughput. SW-846 not tested for SST matrix.
Sulfate	9038	Use IC for sulfate analysis.	Same as for nitrate.
Chloride	9250	Use IC for chloride analysis. Also obtain fluoride.	Same as for nitrate.
pH (Hydroxide)	9040/9045	Use smaller sample (5 g versus 20 g).	Reduce exposure and conserve sample.
Cyanide	9010	Use smaller sample and scaled-down (10) equipment. Use different distillation matrix. pH 4 and EDTA.	Reduce exposure and waste and conserve sample. Eliminate nitrate and nitrite interference.
Sulfide	9030	No sulfide expected. Sulfide stabilization problem.	No proven method.
Chromium (VI)	7197/7195	Cr(VI) analysis based on Cr in water soluble portion. Verify by SW-846 method if >5 µg/mL. Expect problems with SW-846 methods because of nitrite.	Cr(VI) will be reduced to CR(III) by nitrite in SST matrices.

PST89-3095-5-2

Table 5-2. Analytical Areas Where Deviations to SW-846 Procedures are Planned or Expected. (Sheet 2 of 2)

Parameter	Method	Potential differences	Justification
Organic	General	Sample preservation at 4 °C.	
TOX/EOX	9020 83-13	SW-846 method does not apply to solids. Different extractant and total halide.	Reduce exposure and improve throughput. Petroleum ether safety.
Volatile organics	8240	EPA-624 procedure. Possible smaller sample size.	
Semivolatile organic	8270	EPA-625 procedure. Possible smaller sample size.	
PCB/Pesticides	8080		
Waste characteristic			
Corrositivity	9040	Smaller sample size (5 g versus 50 g). Duplicate rather than triplicate analyses.	Reduce exposure and conserve sample. Run triplicate only if near ±2.5 pH limit.
Reactivity	SW-846-7.3	Run only if CN^- >250 µg/g and test is needed to designate waste. Possible smaller sample size and equipment.	Reactivity checked by thermal analyses. No sulfide expected. Total CN^- on each core. Reduce exposure and conserve sample. How will data be used?
Ignitibility	1020	Not planned unless large volume of organic found.	Organic is not expected to be present. Test for immiscibility.
EP toxicity	1310	Scaled down by 10 (10 g/200 mL). Eliminate sieving of waste after homogenation.	Reduce exposure and conserve sample. Easier to handle in hot cell. Reduces hot-cell cleaning and cross contamination.
Physical tests			
Drainable liquid	9085	Obtain drainable liquid from extrusion pan. Do not use paint filter.	Conserve sample and reduce solid waste in hot cell. Reduce exposure and simplify hot-cell operations.
Water (wt%)	CLP-D84	Smaller sample size. Higher drying temperature (120° C versus 104° C)	Reduce exposure and conserve sample. Higher temperature to remove water from aluminate salts.

PST89-3095-5-2

9 2 1 2 6 6 3 0 1 7 0

6.0 REFERENCES

Adams, M. R., L. Jensen, and W. W. Schulz, 1986, *Preliminary Assessment of the TRAC Model as a Predictor of Key Radionuclide Inventories*, RHO-RE-EV-86 P, Rockwell Hanford Operations, Richland, Washington (September).

APHA, 1985, *Standard Methods for the Examination of Water and Wastewater*, 16th Edition, American Public Health Association, Washington, D.C.

Davis, 1988, *Performance Assessment Technology Development for Cleanup and Disposal of Hanford Defense Waste*, WHC-EP-0072, Westinghouse Hanford Company, Richland, Washington (April).

DOE, 1987, *The Environmental Survey Manual*, DOE/EH-0053, Appendix D, U.S. Department of Energy, Washington, D.C. (August).

DOE, 1984, *Environmental Measurements Laboratory Procedures Manual*, HASL-300, U.S. Department of Energy, Washington, D.C. (February).

Ecology, 1982, *Chemical Testing Methods*, WDOE 83-13, Washington State Department of Ecology, Olympia, Washington (March).

EPA, 1987, *Contract Laboratory Program Statement of Work for Inorganic Analysis Multi-Media Multi-Concentration*, EPA SOW 787, U.S. Environmental Protection Agency, Washington, D.C. (July).

EPA, 1986, *Contract Laboratory Program Statement of Work for Organics Analysis Multi-Media Multi-Concentration,* U.S. Environmental Protection Agency, Washington, D.C. (October).

EPA, 1986, *Test Methods for Evaluating Solid Waste,* SW-846, Rev. 0, U.S. Environmental Protection Agency, Washington, D.C. (September).

EPA, 1983, *Permit Application Guidance Manual for the General Facility Standards of 40 CFR 264,* PB87-151064, U.S. Environmental Protection Agency,Washington, D.C..

EPA, 1984, *Waste Analysis Plans (A Guidance Manual),* EPA/530-SW-84-012, U.S. Environmental Protection Agency, Washington, D.C. (September).

EPA,1981, *Plans, Recordkeeping, Variances and Demonstrations for Hazardous Waste Treatment Storage and Disposal Facilities Guidance,* Manual Interim Status Requirements PB87-155503, U.S. Environmental Protection Agency, Washington, D.C. (September).

Jensen, L., 1988, *Statistical Techniques for Characterizing Single-Shell Tank Wastes,* WHC-SA-0348-FP, Westinghouse Hanford Company, Richland, Washington.

Klem, M. J., 1988, WHC-EP-0172, *Inventory of Chemicals Used at Hanford Production Plants and Support Operations (1944-1980),* Westinghouse Hanford Company, Richland, Washington (July).

Morgan, L. G., W. W. Schulz, M. R. Adams, K. W. Owens, 1988, WHC-EP-0075, *Summary of Single-Shell Tank Waste Characterization: 1985-1987,* Westinghouse Hanford Company, Richland, Washington (July).

9 2 1 2 6 5 3 0 1 7 2

Thurman, J. M., 1989, WHC-EP-0182-5, *Tank Farm Surveillance and Waste Status Summary Report for November 1988*, Westinghouse Hanford Company, Richland, Washington (September).

Tomkins, B. A., and J. E. Caton, 1987, *Preparation of Radioactive "Mixed" Waste Samples for Measurements of RCRA Organic Compounds*, Conference 870763-1, Martin Marietta Energy Systems, Inc., Oak Ridge, Tennessee.

NIOSH, 1987, *Registry of Toxic Effects of Chemical Substances*, National Institute of Occupational Safety and Health, Quarterly Issue (July).

Washington State, 1987, *Washington State Dangerous Waste Regulations*, WAC-173-303-300, Olympia, Washington.

Weiss, R. L., 1986, RHO-WM-TI-1 P, *TY Tank Farm Waste Characterization Data*, Rockwell Hanford Operations, Richland, Washington.

9 2 1 2 6 5 3 0 1 7 3

9 2 1 2 6 5 3 0 1 7 4

APPENDIX A

FACILITIES AND WASTE DATA

This page intentionally left blank.

9 2 1 2 6 6 3 0 1 7 5

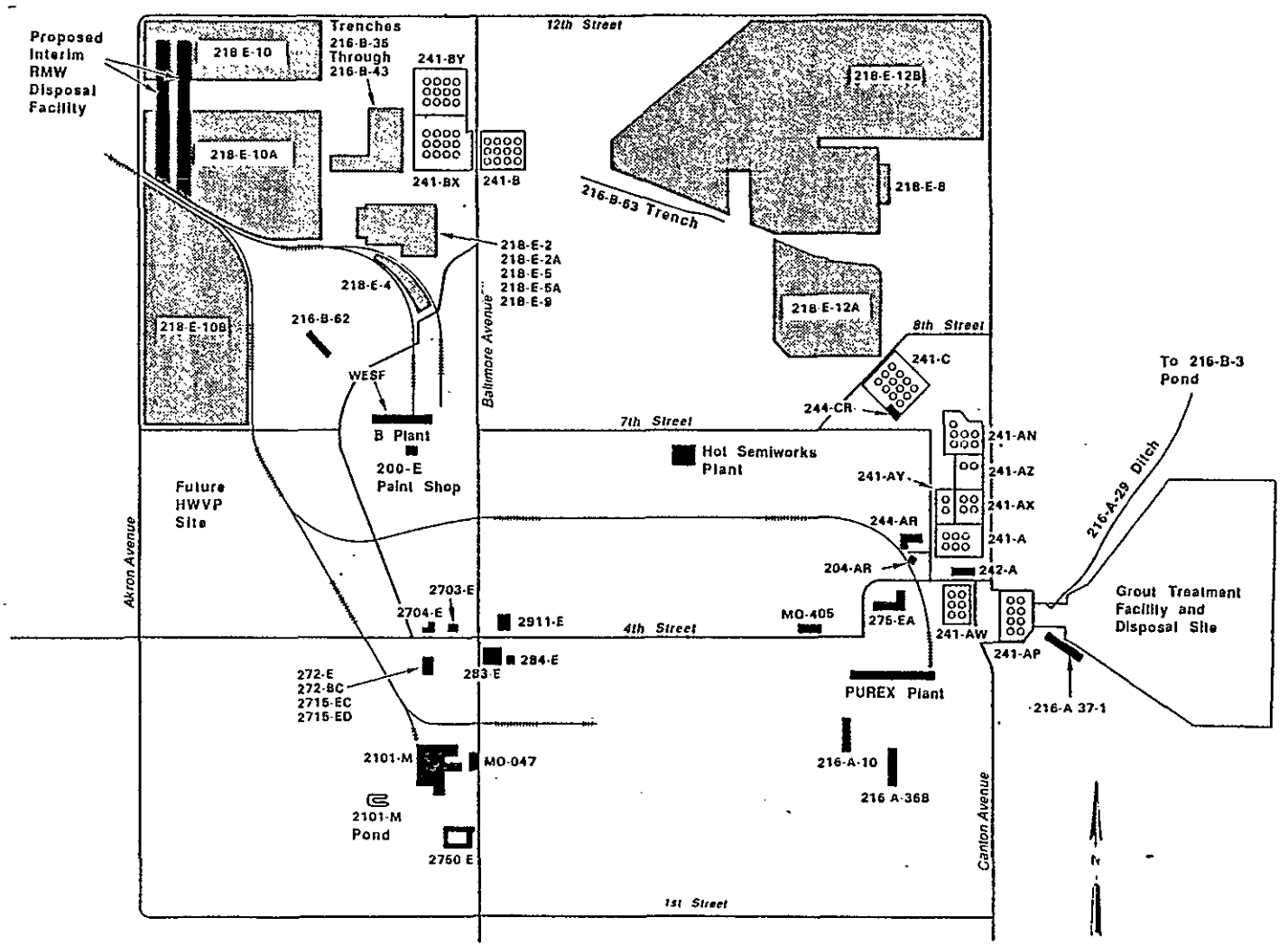

Figure A-1. Hanford Site 200 East Area.

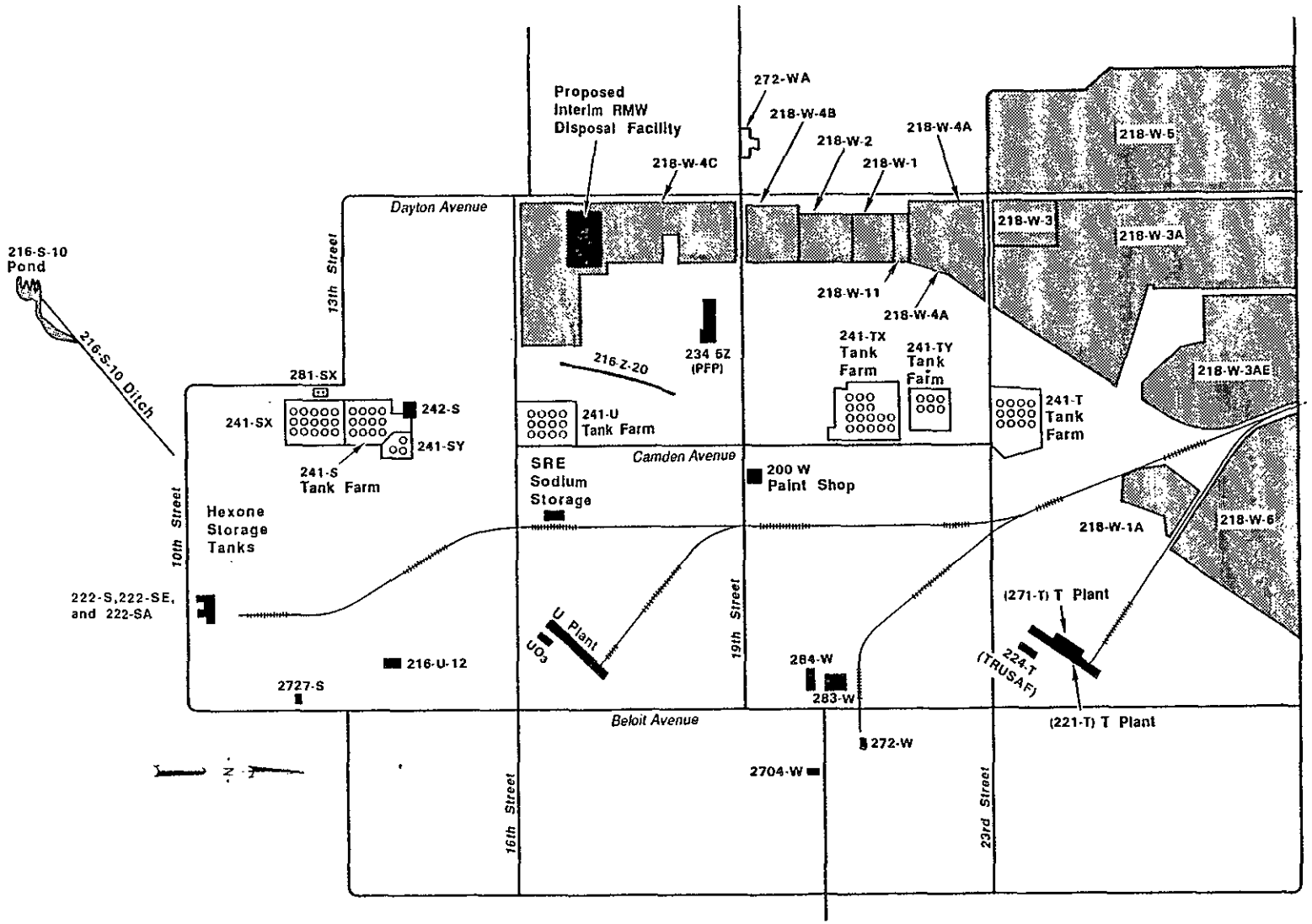

Figure A-2. Hanford Site 200 West Area.

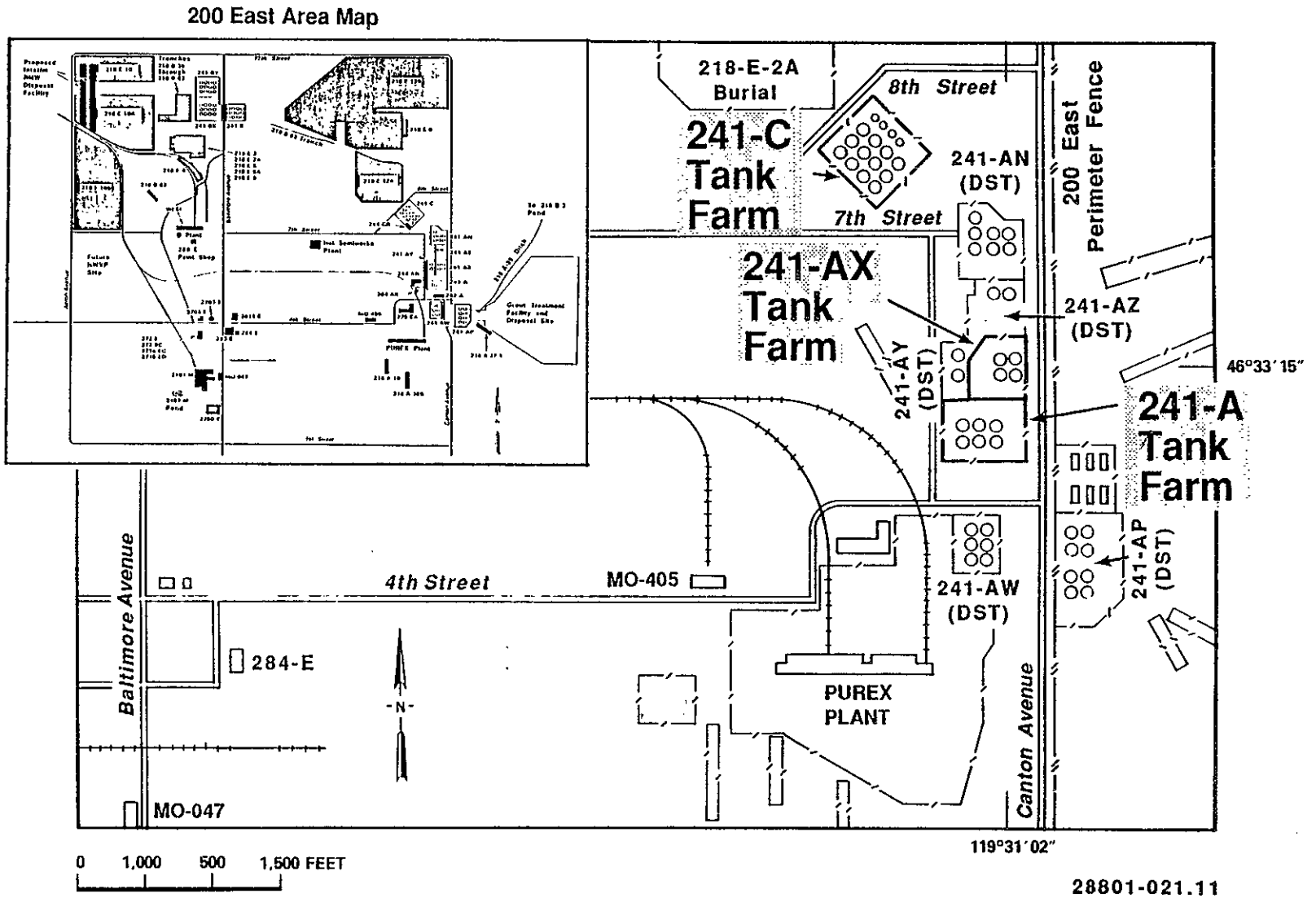

Figure A-3. Site Plan for 241-A, 241-AX, and 241-C Single-Shell Tank Farms.

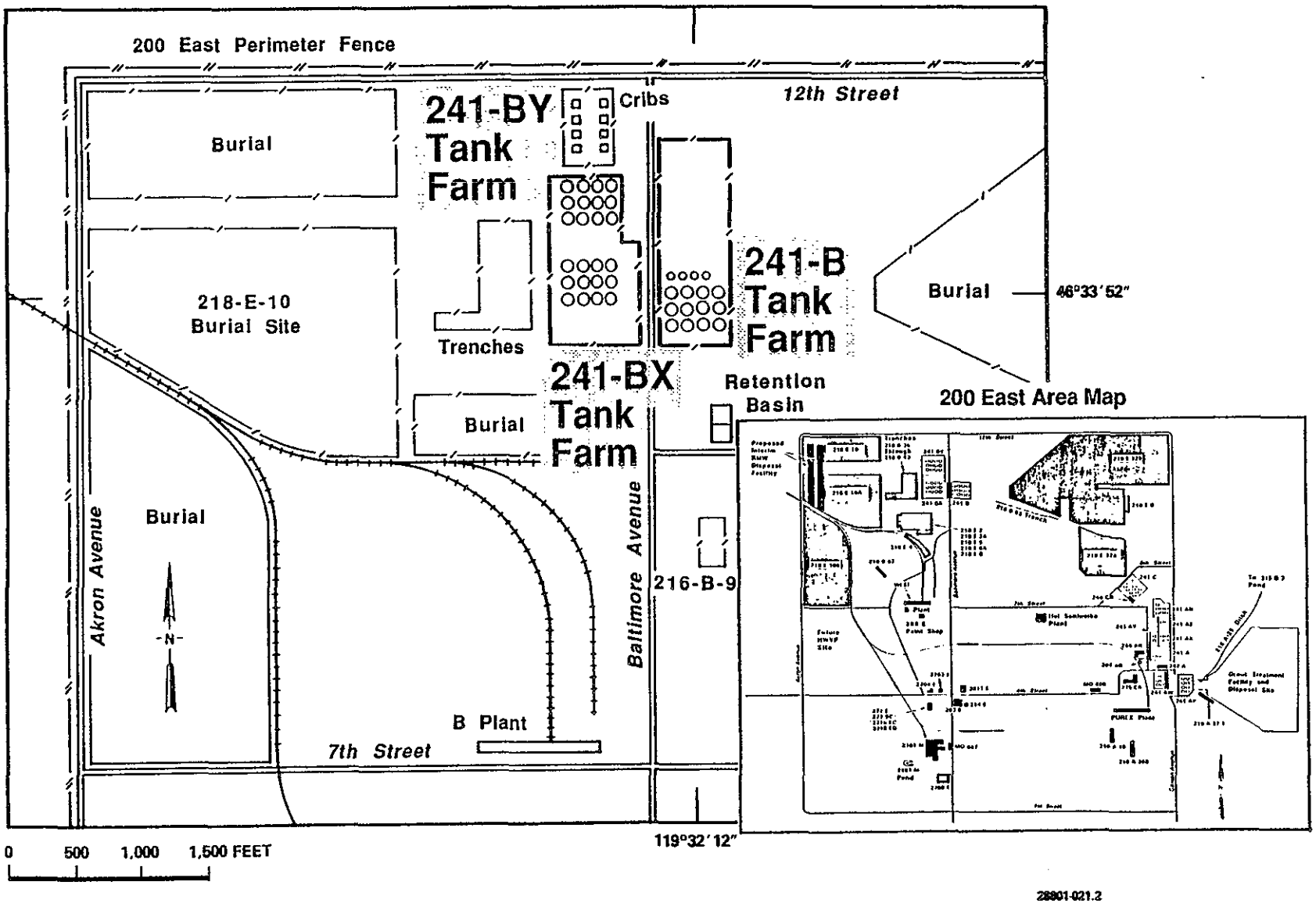

Figure A-4. Site Plan for the 241-B, 241-BX, and 241-BY Single-Shell Tank Farms.

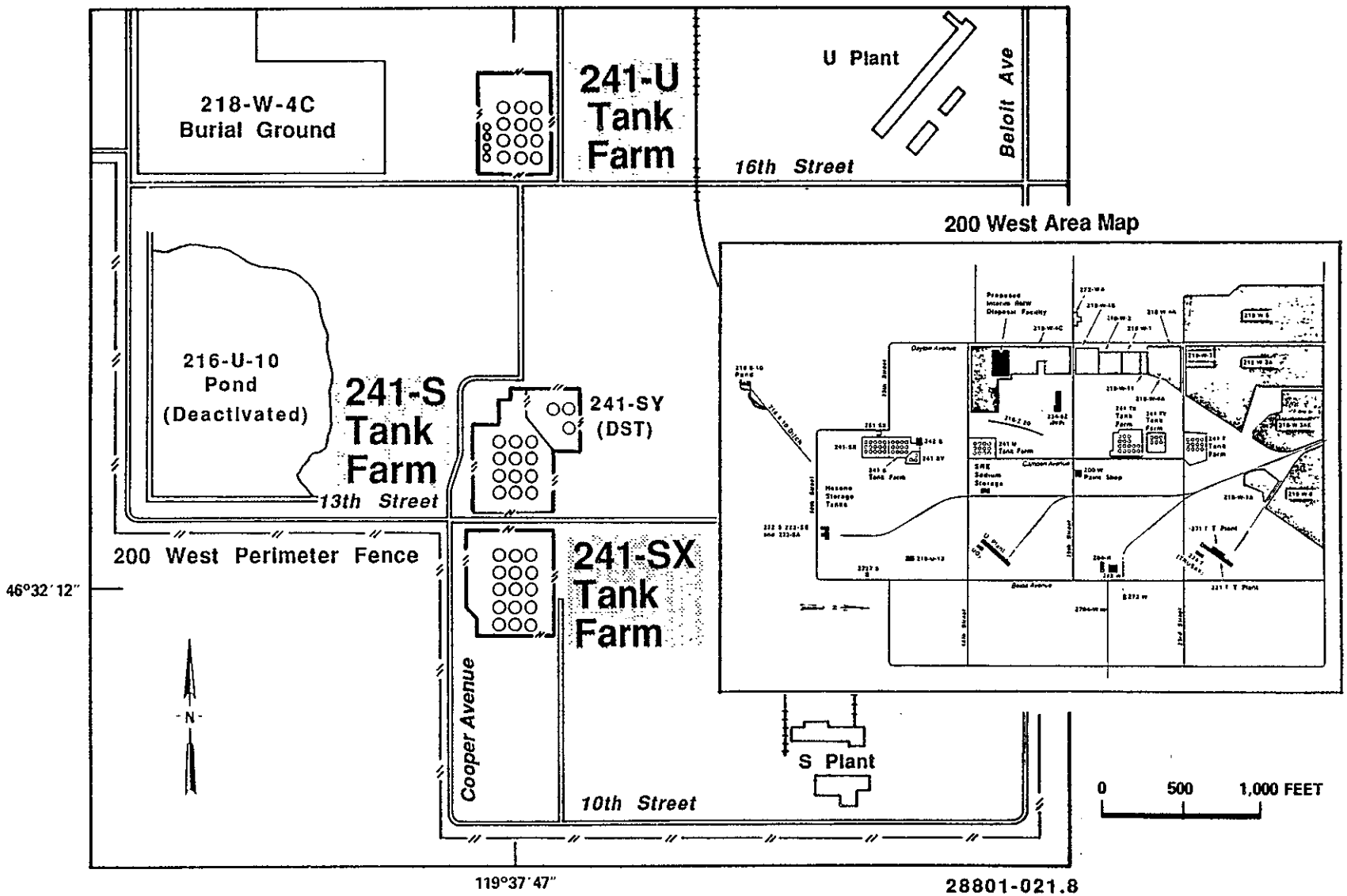

Figure A-5. Site Plan for 241-S, 241-SX, and 241-U Single-Shell Tank Farms.

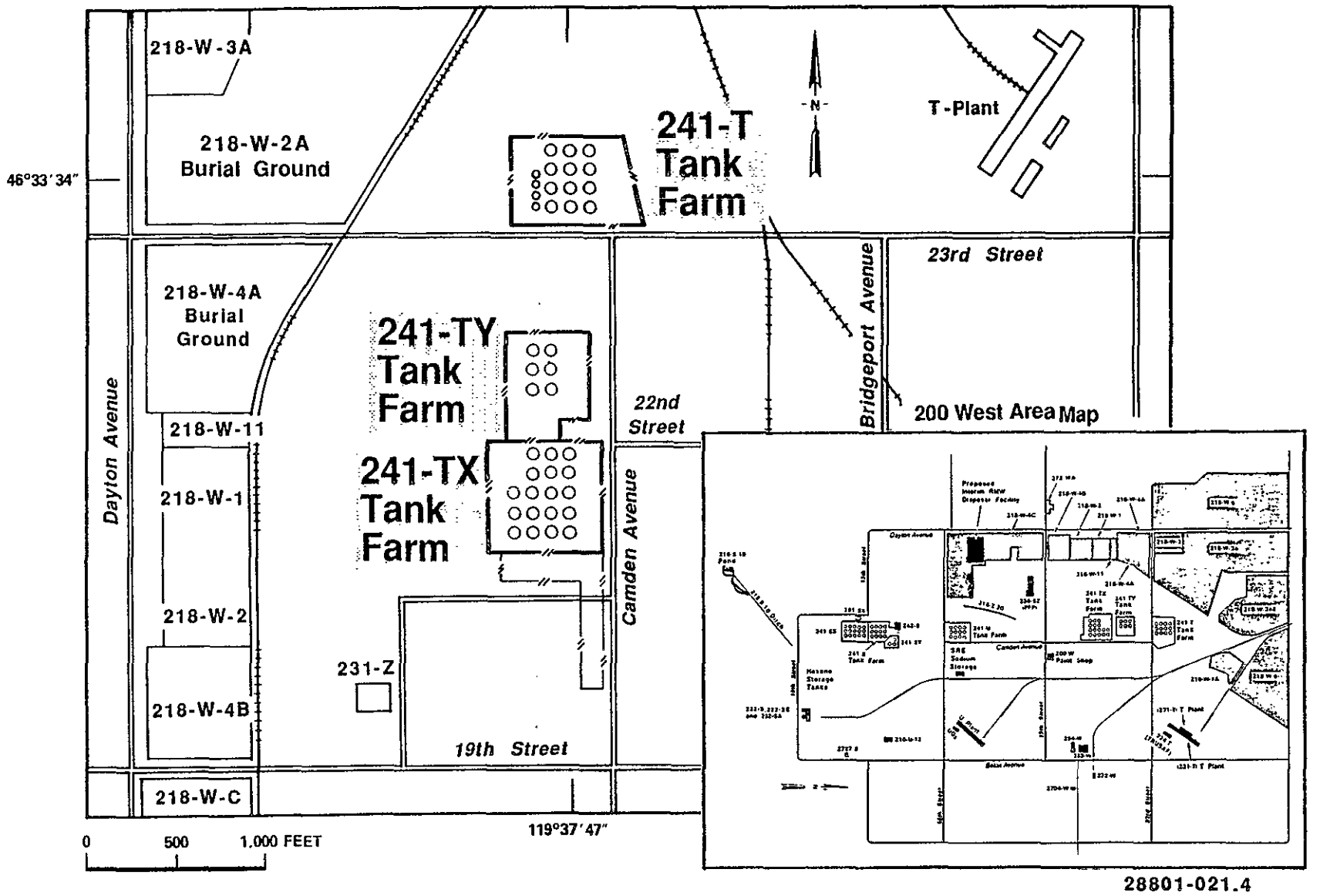

Figure A-6. Site Plan for the 241-T, 241-TX, and 241-TY Single-Shell Tank Farms

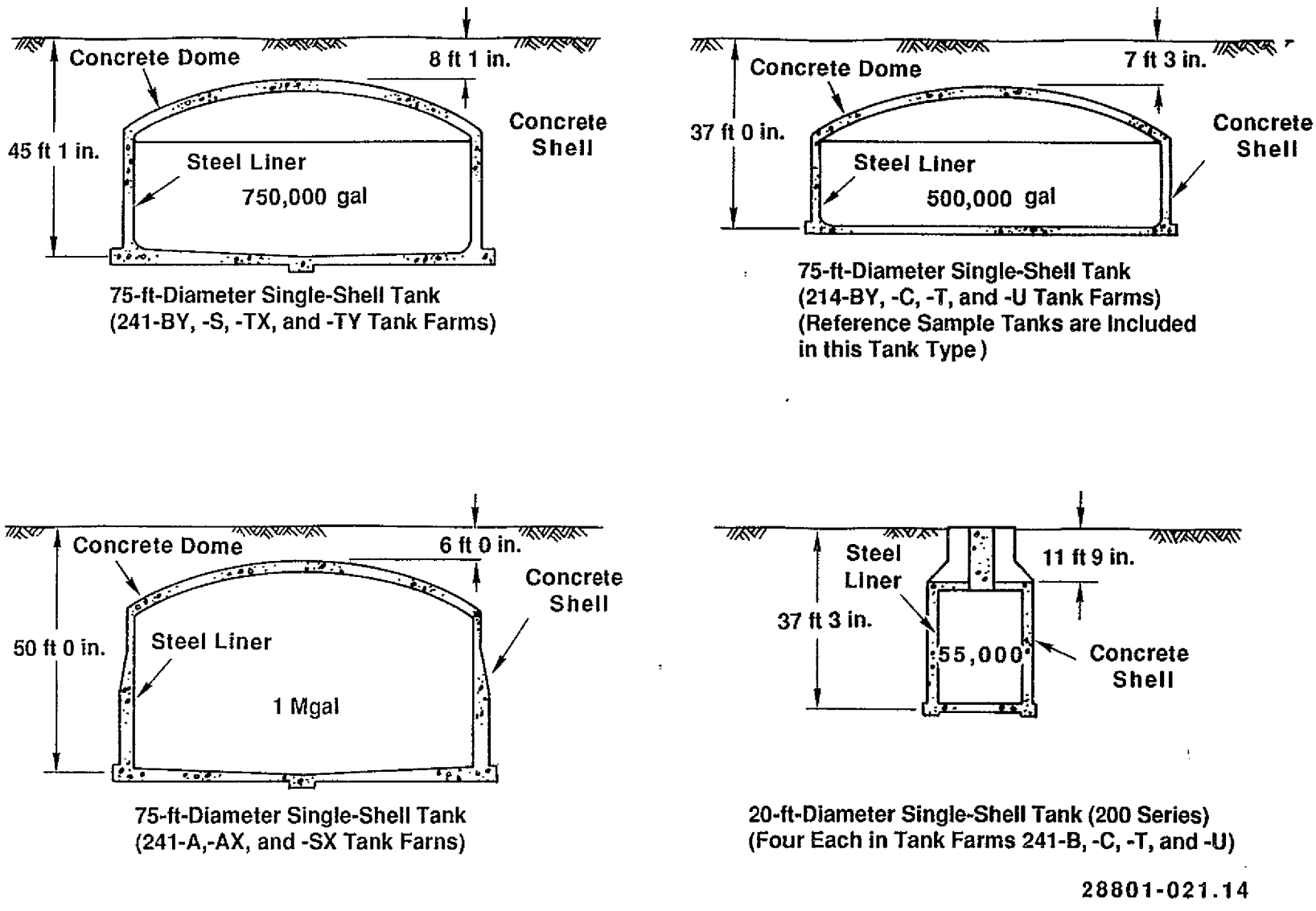

Figure A-7. Various Single-Shell Tanks.

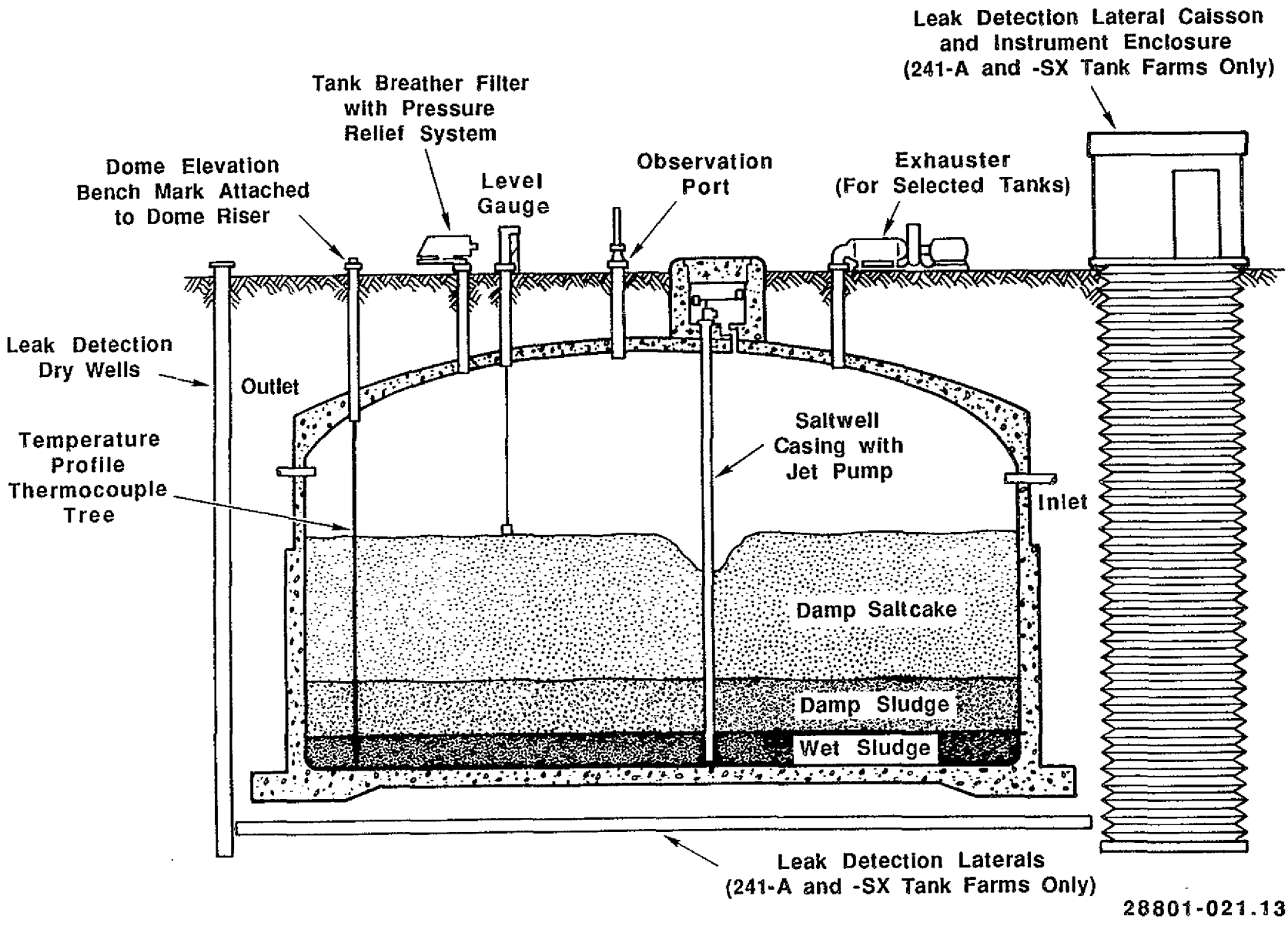

Figure A-8. Typical Single-Shell Tank.

Table A-1. Single-Shell Tank Identification. (Sheet 1 of 6)

Tank number	Year of construction	Year removed from service[a]	Operating capacity (gal)
241-A-101	1954-1955	1980	1,000,000
241-A-102	1954-1955	1980	1,000,000
241-A-103	1954-1955	1980	1,000,000
241-A-104	1954-1955	1975	1,000,000
241-A-105	1954-1955	1963	1,000,000
241-A-106	1954-1955	1980	1,000,000
241-AX-101	1963-1964	1980	1,000,000
241-AX-102	1963-1964	1980	1,000,000
241-AX-103	1963-1964	1980	1,000,000
241-AX-104	1963-1964	1978	1,000,000
241-B-101	1943-1944	1974	500,000
241-B-102	1943-1944	1978	500,000
241-B-103	1943-1944	1977	500,000
241-B-104	1943-1944	1972	500,000
241-B-105	1943-1944	1972	500,000
241-B-106	1943-1944	1977	500,000
241-B-107	1943-1944	1969	500,000
241-B-108	1943-1944	1977	500,000
241-B-109	1943-1944	1977	500,000
241-B-110[b]	1943-1944	1971	500,000
241-B-111	1943-1944	1976	500,000
241-B-112	1943-1944	1977	500,000
241-B-201	1943-1944	1971	55,000
241-B-202	1943-1944	1977	55,000
241-B-203	1943-1944	1977	55,000
241-B-204	1943-1944	1977	55,000
241-BX-101	1946-1947	1972	500,000
241-BX-102	1946-1947	1971	500,000

PST89-3095-A-1

9 2 1 2 6 5 3 0 1 9 4

Table A-1. Single-Shell Tank Identification. (Sheet 2 of 6)

Tank number	Year of construction	Year removed from service[a]	Operating capacity (gal)
241-BX-103	1946-1947	1977	500,000
241-BX-104	1946-1947	1980	500,000
241-BX-105	1946-1947	1980	500,000
241-BX-106	1946-1947	1971	500,000
241-BX-107	1946-1947	1977	500,000
241-BX-108	1946-1947	1974	500,000
241-BX-109	1946-1947	1974	500,000
241-BX-110	1946-1947	1977	500,000
241-BX-111	1946-1947	1977	500,000
241-BX-112	1946-1947	1977	500,000
241-BY-101	1948-1949	1971	750,000
241-BY-102	1948-1949	1977	750,000
241-BY-103	1948-1949	1973	750,000
241-BY-104	1948-1949	1977	750,000
241-BY-105	1948-1949	1974	750,000
241-BY-106	1948-1949	1977	750,000
241-BY-107	1948-1949	1974	750,000
241-BY-108	1948-1949	1972	750,000
241-BY-109	1948-1949	1979	750,000
241-BY-110	1948-1949	1979	750,000
241-BY-111	1948-1949	1977	750,000
241-BY-112	1948-1949	1978	750,000
241-C-101	1943-1944	1970	500,000
241-C-102	1943-1944	1976	500,000
241-C-103	1943-1944	1979	500,000
241-C-104	1943-1944	1980	500,000
241-C-105	1943-1944	1979	500,000
241-C-106	1943-1944	1979	500,000

PST89-3095-A-1

9 2 1 2 5 6 3 0 1 8 5

Table A-1. Single-Shell Tank Identification. (Sheet 3 of 6)

Tank number	Year of construction	Year removed from service[a]	Operating capacity (gal)
241-C-107[b]	1943-1944	1978	500,000
241-C-108	1943-1944	1976	500,000
241-C-109	1943-1944	1976	500,000
241-C-110	1943-1944	1976	500,000
241-C-111	1943-1944	1978	500,000
241-C-112	1943-1944	1976	500,000
241-C-201	1943-1944	1977	55,000
241-C-202	1943-1944	1977	55,000
241-C-203	1943-1944	1977	55,000
241-C-204	1943-1944	1977	55,000
241-S-101	1950-1951	1980	750,000
241-S-102	1950-1951	1980	750,000
241-S-103	1950-1951	1980	750,000
241-S-104	1950-1951	1968	750,000
241-S-105	1950-1951	1974	750,000
241-S-106	1950-1951	1979	750,000
241-S-107	1950-1951	1980	750,000
241-S-108	1950-1951	1979	750,000
241-S-109	1950-1951	1979	750,000
241-S-110	1950-1951	1979	750,000
241-S-111	1950-1951	1972	750,000
241-S-112	1950-1951	1974	750,000
241-SX-101	1953-1954	1980	1,000,000
241-SX-102	1953-1954	1980	1,000,000
241-SX-103	1953-1954	1980	1,000,000
241-SX-104	1953-1954	1980	1,000,000
241-SX-105	1953-1954	1980	1,000,000
241-SX-106	1953-1954	1980	1,000,000

PST89-3095-A-1

9 2 1 2 6 5 3 0 1 3 6

Table A-1. Single-Shell Tank Identification. (Sheet 4 of 6)

Tank number	Year of construction	Year removed from service[a]	Operating capacity (gal)
241-SX-107	1953-1954	1964	1,000,000
241-SX-108	1953-1954	1962	1,000,000
241-SX-109	1953-1954	1965	1,000,000
241-SX-110	1953-1954	1976	1,000,000
241-SX-111	1953-1954	1974	1,000,000
241-SX-112	1953-1954	1969	1,000,000
241-SX-113	1953-1954	1958	1,000,000
241-SX-114	1953-1954	1972	1,000,000
241-SX-115	1953-1954	1965	1,000,000
241-T-101	1943-1944	1979	500,000
241-T-102	1943-1944	1976	500,000
241-T-103	1943-1944	1974	500,000
241-T-104	1943-1944	1974	500,000
241-T-105	1943-1944	1976	500,000
241-T-106	1943-1944	1973	500,000
241-T-107	1943-1944	1976	500,000
241-T-108	1943-1944	1974	500,000
241-T-109	1943-1944	1974	500,000
241-T-110	1943-1944	1976	500,000
241-T-111	1943-1944	1974	500,000
241-T-112	1943-1944	1977	500,000
241-T-201	1943-1944	1976	55,000
241-T-202	1943-1944	1976	55,000
241-T-203	1943-1944	1976	55,000
241-T-204	1943-1944	1976	55,000
241-TX-101	1947-1948	1980	750,000
241-TX-102	1947-1948	1977	750,000
241-TX-103	1947-1948	1980	750,000

PST89-3095-A-1

9 2 1 2 6 5 3 0 1 8 7

Table A-1. Single-Shell Tank Identification. (Sheet 5 of 6)

Tank number	Year of construction	Year removed from service[a]	Operating capacity (gal)
241-TX-104	1947-1948	1977	750,000
241-TX-105	1947-1948	1977	750,000
241-TX-106	1947-1948	1977	750,000
241-TX-107	1947-1948	1977	750,000
241-TX-108	1947-1948	1977	750,000
241-TX-109	1947-1948	1977	750,000
241-TX-110	1947-1948	1977	750,000
241-TX-111	1947-1948	1977	750,000
241-TX-112	1947-1948	1974	750,000
241-TX-113	1947-1948	1971	750,000
241-TX-114	1947-1948	1971	750,000
241-TX-115	1947-1948	1977	750,000
241-TX-116	1947-1948	1969	750,000
241-TX-117	1947-1948	1969	750,000
241-TX-118	1947-1948	1980	750,000
241-TY-101	1951-1952	1973	750,000
241-TY-102	1951-1952	1979	750,000
241-TY-103	1951-1952	1973	750,000
241-TY-104	1951-1952	1974	750,000
241-TY-105	1951-1952	1980	750,000
241-TY-106	1951-1952	1959	750,000
241-U-101	1943-1944	1960	500,000
241-U-102	1943-1944	1979	500,000
241-U-103	1943-1944	1978	500,000
241-U-104	1943-1944	1951	500,000
241-U-105	1943-1944	1978	500,000
241-U-106	1943-1944	1977	500,000
241-U-107	1943-1944	1980	500,000

PST89-3095-A-1

9 2 1 2 6 5 3 0 1 8 8

Table A-1. Single-Shell Tank Identification. (Sheet 6 of 6)

Tank number	Year of construction	Year removed from service[a]	Operating capacity (gal)
241-U-108	1943-1944	1979	500,000
241-U-109	1943-1944	1978	500,000
241-U-110	1943-1944	1975	500,000
241-U-111	1943-1944	1980	500,000
241-U-112	1943-1944	1970	500,000
241-U-201	1943-1944	1977	55,000
241-U-202	1943-1944	1977	55,000
241-U-203	1943-1944	1977	55,000
241-U-204	1943-1944	1977	55,000

[a]The last year the tank was capable of receiving waste; actual date of last waste receipt may have been earlier.

[b]Reference Sample Tank.

PST89-3095-A-1

9 2 1 2 6 5 3 0 1 3 9

Table A-2. Volumes of Wastes Stored in Single-Shell Tanks.[a]

Tank farm	Total	Total supernate	Total solids	Sludge	Saltcake
241-A	1,586	76	1,510	549	961
241-AX	902	3	899	18	881
241-B	2,055	16	2,039	1,694	345
241-BX	1,617	103	1,514	1,361	153
241-BY	4,896	48	4,848	723	4,125
241-C	2,235	69	2,166	2,166	0
241-S	5,982	46	5,936	1,171	4,765
241-SX	4,485	94	4,391	1,533	2,858
241-T	2,064	73	1,991	1,991	0
241-TX	6,905	5	6,900	241	6,659
241-TY	638	3	635	571	64
241-U	3,550	168	3,382	638	2,744
Total	36,915	704	36,211	12,656	23,555

NOTE: Information changes monthly due to interim stabilization activities (Thurman 1989).

[a]Thousands of gallons.

PST89-3095-A-2

Table A-3. Preliminary Classification of Single-Shell Tank Wastes Using TRAC[e]. (Sheet 1 of 6)

Tank	Hazardous[a]	Radionuclide[b]	Transuranic[c]
241-A-101	DW	>C	>500
241-A-102	EHW	>C	>500
241-A-103	DW	>C	100-500
241-A-104	EHW	>C	>500
241-A-105	NR	A	0-50
241-A-106	DW	>C	>500
241-AX-101	EHW	>C	50-100
241-AX-102	EHW	>C	>500
241-AX-103	DW	A	0-50
241-AX-104	EHW	>C	>500
241-B-101	EHW	>C	>500
241-B-102	EHW	>C	100-500
241-B-103	EHW	>C	>500
241-B-104	EHW	C	0-50
241-B-105	EHW	B	0-50
241-B-106	DW	A	0-50
241-B-107	EHW	C	0-50
241-B-108	EHW	B	0-50
241-B-109	EHW	B	0-50
241-B-110[d]	EHW	>C	100-500
241-B-111	EHW	C	0-50
241-B-112	EHW	C	0-50
241-B-201	NR	A	0-50
241-B-202	DW	>C	>500
241-B-203	DW	A	0-50
241-B-204	EHW	C	0-50
241-BX-101	EHW	>C	>500
241-BX-102	EHW	C	50-100

PST89-3095-A-3

9 2 1 2 6 5 3 0 1 9 1

Table A-3. Preliminary Classification of Single-Shell Tank WastesUsing TRAC[e]. (Sheet 2 of 6)

Tank	Hazardous[a]	Radionuclide[b]	Transuranic[c]
241-BX-103	EHW	C	0-50
241-BX-104	EHW	>C	0-500
241-BX-105	EHW	C	0-50
241-BX-106	EHW	>C	0-50
241-BX-107	EHW	C	0-50
241-BX-108	EHW	C	0-50
241-BX-109	DW	C	50-100
241-BX-110	EHW	C	0-50
241-BX-111	DW	B	0-50
241-BX-112	EHW	C	0-50
241-BY-101	DW	B	0-50
241-BY-102	EHW	B	0-50
241-BY-103	EHW	>C	>500
241-BY-104	EHW	>C	100-500
241-BY-105	EHW	C	50-100
241-BY-106	EHW	C	0-50
241-BY-107	EHW	C	50-100
241-BY-108	EHW	>C	100-500
241-BY-109	DW	B	0-50
241-BY-110	EHW	C	50-100
241-BY-111	DW	B	0-50
241-BY-112	EHW	B	0-50
241-C-101	EHW	>C	100-500
241-C-102	EHW	>C	>500
241-C-103	EHW	>C	100-500
241-C-104	EHW	>C	>500
241-C-105	EHW	>C	>500
241-C-106	DW	>C	>500

PST89-3095-A-3

Table A-3. Preliminary Classification of Single-Shell Tank Wastes Using TRAC[e]. (Sheet 3 of 6)

Tank	Hazardous[a]	Radionuclide[b]	Transuranic[c]
241-C-107[d]	EHW	>C	100-500
241-C-108	EHW	>C	100-500
241-C-109	EHW	A	0-50
241-C-110	EHW	>C	100-500
241-C-111	EHW	>C	100-500
241-C-112	EHW	>C	100-500
241-C-201	NR	A	0-50
241-C-202	NR	C	0-50
241-C-203	NR	B	0-50
241-C-204	NR	A	0-50
241-S-101	EHW	>C	100-500
241-S-102	EHW	C	0-50
241-S-103	EHW	B	0-50
241-S-104	EHW	>C	100-500
241-S-105	EHW	B	0-50
241-S-106	EHW	B	0-50
241-S-107	EHW	>C	>500
241-S-108	EHW	C	0-50
241-S-109	EHW	A	0-50
241-S-110	EHW	C	0-50
241-S-111	EHW	B	0-50
241-S-112	EHW	A	0-50
241-SX-101	EHW	>C	100-500
241-SX-102	EHW	C	0-50
241-SX-103	EHW	B	0-50
241-SX-104	EHW	C	50-100
241-SX-105	EHW	C	0-50
241-SX-106	EHW	A	0-50

PST89-3095-A-3

9 2 1 2 6 5 3 0 1 9 3

Table A-3. Preliminary Classification of Single-Shell Tank Wastes Using TRAC[e]. (Sheet 4 of 6)

Tank	Hazardous[a]	Radionuclide[b]	Transuranic[c]
241-SX-107	EHW	>C	>500
241-SX-108	EHW	>C	>500
241-SX-109	EHW	>C	100-500
241-SX-110	EHW	>C	>500
241-SX-111	EHW	>C	>500
241-SX-112	EHW	>C	>500
241-SX-113	EHW	>C	>500
241-SX-114	EHW	>C	>500
241-SX-115	EHW	>C	>500
241-T-101	EHW	A	0-50
241-T-102	DW	A	0-50
241-T-103	DW	C	0-50
241-T-104	EHW	C	50-100
241-T-105	EHW	>C	100-500
241-T-106	EHW	>C	100-500
241-T-107	EHW	C	50-100
241-T-108	EHW	C	0-50
241-T-109	DW	A	0-50
241-T-110	EHW	C	50-100
241-T-111	EHW	C	0-50
241-T-112	EHW	>C	>500
241-T-201	NR	A	0-50
241-T-202	DW	A	0-50
241-T-203	EHW	C	0-50
241-T-204	NR	A	0-50
241-TX-101	EHW	B	0-50
241-TX-102	NR	A	0-50
241-TX-103	NR	A	0-50

PST89-3095-A-3

9 2 1 2 6 5 3 0 1 9 4

Table A-3. Preliminary Classification of Single-Shell Tank Wastes Using TRAC[e]. (Sheet 5 of 6)

Tank	Hazardous[a]	Radionuclide[b]	Transuranic[c]
241-TX-104	NR	A	0-50
241-TX-105	DW	A	0-50
241-TX-106	NR	A	0-50
241-TX-107	NR	A	0-50
241-TX-108	DW	B	0-50
241-TX-109	EHW	C	50-100
241-TX-110	DW	B	0-50
241-TX-111	DW	B	0-50
241-TX-112	NR	A	0-50
241-TX-113	EHW	C	0-50
241-TX-114	DW	B	0-50
241-TX-115	NR	B	0-50
241-TX-116	EHW	B	0-50
241-TX-117	EHW	B	0-50
241-TX-118	EHW	>C	100-500
241-TY-101	EHW	>C	100-500
241-TY-102	DW	A	0-50
241-TY-103	EHW	>C	100-500
241-TY-104	DW	C	0-50
241-TY-105	NR	C	50-100
241-TY-106	NR	>C	100-500
241-U-101	NR	C	50-100
241-U-102	NR	A	0-50
241-U-103	NR	A	0-50
241-U-104	NR	A	0-50
241-U-105	NR	A	0-50
241-U-106	NR	A	0-50
241-U-107	NR	B	0-50

PST89-3095-A-3

9 2 1 2 6 5 3 0 1 9 5

Table A-3. Preliminary Classification of Single-Shell Tank Wastes Using TRAC[e]. (Sheet 6 of 6)

Tank	Hazardous[a]	Radionuclide[b]	Transuranic[c]
241-U-108	DW	B	0-50
241-U-109	NR	B	0-50
241-U-110	EHW	>C	100-500
241-U-111	EHW	B	0-50
241-U-112	EHW	A	0-50
241-U-201	NR	A	0-50
241-U-202	NR	A	0-50
241-U-203	NR	B	0-50
241-U-204	NR	A	0-50

PST89-3095-A-3

[a]Classification per WAC 173-303:
NR = not regulated.
DW = dangerous waste.
EHW = extremely hazardous waste.
[b]Classification per 10 CFR 61.
[c]DOE TRU concentration, nCi/g.
[d]Reference Sample Tank.
[e]This is preliminary data based on an invalidated model (TRAC) and will change when real data from the tanks is acquired.

Table A-4. Recommended Single-Shell Tank Sampling Order. (Sheet 1 of 6)

Tank	Preliminary classification[a]		No. of risers[c]	Sampled[d]	Stabilize schedule (yr)	Waste status summary	
	Hazard	Radionuclide				Saltcake[e] (in.)	Total (in.)
FY 1989 reference sampling							
1. 241-B-110[b]	EHW	>C	5		IS	0	89
2. 241-C-107[b]	EHW	>C	5		1989	0	122
FY 1990							
1. 241-C-106	DW	>C	3	Yes		0	72
2. 241-C-105	EHW	>C	2	Yes		0	54
3. 241-C-102	EHW	>C	2	Yes	1989	0	154
4. 241-C-104	EHW	>C	3	Yes	1989	0	107
5. 241-C-101	EHW	>C	3		IS	0	32
6. 241-C-110	EHW	>C	7		1989	0	71
FY 1991							
1. 241-C-111	EHW	>C	5		IS	0	21
2. 241-C-108	EHW	>C	6		IS	0	24
3. 241-C-109	EHW	A	7		IS	0	23
FY 1992 CST 1							
1. 241-C-112	EHW	>C	7		1989	0	40
2. 241-C-204	NR	A	3		IS	0	12
3. 241-C-203	NR	B	3		IS	0	20
4. 241-C-201	NR	A	3		IS	0	8
5. 241-C-103	EHW	>C	3	Yes	1989	0	64
6. 241-BX-101	EHW	>C	3		IS	0	15
7. 241-BX-102	EHW	C	2		IS	0	35
FY 1992 CST 2							
1. 241-T-101	EHW	A	3		1994	0	37
2. 241-T-104	EHW	C	4		1994	0	160
3. 241-T-107	EHW	C	7		1994	0	62
4. 241-T-110	EHW	C	4		1994	0	137
5. 241-T-111	EHW	C	4		1994	0	166
6. 241-T-108	EHW	C	8		IS	0	16

PST89-3095-A-4

9 2 1 2 6 3 0 1 9 7

Table A-4. Recommended Single-Shell Tank Sampling Order. (Sheet 2 of 6)

Tank	Preliminary classification[a]		No. of risers[c]	Sampled[d]	Stabilize schedule (yr)	Waste status summary	
	Hazard	Radionuclide				Saltcake[e] (in.)	Total (in.)
FY 1993 CST 1							
1. 241-BX-103	EHW	C	3		IS	0	23
2. 241-BX-106	EHW	>C	3		1991	0	11
3. 241-BX-109	DW	C	6		1991	0	72
4. 241-BX-112	EHW	C	5		1991	0	57
5. 241-BX-111	DW	B	4		1991	52	77
6. 241-BX-110	EHW	C	4		IS	3	71
7. 241-BX-107	EHW	C	7		91	0	131
8. 241-BX-104	EHW	>C	3	Yes	91	0	32
FY 1993 CST 2							
1. 241-T-105	EHW	>C	7		IS	0	36
2. 241-T-102	DW	A	3		IS	0	7
3. 241-T-103	DW	C	3		IS	0	8
4. 241-T-106	EHW	>C	8		IS	0	7
5. 241-T-109	DW	A	7		IS	0	21
6. 241-T-112	EHW	>C	7		IS	0	22
7. 241-T-204	NR	A	3		IS	0	152
FY 1994 CST 1							
1. 241-BX-105	EHW	C	3	Yes	IS	1	17
2. 241-BX-108	EHW	C	4		IS	0	9
3. 241-BY-101	DW	B	2		IS	101	141
4. 241-BY-102	EHW	B	4		1992	151	151
5. 241-BY-103	EHW	>C	5		1992	147	149
6. 241-BY-106	EHW	C	5		1992	199	233
7. 241-BY-105	EHW	C	4		1992	167	183
8. 241-BY-104	EHW	>C	5		IS	133	147
9. 241-BY-107	EHW	C	5		IS	75	97
10. 241-BY-108	EHW	>C	5		IS	27	83
11. 241-BY-109	DW	B	5		1992	129	160

PST89-3095-A-4

Table A-4. Recommended Single-Shell Tank Sampling Order. (Sheet 3 of 6)

Tank	Preliminary classification[a]		No. of risers[c]	Sampled[d]	Stabilize schedule (yr)	Waste status summary	
	Hazard	Radionuclide				Saltcake[e] (in.)	Total (in.)
FY 1994 CST 2							
1. 241-T-203	EHW	C	4		IS	0	140
2. 241-T-202	DW	A	5		IS	0	84
3. 241-T-201	NR	A	5		IS	0	112
4. 241-U-101	NR	C	2		IS	0	8
5. 241-U-104	NR	A	4		IS	0	44
6. 241-U-107	NR	B	4		1995	131	136
7. 241-U-110	EHW	>C	6		IS	0	68
8. 241-U-111	EHW	B	6		1995	110	119
9. 241-U-108	DW	B	5		1995	151	161
10. 241-U-105	NR	A	3		1995	127	138
11. 241-U-102	NR	A	4		1995	114	129
FY 1995 CST 1							
1. 241-BY-112	EHW	B	9		IS	104	106
2. 241-BY-111	DW	B	5		IS	159	167
3. 241-BY-110	EHW	C	4		IS	107	145
4. 241-B-101	EHW	>C	6		IS	0	41
5. 241-B-102	EHW	>C	2		IS	4	10
6. 241-B-103	EHW	>C	6		IS	0	21
7. 241-B-106	DW	A	5		IS	0	42
8. 241-B-105	EHW	B	5		IS	97	111
9. 241-B-104	EHW	C	4		IS	25	134
10. 241-B-107	EHW	C	6		IS	0	60
11. 241-B-108	EHW	B	5		IS	0	34
FY 1995 CST 2							
1. 241-U-103	NR	A	3		1995	154	165
2. 241-U-106	NR	A	4		1995	67	77
3. 241-U-109	NR	B	5		1995	144	161
4. 241-U-112	EHW	A	5		IS	0	16
5. 241-U-204	NR	A	4		IS	0	8
6. 241-U-203	NR	B	4		IS	0	8
7. 241-U-202	NR	A	5		IS	0	16
8. 241-U-201	NR	A	4		IS	0	16

PST89-3095-A-4

9 2 1 2 6 5 3 0 1 9 9

Table A-4. Recommended Single-Shell Tank Sampling Order. (Sheet 4 of 6)

Tank	Preliminary classification[a]		No. of risers[c]	Sampled[d]	Stabilize schedule (yr)	Waste status summary	
	Hazard	Radionuclide				Saltcake[e] (in.)	Total (in.)
FY 1995 CST 2 (cont.)							
9. 241-SX-101	EHW	>C	4		1996	125	165
10. 241-SX-102	EHW	C	3		1996	155	197
11. 241-SX-103	EHW	B	4		1996	190	231
FY 1996 CST 1							
1. 241-B-109	EHW	B	4		IS	0	46
2. 241-B-112	EHW	C	5		IS	0	11
3. 241-B-111	EHW	C	5		IS	0	86
4. 241-B-204	EHW	C	5		IS	0	196
5. 241-B-203	DW	A	6		IS	0	196
6. 241-B-202	DW	>C	6		IS	0	104
7. 241-B-201	NR	A	5		IS	0	112
8. 241-A-101	DW	>C	6		1997	345	346
9. 241-A-102	EHW	>C	5	Yes	1997	4	7
10. 241-A-103	DW	>C	5	Yes	1997	0	140
11. 241-A-106	DW	>C	8	Yes	2015	0	45
FY 1996 CST 2							
1. 241-SX-106	EHW	A	5		1996	169	173
2. 241-SX-105	EHW	C	5		1996	221	248
3. 241-SX-104	EHW	C	5		1996	212	273
4. 241-SX-107	EHW	>C	4		IS	0	38
5. 241-SX-108	EHW	>C	4		IS	0	42
6. 241-SX-109	EHW	>C	1	Yes, IS	IS	0	91
7. 241-SX-112	EHW	>C	2		IS	0	33
8. 241-SX-111	EHW	>C	4		IS	0	45
9. 241-SX-110	EHW	>C	3		IS	0	23
10. 241-SX-113	EHW	>C	4		IS	0	9
11. 241-SX-114	EHW	>C	3		IS	0	66

PST89-3095-A-4

9 2 1 2 6 3 3 0 2 0 0

Table A-4. Recommended Single-Shell Tank Sampling Order. (Sheet 5 of 6)

Tank	Preliminary classification[a]		No. of risers[c]	Sampled[d]	Stabilize schedule (yr)	Waste status summary	
	Hazard	Radionuclide				Saltcake[e] (in.)	Total (in.)
FY 1997 CST 1							
1. 241-A-105	NR	A	6		IS	0	7
2. 241-A-104	EHW	>C	7	Yes, IS	IS	0	10
3. 241-AX-101	EHW	>C	9		1997	271	272
4. 241-AX-102	EHW	>C	8		1997	8	11
5. 241-AX-103	DW	A	11		1997	40	41
6. 241-TX-101	EHW	B	1		IS	0	31
7. 241-TX-102	NR	A	1		IS	41	41
8. 241-TX-103	NR	A	0		IS	0	57
9. 241-TX-104	NR	A	1		IS	23	23
10. 241-TX-108	DW	B	1		IS	49	49
11. 241-TX-107	NR	A	1		IS	13	13
FY 1997 CST 2							
1. 241-S-101	EHW	>C	4		1996	62	151
2. 241-S-102	EHW	C	7		1996	198	199
3. 241-S-103	EHW	B	6		1996	80	84
4. 241-S-106	EHW	B	6		1996	186	197
5. 241-S-105	EHW	B	7		1996	176	177
6. 241-S-104	EHW	>C	6		IS	0	106
7. 241-S-107	EHW	>C	7		1996	25	131
8. 241-S-108	EHW	C	6		1996	218	219
9. 241-S-109	EHW	A	7		1996	202	206
10. 241-S-112	EHW	A	7		1996	229	231
11. 241-S-111	EHW	B	6		1996	162	213
FY 1998 CST 1							
1. 241-TX-106	NR	A	1		IS	164	164
2. 241-TX-105	DW	A	2		IS	221	221
3. 241-TX-109	EHW	C	5		IS	139	139
4. 241-TX-110	DW	B	5		IS	168	168
5. 241-TX-111	DW	B	6		IS	134	134
6. 241-TX-112	NR	A	4		IS	236	236

PST89-3095-A-4

9 2 1 2 6 3 3 0 2 0 1

Table A-4. Recommended Single-Shell Tank Sampling Order. (Sheet 6 of 6)

Tank	Preliminary classification[a]		No. of risers[c]	Sampled[d]	Stabilize schedule (yr)	Waste status summary	
	Hazard	Radionuclide				Saltcake (in.)	Total (in.)
FY 1998 CST 1 (cont.)							
7. 241-TX-115	NR	B	3		IS	232	232
8. 241-TX-114	DW	B	5		IS	194	194
9. 241-TX-113	EHW	C	4		IS	220	220
10. 241-TX-116	EHW	B	3		IS	229	229
11. 241-TX-117	EHW	B	4		IS	227	227
12. 241-TX-118	EHW	>C	8		IS	126	126
FY 1998 CST 2							
1. 241-S-110	EHW	C	8		1996	204	251
2. 241-TY-101	EHW	>C	5	Yes	IS	0	43
3. 241-TY-103	EHW	>C	4	Yes	IS	0	59
4. 241-TY-105	NR	C	7	Yes	IS	0	84
5. 241-TY-106	NR	>C	7	Yes	IS	0	6
6. 241-TY-104	DW	C	6	Yes	IS	0	16
7. 241-TY-102	DW	A	4	Yes	IS	23	23

NOTE: The following tanks have less than 6 in. of waste: 241-AX-104-C-202 and -SX-115.
IS = Interim stabilized.
[a]Based on TRAC estimates that cannot be used for formal regulatory classification.
[b]Reference sample tank.
[c]Number of risers expected to allow access for sampling.
[d]Sampled during previous effort (Weiss 1986; Adams 1986).

PST89-3095-A-4

This page intentionally left blank.

9 2 1 2 6 5 3 0 2 0 3

9 2 1 2 6 3 3 0 2 0 4

APPENDIX B

FIELD SAMPLING DATA AND OPERATIONS

This page intentionally left blank.

9 2 1 2 6 5 3 0 2 0 5

CORE SAMPLING DATA SHEET

Tank: _____ Riser: _____ Date: _____

Sample, sampler, cask	Weight tranducer at top without sampler	Latch control unit		Weight transducer at top with empty sampler	Encoder at bottom of the drill string		Calculate encoder lengths	Actuator cable length counter	Calculate hydro liquid required	Hydro liquid added in. of H_2O	Indicated hydro liquid level by the weight transducer (ft)			Encoder at bottom with full sampler		Radiation reading on sampler (mrads)	Expected sampler length (in.)
		O	C		%	MAN						DN	UP	DIG	MAN		
											SAMPLER						
											RLU						
											SAMPLER						
											RLU						
											SAMPLER						
											RLU						
											SAMPLER						
											RLU						
											SAMPLER						
											RLU						
											SAMPLER						
											RLU						
											SAMPLER						
											RLU						
											SAMPLER						
											RLU						
											SAMPLER						
											RLU						
											SAMPLER						
											RLU						

Drill rod to riser distance: _____
Comments:

PS89-3095 B-1

Figure B-1. Core Sampling Data Sheet.

CHAIN OF CUSTODY RECORD

Shipment number _____ Date _____ Sample number _____

Tank _____ Riser _____ Segment _____ Cask serial number _____

Radiation survey data:

	Field	Laboratory
Over top dose rate	_____	_____
Side dose rate	_____	_____
Bottom dose rate	_____	_____
Smearable contamination	_____ (alpha)	_____ (alpha)
	_____ (beta-gamma)	_____ (beta-gamma)

Shipment description:

Expected sample length: _____

Information: (Include statement of laboratory tests to be performed.*)

*Reference laboratory work request, if available.

Point of origin:	Sender name and signature:	Date and time released:	Destination:	Recipient name and signature:	Date and time received:

Seal intact upon receipt?

Yes _____ No _____

Seal data consistent with this record?

Shipment number: Yes _____ No _____

Sample number: Yes _____ No _____

PSB9-3095-B-2

Figure B-2. Chain-of-Custody Record.

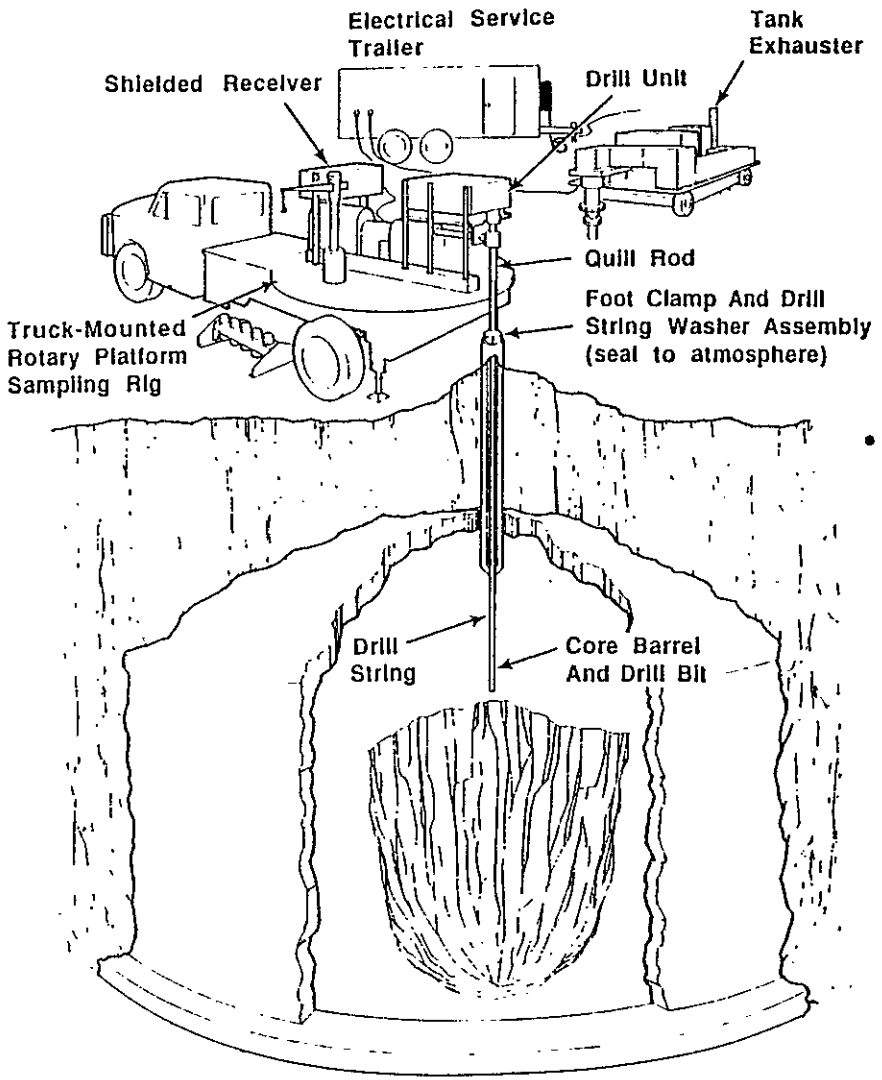

- **Drill string lowered, section by section, by hand to a precalculated position above the waste. Remaining distance to tank bottom is in multiples of 19 in.**

Figure B-3. Sampling Procedure. (Sheet 1 of 7)

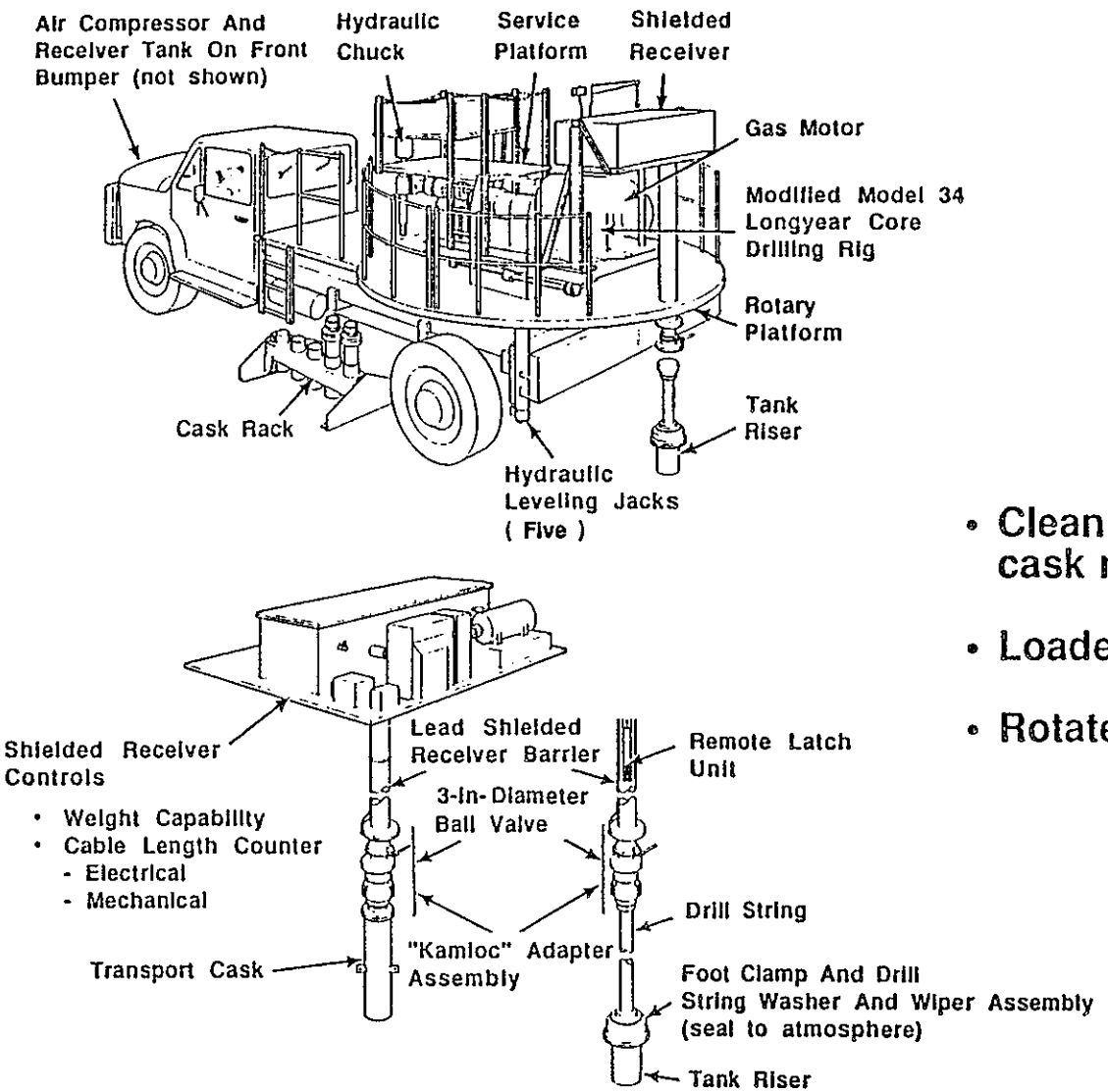

- Clean sampler transferred from cask rack
- Loaded into shielded receiver
- Rotated to drill string

Figure B-3. Sampling Procedure. (Sheet 2 of 7)

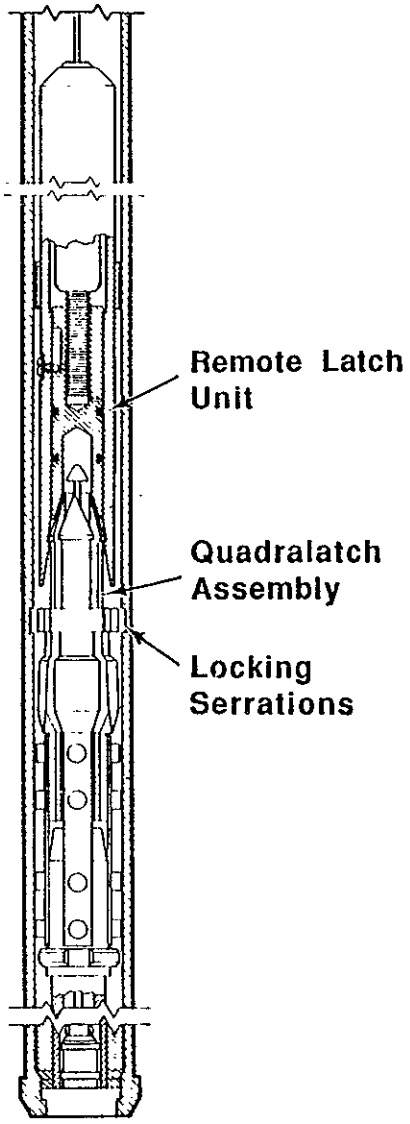

- Sampler lowered to the bottom of drill string
- Locked into core barrel
- Remote latch unit withdrawn

Figure B-3. Sampling Procedure. (Sheet 3 of 7)

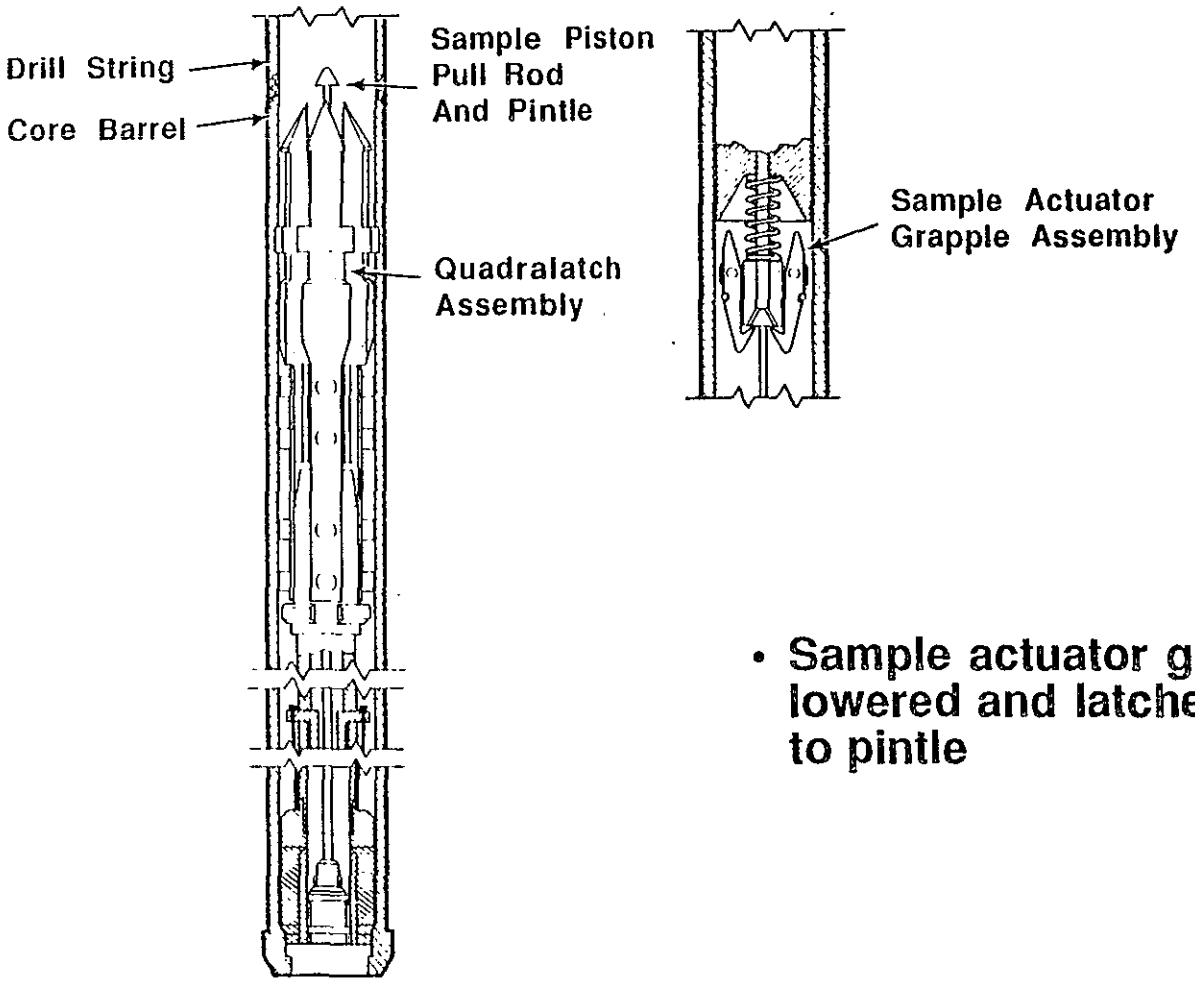

- Sample actuator grapple lowered and latched to pintle

Figure B-3. Sampling Procedure. (Sheet 4 of 7)

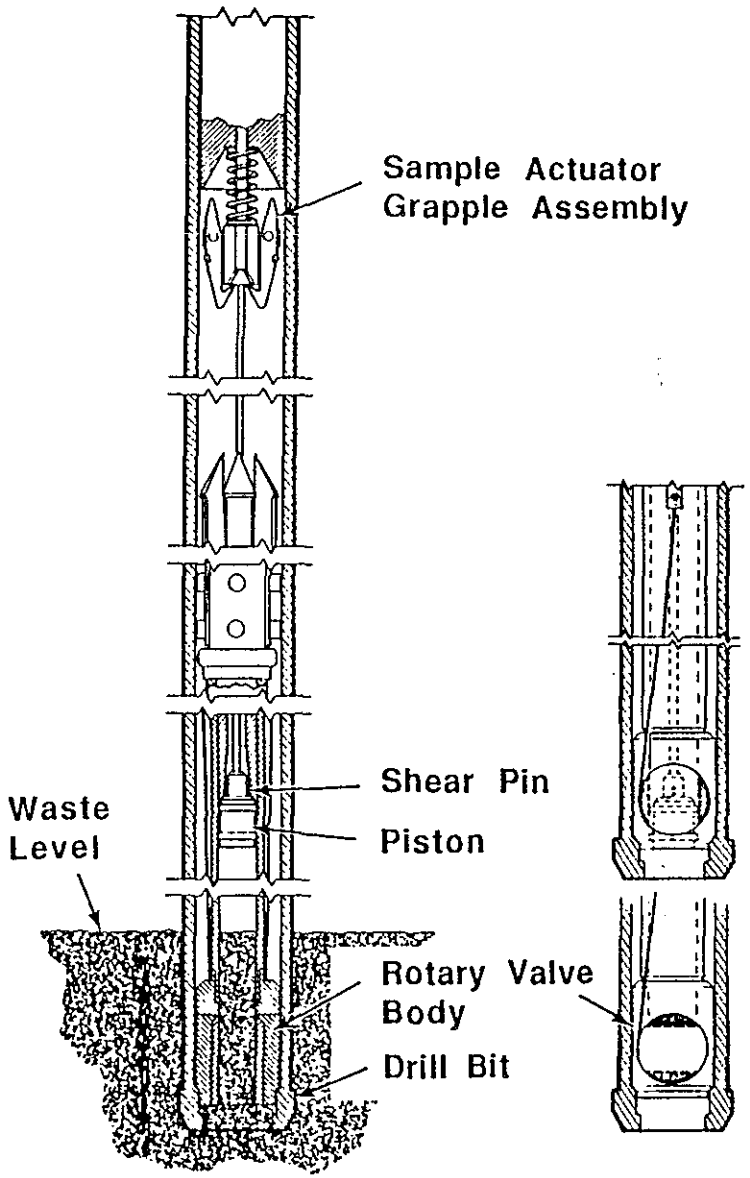

- Drill string driven (either pushed or rotated)
- At 19 in., rotary valve rotates to closed position
- Grapple is raised . Pull rod-shear pin shears at 40 lb force
- Sample is now enclosed and remains locked at bottom of drill string in core barrel

Figure B-3. Sampling Procedure. (Sheet 5 of 7)

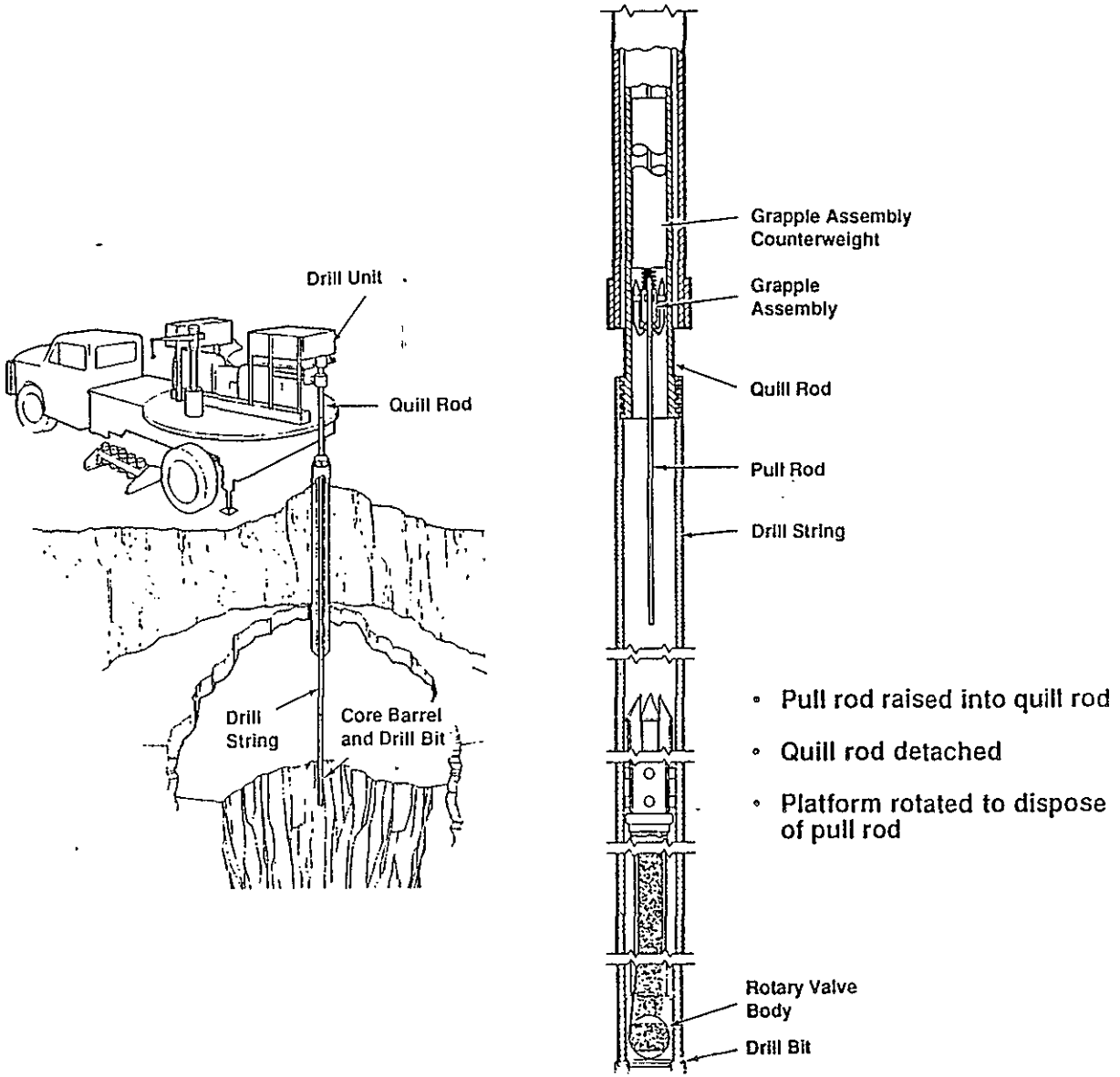

Figure B-3. Sampling Procedure. (Sheet 6 of 7)

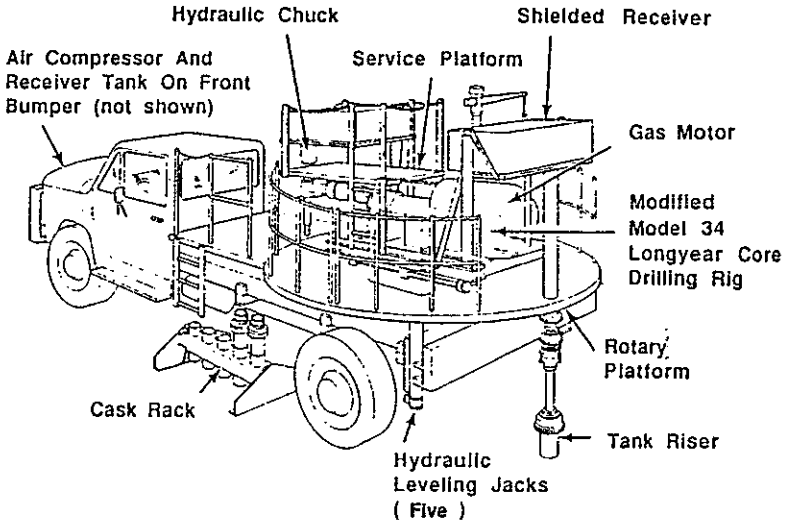

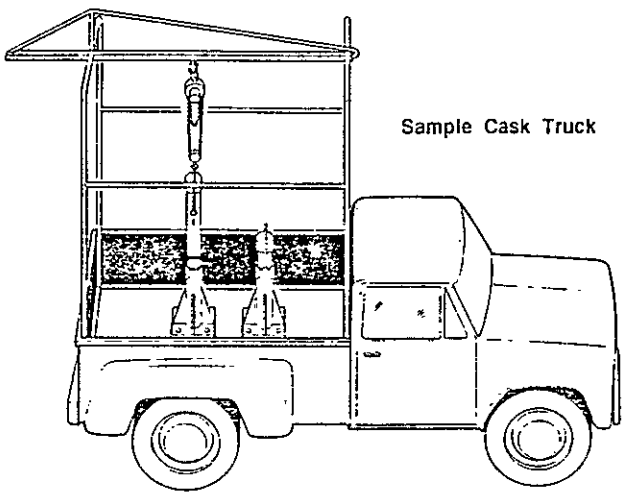

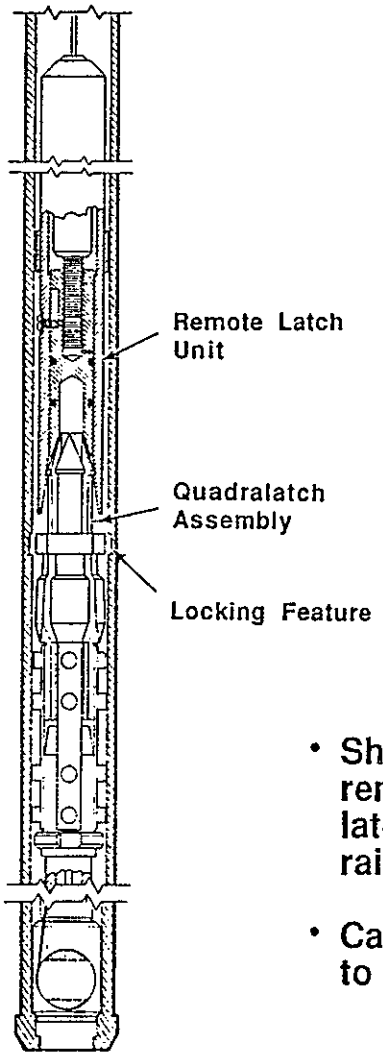

- Shielded receiver positioned, remote latch unit lowered, latched to quadralatch, sample raised, platform rotated to cask
- Cask with sample transported to laboratory for analysis

Figure B-3. Sampling Procedure. (Sheet 7 of 7)

This page intentionally left blank.

9 2 1 2 6 3 3 0 2 1 5

9 2 1 2 6 3 3 0 2 1 6

APPENDIX C

SINGLE-SHELL TANK DEVELOPMENT AND IMPLEMENTATION TASKS

This page intentionally left blank.

9 2 1 2 6 5 3 0 2 1 7

APPENDIX C

SINGLE-SHELL TANK DEVELOPMENT AND IMPLEMENTATION TASKS

This appendix summarizes development tasks that are needed to improve single-shell tank (SST) waste characterization capability. These tasks include the development and testing of new technology, evaluation of existing techniques or analysis requirements, and implementation of SW-846 methods. These developmental tasks are presented in groups based on the phase of sampling and analysis that they affect. Future evaluations of the significance of each to the overall program will result in a priority ranking of the tasks.

C.1 FIELD SAMPLING TASKS

C.1.1 Evaluate the need for refrigerated sample storage during sampling, transport, and laboratory storage. The purpose of this task is to determine the impact of sample handling at ambient temperatures. This task will become more important if significant quantities of volatile organics are found in the waste. This is not expected because the waste has undergone heat and aeration treatment during its storage. If volatiles are found, tests using spiked synthetic waste could be used to evaluate loss of volatile materials. Development of homogeneous organic waste standards may be a difficult part of this evaluation. A second aspect of this task will be to evaluate the effect of waste storage time on water content and analyte

concentrations. This will be done by measuring a known synthetic waste several times over a period of time.

C.1.2 Evaluate the effect of the silicone grease used to lubricate sampler components on the analysis of the waste. Contacting synthetic waste with the grease and evaluating what organics from the grease are transferred through the organic extractions will allow identification of organic components that are not originating from the sample and give more accurate background estimates of the system. The development and use of a suitable "field blank" will help quantify this potential problem. Field blanks are obtained by sampling synthetic wastes at the tank location to identify contaminates that are a function of the sampling and not the sample.

C.1.3 Evaluate the effect of the use of normal paraffin hydrocarbon (NPH) as hydrostatic seals for the drill string on the subsequent analyses. The quantity of NPH contamination in the sample needs to be determined. The seal material needs to be characterized by gas chromatography/mass selective detector (GC/MSD) so that it can be easily identified as a contaminant. The effect of NPH on the extraction of organics from the sample and on the leaching procedures caused by coating of solids with organic needs to be evaluated. Tests have been initiated using archived SST waste to evaluate the NPH extraction effects. Field blank tests will permit estimation of the NPH contamination concentration.

C.1.4 Develop an improved sampler for hard saltcake. A sampler capable of penetrating hard saltcake and hardened sludges and collecting samples needs to be designed, tested, and implemented.

9 2 1 2 6 3 3 0 2 1 9

C.1.5 Develop an improved sampler, drill bit, and core barrel for sampling the bottom 3 in. of waste in a tank. This sampler must be able to collect samples at the bottom of a tank without jeopardizing the integrity of the tank. The sampler must be designed, tested, and implemented.

C.1.6 Determine the effect of using stainless steel equipment for the collection and preparation of samples. Sample contamination by chromium or nickel from the steel is probably the major concern of this task. Contamination levels using synthetic wastes without chromium or nickel would give an indication of the stainless sampling equipment contributions to these analyses. The implementation of a field blank program with the proper synthetic waste materials will help monitor contamination problems from the sampling equipment. Iron, chrome, and nickel measurements on synthetic wastes stored in the sampler for various times will be performed to estimate the contamination level and affects of storage time. Determine appropriate material for construction of samplers. Investigate using plastic or other acceptable material. Investigate decreasing the unit cost of the sampler.

C.1.7 Complete the purchase and testing of the second sample truck. This task will permit more expedient sampling of the tanks.

C.1.8 Evaluate improved methods for determining total waste volumes in a tank such as improved in-tank photography, optical radar, and smart-system analysis.

C.1.9 Develop the ability to install new risers at different locations on a tank.

C.1.10 Develop better methods for detecting incomplete core segments in the field.

C.2 LABORATORY SAMPLE BREAK-DOWN TASKS

C.2.1 Develop an improved extrusion tray to permit easier collection of drainable liquid. The present tray does not have a drain opening and requires difficult manipulations in the hot cell to transfer drainable liquid to the collection vessel. A drain spout will be added to the tray to simplify hot-cell collection of these solutions. Evaluate other hot-cell tools to expedite sample extrusion and packaging in the hot cell.

C.2.2 Evaluate high shear homogenization equipment for segment and core composite mixing. The mixing of SST waste, with the consistency of peanut butter, can challenge conventional mixing equipment. Thorough homogenization is important to ensuring representative sampling. High shear homogenizers made of stainless steel may provide a means of mixing the waste more easily in a hot cell. These systems need to be tested on synthetic waste to evaluate (a) mixing ability, (b) cleanability (cross-contamination), and (c) operability in a hot cell. If successful, a system needs to be modified for hot-cell use, installed, and procedures written.

C.2.3 Develop detailed homogenization and composite procedures. Systematic procedures for preparing the waste composites need to be documented. The method includes defining quantities to be composited, methods of storing, and methods of subsampling.

C.2.4 Develop small (10 to 20 g) sample archiving system and storage capability. Storage of large quantities of highly radioactive waste is not possible because of limited hot-cell (shielded and ventilated) space to reduce radioactive exposure to personnel. Small shielded storage areas with proper ventilation need to be developed to permit storage of a large quantity of small SST samples. These samples would permit disposal of the bulk of the sample but allow

9 2 1 2 6 6 3 0 2 2 1

reanalysis of the sample for many components if required. Tests requiring large volumes of sample could not be reanalyzed.

C.2.5 Determine minimum volume of drainable liquid that can be analyzed or blended back into the solids.

C.3 LABORATORY ANALYTICAL TASKS

C.3.1 Chemical Methods

C.3.1.1 Develop microwave digestion equipment and procedures. Acid digestions for inductively coupled plasma (ICP)/graphite furnace atomic absorption (GFAA) sample preparation require 1 to 2 h. The Environmental Protection Agency (EPA) is evaluating the acceptability of microwave digestion systems that require only 10 to 15 min. The equipment needs to be set up and an acid digestion matrix developed for SST waste. Data needs to be collected on actual samples using both microwave and standard SW-846 techniques. If successful, a petition to the Washington Department of Ecology (Ecology) to use the method would be prepared.

C.3.1.2 Evaluate ICP interelement effects from uranium, rare earth, zirconium, and other spectrally rich components on elements (Pb, Cd, As, Se, Cr, Ba, and Ag) that are environmentally important. Hanford Site waste may contain relatively large quantities of uranium, rare earth, and other components that could interfere with the analysis of lead, cadmium, chromium, and other environmental significant elements. The ICP equipment used for SST analyses will be tested for interelement interferences from these and other potential Hanford Site waste components using standard techniques as described in SW-846.

C.3.1.3 Implement SW-846 ICP digestion procedures in the 222-S Laboratory. This task involves setting up digestion equipment, writing procedures, and training technologists in preparing samples using this standard method.

C.3.1.4 Set up GFAA capabilities at the 222-S Laboratory. This task involves purchasing, installing, and testing a new GFAA system. Standard SW-846 procedures need to be implemented and personnel trained for routine operation.

C.3.1.5 Evaluate Westinghouse Hanford Company (Westinghouse Hanford) hydride atomic absorption (HYAA) procedures for arsenic and selenium against SW-846 procedures. Samples need to be analyzed using both techniques to show equivalency or superiority. This requires setting up SW-846 procedures and evaluating them against existing methods. Data will be documented for presentation to regulatory groups.

C.3.1.6 Develop reliable mercury analyses. Standard cold vapor atomic absorption (CVAA) techniques have not provided reliable results for Hanford waste matrices. This task requires the evaluation of a gold amalgam concentrator to reduce mercury interferences. If successful, this system needs to be documented and compared to standard procedures.

C.3.1.7 Develop a sulfide method. Standard sulfide methods are not suitable for analysis of Hanford waste matrices. A method to determine sulfide in solid samples without interference from waste oxidants needs to be developed. If successfully developed, the comparison to SW-846 procedures will be performed and documented.

9 2 1 2 6 5 3 0 2 2 3

C.3.1.8 Evaluate Cr(VI) methods. Three methods are identified in SW-846 for Cr(VI) analysis. The most sensitive are the diphenylcarbizide colorimetric method and a flame atomic absorption (FAA) method. Both these methods have potential interferences in SST matrices. These interferences need to be evaluated and eliminated by procedure modifications if required. If the standard methods are inadequate, ion chromatography (IC) or pulse polarography (PP) techniques may need to be evaluated. If successfully developed, the comparison to SW-846 procedures will be performed and documented.

C.3.1.9 Evaluate Organic Screening Methods. Normal organic screening tests (e.g., TOC, TOX) give limited information about the organic compound. They also may be insensitive to some materials. Rapid solid extractions with gas chromatography (GC) analysis of extracts may provide more complete information on the types of organics in SST without requiring full GC/mass spectrometry detection (MSD) sample preparation and analysis procedures. Screening tests for volatile and semivolatile organics are described in SW-846 and need to be evaluated on SST matrices to determine if an indication of organic composition and levels can be obtained. The determination of volatiles in SST waste is complicated by the sample handling procedures. Small (<1 g) portions of a core segment (before homogenization) could be taken and placed in a sealed vial. A standard headspace procedure in SW-846 would be used to evaluate the level of volatile organics in the sample. If successful, this could be the simplest method of evaluating the presence of volatiles in the waste. By repeating the analysis after an extended time it could also be used to determine if other organics are degrading to volatile components.

C.3.1.10 Develop a volatile organic sampling train (VOST) method for analyzing organics and other components in the SST atmosphere above the waste. This method would require developing procedures and equipment to quantitatively sample the atmosphere in a tank

and concentrate it by trapping on chromatographic media or cryogenics before analyzing by GC. The standard VOST technology would probably have to be modified because it was designed for a dynamic incinerator system rather than static tank air sampling. Successful implementation of the technology could (1) eliminate the questions concerning sample integrity for volatile organics and (2) provide data on toxic gas evolution during long-term storage of the waste.

C.3.1.11 Develop purge and trap and laboratory headspace capabilities for volatile organics at Westinghouse Hanford laboratories. This requires setting up and testing equipment, writing procedures, and training personnel.

C.3.1.12 Develop TOX capability for SST waste at the 222-S Laboratory. This requires setting up and testing equipment, preparing procedures, and training personnel.

C.3.1.13 Develop PCB/Pesticide analysis capability at 222-S Laboratory. This requires setting up and testing equipment, preparing procedures, and training personnel.

C.3.1.14 Evaluate the need for analysis of cyanide speciation (e.g., $Fe(CN)_6^{-4}$) and develop technology if needed.

C.3.1.15 Evaluate possible remote techniques for the hot cell, such as fiber-optic near infra-red (NIR) spectroscopy and X-ray spectroscopy, that can be used to provide rapid vertical heterogeneity information about a segment.

C.3.1.16 Evaluate methods such as IC for complexant and carboxylic acid determinations.

9 2 1 2 6 5 3 0 2 2 5

C.3.1.17 Evaluate DNAAS for measuring fissile content of SST wastes.

C.3.1.18 If TGA must be used for weight percent water because of excessive exposure to personnel, a comparison with large sample size gravimetric methods will be performed.

C.3.2 Radiochemical Methods

C.3.2.1 Test and implement uranium separation for alpha isotopic measurements at Westinghouse Hanford. This procedure can be transferred from Pacific Northwest Laboratories (PNL). Performance on SST wastes may need to be determined. Procedures need to be written and technologists trained.

C.3.2.2 Same as Item C.3.2.1 except for thorium isotopes.

C.3.2.3 Same as Item C.3.2.1 except for ^{226}Ra and ^{228}Ra.

C.3.2.4 Same as Item C.3.2.1 except for ^{210}Po.

C.3.2.5 Same as Item C.3.2.1 except for ^{210}Pb.

C.3.2.6 Same as Item C.3.2.1 except for ^{79}Se.

C.3.2.7 Same as Item C.3.2.1 except for ^{126}Sn.

C.3.2.8 Same as Item C.3.2.1 except for ^{93}Zr.

C.3.2.9 Same as Item C.3.2.1 except for ^{63}Ni.

C.3.2.10 Same as Item C.3.2.1 except for ^{151}Sm.

C.3.2.11 Develop a method for determining ^{59}Ni. This may require the use of Auger electron counting, X-ray counting, or MS of the separated nickel in the waste.

C.3.2.12 Develop a MS analysis method for the determination of ^{135}Cs in SST wastes. This will require a chemical separation of cesium and MS procedure for measuring ^{135}Cs or ^{135}Cs to ^{137}Cs ratio. The PNL has some experience with this technology, but probably have not applied it to SST matrices.

C.3.2.13 Develop and implement "hot" ICP/MS capability at PNL and Westinghouse Hanford. This requires the purchase and modification of commercial ICP/MS equipment to contain radioactive samples. Methods for rapid analysis of long-lived isotopes would be developed. Technology to permit routine analysis of SST samples would be developed. This would require the documentation of operational requirements, measurement performance, and procedures.

C.3.2.14 Evaluate ^{137}Cs removal technology to improve trace analysis of other gamma emitters. If detection limits for other gamma emitters such as ^{94}Nb, ^{60}Co, and ^{231}Pa are too high because of background, then a rapid method for removing Cs would be developed to improve sensitivity for these isotopes. The method would be evaluated on actual samples to determine the degree of improvement. Procedures would be written and implemented if successful.

9 2 1 2 6 3 3 0 2 2 7

C.3.2.15 Develop small volume tritium method. The Westinghouse Hanford methods for tritium are based on large sample sizes. Modifications to the distillation equipment need to be developed to optimize tritium recovery from small SST samples. Equipment needs to be modified, tested, and the procedure performance documented.

C.3.2.16 Install low-background alpha counting systems for SST total alpha analyses at the 222-S Laboratory. Alpha counting systems with <1 c/min and high-beta tolerances are needed to perform total alpha analyses at 10 nCi/g levels. This capability will help eliminate lengthy separations for individual alpha isotopes such as ^{239}Pu, ^{241}Am, and ^{237}Np.

C.3.2.17 Evaluate possible shielded remote radionuclide beta-gamma sensors that can be used to obtain rapid vertical hetereogenity information about a segment.

C.4 PHYSICAL TESTING TASKS

C.4.1 Develop an alternate thermal output measurement capability. Thermal output of the waste can be calculated from the isotopic content of the waste. If this calculation is inadequate, microcalorimetry technology development may be required. This would involve the purchase of a microcalorimeter and development of procedures applicable to SST waste. Since these systems must measure small heat outputs, control of adiabatic conditions and sensitive electronics can be critical. Other methods may need to be explored.

C.4.2 Develop thermal conductivity measurement. A system to measure thermal conductivity of the waste needs to be developed. Large sample sizes required for standard methods may

require the equipment to be adapted to hot-cell operation so that personnel exposure can be minimized. Equipment needs to be developed, tested, and performance and procedures documented. Technology from PNL may be transferable.

C.4.3 Develop hot-cell rheology systems for the 222-S Laboratory. Large sample sizes and high exposure limit viscosity and rheology measurements outside of a hot cell. Remote rheology systems need to be developed for use at the 222-S Laboratory. This task may require some additional hot-cell modifications to accommodate the equipment. Equipment needs to be installed, tested, and documented.

C.4.4 Develop a Miller number measurement capability for abrasitivity measurement. Equipment capable of being used in the hot cell needs to be evaluated, purchased, modified, and tested. Performance and procedures need to be documented. Technology being developed at PNL will be transferred.

C.4.5 Acquire a penetrometer capability at the 222-S Laboratory. Equipment needs to be purchased, installed, and tested. Technology developed at PNL needs to be transferred. Procedures need to be written.

C.5 WASTE CHARACTERISTICS TESTING TASKS

C.5.1 Implement a modified EP toxicity procedure in the 222-S Laboratory hot cell. Equipment needs to be purchased, installed, and tested. Procedures need to be written and personnel trained.

9 2 1 2 6 5 3 0 2 2 9

C.5.2 Evaluate ICP standard addition results on EP toxicity extracts of SST wastes. Determine affect of acetate matrix on calibration and backgrounds. Determine background levels of EP toxicity methods in acetic acid. Optimize ICP conditions for analysis of EP toxicity extracts.

C.5.3 Same as Item 3 for GFAA.

C.5.4 Same as Item 3 for mercury analysis.

C.5.5 Develop scaled-down reactivity test for SST samples containing >250 μg/g CN^-. Requires developing and testing of reactor and documentation of procedure. The scaled-down reactor will reduce the exposure to personnel and minimize the generation of highly radioactive laboratory wastes.

C.6 WASTE CRITERIA EVALUATION TASKS

C.6.1 Evaluate appropriateness of the toxic equivalent concentration (TEC) calculation to designation of SST wastes. Although analysis of wastes does not provide chemical compound information needed for TEC, it may be possible to used chemical equilibria to predict compounds or worse-case compound scenarios to obtain estimates of waste classification.

C.6.2 Evaluate toxilogical properties of SST test results. Establish basis for evaluation. Experienced toxicologists can look at the chemical components of waste and predict the effects of the wastes on fish and animals. This evaluation will be used to help determine if further biological testing is needed.

C.7 GENERAL

C.7.1 Complete time, cost, and ALARA studies for SST waste characterization operations. This work will allow the impacts of different sampling, preparation, and/or analysis schemes to be quantified with respect to the affects on program schedule, cost, and dose to workers.

C.7.2 Develop data management and validation system for SST characterization. The SST characterization program will generate large amounts of data. Computerized methods of compiling and evaluating this data need to be developed which will minimize the data input times. This will require defining data requirements for different users: laboratory, performance assessment, process development, programmatic, and regulatory. Evaluation of the data will include such things as material balance, charge balance, radionuclide balance (total alpha versus individual total), and comparison to environmental limits or waste criteria such as toxic equivalent concentration.

C.7.3 Request and attain agency approval of modifications to testing procedures. Some analytical methods and sampling procedures will be different from SW-846 procedures. A system or procedure for documenting these differences and the supporting data requirements that are acceptable to Ecology needs to be developed. The supporting data requirements need to be defined. This agreement will ensure data will be acceptable to support closure plans.

C.7.4 Develop laboratory control standards for SST-type matrices. No standard reference materials are available for SST waste matrices. Synthetic standards will be developed to simulate major waste forms (sludge, saltcake, liquid) to help evaluate analytical method performance.

9 2 1 2 6 5 3 0 2 3 1

C.7.5 A SST Procedures Manual will be developed that contains Westinghouse Hanford procedures for sampling and Westinghouse Hanford and PNL procedures for sample extrusion, preparation, and analysis.

C.7.6 The requirements for performing biological testing to designate waste based on "Criteria" methods will be evaluated for Phase II applications. This task will include determining toxilogical factors to the reviewed including assessment for carcinogenicity.

C.7.7 Develop preliminary sorting criteria for tanks. Determine which tanks are candidates for retrieval, in-place disposal, or cannot be categorized based on Phase I data. Such criteria will be based upon comparative evaluations of various retrieval, pretreatment, treatment and disposal technologies in terms of (1) long-term public health and safety, (2) environmental protection, (3) short-term health and safety (public and occupational), (4) costs and (5) schedule considerations.

C.7.8 Complete analysis of second set of archive samples at PNL. These analyses include trials of EPA (SW-846) protocol procedures on archived waste samples, plus an initial evaluation of the use of radionuclide ratios for estimating specific isotope activities.

C.7.9 Develop waste characterization criteria for retrieval, pretreatment, and treatment of SST wastes, based upon technology identification and screening studies.

C.7.10 Develop glassware cleaning procedures and evaluate methods for handling HCl wastes from inorganic metal analyses.

C.7.11 Prepare a Quality Assurance Project Plan for SST waste characterization.

C.8 ADDITIONAL SAMPLING CONSIDERATIONS

C.8.1 Define the uses of vertical waste hetereogeneity information and the parameters of interest. Develop methods for estimating the composition of missing core segment samples and unsampled waste in the bottom of a tank.

C.8.2 Determine the consequences of using analytical results from composite samples.

C.8.3 Determine consequences of significant bias introduced by lack of randomization in sample locations.

C.8.4 Implement the reference sampling plan on SSTs containing hard wastes.

C.8.5 Determine error in volume estimate of SST wastes.

9 2 1 2 6 3 3 0 2 3 3

9 2 1 2 6 5 3 0 2 3 4

APPENDIX D

QUALITY ASSURANCE/QUALITY CONTROL PROCEDURES

This page intentionally left blank.

9 2 1 2 6 5 3 0 2 3 5

QUALITY ASSURANCE/QUALITY CONTROL PROCEDURES

INTRODUCTION

The work performed for single-shell tank (SST) characterization is monitored under the requirements specified by either the Westinghouse Hanford Company (Westinghouse Hanford) or the Pacific Northwest Laboratory (PNL) quality assurance guidelines. The SST characterization is performed by several groups within Westinghouse Hanford and PNL which operate under different quality assurance plans (QAP). An integrated QAP for SST characterization is being developed. This appendix identifies quality assurance/quality control (QA/QC) information from Westinghouse Hanford and PNL sources that correspond to the requirements specified in the U.S. Environmental Protection Agency (EPA) *Interim Guidelines and Specifications for Preparing Quality Assurance Project Plan* (QAMS-005/80).

The Westinghouse Hanford laboratory QA plan is designed to meet the 18 major requirements of NQA-1 as adapted for laboratories in ASTM Guide C1009-83, *Establishing a Quality Assurance Program for Analytical Chemistry Laboratories Within the Nuclear Industry.* The PNL laboratory QA Plan is designed to meet the EPA Contract Laboratory Program (CLP) requirements and is organized according to the 16 major areas identified in the Interim Guidelines and Specifications for Preparing Quality Assurance Project Plans (QAMS-005/80). These QA plans, based on the recommendations of two different agencies, have several common elements as noted in Table D-1. The PNL Quality Assurance Project Plan (QAPP) matches the EPA guidelines, but addresses only

CLP analytical requirements. The Westinghouse Hanford QAPP does not follow the EPA guidelines, but contains most of the desired information. Because the Westinghouse Hanford QAPP does not match the EPA guidelines, some of the SST QA information requested in the EPA QA guidelines are summarized in the following sections.

PROJECT DESCRIPTION

9 2 1 2 6 3 0 2 3 7

The SST Waste Characterization Program is directed at characterizing the waste in the 149 SSTs at Hanford to meet requirements for regulatory control, process development for in-place or retrieve options, and performance assessment of these options. The project requires core sampling of the tanks and analysis of the samples for inorganic and organic chemicals, radionuclides, physical properties, and waste characteristics. Specific details are described in this Waste Characterization Plan (WCP).

PROJECT ORGANIZATION

The project requires the interface of many Westinghouse Hanford organizations and several PNL organizations. The overall program is the responsibility of Westinghouse Hanford; however, PNL will also provide analytical services, interlaboratory verifications, and performance assessment of the data. An organizational chart showing the interaction and responsibilities of Westinghouse

Hanford organizations is shown in Figure D-1. Present organizations are undergoing numerous changes as a result of the recent Hanford consolidation. An Office of Sample Management (OSM) will be set up in the future to coordinate sample analysis and data management activities.

QUALITY ASSURANCE OBJECTIVES FOR MEASUREMENT DATA IN TERMS OF PRECISION, ACCURACY, COMPLETENESS, REPRESENTATIVENESS, AND COMPARABILITY

The QA objectives for each major measurement parameter for SST wastes will be defined. This object will depend, to a certain extent, on the criteria developed for sorting the tanks for retrieval or in-place disposal. The PNL laboratory has identified these objectives for their CLP work. The Westinghouse Hanford Laboratory Measurements Control System (LMCS) sets precision and accuracy limits for its analyses; but they are not specific to SST work. These limits are for most cases established from historical performance data. The precision and accuracy objectives are also a function of the level of concentration for the parameter. If the project objective is near the detection limits of the method, larger errors will be obtained. The objective for "completeness" is 100% valid data from all the measurement systems; however, >90% is a more reasonable estimate. The "representativeness" of the data will be better known after the reference sampling plan is completed. This reference sampling plan will define the variability for the different SST characterization operations. The completion of this plan will help define the objectives of the data measurements systems.

SAMPLING PROCEDURES

The SST sampling procedures have been described in Section 3.0 of this document and include the forms used to document the sampling.

SAMPLE CUSTODY

The Chain-of-Custody procedure for field (tank farm) operations is described in the sampling procedure and is shown in Figure B-2 of the WCP. Because of the high radioactivity, and solid and high pH of the sample, no preservation techniques are used.

The samples received by the Process Chemistry Laboratories (PCL) are logged in on the form shown in Figure D-2. The sample casks are tagged and sealed. After the sample is broken down, portions are distributed to the ACSL, who track the sample and results using the analytical traveler card shown in Figure D-3. Samples are handled according to routine standard operating procedures for the laboratory. Samples will be shipped to PNL under a Chain-of-Custody procedure.

9 2 1 2 6 3 3 0 2 3 9

CALIBRATION PROCEDURES AND FREQUENCY

Calibration procedures, including standards, are described in the applicable analytical procedures. Depending on the analysis, standards are prepared by the Westinghouse Hanford Data Measurement and Control group or purchased. Primary instrument control at Westinghouse Hanford is under the Laboratory Instrument Calibration Control Board (LICCB), a function which identifies the calibration necessary for a particular instrument. Calibrated instruments are tagged. Calibration frequency is tracked by computer.

Analytical procedures are calibrated based on experience or judgment or when trends are spotted by the LMCS computer program. Computer-controlled instrument calibrations are stored at the computer; others are stored at the laboratory leader's office or location of records documented by LICCB. The Instrument Calibration Record System (ICRS) tracks the calibration information.

9 2 1 2 6 5 3 0 2 4 0

ANALYTICAL PROCEDURES

Analysis of SST samples are performed according to written procedures. These procedures are described in Section 5.0 of the WCP. When possible, EPA approved procedures are used; however, modifications or different procedures than EPA are also identified in the WCP. Very few radiochemical procedures are described in EPA documents. The procedures used by Westinghouse

Hanford, PNL, and other laboratories are described in Section 5.0. The writing and control of Westinghouse Hanford procedures is described in the laboratory's quality assurance plan.

DATA REDUCTION, VALIDATION, AND REPORTING

After analyses are completed by a technologist at Westinghouse Hanford, the result is transmitted to the laboratory leader for review and calculation, if not performed by the instrument. The calculations are a part of each analytical procedure. The results are entered into the Laboratory Customer Communication System (LCCS) which tracks the status of the samples and prepares reports. Data is reviewed by the technologist, the laboratory leader, a supervisor, and sometimes the chemist in charge of the procedure. The SST data in the ACSL report is further reviewed by the PCL SST chemist before transmitting to the WTC organization. Additional calculations may be performed on the data to correct for other sample treatment performed by PCL before submitting the data to WTC. The data may also be examined for inconsistencies by checking the material balance, charge balance, and cross checking results from different sample treatments. Data that is identified as questionable will be checked to ensure data has been properly handled. If problems cannot be explained, reanalysis will be requested.

9 2 1 2 6 5 3 0 2 4 1

INTERNAL QUALITY CONTROL CHECKS

All the parameters analyzed by EPA methods will follow the QC protocols described in these methods. The reference tank sampling plan identifies a 100% duplicate analysis frequency. A replicate analysis frequency will be established based on the results of this study and will be high enough to provide a statistical evaluation of the data. Replicate analysis results are tracked using the "Referee" program in LMCS. The LMCS also provides standard control charts and identifies outliers. Blanks are routinely run with each procedure. In addition, field blanks and sample preparation blanks will be prepared and monitored. Radiochemical recoveries are monitored by one of three methods: (1) spiking with a different isotope of the same element, (2) using a known quantity of nonradioactive carrier, or (3) spiking a second portion of sample with the same isotope. Control standards are analyzed on a routine frequency to monitor the performance of the technologist, procedure, reagents, and instruments.

PERFORMANCE AND SYSTEM AUDITS

The analytical measurement systems at Westinghouse Hanford are audited internally by the Data Management and Control Group (DMCG). In addition, the laboratory is also audited by the Chemical Processing Quality Engineering organization. The SST characterization program is further reviewed by the Environmental Quality Assurance organization. The DMCG reviews data and measurement systems and reports problems to management.

PREVENTIVE MAINTENANCE

Analytical instruments at Westinghouse Hanford are not under a formal routine preventive maintenance (PM) program. Chemists oversee the operation and condition of equipment and are responsible for ordering components and seeing that they are installed. Maintenance logs are maintained for the major pieces of equipment. Spare parts are maintained for most major pieces of equipment. In addition, the laboratory has an in-house instrument repair group which maintains a supply of routine electronic parts. Calibration and instrument performance is checked following any maintenance activity that may affect the data.

9 2 1 2 6 5 3 0 2 4 3

SPECIFIC ROUTINE PROCEDURES USED TO ASSESS DATA PRECISION, ACCURACY, AND COMPLETENESS

The specific statistical equations used to evaluate standards and referee data at Westinghouse Hanford are contained in the LMCS computer program. Accuracy and precision are evaluated using standards, duplicate analyses, and spiked samples. Control limits for procedures and measurements systems are established from standards data. The LCCS computer program tracks the status and degree of completion of analyses for samples.

CORRECTIVE ACTION

If a specification limit can be defined for a parameter, the Westinghouse Hanford LCCS program can be used to flag the analysis as being outside the expected limit and an "out-of-tolerance" report can be issued for analyses not tracked by the LCCS system. If a standard or referee result is outside of the established control limit, and "Off Standard Condition Report" is issued that must be resolved by the immediate management or technical leader. Deficiencies found in outside audits by the Data Management Control Group or Quality Engineering Chemical Processing Organization are addressed by management. Audit responses are tracked by the Automated Tracking System (ATS) program.

QUALITY ASSURANCE REPORTS TO MANAGEMENT

Both the LMCS and LCCS programs generate periodic reports for management review. The DMCG evaluates these reports and different analytical measurement systems and prepares reports for management. Outside audits are reported to management for review and corrective action.

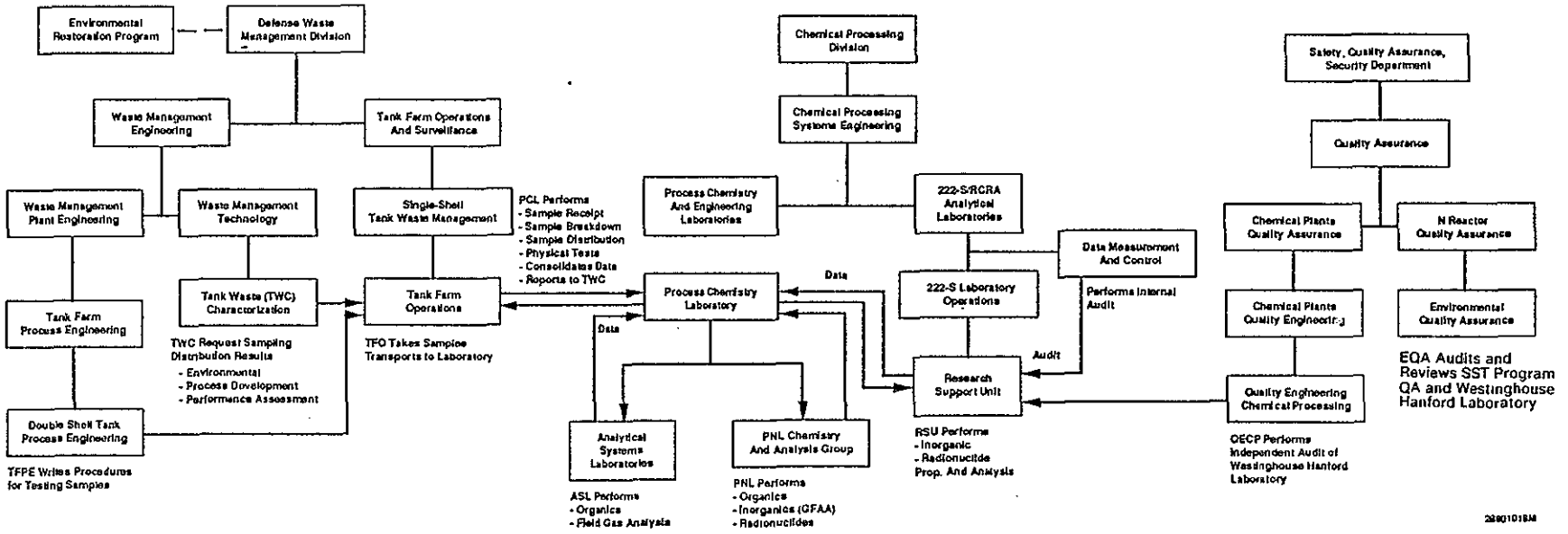

Figure D-1. Single-Shell Tank Waste Characterization Organization Chart.

734 Date _____ Sample Point _____ Chemist _____

Sample Identification _____ Customer _____

Notebook _____ Page _____ CLU Identification Numbers _____

Comments _____ AL Identification Numbers _____

Location and Disposition _____

735 Date _____ Sample Point _____ Chemist _____

Sample Identification _____ Customer _____

Notebook _____ Page _____ CLU Identification Numbers _____

Comments _____ AL Identification Numbers _____

Location and Disposition _____

736 Date _____ Sample Point _____ Chemist _____

Sample Identification _____ Customer _____

Notebook _____ Page _____ CLU Identification Numbers _____

Comments _____ AL Identification Numbers _____

Location and Disposition _____

737 Date _____ Sample Point _____ Chemist _____

Sample Identification _____ Customer _____

Notebook _____ Page _____ CLU Identification Numbers _____

Comments _____ AL Identification Numbers _____

Location and Disposition _____

738 Date _____ Sample Point _____ Chemist _____

Sample Identification _____ Customer _____

Notebook _____ Page _____ CLU Identification Numbers _____

Comments _____ AL Identification Numbers _____

Location and Disposition _____

Figure D-2. Process Chemistry Laboratories Sample Receipt Log.

9 2 1 2 6 3 3 0 2 4 6

Serial Number	Sample Point	Date	Time Issued	Priority

Determination	Method and Standard	Result Units	Charge Code	Reruns

Sample Size	Customer Identification

Remarks. Calculations. Results.

Analyst 1	Analyst 2	Analyst 3	Analyst 4	Analyst 5
Hours	Hours	Hours	Hours	Hours

Date	Time Completed	Laboratory Unit Manager

PS89-3095-D-3

Figure D-3. Laboratory Customer Communication System Sample Card.

9 2 1 2 6 5 3 0 2 4 7

Table D-1. Comparison of Contents for U.S. Environmental Protection Agency and Nuclear Quality Assurance Quality Assurance Plans.

Contents order	EPA-QAMS-005/80	ASTM C-1009-83	NQA-1
1.	Title	Organization	Organization
2.	Table of contents	Quality Assurance program	Quality Assurance program
3.	Project description	Training and qualification	Design Control
4.	Project organization/ responsibility	Procedures	Procurement Document Control
5.	Quality Assurance objectives (precision/accuracy)	Laboratory records	Instructions, procedures, and drawings
6.	Sampling procedures	Control of records	Document Control
7.	Sample custody	Control of equipment and materials	Control of purchased items and services
8.	Calibration procedures and frequency	Control of measurements	Identification and control of items
9.	Analytical procedures	Deficiencies and corrective action	Control of process
10.	Data reduction, validation reporting		Inspection
11.	Internal QC checks		Test control
12.	Performance and system audits		Control of measuring and test equipment
13.	Preventative maintenance		Handling storage and shipping
14.	Procedures to assess precision and accuracy and completeness		Inspection, test, and operation status
15.	Corrective action		Control of nonconforming items
16.	Quality Assurance reports to management		Corrective action
17.			Quality Assurance records
18.			Audits

PST89-3095-D-1

9 2 1 2 6 6 3 0 2 4 8

This page intentionally left blank.

9 2 1 2 6 5 3 0 2 4 9

APPENDIX E

ANALYTICAL PROCEDURE INFORMATION

9 2 1 2 6 6 3 0 2 5 0

This page intentionally left blank.

9 2 1 2 6 6 3 0 2 5 1

Table E-1. Single-Shell Tank Waste Characterization Plan--Methods and Detection Limits Key. (Sheet 1 of 16)

Parameter	Type of constituent or property to be determined.
Analyte	Specific constituent or property measured.
Composite type	Composite type: segment, core, tank, or tank farm.
Waste fraction	Fraction of waste analyzed: D--direct sample DL--drainable liquid A--acid-digested sample W--water-soluble portion of sample F--fusion and acid dissolution Or new sample prepared: Ext--extracted sample EP--extraction procedure
Reference preparation method	The SW-846 method or other referenceable method for preparing the SST sample for analysis or for comparing to Westinghouse Hanford and PNL methods. The SW-846 are usually four-digit numbers. ESM--DOE Environmental Survey Manual. WAC-83-13--Washington State Chemical Methods. CLP--EPA Contract Laboratory Program procedures. HASL--Environmental Measurements Laboratory Procedure Manual. MXW--Standard Method of Examination and Analysis of Water and Waste Waters. ASTM--American Society for Testing Materials.
Reference analytical method	The SW-846 method or other referenceable method for determining the concentration of a constituent. Some constituents may require identification of two methods: (1) chemical separation procedure, or (2) measurement method, such as the alpha counting. Alternative methods may also be specified in this column. Example ICP method is 6010; graphite furnace atomic absorption methods are 7XXX.
PNL preparation method	PNL preparation method availability.
PNL analytical method	PNL analytical method availability.
Westinghouse Hanford preparation method	Westinghouse Hanford sample preparation method availability. May also include alternate method.
Westinghouse Hanford analytical method	Westinghouse Hanford sample analysis method availability.
Reference limit	A measurement requirement identified in a referenceable source. The limit may not be directly applicable to SST analysis requirements, but serves as a guide to evaluate procedure capabilities based on method detection limits. Different sources were used for different analytes and are specified in the "Comment" column.
Method detection limit	Method detection limits are based on the instrument detection limit multiplied by the expected dilution factor from sample preparation. The basis for the limits are specified in the "Comment" column and vary for different analytes. Detection limits also vary with waste fraction because of different sample preparation.
Rationale	The reason the analysis is performed. Rationales are regulatory (R), performance assessment (PA), or process development (PD).
Comment	This section is used to identify assumptions used for limit calculations, identify limitations and possible deviations from SW-846 procedures, and provide other supporting information. If deviations are not identified, the procedures agree or SW-846 is not applicable.
Notations	*Elements on PNL ARL-3580 ICP. LBRC--Level below regulatory concern. NRM--No routine method. NA--Not available. IM--Internal method. TBD--To be determined. DF--Dilution factor.

PST89-3095-E-1

Table E-1. Single-Shell Tank Waste Characterization Plan--Methods and Detection Limits. (Sheet 2 of 16)

Parameter	Analyte	Composite type	Waste fraction	Reference preparation method	Reference analytical method	PNL preparation method	PNL analytical method	Westinghouse Hanford preparation method	Westinghouse Hanford analytical method	Reference limit	Method detection limit	Rationale	Comments and potential SW-846 deviations
Metals	Al*	Core	A	3050	6010	CLP-SOW	CLP-200.7	NRM	IM	200 µg/L	2.9 µg/g	PD	<1 g of sample may be used if radiation dose is too high.
CLP			W	3010							2.9 µg/g		<100 mL of H_2O and DL is used.
			DL	3010							2.9 µg/mL		ICP reference limit is CLP-SOW requirements.
			F	ASTM-C126		IM		IM			58 µg/g		
	Ag	Core	A	3050	6010/7760	CLP-SOW	CLP-200.7	NRM	IM	10 µg/L	0.3 µg/g	R, PA	Silver LBRC = 500 mg/L. Detection limits are based on following dilutions: A = 1 g = 100 mL, DF = 100.
			W	3010							0.3 µg/g		W - 10 g - 100 mL - 10 mL - 100 mL, DF = 100.
			DL	3010							0.3 µg/mL		DL - 1 mL - 100 mL, DF = 100.
			F	C-126							6.0 µg/g		F - 0.5 g - 100 mL - 1 mL - 10 mL, DF = 2,000.
	As	Core	A	3050	6010	CLP-SOW	CLP-200.7	NRM	IM	10 µg/L	2.1 µg/g	R, PA	GFAAs at Hanford presently do not use Zeeman or Smith-Heiftje background correction.
			W	3010/3020	7060/7061		CLP-206.2		IM		2.1 µg/g		Westinghouse Hanford uses HYAA for low-level arsenic analysis and HYAA sample preparation different than SW-846.
			DL	3010/3020	7060/7061						2.1 µg/mL		Arsenic LBRC limit = 500 µg/L.
			F	C-126							42 µg/g		Detection limits for ICP are based on ARL-3580 instrument. Using pure standards, limits are 3σ as per ARL.
	Ba*	Core	A	3050	6010	CLP-SOW	CLP-200.7	NRM	IM	200 µg/L	0.14 µg/g	R, PA	Barium LBRC = 10 mg/L.
			W	3010							0.14 µg/g		Calculate instrument limits in µg/L by multiplying acid limit by 10. Example: Al = 29 µg/L.
			DL	3010							0.14 µg/mL		Note: Actual measurement limits may be 5 to 10 times higher depending on the matrix.
			F	C-126							2.8 µg/g		

PST 3095-E-1

Table E-1. Single-Shell Tank Waste Characterization Plan--Methods and Detection Limits. (Sheet 3 of 16)

Parameter	Analyte	Composite type	Waste fraction	Reference preparation method	Reference analytical method	PNL preparation method	PNL analytical method	Westinghouse Hanford preparation method	Westinghouse Hanford analytical method	Reference limit	Method detection limit	Rationale	Comments and potential SW-846 deviations
	Be	Core	A	3050	6010	CLP-SOW	CLP-200.7	NRM	IM	5 µg/L	0.05 µg/g	R, PA	Not on Westinghouse Hanford fixed channel--requires a scan.
			W	3010							0.05 µg/g		
			DL	3010							0.05 µg/mL		
			F	C-126							1.0 µg/g		
	Ca*	Core	A	3050	6010	CLP-SOW	CLP-200.7	NRM	IM	5,000 µg/L	0.015 µg/g	PD	
			W	3010							0.015 µg/g		
			DL	3010							0.02 µg/mL		
			F	C-126							0.3 µg/g		
	Cd	Core	A	3050	6010	CLP-SOW	CLP-200.7	NRM	IM	5 µg/L	0.24 µg/g	R,PA	GFAA may be required. Cadmium LBRC limit = 100 µg/L.
			W	3010/3020	7131		CLP-213.2				0.24 µg/g		
			DL	3010/3020							0.24 µg/mL		
			F	C-126							4.8 µg/g		
	Cr*	Core	A	3050	6010	CLP-SOW	CLP-200.7	NRM	IM	10 µg/L	0.54 µg/g	R, PA	GFAA may be required. Chromium LBRC limit = 5 µg/L.
			W	3010/3020	7191						0.54 µg/g		
			DL	3010/3020							0.54 µg/mL		
			F	C-126							10.8 µg/g		
	Cu	Core	A	3050	6010	CLP-SOW	CLP-200.7	NRM	IM	25 µg/L	0.26 µg/g	R, PA	
			W	3010							0.26 µg/g		
			DL	3010							0.26 µg/mL		
			F	C-126							5.2 µg/g		
	Fe*	Core	A	3050	6010	CLP-SOW	CLP-200.7	NRM	IM	100 µg/L	0.66 µg/g	PD	
			W	3010							0.66 µg/g		
			DL	3010							0.66 µg/mL		
			F	C-126							13.2 µg/g		

PST 3095-E-1

Table E-1. Single-Shell Tank Waste Characterization Plan--Methods and Detection Limits. (Sheet 4 of 16)

Parameter	Analyte	Composite type	Waste fraction	Reference preparation method	Reference analytical method	PNL preparation method	PNL analytical method	Westinghouse Hanford preparation method	Westinghouse Hanford analytical method	Reference limit	Method detection limit	Rationale	Comments and potential SW-846 deviations
	Hg	Core	A	D	7470	CLP-SOW	CLP-245.1	D	IM	0.2 µg/L	0.5 µg/g	R, PA	Detection limits are for ICP.
			W		7471						0.5 µg/g		ICP meets 10% LBRC criteria--20 µg/L.
			DL								0.5 µg/mL		Interferences may require CVAA modifications.
			F								10.0 µg/g		Westinghouse Hanford sample preparation different than SW-846 for mercury and may use gold amalgam concentrator for mercury. This procedure is in development.
	K*	Core	A	3050	6010	CLP-SOW	CLP-200.7	NRM	IM	5,000 µg/L	13.8 µg/mL	PD	
			W	3010							13.8 µg/g		
			DL	3010							13.8 µg/g		
			F	C-126							276 µg/g		
	Mg*	Core	A	3050	6010	CLP-SOW	CLP-200.7	NRM	IM	5,000 µg/L	0.02 µg/g	PD	
			W	3010							0.02 µg/g		
			DL	3010							0.02 µg/g		
			F	C-126							0.3 µg/g		
	Mn*	Core	A	3050	6010	CLP-SOW	CLP-200.7	NRM	IM	15 µg/L	0.09 µg/g	R, PA	
			W	3010							0.09 µg/g		
			DL	3010							0.09 µg/mL		
			F	C-126							1.8 µg/g		
	Na*	Core	A	3050	6010	CLP-SOW	CLP-200.7	NRM	IM	5,000 µg/L	8.7 µg/g	PD	
			W	3010							8.7 µg/g		
			DL	3010							8.7 µg/mL		
			F	C-126							174 µg/g		
	Ni*	Core	A	3050	6010	CLP-SOW	CLP-200.7	NRM	IM	40 µg/L	0.96 µg/g	R,PA	
			W	3010							0.96 µg/g		
			DL	3010							0.96 µg/mL		
			F	C-126							19.2 µg/g		

PST 3095-5-1

Table E-1. Single-Shell Tank Waste Characterization Plan--Methods and Detection Limits. (Sheet 5 of 16)

Parameter	Analyte	Composite type	Waste fraction	Reference preparation method	Reference analytical method	PNL preparation method	PNL analytical method	Westinghouse Hanford preparation method	Westinghouse Hanford analytical method	Reference limit	Method detection limit	Rationale	Comments and potential SW-846 deviations
	Pb	Core	A	3050	6010	CLP-SOW	CLP-200.7	NRM	IM	5 µg/L	1.1 µg/g	R, PA	GFAA uses deuterium background correction.
			W	3010/3020	7421		CLP-239.2				1.1 µg/g		ICP meets 10% LBRC.
			DL	3010/3020							1.1 µg/mL		Lead LBRC limit = 500 µg/L.
			F	C-126							22 µg/g		
	Se	Core	A	3050	6010	CLP-SOW	CLP-200.7	NRM	IM	5 µg/L	5.8 µg/g	R, PA	GFAA uses deuterium background correction.
			W	3010/3020	7740		CLP-270.2		IM		5.8 µg/g		Westinghouse Hanford uses HYAA system for selenium.
			DL	3010/3020	7741						5.8 µg/mL		ICP meets 10% LBRC criteria.
			F	C-126							116 µg/g		Selenium LBRC limit = 100 µg/L.
													Westinghouse Hanford selenium HYAA sample preparation different than SW-846.
	V	Core	A	3050	6010	CLP-SOW	CLP-200.7	NRM	IM	50 µg/L	0.3 µg/g	R, PA	No channel on Westinghouse Hanford ICP requires scan mode.
			W	3010							0.3 µg/g		
			DL	3010							0.3 µg/mL		
			F	C-126							6 µg/g		
	Tl	Core	A	3050	6010	CLP-SOW	CLP-200.7	NRM	IM	10 µg/L	11.3 µg/g	R, PA	GFAA background correction uses deuterium.
			W	3010/3020	7841		CLP-279.1				11.3 µg/g		No channel on Westinghouse Hanford ICP requires scan mode.
			DL	3010/3020							11.3 µg/mL		
			F	C-126							226 µg/g		
Other metals	Si*	Core	A	3050	6010	CLP-SOW	CLP-200.7	NRM	IM	NA	2.0 µg/g	PD	Note: SW-846 digestion will not solubilize silicon.
			W	3010							2.0 µg/g		
			DL	3010							2.0 µg/mL		
			F	C-126							4.0 µg/g		

PST89-3095-E-1

Table E-1. Single-Shell Tank Waste Characterization Plan--Methods and Detection Limits. (Sheet 6 of 16)

Parameter	Analyte	Composite type	Waste fraction	Reference preparation method	Reference analytical method	PNL preparation method	PNL analytical method	Westinghouse Hanford preparation method	Westinghouse Hanford analytical method	Reference limit	Method detection limit	Rationale	Comments and potential SW-846 deviations
	Th	Tank and core	A	3050	6010	CLP-SOW	CLP-200.7	NRM	IM	0.09 g/g	3.4 µg/g	R, PA	Reference limit is based on LBRC.
			W	3010					IM		3.4 µg/g		Detection limit of ICP is equivalent to 17 d/m/g ^{232}Th.
			DL	3010							3.4 µ/mL		
			F	C-126							68 µg/g		
	U	Tank and core	A	3050	6010	CLP-SOW	CLP-200.7	NRM	IM	0.03 µg/g	18.6 µg/g	R, PA	Reference limit is based on LBRC.
			W	3010			IM		IM		18.6 µg/g		Detection limit of ICP is equivalent to 279 d/m/g ^{238}U.
			DL	3010							18.6 µg/g		Alternate low-level uranium method is based on laser flourimetry.
			F	C-126							372 µg/g		
	Zr	Tank and core	A	3050	6010	CLP-SOW	CLP-200.7	NRM	IM	NA	0.72 µg/g	PD	Note: F is done in zirconium or nickel crucible.
			W	3010					IM		0.72 µg/g		
			DL	3010							0.72 µg/mL		
			F	C-126							14.4 µg/g		
	Zn	Core	A	3050	6010	CLP-SOW	CLP-200.7	NRM	IM	20 µg/L	0.17 µg/g	R, PA	
			W	3010							0.17 µg/g		
			DL	3010							0.17 µg/mL		
			F	C-126							3.4 µg/g		
	Co	Core	A	3050	6010	CLP-SOW	CLP-200.7	NRM	IM	50 µg/L	0.57 µg/g	PD	
			W	3010							0.57 µg/g		
			DL	3010							0.57 µg/mL		
			F	C-126							11.4 µg/g		

PST89-3095-E-1

Table E-1. Single-Shell Tank Waste Characterization Plan--Methods and Detection Limits. (Sheet 7 of 16)

Parameter	Analyte	Composite type	Waste fraction	Reference preparation method	Reference analytical method	PNL preparation method	PNL analytical method	Westinghouse Hanford preparation method	Westinghouse Hanford analytical method	Reference limit	Method detection limit	Rationale	Comments and potential SW-846 deviations
	Sb	Core	A	3050	6010	CLP-SOW	CLP-200.7	NRM	IM	60 µg/L	4.5 µg/g	R, PA	GFAA background correction uses deuterium.
			W	3010/3020	7041		CLP-204.2				4.5 µg/g		No channel on Westinghouse Hanford ICP requires scan mode.
			DL	3010/3020							4.5 µg/mL		
			F	C-126							90 µg/g		
Other metals from Westinghouse Hanford ICP	Ce*	Core	A,W,DL,F	3050/3010	6010	CLP-SOW	CLP-200.7	NRM	IM	NA	(0.6) 11 µg/g	PD	Method detection limit for A and F.
	Sr*	Core	A,W,DL,F	3050/3010	6010	CLP-SOW	CLP-200.7	NRM	IM	NA	(0.1) 1.6 µg/g	PD	
	Sm	Core	A,W,DL,F	3050/3010	6010	CLP-SOW	CLP-200.7	NRM	IM	NA	(7) 138 µg/g	PD	
	Bi	Core	A,W,DL,F	3050/3010	6010	CLP-SOW	CLP-200.7	NRM	IM	NA	(7) 136 µg/g	PD	
	Ta	Core	A,W,DL,F	3050/3010	6010	CLP-SOW	CLP-200.7	NRM	IM	NA	(1) 20 µg/g	PD	
	P	Core	A,W,DL,F	3050/3010	6010	CLP-SOW	CLP-200.7	NRM	IM	NA	(1.3) 26 µg/g	PD	
	S	Core	A,W,DL,F	3050/3010	6010	CLP-SOW	CLP-200.7	NRM	IM	NA	(2.2) 44µg/g	PD	
	Sn	Core	A,W,DL,F	3050/3010	6010	CLP-SOW	CLP-200.7	NRM	IM	NA	(1.3) 26µg/g	PD	
	Mo*	Core	A,W,DL,F	3050/3010	6010	CLP-SOW	CLP-200.7	NRM	IM	NA	(0.6) 12 µg/g	PD	
	W	Core	A,W,DL,F	3050/3010	6010	CLP-SOW	CLP-200.7	NRM	IM	NA	(5) 103 µg/g	PD	
	Li	Core	A,W,DL,F	3050/3010	6010	CLP-SOW	CLP-200.7	NRM	IM	NA	(0.2) 4 µg/g	PD	
	Ti	Core	A,W,DL,F	3050/3010	6010	CLP-SOW	CLP-200.7	NRM	IM	NA	(0.1) 2.8 µg/g	PD	
	B*	Core	A,W,DL,F	3050/3010	6010	CLP-SOW	CLP-200.7	NRM	IM	NA	(0.5) 10 µg/g	PD	
	La	Core	A,W,DL,F	3050/3010	6010	CLP-SOW	CLP-200.7	NRM	IM	NA	(0.3) 6 µg/g	PD	
	Eu	Core	A,W,DL,F	3050/3010	6010	CLP-SOW	CLP-200.7	NRM	IM	NA	(0.1) 2.0 µg/g	PD	
	Nd	Core	A,W,DL,F	3050/3010	6010	CLP-SOW	CLP-200.7	NRM	IM	NA	(3.3) 66 µg/g	PD	
	Pu	Core	A,W,DL,F	3050/3010	6010	CLP-SOW	CLP-200.7	NRM	IM	NA	Not determined	PD	Plutonium limit is not determined yet. Expected to be about the same as uranium.

PST89-3095-E-1

Table E-1. Single-Shell Tank Waste Characterization Plan--Methods and Detection Limits. (Sheet 8 of 16)

Parameter	Analyte	Composite type	Waste fraction	Reference preparation method	Reference analytical method	PNL preparation method	PNL analytical method	Westinghouse Hanford preparation method	Westinghouse Hanford analytical method	Reference limit	Method detection limit	Rationale	Comments and potential SW-846 deviations
Anions	NO_3^-	Core	W	ESM-D449	EPA-300	IM	IM	NRM	IM	300 µg/L	1 µg/g	R, PA, PD	NO_3^- LBRC limits 4.5 mg/L.
IC	-		DL								1,000 µg/L		Reference limits based on SW-846 groundwater limits.
	SO_4^{-2}	Core	W	ESM-449	EPA-300	IM	IM	NRM	IM	1,000 µg/L	20 µg/g	PD	IC detection limits based on EPA-300 procedure.
			DL								20,000 µg/L		Westinghouse Hanford lower IC calibration limits are 100 µg/L for fluorine and chlorine and 1,000 µg/L for the other anions.
	PO_4^{-3}	Core	W	ESM-449	EPA-300	IM	IM	NRM	IM	NA	6 µg/g	PD	Assumes a dilution of 100 µL to 10 mL H_2O for DL.
			DL								6,000 µg/L		
	F^-	Core	W	ESM-449	EPA-300	IM	IM	NRM	IM	1,000 µg/L	0.5 µg/g	R, PA, PD	Assumes a dilution of 10 g - 100 mL - 1 mL - 10 mL for H_2O.
			DL								500 µg/L		F^- LBRC limit = 14 mg/L.
	Cl^-	Core	W	ESM-449	EPA-300	IM	IM	NRM	IM	1,000 µg/L	2 µg/g	PD	
			DL								2,000 µg/L		
Other anions	NO_2^-	Core	W	ESM-449	EPA-300	IM	IM	NRM	IM	300 µg/L	5 µg/g	R, PA, PD	Detection limit based on colorimetric method LA645-001.
			DL		MXW-354.1						5,000 µg/L		
	OH^-/pH	Core	W	WDOE 83-13 App. B - Att. 3	9040		IM	NRM	IM	2.5-12.5 µg/L	pH 1-13	R, PA, PD	Will use smaller sample size (<50 g) and probably not in triplicate unless near limits. Temperature is not recorded.
			DL	App. 3							OH^- 0.1M		
	CN^-	Core	W		9010		CLP-335.2		IM	10 µg/L	1 µg/g	R, PA	CN^- LBRC limit = 2 mg/L. Assumes 10 g - 100 mL - 10 mL sample size.
			DL		CLP-335.2						1,000 µg/L		Assumes 1 mL sample size.
			D								1 µg/g		Assumes 1 g sample size.
	S^{-2}	Tank	W		9030		No method		No method	1,000 µg/L		R, PA	Modified cyanide method to eliminate NO_3^- and NO_2^- interferences.
			DL										Sulfide requires distillation before analysis.
			D										Sulfide needs development effort.

PST89-3095-E-1

Table E-1. Single-Shell Tank Waste Characterization Plan--Methods and Detection Limits. (Sheet 9 of 16)

Parameter	Analyte	Composite type	Waste fraction	Reference preparation method	Reference analytical method	PNL preparation method	PNL analytical method	Westinghouse Hanford preparation method	Westinghouse Hanford analytical method	Reference limit	Method detection limit	Rationale	Comments and potential SW-846 deviations
Other anions (cont.)	Cr(VI)	Core	W		7197/7195		MXW-312B	NRM	IM	5 µg/L	540 µg/L	R, PA	Use ICP to screen chromium(VI). NO_2^- reduces chromium(VI) in acid. Westinghouse Hanford does not have method based on reference methods.
			DL										Chromium(VI) based on Ecology EP toxicity limit. Chromium LBRC = 5 µg/L.
	NH_3	Tank	W		MXW-350.2		MXW-417E	Direct	IM	300 µg/L	90 µg/g		
			DL								90 µg/mL		
	CO_3^{-2}	Core	W		IM		IM	Direct	IM	NA	1 µg/mL		
			DL								1 µg/g		
Organic screening tests	TOC	Core	W		9060			Direct	IM	1,000 µg/L	5 µg/g	R, PA	Assumes 10 g - 100 mL - 0.2 mL into LA344-111 IOC 700. TOC LBRC limits = 100 mg/L.
			DL								500 µg/L		Assumes 1 mL of DL analyzed.
			D								0.5 µg/g		Assumes 1 g of sample analyzed. Actual limit may be 10 times higher because of matrix problems.
	TOX/ EOX	Core	D, Ext	NA	9020	NA	IM	NA	NRM	5 µg/L	0.5 µg/g	R, PA	PNL uses Dohrman analyzer for TOX.
					WDOE 83-13								
	GC-Volatile	Core and segment	D, Ext	NA	3820	CLP-SOW	CLP-SOW	NA	NRM	10 µg/L	Variable	R, PA	Organic screen tests reference limits are based on SW-846 groundwater.
					ESM-D11								
					CLP-VOA-D8								
	GC-Semi-volatile	Core	D, Ext	NA	ESM-D13	CLP-SOW	CLP-SOW	NA	NRM	20 µg/L	Variable	R, PA	
					CLP-SV-D26				NRM		Variable	R, PA	
	GC-Head-space	Core and segment	D	NA	3810	NA	NRM	NA	NRM	10 µg/L	Variable	R, PA	Headspace analysis may be done on trapped gases in sample container.

PST89-1095-E-1

Table E-1. Single-Shell Tank Waste Characterization Plan--Methods and Detection Limits. (Sheet 10 of 16)

Parameter	Analyte	Composite type	Waste fraction	Reference preparation method	Reference analytical method	PNL preparation method	PNL analytical method	Westinghouse Hanford preparation method	Westinghouse Hanford analytical method	Reference limit	Method detection limit	Rationale	Comments and potential SW-846 deviations
Compre-hensive	VOAS	Tank	D, Ext	5030/5040	8240	CLP-SOW	CLP-SOW	NRM	NRM	5-10 µg/L	Variable	R, PA	Reference limits are CLP requirements.
					CLP-VOA-D12								
Organic analysis	Semi-volatiles	Tank	D, Ext	3520/3550	8270	CLP-SOW	CLP-SOW	NRM		10-50 µg/L H_2O			Reference limits are CLP requirements.
				3640	CLP-SV-D29					330-1,500 µg/L			Higher limits are µg/kg for soils.
				CLP-SV-D3									
	Pesticides/PCB	Tank	D, Ext	3520/3550	8080	CLP-SOW	CLP-SOW	NRM	NRM	0.05-1 µg/L	Variable	R, PA	
				3640/3610	CLP-PST-D30					8-160 µg/kg			
				CLP-PST-D6									
	VOST	Tank	Gaseous	30	5040				NRM		Variable	R, PA	Modified for SST atmospheric analysis instead of incinerator.
	Organic complex-ants	Tank	W			IM	IM	IM	IM			PA	
Radionuclide	Total Alpha	Core	W		9310	IM	IM	IM	IM	10 nCi/g	0.8-8 nCi/g	R, PA	Assume 0.25 g - 100 mL - 0.1 mL, count time of 10 to 100 min, background of 0.1 - 1 c/min. Reference limits for radionuclides are based on LBRC.
			DL		ESM-D508						1 µg/g		
			F										
	Total Beta	Core	W		9310	IM	IM	IM	IM	100 nCi/g	12-36 nCi/g	R, PA	Assume 10 c/min background and count time of 10 to 100 min. Reference limit based on LBRC for ^{90}Sr.
			DL		ESM-D508								Assume DF = 10 for W; DF = 10 for DL.
			F										

PST89-1095-E-1

Table E-1. Single-Shell Tank Waste Characterization Plan--Methods and Detection Limits. (Sheet 11 of 16)

Parameter	Analyte	Composite type	Waste fraction	Reference preparation method	Reference analytical method	PNL preparation method	PNL analytical method	Westinghouse Hanford preparation method	Westinghouse Hanford analytical method	Reference limit	Method detection limit	Rationale	Comments and potential SW-846 deviations
Radionuclide (cont.)	Total Gamma	Core	W		ESM-D518	IM	IM	IM	IM	100 nCi/g	1 nCi/g	R, PA	DF = 400 for F. Reference based on ^{137}Cs LBRC.
			DL		ESM-D722		IM				1 nCi/L		^{137}Cs, ^{60}Co, ^{94}Nb, ^{106}Ru, and others.
			F								160 nCi/g		
	^{238}Pu	Core	W		ESM-D553	IM	IM	IM	IM	10 nCi/g	0.02-0.2 nCi/g	R, PA	W DF = 125; DL DF = 10; F DF = 400.
	^{239,240}Pu		DL		ESM-D578			IM			0.002-0.02 nCi/L		If total alpha is <10 nCi/g, separated plutonium is not run.
			F					IM			0.32-32 nCi/g		
	^{241}Am	Core	W		ESM-D715	IM	IM	IM	IM	10 nCi/g	0.01-0.1 nCi/g	R, PA	W DF = 40; DL DF = 4; F DF = 400.
	^{242,244}Cm		DL					IM			0.001-0.01 nCi/L		Curium isotopes follow americium and are determined on AEA.
			F					IM			0.32-3.2 nCi/g		If total alpha is <10 nCi/g separated amercium is not required.
	^{237}Np	Core	W		NA	IM	IM	IM	IM	10 nCi/g	0.02-0.2 nCi/L	R, PA	Same comments as plutonium.
			DL					IM			0.002-0.02 µg/L		
			F					IM			0.32-3.2 µg/L		
	^{99}Tc	Core	W		ESM-D702	IM	IM	IM	IM	1,000 nCi/g	0.1 nCi/g	R, PA	Reference limit based on LBRC.
			DL		ESM-D706						0.1 nCi/mL		Assumes W DF = 10; DL DF = 1; F DF = 400.
			F	ETC-01-01	HASL-300						1 nCi/g		
	^{14}C	Core	W		NA	IM	IM	IM	IM	10 nCi/g	0.05 nCi/g	R, PA	Reference limit based on LBRC.
			DL								0.1 nCi/mL		Assumes W DF = 10; DL DF = 1; D DF = 4.
			D								0.08 nCi/g		

PST89-3095-E-1

Table E-1. Single-Shell Tank Waste Characterization Plan--Methods and Detection Limits. (Sheet 12 of 16)

Parameter	Analyte	Composite type	Waste fraction	Reference preparation method	Reference analytical method	PNL preparation method	PNL analytical method	Westinghouse Hanford preparation method	Westinghouse Hanford analytical method	Reference limit	Method detection limit	Rationale	Comments and potential SW-846 deviations
Radionuclide (cont.)	^{129}I	Core	W		MXW710A BC	IM	IM	IM	IM	10 nCi/g	0.1 nCi/g	R, PA	Assumes W DF = 10; DL DF = 1; F DF = 400.
			DL								0.01 nCi/mL		
			F								4 nCi/g		
	^{90}Sr	Core	W		ESM-679	IM	IM	IM	IM	100 nCi/g	0.04 nCi/g	R, PA	Assumes W DF = 10; DL DF = 1; F DF = 400.
			DL		ESM-687						0.01 nCi/mL		
			F								1.6 nCi/g		
	^{93}Zr	Tank	W		NA	IM	IM	NRM	NRM	100 nCi/g			
			DL										
			F										
	^{59}Ni	Tank	W		NA	IM	IM	NRM	NRM	100 nCi/g			
			DL										
			F										
	^{151}Sm	Core	W		NA	IM	IM	NRM	NRM	100 nCi/g		R, PA	
			DL										
			F										
	^{79}Se	Core	W		NA	IM	IM	NRM	NRM	NA		R, PA	
			DL										
			F										
	^{126}Sn	Core	W		NA	IM	IM	NRM	NRM	100 nCi/g		R, PA	
			DL										
			F										
	^{226}Ra	Tank	W	9315	NA	IM	IM	NRM	NRM			R, PA	
			DL										
			F										

PST89-3095 E-1

Table E-1. Single-Shell Tank Waste Characterization Plan--Methods and Detection Limits. (Sheet 13 of 16)

Parameter	Analyte	Composite type	Waste fraction	Reference preparation method	Reference analytical method	PNL preparation method	PNL analytical method	Westinghouse Hanford preparation method	Westinghouse Hanford analytical method	Reference limit	Method detection limit	Rationale	Comments and potential SW-846 deviations
Radionuclide (cont.)	^{3}H	Core	W			IM	IM	IM	IM	100 nCi/g		R, PA	
			DL										
	U isotope	Tank	F		ASTM	IM	IM	IM	IM	10 nCi/g		R, PA	Alpha gives $^{233/234}U$ and $^{235/236}U$.
					ESM-D594		Alpha						
	Pu isotope	Tank	F		ASTM	IM	IM	IM	IM	10 nCi/g		R, PA	Mass spectroscopy needed for individual $^{239,240,241}Pu$. ^{241}Pu reference limit 300 nCi/g.
	Th isotope	Tank	F		ESM-D637	IM	IM	NRM	NRM	10 nCi/g		R, PA	Run only if thorium is detected on ICP.
					ESM-D645								
					ESM-D673								
Other mass spectroscopy isotopes	^{59}Ni	Tank	F			IM	IM	NRM					Calculate from other nickel and cesium isotopes.
	^{135}Cs					IM	IM						
Other Alpha Isotopes	^{227}Ac ^{210}Pb ^{210}Po ^{231}Pa ^{242}Am ^{243}Am	Tank Tank Tank Tank Tank Tank	F F F F F F			IM IM IM IM IM IM	IM IM IM IM IM IM	NRM NRM NRM NRM NRM NRM	NRM NRM NRM NRM NRM NRM	100 nCi/g		R, PA	These isotopes not expected in significant quantities. Analyze on tank composite if other radionuclide data indicates they may be present.
Characteristics	As	Tank	EP leachate	1310	6010	CLP-SOW	See inorganic		See inorganic	5 µg/L	2.1	R	
EP toxicity				3020	7060/7061				See inorganic	100 µg/L	0.14	R	
	Ba	Tank	EP leachate	1310	6010	CLP-SOW	See inorganic		See inorganic	1 µg/L	0.24	R	
				3020					See inorganic	5 µg/L	0.54	R	

PST89-3095-E-1

Table E-1. Single-Shell Tank Waste Characterization Plan--Methods and Detection Limits. (Sheet 14 of 16)

Parameter	Analyte	Composite type	Waste fraction	Reference preparation method	Reference analytical method	PNL preparation method	PNL analytical method	Westinghouse Hanford preparation method	Westinghouse Hanford analytical method	Reference limit	Method detection limit	Rationale	Comments and potential SW-846 deviations
Characteristics (cont.)	Cd	Tank	EP leachate	1310	6010	CLP-SOW	See inorganic		See inorganic	5 µg/L	1	R	
				3020	7131				See inorganic	5 µg/L	0.3	R	
	Cr(VI)	Tank	EP leachate	1310	6010	CLP-SOW	See inorganic		See inorganic	1 µg/L	58	R	Ecology procedures specify chromium(VI), EPA is chromium.
				3020	7197				See inorganic	0.2 µg/L	0.5	R	
	Pb	Tank	EP leachate	1310	6010	CLP-SOW	See inorganic		See inorganic	0.02 µg/L		R	
				3020	7420/7421				See inorganic	0.4 µg/L		R	
	Ag	Tank	EP leachate	1310	6010	CLP-SOW	See inorganic		See inorganic	10 µg/L		R	
				3020	7760/7761				See inorganic	0.5 µg/L		R	
	Se	Tank	EP leachate	1310	6010	CLP-SOW	See inorganic		See inorganic	10 µg/L		R	Detection limit is for ICP method, not HYAA or GFAA.
				3020	7740/7741								
	Hg	Tank	EP leachate	1310	6010	CLP-SOW	See inorganic		See inorganic	1 µg/L		R	Detection limit is for ICP method, not HYAA or GFAA.
				3020	7470								
	Endrin	Tank	EP leachate	3520/3550	8080	CLP-SOW	See organic			0.02 mg/L		R	
				3640									
	Lindane	Tank	EP leachate	3520/3550	8080	CLP-SOW	See organic			0.4 mg/L		R	
				3640									
	Methoxy-chlor	Tank	EP leachate	3520/3550	8080	CLP-SOW	See organic			10 mg/L		R	
				3640									

PST89-3095-E-1

Table E-1. Single-Shell Tank Waste Characterization Plan--Methods and Detection Limits. (Sheet 15 of 16)

Parameter	Analyte	Composite type	Waste fraction	Reference preparation method	Reference analytical method	PNL preparation method	PNL analytical method	Westinghouse Hanford preparation method	Westinghouse Hanford analytical method	Reference limit	Method detection limit	Rationale	Comments and potential SW-846 deviations
Characteristics (cont.)	Toxaphene	Tank	EP leachate	3520/3550	8080	CLP-SOW	See organic			0.5 mg/L		R	
				3640									
	2,4-D	Tank	EP leachate	3640	8150	CLP-SOW	See organic			10 mg/L		R	
	Silvex	Tank	EP leachate	3640	8150	CLP-SOW	See organic			1 mg/L		R	
Corrosion	pH	Tank	D	WAC-B-1	9040/9045		IM	NRM	IM	2.5-12.5	0-14	R	Reference limit is in pH units, no temperature recorded.
			DL	WDOE 83-13									
Reactivity	CN^-	Tank	D	SW846-7.3	9010	D	See anions	D	See anions	250 mg/kg		R	Reference limit is for cyanide.
	S^{-2}				9030				NRM			R	
Ignitibility	Flash point	Tank	D	ASTM D93-79	1010/1020			D	NRM			PD, R	For flammable liquids only.
				WAC 83-13	WAC-A-1								
DL	Volume liquid	Segment	D		9095					0 in 5 min		PD, R	Westinghouse Hanford uses liquid that drains from extrusion pan in place of paint filter.
Physical measure	Length	Segment	D		NA	NA	NA		IM			PD	
	Weight	Segment	D		NA	NA	NA		IM			PD	
	Volume	Segment	D		NA	NA	NA		IM			PD	Alternate method LA519-111.
	DL-Wt	Segment	D		NA				IM			PD	
	DL-Vol	Segment	D		NA				IM			PD	
	DL-SpG	Segment	D		NA				IM			PD	
	Density	Segment	D									PD	Calculated from dimensional data and weight.
	Bulk density	Special	D						IM			PD	
	Particle density	Special	D						IM			PD	

PST89-3095-E-1

Table E-1. Single-Shell Tank Waste Characterization Plan--Methods and Detection Limits. (Sheet 16 of 16)

Parameter	Analyte	Composite type	Waste fraction	Reference preparation method	Reference analytical method	PNL preparation method	PNL analytical method	Westinghouse Hanford preparation method	Westinghouse Hanford analytical method	Reference limit	Method detection limit	Rationale	Comments and potential SW-846 deviations
Physical measure (cont.)	Particle size	Segment	D						NRM			PD	Sample taken before homogenization.
	TGA/DSC	Core	D						IM			PD	
	Specific heat	Core	D						IM				Obtained from DSC data for high-heat tanks only.
	Thermal output	Core	D						IM				Can be calculated from radiation data, for high heat.
	Thermal conductivity	Special	D						NRM				Requires a special large sample for high-heat tank.
	Viscosity	Special	D				IM		IM				Many times viscosity is too high to measure.
	H_2O (wt%)	Core	D		CLP-D84		IM		IM			PD	Uses smaller samples and higher temperatures.
	Shear stress	Special	D				IM		NRM			PD	Needs special large sample.
	Shear rate	Special	D				IM		NRM			PD	Needs special large sample.
	Settling solids (vol%)	Slurry	D						IM			PD	For slurry samples only.
	Centrifuged solids (vol%)	Slurry	D						IM			PD	For slurry samples only.
	Settling rate	Slurry	D						IM			PD	For slurry samples only.
	Penetrometer	Segment	D			IM	IM	NRM	NRM			PD	
	Miller No.	Special	D			IM	IM	NRM	NRM			PD	

PST89-3095-E-1

Table E-2. Elements and Spectral Lines for 222-S Laboratory, ARL-3580 Inductively Coupled Plasma. (Sheet 1 of 2)

Element	Line (nm)	Instrument 2 σ-detection limit (mg/mL)
Zr	343.82	0.048
U	409.01	1.240
Ce	413.76	0.370
Sr	421.55	0.005
Sm	443.43	0.460
Bi	223.06	0.450
Pu	453.62	NA
Ta	240.06	0.068
Ba	493.41	0.009
P	178.29	0.088
S	180.73	0.147
Hg	184.95	0.033
Mg	279.55	0.001
As	193.70	0.140
Sn	189.99	0.083
Si	288.16	0.130
Na	589.59	0.577
Mo	202.30	0.041
Se	203.99	0.385
Al	308.22	0.190
W	207.91	0.350
Zn	213.86	0.011
Cu	324.75	0.017
Ag	328.07	0.022
Pb	220.35	0.070

PST-89-3095-E-2

9 2 1 2 6 6 3 0 2 6 8

Table E-2. Elements and Spectral Lines for 222-S Laboratory, ARL-3580 Inductively Coupled Plasma. (Sheet 2 of 2)

Element	Line (nm)	Instrument 2 σ-detection limit (mg/mL)
Th	332.51	0.226
Li	670.78	0.014
Ti	337.28	0.009
Cd	226.50	0.016
Co	228.62	0.038
Ni	231.60	0.064
B	249.68	0.034
La	379.48	0.018
Eu	381.97	0.008
K	766.49	0.920
Mn	257.61	0.006
Fe	259.94	0.044
Ca	393.37	0.001
Cr	267.72	0.036
Nd	406.11	0.220

PST89-3095-E-2

9 2 1 2 6 5 3 0 2 6 9

Table E-3. Target Volatile Compound Table and Contract[a] Required Quantitation Limits.[b] (Sheet 1 of 2)

Volatile	CAS number	Quantitation limits[c]	
		Water (µg/L)	Low soil and sediment[d] (µg/kg)
1. Chloromethane	74-87-3	10	10
2. Bromomethane	74-83-9	10	10
3. Vinyl chloride	75-01-4	10	10
4. Chloroethane	75-00-3	10	10
5. Methylene chloride	75-09-2	5	5
6. Acetone	67-64-1	10	10
7. Carbon disulfide	75-15-0	5	5
8. 1,1-Dichloroethene	75-35-4	5	5
9. 1,1-Dichloroethane	75-34-3	5	5
10. 1,2-Dichloroethene (total)	540-59-0	5	5
11. Chloroform	67-66-3	5	5
12. 1,2-Dichloroethane	107-06-2	5	5
13. 2-Butanone	78-93-3	10	10
14. 1,1,1-Trichloroethane	71-55-6	5	5
15. Carbon tetrachloride	56-23-5	5	5
16. Vinyl acetate	108-05-4	10	10
17. Bromodichloromethane	75-27-4	5	5
18. 1,2-Dichloropropane	78-87-5	5	5
19. cis-1,3-Dichloropropene	10061-01-5	5	5
20. Trichloroethene	79-01-6	5	5
21. Dibromochloromethane	124-48-1	5	5
22. 1,1,2-Trichloroethane	79-00-5	5	5
23. Benzene	71-43-2	5	5
24. trans-1,3-Dichloropropene	10061-02-6	5	5
25. Bromoform	75-25-2	5	5

PST89-3095-E-3

9 2 1 2 6 5 3 0 2 7 0

Table E-3. Target Volatile Compound Table and Contract[a] Required Quantitation Limits.[b] (Sheet 2 of 2)

Volatile	CAS number	Quantitation limits[c]	
		Water (µg/L)	Low soil and sediment[d] (µg/kg)
26. 4-Methyl-2-pentanone	108-10-1	10	10
27. 2-Hexanone	591-78-6	10	10
28. Tetrachloroethene	127-18-4	5	5
29. Toluene	108-88-3	5	5
30. 1,1,2,2-Tetrachloroethane	79-34-5	5	5
31. Chlorobenzene	108-90-7	5	5
32. Ethyl benzene	100-41-4	5	5
33. Styrene	100-42-5	5	5
34. Xylenes (total)	1330-20-7	5	5

[a]Taken from the Statement of Work for the EPA Contract Laboratory Program.
[b]Specific quantitation limits are highly matrix dependent. The quantitation limits listed herein are provided for guidance and may not always be achievable.
[c]Quantitation limits listed for soil and sediment are based on wet weight. The quantitation limits calculated by the laboratory for soil and sediment, calculated on dry weight basis as required by the contract, will be higher.
[d]Medium Soil and Sediment Contract-Required Quantitation Limits for target volatile compound list compounds are 125 times the individual Low Soil and Sediment Contract-Required Quantitation Limits.

PST89-3095-E-3

9 2 1 2 6 5 3 0 2 7 1

Table E-4. Target Semivolatile Compound Table and Contract[a]-Required Quantitation Limits.[b] (Sheet 1 of 2)

Semivolatile	CAS number	Quantitation limits[c]	
		Water (µg/L)	Low soil and sediment[d] (µg/kg)
35. Phenol	108-95-2	10	330
36. bis (2-Chloroethyl) ether	111-44-4	10	330
37. 2-Chlorophenol	95-57-8	10	330
38. 1,3-Dichlorobenzene	541-73-1	10	330
39. 1,4-Dichlorobenzene	106-46-7	10	330
40. Benzyl alcohol	100-51-6	10	330
41. 1,2-Dichlorobenzene	95-50-1	10	330
42. 2-Methylphenol	95-48-7	10	330
43. bis (2-Chloroisopropyl) ether	108-60-1	10	330
44. 4-Methylphenol	106-44-5	10	330
45. N-Nitroso-di-n-dipropylamine	621-64-7	10	330
46. Hexachloroethane	67-72-1	10	330
47. Nitrobenzene	98-95-3	10	330
48. Isophorone	78-59-1	10	330
49. 2-Nitrophenol	88-75-5	10	330
50. 2,4-Dimethylphenol	105-67-9	10	330
51. Benzoic acid	65-85-0	50	1600
52. bis(2-Chloroethoxy) methane	111-91-1	10	330
53. 2,4-Dichlorophenol	120-83-2	10	330
54. 1,2,4-Trichlorobenzene	120-82-1	10	330
55. Naphthalene	91-20-3	10	330
56. 4-Chloroaniline	106-47-8	10	330
57. Hexachlorobutadiene	87-68-3	10	330
58. 4-Chloro-3-methylphenol (para-chloro-meta-cresol)	59-50-7	10	330
59. 2-Methylnaphthalene	91-57-6	10	330
60. Hexachlorocyclopentadiene	77-47-4	10	330
61. 2,4,6-Trichlorophenol	88-06-2	10	330
62. 2,4,5-Trichlorophenol	95-95-4	50	1600
63. 2-Chloronaphthalene	91-58-7	10	330
64. 2-Nitroaniline	88-74-4	50	1600
65. Dimethylphthalate	131-11-3	10	330
66. Acenaphthylene	208-96-8	10	330
67. 2,6-Dinitrotoluene	606-20-2	10	330
68. 3-Nitroaniline	99-09-21	50	1600
69. Acenaphthene	83-32-9	10	330
70. 2,4-Dinitrophenol	51-28-5	50	1600

PST89-3095-E-4

Table E-4. Target Semivolatile Compound Table and Contract[a]-Required Quantitation Limits.[b] (Sheet 2 of 2)

Semivolatile	CAS number	Quantitation limits[c]	
		Water (µg/L)	Low soil and sediment[d] (µg/kg)
71. 4-Nitrophenol	100-02-7	50	1600
72. Dibenzofuran	132-64-9	10	330
73. 2,4-Dinitrotoluene	121-14-2	10	330
74. Diethylphthalate	84-66-2	10	330
75. 4-Chlorophenyl-phenyl ether	7005-72-3	10	330
76. Fluorene	86-73-7	10	330
77. 4-Nitroaniline	100-01-6	50	1600
78. 4,6-Dinitro-2-methylphenol	534-52-1	50	1600
79. N-nitrosodiphenylamine	86-30-6	10	330
80. 4-Bromophenyl-phenylether	101-55-3	10	330
81. Hexachlorobenzene	118-74-1	10	330
82. Pentachlorophenol	87-86-5	50	1600
83. Phenanthrene	85-01-8	10	330
84. Anthracene	120-12-7	10	330
85. Di-n-butylphthalate	84-74-2	10	330
86. Fluoranthene	206-44-0	10	330
87. Pyrene	129-00-0	10	330
88. Butylbenzylphthalate	85-68-7	10	330
89. 3,3'-Dichlorobenzidine	91-94-1	20	660
90. Benzo(a)anthracene	56-55-3	10	330
91. Chrysene	218-01-9	10	330
92. bis(2-Ethylhexyl)phthalate	117-81-7	10	330
93. Di-n-octylphthalate	117-84-0	10	330
94. Benzo(b)fluoranthene	205-99-2	10	330
95. Benzo(k)fluoranthene	207-08-9	10	330
96. Benzo(a)pyrene	50-32-8	10	330
97. Indeno(1,2,3-cd)pyrene	193-39-5	10	330
98. Dibenz(a,h)anthracene	53-70-3	10	330
99. Benzo(g,h,i)perylene	191-24-2	10	330

[a]Taken from the Statement of Work for the EPA Contract Laboratory Program.
[b]Specific quantitation limits are highly matrix dependent. The quantitation limits listed herein are provided for guidance and may not always be achievable.
[c]Quantitation limits listed for soil and sediment are based on wet weight. The quantitation limits calculated by the laboratory for soil and sediment, calculated on dry weight basis as required by the contract, will be higher.
[d]Medium Soil and Sediment Contract Required Quantitation Limits for target semivolatile compound list compounds are 60 times the individual Low Soil and Sediment Contract Required Quantitation Limits.

PST89-3095-E-4

9 2 1 2 6 5 3 0 2 7 3

Table E-5. Target Pesticide and Polychlorinated Biphenyls Compound Table and Contract[a]-Required Quantitation Limits.[b]

Pesticides/PCBs	CAS number	Quantitation limits[c]	
		Water (µg/L)	Low soil and sediment[d] (µg/kg)
100. alpha-BHC	319-84-6	0.05	8.0
101. beta-BHC	319-85-7	0.05	8.0
102. delta-BHC	319-86-8	0.05	8.0
103. gamma-BHC (Lindane)	58-89-9	0.05	8.0
104. Heptachlor	76-44-8	0.05	8.0
105. Aldrin	309-00-2	0.05	8.0
106. Heptachlor epoxide	1024-57-3	0.05	8.0
107. Endosulfan I	959-98-8	0.05	8.0
108. Dieldrin	60-57-1	0.10	16.0
109. 4,4'-DDE	72-55-9	0.10	16.0
110. Endrin	72-20-8	0.10	16.0
111. Endosulfan II	33213-65-9	0.10	16.0
112. 4,4'-DDD	72-54-8	0.10	16.0
113. Endosulfan sulfate	1031-07-8	0.10	16.0
114. 4,4'-DDT	50-29-3	0.10	16.0
115. Methoxychlor	72-43-5	0.5	80.0
116. Endrin ketone	53494-70-5	0.10	16.0
117. alpha-Chlordane	5103-71-9	0.5	80.0
118. gamma-Chlordane	5103-74-2	0.5	80.0
119. Toxaphene	8001-35-2	1.0	160.0
120. Aroclor-1016	12674-11-2	0.5	80.0
121. Aroclor-1221	11104-28-2	0.5	80.0
122. Aroclor-1232	11141-16-5	0.5	80.0
123. Aroclor-1242	53469-21-9	0.5	80.0
124. Aroclor-1248	12672-29-6	0.5	80.0
125. Aroclor-1254	11097-69-1	1.0	160.0
126. Aroclor-1260	11096-82-5	1.0	160.0

[a]Taken from the Statement of Work for the EPA Contract Laboratory Program.
[b]Specific quantitation limits are highly matrix dependent. The quantitation limits listed herein are provided for guidance and may not always be achievable.
[c]Quantitation limits listed for soil and sediment are based on wet weight. The quantitation limits calculated by the laboratory for soil and sediment, calculated on dry weight basis as required by the contract, will be higher.
[d]Medium Soil and Sediment Contract-Required Quantitation Limits for target pesticide/polychlorinated biphenyls compound list compounds are 15 times the individual Low Soil and Sediment Contract-Required Quantitation Limits. PST89-3095-E-5

Table E-6. Present 222-S Laboratory Gamma Energy Analysis Library. (Sheet 1 of 4)

Radionuclide abbreviation	Radionuclide
^{108m}Ag	Silver-108m
^{110m}Ag	Silver-110m
^{241}Am	Americium-241
^{243}Am	Americium-243
^{41}Ar	Argon-41
^{198}Au	Gold-198
^{133}Ba	Barium-133
^{139}Ba	Barium-139
^{140}Ba	Barium-140
^{141}Ba	Barium-141
^{7}Be	Beryllium-7
^{207}Bi	Bismuth-207
^{212}Bi	Bismuth-212
^{214}Bi	Bismuth-214
^{109}Cd	Cadmium-109
^{139}Ce	Cerium-139
^{141}Ce	Cerium-141
$^{144}CePr$	Cesium-praseodymium-144
^{56}Co	Cobalt-56
^{57}Co	Cobalt-57
^{58}Co	Cobalt-58
^{60}Co	Cobalt-60
^{51}Cr	Chromium-51
^{134}Cs	Cesium-134
^{136}Cs	Cesium-136
^{137}Cs	Cesium-137
^{138}Cs	Cesium-138
^{152}Eu	Europium-152

PST89-3095-E-6

9 2 1 2 6 6 3 0 2 7 5

Table E-6. Present 222-S Laboratory Gamma Energy Analysis Library. (Sheet 2 of 4)

Radionuclide abbreviation	Radionuclide
^{154}Eu	Europium-154
^{155}Eu	Europium-155
^{59}Fe	Iron-59
^{181}Hf	Hafnium-181
^{203}Hg	Mercury-203
^{131}I	Iodine-131
^{132}I	Iodine-132
^{133}I	Iodine-133
^{134}I	Iodine-134
^{135}I	Iodine-135
^{40}K	Potassium-40
^{85}Kr	Krypton-85
^{85m}Kr	Krypton-85m
^{87}Kr	Krypton-87
^{89}Kr	Krypton-89
^{140}La	Lanthanum-140
^{142}La	Lanthanum-142
^{54}Mn	Manganese-54
^{56}Mn	Manganese-56
^{22}Na	Sodium-22
^{24}Na	Sodium-24
^{95}Nb	Niobium-95
^{97}Nb	Niobium-97
^{238}Np	Neptunium-238
^{239}Np	Neptunium-239
^{233}Pa	Protactinium-233
^{234m}Pa	Protactinium-234m
^{210}Pb	Lead-210

PST89-3095-E-6

9 2 1 2 5 6 3 0 2 7 6

Table E-6. Present 222-S Laboratory Gamma Energy Analysis Library. (Sheet 3 of 4)

Radionuclide abbreviation	Radionuclide
^{212}Pb	Lead-212
^{214}Pb	Lead-214
^{210}Po	Polonium-210
^{214}Po	Polonium-214
^{216}Po	Polonium-216
^{239}Pu	Plutonium-239
^{241}Pu	Plutonium-241
^{224}Ra	Radium-224
^{226}Ra	Radium-226
^{88}Rb	Rubidium-88
^{89}Rb	Rubidium-89
^{220}Rn	Radon-220
^{103}Ru	Ruthenium-103
^{106}RuRh	Ruthenium-rhodium-106
^{124}Sb	Antimony-124
^{125}Sb	Antimony-125
^{46}Sc	Scandium-46
^{75}Se	Selenium-75
^{113}Sn	Tin-113
^{85}Sr	Strontium-85
^{91}Sr	Strontium-91
^{92}Sr	Strontium-92
^{182}Ta	Tantalum-182
^{99m}Tc	Technetium-99m
^{123m}Te	Tellurium-123m
^{125m}Te	Tellurium-125m
^{132}Te	Tellurium-132
^{228}Th	Thorium-228

PST89-3095-E-6

Table E-6. Present 222-S Laboratory Gamma Energy Analysis Library. (Sheet 4 of 4)

Radionuclide abbreviation	Radionuclide
^{208}Tl	Thallium-208
^{235}U	Uranium-235
^{237}U	Uranium-237
^{187}W	Tungsten-187
^{131m}Xe	Xenon-131m
^{133}Xe	Xenon-133
^{133m}Xe	Xenon-133m
^{135}Xe	Xenon-135
^{138}Xe	Xenon-138
^{88}Y	Yttrium-88
^{91}Y	Yttrium-91
^{91m}Y	Yttrium-91m
^{65}Zn	Zinc-65
^{95}Zr	Zirconium-95
^{97}Zr	Zirconium-97

PST89-3095-E-6

9 2 1 2 6 6 3 0 2 7 8

This page intentionally left blank.

9 2 1 2 5 6 3 0 2 7 9