0042490 [redacted]

JUL 19 1995 ENGINEERING DATA TRANSMITTAL

1. EDT № 612612

2. To: (Receiving Organization)	3. From: (Originating Organization)	4. Related EDT No.:
TWRS Compliance Plans	Process Engineering	608727
5. Proj./Prog./Dept./Div.:	6. Cog. Engr.:	7. Purchase Order No.:
Tank Waste Remediation System	E. J. Slaathaug	n/a

8. Originator Remarks:

This engineering data package provides supporting data for preparation of the TWRS Environmental Impact Statement (TWRS EIS). Data in this document addresses the Tri-Party Agreement Alternative. Other alternatives addressed in the TWRS EIS include the In-Situ Disposal Alternative, the No Separations Alternative, the Extensive Separations Alternative, and the No Disposal Action Alternative. Additional data supporting the Tri-Party Agreement Alternative are provided in the Waste Retrieval Engineering Data Package (WHC-SD-WM-EV-097) and the Closure Engineering Data Package (WHC-SD-WM-EV-107). Environmental, Safety, and QA approvals required by WHC-CM-3-5 Section 12.7 were obtained on Rev. B of this document (EDT 608727). Changes in this revision, relative to Rev. B, primarily involved revisions and clarifications to cost, schedule, and transportation data in Section 9 and backup appendices.

9. Equip./Component No.: n/a

10. System/Bldg./Facility: n/a

11. Receiver Remarks:

12. Major Assm. Dwg. No.: n/a

13. Permit/Permit Application No.: n/a

14. Required Response Date: n/a

NOV 1995 RECEIVED EDMC

15. DATA TRANSMITTED

(A) Item No.	(B) Document/Drawing No.	(C) Sheet No.	(D) Rev. No.	(E) Title or Description of Data Transmitted	(F) Approval Designator	(G) Reason for Transmittal	(H) Originator Disposition	(I) Receiver Disposition
1	WHC-SD-WM-EV-104		0	Tri-Party Agreement Engineering Data Package for the Tank Waste Remediation System Environmental Impact Statement	E/S/Q	2	1	1

16. KEY

Approval Designator (F)	Reason for Transmittal (G)		Disposition (H) & (I)	
E, S, Q, D or N/A (see WHC-CM-3-5, Sec.12.7)	1. Approval 2. Release 3. Information	4. Review 5. Post-Review 6. Dist. (Receipt Acknow. Required)	1. Approved 2. Approved w/comment 3. Disapproved w/comment	4. Reviewed no/comment 5. Reviewed w/comment 6. Receipt acknowledged

17. SIGNATURE/DISTRIBUTION (See Approval Designator for required signatures)

(G) Reason	(H) Disp.	(J) Name	(K) Signature	(L) Date	(M) MSIN	(J) Name	(K) Signature	(L) Date	(M) MSIN	(G) Reason	(H) Disp.
2	1	Cog.Eng. E. J. Slaathaug	[signature]	7-14-95							
2	1	Cog. Mgr. J. P. Sloughter	[signature]	7-14-95							
		QA (approved by J. Weber, on EDT 608727)	page 2 of this EDT								
		Safety (approved by J. M. Garcia, on EDT 608727)	page 2 of this EDT								
		Env. (approved by R. H. Engelmann, on EDT 608727)	page 2 of this EDT								

18.	19.	20.	21. DOE APPROVAL (if required)
Slaathaug E. J. ~~Sloughter~~ [signature] 7-14-95 Signature of EDT Originator Date	[signature] L. E. Borneman 7/18/95 Authorized Representative for Receiving Organization Date	J. P. Sloughter [signature] 7-14-95 Cognizant Manager Date	Ctrl. No. [ ] Approved [ ] Approved w/comments [ ] Disapproved w/comments [x] Not Required per Waiver WA-557

BD-7400-172-2 (04/94) GEF097

BD-7400-172-1

EDT-612612

ENGINEERING DATA TRANSMITTAL

Page 1 of 1

1. EDT 608727

2. To: (Receiving Organization) Distribution	3. From: (Originating Organization) Process Flowsheet Modeling	4. Related EDT No.: na
5. Proj./Prog./Dept./Div.: TWRS	6. Cog. Engr.: Eric J. Slaathaug	7. Purchase Order No.: na
8. Originator Remarks: This engineering data package provides the supporting data for the Tri-Party Agreement alternative. This data will be used in the preparation of the TWRS Environmental Impact Statement (EIS). This EDT transmits the data package to TWRS Compliance Plans as Rev. B, for DOE-RL approval, per WHC-CM-3-5, Section 12.7.		9. Equip./Component No.: na
		10. System/Bldg./Facility: na
11. Receiver Remarks:		12. Major Assm. Dwg. No.: na
		13. Permit/Permit Application No.: na
		14. Required Response Date:

15. DATA TRANSMITTED

(A) Item No.	(B) Document/Drawing No.	(C) Sheet No.	(D) Rev. No.	(E) Title or Description of Data Transmitted	(F) Approval Designator	(G) Reason for Transmittal	(H) Originator Disposition	(I) Receiver Disposition
1	WHC-SD-WM-EV-104		B	Tri-Party Agreement Alternative Engineering Data Package for the Tank Waste Remediation System Environmental Impact Statement	ESQ D	1 4	1	

16. KEY

Approval Designator (F)	Reason for Transmittal (G)		Disposition (H) & (I)	
E, S, Q, D or N/A (see WHC-CM-3-5, Sec.12.7)	1. Approval 2. Release 3. Information	4. Review 5. Post-Review 6. Dist. (Receipt Acknow. Required)	1. Approved 2. Approved w/comment 3. Disapproved w/comment	4. Reviewed no/comment 5. Reviewed w/comment 6. Receipt acknowledged

17. SIGNATURE/DISTRIBUTION (See Approval Designator for required signatures)

(G) Reason	(H) Disp.	(J) Name	(K) Signature	(L) Date	(M) MSIN	(J) Name	(K) Signature	(L) Date	(M) MSIN	(G) Reason	(H) Disp.
1	1	Cog.Eng. E.J. Slaathaug	EJ Slaathaug	2-28-95	H8-49						
1	1	Cog. Mgr. D.J. Washenfelder	DJ Washenfelder	2/28/95							
1	1	QA J. Weber	Jack Weber	3/1/95							
1	1	Safety J.M. Garcia	John M Garcia	3/1/95							
1	1	Env. R.H. Engelmann	R.H. Engelmann	3-1-95							
1	1	L.E. Borneman	L.E. Borneman	3/2/95							
1	1	J.O. Honeyman	J.O. Honeyman	3/1/95							

18. E.J. Slaathaug Signature of EDT Originator — Date 2-28-95	19. L.E. Borneman Authorized Representative for Receiving Organization — Date 3/2/95	20. DJ Washenfelder per telecon w/ Borneman D.J. Washenfelder Cognizant Manager — Date	21. DOE APPROVAL (if required) Ctrl. No. [] Approved [] Approved w/comments [] Disapproved w/comments

BD-7400-172-2 (04/94) GEF097

BD-7400-172-1 (07/91)

9513385.0276

RELEASE AUTHORIZATION

Document Number:	WHC-SD-WM-EV-104, REV 0
Document Title:	Tri-Party Agreement Engineering Data Package for the Tank Waste Remediation System Environmental Impact Statement
Release Date:	7/19/95

This document was reviewed following the procedures described in WHC-CM-3-4 and is:

APPROVED FOR PUBLIC RELEASE

WHC Information Release Administration Specialist:

Kara M. Broz 7/19/95

Kara M. Broz

TRADEMARK DISCLAIMER. Reference herein to any specific commercial product, process, or service by trade name, trademark, manufacturer, or otherwise, does not necessarily constitute or imply its endorsement, recommendation, or favoring by the United States Government or any agency thereof or its contractors or subcontractors.

This report has been reproduced from the best available copy. Available in paper copy. Printed in the United States of America. To obtain copies of this report, contact:

Westinghouse Hanford Company - Document Control Services
P.O. Box 1970, Mailstop H6-08, Richland, WA 99352
Telephone: (509) 372-2420; Fax: (509) 376-4989

9513385.0277

SUPPORTING DOCUMENT

1. Total Pages ~~663~~ 662

2. Title	3. Number	4. Rev No.
Tri-Party Agreement Engineering Data Package for the Tank Waste Remediation System Environmental Impact Statement	WHC-SD-WM-EV-104	0

5. Key Words	6. Author
Tri-Party Agreement, separations, vitrification, disposal, environmental impact statement, NEPA	Name: E. J. Slaathaug Signature Organization/Charge Code 74D00/D1DDB

7. Abstract

This engineering data package provides supporting data for preparation of the TWRS Environmental Impact Statement (TWRS EIS). Data in this document addresses specifically the Tri-Party Agreement Alternative. Engineering data packages addressing the other alternatives to be evaluated in the TWRS EIS are the No Disposal Action Alternative (WHC-SD-WM-EV-099), In Situ Disposal Alternative (WHC-SD-WM-EV-101), Extensive Separations Alternative (WHC-SD-WM-EV-100), and the No Separations Alternative (WHC-SD-WM-EV-103). The Waste Retrieval and Transfer Engineering Data Package (WHC-SD-WM-EV-097) and the Closure Engineering Data Package (WHC-SD-WM-EV-107) provide additional data addressing the Tri-Party Agreement Alternative. Data provided in this document relate to impacts from construction, operations (including startup, and decontamination and decommissioning), resource utilization, transportation, and radiation dose to workers. Processes and activities addressed in this data package include sludge washing, cesium removal, low-level waste vitrification, low-level waste disposal, high-level waste vitrification, on-site interim storage of the vitrified high-level waste product, and transportation of the vitrified high-level waste product to a geologic repository. Environmental impacts associated with disposal of high-level waste in a geologic repository are not within the scope of the TWRS EIS and not addressed in this document, other than accounting for the repository disposal fee in order to equitably compare alternatives.

8. RELEASE STAMP

OFFICIAL RELEASE BY WHC (2)
DATE JUL 19 1995

A-6400-073 (08/94) WEF124

9513385.0278

WHC-SD-WM-EV-104 Rev. 0

UC-630

Tri-Party Agreement Alternative Engineering Data Package for the Tank Waste Remediation System Environmental Impact Statement

E. J. Slaathaug

Date Published
July 1995

Prepared for the U.S. Department of Energy
Office of Environmental Restoration and
Waste Management

Westinghouse Hanford Company P.O Box 1970 Richland, Washington

Management and Operations Contractor for the
U.S. Department of Energy under Contract DE-AC06-87RL10930

Approved for Public Release

CONTENTS

1.0 INTRODUCTION 1-1

2.0 SCOPE 2-1

3.0 OVERVIEW OF THE TRI-PARTY AGREEMENT ALTERNATIVE 3-1
3.1 CHANGES IN THE TRI-PARTY AGREEMENT 3-1
3.2 NEW TECHNICAL STRATEGY 3-1
3.2.1 Solid/Liquid Separations. 3-3
3.2.2 Radionuclide Removal 3-3
3.2.3 Additional Separations 3-3
3.2.4 Low-Level Waste Vitrification 3-3
3.2.5 On-Site Disposal 3-3
3.2.6 High-Level Waste Vitrification 3-3
3.2.7 Interim Storage 3-3
3.2.8 Off-Site Disposal 3-3
3.2.9 Cesium/Strontium Capsule. 3-3
3.2.10 Repackaging of Cesium/Strontium Capsules 3-3

4.0 ASSUMPTIONS 4-1
4.1 PROCESS FEED 4-1
4.2 SOLUBILITY 4-1
4.3 SOLID/LIQUID SEPARATIONS 4-1
4.4 ENHANCED WASH 4-2
4.5 DECANT OPERATION 4-2
4.6 RADIONUCLIDE REMOVAL 4-3
4.7 CESIUM ION EXCHANGE 4-3
4.8 LOW-LEVEL WASTE MELTER 4-3
4.9 LOW-LEVEL WASTE GLASS 4-3
4.10 LOW-LEVEL WASTE DISPOSAL 4-4
4.11 HIGH-LEVEL WASTE MELTER 4-4
4.12 HIGH-LEVEL WASTE GLASS 4-4
4.13 HIGH-LEVEL WASTE DISPOSAL 4-5
4.14 PRETREATMENT/LOW-LEVEL WASTE COMBINED - HIGH-LEVEL WASTE SEPARATE 4-5
4.15 CENTRALIZED FACILITIES 4-5
4.16 CESIUM/STRONTIUM CAPSULES 4-5

5.0 PROCESS DESCRIPTION 5-1
5.1 COMBINED SEPARATIONS AND LOW-LEVEL WASTE VITRIFICATION 5-1
5.2 DETACHED HIGH-LEVEL WASTE VITRIFICATION 5-4

CONTENTS (Continued)

6.0 PROCESS EQUIPMENT 6-1

7.0 CONSTRUCTION 7-1
7.1 FACILITY LAYOUTS 7-1
7.1.1 Pretreatment/Low-Level Waste Vitrification Facility 7-1
7.1.2 Detached High-Level Waste Vitrification Facility 7-7

8.0 SITE LAYOUTS 8-1

9.0 DATA TABLES 9-1
9.1 DATA ACCURACY 9-1
9.2 LIST OF TABLES 9-1

10.0 RATE DATE 10-1

11.0 REFERENCES 11-1

12.0 ACKNOWLEDGMENTS 12-1

APPENDICES

A FLOW DIAGRAMS FOR HIGH-LEVEL WASTE, LOW-LEVEL WASTE AND DETAILED MATERIAL BALANCES A-1

B EQUIPMENT LISTS B-1

C MASS BALANCES AND PROCESS FLOW DIAGRAMS FOR EQUIPMENT SIZING C-1

D FACILITY LAYOUTS D-1

E SITE LAYOUTS E-1

F ACCOMPANYING DATA FOR DATA TABLES F-1

LIST OF FIGURES

3-1 New Technical Strategy 3-2

5-1 Block Diagram of Pretreatment/Low-Level Waste Process 5-3

5-2 Block Diagram of Detached High-Level Waste Process 5-5

7-1 Pretreatment/Low-Level Waste Facility Layout 7-3

7-2 Artists Rendering of Pretreatment/Low-Level Waste Facility 7-5

7-3 High-Level Waste Facility Layout 7-9

7-4 Artists Rendering of High-Level Waste Facility 7-11

8-1 Site Plan 8-3

10-1 Tri-Party Agreement Chart for Construction 10-2

10-2 Tri-Party Agreement Chart for Staffing 10-3

10-3 Tri-Party Agreement Processing Cost 10-4

LIST OF TABLES

9-1 Average Radionuclide Inventory in the Final Glass Form (Ci/m^3) 9-3

9-2 Unit Process: Operating Personnel Requirements 9-5

9-3 Operating Personnel Requirements (Staff-Hours)[1] 9-6

9-4 Operating Resource Requirements 9-7

9-5 Non-Radiological Operating Emissions 9-9

9-6 Radiological Operating Emissions 9-11

9-7 Transportation in Support of Processing 9-13

9-8 Unit Process: Construction Personnel Requirements 9-15

9-9 Construction Personnel Requirements 9-16

9-10 Construction Resource Requirements 9-17

9-11 Nonradiological Construction Emissions 9-18

9-12 Transportation of Earthen Borrow Construction Material 9-20

9-13 Transportation of Other Construction Material 9-21

9-14 Decommissioning of Non-Contaminated Treatment/Storage Facilities 9-22

9-15 Decommissioning of Contaminated Treatment/Storage Facilities 9-23

9-16 Process Module: Overall Cost 9-24

9-17 Overall Cost Component 9-25

9-18 Capital Cost Component 9-26

9-19 Operating Cost Component 9-27

9-20 Overall Schedule 9-28

9-21 Unit Process: Sequence of Construction 9-29

LIST OF TABLES (Continued)

9-22 Construction Equipment Schedule 9-30

9-23 Unit Process: Average Radiation Dose at Facility 9-31

9-24 Unit Process: Operating Schedule 9-32

9-25 Construction Type by Duration 9-33

10-1 Table/Figure Key 10-1

10-2 Canister Transportation to Repository Schedule 10-5

This page intentionally left blank.

LIST OF TERMS

CRWMS	Civilian Radioactive Waste Management System
Cs	cesium
CsIX	cesium ion exchange
DOE	U.S. Department of Energy
DST	double-shell tank
DWPF	Defense Waste Production Facility
EIS	environmental impact statement
ETF	Effluent Treatment Facility
HMPC	Hanford Multi-Purpose Canisters
HWVP	Hanford Waste Vitrification Plant
HLW	high-level waste
LETF	Liquid Effluent Treatment Facility
LLW	low-level waste
MGDS	mined geological disposal system
MOG	melter offgas
NOI	Notice of Intent
NOx	nitrogen oxide and nitrogen dioxide
PFD	process flow diagram
RL	U.S. Department of Energy, Richland Field Office
Sr	strontium
SST	single-shell tank
TAPS	Task Authorization and Planning System
TWRS	Tank Waste Remediation System
WHC	Westinghouse Hanford Company

This page intentionally left blank.

1.0 INTRODUCTION

On January 28, 1994, the U.S. Department of Energy (DOE) announced via a Notice of Intent (NOI) in the Federal Register that an environmental impact statement (EIS) would be prepared for disposal of the wastes in 177 underground storage tanks and the approximately 2000 cesium (Cs) and strontium (Sr) capsules at the Hanford Site. The purpose of the EIS is to identify and evaluate the impacts of the proposed actions in the recently amended Hanford Federal Facility Agreement and Consent Order (Tri-Party Agreement) (Ecology et al. 1994).

The Westinghouse Hanford Company (WHC) Tank Waste Remediation System (TWRS) has been assigned the task of preparing this EIS. TWRS has established an outline for the EIS stating that it will encompass the following five treatment alternatives:

- Tri-Party Agreement preferred alternative
- No disposal action
- Extensive pretreatment
- No separations
- In-situ disposal.

In addition to the five alternatives listed above, three other data packages will be created, which are the following:

- Waste retrieval and transfer
- Tank closure
- Deposition of cesium and strontium capsules.

Engineering data will be provided to the Jacobs Engineering Company, the EIS preparer, in the form of tables and figures. The necessary data will be equivalent to the data prepared for the *Environmental Impact Statement for the Disposal of Hanford Defense High-Level Transuranic and Tank Wastes* (DOE 1987), plus any additional information the EIS preparer requests. All data will be compiled into individual data packages. The data packages will then be combined into a single document by WHC before being transmitted to the EIS preparer.

This document is the data package for the Tri-Party Agreement preferred alternative.

This page intentionally left blank.

2.0 SCOPE

To comprehend the intended scope of this document, the reader must keep the following in mind:

1. This data package includes waste treatment operations that fall between waste retrieval and transfer and closure of single-shell tanks (SST) and double-shell tanks (DST). Retrieval and transfer and tank closure will not be covered in this data package; both will be included in separate packages (Fredenberg 1995 and Scanlon 1995).

2. The sole purpose of this document is to serve as a technical data package. It will be used to prepare the EIS.

3. The disposition of the cesium and strontium capsules will not be addressed in this data package. It is assumed that the capsules will be returned to the Hanford Site, re-packaged if necessary, overpacked, and sent to an offsite geological repository for final disposal. The disposition of the cesium and strontium capsules is being addressed in a separate data package (Nankani 1995).

This page intentionally left blank.

3.0 OVERVIEW OF THE TRI-PARTY AGREEMENT ALTERNATIVE

This section outlines the major changes in technical strategy for the disposal of tank wastes that have occurred in the Tri-Party Agreement since the release of the *Final Environmental Impact Statement for the Disposal of Hanford Defense, High-Level, Transuranic, and Tank Wastes, Hanford Site, Richland, Washington (HDW-EIS) Record of Decision (ROD)* (DOE 1987). As outlined in Section 2.0 this document will only address the treatment and disposal of the tank wastes. It will not cover retrieval and transfer of the tank wastes nor the closure of the tank farms.

3.1 CHANGES IN THE TRI-PARTY AGREEMENT

The HDW-EIS ROD directed the following activities pertaining to the treatment and disposal of the tank wastes:

- Retrieve and separate all existing and future DST wastes into high-activity and low-activity fractions.
- Process the high-activity waste fraction into a borosilicate glass in the Hanford Waste Vitrification Plant (HWVP), followed by disposal in a geologic repository.
- Solidify the low-activity waste fraction as grout and dispose in near-surface vaults on-site.

In January 1994, DOE, Washington State Department of Ecology (Ecology), and U.S. Environmental Protection Agency (EPA) renegotiated the Tri-Party Agreement and, based on a new technical strategy and stakeholder input, proposed the following changes:

- Retrieve present and future wastes from all DSTs and SSTs.
- Terminate construction of HWVP due to its inability to process all the waste in the time frame allotted.
- Vitrify the low-activity fraction and dispose of it on-site, near-surface, and in a retrievable form.

3.2 NEW TECHNICAL STRATEGY

From the changes to the Tri-Party Agreement given in Section 3.1, a new technical strategy was created. This new strategy is shown in Figure 3-1 and is described below.

Figure 3-1. New Technical Strategy.

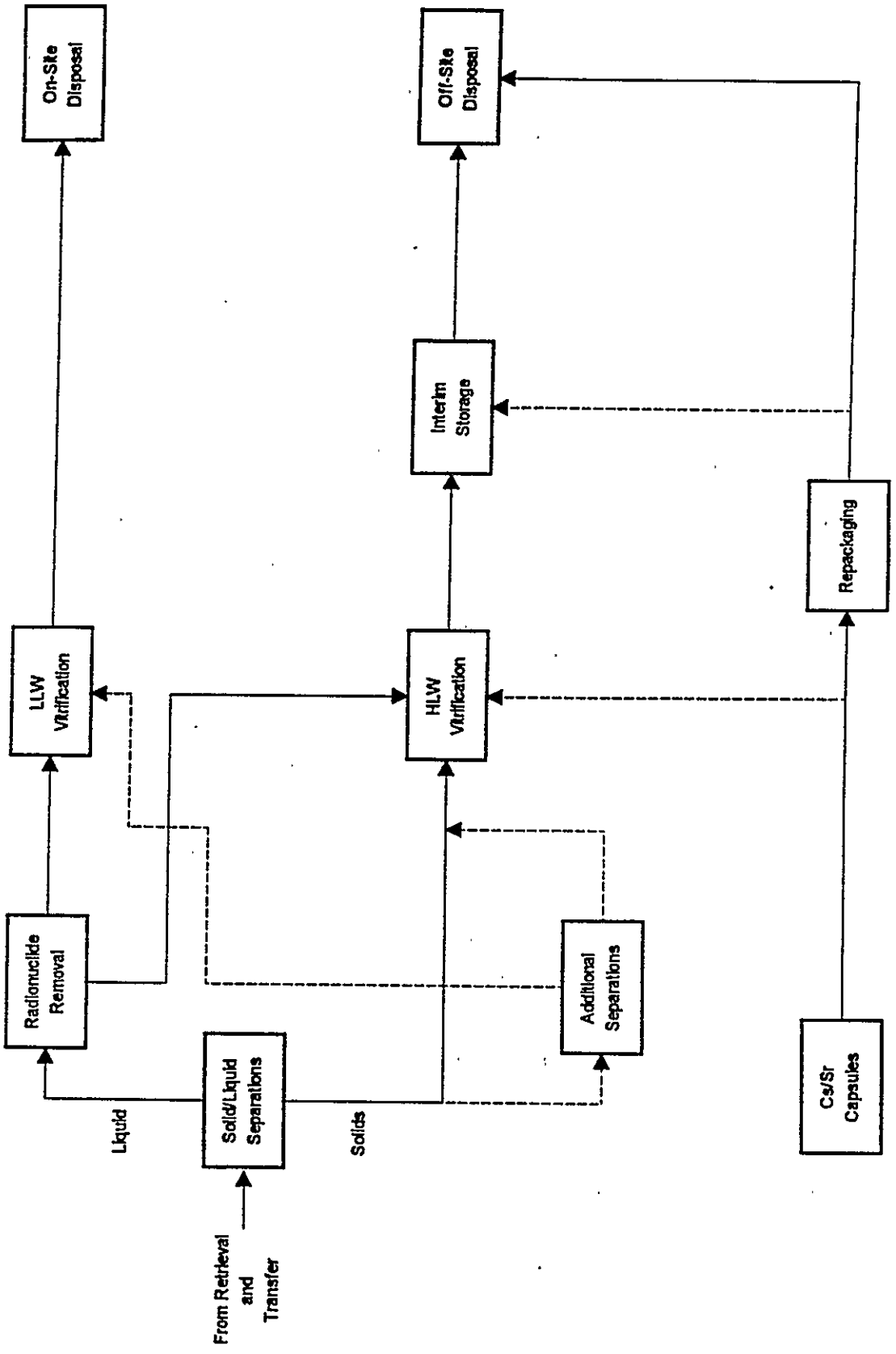

3.2.1 Solid/Liquid Separations. Solid/liquid separations would employ sludge washing to separate soluble species from insoluble species. Proposed methods include in-tank and/or out-of-tank water washing, in-tank and/or out-of-tank enhanced washing (caustic leaching), and in-tank or out-of-tank centrifugation or filtration.

3.2.2 Radionuclide Removal. Radionuclide removal would remove radionuclides from the low-activity waste stream in order to meet disposal requirements.

3.2.3 Additional Separations. Additional separations may need to be used if the volume of the vitrified high-activity stream is unacceptable on a cost/processing/disposal basis.

3.2.4 Low-Level Waste Vitrification. Low-level waste (LLW) vitrification would vitrify the low-activity fraction.

3.2.5 On-Site Disposal. On-site disposal ultimately would dispose of the low-activity waste on-site, near-surface, in a retrievable form that complies with all disposal requirements.

3.2.6 High-Level Waste Vitrification. High-level waste (HLW) vitrification would vitrify the high-activity fraction.

3.2.7 Interim Storage. Sufficient on-site interim storage of the vitrified high-activity waste would be allowed for the storage of all waste until final disposal.

3.2.8 Off-Site Disposal. Off-site disposal of the vitrified high-activity waste would be at a Federal repository.

3.2.9 Cesium/Strontium Capsule. Cs/Sr capsules that were loaned out would be returned to the Site, at which point it would be decided if the capsules would be repackaged or combined with the high-activity fraction for vitrification.

3.2.10 Repackaging of Cesium/Strontium Capsules. Repackaging of Cs/Sr capsules would occur if it is decided that they would not be vitrified. The capsules would be repacked if necessary and placed into overpack containers. From here they would be sent to the Federal repository or to interim storage.

This page intentionally left blank.

4.0 ASSUMPTIONS

The major assumptions employed in creating this data package are summarized in the paragraphs below. The assumptions coupled with the new technical strategy outline (Section 3.2) results in the process outline used for this data package.

The accompanying text also includes the rational for selecting these assumptions as well as their relative impacts on the process.

4.1 PROCESS FEED

The material balances for the facilities assume that the feed from retrieval and transfer is a homogeneous mixture of all tanks wastes. Furthermore, the material balances also assume that the feed is adjusted to 5 M soluble sodium in the retrieval and transfer steps.

The homogeneous mixture assumption was made because tank-by-tank inventories were not available and even if they were, a tank retrieval scenario has not been accepted as of this date. By using this assumption, all of the treatment scenarios use a comparable basis and this data package remains consistent with the referenced work (Boomer 1994 and Orme 1994).

> Note: **Preliminary** results for tank-by-tank treatment shows that if all other assumptions remain the same in the reference flowsheet (Orme 1994) the high-activity glass volume would increase by a factor of about two.

Using the sodium molarity specification in the feed has virtually no effect on the process.

4.2 SOLUBILITY

The material balances for the facilities assume that the components in the feed stream have solubilities identical to the factors outlined in the reference flowsheet (Orme 1994).

This assumption directly effects the volume of high-activity glass produced, but its overall affect is unknown. By using this assumption all of the treatment scenarios use a comparable basis and this data package remains consistent with the referenced work (Boomer 1994 and Orme 1994).

4.3 SOLID/LIQUID SEPARATIONS

The soluble fraction of the tank waste would be separated from the insoluble via a series of in-tank settle decant steps. These in-tank settle decants would occur in existing DSTs.

This assumption means that solid/liquid separation would be performed without the need for a facility or construction of additional DSTs. This has an impact on the total capital cost for the option. By using this assumption, this data package remains consistent with the referenced work (Boomer 1994 and Orme 1994) from which much of the sizing and costing data was extracted.

4.4 ENHANCED WASH

The pretreatment process employs sodium hydroxide to solubilize additional amounts of aluminum, chromium, and phosphate (85, 75, and 70 percent respectively) that are not soluble in water alone. This would be performed in existing DSTs.

This assumption has a large effect on the volume of high-activity glass produced. The overall effect is an increase in the high-activity glass volume by a factor of about three and a decrease in the number of low-activity disposal vaults by approximately four. In order to compensate for this assumption, the high-activity melter would have a design capacity (20 metric tons per operating day) far greater than the flow rate if enhanced washing is employed (approximately 8 metric tons per operating day). However, the raw material and glass volume produces would be based on the smaller throughput. By using this assumption this data package remains consistent with the referenced work (Boomer 1994 and Orme 1994) from which much of the sizing and costing data was extracted.

4.5 DECANT OPERATION

The pretreatment process separates the liquid fraction from the solid fraction via a number of settle/decant/wash steps. The degree of separation in the decant is set to 50 weight percent solids and the amount of wash solution added was set to make the resulting slurry 20 weight percent solids.

The decanting specification for this data package differs from the decanting specifications outlined in the *TWRS Process Flowsheet* (Orme 1994), but remain consistent with the *Tank Waste Remediation System Facility Configuration Study* (Boomer 1994). In the Orme 1994 the slurries are decanted to 20 weight percent solids and then adjusted to 8 percent solids before transfer. In the data package and Boomer 1994 case, the percents are 50 and 20 respectively. Also in Orme 1994, two more wash steps are used. The extra wash steps compensate for the lesser separation; the end result is that the solid slurries have nearly identical compositions and the impact on the low-activity glass volume is minimal. A negative affect is the low-activity melter feed evaporator has to remove nearly five times the amount of liquid to achieve its product specification. However, this should not have a great environmental affect because the overheads from the evaporator are recycled back to the in-tank sludge washing process.

4.6 RADIONUCLIDE REMOVAL

The only radionuclide removal process is cesium ion exchange (CsIX).

This assumption leads to a lot of debate. Strontium and technetium removal (to name a few) plus organic destruction may be required in order for the low-activity glass to meet the regulations that pertain to its disposal. Unfortunately, the need for additional radionuclide removal has not been decided upon. Therefore, in order to remain consistent with the referenced work (Boomer 1994 and Orme 1994), this assumption was selected. As more information becomes available, this assumption may need to be readdressed.

4.7 CESIUM ION EXCHANGE

The CsIX section is based on using a regenerable resin (Duolite CS-100) that removes at least 99 percent of the incoming cesium.

This assumption has a small effect on the volume of high-activity glass produced. The regeneration of the columns does have an impact, but it is estimated to be much less than ten percent and one percent of the total high-activity and low-activity glass produced respectively. By using this assumption, this data package remains consistent with the referenced work (Boomer 1994 and Orme 1994).

4.8 LOW-LEVEL WASTE MELTER

The low-activity glass melter is a combustion-fired melter with kerosene as its fuel. The feed slurry and the dry glass formers are added to the melter simultaneously.

The type of melter selected has its largest impact on the volume of offgas produced, but generally does not impact the masses of the components in it. The melter models have not been developed to such an extent that individual component carryover in the offgas streams are based upon the melter type. For example, every melter has the same percent of sodium fed to it in its offgas regardless of what type of melter it is (combustion, joule, etc.). Also, the glass produced would meet the same criteria regardless of the melter type selected. By using this assumption, this data package remains consistent with the referenced work (Boomer 1994 and Orme 1994).

4.9 LOW-LEVEL WASTE GLASS

The amount of low-activity glass produced is determined by the maximum allowable sodium oxide loading (25 weight percent). Also in the low-activity glass, the aluminum oxide and calcium oxide weight percents are set to five and ten respectively.

The 25 weight percent loading assumption insures that the data package remains consistent with the referenced work (Boomer 1994 and Orme 1994). The aluminum oxide and calcium oxide specifications have no impact on the volume of low-activity glass produced, but do affect the total cost for the glass formers. However this affect is negligible when compared to the total operating cost.

4.10 LOW-LEVEL WASTE DISPOSAL

The low-activity glass product would be disposed onsite in 5300 m^3 vaults in a polymer/sulfur matrix.

In order to use the information contained in the references (facility layouts, equipment sizes, costs, etc.), this data package remains consistent with the referenced work (Boomer 1994 and Orme 1994).

4.11 HIGH-LEVEL WASTE MELTER

The high-activity glass melter is a joule-heated melter.

As stated above in the LLW Melter assumptions, the process is relatively independent of the type of melter employed. In fact most of the data used for sizing and costing purposes for this document and the *Tank Waste Remediation System Facility Configuration Study* (Boomer 1994) used a combustion melter for high-activity glass vitrification. This would impact the high-activity melter's offgas equipment, but would have a small impact on the volume of offgas when compared to the low-activity melter's offgas. Also, as stated before, the masses of components in the offgas stream and the volume of glass produced would not change with the melter type.

4.12 HIGH-LEVEL WASTE GLASS

The high-activity glass product has a waste oxide loading of 45 weight percent.

The 45 weight percent waste oxide loading is an effect of meeting the same glass specifications used in the referenced work (Boomer 1994 and Orme 1994).

4.13 HIGH-LEVEL WASTE DISPOSAL

The final high-activity glass form is a glass monolith (0.68m ID x 4.57m) with a net volume of 1.26 m^3. Also the high-activity vitrification facility allows enough interim storage space for all of the high-activity glass produced. After the high-activity vitrification campaign has concluded, the monoliths would be transported in Hanford Multi-Purpose Canisters (HMPC) (4 monoliths per HMPC) to an offsite Federal repository for final disposal.

The rational for this is the *Tank Waste Remediation System Facility Configuration Study* (Boomer 1994), which has the same assumption and is the primary reference source for the costing information in this data package.

4.14 PRETREATMENT/LOW-LEVEL WASTE COMBINED - HIGH-LEVEL WASTE SEPARATE

The WHC TWRS decision board selected this facility configuration as the one to be used for all future work related to the TWRS mission. This effects the total capital expenditures as well as the spending profile for this alternative.

4.15 CENTRALIZED FACILITIES

The WHC TWRS decision board, in selecting the above facility configuration, stated that the facilities are also to be centralized and would share the same support facilities.

4.16 CESIUM/STRONTIUM CAPSULES

The Cs/Sr capsules would be returned to the Site, repacked if necessary, overpacked, and sent to the repository without interim storage independent of the processes outlined in this data package.

For information relating to the disposition of Cs/Sr capsules, the reader is referred to the Cs/Sr data package (Nankani 1995).

This page intentionally left blank.

5.0 PROCESS DESCRIPTION

The configuration used for costing basis actually consists of two separate facilities; (1) a pretreatment and LLW combined facility and (2) a HLW treatment facility (see Section 4.14) and therefore two independent processes, which are described below.

5.1 COMBINED SEPARATIONS AND LOW-LEVEL WASTE VITRIFICATION

Figure 5-1 shows the overall process steps employed for the combined separations and LLW vitrification scheme. Appendix A contains an overall process flow diagram (PFD) and material balance for this alternative.

The feed from retrieval and transfer is pumped to the in-tank enhanced wash tanks where it is allowed to settle. The resulting liquid then is decanted off and sent to secondary settling and the filling/settling process is repeated. If, after decanting, sufficient solids are left in the tank, sodium hydroxide is added to solubilize most of the aluminum, chromium, and phosphate thereby reducing the quantity of solids going the HLW. The resulting solid slurry then is transferred to in-tank washing.

In secondary settling, the decanted liquid is allowed to settle for a second time. The resulting liquid is decanted and the solids, when enough have accumulated, are routed to in-tank washing.

The in-tank washing section consists of two identical steps where the solids are allowed to settle, the liquid is decanted, and the solids are re-slurried with a dilute sodium hydroxide-sodium nitrite solution before being transferred. No additional dissolution occurs in these steps; they serve primarily as dilution steps to remove most of the original liquid from the solids. The two decants from this step are combined with the decant from secondary settling and routed to CsIX feed evaporation. The resulting solids are routed to tank farms to await further treatment in the HLW facility.

The decanted liquid is concentrated to 7 M sodium in the CsIX feed evaporation section. This concentrated stream then is sent to the CsIX feed clarification section where a sand filter is employed to remove nearly all of the solids carried over in the decant step. The sand filter periodically is flushed and the filter media is sent to tank farms to await further treatment in the HLW facility.

In the CsIX section, four ion exchange columns operate in a carousel fashion where three of the columns are loaded in series while the fourth is being eluted/regenerated. Nitric acid is used to elute the cesium from the column and sodium hydroxide is used to regenerate the resin. This fourth column returns to service once the next column has become loaded. The columns are sized to allow this process to operate in a continuous fashion with one elution/regeneration step occurring per operating day. The cesium rich stream is routed to

the HLW evaporator. The column effluent and regeneration streams are combined and routed to the LLW feed evaporator.

The HLW evaporator operates under a vacuum in order to remove the nitric acid before the stream is neutralized thereby reducing the amount of sodium going to HLW. The evaporator overheads are recycled back to the elution step and the bottoms are neutralized with sodium hydroxide before being pump to tank farms to await treatment in the HLW facility.

In the LLW evaporator section, the stream from CsIX is combined with the recycle stream from melter offgas treatment. The resulting stream is concentrated to 10 M sodium before being routed to the melter feed section.

In the melter feed section, the LLW evaporator bottoms are combined with recycled cullet from cullet handling before being sent to the melter.

The melter section consists of two continuous, kerosene fueled combustion melters. The melter feed and dry glass formers feed into the melters where the streams combine and are vitrified. The molten glass exits the melters and enters the cullet handling section while the melter offgases are routed to the melter offgas treatment section.

In the cullet handling section, the molten glass passes through a quenching and crushing stage resulting in pea-sized fractured glass or cullet. The cullet would be analyzed to ensure that it meets product specifications. If the glass fails, it would be recycled back to the melter feed section. If it passes, it would be routed to the cullet and sulfur handling section.

The melter offgas treatment system receives the hot combustion gases from the melter. Most of the entrained particulates, water-soluble contaminants, and water vapor are removed through a series of scrubber steps. Excess condensates recycle to the LLW feed evaporator section for re-evaporation. The scrubbed melter offgases are cooled and pass through successive stages of filtration before flowing to a sulfur dioxide adsorption process and a catalytic de-nitrogen oxide and nitrogen dioxide (NO_x) reactor before final discharge. The recovered sulfur dioxide is converted into elemental sulfur by a claus unit that discharges its product to the cullet and sulfur handling section.

In the cullet and sulfur handling section, the cullet is combined with a sulfur/polymer blend before being transferred to the onsite disposal vaults.

Four ion-exchange columns operate in a carousel fashion where three of the columns load in series. Nitric acid is used to elute the cesium and sodium hydroxide and wash water solutions regenerate the resin in the fourth column. This fourth column returns to service once the next column has loaded. The columns are sized to allow this process to operate in a continuous fashion. The cesium-rich streams are routed to tank farms to await treatment in the HLW facility. The column effluent and regeneration streams are combined and routed to LLW feed adjustment.

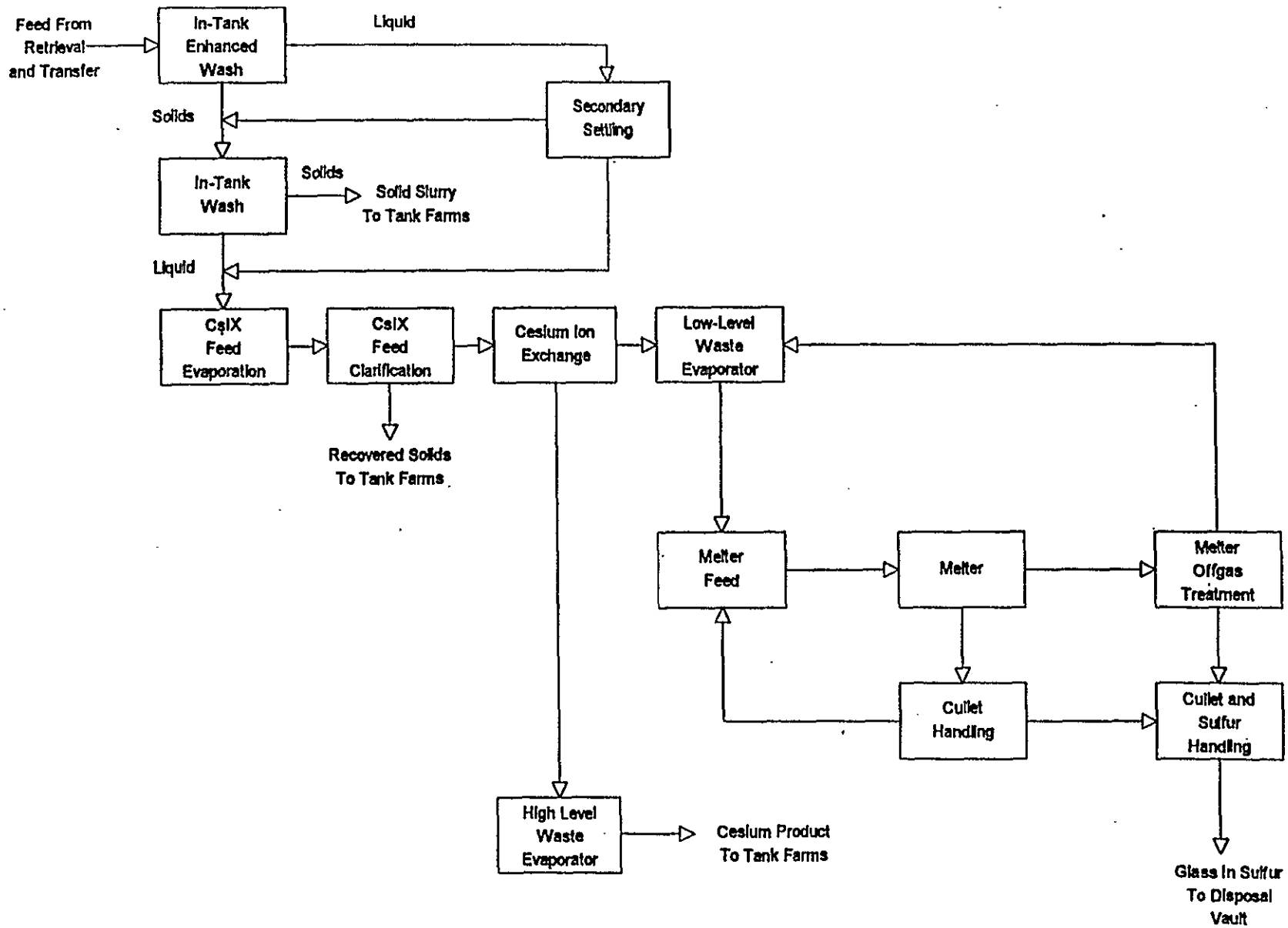

Figure 5-1. Block Diagram of Pretreatment/Low-Level Waste Process.

In the LLW feed adjustment system, the LLW recycle streams mix with the supernatant feed before concentration by the LLW evaporator. Evaporator overheads are condensed and collected in the process liquid waste system for recycle. The evaporator bottoms are sampled, cooled, and adjusted (if necessary) before transfer to the LLW melter feed system. The liquid melter feed and dry glass formers feed into a combustion melter where the streams combine and melt into liquid glass. The glass exits the melter, passes through a quenching and crushing stage, and enters into a cullet quench tank. The glass cools further in the quench-tank water resulting in pea-sized fractured glass or cullet. The cullet goes to a lag storage area were it would be analyzed to ensure that it meets product specifications. If the glass fails, it would be recycled back to the melter. If it passes, it would be combined with a sulfur/polymer mixture that helps transport the cullet to near-surface vaults for disposal.

The LLW melter offgas (MOG) system receives the hot combustion gases from the glass separator section of the melter. Quenching of these offgases by countercurrent contact with cool scrub water removes most of the entrained particulates and water-soluble contaminants and condenses much of the water vapor. Excess condensate from the LLW MOG system recycle to the LLW feed preparation step for re-evaporation. The scrubbed MOGs are cooled and pass through successive stages of filtration before flowing to a sulfur dioxide adsorption process and a catalytic de-NO_x reactor and final discharge to the heating, ventilating, and air conditioning (HVAC) system. The recovered sulfur dioxide is converted into elemental sulfur by a claus unit that discharges its product to LLW cullet and sulfur mixing.

5.2 DETACHED HIGH-LEVEL WASTE VITRIFICATION

Figure 5-2 shows the overall process steps employed for the detached HLW vitrification scheme. An overall PFD and material balance for this option is contained in Appendix A.

The solid slurry from tank farms is routed to the HLW centrifuge. The centrifuged solids are sent to the melter feed section and the liquid goes to the HLW evaporator. The HLW evaporator concentrates the stream in order to decrease the amount of water entering the HLW melter. The evaporator bottoms are routed to the melter feed section.

In the melter feed section, the solids from the HLW centrifuge, the bottoms from the HLW evaporator, the recovered solids from tank farms, the cesium product from tank farms, and the MOG treatment recycle are combined together. Glass formers and an organic acid (glycolic) then are added to this stream before it enters the melter section. The organic acid is added for reduction/oxidation control in the melter.

Figure 5-2. Block Diagram of Detached High-Level Waste Process.

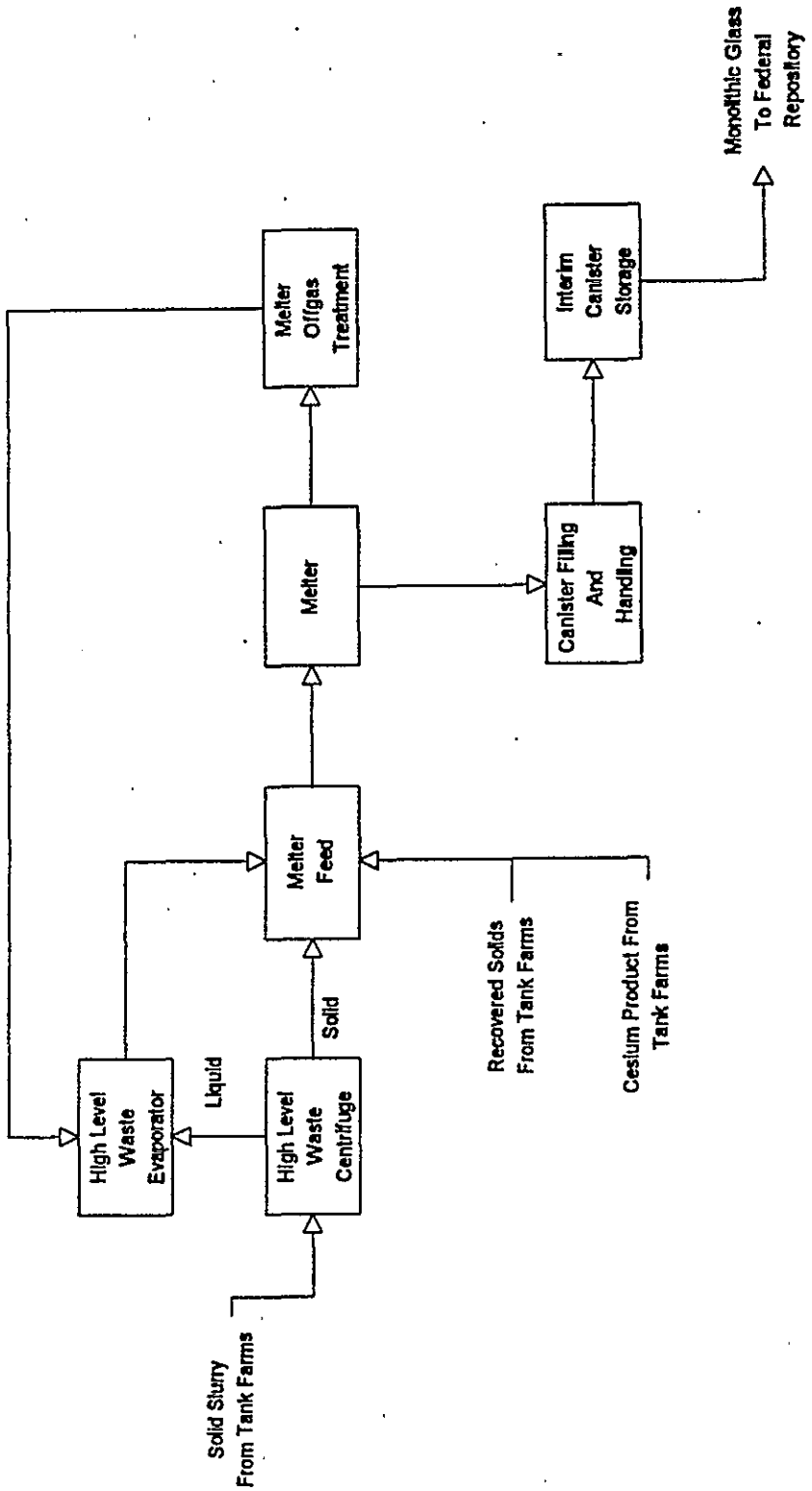

The melter is a joule-heated, liquid-slurry-fed glass melter. The molten glass exits the melter and proceeds to the canister filling and handling section. The MOG is routed to the MOG treatment section.

The MOG treatment system receives the hot combustion gases from the melter. Most of the entrained particulates, water-soluble contaminants, and water vapor are removed through a series of scrubber steps. Excess condensates recycle to the HLW evaporator section for re-evaporation. The scrubbed MOGs are cooled and pass through successive stages of filtration before flowing to a sulfur dioxide adsorption process and a catalytic de-NO_x reactor before final discharge.

In the canister filling and handling section the molten glass is poured into cylinders to form solid monoliths. After cooling, four cylinders are placed into another canister. This canister in turn is placed into an overpack container and routed to interim canister storage.

Interim canister storage is a storage pad located outside of the HLW treatment facility. All of the canisters would be stored here until the Federal repository would accept shipments. Then, over a period of years, the containers would be transported to the repository for final disposal.

6.0 PROCESS EQUIPMENT

Equipment sizes are based on information from the construction of the Defense Waste Production Facility (DWPF) in Savannah River and the throughput of the melters (200 metric tons low-level and 20 metric tons high-level). This DWPF information includes size, material of construction, and costs. Equipment lists for both facilities are located in Appendix B. The equipment lists include capacity/flow rate, physical size, material of construction, and power requirements. Overall mass balances and PFDs for the two facilities are located in Appendix C. The mass balances are based on plants operating at design capacity.

This page intentionally left blank.

7.0 CONSTRUCTION

Layouts for the Pretreatment/LLW and HLW facilities were developed by using the equipment sizes calculated in Section 6.0 and Appendix B. Both facilities were developed using a remote operation and remote maintenance design philosophy. However, the Pretreatment/LLW facility uses a flasking concept for the removal of failed equipment while the HLW facility uses a canyon concept.

7.1 FACILITY LAYOUTS

7.1.1 Pretreatment/Low-Level Waste Vitrification Facility

A detailed facility layout for the Pretreatment/LLW Vitrification facility is given in Figure 7-1. Additional detailed facility layouts are contained in Appendix D. An architectural rendering of the facility is shown in Figure 7-2. The rendering shows the facility's proximity to the LLW vaults as well as to the HLW facility.

The facility contains seven areas: feed receipt and sampling, CsIX, melter operations, cullet processing, sulfur operations, cold chemical make-up, and HVAC. The facility has an overall footprint of about 89 m wide by 76 m long with an overall height of 39 m, of which 20 m extends belowgrade. In addition to the process level, the facility has two other levels at grade and +9 m. The facility has a total area of approximately 6,800 m^2 and a volume of approximately 260,000 m^3.

The process level contains the feed receipt and sampling, CsIX, process evaporation for separations, and cullet processing areas. Feed receipt and sampling occurs in six 200-m^3 tanks that receive feed from six 400-m^3 tanks external to the building. The CsIX consists of a single stage of 12.5-m^3 columns, and supporting tanks. The cullet processing consist of quench tanks below the evaporators and 18 cullet storage tanks.

The two other levels provide space for support services and additional process equipment. The grade level of the facility provides space to support flasking operations to the separation cells below, instrumentation to the process equipment, melter operations, process evaporator for LLW melter feed, maintenance areas, and sulfur operations. The +9 m level provides electrical services and cold chemical make-up space.

This page intentionally left blank.

Figure 7-1. Pretreatment/Low-Level Waste Facility Layout. (7 sheets)

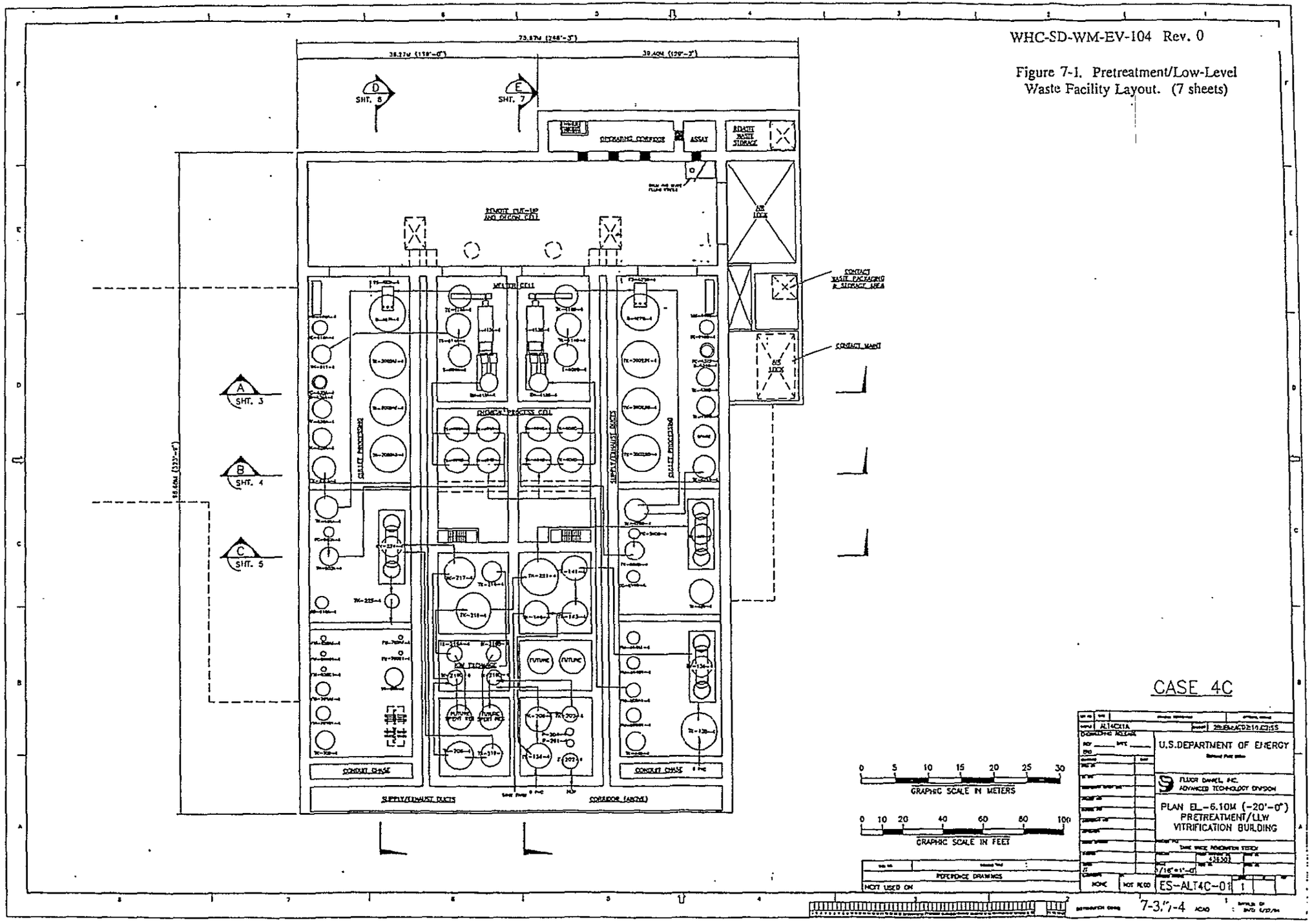

Figure 7-2. Artists Rendering of Pretreatment/Low-Level Waste Facility.

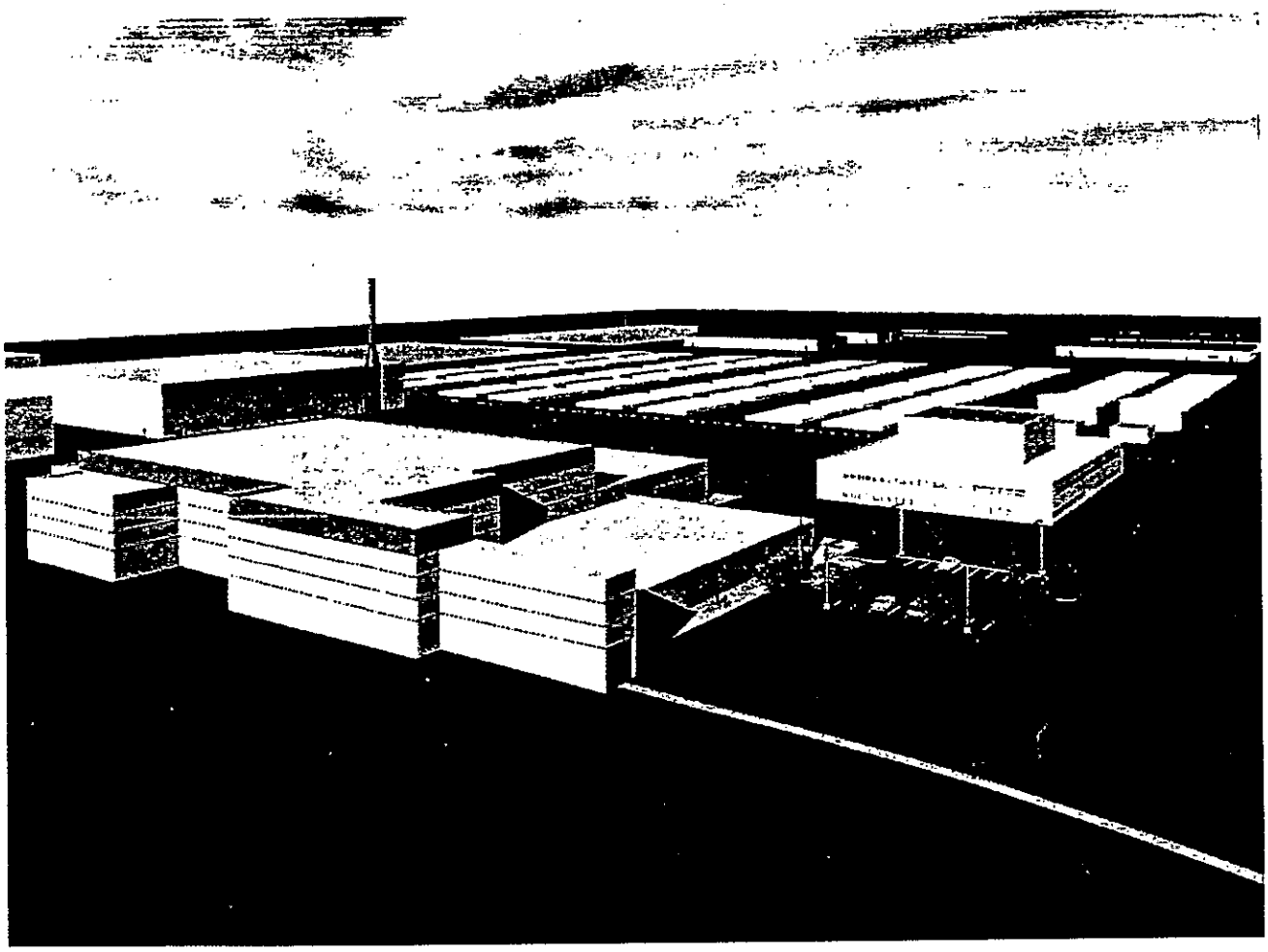

7.1.2 Detached High-Level Waste Vitrification Facility

A detailed facility layout for the HLW Vitrification Facility is given in Figure 7-3. Additional detailed facility layouts are contained in Appendix D. Architectural renderings of the facility are shown in Figure 7-4. The renderings show the facility's proximity to the LLW facility.

The HLW facility has six areas: feed receipt and sampling, process evaporation, melter operations, maintenance areas, canister loading, cold chemical make-up, and HVAC system. The facility has an overall height of 45 m, of which 13 m extends belowgrade. In addition to the process level, the facility has three other levels at -13 m, +13 m, and +20 m. The dimensions of the facility are 53 m by 166 m for an area of 8,800 m^2. The facility's volume is approximately 396,000 m^3.

The process level contains the feed receipt and sampling, process evaporation, melter operations and the maintenance area. The chemical process cell contains the feed receipt and sampling vessels. The tanks receive feed from 6 200-m^3 tanks that sit in an adjacent structure.

The process cell also includes tanks to support the process evaporator. Finally, this cell contains feed tanks to the melter. The melter cell contains the HLW melter and offgas equipment. The maintenance area provides space for the repair and disposal of failed equipment.

The other three levels provide the remainder of the support facilities. The -13 m level houses the canister loading and handling equipment. The +13 m level contains service corridors at the top of the cover blocks. The +20 m level provide crane maintenance and cold chemical make-up.

Figure 7-3. High-Level Waste Facility Layout. (5 sheets)

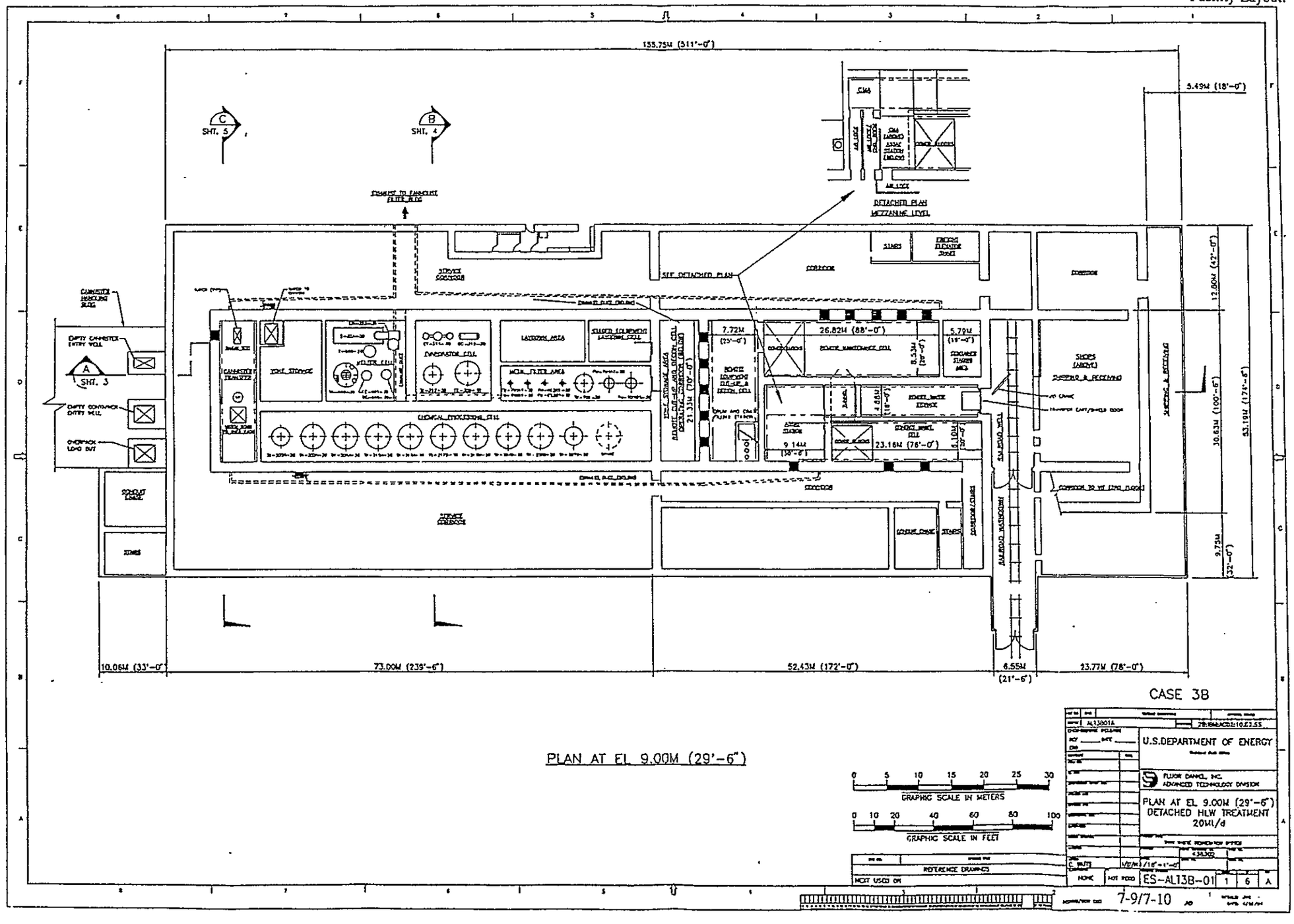

Figure 7-4. Artists Rendering of High-Level Waste Facility. (2 sheets)

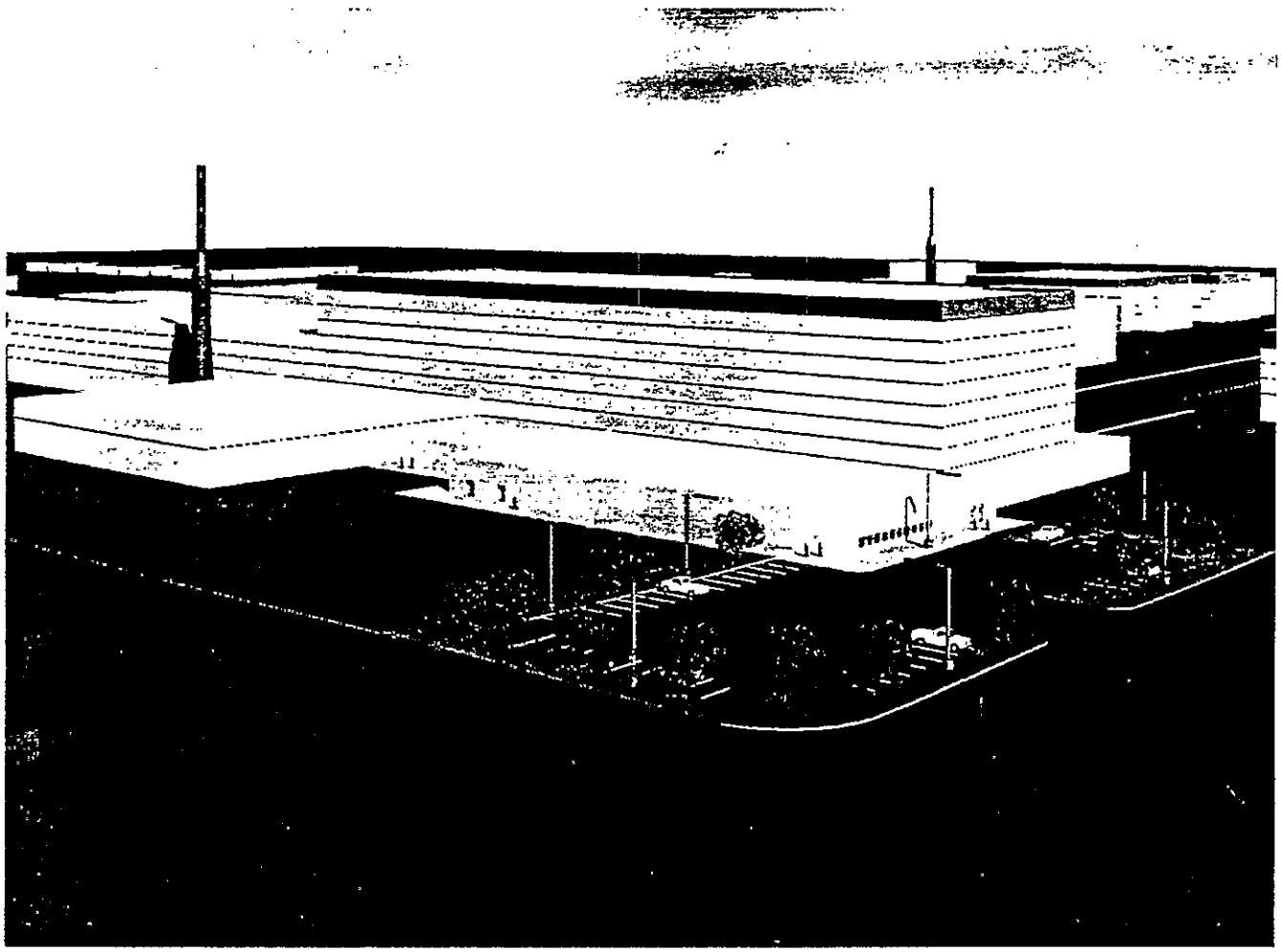

Figure 7-4. Artists Rendering of High-Level Waste Facility. (2 sheets)

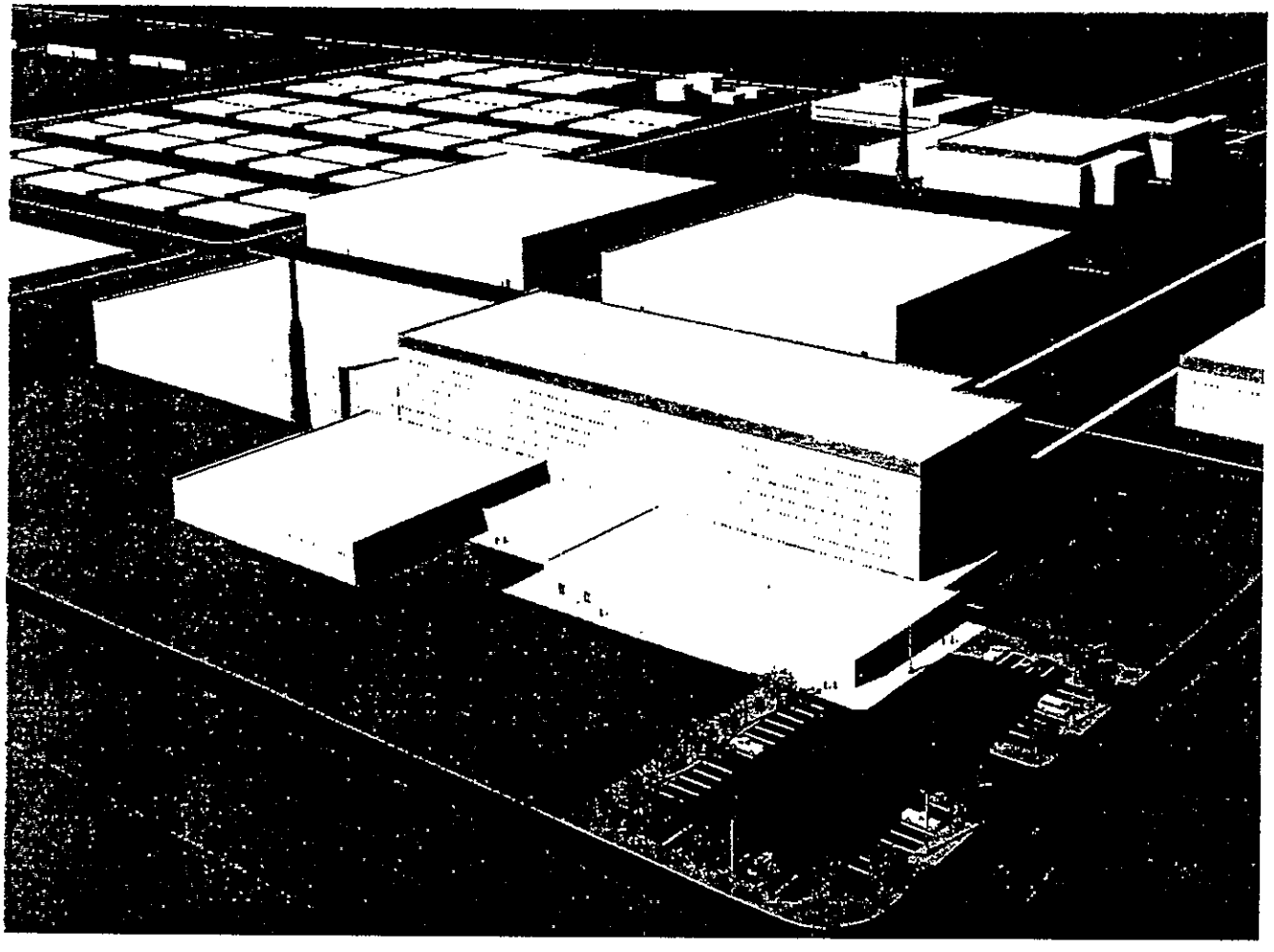

8.0 SITE LAYOUTS

Figure 8-1 shows a typical site for the Tri-Party Agreement preferred alternative. Work is currently under way to select the actual site, but final selection results are not expected until the end of the fiscal year. Until that time, this site would serve as the costing basis for the Tri-Party Agreement preferred alternative data package.

A layout showing the areas disturbed by the construction and operation of the facilities is in Appendix E. Also in Appendix E is a layout showing the location of the construction borrow pit and temporary facilities and laydown areas associated with construction.

Descriptions of the proposed support buildings shown in Figure 8-1 also are contained in Appendix E along with descriptions of common utilities and services.

Figure 8-1 Site Plan.

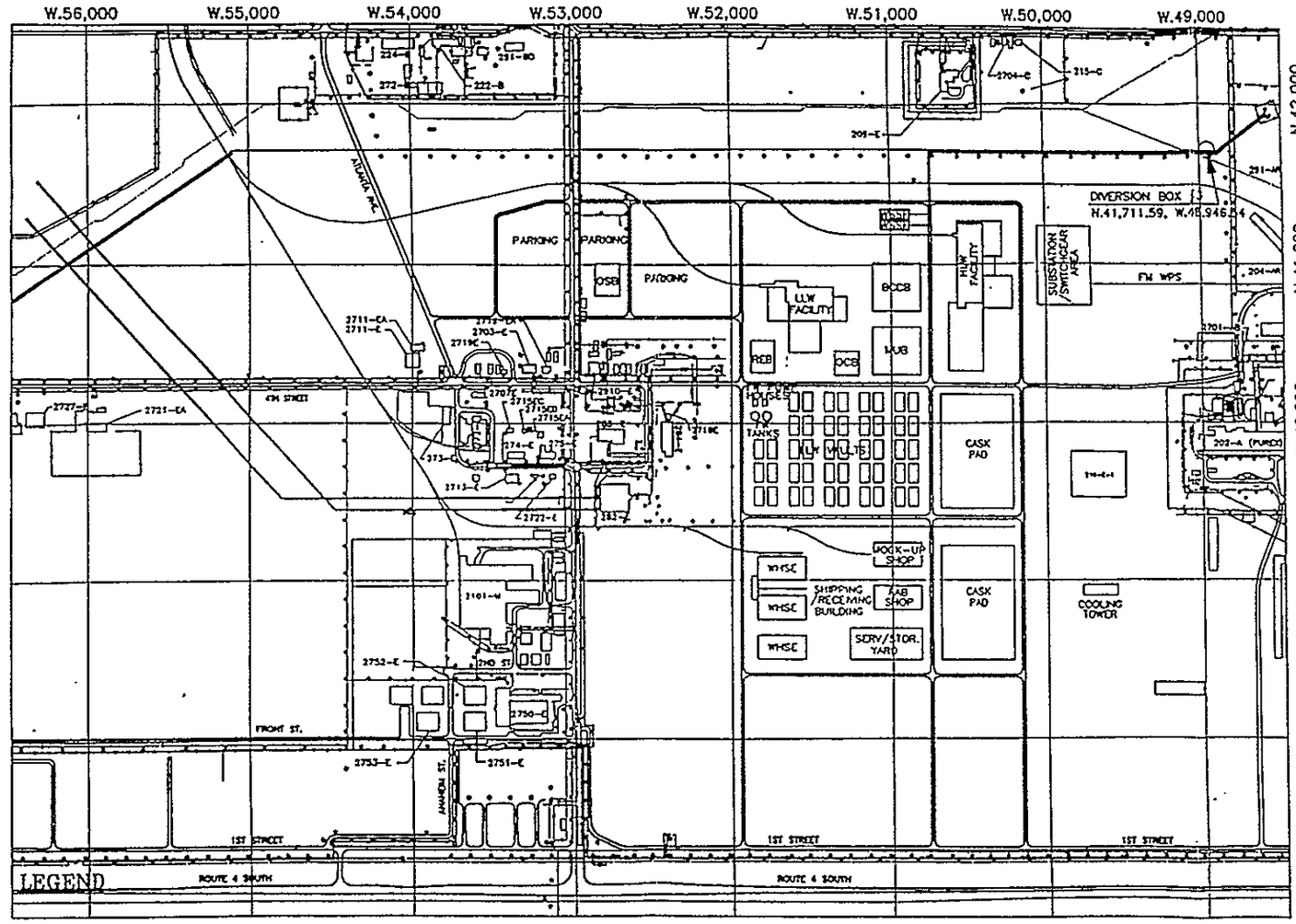

200 EAST AREA

LEGEND

BCCB	BULK HANDLING & COLD CHEMICAL MAKE-UP BUILDING
FAB	FABRICATION
FW	FIREWATER
HLW	HIGH LEVEL WASTE VITRIFICATION
LLW	LOW LEVEL WASTE VITRIFICATION
MUB	MECHANICAL UTILITIES BUILDING
OCB	OPERATIONS CONTROL BUILDING
OSB	OPERATIONS SUPPORT BUILDING
RCB	REGULATED ENTRANCE BUILDING
WSSF	WASTE STAGING AND SAMPLING FACILITY
SERV/STOR	SERVICE/STORAGE
WHSE	WAREHOUSE

CASE 8A EIS

U.S.DEPARTMENT OF ENERGY

FLUOR DANIEL, INC. ADVANCED TECHNOLOGY DIVISION

EIS
TPA PREFERRRED ALTERNATIVE
SITE PLAN

ES-ALT8A-03 2 0

9.0 DATA TABLES

The calculations and/or calculation methods used to obtain the numbers in the tables will be footnoted where possible. Materials referenced in the footnotes may include publicly released documents, other tables, and best engineering judgement. If engineering judgement is used, the rational for the judgement will be outlined in the footnotes. If the rational, the calculations, and/or the calculation methods are too complex to be footnoted they will be documented in Appendix F.

9.1 DATA ACCURACY

Data accuracy is defined as the delta range expected between a calculated or estimated value to the actual value. Unfortunately, it is impossible to define the accuracy of the data contained in the tables because of the immaturity of the process and the technical uncertainties that surround it. Therefore, rather than use data accuracy, the preparer of the data packages (WHC) will ensure that there is consistency between the data packages for comparison purposes. All values given in the tables have been adjusted to two significant figures.

9.2 LIST OF TABLES

Inventory

Table 9-1. Average Radionuclide Inventory in the Final Glass Form.

Operating

Table 9-2. Unit Process: Operating Personnel Requirements.
Table 9-3. Operating Personnel Requirements.
Table 9-4. Operating Resource Requirements.
Table 9-5. Nonradiological Operating Emissions.
Table 9-6. Radiological Operating Emissions.
Table 9-7. Transportation in Support of Operations.

Construction

Table 9-8. Unit Process: Construction Personnel Requirements.
Table 9-9. Construction Personnel Requirements.
Table 9-10. Construction Resource Requirements.
Table 9-11. Nonradiological Construction Emissions.
Table 9-12. Transportation of Earthen Borrow Construction Material.
Table 9-13. Transportation of Other Construction Material.

Decontamination and Decommissioning

Table 9-14. Decommissioning of Non-Contaminated Treatment/Storage Facilities.
Table 9-15. Decommissioning of Contaminated Treatment/Storage Facilities.

Cost

Table 9-16. Unit Process: Cost.
Table 9-17. Overall Cost.
Table 9-18. Capital Cost.
Table 9-19. Operating Cost.

Schedule

Table 9-20. Overall Schedule.
Table 9-21. Unit Process: Sequence of Construction.
Table 9-22. Construction Equipment Schedule.
Table 9-23. Unit Process: Average Radiation Dose At Facility.
Table 9-24. Unit Process: Operating Schedule.
Table 9-25. Construction Type.

Table 9-1. Average Radionuclide Inventory in the Final Glass Form (Ci/m³).[1]

Radionuclide Inventory[2]	Tri-Party Agreement Preferred Alternative	
	Low-Level Waste Glass	High-Level Waste Glass
^{241}Am	3.9E-2	1.0E+1
^{243}Am	1.3E-5	3.2E-3
^{14}C		
^{244}Cm	4.7E-6	5.9E-3
^{135}Cs	4.8E-6	1.5E-2
$^{137}Cs^{(1)}$	1.2E+0	3.7E+3
^{129}I		
^{63}Ni	2.6E-2	2.8E+1
^{237}Np	3.2E-5	6.6E-3
^{238}Pu	3.1E-4	1.1E-1
^{239}Pu	7.6E-3	2.6E+0
^{240}Pu	1.9E-3	6.7E-1
^{241}Pu	6.7E-3	7.8E+0
^{226}Ra		
^{106}Ru	8.5E-9	3.8E-6
^{151}Sm	3.1E-2	6.6E+1
^{126}Sn	7.2E-4	5.0E-2
$^{90}Sr^{(1)}$	4.3E+0	5.6E+3
^{99}Tc	1.2E-1	6.3E-1
^{230}Th	2.3E-12	4.1E-9
^{233}U	2.8E-9	1.2E-6
^{234}U	4.9E-8	2.1E-5
^{235}U	4.8E-6	2.1E-3
^{238}U	1.1E-4	4.8E-2
^{93}Zr	1.6E-5	4.1E-1
Total (m3)[3]	2.2E+5	9.4E+3

Includes sulfur matrix if packing fraction = 0.7, glass vol ≡ 1.5E+5 m³

$\frac{V_{LL}}{V_{HL}} = \frac{1.5 \times 10^5}{9.4 \times 10^3} = 16$

Table 9-1. Average Radionuclide Inventory in the Final Glass Form (Ci/m^3).[1]

Notes:

Am = americium
Ci = curie
Cm = curium
Cs = cesium
HLW = high-level waste
LLW = low-level waste
m^3 = cubic meter
Ni = nickel
Np = neptunium
Pu = plutonium
Ru = ruthenium
Sm = samarium
Sn = tin
Sr = strontium
Tc = technetium
U = uranium
Zr = zirconium

[1]Values are calculated from the material balance. Percentages of the feed of each component in the final streams were determined. These percentages were then used along with the inventory data to determine the final values.

[2]Curies from decay daughter products are not included.

[3]Volumes of high-level waste (HLW) and low-level waste (LLW) taken from material balance. Streams used were final disposal streams (Tri-Party Agreement LLW includes sulfur cement).

Table 9-2. Unit Process: Operating Personnel Requirements (Staff-Hours)[1].

Unit Process	Tri-Party Agreement Preferred Alternative
Sludge wash	2.3E+6
Cesium removal	5.0E+6
Other radionuclide removal	n/a
Low-level waste vitrification	1.1E+7
Low-level waste disposal	2.8E+5
High-level waste vitrification	1.1E+7
High-level waste transportation/disposal	6.2E+5
Total	3.1E+7

Notes:

[1]Includes staffing for start-up, decontamination and decommissioning, and monitoring and maintenance.

Table 9-3. Operating Personnel Requirements (Staff-Hours)[1].

Operating Personnel[2]	Tri-Party Agreement Preferred Alternative
Nonexempt	
Radiation worker	0
Nonradiation worker	3.8E+6
Exempt	
Radiation worker	2.7E+7
Nonradiation worker	0
Total Staff Hours	3.1E+7

Notes:

[1]All exempt and bargaining unit employees are assumed to be radiation workers. All nonexempt employees are nonradiation workers.

[2]Includes staffing for start-up, decontamination and decommissioning, and monitoring and maintenance.

Table 9-4. Operating Resource Requirements. (Units As Indicated) (2 sheets)

Operating Resource	Tri-Party Agreement Preferred Alternative
Land (m^2)	
Surface committed permanently	7.9E+4[1]
Water (m^3) Total	1.2E+7
Raw water (m^3)	1.1E+7[2]
Sanitary water (m^3)	1.1E+6[3]
Energy	
Electrical (GWh)	9.0E+3
Kerosene (m^3)	5.8E+4
Material[4]	
Glass former (Mg) Total	
Silicon dioxide (Mg)	2.9E+5
Boron oxide (Mg)	2.4E+5
Lithium oxide (Mg)	1.8E+3
Calcium oxide (Mg)	5.0E+2
Aluminum oxide (Mg)	3.9E+4
Bulk frit (Mg)	1.3E+4
50% nitric acid (mg)	52
50% sodium hydroxide (mg)	4.2E+3
Sodium nitrite (Mg)	2.6E+4
Flocculent (Mg)	54
100% glycolic acid (Mg)[5]	85
Decon chemicals (Mg)[6]	3.5E+3
Ammonia (Mg)	5.3E+3
	8.8E+3
Bulk sulfur cement	
sulfur (Mg)	1.3E+5
dicyclopentadiene (Mg)	3.4E+3
oligomer (Mg)	3.4E+3
Ion exchange media (m^3)[7]	220

Table 9-4. Operating Resource Requirements. (Units As Indicated) (2 sheets)

Operating Resource	Tri-Party Agreement Preferred Alternative
Materials for construction of LLW Vaults	
Concrete (m^3)	1.6×10^{5}[8]
Steel (Mg)	1.9×10^{4}[8]
Materials for construction of HLW Containers	
Concrete (m^3)	1.0E+4
Steel (m^3)	2.3E+2

Notes:

HVAC = heating, venting, and air conditioning
LLW = low-level waste

[1]"Surface committed permanently" is that remaining after decontamination and decommissioning, which includes all contaminated buildings, facilities, etc., and the LLW vaults.

[2]Raw water includes cooling tower makeup and process water. Process water usage is based on cold chemical makeup, decon, and equipment flushing requirements.

[3]Sanitary water includes potable water, process water, demineralized water, utility station water, and water for HVAC air humidification. Potable water use is based on the assumption of 20 gal/day/person with an additional 10% contingency. Demineralized water use is based on makeup requirements for electric steam generators, melter cooling water system, process cooling water system, and process chilled water system. Sanitary water use for utility stations is based on the assumption of continuous flow at 0.00379 m3/min (1 gal/min) for each of the treatment facilities.

[4]Generally, material requirements are based on Westinghouse Hanford Company material balances and the facility design capacities. Exceptions are concrete and steel for LLW vault construction, and decon chemical requirements.

[5]Glycolic acid is added to adjust the reduction potential of the high-level waste (HLW) melter. One mole of glycolic acid is added per mole of nitrate in the feed slurry.

[6]Decon chemicals contain sodium hydroxide, nitric acid, potassium permanganate, oxalic acid, and trisodium phosphate.

[7]The ion exchange media requirement is based on the *Tank Waste Remediation System Facilities Configuration Studies*, Boomer 1994, Table 4.1-4.

[8]Based on the quantities for the expense funded LLW vaults.

Boomer, K. D., J. M. Colby, T. W. Crawford, J. S. Garfield, C. E. Golberg, C. E. Leach, D. E. Mitchell, F. D. Nankani, E. J. Slaathaug, L. M. Swanson, T. L. Waldo, and C. M. Winkler, 1994, *Tank Waste Remediation System Facility Configuration Study*, WHC-SD-WM-ES-295, Westinghouse Hanford Company, Richland, Washington.

Table 9-5. Non-Radiological Operating Emissions.
(Units as Indicated) (2 sheets)

Item	Tri-Party Agreement Preferred Alternative
Thermal releases[1] (J)	2.1E+16
Particulates[2] (kg)	1.5E+4
VOC[3] (kg)	770
Fugitive dust	n/a
TAPS[4] (state) (kg)	
HCl[5]	2.6E+3
HF[6]	6.1E+3
Ammonia[7]	2.4E+4
Nitric Acid[8]	1.4E+3
HAPS (metals)[9]	<100 kg/yr
NOx (as NO_2) (kg)	1.1E+4[9]
SOx (as SO_2) (kg)	1.5E+4[10]
CO	<100,000 kg/yr[11]

Notes:

CO = carbon dioxide
H = hydrogen
F = fluorine
HWVP = Hanford Waste Vitrification Plant
J = joule
LLW = low-level waste
kg = kilogram
N = nitrogen
NOx = nitrogen oxide and nitrogen dioxide
S = sulfur
TAPS = Task Authorization and Planning System
VOC = volatile organic carbon

[1]Derived from factoring the heat load.

Table 9-5. Non-Radiological Operating Emissions.
(Units as Indicated) (2 sheets)

[2]Particulate emission estimate assumes cooling tower emissions are 95% of total particulate emissions (i.e. cooling tower emissions/0.95 = total emissions). Particulate emission are essentially 100% PM_{10}. Cooling tower emissions are a ratio of cooling water recirculation rates used for the alternatives. Emissions from standby power diesel engines, diesel tanks, and welding are all considered to result in emission of less than 100 kg/yr for the pollutants being analyzed.

[3]The VOC emissions shown are for kerosene handling and tankage activities assuming the use of an aboveground tank. VOC emissions from the main processes and other auxiliary sources are not currently defined. It is assumed that glycolic acid, if received, stored, and handled as a liquid, does not exhibit a significant vapor pressure, and if handled as a solid it is assumed to be controlled by filter media (i.e. baghouses, etc.) to less than 100 kg/yr.

[4]Emissions for TAP pollutants estimated to exceed 100 kg/yr are shown. Emissions from any single particulate source (silos, material handling, etc.) is considered to be controlled to a level that results in emissions below 100 kg/yr. Therefore, no particulate TAP emissions above 100 kg/yr are expected.

[5]The chlorine and fluorine emissions are expressed as HCl and HF, respectively (assumed chemical form). These emissions are based on the WHC material balances with an assumed decontamination factor of 200 for the venturi scrubber and mist eliminator.

[6]Ammonia slip from NOx control process. The ammonia emissions for Pretreatment/LLW is taken directly from the WHC material balances. The ammonia requirement for the 20 Mg/d joule-heated melter is based on assuming complete conversion of NOx precursors to NOx. The ammonia emissions for the 20 Mg/d joule-heated melter are based on a relative slip of 0.27% (in accordance with the material balance for Pretreatment/LLW).

[7]Nitric acid emissions are from decontamination activities where 100 kg/yr is estimated per melter plant.

[8]No HAPS metals will be emitted above 100 kg/yr. Appropriate NO_x abatement equipment will be installed to reduce the emission to below 40,000 kg/year.

[9]The unmitigated NO_x emission is 1.0E+6 kg/year as NO_2 based on the operating characteristics of the melters.

[10]The unmitigated SO_x emission is 9.7E+4 kg/year as SO_2.

[11]The unmitigated CO emission is 1.8E+5 kg/year. This is based on the mass of CO from Pretreatment/LLW material balance times a factor of 1.1 (to account for HLW). The flowsheets, at the present time, do not include abatement equipment for CO. Also it is assumed that the abatement equipment used for NO_X + SO_X does not effect CO, which it should. Therefore assuming less than 100,000 Kg/yr is justified.

Table 9-6. Radiological Operating Emissions. (Ci)

Radionuclide[1]	Tri-Party Agreement Preferred Alternative	
	Air[2]	Water[3]
^{241}Am	5.3E-02	4.2E-4
^{14}C	5.3E+03	n/a[4]
^{137}Cs	2.5E+01	6.9E-2
^{129}I	1.6E+01	3.5E-4
$^{239,240}Pu$	1.7E-02	4.2E-4
^{106}Ru	1.9E-08	1.0E-2
^{151}Sm	3.2E-01	NA
^{90}Sr	2.7E+01	2.8E-3
^{99}Tc	1.6E-02	n/a
^{93}Zr	1.8E-01	n/a
%PM-10[5]	2.67E-01	- -[6]

Notes:

[1]All values in Ci except for % PM-10 which is in metric tonnes

[2]Air values taken from material balances (Streams 907 and 917 in Appendix A)

[3]Water values are based on effluent streams from both Pretreatment/low-level waste (LLW) and high-level waste (HLW) flowsheets (Streams 807 and 802 respectively) and design basis for Liquid Effluent Treatment Facility (LETF) C-018. Yearly flowrates of these streams were calculated. Engineering judgement set the total amount of effluent to be processed by the LETF equal to 20% of the flow for all but one year of operation. For the last year, 100% was to be processed. The composition of the effluent was assumed to be comparable to the feed set in the design basis. Therefore the concentrations of radionuclides/chemicals in the discharge in the design sheet equals what the discharge would be for the process effluent.

Table 9-6. Radiological Operating Emissions. (Ci)

Concentrations from the design sheet used in the calculations are in the following table:

^{241}Am	1.20e-09
^{14}C	n/a
^{137}Cs	2.00e-07
^{129}I	1.00e-09
^{239}Pu	1.20e-09
^{240}Pu	n/a
^{106}Ru	3.00e-08
^{151}Sm	n/a
^{90}Sr	8.00e-09
^{99}Tc	n/a
^{93}Zr	n/a
%PM	(MT) - -

[4]"n/a" means data not available. No data for the chemical was found on LETF design sheet.

[5]% PM-10 set equal to total amount of solids in the streams

[6]Design sheet included solids, but for the discharge stream "- -" was entered

Table 9-7. Transportation in Support of Processing. (Units As Indicated)

Item	Tri-Party Agreement Preferred Alternative
Normal Operation Route location (State mileage)	Portland/Seattle (400 km)
Road type (gravel or asphalt)	Asphalt
No. of trips/year[1] Truck Train[2]	 23 260
HLW transportation Route location (state mileage)	 1330[3]
Number of canisters	1,700[4]
No. of trips total train	170[5]

Notes:

HWVP = Hanford Waste Vitrification Plant
ID = inside diameter
km - kilometer
M = metric
MPC = multipurpose canister
OD = outside diameter
R/R = railroad
WHC = Westinghouse Hanford Company

[1]Based on yearly loads of glass formers and other cold chemicals.

[2]Trains consist of 130 ton railcars with 20 cars per train.

[3]Mileage to future Yucca Mountain repository.

[4]Based on 0.68 m OD (0.66m ID) x 4.57 m tall canisters containing monolith with 4 canisters placed in a Hanford MPC overpack canister.

Weight/canister = (Pi/4) x (0.66 m ID)^2 x 3.68 m (fill height proportional to HWVP estimates) x 2,643 kg/m^3 x 1 M ton/1,000 kg = 3.33 M tons glass/canister.

2.27E4 M tons glass (WHC material balance)/3.33 M tons glass/canister x 1 overpack canister/4 canisters = 1705 Hanford MPCs.

Table 9-7. Transportation in Support of Processing. (Units As Indicated)

The 2.27E+4 value does not agree with the high-level waste (HLW) material balance value (2.51E+4). This is because the new inventory (Golberg, 1995) for SST's was for prior to the completion of saltwell pumping. Thus using the wash factors in Orme, 1994 (see Section 4.2) attributed more of the total sodium in the SST's as solid than what should have been. Therefore it was decided to use the values in Boomer 1994 (2.27E+4) for calculation of the number of HLW MPCs.

[5]Based on transportation of 10 MPC canisters, via 10 railcars, per week from Hanford to future repository and findings from Civilian Radioactive Waste Management System (CRWMS) Control Design Assumptions Document, B00000000-01717-4600-00032, Rev. 00; namely, future mined geological disposal system (MGDS) repository will process 2 mpc canisters of DHLW per day or 10 per week. Weekly shipments are assumed to minimize canister storage at the repository.

Boomer, K. D., J. M. Colby, T. W. Crawford, J. S. Garfield, C. E. Golberg, C. E. Leach, D. E. Mitchell, F. D. Nankani, E. J. Slaathaug, L. M. Swanson, T. L. Waldo, and C. M. Winkler, 1994, *Tank Waste Remediation System Facility Configuration Study*, WHC-SD-WM-ES-295, Westinghouse Hanford Company, Richland, Washington.

Golberg, C.E., 1994, *Final Environmental Impact Statement and 1994 Integrated Data Base Tank Inventory Tables*, 71220-94-041, Westinghouse Hanford Company, Richland, Washington.

Table 9-8. Unit Process: Construction Personnel Requirements. (Staff-Hours)[1]

Unit process	Tri-Party Agreement Preferred Alternative
Sludge wash[1,2]	4.4E+5
Cesium removal[1,3]	4.0E+6
Centralized facilities	6.0E+6
Low-level waste vitrification[1]	1.3E+7
Low-level waste disposal	0
High-level waste vitrification	1.6E+7
High-level waste transportation	0
High-level waste disposal	0
Total	4.0E+7

Notes:

[1]Backup in Appendix F contains staff hours for pretreatment/low-level waste (LLW) combined. To separate sludge wash and cesium removal from LLW vitrification other cost estimates were employed. Cost estimates were found for a detached pretreatment facility and a detached LLW facility (these are contained in Appendix F). The staff hours for each were taken and added together. This total was then divided into each staff hour value separately. The calculation was as follows:

Detached Separations - Total staff hours = 1,463,389
Detached LLW - Total staff hours = 4,704,549
Total = 6,167,938

% separations = 1,463,389/6,167,938 = 0.237 => Value used is 25 %
Therefore % LLW = 75%

[2]Engineering judgement set the sludge wash staff hours equal to 10% of the total staff hours for separations (see number 2 above).

[3]Engineering judgement set the cesium removal staff hours equal to 90% of the total staff hours for separations (see number 2 above).

Table 9-9. Construction Personnel Requirements. (Staff-Hours)

Construction Personnel	Tri-Party Agreement Preferred Alternative
Design and engineering	1.0E+7
Construction[1]	
Radiation worker	0
Nonradiation worker	2.4E+7
Supervisory[2]	5.6E+6
Total	4.0E+7

Notes:

[1]Staff hours equal to summation of staff hours calculated for equipment/facility installation and subcontract in backup. All construction staff hours are assumed to be for nonradiation work.

[2]Staff hours equal to summation of staff hours calculated for construction and project management.

Table 9-10. Construction Resource Requirements.[1] (Units As Indicated)

Construction Resource	Tri-Party Agreement Preferred Alternative
Land (m^2)	
Surface committed	
Temporarily	8.1E+5
Water (m^3)	
Source of water	4.9E+5
Energy	
Electrical (Gwh)[2]	73.7
Propane (m^3)	0
Diesel fuel (L)	2.1E+7
Gasoline (L)	7.6E+6
Materials	
Concrete (m^3)	4.8E+5
Steel	
Carbon Steel (Mg)	9.7E+4
Stainless Steel (Mg)	1.5E+4
Hastelloy/Inconnel (Mg)	2.3E+3
Excavation (m^3)	1.7E+6[3]
Riprap (m^3)	0
Structure backfill (m^3)	1.2E+6[4]

Notes:

[1]Includes construction of the low-level waste (LLW) vaults.

[2]Electrical service will require approximately 2.5 kilometers of 13.8 kilovolt overhead power line.

[3]Excavation represents structural excavation for building and vault construction.

[4]Structure backfill is at the buildings and vaults.

Table 9-11. Nonradiological Construction Emissions. (Units As Indicated)

Construction Emission Pollutant		Tri-Party Agreement Preferred Alternative
Particulate[2]	kg	1.3E+5
SO_x (as SO_2)[2]	kg	1.6E+4
CO_2	kg	3.2E+7
Hydrocarbons[2,3] (exhaust & fugitive)	kg	1.6E+6
NO_x(as NO_2)[2]	kg	1.9E+6
Aldehydes[2] (as HCHO)	kg	5.6E+4
Organic Acids	kg	n/a
Thermal Releases[4]	J	8.0E+14
Fugitive Dust[5]	t	840

Notes:

CO_2 = carbon dioxide
EPA = U.S. Environmental Protection Agency
LLW = low-level waste
NOx = nitrogen oxide and nitrogen dioxide
SOx = sulfur oxide and sulfur dioxide

[1]Includes LLW vault construction.

Table 9-11. Nonradiological Construction Emissions. (Units As Indicated)

[2]The criteria pollutant (particulate, SOx, CO, hydrocarbon, and NOx) emissions were calculated using factors from EPA publication number AP-42, "Compilation of Air Pollutant Emission Factors." The sections of the document used in the calculations are:

Volume I, Section 3.3 - "Gasoline and Diesel Industrial Engines",
Volume II, Appendix H - "Highway Mobile Source Emissions Factor Tables",
Volume II, Section II-7 - "Heavy Duty Construction Equipment"

The emission factors for each pollutant are presented as "grams of pollutant per hour of equipment operation for heavy construction equipment, "grams of pollutant per mile travelled" for heavy and "light duty transportation vehicles, and "grams of pollutant per horsepower-hour of operation" for stationary industrial engines. The diesel engine SO_2 Emission Factor is revised to 7.1216/1,000 gallons based on a maximum allowable fuel sulfur content of 0.05% by weight. Construction equipment lists with equipment duty cycles were obtained for the No Separations Alternative (Colby 1995). Each piece of equipment was associated with one of the AP-42 equipment categories and the emission factors applicable to that category were assigned to the piece of equipment. Emissions were calculated by multiplying the duty cycle information (in miles, hours, or horsepower-hours) by the emission factors.

[3]The hydrocarbon emissions estimate includes diesel and gasoline engine exhaust emissions and fugitive crankcase emissions for gasoline engines. The hydrocarbon emissions resulting from other fugitive emissions sources (bulk fuel receiving, fuel storage, equipment refueling, asphalt paving activities, etc.) are negligible in comparison with the diesel and gasoline engine hydrocarbon emissions.

[4]The thermal release estimate includes internal combustion engine heat sources, other heat sources (electric equipment, road paving, concrete heat of formation, etc.) are considered to be negligible in comparison. An average working engine efficiency of 25% (75% thermal loss) for diesel engines and 20% (80% thermal loss) for gasoline engines is assumed; and 3,118,569 gallons of diesel @140,000 Btu/gallon and 1,336,905 gallons of gasoline @127,650 Btu/gallon (1055.1 J/Btu) is assumed.

[5]Fugitive particulate emissions are estimated for site preparation activities; construction material excavation, handling, preparation, and storage; and paved and unpaved road traffic. Controls for certain material handling and processing activities (wet processing or filter controls) and watering of most unpaved roads are assumed. Road traffic emissions are calculated for high use heavy duty construction vehicles (scrapers, dozers, dump trucks, etc.), emissions from sporadic use light duty vehicles (pickup trucks, flat bed trucks, vans, etc.) is negligible in comparison. Emissions were calculated using 1) EPA, "Estimation of Air Impacts from Area Sources of Particulate Matter Emissions at Superfund Sites," 1993; 2) EPA AP-42 "Compilation of Air Pollutant Emission Factors," 1993; and 3) EPA "Emission Control Technologies and Emission Factors for Unpaved Road Emissions," 1987.

Colby, 1995, *No Separations Data Package for the Tank Waste Remediation System Environmental Impact System*, WHC-SD-WM-EV-103, Rev. 0, Westinghouse Hanford Company, Richland, Washington.

Table 9-12. Transportation of Earthen Borrow Construction Material.[1]
(Units As Indicated)

Item	Tri-Party Agreement Preferred Alternative
Borrow source location (state)[2]	3 km northwest of site
Route location (state mileage)	Route 3 to Route 4 (5 km)
Road type (gravel or asphalt)	Gravel, level
Total number of trips Truck[2] Train Barge	 5.2E+4 0 0
New road construction (mi)	0
Load volumes, $m^{3(2)}$	6.1

Notes:

km = kilometers
m^3 = cubic meters

[1]Includes construction of low-level waste vaults.

[2]Crushed coarse aggregate for concrete, from onsite borrow pit.

Table 9-13. Transportation of Other Construction Material.
(Units as Indicated)

Item	Tri-Party Agreement Preferred Alternative
Concrete	
Route location (state mileage)	Tri-Cities (70 Km)
Total number of trips	
Truck	2.9E+4
Train	0
Barge	0
Steel	
Route location (state mileage)	Portland/Seattle (400 Km)
Total number of trips	
Truck	9.5E+3
Train	0
Barge	0

Table 9-14. Decommissioning of Non-Contaminated Treatment/Storage Facilities. (Metric Kilo-Tons)[1]

Item	Tri-Party Agreement Preferred Alternative
Steel Quantity Disposition	 79 regulated landfill
Concrete Quantity Disposition	 220 regulated landfill
Soil Quantity Disposition	 0
Debris Quantity Disposition	 15 regulated landfill

Note:

[1]Excludes low-level vaults.

Table 9-15. Decommissioning of Contaminated Treatment/Storage Facilities. (Metric Kilo-Tons)[1]

Item	Tri-Party Agreement Preferred Alternative
Steel Quantity Disposition	 17 LLW burial grounds
Concrete Quantity Disposition	 11 LLW burial grounds
Soil Quantity Disposition	 0
Debris Quantity Disposition	 1.4 LLW burial grounds

Note:

[1]Excludes low-level vaults.

Table 9-16. Process Module: Overall Cost.
(Millions of 1995 Dollars)

Process Module	Tri-Party Agreement Preferred Alternative
Sludge wash	210
Cesium removal	980
Centralized facilities	520
Low-level waste vitrification	2,900
Low-level waste disposal	290
High-level waste vitrification	3,000
High-level waste transportation	31
High-level waste disposal	5,900
Total	$13,800

Table 9-17. Overall Cost Component. (Millions of 1995 Dollars)

Cost Component	Tri-Party Agreement Preferred Alternative
Capital	3,600[1]
Operating	3,900[2]
Research and development	630[3]
Repository fee	3,960[4]
Total	$12,100

Notes:

[1]Total capital cost includes 40% contingency. Contingency is excluded from other costs.

[2]Includes start-up, decontamination and decommissioning, and monitoring and maintenance costs for process facilities. Does not include costs associated with routine tank farm operations (estimated at $4,340 million [1995 dollars]). Also does not include costs associated with TWRS program management characterization, tank farm upgrades, single-shell tank saltwell pumping, and tank farm safety.

[3]Pg. 130 of Boomer 1994, which was based on a draft of the *Tank Waste Remediation System Multi-Year Program Plan* (MYPP) (WHC 1994).

[4]Table D-8, TRW 1995, estimates the repository fee for the TPA Alternative (Case 2-5SC) would be $112 million lower than the estimated repository fee for Case 1C, using the TRW Total System Life Cycle Cost (TSLCC) model developed for the Office of Civilian Radioactive Waste Management. Per informal communications with Mr. Don Nitti of TRW on 5/31/95 and 7/13/95, Hanford's repository fee for Case 1C is estimated as follows:

Two repository case total life cycle cost	=	$48.294 billion
Defense program share	=	15.7%
Hanford's share based on ratio of number of Hanford waste packages (2,465) to total defense program waste packages (4,588), from Table 2-4 of TRW 1995	=	53.7%
Hanford's share of Case 1C: ($48.294 billion x 0.157 x 0.537)	=	$4.072 billion

Boomer, K. D., J. M. Colby, T. W. Crawford, J. S. Garfield, C. E. Golberg, C. E. Leach, D. E. Mitchell, F. D. Nankani, E. J. Slaathaug, L. M. Swanson, T. L. Waldo, and C. M. Winkler, 1994, *Tank Waste Remediation System Facility Configuration Study*, WHC-SD-WM-ES-295, Westinghouse Hanford Company, Richland, Washington.

TRW, 1995, *Assessment of Pre-Closure System Cost and Health and Safety Impacts of Hanford High-Level Waste Vitrification Options on the Civilian Radioactive Waste Management System*, A00000000-01717-5705-00003, Rev. 0, TRW Environmental Safety Systems, Inc., Vienna, Virginia.

Table 9-18. Capital Cost Component.
(Millions of 1994 Dollars)[1]

Capital Cost Component	Tri-Party Agreement Preferred Alternative
Labor	1,600
Materials/supplies[2]	610
Equipment[2]	1,100
Local purchases[2]	300
Total	$3,600

Notes:

[1]Excludes construction of low-level waste vaults.

[2]Local purchases set to 15% of material/supplies and equipment.

Table 9-19. Operating Cost Component. (Millions of 1995 Dollars)[1]

Operating cost component	Tri-Party Agreement Preferred Alternative
Labor	1,700
Materials/supplies	1,600
Equipment	270
Local purchases	330[2]
Total	$3,900

Notes:

[1]Includes construction of low-level waste vaults as well as start-up cost, decontamination and decommissioning cost, and monitoring and maintenance cost.

[2]Based on 15% of materials/supplies and equipment.

Table 9-20. Overall Schedule.
(Calendar Year Start/Completion Date)

Activity	Tri-Party Agreement Preferred Alternative
Construction	12/1997 - 11/2007[1, 2]
Operation	06/2004 - 12/2023[3]
Decontamination and decommissioning	06/2019 - 12/2028[4]
Monitoring and maintenance	12/2023 - 12/2029[5]
High-level waste disposal	12/2019 - 12/2029
Research and development	1995 - 2018[6]

Notes:

[1]Boomer, 1994, Figure 4.3-5, pp. 76. Does not include low-level waste (LLW) vaults.

[2]Boomer, 1994, Figure 4.4-5, pp. 92

[3]Boomer, 1994, Table 3.4-1, pp. 33. Finishes ahead of Tri-Party Agreement milestone.

[4]Assumes 5 years per facility for decontamination and decommissioning after 14 years of operation.

[5]Monitoring and maintenance is for the high-level waste casks stored onsite until transportation to the repository.

[6]Based on the *Tank Waste Remediation System Multi-Year Program Plan* and is consistent with the LLW operation.

Boomer, K. D., J. M. Colby, T. W. Crawford, J. S. Garfield, C. E. Golberg, C. E. Leach, D. E. Mitchell, F. D. Nankani, E. J. Slaathaug, L. M. Swanson, T. L. Waldo, and C. M. Winkler, 1994, *Tank Waste Remediation System Facility Configuration Study*, WHC-SD-WM-ES-295, Westinghouse Hanford Company, Richland, Washington.

WHC, 1994, *Tank Waste Remediation System Multi-Year Program Plan*, WHC-SP-1101, Westinghouse Hanford Company, Richland, Washington.

Table 9-21. Unit Process: Sequence of Construction.
(Calendar Year Start\Completion Date)

Unit process	Tri-Party Agreement Preferred Alternative
Sludge wash	12/1997 - 12/2003[a]
Cesium removal	12/1997 - 12/2003[a]
Other radionuclide removal	n/a
Low-level waste vitrification	12/1997-12/2003[1]
Low-level waste disposal	12/2003-12/2019[2]
High-level waste vitrification	06/2002-12/2007[3]
High-level waste transportation/disposal	n/a

Notes:

[1]Boomer, 1994, Figure 4.4-5, pp. 92.

[2]Construction of the low-level waste (LLW) vaults will commence when LLW Vitrification construction is complete which is approximately 1.5 years prior to LLW operations. Vault construction will continue as required through LLW operations.

[3]Tri-Party Agreement Milestone M-51-03-T04.

Boomer, K. D., J. M. Colby, T. W. Crawford, J. S. Garfield, C. E. Golberg, C. E. Leach, D. E. Mitchell, F. D. Nankani, E. J. Slaathaug, L. M. Swanson, T. L. Waldo, and C. M. Winkler, 1994, *Tank Waste Remediation System Facility Configuration Study*, WHC-SD-WM-ES-295, Westinghouse Hanford Company, Richland, Washington.

Ecology, EPA and DOE, 1994, Hanford Federal Facility Agreement and Consent Order, 2 vols, as amended, Washington State Department of Ecology, Olympia, Washington, and U.S. Environmental Protection Agency and U.S. Department of Energy, Washington, D.C.

Table 9-22. Construction Equipment Schedule. (Units)

Construction equipment type	Tri-Party Agreement Preferred Alternative
Heavy duty diesel equipment	120
Light duty[1] diesel equipment	220
Light duty gasoline vehicles	210
Small gasoline engines	630
Construction[2] noise (dcbls)	85

Notes:

[1]Light duty diesel equipment has been added to this chart. It represents diesel engine equipment that runs at idle speed for a major portion of its time (for instance lift cranes).

[2]Represents noise near a twin engine scraper with 2 push dozers at full throttle.

Table 9-23. Unit Process: Average Radiation Dose at Facility[1]. (mrem)[2]

Unit Process	Tri-Party Agreement Preferred Alternative
Sludge wash	2.3E+5
Cesium removal	4.8E+5
Other radionuclide removal	n/a
Low-level waste vitrification	1.1E+6
Low-level waste disposal	2.8E+4
High-level waste vitrification	1.1E+6
High-level waste transportation	2.5E+4
High-level waste disposal	0

Notes:

[1]Maximum radiation exposure to a radiation worker is 500 mrem/yr. Calculations assumes 1986 Plutonium Uranium Extraction (PUREX) plant whole body deep exposure average (200 mrem/yr) applies to all radiation workers.

[2]Radiation dose to nearby facilities is assumed to be 0.

Table 9-24. Unit Process: Operating Schedule. (Calendar Year Start/Completion Date)

Unit process	Tri-Party Agreement Preferred Alternative
Sludge wash	12/2004 - 12/2018[1]
Cesium removal	12/2005 - 12/2019[1]
Other radionuclide removal	n/a
Low-level waste vitrification	06/2005 - 12/2019[1]
Low-level waste disposal	06/2005 - 12/2019[1]
High-level waste vitrification	12/2009 - 12/2023[1]
High-level waste transportation/disposal	12/2019 - 12/2029

Notes:

[1]Boomer, 1994, Figure 3.4-1, pp 33.

Boomer, K. D., J. M. Colby, T. W. Crawford, J. S. Garfield, C. E. Golberg, C. E. Leach, D. E. Mitchell, F. D. Nankani, E. J. Slaathaug, L. M. Swanson, T. L. Waldo, and C. M. Winkler, 1994, *Tank Waste Remediation System Facility Configuration Study*, WHC-SD-WM-ES-295, Westinghouse Hanford Company, Richland, Washington.

Table 9-25. Construction Type by Duration.
(Percentage of Construction)

Unit Process	Tri-Party Agreement Preferred Alternative
Clearing	1.6
Grubbing	1.6
Earthwork	4.9
Foundations	7.8
Structure	25.9
Mechanical/electrical	29.1
Piping	29.1

This page intentionally left blank.

10.0 RATE DATE

The calculation of the peak and average for the data given in the data tables (Section 9.0) is outlined in this section.

10.1 YEAR-BY-YEAR DATA

Figures 10-1 through 10-3 give year-by-year data for construction, staffing, and total processing cost respectively. Table 10-1 lists the figures to which the data in the data tables correspond.

Table 10-1. Table/Figure Key.

Figure	Title	Data Tables
10-1	Tri-Party Agreement Chart for Construction	9-2 9-3 9-19[staff only]
10-2	Tri-Party Agreement Chart for Staffing	9-8 9-9 9-10 9-11 9-12 9-13 9-18
10-3	Tri-Party Agreement Processing Cost	9-16 9-17

For the construction and staffing figures, the totals from the appropriate data tables can be multiplied by the percentage that corresponds to the year in question. Percentages were given so that the figures could be used for more than one data table (the use of absolute numbers would require each table to have its own figure). For the total processing cost figure, the absolute value can be read directly from the chart.

10.2 YEARLY AVERAGE/PEAK

As shown in the previous section, the data in many of the charts could easily be shown on a year-by-year basis. Unfortunately not all of the information in all of the data tables could be displayed this way. Therefore, to estimate the yearly average and peak, the following method should be followed.

Yearly Average

Divide the value from the table by 19 (the total processing time). This gives the average value over the entire processing lifetime. If it is known that a data table value corresponds to only one of the processing facilities (Pretreatment/LLW or HLW) then the value should be divided by 14 (the processing time for each plant separately). Care should be taken to ensure that this value is used only during the operational lifetime of the appropriate facility.

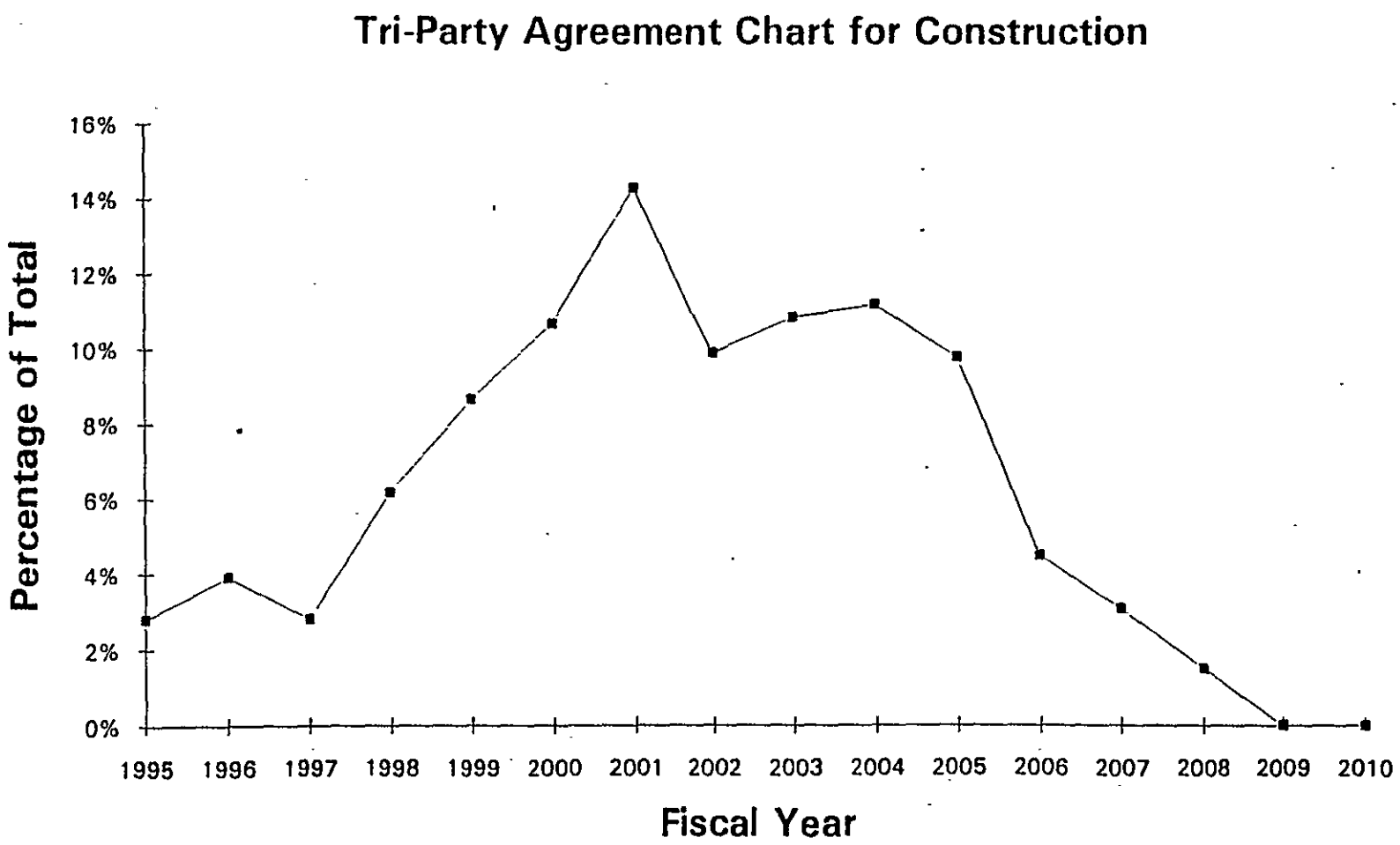

Figure 10-1. Tri-Party Agreement Chart for Construction

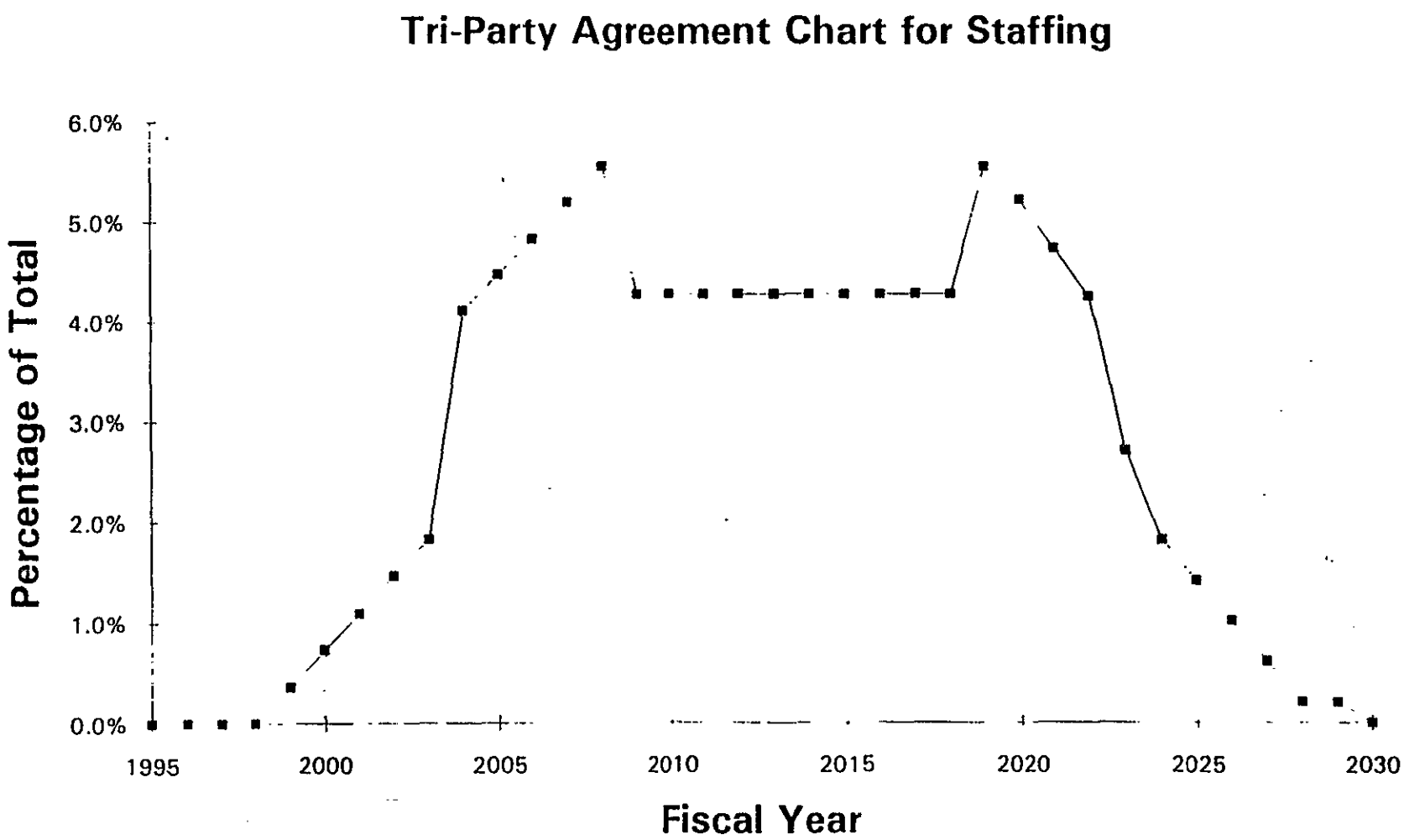

Figure 10-2. Tri-Party Agreement Chart for Staffing

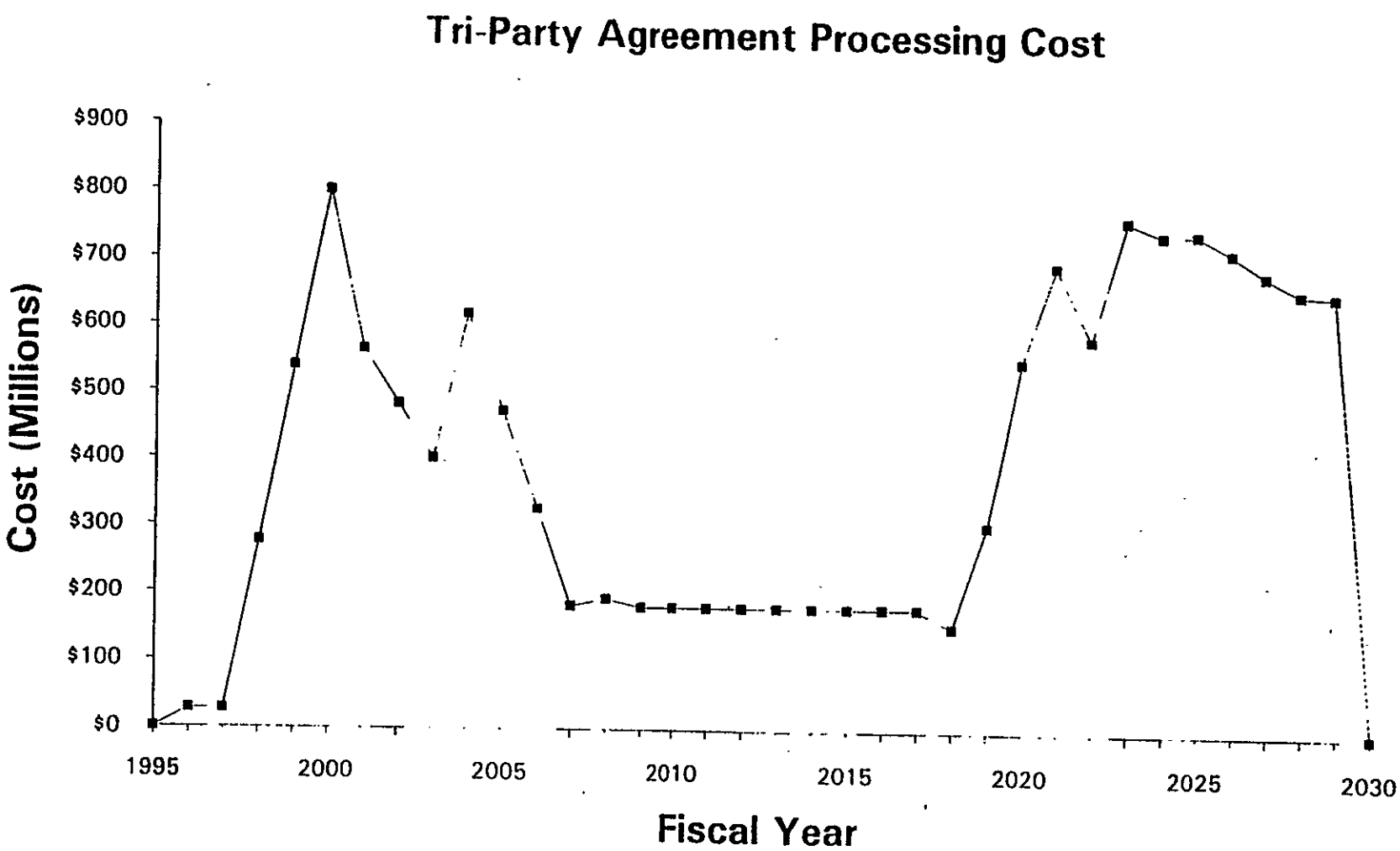

Figure 10-3. Tri-Party Agreement Processing Cost

This is a very simplistic way of calculating the average because it is not accurate if the table value is split between the two facilities. For example, the total silicon dioxide needed for processing is 240,000 metric tons (MT) (Table 9-4). Calculating the average gives approximately 12,600 MT per year. However, by examining the detailed material balances (Appendix A), one finds that Pretreatment/LLW requires 229,000 MT (an average of 16,400 MT per operating year) and HLW requires 11,300 MT (an average of 810 MT per operating year). It is recommended that if more accurate year-by-year values are required, the reader employ the data tables and the appendices to calculate it.

Peak

Divide the value from the table by 14. This gives the peak value assuming the yearly needs for each facility are constant over their processing lives. As long as this is true, the value will be valid regardless of how the total value is split between the two facilities.

These methods should be used for data Tables 9-4, 9-5, 9-6, and 9-7 (except for HLW canister transportation). For HLW canister transportation, the repository fee per year is based upon the number of casks transported per year.

Table 10-2. Canister Transportation to Repository Schedule.

Year	Canisters
2019	0
2020	848
2021	576
2022	496
2023	684
2024	748
2025	788
2026	792
2027	788
2028	792
2029	788
2030	0
Total	6,800

This page intentionally left blank.

11.0 REFERENCES

Boomer, K. D., J. M. Colby, T. W. Crawford, J. S. Garfield, C. E. Golberg, C. E. Leach, D. E. Mitchell, F. D. Nankani, E. J. Slaathaug, L. M. Swanson, T. L. Waldo, and C. M. Winkler, 1994, *Tank Waste Remediation System Facility Configuration Study*, WHC-SD-WM-ES-295, Westinghouse Hanford Company, Richland, Washington.

Colby, 1995, *No Separations Engineering Data Package for the Tank Waste Remediation System Environmental Impact System*, WHC-SD-WM-EV-103, Rev. 0, Westinghouse Hanford Company, Richland, Washington.

DOE, 1987, *Final Environmental Impact Statement, Disposal of Hanford Defense High-Level, Transuranic and Tank Wastes, Hanford Site, Richland, Washington*, DOE/EIS-0113, 5 vols., U.S. Department of Energy, Washington, D.C.

Ecology, EPA and DOE, 1994, Hanford Federal Facility Agreement and Consent Order, 2 vols, as amended, Washington State Department of Ecology, Olympia, Washington, and U.S. Environmental Protection Agency and U.S. Department of Energy, Washington, D.C.

Fredenberg, 1995, *Waste Retrieval and Transfer Engineering Data package for the Tank Waste Remediation System Environmental Impact Statement*, Rev. B, WHC-SD-WM-EV-097, Rev. 0, Westinghouse Hanford Company, Richland, Washington.

Golberg, C.E., 1995, *Single-Shell and Double-Shell Tank Waste Inventory for the Tank Waste Remediation System Environmental Impact Statement*, WHC-SD-WM-EV-102, Rev. 0, Westinghouse Hanford Company, Richland, Washington.

Nankani, 1995, *Preliminary Tank Waste Remediation System Environmental Impact Statement Engineering Data Package for the Disposition of Cesium and Strontium Capsules*, WHC-SD-WM-DP-87, Rev. 0, Westinghouse Hanford Company, Richland, Washington.

Orme, R. M., 1994, *TWRS Process Flowsheet*, WHC-SD-WM-TI-613, Westinghouse Hanford Company, Richland, Washington.

Scanlon, 1995, *Closure Technical Data Package for the Tank Waste Remediation System Environmental Impact System*, WHC-SD-WM-DP-120, Rev. 0, Westinghouse Hanford Company, Richland, Washington.

WHC, 1994, *Tank Waste Remediation System Multi-Year Program Plan*, WHC-SP-1101, Westinghouse Hanford Company, Richland, Washington.

This page intentionally left blank.

12.0 ACKNOWLEDGMENTS

The author of this data package would like to thank Allyn Boldt and Kayle Boomer for their contributions. Without the assistance and guidance of these individuals the data package would not have been completed.

Special thanks must also be given to Fluor/Daniel Inc. and specifically Pat Early for providing the large number of layouts and volumes of table data.

This page intentionally left blank.

APPENDIX A

FLOW DIAGRAMS FOR HIGH-LEVEL WASTE, LOW-LEVEL WASTE AND DETAILED MATERIAL BALANCES

This page intentionally left blank.

A1.0 PRETREATMENT/LLW MATERIAL BALANCES

The combined Pretreatment/LLW process flow diagrams are shown in Figure A-1. The accompanying overall material balance is Table A-1 (153 sheets). Stream values in Table A-1 are not based on a set operational period; rather they are totals over the lifetime of the facility.

This page intentionally left blank.

Figure A-1. Process Flow Diagram for Combined Pretreatment/Low-Level Waste. (Sheet 1 of 18)

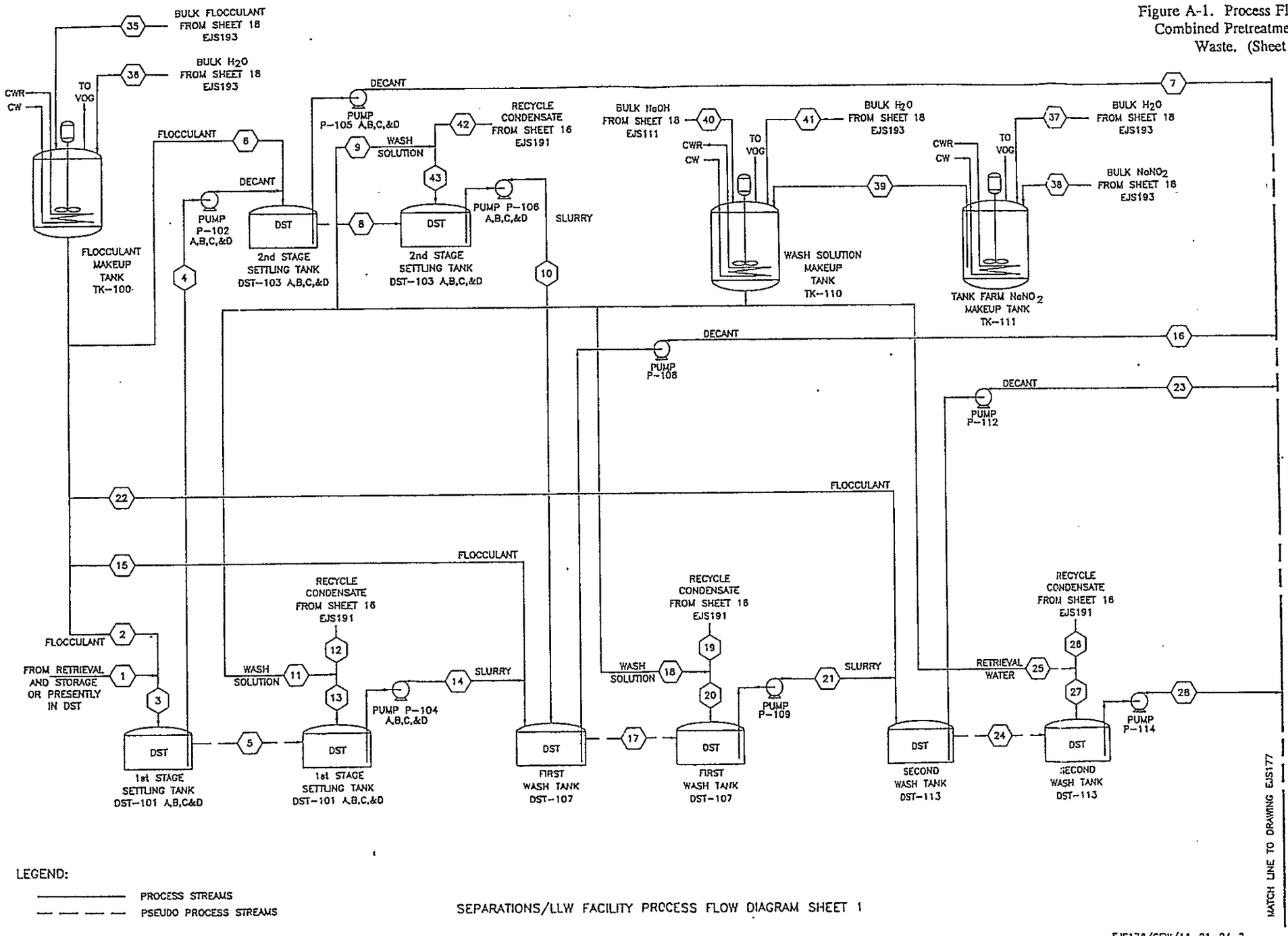

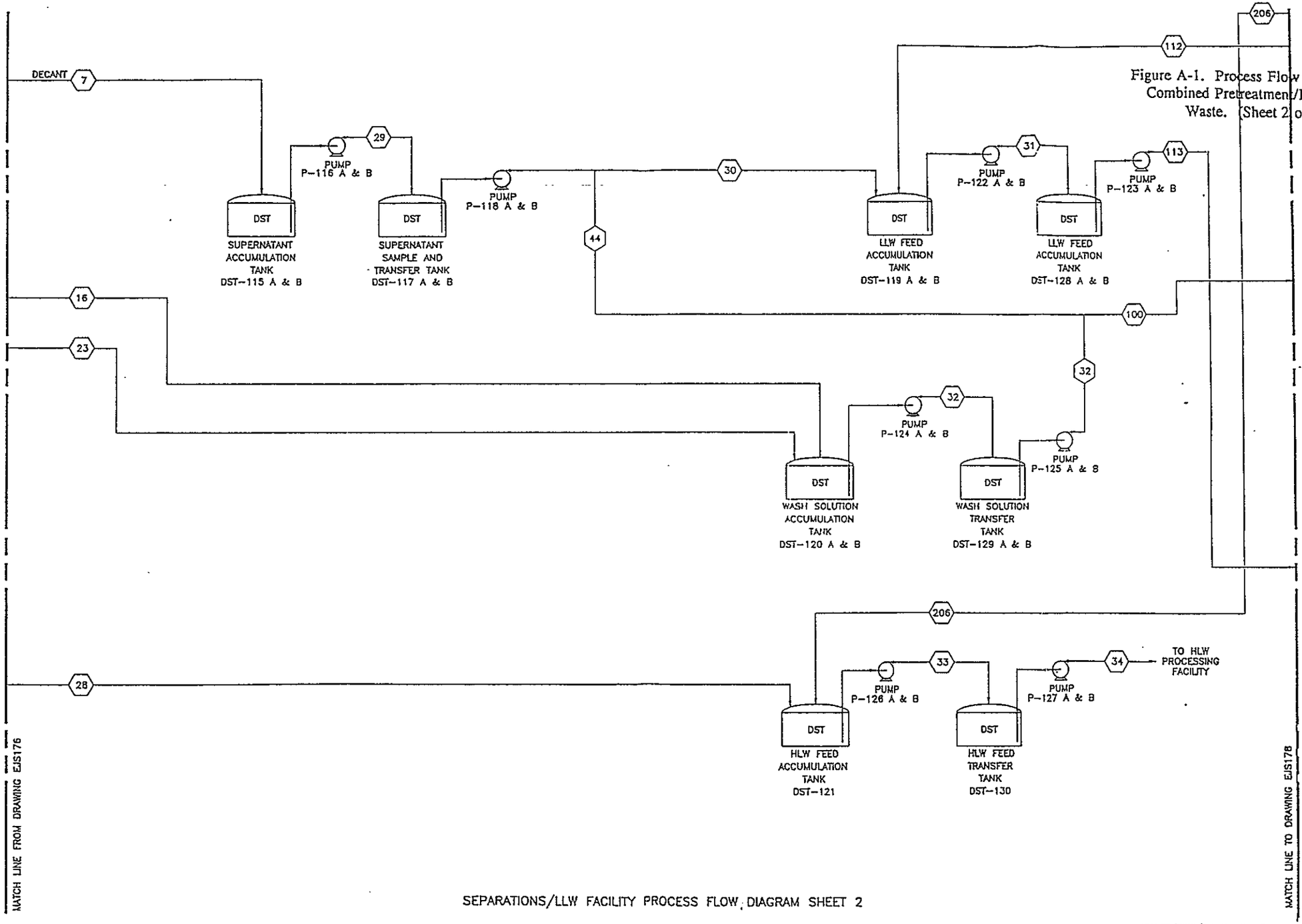

Figure A-1. Process Flow Diagram for Combined Pretreatment/Low-Level Waste. (Sheet 2 of 18)

Figure A-1. Process Flow Diagram for Combined Pretreatment/Low-Level Waste (Sheet 3 of 18)

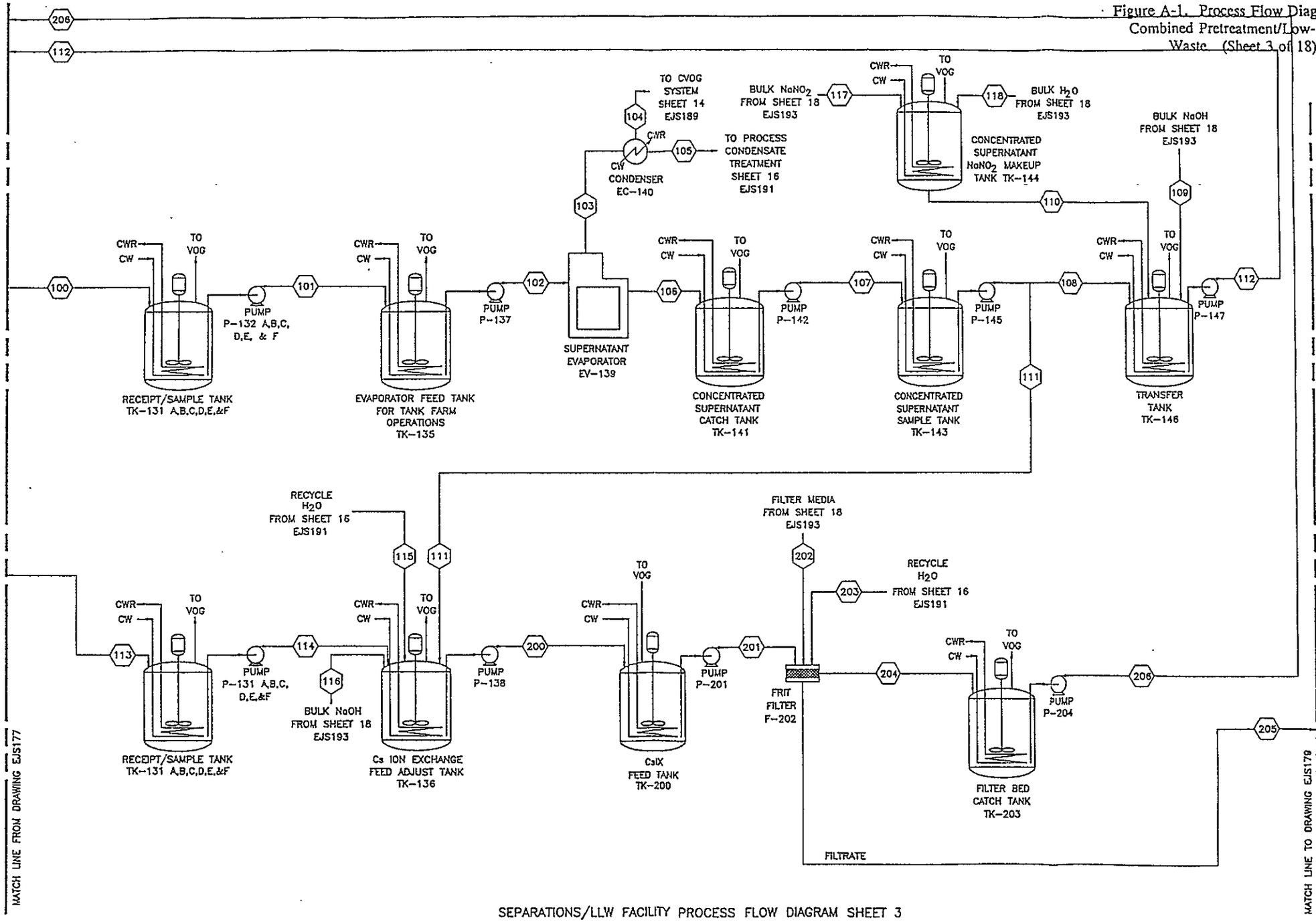

SEPARATIONS/LLW FACILITY PROCESS FLOW DIAGRAM SHEET 3

EJS178/CEW/11-21-94-2

Figure A-1. Process Flow Diagram for Combined Pretreatment/Low-Level Waste. (Sheet 4 of 18)

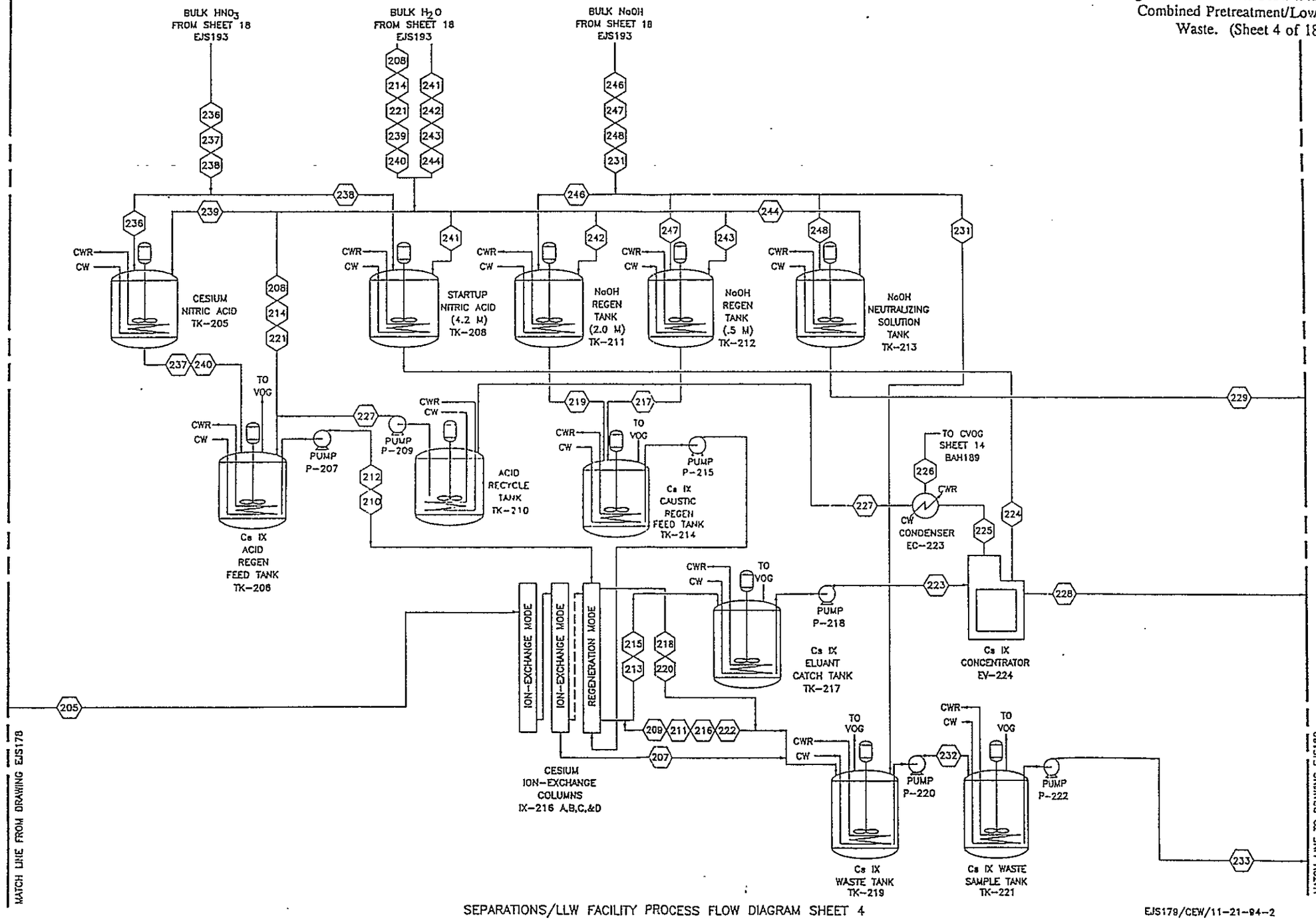

SEPARATIONS/LLW FACILITY PROCESS FLOW DIAGRAM SHEET 4

EJS179/CEW/11-21-94-2

Figure A-1. Process Flow Diagram for Combined Pretreatment/Low-Level Waste. (Sheet 5 of 18)

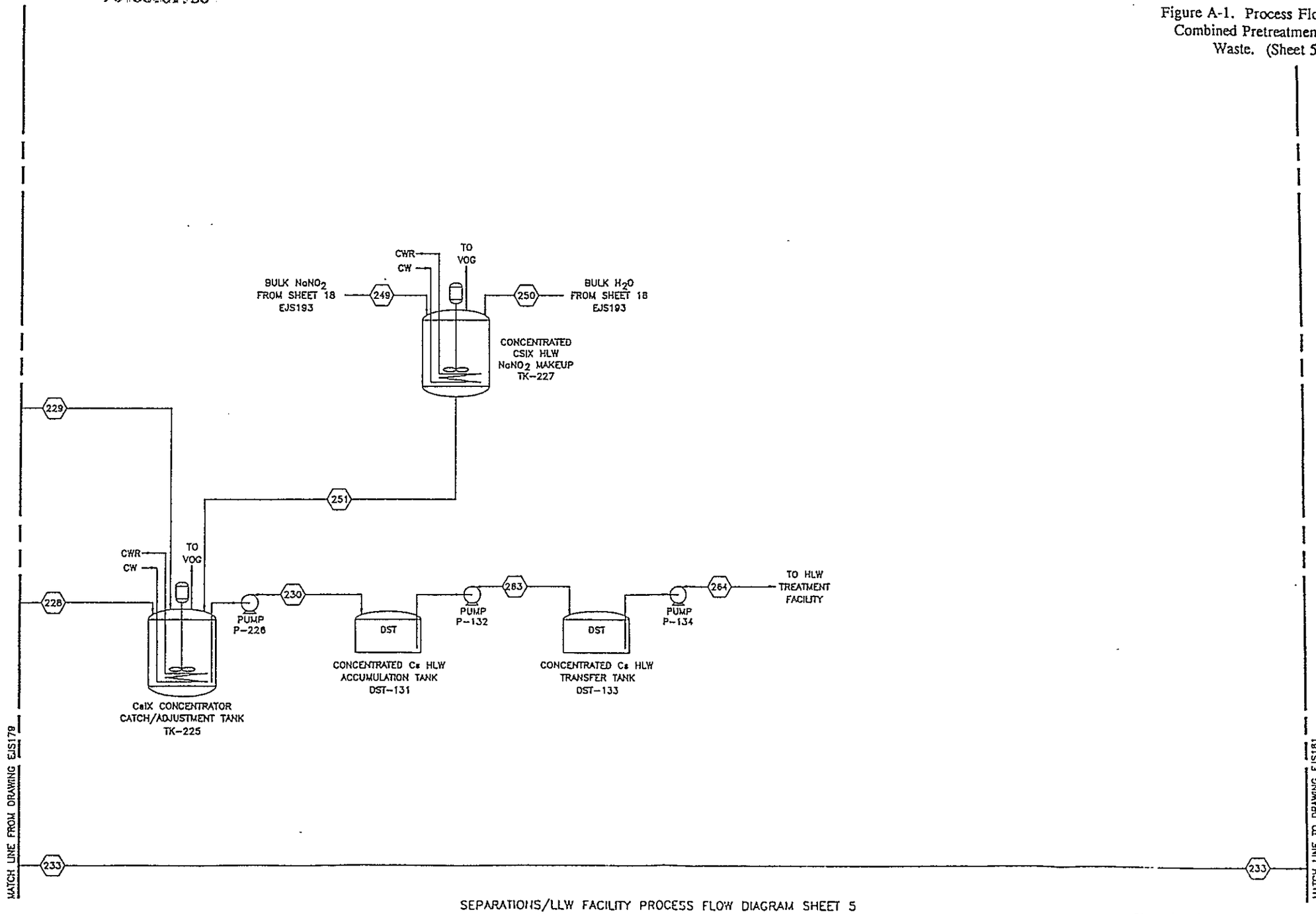

SEPARATIONS/LLW FACILITY PROCESS FLOW DIAGRAM SHEET 5

EJS180/CEW/11-21-94-2

Figure A-1. Process Flow Diagram for Combined Pretreatment/Low-Level Waste. (Sheet 6 of 18)

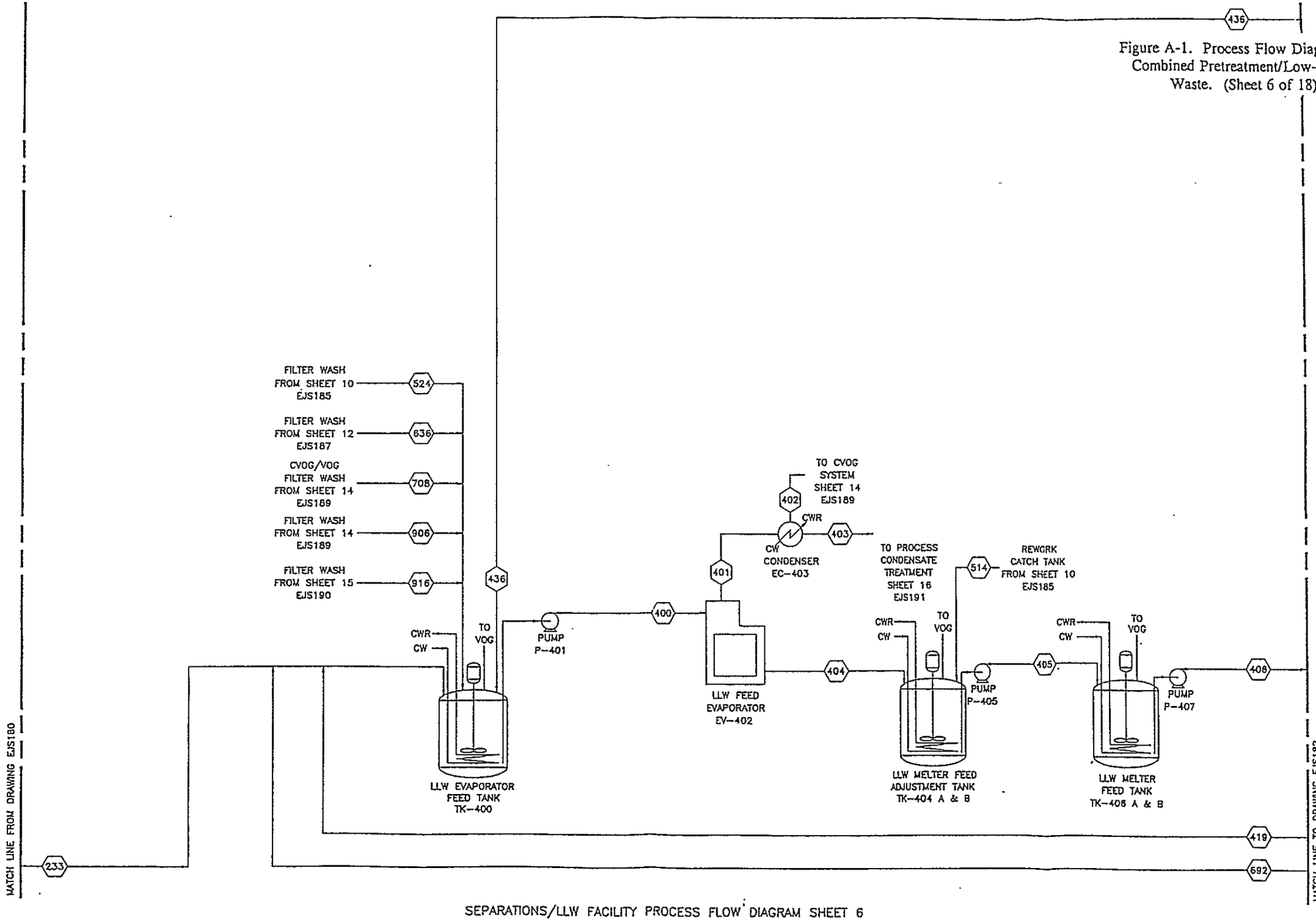

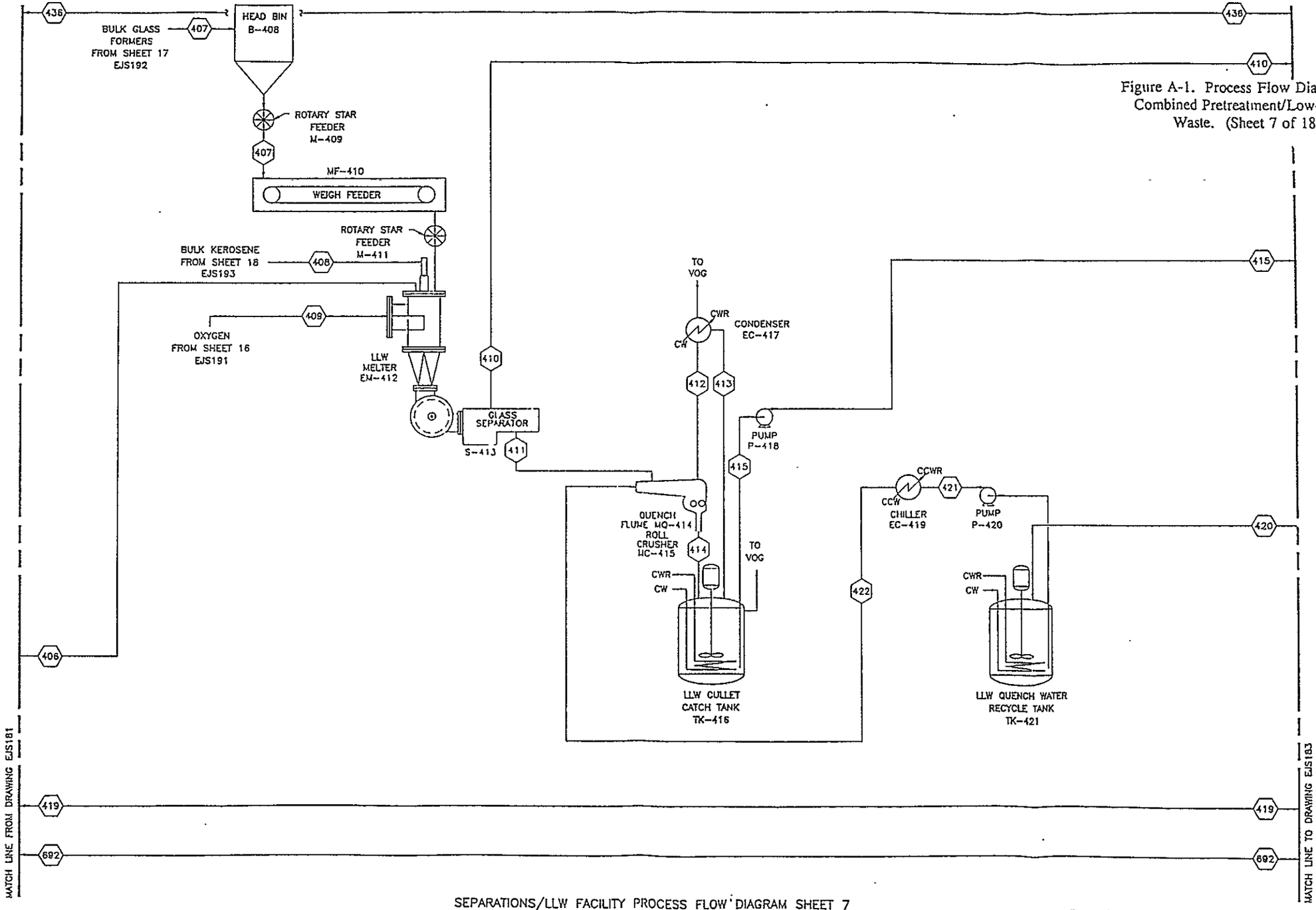

Figure A-1. Process Flow Diagram for Combined Pretreatment/Low-Level Waste. (Sheet 7 of 18)

SEPARATIONS/LLW FACILITY PROCESS FLOW DIAGRAM SHEET 7

EJS182/CEW/11-24-94-2

Figure A-1. Process Flow Diagram for Combined Pretreatment/Low-Level Waste. (Sheet 8 of 18)

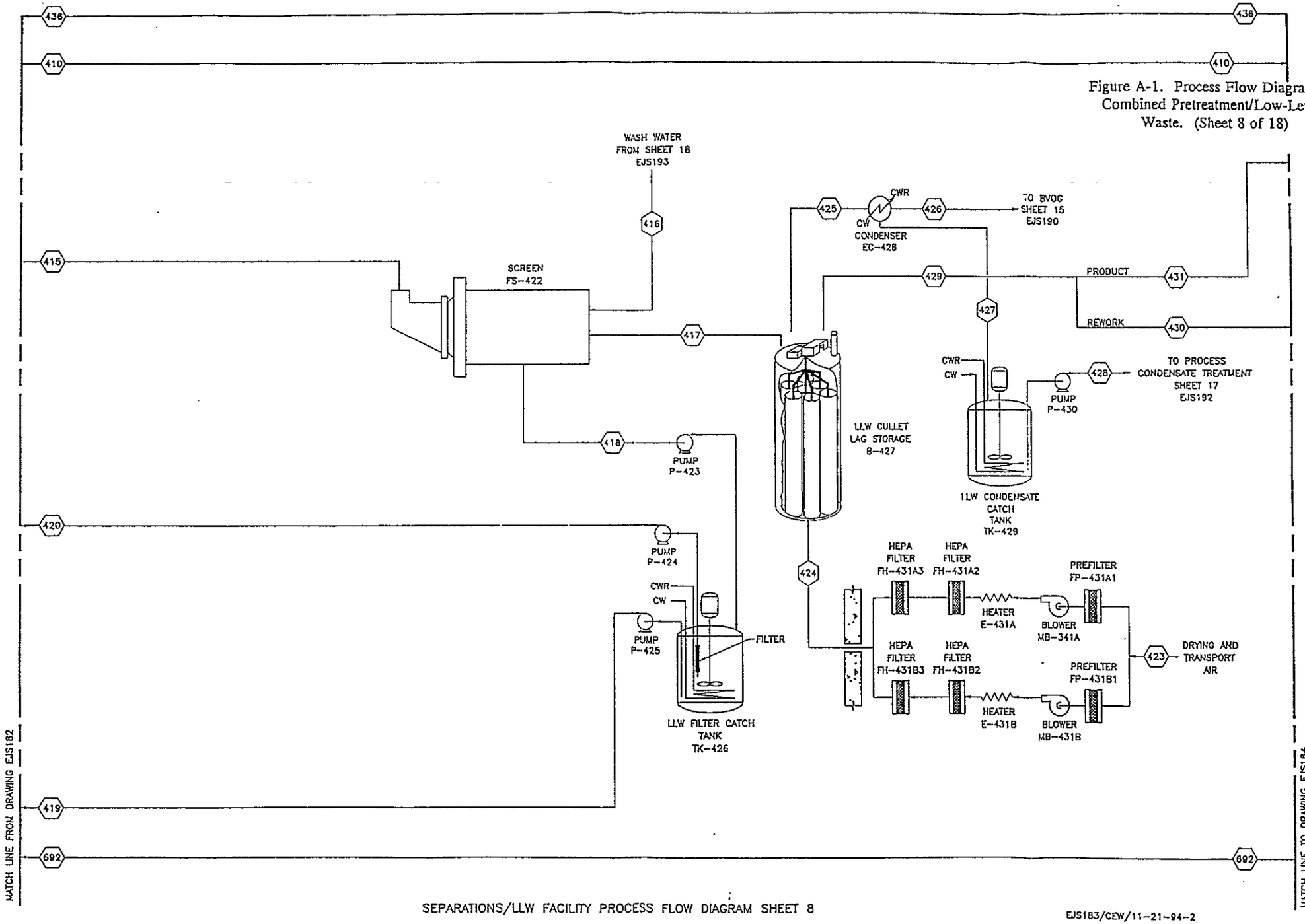

SEPARATIONS/LLW FACILITY PROCESS FLOW DIAGRAM SHEET 8

EJS183/CEW/11-21-94-2

Figure A-1. Process Flow Diagram for Combined Pretreatment/Low-Level Waste. (Sheet 9 of 18)

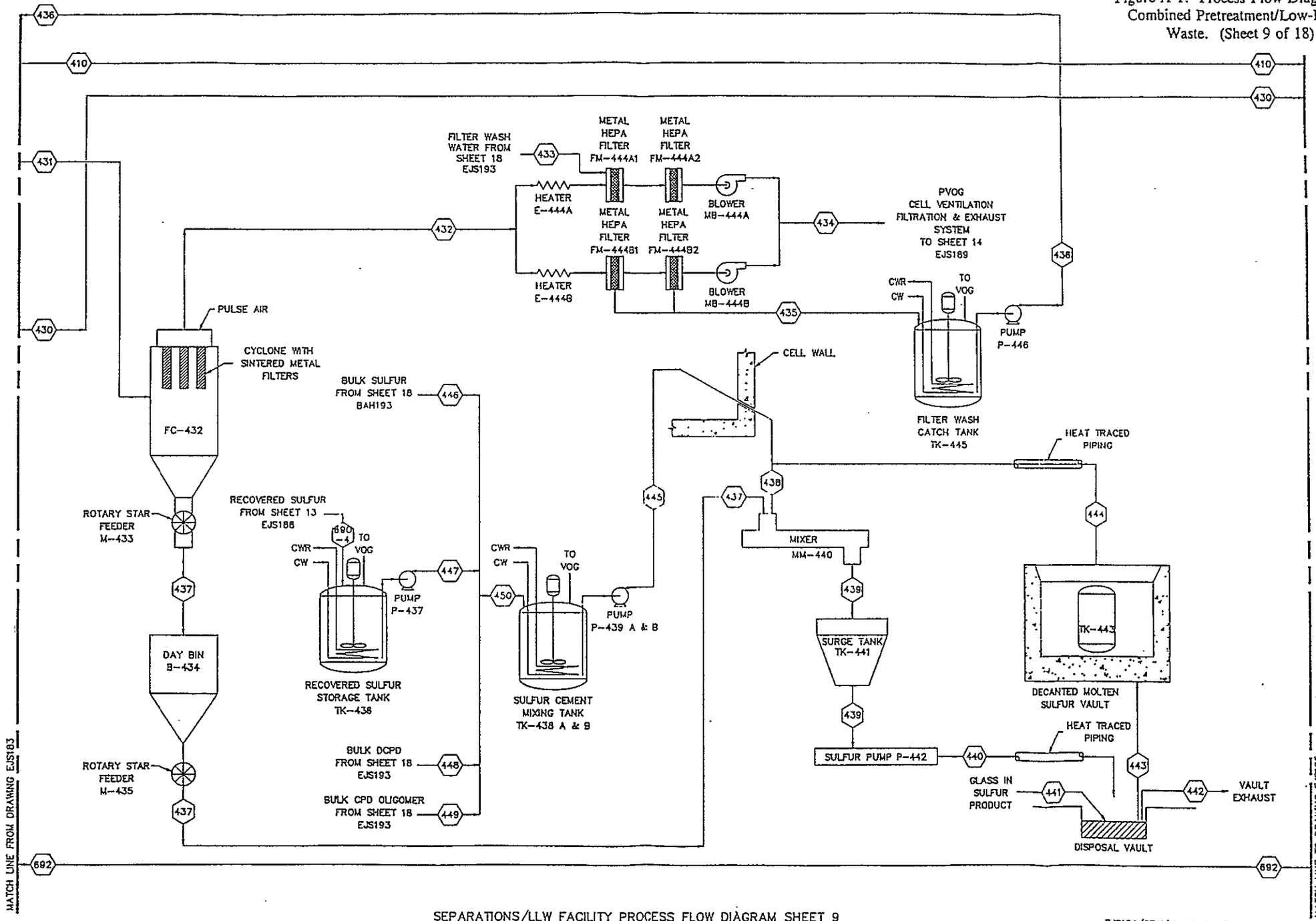

SEPARATIONS/LLW FACILITY PROCESS FLOW DIAGRAM SHEET 9

EJS184/CEW/11-21-94-2

Figure A-1. Process Flow Diagram for Combined Pretreatment/Low-Level Waste. (Sheet 10 of 18)

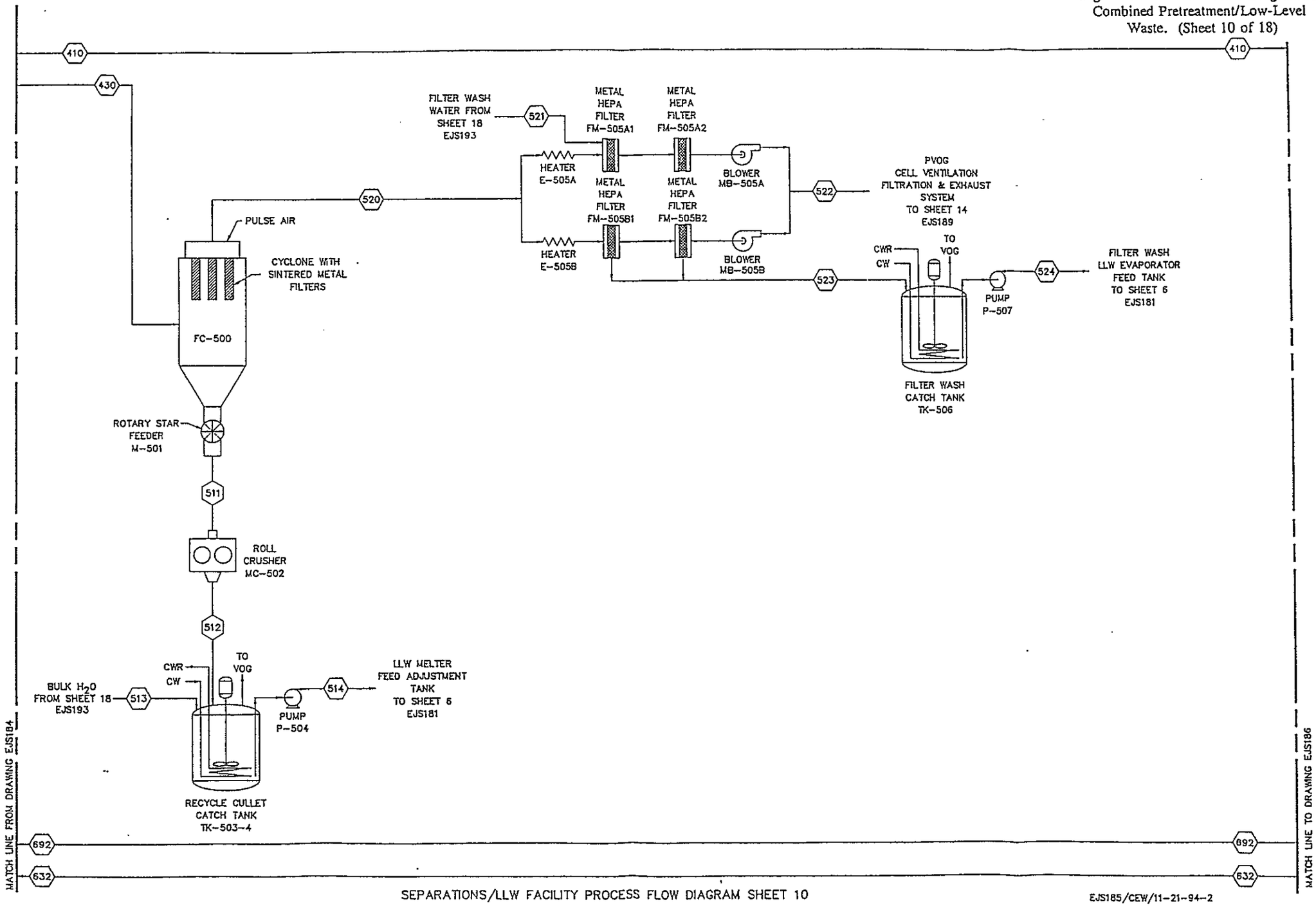

SEPARATIONS/LLW FACILITY PROCESS FLOW DIAGRAM SHEET 10

EJS185/CEW/11-21-94-2

Figure A-1. Process Flow Diagram for Combined Pretreatment/Low-Level Waste. (Sheet 11 of 18)

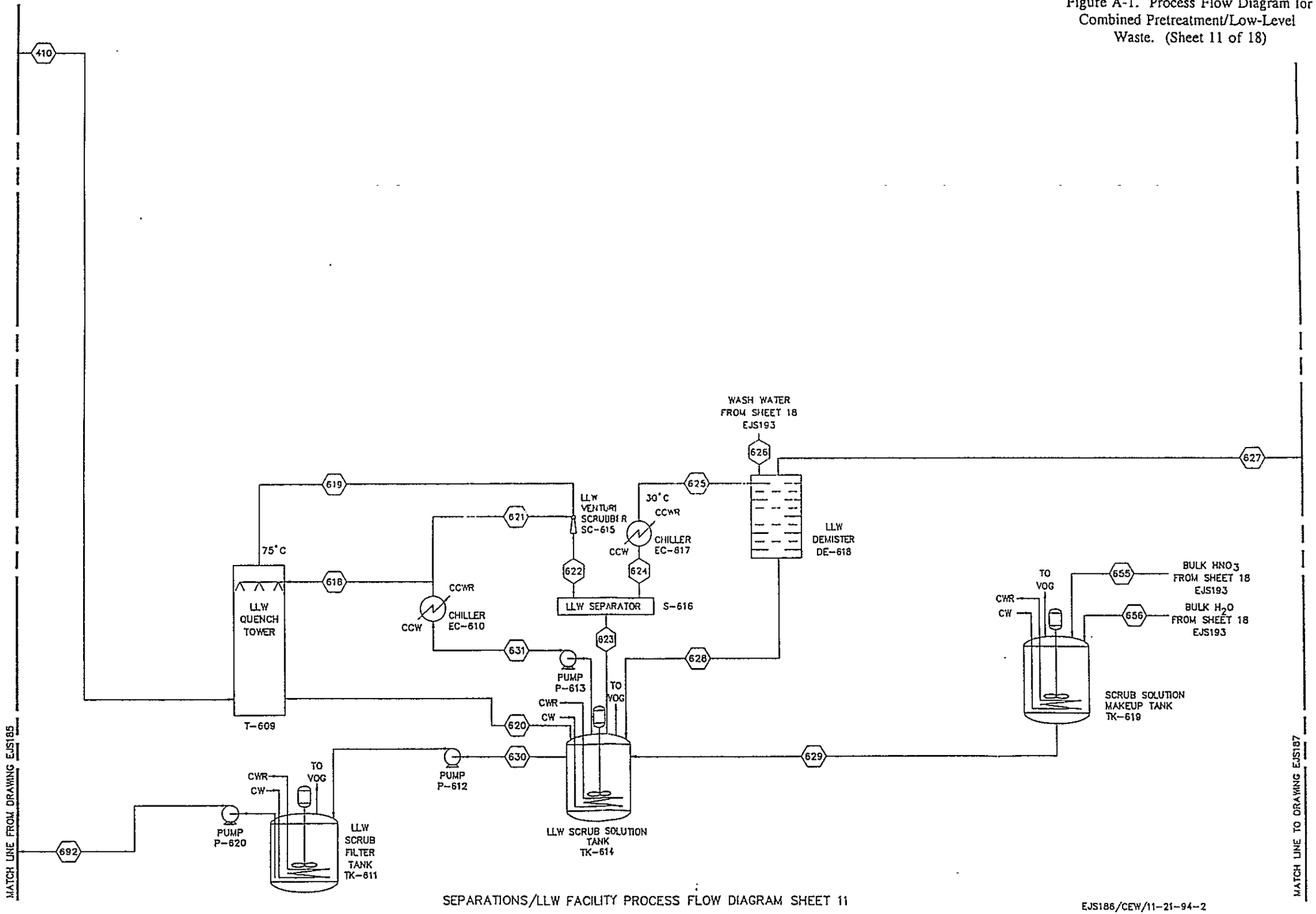

SEPARATIONS/LLW FACILITY PROCESS FLOW DIAGRAM SHEET 11

EJS186/CEW/11-21-94-2

Figure A-1. Process Flow Diagram for Combined Pretreatment/Low-Level Waste. (Sheet 12 of 18)

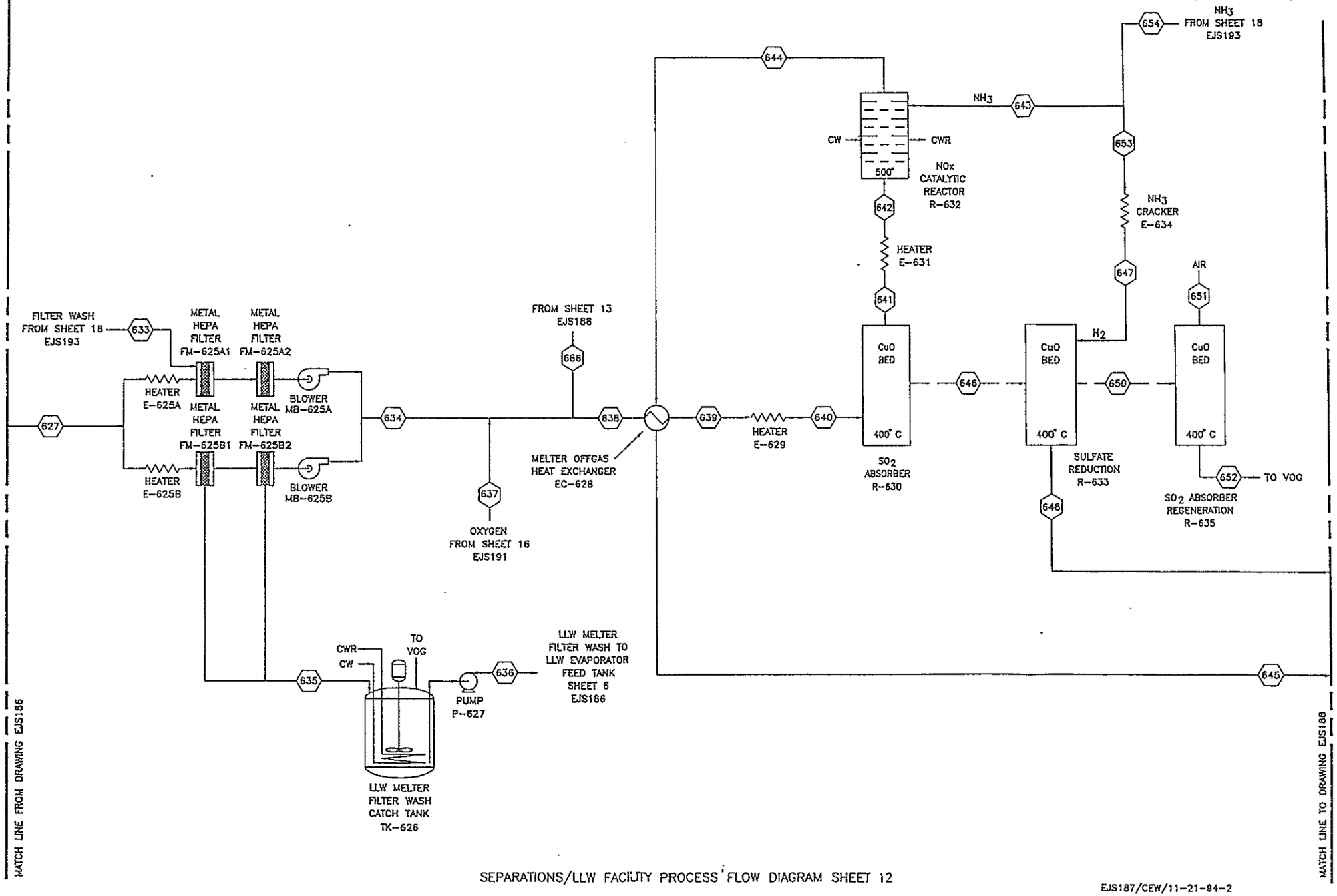

SEPARATIONS/LLW FACILITY PROCESS FLOW DIAGRAM SHEET 12

EJS187/CEW/11-21-94-2

Figure A-1. Process Flow Diagram for Combined Pretreatment/Low-Level Waste. (Sheet 13 of 18)

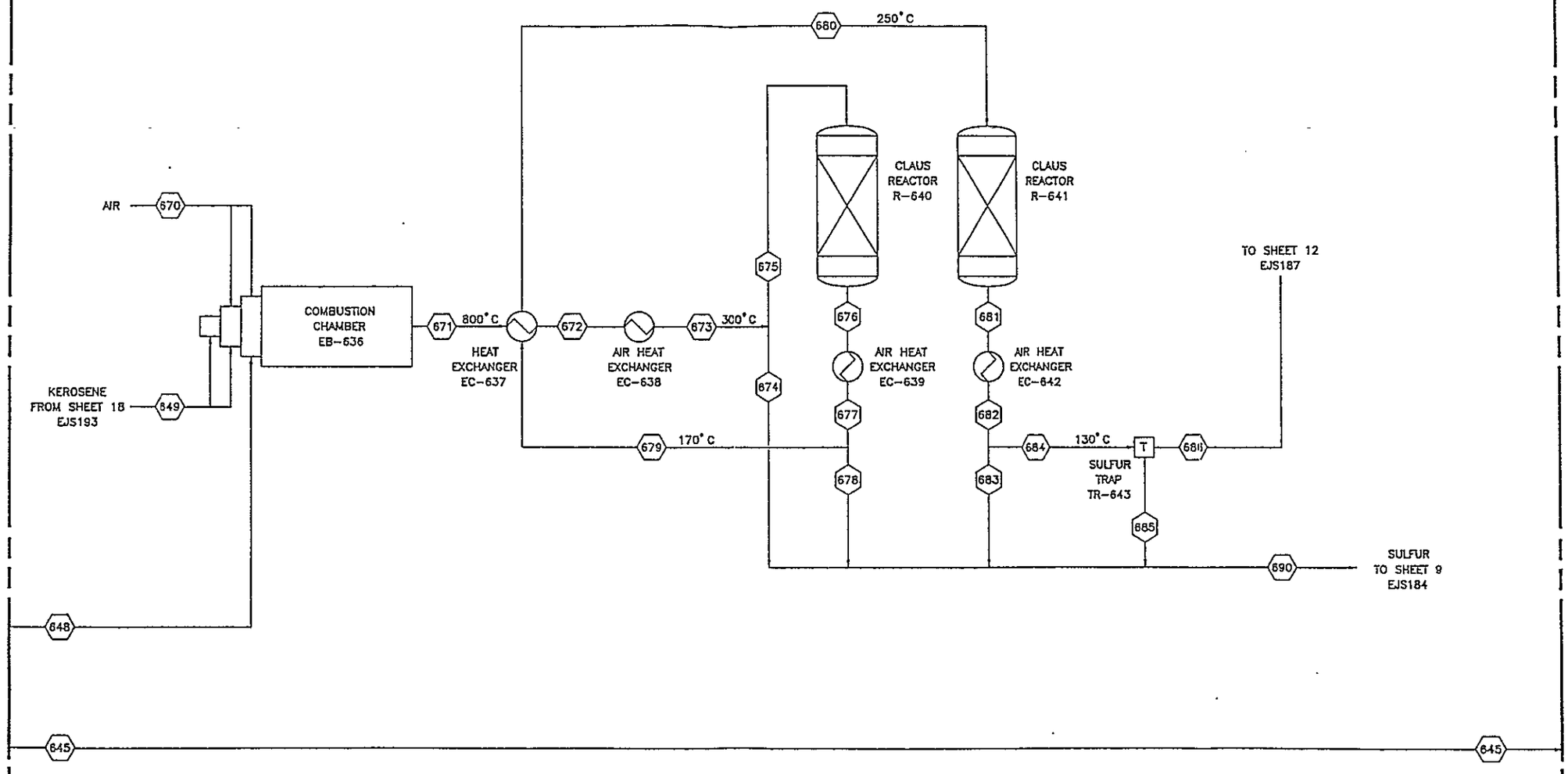

MATCH LINE FROM DRAWING EJS187

MATCH LINE TO DRAWING EJS189

SEPARATIONS/LLW FACILITY PROCESS FLOW DIAGRAM SHEET 13

EJS188/CEW/11-21-94-2

Figure A-1. Process Flow Diagram for Combined Pretreatment/Low-Level Waste. (Sheet 14 of 18)

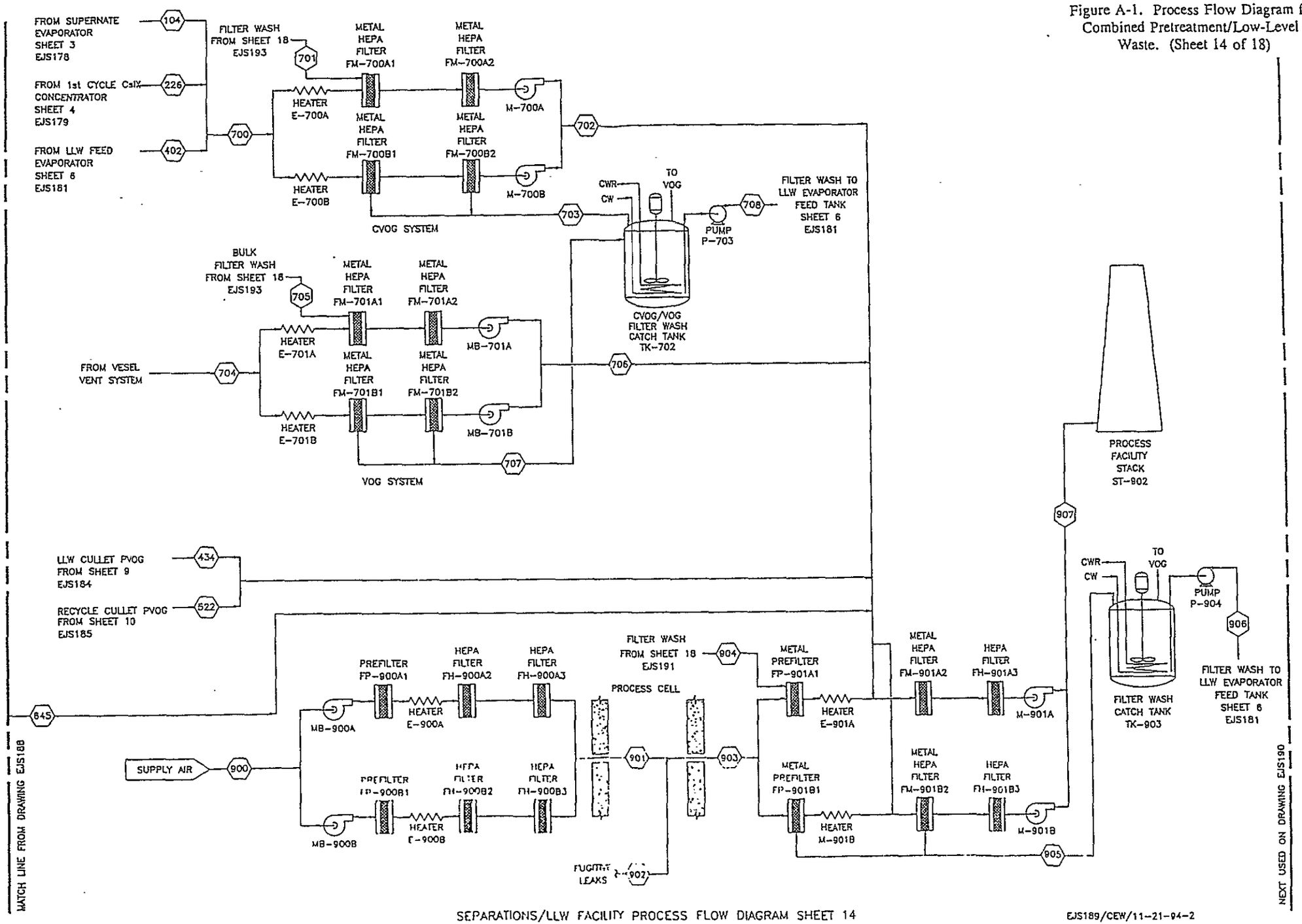

SEPARATIONS/LLW FACILITY PROCESS FLOW DIAGRAM SHEET 14

EJS189/CEW/11-21-94-2

Figure A-1. Process Flow Diagram for Combined Pretreatment/Low-Level Waste. (Sheet 15 of 18)

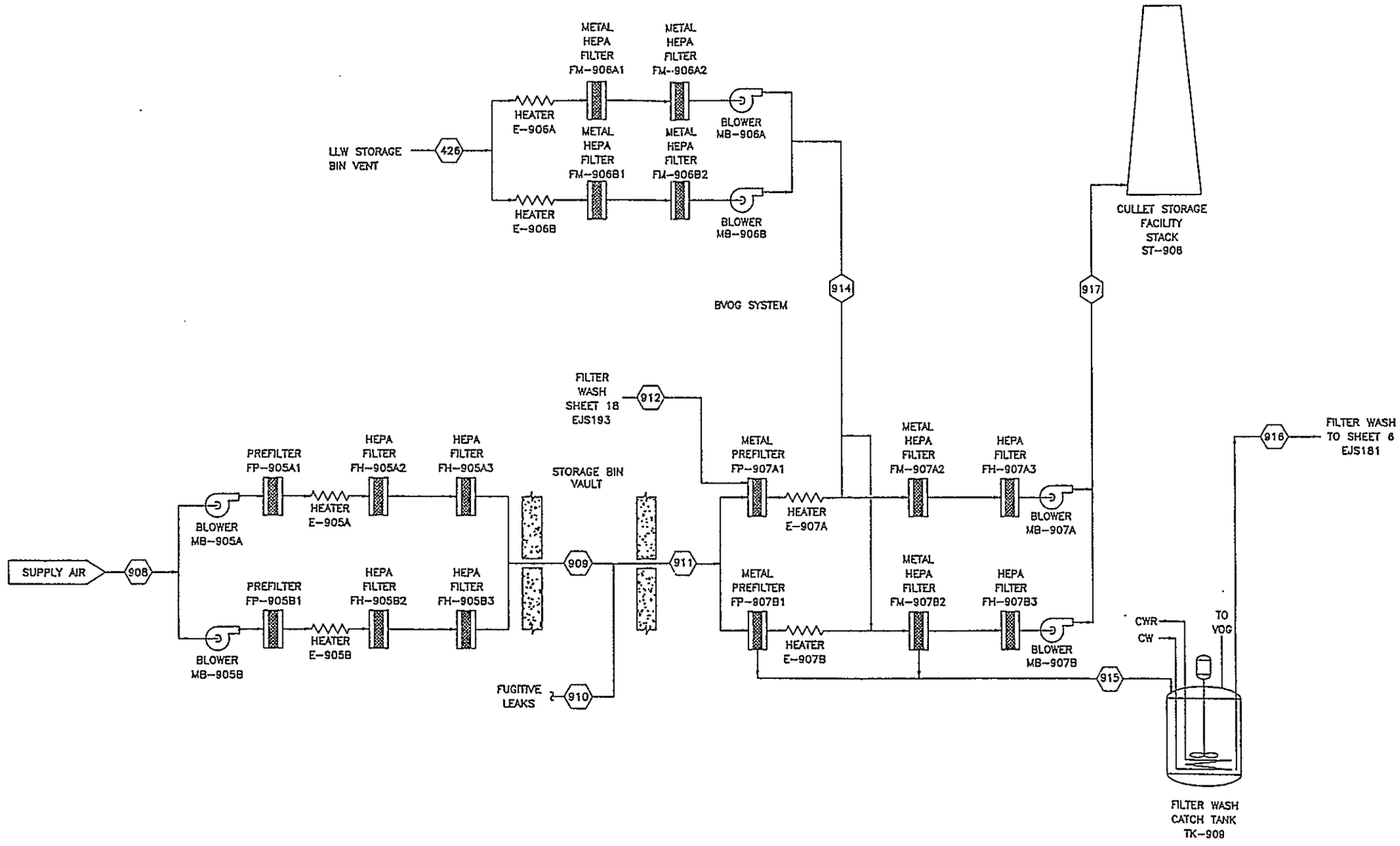

CONTINUED FROM DRAWING EJS189

NEXT USED ON DRAWING EJS191

SEPARATIONS/LLW FACILITY PROCESS FLOW DIAGRAM SHEET 15

EJS190/CEW/11-21-94-2

Figure A-1. Process Flow Diagram for Combined Pretreatment/Low-Level Waste. (Sheet 16 of 18)

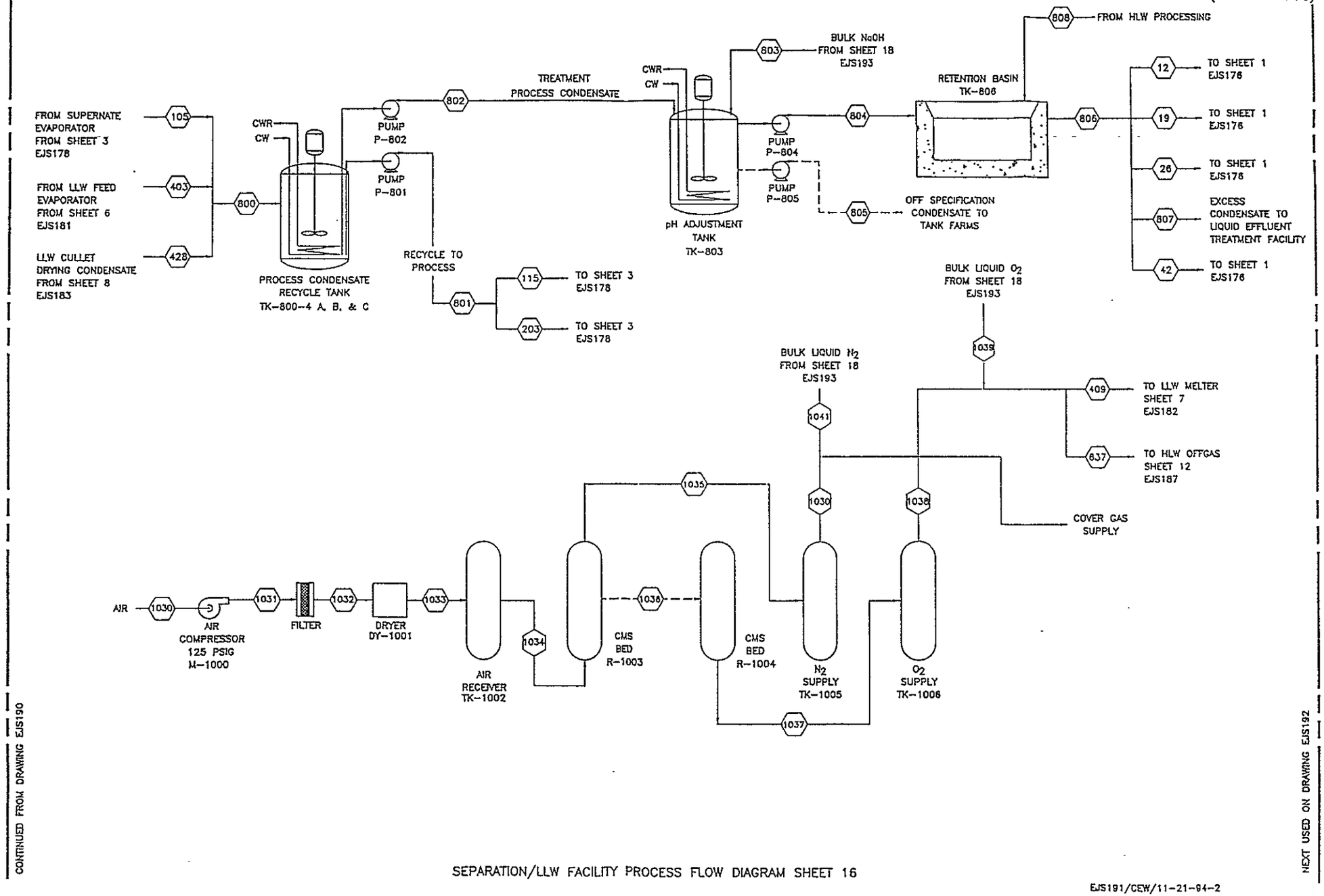

SEPARATION/LLW FACILITY PROCESS FLOW DIAGRAM SHEET 16

EJS191/CEW/11-21-94-2

Figure A-1. Process Flow Diagram for Combined Pretreatment/Low-Level Waste. (Sheet 17 of 18)

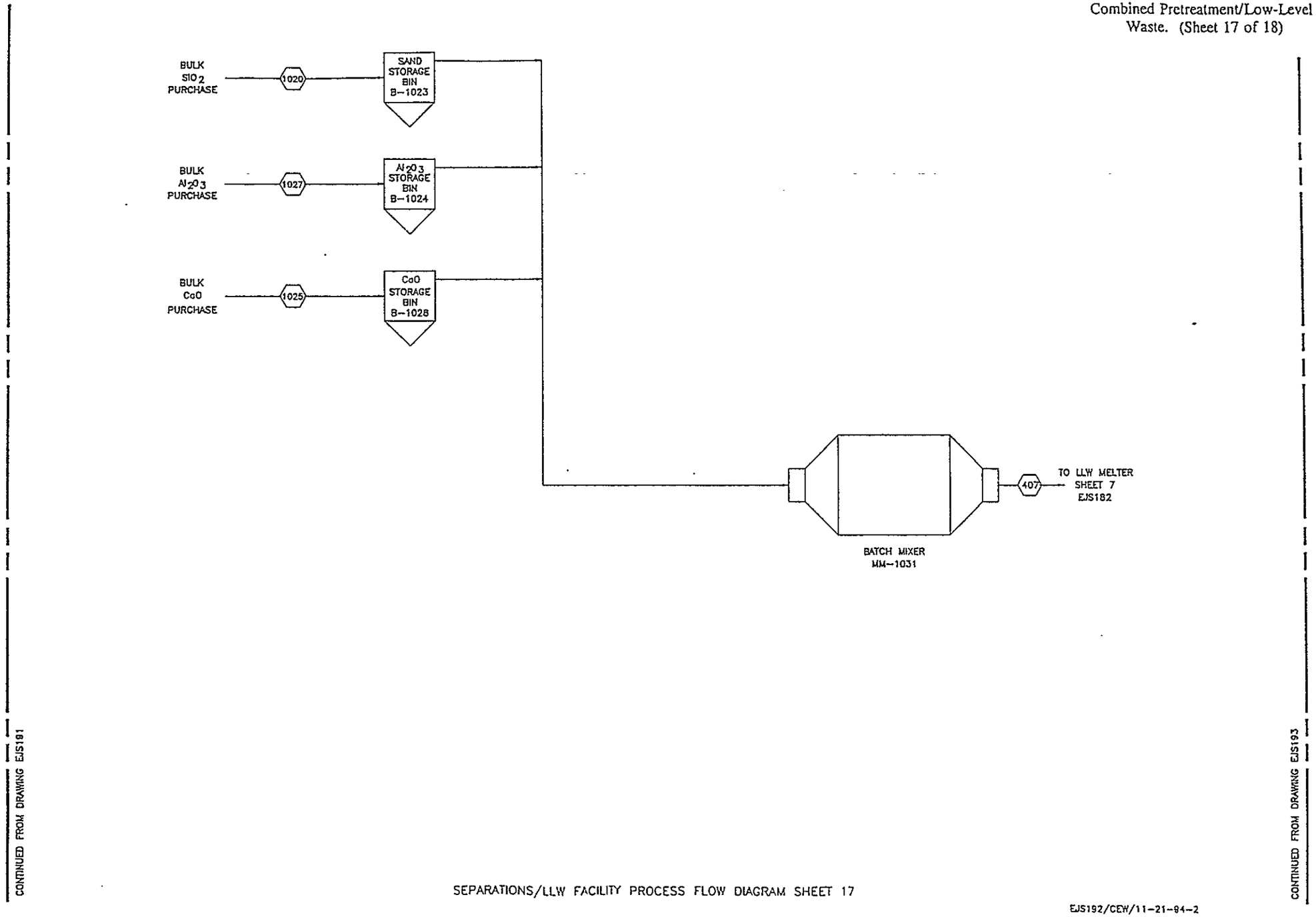

Figure A-1. Process Flow Diagram for Combined Pretreatment/Low-Level Waste. (Sheet 18 of 18)

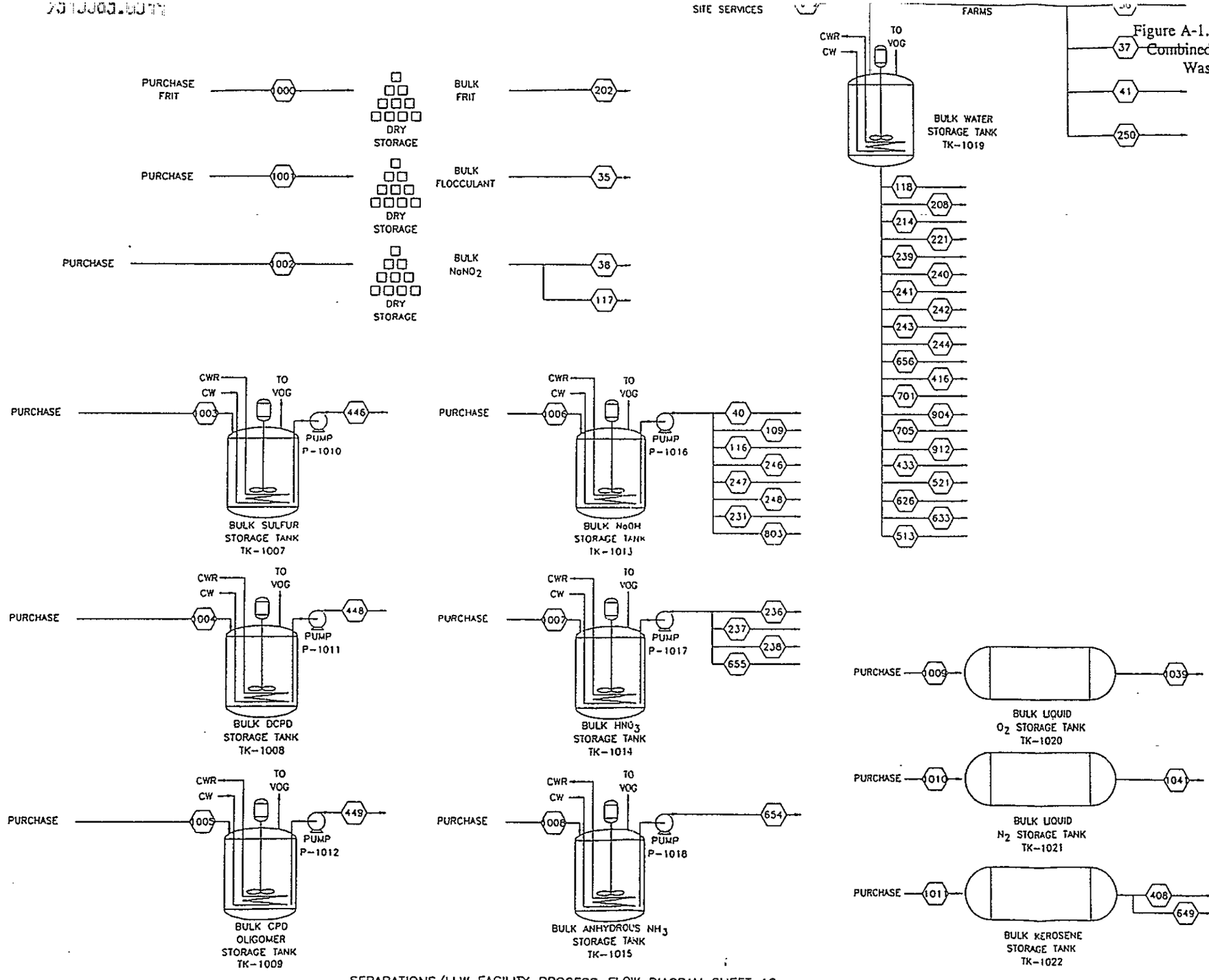

CONTINUED FROM DRAWING EJS192

SEPARATIONS/LLW FACILITY PROCESS FLOW DIAGRAM SHEET 18

EJS193/CEW/11-29-94-3

Stream Name Liquid Components	1	2	3	4	5	6	7	8	10	11NO2
Cs and Ba, (MCi)	6.28E+01		6.28E+01	6.10E+01	1.71E+00		6.10E+01	6.17E-03	6.17E-03	
Sr and Y, (MCi)	2.10E+00		2.10E+00	2.04E+00	5.74E-02		2.04E+00	2.07E-04	2.07E-04	
Tc, (MCi)	2.61E-02		2.61E-02	2.54E-02	7.14E-04		2.54E-02	2.57E-06	2.57E-06	
Am, (MCi)	8.61E-03		8.61E-03	8.38E-03	2.35E-04		8.38E-03	8.47E-07	8.47E-07	
Np, (MCi)	1.03E-05		1.03E-05	1.00E-05	2.82E-07		1.00E-05	1.01E-09	1.01E-09	
Pu-239, (MCi)	1.67E-03		1.67E-03	1.62E-03	4.56E-05		1.62E-03	1.64E-07	1.64E-07	
Pu-240, (MCi)	4.14E-04		4.14E-04	4.03E-04	1.13E-05		4.03E-04	4.07E-08	4.07E-08	
Pu-241, (MCi)	1.49E-03		1.49E-03	1.45E-03	4.06E-05		1.45E-03	1.46E-07	1.46E-07	
Total TRU, (MCi)	1.22E-02		1.22E-02	1.19E-02	3.33E-04		1.19E-02	1.20E-06	1.20E-06	
Total MCi	6.49E+01		6.49E+01	6.31E+01	1.77E+00		6.31E+01	6.38E-03	6.38E-03	
Total Mass Flow, (MT)	7.10E+05	3.69E+02	7.11E+05	6.91E+05	1.94E+04	1.22E+00	6.91E+05	6.98E+01	1.87E+02	
Total Cr, (MT)	5.15E+01		5.15E+01	5.01E+01	1.41E+00		5.01E+01	5.06E-03	5.06E-03	
Total Na, (MT)	6.51E+04		6.51E+04	6.33E+04	1.78E+03		6.33E+04	6.40E+00	7.39E+00	
Total Si, (MT)	5.65E+00		5.65E+00	5.49E+00	1.54E-01		5.49E+00	5.55E-04	5.55E-04	
Total P, (MT)	8.42E+02		8.42E+02	8.19E+02	2.30E+01		8.19E+02	8.28E-02	8.28E-02	
Total NO2-, (MT)	9.54E+03		9.54E+03	9.28E+03	2.60E+02		9.28E+03	9.38E-01	1.67E+00	
Total NO3-, (MT)	1.06E+05		1.06E+05	1.03E+05	2.89E+03		1.03E+05	1.04E+01	1.04E+01	
AG+	3.28E-01		3.28E-01	3.19E-01	8.95E-03		3.19E-01	3.22E-05	3.22E-05	
AL(OH)4-	4.83E+03		4.83E+03	4.70E+03	1.32E+02		4.70E+03	4.75E-01	4.75E-01	
AM+3	2.51E-03		2.51E-03	2.44E-03	6.86E-05		2.44E-03	2.47E-07	2.47E-07	
AS+5	7.70E-01		7.70E-01	7.49E-01	2.10E-02		7.49E-01	7.57E-05	7.57E-05	
B+3	5.19E-01		5.19E-01	5.05E-01	1.42E-02		5.05E-01	5.10E-05	5.10E-05	
BA+2	7.91E-01		7.91E-01	7.69E-01	2.16E-02		7.69E-01	7.78E-05	7.78E-05	
BE+2	8.19E-02		8.19E-02	7.97E-02	2.24E-03		7.97E-02	8.05E-06	8.05E-06	
BI+3	6.76E+01		6.76E+01	6.57E+01	1.85E+00		6.57E+01	6.64E-03	6.64E-03	
C14	7.43E-04		7.43E-04	7.23E-04	2.03E-05		7.23E-04	7.30E-08	7.30E-08	
CA+2	1.67E+01		1.67E+01	1.63E+01	4.56E-01		1.63E+01	1.64E-03	1.64E-03	
CD+2	2.09E+00		2.09E+00	2.03E+00	5.70E-02		2.03E+00	2.05E-04	2.05E-04	
CE+3	2.37E+00		2.37E+00	2.30E+00	6.47E-02		2.30E+00	2.33E-04	2.33E-04	
CL-	3.11E+02		3.11E+02	3.03E+02	8.49E+00		3.03E+02	3.06E-02	3.06E-02	
CL2										
CO										
CO2										
CO3-2	3.37E+03		3.37E+03	3.27E+03	9.19E+01		3.27E+03	3.31E-01	3.31E-01	
CR(OH)4-	1.19E+02		1.19E+02	1.16E+02	3.24E+00		1.16E+02	1.17E-02	1.17E-02	
CS+	8.19E-01		8.19E-01	7.97E-01	2.24E-02		7.97E-01	8.05E-05	8.05E-05	
CU+2	1.77E-01		1.77E-01	1.72E-01	4.83E-03		1.72E-01	1.74E-05	1.74E-05	
DPCD										
F-	1.12E+03		1.12E+03	1.09E+03	3.05E+01		1.09E+03	1.10E-01	1.10E-01	
F2										
FE+3	1.44E+01		1.44E+01	1.40E+01	3.92E-01		1.40E+01	1.41E-03	1.41E-03	
H+										
H2										
H2O	5.07E+05	3.32E+02	5.07E+05	4.93E+05	1.38E+04	1.10E+00	4.93E+05	4.98E+01	1.64E+02	
H2S										

Stream Name Liquid Components	1	2	3	4	5	6	7	8	10	11NO2
HG										
HG+2	9.49E-01		9.49E-01	9.23E-01	2.59E-02		9.23E-01	9.33E-05	9.33E-05	
I-	5.46E+02		5.46E+02	5.31E+02	1.49E+01		5.31E+02	5.37E-02	5.37E-02	
I2										
K+	2.19E-01		2.19E-01	2.13E-01	5.98E-03		2.13E-01	2.15E-05	2.15E-05	
KEROSENE										
LA+3	2.19E-01		2.19E-01	2.13E-01	5.98E-03		2.13E-01	2.15E-05	2.15E-05	
LI+	5.77E-03		5.77E-03	5.61E-03	1.58E-04		5.61E-03	5.67E-07	5.67E-07	
MG+2	9.65E-01		9.65E-01	9.39E-01	2.63E-02		9.39E-01	9.49E-05	9.49E-05	
MNO2	2.17E+01		2.17E+01	2.11E+01	5.92E-01		2.11E+01	2.13E-03	2.13E-03	
MO+6	4.87E+00		4.87E+00	4.74E+00	1.33E-01		4.74E+00	4.79E-04	4.79E-04	
N2										
NA+	6.51E+04		6.51E+04	6.33E+04	1.78E+03		6.33E+04	6.40E+00	7.39E+00	
NH3										
NI+3	4.07E+00		4.07E+00	3.96E+00	1.11E-01		3.96E+00	4.00E-04	4.00E-04	
NO										
NO2										
NO2-	9.54E+03		9.54E+03	9.28E+03	2.60E+02		9.28E+03	9.38E-01	1.67E+00	
NO3-	1.06E+05		1.06E+05	1.03E+05	2.89E+03		1.03E+05	1.04E+01	1.04E+01	
NP+4	1.46E-02		1.46E-02	1.42E-02	4.00E-04		1.42E-02	1.44E-06	1.44E-06	
O2										
OH-	6.44E+03		6.44E+03	6.26E+03	1.76E+02		6.26E+03	6.33E-01	1.10E+00	
OLIGIMER										
PB+4	1.96E+00		1.96E+00	1.91E+00	5.35E-02		1.91E+00	1.93E-04	1.93E-04	
PO4-3	2.58E+03		2.58E+03	2.51E+03	7.04E+01		2.51E+03	2.54E-01	2.54E-01	
POLY		3.69E+01	7.39E+00	7.18E+00	2.02E-01	1.22E-01	1.46E+00	1.48E-04	1.48E-04	
PU+4	2.88E-02		2.88E-02	2.80E-02	7.86E-04		2.80E-02	2.83E-06	2.83E-06	
S										
SI+4	5.65E+00		5.65E+00	5.49E+00	1.54E-01		5.49E+00	5.55E-04	5.55E-04	
SO2										
SO4-2	2.01E+03		2.01E+03	1.95E+03	5.47E+01		1.95E+03	1.97E-01	1.97E-01	
SR+2	3.75E-01		3.75E-01	3.65E-01	1.03E-02		3.65E-01	3.69E-05	3.69E-05	
TCO2										
TCO4-	2.52E+00		2.52E+00	2.45E+00	6.89E-02		2.45E+00	2.48E-04	2.48E-04	
TOC	1.42E+03		1.42E+03	1.38E+03	3.87E+01		1.38E+03	1.39E-01	1.39E-01	
UO2+2	8.52E+01		8.52E+01	8.29E+01	2.33E+00		8.29E+01	8.38E-03	8.38E-03	
V+5	6.20E-02		6.20E-02	6.03E-02	1.69E-03		6.03E-02	6.10E-06	6.10E-06	
W+6	7.47E-01		7.47E-01	7.27E-01	2.04E-02		7.27E-01	7.34E-05	7.34E-05	
ZN+2	3.59E+00		3.59E+00	3.49E+00	9.80E-02		3.49E+00	3.53E-04	3.53E-04	
ZR+4	4.48E-01		4.48E-01	4.36E-01	1.22E-02		4.36E-01	4.40E-05	4.40E-05	
ZRO2:2H2	2.15E+01		2.15E+01	2.09E+01	5.87E-01		2.09E+01	2.11E-03	2.11E-03	

Stream Name Solid Components	1	2	3	4	5	6	7	8	10	11NO2
Cs and Ba, (MCi)	5.28E+00		5.28E+00	1.74E-02	5.27E+00		5.75E-05	1.74E-02	1.74E-02	
Sr and Y, (MCi)	1.05E+02		1.05E+02	3.47E-01	1.05E+02		1.15E-03	3.46E-01	3.46E-01	
Tc, (MCi)	5.89E-03		5.89E-03	1.94E-05	5.87E-03		6.41E-08	1.94E-05	1.94E-05	
Am, (MCi)	9.51E-02		9.51E-02	3.14E-04	9.48E-02		1.04E-06	3.13E-04	3.13E-04	
Np, (MCi)	9.29E-05		9.29E-05	3.06E-07	9.25E-05		1.01E-09	3.05E-07	3.05E-07	
Pu-239, (MCi)	2.47E-02		2.47E-02	8.15E-05	2.46E-02		2.69E-07	8.12E-05	8.12E-05	
Pu-240, (MCi)	6.28E-03		6.28E-03	2.07E-05	6.26E-03		6.84E-08	2.07E-05	2.07E-05	
Pu-241, (MCi)	7.34E-02		7.34E-02	2.42E-04	7.31E-02		7.99E-07	2.41E-04	2.41E-04	
Total TRU, (MCi)	2.00E-01		2.00E-01	6.59E-04	1.99E-01		2.17E-06	6.56E-04	6.56E-04	
Total MCi	1.11E+02		1.11E+02	3.65E-01	1.10E+02		1.21E-03	3.64E-01	3.64E-01	
Total Mass Flow, (MT)	1.94E+04		1.95E+04	6.42E+01	1.94E+04		2.31E-01	6.98E+01	6.98E+01	
Total Cr, (MT)	1.32E+02		1.32E+02	4.36E-01	1.32E+02		1.44E-03	4.35E-01	4.35E-01	
Total Na, (MT)	1.24E+03		1.24E+03	4.08E+00	1.23E+03		1.35E-02	4.07E+00	4.07E+00	
Total Si, (MT)	5.24E+02		5.24E+02	1.73E+00	5.23E+02		5.71E-03	1.73E+00	1.73E+00	
Total P, (MT)	7.80E+02		7.80E+02	2.57E+00	7.78E+02		8.50E-03	2.57E+00	2.57E+00	
Total NO2-, (MT)	7.38E+01		7.38E+01	2.43E-01	7.35E+01		8.03E-04	2.43E-01	2.43E-01	
Total NO3-, (MT)	1.03E+03		1.03E+03	3.41E+00	1.03E+03		1.12E-02	3.40E+00	3.40E+00	
AG+	1.38E+00		1.38E+00	4.54E-03	1.37E+00		1.50E-05	4.53E-03	4.53E-03	
AG2O										
AL+3	2.37E+03		2.37E+03	7.81E+00	2.36E+03		2.58E-02	7.79E+00	7.79E+00	
AL2O3										
AM+3	2.77E-02		2.77E-02	9.15E-05	2.76E-02		3.02E-07	9.12E-05	9.12E-05	
AM2O3										
AS+5	4.98E-01		4.98E-01	1.64E-03	4.96E-01		5.42E-06	1.64E-03	1.64E-03	
AS2O5										
B+3	9.94E-01		9.94E-01	3.28E-03	9.91E-01		1.08E-05	3.27E-03	3.27E-03	
B2O3										
BA+2	3.09E+00		3.09E+00	1.02E-02	3.08E+00		3.37E-05	1.02E-02	1.02E-02	
BAO										
BE+2	7.61E-03		7.61E-03	2.51E-05	7.59E-03		8.29E-08	2.50E-05	2.50E-05	
BEO										
BI+3	1.96E+02		1.96E+02	6.47E-01	1.95E+02		2.13E-03	6.45E-01	6.45E-01	
BI2O3										
C14	4.53E-04		4.53E-04	1.50E-06	4.51E-04		4.93E-09	1.49E-06	1.49E-06	
CA+2	1.33E+02		1.33E+02	4.40E-01	1.33E+02		1.45E-03	4.38E-01	4.38E-01	
CANCRINI	2.70E+03		2.70E+03	8.91E+00	2.69E+03		2.94E-02	8.88E+00	8.88E+00	
CAO										
CD+2	7.93E+00		7.93E+00	2.62E-02	7.90E+00		8.64E-05	2.61E-02	2.61E-02	
CDO										
CE+3	2.35E+02		2.35E+02	7.76E-01	2.35E+02		2.56E-03	7.74E-01	7.74E-01	
CE2O3										
CL-	3.49E+00		3.49E+00	1.15E-02	3.48E+00		3.80E-05	1.15E-02	1.15E-02	
CO3-2	2.25E+02		2.25E+02	7.41E-01	2.24E+02		2.44E-03	7.38E-01	7.38E-01	
CR+3	1.32E+02		1.32E+02	4.36E-01	1.32E+02		1.44E-03	4.35E-01	4.35E-01	
CR2O3										
CS+	9.25E-02		9.25E-02	3.05E-04	9.22E-02		1.01E-06	3.04E-04	3.04E-04	

Stream Name Solid Components	1	2	3	4	5	6	7	8	10	11NO2
CS2O										
CU										
CU+2	7.46E-01		7.46E-01	2.46E-03	7.44E-01		8.12E-06	2.45E-03	2.45E-03	
CUO										
CUSO4										
F-	5.97E+01		5.97E+01	1.97E-01	5.95E+01		6.50E-04	1.96E-01	1.96E-01	
FE+3	7.63E+02		7.63E+02	2.52E+00	7.60E+02		8.31E-03	2.51E+00	2.51E+00	
FE2O3										
HG+2	9.00E-03		9.00E-03	2.97E-05	8.97E-03		9.80E-08	2.96E-05	2.96E-05	
I-	2.02E+01		2.02E+01	6.67E-02	2.01E+01		2.20E-04	6.64E-02	6.64E-02	
K+	2.10E+01		2.10E+01	6.93E-02	2.09E+01		2.29E-04	6.91E-02	6.91E-02	
K2O										
LA+3	2.10E+01		2.10E+01	6.93E-02	2.09E+01		2.29E-04	6.91E-02	6.91E-02	
LA2O3										
LI+	2.46E-02		2.46E-02	8.11E-05	2.45E-02		2.68E-07	8.08E-05	8.08E-05	
LI2O										
MG+2	1.10E+01		1.10E+01	3.63E-02	1.10E+01		1.20E-04	3.62E-02	3.62E-02	
MGO										
MNO2	2.09E+02		2.09E+02	6.90E-01	2.08E+02		2.28E-03	6.87E-01	6.87E-01	
MO+6	8.01E-01		8.01E-01	2.64E-03	7.98E-01		8.72E-06	2.64E-03	2.64E-03	
MOO3										
NA+	7.77E+02		7.77E+02	2.56E+00	7.75E+02		8.46E-03	2.56E+00	2.56E+00	
NA2O										
NI+3	6.57E+00		6.57E+00	2.17E-02	6.55E+00		7.16E-05	2.16E-02	2.16E-02	
NI2FECN6	5.00E+02		5.00E+02	1.65E+00	4.98E+02		5.45E-03	1.65E+00	1.65E+00	
NI2O3										
NIO										
NO2-	7.38E+01		7.38E+01	2.43E-01	7.35E+01		8.03E-04	2.43E-01	2.43E-01	
NO3-	1.03E+03		1.03E+03	3.41E+00	1.03E+03		1.12E-02	3.40E+00	3.40E+00	
NP+4	1.32E-01		1.32E-01	4.35E-04	1.31E-01		1.43E-06	4.33E-04	4.33E-04	
NPO2										
OH-	5.00E+03		5.00E+03	1.65E+01	4.98E+03		5.45E-02	1.65E+01	1.65E+01	
P2O5										
P2O5:24W	5.21E-01		5.21E-01	1.72E-03	5.19E-01		5.67E-06	1.71E-03	1.71E-03	
PB+4	3.28E+00		3.28E+00	1.08E-02	3.27E+00		3.57E-05	1.08E-02	1.08E-02	
PBO2										
PO4-3	2.39E+03		2.39E+03	7.89E+00	2.38E+03		2.60E-02	7.86E+00	7.86E+00	
POLY			2.95E+01	9.75E-02	2.94E+01		1.96E-02	5.92E+00	5.92E+00	
PU+4	4.27E-01		4.27E-01	1.41E-03	4.25E-01		4.65E-06	1.40E-03	1.40E-03	
PUO2										
S										
SI+4	7.90E+01		7.90E+01	2.61E-01	7.87E+01		8.60E-04	2.60E-01	2.60E-01	
SIO2										
SO4-2	3.97E+01		3.97E+01	1.31E-01	3.96E+01		4.33E-04	1.31E-01	1.31E-01	
SR+2	3.64E+01		3.64E+01	1.20E-01	3.63E+01		3.97E-04	1.20E-01	1.20E-01	
SRO										

Stream Name Solid Components	1	2	3	4	5	6	7	8	10	11NO2
TC2O7										
TCO4-	5.68E-01		5.68E-01	1.87E-03	5.66E-01		6.18E-06	1.87E-03	1.87E-03	
TOC	1.16E+02		1.16E+02	3.82E-01	1.15E+02		1.26E-03	3.81E-01	3.81E-01	
UO2+2	1.58E+03		1.58E+03	5.21E+00	1.57E+03		1.72E-02	5.19E+00	5.19E+00	
UO3										
V+5	1.88E-01		1.88E-01	6.20E-04	1.87E-01		2.05E-06	6.18E-04	6.18E-04	
V2O5										
WO2										
WO3										
ZN+2	9.45E-01		9.45E-01	3.12E-03	9.42E-01		1.03E-05	3.11E-03	3.11E-03	
ZNO										
ZR+4	2.77E+02		2.77E+02	9.14E-01	2.76E+02		3.02E-03	9.11E-01	9.11E-01	
ZRO2										
ZRO2:2H2	4.09E+02		4.09E+02	1.35E+00	4.07E+02		4.45E-03	1.34E+00	1.34E+00	

Stream Name Liquid Components	11OH	12	13	14	15	16	17	18NO2	18OH	19
Cs and Ba, (MCi)				1.71E+00		1.29E+00	4.28E-01			
Sr and Y, (MCi)				5.74E-02		4.32E-02	1.43E-02			
Tc, (MCi)				7.14E-04		5.38E-04	1.78E-04			
Am, (MCi)				2.35E-04		1.77E-04	5.88E-05			
Np, (MCi)				2.82E-07		2.12E-07	7.04E-08			
Pu-239, (MCi)				4.56E-05		3.44E-05	1.14E-05			
Pu-240, (MCi)				1.13E-05		8.52E-06	2.82E-06			
Pu-241, (MCi)				4.06E-05		3.06E-05	1.01E-05			
Total TRU, (MCi)				3.33E-04		2.51E-04	8.32E-05			
Total MCi				1.77E+00		1.34E+00	4.43E-01			
Total MassFlow, (MT)	1.74E+04	6.92E+03	2.44E+04	5.05E+04	2.41E+02	3.83E+04	1.27E+04	5.29E+01	3.06E+02	3.78E+04
Total Cr, (MT)				1.00E+02		7.53E+01	2.50E+01			
Total Na, (MT)	5.01E+03		5.01E+03	6.79E+03		5.10E+03	1.69E+03	8.81E+00	8.80E+01	
Total Si, (MT)				1.54E-01		1.16E-01	3.85E-02			
Total P, (MT)				5.67E+02		4.26E+02	1.41E+02			
Total NO2-, (MT)				2.60E+02		1.97E+02	6.53E+01	1.76E+01		
Total NO3-, (MT)				2.89E+03		2.18E+03	7.23E+02			
AG+				8.95E-03		6.75E-03	2.24E-03			
AL(OH)4-				7.20E+03		5.41E+03	1.79E+03			
AM+3				6.86E-05		5.17E-05	1.71E-05			
AS+5				2.10E-02		1.58E-02	5.25E-03			
B+3				1.42E-02		1.07E-02	3.54E-03			
BA+2				2.16E-02		1.63E-02	5.40E-03			
BE+2				2.24E-03		1.69E-03	5.59E-04			
BI+3				1.85E+00		1.39E+00	4.61E-01			
C14				2.03E-05		1.53E-05	5.07E-06			
CA+2				4.56E-01		3.44E-01	1.14E-01			
CD+2				5.70E-02		4.29E-02	1.42E-02			
CE+3				6.47E-02		4.87E-02	1.62E-02			
CL-				8.49E+00		6.40E+00	2.12E+00			
CL2										
CO										
CO2										
CO3-2				9.19E+01		6.93E+01	2.30E+01			
CR(OH)4-				2.31E+02		1.74E+02	5.76E+01			
CS+				2.24E-02		1.69E-02	5.59E-03			
CU+2				4.83E-03		3.64E-03	1.21E-03			
DPCD										
F-				3.05E+01		2.30E+01	7.62E+00			
F2										
FE+3				3.92E-01		2.96E-01	9.80E-02			
H+										
H2										
H2O	8.72E+03	6.92E+03	1.56E+04	2.95E+04	2.17E+02	2.24E+04	7.43E+03	2.65E+01	1.53E+02	3.78E+04
H2S										
HG										

Stream Name Liquid Components	11OH	12	13	14	15	16	17	18NO2	18OH	19
HG+2				2.59E-02		1.95E-02	6.48E-03			
I-				1.49E+01		1.12E+01	3.72E+00			
I2										
K+				5.98E-03		4.51E-03	1.49E-03			
KEROSENE										
LA+3				5.98E-03		4.51E-03	1.49E-03			
LI+				1.58E-04		1.19E-04	3.94E-05			
MG+2				2.63E-02		1.99E-02	6.58E-03			
MNO2				5.92E-01		4.46E-01	1.48E-01			
MO+6				1.33E-01		1.00E-01	3.32E-02			
N2										
NA+	5.01E+03		5.01E+03	6.79E+03		5.10E+03	1.69E+03	8.81E+00	8.80E+01	
NH3										
NI+3				1.11E-01		8.38E-02	2.78E-02			
NO										
NO2										
NO2-				2.60E+02		1.97E+02	6.53E+01	1.76E+01		
NO3-				2.89E+03		2.18E+03	7.23E+02			
NP+4				4.00E-04		3.01E-04	9.98E-05			
O2										
OH-	3.71E+03		3.71E+03	1.69E+03		1.27E+03	4.21E+02		6.51E+01	
OLIGIMER										
PB+4				5.35E-02		4.03E-02	1.34E-02			
PO4-3				1.74E+03		1.31E+03	4.33E+02			
POLY				2.02E-01	2.41E+01	3.66E+00	1.21E+00			
PU+4				7.86E-04		5.92E-04	1.96E-04			
S										
SI+4				1.54E-01		1.16E-01	3.85E-02			
SO2										
SO4-2				5.47E+01		4.13E+01	1.37E+01			
SR+2				1.03E-02		7.72E-03	2.56E-03			
TCO2										
TCO4-				6.89E-02		5.19E-02	1.72E-02			
TOC				3.87E+01		2.91E+01	9.66E+00			
UO2+2				2.33E+00		1.75E+00	5.81E-01			
V+5				1.69E-03		1.28E-03	4.23E-04			
W+6				2.04E-02		1.54E-02	5.10E-03			
ZN+2				9.80E-02		7.39E-02	2.45E-02			
ZR+4				1.22E-02		9.22E-03	3.06E-03			
ZRO2:2H2				5.87E-01		4.42E-01	1.47E-01			

Stream Name Solid Components	11OH	12	13	14	15	16	17	18NO2	18OH	19
Cs and Ba, (MCi)				5.27E+00		1.74E-02	5.27E+00			
Sr and Y, (MCi)				1.05E+02		3.47E-01	1.05E+02			
Tc, (MCi)				5.87E-03		1.94E-05	5.87E-03			
Am, (MCi)				9.48E-02		3.14E-04	9.48E-02			
Np, (MCi)				9.25E-05		3.06E-07	9.25E-05			
Pu-239, (MCi)				2.46E-02		8.15E-05	2.46E-02			
Pu-240, (MCi)				6.26E-03		2.07E-05	6.26E-03			
Pu-241, (MCi)				7.31E-02		2.42E-04	7.31E-02			
Total TRU, (MCi)				1.99E-01		6.59E-04	1.99E-01			
Total MCi				1.10E+02		3.65E-01	1.10E+02			
Total Mass Flow, (MT)				1.26E+04		4.20E+01	1.27E+04			
Total Cr, (MT)				3.29E+01		1.10E-01	3.33E+01			
Total Na, (MT)				1.23E+03		4.08E+00	1.23E+03			
Total Si, (MT)				5.23E+02		1.73E+00	5.23E+02			
Total P, (MT)				2.33E+02		7.78E-01	2.35E+02			
Total NO2-, (MT)				7.35E+01		2.43E-01	7.35E+01			
Total NO3-, (MT)				1.03E+03		3.41E+00	1.03E+03			
AG+				1.37E+00		4.54E-03	1.37E+00			
AG2O										
AL+3				3.54E+02		1.19E+00	3.61E+02			
AL2O3										
AM+3				2.76E-02		9.15E-05	2.76E-02			
AM2O3										
AS+5				4.96E-01		1.64E-03	4.96E-01			
AS2O5										
B+3				9.91E-01		3.28E-03	9.91E-01			
B2O3										
BA+2				3.08E+00		1.02E-02	3.08E+00			
BAO										
BE+2				7.59E-03		2.51E-05	7.59E-03			
BEO										
BI+3				1.95E+02		6.47E-01	1.95E+02			
BI2O3										
C14				4.51E-04		1.50E-06	4.51E-04			
CA+2				1.33E+02		4.40E-01	1.33E+02			
CANCRINI				2.69E+03		8.91E+00	2.69E+03			
CAO										
CD+2				7.90E+00		2.62E-02	7.90E+00			
CDO										
CE+3				2.35E+02		7.76E-01	2.35E+02			
CE2O3										
CL-				3.48E+00		1.15E-02	3.48E+00			
CO3-2				2.24E+02		7.41E-01	2.24E+02			
CR+3				3.29E+01		1.10E-01	3.33E+01			
CR2O3										
CS+				9.22E-02		3.05E-04	9.22E-02			

Stream Name Solid Components	11OH	12	13	14	15	16	17	18NO2	18OH	19
CS2O										
CU										
CU+2				7.44E-01		2.46E-03	7.44E-01			
CUO										
CUSO4										
F-				5.95E+01		1.97E-01	5.95E+01			
FE+3				7.60E+02		2.52E+00	7.60E+02			
FE2O3										
HG+2				8.97E-03		2.97E-05	8.97E-03			
I-				2.01E+01		6.67E-02	2.01E+01			
K+				2.09E+01		6.93E-02	2.09E+01			
K2O										
LA+3				2.09E+01		6.93E-02	2.09E+01			
LA2O3										
LI+				2.45E-02		8.11E-05	2.45E-02			
LI2O										
MG+2				1.10E+01		3.63E-02	1.10E+01			
MGO										
MNO2				2.08E+02		6.90E-01	2.08E+02			
MO+6				7.98E-01		2.64E-03	7.98E-01			
MOO3										
NA+				7.75E+02		2.56E+00	7.75E+02			
NA2O										
NI+3				6.55E+00		2.17E-02	6.55E+00			
NI2FECN6				4.98E+02		1.65E+00	4.98E+02			
NI2O3										
NIO										
NO2-				7.35E+01		2.43E-01	7.35E+01			
NO3-				1.03E+03		3.41E+00	1.03E+03			
NP+4				1.31E-01		4.35E-04	1.31E-01			
NPO2										
OH-				1.99E+03		6.62E+00	2.00E+03			
P2O5										
P2O5.24W				5.19E-01		1.72E-03	5.19E-01			
PB+4				3.27E+00		1.08E-02	3.27E+00			
PBO2										
PO4-3				7.15E+02		2.38E+00	7.20E+02			
POLY				2.94E+01		1.81E-01	5.47E+01			
PU+4				4.25E-01		1.41E-03	4.25E-01			
PUO2										
S										
SI+4				7.87E+01		2.61E-01	7.87E+01			
SIO2										
SO4-2				3.96E+01		1.31E-01	3.96E+01			
SR+2				3.63E+01		1.20E-01	3.63E+01			
SRO										

Stream Name Solid Components	11OH	12	13	14	15	16	17	18NO2	18OH	19
TC2O7										
TCO4-				5.66E-01		1.87E-03	5.66E-01			
TOC				1.15E+02		3.82E-01	1.15E+02			
UO2+2				1.57E+03		5.21E+00	1.57E+03			
UO3										
V+5				1.87E-01		6.20E-04	1.87E-01			
V2O5										
WO2										
WO3										
ZN+2				9.42E-01		3.12E-03	9.42E-01			
ZNO										
ZR+4				2.76E+02		9.14E-01	2.76E+02			
ZRO2										
ZRO2:2H2				4.07E+02		1.35E+00	4.07E+02			

Stream Name Liquid Components	20	21	22	23	24	25NO2	25OH	26	27	28
Cs and Ba, (MCi)		4.28E-01		3.22E-01	1.06E-01					1.06E-01
Sr and Y, (MCi)		1.43E-02		1.08E-02	3.55E-03					3.55E-03
Tc, (MCi)		1.78E-04		1.34E-04	4.42E-05					4.42E-05
Am, (MCi)		5.88E-05		4.42E-05	1.46E-05					1.46E-05
Np, (MCi)		7.04E-08		5.29E-08	1.75E-08					1.75E-08
Pu-239, (MCi)		1.14E-05		8.57E-06	2.83E-06					2.83E-06
Pu-240, (MCi)		2.82E-06		2.12E-06	7.00E-07					7.00E-07
Pu-241, (MCi)		1.01E-05		7.62E-06	2.51E-06					2.51E-06
Total TRU, (MCi)		8.32E-05		6.26E-05	2.06E-05					2.06E-05
Total MCi		4.43E-01		3.33E-01	1.10E-01					1.10E-01
Total Mass Flow, (MT)	3.82E+04	5.08E+04	2.41E+02	3.84E+04	1.27E+04	5.23E+01	3.02E+02	3.77E+04	3.81E+04	5.07E+04
Total Cr, (MT)		2.50E+01		1.88E+01	6.19E+00					6.19E+00
Total Na, (MT)	9.68E+01	1.79E+03		1.35E+03	4.44E+02	8.71E+00	8.67E+01		9.55E+01	5.39E+02
Total Si, (MT)		3.85E-02		2.90E-02	9.55E-03					9.55E-03
Total P, (MT)		1.41E+02		1.06E+02	3.50E+01					3.50E+01
Total NO2-, (MT)	1.76E+01	8.29E+01		6.23E+01	2.06E+01	1.74E+01			1.74E+01	3.79E+01
Total NO3-, (MT)		7.23E+02		5.44E+02	1.79E+02					1.79E+02
AG+		2.24E-03		1.68E-03	5.55E-04					5.55E-04
AL(OH)4-		1.79E+03		1.35E+03	4.44E+02					4.44E+02
AM+3		1.71E-05		1.29E-05	4.25E-06					4.25E-06
AS+5		5.25E-03		3.95E-03	1.30E-03					1.30E-03
B+3		3.54E-03		2.66E-03	8.78E-04					8.78E-04
BA+2		5.40E-03		4.06E-03	1.34E-03					1.34E-03
BE+2		5.59E-04		4.20E-04	1.39E-04					1.39E-04
BI+3		4.61E-01		3.47E-01	1.14E-01					1.14E-01
C14		5.07E-06		3.81E-06	1.26E-06					1.26E-06
CA+2		1.14E-01		8.57E-02	2.83E-02					2.83E-02
CD+2		1.42E-02		1.07E-02	3.53E-03					3.53E-03
CE+3		1.62E-02		1.22E-02	4.01E-03					4.01E-03
CL-		2.12E+00		1.60E+00	5.26E-01					5.26E-01
CL2										
CO										
CO2										
CO3-2		2.30E+01		1.73E+01	5.69E+00					5.69E+00
CR(OH)4-		5.76E+01		4.33E+01	1.43E+01					1.43E+01
CS+		5.59E-03		4.20E-03	1.39E-03					1.39E-03
CU+2		1.21E-03		9.08E-04	2.99E-04					2.99E-04
DPCD										
F-		7.62E+00		5.73E+00	1.89E+00					1.89E+00
F2										
FE+3		9.80E-02		7.37E-02	2.43E-02					2.43E-02
H+										
H2										
H2O	3.80E+04	4.54E+04	2.17E+02	3.43E+04	1.13E+04	2.62E+01	1.51E+02	3.77E+04	3.79E+04	4.92E+04
H2S										
HG										

Stream Name Liquid Components	20	21	22	23	24	25NO2	25OH	26	27	28
HG+2		6.48E-03		4.87E-03	1.61E-03					1.61E-03
I-		3.72E+00		2.80E+00	9.24E-01					9.24E-01
I2										
K+		1.49E-03		1.12E-03	3.70E-04					3.70E-04
KEROSENE										
LA+3		1.49E-03		1.12E-03	3.70E-04					3.70E-04
LI+		3.94E-05		2.96E-05	9.76E-06					9.76E-06
MG+2		6.58E-03		4.95E-03	1.63E-03					1.63E-03
MNO2		1.48E-01		1.11E-01	3.67E-02					3.67E-02
MO+6		3.32E-02		2.50E-02	8.24E-03					8.24E-03
N2										
NA+	9.68E+01	1.79E+03		1.35E+03	4.44E+02	8.71E+00	8.67E+01		9.55E+01	5.39E+02
NH3										
NI+3		2.78E-02		2.09E-02	6.88E-03					6.88E-03
NO										
NO2										
NO2-	1.76E+01	8.29E+01		6.23E+01	2.06E+01	1.74E+01			1.74E+01	3.79E+01
NO3-		7.23E+02		5.44E+02	1.79E+02					1.79E+02
NP+4		9.98E-05		7.51E-05	2.48E-05					2.48E-05
O2										
OH-	6.51E+01	4.86E+02		3.66E+02	1.21E+02		6.42E+01		6.42E+01	1.85E+02
OLIGIMER										
PB+4		1.34E-02		1.01E-02	3.32E-03					3.32E-03
PO4-3		4.33E+02		3.25E+02	1.07E+02					1.07E+02
POLY		1.21E+00	2.41E+01	3.81E+00	1.26E+00					1.26E+00
PU+4		1.96E-04		1.48E-04	4.87E-05					4.87E-05
S										
SI+4		3.85E-02		2.90E-02	9.55E-03					9.55E-03
SO2										
SO4-2		1.37E+01		1.03E+01	3.39E+00					3.39E+00
SR+2		2.56E-03		1.93E-03	6.35E-04					6.35E-04
TCO2										
TCO4-		1.72E-02		1.29E-02	4.27E-03					4.27E-03
TOC		9.66E+00		7.26E+00	2.40E+00					2.40E+00
UO2+2		5.81E-01		4.37E-01	1.44E-01					1.44E-01
V+5		4.23E-04		3.18E-04	1.05E-04					1.05E-04
W+6		5.10E-03		3.83E-03	1.26E-03					1.26E-03
ZN+2		2.45E-02		1.84E-02	6.07E-03					6.07E-03
ZR+4		3.06E-03		2.30E-03	7.58E-04					7.58E-04
ZRO2:2H2		1.47E-01		1.10E-01	3.64E-02					3.64E-02

Stream Name Solid Components	20	21	22	23	24	25NO2	25OH	26	27	28
Cs and Ba, (MCi)		5.27E+00		1.74E-02	5.25E+00					5.25E+00
Sr and Y, (MCi)		1.05E+02		3.46E-01	1.05E+02					1.05E+02
Tc, (MCi)		5.87E-03		1.94E-05	5.85E-03					5.85E-03
Am, (MCi)		9.48E-02		3.13E-04	9.45E-02					9.45E-02
Np, (MCi)		9.25E-05		3.05E-07	9.22E-05					9.22E-05
Pu-239, (MCi)		2.46E-02		8.12E-05	2.45E-02					2.45E-02
Pu-240, (MCi)		6.26E-03		2.07E-05	6.24E-03					6.24E-03
Pu-241, (MCi)		7.31E-02		2.41E-04	7.29E-02					7.29E-02
Total TRU, (MCi)		1.99E-01		6.56E-04	1.98E-01					1.98E-01
Total MCi		1.10E+02		3.64E-01	1.10E+02					1.10E+02
Total Mass Flow, (MT)		1.27E+04		4.19E+01	1.27E+04					1.27E+04
Total Cr, (MT)		3.33E+01		1.10E-01	3.32E+01					3.32E+01
Total Na, (MT)		1.23E+03		4.07E+00	1.23E+03					1.23E+03
Total Si, (MT)		5.23E+02		1.73E+00	5.21E+02					5.21E+02
Total P, (MT)		2.35E+02		7.76E-01	2.34E+02					2.34E+02
Total NO2-, (MT)		7.35E+01		2.43E-01	7.33E+01					7.33E+01
Total NO3-, (MT)		1.03E+03		3.40E+00	1.03E+03					1.03E+03
AG+		1.37E+00		4.53E-03	1.37E+00					1.37E+00
AG2O										
AL+3		3.61E+02		1.19E+00	3.59E+02					3.59E+02
AL2O3										
AM+3		2.76E-02		9.12E-05	2.76E-02					2.76E-02
AM2O3										
AS+5		4.96E-01		1.64E-03	4.95E-01					4.95E-01
AS2O5										
B+3		9.91E-01		3.27E-03	9.87E-01					9.87E-01
B2O3										
BA+2		3.08E+00		1.02E-02	3.07E+00					3.07E+00
BAO										
BE+2		7.59E-03		2.50E-05	7.56E-03					7.56E-03
BEO										
BI+3		1.95E+02		6.45E-01	1.95E+02					1.95E+02
BI2O3										
C14		4.51E-04		1.49E-06	4.50E-04					4.50E-04
CA+2		1.33E+02		4.38E-01	1.32E+02					1.32E+02
CANCRINI		2.69E+03		8.88E+00	2.68E+03					2.68E+03
CAO										
CD+2		7.90E+00		2.61E-02	7.88E+00					7.88E+00
CDO										
CE+3		2.35E+02		7.74E-01	2.34E+02					2.34E+02
CE2O3										
CL-		3.48E+00		1.15E-02	3.47E+00					3.47E+00
CO3-2		2.24E+02		7.38E-01	2.23E+02					2.23E+02
CR+3		3.33E+01		1.10E-01	3.32E+01					3.32E+01
CR2O3										
CS+		9.22E-02		3.04E-04	9.19E-02					9.19E-02

Stream Name Solid Components	20	21	22	23	24	25NO2	25OH	26	27	28
CS2O										
CU										
CU+2		7.44E-01		2.45E-03	7.41E-01					7.41E-01
CUO										
CUSO4										
F-		5.95E+01		1.96E-01	5.93E+01					5.93E+01
FE+3		7.60E+02		2.51E+00	7.58E+02					7.58E+02
FE2O3										
HG+2		8.97E-03		2.96E-05	8.94E-03					8.94E-03
I-		2.01E+01		6.64E-02	2.01E+01					2.01E+01
K+		2.09E+01		6.91E-02	2.09E+01					2.09E+01
K2O										
LA+3		2.09E+01		6.91E-02	2.09E+01					2.09E+01
LA2O3										
LI+		2.45E-02		8.08E-05	2.44E-02					2.44E-02
LI2O										
MG+2		1.10E+01		3.62E-02	1.09E+01					1.09E+01
MGO										
MNO2		2.08E+02		6.87E-01	2.08E+02					2.08E+02
MO+6		7.98E-01		2.64E-03	7.96E-01					7.96E-01
MOO3										
NA+		7.75E+02		2.56E+00	7.72E+02					7.72E+02
NA2O										
NI+3		6.55E+00		2.16E-02	6.53E+00					6.53E+00
NI2FECN6		4.98E+02		1.65E+00	4.97E+02					4.97E+02
NI2O3										
NIO										
NO2-		7.35E+01		2.43E-01	7.33E+01					7.33E+01
NO3-		1.03E+03		3.40E+00	1.03E+03					1.03E+03
NP+4		1.31E-01		4.33E-04	1.31E-01					1.31E-01
NPO2										
OH-		2.00E+03		6.60E+00	1.99E+03					1.99E+03
P2O5										
P2O5:24W		5.19E-01		1.71E-03	5.17E-01					5.17E-01
PB+4		3.27E+00		1.08E-02	3.26E+00					3.26E+00
PBO2										
PO4-3		7.20E+02		2.38E+00	7.18E+02					7.18E+02
POLY		5.47E+01		2.47E-01	7.47E+01					7.47E+01
PU+4		4.25E-01		1.40E-03	4.24E-01					4.24E-01
PUO2										
S										
SI+4		7.87E+01		2.60E-01	7.85E+01					7.85E+01
SIO2										
SO4-2		3.96E+01		1.31E-01	3.95E+01					3.95E+01
SR+2		3.63E+01		1.20E-01	3.62E+01					3.62E+01
SRO										

Stream Name Solid Components	20	21	22	23	24	25NO2	25OH	26	27	28
TC2O7										
TCO4-		5.66E-01		1.87E-03	5.64E-01					5.64E-01
TOC		1.15E+02		3.81E-01	1.15E+02					1.15E+02
UO2+2		1.57E+03		5.19E+00	1.57E+03					1.57E+03
UO3										
V+5		1.87E-01		6.18E-04	1.87E-01					1.87E-01
V2O5										
WO2										
WO3										
ZN+2		9.42E-01		3.11E-03	9.39E-01					9.39E-01
ZNO										
ZR+4		2.76E+02		9.11E-01	2.75E+02					2.75E+02
ZRO2										
ZRO2:2H2		4.07E+02		1.34E+00	4.06E+02					4.06E+02

Stream Name Liquid Components	29	30	31	32	33	34	35	36	37	38
Cs and Ba, (MCi)	6.10E+01			1.61E+00	1.38E-01	1.38E-01				
Sr and Y, (MCi)	2.04E+00			5.40E-02	4.60E-03	4.60E-03				
Tc, (MCi)	2.54E-02			6.72E-04	5.73E-05	5.73E-05				
Am, (MCi)	8.38E-03			2.21E-04	1.89E-05	1.89E-05				
Np, (MCi)	1.00E-05			2.65E-07	2.26E-08	2.26E-08				
Pu-239, (MCi)	1.62E-03			4.29E-05	3.66E-06	3.66E-06				
Pu-240, (MCi)	4.03E-04			1.06E-05	9.07E-07	9.07E-07				
Pu-241, (MCi)	1.45E-03			3.82E-05	3.25E-06	3.25E-06				
Total TRU, (MCi)	1.19E-02			3.14E-04	2.67E-05	2.67E-05				
Total MCi	6.31E+01			1.67E+00	1.42E-01	1.42E-01				
Total Mass Flow, (MT)	6.91E+05		4.38E-04	7.66E+04	5.11E+04	5.11E+04	8.53E+01	7.67E+02	5.38E+01	5.36E+01
Total Cr, (MT)	5.01E+01			9.40E+01	6.26E+00	6.26E+00				
Total Na, (MT)	6.33E+04		9.96E-05	6.45E+03	5.74E+02	5.74E+02				1.79E+01
Total Si, (MT)	5.49E+00			1.45E-01	1.24E-02	1.24E-02				
Total P, (MT)	8.19E+02			5.32E+02	3.57E+01	3.57E+01				
Total NO2-, (MT)	9.28E+03		7.30E-05	2.59E+02	4.27E+01	4.27E+01				3.57E+01
Total NO3-, (MT)	1.03E+05			2.73E+03	2.32E+02	2.32E+02				
AG+	3.19E-01			8.43E-03	7.19E-04	7.19E-04				
AL(OH)4-	4.70E+03			6.75E+03	4.50E+02	4.50E+02				
AM+3	2.44E-03			6.46E-05	5.50E-06	5.50E-06				
AS+5	7.49E-01			1.98E-02	1.69E-03	1.69E-03				
B+3	5.05E-01			1.33E-02	1.14E-03	1.14E-03				
BA+2	7.69E-01			2.03E-02	1.73E-03	1.73E-03				
BE+2	7.97E-02			2.11E-03	1.79E-04	1.79E-04				
BI+3	6.57E+01			1.74E+00	1.48E-01	1.48E-01				
C14	7.23E-04			1.91E-05	1.63E-06	1.63E-06				
CA+2	1.63E+01			4.30E-01	3.66E-02	3.66E-02				
CD+2	2.03E+00			5.36E-02	4.57E-03	4.57E-03				
CE+3	2.30E+00			6.09E-02	5.19E-03	5.19E-03				
CL-	3.03E+02			8.00E+00	6.81E-01	6.81E-01				
CL2										
CO										
CO2										
CO3-2	3.27E+03			8.65E+01	7.37E+00	7.37E+00				
CR(OH)4-	1.16E+02			2.17E+02	1.45E+01	1.45E+01				
CS+	7.97E-01			2.11E-02	1.80E-03	1.80E-03				
CU+2	1.72E-01			4.55E-03	3.88E-04	3.88E-04				
DPCD										
F-	1.09E+03			2.87E+01	2.45E+00	2.45E+00				
F2										
FE+3	1.40E+01			3.69E-01	3.15E-02	3.15E-02				
H+										
H2										
H2O	4.93E+05		2.19E-04	5.67E+04	4.95E+04	4.95E+04		7.67E+02	5.38E+01	
H2S										
HG										

Stream Name Liquid Components	29	30	31	32	33	34	35	36	37	38
HG+2	9.23E-01			2.44E-02	2.08E-03	2.08E-03				
I-	5.31E+02			1.40E+01	1.20E+00	1.20E+00				
I2										
K+	2.13E-01			5.63E-03	4.80E-04	4.80E-04				
KEROSENE										
LA+3	2.13E-01			5.63E-03	4.80E-04	4.80E-04				
LI+	5.61E-03			1.48E-04	1.26E-05	1.26E-05				
MG+2	9.39E-01			2.48E-02	2.11E-03	2.11E-03				
MNO2	2.11E+01			5.57E-01	4.75E-02	4.75E-02				
MO+6	4.74E+00			1.25E-01	1.07E-02	1.07E-02				
N2										
NA+	6.33E+04		9.96E-05	6.45E+03	5.74E+02	5.74E+02				1.79E+01
NH3										
NI+3	3.96E+00			1.05E-01	8.92E-03	8.92E-03				
NO										
NO2										
NO2-	9.28E+03		7.30E-05	2.59E+02	4.27E+01	4.27E+01				3.57E+01
NO3-	1.03E+05			2.73E+03	2.32E+02	2.32E+02				
NP+4	1.42E-02			3.76E-04	3.21E-05	3.21E-05				
O2										
OH-	6.26E+03		4.66E-05	1.64E+03	1.89E+02	1.89E+02				
OLIGIMER										
PB+4	1.91E+00			5.04E-02	4.29E-03	4.29E-03				
PO4-3	2.51E+03			1.63E+03	1.09E+02	1.09E+02				
POLY	1.46E+00			7.46E+00	1.26E+00	1.26E+00	8.53E+01			
PU+4	2.80E-02			7.40E-04	6.30E-05	6.30E-05				
S										
SI+4	5.49E+00			1.45E-01	1.24E-02	1.24E-02				
SO2										
SO4-2	1.95E+03			5.15E+01	4.39E+00	4.39E+00				
SR+2	3.65E-01			9.65E-03	8.22E-04	8.22E-04				
TCO2										
TCO4-	2.45E+00			6.48E-02	5.53E-03	5.53E-03				
TOC	1.38E+03			3.64E+01	3.10E+00	3.10E+00				
UO2+2	8.29E+01			2.19E+00	1.87E-01	1.87E-01				
V+5	6.03E-02			1.59E-03	1.36E-04	1.36E-04				
W+6	7.27E-01			1.92E-02	1.64E-03	1.64E-03				
ZN+2	3.49E+00			9.23E-02	7.86E-03	7.86E-03				
ZR+4	4.36E-01			1.15E-02	9.81E-04	9.81E-04				
ZRO2:2H2	2.09E+01			5.53E-01	4.71E-02	4.71E-02				

Stream Name Solid Components	29	30	31	32	33	34	35	36	37	38
Cs and Ba, (MCi)	5.75E-05			3.48E-02	5.28E+00	5.28E+00				
Sr and Y, (MCi)	1.15E-03			6.93E-01	1.05E+02	1.05E+02				
Tc, (MCi)	6.41E-08			3.88E-05	5.89E-03	5.89E-03				
Am, (MCi)	1.04E-06			6.27E-04	9.51E-02	9.51E-02				
Np, (MCi)	1.01E-09			6.12E-07	9.28E-05	9.28E-05				
Pu-239, (MCi)	2.69E-07			1.63E-04	2.47E-02	2.47E-02				
Pu-240, (MCi)	6.84E-08			4.14E-05	6.28E-03	6.28E-03				
Pu-241, (MCi)	7.99E-07			4.83E-04	7.34E-02	7.34E-02				
Total TRU, (MCi)	2.17E-06			1.32E-03	2.00E-01	2.00E-01				
Total MCi	1.21E-03			7.29E-01	1.11E+02	1.11E+02				
Total Mass Flow, (MT)	2.31E-01			8.39E+01	1.28E+04	1.28E+04				
Total Cr, (MT)	1.44E-03			2.20E-01	3.34E+01	3.34E+01				
Total Na, (MT)	1.35E-02			8.15E+00	1.24E+03	1.24E+03				
Total Si, (MT)	5.71E-03			3.46E+00	5.43E+02	5.43E+02				
Total P, (MT)	8.50E-03			1.55E+00	2.36E+02	2.36E+02				
Total NO2-, (MT)	8.03E-04			4.86E-01	7.38E+01	7.38E+01				
Total NO3-, (MT)	1.12E-02			6.80E+00	1.03E+03	1.03E+03				
AG+	1.50E-05			9.07E-03	1.38E+00	1.38E+00				
AG2O										
AL+3	2.58E-02			2.38E+00	3.62E+02	3.62E+02				
AL2O3										
AM+3	3.02E-07			1.83E-04	2.77E-02	2.77E-02				
AM2O3										
AS+5	5.42E-06			3.28E-03	4.98E-01	4.98E-01				
AS2O5										
B+3	1.08E-05			6.55E-03	9.94E-01	9.94E-01				
B2O3					7.99E+00	7.99E+00				
BA+2	3.37E-05			2.04E-02	3.09E+00	3.09E+00				
BAO										
BE+2	8.29E-08			5.01E-05	7.61E-03	7.61E-03				
BEO										
BI+3	2.13E-03			1.29E+00	1.96E+02	1.96E+02				
BI2O3										
C14	4.93E-09			2.98E-06	4.53E-04	4.53E-04				
CA+2	1.45E-03			8.78E-01	1.33E+02	1.33E+02				
CANCRINI	2.94E-02			1.78E+01	2.70E+03	2.70E+03				
CAO					5.71E-01	5.71E-01				
CD+2	8.64E-05			5.23E-02	7.93E+00	7.93E+00				
CDO										
CE+3	2.56E-03			1.55E+00	2.35E+02	2.35E+02				
CE2O3										
CL-	3.80E-05			2.30E-02	3.49E+00	3.49E+00				
CO3-2	2.44E-03			1.48E+00	2.24E+02	2.24E+02				
CR+3	1.44E-03			2.20E-01	3.34E+01	3.34E+01				
CR2O3										
CS+	1.01E-06			6.10E-04	9.25E-02	9.25E-02				

Stream Name Solid Components	29	30	31	32	33	34	35	36	37	38
CS2O										
CU										
CU+2	8.12E-06			4.92E-03	7.46E-01	7.46E-01				
CUO										
CUSO4										
F-	6.50E-04			3.93E-01	5.97E+01	5.97E+01				
FE+3	8.31E-03			5.03E+00	7.63E+02	7.63E+02				
FE2O3										
HG+2	9.80E-08			5.93E-05	9.00E-03	9.00E-03				
I-	2.20E-04			1.33E-01	2.02E+01	2.02E+01				
K+	2.29E-04			1.38E-01	2.10E+01	2.10E+01				
K2O										
LA+3	2.29E-04			1.38E-01	2.10E+01	2.10E+01				
LA2O3										
LI+	2.68E-07			1.62E-04	2.46E-02	2.46E-02				
LI2O					2.85E+00	2.85E+00				
MG+2	1.20E-04			7.25E-02	1.10E+01	1.10E+01				
MGO					5.71E-01	5.71E-01				
MNO2	2.28E-03			1.38E+00	2.09E+02	2.09E+02				
MO+6	8.72E-06			5.28E-03	8.01E-01	8.01E-01				
MOO3										
NA+	8.46E-03			5.12E+00	7.77E+02	7.77E+02				
NA2O										
NI+3	7.16E-05			4.33E-02	6.57E+00	6.57E+00				
NI2FECN6	5.45E-03			3.30E+00	5.00E+02	5.00E+02				
NI2O3										
NIO										
NO2-	8.03E-04			4.86E-01	7.38E+01	7.38E+01				
NO3-	1.12E-02			6.80E+00	1.03E+03	1.03E+03				
NP+4	1.43E-06			8.68E-04	1.32E-01	1.32E-01				
NPO2										
OH-	5.45E-02			1.32E+01	2.01E+03	2.01E+03				
P2O5										
P2O5:24W	5.67E-06			3.43E-03	5.21E-01	5.21E-01				
PB+4	3.57E-05			2.16E-02	3.28E+00	3.28E+00				
PBO2										
PO4-3	2.60E-02			4.76E+00	7.22E+02	7.22E+02				
POLY	1.96E-02			4.28E-01	7.51E+01	7.51E+01				
PU+4	4.65E-06			2.81E-03	4.27E-01	4.27E-01				
PUO2										
S										
SI+4	8.60E-04			5.21E-01	7.90E+01	7.90E+01				
SIO2					3.99E+01	3.99E+01				
SO4-2	4.33E-04			2.62E-01	3.97E+01	3.97E+01				
SR+2	3.97E-04			2.40E-01	3.64E+01	3.64E+01				
SRO										

Stream Name Solid Components	29	30	31	32	33	34	35	36	37	38
TC2O7										
TCO4-	6.18E-06			3.74E-03	5.68E-01	5.68E-01				
TOC	1.26E-03			7.62E-01	1.16E+02	1.16E+02				
UO2+2	1.72E-02			1.04E+01	1.58E+03	1.58E+03				
UO3										
V+5	2.05E-06			1.24E-03	1.88E-01	1.88E-01				
V2O5										
WO2										
WO3										
ZN+2	1.03E-05			6.23E-03	9.45E-01	9.45E-01				
ZNO										
ZR+4	3.02E-03			1.82E+00	2.77E+02	2.77E+02				
ZRO2										
ZRO2:2H2	4.45E-03			2.69E+00	4.09E+02	4.09E+02				

Stream Name Liquid Components	40	41	42	42NO2	42OH	43	44	100	101	102
Cs and Ba, (MCi)							6.10E+01	6.27E+01	6.27E+01	6.27E+01
Sr and Y, (MCi)							2.04E+00	2.10E+00	2.10E+00	2.10E+00
Tc, (MCi)							2.54E-02	2.61E-02	2.61E-02	2.61E-02
Am, (MCi)							8.38E-03	8.60E-03	8.60E-03	8.60E-03
Np, (MCi)							1.00E-05	1.03E-05	1.03E-05	1.03E-05
Pu-239, (MCi)							1.62E-03	1.67E-03	1.67E-03	1.67E-03
Pu-240, (MCi)							4.03E-04	4.13E-04	4.13E-04	4.13E-04
Pu-241, (MCi)							1.45E-03	1.48E-03	1.48E-03	1.48E-03
Total TRU, (MCi)							1.19E-02	1.22E-02	1.22E-02	1.22E-02
Total MCi							6.31E+01	6.48E+01	6.48E+01	6.48E+01
Total Mass Flow, (MT)	1.81E+04		1.12E+02	2.19E+00	2.19E+00	1.17E+02	6.91E+05	7.68E+05	7.68E+05	7.68E+05
Total Cr, (MT)							5.01E+01	1.44E+02	1.44E+02	1.44E+02
Total Na, (MT)	5.19E+03			3.65E-01	6.30E-01	9.95E-01	6.33E+04	6.97E+04	6.97E+04	6.97E+04
Total Si, (MT)							5.49E+00	5.64E+00	5.64E+00	5.64E+00
Total P, (MT)							8.19E+02	1.35E+03	1.35E+03	1.35E+03
Total NO2-, (MT)				7.29E-01		7.29E-01	9.28E+03	9.54E+03	9.54E+03	9.54E+03
Total NO3-, (MT)							1.03E+05	1.06E+05	1.06E+05	1.06E+05
AG+							3.19E-01	3.27E-01	3.27E-01	3.27E-01
AL(OH)4-							4.70E+03	1.15E+04	1.15E+04	1.15E+04
AM+3							2.44E-03	2.51E-03	2.51E-03	2.51E-03
AS+5							7.49E-01	7.69E-01	7.69E-01	7.69E-01
B+3							5.05E-01	5.18E-01	5.18E-01	5.18E-01
BA+2							7.69E-01	7.90E-01	7.90E-01	7.90E-01
BE+2							7.97E-02	8.18E-02	8.18E-02	8.18E-02
BI+3							6.57E+01	6.75E+01	6.75E+01	6.75E+01
C14							7.23E-04	7.42E-04	7.42E-04	7.42E-04
CA+2							1.63E+01	1.67E+01	1.67E+01	1.67E+01
CD+2							2.03E+00	2.08E+00	2.08E+00	2.08E+00
CE+3							2.30E+00	2.36E+00	2.36E+00	2.36E+00
CL-							3.03E+02	3.11E+02	3.11E+02	3.11E+02
CL2										
CO										
CO2										
CO3-2							3.27E+03	3.36E+03	3.36E+03	3.36E+03
CR(OH)4-							1.16E+02	3.33E+02	3.33E+02	3.33E+02
CS+							7.97E-01	8.18E-01	8.18E-01	8.18E-01
CU+2							1.72E-01	1.77E-01	1.77E-01	1.77E-01
DPCD										
F-							1.09E+03	1.12E+03	1.12E+03	1.12E+03
F2										
FE+3							1.40E+01	1.43E+01	1.43E+01	1.43E+01
H+										
H2										
H2O	9.03E+03		1.12E+02	1.10E+00	1.10E+00	1.15E+02	4.93E+05	5.50E+05	5.50E+05	5.50E+05
H2S										
HG										

Stream Name Liquid Components	40	41	42	42NO2	42OH	43	44	100	101	102
HG+2							9.23E-01	9.48E-01	9.48E-01	9.48E-01
I-							5.31E+02	5.45E+02	5.45E+02	5.45E+02
I2										
K+							2.13E-01	2.19E-01	2.19E-01	2.19E-01
KEROSENE										
LA+3							2.13E-01	2.19E-01	2.19E-01	2.19E-01
LI+							5.61E-03	5.76E-03	5.76E-03	5.76E-03
MG+2							9.39E-01	9.63E-01	9.63E-01	9.63E-01
MNO2							2.11E+01	2.16E+01	2.16E+01	2.16E+01
MO+6							4.74E+00	4.86E+00	4.86E+00	4.86E+00
N2										
NA+	5.19E+03			3.65E-01	6.30E-01	9.95E-01	6.33E+04	6.97E+04	6.97E+04	6.97E+04
NH3										
NI+3							3.96E+00	4.06E+00	4.06E+00	4.06E+00
NO										
NO2										
NO2-				7.29E-01		7.29E-01	9.28E+03	9.54E+03	9.54E+03	9.54E+03
NO3-							1.03E+05	1.06E+05	1.06E+05	1.06E+05
NP+4							1.42E-02	1.46E-02	1.46E-02	1.46E-02
O2										
OH-	3.84E+03				4.66E-01	4.66E-01	6.26E+03	7.90E+03	7.90E+03	7.90E+03
OLIGIMER										
PB+4							1.91E+00	1.96E+00	1.96E+00	1.96E+00
PO4-3							2.51E+03	4.14E+03	4.14E+03	4.14E+03
POLY							1.46E+00	8.92E+00	8.92E+00	8.92E+00
PU+4							2.80E-02	2.87E-02	2.87E-02	2.87E-02
S										
SI+4							5.49E+00	5.64E+00	5.64E+00	5.64E+00
SO2										
SO4-2							1.95E+03	2.00E+03	2.00E+03	2.00E+03
SR+2							3.65E-01	3.75E-01	3.75E-01	3.75E-01
TCO2										
TCO4-							2.45E+00	2.52E+00	2.52E+00	2.52E+00
TOC							1.38E+03	1.41E+03	1.41E+03	1.41E+03
UO2+2							8.29E+01	8.51E+01	8.51E+01	8.51E+01
V+5							6.03E-02	6.19E-02	6.19E-02	6.19E-02
W+6							7.27E-01	7.46E-01	7.46E-01	7.46E-01
ZN+2							3.49E+00	3.58E+00	3.58E+00	3.58E+00
ZR+4							4.36E-01	4.47E-01	4.47E-01	4.47E-01
ZRO2:2H2							2.09E+01	2.15E+01	2.15E+01	2.15E+01

Stream Name Solid Components	40	41	42	42NO2	42OH	43	44	100	101	102
Cs and Ba, (MCi)							5.75E-05	3.49E-02	3.49E-02	3.49E-02
Sr and Y, (MCi)							1.15E-03	6.94E-01	6.94E-01	6.94E-01
Tc, (MCi)							6.41E-08	3.88E-05	3.88E-05	3.88E-05
Am, (MCi)							1.04E-06	6.28E-04	6.28E-04	6.28E-04
Np, (MCi)							1.01E-09	6.13E-07	6.13E-07	6.13E-07
Pu-239, (MCi)							2.69E-07	1.63E-04	1.63E-04	1.63E-04
Pu-240, (MCi)							6.84E-08	4.15E-05	4.15E-05	4.15E-05
Pu-241, (MCi)							7.99E-07	4.84E-04	4.84E-04	4.84E-04
Total TRU, (MCi)							2.17E-06	1.32E-03	1.32E-03	1.32E-03
Total MCi							1.21E-03	7.31E-01	7.31E-01	7.31E-01
Total Mass Flow, (MT)							2.31E-01	8.41E+01	8.41E+01	8.41E+01
Total Cr, (MT)							1.44E-03	2.21E-01	2.21E-01	2.21E-01
Total Na, (MT)							1.35E-02	8.16E+00	8.16E+00	8.16E+00
Total Si, (MT)							5.71E-03	3.46E+00	3.46E+00	3.46E+00
Total P, (MT)							8.50E-03	1.56E+00	1.56E+00	1.56E+00
Total NO2-, (MT)							8.03E-04	4.87E-01	4.87E-01	4.87E-01
Total NO3-, (MT)							1.12E-02	6.81E+00	6.81E+00	6.81E+00
AG+							1.50E-05	9.08E-03	9.08E-03	9.08E-03
AG2O										
AL+3							2.58E-02	2.41E+00	2.41E+00	2.41E+00
AL2O3										
AM+3							3.02E-07	1.83E-04	1.83E-04	1.83E-04
AM2O3										
AS+5							5.42E-06	3.29E-03	3.29E-03	3.29E-03
AS2O5										
B+3							1.08E-05	6.56E-03	6.56E-03	6.56E-03
B2O3										
BA+2							3.37E-05	2.04E-02	2.04E-02	2.04E-02
BAO										
BE+2							8.29E-08	5.02E-05	5.02E-05	5.02E-05
BEO										
BI+3							2.13E-03	1.29E+00	1.29E+00	1.29E+00
BI2O3										
C14							4.93E-09	2.99E-06	2.99E-06	2.99E-06
CA+2							1.45E-03	8.79E-01	8.79E-01	8.79E-01
CANCRINI							2.94E-02	1.78E+01	1.78E+01	1.78E+01
CAO										
CD+2							8.64E-05	5.23E-02	5.23E-02	5.23E-02
CDO										
CE+3							2.56E-03	1.55E+00	1.55E+00	1.55E+00
CE2O3										
CL-							3.80E-05	2.30E-02	2.30E-02	2.30E-02
CO3-2							2.44E-03	1.48E+00	1.48E+00	1.48E+00
CR+3							1.44E-03	2.21E-01	2.21E-01	2.21E-01
CR2O3										
CS+							1.01E-06	6.11E-04	6.11E-04	6.11E-04

Stream Name Solid Components	40	41	42	42NO2	42OH	43	44	100	101	102
CS2O										
CU										
CU+2							8.12E-06	4.92E-03	4.92E-03	4.92E-03
CUO										
CUSO4										
F-							6.50E-04	3.94E-01	3.94E-01	3.94E-01
FE+3							8.31E-03	5.04E+00	5.04E+00	5.04E+00
FE2O3										
HG+2							9.80E-08	5.94E-05	5.94E-05	5.94E-05
I-							2.20E-04	1.33E-01	1.33E-01	1.33E-01
K+							2.29E-04	1.39E-01	1.39E-01	1.39E-01
K2O										
LA+3							2.29E-04	1.39E-01	1.39E-01	1.39E-01
LA2O3										
LI+							2.68E-07	1.62E-04	1.62E-04	1.62E-04
LI2O										
MG+2							1.20E-04	7.26E-02	7.26E-02	7.26E-02
MGO										
MNO2							2.28E-03	1.38E+00	1.38E+00	1.38E+00
MO+6							8.72E-06	5.29E-03	5.29E-03	5.29E-03
MOO3										
NA+							8.46E-03	5.13E+00	5.13E+00	5.13E+00
NA2O										
NI+3							7.16E-05	4.34E-02	4.34E-02	4.34E-02
NI2FECN6							5.45E-03	3.30E+00	3.30E+00	3.30E+00
NI2O3										
NIO										
NO2-							8.03E-04	4.87E-01	4.87E-01	4.87E-01
NO3-							1.12E-02	6.81E+00	6.81E+00	6.81E+00
NP+4							1.43E-06	8.69E-04	8.69E-04	8.69E-04
NPO2										
OH-							5.45E-02	1.33E+01	1.33E+01	1.33E+01
P2O5										
P2O5:24W							5.67E-06	3.44E-03	3.44E-03	3.44E-03
PB+4							3.57E-05	2.17E-02	2.17E-02	2.17E-02
PBO2										
PO4-3							2.60E-02	4.79E+00	4.79E+00	4.79E+00
POLY							1.96E-02	4.48E-01	4.48E-01	4.48E-01
PU+4							4.65E-06	2.82E-03	2.82E-03	2.82E-03
PUO2										
S										
SI+4							8.60E-04	5.21E-01	5.21E-01	5.21E-01
SIO2										
SO4-2							4.33E-04	2.62E-01	2.62E-01	2.62E-01
SR+2							3.97E-04	2.40E-01	2.40E-01	2.40E-01
SRO										

Stream Name Solid Components	40	41	42	42NO2	42OH	43	44	100	101	102
TC2O7										
TCO4-							6.18E-06	3.75E-03	3.75E-03	3.75E-03
TOC							1.26E-03	7.64E-01	7.64E-01	7.64E-01
UO2+2							1.72E-02	1.04E+01	1.04E+01	1.04E+01
UO3										
V+5							2.05E-06	1.24E-03	1.24E-03	1.24E-03
V2O5										
WO2										
WO3										
ZN+2							1.03E-05	6.24E-03	6.24E-03	6.24E-03
ZNO										
ZR+4							3.02E-03	1.83E+00	1.83E+00	1.83E+00
ZRO2										
ZRO2:2H2							4.45E-03	2.70E+00	2.70E+00	2.70E+00

Stream Name Liquid Components	103	104	105	106	107	108	109	110	111	112
Cs and Ba, (MCi)				6.27E+01	6.27E+01				6.27E+01	
Sr and Y, (MCi)				2.10E+00	2.10E+00				2.10E+00	
Tc, (MCi)				2.61E-02	2.61E-02				2.61E-02	
Am, (MCi)				8.60E-03	8.60E-03				8.60E-03	
Np, (MCi)				1.03E-05	1.03E-05				1.03E-05	
Pu-239, (MCi)				1.67E-03	1.67E-03				1.67E-03	
Pu-240, (MCi)				4.13E-04	4.13E-04				4.13E-04	
Pu-241, (MCi)				1.48E-03	1.48E-03				1.48E-03	
Total TRU, (MCi)				1.22E-02	1.22E-02				1.22E-02	
Total MCi				6.48E+01	6.48E+01				6.48E+01	
Total Mass Flow, (MT)	1.97E+05	1.97E+03	1.95E+05	5.71E+05	5.71E+05		2.19E-04	2.19E-04	5.71E+05	4.38E-04
Total Cr, (MT)				1.44E+02	1.44E+02				1.44E+02	
Total Na, (MT)				6.97E+04	6.97E+04		6.30E-05	3.66E-05	6.97E+04	9.96E-05
Total Si, (MT)				5.64E+00	5.64E+00				5.64E+00	
Total P, (MT)				1.35E+03	1.35E+03				1.35E+03	
Total NO2-, (MT)				9.54E+03	9.54E+03			7.30E-05	9.54E+03	7.30E-05
Total NO3-, (MT)				1.06E+05	1.06E+05				1.06E+05	
AG+				3.27E-01	3.27E-01				3.27E-01	
AL(OH)4-				1.15E+04	1.15E+04				1.15E+04	
AM+3				2.51E-03	2.51E-03				2.51E-03	
AS+5				7.69E-01	7.69E-01				7.69E-01	
B+3				5.18E-01	5.18E-01				5.18E-01	
BA+2				7.90E-01	7.90E-01				7.90E-01	
BE+2				8.18E-02	8.18E-02				8.18E-02	
BI+3				6.75E+01	6.75E+01				6.75E+01	
C14				7.42E-04	7.42E-04				7.42E-04	
CA+2				1.67E+01	1.67E+01				1.67E+01	
CD+2				2.08E+00	2.08E+00				2.08E+00	
CE+3				2.36E+00	2.36E+00				2.36E+00	
CL-				3.11E+02	3.11E+02				3.11E+02	
CL2										
CO										
CO2										
CO3-2				3.36E+03	3.36E+03				3.36E+03	
CR(OH)4-				3.33E+02	3.33E+02				3.33E+02	
CS+				8.18E-01	8.18E-01				8.18E-01	
CU+2				1.77E-01	1.77E-01				1.77E-01	
DPCD										
F-				1.12E+03	1.12E+03				1.12E+03	
F2										
FE+3				1.43E+01	1.43E+01				1.43E+01	
H+										
H2										
H2O	1.97E+05	1.97E+03	1.95E+05	3.53E+05	3.53E+05		1.10E-04	1.10E-04	3.53E+05	2.19E-04
H2S										
HG										

Stream Name Liquid Components	103	104	105	106	107	108	109	110	111	112
HG+2				9.48E-01	9.48E-01				9.48E-01	
I-				5.45E+02	5.45E+02				5.45E+02	
I2										
K+				2.19E-01	2.19E-01				2.19E-01	
KEROSENE										
LA+3				2.19E-01	2.19E-01				2.19E-01	
LI+				5.76E-03	5.76E-03				5.76E-03	
MG+2				9.63E-01	9.63E-01				9.63E-01	
MNO2				2.16E+01	2.16E+01				2.16E+01	
MO+6				4.86E+00	4.86E+00				4.86E+00	
N2										
NA+				6.97E+04	6.97E+04		6.30E-05	3.66E-05	6.97E+04	9.96E-05
NH3										
NI+3				4.06E+00	4.06E+00				4.06E+00	
NO										
NO2										
NO2-				9.54E+03	9.54E+03			7.30E-05	9.54E+03	7.30E-05
NO3-				1.06E+05	1.06E+05				1.06E+05	
NP+4				1.46E-02	1.46E-02				1.46E-02	
O2										
OH-				7.90E+03	7.90E+03		4.66E-05		7.90E+03	4.66E-05
OLIGIMER										
PB+4				1.96E+00	1.96E+00				1.96E+00	
PO4-3				4.14E+03	4.14E+03				4.14E+03	
POLY				8.92E+00	8.92E+00				8.92E+00	
PU+4				2.87E-02	2.87E-02				2.87E-02	
S										
SI+4				5.64E+00	5.64E+00				5.64E+00	
SO2										
SO4-2				2.00E+03	2.00E+03				2.00E+03	
SR+2				3.75E-01	3.75E-01				3.75E-01	
TCO2										
TCO4-				2.52E+00	2.52E+00				2.52E+00	
TOC				1.41E+03	1.41E+03				1.41E+03	
UO2+2				8.51E+01	8.51E+01				8.51E+01	
V+5				6.19E-02	6.19E-02				6.19E-02	
W+6				7.46E-01	7.46E-01				7.46E-01	
ZN+2				3.58E+00	3.58E+00				3.58E+00	
ZR+4				4.47E-01	4.47E-01				4.47E-01	
ZRO2:2H2				2.15E+01	2.15E+01				2.15E+01	

Stream Name Solid Components	103	104	105	106	107	108	109	110	111	112
Cs and Ba, (MCi)				3.49E-02	3.49E-02				3.49E-02	
Sr and Y, (MCi)				6.94E-01	6.94E-01				6.94E-01	
Tc, (MCi)				3.88E-05	3.88E-05				3.88E-05	
Am, (MCi)				6.28E-04	6.28E-04				6.28E-04	
Np, (MCi)				6.13E-07	6.13E-07				6.13E-07	
Pu-239, (MCi)				1.63E-04	1.63E-04				1.63E-04	
Pu-240, (MCi)				4.15E-05	4.15E-05				4.15E-05	
Pu-241, (MCi)				4.84E-04	4.84E-04				4.84E-04	
Total TRU, (MCi)				1.32E-03	1.32E-03				1.32E-03	
Total MCi				7.31E-01	7.31E-01				7.31E-01	
Total Mass Flow, (MT)				8.41E+01	8.41E+01				8.41E+01	
Total Cr, (MT)				2.21E-01	2.21E-01				2.21E-01	
Total Na, (MT)				8.16E+00	8.16E+00				8.16E+00	
Total Si, (MT)				3.46E+00	3.46E+00				3.46E+00	
Total P, (MT)				1.56E+00	1.56E+00				1.56E+00	
Total NO2-, (MT)				4.87E-01	4.87E-01				4.87E-01	
Total NO3-, (MT)				6.81E+00	6.81E+00				6.81E+00	
AG+				9.08E-03	9.08E-03				9.08E-03	
AG2O										
AL+3				2.41E+00	2.41E+00				2.41E+00	
AL2O3										
AM+3				1.83E-04	1.83E-04				1.83E-04	
AM2O3										
AS+5				3.29E-03	3.29E-03				3.29E-03	
AS2O5										
B+3				6.56E-03	6.56E-03				6.56E-03	
B2O3										
BA+2				2.04E-02	2.04E-02				2.04E-02	
BAO										
BE+2				5.02E-05	5.02E-05				5.02E-05	
BEO										
BI+3				1.29E+00	1.29E+00				1.29E+00	
BI2O3										
C14				2.99E-06	2.99E-06				2.99E-06	
CA+2				8.79E-01	8.79E-01				8.79E-01	
CANCRINI				1.78E+01	1.78E+01				1.78E+01	
CAO										
CD+2				5.23E-02	5.23E-02				5.23E-02	
CDO										
CE+3				1.55E+00	1.55E+00				1.55E+00	
CE2O3										
CL-				2.30E-02	2.30E-02				2.30E-02	
CO3-2				1.48E+00	1.48E+00				1.48E+00	
CR+3				2.21E-01	2.21E-01				2.21E-01	
CR2O3										
CS+				6.11E-04	6.11E-04				6.11E-04	

Stream Name Solid Components	103	104	105	106	107	108	109	110	111	112
CS2O										
CU										
CU+2				4.92E-03	4.92E-03				4.92E-03	
CUO										
CUSO4										
F-				3.94E-01	3.94E-01				3.94E-01	
FE+3				5.04E+00	5.04E+00				5.04E+00	
FE2O3										
HG+2				5.94E-05	5.94E-05				5.94E-05	
I-				1.33E-01	1.33E-01				1.33E-01	
K+				1.39E-01	1.39E-01				1.39E-01	
K2O										
LA+3				1.39E-01	1.39E-01				1.39E-01	
LA2O3										
LI+				1.62E-04	1.62E-04				1.62E-04	
LI2O										
MG+2				7.26E-02	7.26E-02				7.26E-02	
MGO										
MNO2				1.38E+00	1.38E+00				1.38E+00	
MO+6				5.29E-03	5.29E-03				5.29E-03	
MOO3										
NA+				5.13E+00	5.13E+00				5.13E+00	
NA2O										
NI+3				4.34E-02	4.34E-02				4.34E-02	
NI2FECN6				3.30E+00	3.30E+00				3.30E+00	
NI2O3										
NIO										
NO2-				4.87E-01	4.87E-01				4.87E-01	
NO3-				6.81E+00	6.81E+00				6.81E+00	
NP+4				8.69E-04	8.69E-04				8.69E-04	
NPO2										
OH-				1.33E+01	1.33E+01				1.33E+01	
P2O5										
P2O5:24W				3.44E-03	3.44E-03				3.44E-03	
PB+4				2.17E-02	2.17E-02				2.17E-02	
PBO2										
PO4-3				4.79E+00	4.79E+00				4.79E+00	
POLY				4.48E-01	4.48E-01				4.48E-01	
PU+4				2.82E-03	2.82E-03				2.82E-03	
PUO2										
S										
SI+4				5.21E-01	5.21E-01				5.21E-01	
SIO2										
SO4-2				2.62E-01	2.62E-01				2.62E-01	
SR+2				2.40E-01	2.40E-01				2.40E-01	
SRO										

Stream Name Solid Components	103	104	105	106	107	108	109	110	111	112
TC2O7										
TCO4-				3.75E-03	3.75E-03				3.75E-03	
TOC				7.64E-01	7.64E-01				7.64E-01	
UO2+2				1.04E+01	1.04E+01				1.04E+01	
UO3										
V+5				1.24E-03	1.24E-03				1.24E-03	
V2O5										
WO2										
WO3										
ZN+2				6.24E-03	6.24E-03				6.24E-03	
ZNO										
ZR+4				1.83E+00	1.83E+00				1.83E+00	
ZRO2										
ZRO2:2H2				2.70E+00	2.70E+00				2.70E+00	

Stream Name Liquid Components	113	114	115	116	117	118	200	201	202	203
Cs and Ba, (MCi)							6.27E+01	6.27E+01		
Sr and Y, (MCi)							2.10E+00	2.10E+00		
Tc, (MCi)							2.61E-02	2.61E-02		
Am, (MCi)							8.60E-03	8.60E-03		
Np, (MCi)							1.03E-05	1.03E-05		
Pu-239, (MCi)							1.67E-03	1.67E-03		
Pu-240, (MCi)							4.13E-04	4.13E-04		
Pu-241, (MCi)							1.48E-03	1.48E-03		
Total TRU, (MCi)							1.22E-02	1.22E-02		
Total MCi							6.48E+01	6.48E+01		
Total Mass Flow, (MT)	4.38E-04	4.38E-04	2.19E-04		1.10E-04	1.10E-04	5.71E+05	5.71E+05		1.20E+02
Total Cr, (MT)							1.44E+02	1.44E+02		
Total Na, (MT)	9.96E-05	9.96E-05			3.66E-05		6.97E+04	6.97E+04		
Total Si, (MT)							5.64E+00	5.64E+00		
Total P, (MT)							1.35E+03	1.35E+03		
Total NO2-, (MT)	7.30E-05	7.30E-05			7.30E-05		9.54E+03	9.54E+03		
Total NO3-, (MT)							1.06E+05	1.06E+05		
AG+							3.27E-01	3.27E-01		
AL(OH)4-							1.15E+04	1.15E+04		
AM+3							2.51E-03	2.51E-03		
AS+5							7.69E-01	7.69E-01		
B+3							5.18E-01	5.18E-01		
BA+2							7.90E-01	7.90E-01		
BE+2							8.18E-02	8.18E-02		
BI+3							6.75E+01	6.75E+01		
C14							7.42E-04	7.42E-04		
CA+2							1.67E+01	1.67E+01		
CD+2							2.08E+00	2.08E+00		
CE+3							2.36E+00	2.36E+00		
CL-							3.11E+02	3.11E+02		
CL2										
CO										
CO2										
CO3-2							3.36E+03	3.36E+03		
CR(OH)4-							3.33E+02	3.33E+02		
CS+							8.18E-01	8.18E-01		
CU+2							1.77E-01	1.77E-01		
DPCD										
F-							1.12E+03	1.12E+03		
F2										
FE+3							1.43E+01	1.43E+01		
H+										
H2										
H2O	2.19E-04	2.19E-04	2.19E-04			1.10E-04	3.53E+05	3.53E+05		1.20E+02
H2S										
HG										

Stream Name Liquid Components	113	114	115	116	117	118	200	201	202	203
HG+2							9.48E-01	9.48E-01		
I-							5.45E+02	5.45E+02		
I2										
K+							2.19E-01	2.19E-01		
KEROSENE										
LA+3							2.19E-01	2.19E-01		
LI+							5.76E-03	5.76E-03		
MG+2							9.63E-01	9.63E-01		
MNO2							2.16E+01	2.16E+01		
MO+6							4.86E+00	4.86E+00		
N2										
NA+	9.96E-05	9.96E-05			3.66E-05		6.97E+04	6.97E+04		
NH3										
NI+3							4.06E+00	4.06E+00		
NO										
NO2										
NO2-	7.30E-05	7.30E-05			7.30E-05		9.54E+03	9.54E+03		
NO3-							1.06E+05	1.06E+05		
NP+4							1.46E-02	1.46E-02		
O2										
OH-	4.66E-05	4.66E-05					7.90E+03	7.90E+03		
OLIGIMER										
PB+4							1.96E+00	1.96E+00		
PO4-3							4.14E+03	4.14E+03		
POLY							8.92E+00	8.92E+00		
PU+4							2.87E-02	2.87E-02		
S										
SI+4							5.64E+00	5.64E+00		
SO2										
SO4-2							2.00E+03	2.00E+03		
SR+2							3.75E-01	3.75E-01		
TCO2										
TCO4-							2.52E+00	2.52E+00		
TOC							1.41E+03	1.41E+03		
UO2+2							8.51E+01	8.51E+01		
V+5							6.19E-02	6.19E-02		
W+6							7.46E-01	7.46E-01		
ZN+2							3.58E+00	3.58E+00		
ZR+4							4.47E-01	4.47E-01		
ZRO2.2H2							2.15E+01	2.15E+01		

Stream Name Solid Components	113	114	115	116	117	118	200	201	202	203
Cs and Ba, (MCi)							3.49E-02	3.49E-02		
Sr and Y, (MCi)							6.94E-01	6.94E-01		
Tc, (MCi)							3.88E-05	3.88E-05		
Am, (MCi)							6.28E-04	6.28E-04		
Np, (MCi)							6.13E-07	6.13E-07		
Pu-239, (MCi)							1.63E-04	1.63E-04		
Pu-240, (MCi)							4.15E-05	4.15E-05		
Pu-241, (MCi)							4.84E-04	4.84E-04		
Total TRU, (MCi)							1.32E-03	1.32E-03		
Total MCi							7.31E-01	7.31E-01		
Total Mass Flow, (MT)							8.41E+01	8.41E+01	5.19E+01	
Total Cr, (MT)							2.21E-01	2.21E-01		
Total Na, (MT)							8.16E+00	8.16E+00		
Total Si, (MT)							3.46E+00	3.46E+00	1.87E+01	
Total P, (MT)							1.56E+00	1.56E+00		
Total NO2-, (MT)							4.87E-01	4.87E-01		
Total NO3-, (MT)							6.81E+00	6.81E+00		
AG+							9.08E-03	9.08E-03		
AG2O										
AL+3							2.41E+00	2.41E+00		
AL2O3										
AM+3							1.83E-04	1.83E-04		
AM2O3										
AS+5							3.29E-03	3.29E-03		
AS2O5										
B+3							6.56E-03	6.56E-03		
B2O3									7.99E+00	
BA+2							2.04E-02	2.04E-02		
BAO										
BE+2							5.02E-05	5.02E-05		
BEO										
BI+3							1.29E+00	1.29E+00		
BI2O3										
C14							2.99E-06	2.99E-06		
CA+2							8.79E-01	8.79E-01		
CANCRINI							1.78E+01	1.78E+01		
CAO									5.71E-01	
CD+2							5.23E-02	5.23E-02		
CDO										
CE+3							1.55E+00	1.55E+00		
CE2O3										
CL-							2.30E-02	2.30E-02		
CO3-2							1.48E+00	1.48E+00		
CR+3							2.21E-01	2.21E-01		
CR2O3										
CS+							6.11E-04	6.11E-04		

Stream Name Solid Components	113	114	115	116	117	118	200	201	202	203
CS2O										
CU										
CU+2							4.92E-03	4.92E-03		
CUO										
CUSO4										
F-							3.94E-01	3.94E-01		
FE+3							5.04E+00	5.04E+00		
FE2O3										
HG+2							5.94E-05	5.94E-05		
I-							1.33E-01	1.33E-01		
K+							1.39E-01	1.39E-01		
K2O										
LA+3							1.39E-01	1.39E-01		
LA2O3										
LI+							1.62E-04	1.62E-04		
LI2O									2.85E+00	
MG+2							7.26E-02	7.26E-02		
MGO									5.71E-01	
MNO2							1.38E+00	1.38E+00		
MO+6							5.29E-03	5.29E-03		
MOO3										
NA+							5.13E+00	5.13E+00		
NA2O										
NI+3							4.34E-02	4.34E-02		
NI2FECN6							3.30E+00	3.30E+00		
NI2O3										
NIO										
NO2-							4.87E-01	4.87E-01		
NO3-							6.81E+00	6.81E+00		
NP+4							8.69E-04	8.69E-04		
NPO2										
OH-							1.33E+01	1.33E+01		
P2O5										
P2O5.24W							3.44E-03	3.44E-03		
PB+4							2.17E-02	2.17E-02		
PBO2										
PO4-3							4.79E+00	4.79E+00		
POLY							4.48E-01	4.48E-01		
PU+4							2.82E-03	2.82E-03		
PUO2										
S										
SI+4							5.21E-01	5.21E-01		
SIO2									3.99E+01	
SO4-2							2.62E-01	2.62E-01		
SR+2							2.40E-01	2.40E-01		
SRO										

Stream Name Solid Components	113	114	115	116	117	118	200	201	202	203
TC2O7										
TCO4-							3.75E-03	3.75E-03		
TOC							7.64E-01	7.64E-01		
UO2+2							1.04E+01	1.04E+01		
UO3										
V+5							1.24E-03	1.24E-03		
V2O5										
WO2										
WO3										
ZN+2							6.24E-03	6.24E-03		
ZNO										
ZR+4							1.83E+00	1.83E+00		
ZRO2										
ZRO2:2H2							2.70E+00	2.70E+00		

Stream Name Liquid Components	204	205	206	207	208	209	210	211	212	213
Cs and Ba, (MCi)	3.13E-02	6.26E+01	3.13E-02	2.44E-01				2.50E-01		6.21E+01
Sr and Y, (MCi)	1.05E-03	2.10E+00	1.05E-03	2.10E-02				1.87E+00		2.08E-01
Tc, (MCi)	1.31E-05	2.61E-02	1.31E-05	2.61E-02						
Am, (MCi)	4.30E-06	8.60E-03	4.30E-06	8.60E-03						
Np, (MCi)	5.15E-09	1.03E-05	5.15E-09	1.03E-05						
Pu-239, (MCi)	8.34E-07	1.67E-03	8.34E-07	1.67E-03						
Pu-240, (MCi)	2.07E-07	4.13E-04	2.07E-07	4.13E-04						
Pu-241, (MCi)	7.41E-07	1.48E-03	7.41E-07	1.48E-03						
Total TRU, (MCi)	6.09E-06	1.22E-02	6.09E-06	1.22E-02						
Total MCi	3.24E-02	6.48E+01	3.24E-02	3.03E-01				2.12E+00		6.23E+01
Total Mass Flow, (MT)	4.06E+02	5.71E+05	4.06E+02	5.71E+05	4.54E+04	4.54E+04	1.95E+05	1.95E+05	1.86E+05	1.86E+05
Total Cr, (MT)	7.21E-02	1.44E+02	7.21E-02	1.44E+02						
Total Na, (MT)	3.49E+01	6.97E+04	3.49E+01	6.97E+04				3.16E+02		1.86E+02
Total Si, (MT)	2.82E-03	5.64E+00	2.82E-03	5.64E+00						
Total P, (MT)	6.76E-01	1.35E+03	6.76E-01	1.35E+03						
Total NO2-, (MT)	4.77E+00	9.53E+03	4.77E+00	9.53E+03						
Total NO3-, (MT)	5.29E+01	1.06E+05	5.29E+01	1.06E+05			1.20E+03	1.20E+03	3.44E+03	3.44E+03
AG+	1.64E-04	3.27E-01	1.64E-04	3.27E-01						
AL(OH)4-	5.73E+00	1.15E+04	5.73E+00	1.15E+04						
AM+3	1.25E-06	2.51E-03	1.25E-06	2.51E-03						
AS+5	3.84E-04	7.68E-01	3.84E-04	7.68E-01						
B+3	2.59E-04	5.18E-01	2.59E-04	5.18E-01						
BA+2	3.95E-04	7.89E-01	3.95E-04	7.89E-01						
BE+2	4.09E-05	8.17E-02	4.09E-05	8.17E-02						
BI+3	3.37E-02	6.74E+01	3.37E-02	6.74E+01						
C14	3.71E-07	7.41E-04	3.71E-07	7.41E-04						
CA+2	8.34E-03	1.67E+01	8.34E-03	1.67E-01				1.49E+01		1.65E+00
CD+2	1.04E-03	2.08E+00	1.04E-03	2.08E+00						
CE+3	1.18E-03	2.36E+00	1.18E-03	2.36E+00						
CL-	1.55E-01	3.10E+02	1.55E-01	3.10E+02						
CL2										
CO										
CO2										
CO3-2	1.68E+00	3.36E+03	1.68E+00	3.36E+03						
CR(OH)4-	1.66E-01	3.33E+02	1.66E-01	3.33E+02						
CS+	4.09E-04	8.17E-01	4.09E-04	3.19E-03				3.26E-03		8.11E-01
CU+2	8.84E-05	1.77E-01	8.84E-05	1.77E-01						
DPCD										
F-	5.58E-01	1.12E+03	5.58E-01	1.12E+03						
F2										
FE+3	7.17E-03	1.43E+01	7.17E-03	1.43E+01						
H+							1.96E+01	4.90E+00	5.58E+01	4.75E+01
H2										
H2O	2.97E+02	3.53E+05	2.97E+02	3.53E+05	4.54E+04	4.54E+04	1.94E+05	1.94E+05	1.83E+05	1.83E+05
H2S										
HG										

Stream Name Liquid Components	204	205	206	207	208	209	210	211	212	213
HG+2	4.74E-04	9.47E-01	4.74E-04	9.47E-01						
I-	2.73E-01	5.45E+02	2.73E-01	5.45E+02						
I2										
K+	1.09E-04	2.19E-01	1.09E-04	2.19E-01						
KEROSENE										
LA+3	1.09E-04	2.19E-01	1.09E-04	2.19E-01						
LI+	2.88E-06	5.76E-03	2.88E-06	5.76E-03						
MG+2	4.82E-04	9.63E-01	4.82E-04	9.63E-01						
MNO2	1.08E-02	2.16E+01	1.08E-02	2.16E+01						
MO+6	2.43E-03	4.86E+00	2.43E-03	4.86E+00						
N2										
NA+	3.49E+01	6.97E+04	3.49E+01	6.97E+04				3.16E+02		1.86E+02
NH3										
NI+3	2.03E-03	4.06E+00	2.03E-03	4.06E+00						
NO										
NO2										
NO2-	4.77E+00	9.53E+03	4.77E+00	9.53E+03						
NO3-	5.29E+01	1.06E+05	5.29E+01	1.06E+05			1.20E+03	1.20E+03	3.44E+03	3.44E+03
NP+4	7.30E-06	1.46E-02	7.30E-06	1.46E-02						
O2										
OH-	3.95E+00	7.90E+03	3.95E+00	7.90E+03						
OLIGIMER										
PB+4	9.78E-04	1.96E+00	9.78E-04	1.96E+00						
PO4-3	2.07E+00	4.14E+03	2.07E+00	4.14E+03						
POLY	4.46E-03	8.92E+00	4.46E-03	8.92E+00						
PU+4	1.44E-05	2.87E-02	1.44E-05	2.87E-02						
S										
SI+4	2.82E-03	5.64E+00	2.82E-03	5.64E+00						
SO2										
SO4-2	1.00E+00	2.00E+03	1.00E+00	2.00E+03						
SR+2	1.87E-04	3.75E-01	1.87E-04	3.75E-03				3.34E-01		3.71E-02
TCO2										
TCO4-	1.26E-03	2.52E+00	1.26E-03	2.52E+00						
TOC	7.07E-01	1.41E+03	7.07E-01	1.41E+03						
UO2+2	4.25E-02	8.50E+01	4.25E-02	8.50E+01						
V+5	3.10E-05	6.19E-02	3.10E-05	6.19E-02						
W+6	3.73E-04	7.46E-01	3.73E-04	7.46E-01						
ZN+2	1.79E-03	3.58E+00	1.79E-03	3.58E+00						
ZR+4	2.24E-04	4.47E-01	2.24E-04	4.47E-01						
ZRO2:2H2	1.07E-02	2.15E+01	1.07E-02	2.15E+01						

Stream Name Solid Components	204	205	206	207	208	209	210	211	212	213
Cs and Ba, (MCi)	3.45E-02	3.49E-04	3.45E-02	3.49E-04						
Sr and Y, (MCi)	6.87E-01	6.94E-03	6.87E-01	6.94E-03						
Tc, (MCi)	3.85E-05	3.88E-07	3.85E-05	3.88E-07						
Am, (MCi)	6.22E-04	6.28E-06	6.22E-04	6.28E-06						
Np, (MCi)	6.07E-07	6.13E-09	6.07E-07	6.13E-09						
Pu-239, (MCi)	1.61E-04	1.63E-06	1.61E-04	1.63E-06						
Pu-240, (MCi)	4.11E-05	4.15E-07	4.11E-05	4.15E-07						
Pu-241, (MCi)	4.79E-04	4.84E-06	4.79E-04	4.84E-06						
Total TRU, (MCi)	1.30E-03	1.32E-05	1.30E-03	1.32E-05						
Total MCi	7.23E-01	7.31E-03	7.23E-01	7.31E-03						
Total Mass Flow, (MT)	1.35E+02	8.41E-01	1.35E+02	8.41E-01						
Total Cr, (MT)	2.19E-01	2.21E-03	2.19E-01	2.21E-03						
Total Na, (MT)	8.08E+00	8.16E-02	8.08E+00	8.16E-02						
Total Si, (MT)	2.21E+01	3.46E-02	2.21E+01	3.46E-02						
Total P, (MT)	1.55E+00	1.56E-02	1.55E+00	1.56E-02						
Total NO2-, (MT)	4.82E-01	4.87E-03	4.82E-01	4.87E-03						
Total NO3-, (MT)	6.75E+00	6.81E-02	6.75E+00	6.81E-02						
AG+	8.99E-03	9.08E-05	8.99E-03	9.08E-05						
AG2O										
AL+3	2.39E+00	2.41E-02	2.39E+00	2.41E-02						
AL2O3										
AM+3	1.81E-04	1.83E-06	1.81E-04	1.83E-06						
AM2O3										
AS+5	3.25E-03	3.29E-05	3.25E-03	3.29E-05						
AS2O5										
B+3	6.50E-03	6.56E-05	6.50E-03	6.56E-05						
B2O3	7.99E+00		7.99E+00							
BA+2	2.02E-02	2.04E-04	2.02E-02	2.04E-04						
BAO										
BE+2	4.97E-05	5.02E-07	4.97E-05	5.02E-07						
BEO										
BI+3	1.28E+00	1.29E-02	1.28E+00	1.29E-02						
BI2O3										
C14	2.96E-06	2.99E-08	2.96E-06	2.99E-08						
CA+2	8.71E-01	8.79E-03	8.71E-01	8.79E-03						
CANCRINI	1.77E+01	1.78E-01	1.77E+01	1.78E-01						
CAO	5.71E-01		5.71E-01							
CD+2	5.18E-02	5.23E-04	5.18E-02	5.23E-04						
CDO										
CE+3	1.54E+00	1.55E-02	1.54E+00	1.55E-02						
CE2O3										
CL-	2.28E-02	2.30E-04	2.28E-02	2.30E-04						
CO3-2	1.47E+00	1.48E-02	1.47E+00	1.48E-02						
CR+3	2.19E-01	2.21E-03	2.19E-01	2.21E-03						
CR2O3										
CS+	6.05E-04	6.11E-06	6.05E-04	6.11E-06						

Stream Name Solid Components	204	205	206	207	208	209	210	211	212	213
CS2O										
CU										
CU+2	4.87E-03	4.92E-05	4.87E-03	4.92E-05						
CUO										
CUSO4										
F-	3.90E-01	3.94E-03	3.90E-01	3.94E-03						
FE+3	4.98E+00	5.04E-02	4.98E+00	5.04E-02						
FE2O3										
HG+2	5.88E-05	5.94E-07	5.88E-05	5.94E-07						
I-	1.32E-01	1.33E-03	1.32E-01	1.33E-03						
K+	1.37E-01	1.39E-03	1.37E-01	1.39E-03						
K2O										
LA+3	1.37E-01	1.39E-03	1.37E-01	1.39E-03						
LA2O3										
LI+	1.61E-04	1.62E-06	1.61E-04	1.62E-06						
LI2O	2.85E+00		2.85E+00							
MG+2	7.19E-02	7.26E-04	7.19E-02	7.26E-04						
MGO	5.71E-01		5.71E-01							
MNO2	1.37E+00	1.38E-02	1.37E+00	1.38E-02						
MO+6	5.23E-03	5.29E-05	5.23E-03	5.29E-05						
MOO3										
NA+	5.08E+00	5.13E-02	5.08E+00	5.13E-02						
NA2O										
NI+3	4.29E-02	4.34E-04	4.29E-02	4.34E-04						
NI2FECN6	3.27E+00	3.30E-02	3.27E+00	3.30E-02						
NI2O3										
NIO										
NO2-	4.82E-01	4.87E-03	4.82E-01	4.87E-03						
NO3-	6.75E+00	6.81E-02	6.75E+00	6.81E-02						
NP+4	8.61E-04	8.69E-06	8.61E-04	8.69E-06						
NPO2										
OH-	1.31E+01	1.33E-01	1.31E+01	1.33E-01						
P2O5										
P2O5:24W	3.40E-03	3.44E-05	3.40E-03	3.44E-05						
PB+4	2.14E-02	2.17E-04	2.14E-02	2.17E-04						
PBO2										
PO4-3	4.74E+00	4.79E-02	4.74E+00	4.79E-02						
POLY	4.43E-01	4.48E-03	4.43E-01	4.48E-03						
PU+4	2.79E-03	2.82E-05	2.79E-03	2.82E-05						
PUO2										
S										
SI+4	5.16E-01	5.21E-03	5.16E-01	5.21E-03						
SIO2	3.99E+01		3.99E+01							
SO4-2	2.60E-01	2.62E-03	2.60E-01	2.62E-03						
SR+2	2.38E-01	2.40E-03	2.38E-01	2.40E-03						
SRO										

Stream Name Solid Components	204	205	206	207	208	209	210	211	212	213
TC2O7										
TCO4-	3.71E-03	3.75E-05	3.71E-03	3.75E-05						
TOC	7.56E-01	7.64E-03	7.56E-01	7.64E-03						
UO2+2	1.03E+01	1.04E-01	1.03E+01	1.04E-01						
UO3										
V+5	1.23E-03	1.24E-05	1.23E-03	1.24E-05						
V2O5										
WO2										
WO3										
ZN+2	6.18E-03	6.24E-05	6.18E-03	6.24E-05						
ZNO										
ZR+4	1.81E+00	1.83E-02	1.81E+00	1.83E-02						
ZRO2										
ZRO2:2H2	2.67E+00	2.70E-02	2.67E+00	2.70E-02						

Stream Name Liquid Components	214	215	216	217	218	219	220	221	222	223
Cs and Ba, (MCi)										6.21E+01
Sr and Y, (MCi)										2.08E-01
Tc, (MCi)										
Am, (MCi)										
Np, (MCi)										
Pu-239, (MCi)										
Pu-240, (MCi)										
Pu-241, (MCi)										
Total TRU, (MCi)										
Total MCi										6.23E+01
Total Mass Flow, (MT)	9.08E+04	2.27E+04	6.81E+04	2.30E+04	2.29E+04	4.79E+04	4.76E+04	2.27E+04	2.27E+04	2.09E+05
Total Cr, (MT)										
Total Na, (MT)				2.65E+02	1.34E+02	2.07E+03	1.68E+03			1.86E+02
Total Si, (MT)										
Total P, (MT)										
Total NO2-, (MT)										
Total NO3-, (MT)										3.44E+03
AG+										
AL(OH)4-										
AM+3										
AS+5										
B+3										
BA+2										
BE+2										
BI+3										
C14										
CA+2										1.65E+00
CD+2										
CE+3										
CL-										
CL2										
CO										
CO2										
CO3-2										
CR(OH)4-										
CS+										8.11E-01
CU+2										
DPCD										
F-										
F2										
FE+3										
H+					5.72E+00		1.72E+01			4.75E+01
H2										
H2O	9.08E+04	2.27E+04	6.81E+04	2.26E+04	2.26E+04	4.43E+04	4.43E+04	2.27E+04	2.27E+04	2.05E+05
H2S										
HG										

Stream Name Liquid Components	214	215	216	217	218	219	220	221	222	223
HG+2										
I-										
I2										
K+										
KEROSENE										
LA+3										
LI+										
MG+2										
MNO2										
MO+6										
N2										
NA+				2.65E+02	1.34E+02	2.07E+03	1.68E+03			1.86E+02
NH3										
NI+3										
NO										
NO2										
NO2-										
NO3-										3.44E+03
NP+4										
O2										
OH-				1.96E+02	1.96E+02	1.53E+03	1.53E+03			
OLIGIMER										
PB+4										
PO4-3										
POLY										
PU+4										
S										
SI+4										
SO2										
SO4-2										
SR+2										3.71E-02
TCO2										
TCO4-										
TOC										
UO2+2										
V+5										
W+6										
ZN+2										
ZR+4										
ZRO2:2H2										

Stream Name Solid Components	214	215	216	217	218	219	220	221	222	223
Cs and Ba, (MCi)										
Sr and Y, (MCi)										
Tc, (MCi)										
Am, (MCi)										
Np, (MCi)										
Pu-239, (MCi)										
Pu-240, (MCi)										
Pu-241, (MCi)										
Total TRU, (MCi)										
Total MCi										
Total Mass Flow, (MT)										
Total Cr, (MT)										
Total Na, (MT)										
Total Si, (MT)										
Total P, (MT)										
Total NO2-, (MT)										
Total NO3-, (MT)										
AG+										
AG2O										
AL+3										
AL2O3										
AM+3										
AM2O3										
AS+5										
AS2O5										
B+3										
B2O3										
BA+2										
BAO										
BE+2										
BEO										
BI+3										
BI2O3										
C14										
CA+2										
CANCRINI										
CAO										
CD+2										
CDO										
CE+3										
CE2O3										
CL-										
CO3-2										
CR+3										
CR2O3										
CS+										

Stream Name Solid Components	214	215	216	217	218	219	220	221	222	223
CS2O										
CU										
CU+2										
CUO										
CUSO4										
F-										
FE+3										
FE2O3										
HG+2										
I-										
K+										
K2O										
LA+3										
LA2O3										
LI+										
LI2O										
MG+2										
MGO										
MNO2										
MO+6										
MOO3										
NA+										
NA2O										
NI+3										
NI2FECN6										
NI2O3										
NIO										
NO2-										
NO3-										
NP+4										
NPO2										
OH-										
P2O5										
P2O5:24W										
PB+4										
PBO2										
PO4-3										
POLY										
PU+4										
PUO2										
S										
SI+4										
SIO2										
SO4-2										
SR+2										
SRO										

Stream Name Solid Components	214	215	216	217	218	219	220	221	222	223
TC2O7										
TCO4-										
TOC										
UO2+2										
UO3										
V+5										
V2O5										
WO2										
WO3										
ZN+2										
ZNO										
ZR+4										
ZRO2										
ZRO2:2H2										

Stream Name Liquid Components	224	225	226	227	228	229	230	231	232	233
Cs and Ba, (MCi)					6.21E+01		6.21E+01		4.94E-01	4.94E-01
Sr and Y, (MCi)					2.08E-01		2.08E-01		1.89E+00	1.89E+00
Tc, (MCi)									2.61E-02	2.61E-02
Am, (MCi)									8.60E-03	8.60E-03
Np, (MCi)									1.03E-05	1.03E-05
Pu-239, (MCi)									1.67E-03	1.67E-03
Pu-240, (MCi)									4.13E-04	4.13E-04
Pu-241, (MCi)									1.48E-03	1.48E-03
Total TRU, (MCi)									1.22E-02	1.22E-02
Total MCi					6.23E+01		6.23E+01		2.42E+00	2.42E+00
Total Mass Flow, (MT)		2.05E+05	2.05E+03	2.03E+05	3.65E+03	1.16E+03	4.81E+03	2.19E-04	9.73E+05	9.73E+05
Total Cr, (MT)									1.44E+02	1.44E+02
Total Na, (MT)					1.86E+02	3.34E+02	5.20E+02	6.30E-05	7.18E+04	7.18E+04
Total Si, (MT)									5.64E+00	5.64E+00
Total P, (MT)									1.35E+03	1.35E+03
Total NO2-, (MT)									9.53E+03	9.53E+03
Total NO3-, (MT)		2.05E+03	2.05E+01	2.03E+03	1.40E+03		1.40E+03		1.07E+05	1.07E+05
AG+									3.27E-01	3.27E-01
AL(OH)4-									1.15E+04	1.15E+04
AM+3									2.51E-03	2.51E-03
AS+5									7.68E-01	7.68E-01
B+3									5.18E-01	5.18E-01
BA+2									7.89E-01	7.89E-01
BE+2									8.17E-02	8.17E-02
BI+3									6.74E+01	6.74E+01
C14									7.41E-04	7.41E-04
CA+2					1.65E+00		1.65E+00		1.50E+01	1.50E+01
CD+2									2.08E+00	2.08E+00
CE+3									2.36E+00	2.36E+00
CL-									3.10E+02	3.10E+02
CL2										
CO										
CO2									6.07E+02	6.07E+02
CO3-2									2.53E+03	2.53E+03
CR(OH)4-									3.33E+02	3.33E+02
CS+					8.11E-01		8.11E-01		6.45E-03	6.45E-03
CU+2									1.77E-01	1.77E-01
DPCD										
F-									1.12E+03	1.12E+03
F2										
FE+3									1.43E+01	1.43E+01
H+		3.33E+01	3.33E-01	3.29E+01	1.43E+01					
H2										
H2O		2.03E+05	2.03E+03	2.01E+05	2.05E+03	5.81E+02	2.89E+03	1.10E-04	7.50E+05	7.50E+05
H2S										
HG										

Stream Name Liquid Components	224	225	226	227	228	229	230	231	232	233
HG+2									9.47E-01	9.47E-01
I-									5.45E+02	5.45E+02
I2										
K+									2.19E-01	2.19E-01
KEROSENE										
LA+3									2.19E-01	2.19E-01
LI+									5.76E-03	5.76E-03
MG+2									9.63E-01	9.63E-01
MNO2									2.16E+01	2.16E+01
MO+6									4.86E+00	4.86E+00
N2										
NA+					1.86E+02	3.34E+02	5.20E+02	6.30E-05	7.18E+04	7.18E+04
NH3										
NI+3									4.06E+00	4.06E+00
NO										
NO2										
NO2-									9.53E+03	9.53E+03
NO3-		2.05E+03	2.05E+01	2.03E+03	1.40E+03		1.40E+03		1.07E+05	1.07E+05
NP+4									1.46E-02	1.46E-02
O2										
OH-						2.47E+02	6.32E+00	4.66E-05	9.62E+03	9.62E+03
OLIGIMER										
PB+4									1.96E+00	1.96E+00
PO4-3									4.14E+03	4.14E+03
POLY									8.92E+00	8.92E+00
PU+4									2.87E-02	2.87E-02
S										
SI+4									5.64E+00	5.64E+00
SO2										
SO4-2									2.00E+03	2.00E+03
SR+2					3.71E-02		3.71E-02		3.37E-01	3.37E-01
TCO2										
TCO4-									2.52E+00	2.52E+00
TOC									1.41E+03	1.41E+03
UO2+2									8.50E+01	8.50E+01
V+5									6.19E-02	6.19E-02
W+6									7.46E-01	7.46E-01
ZN+2									3.58E+00	3.58E+00
ZR+4									4.47E-01	4.47E-01
ZRO2:2H2									2.15E+01	2.15E+01

Stream Name Solid Components	224	225	226	227	228	229	230	231	232	233
Cs and Ba, (MCi)									3.49E-04	3.49E-04
Sr and Y, (MCi)									6.94E-03	6.94E-03
Tc, (MCi)									3.88E-07	3.88E-07
Am, (MCi)									6.28E-06	6.28E-06
Np, (MCi)									6.13E-09	6.13E-09
Pu-239, (MCi)									1.63E-06	1.63E-06
Pu-240, (MCi)									4.15E-07	4.15E-07
Pu-241, (MCi)									4.84E-06	4.84E-06
Total TRU, (MCi)									1.32E-05	1.32E-05
Total MCi									7.31E-03	7.31E-03
Total Mass Flow, (MT)									8.41E-01	8.41E-01
Total Cr, (MT)									2.21E-03	2.21E-03
Total Na, (MT)									8.16E-02	8.16E-02
Total Si, (MT)									3.46E-02	3.46E-02
Total P, (MT)									1.56E-02	1.56E-02
Total NO2-, (MT)									4.87E-03	4.87E-03
Total NO3-, (MT)									6.81E-02	6.81E-02
AG+									9.08E-05	9.08E-05
AG2O										
AL+3									2.41E-02	2.41E-02
AL2O3										
AM+3									1.83E-06	1.83E-06
AM2O3										
AS+5									3.29E-05	3.29E-05
AS2O5										
B+3									6.56E-05	6.56E-05
B2O3										
BA+2									2.04E-04	2.04E-04
BAO										
BE+2									5.02E-07	5.02E-07
BEO										
BI+3									1.29E-02	1.29E-02
BI2O3										
C14									2.99E-08	2.99E-08
CA+2									8.79E-03	8.79E-03
CANCRINI									1.78E-01	1.78E-01
CAO										
CD+2									5.23E-04	5.23E-04
CDO										
CE+3									1.55E-02	1.55E-02
CE2O3										
CL-									2.30E-04	2.30E-04
CO3-2									1.48E-02	1.48E-02
CR+3									2.21E-03	2.21E-03
CR2O3										
CS+									6.11E-06	6.11E-06

Stream Name Solid Components	224	225	226	227	228	229	230	231	232	233
CS2O										
CU										
CU+2									4.92E-05	4.92E-05
CUO										
CUSO4										
F-									3.94E-03	3.94E-03
FE+3									5.04E-02	5.04E-02
FE2O3										
HG+2									5.94E-07	5.94E-07
I-									1.33E-03	1.33E-03
K+									1.39E-03	1.39E-03
K2O										
LA+3									1.39E-03	1.39E-03
LA2O3										
LI+									1.62E-06	1.62E-06
LI2O										
MG+2									7.26E-04	7.26E-04
MGO										
MNO2									1.38E-02	1.38E-02
MO+6									5.29E-05	5.29E-05
MOO3										
NA+									5.13E-02	5.13E-02
NA2O										
NI+3									4.34E-04	4.34E-04
NI2FECN6									3.30E-02	3.30E-02
NI2O3										
NIO										
NO2-									4.87E-03	4.87E-03
NO3									6.81E-02	6.81E-02
NP+4									8.69E-06	8.69E-06
NPO2										
OH-									1.33E-01	1.33E-01
P2O5										
P2O5.24W									3.44E-05	3.44E-05
PB+4									2.17E-04	2.17E-04
PBO2										
PO4-3									4.79E-02	4.79E-02
POLY									4.48E-03	4.48E-03
PU+4									2.82E-05	2.82E-05
PUO2										
S										
SI+4									5.21E-03	5.21E-03
SIO2										
SO4-2									2.62E-03	2.62E-03
SR+2									2.40E-03	2.40E-03
SRO										

Stream Name Solid Components	224	225	226	227	228	229	230	231	232	233
TC2O7										
TCO4-									3.75E-05	3.75E-05
TOC									7.64E-03	7.64E-03
UO2+2									1.04E-01	1.04E-01
UO3										
V+5									1.24E-05	1.24E-05
V2O5										
WO2										
WO3										
ZN+2									6.24E-05	6.24E-05
ZNO										
ZR+4									1.83E-02	1.83E-02
ZRO2										
ZRO2:2H2									2.70E-02	2.70E-02

Stream Name Liquid Components	236	237	238	239	240	241	242	243	244	246
Cs and Ba, (MCi)										
Sr and Y, (MCi)										
Tc, (MCi)										
Am, (MCi)										
Np, (MCi)										
Pu-239, (MCi)										
Pu-240, (MCi)										
Pu-241, (MCi)										
Total TRU, (MCi)										
Total MCi										
Total Mass Flow, (MT)	2.88E+03	1.31E+03			1.74E+05		4.07E+04	2.21E+04		7.19E+03
Total Cr, (MT)										
Total Na, (MT)										2.07E+03
Total Si, (MT)										
Total P, (MT)										
Total NO2-, (MT)										
Total NO3-, (MT)	1.62E+03	1.00E+03								
AG+										
AL(OH)4-										
AM+3										
AS+5										
B+3										
BA+2										
BE+2										
BI+3										
C14										
CA+2										
CD+2										
CE+3										
CL-										
CL2										
CO										
CO2										
CO3-2										
CR(OH)4-										
CS+										
CU+2										
DPCD										
F-										
F2										
FE+3										
H+	2.61E+01	1.63E+01								
H2										
H2O	1.24E+03	2.94E+02			1.74E+05		4.07E+04	2.21E+04		3.60E+03
H2S										
HG										

Stream Name Liquid Components	236	237	238	239	240	241	242	243	244	246
HG+2										
I-										
I2										
K+										
KEROSENE										
LA+3										
LI+										
MG+2										
MNO2										
MO+6										
N2										
NA+										2.07E+03
NH3										
NI+3										
NO										
NO2										
NO2-										
NO3-	1.62E+03	1.00E+03								
NP+4										
O2										
OH-										1.53E+03
OLIGIMER										
PB+4										
PO4-3										
POLY										
PU+4										
S										
SI+4										
SO2										
SO4-2										
SR+2										
TCO2										
TCO4-										
TOC										
UO2+2										
V+5										
W+6										
ZN+2										
ZR+4										
ZRO2:2H2										

Stream Name Solid Components	236	237	238	239	240	241	242	243	244	246
Cs and Ba, (MCi)										
Sr and Y, (MCi)										
Tc, (MCi)										
Am, (MCi)										
Np, (MCi)										
Pu-239, (MCi)										
Pu-240, (MCi)										
Pu-241, (MCi)										
Total TRU, (MCi)										
Total MCi										
Total Mass Flow, (MT)										
Total Cr, (MT)										
Total Na, (MT)										
Total Si, (MT)										
Total P, (MT)										
Total NO2-, (MT)										
Total NO3-, (MT)										
AG+										
AG2O										
AL+3										
AL2O3										
AM+3										
AM2O3										
AS+5										
AS2O5										
B+3										
B2O3										
BA+2										
BAO										
BE+2										
BEO										
BI+3										
BI2O3										
C14										
CA+2										
CANCRINI										
CAO										
CD+2										
CDO										
CE+3										
CE2O3										
CL-										
CO3-2										
CR+3										
CR2O3										
CS+										

Stream Name Solid Components	236	237	238	239	240	241	242	243	244	246
CS2O										
CU										
CU+2										
CUO										
CUSO4										
F-										
FE+3										
FE2O3										
HG+2										
I-										
K+										
K2O										
LA+3										
LA2O3										
LI+										
LI2O										
MG+2										
MGO										
MNO2										
MO+6										
MOO3										
NA+										
NA2O										
NI+3										
NI2FECN6										
NI2O3										
NIO										
NO2-										
NO3-										
NP+4										
NPO2										
OH-										
P2O5										
P2O5:24W										
PB+4										
PBO2										
PO4-3										
POLY										
PU+4										
PUO2										
S										
SI+4										
SIO2										
SO4-2										
SR+2										
SRO										

Stream Name Solid Components	236	237	238	239	240	241	242	243	244	246
TC2O7										
TCO4-										
TOC										
UO2+2										
UO3										
V+5										
V2O5										
WO2										
WO3										
ZN+2										
ZNO										
ZR+4										
ZRO2										
ZRO2:2H2										

Stream Name Liquid Components	247	248	251	263	264	400	401	402	403	404
Cs and Ba, (MCi)				6.21E+01	6.21E+01	4.94E-01				4.94E-01
Sr and Y, (MCi)				2.08E-01	2.08E-01	1.89E+00				1.89E+00
Tc, (MCi)						5.22E-02				5.22E-02
Am, (MCi)						8.60E-03				8.60E-03
Np, (MCi)						1.03E-05				1.03E-05
Pu-239, (MCi)						1.67E-03				1.67E-03
Pu-240, (MCi)						4.13E-04				4.13E-04
Pu-241, (MCi)						1.48E-03				1.48E-03
Total TRU, (MCi)						1.22E-02				1.22E-02
Total MCi				6.23E+01	6.23E+01	2.45E+00				2.45E+00
Total Mass Flow, (MT)	9.21E+02			4.81E+03	4.81E+03	1.44E+06	9.90E+05	9.90E+03	9.80E+05	4.53E+05
Total Cr, (MT)						1.44E+02				1.44E+02
Total Na, (MT)	2.65E+02			5.20E+02	5.20E+02	7.18E+04				7.18E+04
Total Si, (MT)						5.64E+00				5.64E+00
Total P, (MT)						1.35E+03				1.35E+03
Total NO2-, (MT)						9.53E+03				9.53E+03
Total NO3-, (MT)				1.40E+03	1.40E+03	1.07E+05				1.07E+05
AG+						3.27E-01				3.27E-01
AL(OH)4-						1.15E+04				1.15E+04
AM+3						2.51E-03				2.51E-03
AS+5						7.68E-01				7.68E-01
B+3						5.18E-01				5.18E-01
BA+2						7.89E-01				7.89E-01
BE+2						8.17E-02				8.17E-02
BI+3						6.74E+01				6.74E+01
C14						7.41E-04				7.41E-04
CA+2				1.65E+00	1.65E+00	1.50E+01				1.50E+01
CD+2						2.08E+00				2.08E+00
CE+3						2.36E+00				2.36E+00
CL-						3.10E+02				3.10E+02
CL2										
CO										
CO2						6.07E+02				6.07E+02
CO3-2						2.53E+03				2.53E+03
CR(OH)4-						3.33E+02				3.33E+02
CS+				8.11E-01	8.11E-01	6.45E-03				6.45E-03
CU+2						1.77E-01				1.77E-01
DPCD										
F-						1.12E+03				1.12E+03
F2										
FE+3						1.43E+01				1.43E+01
H+										
H2										
H2O	4.60E+02			2.89E+03	2.89E+03	1.12E+06	9.90E+05	9.90E+03	9.80E+05	1.27E+05
H2S										
HG						2.21E+00				2.21E+00

Stream Name Liquid Components	247	248	251	263	264	400	401	402	403	404
HG+2						9.47E-01				9.47E-01
I-						5.45E+02				5.45E+02
I2										
K+						2.19E-01				2.19E-01
KEROSENE										
LA+3						2.19E-01				2.19E-01
LI+						5.76E-03				5.76E-03
MG+2						9.63E-01				9.63E-01
MNO2						2.16E+01				2.16E+01
MO+6						4.86E+00				4.86E+00
N2										
NA+	2.65E+02			5.20E+02	5.20E+02	7.18E+04				7.18E+04
NH3										
NI+3						4.06E+00				4.06E+00
NO										
NO2										
NO2-						9.53E+03				9.53E+03
NO3-				1.40E+03	1.40E+03	1.07E+05				1.07E+05
NP+4						1.46E-02				1.46E-02
O2										
OH-	1.96E+02			6.32E+00	6.32E+00	9.62E+03				9.62E+03
OLIGIMER										
PB+4						1.96E+00				1.96E+00
PO4-3						4.14E+03				4.14E+03
POLY						8.92E+00				8.92E+00
PU+4						2.87E-02				2.87E-02
S										
SI+4						5.64E+00				5.64E+00
SO2										
SO4-2						2.00E+03				2.00E+03
SR+2				3.71E-02	3.71E-02	3.37E-01				3.37E-01
TCO2										
TCO4-						5.03E+00				5.03E+00
TOC						1.41E+03				1.41E+03
UO2+2						8.50E+01				8.50E+01
V+5						6.19E-02				6.19E-02
W+6						7.46E-01				7.46E-01
ZN+2						3.58E+00				3.58E+00
ZR+4						4.47E-01				4.47E-01
ZRO2:2H2						1.03E+05				1.03E+05

Stream Name Solid Components	247	248	251	263	264	400	401	402	403	404
Cs and Ba, (MCi)						1.10E-02				1.10E-02
Sr and Y, (MCi)						4.78E-02				4.78E-02
Tc, (MCi)						5.59E-04				5.59E-04
Am, (MCi)						1.92E-04				1.92E-04
Np, (MCi)						2.28E-07				2.28E-07
Pu-239, (MCi)						3.76E-05				3.76E-05
Pu-240, (MCi)						9.32E-06				9.32E-06
Pu-241, (MCi)						3.42E-05				3.42E-05
Total TRU, (MCi)						2.73E-04				2.73E-04
Total MCi						5.96E-02				5.96E-02
Total Mass Flow, (MT)						8.34E+03				8.34E+03
Total Cr, (MT)						3.11E+00				3.11E+00
Total Na, (MT)						1.55E+03				1.55E+03
Total Si, (MT)						2.30E+03				2.30E+03
Total P, (MT)						2.91E+01				2.91E+01
Total NO2-, (MT)						4.87E-03				4.87E-03
Total NO3-, (MT)						6.81E-02				6.81E-02
AG+						9.08E-05				9.08E-05
AG2O						7.58E-03				7.58E-03
AL+3						2.41E-02				2.41E-02
AL2O3						4.17E+02				4.17E+02
AM+3						1.83E-06				1.83E-06
AM2O3						5.94E-05				5.94E-05
AS+5						3.29E-05				3.29E-05
AS2O5						2.54E-02				2.54E-02
B+3						6.56E-05				6.56E-05
B2O3						3.59E-02				3.59E-02
BA+2						2.04E-04				2.04E-04
BAO						1.90E-02				1.90E-02
BE+2						5.02E-07				5.02E-07
BEO						4.89E-03				4.89E-03
BI+3						1.29E-02				1.29E-02
BI2O3						1.62E+00				1.62E+00
C14						2.99E-08				2.99E-08
CA+2						8.79E-03				8.79E-03
CANCRINI						1.78E-01				1.78E-01
CAO						8.34E+02				8.34E+02
CD+2						5.23E-04				5.23E-04
CDO						5.12E-02				5.12E-02
CE+3						1.55E-02				1.55E-02
CE2O3						6.00E-02				6.00E-02
CL-						2.30E-04				2.30E-04
CO3-2						1.48E-02				1.48E-02
CR+3						2.21E-03				2.21E-03
CR2O3						4.53E+00				4.53E+00
CS+						6.11E-06				6.11E-06

Stream Name Solid Components	247	248	251	263	264	400	401	402	403	404
CS2O						1.47E-04				1.47E-04
CU										
CU+2						4.92E-05				4.92E-05
CUO						4.76E-03				4.76E-03
CUSO4										
F-						3.94E-03				3.94E-03
FE+3						5.04E-02				5.04E-02
FE2O3						4.43E-01				4.43E-01
HG+2						5.94E-07				5.94E-07
I-						1.33E-03				1.33E-03
K+						1.39E-03				1.39E-03
K2O						5.71E-03				5.71E-03
LA+3						1.39E-03				1.39E-03
LA2O3						5.56E-03				5.56E-03
LI+						1.62E-06				1.62E-06
LI2O						2.67E-04				2.67E-04
MG+2						7.26E-04				7.26E-04
MGO						3.44E-02				3.44E-02
MNO2						4.80E-01				4.80E-01
MO+6						5.29E-05				5.29E-05
MOO3						1.57E-01				1.57E-01
NA+						5.13E-02				5.13E-02
NA2O						2.09E+03				2.09E+03
NI+3						4.34E-04				4.34E-04
NI2FECN6						3.30E-02				3.30E-02
NI2O3						1.23E-01				1.23E-01
NIO						3.23E-04				3.23E-04
NO2-						4.87E-03				4.87E-03
NO3-						6.81E-02				6.81E-02
NP+4						8.69E-06				8.69E-06
NPO2						3.57E-04				3.57E-04
OH-						1.33E-01				1.33E-01
P2O5						6.66E+01				6.66E+01
P2O5:24W						3.44E-05				3.44E-05
PB+4						2.17E-04				2.17E-04
PBO2						4.86E-02				4.86E-02
PO4-3						4.79E-02				4.79E-02
POLY						4.48E-03				4.48E-03
PU+4						2.82E-05				2.82E-05
PUO2						7.02E-04				7.02E-04
S										
SI+4						5.21E-03				5.21E-03
SIO2						4.93E+03				4.93E+03
SO4-2						2.62E-03				2.62E-03
SR+2						2.40E-03				2.40E-03
SRO						8.62E-03				8.62E-03

Stream Name Solid Components	247	248	251	263	264	400	401	402	403	404
TC2O7						5.15E-02				5.15E-02
TCO4-						3.75E-05				3.75E-05
TOC						7.64E-03				7.64E-03
UO2+2						1.04E-01				1.04E-01
UO3						1.94E+00				1.94E+00
V+5						1.24E-05				1.24E-05
V2O5						2.38E-03				2.38E-03
WO2						5.74E-07				5.74E-07
WO3						2.03E-02				2.03E-02
ZN+2						6.24E-05				6.24E-05
ZNO						9.60E-02				9.60E-02
ZR+4						1.83E-02				1.83E-02
ZRO2						1.40E-02				1.40E-02
ZRO2:2H2						2.70E-02				2.70E-02

Stream Name Liquid Components	405	406	407	408	409	410	411	412	413	414
Cs and Ba, (MCi)	4.94E-01	4.94E-01								
Sr and Y, (MCi)	1.89E+00	1.89E+00								
Tc, (MCi)	5.22E-02	5.22E-02				2.59E-02				
Am, (MCi)	8.60E-03	8.60E-03								
Np, (MCi)	1.03E-05	1.03E-05								
Pu-239, (MCi)	1.67E-03	1.67E-03								
Pu-240, (MCi)	4.13E-04	4.13E-04								
Pu-241, (MCi)	1.48E-03	1.48E-03								
Total TRU, (MCi)	1.22E-02	1.22E-02								
Total MCi	2.45E+00	2.45E+00				2.59E-02				
Total Mass Flow, (MT)	4.72E+05	4.72E+05		5.78E+04	2.10E+05	6.42E+05		7.91E+04	7.91E+04	7.83E+06
Total Cr, (MT)	1.44E+02	1.44E+02								
Total Na, (MT)	7.18E+04	7.18E+04								
Total Si, (MT)	5.64E+00	5.64E+00								
Total P, (MT)	1.35E+03	1.35E+03								
Total NO2-, (MT)	9.53E+03	9.53E+03								
Total NO3-, (MT)	1.07E+05	1.07E+05								
AG+	3.27E-01	3.27E-01								
AL(OH)4-	1.15E+04	1.15E+04								
AM+3	2.51E-03	2.51E-03								
AS+5	7.68E-01	7.68E-01								
B+3	5.18E-01	5.18E-01								
BA+2	7.89E-01	7.89E-01								
BE+2	8.17E-02	8.17E-02								
BI+3	6.74E+01	6.74E+01								
C14	7.41E-04	7.41E-04								
CA+2	1.50E+01	1.50E+01								
CD+2	2.08E+00	2.08E+00								
CE+3	2.36E+00	2.36E+00								
CL-	3.10E+02	3.10E+02								
CL2						3.10E+02				
CO						2.35E+03				
CO2	6.07E+02	6.07E+02				1.89E+05				
CO3-2	2.53E+03	2.53E+03								
CR(OH)4-	3.33E+02	3.33E+02								
CS+	6.45E-03	6.45E-03								
CU+2	1.77E-01	1.77E-01								
DPCD										
F-	1.12E+03	1.12E+03								
F2						1.12E+03				
FE+3	1.43E+01	1.43E+01								
H+										
H2										
H2O	1.46E+05	1.46E+05				2.88E+05		7.91E+04	7.91E+04	7.83E+06
H2S										
HG	2.21E+00	2.21E+00				3.16E+00				

Stream Name Liquid Components	405	406	407	408	409	410	411	412	413	414
HG+2	9.47E-01	9.47E-01								
I-	5.45E+02	5.45E+02								
I2						5.45E+02				
K+	2.19E-01	2.19E-01								
KEROSENE				5.78E+04						
LA+3	2.19E-01	2.19E-01								
LI+	5.76E-03	5.76E-03								
MG+2	9.63E-01	9.63E-01								
MNO2	2.16E+01	2.16E+01								
MO+6	4.86E+00	4.86E+00								
N2						2.29E+04				
NA+	7.18E+04	7.18E+04								
NH3										
NI+3	4.06E+00	4.06E+00								
NO						3.11E+02				
NO2						1.34E+04				
NO2-	9.53E+03	9.53E+03								
NO3-	1.07E+05	1.07E+05								
NP+4	1.46E-02	1.46E-02								
O2					2.10E+05	1.91E+04				
OH-	9.62E+03	9.62E+03								
OLIGIMER										
PB+4	1.96E+00	1.96E+00								
PO4-3	4.14E+03	4.14E+03								
POLY	8.92E+00	8.92E+00								
PU+4	2.87E-02	2.87E-02								
S										
SI+4	5.64E+00	5.64E+00								
SO2						1.33E+03				
SO4-2	2.00E+03	2.00E+03								
SR+2	3.37E-01	3.37E-01								
TCO2						2.02E+00				
TCO4-	5.03E+00	5.03E+00								
TOC	1.41E+03	1.41E+03								
UO2+2	8.50E+01	8.50E+01								
V+5	6.19E-02	6.19E-02								
W+6	7.46E-01	7.46E-01								
ZN+2	3.58E+00	3.58E+00								
ZR+4	4.47E-01	4.47E-01								
ZRO2:2H2	1.03E+05	1.03E+05				1.03E+05				

Stream Name Solid Components	405	406	407	408	409	410	411	412	413	414
Cs and Ba, (MCi)	1.60E-02	1.60E-02				5.09E-03	5.04E-01			5.04E-01
Sr and Y, (MCi)	6.69E-02	6.69E-02				1.96E-02	1.94E+00			1.94E+00
Tc, (MCi)	8.21E-04	8.21E-04				2.67E-04	2.65E-02			2.65E-02
Am, (MCi)	2.78E-04	2.78E-04				8.87E-05	8.79E-03			8.79E-03
Np, (MCi)	3.32E-07	3.32E-07				1.06E-07	1.05E-05			1.05E-05
Pu-239, (MCi)	5.44E-05	5.44E-05				1.72E-05	1.70E-03			1.70E-03
Pu-240, (MCi)	1.35E-05	1.35E-05				4.27E-06	4.22E-04			4.22E-04
Pu-241, (MCi)	4.92E-05	4.92E-05				1.53E-05	1.52E-03			1.52E-03
Total TRU, (MCi)	3.96E-04	3.96E-04				1.26E-04	1.24E-02			1.24E-02
Total MCi	8.41E-02	8.41E-02				2.50E-02	2.48E+00			2.48E+00
Total Mass Flow, (MT)	1.23E+04	1.23E+04	2.81E+05			4.00E+03	3.96E+05			3.96E+05
Total Cr, (MT)	4.56E+00	4.56E+00				1.49E+00	1.47E+02			1.47E+02
Total Na, (MT)	2.27E+03	2.27E+03				7.41E+02	7.34E+04			7.34E+04
Total Si, (MT)	3.39E+03	3.39E+03	1.07E+05			1.10E+03	1.09E+05			1.09E+05
Total P, (MT)	4.28E+01	4.28E+01				1.39E+01	1.38E+03			1.38E+03
Total NO2-, (MT)	4.87E-03	4.87E-03								
Total NO3-, (MT)	6.81E-02	6.81E-02								
AG+	9.08E-05	9.08E-05								
AG2O	1.11E-02	1.11E-02				3.63E-03	3.59E-01			3.59E-01
AL+3	2.41E-02	2.41E-02								
AL2O3	6.13E+02	6.13E+02	1.32E+04			2.00E+02	1.98E+04			1.98E+04
AM+3	1.83E-06	1.83E-06								
AM2O3	8.72E-05	8.72E-05				2.84E-05	2.81E-03			2.81E-03
AS+5	3.29E-05	3.29E-05								
AS2O5	3.73E-02	3.73E-02				1.22E-02	1.20E+00			1.20E+00
B+3	6.56E-05	6.56E-05								
B2O3	5.28E-02	5.28E-02				1.72E-02	1.70E+00			1.70E+00
BA+2	2.04E-04	2.04E-04								
BAO	2.79E-02	2.79E-02				9.09E-03	9.00E-01			9.00E-01
BE+2	5.02E-07	5.02E-07								
BEO	7.18E-03	7.18E-03				2.34E-03	2.32E-01			2.32E-01
BI+3	1.29E-02	1.29E-02								
BI2O3	2.38E+00	2.38E+00				7.76E-01	7.68E+01			7.68E+01
C14	2.99E-08	2.99E-08								
CA+2	8.79E-03	8.79E-03								
CANCRINI	1.78E-01	1.78E-01								
CAO	1.23E+03	1.23E+03	3.87E+04			4.00E+02	3.96E+04			3.96E+04
CD+2	5.23E-04	5.23E-04								
CDO	7.53E-02	7.53E-02				2.45E-02	2.43E+00			2.43E+00
CE+3	1.55E-02	1.55E-02								
CE2O3	8.82E-02	8.82E-02				2.87E-02	2.85E+00			2.85E+00
CL-	2.30E-04	2.30E-04								
CO3-2	1.48E-02	1.48E-02								
CR+3	2.21E-03	2.21E-03								
CR2O3	6.66E+00	6.66E+00				2.17E+00	2.15E+02			2.15E+02
CS+	6.11E-06	6.11E-06								

Stream Name Solid Components	405	406	407	408	409	410	411	412	413	414
CS2O	2.16E-04	2.16E-04				7.04E-05	6.97E-03			6.97E-03
CU										
CU+2	4.92E-05	4.92E-05								
CUO	7.00E-03	7.00E-03				2.28E-03	2.26E-01			2.26E-01
CUSO4										
F-	3.94E-03	3.94E-03								
FE+3	5.04E-02	5.04E-02								
FE2O3	6.51E-01	6.51E-01				2.12E-01	2.10E+01			2.10E+01
HG+2	5.94E-07	5.94E-07								
I-	1.33E-03	1.33E-03								
K+	1.39E-03	1.39E-03								
K2O	8.38E-03	8.38E-03				2.73E-03	2.71E-01			2.71E-01
LA+3	1.39E-03	1.39E-03								
LA2O3	8.16E-03	8.16E-03				2.66E-03	2.63E-01			2.63E-01
LI+	1.62E-06	1.62E-06								
LI2O	3.92E-04	3.92E-04				1.28E-04	1.27E-02			1.27E-02
MG+2	7.26E-04	7.26E-04								
MGO	5.06E-02	5.06E-02				1.65E-02	1.63E+00			1.63E+00
MNO2	6.99E-01	6.99E-01				2.23E-01	2.21E+01			2.21E+01
MO+6	5.29E-05	5.29E-05								
MOO3	2.31E-01	2.31E-01				7.52E-02	7.45E+00			7.45E+00
NA+	5.13E-02	5.13E-02								
NA2O	3.06E+03	3.06E+03				9:99E+02	9.89E+04			9.89E+04
NI+3	4.34E-04	4.34E-04								
NI2FECN6	3.30E-02	3.30E-02								
NI2O3	1.81E-01	1.81E-01				5.90E-02	5.84E+00			5.84E+00
NIO	4.74E-04	4.74E-04				1.54E-04	1.53E-02			1.53E-02
NO2-	4.87E-03	4.87E-03								
NO3-	6.81E-02	6.81E-02								
NP+4	8.69E-06	8.69E-06								
NPO2	5.25E-04	5.25E-04				1.71E-04	1.69E-02			1.69E-02
OH-	1.33E-01	1.33E-01								
P2O5	9.79E+01	9.79E+01				3.19E+01	3.16E+03			3.16E+03
P2O5:24W	3.44E-05	3.44E-05								
PB+4	2.17E-04	2.17E-04								
PBO2	7.15E-02	7.15E-02				2.33E-02	2.31E+00			2.31E+00
PO4-3	4.79E-02	4.79E-02								
POLY	4.48E-03	4.48E-03								
PU+4	2.82E-05	2.82E-05								
PUO2	1.03E-03	1.03E-03				3.36E-04	3.33E-02			3.33E-02
S										
SI+4	5.21E-03	5.21E-03								
SIO2	7.24E+03	7.24E+03	2.29E+05			2.36E+03	2.34E+05			2.34E+05
SO4-2	2.62E-03	2.62E-03								
SR+2	2.40E-03	2.40E-03								
SRO	1.27E-02	1.27E-02				4.13E-03	4.09E-01			4.09E-01

Stream Name Solid Components	405	406	407	408	409	410	411	412	413	414
TC2O7	7.57E-02	7.57E-02				2.47E-02	2.44E+00			2.44E+00
TCO4-	3.75E-05	3.75E-05								
TOC	7.64E-03	7.64E-03								
UO2+2	1.04E-01	1.04E-01								
UO3	2.85E+00	2.85E+00				9.30E-01	9.21E+01			9.21E+01
V+5	1.24E-05	1.24E-05								
V2O5	3.50E-03	3.50E-03				1.14E-03	1.13E-01			1.13E-01
WO2	8.68E-07	8.68E-07				3.00E-07	2.97E-05			2.97E-05
WO3	2.98E-02	2.98E-02				9.70E-03	9.60E-01			9.60E-01
ZN+2	6.24E-05	6.24E-05								
ZNO	1.41E-01	1.41E-01				4.60E-02	4.55E+00			4.55E+00
ZR+4	1.83E-02	1.83E-02								
ZRO2	2.06E-02	2.06E-02				6.70E-03	6.63E-01			6.63E-01
ZRO2:2H2	2.70E-02	2.70E-02								

Stream Name Liquid Components	415	416	417	418	419	420	421	422	423	424
Cs and Ba, (MCi)										
Sr and Y, (MCi)										
Tc, (MCi)										
Am, (MCi)										
Np, (MCi)										
Pu-239, (MCi)										
Pu-240, (MCi)										
Pu-241, (MCi)										
Total TRU, (MCi)										
Total MCi										
Total Mass Flow, (MT)	7.91E+06	4.74E+04	7.83E+03	7.95E+06	3.96E+04	7.91E+06	7.91E+06	7.91E+06	3.30E+06	3.30E+06
Total Cr, (MT)										
Total Na, (MT)										
Total Si, (MT)										
Total P, (MT)										
Total NO2-, (MT)										
Total NO3-, (MT)										
AG+										
AL(OH)4-										
AM+3										
AS+5										
B+3										
BA+2										
BE+2										
BI+3										
C14										
CA+2										
CD+2										
CE+3										
CL-										
CL2										
CO										
CO2										
CO3 2										
CR(OH)4-										
CS+										
CU+2										
DPCD										
F-										
F2										
FE+3										
H+										
H2										
H2O	7.91E+06	4.74E+04	7.83E+03	7.95E+06	3.96E+04	7.91E+06	7.91E+06	7.91E+06	3.66E+04	3.66E+04

Stream Name Liquid Components	415	416	417	418	419	420	421	422	423	424
H2S										
HG										
HG+2										
I-										
I2										
K+										
KEROSENE										
LA+3										
LI+										
MG+2										
MNO2										
MO+6										
N2									2.58E+06	2.58E+06
NA+										
NH3										
NI+3										
NO										
NO2										
NO2-										
NO3-										
NP+4										
O2									6.85E+05	6.85E+05
OH-										
OLIGIMER										
PB+4										
PO4-3										
POLY										
PU+4										
S										
SI+4										
SO2										
SO4-2										
SR+2										
TCO2										
TCO4-										
TOC										
UO2+2										
V+5										
W+6										
ZN+2										
ZR+4										
ZRO2:2H2										

Stream Name Solid Components	415	416	417	418	419	420	421	422	423	424
Cs and Ba, (MCi)	5.04E-01		4.99E-01	5.04E-03	5.03E-03	5.04E-06	5.04E-06	5.04E-06		
Sr and Y, (MCi)	1.94E+00		1.92E+00	1.94E-02	1.94E-02	1.94E-05	1.94E-05	1.94E-05		
Tc, (MCi)	2.65E-02		2.62E-02	2.65E-04	2.65E-04	2.65E-07	2.65E-07	2.65E-07		
Am, (MCi)	8.79E-03		8.70E-03	8.79E-05	8.78E-05	8.79E-08	8.79E-08	8.79E-08		
Np, (MCi)	1.05E-05		1.04E-05	1.05E-07	1.05E-07	1.05E-10	1.05E-10	1.05E-10		
Pu-239, (MCi)	1.70E-03		1.69E-03	1.70E-05	1.70E-05	1.70E-08	1.70E-08	1.70E-08		
Pu-240, (MCi)	4.22E-04		4.18E-04	4.22E-06	4.22E-06	4.22E-09	4.22E-09	4.22E-09		
Pu-241, (MCi)	1.52E-03		1.50E-03	1.52E-05	1.51E-05	1.52E-08	1.52E-08	1.52E-08		
Total TRU, (MCi)	1.24E-02		1.23E-02	1.24E-04	1.24E-04	1.24E-07	1.24E-07	1.24E-07		
Total MCi	2.48E+00		2.45E+00	2.48E-02	2.48E-02	2.48E-05	2.48E-05	2.48E-05		
Total Mass Flow, (MT)	3.96E+05		3.92E+05	3.96E+03	3.95E+03	3.96E+00	3.96E+00	3.96E+00		
Total Cr, (MT)	1.47E+02		1.46E+02	1.47E+00	1.47E+00	1.47E-03	1.47E-03	1.47E-03		
Total Na, (MT)	7.34E+04		7.26E+04	7.34E+02	7.33E+02	7.34E-01	7.34E-01	7.34E-01		
Total Si, (MT)	1.09E+05		1.08E+05	1.09E+03	1.09E+03	1.09E+00	1.09E+00	1.09E+00		
Total P, (MT)	1.38E+03		1.37E+03	1.38E+01	1.38E+01	1.38E-02	1.38E-02	1.38E-02		
Total NO2-, (MT)										
Total NO3-, (MT)										
AG+										
AG2O	3.59E-01		3.56E-01	3.59E-03	3.59E-03	3.59E-06	3.59E-06	3.59E-06		
AL+3										
AL2O3	1.98E+04		1.96E+04	1.98E+02	1.98E+02	1.98E-01	1.98E-01	1.98E-01		
AM+3										
AM2O3	2.81E-03		2.79E-03	2.81E-05	2.81E-05	2.81E-08	2.81E-08	2.81E-08		
AS+5										
AS2O5	1.20E+00		1.19E+00	1.20E-02	1.20E-02	1.20E-05	1.20E-05	1.20E-05		
B+3										
B2O3	1.70E+00		1.69E+00	1.70E-02	1.70E-02	1.70E-05	1.70E-05	1.70E-05		
BA+2										
BAO	9.00E-01		8.91E-01	9.00E-03	8.99E-03	9.00E-06	9.00E-06	9.00E-06		
BE+2										
BEO	2.32E-01		2.29E-01	2.32E-03	2.31E-03	2.32E-06	2.32E-06	2.32E-06		
BI+3										
BI2O3	7.68E+01		7.60E+01	7.68E-01	7.67E-01	7.68E-04	7.68E-04	7.68E-04		
C14										
CA+2										
CANCRINI										
CAO	3.96E+04		3.92E+04	3.96E+02	3.95E+02	3.96E-01	3.96E-01	3.96E-01		
CD+2										
CDO	2.43E+00		2.41E+00	2.43E-02	2.43E-02	2.43E-05	2.43E-05	2.43E-05		
CE+3										
CE2O3	2.85E+00		2.82E+00	2.85E-02	2.84E-02	2.85E-05	2.85E-05	2.85E-05		
CL-										
CO3-2										
CR+3										
CR2O3	2.15E+02		2.13E+02	2.15E+00	2.15E+00	2.15E-03	2.15E-03	2.15E-03		
CS+										

Stream Name Solid Components	415	416	417	418	419	420	421	422	423	424
CS2O	6.97E-03		6.90E-03	6.97E-05	6.97E-05	6.97E-08	6.97E-08	6.97E-08		
CU										
CU+2										
CUO	2.26E-01		2.24E-01	2.26E-03	2.26E-03	2.26E-06	2.26E-06	2.26E-06		
CUSO4										
F-										
FE+3										
FE2O3	2.10E+01		2.08E+01	2.10E-01	2.10E-01	2.10E-04	2.10E-04	2.10E-04		
HG+2										
I-										
K+										
K2O	2.71E-01		2.68E-01	2.71E-03	2.70E-03	2.71E-06	2.71E-06	2.71E-06		
LA+3										
LA2O3	2.63E-01		2.61E-01	2.63E-03	2.63E-03	2.63E-06	2.63E-06	2.63E-06		
LI+										
LI2O	1.27E-02		1.25E-02	1.27E-04	1.27E-04	1.27E-07	1.27E-07	1.27E-07		
MG+2										
MGO	1.63E+00		1.62E+00	1.63E-02	1.63E-02	1.63E-05	1.63E-05	1.63E-05		
MNO2	2.21E+01		2.19E+01	2.21E-01	2.21E-01	2.21E-04	2.21E-04	2.21E-04		
MO+6										
MOO3	7.45E+00		7.37E+00	7.45E-02	7.44E-02	7.45E-05	7.45E-05	7.45E-05		
NA+										
NA2O	9.89E+04		9.79E+04	9.89E+02	9.88E+02	9.89E-01	9.89E-01	9.89E-01		
NI+3										
NI2FECN6										
NI2O3	5.84E+00		5.79E+00	5.84E-02	5.84E-02	5.84E-05	5.84E-05	5.84E-05		
NIO	1.53E-02		1.51E-02	1.53E-04	1.53E-04	1.53E-07	1.53E-07	1.53E-07		
NO2-										
NO3-										
NP+4										
NPO2	1.69E-02		1.68E-02	1.69E-04	1.69E-04	1.69E-07	1.69E-07	1.69E-07		
OH-										
P2O5	3.16E+03		3.13E+03	3.16E+01	3.16E+01	3.16E-02	3.16E-02	3.16E-02		
P2O5:24W										
PB+4										
PBO2	2.31E+00		2.28E+00	2.31E-02	2.30E-02	2.31E-05	2.31E-05	2.31E-05		
PO4-3										
POLY										
PU+4										
PUO2	3.33E-02		3.30E-02	3.33E-04	3.33E-04	3.33E-07	3.33E-07	3.33E-07		
S										
SI+4										
SIO2	2.34E+05		2.31E+05	2.34E+03	2.34E+03	2.34E+00	2.34E+00	2.34E+00		
SO4-2										
SR+2										
SRO	4.09E-01		4.05E-01	4.09E-03	4.08E-03	4.09E-06	4.09E-06	4.09E-06		

Stream Name Solid Components	415	416	417	418	419	420	421	422	423	424
TC2O7	2.44E+00		2.42E+00	2.44E-02	2.44E-02	2.44E-05	2.44E-05	2.44E-05		
TCO4-										
TOC										
UO2+2										
UO3	9.21E+01		9.12E+01	9.21E-01	9.20E-01	9.21E-04	9.21E-04	9.21E-04		
V+5										
V2O5	1.13E-01		1.12E-01	1.13E-03	1.13E-03	1.13E-06	1.13E-06	1.13E-06		
WO2	2.97E-05		2.94E-05	2.97E-07	2.97E-07	2.97E-10	2.97E-10	2.97E-10		
WO3	9.60E-01		9.51E-01	9.60E-03	9.59E-03	9.60E-06	9.60E-06	9.60E-06		
ZN+2										
ZNO	4.55E+00		4.51E+00	4.55E-02	4.55E-02	4.55E-05	4.55E-05	4.55E-05		
ZR+4										
ZRO2	6.63E-01		6.57E-01	6.63E-03	6.63E-03	6.63E-06	6.63E-06	6.63E-06		
ZRO2:2H2										

Stream Name Liquid Components	425	426	427	428	429	430	431	432	433	434
Cs and Ba, (MCi)										
Sr and Y, (MCi)										
Tc, (MCi)										
Am, (MCi)										
Np, (MCi)										
Pu-239, (MCi)										
Pu-240, (MCi)										
Pu-241, (MCi)										
Total TRU, (MCi)										
Total MCi										
Total Mass Flow, (MT)	5.00E+05	4.87E+05	1.32E+04	1.32E+04	2.80E+06	2.80E+04	2.78E+06	2.78E+06	3.83E+02	2.78E+06
Total Cr, (MT)										
Total Na, (MT)										
Total Si, (MT)										
Total P, (MT)										
Total NO2-, (MT)										
Total NO3-, (MT)										
AG+										
AL(OH)4-										
AM+3										
AS+5										
B+3										
BA+2										
BE+2										
BI+3										
C14										
CA+2										
CD+2										
CE+3										
CL-										
CL2										
CO										
CO2										
CO3-2										
CR(OH)4-										
CS+										
CU+2										
DPCD										
F-										
F2										
FE+3										
H+										
H2										
H2O	1.32E+04		1.32E+04	1.32E+04	3.12E+04	3.12E+02	3.09E+04	3.09E+04	3.83E+02	3.09E+04
H2S										
HG										

Stream Name Liquid Components	425	426	427	428	429	430	431	432	433	434
HG+2										
I-										
I2										
K+										
KEROSENE										
LA+3										
LI+										
MG+2										
MNO2										
MO+6										
N2	3.85E+05	3.85E+05			2.19E+06	2.19E+04	2.17E+06	2.17E+06		2.17E+06
NA+										
NH3										
NI+3										
NO										
NO2										
NO2-										
NO3-										
NP+4										
O2	1.02E+05	1.02E+05			5.82E+05	5.82E+03	5.77E+05	5.77E+05		5.77E+05
OH-										
OLIGIMER										
PB+4										
PO4-3										
POLY										
PU+4										
S										
SI+4										
SO2										
SO4-2										
SR+2										
TCO2										
TCO4-										
TOC										
UO2+2										
V+5										
W+6										
ZN+2										
ZR+4										
ZRO2:2H2										

Stream Name Solid Components	425	426	427	428	429	430	431	432	433	434
Cs and Ba, (MCi)	4.99E-04	4.99E-04			4.98E-01	4.98E-03	4.93E-01	4.93E-06		2.47E-09
Sr and Y, (MCi)	1.92E-03	1.92E-03			1.92E+00	1.92E-02	1.90E+00	1.90E-05		9.48E-09
Tc, (MCi)	2.62E-05	2.62E-05			2.62E-02	2.62E-04	2.59E-02	2.59E-07		1.30E-10
Am, (MCi)	8.70E-06	8.70E-06			8.69E-03	8.69E-05	8.60E-03	8.60E-08		4.30E-11
Np, (MCi)	1.04E-08	1.04E-08			1.04E-05	1.04E-07	1.03E-05	1.03E-10		5.15E-14
Pu-239, (MCi)	1.69E-06	1.69E-06			1.69E-03	1.69E-05	1.67E-03	1.67E-08		8.34E-12
Pu-240, (MCi)	4.18E-07	4.18E-07			4.18E-04	4.18E-06	4.14E-04	4.14E-09		2.07E-12
Pu-241, (MCi)	1.50E-06				1.50E-03	1.50E-05	1.48E-03	1.48E-08		7.42E-12
Total TRU, (MCi)	1.23E-05	1.08E-05			1.23E-02	1.23E-04	1.22E-02	1.22E-07		6.09E-11
Total MCi	2.45E-03	2.45E-03			2.45E+00	2.45E-02	2.43E+00	2.43E-05		1.21E-08
Total Mass Flow, (MT)	3.92E+02	3.92E+02			3.91E+05	3.91E+03	3.87E+05	3.87E+00		1.94E-03
Total Cr, (MT)	1.46E-01	1.46E-01			1.46E+02	1.46E+00	1.44E+02	1.44E-03		7.20E-07
Total Na, (MT)	7.26E+01	7.26E+01			7.26E+04	7.26E+02	7.18E+04	7.18E-01		3.59E-04
Total Si, (MT)	1.08E+02	1.08E+02			1.08E+05	1.08E+03	1.07E+05	1.07E+00		5.35E-04
Total P, (MT)	1.37E+00	1.37E+00			1.36E+03	1.36E+01	1.35E+03	1.35E-02		6.75E-06
Total NO2-, (MT)										
Total NO3-, (MT)										
AG+										
AG2O	3.56E-04	3.56E-04			3.55E-01	3.55E-03	3.52E-01	3.52E-06		1.76E-09
AL+3										
AL2O3	1.96E+01	1.96E+01			1.96E+04	1.96E+02	1.94E+04	1.94E-01		9.68E-05
AM+3										
AM2O3	2.79E-06	2.79E-06			2.78E-03	2.78E-05	2.76E-03	2.76E-08		1.38E-11
AS+5										
AS2O5	1.19E-03	1.19E-03			1.19E+00	1.19E-02	1.18E+00	1.18E-05		5.89E-09
B+3										
B2O3	1.69E-03	1.69E-03			1.69E+00	1.69E-02	1.67E+00	1.67E-05		8.34E-09
BA+2										
BAO	8.91E-04	8.91E-04			8.90E-01	8.90E-03	8.81E-01	8.81E-06		4.41E-09
BE+2										
BEO	2.29E-04	2.29E-04			2.29E-01	2.29E-03	2.27E-01	2.27E-06		1.13E-09
BI+3										
BI2O3	7.60E-02	7.60E-02			7.60E+01	7.60E-01	7.52E+01	7.52E-04		3.76E-07
C14										
CA+2										
CANCRINI										
CAO	3.92E+01	3.92E+01			3.91E+04	3.91E+02	3.87E+04	3.87E-01		1.94E-04
CD+2										
CDO	2.41E-03	2.41E-03			2.40E+00	2.40E-02	2.38E+00	2.38E-05		1.19E-08
CE+3										
CE2O3	2.82E-03	2.82E-03			2.81E+00	2.81E-02	2.79E+00	2.79E-05		1.39E-08
CL-										
CO3-2										
CR+3										
CR2O3	2.13E-01	2.13E-01			2.13E+02	2.13E+00	2.11E+02	2.11E-03		1.05E-06
CS+										

Stream Name Solid Components	425	426	427	428	429	430	431	432	433	434
CS2O	6.90E-06	6.90E-06			6.90E-03	6.90E-05	6.83E-03	6.83E-08		3.41E-11
CU										
CU+2										
CUO	2.24E-04	2.24E-04			2.23E-01	2.23E-03	2.21E-01	2.21E-06		1.11E-09
CUSO4										
F-										
FE+3										
FE2O3	2.08E-02	2.08E-02			2.08E+01	2.08E-01	2.06E+01	2.06E-04		1.03E-07
HG+2										
I-										
K+										
K2O	2.68E-04	2.68E-04			2.68E-01	2.68E-03	2.65E-01	2.65E-06		1.33E-09
LA+3										
LA2O3	2.61E-04	2.61E-04			2.61E-01	2.61E-03	2.58E-01	2.58E-06		1.29E-09
LI+										
LI2O	1.25E-05	1.25E-05			1.25E-02	1.25E-04	1.24E-02	1.24E-07		6.20E-11
MG+2										
MGO	1.62E-03	1.62E-03			1.61E+00	1.61E-02	1.60E+00	1.60E-05		7.99E-09
MNO2	2.19E-02	2.19E-02			2.19E+01	2.19E-01	2.16E+01	2.16E-04		1.08E-07
MO+6										
MOO3	7.37E-03	7.37E-03			7.36E+00	7.36E-02	7.29E+00	7.29E-05		3.65E-08
NA+										
NA2O	9.79E+01	9.79E+01			9.78E+04	9.78E+02	9.68E+04	9.68E-01		4.84E-04
NI+3										
NI2FECN6										
NI2O3	5.79E-03	5.79E-03			5.78E+00	5.78E-02	5.72E+00	5.72E-05		2.86E-08
NIO	1.51E-05	1.51E-05			1.51E-02	1.51E-04	1.50E-02	1.50E-07		7.49E-11
NO2-										
NO3-										
NP+4										
NPO2	1.68E-05	1.68E-05			1.68E-02	1.68E-04	1.66E-02	1.66E-07		8.29E-11
OH-										
P2O5	3.13E+00	3.13E+00			3.12E+03	3.12E+01	3.09E+03	3.09E-02		1.55E-05
P2O5:24W										
PB+4										
PBO2	2.28E-03	2.28E-03			2.28E+00	2.28E-02	2.26E+00	2.26E-05		1.13E-08
PO4-3										
POLY										
PU+4										
PUO2	3.30E-05	3.29E-05			3.29E-02	3.29E-04	3.26E-02	3.26E-07		1.63E-10
S										
SI+4										
SIO2	2.31E+02	2.31E+02			2.31E+05	2.31E+03	2.29E+05	2.29E+00		1.14E-03
SO4-2										
SR+2										
SRO	4.05E-04	4.05E-04			4.04E-01	4.04E-03	4.00E-01	4.00E-06		2.00E-09

Stream Name Solid Components	425	426	427	428	429	430	431	432	433	434
TC2O7	2.42E-03	2.42E-03			2.42E+00	2.42E-02	2.39E+00	2.39E-05		1.20E-08
TCO4-										
TOC										
UO2+2										
UO3	9.12E-02	9.12E-02			9.11E+01	9.11E-01	9.02E+01	9.02E-04		4.51E-07
V+5										
V2O5	1.12E-04	1.12E-04			1.12E-01	1.12E-03	1.11E-01	1.11E-06		5.53E-10
WO2	2.94E-08				2.94E-05	2.94E-07	2.91E-05	2.91E-10		1.45E-13
WO3	9.51E-04	9.51E-04			9.50E-01	9.50E-03	9.40E-01	9.40E-06		4.70E-09
ZN+2										
ZNO	4.51E-03	4.51E-03			4.50E+00	4.50E-02	4.46E+00	4.46E-05		2.23E-08
ZR+4										
ZRO2	6.57E-04	6.57E-04			6.56E-01	6.56E-03	6.49E-01	6.49E-06		3.25E-09
ZRO2:2H2										

Stream Name Liquid Components	435	436	437	438	439	440	441	442	443	444
Cs and Ba, (MCi)										
Sr and Y, (MCi)										
Tc, (MCi)										
Am, (MCi)										
Np, (MCi)										
Pu-239, (MCi)										
Pu-240, (MCi)										
Pu-241, (MCi)										
Total TRU, (MCi)										
Total MCi										
Total Mass Flow, (MT)	3.83E+02	3.83E+02		3.94E+05	3.94E+05	3.94E+05	6.71E+03		2.60E+05	2.60E+05
Total Cr, (MT)										
Total Na, (MT)										
Total Si, (MT)										
Total P, (MT)										
Total NO2-, (MT)										
Total NO3-, (MT)										
AG+										
AL(OH)4-										
AM+3										
AS+5										
B+3										
BA+2										
BE+2										
BI+3										
C14										
CA+2										
CD+2										
CE+3										
CL-										
CL2										
CO										
CO2										
CO3-2										
CR(OH)4-										
CS+										
CU+2										
DPCD				9.85E+03	9.85E+03	9.85E+03	3.36E+03		6.50E+03	6.50E+03
F-										
F2										
FE+3										
H+										
H2										
H2O	3.83E+02	3.83E+02								
H2S										
HG										

Stream Name Liquid Components	435	436	437	438	439	440	441	442	443	444
HG+2										
I-										
I2										
K+										
KEROSENE										
LA+3										
LI+										
MG+2										
MNO2										
MO+6										
N2										
NA+										
NH3										
NI+3										
NO										
NO2										
NO2-										
NO3-										
NP+4										
O2										
OH-										
OLIGIMER				9.85E+03	9.85E+03	9.85E+03	3.36E+03		6.50E+03	6.50E+03
PB+4										
PO4-3										
POLY										
PU+4										
S				3.74E+05	3.74E+05	3.74E+05			2.47E+05	2.47E+05
SI+4										
SO2										
SO4-2										
SR+2										
TCO2										
TCO4-										
TOC										
UO2+2										
V+5										
W+6										
ZN+2										
ZR+4										
ZRO2:2H2										

Stream Name Solid Components	435	436	437	438	439	440	441	442	443	444
Cs and Ba, (MCi)	4.93E-06	4.93E-06	4.93E-01	4.93E-05	4.93E-01	4.93E-01	4.93E-01		4.93E-05	4.93E-05
Sr and Y, (MCi)	1.90E-05	1.90E-05	1.90E+00	1.90E-04	1.90E+00	1.90E+00	1.90E+00		1.90E-04	1.90E-04
Tc, (MCi)	2.59E-07	2.59E-07	2.59E-02	2.59E-06	2.59E-02	2.59E-02	2.59E-02		2.59E-06	2.59E-06
Am, (MCi)	8.60E-08	8.60E-08	8.60E-03	8.60E-07	8.60E-03	8.60E-03	8.60E-03		8.60E-07	8.60E-07
Np, (MCi)	1.03E-10	1.03E-10	1.03E-05	1.03E-09	1.03E-05	1.03E-05	1.03E-05		1.03E-09	1.03E-09
Pu-239, (MCi)	1.67E-08	1.67E-08	1.67E-03	1.67E-07	1.67E-03	1.67E-03	1.67E-03		1.67E-07	1.67E-07
Pu-240, (MCi)	4.13E-09	4.13E-09	4.14E-04	4.14E-08	4.14E-04	4.14E-04	4.14E-04		4.14E-08	4.14E-08
Pu-241, (MCi)	1.48E-08	1.48E-08	1.48E-03	1.48E-07	1.48E-03	1.48E-03	1.48E-03		1.48E-07	1.48E-07
Total TRU, (MCi)	1.22E-07	1.22E-07	1.22E-02	1.22E-06	1.22E-02	1.22E-02	1.22E-02		1.22E-06	1.22E-06
Total MCi	2.43E-05	2.43E-05	2.43E+00	2.43E-04	2.43E+00	2.43E+00	2.43E+00		2.43E-04	2.43E-04
Total Mass Flow, (MT)	3.87E+00	3.87E+00	3.87E+05	3.87E+01	3.87E+05	3.87E+05	5.15E+05		3.87E+01	3.87E+01
Total Cr, (MT)	1.44E-03	1.44E-03	1.44E+02	1.44E-02	1.44E+02	1.44E+02	1.44E+02		1.44E-02	1.44E-02
Total Na, (MT)	7.18E-01	7.18E-01	7.18E+04	7.18E+00	7.18E+04	7.18E+04	7.18E+04		7.18E+00	7.18E+00
Total Si, (MT)	1.07E+00	1.07E+00	1.07E+05	1.07E+01	1.07E+05	1.07E+05	1.07E+05		1.07E+01	1.07E+01
Total P, (MT)	1.35E-02	1.35E-02	1.35E+03	1.35E-01	1.35E+03	1.35E+03	1.35E+03		1.35E-01	1.35E-01
Total NO2-, (MT)										
Total NO3-, (MT)										
AG+										
AG2O	3.52E-06	3.52E-06	3.52E-01	3.52E-05	3.52E-01	3.52E-01	3.52E-01		3.52E-05	3.52E-05
AL+3										
AL2O3	1.94E-01	1.94E-01	1.94E+04	1.94E+00	1.94E+04	1.94E+04	1.94E+04		1.94E+00	1.94E+00
AM+3										
AM2O3	2.75E-08	2.75E-08	2.76E-03	2.76E-07	2.76E-03	2.76E-03	2.76E-03		2.76E-07	2.76E-07
AS+5										
AS2O5	1.18E-05	1.18E-05	1.18E+00	1.18E-04	1.18E+00	1.18E+00	1.18E+00		1.18E-04	1.18E-04
B+3										
B2O3	1.67E-05	1.67E-05	1.67E+00	1.67E-04	1.67E+00	1.67E+00	1.67E+00		1.67E-04	1.67E-04
BA+2										
BAO	8.81E-06	8.81E-06	8.81E-01	8.82E-05	8.82E-01	8.82E-01	8.81E-01		8.82E-05	8.82E-05
BE+2										
BEO	2.27E-06	2.27E-06	2.27E-01	2.27E-05	2.27E-01	2.27E-01	2.27E-01		2.27E-05	2.27E-05
BI+3										
BI2O3	7.52E-04	7.52E-04	7.52E+01	7.52E-03	7.52E+01	7.52E+01	7.52E+01		7.52E-03	7.52E-03
C14										
CA+2										
CANCRINI										
CAO	3.87E-01	3.87E-01	3.87E+04	3.87E+00	3.87E+04	3.87E+04	3.87E+04		3.87E+00	3.87E+00
CD+2										
CDO	2.38E-05	2.38E-05	2.38E+00	2.38E-04	2.38E+00	2.38E+00	2.38E+00		2.38E-04	2.38E-04
CE+3										
CE2O3	2.79E-05	2.79E-05	2.79E+00	2.79E-04	2.79E+00	2.79E+00	2.79E+00		2.79E-04	2.79E-04
CL-										
CO3-2										
CR+3										
CR2O3	2.10E-03	2.10E-03	2.11E+02	2.11E-02	2.11E+02	2.11E+02	2.11E+02		2.11E-02	2.11E-02
CS+										

Stream Name Solid Components	435	436	437	438	439	440	441	442	443	444
CS2O	6.82E-08	6.82E-08	6.83E-03	6.83E-07	6.83E-03	6.83E-03	6.83E-03		6.83E-07	6.83E-07
CU										
CU+2										
CUO	2.21E-06	2.21E-06	2.21E-01	2.21E-05	2.21E-01	2.21E-01	2.21E-01		2.21E-05	2.21E-05
CUSO4										
F-										
FE+3										
FE2O3	2.06E-04	2.06E-04	2.06E+01	2.06E-03	2.06E+01	2.06E+01	2.06E+01		2.06E-03	2.06E-03
HG+2										
I-										
K+										
K2O	2.65E-06	2.65E-06	2.65E-01	2.65E-05	2.65E-01	2.65E-01	2.65E-01		2.65E-05	2.65E-05
LA+3										
LA2O3	2.58E-06	2.58E-06	2.58E-01	2.58E-05	2.58E-01	2.58E-01	2.58E-01		2.58E-05	2.58E-05
LI+										
LI2O	1.24E-07	1.24E-07	1.24E-02	1.24E-06	1.24E-02	1.24E-02	1.24E-02		1.24E-06	1.24E-06
MG+2										
MGO	1.60E-05	1.60E-05	1.60E+00	1.60E-04	1.60E+00	1.60E+00	1.60E+00		1.60E-04	1.60E-04
MNO2	2.16E-04	2.16E-04	2.16E+01	2.16E-03	2.16E+01	2.16E+01	2.16E+01		2.16E-03	2.16E-03
MO+6										
MOO3	7.29E-05	7.29E-05	7.29E+00	7.29E-04	7.29E+00	7.29E+00	7.29E+00		7.29E-04	7.29E-04
NA+										
NA2O	9.68E-01	9.68E-01	9.68E+04	9.68E+00	9.68E+04	9.68E+04	9.68E+04		9.68E+00	9.68E+00
NI+3										
NI2FECN6										
NI2O3	5.72E-05	5.72E-05	5.72E+00	5.72E-04	5.72E+00	5.72E+00	5.72E+00		5.72E-04	5.72E-04
NIO	1.50E-07	1.50E-07	1.50E-02	1.50E-06	1.50E-02	1.50E-02	1.50E-02		1.50E-06	1.50E-06
NO2-										
NO3-										
NP+4										
NPO2	1.66E-07	1.66E-07	1.66E-02	1.66E-06	1.66E-02	1.66E-02	1.66E-02		1.66E-06	1.66E-06
OH-										
P2O5	3.09E-02	3.09E-02	3.09E+03	3.09E-01	3.09E+03	3.09E+03	3.09E+03		3.09E-01	3.09E-01
P2O5:24W										
PB+4										
PBO2	2.26E-05	2.26E-05	2.26E+00	2.26E-04	2.26E+00	2.26E+00	2.26E+00		2.26E-04	2.26E-04
PO4-3										
POLY										
PU+4										
PUO2	3.26E-07	3.26E-07	3.26E-02	3.26E-06	3.26E-02	3.26E-02	3.26E-02		3.26E-06	3.26E-06
S							1.28E+05			
SI+4										
SIO2	2.29E+00	2.29E+00	2.29E+05	2.29E+01	2.29E+05	2.29E+05	2.29E+05		2.29E+01	2.29E+01
SO4-2										
SR+2										
SRO	4.00E-06	4.00E-06	4.00E-01	4.00E-05	4.00E-01	4.00E-01	4.00E-01		4.00E-05	4.00E-05

Stream Name Solid Components	435	436	437	438	439	440	441	442	443	444
TC2O7	2.39E-05	2.39E-05	2.39E+00	2.39E-04	2.39E+00	2.39E+00	2.39E+00		2.39E-04	2.39E-04
TCO4-										
TOC										
UO2+2										
UO3	9.01E-04	9.01E-04	9.02E+01	9.02E-03	9.02E+01	9.02E+01	9.02E+01		9.02E-03	9.02E-03
V+5										
V2O5	1.10E-06	1.10E-06	1.11E-01	1.11E-05	1.11E-01	1.11E-01	1.11E-01		1.11E-05	1.11E-05
WO2	2.91E-10	2.91E-10	2.91E-05	2.91E-09	2.91E-05	2.91E-05	2.91E-05		2.91E-09	2.91E-09
WO3	9.40E-06	9.40E-06	9.40E-01	9.40E-05	9.40E-01	9.40E-01	9.40E-01		9.40E-05	9.40E-05
ZN+2										
ZNO	4.46E-05	4.46E-05	4.46E+00	4.46E-04	4.46E+00	4.46E+00	4.46E+00		4.46E-04	4.46E-04
ZR+4										
ZRO2	6.49E-06	6.49E-06	6.49E-01	6.49E-05	6.49E-01	6.49E-01	6.49E-01		6.49E-05	6.49E-05
ZRO2:2H2										

Stream Name Liquid Components	445	446	447	448	449	450	510	511	512	513
Cs and Ba, (MCi)										
Sr and Y, (MCi)										
Tc, (MCi)										
Am, (MCi)										
Np, (MCi)										
Pu-239, (MCi)										
Pu-240, (MCi)										
Pu-241, (MCi)										
Total TRU, (MCi)										
Total MCi										
Total Mass Flow, (MT)	1.34E+05	1.27E+05	5.76E+02	3.36E+03	3.36E+03	1.34E+05	2.80E+04			1.96E+04
Total Cr, (MT)										
Total Na, (MT)										
Total Si, (MT)										
Total P, (MT)										
Total NO2-, (MT)										
Total NO3-, (MT)										
AG+										
AL(OH)4-										
AM+3										
AS+5										
B+3										
BA+2										
BE+2										
BI+3										
C14										
CA+2										
CD+2										
CE+3										
CL-										
CL2										
CO										
CO2										
CO3-2										
CR(OH)4-										
CS+										
CU+2										
DPCD	3.36E+03			3.36E+03		3.36E+03				
F-										
F2										
FE+3										
H+										
H2										
H2O							3.12E+02			1.96E+04
H2S										
HG										

Stream Name Liquid Components	445	446	447	448	449	450	510	511	512	513
HG+2										
I-										
I2										
K+										
KEROSENE										
LA+3										
LI+										
MG+2										
MNO2										
MO+6										
N2							2.19E+04			
NA+										
NH3										
NI+3										
NO										
NO2										
NO2-										
NO3-										
NP+4										
O2							5.82E+03			
OH-										
OLIGIMER	3.36E+03				3.36E+03	3.36E+03				
PB+4										
PO4-3										
POLY										
PU+4										
S	1.28E+05	1.27E+05	5.76E+02			1.28E+05				
SI+4										
SO2										
SO4-2										
SR+2										
TCO2										
TCO4-										
TOC										
UO2+2										
V+5										
W+6										
ZN+2										
ZR+4										
ZRO2:2H2										

Stream Name Solid Components	445	446	447	448	449	450	510	511	512	513
Cs and Ba, (MCi)							4.98E-03	4.98E-03	4.98E-03	
Sr and Y, (MCi)							1.92E-02	1.92E-02	1.92E-02	
Tc, (MCi)							2.62E-04	2.62E-04	2.62E-04	
Am, (MCi)							8.69E-05	8.69E-05	8.69E-05	
Np, (MCi)							1.04E-07	1.04E-07	1.04E-07	
Pu-239, (MCi)							1.69E-05	1.69E-05	1.69E-05	
Pu-240, (MCi)							4.18E-06	4.18E-06	4.18E-06	
Pu-241, (MCi)							1.50E-05	1.50E-05	1.50E-05	
Total TRU, (MCi)							1.23E-04	1.23E-04	1.23E-04	
Total MCi							2.45E-02	2.45E-02	2.45E-02	
Total Mass Flow, (MT)							3.91E+03	3.91E+03	3.91E+03	
Total Cr, (MT)							1.46E+00	1.46E+00	1.46E+00	
Total Na, (MT)							7.26E+02	7.26E+02	7.26E+02	
Total Si, (MT)							1.08E+03	1.08E+03	1.08E+03	
Total P, (MT)							1.36E+01	1.36E+01	1.36E+01	
Total NO2-, (MT)										
Total NO3-, (MT)										
AG+										
AG2O							3.55E-03	3.55E-03	3.55E-03	
AL+3										
AL2O3							1.96E+02	1.96E+02	1.96E+02	
AM+3										
AM2O3							2.78E-05	2.78E-05	2.78E-05	
AS+5										
AS2O5							1.19E-02	1.19E-02	1.19E-02	
B+3										
B2O3							1.69E-02	1.69E-02	1.69E-02	
BA+2										
BAO							8.90E-03	8.90E-03	8.90E-03	
BE+2										
BEO							2.29E-03	2.29E-03	2.29E-03	
BI+3										
BI2O3							7.60E-01	7.60E-01	7.60E-01	
C14										
CA+2										
CANCRINI										
CAO							3.91E+02	3.91E+02	3.91E+02	
CD+2										
CDO							2.40E-02	2.40E-02	2.40E-02	
CE+3										
CE2O3							2.81E-02	2.81E-02	2.81E-02	
CL-										
CO3-2										
CR+3										
CR2O3							2.13E+00	2.13E+00	2.13E+00	
CS+										

Stream Name Solid Components	445	446	447	448	449	450	510	511	512	513
CS2O							6.90E-05	6.90E-05	6.90E-05	
CU										
CU+2										
CUO							2.23E-03	2.23E-03	2.23E-03	
CUSO4										
F-										
FE+3										
FE2O3							2.08E-01	2.08E-01	2.08E-01	
HG+2										
I-										
K+										
K2O							2.68E-03	2.68E-03	2.68E-03	
LA+3										
LA2O3							2.61E-03	2.61E-03	2.61E-03	
LI+										
LI2O							1.25E-04	1.25E-04	1.25E-04	
MG+2										
MGO							1.61E-02	1.61E-02	1.61E-02	
MNO2							2.19E-01	2.19E-01	2.19E-01	
MO+6										
MOO3							7.36E-02	7.36E-02	7.36E-02	
NA+										
NA2O							9.78E+02	9.78E+02	9.78E+02	
NI+3										
NI2FECN6										
NI2O3							5.78E-02	5.78E-02	5.78E-02	
NIO							1.51E-04	1.51E-04	1.51E-04	
NO2-										
NO3-										
NP+4										
NPO2							1.68E-04	1.68E-04	1.68E-04	
OH-										
P2O5							3.12E+01	3.12E+01	3.12E+01	
P2O5.24W										
PB+4										
PBO2							2.28E-02	2.28E-02	2.28E-02	
PO4-3										
POLY										
PU+4										
PUO2							3.29E-04	3.29E-04	3.29E-04	
S										
SI+4										
SIO2							2.31E+03	2.31E+03	2.31E+03	
SO4-2										
SR+2										
SRO							4.04E-03	4.04E-03	4.04E-03	

Stream Name Solid Components	445	446	447	448	449	450	510	511	512	513
TC2O7							2.42E-02	2.42E-02	2.42E-02	
TCO4-										
TOC										
UO2+2										
UO3							9.11E-01	9.11E-01	9.11E-01	
V+5										
V2O5							1.12E-03	1.12E-03	1.12E-03	
WO2							2.94E-07	2.94E-07	2.94E-07	
WO3							9.50E-03	9.50E-03	9.50E-03	
ZN+2										
ZNO							4.50E-02	4.50E-02	4.50E-02	
ZR+4										
ZRO2							6.56E-03	6.56E-03	6.56E-03	
ZRO2:2H2										

Stream Name Liquid Components	514	520	521	522	523	524	561B	619	620	621
Cs and Ba, (MCi)										
Sr and Y, (MCi)										
Tc, (MCi)							6.86E-04		2.66E-02	6.86E-04
Am, (MCi)										
Np, (MCi)										
Pu-239, (MCi)										
Pu-240, (MCi)										
Pu-241, (MCi)										
Total TRU, (MCi)										
Total MCi							6.86E-04		2.66E-02	6.86E-04
Total Mass Flow, (MT)	1.96E+04		2.19E-10				1.03E+04	2.65E+05	3.87E+05	1.03E+04
Total Cr, (MT)										
Total Na, (MT)										
Total Si, (MT)										
Total P, (MT)										
Total NO2-, (MT)										
Total NO3-, (MT)										
AG+										
AL(OH)4-										
AM+3										
AS+5										
B+3										
BA+2										
BE+2										
BI+3										
C14										
CA+2										
CD+2										
CE+3										
CL-										
CL2								3.10E+02		
CO								2.35E+03		
CO2								1.89E+05		
CO3-2										
CR(OH)4-										
CS+										
CU+2										
DPCD										
F-										
F2								1.12E+03		
FE+3										
H+										
H2										
H2O	1.96E+04		2.19E-10				7.58E+03	1.48E+04	2.81E+05	7.58E+03
H2S										
HG							5.82E-02	1.13E-01	2.16E+00	5.82E-02

Stream Name Liquid Components	514	520	521	522	523	524	5618	619	620	621
HG+2										
I-										
I2								5.45E+02		
K+										
KEROSENE										
LA+3										
LI+										
MG+2										
MNO2										
MO+6										
N2								2.29E+04		
NA+										
NH3										
NI+3										
NO								3.11E+02		
NO2								1.34E+04		
NO2-										
NO3-										
NP+4										
O2								1.91E+04		
OH-										
OLIGIMER										
PB+4										
PO4-3										
POLY										
PU+4										
S										
SI+4										
SO2								1.33E+03		
SO4-2										
SR+2										
TCO2									2.02E+00	
TCO4-							6.62E-02		6.62E-02	6.62E-02
TOC										
UO2+2										
V+5										
W+6										
ZN+2										
ZR+4										
ZRO2:2H2							2.72E+03		1.06E+05	2.72E+03

Stream Name Solid Components	514	520	521	522	523	524	618	619	620	621
Cs and Ba, (MCi)	4.98E-03						1.34E-04	2.61E-04	4.96E-03	1.34E-04
Sr and Y, (MCi)	1.92E-02						5.15E-04	1.00E-03	1.91E-02	5.15E-04
Tc, (MCi)	2.62E-04						7.04E-06	1.37E-05	2.61E-04	7.04E-06
Am, (MCi)	8.69E-05						2.34E-06	4.55E-06	8.65E-05	2.34E-06
Np, (MCi)	1.04E-07						2.80E-09	5.45E-09	1.04E-07	2.80E-09
Pu-239, (MCi)	1.69E-05						4.53E-07	8.83E-07	1.68E-05	4.53E-07
Pu-240, (MCi)	4.18E-06						1.12E-07	2.19E-07	4.16E-06	1.12E-07
Pu-241, (MCi)	1.50E-05						3.73E-07	7.84E-07	1.49E-05	3.73E-07
Total TRU, (MCi)	1.23E-04						3.28E-06	6.45E-06	1.23E-04	3.28E-06
Total MCi	2.45E-02						6.59E-04	1.29E-03	2.44E-02	6.59E-04
Total Mass Flow, (MT)	3.91E+03						1.05E+02	2.05E+02	3.90E+03	1.05E+02
Total Cr, (MT)	1.46E+00						3.91E-02	7.63E-02	1.45E+00	3.91E-02
Total Na, (MT)	7.26E+02						1.95E+01	3.80E+01	7.23E+02	1.95E+01
Total Si, (MT)	1.08E+03						2.90E+01	5.66E+01	1.08E+03	2.90E+01
Total P, (MT)	1.36E+01						3.67E-01	7.15E-01	1.36E+01	3.67E-01
Total NO2-, (MT)										
Total NO3-, (MT)										
AG+										
AG2O	3.55E-03						9.55E-05	1.86E-04	3.54E-03	9.55E-05
AL+3										
AL2O3	1.96E+02						5.26E+00	1.03E+01	1.95E+02	5.26E+00
AM+3										
AM2O3	2.78E-05						7.48E-07	1.46E-06	2.77E-05	7.48E-07
AS+5										
AS2O5	1.19E-02						3.20E-04	6.24E-04	1.19E-02	3.20E-04
B+3										
B2O3	1.69E-02						4.53E-04	8.83E-04	1.68E-02	4.53E-04
BA+2										
BAO	8.90E-03						2.39E-04	4.67E-04	8.87E-03	2.39E-04
BE+2										
BEO	2.29E-03						6.16E-05	1.20E-04	2.28E-03	6.16E-05
BI+3										
BI2O3	7.60E-01						2.04E-02	3.98E-02	7.56E-01	2.04E-02
C14										
CA+2										
CANCRINI										
CAO	3.91E+02						1.05E+01	2.05E+01	3.90E+02	1.05E+01
CD+2										
CDO	2.40E-02						6.46E-04	1.26E-03	2.39E-02	6.46E-04
CE+3										
CE2O3	2.81E-02						7.56E-04	1.48E-03	2.80E-02	7.56E-04
CL-										
CO3-2										
CR+3										
CR2O3	2.13E+00						5.71E-02	1.11E-01	2.12E+00	5.71E-02
CS+										

Stream Name Solid Components	514	520	521	522	523	524	618	619	620	621
CS2O	6.90E-05						1.85E-06	3.61E-06	6.87E-05	1.85E-06
CU										
CU+2										
CUO	2.23E-03						6.00E-05	1.17E-04	2.22E-03	6.00E-05
CUSO4										
F-										
FE+3										
FE2O3	2.08E-01						5.58E-03	1.09E-02	2.07E-01	5.58E-03
HG+2										
I-										
K+										
K2O	2.68E-03						7.19E-05		2.81E-03	7.19E-05
LA+3										
LA2O3	2.61E-03						7.00E-05	1.37E-04	2.59E-03	7.00E-05
LI+										
LI2O	1.25E-04						3.37E-06	6.57E-06	1.25E-04	3.37E-06
MG+2										
MGO	1.61E-02						4.34E-04	8.46E-04	1.61E-02	4.34E-04
MNO2	2.19E-01						5.88E-03	1.15E-02	2.18E-01	5.88E-03
MO+6										
MOO3	7.36E-02						1.98E-03	3.86E-03	7.33E-02	1.98E-03
NA+										
NA2O	9.78E+02						2.63E+01	5.13E+01	9.74E+02	2.63E+01
NI+3										
NI2FECN6										
NI2O3	5.78E-02						1.55E-03		6.06E-02	1.55E-03
NIO	1.51E-04						4.06E-06	7.93E-06	1.51E-04	4.06E-06
NO2-										
NO3-										
NP+4										
NPO2	1.68E-04						4.50E-06	8.78E-06	1.67E-04	4.50E-06
OH-										
P2O5	3.12E+01						8.40E-01	1.64E+00	3.11E+01	8.40E-01
P2O5.24W										
PB+4										
PBO2	2.28E-02						6.13E-04	1.20E-03	2.27E-02	6.13E-04
PO4-3										
POLY										
PU+4										
PUO2	3.29E-04						8.85E-06	1.73E-05	3.28E-04	8.85E-06
S										
SI+4										
SIO2	2.31E+03						6.21E+01	1.21E+02	2.30E+03	6.21E+01
SO4-2										
SR+2										
SRO	4.04E-03						1.09E-04	2.12E-04	4.03E-03	1.09E-04

Stream Name Solid Components	514	520	521	522	523	524	618	619	620	621
TC2O7	2.42E-02						6.50E-04	1.27E-03	2.41E-02	6.50E-04
TCO4-										
TOC										
UO2+2										
UO3	9.11E-01						2.45E-02	4.77E-02	9.07E-01	2.45E-02
V+5										
V2O5	1.12E-03						3.00E-05	5.85E-05	1.11E-03	3.00E-05
WO2	2.94E-07						7.30E-09	1.54E-08	2.92E-07	7.30E-09
WO3	9.50E-03						2.55E-04	4.98E-04	9.46E-03	2.55E-04
ZN+2										
ZNO	4.50E-02						1.21E-03	2.36E-03	4.49E-02	1.21E-03
ZR+4										
ZRO2	6.56E-03						1.76E-04	3.44E-04	6.53E-03	1.76E-04
ZRO2:2H2										

Stream Name Liquid Components	622	623	624	625	626	627	628	629	630	631
Cs and Ba, (MCi)										
Sr and Y, (MCi)										
Tc, (MCi)	6.86E-04		6.86E-04	6.86E-04			6.86E-04		2.61E-02	1.37E-03
Am, (MCi)										
Np, (MCi)										
Pu-239, (MCi)										
Pu-240, (MCi)										
Pu-241, (MCi)										
Total TRU, (MCi)										
Total MCi	6.86E-04		6.86E-04	6.86E-04			6.86E-04		2.61E-02	1.37E-03
Total Mass Flow, (MT)	2.75E+05	2.12E+04	2.54E+05	2.54E+05		2.50E+05	3.67E+03		3.91E+05	2.06E+04
Total Cr, (MT)										
Total Na, (MT)										
Total Si, (MT)										
Total P, (MT)										
Total NO2-, (MT)										
Total NO3-, (MT)										
AG+										
AL(OH)4-										
AM+3										
AS+5										
B+3										
BA+2										
BE+2										
BI+3										
C14										
CA+2										
CD+2										
CE+3										
CL-										
CL2	3.10E+02		3.10E+02	3.10E+02		3.10E+02				
CO	2.35E+03		2.35E+03	2.35E+03		2.35E+03				
CO2	1.89E+05		1.89E+05	1.89E+05		1.89E+05				
CO3-2										
CR(OH)4-										
CS+										
CU+2										
DPCD										
F-										
F2	1.12E+03		1.12E+03	1.12E+03		1.12E+03				
FE+3										
H+										
H2										
H2O	2.24E+04	2.12E+04	1.12E+03	1.12E+03		1.68E+02	9.50E+02		2.88E+05	1.52E+04
H2S										
HG	1.72E-01	1.72E-01							2.21E+00	1.16E-01

Stream Name Liquid Components	622	623	624	625	626	627	628	629	630	631
HG+2										
I-										
I2	5.45E+02		5.45E+02	5.45E+02		5.45E+02				
K+										
KEROSENE										
LA+3										
LI+										
MG+2										
MNO2										
MO+6										
N2	2.29E+04		2.29E+04	2.29E+04		2.29E+04				
NA+										
NH3										
NI+3										
NO	3.11E+02		3.11E+02	3.11E+02		3.11E+02				
NO2	1.34E+04		1.34E+04	1.34E+04		1.34E+04				
NO2-										
NO3-										
NP+4										
O2	1.91E+04		1.91E+04	1.91E+04		1.91E+04				
OH-										
OLIGIMER										
PB+4										
PO4-3										
POLY										
PU+4										
S										
SI+4										
SO2	1.33E+03		1.33E+03	1.33E+03		1.33E+03				
SO4-2										
SR+2										
TCO2										
TCO4-	6.62E-02		6.62E-02	6.62E-02			6.62E-02		2.52E+00	1.32E-01
TOC										
UO2+2										
V+5										
W+6										
ZN+2										
ZR+4										
ZRO2.2H2	2.72E+03		2.72E+03	2.72E+03			2.72E+03		1.03E+05	5.44E+03

Stream Name Solid Components	622	623	624	625	626	627	628	629	630	631
Cs and Ba, (MCi)	3.95E-04	3.75E-04	1.98E-05	1.98E-05		3.95E-07	1.94E-05		5.09E-03	2.68E-04
Sr and Y, (MCi)	1.52E-03	1.44E-03	7.59E-05	7.59E-05		1.52E-06	7.44E-05		1.96E-02	1.03E-03
Tc, (MCi)	2.08E-05	1.97E-05	1.04E-06	1.04E-06		2.08E-08	1.02E-06		2.67E-04	1.41E-05
Am, (MCi)	6.89E-06	6.54E-06	3.44E-07	3.44E-07		6.89E-09	3.38E-07		8.87E-05	4.67E-06
Np, (MCi)	8.25E-09	7.84E-09	4.12E-10	4.12E-10		8.25E-12	4.04E-10		1.06E-07	5.59E-09
Pu-239, (MCi)	1.34E-06	1.27E-06	6.68E-08	6.68E-08		1.34E-09	6.55E-08		1.72E-05	9.06E-07
Pu-240, (MCi)	3.31E-07	3.15E-07	1.66E-08	1.66E-08		3.31E-10	1.62E-08		4.27E-06	2.25E-07
Pu-241, (MCi)	1.16E-06								1.42E-05	7.45E-07
Total TRU, (MCi)	9.72E-06	8.14E-06	4.28E-07	4.28E-07		8.56E-09	4.20E-07		1.25E-04	6.55E-06
Total MCi	1.94E-03	1.85E-03	9.71E-05	9.71E-05		1.94E-06	9.52E-05		2.50E-02	1.32E-03
Total Mass Flow, (MT)	3.10E+02	2.95E+02	1.55E+01	1.55E+01		3.10E-01	1.52E+01		4.00E+03	2.10E+02
Total Cr, (MT)	1.15E-01	1.10E-01	5.77E-03	5.77E-03		1.15E-04	5.65E-03		1.49E+00	7.82E-02
Total Na, (MT)	5.75E+01	5.47E+01	2.88E+00	2.88E+00		5.75E-02	2.82E+00		7.41E+02	3.90E+01
Total Si, (MT)	8.57E+01	8.14E+01	4.28E+00	4.28E+00		8.57E-02	4.20E+00		1.10E+03	5.81E+01
Total P, (MT)	1.08E+00	1.03E+00	5.41E-02	5.41E-02		1.08E-03	5.30E-02		1.39E+01	7.33E-01
Total NO2-, (MT)										
Total NO3-, (MT)										
AG+										
AG2O	2.82E-04	2.68E-04	1.41E-05	1.41E-05		2.82E-07	1.38E-05		3.63E-03	1.91E-04
AL+3										
AL2O3	1.55E+01	1.47E+01	7.76E-01	7.76E-01		1.55E-02	7.60E-01		2.00E+02	1.05E+01
AM+3										
AM2O3	2.21E-06	2.10E-06	1.10E-07	1.10E-07		2.21E-09	1.08E-07		2.84E-05	1.50E-06
AS+5										
AS2O5	9.44E-04	8.97E-04	4.72E-05	4.72E-05		9.44E-07	4.63E-05		1.22E-02	6.40E-04
B+3										
B2O3	1.34E-03	1.27E-03	6.68E-05	6.68E-05		1.34E-06	6.55E-05		1.72E-02	9.06E-04
BA+2										
BAO	7.06E-04	6.71E-04	3.53E-05	3.53E-05		7.06E-07	3.46E-05		9.09E-03	4.79E-04
BE+2										
BEO	1.82E-04	1.73E-04	9.08E-06	9.08E-06		1.82E-07	8.90E-06		2.34E-03	1.23E-04
BI+3										
BI2O3	6.02E-02	5.72E-02	3.01E-03	3.01E-03		6.02E-05	2.95E-03		7.76E-01	4.08E-02
C14										
CA+2										
CANCRINI										
CAO	3.10E+01	2.95E+01	1.55E+00	1.55E+00		3.10E-02	1.52E+00		4.00E+02	2.10E+01
CD+2										
CDO	1.91E-03	1.81E-03	9.53E-05	9.53E-05		1.91E-06	9.33E-05		2.45E-02	1.29E-03
CE+3										
CE2O3	2.23E-03	2.12E-03	1.12E-04	1.12E-04		2.23E-06	1.09E-04		2.87E-02	1.51E-03
CL-										
CO3-2										
CR+3										
CR2O3	1.69E-01	1.60E-01	8.43E-03	8.43E-03		1.69E-04	8.26E-03		2.17E+00	1.14E-01
CS+										

Stream Name Solid Components	622	623	624	625	626	627	628	629	630	631
CS2O	5.47E-06	5.19E-06	2.73E-07	2.73E-07		4.84E-09	2.37E-07		7.04E-05	3.71E-06
CU										
CU+2										
CUO	1.77E-04	1.68E-04	8.86E-06	8.86E-06		1.77E-07	8.68E-06		2.28E-03	1.20E-04
CUSO4										
F-										
FE+3										
FE2O3	1.65E-02	1.57E-02	8.24E-04	8.24E-04		1.65E-05	8.07E-04		2.12E-01	1.12E-02
HG+2										
I-										
K+										
K2O	7.19E-05		7.19E-05	7.19E-05			7.19E-05		2.73E-03	1.44E-04
LA+3										
LA2O3	2.07E-04	1.96E-04	1.03E-05	1.03E-05		2.07E-07	1.01E-05		2.66E-03	1.40E-04
LI+										
LI2O	9.93E-06	9.44E-06	4.97E-07	4.97E-07		9.93E-09	4.87E-07		1.28E-04	6.73E-06
MG+2										
MGO	1.28E-03	1.22E-03	6.40E-05	6.40E-05		1.28E-06	6.27E-05		1.65E-02	8.68E-04
MNO2	1.73E-02	1.65E-02	8.67E-04	8.67E-04		1.73E-05	8.49E-04		2.23E-01	1.18E-02
MO+6										
MOO3	5.84E-03	5.55E-03	2.92E-04	2.92E-04		5.84E-06	2.86E-04		7.52E-02	3.96E-03
NA+										
NA2O	7.76E+01	7.37E+01	3.88E+00	3.88E+00		7.76E-02	3.80E+00		9.99E+02	5.26E+01
NI+3										
NI2FECN6										
NI2O3	1.55E-03		1.55E-03	1.55E-03			1.55E-03		5.90E-02	3.11E-03
NIO	1.20E-05	1.14E-05	5.99E-07	5.99E-07		1.20E-08	5.88E-07		1.54E-04	8.13E-06
NO2-										
NO3-										
NP+4										
NPO2	1.33E-05	1.26E-05	6.64E-07	6.64E-07		1.33E-08	6.51E-07		1.71E-04	9.00E-06
OH-										
P2O5	2.48E+00	2.35E+00	1.24E-01	1.24E-01		2.48E-03	1.21E-01		3.19E+01	1.68E+00
P2O5:24W										
PB+4										
PBO2	1.81E-03	1.72E-03	9.04E-05	9.04E-05		1.81E-06	8.86E-05		2.33E-02	1.23E-03
PO4-3										
POLY										
PU+4										
PUO2	2.61E-05	2.48E-05	1.30E-06	1.30E-06		2.61E-08	1.28E-06		3.36E-04	1.77E-05
S										
SI+4										
SIO2	1.83E+02	1.74E+02	9.16E+00	9.16E+00		1.83E-01	8.98E+00		2.36E+03	1.24E+02
SO4-2										
SR+2										
SRO	3.21E-04	3.05E-04	1.60E-05	1.60E-05		3.21E-07	1.57E-05		4.13E-03	2.17E-04

Stream Name Solid Components	622	623	624	625	626	627	628	629	630	631
TC2O7	1.92E-03	1.82E-03	9.58E-05	9.58E-05		1.92E-06	9.39E-05		2.47E-02	1.30E-03
TCO4-										
TOC										
UO2+2										
UO3	7.22E-02	6.86E-02	3.61E-03	3.61E-03		7.22E-05	3.54E-03		9.30E-01	4.90E-02
V+5										
V2O5	8.85E-05	8.41E-05	4.43E-06	4.43E-06		8.85E-08	4.34E-06		1.14E-03	6.00E-05
WO2	2.27E-08								2.77E-07	1.46E-08
WO3	7.53E-04	7.15E-04	3.77E-05	3.77E-05		7.53E-07	3.69E-05		9.70E-03	5.10E-04
ZN+2										
ZNO	3.57E-03	3.39E-03	1.79E-04	1.79E-04		3.57E-06	1.75E-04		4.60E-02	2.42E-03
ZR+4										
ZRO2	5.20E-04	4.94E-04	2.60E-05	2.60E-05		5.20E-07	2.55E-05		6.70E-03	3.53E-04
ZRO2:2H2										

Stream Name Liquid Components	632	633	634	635	636	637	638	639	640	641
Cs and Ba, (MCi)										
Sr and Y, (MCi)										
Tc, (MCi)	5.94E-03									
Am, (MCi)										
Np, (MCi)										
Pu-239, (MCi)										
Pu-240, (MCi)										
Pu-241, (MCi)										
Total TRU, (MCi)										
Total MCi	5.94E-03									
Total Mass Flow, (MT)	5.05E+04	2.19E-10	2.50E+05			2.19E+00	2.57E+05	2.57E+05	2.57E+05	2.55E+05
Total Cr, (MT)										
Total Na, (MT)										
Total Si, (MT)										
Total P, (MT)										
Total NO2-, (MT)										
Total NO3-, (MT)										
AG+										
AL(OH)4-										
AM+3										
AS+5										
B+3										
BA+2										
BE+2										
BI+3										
C14										
CA+2										
CD+2										
CE+3										
CL-										
CL2			3.10E+02				3.10E+02	3.10E+02	3.10E+02	3.10E+02
CO			2.35E+03				2.35E+03	2.35E+03	2.35E+03	2.35E+03
CO2			1.89E+05				1.89E+05	1.89E+05	1.89E+05	1.89E+05
CO3-2										
CR(OH)4-										
CS+										
CU+2										
DPCD										
F-										
F2			1.12E+03				1.12E+03	1.12E+03	1.12E+03	1.12E+03
FE+3										
H+										
H2										
H2O	5.05E+04	2.19E-10	1.68E+02				2.81E+03	2.81E+03	2.81E+03	2.81E+03
H2S										
HG	2.59E-02									

Stream Name Liquid Components	632	633	634	635	636	637	638	639	640	641
HG+2										
I-										
I2			5.45E+02				5.45E+02	5.45E+02	5.45E+02	5.45E+02
K+										
KEROSENE										
LA+3										
LI+										
MG+2										
MNO2										
MO+6										
N2			2.29E+04				2.62E+04	2.62E+04	2.62E+04	2.62E+04
NA+										
NH3										
NI+3										
NO			3.11E+02				3.11E+02	3.11E+02	3.11E+02	3.11E+02
NO2			1.34E+04				1.34E+04	1.34E+04	1.34E+04	1.34E+04
NO2-										
NO3-										
NP+4										
O2			1.91E+04			2.19E+00	1.92E+04	1.92E+04	1.92E+04	1.87E+04
OH-										
OLIGIMER										
PB+4										
PO4-3										
POLY										
PU+4										
S										
SI+4										
SO2			1.33E+03				2.09E+03	2.09E+03	2.09E+03	2.09E+02
SO4-2										
SR+2										
TCO2										
TCO4-	5.73E-01									
TOC										
UO2+2										
V+5										
W+6										
ZN+2										
ZR+4										
ZRO2.2H2										

Stream Name Solid Components	632	633	634	635	636	637	638	639	640	641
Cs and Ba, (MCi)	6.96E-01		1.98E-10	3.95E-07	3.95E-07		1.98E-10	1.98E-10	1.98E-10	
Sr and Y, (MCi)	1.09E+00		7.59E-10	1.52E-06	1.52E-06		7.59E-10	7.59E-10	7.59E-10	
Tc, (MCi)	6.09E-05		1.04E-11	2.08E-08	2.08E-08		1.04E-11	1.04E-11	1.04E-11	
Am, (MCi)	9.82E-04		3.44E-12	6.89E-09	6.89E-09		3.44E-12	3.44E-12	3.44E-12	
Np, (MCi)	9.58E-07		4.12E-15	8.25E-12	8.25E-12		4.12E-15	4.12E-15	4.12E-15	
Pu-239, (MCi)	2.55E-04		6.68E-13	1.34E-09	1.34E-09		6.68E-13	6.68E-13	6.68E-13	
Pu-240, (MCi)	6.48E-05		1.66E-13	3.31E-10	3.31E-10		1.66E-13	1.66E-13	1.66E-13	
Pu-241, (MCi)	7.54E-04									
Total TRU, (MCi)	2.06E-03		4.28E-12	8.56E-09	8.56E-09		4.28E-12	4.28E-12	4.28E-12	
Total MCi	1.79E+00		9.71E-10	1.94E-06	1.94E-06		9.71E-10	9.71E-10	9.71E-10	
Total Mass Flow, (MT)	2.59E+02		1.55E-04	3.10E-01	3.10E-01		1.55E-04	1.55E-04	1.55E-04	1.55E-04
Total Cr, (MT)	4.09E-01		5.77E-08	1.15E-04	1.15E-04		5.77E-08	5.77E-08	5.77E-08	5.77E-08
Total Na, (MT)	2.40E+01		2.88E-05	5.75E-02	5.75E-02		2.88E-05	2.88E-05	2.88E-05	2.88E-05
Total Si, (MT)	6.01E+01		4.28E-05	8.56E-02	8.56E-02		4.28E-05	4.28E-05	4.28E-05	4.28E-05
Total P, (MT)	2.80E+00		5.41E-07	1.08E-03	1.08E-03		5.41E-07	5.41E-07	5.41E-07	5.41E-07
Total NO2-, (MT)										
Total NO3-, (MT)										
AG+										
AG2O	1.53E-02		1.41E-10	2.82E-07	2.82E-07		1.41E-10	1.41E-10	1.41E-10	
AL+3										
AL2O3	1.79E+01		7.76E-06	1.55E-02	1.55E-02		7.76E-06	7.76E-06	7.76E-06	7.76E-06
AM+3										
AM2O3	3.14E-04		1.10E-12	2.21E-09	2.21E-09		1.10E-12	1.10E-12	1.10E-12	
AS+5										
AS2O5	7.91E-03		4.72E-10	9.43E-07	9.43E-07		4.72E-10	4.72E-10	4.72E-10	
B+3										
B2O3	1.81E+01		6.68E-10	1.34E-06	1.34E-06		6.68E-10	6.68E-10	6.68E-10	
BA+2										
BAO	3.56E-02		3.53E-10	7.06E-07	7.06E-07		3.53E-10	3.53E-10	3.53E-10	
BE+2										
BEO	2.23E-04		9.08E-11	1.82E-07	1.82E-07		9.08E-11	9.08E-11	9.08E-11	
BI+3										
BI2O3	2.26E+00		3.01E-08	6.02E-05	6.02E-05		3.01E-08	3.01E-08	3.01E-08	
C14										
CA+2										
CANCRIN1										
CAO	1.95E+00		1.55E-05	3.10E-02	3.10E-02		1.55E-05	1.55E-05	1.55E-05	1.55E-05
CD+2										
CDO	9.35E-02		9.53E-10	1.90E-06	1.90E-06		9.53E-10	9.53E-10	9.53E-10	
CE+3										
CE2O3	2.84E+00		1.12E-09	2.23E-06	2.23E-06		1.12E-09	1.12E-09	1.12E-09	
CL-										
CO3-2										
CR+3										
CR2O3	5.98E-01		8.43E-08	1.69E-04	1.69E-04		8.43E-08	8.43E-08	8.43E-08	8.43E-08
CS+										

Stream Name Solid Components	632	633	634	635	636	637	638	639	640	641
CS2O	9.88E-03		2.42E-12	4.83E-09	4.83E-09		2.42E-12	2.42E-12	2.42E-12	
CU										
CU+2										
CUO	9.64E-03		8.86E-11	1.77E-07	1.77E-07		8.86E-11	8.86E-11	8.86E-11	
CUSO4										
F-										
FE+3										
FE2O3	1.25E+01		8.24E-09	1.65E-05	1.65E-05		8.24E-09	8.24E-09	8.24E-09	
HG+2										
I-										
K+										
K2O	2.61E-01									
LA+3										
LA2O3	2.54E-01		1.03E-10	2.06E-07	2.06E-07		1.03E-10	1.03E-10	1.03E-10	
LI+										
LI2O	5.18E+00		4.97E-12	9.93E-09	9.93E-09		4.97E-12	4.97E-12	4.97E-12	
MG+2										
MGO	1.94E-01		6.40E-10	1.28E-06	1.28E-06		6.40E-10	6.40E-10	6.40E-10	
MNO2	2.16E+00		8.67E-09	1.73E-05	1.73E-05		8.67E-09	8.67E-09	8.67E-09	
MO+6										
MOO3	1.26E-02		2.92E-09	5.84E-06	5.84E-06		2.92E-09	2.92E-09	2.92E-09	
NA+										
NA2O	3.24E+01		3.88E-05	7.75E-02	7.75E-02		3.88E-05	3.88E-05	3.88E-05	3.88E-05
NI+3										
NI2FECN6										
NI2O3	9.56E-02									
NIO	2.34E+00		5.99E-12	1.20E-08	1.20E-08		5.99E-12	5.99E-12	5.99E-12	
NO2-										
NO3-										
NP+4										
NPO2	1.54E-03		6.64E-12	1.33E-08	1.33E-08		6.64E-12	6.64E-12	6.64E-12	
OH-										
P2O5	6.41E+00		1.24E-06	2.48E-03	2.48E-03		1.24E-06	1.24E-06	1.24E-06	1.24E-06
P2O5:24W										
PB+4										
PBO2	3.91E-02		9.04E-10	1.81E-06	1.81E-06		9.04E-10	9.04E-10	9.04E-10	
PO4-3										
POLY										
PU+4										
PUO2	4.99E-03		1.30E-11	2.61E-08	2.61E-08		1.30E-11	1.30E-11	1.30E-11	
S										
SI+4										
SIO2	1.29E+02		9.16E-05	1.83E-01	1.83E-01		9.16E-05	9.16E-05	9.16E-05	9.16E-05
SO4-2										
SR+2										
SRO	4.43E-01		1.60E-10	3.20E-07	3.20E-07		1.60E-10	1.60E-10	1.60E-10	

Stream Name Solid Components	632	633	634	635	636	637	638	639	640	641
TC2O7	5.62E-03		9.58E-10	1.92E-06	1.92E-06		9.58E-10	9.58E-10	9.58E-10	
TCO4-										
TOC										
UO2+2										
UO3	1.73E+01		3.61E-08	7.22E-05	7.22E-05		3.61E-08	3.61E-08	3.61E-08	
V+5										
V2O5	3.46E-03		4.43E-11	8.85E-08	8.85E-08		4.43E-11	4.43E-11	4.43E-11	
WO2	4.55E-03									
WO3	2.13E-05		3.77E-10	7.53E-07	7.53E-07		3.77E-10	3.77E-10	3.77E-10	
ZN+2										
ZNO	1.22E-02		1.79E-09	3.57E-06	3.57E-06		1.79E-09	1.79E-09	1.79E-09	
ZR+4										
ZRO2	7.12E+00		2.60E-10	5.20E-07	5.20E-07		2.60E-10	2.60E-10	2.60E-10	
ZRO2:2H2										

Stream Name Liquid Components	642	643	644	645	646	647	648	649	650	651
Cs and Ba, (MCi)										
Sr and Y, (MCi)										
Tc, (MCi)										
Am, (MCi)										
Np, (MCi)										
Pu-239, (MCi)										
Pu-240, (MCi)										
Pu-241, (MCi)										
Total TRU, (MCi)										
Total MCi										
Total Mass Flow, (MT)	2.55E+05	6.78E+03	2.61E+05	2.61E+05		1.69E+03	3.11E+03		1.40E+03	1.42E+05
Total Cr, (MT)										
Total Na, (MT)										
Total Si, (MT)										
Total P, (MT)										
Total NO2-, (MT)										
Total NO3-, (MT)										
AG+										
AL(OH)4-										
AM+3										
AS+5										
B+3										
BA+2										
BE+2										
BI+3										
C14										
CA+2										
CD+2										
CE+3										
CL-										
CL2	3.10E+02		3.10E+02	3.10E+02						
CO	2.35E+03		2.35E+03	2.35E+03						
CO2	1.89E+05		1.89E+05	1.89E+05						
CO3-2										
CR(OH)4-										
CS+										
CU+2										
DPCD										
F-										
F2	1.12E+03		1.12E+03	1.12E+03						
FE+3										
H+										
H2						2.97E+02			2.21E+00	
H2O	2.81E+03		1.35E+04	1.35E+04			2.11E+03			
H2S							9.98E+02			
HG										

Stream Name Liquid Components	642	643	644	645	646	647	648	649	650	651
HG+2										
I-										
I2	5.45E+02		5.45E+02	5.45E+02						
K+										
KEROSENE										
LA+3										
LI+										
MG+2										
MNO2										
MO+6										
N2	2.62E+04		3.59E+04	3.59E+04		1.38E+03			1.38E+03	1.12E+05
NA+										
NH3		6.78E+03	1.63E+01	1.63E+01		1.69E+01			1.69E+01	
NI+3										
NO	3.11E+02		3.11E+00	3.11E+00						
NO2	1.34E+04		1.39E+02	1.39E+02						
NO2-										
NO3-										
NP+4										
O2	1.87E+04		1.85E+04	1.85E+04						2.98E+04
OH-										
OLIGIMER										
PB+4										
PO4-3										
POLY										
PU+4										
S										
SI+4										
SO2	2.09E+02		2.09E+02	2.09E+02						
SO4-2										
SR+2										
TCO2										
TCO4-										
TOC										
UO2+2										
V+5										
W+6										
ZN+2										
ZR+4										
ZRO2:2H2										

Stream Name Solid Components	642	643	644	645	646	647	648	649	650	651
Cs and Ba, (MCi)										
Sr and Y, (MCi)										
Tc, (MCi)										
Am, (MCi)										
Np, (MCi)										
Pu-239, (MCi)										
Pu-240, (MCi)										
Pu-241, (MCi)										
Total TRU, (MCi)										
Total MCi										
Total Mass Flow, (MT)	1.55E-04		1.55E-04	1.55E-04	4.68E+03				1.86E+03	
Total Cr, (MT)	5.77E-08		5.77E-08	5.77E-08						
Total Na, (MT)	2.88E-05		2.88E-05	2.88E-05						
Total Si, (MT)	4.28E-05		4.28E-05	4.28E-05						
Total P, (MT)	5.41E-07		5.41E-07	5.41E-07						
Total NO2-, (MT)										
Total NO3-, (MT)										
AG+										
AG2O										
AL+3										
AL2O3	7.76E-06		7.76E-06	7.76E-06						
AM+3										
AM2O3										
AS+5										
AS2O5										
B+3										
B2O3										
BA+2										
BAO										
BE+2										
BEO										
BI+3										
BI2O3										
C14										
CA+2										
CANCRINI										
CAO	1.55E-05		1.55E-05	1.55E-05						
CD+2										
CDO										
CE+3										
CE2O3										
CL-										
CO3-2										
CR+3										
CR2O3	8.43E-08		8.43E-08	8.43E-08						
CS+										

Stream Name Solid Components	642	643	644	645	646	647	648	649	650	651
CS2O										
CU									1.86E+03	
CU+2										
CUO										
CUSO4					4.68E+03					
F-										
FE+3										
FE2O3										
HG+2										
I-										
K+										
K2O										
LA+3										
LA2O3										
LI+										
LI2O										
MG+2										
MGO										
MNO2										
MO+6										
MOO3										
NA+										
NA2O	3.88E-05		3.88E-05	3.88E-05						
NI+3										
NI2FECN6										
NI2O3										
NIO										
NO2-										
NO3-										
NP+4										
NPO2										
OH-										
P2O5	1.24E-06		1.24E-06	1.24E-06						
P2O5:24W										
PB+4										
PBO2										
PO4-3										
POLY										
PU+4										
PUO2										
S										
SI+4										
SIO2	9.16E-05		9.16E-05	9.16E-05						
SO4-2										
SR+2										
SRO										

Stream Name Solid Components	642	643	644	645	646	647	648	649	650	651
TC2O7										
TCO4-										
TOC										
UO2+2										
UO3										
V+5										
V2O5										
WO2										
WO3										
ZN+2										
ZNO										
ZR+4										
ZRO2										
ZRO2:2H2										

Stream Name Liquid Components	652	653	654	655	656	670	671	672	673	674
Cs and Ba, (MCi)										
Sr and Y, (MCi)										
Tc, (MCi)										
Am, (MCi)										
Np, (MCi)										
Pu-239, (MCi)										
Pu-240, (MCi)										
Pu-241, (MCi)										
Total TRU, (MCi)										
Total MCi										
Total Mass Flow, (MT)	1.43E+05	1.69E+03	8.48E+03			4.18E+03	7.29E+03	7.29E+03	7.29E+03	5.63E+02
Total Cr, (MT)										
Total Na, (MT)										
Total Si, (MT)										
Total P, (MT)										
Total NO2-, (MT)										
Total NO3-, (MT)										
AG+										
AL(OH)4-										
AM+3										
AS+5										
B+3										
BA+2										
BE+2										
BI+3										
C14										
CA+2										
CD+2										
CE+3										
CL-										
CL2										
CO										
CO2										
CO3-2										
CR(OH)4-										
CS+										
CU+2										
DPCD										
F-										
F2										
FE+3										
H+										
H2	2.21E+00									
H2O							2.64E+03	2.64E+03	2.64E+03	
H2S										
HG										

Stream Name Liquid Components	652	653	654	655	656	670	671	672	673	674
HG+2										
I-										
I2										
K+										
KEROSENE										
LA+3										
LI+										
MG+2										
MNO2										
MO+6										
N2	1.13E+05					3.31E+03	3.31E+03	3.31E+03	3.31E+03	
NA+										
NH3	1.69E+01	1.69E+03	8.48E+03							
NI+3										
NO										
NO2										
NO2-										
NO3-										
NP+4										
O2	2.93E+04					8.79E+02	3.51E+01	3.51E+01	3.51E+01	
OH-										
OLIGIMER										
PB+4										
PO4-3										
POLY										
PU+4										
S							5.63E+02	5.63E+02	5.63E+02	5.63E+02
SI+4										
SO2							7.51E+02	7.51E+02	7.51E+02	
SO4-2										
SR+2										
TCO2										
TCO4-										
TOC										
UO2+2										
V+5										
W+6										
ZN+2										
ZR+4										
ZRO2:2H2										

Stream Name Solid Components	652	653	654	655	656	670	671	672	673	674
Cs and Ba, (MCi)										
Sr and Y, (MCi)										
Tc, (MCi)										
Am, (MCi)										
Np, (MCi)										
Pu-239, (MCi)										
Pu-240, (MCi)										
Pu-241, (MCi)										
Total TRU, (MCi)										
Total MCi										
Total Mass Flow, (MT)										
Total Cr, (MT)										
Total Na, (MT)										
Total Si, (MT)										
Total P, (MT)										
Total NO2-, (MT)										
Total NO3-, (MT)										
AG+										
AG2O										
AL+3										
AL2O3										
AM+3										
AM2O3										
AS+5										
AS2O5										
B+3										
B2O3										
BA+2										
BAO										
BE+2										
BEO										
BI+3										
BI2O3										
C14										
CA+2										
CANCRINI										
CAO										
CD+2										
CDO										
CE+3										
CE2O3										
CL-										
CO3-2										
CR+3										
CR2O3										
CS+										

Stream Name Solid Components	652	653	654	655	656	670	671	672	673	674
CS2O										
CU										
CU+2										
CUO										
CUSO4										
F-										
FE+3										
FE2O3										
HG+2										
I-										
K+										
K2O										
LA+3										
LA2O3										
LI+										
LI2O										
MG+2										
MGO										
MNO2										
MO+6										
MOO3										
NA+										
NA2O										
NI+3										
NI2FECN6										
NI2O3										
NIO										
NO2-										
NO3-										
NP+4										
NPO2										
OH-										
P2O5										
P2O5:24W										
PB+4										
PBO2										
PO4-3										
POLY										
PU+4										
PUO2										
S										
SI+4										
SIO2										
SO4-2										
SR+2										
SRO										

Stream Name Solid Components	652	653	654	655	656	670	671	672	673	674
TC2O7										
TCO4-										
TOC										
UO2+2										
UO3										
V+5										
V2O5										
WO2										
WO3										
ZN+2										
ZNO										
ZR+4										
ZRO2										
ZRO2:2H2										

Stream Name Liquid Components	675	676	677	678	679	680	681	682	683	684
Cs and Ba, (MCi)										
Sr and Y, (MCi)										
Tc, (MCi)										
Am, (MCi)										
Np, (MCi)										
Pu-239, (MCi)										
Pu-240, (MCi)										
Pu-241, (MCi)										
Total TRU, (MCi)										
Total MCi										
Total Mass Flow, (MT)	6.73E+03	6.73E+03	6.73E+03		6.73E+03	6.73E+03	6.73E+03	6.73E+03		6.73E+03
Total Cr, (MT)										
Total Na, (MT)										
Total Si, (MT)										
Total P, (MT)										
Total NO2-, (MT)										
Total NO3-, (MT)										
AG+										
AL(OH)4-										
AM+3										
AS+5										
B+3										
BA+2										
BE+2										
BI+3										
C14										
CA+2										
CD+2										
CE+3										
CL-										
CL2										
CO										
CO2										
CO3-2										
CR(OH)4-										
CS+										
CU+2										
DPCD										
F-										
F2										
FE+3										
H+										
H2										
H2O	2.64E+03	2.64E+03	2.64E+03		2.64E+03	2.64E+03	2.64E+03	2.64E+03		2.64E+03
H2S										
HG										

Stream Name Liquid Components	675	676	677	678	679	680	681	682	683	684
HG+2										
I-										
I2										
K+										
KEROSENE										
LA+3										
LI+										
MG+2										
MNO2										
MO+6										
N2	3.31E+03	3.31E+03	3.31E+03		3.31E+03	3.31E+03	3.31E+03	3.31E+03		3.31E+03
NA+										
NH3										
NI+3										
NO										
NO2										
NO2-										
NO3-										
NP+4										
O2	3.51E+01	3.51E+01	3.51E+01		3.51E+01	3.51E+01	3.51E+01	3.51E+01		3.51E+01
OH-										
OLIGIMER										
PB+4										
PO4-3										
POLY										
PU+4										
S										
SI+4										
SO2	7.51E+02	7.51E+02	7.51E+02		7.51E+02	7.51E+02	7.51E+02	7.51E+02		7.51E+02
SO4-2										
SR+2										
TCO2										
TCO4-										
TOC										
UO2+2										
V+5										
W+6										
ZN+2										
ZR+4										
ZRO2:2H2										

Stream Name Solid Components	675	676	677	678	679	680	681	682	683	684
Cs and Ba, (MCi)										
Sr and Y, (MCi)										
Tc, (MCi)										
Am, (MCi)										
Np, (MCi)										
Pu-239, (MCi)										
Pu-240, (MCi)										
Pu-241, (MCi)										
Total TRU, (MCi)										
Total MCi										
Total Mass Flow, (MT)										
Total Cr, (MT)										
Total Na, (MT)										
Total Si, (MT)										
Total P, (MT)										
Total NO2-, (MT)										
Total NO3-, (MT)										
AG+										
AG2O										
AL+3										
AL2O3										
AM+3										
AM2O3										
AS+5										
AS2O5										
B+3										
B2O3										
BA+2										
BAO										
BE+2										
BEO										
BI+3										
BI2O3										
C14										
CA+2										
CANCRINI										
CAO										
CD+2										
CDO										
CE+3										
CE2O3										
CL-										
CO3-2										
CR+3										
CR2O3										
CS+										

Stream Name Solid Components	675	676	677	678	679	680	681	682	683	684
CS2O										
CU										
CU+2										
CUO										
CUSO4										
F-										
FE+3										
FE2O3										
HG+2										
I-										
K+										
K2O										
LA+3										
LA2O3										
LI+										
LI2O										
MG+2										
MGO										
MNO2										
MO+6										
MOO3										
NA+										
NA2O										
NI+3										
NI2FECN6										
NI2O3										
NIO										
NO2-										
NO3-										
NP+4										
NPO2										
OH-										
P2O5										
P2O5:24W										
PB+4										
PBO2										
PO4-3										
POLY										
PU+4										
PUO2										
S										
SI+4										
SIO2										
SO4-2										
SR+2										
SRO										

Stream Name Solid Components	675	676	677	678	679	680	681	682	683	684
TC2O7										
TCO4-										
TOC										
UO2+2										
UO3										
V+5										
V2O5										
WO2										
WO3										
ZN+2										
ZNO										
ZR+4										
ZRO2										
ZRO2:2H2										

Stream Name Liquid Components	685	685B6	690	690	700	701	702	703	704	705
Cs and Ba, (MCi)										
Sr and Y, (MCi)										
Tc, (MCi)										
Am, (MCi)										
Np, (MCi)										
Pu-239, (MCi)										
Pu-240, (MCi)										
Pu-241, (MCi)										
Total TRU, (MCi)										
Total MCi										
Total Mass Flow, (MT)		6.73E+03	5.76E+02		1.39E+04	2.19E-10	1.39E+04			2.19E-10
Total Cr, (MT)										
Total Na, (MT)										
Total Si, (MT)										
Total P, (MT)										
Total NO2-, (MT)										
Total NO3-, (MT)					2.05E+01		2.05E+01			
AG+										
AL(OH)4-										
AM+3										
AS+5										
B+3										
BA+2										
BE+2										
BI+3										
C14										
CA+2										
CD+2										
CE+3										
CL-										
CL2										
CO										
CO2										
CO3-2										
CR(OH)4-										
CS+										
CU+2										
DPCD										
F-										
F2										
FE+3										
H+					3.33E-01		3.33E-01			
H2										
H2O		2.64E+03			1.39E+04	2.19E-10	1.39E+04			2.19E-10
H2S										
HG										

Stream Name Liquid Components	685	685B6	690	690	700	701	702	703	704	705
HG+2										
I-										
I2										
K+										
KEROSENE										
LA+3										
LI+										
MG+2										
MNO2										
MO+6										
N2		3.31E+03								
NA+										
NH3										
NI+3										
NO										
NO2										
NO2-										
NO3-					2.05E+01		2.05E+01			
NP+4										
O2		3.51E+01								
OH-										
OLIGIMER										
PB+4										
PO4-3										
POLY										
PU+4										
S			5.76E+02							
SI+4										
SO2		7.51E+02								
SO4-2										
SR+2										
TCO2										
TCO4-										
TOC										
UO2+2										
V+5										
W+6										
ZN+2										
ZR+4										
ZRO2:2H2										

Stream Name Solid Components	685	686	690	690	700	701	702	703	704	705
Cs and Ba, (MCi)										
Sr and Y, (MCi)										
Tc, (MCi)										
Am, (MCi)										
Np, (MCi)										
Pu-239, (MCi)										
Pu-240, (MCi)										
Pu-241, (MCi)										
Total TRU, (MCi)										
Total MCi										
Total Mass Flow, (MT)										
Total Cr, (MT)										
Total Na, (MT)										
Total Si, (MT)										
Total P, (MT)										
Total NO2-, (MT)										
Total NO3-, (MT)										
AG+										
AG2O										
AL+3										
AL2O3										
AM+3										
AM2O3										
AS+5										
AS2O5										
B+3										
B2O3										
BA+2										
BAO										
BE+2										
BEO										
BI+3										
BI2O3										
C14										
CA+2										
CANCRIN1										
CAO										
CD+2										
CDO										
CE+3										
CE2O3										
CL-										
CO3-2										
CR+3										
CR2O3										
CS+										

Stream Name Solid Components	685	686	690	690	700	701	702	703	704	705
CS2O										
CU										
CU+2										
CUO										
CUSO4										
F-										
FE+3										
FE2O3										
HG+2										
I-										
K+										
K2O										
LA+3										
LA2O3										
LI+										
LI2O										
MG+2										
MGO										
MNO2										
MO+6										
MOO3										
NA+										
NA2O										
NI+3										
NI2FECN6										
NI2O3										
NIO										
NO2-										
NO3-										
NP+4										
NPO2										
OH-										
P2O5										
P2O5.24W										
PB+4										
PBO2										
PO4-3										
POLY										
PU+4										
PUO2										
S										
SI+4										
SIO2										
SO4-2										
SR+2										
SRO										

Stream Name Solid Components	685	686	690	690	700	701	702	703	704	705
TC2O7										
TCO4-										
TOC										
UO2+2										
UO3										
V+5										
V2O5										
WO2										
WO3										
ZN+2										
ZNO										
ZR+4										
ZRO2										
ZRO2:2H2										

Stream Name Liquid Components	706	707	708	800	801	802	803	804	805	806
Cs and Ba, (MCi)										
Sr and Y, (MCi)										
Tc, (MCi)										
Am, (MCi)										
Np, (MCi)										
Pu-239, (MCi)										
Pu-240, (MCi)										
Pu-241, (MCi)										
Total TRU, (MCi)										
Total MCi										
Total Mass Flow, (MT)				1.19E+06	1.20E+02	1.19E+06		1.19E+06		1.26E+06
Total Cr, (MT)										
Total Na, (MT)										
Total Si, (MT)										
Total P, (MT)										
Total NO2-, (MT)										
Total NO3-, (MT)										
AG+										
AL(OH)4-										
AM+3										
AS+5										
B+3										
BA+2										
BE+2										
BI+3										
C14										
CA+2										
CD+2										
CE+3										
CL-										
CL2										
CO										
CO2										
CO3-2										
CR(OH)4-										
CS+										
CU+2										
DPCD										
F-										
F2										
FE+3										
H+										
H2										
H2O				1.19E+06	1.20E+02	1.19E+06		1.19E+06		1.26E+06
H2S										
HG										

Stream Name Liquid Components	706	707	708	800	801	802	803	804	805	806
HG+2										
I-										
I2										
K+										
KEROSENE										
LA+3										
LI+										
MG+2										
MNO2										
MO+6										
N2										
NA+										
NH3										
NI+3										
NO										
NO2										
NO2-										
NO3-										
NP+4										
O2										
OH-										
OLIGIMER										
PB+4										
PO4-3										
POLY										
PU+4										
S										
SI+4										
SO2										
SO4-2										
SR+2										
TCO2										
TCO4-										
TOC										
UO2+2										
V+5										
W+6										
ZN+2										
ZR+4										
ZRO2:2H2										

Stream Name Solid Components	706	707	708	800	801	802	803	804	805	806
Cs and Ba, (MCi)										
Sr and Y, (MCi)										
Tc, (MCi)										
Am, (MCi)										
Np, (MCi)										
Pu-239, (MCi)										
Pu-240, (MCi)										
Pu-241, (MCi)										
Total TRU, (MCi)										
Total MCi										
Total Mass Flow, (MT)										
Total Cr, (MT)										
Total Na, (MT)										
Total Si, (MT)										
Total P, (MT)										
Total NO2-, (MT)										
Total NO3-, (MT)										
AG+										
AG2O										
AL+3										
AL2O3										
AM+3										
AM2O3										
AS+5										
AS2O5										
B+3										
B2O3										
BA+2										
BAO										
BE+2										
BEO										
BI+3										
BI2O3										
C14										
CA+2										
CANCRINI										
CAO										
CD+2										
CDO										
CE+3										
CE2O3										
CL-										
CO3-2										
CR+3										
CR2O3										
CS+										

Stream Name Solid Components	706	707	708	800	801	802	803	804	805	806
CS2O										
CU										
CU+2										
CUO										
CUSO4										
F-										
FE+3										
FE2O3										
HG+2										
I-										
K+										
K2O										
LA+3										
LA2O3										
LI+										
LI2O										
MG+2										
MGO										
MNO2										
MO+6										
MOO3										
NA+										
NA2O										
NI+3										
NI2FECN6										
NI2O3										
NIO										
NO2-										
NO3-										
NP+4										
NPO2										
OH-										
P2O5										
P2O5:24W										
PB+4										
PBO2										
PO4-3										
POLY										
PU+4										
PUO2										
S										
SI+4										
SIO2										
SO4-2										
SR+2										
SRO										

Stream Name Solid Components	706	707	708	800	801	802	803	804	805	806
TC2O7										
TCO4-										
TOC										
UO2+2										
UO3										
V+5										
V2O5										
WO2										
WO3										
ZN+2										
ZNO										
ZR+4										
ZRO2										
ZRO2:2H2										

Stream Name Liquid Components	808	900	901	902	903	904	905	906	907	908
Cs and Ba, (MCi)										
Sr and Y, (MCi)										
Tc, (MCi)										
Am, (MCi)										
Np, (MCi)										
Pu-239, (MCi)										
Pu-240, (MCi)										
Pu-241, (MCi)										
Total TRU, (MCi)										
Total MCi										
Total Mass Flow, (MT)	7.20E+04					2.07E-01	2.07E-01	2.07E-01	3.05E+06	
Total Cr, (MT)										
Total Na, (MT)										
Total Si, (MT)										
Total P, (MT)										
Total NO2-, (MT)										
Total NO3-, (MT)									2.05E+01	
AG+										
AL(OH)4-										
AM+3										
AS+5										
B+3										
BA+2										
BE+2										
BI+3										
C14										
CA+2										
CD+2										
CE+3										
CL-										
CL2									3.10E+02	
CO									2.35E+03	
CO2									1.89E+05	
CO3-2										
CR(OH)4-										
CS+										
CU+2										
DPCD										
F-										
F2									1.12E+03	
FE+3										
H+									3.33E-01	
H2										
H2O	7.20E+04					2.07E-01	2.07E-01	2.07E-01	5.83E+04	
H2S										
HG										

Stream Name Liquid Components	808	900	901	902	903	904	905	906	907	908
HG+2										
I-										
I2									5.45E+02	
K+										
KEROSENE										
LA+3										
LI+										
MG+2										
MNO2										
MO+6										
N2									2.21E+06	
NA+										
NH3									1.63E+01	
NI+3										
NO									3.11E+00	
NO2									1.39E+02	
NO2-										
NO3-									2.05E+01	
NP+4										
O2									5.95E+05	
OH-										
OLIGIMER										
PB+4										
PO4-3										
POLY										
PU+4										
S										
SI+4										
SO2									2.09E+02	
SO4-2										
SR+2										
TCO2										
TCO4-										
TOC										
UO2+2										
V+5										
W+6										
ZN+2										
ZR+4										
ZRO2:2H2										

Stream Name Solid Components	898	900	901	902	903	904	905	906	907	908
Cs and Ba, (MCi)							2.47E-09	2.47E-09	1.23E-12	
Sr and Y, (MCi)							9.48E-09	9.48E-09	4.74E-12	
Tc, (MCi)							1.30E-10	1.30E-10	6.48E-14	
Am, (MCi)							4.30E-11	4.30E-11	2.15E-14	
Np, (MCi)							5.15E-14	5.15E-14	2.58E-17	
Pu-239, (MCi)							8.34E-12	8.34E-12	4.17E-15	
Pu-240, (MCi)							2.07E-12	2.07E-12	1.03E-15	
Pu-241, (MCi)							7.42E-12	7.42E-12	3.71E-15	
Total TRU, (MCi)							6.09E-11	6.09E-11	3.04E-14	
Total MCi							1.21E-08	1.21E-08	6.07E-12	
Total Mass Flow, (MT)							2.09E-03	2.09E-03	1.05E-06	
Total Cr, (MT)							7.77E-07	7.77E-07	3.89E-10	
Total Na, (MT)							3.88E-04	3.88E-04	1.94E-07	
Total Si, (MT)							5.77E-04	5.77E-04	2.89E-07	
Total P, (MT)							7.29E-06	7.29E-06	3.65E-09	
Total NO2-, (MT)										
Total NO3-, (MT)										
AG+										
AG2O							1.76E-09	1.76E-09	8.79E-13	
AL+3										
AL2O3							1.05E-04	1.05E-04	5.23E-08	
AM+3										
AM2O3							1.38E-11	1.38E-11	6.89E-15	
AS+5										
AS2O5							5.89E-09	5.89E-09	2.95E-12	
B+3										
B2O3							8.34E-09	8.34E-09	4.17E-12	
BA+2										
BAO							4.41E-09	4.41E-09	2.20E-12	
BE+2										
BEO							1.13E-09	1.13E-09	5.67E-13	
BI+3										
BI2O3							3.76E-07	3.76E-07	1.88E-10	
C14										
CA+2										
CANCRINI										
CAO							2.09E-04	2.09E-04	1.05E-07	
CD+2										
CDO							1.19E-08	1.19E-08	5.95E-12	
CE+3										
CE2O3							1.39E-08	1.39E-08	6.97E-12	
CL-										
CO3-2										
CR+3										
CR2O3							1.14E-06	1.14E-06	5.68E-10	
CS+										

Stream Name Solid Components	898	900	901	902	903	904	905	906	907	908
CS2O							3.41E-11	3.41E-11	1.71E-14	
CU										
CU+2										
CUO							1.11E-09	1.11E-09	5.53E-13	
CUSO4										
F-										
FE+3										
FE2O3							1.03E-07	1.03E-07	5.14E-11	
HG+2										
I-										
K+										
K2O							1.32E-09	1.32E-09	6.62E-13	
LA+3										
LA2O3							1.29E-09	1.29E-09	6.45E-13	
LI+										
LI2O							6.20E-11	6.20E-11	3.10E-14	
MG+2										
MGO							7.99E-09	7.99E-09	4.00E-12	
MNO2							1.08E-07	1.08E-07	5.41E-11	
MO+6										
MOO3							3.64E-08	3.64E-08	1.82E-11	
NA+										
NA2O							5.23E-04	5.23E-04	2.62E-07	
NI+3										
NI2FECN6										
NI2O3							2.86E-08	2.86E-08	1.43E-11	
NIO							7.48E-11	7.48E-11	3.74E-14	
NO2-										
NO3-										
NP+4										
NPO2							8.29E-11	8.29E-11	4.15E-14	
OH-										
P2O5							1.67E-05	1.67E-05	8.35E-09	
P2O5:24W										
PB+4										
PBO2							1.13E-08	1.13E-08	5.65E-12	
PO4-3										
POLY										
PU+4										
PUO2							1.63E-10	1.63E-10	8.15E-14	
S										
SI+4										
SIO2							1.24E-03	1.24E-03	6.18E-07	
SO4-2										
SR+2										
SRO							2.00E-09	2.00E-09	1.00E-12	

Stream Name Solid Components	898	900	901	902	903	904	905	906	907	908
TC2O7							1.20E-08	1.20E-08	5.98E-12	
TCO4-										
TOC										
UO2+2										
UO3							4.51E-07	4.51E-07	2.26E-10	
V+5										
V2O5							5.52E-10	5.52E-10	2.76E-13	
WO2							1.45E-13	1.45E-13	7.27E-17	
WO3							4.70E-09	4.70E-09	2.35E-12	
ZN+2										
ZNO							2.23E-08	2.23E-08	1.12E-11	
ZR+4										
ZRO2							3.25E-09	3.25E-09	1.62E-12	
ZRO2:2H2										

Stream Name Liquid Components	909	910	911	912	913	914	915	916	917	1000
Cs and Ba, (MCi)										
Sr and Y, (MCi)										
Tc, (MCi)										
Am, (MCi)										
Np, (MCi)										
Pu-239, (MCi)										
Pu-240, (MCi)										
Pu-241, (MCi)										
Total TRU, (MCi)										
Total MCi										
Total Mass Flow, (MT)				3.88E+04	4.87E+05	4.87E+05	3.88E+04	3.88E+04	4.87E+05	
Total Cr, (MT)										
Total Na, (MT)										
Total Si, (MT)										
Total P, (MT)										
Total NO2-, (MT)										
Total NO3-, (MT)										
AG+										
AL(OH)4-										
AM+3										
AS+5										
B+3										
BA+2										
BE+2										
BI+3										
C14										
CA+2										
CD+2										
CE+3										
CL-										
CL2										
CO										
CO2										
CO3-2										
CR(OH)4-										
CS+										
CU+2										
DPCD										
F-										
F2										
FE+3										
H+										
H2										
H2O				3.88E+04			3.88E+04	3.88E+04		
H2S										
HG										

Stream Name Liquid Components	909	910	911	912	913	914	915	916	917	1000
HG+2										
I-										
I2										
K+										
KEROSENE										
LA+3										
LI+										
MG+2										
MNO2										
MO+6										
N2					3.85E+05	3.85E+05			3.85E+05	
NA+										
NH3										
NI+3										
NO										
NO2										
NO2-										
NO3-										
NP+4										
O2					1.02E+05	1.02E+05			1.02E+05	
OH-										
OLIGIMER										
PB+4										
PO4-3										
POLY										
PU+4										
S										
SI+4										
SO2										
SO4-2										
SR+2										
TCO2										
TCO4-										
TOC										
UO2+2										
V+5										
W+6										
ZN+2										
ZR+4										
ZRO2:2H2										

Stream Name Solid Components	909	910	911	912	913	914	915	916	917	1000
Cs and Ba, (MCi)					4.99E-04	4.99E-04	4.98E-04	4.98E-04	2.49E-07	
Sr and Y, (MCi)					1.92E-03	1.92E-03	1.92E-03	1.92E-03	9.59E-07	
Tc, (MCi)					2.62E-05	2.62E-05	2.62E-05	2.62E-05	1.31E-08	
Am, (MCi)					8.70E-06	8.70E-06	8.69E-06	8.69E-06	4.35E-09	
Np, (MCi)					1.04E-08	1.04E-08	1.04E-08	1.04E-08	5.21E-12	
Pu-239, (MCi)					1.69E-06	1.69E-06	1.69E-06	1.69E-06	8.43E-10	
Pu-240, (MCi)					4.18E-07	4.18E-07	4.18E-07	4.18E-07	2.09E-10	
Pu-241, (MCi)										
Total TRU, (MCi)					1.08E-05	1.08E-05	1.08E-05	1.08E-05	5.41E-09	
Total MCi					2.45E-03	2.45E-03	2.45E-03	2.45E-03	1.23E-06	
Total Mass Flow, (MT)					3.92E+02	3.92E+02	3.92E+02	3.92E+02	1.96E-01	5.19E+01
Total Cr, (MT)					1.46E-01	1.46E-01	1.46E-01	1.46E-01	7.28E-05	
Total Na, (MT)					7.26E+01	7.26E+01	7.26E+01	7.26E+01	3.63E-02	
Total Si, (MT)					1.08E+02	1.08E+02	1.08E+02	1.08E+02	5.41E-02	1.87E+01
Total P, (MT)					1.37E+00	1.37E+00	1.37E+00	1.37E+00	6.83E-04	
Total NO2-, (MT)										
Total NO3-, (MT)										
AG+										
AG2O					3.56E-04	3.56E-04	3.55E-04	3.55E-04	1.78E-07	
AL+3										
AL2O3					1.96E+01	1.96E+01	1.96E+01	1.96E+01	9.79E-03	
AM+3										
AM2O3					2.79E-06	2.79E-06	2.79E-06	2.79E-06	1.39E-09	
AS+5										
AS2O5					1.19E-03	1.19E-03	1.19E-03	1.19E-03	5.96E-07	
B+3										
B2O3					1.69E-03	1.69E-03	1.69E-03	1.69E-03	8.43E-07	7.99E+00
BA+2										
BAO					8.91E-04	8.91E-04	8.91E-04	8.91E-04	4.46E-07	
BE+2										
BEO					2.29E-04	2.29E-04	2.29E-04	2.29E-04	1.15E-07	
BI+3										
BI2O3					7.60E-02	7.60E-02	7.60E-02	7.60E-02	3.80E-05	
C14										
CA+2										
CANCRINI										
CAO					3.92E+01	3.92E+01	3.91E+01	3.91E+01	1.96E-02	5.71E-01
CD+2										
CDO					2.41E-03	2.41E-03	2.40E-03	2.40E-03	1.20E-06	
CE+3										
CE2O3					2.82E-03	2.82E-03	2.82E-03	2.82E-03	1.41E-06	
CL-										
CO3-2										
CR+3										
CR2O3					2.13E-01	2.13E-01	2.13E-01	2.13E-01	1.06E-04	
CS+										

Stream Name Solid Components	909	910	911	912	913	914	915	916	917	1000
CS2O					6.90E-06	6.90E-06	6.90E-06	6.90E-06	3.45E-09	
CU										
CU+2										
CUO					2.24E-04	2.24E-04	2.24E-04	2.24E-04	1.12E-07	
CUSO4										
F-										
FE+3										
FE2O3					2.08E-02	2.08E-02	2.08E-02	2.08E-02	1.04E-05	
HG+2										
I-										
K+										
K2O					2.68E-04	2.68E-04	2.68E-04	2.68E-04	1.34E-07	
LA+3										
LA2O3					2.61E-04	2.61E-04	2.61E-04	2.61E-04	1.30E-07	
LI+										
LI2O					1.25E-05	1.25E-05	1.25E-05	1.25E-05	6.27E-09	2.85E+00
MG+2										
MGO					1.62E-03	1.62E-03	1.62E-03	1.62E-03	8.08E-07	5.71E-01
MNO2					2.19E-02	2.19E-02	2.19E-02	2.19E-02	1.09E-05	
MO+6										
MOO3					7.37E-03	7.37E-03	7.37E-03	7.37E-03	3.69E-06	
NA+										
NA2O					9.79E+01	9.79E+01	9.79E+01	9.79E+01	4.90E-02	
NI+3										
NI2FECN6										
NI2O3					5.79E-03	5.79E-03	5.78E-03	5.78E-03	2.89E-06	
NIO					1.51E-05	1.51E-05	1.51E-05	1.51E-05	7.57E-09	
NO2-										
NO3-										
NP+4										
NPO2					1.68E-05	1.68E-05	1.68E-05	1.68E-05	8.38E-09	
OH-										
P2O5					3.13E+00	3.13E+00	3.13E+00	3.13E+00	1.56E-03	
P2O5.24W										
PB+4										
PBO2					2.28E-03	2.28E-03	2.28E-03	2.28E-03	1.14E-06	
PO4-3										
POLY										
PU+4										
PUO2					3.29E-05	3.29E-05	3.29E-05	3.29E-05	1.65E-08	
S										
SI+4										
SIO2					2.31E+02	2.31E+02	2.31E+02	2.31E+02	1.16E-01	3.99E+01
SO4-2										
SR+2										
SRO					4.05E-04	4.05E-04	4.05E-04	4.05E-04	2.02E-07	

Stream Name Solid Components	909	910	911	912	913	914	915	916	917	1000
TC2O7					2.42E-03	2.42E-03	2.42E-03	2.42E-03	1.21E-06	
TCO4-										
TOC										
UO2+2										
UO3					9.12E-02	9.12E-02	9.11E-02	9.11E-02	4.56E-05	
V+5										
V2O5					1.12E-04	1.12E-04	1.12E-04	1.12E-04	5.59E-08	
WO2										
WO3					9.51E-04	9.51E-04	9.50E-04	9.50E-04	4.75E-07	
ZN+2										
ZNO					4.51E-03	4.51E-03	4.51E-03	4.51E-03	2.25E-06	
ZR+4										
ZRO2					6.57E-04	6.57E-04	6.56E-04	6.56E-04	3.28E-07	
ZRO2:2H2										

Stream Name Liquid Components	1001	1002	1003	1004	1005	1006	1007	1008	1009	1010
Cs and Ba, (MCi)										
Sr and Y, (MCi)										
Tc, (MCi)										
Am, (MCi)										
Np, (MCi)										
Pu-239, (MCi)										
Pu-240, (MCi)										
Pu-241, (MCi)										
Total TRU, (MCi)										
Total MCi										
Total Mass Flow, (MT)	8.53E+01	5.36E+01	1.27E+05	3.36E+03	3.36E+03	2.62E+04	4.19E+03	8.48E+03		
Total Cr, (MT)										
Total Na, (MT)		1.79E+01				7.52E+03				
Total Si, (MT)										
Total P, (MT)										
Total NO2-, (MT)		3.57E+01								
Total NO3-, (MT)							2.62E+03			
AG+										
AL(OH)4-										
AM+3										
AS+5										
B+3										
BA+2										
BE+2										
BI+3										
C14										
CA+2										
CD+2										
CE+3										
CL-										
CL2										
CO										
CO2										
CO3-2										
CR(OH)4-										
CS+										
CU+2										
DPCD				3.36E+03						
F-										
F2										
FE+3										
H+							4.24E+01			
H2										
H2O						1.31E+04	1.53E+03			
H2S										
HG										

Stream Name Liquid Components	1001	1002	1003	1004	1005	1006	1007	1008	1009	1010
HG+2										
I-										
I2										
K+										
KEROSENE										
LA+3										
LI+										
MG+2										
MNO2										
MO+6										
N2										
NA+		1.79E+01				7.52E+03				
NH3								8.48E+03		
NI+3										
NO										
NO2										
NO2-		3.57E+01								
NO3-							2.62E+03			
NP+4										
O2										
OH-						5.56E+03				
OLIGIMER					3.36E+03					
PB+4										
PO4-3										
POLY	8.53E+01									
PU+4										
S			1.27E+05							
SI+4										
SO2										
SO4-2										
SR+2										
TCO2										
TCO4-										
TOC										
UO2+2										
V+5										
W+6										
ZN+2										
ZR+4										
ZRO2:2H2										

Stream Name Solid Components	1001	1002	1003	1004	1005	1006	1007	1008	1009	1010
Cs and Ba, (MCi)										
Sr and Y, (MCi)										
Tc, (MCi)										
Am, (MCi)										
Np, (MCi)										
Pu-239, (MCi)										
Pu-240, (MCi)										
Pu-241, (MCi)										
Total TRU, (MCi)										
Total MCi										
Total Mass Flow, (MT)										
Total Cr, (MT)										
Total Na, (MT)										
Total Si, (MT)										
Total P, (MT)										
Total NO2-, (MT)										
Total NO3-, (MT)										
AG+										
AG2O										
AL+3										
AL2O3										
AM+3										
AM2O3										
AS+5										
AS2O5										
B+3										
B2O3										
BA+2										
BAO										
BE+2										
BEO										
BI+3										
BI2O3										
C14										
CA+2										
CANCRINI										
CAO										
CD+2										
CDO.										
CE+3										
CE2O3										
CL-										
CO3-2										
CR+3										
CR2O3										
CS+										

Stream Name Solid Components	1001	1002	1003	1004	1005	1006	1007	1008	1009	1010
CS2O										
CU										
CU+2										
CUO										
CUSO4										
F-										
FE+3										
FE2O3										
HG+2										
I-										
K+										
K2O										
LA+3										
LA2O3										
LI+										
LI2O										
MG+2										
MGO										
MNO2										
MO+6										
MOO3										
NA+										
NA2O										
NI+3										
NI2FECN6										
NI2O3										
NIO										
NO2-										
NO3-										
NP+4										
NPO2										
OH-										
P2O5										
P2O5:24W										
PB+4										
PBO2										
PO4-3										
POLY										
PU+4										
PUO2										
S										
SI+4										
SIO2										
SO4-2										
SR+2										
SRO										

Stream Name Solid Components	1001	1002	1003	1004	1005	1006	1007	1008	1009	1010
TC2O7										
TCO4-										
TOC										
UO2+2										
UO3										
V+5										
V2O5										
WO2										
WO3										
ZN+2										
ZNO										
ZR+4										
ZRO2										
ZRO2:2H2										

Stream Name Liquid Components	1011	1012	1020	1021	1022	1023	1024	1025	1026	1027
Cs and Ba, (MCi)										
Sr and Y, (MCi)										
Tc, (MCi)										
Am, (MCi)										
Np, (MCi)										
Pu-239, (MCi)										
Pu-240, (MCi)										
Pu-241, (MCi)										
Total TRU, (MCi)										
Total MCi										
Total Mass Flow, (MT)	5.78E+04	5.02E+05								
Total Cr, (MT)										
Total Na, (MT)										
Total Si, (MT)										
Total P, (MT)										
Total NO2-, (MT)										
Total NO3-, (MT)										
AG+										
AL(OH)4-										
AM+3										
AS+5										
B+3										
BA+2										
BE+2										
BI+3										
C14										
CA+2										
CD+2										
CE+3										
CL-										
CL2										
CO										
CO2										
CO3-2										
CR(OH)4-										
CS+										
CU+2										
DPCD										
F-										
F2										
FE+3										
H+										
H2										
H2O		5.02E+05								
H2S										
HG										

Stream Name Liquid Components	1011	1012	1020	1021	1022	1023	1024	1025	1026	1027
HG+2										
I-										
I2										
K+										
KEROSENE	5.78E+04									
LA+3										
LI+										
MG+2										
MNO2										
MO+6										
N2										
NA+										
NH3										
NI+3										
NO										
NO2										
NO2-										
NO3-										
NP+4										
O2										
OH-										
OLIGIMER										
PB+4										
PO4-3										
POLY										
PU+4										
S										
SI+4										
SO2										
SO4-2										
SR+2										
TCO2										
TCO4-										
TOC										
UO2+2										
V+5										
W+6										
ZN+2										
ZR+4										
ZRO2:2H2										

Stream Name Solid Components	1011	1012	1020	1021	1022	1023	1024	1025	1026	1027
Cs and Ba, (MCi)										
Sr and Y, (MCi)										
Tc, (MCi)										
Am, (MCi)										
Np, (MCi)										
Pu-239, (MCi)										
Pu-240, (MCi)										
Pu-241, (MCi)										
Total TRU, (MCi)										
Total MCi										
Total Mass Flow, (MT)			2.29E+05					3.87E+04		1.32E+04
Total Cr, (MT)										
Total Na, (MT)										
Total Si, (MT)			1.07E+05							
Total P, (MT)										
Total NO2-, (MT)										
Total NO3-, (MT)										
AG+										
AG2O										
AL+3										
AL2O3										1.32E+04
AM+3										
AM2O3										
AS+5										
AS2O5										
B+3										
B2O3										
BA+2										
BAO										
BE+2										
BEO										
BI+3										
BI2O3										
C14										
CA+2										
CANCRINI										
CAO								3.87E+04		
CD+2										
CDO										
CE+3										
CE2O3										
CL-										
CO3-2										
CR+3										
CR2O3										
CS+										

Stream Name Solid Components	1011	1012	1020	1021	1022	1023	1024	1025	1026	1027
CS2O										
CU										
CU+2										
CUO										
CUSO4										
F-										
FE+3										
FE2O3										
HG+2										
I-										
K+										
K2O										
LA+3										
LA2O3										
LI+										
LI2O										
MG+2										
MGO										
MNO2										
MO+6										
MOO3										
NA+										
NA2O										
NI+3										
NI2FECN6										
NI2O3										
NIO										
NO2-										
NO3-										
NP+4										
NPO2										
OH-										
P2O5										
P2O5.24W										
PB+4										
PBO2										
PO4-3										
POLY										
PU+4										
PUO2										
S										
SI+4										
SIO2			2.29E+05							
SO4-2										
SR+2										
SRO										

Stream Name Solid Components	1011	1012	1020	1021	1022	1023	1024	1025	1026	1027
TC2O7										
TCO4-										
TOC										
UO2+2										
UO3										
V+5										
V2O5										
WO2										
WO3										
ZN+2										
ZNO										
ZR+4										
ZRO2										
ZRO2:2H2										

Stream Name Liquid Components	1030	1031	1032	1033	1034	1035	1036	1037	1038	1039
Cs and Ba, (MCi)										
Sr and Y, (MCi)										
Tc, (MCi)										
Am, (MCi)										
Np, (MCi)										
Pu-239, (MCi)										
Pu-240, (MCi)										
Pu-241, (MCi)										
Total TRU, (MCi)										
Total MCi										
Total Mass Flow, (MT)	1.24E+06	1.24E+06	1.24E+06	1.24E+06	1.24E+06	1.01E+06	2.34E+05	2.34E+05	2.34E+05	
Total Cr, (MT)										
Total Na, (MT)										
Total Si, (MT)										
Total P, (MT)										
Total NO2-, (MT)										
Total NO3-, (MT)										
AG+										
AL(OH)4-										
AM+3										
AS+5										
B+3										
BA+2										
BE+2										
BI+3										
C14										
CA+2										
CD+2										
CE+3										
CL-										
CL2										
CO										
CO2										
CO3-2										
CR(OH)4-										
CS+										
CU+2										
DPCD										
F-										
F2										
FE+3										
H+										
H2										
H2O										
H2S										
HG										

Stream Name Liquid Components	1030	1031	1032	1033	1034	1035	1036	1037	1038	1039
HG+2										
I-										
I2										
K+										
KEROSENE										
LA+3										
LI+										
MG+2										
MNO2										
MO+6										
N2	9.81E+05	9.81E+05	9.81E+05	9.81E+05	9.81E+05	9.58E+05	2.32E+04	2.32E+04	2.32E+04	
NA+										
NH3										
NI+3										
NO										
NO2										
NO2-										
NO3-										
NP+4										
O2	2.61E+05	2.61E+05	2.61E+05	2.61E+05	2.61E+05	5.04E+04	2.10E+05	2.10E+05	2.10E+05	
OH-										
OLIGIMER										
PB+4										
PO4-3										
POLY										
PU+4										
S										
SI+4										
SO2										
SO4-2										
SR+2										
TCO2										
TCO4-										
TOC										
UO2+2										
V+5										
W+6										
ZN+2										
ZR+4										
ZRO2:2H2										

Stream Name Solid Components	1030	1031	1032	1033	1034	1035	1036	1037	1038	1039
Cs and Ba, (MCi)										
Sr and Y, (MCi)										
Tc, (MCi)										
Am, (MCi)										
Np, (MCi)										
Pu-239, (MCi)										
Pu-240, (MCi)										
Pu-241, (MCi)										
Total TRU, (MCi)										
Total MCi										
Total Mass Flow, (MT)										
Total Cr, (MT)										
Total Na, (MT)										
Total Si, (MT)										
Total P, (MT)										
Total NO2-, (MT)										
Total NO3-, (MT)										
AG+										
AG2O										
AL+3										
AL2O3										
AM+3										
AM2O3										
AS+5										
AS2O5										
B+3										
B2O3										
BA+2										
BAO										
BE+2										
BEO										
BI+3										
BI2O3										
C14										
CA+2										
CANCRINI										
CAO										
CD+2										
CDO										
CE+3										
CE2O3										
CL-										
CO3-2										
CR+3										
CR2O3										
CS+										

Stream Name Solid Components	1030	1031	1032	1033	1034	1035	1036	1037	1038	1039
CS2O										
CU										
CU+2										
CUO										
CUSO4										
F-										
FE+3										
FE2O3										
HG+2										
I-										
K+										
K2O										
LA+3										
LA2O3										
LI+										
LI2O										
MG+2										
MGO										
MNO2										
MO+6										
MOO3										
NA+										
NA2O										
NI+3										
NI2FECN6										
NI2O3										
NIO										
NO2-										
NO3-										
NP+4										
NPO2										
OH-										
P2O5										
P2O5 24W										
PB+4										
PBO2										
PO4-3										
POLY										
PU+4										
PUO2										
S										
SI+4										
SIO2										
S +2										
SR+2										
SRO										

Stream Name Solid Components	1030	1031	1032	1033	1034	1035	1036	1037	1038	1039
TC2O7										
TCO4-										
TOC										
UO2+2										
UO3										
V+5										
V2O5										
WO2										
WO3										
ZN+2										
ZNO										
ZR+4										
ZRO2										
ZRO2:2H2										

Stream Name Liquid Components	1040	1041	1042
Cs and Ba, (MCi)			
Sr and Y, (MCi)			
Tc, (MCi)			
Am, (MCi)			
Np, (MCi)			
Pu-239, (MCi)			
Pu-240, (MCi)			
Pu-241, (MCi)			
Total TRU, (MCi)			
Total MCi			
Total Mass Flow, (MT)	1.01E+06		
Total Cr, (MT)			
Total Na, (MT)			
Total Si, (MT)			
Total P, (MT)			
Total NO2-, (MT)			
Total NO3-, (MT)			
AG+			
AL(OH)4-			
AM+3			
AS+5			
B+3			
BA+2			
BE+2			
BI+3			
C14			
CA+2			
CD+2			
CE+3			
CL-			
CL2			
CO			
CO2			
CO3-2			
CR(OH)4-			
CS+			
CU+2			
DPCD			
F-			
F2			
FE+3			
H+			
H2			
H2O			
H2S			
HG			

Stream Name Liquid Components	1040	1041	1042
HG+2			
I-			
I2			
K+			
KEROSENE			
LA+3			
LI+			
MG+2			
MNO2			
MO+6			
N2	9.58E+05		
NA+			
NH3			
NI+3			
NO			
NO2			
NO2-			
NO3-			
NP+4			
O2	5.04E+04		
OH-			
OLIGIMER			
PB+4			
PO4-3			
POLY			
PU+4			
S			
SI+4			
SO2			
SO4-2			
SR+2			
TCO2			
TCO4-			
TOC			
UO2+2			
V+5			
W+6			
ZN+2			
ZR+4			
ZRO2:2H2			

Stream Name Solid Components	1040	1041	1042
Cs and Ba, (MCi)			
Sr and Y, (MCi)			
Tc, (MCi)			
Am, (MCi)			
Np, (MCi)			
Pu-239, (MCi)			
Pu-240, (MCi)			
Pu-241, (MCi)			
Total TRU, (MCi)			
Total MCi			
Total Mass Flow, (MT)			
Total Cr, (MT)			
Total Na, (MT)			
Total Si, (MT)			
Total P, (MT)			
Total NO2-, (MT)			
Total NO3-, (MT)			
AG+			
AG2O			
AL+3			
AL2O3			
AM+3			
AM2O3			
AS+5			
AS2O5			
B+3			
B2O3			
BA+2			
BAO			
BE+2			
BEO			
BI+3			
BI2O3			
C14			
CA+2			
CANCRIN1			
CAO			
CD+2			
CDO			
CE+3			
CE2O3			
CL-			
CO3-2			
CR+3			
CR2O3			
CS+			

Stream Name Solid Components	1040	1041	1042
CS2O			
CU			
CU+2			
CUO			
CUSO4			
F-			
FE+3			
FE2O3			
HG+2			
I-			
K+			
K2O			
LA+3			
LA2O3			
LI+			
LI2O			
MG+2			
MGO			
MNO2			
MO+6			
MOO3			
NA+			
NA2O			
NI+3			
NI2FECN6			
NI2O3			
NIO			
NO2-			
NO3-			
NP+4			
NPO2			
OH-			
P2O5			
P2O5:24W			
PB+4			
PBO2			
PO4-3			
POLY			
PU+4			
PUO2			
S			
SI+4			
SIO2			
SO4-2			
SR+2			
SRO			

Stream Name Solid Components	1040	1041	1042
TC2O7			
TCO4-			
TOC			
UO2+2			
UO3			
V+5			
V2O5			
WO2			
WO3			
ZN+2			
ZNO			
ZR+4			
ZRO2			
ZRO2:2H2			

A2.0 HIGH-LEVEL WASTE MATERIAL BALANCES

The detached HLW process flow diagrams are shown in Figure A-2. The accompanying overall material balance is Table A-2 (89 sheets). Stream values in Table A-2 are not based on a set operational period rather they are totals over the lifetime of the facility.

Figure A-2. Process Flow Diagram for Detached High-Level Waste. (Sheet 1 of 13)

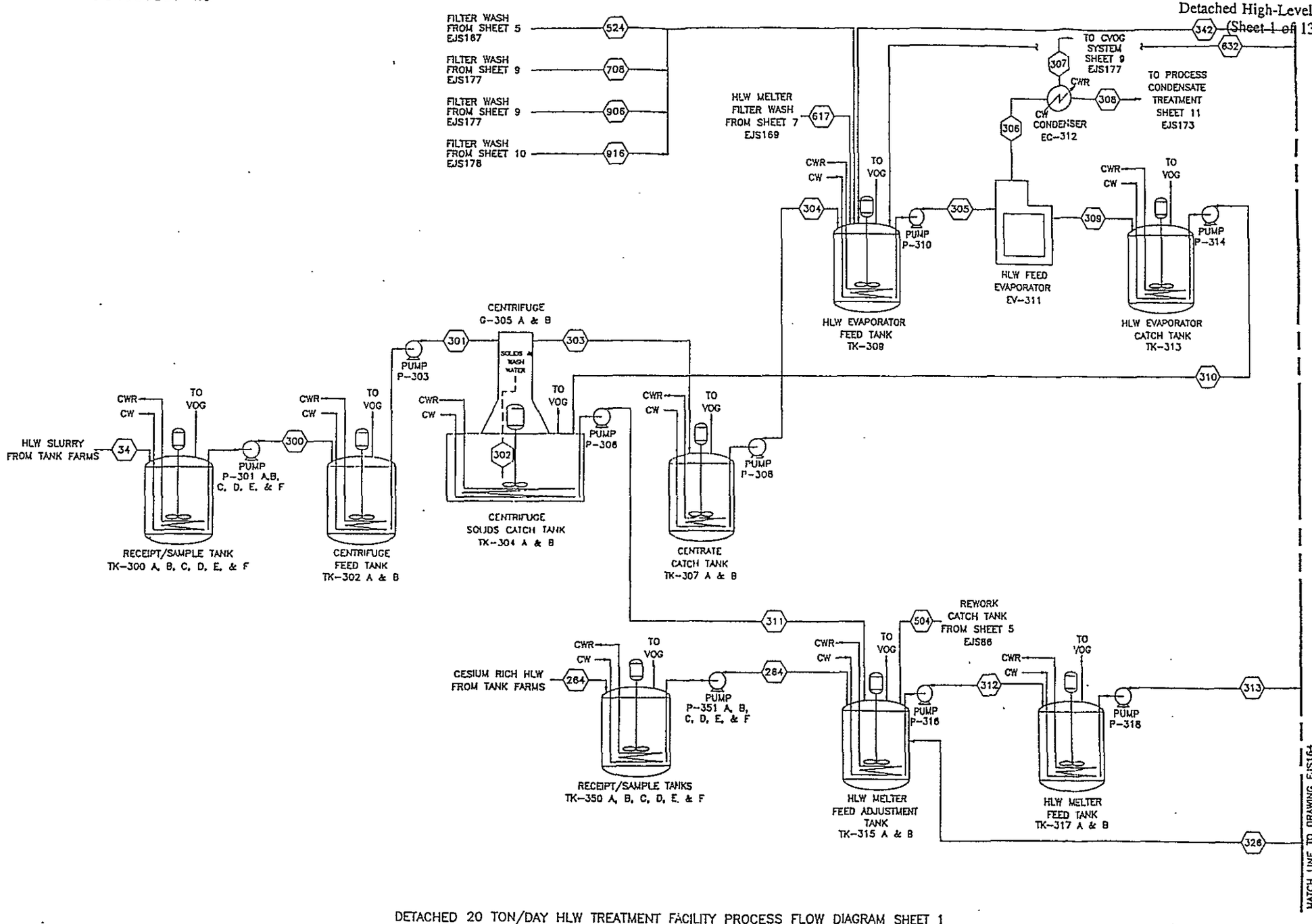

DETACHED 20 TON/DAY HLW TREATMENT FACILITY PROCESS FLOW DIAGRAM SHEET 1

EJS163/CEW/9-15-94-1

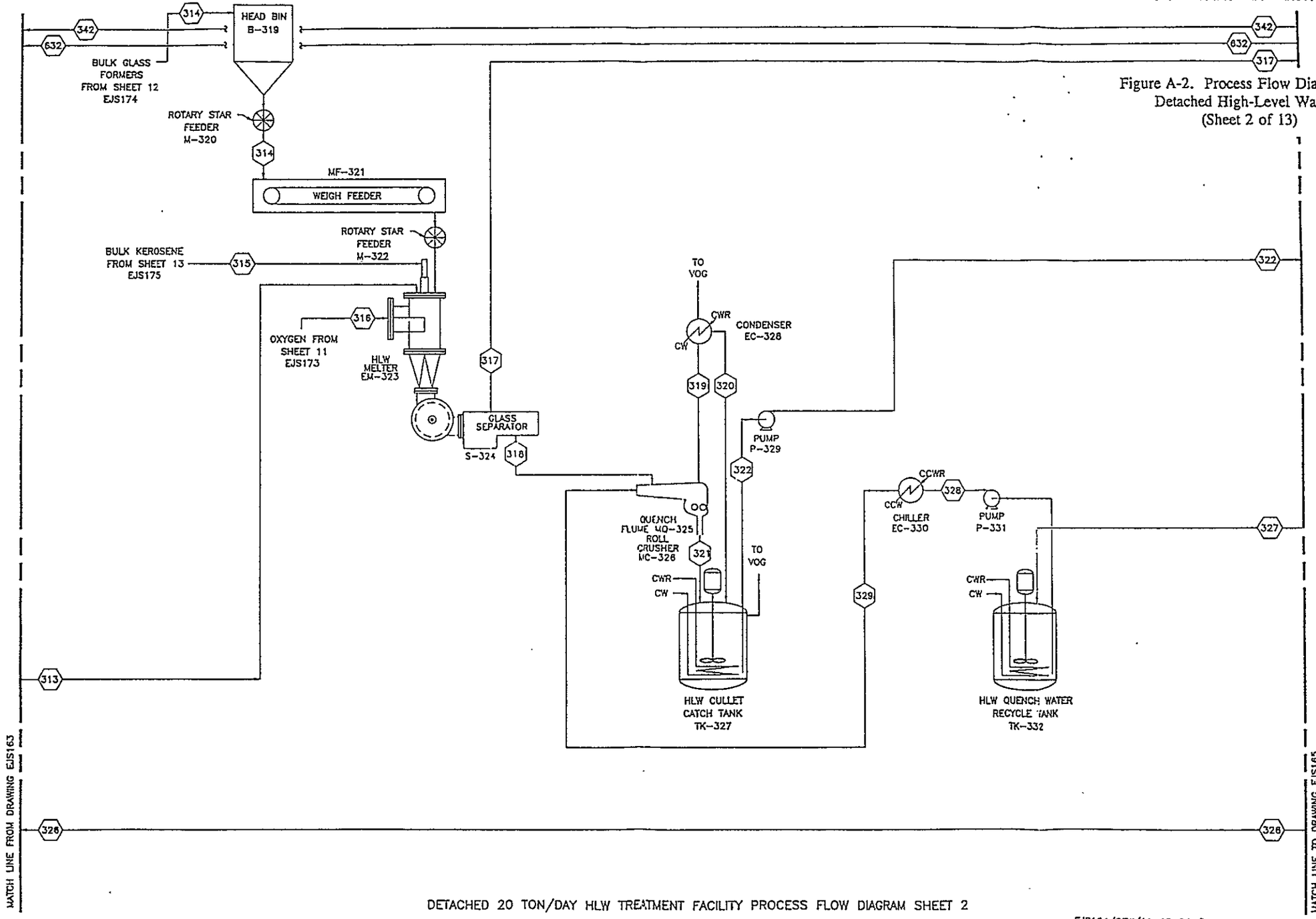

Figure A-2. Process Flow Diagram for Detached High-Level Waste. (Sheet 2 of 13)

Detached High-Level Waste.
(Sheet 3 of 13)

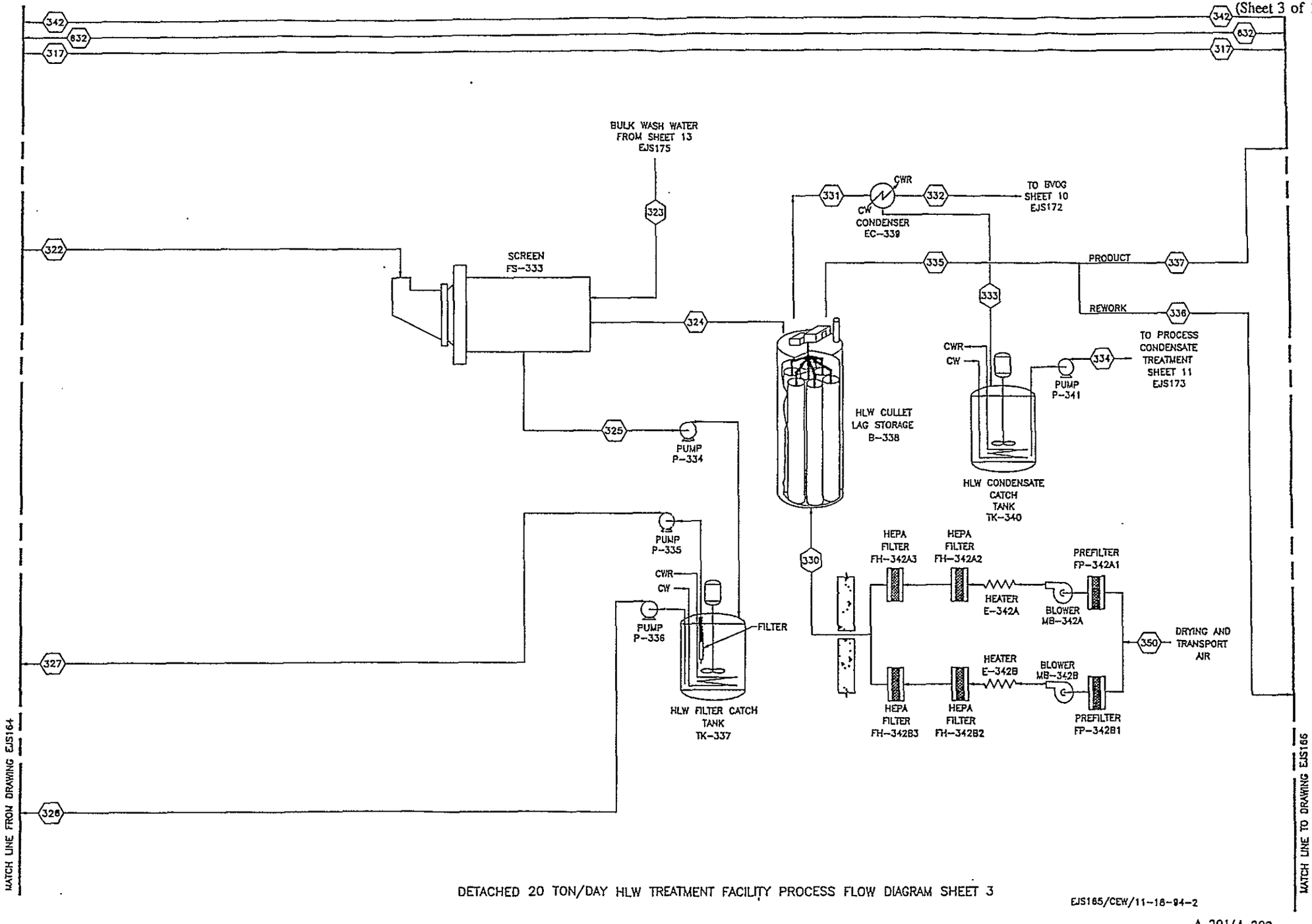

DETACHED 20 TON/DAY HLW TREATMENT FACILITY PROCESS FLOW DIAGRAM SHEET 3

EJS165/CEW/11-18-94-2

Figure A-2. Process Flow Diagram for Detached High-Level Waste. (Sheet 4 of 13)

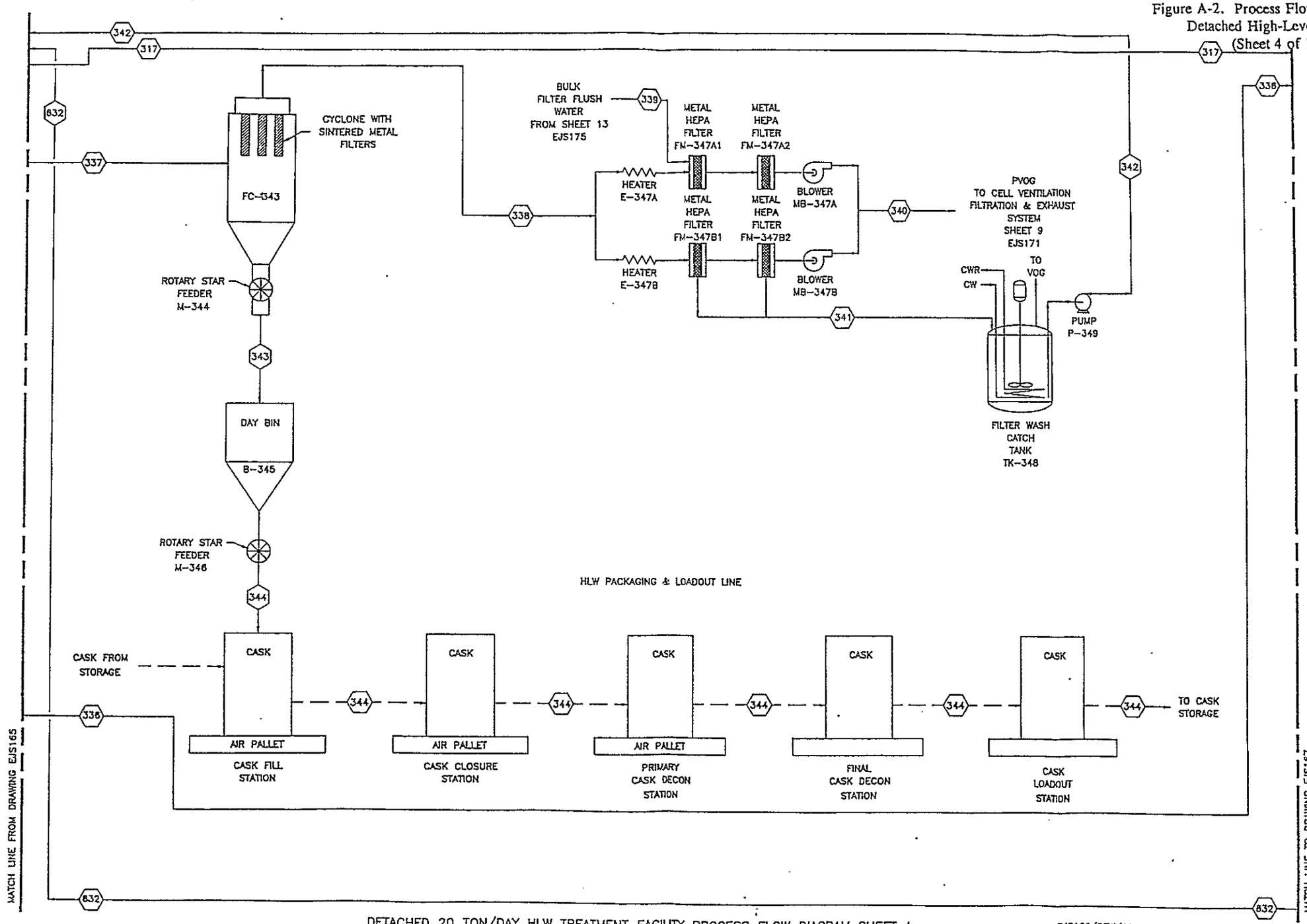

DETACHED 20 TON/DAY HLW TREATMENT FACILITY PROCESS FLOW DIAGRAM SHEET 4

EJS166/CEW/11-18-94-2

Figure A-2. Process Flow Diagram for Detached High-Level Waste. (Sheet 5 of 13)

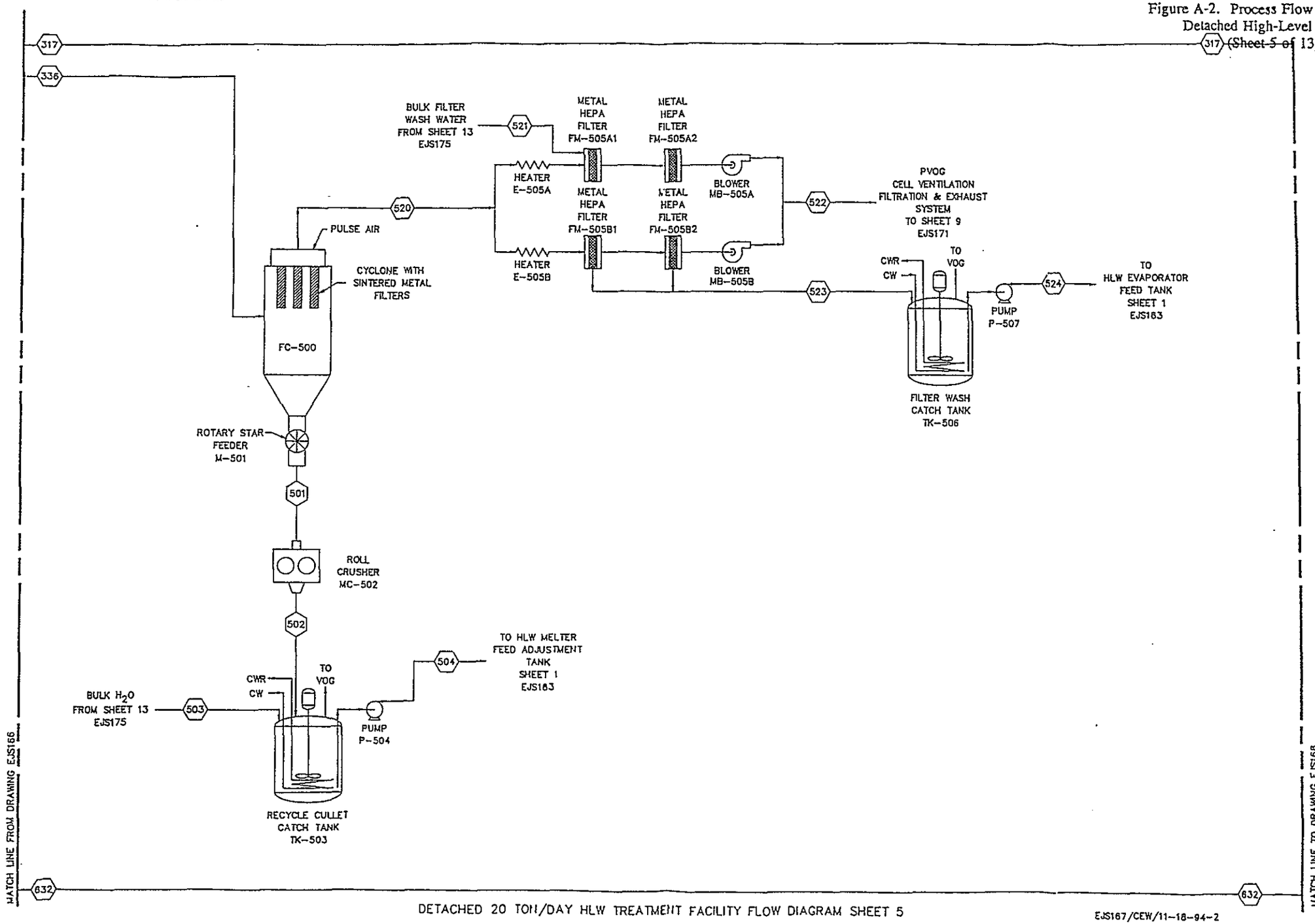

DETACHED 20 TON/DAY HLW TREATMENT FACILITY FLOW DIAGRAM SHEET 5

EJS167/CEW/11-18-94-2

Figure A-2. Process Flow Diagram for Detached High-Level Waste. (Sheet 6 of 13)

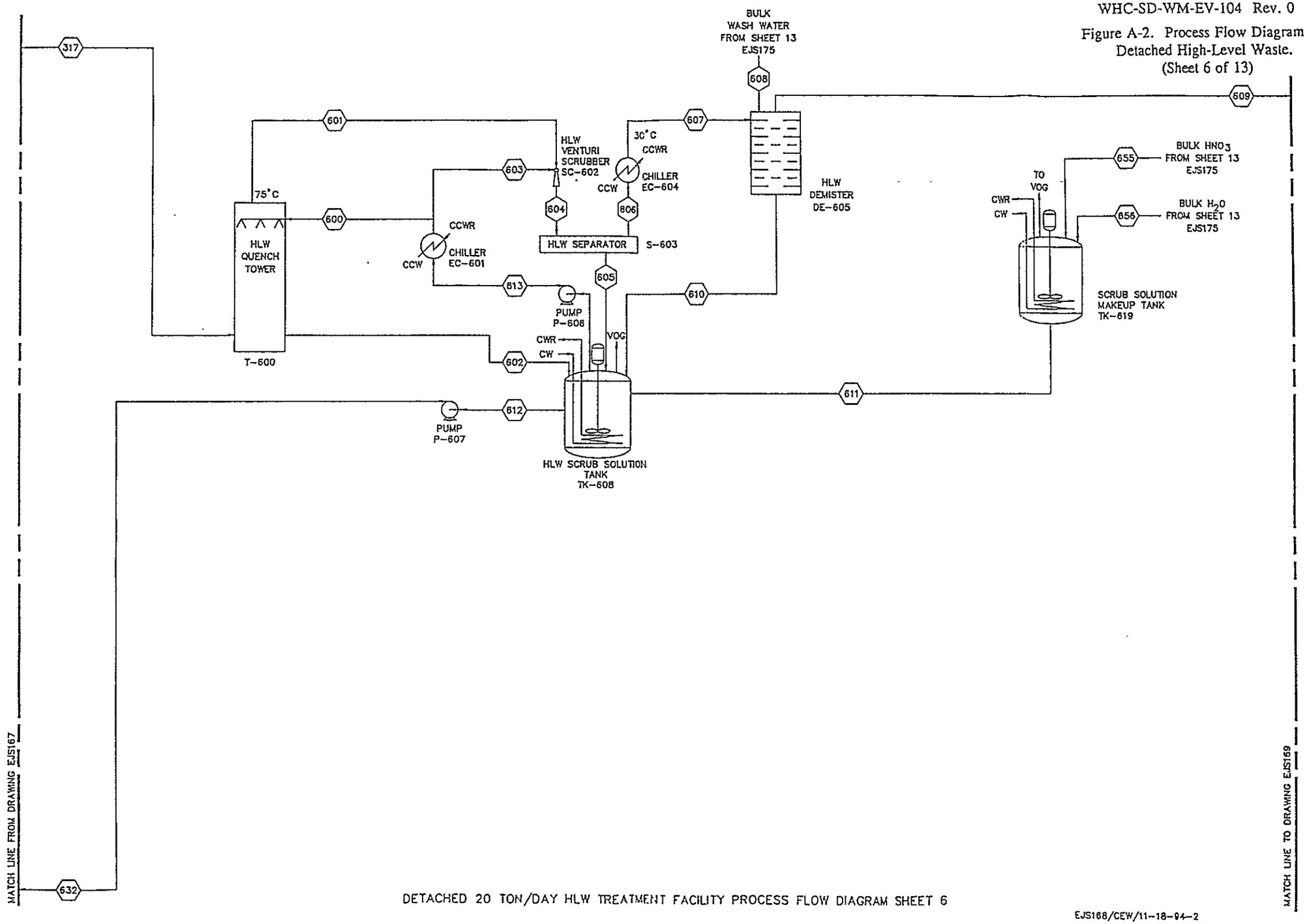

DETACHED 20 TON/DAY HLW TREATMENT FACILITY PROCESS FLOW DIAGRAM SHEET 6

EJS168/CEW/11-18-94-2

Figure A-2. Process Flow Diagram for Detached High-Level Waste. (Sheet 7 of 13)

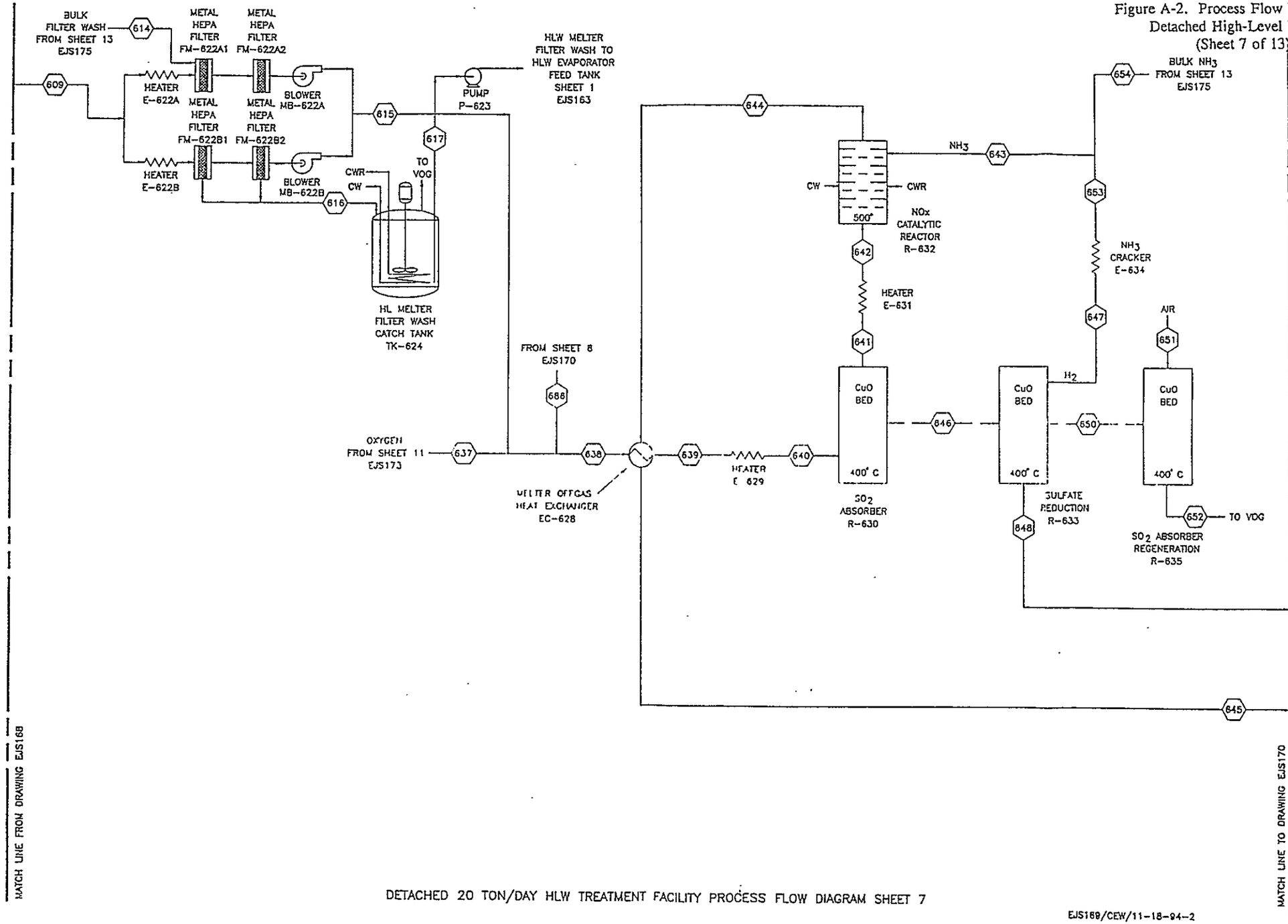

DETACHED 20 TON/DAY HLW TREATMENT FACILITY PROCESS FLOW DIAGRAM SHEET 7

EJS169/CEW/11-18-94-2

Figure A-2. Process Flow Diagram for Detached High-Level Waste. (Sheet 8 of 13)

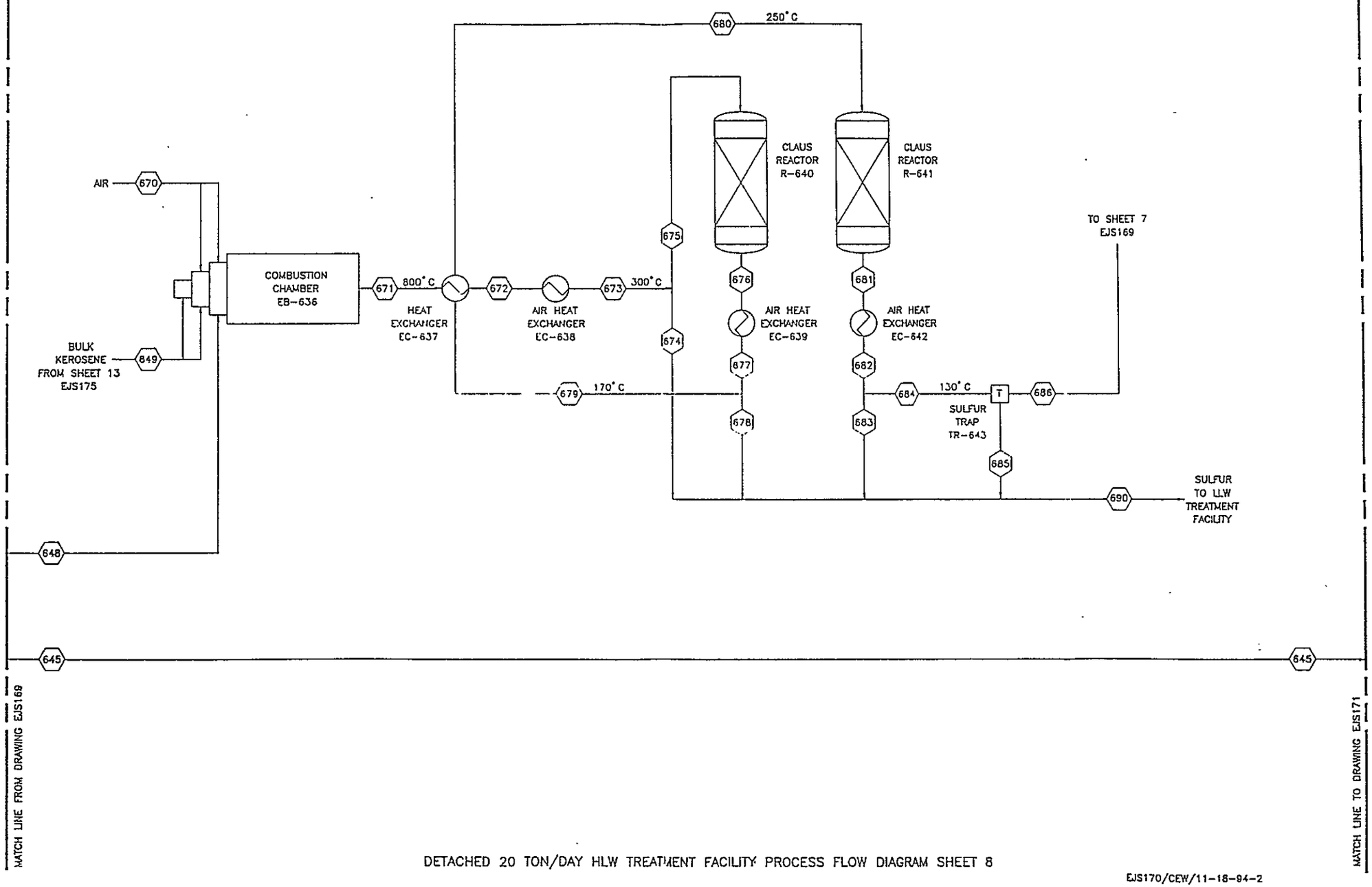

DETACHED 20 TON/DAY HLW TREATMENT FACILITY PROCESS FLOW DIAGRAM SHEET 8

EJS170/CEW/11-18-94-2

Figure A-2. Process Flow Diagram for Detached High-Level Waste. (Sheet 9 of 13)

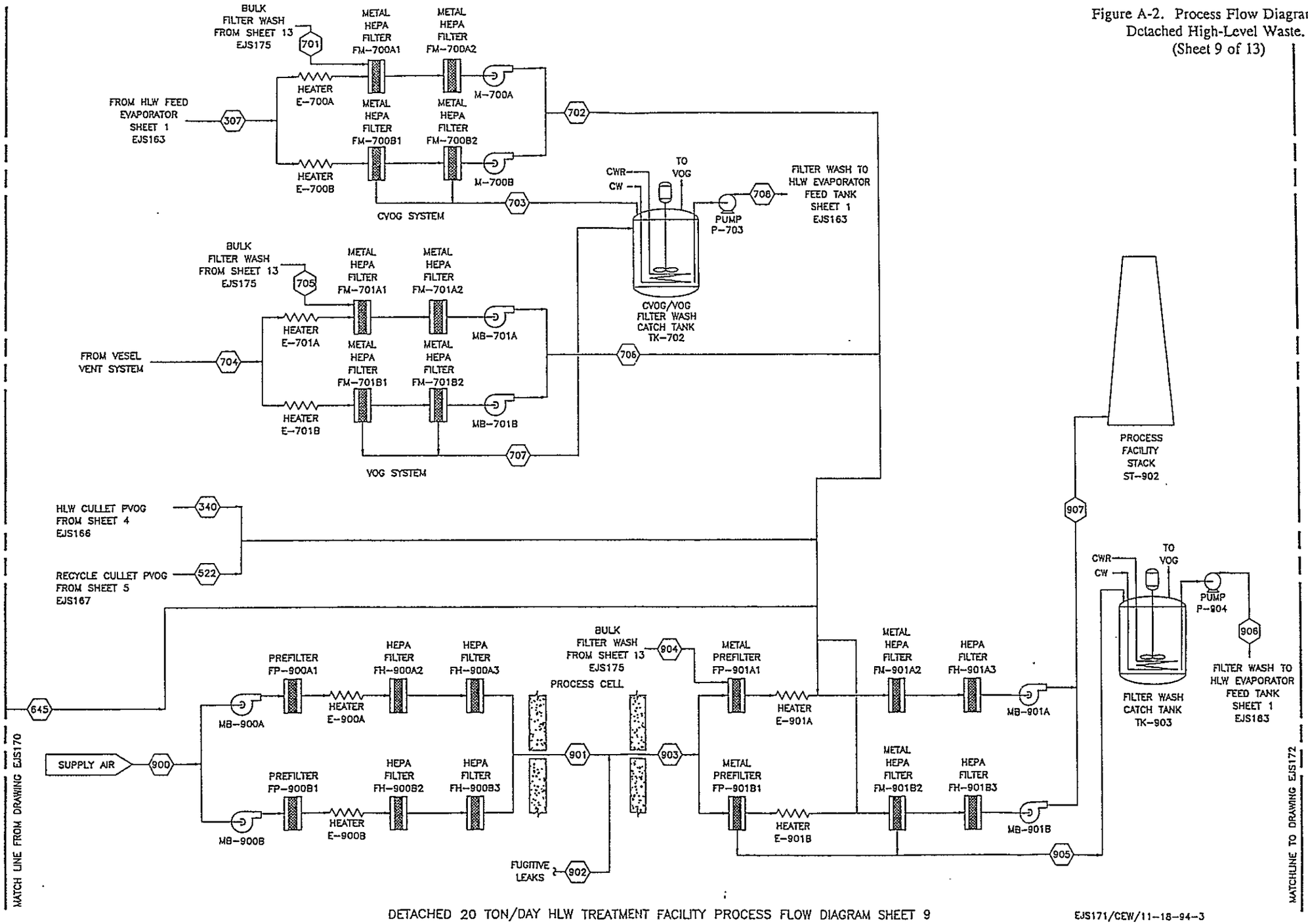

DETACHED 20 TON/DAY HLW TREATMENT FACILITY PROCESS FLOW DIAGRAM SHEET 9

EJS171/CEW/11-18-94-3

Figure A-2. Process Flow Diagram for Detached High-Level Waste. (Sheet 10 of 13)

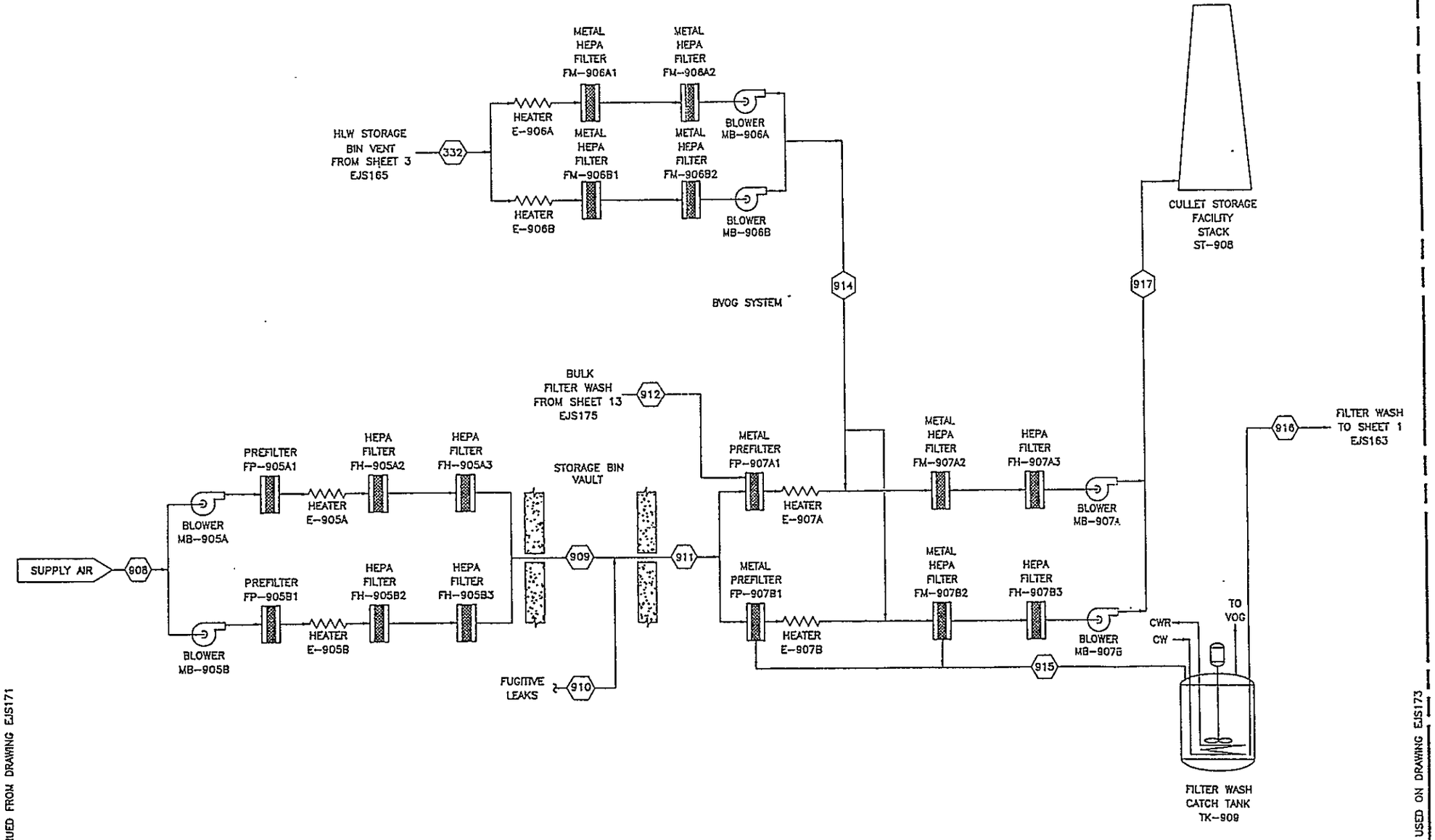

Figure A-2. Process Flow Diagram for Detached High-Level Waste. (Sheet 11 of 13)

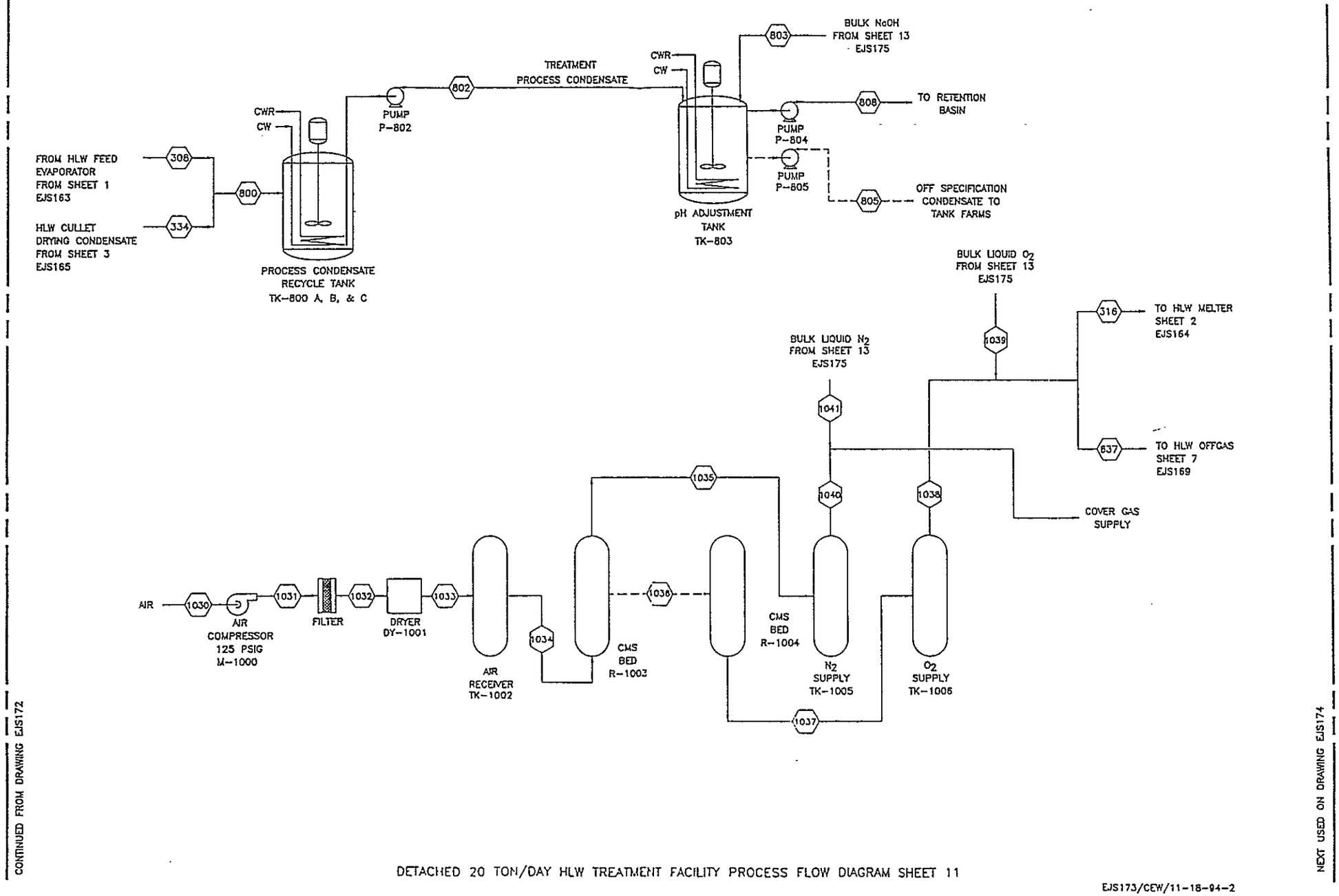

Figure A-2. Process Flow Diagram for Detached High-Level Waste. (Sheet 12 of 13)

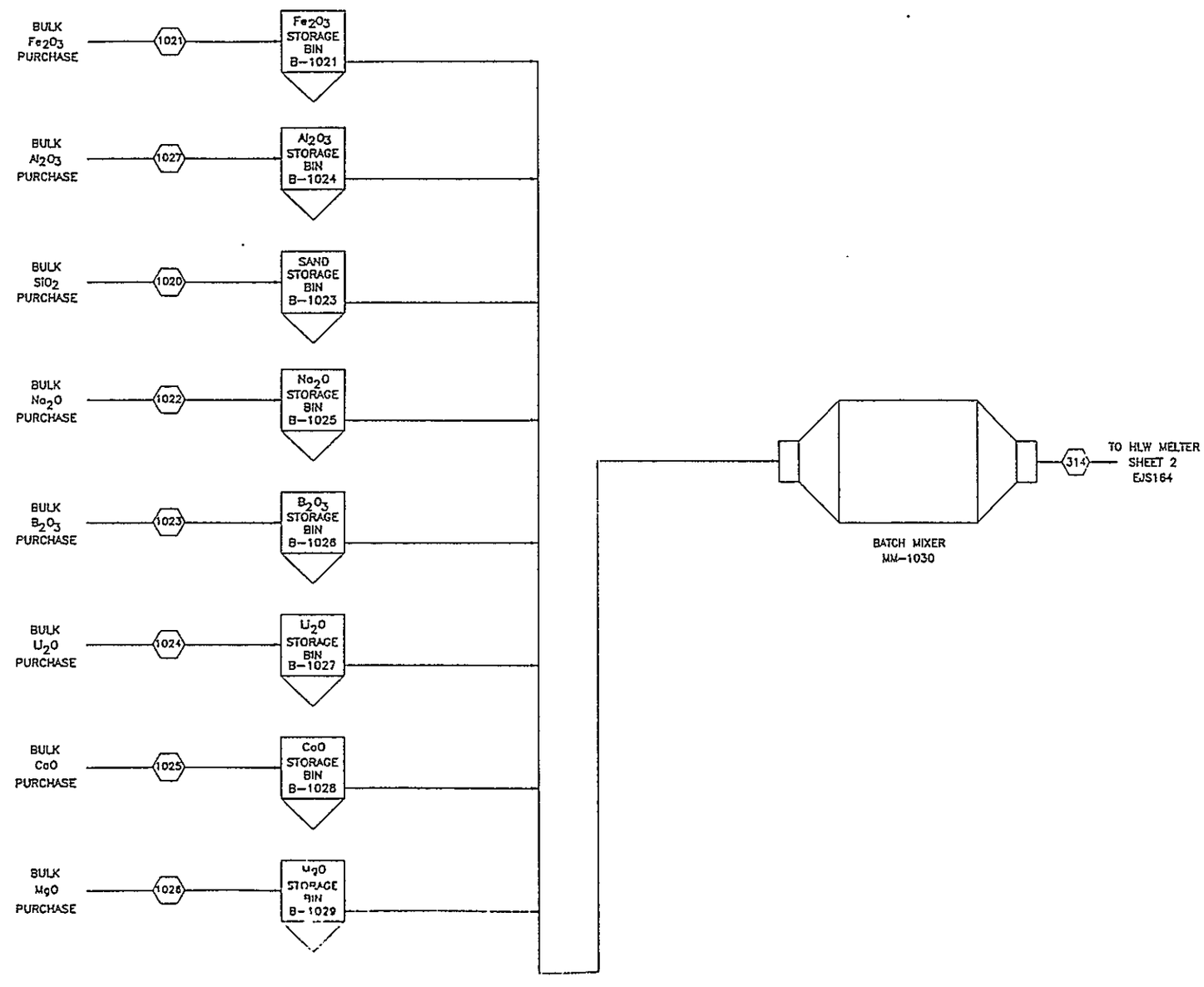

CONTINUED FROM DRAWING EJS173

NEXED USED ON DRAWING EJS175

DETACHED 20 TON/DAY HLW TREATMENT FACILITY PROCESS FLOW DIAGRAM SHEET 12

EJS174/CEW/11-18-94-2

Figure A-2. Process Flow Diagram for Detached High-Level Waste. (Sheet 13 of 13)

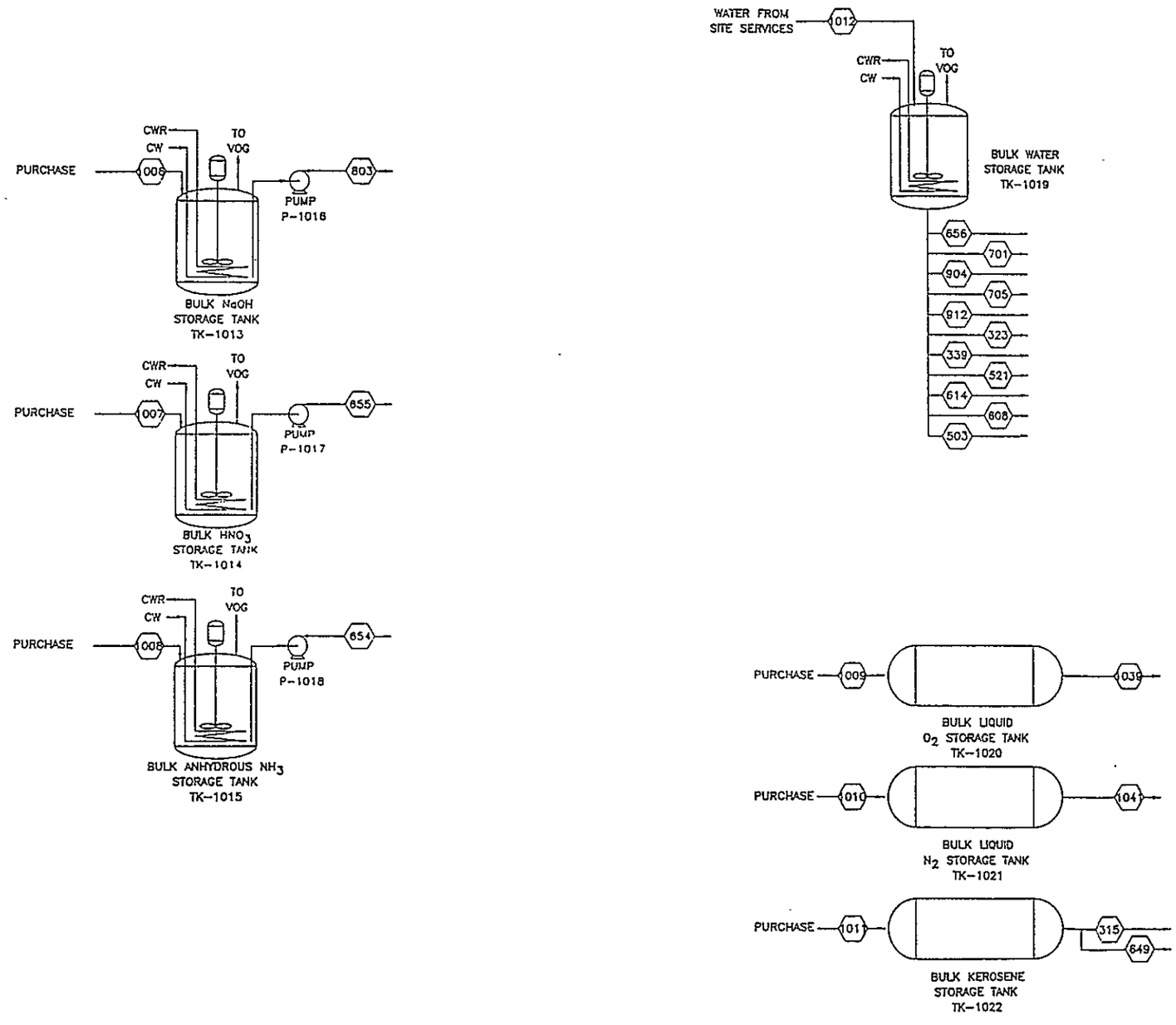

Table A-2. Material Balance for Detached High-Level Waste (63 sheets).

This page intentionally left blank.

Stream Name Liquid Components	34	264	300	301	302	303	304	305	306	307
Cs and Ba, (MCi)	1.38E-01	6.21E+01	1.38E-01	1.38E-01	4.11E-03	1.33E-01	1.33E-01	1.33E-01		
Sr and Y, (MCi)	4.60E-03	2.08E-01	4.60E-03	4.60E-03	1.38E-04	4.47E-03	4.47E-03	4.47E-03		
Tc, (MCi)	5.73E-05		5.73E-05	5.73E-05	1.71E-06	5.56E-05	5.56E-05	6.00E-03		
Am, (MCi)	1.89E-05		1.89E-05	1.89E-05	5.64E-07	1.83E-05	1.83E-05	1.83E-05		
Np, (MCi)	2.26E-08		2.26E-08	2.26E-08	6.76E-10	2.19E-08	2.19E-08	2.19E-08		
Pu-239, (MCi)	3.66E-06		3.66E-06	3.66E-06	1.09E-07	3.55E-06	3.55E-06	3.55E-06		
Pu-240, (MCi)	9.07E-07		9.07E-07	9.07E-07	2.71E-08	8.80E-07	8.80E-07	8.80E-07		
Pu-241, (MCi)	3.25E-06		3.25E-06	3.25E-06	9.73E-08	3.16E-06	3.16E-06	3.16E-06		
Total TRU, (MCi)	2.67E-05		2.67E-05	2.67E-05	7.99E-07	2.59E-05	2.59E-05	2.59E-05		
Total MCi	1.42E-01	6.23E+01	1.42E-01	1.42E-01	4.25E-03	1.38E-01	1.38E-01	1.44E-01		
Total Mass Flow, (MT)	5.11E+04	4.81E+03	5.11E+04	5.11E+04	1.53E+03	4.96E+04	4.96E+04	1.03E+05	7.19E+04	7.19E+02
Total Cr, (MT)	6.26E+00		6.26E+00	6.26E+00	1.87E-01	6.07E+00	6.07E+00	6.07E+00		
Total Na, (MT)	5.74E+02	5.20E+02	5.74E+02	5.74E+02	1.72E+01	5.57E+02	5.57E+02	5.57E+02		
Total Si, (MT)	1.24E-02		1.24E-02	1.24E-02	3.70E-04	1.20E-02	1.20E-02	1.20E-02		
Total P, (MT)	3.57E+01		3.57E+01	3.57E+01	1.07E+00	3.46E+01	3.46E+01	3.46E+01		
Total NO2-, (MT)	4.27E+01		4.27E+01	4.27E+01	1.28E+00	4.14E+01	4.14E+01	4.14E+01		
Total NO3-, (MT)	2.32E+02	1.40E+03	2.32E+02	2.32E+02	6.94E+00	2.25E+02	2.25E+02	2.25E+02		
AG+	7.19E-04		7.19E-04	7.19E-04	2.15E-05	6.97E-04	6.97E-04	6.97E-04		
AL(OH)4-	4.50E+02		4.50E+02	4.50E+02	1.35E+01	4.37E+02	4.37E+02	4.37E+02		
AM+3	5.50E-06		5.50E-06	5.50E-06	1.65E-07	5.34E-06	5.34E-06	5.34E-06		
AS+5	1.69E-03		1.69E-03	1.69E-03	5.04E-05	1.64E-03	1.64E-03	1.64E-03		
B+3	1.14E-03		1.14E-03	1.14E-03	3.40E-05	1.10E-03	1.10E-03	1.10E-03		
BA+2	1.73E-03		1.73E-03	1.73E-03	5.18E-05	1.68E-03	1.68E-03	1.68E-03		
BE+2	1.79E-04		1.79E-04	1.79E-04	5.37E-06	1.74E-04	1.74E-04	1.74E-04		
BI+3	1.48E-01		1.48E-01	1.48E-01	4.43E-03	1.44E-01	1.44E-01	1.44E-01		
C14	1.63E-06		1.63E-06	1.63E-06	4.87E-08	1.58E-06	1.58E-06	1.58E-06		
CA+2	3.66E-02	1.65E+00	3.66E-02	3.66E-02	1.10E-03	3.55E-02	3.55E-02	3.55E-02		
CD+2	4.57E-03		4.57E-03	4.57E-03	1.37E-04	4.43E-03	4.43E-03	4.43E-03		
CE+3	5.19E-03		5.19E-03	5.19E-03	1.55E-04	5.03E-03	5.03E-03	5.03E-03		
CL-	6.81E-01		6.81E-01	6.81E-01	2.04E-02	6.61E-01	6.61E-01	6.61E-01		
CL2										
CO										
CO2										
CO3-2	7.37E+00		7.37E+00	7.37E+00	2.21E-01	7.15E+00	7.15E+00	7.15E+00		
CR(OH)4-	1.45E+01		1.45E+01	1.45E+01	4.32E-01	1.40E+01	1.40E+01	1.40E+01		
CS+	1.80E-03	8.11E-01	1.80E-03	1.80E-03	5.37E-05	1.74E-03	1.74E-03	1.74E-03		
CU+2	3.88E-04		3.88E-04	3.88E-04	1.16E-05	3.76E-04	3.76E-04	3.76E-04		
F-	2.45E+00		2.45E+00	2.45E+00	7.32E-02	2.37E+00	2.37E+00	2.37E+00		
F2										
FE+3	3.15E-02		3.15E-02	3.15E-02	9.41E-04	3.05E-02	3.05E-02	3.05E-02		
H2										
H2O	4.95E+04	2.89E+03	4.95E+04	4.95E+04	1.48E+03	4.80E+04	4.80E+04	1.01E+05	7.19E+04	7.19E+02
H2S										
HG								2.59E-02		
HG+2	2.08E-03		2.08E-03	2.08E-03	6.22E-05	2.02E-03	2.02E-03	2.02E-03		
I-	1.20E+00		1.20E+00	1.20E+00	3.58E-02	1.16E+00	1.16E+00	1.16E+00		

Stream Name Liquid Components	34	264	300	301	302	303	304	305	306	307
I2										
K+	4.80E-04		4.80E-04	4.80E-04	1.44E-05	4.65E-04	4.65E-04	4.65E-04		
KEROSENE										
LA+3	4.80E-04		4.80E-04	4.80E-04	1.44E-05	4.65E-04	4.65E-04	4.65E-04		
LI+	1.26E-05		1.26E-05	1.26E-05	3.78E-07	1.23E-05	1.23E-05	1.23E-05		
MG+2	2.11E-03		2.11E-03	2.11E-03	6.32E-05	2.05E-03	2.05E-03	2.05E-03		
MNO2	4.75E-02		4.75E-02	4.75E-02	1.42E-03	4.61E-02	4.61E-02	4.61E-02		
MO+6	1.07E-02		1.07E-02	1.07E-02	3.19E-04	1.04E-02	1.04E-02	1.04E-02		
N2										
NA+	5.74E+02	5.20E+02	5.74E+02	5.74E+02	1.72E+01	5.57E+02	5.57E+02	5.57E+02		
NH3										
NI+3	8.92E-03		8.92E-03	8.92E-03	2.67E-04	8.65E-03	8.65E-03	8.65E-03		
NO										
NO2										
NO2-	4.27E+01		4.27E+01	4.27E+01	1.28E+00	4.14E+01	4.14E+01	4.14E+01		
NO3-	2.32E+02	1.40E+03	2.32E+02	2.32E+02	6.94E+00	2.25E+02	2.25E+02	2.25E+02		
NP+4	3.21E-05		3.21E-05	3.21E-05	9.59E-07	3.11E-05	3.11E-05	3.11E-05		
O2										
OH-	1.89E+02	6.32E+00	1.89E+02	1.89E+02	5.64E+00	1.83E+02	1.83E+02	1.83E+02		
PB+4	4.29E-03		4.29E-03	4.29E-03	1.28E-04	4.17E-03	4.17E-03	4.17E-03		
PO4-3	1.09E+02		1.09E+02	1.09E+02	3.27E+00	1.06E+02	1.06E+02	1.06E+02		
POLY	1.26E+00		1.26E+00	1.26E+00	3.77E-02	1.22E+00	1.22E+00	1.22E+00		
PU+4	6.30E-05		6.30E-05	6.30E-05	1.89E-06	6.12E-05	6.12E-05	6.12E-05		
S										
SI+4	1.24E-02		1.24E-02	1.24E-02	3.70E-04	1.20E-02	1.20E-02	1.20E-02		
SO2										
SO4-2	4.39E+00		4.39E+00	4.39E+00	1.31E-01	4.26E+00	4.26E+00	4.26E+00		
SR+2	8.22E-04	3.71E-02	8.22E-04	8.22E-04	2.46E-05	7.98E-04	7.98E-04	7.98E-04		
TCO2										
TCO4-	5.53E-03		5.53E-03	5.53E-03	1.65E-04	5.36E-03	5.36E-03	5.79E-01		
TOC	3.10E+00		3.10E+00	3.10E+00	9.27E-02	3.01E+00	3.01E+00	3.01E+00		
UO2+2	1.87E-01		1.87E-01	1.87E-01	5.58E-03	1.81E-01	1.81E-01	1.81E-01		
V+5	1.36E-04		1.36E-04	1.36E-04	4.06E-06	1.32E-04	1.32E-04	1.32E-04		
W+6	1.64E-03		1.64E-03	1.64E-03	4.90E-05	1.59E-03	1.59E-03	1.59E-03		
ZN+2	7.86E-03		7.86E-03	7.86E-03	2.35E-04	7.63E-03	7.63E-03	7.63E-03		
ZR+4	9.81E-04		9.81E-04	9.81E-04	2.94E-05	9.52E-04	9.52E-04	9.52E-04		
ZRO2:2H2	4.71E-02		4.71E-02	4.71E-02	1.41E-03	4.57E-02	4.57E-02	4.57E-02		

Stream Name Solid Components	34	264	300	301	302	303	304	305	306	307
Cs and Ba, (MCi)	5.28E+00		5.28E+00	5.28E+00	5.26E+00	2.05E-02	2.05E-02	7.85E-01		
Sr and Y, (MCi)	1.05E+02		1.05E+02	1.05E+02	1.05E+02	4.08E-01	4.08E-01	1.60E+00		
Tc, (MCi)	5.89E-03		5.89E-03	5.89E-03	5.86E-03	2.28E-05	2.28E-05	8.98E-05		
Am, (MCi)	9.51E-02		9.51E-02	9.51E-02	9.48E-02	3.69E-04	3.69E-04	1.45E-03		
Np, (MCi)	9.28E-05		9.28E-05	9.28E-05	9.25E-05	3.60E-07	3.60E-07	1.41E-06		
Pu-239, (MCi)	2.47E-02		2.47E-02	2.47E-02	2.46E-02	9.58E-05	9.58E-05	3.76E-04		
Pu-240, (MCi)	6.28E-03		6.28E-03	6.28E-03	6.26E-03	2.44E-05	2.44E-05	9.56E-05		
Pu-241, (MCi)	7.34E-02		7.34E-02	7.34E-02	7.31E-02	2.85E-04	2.85E-04	1.11E-03		
Total TRU, (MCi)	2.00E-01		2.00E-01	2.00E-01	1.99E-01	7.75E-04	7.75E-04	3.03E-03		
Total MCi	1.11E+02		1.11E+02	1.11E+02	1.10E+02	4.30E-01	4.30E-01	2.39E+00		
Total Mass Flow, (MT)	1.28E+04		1.28E+04	1.28E+04	1.27E+04	4.97E+01	4.97E+01	3.35E+02		
Total Cr, (MT)	3.34E+01		3.34E+01	3.34E+01	3.32E+01	1.30E-01	1.30E-01	5.79E-01		
Total Na, (MT)	1.24E+03		1.24E+03	1.24E+03	1.23E+03	4.80E+00	4.80E+00	3.12E+01		
Total Si, (MT)	5.43E+02		5.43E+02	5.43E+02	5.41E+02	2.11E+00	2.11E+00	6.82E+01		
Total P, (MT)	2.36E+02		2.36E+02	2.36E+02	2.35E+02	9.15E-01	9.15E-01	3.99E+00		
Total NO2-, (MT)	7.38E+01		7.38E+01	7.38E+01	7.35E+01	2.86E-01	2.86E-01	2.86E-01		
Total NO3-, (MT)	1.03E+03		1.03E+03	1.03E+03	1.03E+03	4.01E+00	4.01E+00	4.01E+00		
AG+	1.38E+00		1.38E+00	1.38E+00	1.37E+00	5.34E-03	5.34E-03	5.34E-03		
AG2O								1.68E-02		
AL+3	3.62E+02		3.62E+02	3.62E+02	3.60E+02	1.40E+00	1.40E+00	1.40E+00		
AL2O3								1.97E+01		
AM+3	2.77E-02		2.77E-02	2.77E-02	2.76E-02	1.08E-04	1.08E-04	1.08E-04		
AM2O3								3.46E-04		
AS+5	4.98E-01		4.98E-01	4.98E-01	4.96E-01	1.93E-03	1.93E-03	1.93E-03		
AS2O5								8.69E-03		
B+3	9.94E-01		9.94E-01	9.94E-01	9.90E-01	3.86E-03	3.86E-03	3.86E-03		
B2O3	7.99E+00		7.99E+00	7.99E+00	7.96E+00	3.10E-02	3.10E-02	2.00E+01		
BA+2	3.09E+00		3.09E+00	3.09E+00	3.08E+00	1.20E-02	1.20E-02	1.20E-02		
BAO								3.91E-02		
BE+2	7.61E-03		7.61E-03	7.61E-03	7.58E-03	2.95E-05	2.95E-05	2.95E-05		
BEO								2.45E-04		
BI+3	1.96E+02		1.96E+02	1.96E+02	1.95E+02	7.61E-01	7.61E-01	7.61E-01		
BI2O3								2.48E+00		
C14	4.53E-04		4.53E-04	4.53E-04	4.51E-04	1.76E-06	1.76E-06	1.76E-06		
CA+2	1.33E+02		1.33E+02	1.33E+02	1.33E+02	5.17E-01	5.17E-01	5.17E-01		
CANCRINI	2.70E+03		2.70E+03	2.70E+03	2.69E+03	1.05E+01	1.05E+01	1.05E+01		
CAO	5.71E-01		5.71E-01	5.71E-01	5.68E-01	2.22E-03	2.22E-03	2.15E+00		
CD+2	7.93E+00		7.93E+00	7.93E+00	7.90E+00	3.08E-02	3.08E-02	3.08E-02		
CDO								1.03E-01		
CE+3	2.35E+02		2.35E+02	2.35E+02	2.34E+02	9.13E-01	9.13E-01	9.13E-01		
CE2O3								3.12E+00		
CL-	3.49E+00		3.49E+00	3.49E+00	3.48E+00	1.36E-02	1.36E-02	1.36E-02		
CO3-2	2.24E+02		2.24E+02	2.24E+02	2.24E+02	8.71E-01	8.71E-01	8.71E-01		
CR+3	3.34E+01		3.34E+01	3.34E+01	3.32E+01	1.30E-01	1.30E-01	1.30E-01		
CR2O3								6.57E-01		
CS+	9.25E-02		9.25E-02	9.25E-02	9.22E-02	3.59E-04	3.59E-04	3.59E-04		

Stream Name Solid Components	34	264	300	301	302	303	304	305	306	307
CS2O								1.09E-02		
CU										
CU+2	7.46E-01		7.46E-01	7.46E-01	7.43E-01	2.90E-03	2.90E-03	2.90E-03		
CUO								1.06E-02		
CUSO4										
F-	5.97E+01		5.97E+01	5.97E+01	5.94E+01	2.32E-01	2.32E-01	2.32E-01		
FE+3	7.63E+02		7.63E+02	7.63E+02	7.60E+02	2.96E+00	2.96E+00	2.96E+00		
FE2O3								1.37E+01		
HG+2	9.00E-03		9.00E-03	9.00E-03	8.96E-03	3.49E-05	3.49E-05	3.49E-05		
I-	2.02E+01		2.02E+01	2.02E+01	2.01E+01	7.84E-02	7.84E-02	7.84E-02		
K+	2.10E+01		2.10E+01	2.10E+01	2.09E+01	8.15E-02	8.15E-02	8.15E-02		
K2O								2.87E-01		
LA+3	2.10E+01		2.10E+01	2.10E+01	2.09E+01	8.15E-02	8.15E-02	8.15E-02		
LA2O3								2.79E-01		
LI+	2.46E-02		2.46E-02	2.46E-02	2.45E-02	9.54E-05	9.54E-05	9.54E-05		
LI2O	2.85E+00		2.85E+00	2.85E+00	2.84E+00	1.11E-02	1.11E-02	5.71E+00		
MG+2	1.10E+01		1.10E+01	1.10E+01	1.10E+01	4.27E-02	4.27E-02	4.27E-02		
MGO	5.71E-01		5.71E-01	5.71E-01	5.68E-01	2.22E-03	2.22E-03	2.16E-01		
MNO2	2.09E+02		2.09E+02	2.09E+02	2.08E+02	8.11E-01	8.11E-01	3.18E+00		
MO+6	8.01E-01		8.01E-01	8.01E-01	7.98E-01	3.11E-03	3.11E-03	3.11E-03		
MOO3								1.38E-02		
NA+	7.77E+02		7.77E+02	7.77E+02	7.74E+02	3.02E+00	3.02E+00	3.02E+00		
NA2O								3.56E+01		
NI+3	6.57E+00		6.57E+00	6.57E+00	6.54E+00	2.55E-02	2.55E-02	2.55E-02		
NI2FECN6	5.00E+02		5.00E+02	5.00E+02	4.98E+02	1.94E+00	1.94E+00	1.94E+00		
NI2O3								1.05E-01		
NIO								2.57E+00		
NO2-	7.38E+01		7.38E+01	7.38E+01	7.35E+01	2.86E-01	2.86E-01	2.86E-01		
NO3-	1.03E+03		1.03E+03	1.03E+03	1.03E+03	4.01E+00	4.01E+00	4.01E+00		
NP+4	1.32E-01		1.32E-01	1.32E-01	1.31E-01	5.11E-04	5.11E-04	5.11E-04		
NPO2								1.70E-03		
OH-	2.01E+03		2.01E+03	2.01E+03	2.00E+03	7.78E+00	7.78E+00	7.78E+00		
P2O5								7.05E+00		
P2O5:24W	5.21E-01		5.21E-01	5.21E-01	5.19E-01	2.02E-03	2.02E-03	2.02E-03		
PB+4	3.28E+00		3.28E+00	3.28E+00	3.27E+00	1.27E-02	1.27E-02	1.27E-02		
PBO2								4.30E-02		
PO4-3	7.22E+02		7.22E+02	7.22E+02	7.20E+02	2.80E+00	2.80E+00	2.80E+00		
POLY	7.51E+01		7.51E+01	7.51E+01	7.48E+01	2.92E-01	2.92E-01	2.92E-01		
PU+4	4.27E-01		4.27E-01	4.27E-01	4.25E-01	1.66E-03	1.66E-03	1.66E-03		
PUO2								5.48E-03		
SI+4	7.90E+01		7.90E+01	7.90E+01	7.87E+01	3.07E-01	3.07E-01	3.07E-01		
SIO2	3.99E+01		3.99E+01	3.99E+01	3.98E+01	1.55E-01	1.55E-01	1.42E+02		
SO4-2	3.97E+01		3.97E+01	3.97E+01	3.96E+01	1.54E-01	1.54E-01	1.54E-01		
SR+2	3.64E+01		3.64E+01	3.64E+01	3.63E+01	1.41E-01	1.41E-01	1.41E-01		
SRO								4.87E-01		
TC2O7								6.18E-03		

Stream Name Solid Components	34	264	300	301	302	303	304	305	306	307
TCO4-	5.68E-01		5.68E-01	5.68E-01	5.66E-01	2.20E-03	2.20E-03	2.20E-03		
TOC	1.16E+02		1.16E+02	1.16E+02	1.15E+02	4.49E-01	4.49E-01	4.49E-01		
UO2+2	1.58E+03		1.58E+03	1.58E+03	1.57E+03	6.13E+00	6.13E+00	6.13E+00		
UO3								1.90E+01		
V+5	1.88E-01		1.88E-01	1.88E-01	1.87E-01	7.29E-04	7.29E-04	7.29E-04		
V2O5								3.80E-03		
WO2								5.00E-03		
WO3								2.34E-05		
ZN+2	9.45E-01		9.45E-01	9.45E-01	9.41E-01	3.67E-03	3.67E-03	3.67E-03		
ZNO								1.35E-02		
ZR+4	2.77E+02		2.77E+02	2.77E+02	2.76E+02	1.07E+00	1.07E+00	1.07E+00		
ZRO2								7.82E+00		
ZRO2:2H2	4.09E+02		4.09E+02	4.09E+02	4.07E+02	1.59E+00	1.59E+00	1.59E+00		

Stream Name Liquid Components	308	309	310	311	312	313	314	315	316	317
Cs and Ba, (MCi)		1.33E-01	1.33E-01	1.38E-01	6.23E+01	6.23E+01				
Sr and Y, (MCi)		4.47E-03	4.47E-03	4.60E-03	2.12E-01	2.12E-01				
Tc, (MCi)		6.00E-03	6.00E-03	6.00E-03	6.00E-03	6.00E-03				5.91E-03
Am, (MCi)		1.83E-05	1.83E-05	1.89E-05	1.89E-05	1.89E-05				
Np, (MCi)		2.19E-08	2.19E-08	2.26E-08	2.26E-08	2.26E-08				
Pu-239, (MCi)		3.55E-06	3.55E-06	3.66E-06	3.66E-06	3.66E-06				
Pu-240, (MCi)		8.80E-07	8.80E-07	9.07E-07	9.07E-07	9.07E-07				
Pu-241, (MCi)				9.73E-08	9.73E-08	9.73E-08				
Total TRU, (MCi)		2.28E-05	2.28E-05	2.36E-05	2.36E-05	2.36E-05				
Total MCi		1.44E-01	1.44E-01	1.48E-01	6.25E+01	6.25E+01				5.91E-03
Total Mass Flow, (MT)	7.11E+04	3.08E+04	3.08E+04	3.23E+04	4.10E+04	4.10E+04		4.99E+03	2.31E+04	7.09E+04
Total Cr, (MT)		6.07E+00	6.07E+00	6.26E+00	6.26E+00	6.26E+00				
Total Na, (MT)		5.57E+02	5.57E+02	5.74E+02	1.09E+03	1.09E+03				
Total Si, (MT)		1.20E-02	1.20E-02	1.24E-02	1.24E-02	1.24E-02				
Total P, (MT)		3.46E+01	3.46E+01	3.57E+01	3.57E+01	3.57E+01				
Total NO2-, (MT)		4.14E+01	4.14E+01	4.27E+01	4.27E+01	4.27E+01				
Total NO3-, (MT)		2.25E+02	2.25E+02	2.32E+02	1.63E+03	1.63E+03				
AG+		6.97E-04	6.97E-04	7.19E-04	7.19E-04	7.19E-04				
AL(OH)4-		4.37E+02	4.37E+02	4.50E+02	4.50E+02	4.50E+02				
AM+3		5.34E-06	5.34E-06	5.50E-06	5.50E-06	5.50E-06				
AS+5		1.64E-03	1.64E-03	1.69E-03	1.69E-03	1.69E-03				
B+3		1.10E-03	1.10E-03	1.14E-03	1.14E-03	1.14E-03				
BA+2		1.68E-03	1.68E-03	1.73E-03	1.73E-03	1.73E-03				
BE+2		1.74E-04	1.74E-04	1.79E-04	1.79E-04	1.79E-04				
BI+3		1.44E-01	1.44E-01	1.48E-01	1.48E-01	1.48E-01				
C14		1.58E-06	1.58E-06	1.63E-06	1.63E-06	1.63E-06				
CA+2		3.55E-02	3.55E-02	3.66E-02	1.69E+00	1.69E+00				
CD+2		4.43E-03	4.43E-03	4.57E-03	4.57E-03	4.57E-03				
CE+3		5.03E-03	5.03E-03	5.19E-03	5.19E-03	5.19E-03				
CL-		6.61E-01	6.61E-01	6.81E-01	6.81E-01	6.81E-01				
CL2										4.17E+00
CO										2.03E+02
CO2										1.69E+04
CO3-2		7.15E+00	7.15E+00	7.37E+00	7.37E+00	7.37E+00				
CR(OH)4-		1.40E+01	1.40E+01	1.45E+01	1.45E+01	1.45E+01				
CS+		1.74E-03	1.74E-03	1.80E-03	8.13E-01	8.13E-01				
CU+2		3.76E-04	3.76E-04	3.88E-04	3.88E-04	3.88E-04				
F-		2.37E+00	2.37E+00	2.45E+00	2.45E+00	2.45E+00				
F2										6.21E+01
FE+3		3.05E-02	3.05E-02	3.15E-02	3.15E-02	3.15E-02				
H2										
H2O	7.11E+04	2.92E+04	2.92E+04	3.07E+04	3.74E+04	3.74E+04				5.05E+04
H2S										
HG		2.59E-02	2.59E-02	2.59E-02	2.59E-02	2.59E-02				3.69E-02
HG+2		2.02E-03	2.02E-03	2.08E-03	2.08E-03	2.08E-03				
I-		1.16E+00	1.16E+00	1.20E+00	1.20E+00	1.20E+00				

Stream Name Liquid Components	308	309	310	311	312	313	314	315	316	317
I2										2.14E+01
K+		4.65E-04	4.65E-04	4.80E-04	4.80E-04	4.80E-04				
KEROSENE								4.99E+03		
LA+3		4.65E-04	4.65E-04	4.80E-04	4.80E-04	4.80E-04				
LI+		1.23E-05	1.23E-05	1.26E-05	1.26E-05	1.26E-05				
MG+2		2.05E-03	2.05E-03	2.11E-03	2.11E-03	2.11E-03				
MNO2		4.61E-02	4.61E-02	4.75E-02	4.75E-02	4.75E-02				
MO+6		1.04E-02	1.04E-02	1.07E-02	1.07E-02	1.07E-02				
N2										6.95E+02
NA+		5.57E+02	5.57E+02	5.74E+02	1.09E+03	1.09E+03				
NH3										
NI+3		8.65E-03	8.65E-03	8.92E-03	8.92E-03	8.92E-03				
NO										9.98E+00
NO2										4.13E+02
NO2-		4.14E+01	4.14E+01	4.27E+01	4.27E+01	4.27E+01				
NO3-		2.25E+02	2.25E+02	2.32E+02	1.63E+03	1.63E+03				
NP+4		3.11E-05	3.11E-05	3.21E-05	3.21E-05	3.21E-05				
O2									2.31E+04	2.10E+03
OH-		1.83E+02	1.83E+02	1.89E+02	1.95E+02	1.95E+02				
PB+4		4.17E-03	4.17E-03	4.29E-03	4.29E-03	4.29E-03				
PO4-3		1.06E+02	1.06E+02	1.09E+02	1.09E+02	1.09E+02				
POLY		1.22E+00	1.22E+00	1.26E+00	1.26E+00	1.26E+00				
PU+4		6.11E-05	6.11E-05	6.30E-05	6.30E-05	6.30E-05				
S										
SI+4		1.20E-02	1.20E-02	1.24E-02	1.24E-02	1.24E-02				
SO2										2.94E+01
SO4-2		4.26E+00	4.26E+00	4.39E+00	4.39E+00	4.39E+00				
SR+2		7.98E-04	7.98E-04	8.22E-04	3.79E-02	3.79E-02				
TCO2										4.61E-01
TCO4-		5.79E-01	5.79E-01	5.79E-01	5.79E-01	5.79E-01				
TOC		3.01E+00	3.01E+00	3.10E+00	3.10E+00	3.10E+00				
UO2+2		1.81E-01	1.81E-01	1.87E-01	1.87E-01	1.87E-01				
V+5		1.32E-04	1.32E-04	1.36E-04	1.36E-04	1.36E-04				
W+6		1.59E-03	1.59E-03	1.64E-03	1.64E-03	1.64E-03				
ZN+2		7.63E-03	7.63E-03	7.86E-03	7.86E-03	7.86E-03				
ZR+4		9.52E-04	9.52E-04	9.81E-04	9.81E-04	9.81E-04				
ZRO2:2H2		4.57E-02	4.57E-02	4.71E-02	4.71E-02	4.71E-02				

Stream Name Solid Components	308	309	310	311	312	313	314	315	316	317
Cs and Ba, (MCi)		7.85E-01	7.85E-01	6.05E+00	7.42E+00	7.42E+00				6.96E-01
Sr and Y, (MCi)		1.60E+00	1.60E+00	1.06E+02	1.09E+02	1.09E+02				1.09E+00
Tc, (MCi)		8.98E-05	8.98E-05	5.95E-03	6.07E-03	6.07E-03				6.09E-05
Am, (MCi)		1.45E-03	1.45E-03	9.62E-02	9.81E-02	9.81E-02				9.82E-04
Np, (MCi)		1.41E-06	1.41E-06	9.39E-05	9.58E-05	9.58E-05				9.58E-07
Pu-239, (MCi)		3.76E-04	3.76E-04	2.50E-02	2.55E-02	2.55E-02				2.55E-04
Pu-240, (MCi)		9.56E-05	9.56E-05	6.35E-03	6.48E-03	6.48E-03				6.48E-05
Pu-241, (MCi)		1.11E-03	1.11E-03	7.42E-02	7.57E-02	7.57E-02				7.57E-04
Total TRU, (MCi)		3.03E-03	3.03E-03	2.02E-01	2.06E-01	2.06E-01				2.06E-03
Total MCi		2.39E+00	2.39E+00	1.13E+02	1.16E+02	1.16E+02				1.79E+00
Total Mass Flow, (MT)		3.35E+02	3.35E+02	1.31E+04	1.36E+04	1.36E+04	1.36E+04			2.59E+02
Total Cr, (MT)		5.79E-01	5.79E-01	3.38E+01	3.46E+01	3.46E+01				4.09E-01
Total Na, (MT)		3.12E+01	3.12E+01	1.26E+03	1.31E+03	1.31E+03				2.40E+01
Total Si, (MT)		6.82E+01	6.82E+01	6.09E+02	7.28E+02	7.28E+02	5.29E+03			6.01E+01
Total P, (MT)		3.99E+00	3.99E+00	2.39E+02	2.44E+02	2.44E+02				2.80E+00
Total NO2-, (MT)		2.86E-01	2.86E-01	7.38E+01	7.38E+01	7.38E+01				
Total NO3-, (MT)		4.01E+00	4.01E+00	1.03E+03	1.03E+03	1.03E+03				
AG+		5.34E-03	5.34E-03	1.38E+00	1.38E+00	1.38E+00				
AG2O		1.68E-02	1.68E-02	1.68E-02	4.68E-02	4.68E-02				1.53E-02
AL+3		1.40E+00	1.40E+00	3.62E+02	3.62E+02	3.62E+02				
AL2O3		1.97E+01	1.97E+01	1.97E+01	5.49E+01	5.49E+01				1.79E+01
AM+3		1.08E-04	1.08E-04	2.77E-02	2.77E-02	2.77E-02				
AM2O3		3.46E-04	3.46E-04	3.46E-04	9.64E-04	9.64E-04				3.14E-04
AS+5		1.93E-03	1.93E-03	4.98E-01	4.98E-01	4.98E-01				
AS2O5		8.69E-03	8.69E-03	8.69E-03	2.43E-02	2.43E-02				7.91E-03
B+3		3.86E-03	3.86E-03	9.94E-01	9.94E-01	9.94E-01				
B2O3		2.00E+01	2.00E+01	2.79E+01	6.36E+01	6.36E+01	1.75E+03			1.82E+01
BA+2		1.20E-02	1.20E-02	3.09E+00	3.09E+00	3.09E+00				
BAO		3.91E-02	3.91E-02	3.91E-02	1.09E-01	1.09E-01				3.56E-02
BE+2		2.95E-05	2.95E-05	7.61E-03	7.61E-03	7.61E-03				
BEO		2.45E-04	2.45E-04	2.45E-04	6.84E-04	6.84E-04				2.23E-04
BI+3		7.61E-01	7.61E-01	1.96E+02	1.96E+02	1.96E+02				
BI2O3		2.48E+00	2.48E+00	2.48E+00	6.92E+00	6.92E+00				2.26E+00
C14		1.76E-06	1.76E-06	4.53E-04	4.53E-04	4.53E-04				
CA+2		5.17E-01	5.17E-01	1.33E+02	1.33E+02	1.33E+02				
CANCRINI		1.05E+01	1.05E+01	2.70E+03	2.70E+03	2.70E+03				
CAO		2.15E+00	2.15E+00	2.72E+00	6.56E+00	6.56E+00				1.95E+00
CD+2		3.08E-02	3.08E-02	7.93E+00	7.93E+00	7.93E+00				
CDO		1.03E-01	1.03E-01	1.03E-01	2.87E-01	2.87E-01				9.35E-02
CE+3		9.13E-01	9.13E-01	2.35E+02	2.35E+02	2.35E+02				
CE2O3		3.12E+00	3.12E+00	3.12E+00	8.72E+00	8.72E+00				2.84E+00
CL-		1.36E-02	1.36E-02	3.49E+00	3.49E+00	3.49E+00				
CO3-2		8.71E-01	8.71E-01	2.24E+02	2.24E+02	2.24E+02				
CR+3		1.30E-01	1.30E-01	3.34E+01	3.34E+01	3.34E+01				
CR2O3		6.57E-01	6.57E-01	6.57E-01	1.83E+00	1.83E+00				5.98E-01
CS+		3.59E-04	3.59E-04	9.25E-02	9.25E-02	9.25E-02				

Stream Name Solid Components	308	309	310	311	312	313	314	315	316	317
CS2O		1.09E-02	1.09E-02	1.09E-02	3.03E-02	3.03E-02				9.88E-03
CU										
CU+2		2.90E-03	2.90E-03	7.46E-01	7.46E-01	7.46E-01				
CUO		1.06E-02	1.06E-02	1.06E-02	2.96E-02	2.96E-02				9.64E-03
CUSO4										
F-		2.32E-01	2.32E-01	5.97E+01	5.97E+01	5.97E+01				
FE+3		2.96E+00	2.96E+00	7.63E+02	7.63E+02	7.63E+02				
FE2O3		1.37E+01	1.37E+01	1.37E+01	3.83E+01	3.83E+01				1.25E+01
HG+2		3.49E-05	3.49E-05	9.00E-03	9.00E-03	9.00E-03				
I-		7.84E-02	7.84E-02	2.02E+01	2.02E+01	2.02E+01				
K+		8.15E-02	8.15E-02	2.10E+01	2.10E+01	2.10E+01				
K2O		2.87E-01	2.87E-01	2.87E-01	8.00E-01	8.00E-01				2.61E-01
LA+3		8.15E-02	8.15E-02	2.10E+01	2.10E+01	2.10E+01				
LA2O3		2.79E-01	2.79E-01	2.79E-01	7.79E-01	7.79E-01				2.54E-01
LI+		9.54E-05	9.54E-05	2.46E-02	2.46E-02	2.46E-02				
LI2O		5.71E+00	5.71E+00	8.55E+00	1.88E+01	1.88E+01	5.00E+02			5.18E+00
MG+2		4.27E-02	4.27E-02	1.10E+01	1.10E+01	1.10E+01				
MGO		2.16E-01	2.16E-01	7.84E-01	1.17E+00	1.17E+00				1.94E-01
MNO2		3.18E+00	3.18E+00	2.11E+02	2.16E+02	2.16E+02				2.16E+00
MO+6		3.11E-03	3.11E-03	8.01E-01	8.01E-01	8.01E-01				
MOO3		1.38E-02	1.38E-02	1.38E-02	3.85E-02	3.85E-02				1.26E-02
NA+		3.02E+00	3.02E+00	7.77E+02	7.77E+02	7.77E+02				
NA2O		3.56E+01	3.56E+01	3.56E+01	9.94E+01	9.94E+01				3.24E+01
NI+3		2.55E-02	2.55E-02	6.57E+00	6.57E+00	6.57E+00				
NI2FECN6		1.94E+00	1.94E+00	5.00E+02	5.00E+02	5.00E+02				
NI2O3		1.05E-01	1.05E-01	1.05E-01	2.93E-01	2.93E-01				9.56E-02
NIO		2.57E+00	2.57E+00	2.57E+00	7.18E+00	7.18E+00				2.34E+00
NO2-		2.86E-01	2.86E-01	7.38E+01	7.38E+01	7.38E+01				
NO3-		4.01E+00	4.01E+00	1.03E+03	1.03E+03	1.03E+03				
NP+4		5.11E-04	5.11E-04	1.32E-01	1.32E-01	1.32E-01				
NPO2		1.70E-03	1.70E-03	1.70E-03	4.73E-03	4.73E-03				1.54E-03
OH-		7.78E+00	7.78E+00	2.01E+03	2.01E+03	2.01E+03				
P2O5		7.05E+00	7.05E+00	7.05E+00	1.97E+01	1.97E+01				6.41E+00
P2O5:24W		2.02E-03	2.02E-03	5.21E-01	5.21E-01	5.21E-01				
PB+4		1.27E-02	1.27E-02	3.28E+00	3.28E+00	3.28E+00				
PBO2		4.30E-02	4.30E-02	4.30E-02	1.20E-01	1.20E-01				3.91E-02
PO4-3		2.80E+00	2.80E+00	7.22E+02	7.22E+02	7.22E+02				
POLY		2.92E-01	2.92E-01	7.51E+01	7.51E+01	7.51E+01				
PU+4		1.66E-03	1.66E-03	4.27E-01	4.27E-01	4.27E-01				
PUO2		5.48E-03	5.48E-03	5.48E-03	1.53E-02	1.53E-02				4.99E-03
SI+4		3.07E-01	3.07E-01	7.90E+01	7.90E+01	7.90E+01				
SIO2		1.42E+02	1.42E+02	1.81E+02	4.35E+02	4.35E+02	1.13E+04			1.29E+02
SO4-2		1.54E-01	1.54E-01	3.97E+01	3.97E+01	3.97E+01				
SR+2		1.41E-01	1.41E-01	3.64E+01	3.64E+01	3.64E+01				
SRO		4.87E-01	4.87E-01	4.87E-01	1.36E+00	1.36E+00				4.43E-01
TC2O7		6.18E-03	6.18E-03	6.18E-03	1.73E-02	1.73E-02				5.62E-03

Stream Name Solid Components	308	309	310	311	312	313	314	315	316	317
TCO4-		2.20E-03	2.20E-03	5.68E-01	5.68E-01	5.68E-01				
TOC		4.49E-01	4.49E-01	1.16E+02	1.16E+02	1.16E+02				
UO2+2		6.13E+00	6.13E+00	1.58E+03	1.58E+03	1.58E+03				
UO3		1.90E+01	1.90E+01	1.90E+01	5.29E+01	5.29E+01				1.73E+01
V+5		7.29E-04	7.29E-04	1.88E-01	1.88E-01	1.88E-01				
V2O5		3.80E-03	3.80E-03	3.80E-03	1.06E-02	1.06E-02				3.46E-03
WO2		5.00E-03	5.00E-03	5.00E-03	1.40E-02	1.40E-02				4.55E-03
WO3		2.34E-05	2.34E-05	2.34E-05	6.53E-05	6.53E-05				2.13E-05
ZN+2		3.67E-03	3.67E-03	9.45E-01	9.45E-01	9.45E-01				
ZNO		1.35E-02	1.35E-02	1.35E-02	3.75E-02	3.75E-02				1.22E-02
ZR+4		1.07E+00	1.07E+00	2.77E+02	2.77E+02	2.77E+02				
ZRO2		7.82E+00	7.82E+00	7.82E+00	2.18E+01	2.18E+01				7.12E+00
ZRO2:2H2		1.59E+00	1.59E+00	4.09E+02	4.09E+02	4.09E+02				

Stream Name Liquid Components	318	319	320	321	322	323	324	325	326	327
Cs and Ba, (MCi)										
Sr and Y, (MCi)										
Tc, (MCi)										
Am, (MCi)										
Np, (MCi)										
Pu-239, (MCi)										
Pu-240, (MCi)										
Pu-241, (MCi)										
Total TRU, (MCi)										
Total MCi										
Total Mass Flow, (MT)		5.13E+03	5.13E+03	5.08E+05	5.13E+05	3.07E+03	5.08E+02	5.16E+05	2.57E+03	5.13E+05
Total Cr, (MT)										
Total Na, (MT)										
Total Si, (MT)										
Total P, (MT)										
Total NO2-, (MT)										
Total NO3-, (MT)										
AG+										
AL(OH)4-										
AM+3										
AS+5										
B+3										
BA+2										
BE+2										
BI+3										
C14										
CA+2										
CD+2										
CE+3										
CL-										
CL2										
CO										
CO2										
CO3-2										
CR(OH)4-										
CS+										
CU+2										
F-										
F2										
FE+3										
H2										
H2O		5.13E+03	5.13E+03	5.08E+05	5.13E+05	3.07E+03	5.08E+02	5.16E+05	2.57E+03	5.13E+05
H2S										
HG										
HG+2										
I-										

Stream Name Liquid Components	318	319	320	321	322	323	324	325	326	327
I2										
K+										
KEROSENE										
LA+3										
LI+										
MG+2										
MNO2										
MO+6										
N2										
NA+										
NH3										
NI+3										
NO										
NO2										
NO2-										
NO3-										
NP+4										
O2										
OH-										
PB+4										
PO4-3										
POLY										
PU+4										
S										
SI+4										
SO2										
SO4-2										
SR+2										
TCO2										
TCO4-										
TOC										
UO2+2										
V+5										
W+6										
ZN+2										
ZR+4										
ZRO2:2H2										

Stream Name Solid Components	318	319	320	321	322	323	324	325	326	327
Cs and Ba, (MCi)	6.89E+01			6.89E+01	6.89E+01		6.82E+01	6.89E-01	6.88E-01	6.89E-04
Sr and Y, (MCi)	1.08E+02			1.08E+02	1.08E+02		1.07E+02	1.08E+00	1.08E+00	1.08E-03
Tc, (MCi)	6.03E-03			6.03E-03	6.03E-03		5.97E-03	6.03E-05	6.03E-05	6.03E-08
Am, (MCi)	9.72E-02			9.72E-02	9.72E-02		9.62E-02	9.72E-04	9.71E-04	9.72E-07
Np, (MCi)	9.49E-05			9.49E-05	9.49E-05		9.39E-05	9.49E-07	9.48E-07	9.49E-10
Pu-239, (MCi)	2.52E-02			2.52E-02	2.52E-02		2.50E-02	2.52E-04	2.52E-04	2.52E-07
Pu-240, (MCi)	6.42E-03			6.42E-03	6.42E-03		6.35E-03	6.42E-05	6.41E-05	6.42E-08
Pu-241, (MCi)	7.49E-02			7.49E-02	7.49E-02		7.42E-02	7.49E-04	7.48E-04	7.49E-07
Total TRU, (MCi)	2.04E-01			2.04E-01	2.04E-01		2.02E-01	2.04E-03	2.04E-03	2.04E-06
Total MCi	1.77E+02			1.77E+02	1.77E+02		1.75E+02	1.77E+00	1.77E+00	1.77E-03
Total Mass Flow, (MT)	2.57E+04			2.57E+04	2.57E+04		2.54E+04	2.57E+02	2.56E+02	2.57E-01
Total Cr, (MT)	4.05E+01			4.05E+01	4.05E+01		4.01E+01	4.05E-01	4.04E-01	4.05E-04
Total Na, (MT)	2.38E+03			2.38E+03	2.38E+03		2.36E+03	2.38E+01	2.38E+01	2.38E-02
Total Si, (MT)	5.95E+03			5.95E+03	5.95E+03		5.90E+03	5.95E+01	5.95E+01	5.95E-02
Total P, (MT)	2.77E+02			2.77E+02	2.77E+02		2.75E+02	2.77E+00	2.77E+00	2.77E-03
Total NO2-, (MT)										
Total NO3-, (MT)										
AG+										
AG2O	1.51E+00			1.51E+00	1.51E+00		1.50E+00	1.51E-02	1.51E-02	1.51E-05
AL+3										
AL2O3	1.77E+03			1.77E+03	1.77E+03		1.75E+03	1.77E+01	1.77E+01	1.77E-02
AM+3										
AM2O3	3.11E-02			3.11E-02	3.11E-02		3.08E-02	3.11E-04	3.11E-04	3.11E-07
AS+5										
AS2O5	7.83E-01			7.83E-01	7.83E-01		7.75E-01	7.83E-03	7.82E-03	7.83E-06
B+3										
B2O3	1.80E+03			1.80E+03	1.80E+03		1.78E+03	1.80E+01	1.80E+01	1.80E-02
BA+2										
BAO	3.53E+00			3.53E+00	3.53E+00		3.49E+00	3.53E-02	3.52E-02	3.53E-05
BE+2										
BEO	2.21E-02			2.21E-02	2.21E-02		2.19E-02	2.21E-04	2.21E-04	2.21E-07
BI+3										
BI2O3	2.23E+02			2.23E+02	2.23E+02		2.21E+02	2.23E+00	2.23E+00	2.23E-03
C14										
CA+2										
CANCRINI										
CAO	1.93E+02			1.93E+02	1.93E+02		1.91E+02	1.93E+00	1.93E+00	1.93E-03
CD+2										
CDO	9.26E+00			9.26E+00	9.26E+00		9.16E+00	9.26E-02	9.25E-02	9.26E-05
CE+3										
CE2O3	2.81E+02			2.81E+02	2.81E+02		2.79E+02	2.81E+00	2.81E+00	2.81E-03
CL-										
CO3-2										
CR+3										
CR2O3	5.92E+01			5.92E+01	5.92E+01		5.86E+01	5.92E-01	5.91E-01	5.92E-04
CS+										

Stream Name Solid Components	318	319	320	321	322	323	324	325	326	327
CS2O	9.79E-01			9.79E-01	9.79E-01		9.69E-01	9.79E-03	9.78E-03	9.79E-06
CU										
CU+2										
CUO	9.54E-01			9.54E-01	9.54E-01		9.45E-01	9.54E-03	9.53E-03	9.54E-06
CUSO4										
F-										
FE+3										
FE2O3	1.24E+03			1.24E+03	1.24E+03		1.23E+03	1.24E+01	1.24E+01	1.24E-02
HG+2										
I-										
K+										
K2O	2.58E+01			2.58E+01	2.58E+01		2.56E+01	2.58E-01	2.58E-01	2.58E-04
LA+3										
LA2O3	2.52E+01			2.52E+01	2.52E+01		2.49E+01	2.52E-01	2.51E-01	2.52E-04
LI+										
LI2O	5.13E+02			5.13E+02	5.13E+02		5.08E+02	5.13E+00	5.13E+00	5.13E-03
MG+2										
MGO	1.92E+01			1.92E+01	1.92E+01		1.90E+01	1.92E-01	1.92E-01	1.92E-04
MNO2	2.14E+02			2.14E+02	2.14E+02		2.11E+02	2.14E+00	2.13E+00	2.14E-03
MO+6										
MOO3	1.24E+00			1.24E+00	1.24E+00		1.23E+00	1.24E-02	1.24E-02	1.24E-05
NA+										
NA2O	3.21E+03			3.21E+03	3.21E+03		3.18E+03	3.21E+01	3.21E+01	3.21E-02
NI+3										
NI2FECN6										
NI2O3	9.47E+00			9.47E+00	9.47E+00		9.37E+00	9.47E-02	9.46E-02	9.47E-05
NIO	2.32E+02			2.32E+02	2.32E+02		2.29E+02	2.32E+00	2.31E+00	2.32E-03
NO2-										
NO3-										
NP+4										
NPO2	1.53E-01			1.53E-01	1.53E-01		1.51E-01	1.53E-03	1.53E-03	1.53E-06
OH-										
P2O5	6.35E+02			6.35E+02	6.35E+02		6.29E+02	6.35E+00	6.34E+00	6.35E-03
P2O5.24W										
PB+4										
PBO2	3.87E+00			3.87E+00	3.87E+00		3.83E+00	3.87E-02	3.87E-02	3.87E-05
PO4-3										
POLY										
PU+4										
PUO2	4.94E-01			4.94E-01	4.94E-01		4.89E-01	4.94E-03	4.94E-03	4.94E-06
SI+4										
SIO2	1.27E+04			1.27E+04	1.27E+04		1.26E+04	1.27E+02	1.27E+02	1.27E-01
SO4-2										
SR+2										
SRO	4.39E+01			4.39E+01	4.39E+01		4.34E+01	4.39E-01	4.38E-01	4.39E-04
TC2O7	5.57E-01			5.57E-01	5.57E-01		5.51E-01	5.57E-03	5.56E-03	5.57E-06

Stream Name Solid Components	318	319	320	321	322	323	324	325	326	327
TCO4-										
TOC										
UO2+2										
UO3	1.71E+03			1.71E+03	1.71E+03		1.69E+03	1.71E+01	1.71E+01	1.71E-02
V+5										
V2O5	3.43E-01			3.43E-01	3.43E-01		3.39E-01	3.43E-03	3.42E-03	3.43E-06
WO2	4.51E-01			4.51E-01	4.51E-01		4.46E-01	4.51E-03	4.50E-03	4.51E-06
WO3	2.11E-03			2.11E-03	2.11E-03		2.09E-03	2.11E-05	2.11E-05	2.11E-08
ZN+2										
ZNO	1.21E+00			1.21E+00	1.21E+00		1.20E+00	1.21E-02	1.21E-02	1.21E-05
ZR+4										
ZRO2	7.05E+02			7.05E+02	7.05E+02		6.98E+02	7.05E+00	7.04E+00	7.05E-03
ZRO2:2H2										

Stream Name Liquid Components	328	329	330	331	332	333	334	335	336	337
Cs and Ba, (MCi)										
Sr and Y, (MCi)										
Tc, (MCi)										
Am, (MCi)										
Np, (MCi)										
Pu-239, (MCi)										
Pu-240, (MCi)										
Pu-241, (MCi)										
Total TRU, (MCi)										
Total MCi										
Total Mass Flow, (MT)	5.13E+05	5.13E+05	2.14E+05	3.24E+04	3.16E+04	8.58E+02	8.58E+02	1.82E+05	1.82E+03	1.80E+05
Total Cr, (MT)										
Total Na, (MT)										
Total Si, (MT)										
Total P, (MT)										
Total NO2-, (MT)										
Total NO3-, (MT)										
AG+										
AL(OH)4-										
AM+3										
AS+5										
B+3										
BA+2										
BE+2										
BI+3										
C14										
CA+2										
CD+2										
CE+3										
CL-										
CL2										
CO										
CO2										
CO3-2										
CR(OH)4-										
CS+										
CU+2										
F-										
F2										
FE+3										
H2										
H2O	5.13E+05	5.13E+05	2.37E+03	8.58E+02		8.58E+02	8.58E+02	2.02E+03	2.02E+01	2.00E+03
H2S										
HG										
HG+2										
I-										

Stream Name Liquid Components	328	329	330	331	332	333	334	335	336	337
I2										
K+										
KEROSENE										
LA+3										
LI+										
MG+2										
MNO2										
MO+6										
N2			1.67E+05	2.50E+04	2.50E+04			1.42E+05	1.42E+03	1.41E+05
NA+										
NH3										
NI+3										
NO										
NO2										
NO2-										
NO3-										
NP+4										
O2			4.44E+04	6.63E+03	6.63E+03			3.78E+04	3.78E+02	3.74E+04
OH-										
PB+4										
PO4-3										
POLY										
PU+4										
S										
SI+4										
SO2										
SO4-2										
SR+2										
TCO2										
TCO4-										
TOC										
UO2+2										
V+5										
W+6										
ZN+2										
ZR+4										
ZRO2:2H2										

Stream Name Solid Components	328	329	330	331	332	333	334	335	336	337
Cs and Ba, (MCi)	6.89E-04	6.89E-04		6.82E-02	6.82E-02			6.81E+01	6.81E-01	6.74E+01
Sr and Y, (MCi)	1.08E-03	1.08E-03		1.07E-01	1.07E-01			1.07E+02	1.07E+00	1.05E+02
Tc, (MCi)	6.03E-08	6.03E-08		5.97E-06	5.97E-06			5.97E-03	5.97E-05	5.91E-03
Am, (MCi)	9.72E-07	9.72E-07		9.62E-05	9.62E-05			9.61E-02	9.61E-04	9.52E-02
Np, (MCi)	9.49E-10	9.49E-10		9.39E-08	9.39E-08			9.38E-05	9.38E-07	9.29E-05
Pu-239, (MCi)	2.52E-07	2.52E-07		2.50E-05	2.50E-05			2.49E-02	2.49E-04	2.47E-02
Pu-240, (MCi)	6.42E-08	6.42E-08		6.35E-06	6.35E-06			6.35E-03	6.35E-05	6.28E-03
Pu-241, (MCi)	7.49E-07	7.49E-07		7.42E-05	7.42E-05			7.41E-02	7.41E-04	7.34E-02
Total TRU, (MCi)	2.04E-06	2.04E-06		2.02E-04	2.02E-04			2.02E-01	2.02E-03	2.00E-01
Total MCi	1.77E-03	1.77E-03		1.75E-01	1.75E-01			1.75E+02	1.75E+00	1.73E+02
Total Mass Flow, (MT)	2.57E-01	2.57E-01		2.54E+01	2.54E+01			2.54E+04	2.54E+02	2.51E+04
Total Cr, (MT)	4.05E-04	4.05E-04		4.01E-02	4.01E-02			4.00E+01	4.00E-01	3.96E+01
Total Na, (MT)	2.38E-02	2.38E-02		2.36E+00	2.36E+00			2.35E+03	2.35E+01	2.33E+03
Total Si, (MT)	5.95E-02	5.95E-02		5.90E+00	5.90E+00			5.89E+03	5.89E+01	5.83E+03
Total P, (MT)	2.77E-03	2.77E-03		2.75E-01	2.75E-01			2.74E+02	2.74E+00	2.72E+02
Total NO2-, (MT)										
Total NO3-, (MT)										
AG+										
AG2O	1.51E-05	1.51E-05		1.50E-03	1.50E-03			1.49E+00	1.49E-02	1.48E+00
AL+3										
AL2O3	1.77E-02	1.77E-02		1.75E+00	1.75E+00			1.75E+03	1.75E+01	1.73E+03
AM+3										
AM2O3	3.11E-07	3.11E-07		3.08E-05	3.08E-05			3.08E-02	3.08E-04	3.05E-02
AS+5										
AS2O5	7.83E-06	7.83E-06		7.75E-04	7.75E-04			7.74E-01	7.74E-03	7.66E-01
B+3										
B2O3	1.80E-02	1.80E-02		1.78E+00	1.78E+00			1.78E+03	1.78E+01	1.76E+03
BA+2										
BAO	3.53E-05	3.53E-05		3.49E-03	3.49E-03			3.49E+00	3.49E-02	3.45E+00
BE+2										
BEO	2.21E-07	2.21E-07		2.19E-05	2.19E-05			2.18E-02	2.18E-04	2.16E-02
BI+3										
BI2O3	2.23E-03	2.23E-03		2.21E-01	2.21E-01			2.21E+02	2.21E+00	2.19E+02
C14										
CA+2										
CANCRINI										
CAO	1.93E-03	1.93E-03		1.91E-01	1.91E-01			1.91E+02	1.91E+00	1.89E+02
CD+2										
CDO	9.26E-05	9.26E-05		9.16E-03	9.16E-03			9.15E+00	9.15E-02	9.06E+00
CE+3										
CE2O3	2.81E-03	2.81E-03		2.79E-01	2.79E-01			2.78E+02	2.78E+00	2.76E+02
CL-										
CO3-2										
CR+3										
CR2O3	5.92E-04	5.92E-04		5.86E-02	5.86E-02			5.85E+01	5.85E-01	5.79E+01
CS+										

Stream Name Solid Components	328	329	330	331	332	333	334	335	336	337
CS2O	9.79E-06	9.79E-06		9.69E-04	9.69E-04			9.68E-01	9.68E-03	9.58E-01
CU										
CU+2										
CUO	9.54E-06	9.54E-06		9.45E-04	9.45E-04			9.44E-01	9.44E-03	9.34E-01
CUSO4										
F-										
FE+3										
FE2O3	1.24E-02	1.24E-02		1.23E+00	1.23E+00			1.22E+03	1.22E+01	1.21E+03
HG+2										
I-										
K+										
K2O	2.58E-04	2.58E-04		2.56E-02	2.56E-02			2.56E+01	2.56E-01	2.53E+01
LA+3										
LA2O3	2.52E-04	2.52E-04		2.49E-02	2.49E-02			2.49E+01	2.49E-01	2.46E+01
LI+										
LI2O	5.13E-03	5.13E-03		5.08E-01	5.08E-01			5.08E+02	5.08E+00	5.03E+02
MG+2										
MGO	1.92E-04	1.92E-04		1.90E-02	1.90E-02			1.90E+01	1.90E-01	1.88E+01
MNO2	2.14E-03	2.14E-03		2.11E-01	2.11E-01			2.11E+02	2.11E+00	2.09E+02
MO+6										
MOO3	1.24E-05	1.24E-05		1.23E-03	1.23E-03			1.23E+00	1.23E-02	1.22E+00
NA+										
NA2O	3.21E-02	3.21E-02		3.18E+00	3.18E+00			3.17E+03	3.17E+01	3.14E+03
NI+3										
NI2FECN6										
NI2O3	9.47E-05	9.47E-05		9.37E-03	9.37E-03			9.36E+00	9.36E-02	9.27E+00
NIO	2.32E-03	2.32E-03		2.29E-01	2.29E-01			2.29E+02	2.29E+00	2.27E+02
NO2-										
NO3-										
NP+4										
NPO2	1.53E-06	1.53E-06		1.51E-04	1.51E-04			1.51E-01	1.51E-03	1.50E-01
OH-										
P2O5	6.35E-03	6.35E-03		6.29E-01	6.29E-01			6.28E+02	6.28E+00	6.22E+02
P2O5:24W										
PB+4										
PBO2	3.87E-05	3.87E-05		3.83E-03	3.83E-03			3.83E+00	3.83E-02	3.79E+00
PO4-3										
POLY										
PU+4										
PUO2	4.94E-06	4.94E-06		4.89E-04	4.89E-04			4.89E-01	4.89E-03	4.84E-01
SI+4										
SIO2	1.27E-01	1.27E-01		1.26E+01	1.26E+01			1.26E+04	1.26E+02	1.25E+04
SO4-2										
SR+2										
SRO	4.39E-04	4.39E-04		4.34E-02	4.34E-02			4.34E+01	4.34E-01	4.29E+01
TC2O7	5.57E-06	5.57E-06		5.51E-04	5.51E-04			5.51E-01	5.51E-03	5.45E-01

Stream Name Solid Components	328	329	330	331	332	333	334	335	336	337
TCO4-										
TOC										
UO2+2										
UO3	1.71E-02	1.71E-02		1.69E+00	1.69E+00			1.69E+03	1.69E+01	1.67E+03
V+5										
V2O5	3.43E-06	3.43E-06		3.39E-04	3.39E-04			3.39E-01	3.39E-03	3.36E-01
WO2	4.51E-06	4.51E-06		4.46E-04	4.46E-04			4.46E-01	4.46E-03	4.41E-01
WO3	2.11E-08	2.11E-08		2.09E-06	2.09E-06			2.09E-03	2.09E-05	2.06E-03
ZN+2										
ZNO	1.21E-05	1.21E-05		1.20E-03	1.20E-03			1.20E+00	1.20E-02	1.19E+00
ZR+4										
ZRO2	7.05E-03	7.05E-03		6.98E-01	6.98E-01			6.97E+02	6.97E+00	6.90E+02
ZRO2:2H2										

Stream Name Liquid Components	338	339	340	341	342	343	344	350	501	502
Cs and Ba, (MCi)										
Sr and Y, (MCi)										
Tc, (MCi)										
Am, (MCi)										
Np, (MCi)										
Pu-239, (MCi)										
Pu-240, (MCi)										
Pu-241, (MCi)										
Total TRU, (MCi)										
Total MCi										
Total Mass Flow, (MT)	1.80E+05	2.49E+01	1.80E+05	2.49E+01	2.49E+01			2.14E+05		
Total Cr, (MT)										
Total Na, (MT)										
Total Si, (MT)										
Total P, (MT)										
Total NO2-, (MT)										
Total NO3-, (MT)										
AG+										
AL(OH)4-										
AM+3										
AS+5										
B+3										
BA+2										
BE+2										
BI+3										
C14										
CA+2										
CD+2										
CE+3										
CL-										
CL2										
CO										
CO2										
CO3-2										
CR(OH)4-										
CS+										
CU+2										
F-										
F2										
FE+3										
H2										
H2O	2.00E+03	2.49E+01	2.00E+03	2.49E+01	2.49E+01			2.37E+03		
H2S										
HG										
HG+2										
I-										

Stream Name Liquid Components	338	339	340	341	342	343	344	350	501	502
I2										
K+										
KEROSENE										
LA+3										
LI+										
MG+2										
MNO2										
MO+6										
N2	1.41E+05		1.41E+05					1.67E+05		
NA+										
NH3										
NI+3										
NO										
NO2										
NO2-										
NO3-										
NP+4										
O2	3.74E+04		3.74E+04					4.44E+04		
OH-										
PB+4										
PO4-3										
POLY										
PU+4										
S										
SI+4										
SO2										
SO4-2										
SR+2										
TCO2										
TCO4-										
TOC										
UO2+2										
V+5										
W+6										
ZN+2										
ZR+4										
ZRO2:2H2										

Stream Name Solid Components	338	339	340	341	342	343	344	350	501	502
Cs and Ba, (MCi)	6.74E-04		3.37E-07	6.74E-04	6.74E-04	6.74E+01	6.74E+01		6.81E-01	6.81E-01
Sr and Y, (MCi)	1.05E-03		5.27E-07	1.05E-03	1.05E-03	1.05E+02	1.05E+02		1.07E+00	1.07E+00
Tc, (MCi)	5.91E-08		2.95E-11	5.90E-08	5.90E-08	5.91E-03	5.91E-03		5.97E-05	5.97E-05
Am, (MCi)	9.52E-07		4.76E-10	9.51E-07	9.51E-07	9.52E-02	9.52E-02		9.61E-04	9.61E-04
Np, (MCi)	9.29E-10		4.64E-13	9.28E-10	9.28E-10	9.29E-05	9.29E-05		9.38E-07	9.38E-07
Pu-239, (MCi)	2.47E-07		1.24E-10	2.47E-07	2.47E-07	2.47E-02	2.47E-02		2.49E-04	2.49E-04
Pu-240, (MCi)	6.28E-08		3.14E-11	6.28E-08	6.28E-08	6.28E-03	6.28E-03		6.35E-05	6.35E-05
Pu-241, (MCi)	7.34E-07		3.67E-10	7.33E-07	7.33E-07	7.34E-02	7.34E-02		7.41E-04	7.41E-04
Total TRU, (MCi)	2.00E-06		9.98E-10	2.00E-06	2.00E-06	2.00E-01	2.00E-01		2.02E-03	2.02E-03
Total MCi	1.73E-03		8.65E-07	1.73E-03	1.73E-03	1.73E+02	1.73E+02		1.75E+00	1.75E+00
Total Mass Flow, (MT)	2.51E-01		1.26E-04	2.51E-01	2.51E-01	2.51E+04	2.51E+04		2.54E+02	2.54E+02
Total Cr, (MT)	3.96E-04		1.98E-07	3.96E-04	3.96E-04	3.96E+01	3.96E+01		4.00E-01	4.00E-01
Total Na, (MT)	2.33E-02		1.17E-05	2.33E-02	2.33E-02	2.33E+03	2.33E+03		2.35E+01	2.35E+01
Total Si, (MT)	5.83E-02		2.92E-05	5.83E-02	5.83E-02	5.83E+03	5.83E+03		5.89E+01	5.89E+01
Total P, (MT)	2.72E-03		1.36E-06	2.71E-03	2.71E-03	2.72E+02	2.72E+02		2.74E+00	2.74E+00
Total NO2-, (MT)										
Total NO3-, (MT)										
AG+										
AG2O	1.48E-05		7.40E-09	1.48E-05	1.48E-05	1.48E+00	1.48E+00		1.49E-02	1.49E-02
AL+3										
AL2O3	1.73E-02		8.67E-06	1.73E-02	1.73E-02	1.73E+03	1.73E+03		1.75E+01	1.75E+01
AM+3										
AM2O3	3.05E-07		1.52E-10	3.05E-07	3.05E-07	3.05E-02	3.05E-02		3.08E-04	3.08E-04
AS+5										
AS2O5	7.66E-06		3.83E-09	7.66E-06	7.66E-06	7.66E-01	7.66E-01		7.74E-03	7.74E-03
B+3										
B2O3	1.76E-02		8.79E-06	1.76E-02	1.76E-02	1.76E+03	1.76E+03		1.78E+01	1.78E+01
BA+2										
BAO	3.45E-05		1.73E-08	3.45E-05	3.45E-05	3.45E+00	3.45E+00		3.49E-02	3.49E-02
BE+2										
BEO	2.16E-07		1.08E-10	2.16E-07	2.16E-07	2.16E-02	2.16E-02		2.18E-04	2.18E-04
BI+3										
BI2O3	2.19E-03		1.09E-06	2.19E-03	2.19E-03	2.19E+02	2.19E+02		2.21E+00	2.21E+00
C14										
CA+2										
CANCRINI										
CAO	1.89E-03		9.47E-07	1.89E-03	1.89E-03	1.89E+02	1.89E+02		1.91E+00	1.91E+00
CD+2										
CDO	9.06E-05		4.53E-08	9.06E-05	9.06E-05	9.06E+00	9.06E+00		9.15E-02	9.15E-02
CE+3										
CE2O3	2.76E-03		1.38E-06	2.75E-03	2.75E-03	2.76E+02	2.76E+02		2.78E+00	2.78E+00
CL-										
CO3-2										
CR+3										
CR2O3	5.79E-04		2.90E-07	5.79E-04	5.79E-04	5.79E+01	5.79E+01		5.85E-01	5.85E-01
CS+										

Stream Name Solid Components	338	339	340	341	342	343	344	350	501	502
CS2O	9.58E-06		4.79E-09	9.58E-06	9.58E-06	9.58E-01	9.58E-01		9.68E-03	9.68E-03
CU										
CU+2										
CUO	9.34E-06		4.67E-09	9.34E-06	9.34E-06	9.34E-01	9.34E-01		9.44E-03	9.44E-03
CUSO4										
F-										
FE+3										
FE2O3	1.21E-02		6.06E-06	1.21E-02	1.21E-02	1.21E+03	1.21E+03		1.22E+01	1.22E+01
HG+2										
I-										
K+										
K2O	2.53E-04		1.27E-07	2.53E-04	2.53E-04	2.53E+01	2.53E+01		2.56E-01	2.56E-01
LA+3										
LA2O3	2.46E-04		1.23E-07	2.46E-04	2.46E-04	2.46E+01	2.46E+01		2.49E-01	2.49E-01
LI+										
LI2O	5.03E-03		2.51E-06	5.02E-03	5.02E-03	5.03E+02	5.03E+02		5.08E+00	5.08E+00
MG+2										
MGO	1.88E-04		9.41E-08	1.88E-04	1.88E-04	1.88E+01	1.88E+01		1.90E-01	1.90E-01
MNO2	2.09E-03		1.05E-06	2.09E-03	2.09E-03	2.09E+02	2.09E+02		2.11E+00	2.11E+00
MO+6										
MOO3	1.22E-05		6.09E-09	1.22E-05	1.22E-05	1.22E+00	1.22E+00		1.23E-02	1.23E-02
NA+										
NA2O	3.14E-02		1.57E-05	3.14E-02	3.14E-02	3.14E+03	3.14E+03		3.17E+01	3.17E+01
NI+3										
NI2FECN6										
NI2O3	9.27E-05		4.63E-08	9.26E-05	9.26E-05	9.27E+00	9.27E+00		9.36E-02	9.36E-02
NIO	2.27E-03		1.13E-06	2.27E-03	2.27E-03	2.27E+02	2.27E+02		2.29E+00	2.29E+00
NO2-										
NO3-										
NP+4										
NPO2	1.50E-06		7.48E-10	1.49E-06	1.49E-06	1.50E-01	1.50E-01		1.51E-03	1.51E-03
OH-										
P2O5	6.22E-03		3.11E-06	6.21E-03	6.21E-03	6.22E+02	6.22E+02		6.28E+00	6.28E+00
P2O5.24W										
PB+4										
PBO2	3.79E-05		1.90E-08	3.79E-05	3.79E-05	3.79E+00	3.79E+00		3.83E-02	3.83E-02
PO4-3										
POLY										
PU+4										
PUO2	4.84E-06		2.42E-09	4.84E-06	4.84E-06	4.84E-01	4.84E-01		4.89E-03	4.89E-03
SI+4										
SIO2	1.25E-01		6.24E-05	1.25E-01	1.25E-01	1.25E+04	1.25E+04		1.26E+02	1.26E+02
SO4-2										
SR+2										
SRO	4.29E-04		2.15E-07	4.29E-04	4.29E-04	4.29E+01	4.29E+01		4.34E-01	4.34E-01
TC2O7	5.45E-06		2.73E-09	5.45E-06	5.45E-06	5.45E-01	5.45E-01		5.51E-03	5.51E-03

Stream Name Solid Components	338	339	340	341	342	343	344	350	501	502
TCO4-										
TOC										
UO2+2										
UO3	1.67E-02		8.36E-06	1.67E-02	1.67E-02	1.67E+03	1.67E+03		1.69E+01	1.69E+01
V+5										
V2O5	3.36E-06		1.68E-09	3.35E-06	3.35E-06	3.35E-01	3.35E-01		3.39E-03	3.39E-03
WO2	4.41E-06		2.21E-09	4.41E-06	4.41E-06	4.41E-01	4.41E-01		4.46E-03	4.46E-03
WO3	2.06E-08		1.03E-11	2.06E-08	2.06E-08	2.06E-03	2.06E-03		2.09E-05	2.09E-05
ZN+2										
ZNO	1.19E-05		5.93E-09	1.19E-05	1.19E-05	1.19E+00	1.19E+00		1.20E-02	1.20E-02
ZR+4										
ZRO2	6.90E-03		3.45E-06	6.90E-03	6.90E-03	6.90E+02	6.90E+02		6.97E+00	6.97E+00
ZRO2:2H2										

Stream Name Liquid Components	503	504	520	521	522	523	524	600	601	602
Cs and Ba, (MCi)										
Sr and Y, (MCi)										
Tc, (MCi)								1.56E-04		6.07E-03
Am, (MCi)										
Np, (MCi)										
Pu-239, (MCi)										
Pu-240, (MCi)										
Pu-241, (MCi)										
Total TRU, (MCi)										
Total MCi								1.56E-04		6.07E-03
Total Mass Flow, (MT)	1.27E+03	1.27E+03		2.19E-10				1.33E+03	2.30E+04	4.93E+04
Total Cr, (MT)										
Total Na, (MT)										
Total Si, (MT)										
Total P, (MT)										
Total NO2-, (MT)										
Total NO3-, (MT)										
AG+										
AL(OH)4-										
AM+3										
AS+5										
B+3										
BA+2										
BE+2										
BI+3										
C14										
CA+2										
CD+2										
CE+3										
CL-										
CL2									4.17E+00	
CO									2.03E+02	
CO2									1.69E+04	
CO3-2										
CR(OH)4-										
CS+										
CU+2										
F-										
F2									6.21E+01	
FE+3										
H2										
H2O	1.27E+03	1.27E+03		2.19E-10				1.33E+03	2.59E+03	4.93E+04
H2S										
HG								6.80E-04	1.33E-03	2.52E-02
HG+2										
I-										

Stream Name Liquid Components	503	504	520	521	522	523	524	600	601	602
I2									2.14E+01	
K+										
KEROSENE										
LA+3										
LI+										
MG+2										
MNO2										
MO+6										
N2									6.95E+02	
NA+										
NH3										
NI+3										
NO									9.98E+00	
NO2									4.13E+02	
NO2-										
NO3-										
NP+4										
O2									2.10E+03	
OH-										
PB+4										
PO4-3										
POLY										
PU+4										
S										
SI+4										
SO2									2.94E+01	
SO4-2										
SR+2										
TCO2										4.61E-01
TCO4-								1.51E-02		1.51E-02
TOC										
UO2+2										
V+5										
W+6										
ZN+2										
ZR+4										
ZRO2:2H2										

Stream Name Solid Components	503	504	520	521	522	523	524	600	601	602
Cs and Ba, (MCi)		6.81E-01						1.83E-02	3.57E-02	6.78E-01
Sr and Y, (MCi)		1.07E+00						2.86E-02	5.58E-02	1.06E+00
Tc, (MCi)		5.97E-05						1.60E-06	3.13E-06	5.94E-05
Am, (MCi)		9.61E-04						2.58E-05	5.04E-05	9.57E-04
Np, (MCi)		9.38E-07						2.52E-08	4.92E-08	9.34E-07
Pu-239, (MCi)		2.49E-04						6.70E-06	1.31E-05	2.48E-04
Pu-240, (MCi)		6.35E-05						1.71E-06	3.33E-06	6.32E-05
Pu-241, (MCi)		7.41E-04						1.98E-05	3.88E-05	7.38E-04
Total TRU, (MCi)		2.02E-03						5.41E-05	1.06E-04	2.01E-03
Total MCi		1.75E+00						4.70E-02	9.16E-02	1.74E+00
Total Mass Flow, (MT)		2.54E+02						6.82E+00	1.33E+01	2.53E+02
Total Cr, (MT)		4.00E-01						1.08E-02	2.10E-02	3.99E-01
Total Na, (MT)		2.35E+01						6.33E-01	1.23E+00	2.34E+01
Total Si, (MT)		5.89E+01						1.58E+00	3.09E+00	5.86E+01
Total P, (MT)		2.74E+00						7.37E-02	1.44E-01	2.73E+00
Total NO2-, (MT)										
Total NO3-, (MT)										
AG+										
AG2O		1.49E-02						4.02E-04	7.83E-04	1.49E-02
AL+3										
AL2O3		1.75E+01						4.71E-01	9.18E-01	1.74E+01
AM+3										
AM2O3		3.08E-04						8.27E-06	1.61E-05	3.07E-04
AS+5										
AS2O5		7.74E-03						2.08E-04	4.06E-04	7.71E-03
B+3										
B2O3		1.78E+01						4.78E-01	9.31E-01	1.77E+01
BA+2										
BAO		3.49E-02						9.37E-04	1.83E-03	3.47E-02
BE+2										
BEO		2.18E-04						5.87E-06	1.14E-05	2.17E-04
BI+3										
BI2O3		2.21E+00						5.93E-02	1.16E-01	2.20E+00
C14										
CA+2										
CANCRINI										
CAO		1.91E+00						5.14E-02	1.00E-01	1.90E+00
CD+2										
CDO		9.15E-02						2.46E-03	4.80E-03	9.12E-02
CE+3										
CE2O3		2.78E+00						7.48E-02	1.46E-01	2.77E+00
CL-										
CO3-2										
CR+3										
CR2O3		5.85E-01						1.57E-02	3.07E-02	5.83E-01
CS+										

Stream Name Solid Components	503	504	520	521	522	523	524	600	601	602
CS2O		9.68E-03						2.60E-04	5.07E-04	9.64E-03
CU										
CU+2										
CUO		9.44E-03						2.54E-04	4.95E-04	9.40E-03
CUSO4										
F-										
FE+3										
FE2O3		1.22E+01						3.29E-01	6.42E-01	1.22E+01
HG+2										
I-										
K+										
K2O		2.56E-01						6.87E-03		2.68E-01
LA+3										
LA2O3		2.49E-01						6.69E-03	1.30E-02	2.48E-01
LI+										
LI2O		5.08E+00						1.36E-01	2.66E-01	5.06E+00
MG+2										
MGO		1.90E-01						5.11E-03	9.96E-03	1.89E-01
MNO2		2.11E+00						5.67E-02	1.11E-01	2.10E+00
MO+6										
MOO3		1.23E-02						3.31E-04	6.45E-04	1.23E-02
NA+										
NA2O		3.17E+01						8.53E-01	1.66E+00	3.16E+01
NI+3										
NI2FECN6										
NI2O3		9.36E-02						2.52E-03		9.81E-02
NIO		2.29E+00						6.16E-02	1.20E-01	2.28E+00
NO2-										
NO3-										
NP+4										
NPO2		1.51E-03						4.06E-05	7.92E-05	1.50E-03
OH-										
P2O5		6.28E+00						1.69E-01	3.29E-01	6.25E+00
P2O5.24W										
PB+4										
PBO2		3.83E-02						1.03E-03	2.01E-03	3.81E-02
PO4-3										
POLY										
PU+4										
PUO2		4.89E-03						1.31E-04	2.56E-04	4.87E-03
SI+4										
SIO2		1.26E+02						3.39E+00	6.60E+00	1.26E+02
SO4-2										
SR+2										
SRO		4.34E-01						1.17E-02	2.27E-02	4.32E-01
TC2O7		5.51E-03						1.48E-04	2.89E-04	5.48E-03

Stream Name Solid Components	503	504	520	521	522	523	524	600	601	602
TCO4-										
TOC										
UO2+2										
UO3		1.69E+01						4.54E-01	8.85E-01	1.68E+01
V+5										
V2O5		3.39E-03						9.11E-05	1.78E-04	3.37E-03
WO2		4.46E-03						1.20E-04	2.34E-04	4.44E-03
WO3		2.09E-05						5.60E-07	1.09E-06	2.08E-05
ZN+2										
ZNO		1.20E-02						3.22E-04	6.28E-04	1.19E-02
ZR+4										
ZRO2		6.97E+00						1.87E-01	3.65E-01	6.94E+00
ZRO2:2H2										

Stream Name Liquid Components	603	604	605	606	607	608	609	610	611	612
Cs and Ba, (MCi)										
Sr and Y, (MCi)										
Tc, (MCi)	1.56E-04	1.56E-04		1.56E-04	1.56E-04			1.56E-04		5.94E-03
Am, (MCi)										
Np, (MCi)										
Pu-239, (MCi)										
Pu-240, (MCi)										
Pu-241, (MCi)										
Total TRU, (MCi)										
Total MCi	1.56E-04	1.56E-04		1.56E-04	1.56E-04			1.56E-04		5.94E-03
Total Mass Flow, (MT)	1.33E+03	2.43E+04	3.73E+03	2.06E+04	2.06E+04		2.04E+04	1.67E+02		5.05E+04
Total Cr, (MT)										
Total Na, (MT)										
Total Si, (MT)										
Total P, (MT)										
Total NO2-, (MT)										
Total NO3-, (MT)										
AG+										
AL(OH)4-										
AM+3										
AS+5										
B+3										
BA+2										
BE+2										
BI+3										
C14										
CA+2										
CD+2										
CE+3										
CL-										
CL2		4.17E+00		4.17E+00	4.17E+00		4.17E+00			
CO		2.03E+02		2.03E+02	2.03E+02		2.03E+02			
CO2		1.69E+04		1.69E+04	1.69E+04		1.69E+04			
CO3-2										
CR(OH)4-										
CS+										
CU+2										
F-										
F2		6.21E+01		6.21E+01	6.21E+01		6.21E+01			
FE+3										
H2										
H2O	1.33E+03	3.92E+03	3.73E+03	1.96E+02	1.96E+02		2.94E+01	1.67E+02		5.05E+04
H2S										
HG	6.80E-04	2.01E-03	2.01E-03							2.59E-02
HG+2										
I-										

Stream Name Liquid Components	603	604	605	606	607	608	609	610	611	612
I2		2.14E+01		2.14E+01	2.14E+01		2.14E+01			
K+										
KEROSENE										
LA+3										
LI+										
MG+2										
MNO2										
MO+6										
N2		6.95E+02		6.95E+02	6.95E+02		6.95E+02			
NA+										
NH3										
NI+3										
NO		9.98E+00		9.98E+00	9.98E+00		9.98E+00			
NO2		4.13E+02		4.13E+02	4.13E+02		4.13E+02			
NO2-										
NO3-										
NP+4										
O2		2.10E+03		2.10E+03	2.10E+03		2.10E+03			
OH-										
PB+4										
PO4-3										
POLY										
PU+4										
S										
SI+4										
SO2		2.94E+01		2.94E+01	2.94E+01		2.94E+01			
SO4-2										
SR+2										
TCO2										
TCO4-	1.51E-02	1.51E-02		1.51E-02	1.51E-02			1.51E-02		5.73E-01
TOC										
UO2+2										
V+5										
W+6										
ZN+2										
ZR+4										
ZRO2:2H2										

Stream Name Solid Components	603	604	605	606	607	608	609	610	611	612
Cs and Ba, (MCi)	1.83E-02	5.40E-02	5.13E-02	2.70E-03	2.70E-03		5.40E-05	2.65E-03		6.96E-01
Sr and Y, (MCi)	2.86E-02	8.44E-02	8.02E-02	4.22E-03	4.22E-03		8.44E-05	4.14E-03		1.09E+00
Tc, (MCi)	1.60E-06	4.73E-06	4.49E-06	2.37E-07	2.37E-07		4.73E-09	2.32E-07		6.09E-05
Am, (MCi)	2.58E-05	7.62E-05	7.24E-05	3.81E-06	3.81E-06		7.62E-08	3.73E-06		9.82E-04
Np, (MCi)	2.52E-08	7.44E-08	7.07E-08	3.72E-09	3.72E-09		7.44E-11	3.64E-09		9.58E-07
Pu-239, (MCi)	6.70E-06	1.98E-05	1.88E-05	9.89E-07	9.89E-07		1.98E-08	9.69E-07		2.55E-04
Pu-240, (MCi)	1.71E-06	5.03E-06	4.78E-06	2.52E-07	2.52E-07		5.03E-09	2.47E-07		6.48E-05
Pu-241, (MCi)	1.98E-05	5.87E-05	5.57E-05	2.93E-06	2.93E-06					7.54E-04
Total TRU, (MCi)	5.41E-05	1.60E-04	1.52E-04	7.99E-06	7.99E-06		1.01E-07	4.95E-06		2.06E-03
Total MCi	4.70E-02	1.39E-01	1.32E-01	6.93E-03	6.93E-03		1.39E-04	6.79E-03		1.79E+00
Total Mass Flow, (MT)	6.82E+00	2.01E+01	1.91E+01	1.01E+00	1.01E+00		2.01E-02	9.94E-01		2.59E+02
Total Cr, (MT)	1.08E-02	3.17E-02	3.02E-02	1.59E-03	1.59E-03		3.17E-05	1.56E-03		4.09E-01
Total Na, (MT)	6.33E-01	1.87E+00	1.77E+00	9.33E-02	9.33E-02		1.87E-03	9.14E-02		2.40E+01
Total Si, (MT)	1.58E+00	4.67E+00	4.44E+00	2.33E-01	2.33E-01		4.67E-03	2.29E-01		6.01E+01
Total P, (MT)	7.37E-02	2.18E-01	2.07E-01	1.09E-02	1.09E-02		2.18E-04	1.07E-02		2.80E+00
Total NO2-, (MT)										
Total NO3-, (MT)										
AG+										
AG2O	4.02E-04	1.18E-03	1.13E-03	5.92E-05	5.92E-05		1.18E-06	5.80E-05		1.53E-02
AL+3										
AL2O3	4.71E-01	1.39E+00	1.32E+00	6.94E-02	6.94E-02		1.39E-03	6.80E-02		1.79E+01
AM+3										
AM2O3	8.27E-06	2.44E-05	2.32E-05	1.22E-06	1.22E-06		2.44E-08	1.20E-06		3.14E-04
AS+5										
AS2O5	2.08E-04	6.14E-04	5.83E-04	3.07E-05	3.07E-05		6.14E-07	3.01E-05		7.91E-03
B+3										
B2O3	4.78E-01	1.41E+00	1.34E+00	7.04E-02	7.04E-02		1.41E-03	6.90E-02		1.81E+01
BA+2										
BAO	9.37E-04	2.76E-03	2.63E-03	1.38E-04	1.38E-04		2.76E-06	1.36E-04		3.56E-02
BE+2										
BEO	5.87E-06	1.73E-05	1.65E-05	8.66E-07	8.66E-07		1.73E-08	8.48E-07		2.23E-04
BI+3										
BI2O3	5.93E-02	1.75E-01	1.66E-01	8.75E-03	8.75E-03		1.75E-04	8.58E-03		2.26E+00
C14										
CA+2										
CANCRINI										
CAO	5.14E-02	1.52E-01	1.44E-01	7.58E-03	7.58E-03		1.52E-04	7.43E-03		1.95E+00
CD+2										
CDO	2.46E-03	7.26E-03	6.90E-03	3.63E-04	3.63E-04		7.26E-06	3.56E-04		9.35E-02
CE+3										
CE2O3	7.48E-02	2.21E-01	2.10E-01	1.10E-02	1.10E-02		2.21E-04	1.08E-02		2.84E+00
CL-										
CO3-2										
CR+3										
CR2O3	1.57E-02	4.64E-02	4.41E-02	2.32E-03	2.32E-03		4.64E-05	2.27E-03		5.98E-01
CS+										

Stream Name Solid Components	603	604	605	606	607	608	609	610	611	612
CS2O	2.60E-04	7.67E-04	7.29E-04	3.84E-05	3.84E-05		7.67E-07	3.76E-05		9.88E-03
CU										
CU+2										
CUO	2.54E-04	7.48E-04	7.11E-04	3.74E-05	3.74E-05		7.48E-07	3.67E-05		9.64E-03
CUSO4										
F-										
FE+3										
FE2O3	3.29E-01	9.71E-01	9.22E-01	4.85E-02	4.85E-02		9.71E-04	4.76E-02		1.25E+01
HG+2										
I-										
K+										
K2O	6.87E-03	6.87E-03		6.87E-03	6.87E-03			6.87E-03		2.61E-01
LA+3										
LA2O3	6.69E-03	1.97E-02	1.87E-02	9.86E-04	9.86E-04		1.97E-05	9.66E-04		2.54E-01
LI+										
LI2O	1.36E-01	4.03E-01	3.82E-01	2.01E-02	2.01E-02		4.03E-04	1.97E-02		5.18E+00
MG+2										
MGO	5.11E-03	1.51E-02	1.43E-02	7.53E-04	7.53E-04		1.51E-05	7.38E-04		1.94E-01
MNO2	5.67E-02	1.67E-01	1.59E-01	8.37E-03	8.37E-03		1.67E-04	8.20E-03		2.16E+00
MO+6										
MOO3	3.31E-04	9.75E-04	9.26E-04	4.88E-05	4.88E-05		9.75E-07	4.78E-05		1.26E-02
NA+										
NA2O	8.53E-01	2.52E+00	2.39E+00	1.26E-01	1.26E-01		2.52E-03	1.23E-01		3.24E+01
NI+3										
NI2FECN6										
NI2O3	2.52E-03	2.52E-03		2.52E-03	2.52E-03			2.52E-03		9.56E-02
NIO	6.16E-02	1.82E-01	1.73E-01	9.08E-03	9.08E-03		1.82E-04	8.90E-03		2.34E+00
NO2-										
NO3-										
NP+4										
NPO2	4.06E-05	1.20E-04	1.14E-04	5.99E-06	5.99E-06		1.20E-07	5.87E-06		1.54E-03
OH-										
P2O5	1.69E-01	4.98E-01	4.73E-01	2.49E-02	2.49E-02		4.98E-04	2.44E-02		6.41E+00
P2O5:24W										
PB+4										
PBO2	1.03E-03	3.04E-03	2.88E-03	1.52E-04	1.52E-04		3.04E-06	1.49E-04		3.91E-02
PO4-3										
POLY										
PU+4										
PUO2	1.31E-04	3.87E-04	3.68E-04	1.94E-05	1.94E-05		3.87E-07	1.90E-05		4.99E-03
SI+4										
SIO2	3.39E+00	9.99E+00	9.49E+00	4.99E-01	4.99E-01		9.99E-03	4.89E-01		1.29E+02
SO4-2										
SR+2										
SRO	1.17E-02	3.44E-02	3.27E-02	1.72E-03	1.72E-03		3.44E-05	1.69E-03		4.43E-01
TC2O7	1.48E-04	4.37E-04	4.15E-04	2.18E-05	2.18E-05		4.37E-07	2.14E-05		5.62E-03

Stream Name Solid Components	603	604	605	606	607	608	609	610	611	612
TCO4-										
TOC										
UO2+2										
UO3	4.54E-01	1.34E+00	1.27E+00	6.70E-02	6.70E-02		1.34E-03	6.56E-02		1.73E+01
V+5										
V2O5	9.11E-05	2.69E-04	2.55E-04	1.34E-05	1.34E-05		2.69E-07	1.32E-05		3.46E-03
WO2	1.20E-04	3.53E-04	3.36E-04	1.77E-05	1.77E-05		3.53E-07	1.73E-05		4.55E-03
WO3	5.60E-07	1.65E-06	1.57E-06	8.27E-08	8.27E-08		1.65E-09	8.10E-08		2.13E-05
ZN+2										
ZNO	3.22E-04	9.50E-04	9.02E-04	4.75E-05	4.75E-05		9.50E-07	4.65E-05		1.22E-02
ZR+4										
ZRO2	1.87E-01	5.53E-01	5.25E-01	2.76E-02	2.76E-02		5.53E-04	2.71E-02		7.12E+00
ZRO2:2H2										

Stream Name Liquid Components	614	615	616	632	637	638	639	640	641	642
Cs and Ba, (MCi)										
Sr and Y, (MCi)										
Tc, (MCi)				5.94E-03						
Am, (MCi)										
Np, (MCi)										
Pu-239, (MCi)										
Pu-240, (MCi)										
Pu-241, (MCi)										
Total TRU, (MCi)										
Total MCi				5.94E-03						
Total Mass Flow, (MT)	1.99E+00	2.04E+04	1.99E+00	5.05E+04	2.19E-04	2.07E+04	2.07E+04	2.07E+04	2.07E+04	2.07E+04
Total Cr, (MT)										
Total Na, (MT)										
Total Si, (MT)										
Total P, (MT)										
Total NO2-, (MT)										
Total NO3-, (MT)										
AG+										
AL(OH)4-										
AM+3										
AS+5										
B+3										
BA+2										
BE+2										
BI+3										
C14										
CA+2										
CD+2										
CE+3										
CL-										
CL2		4.17E+00				4.17E+00	4.17E+00	4.17E+00	4.17E+00	4.17E+00
CO		2.03E+02				2.03E+02	2.03E+02	2.03E+02	2.03E+02	2.03E+02
CO2		1.69E+04				1.69E+04	1.69E+04	1.69E+04	1.69E+04	1.69E+04
CO3-2										
CR(OH)4-										
CS+										
CU+2										
F-										
F2		6.21E+01				6.21E+01	6.21E+01	6.21E+01	6.21E+01	6.21E+01
FE+3										
H2										
H2O	1.99E+00	2.94E+01	1.99E+00	5.05E+04		8.76E+01	8.76E+01	8.76E+01	8.76E+01	8.76E+01
H2S										
HG				2.59E-02						
HG+2										
I-										

Stream Name Liquid Components	614	615	616	632	637	638	639	640	641	642
I2		2.14E+01				2.14E+01	2.14E+01	2.14E+01	2.14E+01	2.14E+01
K+										
KEROSENE										
LA+3										
LI+										
MG+2										
MNO2										
MO+6										
N2		6.95E+02				8.71E+02	8.71E+02	8.71E+02	8.71E+02	8.71E+02
NA+										
NH3										
NI+3										
NO		9.98E+00				9.98E+00	9.98E+00	9.98E+00	9.98E+00	9.98E+00
NO2		4.13E+02				4.13E+02	4.13E+02	4.13E+02	4.13E+02	4.13E+02
NO2-										
NO3-										
NP+4										
O2		2.10E+03			2.19E-04	2.13E+03	2.13E+03	2.13E+03	2.12E+03	2.12E+03
OH-										
PB+4										
PO4-3										
POLY										
PU+4										
S										
SI+4										
SO2		2.94E+01				4.60E+01	4.60E+01	4.60E+01	4.60E+00	4.60E+00
SO4-2										
SR+2										
TCO2										
TCO4-				5.73E-01						
TOC										
UO2+2										
V+5										
W+6										
ZN+2										
ZR+4										
ZRO2:2H2										

Stream Name Solid Components	614	615	616	632	637	638	639	640	641	642
Cs and Ba, (MCi)		2.70E-08	5.40E-05	6.96E-01		2.70E-08	2.70E-08	2.70E-08		
Sr and Y, (MCi)		4.22E-08	8.44E-05	1.09E+00		4.22E-08	4.22E-08	4.22E-08		
Tc, (MCi)		2.37E-12	4.73E-09	6.09E-05		2.37E-12	2.37E-12	2.37E-12		
Am, (MCi)		3.81E-11	7.62E-08	9.82E-04		3.81E-11	3.81E-11	3.81E-11		
Np, (MCi)		3.72E-14	7.43E-11	9.58E-07		3.72E-14	3.72E-14	3.72E-14		
Pu-239, (MCi)		9.89E-12	1.98E-08	2.55E-04		9.89E-12	9.89E-12	9.89E-12		
Pu-240, (MCi)		2.52E-12	5.03E-09	6.48E-05		2.52E-12	2.52E-12	2.52E-12		
Pu-241, (MCi)				7.54E-04						
Total TRU, (MCi)		5.05E-11	1.01E-07	2.06E-03		5.05E-11	5.05E-11	5.05E-11		
Total MCi		6.93E-08	1.38E-04	1.79E+00		6.93E-08	6.93E-08	6.93E-08		
Total Mass Flow, (MT)		1.01E-05	2.01E-02	2.59E+02		1.01E-05	1.01E-05	1.01E-05	9.89E-06	9.89E-06
Total Cr, (MT)		1.59E-08	3.17E-05	4.09E-01		1.59E-08	1.59E-08	1.59E-08		
Total Na, (MT)		9.33E-07	1.87E-03	2.40E+01		9.33E-07	9.33E-07	9.33E-07	9.33E-07	9.33E-07
Total Si, (MT)		2.33E-06	4.67E-03	6.01E+01		2.33E-06	2.33E-06	2.33E-06	2.33E-06	2.33E-06
Total P, (MT)		1.09E-07	2.17E-04	2.80E+00		1.09E-07	1.09E-07	1.09E-07	1.09E-07	1.09E-07
Total NO2-, (MT)										
Total NO3-, (MT)										
AG+										
AG2O		5.92E-10	1.18E-06	1.53E-02		5.92E-10	5.92E-10	5.92E-10		
AL+3										
AL2O3		6.94E-07	1.39E-03	1.79E+01		6.94E-07	6.94E-07	6.94E-07	6.94E-07	6.94E-07
AM+3										
AM2O3		1.22E-11	2.44E-08	3.14E-04		1.22E-11	1.22E-11	1.22E-11		
AS+5										
AS2O5		3.07E-10	6.14E-07	7.91E-03		3.07E-10	3.07E-10	3.07E-10		
B+3										
B2O3		7.04E-07	1.41E-03	1.81E+01		7.04E-07	7.04E-07	7.04E-07	7.04E-07	7.04E-07
BA+2										
BAO		1.38E-09	2.76E-06	3.56E-02		1.38E-09	1.38E-09	1.38E-09		
BE+2										
BEO		8.66E-12	1.73E-08	2.23E-04		8.66E-12	8.66E-12	8.66E-12		
BI+3										
BI2O3		8.75E-08	1.75E-04	2.26E+00		8.75E-08	8.75E-08	8.75E-08		
C14										
CA+2										
CANCRINI										
CAO		7.58E-08	1.52E-04	1.95E+00		7.58E-08	7.58E-08	7.58E-08	7.58E-08	7.58E-08
CD+2										
CDO		3.63E-09	7.25E-06	9.35E-02		3.63E-09	3.63E-09	3.63E-09		
CE+3										
CE2O3		1.10E-07	2.21E-04	2.84E+00		1.10E-07	1.10E-07	1.10E-07	1.10E-07	1.10E-07
CL-										
CO3-2										
CR+3										
CR2O3		2.32E-08	4.64E-05	5.98E-01		2.32E-08	2.32E-08	2.32E-08		

Stream Name Solid Components	614	615	616	632	637	638	639	640	641	642
CS+										
CS2O		3.84E-10	7.67E-07	9.88E-03		3.84E-10	3.84E-10	3.84E-10		
CU										
CU+2										
CUO		3.74E-10	7.48E-07	9.64E-03		3.74E-10	3.74E-10	3.74E-10		
CUSO4										
F-										
FE+3										
FE2O3		4.85E-07	9.70E-04	1.25E+01		4.85E-07	4.85E-07	4.85E-07	4.85E-07	4.85E-07
HG+2										
I-										
K+										
K2O				2.61E-01						
LA+3										
LA2O3		9.86E-09	1.97E-05	2.54E-01		9.86E-09	9.86E-09	9.86E-09		
LI+										
LI2O		2.01E-07	4.02E-04	5.18E+00		2.01E-07	2.01E-07	2.01E-07	2.01E-07	2.01E-07
MG+2										
MGO		7.53E-09	1.51E-05	1.94E-01		7.53E-09	7.53E-09	7.53E-09		
MNO2		8.37E-08	1.67E-04	2.16E+00		8.37E-08	8.37E-08	8.37E-08	8.37E-08	8.37E-08
MO+6										
MOO3		4.88E-10	9.75E-07	1.26E-02		4.88E-10	4.88E-10	4.88E-10		
NA+										
NA2O		1.26E-06	2.51E-03	3.24E+01		1.26E-06	1.26E-06	1.26E-06	1.26E-06	1.26E-06
NI+3										
NI2FECN6										
NI2O3				9.56E-02						
NIO		9.08E-08	1.82E-04	2.34E+00		9.08E-08	9.08E-08	9.08E-08	9.08E-08	9.08E-08
NO2-										
NO3-										
NP+4										
NPO2		5.99E-11	1.20E-07	1.54E-03		5.99E-11	5.99E-11	5.99E-11		
OH-										
P2O5		2.49E-07	4.98E-04	6.41E+00		2.49E-07	2.49E-07	2.49E-07	2.49E-07	2.49E-07
P2O5.24W										
PB+4										
PBO2		1.52E-09	3.04E-06	3.91E-02		1.52E-09	1.52E-09	1.52E-09		
PO4-3										
POLY										
PU+4										
PUO2		1.93E-10	3.87E-07	4.99E-03		1.93E-10	1.93E-10	1.93E-10		
SI+4										
SIO2		4.99E-06	9.98E-03	1.29E+02		4.99E-06	4.99E-06	4.99E-06	4.99E-06	4.99E-06
SO4-2										
SR+2										
SRO		1.72E-08	3.44E-05	4.43E-01		1.72E-08	1.72E-08	1.72E-08		

Stream Name Solid Components	614	615	616	632	637	638	639	640	641	642
TC2O7		2.18E-10	4.36E-07	5.62E-03		2.18E-10	2.18E-10	2.18E-10		
TCO4-										
TOC										
UO2+2										
UO3		6.70E-07	1.34E-03	1.73E+01		6.70E-07	6.70E-07	6.70E-07	6.70E-07	6.70E-07
V+5										
V2O5		1.34E-10	2.69E-07	3.46E-03		1.34E-10	1.34E-10	1.34E-10		
WO2		1.77E-10	3.53E-07	4.55E-03		1.77E-10	1.77E-10	1.77E-10		
WO3		8.27E-13	1.65E-09	2.13E-05		8.27E-13	8.27E-13	8.27E-13		
ZN+2										
ZNO		4.75E-10	9.49E-07	1.22E-02		4.75E-10	4.75E-10	4.75E-10		
ZR+4										
ZRO2		2.76E-07	5.52E-04	7.12E+00		2.76E-07	2.76E-07	2.76E-07	2.76E-07	2.76E-07
ZRO2:2H2										

Stream Name Liquid Components	643	644	645	646	647	648	649	650	651	652
Cs and Ba, (MCi)										
Sr and Y, (MCi)										
Tc, (MCi)										
Am, (MCi)										
Np, (MCi)										
Pu-239, (MCi)										
Pu-240, (MCi)										
Pu-241, (MCi)										
Total TRU, (MCi)										
Total MCi										
Total Mass Flow, (MT)	2.27E+02	2.09E+04	2.09E+04		4.96E+01	6.85E+01		4.31E+01	3.13E+03	3.16E+03
Total Cr, (MT)										
Total Na, (MT)										
Total Si, (MT)										
Total P, (MT)										
Total NO2-, (MT)										
Total NO3-, (MT)										
AG+										
AL(OH)4-										
AM+3										
AS+5										
B+3										
BA+2										
BE+2										
BI+3										
C14										
CA+2										
CD+2										
CE+3										
CL-										
CL2		4.17E+00	4.17E+00							
CO		2.03E+02	2.03E+02							
CO2		1.69E+04	1.69E+04							
CO3-2										
CR(OH)4-										
CS+										
CU+2										
F-										
F2		6.21E+01	6.21E+01							
FE+3										
H2					8.72E+00			2.21E+00		2.21E+00
H2O		4.19E+02	4.19E+02			4.65E+01				
H2S						2.20E+01				
HG										
HG+2										
I-										

Stream Name Liquid Components	643	644	645	646	647	648	649	650	651	652
I2		2.14E+01	2.14E+01							
K+										
KEROSENE										
LA+3										
LI+										
MG+2										
MNO2										
MO+6										
N2		1.17E+03	1.17E+03		4.04E+01			4.04E+01	2.47E+03	2.51E+03
NA+										
NH3	2.27E+02	1.83E+01	1.83E+01		4.96E-01			4.96E-01		4.96E-01
NI+3										
NO		9.98E-02	9.98E-02							
NO2		4.28E+00	4.28E+00							
NO2-										
NO3-										
NP+4										
O2		2.11E+03	2.11E+03						6.57E+02	6.46E+02
OH-										
PB+4										
PO4-3										
POLY										
PU+4										
S										
SI+4										
SO2		4.60E+00	4.60E+00							
SO4-2										
SR+2										
TCO2										
TCO4-										
TOC										
UO2+2										
V+5										
W+6										
ZN+2										
ZR+4										
ZRO2:2H2										

Stream Name Solid Components	643	644	645	646	647	648	649	650	651	652
Cs and Ba, (MCi)										
Sr and Y, (MCi)										
Tc, (MCi)										
Am, (MCi)										
Np, (MCi)										
Pu-239, (MCi)										
Pu-240, (MCi)										
Pu-241, (MCi)										
Total TRU, (MCi)										
Total MCi										
Total Mass Flow, (MT)		9.89E-06	9.89E-06	1.03E+02				4.10E+01		
Total Cr, (MT)										
Total Na, (MT)		9.33E-07	9.33E-07							
Total Si, (MT)		2.33E-06	2.33E-06							
Total P, (MT)		1.09E-07	1.09E-07							
Total NO2-, (MT)										
Total NO3-, (MT)										
AG+										
AG2O										
AL+3										
AL2O3		6.94E-07	6.94E-07							
AM+3										
AM2O3										
AS+5										
AS2O5										
B+3										
B2O3		7.04E-07	7.04E-07							
BA+2										
BAO										
BE+2										
BEO										
BI+3										
BI2O3										
C14										
CA+2										
CANCRINI										
CAO		7.58E-08	7.58E-08							
CD+2										
CDO										
CE+3										
CE2O3		1.10E-07	1.10E-07							
CL-										
CO3-2										
CR+3										
CR2O3										
CS+										

Stream Name Solid Components	643	644	645	646	647	648	649	650	651	652
CS2O										
CU								4.10E+01		
CU+2										
CUO										
CUSO4				1.03E+02						
F-										
FE+3										
FE2O3		4.85E-07	4.85E-07							
HG+2										
I-										
K+										
K2O										
LA+3										
LA2O3										
LI+										
LI2O		2.01E-07	2.01E-07							
MG+2										
MGO										
MNO2		8.37E-08	8.37E-08							
MO+6										
MOO3										
NA+										
NA2O		1.26E-06	1.26E-06							
NI+3										
NI2FECN6										
NI2O3										
NIO		9.08E-08	9.08E-08							
NO2-										
NO3-										
NP+4										
NPO2										
OH-										
P2O5		2.49E-07	2.49E-07							
P2O5:24W										
PB+4										
PBO2										
PO4-3										
POLY										
PU+4										
PUO2										
SI+4										
SIO2		4.99E-06	4.99E-06							
SO4-2										
SR+2										
SRO										
TC2O7										

Stream Name Solid Components	643	644	645	646	647	648	649	650	651	652
TCO4-										
TOC										
UO2+2										
UO3		6.70E-07	6.70E-07							
V+5										
V2O5										
WO2										
WO3										
ZN+2										
ZNO										
ZR+4										
ZRO2		2.76E-07	2.76E-07							
ZRO2:2H2										

Stream Name Liquid Components	653	654	655	656	670	671	672	673	674	675
Cs and Ba, (MCi)										
Sr and Y, (MCi)										
Tc, (MCi)										
Am, (MCi)										
Np, (MCi)										
Pu-239, (MCi)										
Pu-240, (MCi)										
Pu-241, (MCi)										
Total TRU, (MCi)										
Total MCi										
Total Mass Flow, (MT)	4.96E+01	2.77E+02			2.24E+02	2.92E+02	2.92E+02	2.92E+02	1.24E+01	2.80E+02
Total Cr, (MT)										
Total Na, (MT)										
Total Si, (MT)										
Total P, (MT)										
Total NO2-, (MT)										
Total NO3-, (MT)										
AG+										
AL(OH)4-										
AM+3										
AS+5										
B+3										
BA+2										
BE+2										
BI+3										
C14										
CA+2										
CD+2										
CE+3										
CL-										
CL2										
CO										
CO2										
CO3-2										
CR(OH)4-										
CS+										
CU+2										
F-										
F2										
FE+3										
H2										
H2O						5.82E+01	5.82E+01	5.82E+01		5.82E+01
H2S										
HG										
HG+2										
I-										

Stream Name Liquid Components	653	654	655	656	670	671	672	673	674	675
I2										
K+										
KEROSENE										
LA+3										
LI+										
MG+2										
MNO2										
MO+6										
N2					1.77E+02	1.77E+02	1.77E+02	1.77E+02		1.77E+02
NA+										
NH3	4.96E+01	2.77E+02								
NI+3										
NO										
NO2										
NO2-										
NO3-										
NP+4										
O2					4.70E+01	2.84E+01	2.84E+01	2.84E+01		2.84E+01
OH-										
PB+4										
PO4-3										
POLY										
PU+4										
S						1.24E+01	1.24E+01	1.24E+01	1.24E+01	
SI+4										
SO2						1.66E+01	1.66E+01	1.66E+01		1.66E+01
SO4-2										
SR+2										
TCO2										
TCO4-										
TOC										
UO2+2										
V+5										
W+6										
ZN+2										
ZR+4										
ZRO2:2H2										

Stream Name Solid Components	653	654	655	656	670	671	672	673	674	675
Cs and Ba, (MCi)										
Sr and Y, (MCi)										
Tc, (MCi)										
Am, (MCi)										
Np, (MCi)										
Pu-239, (MCi)										
Pu-240, (MCi)										
Pu-241, (MCi)										
Total TRU, (MCi)										
Total MCi										
Total Mass Flow, (MT)										
Total Cr, (MT)										
Total Na, (MT)										
Total Si, (MT)										
Total P, (MT)										
Total NO2-, (MT)										
Total NO3-, (MT)										
AG+										
AG2O										
AL+3										
AL2O3										
AM+3										
AM2O3										
AS+5										
AS2O5										
B+3										
B2O3										
BA+2										
BAO										
BE+2										
BEO										
BI+3										
BI2O3										
C14										
CA+2										
CANCRINI										
CAO										
CD+2										
CDO										
CE+3										
CE2O3										
CL-										
CO3-2										
CR+3										
CR2O3										
CS+										

Stream Name Solid Components	653	654	655	656	670	671	672	673	674	675
CS2O										
CU										
CU+2										
CUO										
CUSO4										
F-										
FE+3										
FE2O3										
HG+2										
I-										
K+										
K2O										
LA+3										
LA2O3										
LI+										
LI2O										
MG+2										
MGO										
MNO2										
MO+6										
MOO3										
NA+										
NA2O										
NI+3										
NI2FECN6										
NI2O3										
NIO										
NO2-										
NO3-										
NP+4										
NPO2										
OH-										
P2O5										
P2O5.24W										
PB+4										
PBO2										
PO4-3										
POLY										
PU+4										
PUO2										
SI+4										
SIO2										
SO4-2										
SR+2										
SRO										
TC2O7										

Stream Name Solid Components	653	654	655	656	670	671	672	673	674	675
TCO4-										
TOC										
UO2+2										
UO3										
V+5										
V2O5										
WO2										
WO3										
ZN+2										
ZNO										
ZR+4										
ZRO2										
ZRO2:2H2										

Stream Name Liquid Components	676	677	678	679	680	681	682	683	684	685
Cs and Ba, (MCi)										
Sr and Y, (MCi)										
Tc, (MCi)										
Am, (MCi)										
Np, (MCi)										
Pu-239, (MCi)										
Pu-240, (MCi)										
Pu-241, (MCi)										
Total TRU, (MCi)										
Total MCi										
Total Mass Flow, (MT)	2.80E+02	2.80E+02		2.80E+02	2.80E+02	2.80E+02	2.80E+02		2.80E+02	
Total Cr, (MT)										
Total Na, (MT)										
Total Si, (MT)										
Total P, (MT)										
Total NO2-, (MT)										
Total NO3-, (MT)										
AG+										
AL(OH)4-										
AM+3										
AS+5										
B+3										
BA+2										
BE+2										
BI+3										
C14										
CA+2										
CD+2										
CE+3										
CL-										
CL2'										
CO										
CO2										
CO3-2										
CR(OH)4-										
CS+										
CU+2										
F-										
F2										
FE+3										
H2										
H2O	5.82E+01	5.82E+01		5.82E+01	5.82E+01	5.82E+01	5.82E+01		5.82E+01	
H2S										
HG										
HG+2										
I-										

Stream Name Liquid Components	676	677	678	679	680	681	682	683	684	685
I2										
K+										
KEROSENE										
LA+3										
LI+										
MG+2										
MNO2										
MO+6										
N2	1.77E+02	1.77E+02		1.77E+02	1.77E+02	1.77E+02	1.77E+02		1.77E+02	
NA+										
NH3										
NI+3										
NO										
NO2										
NO2-										
NO3-										
NP+4										
O2	2.84E+01	2.84E+01		2.84E+01	2.84E+01	2.84E+01	2.84E+01		2.84E+01	
OH-										
PB+4										
PO4-3										
POLY										
PU+4										
S										
SI+4										
SO2	1.66E+01	1.66E+01		1.66E+01	1.66E+01	1.66E+01	1.66E+01		1.66E+01	
SO4-2										
SR+2										
TCO2										
TCO4-										
TOC										
UO2+2										
V+5										
W+6										
ZN+2										
ZR+4										
ZRO2:2H2										

Stream Name Solid Components	676	677	678	679	680	681	682	683	684	685
Cs and Ba, (MCi)										
Sr and Y, (MCi)										
Tc, (MCi)										
Am, (MCi)										
Np, (MCi)										
Pu-239, (MCi)										
Pu-240, (MCi)										
Pu-241, (MCi)										
Total TRU, (MCi)										
Total MCi										
Total Mass Flow, (MT)										
Total Cr, (MT)										
Total Na, (MT)										
Total Si, (MT)										
Total P, (MT)										
Total NO2-, (MT)										
Total NO3-, (MT)										
AG+										
AG2O										
AL+3										
AL2O3										
AM+3										
AM2O3										
AS+5										
AS2O5										
B+3										
B2O3										
BA+2										
BAO										
BE+2										
BEO										
BI+3										
BI2O3										
C14										
CA+2										
CANCRINI										
CAO										
CD+2										
CDO										
CE+3										
CE2O3										
CL-										
CO3-2										
CR+3										
CR2O3										
CS+										

Stream Name Solid Components	676	677	678	679	680	681	682	683	684	685
CS2O										
CU										
CU+2										
CUO										
CUSO4										
F-										
FE+3										
FE2O3										
HG+2										
I-										
K+										
K2O										
LA+3										
LA2O3										
LI+										
LI2O										
MG+2										
MGO										
MNO2										
MO+6										
MOO3										
NA+										
NA2O										
NI+3										
NI2FECN6										
NI2O3										
NIO										
NO2-										
NO3-										
NP+4										
NPO2										
OH-										
P2O5										
P2O5:24W										
PB+4										
PBO2										
PO4-3										
POLY										
PU+4										
PUO2										
SI+4										
SIO2										
SO4-2										
SR+2										
SRO										
TC2O7										

Stream Name Solid Components	676	677	678	679	680	681	682	683	684	685
TCO4-										
TOC										
UO2+2										
UO3										
V+5										
V2O5										
WO2										
WO3										
ZN+2										
ZNO										
ZR+4										
ZRO2										
ZRO2:2H2										

Stream Name Liquid Components	686	690	700	701	702	703	704	705	706	707
Cs and Ba, (MCi)										
Sr and Y, (MCi)										
Tc, (MCi)										
Am, (MCi)										
Np, (MCi)										
Pu-239, (MCi)										
Pu-240, (MCi)										
Pu-241, (MCi)										
Total TRU, (MCi)										
Total MCi										
Total Mass Flow, (MT)	2.80E+02	1.24E+01	7.19E+02	2.19E-10	7.19E+02			2.19E-10		
Total Cr, (MT)										
Total Na, (MT)										
Total Si, (MT)										
Total P, (MT)										
Total NO2-, (MT)										
Total NO3-, (MT)										
AG+										
AL(OH)4-										
AM+3										
AS+5										
B+3										
BA+2										
BE+2										
BI+3										
C14										
CA+2										
CD+2										
CE+3										
CL-										
CL2										
CO										
CO2										
CO3-2										
CR(OH)4-										
CS+										
CU+2										
F-										
F2										
FE+3										
H2										
H2O	5.82E+01		7.19E+02	2.19E-10	7.19E+02			2.19E-10		
H2S										
HG										
HG+2										
I-										

Stream Name Liquid Components	686	690	700	701	702	703	704	705	706	707
I2										
K+										
KEROSENE										
LA+3										
LI+										
MG+2										
MNO2										
MO+6										
N2	1.77E+02									
NA+										
NH3										
NI+3										
NO										
NO2										
NO2-										
NO3-										
NP+4										
O2	2.84E+01									
OH-										
PB+4										
PO4-3										
POLY										
PU+4										
S		1.24E+01								
SI+4										
SO2	1.66E+01									
SO4-2										
SR+2										
TCO2										
TCO4-										
TOC										
UO2+2										
V+5										
W+6										
ZN+2										
ZR+4										
ZRO2:2H2										

Stream Name Solid Components	686	690	700	701	702	703	704	705	706	707
Cs and Ba, (MCi)										
Sr and Y, (MCi)										
Tc, (MCi)										
Am, (MCi)										
Np, (MCi)										
Pu-239, (MCi)										
Pu-240, (MCi)										
Pu-241, (MCi)										
Total TRU, (MCi)										
Total MCi										
Total Mass Flow, (MT)										
Total Cr, (MT)										
Total Na, (MT)										
Total Si, (MT)										
Total P, (MT)										
Total NO2-, (MT)										
Total NO3-, (MT)										
AG+										
AG2O										
AL+3										
AL2O3										
AM+3										
AM2O3										
AS+5										
AS2O5										
B+3										
B2O3										
BA+2										
BAO										
BE+2										
BEO										
BI+3										
BI2O3										
C14										
CA+2										
CANCRIN1										
CAO										
CD+2										
CDO										
CE+3										
CE2O3										
CL-										
CO3-2										
CR+3										
CR2O3										
CS+										

Stream Name Solid Components	686	690	700	701	702	703	704	705	706	707
CS2O										
CU										
CU+2										
CUO										
CUSO4										
F-										
FE+3										
FE2O3										
HG+2										
I-										
K+										
K2O										
LA+3										
LA2O3										
LI+										
LI2O										
MG+2										
MGO										
MNO2										
MO+6										
MOO3										
NA+										
NA2O										
NI+3										
NI2FECN6										
NI2O3										
NIO										
NO2-										
NO3-										
NP+4										
NPO2										
OH-										
P2O5										
P2O5:24W										
PB+4										
PBO2										
PO4-3										
POLY										
PU+4										
PUO2										
SI+4										
SIO2										
SO4-2										
SR+2										
SRO										
TC2O7										

Stream Name Solid Components	686	690	700	701	702	703	704	705	706	707
TCO4-										
TOC										
UO2+2										
UO3										
V+5										
V2O5										
WO2										
WO3										
ZN+2										
ZNO										
ZR+4										
ZRO2										
ZRO2:2H2										

Stream Name Liquid Components	708	800	801	802	803	804	805	806	900	901
Cs and Ba, (MCi)										
Sr and Y, (MCi)										
Tc, (MCi)										
Am, (MCi)										
Np, (MCi)										
Pu-239, (MCi)										
Pu-240, (MCi)										
Pu-241, (MCi)										
Total TRU, (MCi)										
Total MCi										
Total Mass Flow, (MT)		7.20E+04		7.20E+04				7.20E+04		
Total Cr, (MT)										
Total Na, (MT)										
Total Si, (MT)										
Total P, (MT)										
Total NO2-, (MT)										
Total NO3-, (MT)										
AG+										
AL(OH)4-										
AM+3										
AS+5										
B+3										
BA+2										
BE+2										
BI+3										
C14										
CA+2										
CD+2										
CE+3										
CL-										
CL2										
CO										
CO2										
CO3-2										
CR(OH)4-										
CS+										
CU+2										
F-										
F2										
FE+3										
H2										
H2O		7.20E+04		7.20E+04				7.20E+04		
H2S										
HG										
HG+2										
I-										

Stream Name Liquid Components	708	800	801	802	803	804	805	806	900	901
I2										
K+										
KEROSENE										
LA+3										
LI+										
MG+2										
MNO2										
MO+6										
N2										
NA+										
NH3										
NI+3										
NO										
NO2										
NO2-										
NO3-										
NP+4										
O2										
OH-										
PB+4										
PO4-3										
POLY										
PU+4										
S										
SI+4										
SO2										
SO4-2										
SR+2										
TCO2										
TCO4-										
TOC										
UO2+2										
V+5										
W+6										
ZN+2										
ZR+4										
ZRO2:2H2										

Stream Name Solid Components	708	800	801	802	803	804	805	808	900	901
Cs and Ba, (MCi)										
Sr and Y, (MCi)										
Tc, (MCi)										
Am, (MCi)										
Np, (MCi)										
Pu-239, (MCi)										
Pu-240, (MCi)										
Pu-241, (MCi)										
Total TRU, (MCi)										
Total MCi										
Total Mass Flow, (MT)										
Total Cr, (MT)										
Total Na, (MT)										
Total Si, (MT)										
Total P, (MT)										
Total NO2-, (MT)										
Total NO3-, (MT)										
AG+										
AG2O										
AL+3										
AL2O3										
AM+3										
AM2O3										
AS+5										
AS2O5										
B+3										
B2O3										
BA+2										
BAO										
BE+2										
BEO										
BI+3										
BI2O3										
C14										
CA+2										
CANCRINI										
CAO										
CD+2										
CDO										
CE+3										
CE2O3										
CL-										
CO3-2										
CR+3										
CR2O3										
CS+										

Stream Name Solid Components	706	800	801	802	803	804	805	808	900	901
CS2O										
CU										
CU+2										
CUO										
CUSO4										
F-										
FE+3										
FE2O3										
HG+2										
I-										
K+										
K2O										
LA+3										
LA2O3										
LI+										
LI2O										
MG+2										
MGO										
MNO2										
MO+6										
MOO3										
NA+										
NA2O										
NI+3										
NI2FECN6										
NI2O3										
NIO										
NO2-										
NO3-										
NP+4										
NPO2										
OH-										
P2O5										
P2O5:24W										
PB+4										
PBO2										
PO4-3										
POLY										
PU+4										
PUO2										
SI+4										
SIO2										
SO4-2										
SR+2										
SRO										
TC2O7										

Stream Name Solid Components	708	800	801	802	803	804	805	808	900	901
TCO4-										
TOC										
UO2+2										
UO3										
V+5										
V2O5										
WO2										
WO3										
ZN+2										
ZNO										
ZR+4										
ZRO2										
ZRO2:2H2										

Stream Name Liquid Components	902	903	904	905	906	907	908	909	910	911
Cs and Ba, (MCi)										
Sr and Y, (MCi)										
Tc, (MCi)										
Am, (MCi)										
Np, (MCi)										
Pu-239, (MCi)										
Pu-240, (MCi)										
Pu-241, (MCi)										
Total TRU, (MCi)										
Total MCi										
Total Mass Flow, (MT)			1.34E-02	1.34E-02	1.34E-02	2.02E+05				
Total Cr, (MT)										
Total Na, (MT)										
Total Si, (MT)										
Total P, (MT)										
Total NO2-, (MT)										
Total NO3-, (MT)										
AG+										
AL(OH)4-										
AM+3										
AS+5										
B+3										
BA+2										
BE+2										
BI+3										
C14										
CA+2										
CD+2										
CE+3										
CL-										
CL2						4.17E+00				
CO						2.03E+02				
CO2						1.69E+04				
CO3-2										
CR(OH)4-										
CS+										
CU+2										
F-										
F2						6.21E+01				
FE+3										
H2										
H2O			1.34E-02	1.34E-02	1.34E-02	3.14E+03				
H2S										
HG										
HG+2										
I-										

Stream Name Liquid Components	902	903	904	905	906	907	908	909	910	911
I2						2.14E+01				
K+										
KEROSENE										
LA+3										
LI+										
MG+2										
MNO2										
MO+6										
N2						1.42E+05				
NA+										
NH3						1.83E+01				
NI+3										
NO						9.98E-02				
NO2						4.28E+00				
NO2-										
NO3-										
NP+4										
O2						3.95E+04				
OH-										
PB+4										
PO4-3										
POLY										
PU+4										
S										
SI+4										
SO2						4.60E+00				
SO4-2										
SR+2										
TCO2										
TCO4-										
TOC										
UO2+2										
V+5										
W+6										
ZN+2										
ZR+4										
ZRO2:2H2										

Stream Name Solid Components	902	903	904	905	906	907	908	909	910	911
Cs and Ba, (MCi)				3.37E-07	3.37E-07	1.69E-10				
Sr and Y, (MCi)				5.27E-07	5.27E-07	2.64E-10				
Tc, (MCi)				2.95E-11	2.95E-11	1.48E-14				
Am, (MCi)				4.76E-10	4.76E-10	2.38E-13				
Np, (MCi)				4.64E-13	4.64E-13	2.32E-16				
Pu-239, (MCi)				1.23E-10	1.23E-10	6.17E-14				
Pu-240, (MCi)				3.14E-11	3.14E-11	1.57E-14				
Pu-241, (MCi)				3.67E-10	3.67E-10	1.83E-13				
Total TRU, (MCi)				9.97E-10	9.97E-10	4.99E-13				
Total MCi				8.65E-07	8.65E-07	4.33E-10				
Total Mass Flow, (MT)				1.36E-04	1.36E-04	6.78E-08				
Total Cr, (MT)				1.98E-07	1.98E-07	9.91E-11				
Total Na, (MT)				1.26E-05	1.26E-05	6.29E-09				
Total Si, (MT)				3.15E-05	3.15E-05	1.57E-08				
Total P, (MT)				1.47E-06	1.47E-06	7.33E-10				
Total NO2-, (MT)										
Total NO3-, (MT)										
AG+										
AG2O				7.39E-09	7.39E-09	3.70E-12				
AL+3										
AL2O3				9.36E-06	9.36E-06	4.68E-09				
AM+3										
AM2O3				1.52E-10	1.52E-10	7.62E-14				
AS+5										
AS2O5				3.83E-09	3.83E-09	1.92E-12				
B+3										
B2O3				9.49E-06	9.49E-06	4.75E-09				
BA+2										
BAO				1.73E-08	1.73E-08	8.63E-12				
BE+2										
BEO				1.08E-10	1.08E-10	5.40E-14				
BI+3										
BI2O3				1.09E-06	1.09E-06	5.47E-10				
C14										
CA+2										
CANCRIN1										
CAO				1.02E-06	1.02E-06	5.11E-10				
CD+2										
CDO				4.53E-08	4.53E-08	2.27E-11				
CE+3										
CE2O3				1.49E-06	1.49E-06	7.44E-10				
CL-										
CO3-2										
CR+3										
CR2O3				2.90E-07	2.90E-07	1.45E-10				
CS+										

Stream Name Solid Components	902	903	904	905	906	907	908	909	910	911
CS2O				4.79E-09	4.79E-09	2.40E-12				
CU										
CU+2										
CUO				4.67E-09	4.67E-09	2.34E-12				
CUSO4										
F-										
FE+3										
FE2O3				6.54E-06	6.54E-06	3.27E-09				
HG+2										
I-										
K+										
K2O				1.26E-07	1.26E-07	6.32E-11				
LA+3										
LA2O3				1.23E-07	1.23E-07	6.16E-11				
LI+										
LI2O				2.71E-06	2.71E-06	1.36E-09				
MG+2										
MGO				9.40E-08	9.40E-08	4.70E-11				
MNO2				1.13E-06	1.13E-06	5.64E-10				
MO+6										
MOO3				6.09E-09	6.09E-09	3.04E-12				
NA+										
NA2O				1.70E-05	1.70E-05	8.48E-09				
NI+3										
NI2FECN6										
NI2O3				4.63E-08	4.63E-08	2.32E-11				
NIO				1.22E-06	1.22E-06	6.12E-10				
NO2-										
NO3-										
NP+4										
NPO2				7.47E-10	7.47E-10	3.74E-13				
OH-										
P2O5				3.36E-06	3.36E-06	1.68E-09				
P2O5:24W										
PB+4										
PBO2				1.90E-08	1.90E-08	9.48E-12				
PO4-3										
POLY										
PU+4										
PUO2				2.42E-09	2.42E-09	1.21E-12				
SI+4										
SIO2				6.73E-05	6.73E-05	3.37E-08				
SO4-2										
SR+2										
SRO				2.15E-07	2.15E-07	1.07E-10				
TC2O7				2.72E-09	2.72E-09	1.36E-12				

Stream Name Solid Components	902	903	904	905	906	907	908	909	910	911
TCO4-										
TOC										
UO2+2										
UO3				9.03E-06	9.03E-06	4.52E-09				
V+5										
V2O5				1.68E-09	1.68E-09	8.39E-13				
WO2				2.21E-09	2.21E-09	1.10E-12				
WO3				1.03E-11	1.03E-11	5.16E-15				
ZN+2										
ZNO				5.93E-09	5.93E-09	2.97E-12				
ZR+4										
ZRO2				3.72E-06	3.72E-06	1.86E-09				
ZRO2:2H2										

Stream Name Liquid Components	912	913	914	915	916	917	1006	1007	1008	1009
Cs and Ba, (MCi)										
Sr and Y, (MCi)										
Tc, (MCi)										
Am, (MCi)										
Np, (MCi)										
Pu-239, (MCi)										
Pu-240, (MCi)										
Pu-241, (MCi)										
Total TRU, (MCi)										
Total MCi										
Total Mass Flow, (MT)	2.52E+03	3.16E+04	3.16E+04	2.52E+03	2.52E+03	3.16E+04			2.77E+02	
Total Cr, (MT)										
Total Na, (MT)										
Total Si, (MT)										
Total P, (MT)										
Total NO2-, (MT)										
Total NO3-, (MT)										
AG+										
AL(OH)4-										
AM+3										
AS+5										
B+3										
BA+2										
BE+2										
BI+3										
C14										
CA+2										
CD+2										
CE+3										
CL-										
CL2										
CO										
CO2										
CO3-2										
CR(OH)4-										
CS+										
CU+2										
F-										
F2										
FE+3										
H2										
H2O	2.52E+03			2.52E+03	2.52E+03					
H2S										
HG										
HG+2										
I-										

Stream Name Liquid Components	912	913	914	915	916	917	1006	1007	1008	1009
I2										
K+										
KEROSENE										
LA+3										
LI+										
MG+2										
MNO2										
MO+6										
N2		2.50E+04	2.50E+04			2.50E+04				
NA+										
NH3									2.77E+02	
NI+3										
NO										
NO2										
NO2-										
NO3-										
NP+4										
O2		6.63E+03	6.63E+03			6.63E+03				
OH-										
PB+4										
PO4-3										
POLY										
PU+4										
S										
SI+4										
SO2										
SO4-2										
SR+2										
TCO2										
TCO4-										
TOC										
UO2+2										
V+5										
W+6										
ZN+2										
ZR+4										
ZRO2:2H2										

Stream Name Solid Components	912	913	914	915	916	917	1006	1007	1008	1009
Cs and Ba, (MCi)		6.82E-02	6.82E-02	6.81E-02	6.81E-02	3.41E-05				
Sr and Y, (MCi)		1.07E-01	1.07E-01	1.07E-01	1.07E-01	5.33E-05				
Tc, (MCi)		5.97E-06	5.97E-06	5.97E-06	5.97E-06	2.99E-09				
Am, (MCi)		9.62E-05	9.62E-05	9.62E-05	9.62E-05	4.81E-08				
Np, (MCi)		9.39E-08	9.39E-08	9.39E-08	9.39E-08	4.70E-11				
Pu-239, (MCi)		2.50E-05	2.50E-05	2.50E-05	2.50E-05	1.25E-08				
Pu-240, (MCi)		6.35E-06	6.35E-06	6.35E-06	6.35E-06	3.18E-09				
Pu-241, (MCi)		7.42E-05	7.42E-05	7.41E-05	7.41E-05	3.71E-08				
Total TRU, (MCi)		2.02E-04	2.02E-04	2.02E-04	2.02E-04	1.01E-07				
Total MCi		1.75E-01	1.75E-01	1.75E-01	1.75E-01	8.75E-05				
Total Mass Flow, (MT)		2.54E+01	2.54E+01	2.54E+01	2.54E+01	1.27E-02				
Total Cr, (MT)		4.01E-02	4.01E-02	4.01E-02	4.01E-02	2.00E-05				
Total Na, (MT)		2.36E+00	2.36E+00	2.36E+00	2.36E+00	1.18E-03				
Total Si, (MT)		5.90E+00	5.90E+00	5.89E+00	5.89E+00	2.95E-03				
Total P, (MT)		2.75E-01	2.75E-01	2.74E-01	2.74E-01	1.37E-04				
Total NO2-, (MT)										
Total NO3-, (MT)										
AG+										
AG2O		1.50E-03	1.50E-03	1.50E-03	1.50E-03	7.48E-07				
AL+3										
AL2O3		1.75E+00	1.75E+00	1.75E+00	1.75E+00	8.76E-04				
AM+3										
AM2O3		3.08E-05	3.08E-05	3.08E-05	3.08E-05	1.54E-08				
AS+5										
AS2O5		7.75E-04	7.75E-04	7.75E-04	7.75E-04	3.88E-07				
B+3										
B2O3		1.78E+00	1.78E+00	1.78E+00	1.78E+00	8.89E-04				
BA+2										
BAO		3.49E-03	3.49E-03	3.49E-03	3.49E-03	1.75E-06				
BE+2										
BEO		2.19E-05	2.19E-05	2.19E-05	2.19E-05	1.09E-08				
BI+3										
BI2O3		2.21E-01	2.21E-01	2.21E-01	2.21E-01	1.11E-04				
C14										
CA+2										
CANCRINI										
CAO		1.91E-01	1.91E-01	1.91E-01	1.91E-01	9.57E-05				
CD+2										
CDO		9.16E-03	9.16E-03	9.16E-03	9.16E-03	4.58E-06				
CE+3										
CE2O3		2.79E-01	2.79E-01	2.79E-01	2.79E-01	1.39E-04				
CL-										
CO3-2										
CR+3										
CR2O3		5.86E-02	5.86E-02	5.85E-02	5.85E-02	2.93E-05				
CS+										

Stream Name Solid Components	912	913	914	915	916	917	1006	1007	1008	1009
CS2O		9.69E-04	9.69E-04	9.68E-04	9.68E-04	4.84E-07				
CU										
CU+2										
CUO		9.45E-04	9.45E-04	9.44E-04	9.44E-04	4.72E-07				
CUSO4										
F-										
FE+3										
FE2O3		1.23E+00	1.23E+00	1.23E+00	1.23E+00	6.13E-04				
HG+2										
I-										
K+										
K2O		2.56E-02	2.56E-02	2.56E-02	2.56E-02	1.28E-05				
LA+3										
LA2O3		2.49E-02	2.49E-02	2.49E-02	2.49E-02	1.25E-05				
LI+										
LI2O		5.08E-01	5.08E-01	5.08E-01	5.08E-01	2.54E-04				
MG+2										
MGO		1.90E-02	1.90E-02	1.90E-02	1.90E-02	9.51E-06				
MNO2		2.11E-01	2.11E-01	2.11E-01	2.11E-01	1.06E-04				
MO+6										
MOO3		1.23E-03	1.23E-03	1.23E-03	1.23E-03	6.16E-07				
NA+										
NA2O		3.18E+00	3.18E+00	3.17E+00	3.17E+00	1.59E-03				
NI+3										
NI2FECN6										
NI2O3		9.37E-03	9.37E-03	9.37E-03	9.37E-03	4.69E-06				
NIO		2.29E-01	2.29E-01	2.29E-01	2.29E-01	1.15E-04				
NO2-										
NO3-										
NP+4										
NPO2		1.51E-04	1.51E-04	1.51E-04	1.51E-04	7.56E-08				
OH-										
P2O5		6.29E-01	6.29E-01	6.28E-01	6.28E-01	3.14E-04				
P2O5:24W										
PB+4										
PBO2		3.83E-03	3.83E-03	3.83E-03	3.83E-03	1.92E-06				
PO4-3										
POLY										
PU+4										
PUO2		4.89E-04	4.89E-04	4.89E-04	4.89E-04	2.45E-07				
SI+4										
SIO2		1.26E+01	1.26E+01	1.26E+01	1.26E+01	6.31E-03				
SO4-2										
SR+2										
SRO		4.34E-02	4.34E-02	4.34E-02	4.34E-02	2.17E-05				
TC2O7		5.51E-04	5.51E-04	5.51E-04	5.51E-04	2.76E-07				

Stream Name Solid Components	912	913	914	915	916	917	1006	1007	1008	1009
TCO4-										
TOC										
UO2+2										
UO3		1.69E+00	1.69E+00	1.69E+00	1.69E+00	8.46E-04				
V+5										
V2O5		3.39E-04	3.39E-04	3.39E-04	3.39E-04	1.70E-07				
WO2		4.46E-04	4.46E-04	4.46E-04	4.46E-04	2.23E-07				
WO3		2.09E-06	2.09E-06	2.09E-06	2.09E-06	1.04E-09				
ZN+2										
ZNO		1.20E-03	1.20E-03	1.20E-03	1.20E-03	6.00E-07				
ZR+4										
ZRO2		6.98E-01	6.98E-01	6.97E-01	6.97E-01	3.49E-04				
ZRO2:2H2										

Stream Name Liquid Components	1010	1011	1012	1020	1021	1022	1023	1024	1025	1026
Cs and Ba, (MCi)										
Sr and Y, (MCi)										
Tc, (MCi)										
Am, (MCi)										
Np, (MCi)										
Pu-239, (MCi)										
Pu-240, (MCi)										
Pu-241, (MCi)										
Total TRU, (MCi)										
Total MCi										
Total Mass Flow, (MT)		4.99E+03	6.89E+03							
Total Cr, (MT)										
Total Na, (MT)										
Total Si, (MT)										
Total P, (MT)										
Total NO2-, (MT)										
Total NO3-, (MT)										
AG+										
AL(OH)4-										
AM+3										
AS+5										
B+3										
BA+2										
BE+2										
BI+3										
C14										
CA+2										
CD+2										
CE+3										
CL-										
CL2										
CO										
CO2										
CO3-2										
CR(OH)4-										
CS+										
CU+2										
F-										
F2										
FE+3										
H2										
H2O			6.89E+03							
H2S										
HG										
HG+2										
I-										

Stream Name Liquid Components	1010	1011	1012	1020	1021	1022	1023	1024	1025	1026
I2										
K+										
KEROSENE		4.99E+03								
LA+3										
LI+										
MG+2										
MNO2										
MO+6										
N2										
NA+										
NH3										
NI+3										
NO										
NO2										
NO2-										
NO3-										
NP+4										
O2										
OH-										
PB+4										
PO4-3										
POLY										
PU+4										
S										
SI+4										
SO2										
SO4-2										
SR+2										
TCO2										
TCO4-										
TOC										
UO2+2										
V+5										
W+6										
ZN+2										
ZR+4										
ZRO2:2H2										

Stream Name Solid Components	1010	1011	1012	1020	1021	1022	1023	1024	1025	1026
Cs and Ba, (MCi)										
Sr and Y, (MCi)										
Tc, (MCi)										
Am, (MCi)										
Np, (MCi)										
Pu-239, (MCi)										
Pu-240, (MCi)										
Pu-241, (MCi)										
Total TRU, (MCi)										
Total MCi										
Total Mass Flow, (MT)				1.13E+04			1.75E+03	5.00E+02		
Total Cr, (MT)										
Total Na, (MT)										
Total Si, (MT)				5.29E+03						
Total P, (MT)										
Total NO2-, (MT)										
Total NO3-, (MT)										
AG+										
AG2O										
AL+3										
AL2O3										
AM+3										
AM2O3										
AS+5										
AS2O5										
B+3										
B2O3							1.75E+03			
BA+2										
BAO										
BE+2										
BEO										
BI+3										
BI2O3										
C14										
CA+2										
CANCRINI										
CAO										
CD+2										
CDO										
CE+3										
CE2O3										
CL-										
CO3-2										
CR+3										
CR2O3										
CS+										

Stream Name Solid Components	1010	1011	1012	1020	1021	1022	1023	1024	1025	1026
CS2O										
CU										
CU+2										
CUO										
CUSO4										
F-										
FE+3										
FE2O3										
HG+2										
I-										
K+										
K2O										
LA+3										
LA2O3										
LI+										
LI2O								5.00E+02		
MG+2										
MGO										
MNO2										
MO+6										
MOO3										
NA+										
NA2O										
NI+3										
NI2FECN6										
NI2O3										
NIO										
NO2-										
NO3-										
NP+4										
NPO2										
OH-										
P2O5										
P2O5:24W										
PB+4										
PBO2										
PO4-3										
POLY										
PU+4										
PUO2										
SI+4										
SIO2				1.13E+04						
SO4-2										
SR+2										
SRO										
TC2O7										

Stream Name Solid Components	1010	1011	1012	1020	1021	1022	1023	1024	1025	1026
TCO4-										
TOC										
UO2+2										
UO3										
V+5										
V2O5										
WO2										
WO3										
ZN+2										
ZNO										
ZR+4										
ZRO2										
ZRO2:2H2										

Stream Name Liquid Components	1027	1030	1031	1032	1033	1034	1035	1036	1037	1038
Cs and Ba, (MCi)										
Sr and Y, (MCi)										
Tc, (MCi)										
Am, (MCi)										
Np, (MCi)										
Pu-239, (MCi)										
Pu-240, (MCi)										
Pu-241, (MCi)										
Total TRU, (MCi)										
Total MCi										
Total Mass Flow, (MT)		1.36E+05	1.36E+05	1.36E+05	1.36E+05	1.36E+05	1.11E+05	2.56E+04	2.56E+04	2.56E+04
Total Cr, (MT)										
Total Na, (MT)										
Total Si, (MT)										
Total P, (MT)										
Total NO2-, (MT)										
Total NO3-, (MT)										
AG+										
AL(OH)4-										
AM+3										
AS+5										
B+3										
BA+2										
BE+2										
BI+3										
C14										
CA+2										
CD+2										
CE+3										
CL-										
CL2										
CO										
CO2										
CO3-2										
CR(OH)4-										
CS+										
CU+2										
F-										
F2										
FE+3										
H2										
H2O										
H2S										
HG										
HG+2										
I-										

Stream Name Liquid Components	1027	1030	1031	1032	1033	1034	1035	1036	1037	1038
I2										
K+										
KEROSENE										
LA+3										
LI+										
MG+2										
MNO2										
MO+6										
N2		1.08E+05	1.08E+05	1.08E+05	1.08E+05	1.08E+05	1.05E+05	2.54E+03	2.54E+03	2.54E+03
NA+										
NH3										
NI+3										
NO										
NO2										
NO2-										
NO3-										
NP+4										
O2		2.86E+04	2.86E+04	2.86E+04	2.86E+04	2.86E+04	5.53E+03	2.31E+04	2.31E+04	2.31E+04
OH-										
PB+4										
PO4-3										
POLY										
PU+4										
S										
SI+4										
SO2										
SO4-2										
SR+2										
TCO2										
TCO4-										
TOC										
UO2+2										
V+5										
W+6										
ZN+2										
ZR+4										
ZRO2:2H2										

Stream Name Solid Components	1027	1030	1031	1032	1033	1034	1035	1036	1037	1038
Cs and Ba, (MCi)										
Sr and Y, (MCi)										
Tc, (MCi)										
Am, (MCi)										
Np, (MCi)										
Pu-239, (MCi)										
Pu-240, (MCi)										
Pu-241, (MCi)										
Total TRU, (MCi)										
Total MCi										
Total Mass Flow, (MT)										
Total Cr, (MT)										
Total Na, (MT)										
Total Si, (MT)										
Total P, (MT)										
Total NO2-, (MT)										
Total NO3-, (MT)										
AG+										
AG2O										
AL+3										
AL2O3										
AM+3										
AM2O3										
AS+5										
AS2O5										
B+3										
B2O3										
BA+2										
BAO										
BE+2										
BEO										
BI+3										
BI2O3										
C14										
CA+2										
CANCRINI										
CAO										
CD+2										
CDO										
CE+3										
CE2O3										
CL-										
CO3-2										
CR+3										
CR2O3										
CS+										

Stream Name Solid Components	1027	1030	1031	1032	1033	1034	1035	1036	1037	1038
CS2O										
CU										
CU+2										
CUO										
CUSO4										
F-										
FE+3										
FE2O3										
HG+2										
I-										
K+										
K2O										
LA+3										
LA2O3										
LI+										
LI2O										
MG+2										
MGO										
MNO2										
MO+6										
MOO3										
NA+										
NA2O										
NI+3										
NI2FECN6										
NI2O3										
NIO										
NO2-										
NO3-										
NP+4										
NPO2										
OH-										
P2O5										
P2O5.24W										
PB+4										
PBO2										
PO4-3										
POLY										
PU+4										
PUO2										
SI+4										
SIO2										
SO4-2										
SR+2										
SRO										
TC2O7										

Stream Name Solid Components	1027	1030	1031	1032	1033	1034	1035	1036	1037	1038
TCO4-										
TOC										
UO2+2										
UO3										
V+5										
V2O5										
WO2										
WO3										
ZN+2										
ZNO										
ZR+4										
ZRO2										
ZRO2:2H2										

Stream Name Liquid Components	1039	1040	1041	1042
Cs and Ba, (MCi)				
Sr and Y, (MCi)				
Tc, (MCi)				
Am, (MCi)				
Np, (MCi)				
Pu-239, (MCi)				
Pu-240, (MCi)				
Pu-241, (MCi)				
Total TRU, (MCi)				
Total MCi				
Total Mass Flow, (MT)		1.11E+05		
Total Cr, (MT)				
Total Na, (MT)				
Total Si, (MT)				
Total P, (MT)				
Total NO2-, (MT)				
Total NO3-, (MT)				
AG+				
AL(OH)4-				
AM+3				
AS+5				
B+3				
BA+2				
BE+2				
BI+3				
C14				
CA+2				
CD+2				
CE+3				
CL-				
CL2				
CO				
CO2				
CO3-2				
CR(OH)4-				
CS+				
CU+2				
F-				
F2				
FE+3				
H2				
H2O				
H2S				
HG				
HG+2				
I-				

Stream Name Liquid Components	1039	1040	1041	1042
I2				
K+				
KEROSENE				
LA+3				
LI+				
MG+2				
MNO2				
MO+6				
N2		1.05E+05		
NA+				
NH3				
NI+3				
NO				
NO2				
NO2-				
NO3-				
NP+4				
O2		5.53E+03		
OH-				
PB+4				
PO4-3				
POLY				
PU+4				
S				
SI+4				
SO2				
SO4-2				
SR+2				
TCO2				
TCO4-				
TOC				
UO2+2				
V+5				
W+6				
ZN+2				
ZR+4				
ZRO2:2H2				

Stream Name Solid Components	1039	1040	1041	1042
Cs and Ba, (MCi)				
Sr and Y, (MCi)				
Tc, (MCi)				
Am, (MCi)				
Np, (MCi)				
Pu-239, (MCi)				
Pu-240, (MCi)				
Pu-241, (MCi)				
Total TRU, (MCi)				
Total MCi				
Total Mass Flow, (MT)				
Total Cr, (MT)				
Total Na, (MT)				
Total Si, (MT)				
Total P, (MT)				
Total NO2-, (MT)				
Total NO3-, (MT)				
AG+				
AG2O				
AL+3				
AL2O3				
AM+3				
AM2O3				
AS+5				
AS2O5				
B+3				
B2O3				
BA+2				
BAO				
BE+2				
BEO				
BI+3				
BI2O3				
C14				
CA+2				
CANCRINI				
CAO				
CD+2				
CDO				
CE+3				
CE2O3				
CL-				
CO3-2				
CR+3				
CR2O3				

Stream Name Solid Components	1039	1040	1041	1042
CS+				
CS2O				
CU				
CU+2				
CUO				
CUSO4				
F-				
FE+3				
FE2O3				
HG+2				
I-				
K+				
K2O				
LA+3				
LA2O3				
LI+				
LI2O				
MG+2				
MGO				
MNO2				
MO+6				
MOO3				
NA+				
NA2O				
NI+3				
NI2FECN6				
NI2O3				
NIO				
NO2-				
NO3-				
NP+4				
NPO2				
OH-				
P2O5				
P2O5:24W				
PB+4				
PBO2				
PO4-3				
POLY				
PU+4				
PUO2				
SI+4				
SIO2				
SO4-2				
SR+2				
SRO				

Stream Name Solid Components	1039	1040	1041	1042
TC2O7				
TCO4-				
TOC				
UO2+2				
UO3				
V+5				
V2O5				
WO2				
WO3				
ZN+2				
ZNO				
ZR+4				
ZRO2				
ZRO2:2H2				

APPENDIX B

EQUIPMENT LISTS

This page intentionally left blank.

APPENDIX B - EQUIPMENT LISTS

Equipment sizes are based on information from the construction of the Defense Waste Production Facility (DWPF) in Savannah River. This information includes size, material of construction, and costs. The equipment lists include capacity/flow rate, physical size, material of construction, and power requirements. The flowrates listed for individual pieces of equipment are taken from data in Appendix C.

Table B.1 Equipment List For Pretreatment/LLW Facility

Equipment Description	Equip Id	No. items	Capacity	Physical size	Material	Power	Cool load	Cool H_2O	Heat load	Dwg	Comments
Flocculant Makeup Tank	TK-100	1	19 m^3	2.29 x 4.57	316 SS	3.00				SH-21	Power estimated
First Stage Settling Tanks	DST-101 A, B, C, and D	4								SH-21	Existing Item
First Stage Settling Tank Decant Pumps	P-102 A, B, C, and D	4								SH-21	Existing Item
Second Stage Settling Tanks	DST-103 A, B, C, and D	4								SH-21	Existing Item
First Stage Settling Tank Slurry Pumps	P-104 A, B, C, and D	4								SH-21	Existing Item
Second Stage Settling Tank Decant Pumps	P-105 A, B, C, and D	4								SH-21	Existing Item
Second Stage Settling Tank Slurry Pumps	P-106 A, B, C, and D	4								SH-21	Existing Item
First Wash Tank	DST-107	1								SH-21	Existing Item
First Wash Tank Decant Pump	P-108	1								SH-21	Existing Item
First Wash Tank Slurry Pump	P-109	1								SH-21	Existing Item
Wash Solution Makeup Tank	TK-110	1	23 m^3	2.74 X 4.11	316 SS	3.00	73	190		SH-21	S,CL; Power estimated

Table B.1 Equipment List For Pretreatment/LLW Facility

Equipment Description	Equip Id	No. items	Capacity	Physical size	Material	Power	Cool load	Cool H_2O	Heat load	Dwg	Comments
Tank Farm NaNO2 Makeup Tank	TK-111	1	4 m^3	1.83 X 1.83	316 SS	3.00	13	36		SH-21	S,CL; Power estimated
Second Wash Tank Decant Pump	P-112	1								SH-21	Existing Item
Second Wash Tank	DST-113	1								SH-21	Existing Item
Second Wash Tank Pump	P-114	1				1.00				SH-21	Existing Item
Supernatant Accumulation Tanks	DST-115 A and B	2				2.00				SH-22	Existing Item
Supernatant Accumulation Tank Pumps	P-116 A and B	2								SH-22	Existing Item
Supernatant Sample and Transfer Tanks	DST-117 A and B	2								SH-22	Existing Item
Supernatant Sample and Transfer Tank Pumps	P-118 A and B	2								SH-22	Existing Item
LLW Feed Accumulation Tank	DST-119 A and B	2								SH-22	Existing Item
Wash Solution Accumulation Tanks	DST-120 A and B	2								SH-22	Existing Item
HLW Feed Accumulation Tank	DST-121	1								SH-22	Existing Item
LLW Feed Accumulation Tank Pumps	P-122 A and B	2								SH-22	Existing Item
LLW Feed Accumulation Tank Pumps	P-123 A and B	2								SH-22	Existing Item

Table B.1 Equipment List For Pretreatment/LLW Facility

Equipment Description	Equip Id	No. items	Capacity	Physical size	Material	Power	Cool load	Cool H_2O	Heat load	Dwg	Comments
Wash Solution Accumulation Tank Pumps	P-124 A and B	2								SH-22	Existing Item
Wash Solution Transfer Tank Pumps	P-125 A and B	2								SH-22	Existing Item
HLW Feed Accumulation Tank Pumps	P-126 A and B	2								SH-22	Existing Item
HLW Feed Transfer Tank Pumps	P-127 A and B	2								SH-22	Existing Item
LLW Feed Accumulation Tank	DST-128 A and B	2								SH-22	Existing Item
Wash Solution Transfer Tanks	DST-129 A and B	2								SH-22	Existing Item
HLW Feed Transfer Tank	DST-130	1								SH-22	Existing Item
Cesium Concentrated HLW Feed Accumulation Tank	DST-131	1				1.00				SH-26	Existing Item
Receipt/Sample Tanks	TK-131 A,B,C,D,E ,F	6	200m³ each	6.40 X 6.40	316 SS	30.00	3858	9990		SH-23	S,CL; Power estimated.
Cesium Concentrated HLW Feed Acc. Tank Pump	P-132	1				1.00				SH-26	Existing Item
Receipt/Sample Tank Pumps	P-132 A,B,C,D,E ,F	6	95 L/min @ 3.52 kg/cm²	-	316 SS	23.00				SH-23	F. Capacity is for each Pump. Power estimated.

Table B.1 Equipment List For Pretreatment/LLW Facility

Equipment Description	Equip Id	No. items	Capacity	Physical size	Material	Power	Cool load	Cool H_2O	Heat load	Dwg	Comments
Cesium Concentrated HLW Feed Transfer Tank	DST-133	1				1.00				SH-26	Existing Item
Cesium Concentrated HLW Feed Transfer Tank Pump	P-134	1								SH-26	Existing Item
Receipt/Sample Tank Pumps	P-134 A,B,C,D,E ,F	6	95 L/min @ 3.52 kg/cm^2	-	316 SS	23.00				SH-23	R.F. Capacity is for each Pump. Power estimated.
Evaporator Feed Tank For Tank Farm Operations	TK-135	1	133 m^3	5.49 X 5.49	316 SS	5.00				SH-23	S; Power estimated
Cs Ion Exchange Feed Adjust Tank	TK-136	1	53 m^3	3.66 X 5.48	316 SS	4.00	170	440		SH-23	S,CL; Power estimated
Evaporator Feed Tank Pump	P-137	1	95 L/min @ 3.52 kg/cm^2	-	316 SS	3.70				SH-23	F. Power estimated.
Cs Ion Exchange Feed Adjust Tank Pump	P-138	1	95 L/min @ 3.52 kg/cm^2	-	316 SS	3.70				SH-23	F. Power estimated.
Supernatant Evaporator	EV-139	1	3,500KW	See Comments	Hastelloy-C				3500	SH-23	Envelope:3.5 X 5 X 10 O/H;Demister:2.2 M D;Tube Bundle:0.6 M D
Condenser	EC-140	1	3,100KW	See Comments	Hastelloy-C		3100	4005		SH-23	6.1 M (tubes) X 0.7 M D, CL
Concentrated Supernatant Catch Tank	TK-141	1	53 m^3	3.66 X 5.49	316 SS	3.50	170	440		SH-23	S,CL; Power estimated

Table B.1 Equipment List For Pretreatment/LLW Facility

Equipment Description	Equip Id	No. items	Capacity	Physical size	Material	Power	Cool load	Cool H_2O	Heat load	Dwg	Comments
Concentrated Supernatant Catch Tank Pump	P-142	1	95 L/min @ 3.52 kg/cm^2	-	316 SS	3.70				SH-23	F. Power estimated.
Concentrated Supernatant Sample Tank	TK-143	1	53 m^3	3.66 X 5.49	316 SS	3.50	170	440		SH-23	S,CL; Power estimated
Concentrated Supernatant NaNO2 Makeup Tank	TK-144	1	19 m^3	3.05 X 3.05	316 SS	3.50				SH-23	S; Power estimated
Concentrated Supernatant Sample Tank Pumps	P-145 A and B	2	95 L/min @ 3.52 kg/cm^2	-	316 SS	7.40				SH-23	F. Capacity is for each Pump. Power estimated.
Transfer Tank	TK-146	1	53 m^3	3.66 X 5.49	316 SS	3.50	170	440		SH-23	S,CL; Power estimated
Transfer Tank Pump	P-147	1	95 L/min @ 3.52 kg/cm^2	-	316 SS	3.70				SH-23	F. Power estimated.
Flocculant Makeup Tank Pump	P-148	1	1 L/min @ 3.52 kg/cm^2	-	316 SS	0.25				SH-21	Power estimated
Wash Solution Makeup Tank Pump	P-149	1	1 L/min @ 3.52 kg/cm^2	-	316 SS	0.25				SH-21	Power estimated
Tank Farm NaNO2 Makeup Tank Pump	P-150	1	1 L/min @ 3.52 kg/cm^2	-	316 SS	0.25				SH-21	Power estimated
Cs IX Feed Tank	TK-200	1	53 m^3	3.66 X 5.49	316 SS	1.00	170	440		SH-23	CL
Cs IX Feed Tank Pump	P-201	1	95 L/min @ 6.33 kg/cm^2	-	316 SS	3.70				SH-23	C. Power estimated.
Frit Filter	F-202	1	4 m^3	2.1 x 3.6	316 SS					SH-23	
Filter Bed Catch Tank	TK-203	1	8 m^3	2.13 X 2.13	316 SS	3.00				SH-23	S; Power estimated

Table B.1 Equipment List For Pretreatment/LLW Facility

Equipment Description	Equip Id	No. items	Capacity	Physical size	Material	Power	Cool load	Cool H_2O	Heat load	Dwg	Comments
Filter Bed Catch Tank Pump	P-204	1	76 L/min @ 3.52 kg/cm^2	-	316 SS	3.70				SH-23	C. Power estimated.
Cesium Regen. Nitric Acid Tank (0.5 M)	TK-205	1	25 m^3	3.05 X 3.89 O/H	316 SS	3.00	123	320		SH-24	S,CL; Power estimated
Cs IX Acid Regen Feed Tank	TK-206	1	25 m^3	3.05 X 3.89 O/H	316 SS	3.00	123	320		SH-24	S,CL; Power estimated
Cs IX Acid Regen Feed Tank Pump	P-207	1	38 L/min @ 3.52 kg/cm^2	-	316 SS	3.70				SH-24	C. Power estimated.
Startup Nitric Acid Tank (4.2 M)	TK-208	1	19 m^3	2.29 X 4.57	316 SS	3.00	65	165		SH-24	S,CL; Power estimated
Acid Recycle Tank Pump	P-209	1	38 L/min @ 3.52 kg/cm^2	-	316 SS	3.70				SH-24	F. Power estimated.
Acid Recycle Tank	TK-210	1	19 m^3	2.29 X 4.57	316 SS	3.00	65	165		SH-24	S,CL; Power estimated
Regen NaOH Tank (2.0 M)	TK-211	1	25 m^3	3.09 X 3.89	316 SS	3.00	123	320		SH-24	S,CL; Power estimated
Regen NaOH Tank (.5 M)	TK-212	1	8 m^3	2.13 X 2.13	316 SS	0.50	40	110		SH-24	S,CL; Power estimated
Neutralizing NaOH Solution Tank (Concentrated)	TK-213	1	8 m^3	2.13 X 2.13	316 SS	0.50	40	110		SH-24	S,CL; Power estimated
Cs IX Caustic Regen Feed Tank	TK-214	1	8 m^3	2.13 X 2.13	316 SS	0.50	40	110		SH-24	S,CL; Power estimated
Cs IX Caustic Regen Feed Tank Pump	P-215	1	38 L/min @ 3.52 kg/cm^2	-	316 SS	3.70				SH-24	C. Power estimated.
Cesium Ion Exchange Columns	IX-216 A, B, C, and D	4	4000l resin vol each	2.1 X 3.6	316 SS	4.00				SH-25	1.1 M Bed

Table B.1 Equipment List For Pretreatment/LLW Facility

Equipment Description	Equip Id	No. items	Capacity	Physical size	Material	Power	Cool load	Cool H_2O	Heat load	Dwg.	Comments
Cs IX Eluant Catch Tank	TK-217	1	106 m^3	4.57 X 6.71	316 SS		340	440		SH-25	R. CL
Cs IX Eluant Catch Tank Pump	P-218	1	38.5 L/min @ 3.52 kg/cm^2	-	316 SS	3.70				SH-25	Power estimated
Cs IX Waste Tank	TK-219	1	144 m^3	5.49 X 6.10	316 SS	5.00	465	600		SH-25	R. S,CL; Power estimated
Cesium IX Waste Tank Pump	P-220	1	114 L/min @ 3.52 kg/cm^2	-	316 SS	3.70				SH-25	Power estimated
Cs IX Waste Sample Tank	TK-221	1	144 m^3	5.49 X 6.10	316 SS		465	600		SH-25	R. CL
Cs IX Waste Sample Tank Pump	P-222	1	228 L/min @ 3.52 kg/cm^2	-	316 SS	7.50				SH-25	Power estimated
Condenser	EC-223	1	2,000KW	See Comments	Hastelloy-C		2000	2590		SH-25	6.1 M (tubes) X 0.56 M D, CL
Cs IX Concentrator	EV-224	1	2,000KW	See Comments	316 SS				2000	SH-25	Envelope:2 X 3.5 X 10 O/H;Demister:1.75 M D;Tube Bundle:0.45 M D
Cs IX Concentrator/Adjustment Catch Tank	TK-225	1	8 m^3	2.13 X 2.13	316 SS	1.00	26	70		SH-26	CL
Cs IX Concentrator/Adjustment Catch Tank Pump	P-226	1	10 L/min @ 3.52 kg/cm^2	-	316 SS	0.50				SH-26	Power estimated
LLW Evaporator Feed Tanks	TK-400 A and B	2	213 m^3 (each)	6.5 X 8	316 SS	10.00	1370	1770		SH-27	S,CL; Power estimated

Table B.1 Equipment List For Pretreatment/LLW Facility

Equipment Description	Equip Id	No. items	Capacity	Physical size	Material	Power	Cool load	Cool H_2O	Heat load	Dwg	Comments
LLW Evaporator Feed Tank Pumps	P-401 A and B	2	142 L/min @ 3.52 kg/cm^2	-	316 SS	12.00				SH-27	Power estimated. Capacity is for each Pump.
LLW Feed Evaporator	EV-402	1	8132 KW	1 D X 3.0 L	Hastelloy-C				8132	SH-27	Envelope:3.5 X 5 X 10 O/H;Demister: D(max)=3.4 M,O/H=4.5M;Tube Bundle:1.0 M D
Condenser	EC-403	1	6750 KW	1.4 D X 8.1 L	Hastelloy-C		6750	8725		SH-27	CL
LLW Melter Feed Adjustment Tanks	TK-404 A and B	2	76 m^3 (each)	4.0 D X 7.0 O/H	316 SS	30.00	440	568		SH-27	S,CL
LLW Melter Feed Adjustment Tank Pumps	P-405 A and B	2	70 L/min @ 3.52 kg/cm^2	-	316 SS	7.40				SH-27	Capacity is for each Pump. Power estimated.
LLW Melter Feed Tanks	TK-406 A and B	2	76 m^3 (each)	4.0 D X 7.0 O/H	316 SS	30.00	440	380		SH-27	S,CL.
LLW Melter Feed Tank Pumps	P-407 A and B	2	70 L/min @ 3.52 kg/cm^2	-	316 SS	7.80				SH-27	Capacity is for each Pump. Power estimated.
Head Bins	B-408 A and B	2	2.3 m^3 (each)	See Comments	316 SS	2.00				SH-28	Upper Cylinder 1.3 D X 1.3 H. O/H=2.43 M Cone Base
Rotary Star Feeders	M-409 A and B	2	3 te/H (each)		316 SS	0.50				SH-28	
Weigh Feeders	MF-410 A and B	2	3 te/H (each)	See Comments	316 SS					SH-28	Belt width 0.36 M.O/A lenght=3 M.O/A D=1 M

Table B.1 Equipment List For Pretreatment/LLW Facility

Equipment Description	Equip Id	No. items	Capacity	Physical size	Material	Power	Cool load	Cool H_2O	Heat load	Dwg	Comments
Rotary Star Feeders	M-411 A and B	2	3 te/H (each)		316 SS	1.00				SH-28	
LLW Melters	EM-412 A and B	2	4.2 te/H (each)	8.4H4.52L3.35W	316 SS					SH-28	Vortec Combustor Ref.Memo 12/2/92 J.S. Patten
Glass Separators	S-413 A and B	2	4.2 te/H (each)	8.4H4.52L3.35W	316 SS					SH-28	Vortec Combustor Ref.Memo 12/2/92 J.S. Patten
Quench Flumes	MQ-414 A and B	2	TBD	0.6 D X 3.0 L	316 SS					SH-28	
Roll Crushers	MC-415 A and B	2	See Comments	2 X 0.15 D rolls	316 SS	20.00				SH-28	Each roll 0.2 M L.(Excludes motor,drive & maint accessory)
LLW Cullet Catch Tank	TK-416 A,B & C	3	30 m^3 (each)	3.5 D X 4.0 O/H	316 SS	12.00	660	852		SH-28	S,CL
Condensers	EC-417 A and B	2	600KW (each)	0.6 D X 3.7 L	Hastelloy-C		1200	1670		SH-28	CL
LLW Cullet Catch Tank Pumps	P-418 A,B & C	3	1400L/min @ 3.52 kg/cm^2	-	316 SS	51.00				SH-28	Power estimated. Capacity is for each Pump.
Condensers	EC-419 A and B	2	1,500Ton (each)	1.6 D X 6.1 L	316 SS	2.00	14800	21340		SH-28	CL
LLW Quench Water Recycle Tank Pumps	P-420 A and B	2	1400L/min @ 3.52 kg/cm^2	-	316 SS	34.00				SH-28	Power estimated. Capacity is for each Pump.
LLW Quench Water Recycle Tanks	TK-421 A and B	2	58 m^3 (each)	3.5 D X 7.0 O/H	316 SS	8.00	440	568		SH-28	S,CL

Table B.1 Equipment List For Pretreatment/LLW Facility

Equipment Description	Equip Id	No. items	Capacity	Physical size	Material	Power	Cool load	Cool H_2O	Heat load	Dwg	Comments
Screens	FS-422 A,B & C	3	1400L/min (each)	Grid A=.65 m^2	316 SS	3.00				SH-29	Frame size = 1.2 L X 1.2 W X 1 H
Screen Pumps	P-423 A,B & C	3	1400L/min @ 3.52 kg/cm^2	-	316 SS	51.00				SH-29	Power estimated. Capacity is for each Pump.
LLW Filter Catch Tank Pumps	P-424 A and B	2	1400L/min @ 3.52 kg/cm^2	-	316 SS	34.00				SH-29	Power estimated. Capacity is for each Pump.
LLW Filter Catch Tank Pumps	P-425 A and B	2	7 L/min @ 3.52 kg/cm^2	-	316 SS	1.50				SH-29	Capacity is for each Pump. Power estimated.
LLW Filter Catch Tanks	TK-426 A and B	2	58 m^3 (each)	3.5 D X 7.0 O/H	316 SS	8.00	440	568		SH-29	CL
LLW Cullet Lag Storage	B-427	18	38 m^3 (each)	4 D X 5 O/H	316 SS					SH-29	
Condenser	EC-428	1	3400KW	0.54 D X 3 L	Hastalloy-C		400	585		SH-29	CL
LLW Condensate Catch Tank	TK-429	1	5 m^3	1.8 D X 1.8 O/H	316 SS	1.00	3	67		SH-29	CL
LLW Condensate Catch Tank Pump	P-430	1	1400L/min @ 3.52 kg/cm^2	-	316 SS	17.00				SH-29	Power estimated
Cyclone with Sintered Metal Filters	FC-432	1	TBD	1.33 D X 5.3 O/H	316 SS	1.00				SH-30	Data on particle size required to check operation
Rotary Star Feeder	M-433	1	11 te/H	-	316 SS	0.50				SH-30	
Day Bin	B-434	1	75 m^3	4 D X 9.5 O/H	316 SS					SH-30	1 Day holdup
Rotary Star Feeder	M-435	1	11 te/H	-	316 SS	0.50				SH-30	

Table B.1 Equipment List For Pretreatment/LLW Facility

Equipment Description	Equip Id	No. items	Capacity	Physical size	Material	Power	Cool load	Cool H_2O	Heat load	Dwg	Comments
Recovered Sulfur Storage Tank	TK-436	1	0.2 m^3	0.6 D X 0.9 O/H	316 SS		1	2		SH-30	CL
Recovered Sulfur Storage Tank Pump	P-437	1	17 L/min @ 3.52 kg/cm^2	-	316 SS	3.70				SH-30	Power estimated
Sulfur Cement Mixing Tanks	TK-438 A and B	2	50 m^3 (each)	3.9 D X 5.9 O/H	316 SS	56.00	12	840		SH-30	S,CL
Sulfur Cement Mixing Tank Pumps	P-439 A and B	2	3.8 te/H normal	-	316 SS	9.00				SH-30	Capacity 11 te/H (max) during start-up. Power estimated for all pumps.
Mixer	MM-440	1	See Comments	0.4 D X 9.6 L	316 SS	1.00				SH-30	Based on Ko-Kneades design
Surge Tank	TK-441	1	0.3 m^3	0.67 D X 1.25O/H	316 SS					SH-30	Upper cylinder H = 0.67 M. Cone H = 0.58 M
Sulfur Tank Pump	P-442	1	16.5 te/H	-	316 SS	20.00				SH-30	Molten sulfur plus glass; Power estimated
Decanted Molten Sulfur Vault	TK-443	1	20 m^3	2.9 D X 4.4 O/H	316 SS					SH-30	
Filter Wash Catch Tank	TK-445	1	17 m^3	2.4 D X 4.6 O/H	316 SS	7.50	55	75		SH-35	CL
Filter Wash Catch Tank Pump	P-446	1	1 L/min @ 3.52 kg/cm^2	-	316 SS	0.25				SH-35	Power estimated
Cyclone with Sintered Metal Filters	FC-500	1	See Comments	1.33 D X 5.3 O/H	316 SS	1.00				SH-31	Data on particle size required to check operation
Rotary Star Feeder	M-501	1	11 te/H	TBD	316 SS	0.50				SH-31	

Table B.1 Equipment List For Pretreatment/LLW Facility

Equipment Description	Equip Id	No. items	Capacity	Physical size	Material	Power	Cool load	Cool H_2O	Heat load	Dwg	Comments
Roll Crusher	MC-502	1	See Comments	.3 D X 2 L rolls	316 SS	0.50				SH-31	Each roll 1.2 M L.(Excludes motor,drive and maint access)
Recycle Cullet Catch Tank	TK-503	1	116 m^3	5 D X 7 O/H	316 SS		373	970		SH-31	S,CL
Recycle Cullet Catch Tank Pump	P-504	1	5 L/min @ 3.52 kg/cm^2	-	316 SS	0.25				SH-31	Power estimated
LLW Quench Towers	T-609 A and B	2	TBD	3.25 X 6.6 O/H	316 SS	2.00				SH-32	
Condensers	EC-610 A and B	2	1,500 Ton (each)	1.65 X 6.1	316 SS		19220	27340		SH-32	CL
LLW Scrub Filter Tank	TK-611 A and B	2	6 m^3 (each)	1.8 X 3.24 O/H	316 SS	4.40	130	168		SH-32	S,CL
LLW Scrub Filter Tank Pump	P-612 A and B	2	10 L/min @ 3.52 kg/cm^2	-	316 SS	7.40				SH-32	Power estimated
LLW Scrub Solution Tank Pump	P-613 A and B	2	100L/min @ 3.52 kg/cm^2	-	316 SS	1.50				SH-32	Power estimated
LLW Scrub Solution Tanks	TK-614 A and B	2	40 m^3 (each)	3.6 X 5.4 O/H	316 SS	30.00	1291	1668		SH-32	S,CL
LLW Venturi Scrubber	SC-615 A and B	2	See Comments	TBD	316 SS	2.00				SH-32	2,800kg/H (gas), 220 L/min
LLW Separator	S-616 A and B	2	27,340 L/min (each)	0.39 X 1.9 O/H	316 SS					SH-32	Packed upper section
Condensers	EC-617 A and B	2	1,000Ton (each)	0.2 D X 3.1 L	316 SS		46	70		SH-32	CL
LLW Demister	DE-618 A and B	2	27,340 L/min (each)	0.46 D X 2.8 O/H	316 SS					SH-32	Chevron/Kailmast sections

Table B.1 Equipment List For Pretreatment/LLW Facility

Equipment Description	Equip Id	No. items	Capacity	Physical size	Material	Power	Cool load	Cool H_2O	Heat load	Dwg.	Comments
Scrub Solution Makeup Tanks	TK-619 A and B	2	10 m^3 (each)	1.8 X 4.6 O/H	316 SS	7.40	233	150		SH-32	S,CL
LLW Scrub Filter Tank Pump	P-620 A and B	2	10 L/min @ 3.52 kg/cm^2	-	316 SS	1.50				SH-32	Power estimated
Metal HEPA Filter	FM-625 A	1	30,000STD L/min	1 X 4	316 SS	1.00				SH-35	R
Metal HEPA Filter	FM-625 B	1	30,000STD L/min	1 X 4	316 SS					SH-35	R
Metal HEPA Filter	FM-625 C	1	30,000STD L/min	1 X 4	316 SS					SH-35	R
LLW Melter Filter Wash Catch Tank	TK-626	1	17 m^3	2.4 D X 4.6 O/H	316 SS	7.50	55	145		SH-35	CL
LLW Melter Filter Wash Catch Tank Pump	P-627	1	76 L/min @ 3.52 kg/cm^2	-	316 SS	3.70				SH-35	Power estimated
Melter Offgas Heat Exchanger	EC-628	1	600KW	1 X 5	316 SS				600	SH-33	
Heater	E-629	1	600KW	TBD	316 SS				600	SH-33	
SO2 Absorber	R-630	1	90 % Efficiency	3 X 2	316 SS					SH-33	R
NOx Catalytic Reactor	R-632	1	99 % Efficiency	1.2 X 2	316 SS					SH-33	
Sulfate Reduction	R-633	1	90 % Efficiency	3 X 2	316 SS					SH-33	
NH3 Cracker	R-634	1	99.995% Efficiency	2 X 4.5	316 SS				65	SH-33	

Table B.1 Equipment List For Pretreatment/LLW Facility

Equipment Description	Equip Id	No. items	Capacity	Physical size	Material	Power	Cool load	Cool H_2O	Heat load	Dwg	Comments
Combustion Chamber	EB-636	1	99 % Efficiency	1.2 X 2	316 SS	1.00				SH-34	
Heat Exchanger	EC-637	1	25 KW	See Comments	316 SS	1.00			25	SH-34	R.Air Flow Reqd. 3000M^3/H (STP).O/H= 2.5 M;W= 0.6 M;Tube Bundle= 2M X 0.3M X 0.3M
Air Heat Exchanger	EC-638	1	5 KW	See Comments	316 SS				5	SH-34	R.Air Flow Reqd. 600M^3/H (STP).O/H= 2.5 M;W= 0.6 M;Tube Bundle= 2M X 0.3M X 0.3M
Air Heat Exchanger	EC-639	1	6 KW	See Comments	316 SS				6	SH-34	R.Air Flow Reqd. 720 M^3/H (STP).O/H= 2.5 M;W= 0.6 M;Tube Bundle= 2M X 0.3M X 0.3M
Claus Reactor	R-640	1	95 % Efficiency	0.4 X 2	316 SS					SH-34	R
Claus Reactor	R-641	1	95 % Efficiency	0.4 X 2	316 SS					SH-34	R
Air Heat Exchanger	EC-642	1	3 KW	See Comments	316 SS	1.00			3	SH-34	R.Air Flow Reqd. 360 M^3/H (STP).O/H= 2.5 M;W= 0.6 M;Tube Bundle= 2M X 0.3M X 0.3M

Table B.1 Equipment List For Pretreatment/LLW Facility

Equipment Description	Equip Id	No. items	Capacity	Physical size	Material	Power	Cool load	Cool H_2O	Heat load	Dwg	Comments
Sulfur Trap	TR-643	1	TBD	TBD	316 SS					SH-34	R.
CVOG/VOG Filter Wash Catch Tank	TK-702	1	20 m^3	3 X 3 O/H	316 SS	1.00	64	170		SH-35	CL
CVOG/VOG Filter Wash Catch Tank Pump	P-703	1	50 L/min @ 3.52 kg/cm^2	-	316 SS	1.12				SH-35	Power estimated
Process Condensate Recycle Tank	TK-800 A,B & C	3	35 m^3 (each)	3.5 X 4	316 SS	3.00	339	900		SH-36	CL
Process Condensate Recycle Tank Pump	P-801 A,B & C	3	400L/min @ 3.52 kg/cm^2	-	316 SS	22.50				SH-36	R. Power estimated
Process Condensate Recycle Tank Pump	P-802 A,B & C	3	400L/min @ 3.52 kg/cm^2	-	316 SS	22.50				SH-36	R. Power estimated
pH Adjustment Tank	TK-803	1	50 m^3	4 X 4.5	316 SS	4.50	161	420		SH-36	S,CL; Power estimated
pH Adjustment Tank Pump	P-804	1	400L/min @ 3.52 kg/cm^2	-	316 SS	7.50				SH-36	Power estimated
pH Adjustment Tank Pump	P-805	1	400L/min @ 3.52 kg/cm^2	-	316 SS	7.50				SH-36	Power estimated
Sand Storage Bin	B-1023	1	50 m^3 (EST)	4 X 4 Cylinder	316 SS	1.00				SH-37	
Al2O3 Storage Bin	B-1024	1	50 m^3 (EST)	4 X 4 Cylinder	316 SS					SH-37	
B2O3 Storage Bin	B-1026	1	50 m^3 (EST)	4 X 4 Cylinder	316 SS					SH-37	
CaO Storage Bin	B-1028	1	50 m^3 (EST)	4 X 4 Cylinder	316 SS					SH-37	
Batch Mixer	MM-1031	1	12.5 m^3 (EST)	2.5 X 2.5	316 SS					SH-37	
Cartridge Filter	FT-1550	1	95 L/min @ 12 kg/cm^2	0.3 X 0.7	316 SS	5.00				SH-40	Power estimated

Table B.1 Equipment List For Pretreatment/LLW Facility

Equipment Description	Equip Id	No. items	Capacity	Physical size	Material	Power	Cool load	Cool H_2O	Heat load	Dwg	Comments
Resin Fluidizing Pumps	P-1551 A and B	2	95 L/min @ 12 kg/cm^2	0.4 X 0.3 X 0.9	316 SS	7.40				SH-40	Capacity is for each Pump.
Resin Mixing Tank	TK-1552	1	2.3 m^3	1.2 X 2.1	316 SS					SH-40	
Service Water Tank	TK-1553	1	20 m^3	3 X 3 O/H	C.S.	1.00				SH-38	R
Service Water Tank Pump	P-1554 A and B	2	523 L/min @5.6 kg/cm^2	-	C.S.	15.00				SH-38	R.Capacity is for each Pump. Power estimated.
Spent Resin Receivers	TK-1556 A and B	2	10,000l (each)	2.5 X 2.5	316 SS	2.00				SH-41	
Spent Resin Pumps	P-1557 A and B	2	100L/min @ 5 kg/cm^2	-	316 SS	7.40				SH-41	Power estimated
Hot Air Blower	MB-1558	1	2,840 L/min	-	316 SS	4.00				SH-41	
Water Knockout Drum	TK-1559	1	4 m^3	1.5 X 1.5 O/H	316 SS					SH-41	
H2O Pumpout Pump	P-1560	1	19 L/min @ 3.52 kg/cm^2	-	316 SS	0.25				SH-41	Power estimated
Water Cooled Chiller	EC-1566 A,B & C	3	6,000Ton (each)	12 X 7.3 X 6.1	TBD	3.00				SH-39	R. Tube pull space = 6.7 M. Weight = 90,910 kg
Startup Nitric Acid Tank Pump	P-1567	1	40 L/min @ 3.53 kg/cm^2	-	316 SS	1.00				SH-24	Power estimated
NaOH Neutralizing Solution Tank Pump	P-1568	1	40 L/min @ 3.53 kg/cm^2	-	316 SS	1.00				SH-24	Power estimated
Demin Water Tank	TK-1573	1	20 m^3	3 X 3 O/H	C.S.	1.00				SH-39	
Demin Water Tank Pump	P-1574	1	19 L/min @ 3.52 kg/cm^2	-	C.S.	0.25				SH-39	

Table B.1 Equipment List For Pretreatment/LLW Facility

Equipment Description	Equip Id	No. items	Capacity	Physical size	Material	Power	Cool load	Cool H_2O	Heat load	Dwg	Comments
Chilled Water Circulating Pump	P-1575 A and B	2	TBD	-						SH-39	
Closed Expansion Tank	TK-1576	1	TBD	TBD						SH-39	
Boiler	BR-1583 A	1	22,730 kg/h	9.8 X 4.6 X 4.6	C.S.	1.00					R. 150 psig Saturated Steam. Weight = 45,460 kg
Bulk NaNO2 40% Solution Tank	TK-1586	1	15 m^3	2.1 X 4.4	316 SS	2.00				SH-21	S
Bulk NaNO2 40% Solution Tank Pump	P-1587	1	19 L/min @ 3.52 kg/cm^2	-	316 SS	0.50				SH-21	Power estimated
Heater	E-631	1	600KW	TBD	316 SS				600	SH-33	R
SO2 Absorber Regeneration	R-635	1	TBD	TBD	316 SS					SH-33	R
Air Conditioning Unit	ACU-450	1	860,320 L/min	6.7 X 2.4 X 8.5	316 SS					SH-35	R. Operating Unit
Air Conditioning Unit	ACU-451	1	860,320 L/min	6.7 X 2.4 X 8.5	316 SS					SH-35	R. Stand-by Unit
Pneumatic Isolation Dumpers (ACU-450)	D-450	2	860,320 L/min	1.4 m^2	C.S.					SH-35	R
Pneumatic Isolation Dumpers (ACU-451)	D-451	2	860,320 L/min	1.4 m^2	C.S.					SH-35	R
Heater (ACU-450)	E-450	1	TBD	5.7 m^2	316 SS					SH-35	R
Heater (ACU-451)	E-451	1	TBD	5.7 m^2	316 SS					SH-35	R
Air Intake Louvers (ACU-450)	EV-450	1	860,320 L/min	5.7 m^2	C.S.					SH-35	R
Air Intake Louvers (ACU-451)	EV-451	1	860,320 L/min	5.7 m^2	C.S.					SH-35	R

Table B.1 Equipment List For Pretreatment/LLW Facility

Equipment Description	Equip Id	No. items	Capacity	Physical size	Material	Power	Cool load	Cool H_2O	Heat load	Dwg	Comments
HEPA Filters (ACU-450)	FH-450A1	30	26,680 L/min	0.6 X 0.6 X 0.3	Fib. Glass					SH-35	R
HEPA Filters (ACU-451)	FH-451 A1	30	26,680 L/min	0.6 X 0.6 X 0.3	Fib. Glass					SH-35	R
HEPA Filters (ACU-450)	FH-450A2	30	26,680 L/min	0.6 X 0.6 X 0.3	Fib. Glass	30.00				SH-35	R
HEPA Filters (ACU-451)	FH-451 A2	30	26,680 L/min	0.6 X 0.6 X 0.3	Fib. Glass					SH-35	R
Prefilters (ACU-450)	FP-450	30	26,680 L/min	0.6 X 0.6 X 0.3	Fib. Glass					SH-35	R
Prefilters (ACU-451)	FP-451	30	26,680 L/min	0.6 X 0.6 X 0.3	Fib. Glass					SH-35	R
Blowers (ACU-450)	MB-450	1	860,320 L/min	-	316 SS	75.00				SH-35	R
Blowers (ACU-451)	MB-451	1	860,320 L/min	-	316 SS	75.00				SH-35	R
Primary Air Cleaning Unit	ACL-704	1	679,600L/min	2.4 X 5.2 X 5.5	316 SS	1.00				SH-35	R. Operating Unit
Primary Air Cleaning Unit	ACL-706	1	679,600L/min	2.4 X 5.2 X 5.5	316 SS					SH-35	R. Operating Unit
Primary Air Cleaning Unit	ACL-708	1	679,600L/min	2.4 X 5.2 X 5.5	316 SS					SH-35	R. Operating Unit
Primary Air Cleaning Unit	ACL-710	1	679,600L/min	2.4 X 5.2 X 5.5	316 SS					SH-35	R. Stand-by Unit
Charcoal Filter (ACL-704)	CF-704	1	679,600L/min		Charcoal					SH-35	R.
Charcoal Filter (ACL-706)	CF-706	1	679,600L/min		Charcoal					SH-35	R.
Charcoal Filter (ACL-708)	CF-708	1	679,600L/min		Charcoal					SH-35	R.

Table B.1 Equipment List For Pretreatment/LLW Facility

Equipment Description	Equip Id	No. items	Capacity	Physical size	Material	Power	Cool load	Cool H_2O	Heat load	Dwg	Comments
Charcoal Filter (ACL-710)	CF-710	1	679,600L/min		Charcoal					SH-35	R.
Pneumatic Isolation Dumpers (ACL-704)	D-704	3	679,600L/min	1.1m^2	C.S.					SH-35	R.
Pneumatic Isolation Dumpers (ACL-706)	D-706	2	679,600L/min	1.1 m^2	C.S.					SH-35	R.
Pneumatic Isolation Dumpers (ACL-708)	D-708	2	679,600L/min	1.1 m^2	C.S.					SH-35	R.
Pneumatic Isolation Dumpers (ACL-710)	D-710	2	679,600L/min	1.1 m^2	C.S.					SH-35	R.
Heater (ACL-704)	E-704	1	TBD	4.5 m^2	316 SS					SH-35	R.
Heater (ACL-706)	E-706	1	TBD	4.5 m^2	316 SS					SH-35	R.
Heater (ACL-708)	E-708	1	TBD	4.5 m^2	316 SS					SH-35	R.
Heater (ACL-710)	E-710	1	TBD	4.5 m^2	316 SS					SH-35	R.
HEPA Filters (ACL-704)	FH-704 A1	24	28,317 L/min	0.6 X 0.6 X 0.3	Fib. Glass					SH-35	R.
HEPA Filters (ACL-706)	FH-706 A1	24	28,317 L/min	0.6 X 0.6 X 0.3	Fib. Glass					SH-35	R.
HEPA Filters (ACL-708)	FH-708 A1	24	28,317 L/min	0.6 X 0.6 X 0.3	Fib. Glass					SH-35	R.
HEPA Filters (ACL-710)	FH-710 A1	24	28,317 L/min	0.6 X 0.6 X 0.3	Fib. Glass					SH-35	R.
HEPA Filters (ACL-704)	FH-704 A2	24	28,317 L/min	0.6 X 0.6 X 0.3	Fib. Glass					SH-35	R.
HEPA Filters (ACL-706)	FH-706 A2	24	28,317 L/min	0.6 X 0.6 X 0.3	Fib. Glass					SH-35	R.

Table B.1 Equipment List For Pretreatment/LLW Facility

Equipment Description	Equip Id.	No. items	Capacity	Physical size	Material	Power	Cool load	Cool H_2O	Heat load	Dwg.	Comments
HEPA Filters (ACL-708)	FH-708 A2	24	28,317 L/min	0.6 X 0.6 X 0.3	Fib. Glass					SH-35	R.
HEPA Filters (ACL-710)	FH-710 A2	24	28,317 L/min	0.6 X 0.6 X 0.3	Fib. Glass					SH-35	R.
Blower (ACL-704)	MB-704	1	679,600L/min	-	316 SS	75.00				SH-35	R.
Blower (ACL706)	MB-706	1	679,600L/min	-	316 SS	75.00				SH-35	R.
Blower (ACL-708)	MB-708	1	679,600L/min	-	316 SS	75.00				SH-35	R.
Blower (ACL-710)	MB-710	1	679,600L/min	-	316 SS	75.00				SH-35	R.
Metal HEPA Filters	FM-705A, B,C,D,E,F	6	849,500L/min		316 SS					SH-35	R. Delta P = 4" water
Air Conditioning Unit	ACU-900	1	2,850,000L/min	7.3 X 7 X 13.4	316 SS	1.00				SH-35	R. Operating Unit
Air Conditioning Unit	ACU-901	1	2,850,000L/min	7.3 X 7 X 13.4	316 SS					SH-35	R. Stand-by Unit
Pneumatic Isolation Dumpers (ACU-900)	D-900	2	2,850,000L/min	5 m^2	C.S.					SH-35	R.
Pneumatic Isolation Dumpers (ACU-901)	D-901	2	2,850,000L/min	5 m^2	C.S.					SH-35	R.
Heater (ACU-900)	E-900	1	TBD	19 m^2	316 SS					SH-35	R.
Heater (ACU-901)	E-901	1	TBD	19 m^2	316 SS					SH-35	R.
Air Intake Louvers (ACU-900)	EV-900	1	2,850,000L/min	19 m^2	C.S.					SH-35	R.
HEPA Filters (ACU-900)	FH-900 A1	100	28,500L/min	0.6 X 0.6 X 0.3	Fib. Glass					SH-35	R.

Table B.1 Equipment List For Pretreatment/LLW Facility

Equipment Description	Equip Id	No. items	Capacity	Physical size	Material	Power	Cool load	Cool H_2O	Heat load	Dwg	Comments
HEPA Filters (ACU-901)	FH-901 A1	100	28,500L/min	0.6 X 0.6 X 0.3	Fib. Glass	100.00				SH-35	R.
HEPA Filters (ACU-900)	FH-900 A2	100	28,500L/min	0.6 X 0.6 X 0.3	Fib. Glass	100.00				SH-35	R.
HEPA Filters (ACU-901)	FH-901 A2	100	28,500L/min	0.6 X 0.6 X 0.3	Fib. Glass	100.00				SH-35	R.
Prefilters Medium Efficiency (ACU-900)	FP-900	100	28,500L/min	0.6 X 0.6 X 0.3	Fib. Glass	100.00				SH-35	R.
Prefilters Medium Efficiency (ACU-901)	FP-901	100	28,500L/min	0.6 X 0.6 X 0.3	Fib. Glass	100.00				SH-35	R.
Prefilters Low Efficiency (ACU-900)	FP-900	100	28,500L/min	0.6 X 0.6 X 0.3	Fib. Glass	100.00				SH-35	R.
Prefilters Low Efficiency (ACU-901)	FP-901	100	28,500L/min	0.6 X 0.6 X 0.3	Fib. Glass	100.00				SH-35	R.
Blower (ACU-900)	MB-900	1	2,850,000L/min	-	316 SS	224.00				SH-35	R.
Blower (ACU-901)	MB-901	1	2,850,000L/min	-	316 SS	224.00				SH-35	R.
Secondary Air Exhaust Unit	ACL-905	1	679,600L/min	5.5 X 2.4 X 6.4	316 SS	1.00				SH-35	R. Operating Unit
Secondary Air Exhaust Unit	ACL-906	1	679,600L/min	5.5 X 2.4 X 6.4	316 SS	1.00				SH-35	R. Operating Unit
Secondary Air Exhaust Unit	ACL-907	1	679,600L/min	5.5 X 2.4 X 6.4	316 SS	1.00				SH-35	R. Operating Unit
Secondary Air Exhaust Unit	ACL-908	1	679,600L/min	5.5 X 2.4 X 6.4	316 SS	1.00				SH-35	R. Stand-by Unit

Table B.1 Equipment List For Pretreatment/LLW Facility

Equipment Description	Equip Id	No. items	Capacity	Physical size	Material	Power	Cool load	Cool H_2O	Heat load	Dwg	Comments
Secondary Air Exhaust Unit	ACL-902	1	679,600L/min	5.5 X 2.4 X 6.4	316 SS	1.00				SH-35	R. Operating Unit
Charcoal Filters (ACL-902)	CF-902	1	679,600L/min		Charcoal	1.00				SH-35	R.
Charcoal Filters (ACL-905)	CF-905	1	679,600L/min		Charcoal	1.00				SH-35	R.
Charcoal Filters (ACL-906)	CF-906	1	679,600L/min		Charcoal	1.00				SH-35	R.
Charcoal Filters (ACL-907)	CF-907	1	679,600L/min		Charcoal	1.00				SH-35	R.
Charcoal Filters (ACL-908)	CF-908	1	679,600L/min		Charcoal	1.00				SH-35	R.
Pneumatic Isolation Dumpers (ACL-902)	D-902	3	679,600L/min	1.1m^2	C.S.	3.00				SH-35	R.
Pneumatic Isolation Dumpers (ACL-905)	D-905	3	679,600L/min	1.1 m^2	C.S.	3.00				SH-35	R.
Pneumatic Isolation Dumpers (ACL-906)	D-906	3	679,600L/min	1.1 m^2	C.S.	3.00				SH-35	R.
Pneumatic Isolation Dumpers (ACL-907)	D-907	3	679,600L/min	1.1 m^2	C.S.	3.00				SH-35	R.
Pneumatic Isolation Dumpers (ACL-908)	D-908	3	679,600L/min	1.1 m^2	C.S.	3.00				SH-35	R.
Heater (ACL-902)	E-902	1	TBD	4.5 m^2	316 SS	1.00				SH-35	R.
Heater (ACL-905)	E-905	1	TBD	4.5 m^2	316 SS	1.00				SH-35	R.
Heater (ACL-906)	E-906	1	TBD	4.5 m^2	316 SS	1.00				SH-35	R.
Heater (ACL-907)	E-907	1	TBD	4.5 m^2	316 SS	1.00				SH-35	R.

Table B.1 Equipment List For Pretreatment/LLW Facility

Equipment Description	Equip Id	No. items	Capacity	Physical size	Material	Power	Cool load	Cool H_2O	Heat load	Dwg.	Comments
Heater (ACL-908)	E-908	1	TBD	4.5 m^2	316 SS	1.00				SH-35	R.
HEPA Filters (ACL-902)	FH-902 A1	24	28,317 L/min	0.6 X 0.6 X 0.3	Fib. Glass	24.00				SH-35	R.
HEPA Filters (ACL-905)	FH-905 A1	24	28,317 L/min	0.6 X 0.6 X 0.3	Fib. Glass	24.00				SH-35	R.
HEPA Filters (ACL-906)	FH-906 A1	24	28,317 L/min	0.6 X 0.6 X 0.3	Fib. Glass	24.00				SH-35	R.
HEPA Filters (ACL-907)	FH-907 A1	24	28,317 L/min	0.6 X 0.6 X 0.3	Fib. Glass	24.00				SH-35	R.
HEPA Filters (ACL-908)	FH-908 A1	24	28,317 L/min	0.6 X 0.6 X 0.3	Fib. Glass	24.00				SH-35	R.
HEPA Filters (ACL-902)	FH-902 A2	24	28,317 L/min	0.6 X 0.6 X 0.3	Fib. Glass	24.00				SH-35	R.
HEPA Filters (ACL-905)	FH-905 A2	24	28,317 L/min	0.6 X 0.6 X 0.3	Fib. Glass	24.00				SH-35	R.
HEPA Filters (ACL-906)	FH-906 A2	24	28,317 L/min	0.6 X 0.6 X 0.3	Fib. Glass	24.00				SH-35	R.
HEPA Filters (ACL-907)	FH-907 A2	24	28,317 L/min	0.6 X 0.6 X 0.3	Fib. Glass	24.00				SH-35	R.
HEPA Filters (ACL-908)	FH-908 A2	24	28,317 L/min	0.6 X 0.6 X 0.3	Fib. Glass	24.00				SH-35	R.
Prefilters (ACL-902)	FP-902	24	28,317 L/min	0.6 X 0.6 X 0.3	Fib. Glass	24.00				SH-35	R.
Prefilters (ACL-905)	FP-905	24	28,317 L/min	0.6 X 0.6 X 0.3	Fib. Glass	24.00				SH-35	R.
Prefilters (ACL-906)	FP-906	24	28,317 L/min	0.6 X 0.6 X 0.3	Fib. Glass	24.00				SH-35	R.
Prefilters (ACL-907)	FP-907	24	28,317 L/min	0.6 X 0.6 X 0.3	Fib. Glass	24.00				SH-35	R.

Table B.1 Equipment List For Pretreatment/LLW Facility

Equipment Description	Equip Id	No. items	Capacity	Physical size	Material	Power	Cool load	Cool H_2O	Heat load	Dwg	Comments
Prefilters (ACL-908)	FP-908	24	28,317 L/min	0.6 X 0.6 X 0.3	Fib. Glass	24.00				SH-35	R.
Blower (ACL-902)	MB-902	1	679,600L/min	-	316 SS	75.00				SH-35	R.
Blower (ACL-905)	MB-905	1	679,600L/min	-	316 SS	75.00				SH-35	R.
Blower (ACL-906)	MB-906	1	679,600L/min	-	316 SS	75.00				SH-35	R.
Blower (ACL-907)	MB-907	1	679,600L/min	-	316 SS	75.00				SH-35	R.
Blower (ACL-908)	MB-908	1	679,600L/min	-	316 SS	75.00				SH-35	R.
Concentrated Cs-IX HLW NaNO2 Make-up Tank	TK-227	1	TBD	TBD	316 SS	1.00				SH-26	R. S
Deaerator	BR-1583 B	1	31,820 kg/h	4.6 X 2.1 X 4.9	C.S.	1.00					R. Weight = 10,910 lbs
Low Efficiency Prefilters (ACU-450)	FP-450	30	26,680 L/min	0.6 X 0.6 X 0.3	Fib. Glass	30.00				SH-35	R
Low Efficiency Prefilters (ACU-451)	FP-451	30	26,680 L/min	0.6 X 0.6 X 0.3	Fib. Glass	30.00				SH-35	R
Blower	MB-625 A	1	64 m^3/min	2 X 2	316 SS	50.00				SH-35	
Blower	MB-625 B	1	64 m^3/min	2 X 2	316 SS	50.00				SH-35	

Table B-2. Equipment List for Detached High-Level Waste Facility.

Type Change	Equipment Description	Equipment ID	Capcity/Flow Rate	Physical Size	Material	Power	Heat Load	Comment
	RECEIPT/SAMPLE TANK	TK-300A-3B	100,000 GALLON	34' ID X 17' H	316L SS			LOCATED OUTSIDE VIT BUILDING IN UG VAULT
	RECEIPT/SAMPLE TANK	TK-300B-3B	100,000 GALLON	34' ID X 17' H	316L SS			LOCATED OUTSIDE VIT BUILDING IN UG VAULT
	RECEIPT/SAMPLE TANK	TK-300C-3B	100,000 GALLON	34' ID X 17' H	316L SS			LOCATED OUTSIDE VIT BUILDING IN UG VAULT
	RECEIPT/SAMPLE TANK	TK-300D-3B	100,000 GALLON	34' ID X 17' H	316L SS			LOCATED OUTSIDE VIT BUILDING IN UG VAULT
	RECEIPT/SAMPLE TANK	TK-300E-3B	100,000 GALLON	34' ID X 17' H	316L SS			LOCATED OUTSIDE VIT BUILDING IN UG VAULT
	RECEIPT/SAMPLE TANK	TK-300F-3B	100,000 GALLON	34' ID X 17' H	316L SS			LOCATED OUTSIDE VIT BUILDING IN UG VAULT
	PUMP	P-301A-3B	100 GPM, 150 PSI	MOUNTED ON TK-300A-3B	316L SS			BASE COST ON PX-20A-006
	PUMP	P-301B-3B	100 GPM, 150 PSI	MOUNTED ON TK-300B-3B	316L SS			BASE COST ON PX-20A-006
	PUMP	P-301C-3B	100 GPM, 150 PSI	MOUNTED ON TK-300C-3B	316L SS			BASE COST ON PX-20A-006

Table B-2. Equipment List for Detached High-Level Waste Facility.

Type Change	Equipment Description	Equipment ID	Capcity/Flow Rate	Physical Size	Material	Power	Heat Load	Comment
	PUMP	P-301D-3B	100 GPM, 150 PSI	MOUNTED ON TK-300D-3B	316L SS			BASE COST ON PX-20A-006
	PUMP	P-301E-3B	100 GPM, 150 PSI	MOUNTED ON TK-300E-3B	316L SS			BASE COST ON PX-20A-006
	PUMP	P-301F-3B	100 GPM, 150 PSI	MOUNTED ON TK-300F-3B	316L SS			BASE COST ON PX-20A-006
	CENTRIFUGE FEED TANK	TK-302A-3B	9,400 GALLON	12' ID X 19' H	316L SS			BASE COST ON TK-20A-002
	CENTRIFUGE FEED TANK	TK-302B-3B	9,400 GALLON	12' ID X 19' H	316L SS			BASE COST ON TK-20A-002
	PUMP	P-303A-3B	50 GPM, 20 PSI	MOUNTED ON TK-302A-3B	316L SS			BASE COST ON PX-20A-004
	PUMP	P-303B-3B	50 GPM, 20 PSI	MOUNTED ON TK-302B-3B	316L SS			BASE COST ON PX-20A-004
	CENTRIFUGE SOLIDS	TK-304A-3B	9,400 GALLON	12' ID X 19' H	316L SS			BASE COST ON TK-20A-002
	CENTRIFUGE SOLIDS	TK-304B-3B	9,400 GALLON	12' ID X 19' H	316L SS			BASE COST ON TK-20A-002
	CENTRIFUGE	G-305A-3B	11.4 GPM FEED, 50.0 HP	MOUNTED ON TK-304A-3B	316L SS			
	CENTRIFUGE	G-305B-3B	11.4 GPM FEED, 50.0 HP	MOUNTED ON TK-304B-3B	316L SS			
	PUMP	P-306A-3B	100 GPM, 30 PSI	MOUNTED ON TK-304A-3B	316L SS			BASE COST ON PX-20A-003
	PUMP	P-306B-3B	100 GPM, 30 PSI	MOUNTED ON TK-304B-3B	316L SS			BASE COST ON PX-20A-003
	CENTRATE CATCH TANK	TK-307A-3B	5,000 GALLON	9' ID X 18' H	316L SS			THE COST CAN BE RADIOD FROM TK-20A-002

Table B-2. Equipment List for Detached High-Level Waste Facility.

Type Change	Equipment Description	Equipment ID	Capcity/Flow Rate	Physical Size	Material	Power	Heat Load	Comment
	CENTRATE CATCH TANK	TK-307B-3B	5,000 GALLON	9' ID X 18' H	316L SS			THE COST CAN BE RATIOD FROM TK-20A-002
	PUMP	P-308A-3B	50 GPM, 30 PSI	MOUNTED ON TK-307A-3B	316L SS			BASE COST ON PX-20A-004
	PUMP	P-308B-3B	50 GPM, 30 PSI	MOUNTED ON TK-307B-3B	316L SS			BASE COST ON PX-20A-004
	HLW EVAPORATOR FEED TANK	TK-309-3B	9,400 GALLON	12' ID X 19' H	316L SS			BASE COST ON TK-20A-002
	PUMP	P-310-3B	50 GPM, 30 PSI	MOUNTED ON TK-309-3B	316L SS			BASE COST ON PX-20A-004
	HLW FEED EVAPORATOR	EV-311-3B	8.3 MMBTU/HR	12' W X 16' L X 31' H	HASTELLOY C22			
	CONDENSER	EC-312-3B	8.0 MMBTU/HR	MOUNTED ON EV-311-3B	316L SS			
	HLW EVAPORATOR CATCH TANK	TK-313-3B	5,000 GALLON	9' ID X 18' H	HASTELLOY C22			THE COST CAN BE RATIOD FROM TK-120-001
	PUMP	P-314-3B	50 GPM, 30 PSI	MOUNTED ON TK-313-3B	HASTELLOY C22			BASE COST ON PX-120-002
	HLW MELTER FEED	TK-315A-3B	9,400 GALLON	12' ID X 19' H	HASTELLOY C22			BASE COST ON TK-120-001
	HLW MELTER FEED	TK-315B-3B	9,400 GALLON	12' ID X 19' H	HASTELLOY C22			BASE COST ON TK-120-001
	PUMP	P-316A-3B	100 GPM, 30 PSI	MOUNTED ON TK-315A-3B	HASTELLOY C22			BASE COST ON PX-120-001
	PUMP	P-316B-3B	100 GPM, 30 PSI	MOUNTED ON TK-315B-3B	HASTELLOY C22			BASE COST ON PX-120-001

Table B-2. Equipment List for Detached High-Level Waste Facility.

Type Change	Equipment Description	Equipment ID	Capcity/Flow Rate	Physical Size	Material	Power	Heat Load	Comment
	HLW MELTER FEED TANK	TK-317A-3B	9,400 GALLON	12' ID X 19' H	316L SS			BASE COST ON TK-20A-002
	HLW MELTER FEED TANK	TK-317B-3B	9,400 GALLON	12' ID X 19' H	316L SS			BASE COST ON TK-20A-002
	PUMP	P-318A-3B	100 GPM, 30 PSI	MOUNTED ON TK-317A-3B	316L SS			BASE COST ON PX-20A-003
	PUMP	P-318B-3B	100 GPM, 30 PSI	MOUNTED ON TK-317B-3B	316L SS			BASE COST ON PX-20A-003
	HEAD BIN	B-319-3B	34 FT3 (WORKING)	3' ID X 7' T/T	304L SS			
	ROTARY STAR FEEDER	M-320-3B	0.1438 CFM (WORKING), 0.50 HP	MOUNTED BELOW B-319-3B	304L SS			
	WEIGH FEEDER	MF-321-3B	918 - 1,836 LBS/HR	23" W X 21" H X 4'6" L	304L SS			
	ROTARY STAR FEEDER	M-322-3B	0.50 HP	2' X 2'4" X 2'-8"	304L SS			MOUNTED BELOW MF-321-3B
	HLW MELTER	EM-323-3B	1,840 LB/HR	24' H X 17' L X 10' W	REFRACTORY LINED			VORTEC
	GLASS SEPARATOR	S-324-3B	2 HR CAPACITY	16' L X 8' W X 8' H	REFRACTORY LINED			
	CANISTER POSITIONING ARM	HD-325A-3B			304L SS			HD-130-001
	CANISTER POSITIONING ARM	HD-325B-3B			304L SS			HD-130-001
	GAMMA DETECTOR EMBED	MY-326A-3B			304L SS/TITANIUM			MY-130-002
	GAMMA DETECTOR EMBED TUBES	MY-326B-3B			304L SS/TITANIUM			MY-130-002

Table B-2. Equipment List for Detached High-Level Waste Facility.

Type Change	Equipment Description	Equipment ID	Capcity/Flow Rate	Physical Size	Material	Power	Heat Load	Comment
	COBALT SOURCE TREE	RA-327-3B			304L SS/TITANIUM			RA-130-015
	HLW QUENCH TOWER	T-600-3B	1,150 SCFM	6' OD X 11' T/T (14' H)	6" REFRACTORY LINED INCONEL 690			NO SIMILAR EQUIPMENT INHWVP
	COOLER	EC-601-3B	8.36 MMBTU/HR	5' OD X 20' H	HASTELLOY C-22 TUBE, 304L SS SHELL			SIMILAR TO CASE 3A, EX-14A-004
	HLW VENTURI SCRUBBER	SC-602-3B	1,310 LB/HR (GAS), 24 GPM	MOUNTED ON TK-608-3B	HASTELLOY C-22			SIMILAR TO CASE 3A, JX-15A-002
	HLW SEPARATOR	S-603-3B	1,310 LB/HR (GAS), 24	MOUNTED ON TK-608-3B	HASTELLOY C-22			NO SIMILAR EQUIPMENT INHWVP
	CHILLER	EC-604-3B	17,000 BTU/HR	MOUNTED ON TK-608-3B	HASTELLOY C-22 TUBE, 340L SS SHELL			NO SIMILAR EQUIPMENT IN HWVP
	HLW MIST ELIMINATOR	DE-605-3B	194 SCFM	5' OD X 12'-2" H	HASTELLOY C-22			SIMILAR EQUIPMENT FROMHWVP DE-14A/B-002
	PUMP	P-606-3B	251 GPM, 60 PSI	MOUNTED ON TK-608-3B	HASTELLOY C-22			SIMILAR TO HWVP PX-120-001
	PUMP	P-607-3B	50 GPM, 9 PSI	MOUNTED ON TK-608-3B	HASTELLOY C-22			SAME AS HWVP PX-14A-001
	HLW SCRUB SOLUTION TANK	TK-608-3B	9,400 GALLON	12' ID X 12' T/T (19' H)	HASTELLOY C-22			SIMILAR TO HWVP SRAT, TK-120-001

Table B-2. Equipment List for Detached High-Level Waste Facility.

Type Change	Equipment Description	Equipment ID	Capcity/Flow Rate	Physical Size	Material	Power	Heat Load	Comment
	SCRUB SOLUTION MAKEUP TANK	TK-619-3B	367 GALLONS	4'-6" ID X5' T/T	304L SS			TK-540-004
	HEATER	E-622A-3B	3.6 kW		304L SS			SIMILAR TO HWVP HT-14A-004
	BLOWER	MB-622A-3B	229 SCFM, 15.0 HP	6' X 7'	304L SS			SIMILAR TO HWVP BL-14A-001VA/VB
	METAL HEPA FILTER	FM-622A1-3B	229 SCFM	1'-6" ID X 10' T/T	316L SS			SIMILAR TO HWVP FL-14A/B-001V
	METAL HEPA FILTER	FM-622A2-3B	229 SCFM	30" H X 27.25" W X 128" L	304L SS			SIMILAR TO HWVP FH-14A-002
	HEATER	E-622B-3B	3.6 kW		304L SS			SIMILAR TO HWVP HT-14A-004
	BLOWER	MB-622B-3B	229 SCFM, 15.0 HP	6' X 7'	304L SS			SIMILAR TO HWVP BL-14A-001VA/VB
	METAL HEPA FILTER	FM-622B1-3B	229 SCFM	1'-6" ID X 10' T/T	316L SS			SIMILAR TO HWVP FL-14A/B-001V
	METAL HEPA FILTER	FM-622B2-3B	229 SCFM	30" H X 27.25" W X 128" L	304L SS			SIMILAR TO HWVP FH-14A-002
	MELTER OFFGAS HEAT EXCHANGER	EC-628-3B	185,000 BTU/HR	1'-4" H X 10" W X 20'-10" L	304L SS			NO SIMILAR EQUIPMENT INHWVP
	HEATER	E-629-3B	54.0 kW		304L SS			SIMILAR TO HWVP HT-15A/B-001
	SO2 ABSORBER	R-630-3B	0.6' ID X 15' T/T		304L SS			NO SIMILAR EQUIPMENT INHWVP
	HEATER	E-631-3B	33 kW		340L SS			SIMILAR TO HWVP HT-15G-001

Table B-2. Equipment List for Detached High-Level Waste Facility.

Type Change	Equipment Description	Equipment ID	Capcity/Flow Rate	Physical Size	Material	Power	Heat Load	Comment
	NOx CATALYTIC REACTOR	R-632-3B		2' ID X 4' T/T	321 SS			SIMILAR TO HWVP VX-14A-001V
	SULFATE REDUCTION	R-633-3B		0.6' ID X 15' T/T	304L SS			NO SIMILAR EQUIPMENT IN HWVP
	NH3 CRACKER	E-634-3B	33 kW		304L SS			NO SIMILAR EQUIPMENT INHWVP
	SO2 ABSORBER REGEN.	R-635-3B		0.6' ID X 15' T/T	304L SS			NO SIMILAR EQUIPMENT INHWVP
	COOLER	EC-636-3B	97,000 BTU/HR	14" H X 8" W X 20'-8" L	304L SS			SIMILAR TO HWVP EX-14A-003
	CLAUS SULFUR PLANT	CL-650-3B		10' X 10' PLOT SPACE				NO SIMILAR EQUIPMENT INHWVP
	PUMP	P-652-3B	7 GPM, 11 PSI.		316L SS			PX-540-004
	HEATER	E-700A-3B	1.2 kW		316L SS			SIMILAR TO HWVP HT-15G-001
	BLOWER	MB-700A-3B	175 SCFM, 5.0 HP	6' X 7'	304L SS			SIMILAR TO HWVP BL-14A-001VA/VB
	METAL HEPA FILTER	FM-700A1-3B	175 SCFM	1'-6" ID X 10' T/T	316L SS			SIMILAR TO HWVP FL-14A/B-001V
	METAL HEPA FILTER	FM-700A2-3B	175 SCFM	30" H X 27.25" W X 128" L	304L SS			SIMILAR TO HWVP FH-14A-002
	HEATER	E-700B-3B	1.2 kW		304L SS			SIMILAR TO HWVP HT-15G-001
	BLOWER	MB-700B-3B	175 SCFM, 5.0 HP	6' X 7'	304L SS			SIMILAR TO HWVP BL-14A-001VA/VB

Table B-2. Equipment List for Detached High-Level Waste Facility.

Type Change	Equipment Description	Equipment ID	Capcity/Flow Rate	Physical Size	Material	Power	Heat Load	Comment
	METAL HEPA FILTER	FM-700B1-3B	175 SCFM	1'-6" ID X 10' T/T	316L SS			SIMILAR TO HWVP FL-14A/B-001V
	METAL HEPA FILTER	FM-700B2-3B	175 SCFM	30" H X 27.25" W X 128"L	304L SS			SIMILAR TO HWVP FH-14A-002
	HEATER	E-701A-3B	28 kW		304L SS			SIMILAR TO HWVP HT-15G-001
	BLOWER	MB-701A-3B	4,684 SCFM, 50.0 HP	12' X 15'	304L SS			SIMILAR TO HWVP BL-15G-001VA/VB
	METAL HEPA FILTER	FM-701A1-3B	4,684 SCFM	5' ID X 11' T/T	316L SS			SIMILAR TO HWVP FL-15A/B-001V
	METAL HEPA FILTER	FM-701A2-3B	4,684 SCFM	90" H X 51.25" W X 168" L	304L SS			SIMILAR TO HWVP FH-15A-002
	HEATER	E-701B-3B	28 kW		304L SS			SIMILAR TO HWVP HT-15G-001
	BLOWER	MB-701B-3B	4,684 SCFM, 50.0 HP	12' X 15'	304L SS			SIMILAR TO HWVP BL-15G-001VA/VB
	METAL HEPA FILTER	FM-701B1-3B	4,684 SCFM	5' ID X 11' T/T	316L SS			SIMILAR TO HWVP FL-15A/B-001V
	METAL HEPA FILTER	FM-701B2-3B	4,684 SCFM	90" H X 51.25" W X 168" L	304L SS			SIMILAR TO HWVP FH-15A-002
	CVOG/VOG FILTER WASH CATCH TANK	TK-702-3B	3,800 GALLON	9' ID X 9' T/T	316L SS			SIMILAR TO HWVP TK-20A-002 (WAT-A)
	PUMP	P-703-3B	75 GPM, 10 PSI	MOUNTED ON TK-702-3B	316L SS			SIMILAR TO HWVP PX-14A-001
	PROCESS CONDENSATE RECYCLE TANK	TK-800A-3B	9,400 GALLON	12' ID X 19' H	316L SS			BASE COST ON TK-20A-002 LOCATED OUTSIDE VIT BLDG IN UGVAULT

Table B-2. Equipment List for Detached High-Level Waste Facility.

Type Change	Equipment Description	Equipment ID	Capcity/Flow Rate	Physical Size	Material	Power	Heat Load	Comment
	PROCESS CONDENSATE RECYCLE TANK	TK-800B-3B	9,400 GALLON	12' ID X 19' H	316L SS			BASE COST ON TK-20A-002 LOCATED OUTSIDE VIT BLDG IN UGVAULT
	PROCESS CONDENSATE RECYCLE TANK	TK-800C-3B	9,400 GALLON	12' ID X 19' H	316L SS			BASE COST ON TK-20A-002LOCATE D OUTSIDE VIT BLDG IN UGVAULT
	PUMP	P-801A-3B	100 GPM, 71 PSI	MOUNTED ON TK-800A-3B	316L SS			BASE COST ON PX-20A-003
	PUMP	P-801B-3B	100 GPM, 71 PSI	MOUNTED ON TK-800B-3B	316L SS			BASE COST ONPX-20A-003
	PUMP	P-801C-3B	100 GPM, 71 PSI	MOUNTED ON TK-800C-3B	316L SS			BASE COST ON PX-20A-003
	PUMP	P-802A-3B	100 GPM, 71 PSI	MOUNTED ON TK-800A-3B	316L SS			BASE COST ON PX-20A-003
	PUMP	P-802B-3B	100 GPM, 71 PSI	MOUNTED ON TK-800B-3B	316L SS			BASE COST ON PX-20A-003
	PUMP	P-802C-3B	100 GPM, 71 PSI	MOUNTED ON TK-800C-3B	316L SS			BASE COST ON PX-20A-003
	pH ADJUSTMENT TANK	TK-803-3B	9,400 GALLON	12' ID X 19' H	316L SS			BASE COST ON TK-20A-002 LOCATED OUTSIDE VIT BLDG IN UGVAULT
	PUMP	P-804-3B	100 GPM, 71 PSI	MOUNTED ON TK-803-3B	316L SS			BASE COST ON PX-20A-003
	PUMP	P-805-3B	100 GPM, 71 PSI	MOUNTED ON TK-803-3B	316L SS			BASE COST ON PX-20A-003

Table B-2. Equipment List for Detached High-Level Waste Facility.

Type Change	Equipment Description	Equipment ID	Capcity/Flow Rate	Physical Size	Material	Power	Heat Load	Comment
	RETENTION BASIN	TK-806-3B		UNDERGROUND OUTSIDE				NOT IN FLUOR SCOPE
	COLD FEED VENT BLOWER	MB-1100A-3B	300 SCFM, 25.0 in-WG, 2.0 HP		304L SS			BL-560-001A-3B
	COLD FEED VENT BLOWER	MB-1100B-3B	300 SCFM, 25.0 in-WG, 2.0 HP		304L SS			BL-560-001B-3B
	PROCESS STEAM CONDENSATE CONDENSER/COOLER	EC-1102-3B	5.46 MMBTU/HR		304L SS			CD-430-001-3B
	PROCESS COOLING WATER COOLER	EC-1103A-3B	21.2 MMBTU/HR		304L SS PLATES			EX-450-001A-3B
	PROCESS COOLING WATER COOLER	EC-1103B-3B	21.2 MMBTU/HR		304L SS PLATES			EX-450-001B-3B
	MELTER COOLING WATER COOLER	EC-1104A-3B	1.0 MMBTU/HR		304L SS PLATES			EX-460-001A-3B
	MELTER COOLING WATER COOLER	EC-1104B-3B	1.0 MMBTU/HR		304L SS PLATES			EX-460-001B-3B
	ORGANIC ACID DRAIN CATCH TANK HEGA FILTER	FG-1105-3B	212.0 LB/HR		304L SS			FG-520-001-3B
A	ORGANIC ACID VENT HEGA FILTER	FG-1106A-3B	235.0 LB/HR		304L SS			FG-540-001A-3B
B	ORGANIC ACID VENT HEGA FILTER	FG-1106B-3B	235.0 LB/HR		304L SS			FG-540-001B-3B
	PROCESS CONDENSATE HEPA FILGER	FH-1107A-3B	160 ACFM		304L SS			FH-430-001A-3B
	PROCESS CONDENSATE HEPA FILTER	FH-1107B-3B	160 ACFM		304L SS			FH-430-001B-3B

Table B-2. Equipment List for Detached High-Level Waste Facility.

Type Change	Equipment Description	Equipment ID	Capcity/Flow Rate	Physical Size	Material	Power	Heat Load	Comment
	PROCESS COOLING WATER HEPA FILTER	FH-1108A-3B	35 ACFM		304L SS			FH-450-001A-3B
	PROCESS COOLING WATER HEPA FILTER	FH-1108B-3B	35 ACFM		304L SS			FH-450-001B-3B
	MELTER COOLING WATER HEPA FILTER	FH-1109A-3B	35 ACFM		304L SS			FH-460-001A-3B
	MELTER COOLING WATER HEPA FILTER	FH-1109B-3B	35 ACFM		304L SS			FH-460-001B-3B
	FLOOR DRAIN CATCH TANK HEPA FILTER	FH-1110-3B	423.0 LB/HR		304L SS			FH-520-001-3B
	REGULATED DRAINS CATCH TANK HEPA FILTER	FH-1111-3B	212.0 LB/HR		304L SS			FH-520-002-3B
	LIQUID WASTE COLLECTION HEPA FILTER	FH-1112-3B	100 SCFM		304L SS			FH-520-012
	ORGANIC ACID DRAIN CATCH TANK HEPA FILTER	FH-1113-3B	212.0 LB/HR		304L SS			FH-520-003-3B
	FLOOR DRAIN HEPA FILTER	FH-1114A-3B	105 SCFM		304L SS			FH-520-006-3B
	FLOOR DRAIN HEPA FILTER	FH-1114B-3B	105 SCFM		304L SS			FH-520-006-3B
	FLOOR DRAIN HEPA FILTER	FH-1114C-3B	105 SCFM		304L SS			FH-520-006-3B
	FLOOR DRAIN HEPA FILTER	FH-1114D-3B	105 SCFM		304L SS			FH-520-006-3B
	LIQUID WASTE COLLECTION HEPA FILTER	FH-1115-3B	100 SCFM		304L SS			FH-520-010-3B

Table B-2. Equipment List for Detached High-Level Waste Facility.

Type Change	Equipment Description	Equipment ID	Capcity/Flow Rate	Physical Size	Material	Power	Heat Load	Comment
	LIQUID WASTE COLLECTION HEPA FILTER	FH-1116-3B	100 SCFM		304L SS			FH-520-011-3B
	COLD FEED VENT HEPA FILTER	FH-1117A-3B	300 SCFM		304L SS			FH-560-001A-3B
	COLD FEED VENT HEPA FILTER	FH-1117B-3B	300 SCFM		304L SS			FH-560-001B-3B
	VIT BLDG HPS VAC SYSTEM HEPA FILTER	FH-1118A-3B	185 SCFM		CS			FH-620-001A-3B
	VIT BLDG HPS VAC SYSTEM HEPA FILTER	FH-1118B-3B	185 SCFM		CS			FH-620-001B-3B
	VIT BLDG HPS VAC SYSTEM HEPA FILTER	FH-1118C-3B	185 SCFM		CS			FH-620-001C-3B
	VIT BLDG HPS VAC SYSTEM HEPA FILTER	FH-1118D-3B	185 SCFM		CS			FH-620-001D-3B
	VIT BLDG HPS VAC SYSTEM HEPA FILTER	FH-1118E-3B	185 SCFM		CS			FH-620-001E-3B
	VIT BLDG HPS VAC SYSTEM HEPA FILTER	FH-1118F-3B	185 SCFM		CS			FH-620-001F-3B
	VIT BLDG HPS VAC SYSTEM HEPA FILTER	FH-1118G-3B	185 SCFM		CS			FH-620-001G-3B
	VIT BLDG HPS VAC SYSTEM HEPA FILTER	FH-1118H-3B	185 SCFM		CS			FH-620-001H-3B
	OFF-GAS TREATMENT CHEMICAL FEED TANK ROUGHING FILTER	FL-1120-3B	55 ACFM		304L SS			FL-540-011-3B
	COLD CHEMICAL TANK ROUGHING FILTER	FL-1121-3B	55 ACFM		304L SS			FL-540-012-3B

Table B-2. Equipment List for Detached High-Level Waste Facility.

Type Change	Equipment Description	Equipment ID	Capcity/Flow Rate	Physical Size	Material	Power	Heat Load	Comment
	COLD CHEMICAL TANK ROUGHING FILTER	FL-1122-3B	55 ACFM		304L SS			FL-540-013-3B
	COLD CHEMICAL TANK ROUGHING FILTER	FL-1123-3B	55 ACFM		304L SS			FL-540-014-3B
	ELECTRIC PROCESS STEAM GENERATOR	EV-1124A-3B	7.76 MW		CS			GS-430-001
	ELECTRIC PROCESSSTEAM GENERATOR	EV-1124B-3B	7.76 MW		CS			GS-430-001
	STANDBY ELECTRIC HEATER	E-1125A-3B		40.0 KW	N/A			INCLUDED W/EV-1124A-3B
	ELECTRIC PROCESS STEAM GENERATOR	E-1125B-3B		40.0 KW	N/A			INCLUDED W/EV-1124B-3B
	PROCESS STEAM GENERATOR CIRCULATING PUMP	P-1127A-3B		3,000.0 GPM, 10.0 PSI	304L SS			INCLUDED W/EV-1124A-3B
	PROCESS STEAM GENERATOR CIRCULATING PUMP	P-1127B-3B		3,000.0 GPM, 10.0 PSI	304L SS			INCLUDED W/EV-1124B-3B
	BOILER FEED WATER CHEMICAL INJECTION PUMP	P-1128A-3B		1.0 GPM, 198.0 PSI	304L SS			INCLUDED W/EV-1124A-3B
	BOILER FEED WATER CHEMICAL INJECTION PUMP	P-1128B-3B		1.0 GPM, 198.0 PSI	304L SS			INCLUDED W/EV-1124B-3B
	BLOWDOWN DRUM	TK-1129A-3B	400 GALLONS		304L SS			INCLUDED W/EV-1124A-3B
	BLOWDOWN DRUM	TK-1129B-3B	400 GALLONS		304L SS			INCLUDED W/EV-1124B-3B
	CHEMICAL ADDITION TANK	TK-1130A-3B	250 GALLONS		304L SS			INCLUDED W/EV-1124A-3B

Table B-2. Equipment List for Detached High-Level Waste Facility.

Type Change	Equipment Description	Equipment ID	Capcity/Flow Rate	Physical Size	Material	Power	Heat Load	Comment
	CHEMICAL ADDITION TANK	TK-1130B-3B	250 GALLONS		304L SS			INCLUDED W/EV-1124B-3B
	PROCESS CONDENSATE PUMP	P-1137A-3B	60.0 GPM, 200.0 PSI		304L SS			PX-430-001A-3B
	PROCESS CONDENSATE PUMP	P-1137B-3B	60.0 GPM, 200.0 PSI		304L SS			PX-430-001B-3B
	PROCESS CONDENSATE PUMP	P-1137C-3B	60.0 GPM, 200.0 PSI		304L SS			PX-430-001A-3B
	PROCESS CONDENSATE PUMP	P-1137D-3B	60.0 GPM, 200.0 PSI		304L SS			PX-430-001B-3B
	PROCESS COOLING WATER PUMP	P-1138A-3B	2,000 GPM, 71 PSI		304L SS			PX-450-001A-3B
	PROCESS COOLING WATER PUMP	P-1138B-3B	2,000 GPM, 71 PSI		304L SS			PX-450-001B-3B
	MELTER COOLING WATER PUMP	P-1139A-3B	1,000 GPM, 47.4 PSI		304L SS			PX-460-001A-3B
	MELTER COOLING WATER PUMP	P-1139B-3B	1,000 GPM, 47.4 PSI		304L SS			PX-460-001B-3B
R	FLOOR DRAIN CATCH TANK TRANSFER PUMP	P-1140-3B	75.0 GPM, 62.0 PSI		304L SS			PX-520-001-3B
	FLOOR DRAIN CATCH TANK SUMP PUMP	P-1141-3B	10.0 GPM, 49.0 PSI		304L SS			PX-520-002-3B
	REGULATED DRAINS CATCH TANK TRANSFER PUMP	P-1142-3B	70.0 GPM, 60.0 PSI		304L SS			PX-520-003-3B
	ACID DRAIN CATCH TANK TRANSFER PUMP	P-1143-3B	30.0 GPM, 50.0 PSI		304L SS			PX-520-004-3B
	ACID DRAIN CATCH TANK SUMP PUMP	P-1144-3B	10.0 GPM, 49.0 PSI		304L SS			PX-520-005-3B

Table B-2. Equipment List for Detached High-Level Waste Facility.

Type Change	Equipment Description	Equipment ID	Capcity/Flow Rate	Physical Size	Material	Power	Heat Load	Comment
	ORGANIC ACID DRAIN CATCH TANK TRANSFER PUMP	P-1145-3B	30.0 GPM, 52.0 PSI		304L SS			PX-520-006-3B
	ORGANIC ACID DRAIN CATCH TANK SUMP PUMP	P-1146-3B	10.0 GPM, 49.0 PSI		304L SS			PX-520-007-3B
	REGULATED DRAINS CATCH TANK SUMP PUMP	P-1147-3B	10.0 GPM, 49.0 PSI		304L SS			PX-520-008-3B
	FLOOR DRAIN SAMPLING TANK TRANSFER PUMP	P-1148-3B	75.0 GPM, 62.0 PSI		304L SS			PX-520-009-3B
	COLD CHEMICAL FEED PUMP	P-1160-3B	2.0 GPM, 38.0 PSI		304L SS			PX-540-002-3B
	COLD CHEMICAL FEED PUMP	P-1170-3B	7.0 GPM, 36.0 PSI		316L SS			PX-540-006-3B
	COLD CHEMICAL FEED PUMP	P-1171-3B	7.0 GPM, 29.0 PSI		304L SS			PX-540-025-3B
	COLD CHEMICAL FEED PUMP	P-1172-3B	7.0 GPM, 28.0 PSI		316L SS			PX-540-036-3B
	OFFGAS TREATMENT CHEMICAL FEED PUMP	P-1173-3B	7.0 GPM, 11.0 PSI		316L SS			PX-540-004-3B
	50% NITRIC ACID FEED PUMP	P-1175-3B	14.0 GPM, 15.0 PSI		304L SS/316L SS			PX-540-015-3B
	NITRIC ACID DECON FEED PUMP	P-1176-3B	42.0 GPM, 227.0 PSI		304L SS/316L SS			PX-540-018-3B
	OXALIC ACID DECON FEED PUMP	P-1177-3B	42.0 GPM, 227.0 PSI		316L SS			PX-540-021-3B
	POTASSIUM PERMANGANATE FEED PUMP	P-1178-3B	7.0 GPM, 13.0 PSI		304L SS			PX-540-023-3B
	50% CAUSTIC FEED PUMP	P-1180-3B	14.0 GPM, 41.0 PSI		316L SS			PX-540-029-3B

Table B-2. Equipment List for Detached High-Level Waste Facility.

Type Change	Equipment Description	Equipment ID	Capcity/Flow Rate	Physical Size	Material	Power	Heat Load	Comment
	PROCESS WATER BOOSTER PUMP	P-1181-3B	22.0 GPM, 43.0 PSI		304L SS			PX-540-037-3B
	ANTIFOAM FEED TANK	TK-1182-3B	500 GALLONS	4'-6" ID X 5' T/T	304L SS			TK-540-034
	ANTIFOAM FEED PUMP	P-1182A-3B	0.5 GPM, 21.0 PSI		304L SS			PX-540-038A-3B
	ANTIFOAM FEED PUMP	P-1182B-3B	0.5 GPM, 21.0 PSI		304L SS			PX-540-038B-3B
	ANTIFOAM FEED PUMP	P-1182C-3B	0.5 GPM, 21.0 PSI		304L SS			PX-540-038C-3B
	ANTIFOAM FEED PUMP	P-1182D-3B	0.5 GPM, 21.0 PSI		304L SS			PX-540-038D-3B
	ANTIFOAM FEED PUMP	P-1182E-3B	0.5 GPM, 21.0 PSI		304L SS CONCRETE W/7 MIL EPOXY COATING			PX-540-038E-3B
	ACID DRAIN CATCH TANK SUMP	SU-1183-3B	250 GALLONS					SU-520-001-3B
	ORGANIC ACID DRAIN CATCH TANK SUMP	SU-1184-3B	250 GALLONS		CONCRETE W/7 MIL EPOXY COATING			SU-520-002-3B
	FLOOR DRAIN CATCH TANK SUMP	SU-1185-3B	250 GALLONS		CONCRETE W/7 MIL EPOXY COATING			SU-520-003-3B
	REGULATED DRAINS CATCH TANK SUMP	SU-1186-3B	250 GALLONS		CONCRETE W/7 MIL EPOXY COATING			SU-520-005-3B
	PROCESS CONDENSATE COLLECTION TANK	TK-1191-3B	1,200 GALLONS	5' ID X 8' T/T	304L SS			TK-430-002-3B

Table B-2. Equipment List for Detached High-Level Waste Facility.

Type Change	Equipment Description	Equipment ID	Capcity/Flow Rate	Physical Size	Material	Power	Heat Load	Comment
	PROCESS COOLING WATER EXPANSION TANK	TK-1192-3B	420 GALLONS	4' ID X 4'-6" T/T	304L SS			TK-450-001-3B
	MELTER COOLING WATER EXPANSION TANK	TK-1193-3B	3,800 GALLONS	8' ID X 11' T/T	304L SS			TK-460-001-3B
	LOW PRESSURE PROCESSWATER TANK	TK-1194-3B	1,000 GALLONS	5' ID X 7'-6" T/T	304L SS			TK-480-001-3B
	FLOOR DRAIN CATCH TANK	TK-1195-3B	2,600 GALLONS	7' ID X 8'-6" T/T	304L SS			TK-520-001-3B
	REGULATED DRAINS CATCH TANK	TK-1196-3B	1,300 GALLONS	5' ID X 8' T/T	304L SS			TK-520-002-3B
	ACID DRAIN CATCH TANK	TK-1197-3B	1,000 GALLONS	5' ID X 6'-6" T/T	304L SS			TK-520-003-3B
	ORGANIC ACID DRAIN CATCH TANK	TK-1198-3B	1,000 GALLONS	5' ID X 6'-6" T/T	304L SS			TK-520-004-3B
	FLOOR DRAIN SAMPLING TANK	TK-1199-3B	2,600 GALLONS	7' ID X 8'-6" T/T	304L SS			TK-520-005-3B
	COLD CHEMICAL FEED TANK	TK-1200-3B	500 GALLONS.	4'-6" ID X 5' T/T	304L SS			TK-540-002-3B
	COLD CHEMICAL FEED TANK	TK-1201-3B	500 GALLONS	4'-6" ID X 5' T/T	304L SS			TK-540-004-3B
	COLD CHEMICAL FEED TANK	TK-1202-3B	500 GALLONS	4'-6" ID X 5' T/T	316L SS			TK-540-006-3B
	COLD CHEMICAL FEED TANK	TK-1203-3B	500 GALLONS	4'-6" ID X 5' T/T	304L SS			TK-540-021-3B
	50% NITRIC ACID FEED TANK	TK-1205-3B	500 GALLONS	4'-6" ID X 5' T/T	304L SS			TK-540-012-3B
	NITRIC ACID DECON FEED TANK	TK-1206-3B	500 GALLONS	4'-6" ID X 5' T/T	304L SS			TK-540-014-3B
	OXALIC ACID DECON FEED TANK	TK-1207-3B	500 GALLONS	4'-6" ID X 5' T/T	316L SS			TK-540-017-3B

Table B-2. Equipment List for Detached High-Level Waste Facility.

Type Change	Equipment Description	Equipment ID	Capcity/Flow Rate	Physical Size	Material	Power	Heat Load	Comment
	POTASSIUM PERMANGANATE FEED TANK	TK-1208-3B	500 GALLONS	4'-6" ID X 5' T/T	304L SS			TK-540-019-3B
	50% CAUSTIC FEED TANK	TK-1209-3B	500 GALLONS	4'-6" ID X 5' T/T	316L SS			TK-540-023-3B
	FLUSH WATER FEED TANK	TK-1210-3B	500 GALLONS	4'-6" ID X 5' T/T	304L SS			TK-540-024-3B
	OFF GAS TREATMENT CHEMICAL FEED TANK	TK-1211-3B	500 GALLONS	4'-6" ID X 5' T/T	304L SS			TK-540-004-3B
	VIT BLDG HPS VACUUM BLOWER	MB-1213A-3B	740 SCFM, 200.0 HP		CS			VP-620-001VA-3B
	VIT BLDG HPS VACUUM BLOWER	MB-1213B-3B	740 SCFM, 200.0 HP		CS			VP-620-001VA-3B
	COLD CHEMICAL TANK ROUGHING FILTER	FL-1214-3B	55 ACFM		304L SS			FL-540-015-3B
	PROCESS WATER CHILLER	EL-1215-3B	0.017 MMBTU/HR					CM-470-001A
	KEROSENE FEED TANK	TK-1216-3B	1900 GALLONS	6' ID X 9' T/T	CS			NONE
	KEROSENE FEED PUMP	P-1217A-3B	5 GPM X 100 PSI		CS			NONE
	KEROSENE FEED PUMP	P-1217B-3B	5 GPM X 100 PSI		CS			NONE
D	CFC CART ENTRY/SHIELD DOOR	SD-2200-3B						
	PLUG INSERTION/REMOVAL DEVICE W/CONTROL PANEL (#1)	HD-2201-3B						
D	CFC MSM #1	MS-2202-3B						
D	CFC MSM #2	MS-2203-3B						
D	CFC SHIELD WINDOW #1	SZ-2204-3B						

Table B-2. Equipment List for Detached High-Level Waste Facility.

Type Change	Equipment Description	Equipment ID	Capcity/Flow Rate	Physical Size	Material	Power	Heat Load	Comment
D	CFC SHIELD WINDOW #2	SZ-2205-3B						
	CFC CCTV W/VIEWING STATION	TV-2208-3B						
D	CFC WORK TABLE	WB-2209-3B						
	CFC CELL LIGHT ASSEMBLIES (8)	LT-2211-3B						
	CWC JIB CRANE W/CONTROL PANEL (#1)	CN-2213-3B						
	WELD EQUIPMENT TABLE	WB-2214-3B						
	INSPECTION EQUIPMENT TABLE	WB-2215-3B						
	CANISTER WELDER #1 W/POWER PACK	WE-2217-3B						
	CANISTER WELDER #2 W/POWER PACK (SPARE)	WE-2218-3B						
	CWC MSM #1	MS-2219-3B						MODEL F.
	CWC MSM #2	MS-2220-3B						MODEL F
	CWC WINDOW #1	SZ-2223-3B						
	CWC CCTV & VIEWING STATION	TV-2225-3B						
	CWC CELL LIGHT ASSEMBLIES (8)	LT-2226-3B						
	WELD INSPECTION EQUIPMENT (#1)	MY-2227-3B						
	CDC SHIELD WINDOW #1	SZ-2229-3B						
	CCTV CAMERA #1 W/VIEWING STATION	TV-2231-3B						

Table B-2. Equipment List for Detached High-Level Waste Facility.

Type Change	Equipment Description	Equipment ID	Capcity/Flow Rate	Physical Size	Material	Power	Heat Load	Comment
	CCTV CAMERA #2 W/VIEWING STATION	TV-2232-3B						
	CDC CELL LIGHT ASSEMBLIES (8)	LT-2245-3B						
	STC CCTV #1 W/VIEWING STATION	TV-2246-3B						
	STC CCTV #2 W/VIEWING STATION	TV-2247-3B						
	CCTV LIFT TABLE (#1)	HD-2248-3B						
	CANISTER TURNTABLE W/CONTROL PANEL (#1)	TU-2250-3B						
	PNEUMATIC TRANSFER SYSTEM (PTS) #1	XE-2257-3B						
	PNEUMATIC TRANSFER SYSTEM (PTS) #2	XE-2258-3B						
	PNEUMATIC TRANSFER SYSTEM (PTS) #3	XE-2259-3B						
	PNEUMATIC TRANSFER SYSTEM (PTS) #4	XE-2260-3B						
	RADIATION COUNTER #1	RE-2261-3B						
	RADIATION COUNTER #2	RE-2262-3B						
	RADIATION COUNTER #3	RE-2263-3B						
	RADIATION COUNTER #4	RE-2264-3B						
	STC SHIELD WINDOW #1	SZ-2265-3B						
	GAMMA DETECTOR	RE-2268-3B						
	NEUTRON DETECTOR	RE-2269-3B						

Table B-2. Equipment List for Detached High-Level Waste Facility.

Type Change	Equipment Description	Equipment ID	Capcity/Flow Rate	Physical Size	Material	Power	Heat Load	Comment
	TEMPERATURE PROBE & CONTROL PANEL	TE-2270-3B						
	STC LIGHT ASSEMBLIES (8)	LT-2271-3B						
	STC PERSONNEL ACCESS/SHIELD DOOR	SD-2273-3B						
	OVERPACK STAGING BUILDING CRANE	CN-2285-3B						
	OVERPACK DECON STAND	SR-2286-3B						
	RADIATION COUNTER #1	RE-2287-3B						
	RADIATION COUNTER #2	RE-2288-3B						
	RADIATION COUNTER #3	RE-2289-3B						
	RADIATION COUNTER #4	RE-2290-3B						
	OVERPACK WELDING EQUIPMENT	WE-2291-3B						
	TRANSFER CART RAIL SYSTEM W/CONTROLS	CC-2292-3B						
	CANISTER TRANSFER CART #1	CC-2293-3B						
	CANISTER TRANSFER CART #2	CC-2294-3B						
	CANISTER TRANSFER CART #3	CC-2295-3B						
	CANISTER TRANSFER CART #4	CC-2296-3B						
	CANISTER TRANSFER CART #5	CC-2297-3B						

Table B-2. Equipment List for Detached High-Level Waste Facility.

Type Change	Equipment Description	Equipment ID	Capcity/Flow Rate	Physical Size	Material	Power	Heat Load	Comment
	CANISTER TRANSFER CART #6	CC-2298-3B						
	CANISTER TRANSFER CART #7	CC-2299-3B						
	CANISTER TRANSFER CART #8	CC-2300-3B						
	CANISTER HANDLING FORK LIFT	CN-2301-3B						
	CANISTER ENTRY CRANE	CN-2304-3B						
	ENTRY TUNNEL MOTORIZED HATCH (SHIELDED)	RA-2320-3B						
	TUNNEL LIGHT ASSEMBLIES (8)	LT-2321-3B						
	CCC CCTV W/VIEWING STATION	TV-2322-3B						
	PLUG INSERTION/REMOVAL DEVICE W/CONTROL PANEL (#2)	HD-2323-3B						
	CFC MOTORIZED HATCH (NON-SHIELDED)	RA-2324-3B						
M	36-POSITION WATER-COOLED CANISTER STORAGE RACK	SR-2325-3B						
	CCC CANISTER HANDLING ROBOT	CN-2326-3B						
D	CCC SHIELD WINDOW	SZ-2327-3B						

Table B-2. Equipment List for Detached High-Level Waste Facility.

Type Change	Equipment Description	Equipment ID	Capcity/Flow Rate	Physical Size	Material	Power	Heat Load	Comment
	CCC CCTV W/VIEWING STATION	TV-2328-3B						
	CCC CELL LIGHT ASSEMBLIES (8)	LT-2329-3B						
	CWC JIB CRANE W/CONTROL PANEL (#2)	CN-2330-3B						
	CWC CART ENTRY DOOR	SD-2331-3B						
	CANISTER WELDER #3 W/POWER PACK	WE-2332-3B						
	CANISTER WELDER #4 W/POWER PACK (SPARE)	WE-2333-3B						
	WELD INSPECTION EQUIPMENT (#2)	MY-2334-3B						
	CWC MOTORIZED HATCH (NON-SHIELDED)	RA-2335-3B						
	CDC CANISTER HANDLING ROBOT	CN-2336-3B						
	CANISTER DECON TANK (#1)	TK-2337-3B						
	CANISTER DECON TANK (#2)	TK-2338-3B						
	CANISTER RINSE TANK (#1)	TK-2339-3B						
	CANISTER RINSE TANK (#2)	TK-2340-3B						
	CDC CART ENTRY DOOR	SD-2341-3B						
	CDC CART EXIT DOOR	SD-2342-3B						

Table B-2. Equipment List for Detached High-Level Waste Facility.

Type Change	Equipment Description	Equipment ID	Capcity/Flow Rate	Physical Size	Material	Power	Heat Load	Comment
	CDC MOTORIZED HATCH (SHIELDED)	RA-2343-3B						
	CCTV LIFT TABLE (#2)	HD-2344-3B						
	CANISTER TRUNTABLE W/CONTROL PANEL (#2)	TU-2345-3B						
	STC CANISTER HANDLING ROBOT	CN-2346-3B						
	STC CANISTER EXIT/SHIELD DOOR	SD-2347-3B						
	CELL LIGHT ASSEMBLIES (8)	LT-2348-3B						
	OVERPACK ENTRY CRANE	CN-2349-3B						
	OVERPACK ENTRY HATCH (SHIELDED)	RA-2350-3B						
	CELL LIGHT ASSEMBLIES (8)	LT-2351-3B						
	STC PERSONNEL ACCESS/SHIELD DOOR	SD-2352-3B						
	OWC WINDOW	SZ-2353-3B						
	OWC CCTV & VIEWING STATION	TV-2354-3B						
	OWC CELL LIGHT ASSEMBLIES (8)	LT-2355-3B						
	WELD INSPECTION EQUIPMENT	MY-2356-3B						
	OWC PERSONNEL ACCESS/SHIELD DOOR	SD-2357-3B						

Table B-2. Equipment List for Detached High-Level Waste Facility.

Type Change	Equipment Description	Equipment ID	Capcity/Flow Rate	Physical Size	Material	Power	Heat Load	Comment
D	OWC OVERPACK ENTRY/SHIELD DOOR	SD-2358-3B						
	PNEUMATIC TRANSFER SYSTEM (PTS) #1	XE-2359-3B						
	PNEUMATIC TRANSFER SYSTEM (PTS) #2	XE-2360-3B						
	CCTV W/VIEWING STATION	TV-2361-3B						
	CCTV LIFT TABLE	HD-2362-3B						
	OVERPACK TURNTABLE W/CONTROL PANEL	TU-2363-3B						
	TEMPERATURE PROBE & CONTROL PANEL	TE-2364-3B						
	STC LIGHT ASSEMBLIES (8)	LT-2365-3B						
	STC OVERPACK HANDLING ROBOT	CN-2366-3B						
D	CART EXIT DOOR	SD-2367-3B						
	GAMMA DETECTOR	RE-2368-3B						
	NEUTRON DECTECTOR	RE-2369-3B						
	ODC OVERPACK ENTRY/SHIELD DOOR	SD-2370-3B						
	CCTV W/VIEWING STATION	TV-2371-3B						
	ODC LIGHT ASSEMBLIES (8)	LT-2372-3B						
D	LOC OVERPACK ENTRY/SHIELD DOOR	SD-2373-3B						

Table B-2. Equipment List for Detached High-Level Waste Facility.

Type Change	Equipment Description	Equipment ID	Capcity/Flow Rate	Physical Size	Material	Power	Heat Load	Comment
	OVERPACK LOAD OUT/WEIGH STATION	SR-2374-3B						
	CCTV W/ VIEWING STATION	TV-2375-3B						
	LOC LIGHT ASSEMBLIES (8)	LT-2376-3B						
	OVERPACK EXIT HATCH	RA-2377-3B						
	CANISTER TRANSFER CART #9	CC-2378-3B						
	CANISTER TRANSFER CART #10	CC-2379-3B						
	CANISTER TRANSFER CART #11	CC-2380-3B						
	CANISTER TRANSFER CART #12	CC-2381-3B						
	TRANSFER CART RAIL SYSTEM W/CONTROLS	W/CC-2382-3 B						
	OVERPACK TRANSFER CART #1	CC-2383-3B						
	OVERPACK TRANSFER CART #2	CC-2384-3B						
	OVERPACK TRANSFER CART #3	CC-2385-3B						
	OVERPACK TRANSFER CART #4	CC-2386-3B						
	OVERPACK TRANSFER CART #5	CC-2387-3B						
	OVERPACK TRANSFER CART #6	CC-2388-3B						

Table B-2. Equipment List for Detached High-Level Waste Facility.

Type Change	Equipment Description	Equipment ID	Capcity/Flow Rate	Physical Size	Material	Power	Heat Load	Comment
	OVERPACK CELL HATCH (SHIELDED)	RA-2389-3B						
	OVERPACK JIB CRANE	CN-2390-3B	2 TON					
A	CANISTER TRANSFER CART	CC-2391-3B			304L			SIMILAR TO CC-2293-3B
A	CANISTER TRANSFER CART	CC-2392-3B			304L			SIMILAR TO CC-2293-3B
A	TRANSFER CART RAIL SYSTEM W/CONTROLS	CC-2393-3B		5 M				SIMILAR TO CC-2292-3B
A	TRANSFER CART RAIL SYSTEM W/CONTROLS	CC-2394-3B		5 M				SIMILAR TO CC-2292-3B
A*	CRANE (CONTACT MAINT CELL) NOT REMOTE	CN-2395-3B	15 TON	28' SPAN	CS			
A	CMA (RCDC) CRANE NOT REMOTE	CN-2396-3B	15 TON	28' SPAN	CS			
A	CRANE (CENTRIFUGE/EVAPORATION)REMOTE WITH CCTV	CN-2397-3B	50 TON	49' SPAN	CS			
A	CMA CRANE NOT REMOTE (CENTRIFUGE/EVAPORATION)	CN-2398-3B	15 TON	45' SPAN	CS			
A	CRANE (MELTER CELL) REMOTE WITH CCTV	CN-2399-3B	100 TON	33' SPAN	CS			
A*	CRANE (REDC) REMOTE WITH CCTV	CN-2400-3B	100 TON	33' SPAN	CS			
A*	EMM (REDC) ON BRIDGE WITH CCTV	CN-2401-3B		33' SPAN				
A*	CRAME (RAILROAD WILL) NOT REMOTE	CN-2402-3B	100 TON	24' SPAN	CS			

Table B-2. Equipment List for Detached High-Level Waste Facility.

Type Change	Equipment Description	Equipment ID	Capcity/Flow Rate	Physical Size	Material	Power	Heat Load	Comment
A	SHIELD DOOR (CMA-RCDC)	SD-2403-3B		35' W X 20' H				
A	SHIELD DOOR (CMA-CENTRIFUGE/EVAPORATOR CELL)	SD-2404-3B		50' W X 10' H				
A*	RCDC CUT-UP EQUIPMENT ONE LOT	SD-2405-3B						
A	MELTER CUT UP CELL-CUT UP EQUIPMENT ONE LOT	SD-2406-3B						
A	CART FOR MELTER	CC-2407-3B	150 TON		304L			
A	MELTER CART RAIL SYSTEM W/CONTROLS	CC-2408-3B	85'					

Notes:

* This item should be on 3B before and after optimized equipment list, but has been added only to the after list at this time.

M = Modification
A = Addition
D = Deletion (Items marked with "D" will not appear on next revision)

Abbreviations
Equipment Identification Code

B = STORAGE BIN
DE = DEMISTER
DY = DRYER
E = HEATER, CRACKER
EB = CHAMBER, INCINERATOR
EC = CONDENSER, CHILLER, COOLER
EM = MELTER
EV = EVAPORATOR OR CONCENTRATOR
F = FILTER, FRIT FILTER, SCRUB FILTER
FC = CYCLONE FILTER
FH = HEPA FILTER
FM = METAL HEPA FILTER
FP = PREFILTER, METAL PREFILTER
FS = SCREEN
G = CENTRIFUGE
M = ROTARY STAR FEEDER
MB = BLOWER
MC = ROLL CRUSHER
MF = FEEDERS
MM = MIXERS
MQ = QUENCH PLUME
P = PUMPS
R = ABSORBER, REACTOR, REGENERATOR, REDUCER
S = SEPARATOR (VAPOR/LIQUID)
SC = SCRUBBER
T = TOWERS
TK = TANKS
TR = TRAP

This page intentionally left blank.

APPENDIX C

MASS BALANCES AND PROCESS FLOW DIAGRAMS FOR EQUIPMENT SIZING

This page intentionally left blank.

APPENDIX C

MASS BALANCES AND PROCESS FLOW DIAGRAMS FOR EQUIPMENT SIZING

C.1 PRETREATMENT/LOW-LEVEL WASTE FACILITY

Figure C-1 displays the process flow diagrams for the pretreatment/LLW facility. The accompanying material balances are given in Tables C-1 and C-2. The material balances are based on glass production rates through the facility. The pretreatment/LLW facility is sized for 200 metric tons of glass per operating day.

More detailed material balances for the facility are contained in Appendix A. The material balances in Tables C-1 and C-2 were created based on the information from the balances in Appendix A. However, the process flow diagram used to create the balances in Appendix A may be slightly different from the process flow diagram in Figure C-1. The process flow diagram (Figure C-1) and the material balances (Tables C-1 and C-2) were used in the *Tank Waste Remediation System Facility Configuration Study* (Boomer 1994).

C.2 DETACHED HIGH-LEVEL WASTE FACILITY

The process flow diagram for the detached HLW facility are displayed in Figure C-2. The accompanying material balances are given in Tables C-3 and C-4. The material balances are based on glass production rates through the facility. The HLW facility is sized for 20 metric tons of glass per operating day.

More detailed material balances for the facility are contained in Appendix A. The material balances in Tables C-3 and C-4 were created based on the information from the balance in Appendix A. However, the process flow diagrams that were used to create the balance in Appendix A may be different from the process flow diagrams in Figure C-2. The process flow diagram (Figure C-2) and the material balances (Tables C-3 and C-4) were used in the *Tank Waste Remediation System Facility Configuration Study* (Boomer 1994).

This page intentionally left blank.

Figure C-1. Pretreatment/Low-Level Waste Process Flow Diagram. (8 sheets) -

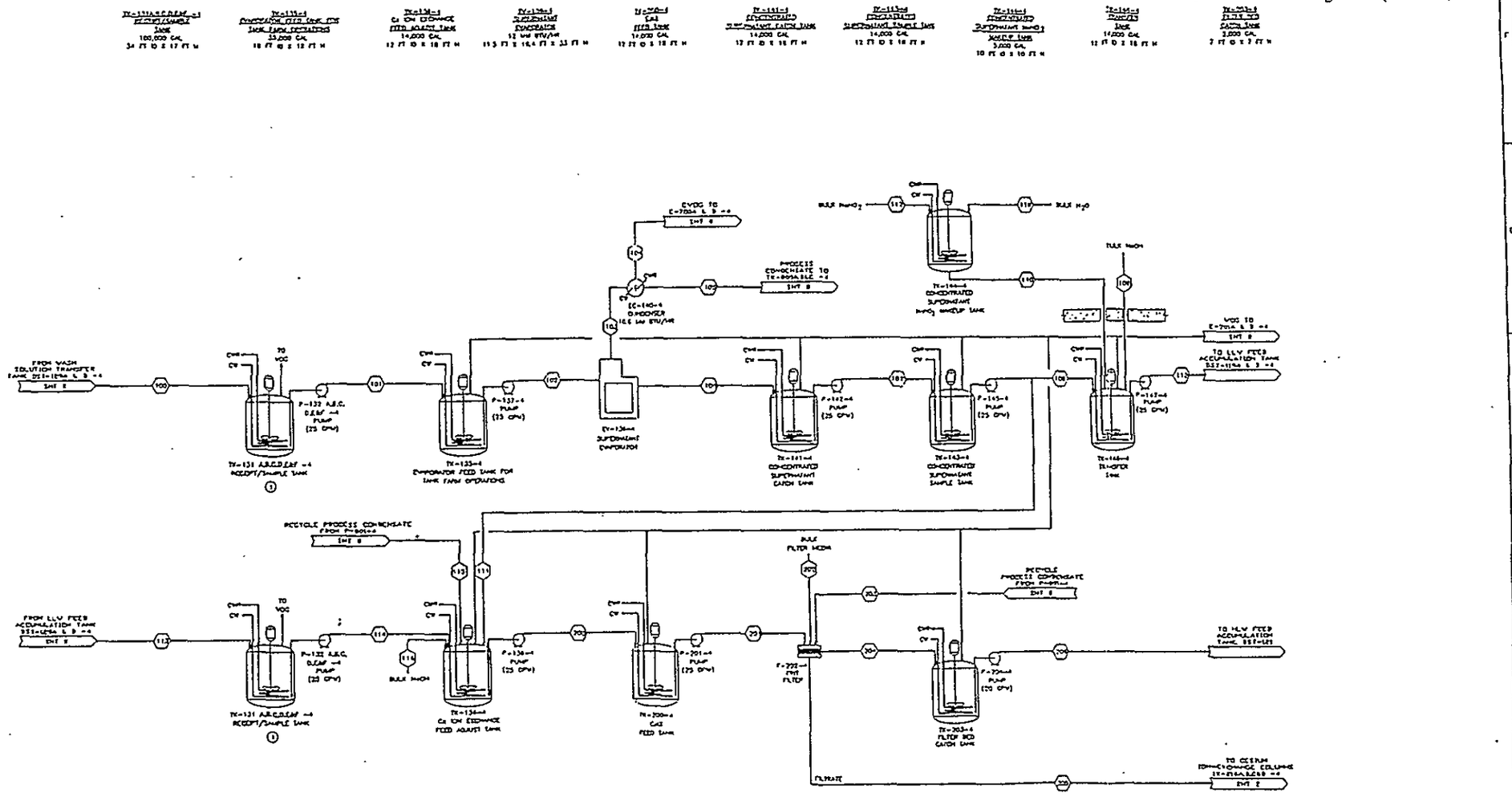

NOTES:

1. THERE ARE A TOTAL OF SIX RECEIPT/SAMPLE TANKS. EACH TANK WILL BE DEDICATED TO EITHER SUPERNATANT SERVICE OR CXF FEED SERVICE. THE ALLOCATION OF TANKS TO SPECIFIC SERVICE WILL BE DETERMINED LATER.

U.S. DEPARTMENT OF ENERGY

FLUOR DANIEL, INC. ADVANCED TECHNOLOGY DIVISION

PROCESS FLOW DIAGRAM PRETREATMENT- 200 T/D LLV COMBINATION

ES-DP4C-400 | 1 | B | A

C-5/C-6

Figure C-1 Pretreatment/Low-Level Waste Process Flow Diagram. (8 sheets)

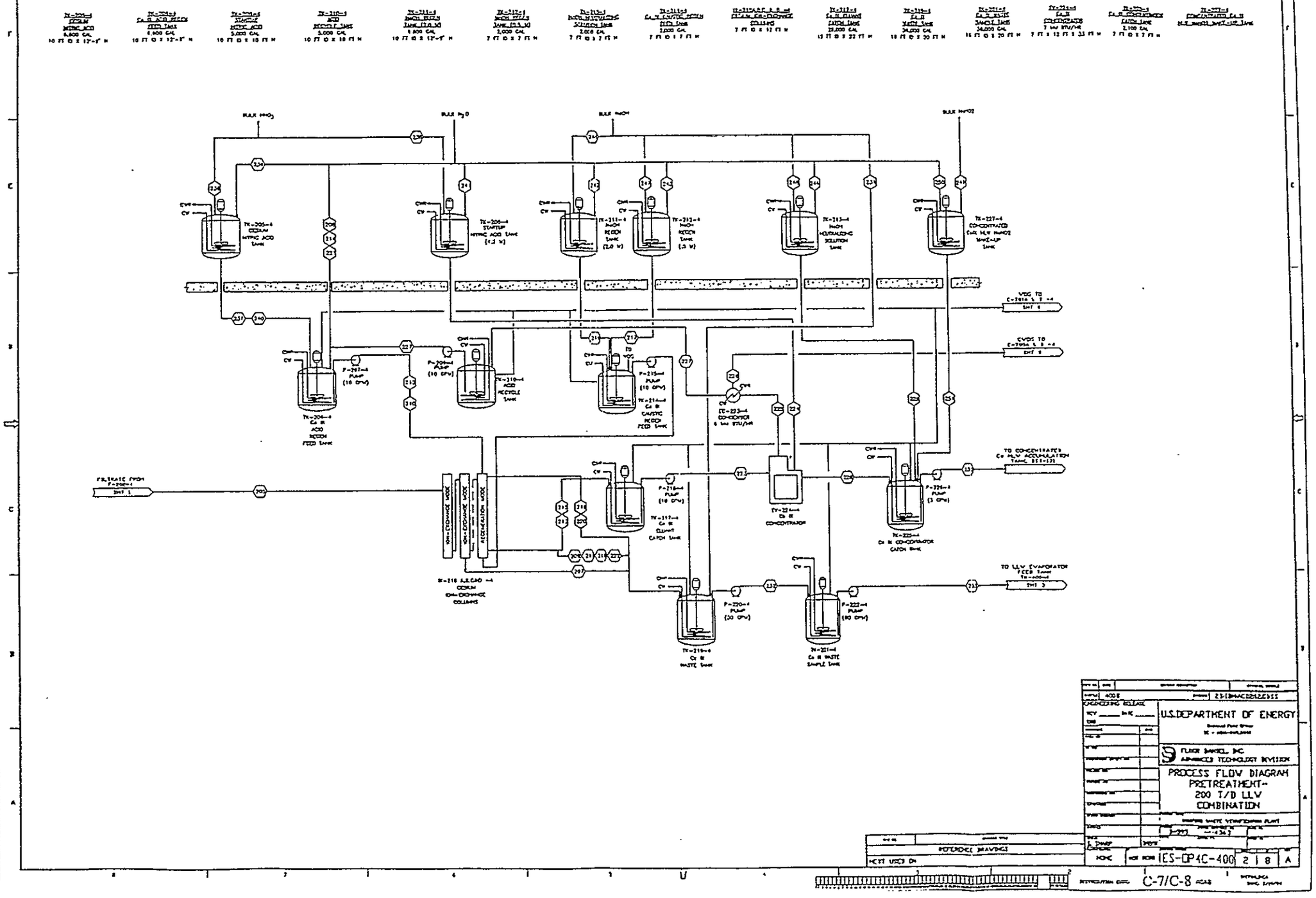

Figure C-1. Pretreatment/Low-Level Waste Process Flow Diagram. (8 sheets)

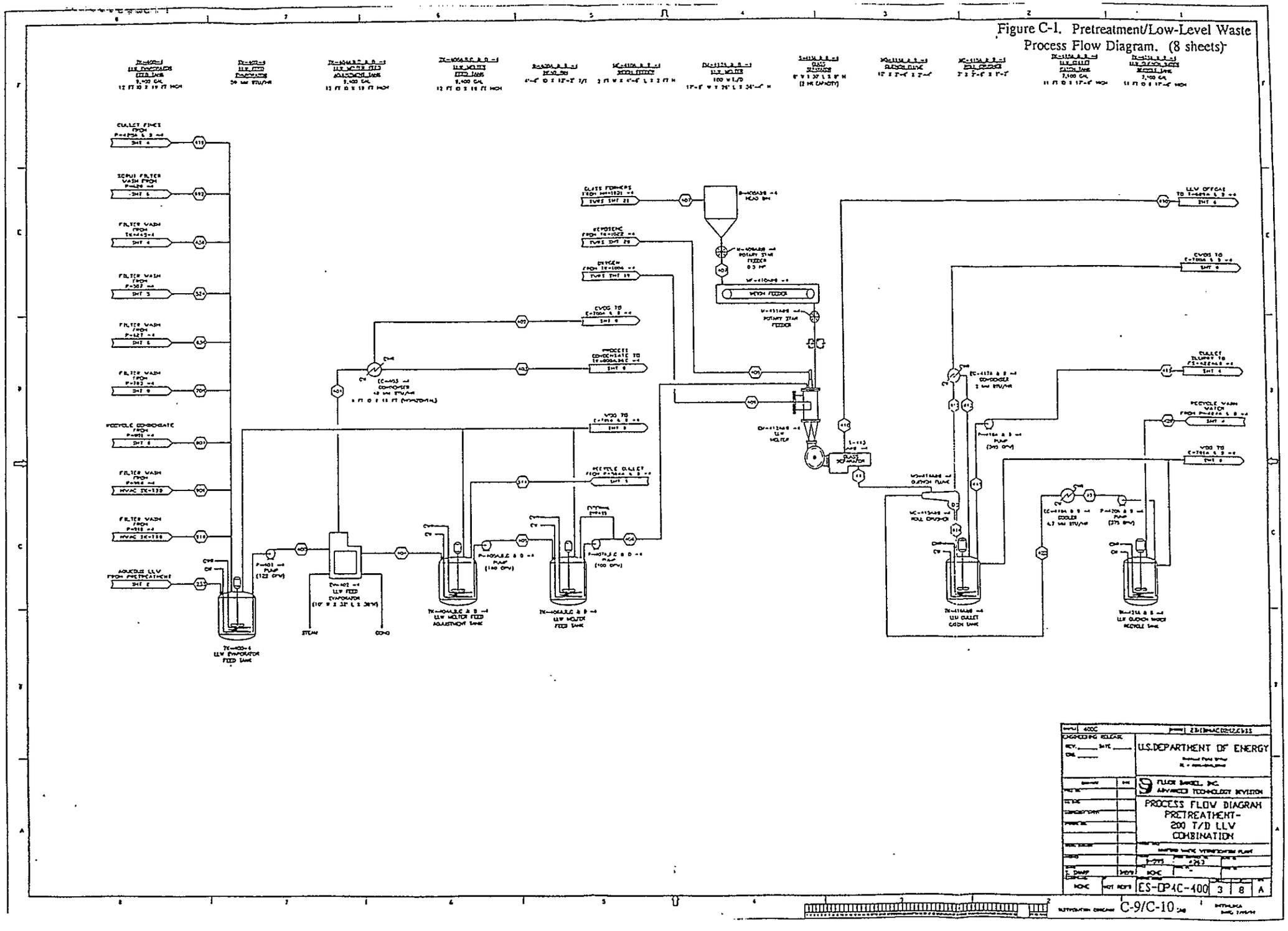

Figure C-1. Pretreatment/Low-Level Waste Process Flow Diagram. (8 sheets)

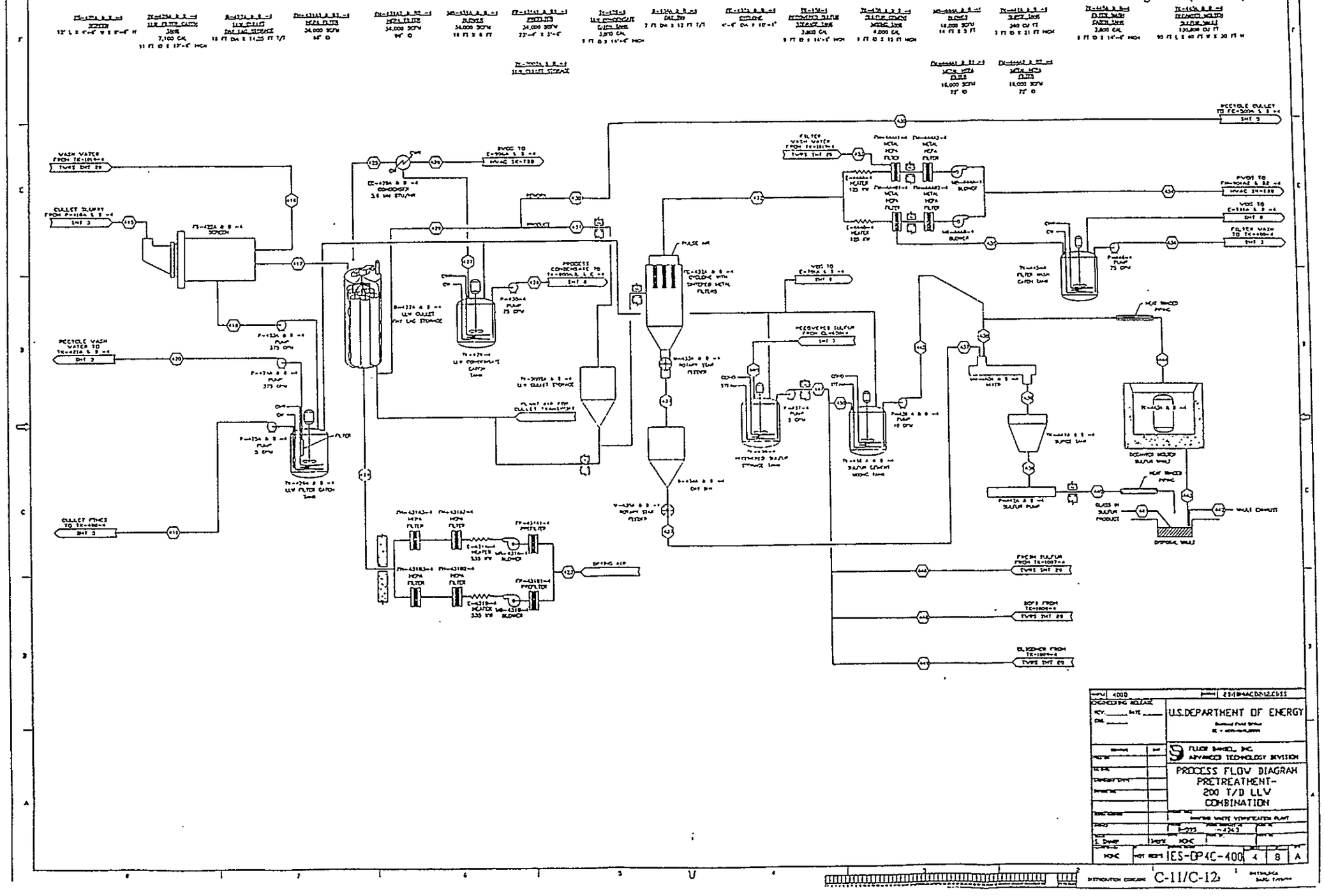

Figure C-1. Pretreatment/Low-Level Waste Process Flow Diagram. (8 sheets)

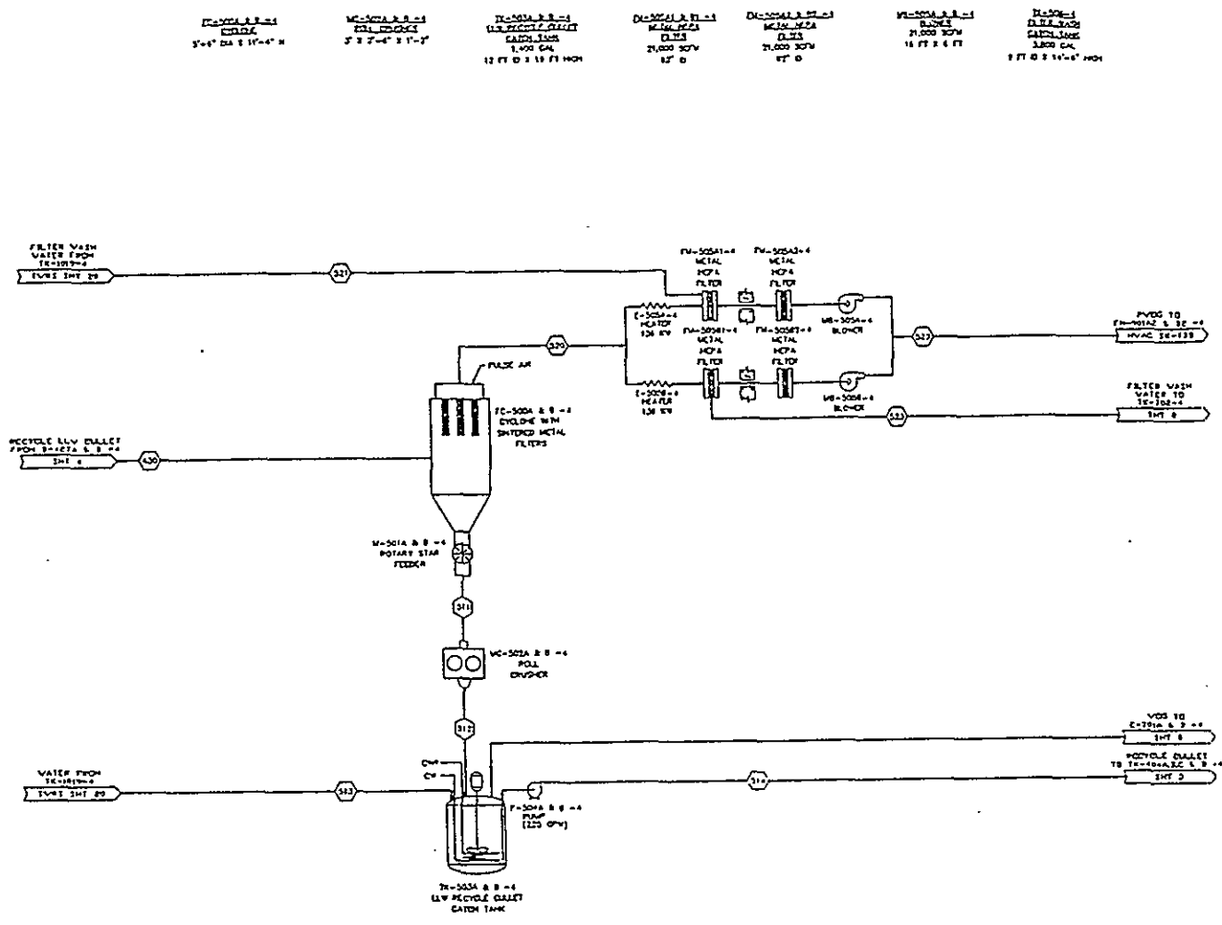

U.S.DEPARTMENT OF ENERGY	
FLUOR DANIEL, INC. ADVANCED TECHNOLOGY DIVISION	
PROCESS FLOW DIAGRAM PRETREATMENT- 200 T/D LLV COMBINATION	
IES-DP4C-400	5 1 8 A

Figure C-1. Pretreatment/Low-Level Waste Process Flow Diagram. (8 sheets)

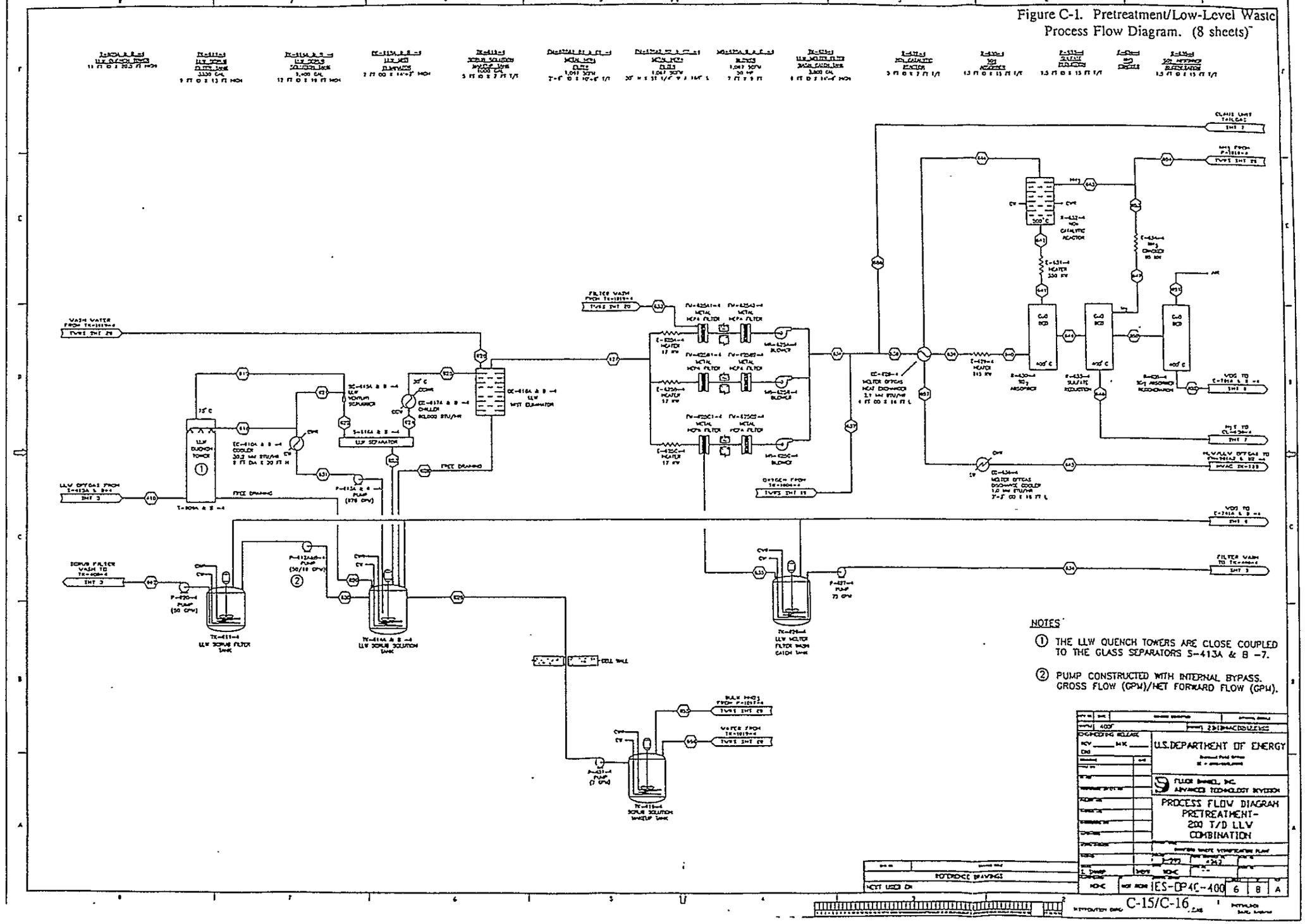

Figure C-1. Pretreatment/Low-Level Waste Process Flow Diagram. (8 sheets)

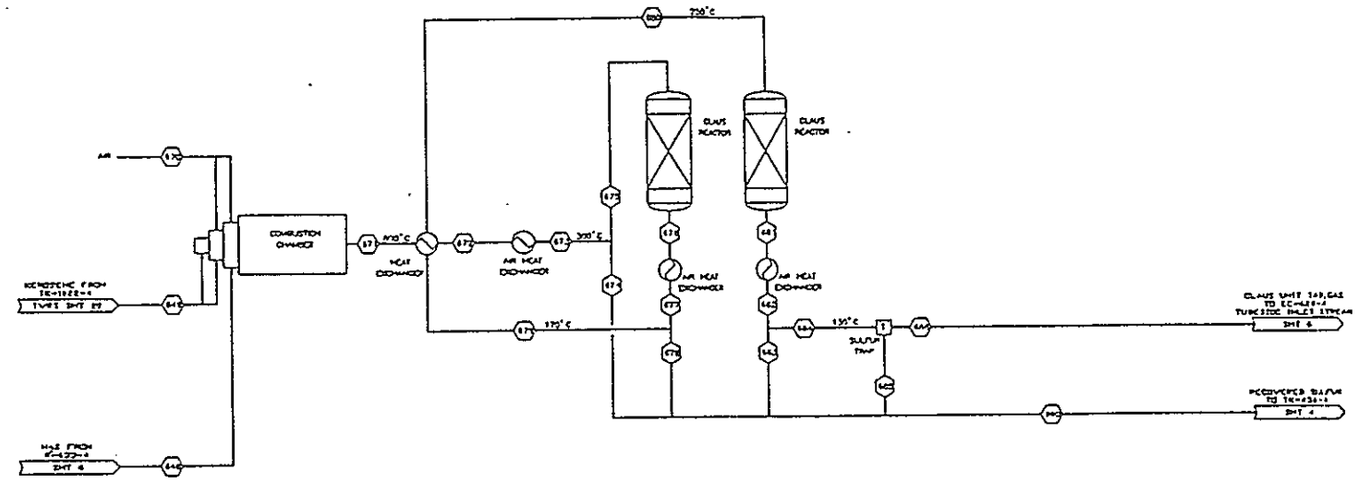

U.S. DEPARTMENT OF ENERGY

FLUOR DANIEL, INC.
ADVANCED TECHNOLOGY DIVISION

PROCESS FLOW DIAGRAM
PRETREATMENT-
200 T/D LLV
COMBINATION

ES-DP4C-400 | 7 | 8 | A

Figure C-1. Pretreatment/Low-Level Waste Process Flow Diagram. (8 sheets)

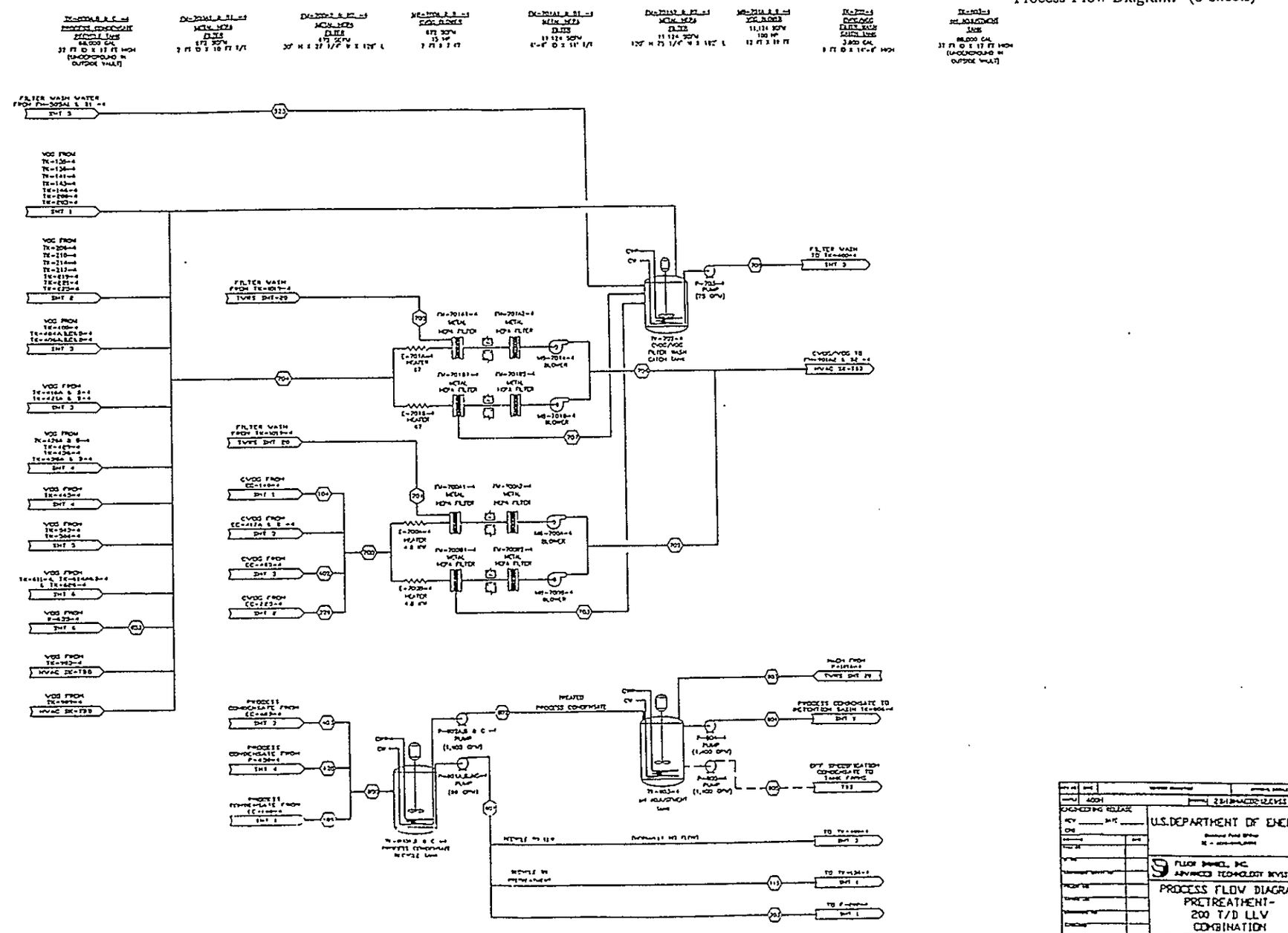

Table C-1. Pretreatment/Low-Level Waste Mass Balance--Liquid and Solid Streams. (9 sheets)

Stream number	WHC mass balance						Fluor mass balance						SI units	
	Liquid phase (MT)	Solid phase (MT)	Total stream (MT)	Phase	Overall factor	Total water (MT)	Dissolved solids (%)	Suspended solids (%)	Total solids (%)	Total stream (lb/hr)	Specific gravity	Total stream (gpm)	Total stream (Kg/hr)	Total stream (l/min)
Shaded numbers in bold print italics are back calculated by fluor and may not agree with WHC mass balance														
100	7.92e+05	7.97e+01	7.92e+05	L	4.593e-02	5.61e+05	29.2	0.0	29.2	36380	1.23	59.11	16501	223.75
101	7.92e+05	7.97e+01	7.92e+05	L	4.593e-02	5.61e+05	29.2	0.0	29.2	36380	1.23	59.11	16501	223.75
102	7.92e+05	7.97e+01	7.92e+05	L	4.593e-02	5.61e+05	29.2	0.0	29.2	36380	1.23	59.11	16501	223.75
103	1.96e+05		1.96e+05	G/L	4.593e-02					9002			4083	
104				G	Included in material balance for gas streams									
105	1.94e+05		1.94e+05	L	4.593e-02	1.94e+05	0.0	0.0	0.0	8910	1.00	17.81	4042	67.41
106	5.96e+05	7.97e+01	5.96e+05	L	4.593e-02	3.66e+05	38.6	0.0	38.6	27377	1.34	40.83	12418	154.56
107	5.96e+05	7.97e+01	5.96e+05	L	4.593e-02	3.66e+05	38.6	0.0	38.6	27377	1.34	40.83	12418	154.56
108														
109	2.19e-04		2.19e-04	L	4.593e-02	1.1e-04	49.8	0.0	49.8	1.0e-05	1.54	1.3e-08	4.6e-06	4.9e-08
110	2.19e-04		2.19e-04	L	4.593e-02	1.1e-04	49.8	0.0	49.8	1.0e-05	1.59	1.3e-08	4.6e-06	4.8e-08
111	5.96e+05	7.97e+01	5.96e+05	L	4.593e-02	3.66e+05	38.6	0.0	38.6	27377	1.34	40.83	12418	154.56
112	4.38e-04		4.38e-04	L	4.593e-02	2.2e-04	50.0	0.0	50.0	2.0e-05	1.56	2.6e-08	9.1e-06	9.8e-08
113	4.38e-04		4.38e-04	L	4.593e-02	2.2e-04	50.0	0.0	50.0	2.0e-05	1.56	2.6e-08	9.1e-06	9.8e-08
114	4.38e-04		4.38e-04	L	4.593e-02	2.2e-04	50.0	0.0	50.0	2.0e-05	1.56	2.6e-08	9.1e-06	9.8e-08
115	N/A									N/A				
116	2.19e-05		2.19e-05	L	4.593e-02	1.10e-05	49.8	0.0	49.8	1.0e-06	1.54	1.3e-09	4.6e-07	4.9e-09
117		1.10e-04	1.10e-04	S	4.593e-02					5.1e-06			2.3e-06	
118	1.10e-04		1.10e-04	L	4.593e-02	1.10e-04	0.0	0.0	0.0	5.1e-06	1.00	1.0e-08	2.3e-06	3.8e-08
200	5.96e+05	7.97e+01	5.96e+05	L	4.593e-02	3.66e+05	38.6	0.0	38.6	27377	1.34	40.83	12418	154.56
201	5.96e+05	7.97e+01	5.96e+05	L	4.593e-02	3.66e+05	38.6	0.0	38.6	27377	1.34	40.83	12418	154.56
202		5.35e+01	5.35e+01	S	4.593e-02					2.5			1.1	
203	2.19e+03		2.19e+03	L	4.593e-02	2.19e+03	0.0	0.0	0.0	101	1.00	0.20	46	0.76
204	2.49e+03	1.32e+02	2.62e+03	S/L	4.593e-02	2.38e+03	4.2	5.0	9.2	120	1.03	0.22	55	0.85
205	5.96e+05	7.97e-01	5.96e+05	L	4.593e-02	3.66e+05	38.6	0.0	38.6	27374	1.34	40.83	12416	154.55
206	2.49e+03	1.32e+02	2.62e+03	S/L	4.593e-02	2.38e+03	4.2	5.0	9.2	120	1.03	0.22	55	0.85
207	5.96e+05	7.97e-01	5.96e+05	L	4.593e-02	3.66e+05	38.6	0.0	38.6	27374	1.34	40.83	12416	154.55
208	4.68e+04		4.68e+04	L	4.593e-02	4.68e+04	0.0	0.0	0.0	2149	1.00	4.30	975	16.26
209	4.68e+04		4.68e+04	L	4.593e-02	4.68e+04	0.0	0.0	0.0	2149	1.00	4.30	975	16.26

Table C-1. Pretreatment/Low-Level Waste Mass Balance--Liquid and Solid Streams. (9 sheets)

Stream number	WHC mass balance						Fluor mass balance						SI units	
	Liquid phase (MT)	Solid phase (MT)	Total stream (MT)	Phase	Overall factor	Total water (MT)	Dissolved solids (%)	Suspended solids (%)	Total solids (%)	Total stream (lb/hr)	Specific gravity	Total stream (gpm)	Total stream (Kg/hr)	Total stream (l/min)
210	2.01e+05		2.01e+05	L	4.593e-02	2.00e+05	0.5	0.0	0.5	9232	1.00	18.45	4187	69.84
211	2.01e+05		2.01e+05	L	4.593e-02	2.00e+05	0.5	0.0	0.5	9232	1.01	18.27	4187	69.15
212	1.92e+05		1.92e+05	L	4.593e-02	1.88e+05	2.1	0.0	2.1	8818	1.01	17.45	4000	66.06
213	1.92e+05		1.92e+05	L	4.593e-02	1.88e+05	2.1	0.0	2.1	8818	1.01	17.45	4000	66.06
214	9.35e+04		9.35e+04	L	4.593e-02	9.35e+04	0.0	0.0	0.0	4294	1.00	8.58	1948	32.49
215	2.34e+04		2.34e+04	L	4.593e-02	2.34e+04	0.0	0.0	0.0	1075	1.00	2.15	487	8.13
216	7.01e+04		7.01e+04	L	4.593e-02	7.01e+04	0.0	0.0	0.0	3220	1.00	6.44	1460	24.36
217	2.37e+04		2.37e+04	L	4.593e-02	2.32e+04	2.1	0.0	2.1	1089	1.01	2.15	494	8.15
218	2.36e+04		2.36e+04	L	4.593e-02	2.32e+04	1.7	0.0	1.7	1084	1.02	2.12	492	8.04
219	4.94e+04		4.94e+04	L	4.593e-02	4.57e+04	7.5	0.0	7.5	2269	1.06	4.28	1029	16.19
220	4.90e+04		4.90e+04	L	4.593e-02	4.57e+04	6.7	0.0	6.7	2251	1.07	4.20	1021	15.91
221	2.34e+04		2.34e+04	L	4.593e-02	2.34e+04	0.0	0.0	0.0	1075	1.00	2.15	487	8.13
222	2.34e+04		2.34e+04	L	4.593e-02	2.34e+04	0.0	0.0	0.0	1075	1.00	2.15	487	8.13
223	2.15e+05		2.15e+05	L	4.593e-02	2.12e+04	90.1	0.0	90.1	9875	1.01	19.54	4479	73.97
224	N/A									N/A				
225	2.12e+05		2.12e+05	G/L	4.593e-02	2.09e+05				9737			4417	
226				G		Included in "material balance for gas streams"								
227	2.09e+05		2.09e+05	L	4.593e-02	2.07e+05	1.0	0.0	1.0	9599	1.01	19.00	4354	71.90
228	3.77e+03		3.77e+03	L	4.593e-02	2.12e+03	43.8	0.0	43.8	173	1.31	0.26	79	1.00
229	1.12e+03		1.12e+03	L	4.593e-02	5.59e+02	50.1	0.0	50.1	51	1.54	0.07	23	0.25
230	4.89e+03		4.89e+03	L	4.593e-02	2.93e+03	40.1	0.0	40.1	225	1.32	0.34	102	1.29
231	2.19e+03		2.19e+03	L	4.593e-02	1.31e+03	40.2	0.0	40.2	101	1.32	0.15	46	0.58
232	1.01e+06	7.97e-01	1.01e+06	L	4.593e-02	7.76e+05	23.2	0.0	23.2	46388	1.18	78.58	21041	297.42
233	1.01e+06	7.97e-01	1.01e+06	L	4.593e-02	7.76e+05	23.2	0.0	23.2	46388	1.18	78.58	21041	297.42
236	2.97e+03		2.97e+03	L	4.593e-02	1.28e+03	56.9	0.0	56.9	136	1.39	0.20	62	0.74
237	1.35e+03		1.35e+03	L	4.593e-02	3.02e+02	77.6	0.0	77.6	62	1.62	0.08	28	0.29
238	N/A									N/A				
239	N/A									N/A				
240	1.79e+05		1.79e+05	L	4.593e-02	1.79e+05	0.0	0.0	0.0	8221	1.00	16.43	3729	62.20
241	N/A									N/A				

Table C-1. Pretreatment/Low-Level Waste Mass Balance--Liquid and Solid Streams. (9 sheets)

Stream number	WHC mass balance						Fluor mass balance						SI units	
	Liquid phase (MT)	Solid phase (MT)	Total stream (MT)	Phase	Overall factor	Total water (MT)	Dissolved solids (%)	Suspended solids (%)	Total solids (%)	Total stream (lb/hr)	Specific gravity	Total stream (gpm)	Total stream (Kg/hr)	Total stream (l/min)
242	4.20e+04		4.20e+04	L	4.593e-02	4.20e+04	0.0	0.0	0.0	1929	1.00	3.86	875	14.59
243	2.28e+04		2.28e+04	L	4.593e-02	2.28e+04	0.0	0.0	0.0	1047	1.00	2.09	475	7.92
244	N/A									N/A				
246	7.40e+03		7.40e+03	L	4.593e-02	3.70e+03	50.0	0.0	50.0	340	1.54	0.44	154	1.67
247	9.48e+02		9.48e+02	L	4.593e-02	4.74e+02	50.0	0.0	50.0	44	1.54	0.06	20	0.21
248	N/A									N/A				
249	N/A									N/A				
250	N/A									N/A				
251	N/A									N/A				
400	1.51e+06	8.68e+03	1.52e+06	L	4.593e-02	1.27e+06	15.8	0.6	16.4	69752	1.11	125.05	31639	473.32
401	1.03e+06		1.03e+06	G/L	4.593e-02	1.03e+06				47307			21458	
402				G		Included in "material balance for gas streams"								
403	1.02e+06		1.02e+06	L	4.593e-02	1.02e+06	0.0	0.0	0.0	46848	1.00	93.64	21250	354.43
404	4.76e+05	8.68e+03	4.85e+05	S/L	4.593e-02	2.40e+05	48.7	1.8	50.5	22261	1.47	29.89	10097	113.14
405	4.96e+05	1.27e+04	5.09e+05	S/L	4.593e-02	2.60e+05	46.4	2.5	48.9	23364	1.45	31.64	10598	119.77
406	4.96e+05	1.27e+04	5.09e+05	S/L	4.593e-02	2.60e+05	46.4	2.5	48.9	23364	1.45	31.64	10598	119.77
407		2.86e+05	2.86e+05	S	4.593e-02					13136			5958	
408	6.07e+04		6.07e+04	L	4.593e-02					2788	1.00	7.14	1265	27.04
409				G		Included in "material balance for gas streams"								
410				G		Included in "material balance for gas streams"								
411		4.09e+05	4.09e+05	S	4.593e-02					18785			8521	
412				G		Included in "material balance for gas streams"								
413	8.08e+04		8.08e+04	L	4.593e-02	8.08e+04	0.0	0.0	0.0	3711	1.00	7.42	1683	28.08
414	8.09e+06	4.09e+05	8.50e+06	S/L	4.593e-02	8.09e+06	0.0	4.8	4.8	390352	1.00	756.81	177060	2864.54
415	8.17e+06	4.09e+05	8.58e+06	S/L	4.593e-02	8.17e+06	0.0	4.8	4.8	394026	1.00	764.16	178726	2892.33
416	4.90e+04		4.90e+04	L	4.593e-02	4.90e+04	0.0	0.0	0.0	2251	1.00	4.50	1021	17.03
417	8.90e+03	4.05e+05	4.14e+05	S	4.593e-02	8.90e+03				19010			8623	
418	8.21e+06	4.09e+03	8.21e+06	L	4.593e-02	8.21e+06	0.0	0.0	0.0	377266	1.00	753.85	171124	2853.34
419	4.09e+04	4.08e+03	4.50e+04	S/L	4.593e-02	4.09e+04	0.0	9.1	9.1	2066	1.00	3.90	937	14.74
420	8.17e+06	4.09e+00	8.17e+06	L	4.593e-02	8.17e+06	0.0	0.0	0.0	375241	1.00	750.04	170206	2838.91

Table C-1. Pretreatment/Low-Level Waste Mass Balance--Liquid and Solid Streams. (9 sheets)

Stream number	WHC mass balance						Fluor mass balance						SI units	
	Liquid phase (MT)	Solid phase (MT)	Total stream (MT)	Phase	Overall factor	Total water (MT)	Dissolved solids (%)	Suspended solids (%)	Total solids (%)	Total stream (lb/hr)	Specific gravity	Total stream (gpm)	Total stream (Kg/hr)	Total stream (l/min)
421	8.17e+06	4.09e+00	8.17e+06	L	4.593e-02	8.17e+06	0.0	0.0	0.0	375241	1.00	750.04	170206	2838.91
422	8.17e+06	4.09e+00	8.17e+06	L	4.593e-02	8.17e+06	0.0	0.0	0.0	375241	1.00	750.04	170206	2838.91
423				G		Included in "material balance for gas streams"								
424				G		Included in "material balance for gas streams"								
425	1.70e+06		1.70e+06	G/L	4.593e-02	2.68e+04				78080			35416	
426				G		Included in "material balance for gas streams"								
427	2.68e+04		2.68e+04	L	4.593e-02	2.68e+04	0.0	0.0	0.0	1231	1.00	2.46	558	9.31
428	2.68e+04		2.68e+04	L	4.593e-02	2.68e+04	0.0	0.0	0.0	1231	1.00	2.46	558	9.31
429				G		Included in "material balance for gas streams"								
430				G		Included in "material balance for gas streams"								
431				G		Included in "material balance for gas streams"								
432				G		Included in "material balance for gas streams"								
433	3.96e+02		3.96e+02	L	4.593e-02	3.96e+02	0.0	0.0	0.0	18	1.00	0.04	8	0.14
434				G		Included in "material balance for gas streams"								
435	3.96e+02	4.00e+00	4.00e+02	S/L	4.593e-02	3.96e+02	0.0	1.0	1.0	18	1.00	0.04	8	0.14
436	3.96e+02	4.00e+00	4.00e+02	S/L	4.593e-02	3.96e+02	0.0	1.0	1.0	18	1.00	0.04	8	0.14
437		4.00e+05	4.00e+05	S	4.593e-02					18372			8333	
438	4.07e+05	4.00e+01	4.07e+05	L	4.593e-02			0.0	0.0	18695	1.00	19.64	8480	74.36
439	4.07e+05	4.00e+05	8.07e+05	S/L	4.593e-02		50.4	49.6	100.0	37067	1.00	33.45	16813	126.61
440	4.07e+05	4.00e+05	8.07e+05	S/L	4.593e-02		50.4	49.6	100.0	37068	1.00	33.45	16814	126.61
441	6.93e+03	5.32e+05	5.39e+05	S/L	4.593e-02		1.3	98.7	100.0	24753			11228	
442	N/A													
443	2.65e+05	3.96e+01	2.65e+05	L	4.593e-02		100.0	0.0	100.0	12173	1.00	12.78	5522	48.36
444	2.65e+05	3.96e+01	2.65e+05	L	4.593e-02		100.0	0.0	100.0	12173	1.00	12.78	5522	48.36
445	1.37e+05		1.37e+05	L	4.593e-02		100.0	0.0	100.0	6292	1.00	6.62	2854	25.05
446	1.30e+05		1.30e+05	L	4.593e-02		100.0	0.0	100.0	5971	1.00	6.09	2708	23.05
447	5.73e+02		5.73e+02	L	4.593e-02		100.0	0.0	100.0	26	1.00	0.03	12	0.10
448	3.43e+03		3.43e+03	L	4.593e-02		100.0	0.0	100.0	158	1.00	0.39	71	1.48
449	3.43e+03		3.43e+03	L	4.593e-02		100.0	0.0	100.0	158	1.00	0.39	71	1.48
450	1.37e+05		1.37e+05	L	4.593e-02		100.0	0.0	100.0	6292	1.00	6.62	2854	25.05

Table C-1. Pretreatment/Low-Level Waste Mass Balance--Liquid and Solid Streams. (9 sheets)

Stream number	WHC mass balance						Fluor mass balance						SI units	
	Liquid phase (MT)	Solid phase (MT)	Total stream (MT)	Phase	Overall factor	Total water (MT)	Dissolved solids (%)	Suspended solids (%)	Total solids (%)	Total stream (lb/hr)	Specific gravity	Total stream (gpm)	Total stream (Kg/hr)	Total stream (l/min)
511		3.99e+03	3.99e+03	S	4.593e-02					183			83	
512		3.99e+03	3.99e+03	S	4.593e-02					183			83	
513	2.00e+04		2.00e+04	L	4.593e-02	2.00e+04	0.0	0.0	0.0	919	1.00	1.84	417	6.95
514	2.00e+04	3.99e+03	2.40e+04	S/L	4.593e-02	2.00e+04	0.0	16.6	16.6	1102	1.00	1.97	500	7.47
520				G		Included in "material balance for gas streams"								
521	4.18e+00		4.18e+00	L	4.593e-02	4.18e+00	0.0	0.0	0.0	0	1.00	0.00	0	0.00
522				G		Included in "material balance for gas streams"								
523	4.18e+00	0.00	4.18e+00	L	4.593e-02	4.18e+00	0.0	0.0	0.0	0	1.00	0.00	0	0.00
618	1.79e+07	2.04e+02	1.79e+07	L	4.593e-02	1.79e+07	0.0	0.0	0.0	822141	1.00	1643	372915	6219.95
619				G		Included in "material balance for gas streams"								
620	1.82e+07	4.12e+03	1.82e+07	L	4.593e-02	1.82e+07	0.0	0.0	0.0	837937	1.00	1675	380080	6339.45
621	1.26e+06	1.44e+01	1.26e+06	L	4.593e-02	1.26e+06	0.0	0.0	0.0	57871	1.00	115.67	26250	437.83
622	1.52e+06	2.25e+02	1.52e+06	L/G	4.593e-02	1.52e+06				69823			31671	
623	1.28e+06	2.09e+02	1.28e+06	L	4.593e-02	1.28e+06	0.0	0.0	0.0	58799	1.00	117.53	26671	444.85
624				G		Included in "material balance for gas streams"								
625				G		Included in "material balance for gas streams"								
626	N/A													
627				G		Included in "material balance for gas streams"								
628	1.35e+03	1.61e+01	1.37e+03	L	4.593e-02	1.35e+03	0.0	1.2	1.2	63	1.00	0.13	28	0.47
629	N/A												0	0.00
630	4.10e+05	4.13e+03	4.14e+05	L	4.593e-02	4.10e+05	0.0	1.0	1.0	19021	1.00	38.02	8628	143.90
631	1.91e+07	2.18e+02	1.91e+07	L	4.593e-02	1.91e+07	0.0	0.0	0.0	877257	1.00	1753	397915	6636.93
633	2.19e-10		2.19e-10	L	4.593e-02	2.19e-10	0.0	0.0	0.0	1.0e-11	1.00	2.0e-14	4.6e-12	7.6e-14
634				G		Included in "material balance for gas streams"								
635	2.19e-10	3.19e-01	3.19e-01	S/L	4.593e-02	2.19e-10	0.0	100.0	100.0	1.5e-02	1.00	1.1e-05	6.6e-03	4.2e-05
636	2.19e-10	3.19e-01	3.19e-01	S/L	4.593e-02	2.19e-10	0.0	100.0	100.0	1.5e-02	1.00	1.1e-05	6.6e-03	4.2e-05
637				G		Included in "material balance for gas streams"								
638				G		Included in "material balance for gas streams"								
639				G		Included in "material balance for gas streams"								
640				G		Included in "material balance for gas streams"								

Table C-1. Pretreatment/Low-Level Waste Mass Balance--Liquid and Solid Streams. (9 sheets)

Stream number	WHC mass balance						Fluor mass balance						SI units	
	Liquid phase (MT)	Solid phase (MT)	Total stream (MT)	Phase	Overall factor	Total water (MT)	Dissolved solids (%)	Suspended solids (%)	Total solids (%)	Total stream (lb/hr)	Specific gravity	Total stream (gpm)	Total stream (Kg/hr)	Total stream (l/min)
641				G		Included in "material balance for gas streams"								
642				G		Included in "material balance for gas streams"								
643				G		Included in "material balance for gas streams"								
644				G		Included in "material balance for gas streams"								
645				G		Included in "material balance for gas streams"								
646		4.65e+03	4.65e+03	S	4.593e-02					214			97	
647				G		Included in "material balance for gas streams"								
648				G		Included in "material balance for gas streams"								
649	N/A									N/A				
650				G		Included in "material balance for gas streams"								
651				G		Included in "material balance for gas streams"								
652				G		Included in "material balance for gas streams"								
653				G		Included in "material balance for gas streams"								
654				G		Included in "material balance for gas streams"								
655	N/A													
656	N/A													
657				G		Included in "material balance for gas streams"								
670	N/A									N/A				
671	N/A									N/A				
672	N/A									N/A				
673	N/A									N/A				
674	N/A									N/A				
675	N/A									N/A				
676	N/A									N/A				
677	N/A									N/A				
678	N/A									N/A				
679	N/A									N/A				
680	N/A									N/A				
681	N/A									N/A				
682	N/A									N/A				

Table C-1. Pretreatment/Low-Level Waste Mass Balance--Liquid and Solid Streams. (9 sheets)

Stream number	WHC mass balance						Fluor mass balance						SI units	
	Liquid phase (MT)	Solid phase (MT)	Total stream (MT)	Phase	Overall factor	Total water (MT)	Dissolved solids (%)	Suspended solids (%)	Total solids (%)	Total stream (lb/hr)	Specific gravity	Total stream (gpm)	Total stream (Kg/hr)	Total stream (l/min)
683	N/A									N/A				
684	N/A									N/A				
685	N/A									N/A				
686				G		Included in "material balance for gas streams"								
690	5.61e+02		5.61e+02	L	4.593e-02		100.0	0.0	100.0	26	1.00	0.03	12	0.10
692	4.10e+05	4.13e+03	4.14e+05	L	4.593e-02	4.10e+05	0.0	1.0	1.0	1.9e+04	1.00	38.02	8628	144
700				G		Included in "material balance for gas streams"								
701	2.19e-10		2.19e-10	L	4.593e-02	2.19e-10	0.0	0.0	0.0	1.0e-11	1.00	2.0e-14	4.6e-12	7.6e-14
702				G		Included in "material balance for gas streams"								
703	N/A									N/A				
704				G		Included in "material balance for gas streams"								
705	2.19e-10		2.19e-10	L	4.593e-02	2.19e-10	0.0	0.0	0.0	1.0e-11	1.00	2.0e-14	4.6e-12	7.6e-14
706				G		Included in "material balance for gas streams"								
707	N/A									N/A				
708	N/A									N/A				
800	1.24e+06		1.24e+06	L	4.593e-02	1.48e+06	-19.3	0.0	-19.3	56989	1.00	113.91	25850	431.15
801	2.19e+03		2.19e+03	L	4.593e-02	2.19e+03	0.0	0.0	0.0	101	1.00	0.20	46	0.76
802	1.24e+06		1.24e+06	L	4.593e-02	1.48e+06	-19.3	0.0	-19.3	56888	1.00	113.71	25804	430.39
803	N/A									N/A				
804	1.24e+06		1.24e+06	L	4.593e-02	1.48e+06	-19.3	0.0	-19.3	56888	1.00	113.71	25804	430.39
805	N/A									N/A				

Table C-2. Pretreatment/Low-Level Waste Mass Balance--Gas Streams. (7 sheets)

	Stream Number									
	104	226	402	409	410	412	423	424	425	426
	Description									
	CVOG from Evaporator EC-140	CVOG from Evaporator EC-223	CVOG from Evaporator EC-403	Oxygen to Melter EM-412A/B	MOG to Quench Tower T-609A/B	Vapor from Roll Crusher MC-415A/B	Incoming air to FP-431A1/B1	Incoming air to B-427A/B	Humid air to EC-428A/B	Dry air from EC-428A/B
G = gas, L = liquid, S = solid	G	G	G	G	G	G	G	G	G	G
Flow, lb/hr	499	499	499	9048	30483	3832	155773	155773	78043	76812
Molecular weight	27.63	27.63	27.63	32.00	22.98	18.16	28.81	28.81	28.73	29.01
Flow, SCFM	114	114	114	1789	8392	1335	34205	34205	17184	16750
Temperature, °F	120	120	120	-	2476	-	101	321	288	70
Pressure, PSIA	13.54	13.54	13.54	-	14.01	-	14.30	30.10	20.10	20.10
Water, lb/hr	40.7	40.7	40.7	0	18831	3752	1727	1727	1231	0
Solids, wt%	-	-	-	0	0.62	-	0	0	0.024	0.024
Flow, kg/hr	226	226	226	4104	13827	1738	70657	70657	35400	34841
Flow, std. m^3/Hr	194	194	194	3039	14257	2268	58114	58114	29197	28459
Temperature, °C	49	49	49	-	1358	-	38	161	142	21
Pressure, kPa	93	93	93	-	97	-	99	208	139	139
Water, kg/hr	18	18	18	0	8542	1702	783	783	558	0

Table C-2. Pretreatment/Low-Level Waste Mass Balance--Gas Streams. (7 sheets)

	Stream Number									
	Stream number									
	429	430	431	432	434	520	522	619	624	625
	Description									
	Product from B-427A/B	Recycle cullet to FC-500A/B	Product to FC-432A/B	Inlet to heater E-444A/B	Outlet from MB-444A/B	Inlet to heater E-505A/B	Outlet from blower MB-505A/B	MOG to venturi scrub SC-615A/B	MOG to chiller EC-617A/B	MOG to mist elimin DE-618A/B
G = gas, L = liquid, S = solid	G/S	G/S	G/S	G	G	G	G	G	G	G
Flow, lb/hr	96342	961	95381	77010	77009	776	776	12437	11536	11536
Molecular weight	28.80	28.80	28.80	28.80	28.80	28.80	28.80	37.15	40.43	40.43
Flow, SCFM	17086	170	16916	16916	16916	170	170	2118	1805	1805
Temperature, °F	288	288	288	288	438	288	442	167	109	86
Pressure, PSIA	20.10	20.10	20.10	20.10	26.10	20.10	26.10	14.01	14.01	13.51
Water, lb/hr	868	9	859	859	859	9	9	965	73	73
Solids, wt%	19.3	19.3	19.3	2.4e-04	1.2e-07	2.2e-04	1.1e-07	0.078	6.5e-03	6.5e-03
Flow, kg/hr	43700	436	43264	34931	34931	352	352	5641	5233	5233
Flow, std. m^3/hr	29030	290	28740	28740	28740	290	290	3598	3067	3067
Temperature, °C	142	142	142	142	226	142	228	75	43	30
Pressure, kPa	139	139	139	139	180	139	180	97	97	93
Water, kg/hr	394	4	390	390	390	4	4	438	33	33

Table C-2. Pretreatment/Low-Level Waste Mass Balance--Gas Streams. (7 sheets)

Stream Number										
Stream number	627	634	637	638	639	640	641	642	643	644
Description	MOG to heater E-625A/B/C	MOG to heat exchanger EC-628	Oxygen to MOG	MOG/TG to heat exchanger EC-628	MOG to heater E-629	MOG to SO2 absorber R-630	MOG to heater E-631	MOG to NOx reactor R-632	Ammonia to NOx reactor R-632	MOG to heat exchanger EC-628
G = gas, L = liquid, S = solid	G	G	G	G	G	G	G	G	G	G
Flow, lb/hr	11473	11473	31	11812	11812	11812	11726	11726	294	12019
Molecular weight	40.71	40.71	32.00	39.97	39.97	39.97	39.86	39.86	17.03	37.33
Flow, SCFM	1783	1783	6	1869	1869	1869	1861	1861	109	2037
Temperature, °F	86	189	-	192	752	752	752	932	-	932
Pressure, PSIA	12.79	17.06	-	17.06	16.56	16.56	15.91	15.91	-	15.26
Water, lb/hr	11	11	-	125.36	125.36	125.36	125.36	125.36	-	592
Solids, wt%	1.3e-04	6.4e-08	-	6.2e-08	6.2e-08	6.2e-08	6.2e-08	6.2e-08	-	6.1e-08
Flow, kg/hr	5204	5204	14	5358	5358	5358	5319	5319	133	5452
Flow, std. m^3/Hr	3029	3029	10	3176	3176	3176	3162	3162	186	3461
Temperature, °C	30	87	-	89	400	400	400	500	-	500
Pressure, kpa	88	118	-	118	114	114	110	110	-	105
Water, kg/hr	5	5	0	57	57	57	57	57	0	268

Table C-2. Pretreatment/Low-Level Waste Mass Balance--Gas Streams. (7 sheets)

	Stream Number									
	Stream number									
	645	647	648	650	651	652	653	654	657	670
	Description									
	MOG to HVAC	Hydrogen to sul. red. R-633	H2S to claus unit CL-650	Gas to SO2 abs. regen. R-635	Air to SO2 abs. regen. R-635	SO2 absorption regeneration to VOG	Ammonia to cracker E-634	Ammonia to sulfur reduction & reactor	MOG to discharge cooler EC-636	Air to claus unit CL-650
G = gas, L = liquid, S = solid	G	G	G	G	G	G	G	G	G	G
Flow, lb/hr	12019	77	142	64	6508	6555	78	371	12019	193
Molecular weight	37.33	8.55	21.23	27.24	29.00	28.99	17.03	17.03	37.33	29.00
Flow, SCFM	2037	57	42	15	1420	1430	29	138	2037	42
Temperature, °F	150	-	-	-	-	-	-	-	426	-
Pressure, PSIA	14.26	-	-	-	-	-	-	-	14.76	-
Water, lb/hr	592	-	96	-	-	-	-	-	592	-
Solids, wt%	6.1e-08	-	-	-	-	-	-	-	6.3e-08	-
Flow, kg/hr	5452	35	64	29	2952	2973	35	168	5452	
Flow, std. m^3/hr	3461	97	72	25	2412	2430	49	234	3461	
Temperature, °C	66	-	-	-	-	-	-	-	219	
Pressure, kPa	98	-	-	-	-	-	-	-	102	
Water, kg/hr	268	0	44	0	0	0	0	0	268	

Table C-2. Pretreatment/Low-Level Waste Mass Balance--Gas Streams. (7 sheets)

Stream Number					
Stream number					
	686	700	702	704	706
Description					
	Claus tail gas recycle	CVOG to heater E-700A/B	CVOG to HVAC	VOG to heater E-701A/B	VOG to HVAC
G = gas, L = liquid, S = solid	G	G	G	G	G
Flow, lb/hr	309	1671	1671	22559	22559
Molecular weight	24.63	27.63	27.63	28.26	28.26
Flow, SCFM	79	383	383	5050	5050
Temperature, °F	266	120	169	100	131
Pressure, PSIA	-	13.54	14.26	14.08	14.26
Water, lb/hr	121	136	136	970	970
Solids, wt%	-	-	-	-	-
Flow, kg/hr	140	758	758	10233	10233
Flow, std. m^3/hr	135	650	650	8580	8580
Temperature, °C	130	49	76	38	55
Pressure, kPa	-	93	98	97	98
Water, kg/hr	55	62	62	440	"

Figure C-2. High-Level Waste Process Flow Diagram. (6 sheets)

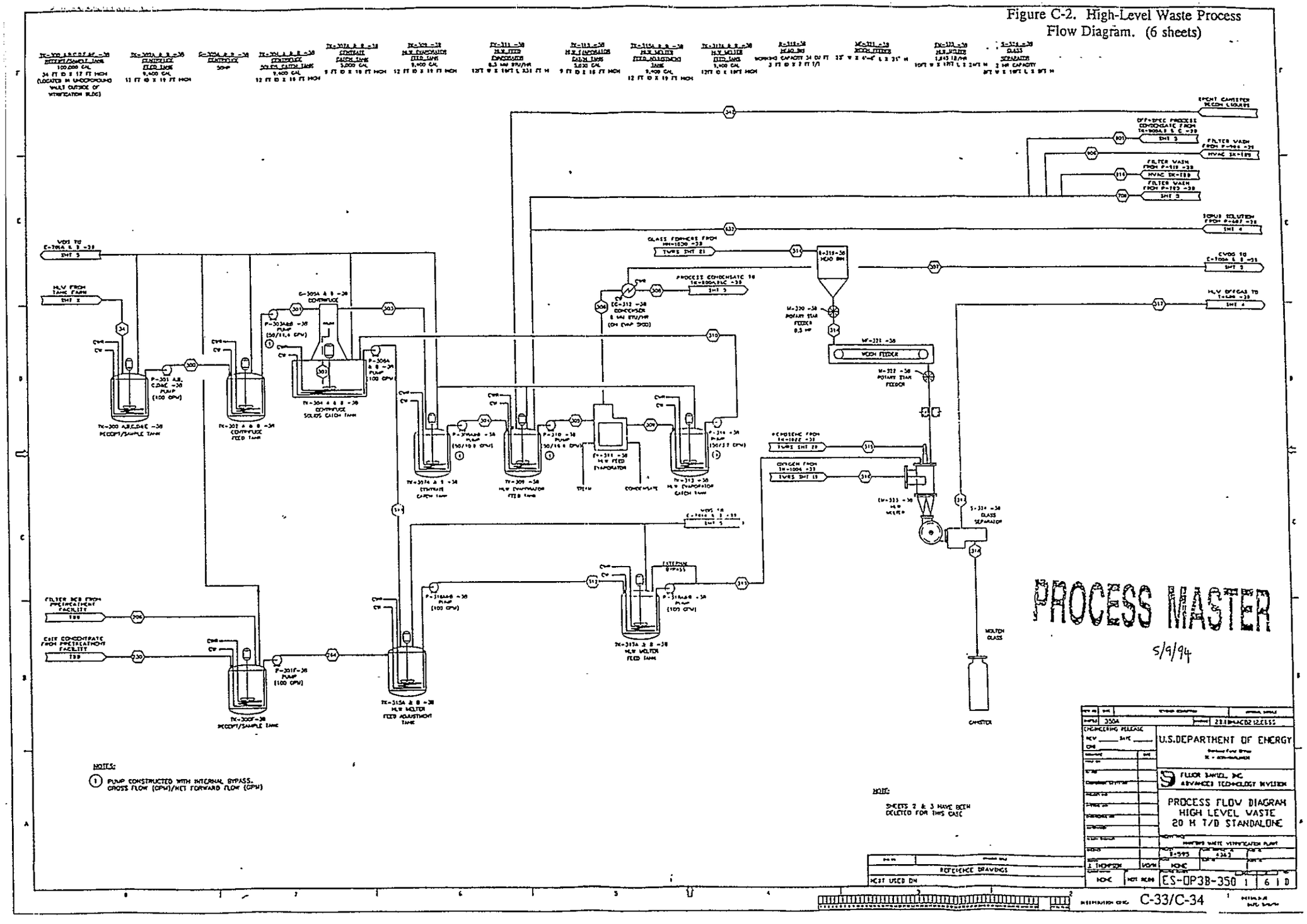

Figure C-2. High-Level Waste Process Flow Diagram. (6 sheets)

PROCESS MASTER

5/9/94

NOTE:

THIS SHEET INTENTIONALLY LEFT BLANK

U.S.DEPARTMENT OF ENERGY

FLUOR DANIEL, INC
ADVANCED TECHNOLOGY DIVISION

PROCESS FLOW DIAGRAM
HIGH LEVEL WASTE
20 H T/D STANDALONE

REFERENCE DRAWINGS

NEXT USED ON

J. THOMPSON

ES-DP3B-350 2 6 D

Figure C-2. High-Level Waste Process Flow Diagram. (6 sheets)

PROCESS MASTER

5/9/94

NOTE:

THIS SHEET INTENTIONALLY LEFT BLANK

REFERENCE DRAWINGS

NEXT USED ON

U.S.DEPARTMENT OF ENERGY

FLUOR DANIEL, INC.
ADVANCED TECHNOLOGY DIVISION

PROCESS FLOW DIAGRAM
HIGH LEVEL WASTE
20 M T/D STANDALONE

ES-OP3B-350 3 6 1 0

Figure C-2. High-Level Waste Process Flow Diagram. (6 sheets)

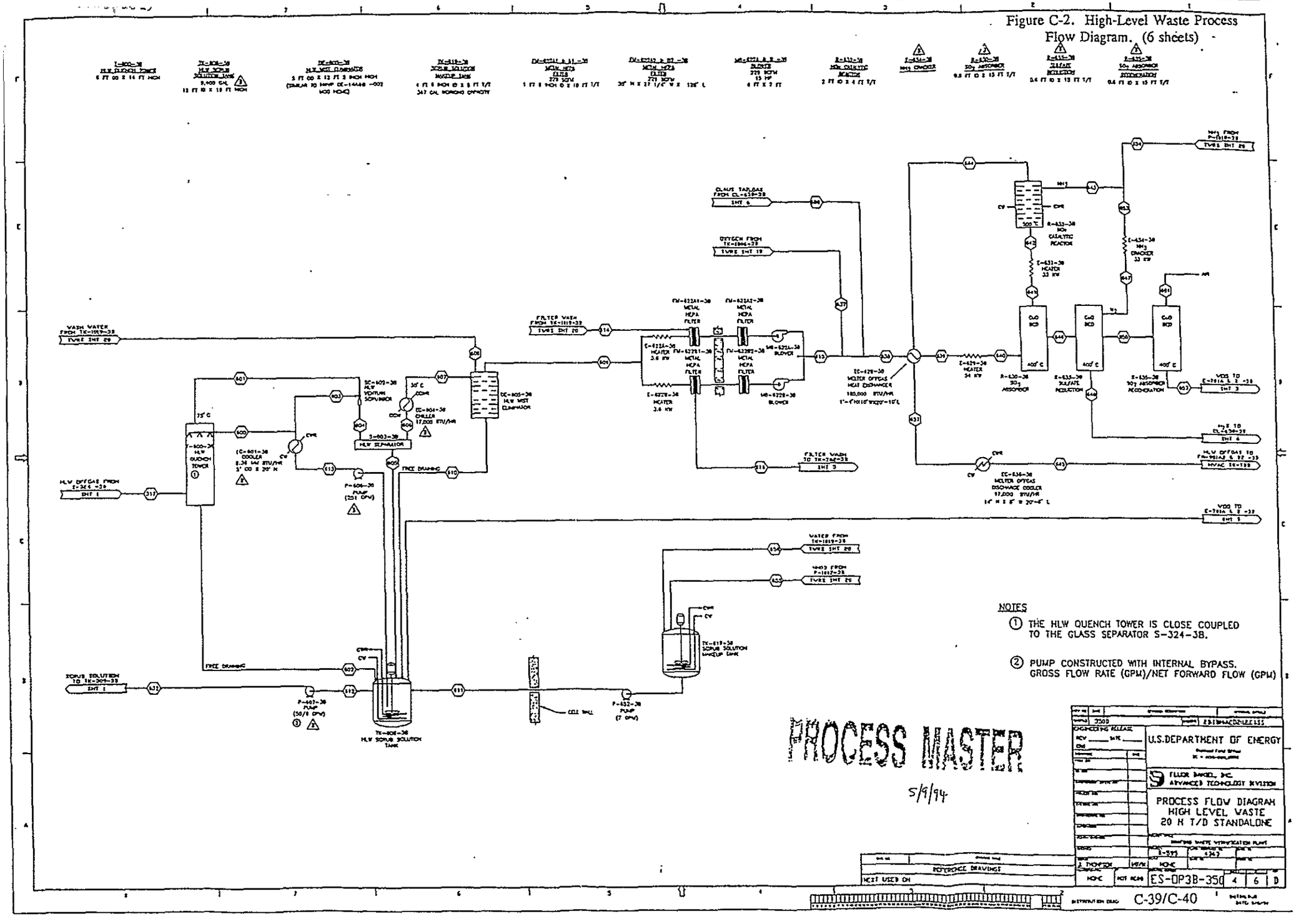

Figure C-2. High-Level Waste Process Flow Diagram. (6 sheets)

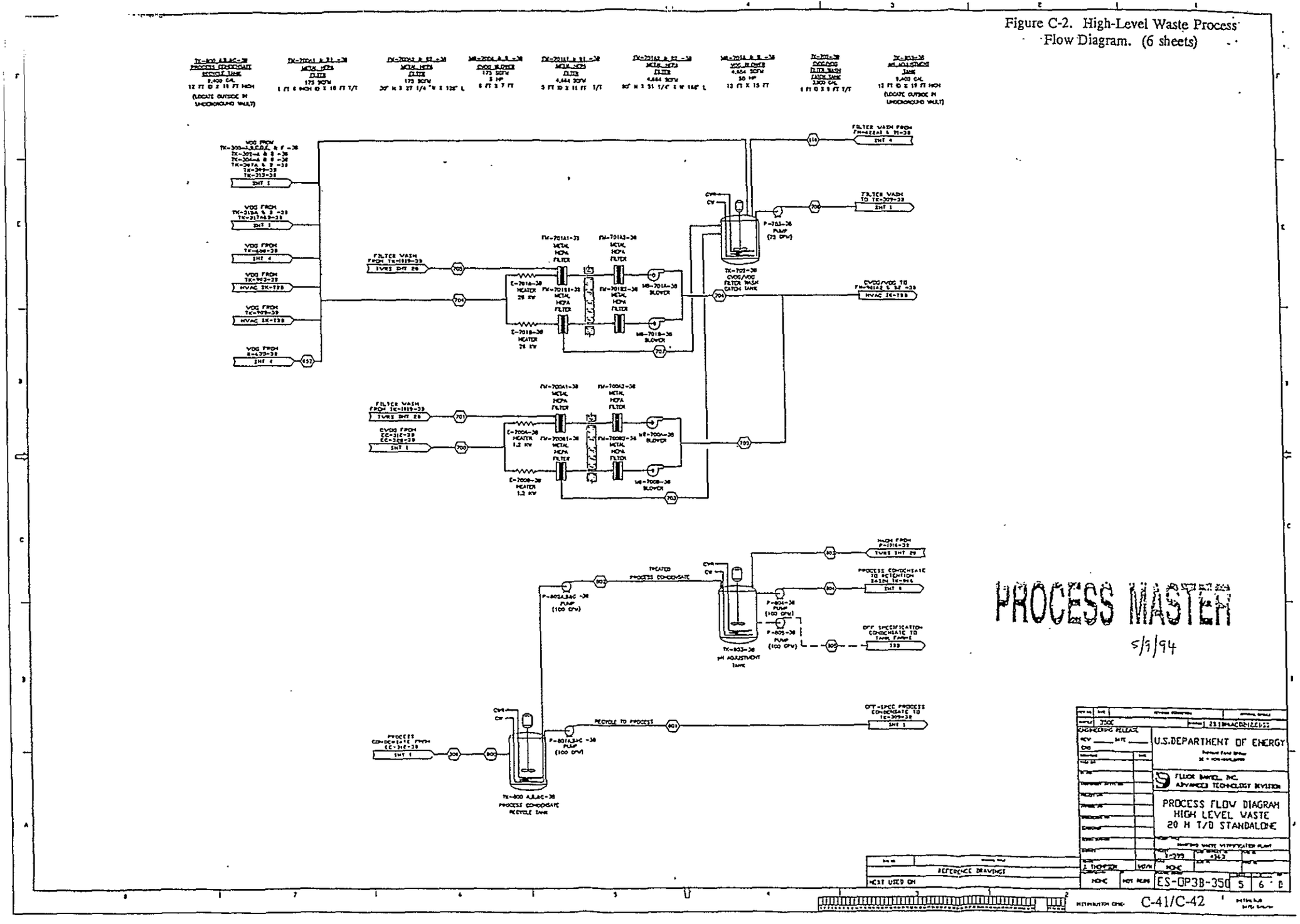

Figure C-2. High-Level Waste Process Flow Diagram. (6 sheets)

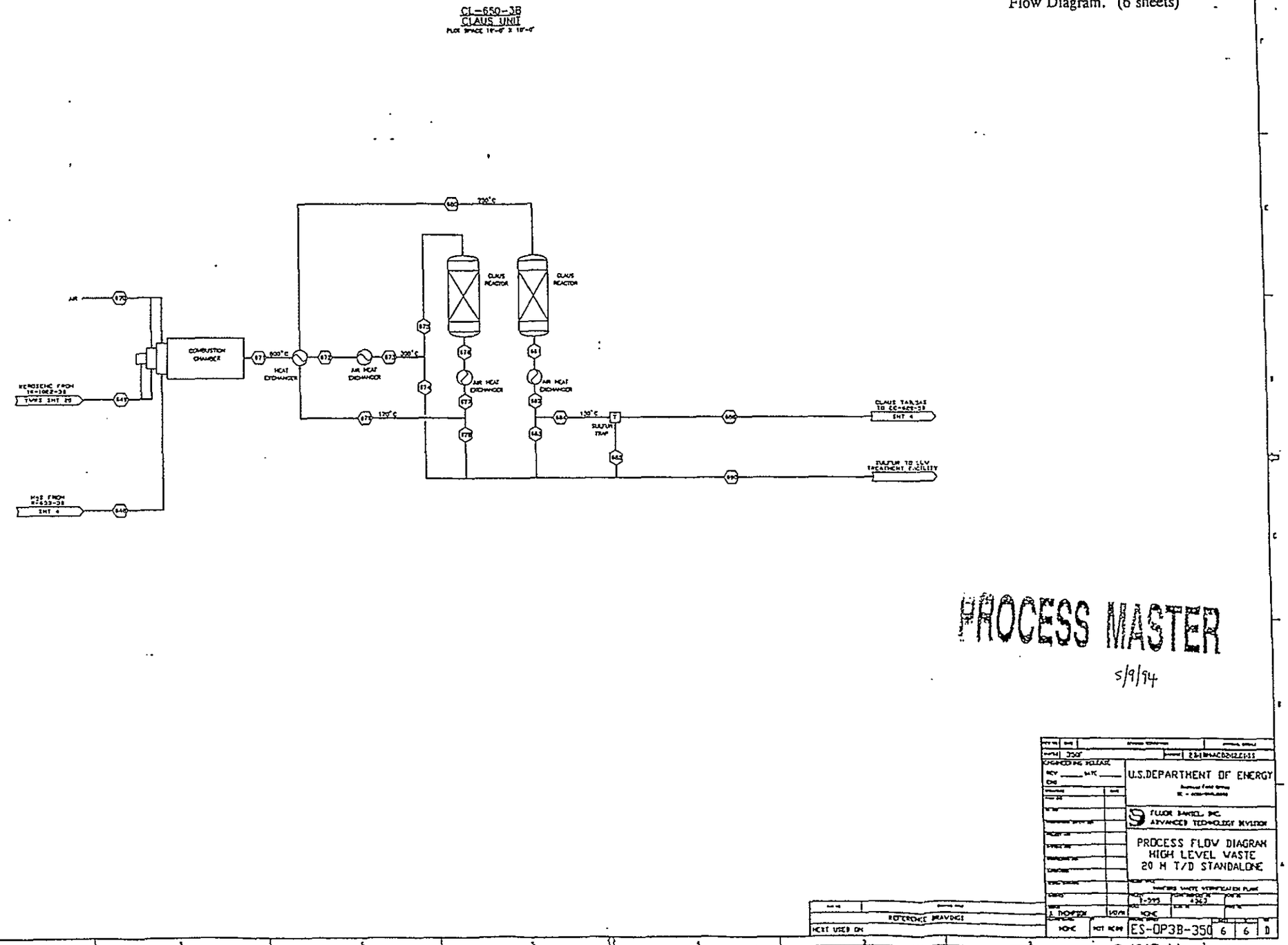

Table C-3. High-Level Waste Mass Balance--Solid and Liquid Streams. (3 sheets)

Stream number	WHC mass balance					Fluor mass Balance						SI units	
	Liquid phase (MT)	Solid phase (MT)	Total stream (MT)	Overall factor	Total water (MT)	Dissolved solids (%)	Suspended solids (%)	Total solids (%)	Total stream (lb/hr)	Specific gravity	Total stream (gpm)	Total stream (kg/hr)	Total stream (l/min)
		= numbers in shaded area are back calculated by fluor and may not agree with whc mass balance											
34	1.97e+05	1.73e+04	2.14e+05	2.83e-02	1.93e+05	1.87	8.07	9.9	6066	1.066	11.37	2752	43.05
115	N/A												
203	N/A		0.00		2.19e+03				0	1.000	0.00	0	0.00
206	N/A		0.00						0	1.073	0.00	0	0.00
264	3.49e+03		3.49e+03		1.96e+03	43.84		43.8	99	1.310	0.15	45	0.57
300	1.97e+05	1.71e+04	2.14e+05		1.93e+05	1.87	7.99	9.9	6061	1.066	11.36	2749	43.01
301	1.97e+05	1.71e+04	2.14e+05		1.93e+05	1.87	7.99	9.9	6061	1.066	11.35	2749	42.97
302	2.05e+03	1.69e+04	1.90e+04		2.02e+03				536			243	
303	1.95e+05	1.95e+02	1.95e+05		1.91e+05	2.05	0.10	2.1	5526	1.014	10.89	2506	41.23
304	1.95e+05	1.95e+02	1.95e+05		1.91e+05	2.05	0.10	2.1	5526	1.014	10.89	2506	41.23
305	2.98e+05	8.63e+02	2.99e+05		2.94e+05	1.34	0.29	1.6	8460	1.012	16.71	3837	63.25
306	2.36e+05		2.36e+05		2.36e+05				6681	1.000	13.35	3030	50.54
308	2.33e+05		2.33e+05		2.33e+05				6596	1.000	13.18	2992	49.90
309	6.21e+04	9.16e+02	6.30e+04		5.87e+04	5.40	1.45	6.8	1784	1.050	3.40	809	12.85
310	6.21e+04	9.16e+02	6.30e+04		5.87e+04	5.40	1.45	6.8	1784	1.050	3.40	809	12.85
311	6.41e+04	1.80e+04	8.21e+04		6.08e+04	4.02	21.92	25.9	2324	1.211	3.84	1054	14.52
312	7.73e+04	1.93e+04	9.66e+04		7.24e+04	5.07	19.98	25.1	2735	1.197	4.57	1240	17.28
313	7.73e+04	1.93e+04	9.66e+04		7.24e+04	5.07	19.98	25.1	2735	1.197	4.57	1240	17.28
314		4.82e+04	4.82e+04						1364			619	
315	9.41e+03		9.41e+03						266	0.815	0.65	121	2.47
318		6.49e+04	6.49e+04						1837			833	
600	4.00e+06	1.73e+01	4.00e+06		4.00e+06		0.00	0.0	113231	1.000	226.33	51360	856.66

Table C-3. High-Level Waste Mass Balance--Solid and Liquid Streams. (3 sheets)

Stream number	WHC mass balance					Fluor mass Balance						SI units	
	Liquid phase (MT)	Solid phase (MT)	Total stream (MT)	Overall factor	Total water (MT)	Dissolved solids (%)	Suspended solids (%)	Total solids (%)	Total stream (lb/hr)	Specific gravity	Total stream (gpm)	Total stream (kg/hr)	Total stream (l/min)
602	4.09e+06	6.39e+02	4.09e+06		4.09e+06		0.02	0.02	115796	1.000	231.46	52524	876.06
603	4.23e+05	1.73e+01	4.23e+05		4.23e+05		0.00	0.0	11975	1.000	23.94	5432	90.59
604	4.28e+05	5.09e+01	4.70e+05	<- incl MOG	4.28e+05				13307			6036	
605	4.27e+05	4.83e+01	4.27e+05		4.27e+05		0.01	0.0	12089	1.000	24.16	5483	91.46
608	N/A								0				
610	3.18e+02	2.51e+00	3.21e+02		3.18e+02		0.78	0.8	9	1.007	0.02	4	0.07
611	N/A								0				
612	9.65e+04	6.56e+02	9.72e+04		9.65e+04		0.68	0.7	2750	1.006	5.46	1247	20.68
613	4.42e+06	3.45e+01	4.42e+06		4.42e+06		0.00	0.0	125121	1.000	250.09	56754	946.61
614	N/A								0				
616	N/A	5.08e-02	5.08e-02						0				
632	9.65e+04	6.56e+02	9.72e+04		9.65e+04		0.68	0.7	2750	1.006	5.46	1247	20.68
646		9.54e+01	9.54e+01						2.7			1.2	
655	N/A								0				
656	N/A								0				
690	1.87e+01								0.53	1.800	0.00	0.24	0.00
701	2.190e-10		2.19e-10		2.19e-10				0				
703	N/A								0				
705	2.190e-10		2.19e-10		2.19e-10				0				
707	N/A								0				
708	N/A								0				
800	2.35e+05	N/A			2.35e+05				0	1.000	0.00	0	0.00
801	3.10e+02	N/A			3.10e+02				0	1.000	0.00	0	0.00

Table C-3. High-Level Waste Mass Balance--Solid and Liquid Streams. (3 sheets)

Stream number	WHC mass balance					Fluor mass Balance						SI units	
	Liquid phase (MT)	Solid phase (MT)	Total stream (MT)	Overall factor	Total water (MT)	Dissolved solids (%)	Suspended solids (%)	Total solids (%)	Total stream (lb/hr)	Specific gravity	Total stream (gpm)	Total stream (kg/hr)	Total stream (l/min)
802	2.35e+05	N/A			2.35e+05				0	1.000	0.00	0	0.00
803	0.00	N/A			0.00				0	1.000	0.00	0	0.00
804	2.35e+05	N/A			2.35e+05				0	1.000	0.00	0	0.00
805	0.00	N/A			0.00				0	1.000	0.00	0	0.00
906	3.40e-02	3.43e-04	3.43e-02		3.40e-02		1.00	1.0	0	1.007	0.00	0	0.00
916	6.36e+03	6.42e+01	6.42e+03		6.36e+03		1.00	1.0	182	1.007	0.36	82	1.37

Table C-4. High-Level Waste Mass Balance--Gas Streams. (4 sheets)

	Stream number									
	307	316	317	319	330	331	332	335	336	337
	Description									
	CVOG from evap. EC-312-3B	Oxygen to melter EM-323-3B	MOG to quench tower T-600-3B	Vapor from roll crusher MC-325-3B	Incoming air to B-338-3B	Humid air to EC-339-3B	Dry air from EC-339-3B	Product from B-338-3B	Recycle cullet to FC-500-3B	Product to FC-343-3B
G = gas, L = liquid, S = solid	G	G	G	G	G	G	G	G/S	G/S	G/S
Flow, lb/hr	499	1105	3908	455	15648	2381	2316	15170	152	15018
Molecular weight	27.63	32.00	21.60	19.31	28.76	28.49	28.95	28.75	28.75	28.75
Flow, SCFM	114	218	1145	149	3442	529	506	2930	29	2901
Temperature, °F	120	-	2476	-	321	297	85	244	244	244
Pressure, PSIA	13.54	-	14.01	-	30.10	20.10	20.10	20.10	20.10	20.10
Water, lb/hr	40.69	0	2717	375	174	65	0	154	2	152
Solids, wt%	-	0	0.49	-	0	0	0	12.24	12.24	12.24
Flow, kg/hr	226	501	1773	206	7098	1080	1051	6881	69	6812
Flow, std. m^3/hr	194	371	1945	253	5848	898	860	4977	49	4928
Temperature, °C	49	-	1358	-	161	147	29	118	118	118
Pressure, kPa	93	-	97	-	208	139	139	139	139	139
Water, kg/hr	18	0	1232	170	79	29	0	70	1	69

	Stream number									
	338	340	350	520	522	601	606	607	609	615
	Description									
	Inlet to heater E-347-3B	Outlet from MB-347-3B	Incoming air to FP-342-3B	Inlet to heater E-505-3B	Outlet from Blower MB-505-3B	MOG to venturi scrubber SC-602-3B	MOG to chiller EC-604-3B	MOG to mist eliminator DE-605-3B	MOG to heater E-622A/B-3B	MOG to heat exch EC-628-3B
G = gas, L = liquid, = solid	G	G	G	G	G	G	G	G	G	G
Flow, lb/hr	13182	13182	15648	133	133	1312	1182	1182	1173	1173
Molecular weight	28.75	28.75	28.76	28.75	28.75	34.68	38.53	38.53	38.87	38.87
Flow, SCFM	2901	2901	3442	29	29	239	194	194	191	191
Temperature, °F	297	447	101	297	444	167	102.4	86	86	228
Pressure, PSIA	20.10	26.10	14.30	20.10	26.10	14.01	14.01	13.51	12.79	17.06
Water, lb/hr	152	152	174	2	2	139	10.6	10.6	1.58	1.58
Solids, wt%	-	-	-	-	-	0.07	0.01	0.01	1.3e-04	6.27e-08
Flow, kg/hr	5979	5979	7098	60	60	595	536	536	532	532

Table C-4. High-Level Waste Mass Balance--Gas Streams. (4 sheets)

	Stream number									
	637	638	639	640	641	642	643	644	645	647
	Description									
	Oxygen to MOG	MOG/TG to heat exchanger EC-628-3B	MOG to heater E-629-3B	MOG to SO2 absorber R-630-3B	MOG to heater E-631-3B	MOG to NOx reactor R-632-3B	Ammonia to NOx reactor R-632-3B	MOG to heat exchanger EC-628-3B	MOG to HVAC	Hydrogen to sul. red. R-633-3B
G = gas, L = liquid, S = solid	G	G	G	G	G	G	G	G	G	G
Flow, lb/hr	0.55	1177	1177	1177	1176	1176	7.4	1183	1183	1.0
Molecular weight	32.00	38.78	38.78	38.78	38.77	38.77	17.03	38.13	38.13	8.56
Flow, SCFM	0.11	192	192	192	192	192	3	196	196	7.32e-01
Temperature, °F	-	228	752	752	752	932	-	932	150	-
Pressure, PSIA	-	17.06	16.56	16.56	15.91	15.91	-	15.26	14.26	-
Water, lb/hr	-	3.11	3.11	3.11	3.11	3.11	-	14.8	14.8	-
Solids, wt%	-	6.24e-08	6.24e-08	6.24e-08	6.25e-08	6.25e-08	-	6.213e-08	6.21e-08	-
Flow, kg/hr	0.2	534	534	534	534	534	3.3	537	537	0.4
Flow, std. m^3/hr	0.2	326	326	326	326	326	5	334	334	1
Temperature, °C	-	109	400	400	400	500	-	500	66	-
Pressure, kPa	-	118	114	114	110	110	-	105	98	-
Water, kg/hr	0	1	1	1	1	1	0	7	7	0

Table C-4. High-Level Waste Mass Balance--Gas Streams. (4 sheets)

	Stream number									
	648	650	651	652	653	654	657	686	700	702
	Description									
	H2S to claus unit CL-650-3B	Gas to SO2 Abs. Regen. R-635-3B	Air to SO2 Abs. Regen. R-635-3B	SO2 Abs. Regen. to VOG	Ammonia to cracker E-634-3B	Ammonia to Sul. Red. & Reactor	MOG to discharge cooler EC-636-3B	Claus tail gas recycle	CVOG to heater E-700A/B-3B	CVOG to HVAC
G = gas, L = liquid, S = solid	G	G	G	G	G	G	G	G	G	G
Flow, lb/hr	1.8	0.8	2.3	2.9	1.0	8.4	1183	3.6	586	586
Molecular weight	21.23	27.06	28.85	28.06	17.03	17.03	38.13	22.95	27.63	27.63
Flow, SCFM	5.39e-01	1.91e-01	5.15e-01	6.52e-01	3.68e-01	3	196	9.96e-01	134	134
Temperature, °F	-	-	-	-	-	-	436	266	120	180
Pressure, PSIA	-	-	-	-	-	-	14.76	-	13.54	14.26
Water, lb/hr	1.23	-	-	-	-	-	14.8	1.53	47.79	47.79
Solids, wt%	-	-	-	-	-	-	6.21e-08	-	-	-
Flow, kg/hr	0.8	0.4	1.1	1.3	0.4	3.8	537	1.6	266	266
Flow, std. m^3/hr	1	0	1	1	1	5	334	2	228	228
Temperature, °C	-	-	-	-	-	-	224	130	49	82
Pressure, kPa	-	-	-	-	-	-	102	-	93	98
Water, kg/hr	1	0	0	0	0	0	7	1	22	22

Table C-4. High-Level Waste Mass Balance--Gas Streams. (4 sheets)

	Stream number		
	704	706	
	Description		
	VOG to heater B-701A/B-3B	VOG to HVAC	
G = gas, L = liquid, S = solid	G	G	
Flow, lb/hr	16093	16093	
Molecular weight	28.26	28.26	
Flow, SCFM	3602	3602	
Temperature, °F	100	130	
Pressure, PSIA	14.08	14.26	
Water, lbs/hr	692	692	
Solids, wt%	-	-	
Flow, kg/hr	7300	7300	
Flow, std. m^3/hr	6121	6121	
Temperature, °C	38	54	
Pressure, kPa	97	98	
Water, kg/hr	314	14	

This page intentionally left blank.

APPENDIX D

FACILITY LAYOUTS

This page intentionally left blank.

APPENDIX D

FACILITY LAYOUTS

This appendix contains additional cutaway view of the facilities, plus the view included in Section 7.0.

This page intentionally left blank.

Figure D-1 Pretreatment/Low-Level Waste Facility Layout. (7 sheets)

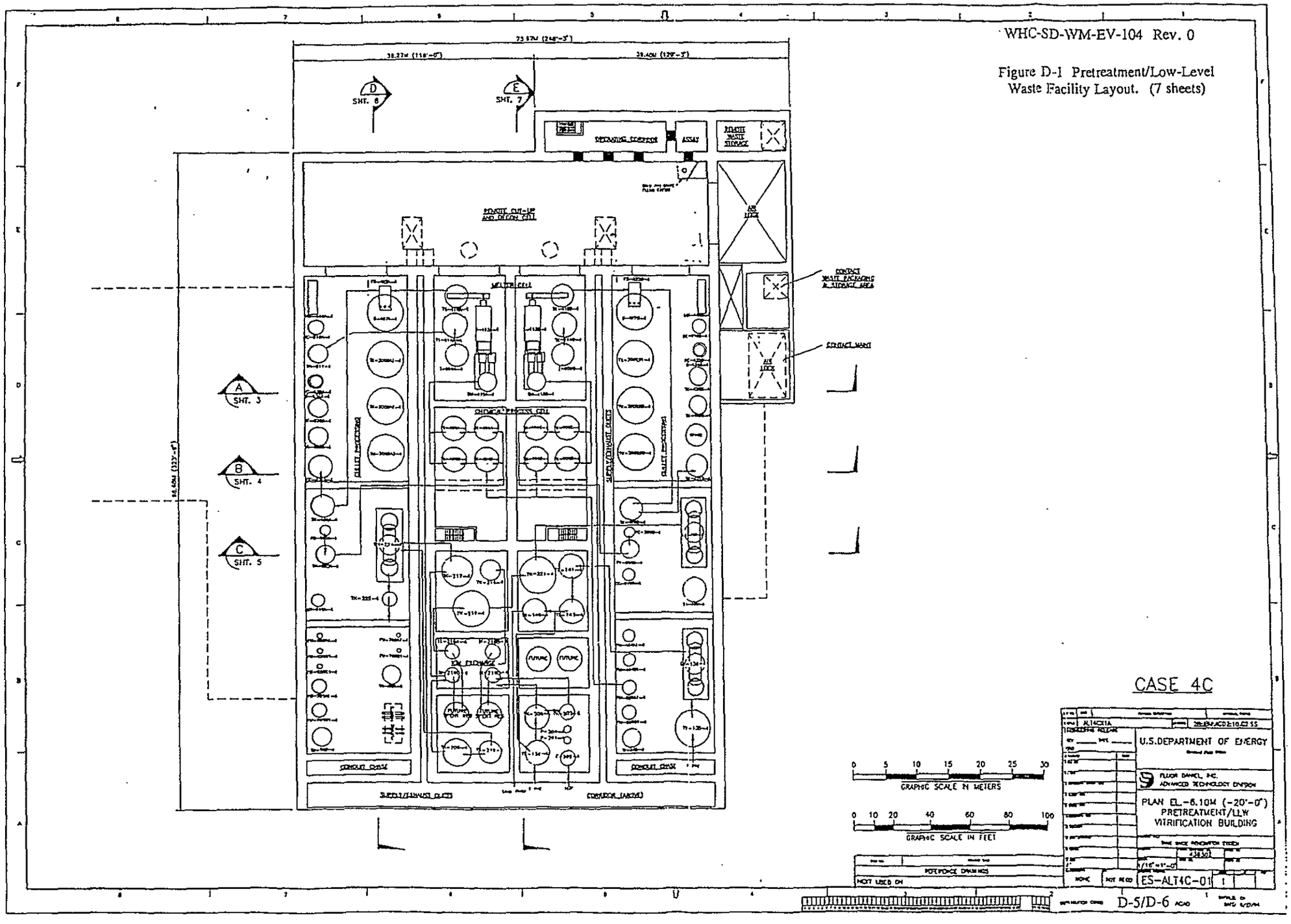

Figure D-1 Pretreatment/Low-Level Waste Facility Layout. (7 sheets)

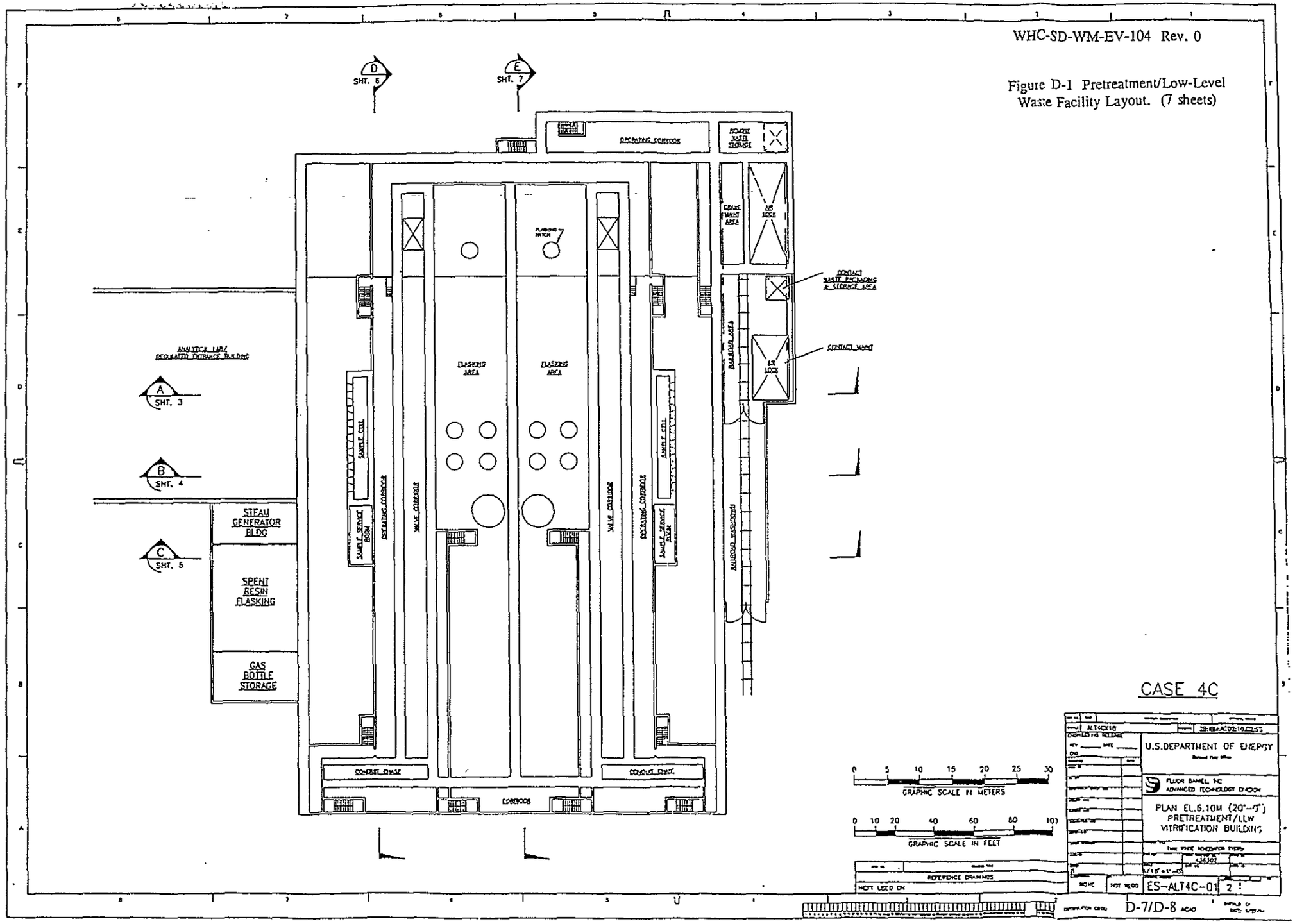

Figure D-1 Pretreatment/Low-Level Waste Facility Layout. (7 sheets)

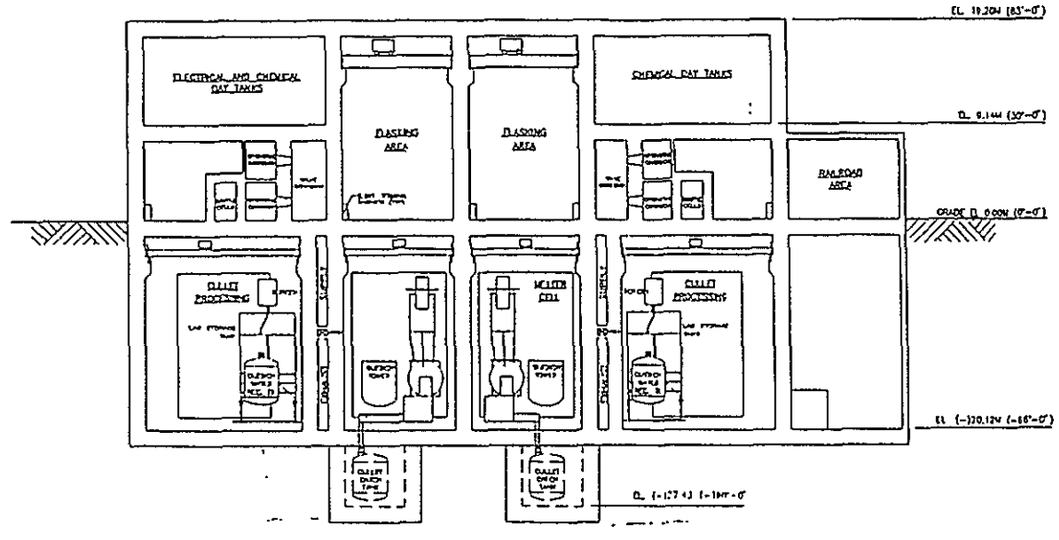

CASE 4C

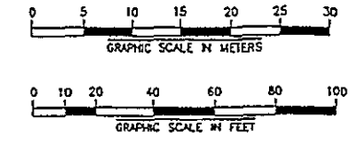

U.S.DEPARTMENT OF ENERGY

FLUOR DANIEL INC
ADVANCED TECHNOLOGY DIVISION

SECTION A
PRETREATMENT/LLW
VITRIFICATION BUILDING

ES-ALT4C-01 3

D-9/D-10

Figure D-1 Pretreatment/Low-Level Waste Facility Layout. (7 sheets)

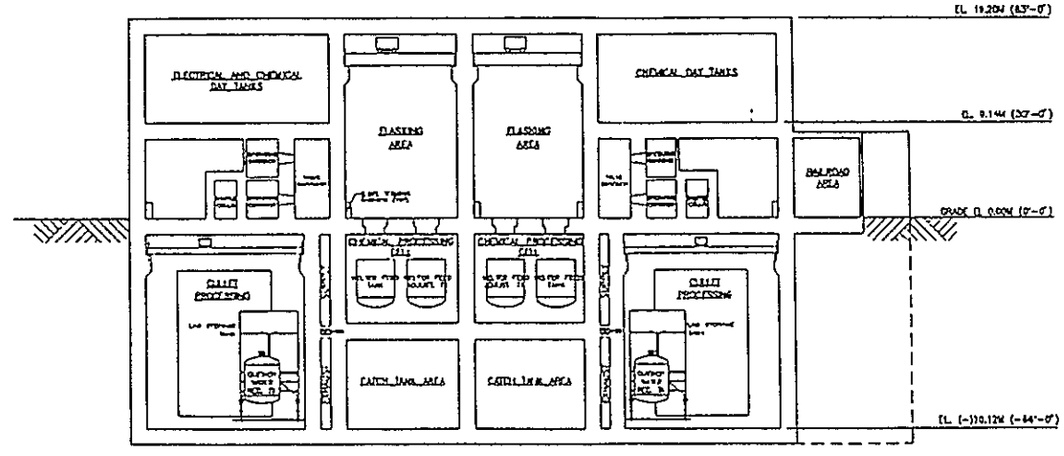

SECTION B
SHTS 1 & 2

CASE 4C

0 5 10 15 20 25 30
GRAPHIC SCALE IN METERS

0 10 20 40 60 80 100
GRAPHIC SCALE IN FEET

REFERENCE DRAWINGS
NOT USED ON

U.S. DEPARTMENT OF ENERGY

FLUOR DANIEL, INC.
ADVANCED TECHNOLOGY DIVISION

SECTION B
PRETREATMENT/LLW
VITRIFICATION BUILDING

ES-ALT4C-01 4

Figure D-1 Pretreatment/Low-Level Waste Facility Layout. (7 sheets)

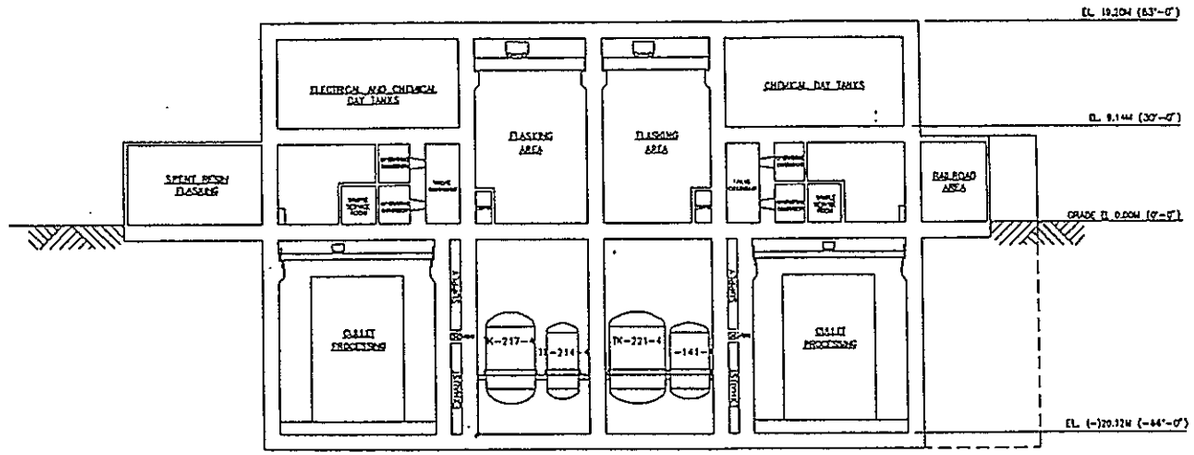

SECTION C
SHTS 1 & 2

CASE 4C

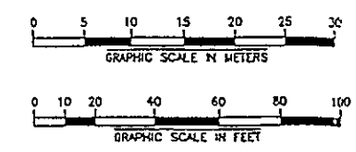

REFERENCE DRAWINGS
NOT USED ON

U.S. DEPARTMENT OF ENERGY

FLUOR DANIEL INC.
ADVANCED TECHNOLOGY DIVISION

SECTION C
PRETREATMENT/LLW
VITRIFICATION BUILDING

ES-ALT4C-01 5

D-13/D-14

Figure D-1 Pretreatment/Low-Level Waste Facility Layout. (7 sheets)

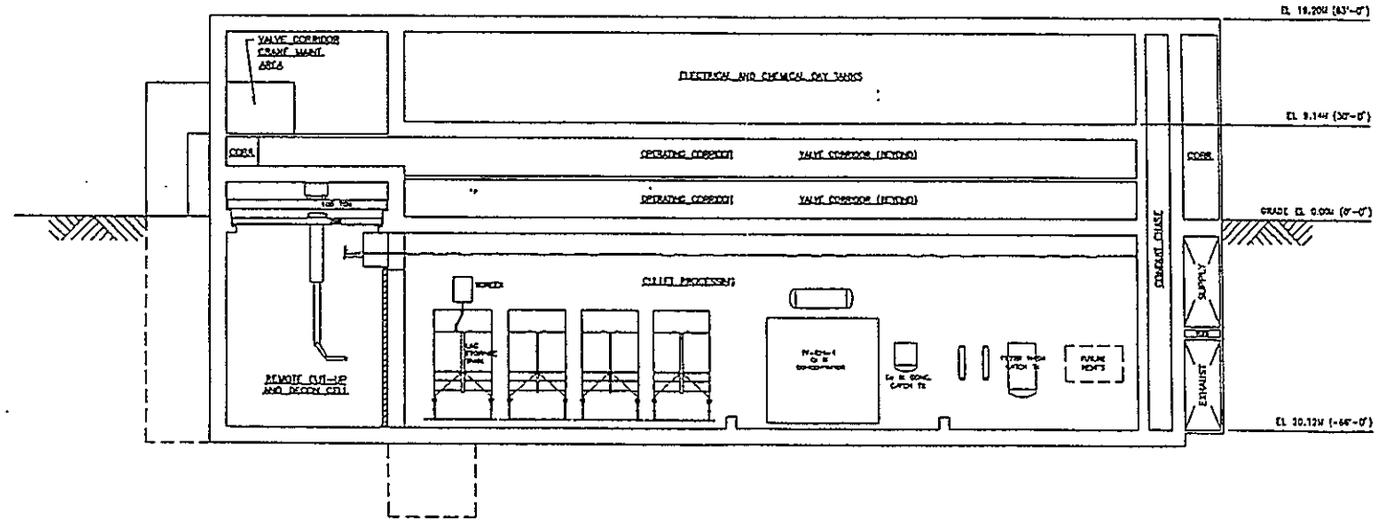

SECTION D
SHTS 1 & 2

CASE 4C

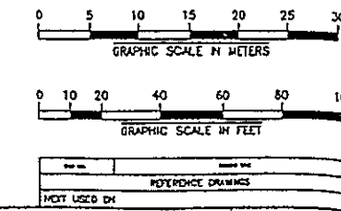

REFERENCE DRAWINGS
NOT USED ON

U.S. DEPARTMENT OF ENERGY

FLUOR DANIEL INC
ADVANCED TECHNOLOGY DIVISION

SECTION D
PRETREATMENT/LLW
VITRIFICATION BUILDING

438507

1/16" = 1'-0"

NONE | NOT REQD | ES-ALT4C-01 | 6

Figure D-1 Pretreatment/Low-Level Waste Facility Layout. (7 sheets)

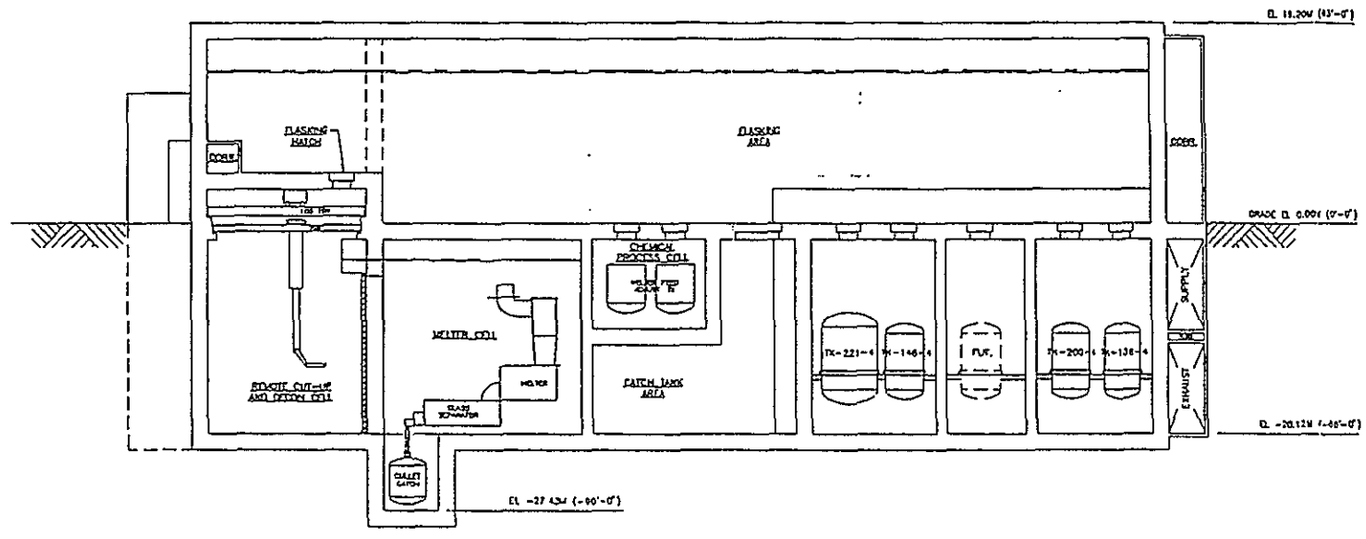

SECTION E
SHTS 1 & 2

CASE 4C

0 5 10 15 20 25 30
GRAPHIC SCALE IN METERS

0 10 20 40 60 80 100
GRAPHIC SCALE IN FEET

U.S. DEPARTMENT OF ENERGY

FLUOR DANIEL INC
ADVANCED TECHNOLOGY DIVISION

SECTION E
PRETREATMENT/LLW
VITRIFICATION BUILDING

1/16"=1'-0"

REFERENCE DRAWINGS
NOT USED ON
NONE
NOT REQD

ES-ALT4C-01

D-17/D-18

Figure D-2. High-Level Waste Process Facility Layout. (5 sheets)

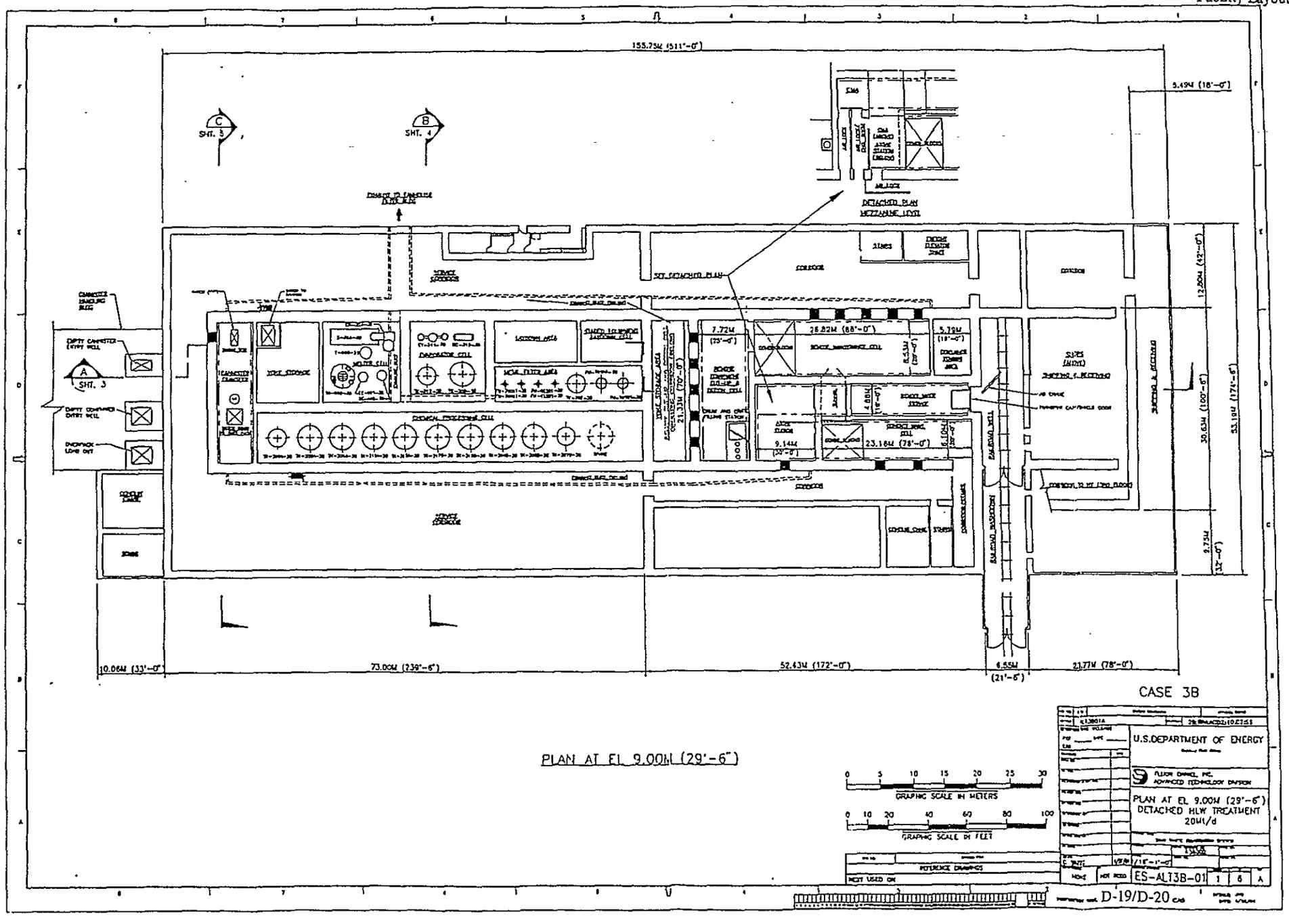

Figure D-2. High-Level Waste Process Facility Layout. (5 sheets)

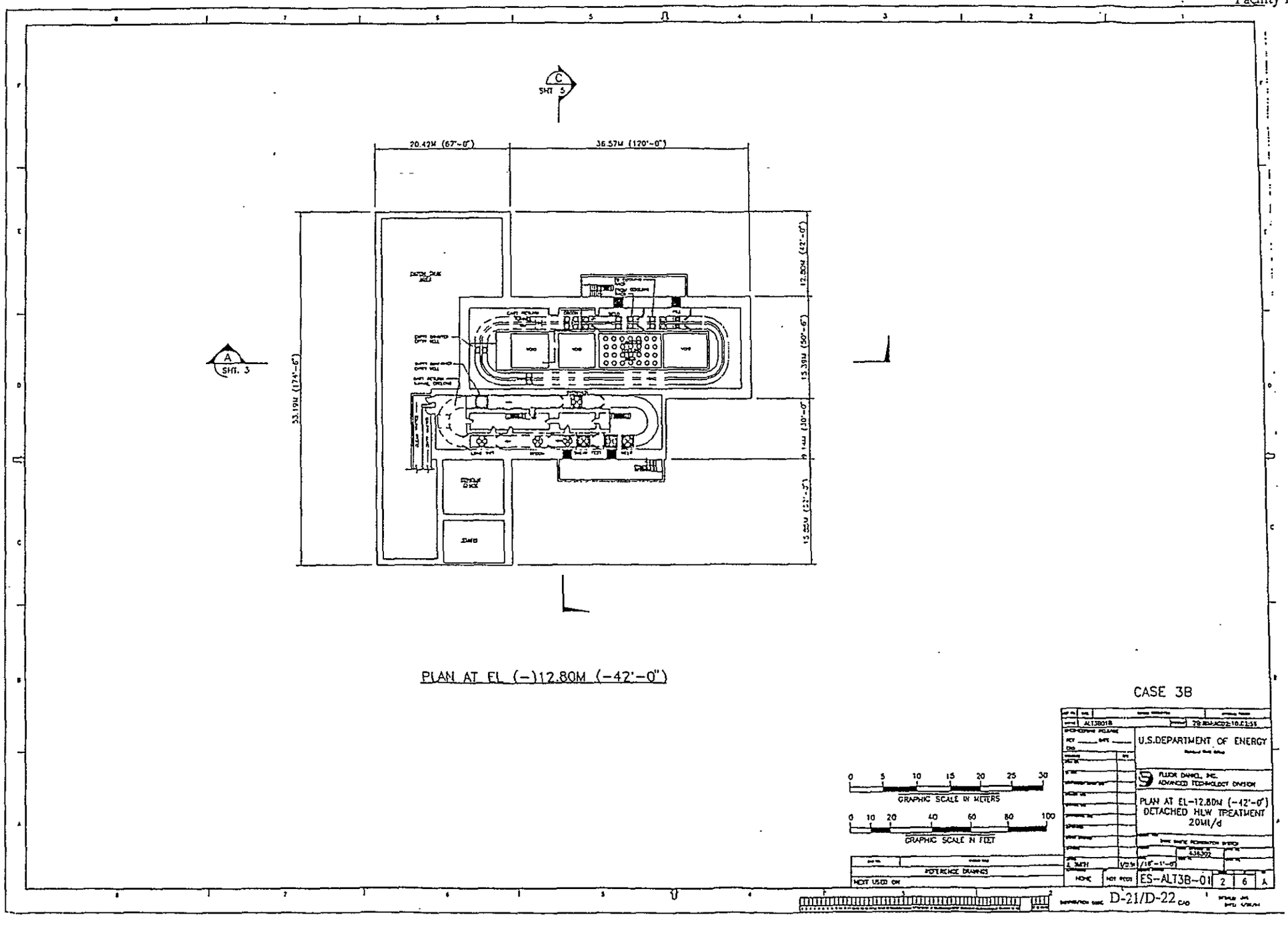

Figure D-2. High-Level Waste Process Facility Layout. (5 sheets)

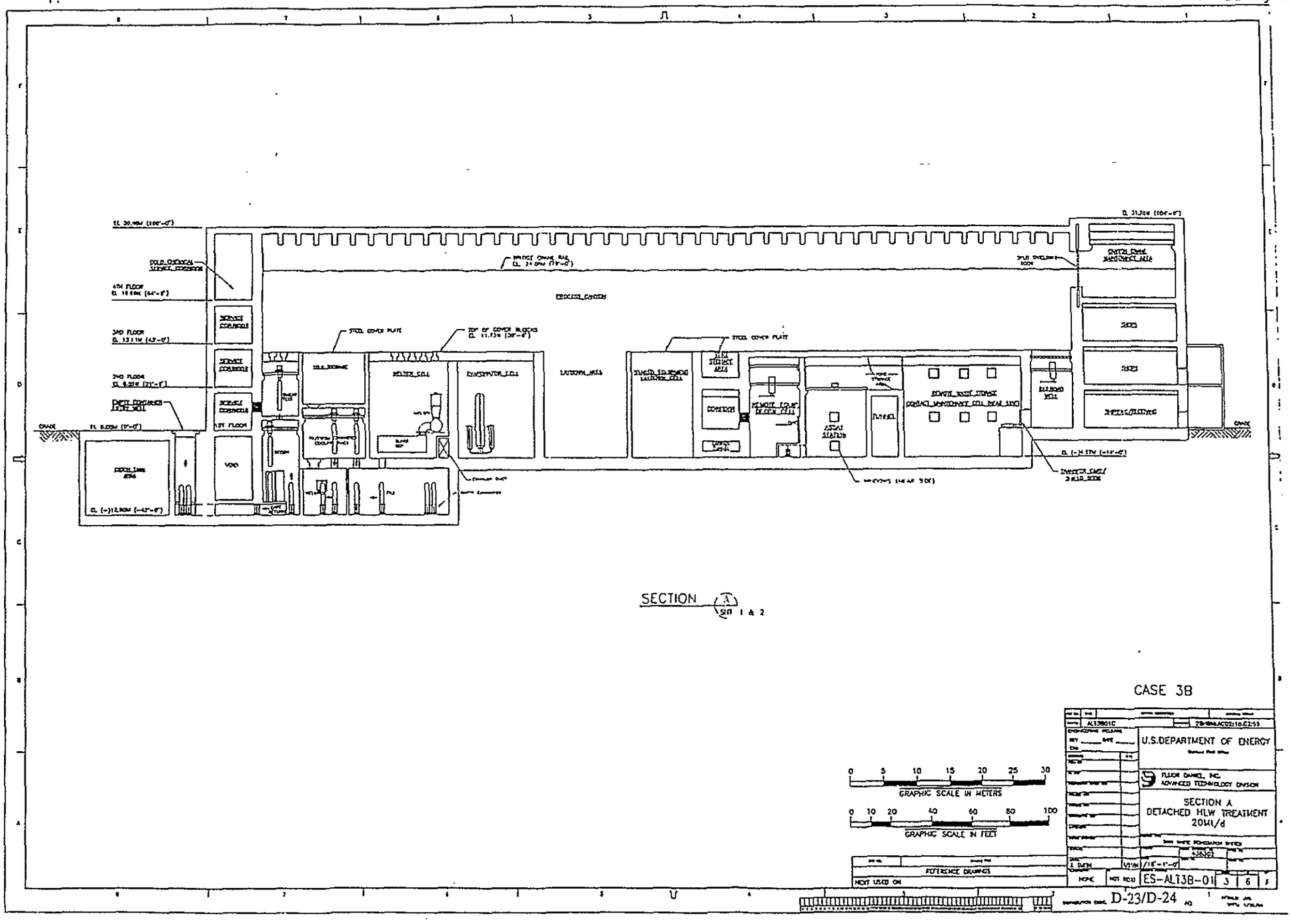

Figure D-2. High-Level Waste Process Facility Layout. (5 sheets)

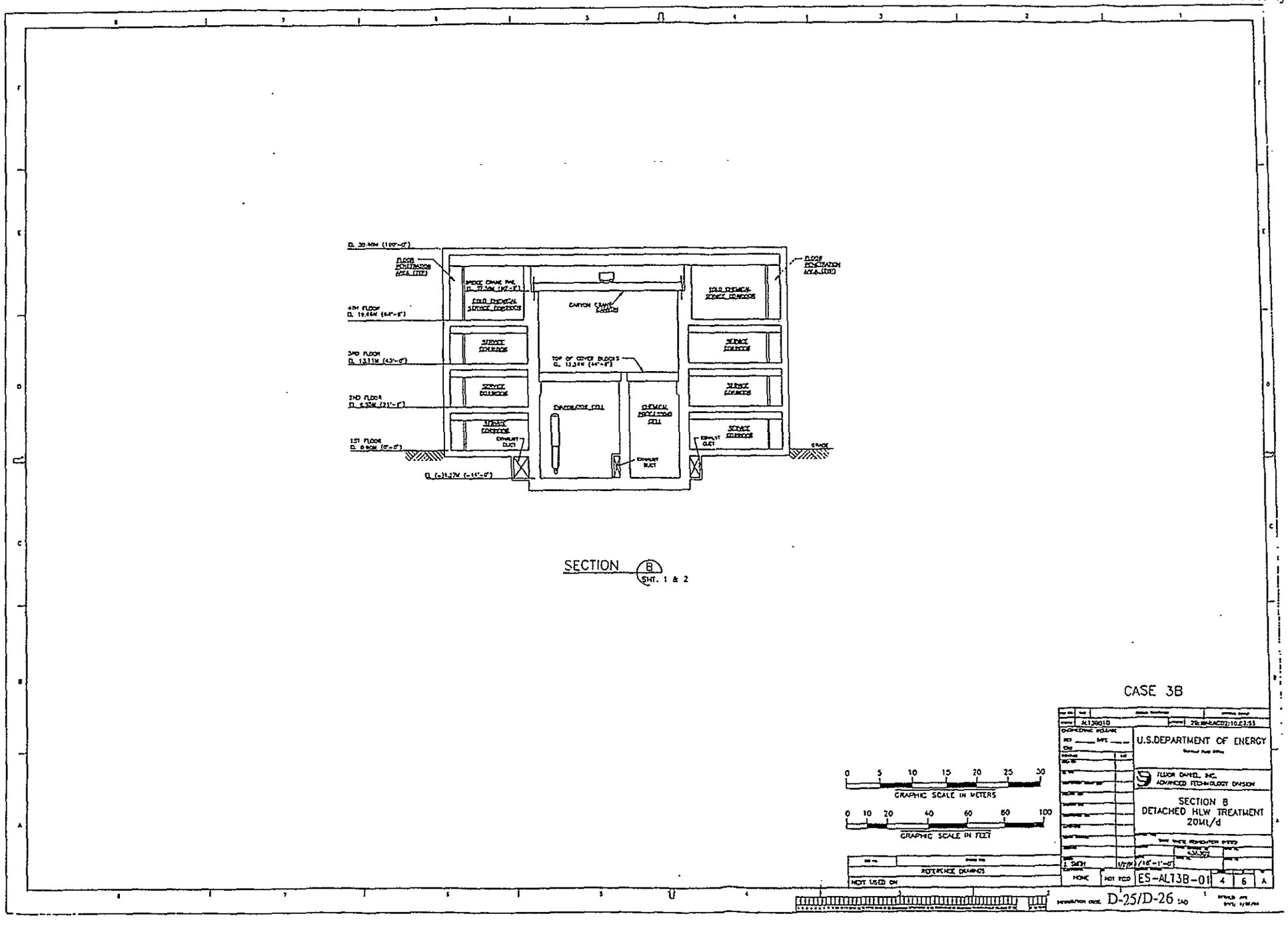

Figure D-2. High-Level Waste Process Facility Layout. (5 sheets)

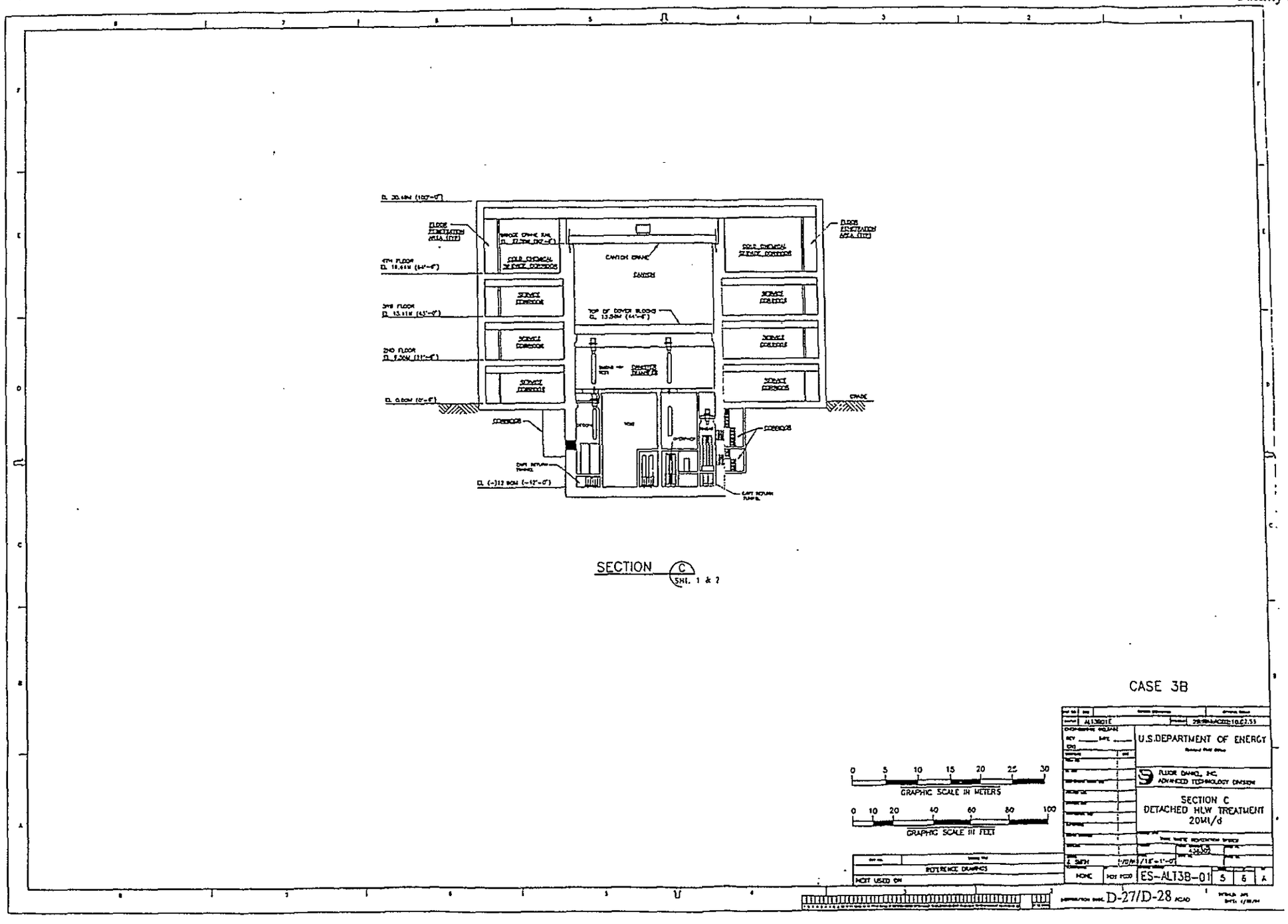

APPENDIX E

SITE LAYOUTS

This page intentionally left blank.

APPENDIX E

SITE LAYOUTS

Figure E-2 shows the areas disturbed by construction and operation of the two facilities. Figure E-3 displays the temporary facilities and laydown areas associated with construction. Figure E-4 gives the location of the construction aggregate pit and the relative proximity of it to the construction site.

E.1 COMMON UTILITIES AND SERVICES

Each of the facilities provides most of the process support equipment it requires. Common utilities and cold chemical areas provide common headers for services to support the individual systems in the plants. These common services include the following.

- Medium pressure steam (consumed) and condensate
- Compressed air (instrument/plant air)
- Cooling tower
- Water
  - Sanitary water
  - Process water
  - Demineralized water
  - Raw water and fire water
- Sanitary sewer
- Non-radioactive liquid waste processing
- Cold chemicals bulk storage and make-up (including glass formers)
- Bulk cold chemical building vent system
- Oxygen
- Electricity.

The medium pressure steam system provides consumed steam (e.g., steam jets) to the facilities as a shared utility. The steam trap condensate collection systems are located in the individual facilities.

Certain systems within the individual processing plants require closed loop steam (to minimize the amount of potentially radioactive material leaving the area). This steam is provided by packaged process steam generators located within each facility. The closed loop process steam system is completely independent of the medium pressure steam system.

The compressed air system provides instrument air for pneumatically controlled components, plant air for spargers, jets, and general maintenance use. The plant air is provided preferentially to critical plant air users. This utility source is located in the Mechanical Utilities Building.

The cooling tower system removes heat from the normal processing operations of the various cooling water systems, and rejects that heat via evaporative cooling. It includes a cooling tower, cooling tower water circulation pumps, inhibitor addition pump, and distribution piping. Raw water is used for cooling tower make up. Bleedoff is routed to the 200 Area Treated Effluent Disposal Facility.

The sanitary water system supplies water for domestic uses and for HVAC humidifiers. It is also the source for the process water system. The sanitary water system consists of distribution piping installed in a loop around its users/facilities.

The process water system is the source water for the low pressure process water tanks and other users in the separations, vitrification treatment facility(ies) and facility(ies) annex, the Bulk Cold Chemical Building, the Waste Staging and Handling Facility, and demineralizer and other users in the Mechanical Utilities Building. The process water system is the source for chemical dilution water, priming for pumps, and equipment flushing. Sanitary water, separated from the process water by a backflow preventer, is used as the source for the Process water system.

The non-radioactive liquid waste processing system receives, collects, stores, and disposes of all non-radioactive liquid waste in a safe and environmentally acceptable manner. Chemically contaminated liquid wastes are sufficiently neutralized prior to transfer to the 200 Area Treated Effluent Disposal Facility. The non-radioactive liquid waste processing system includes hold tanks, neutralization tanks, sumps, and pumps.

The cold chemicals bulk storage and make-up system includes all facilities required to receive, store, prepare, and feed cold chemicals to process users. This system includes storage tanks, make-up tanks, feed tanks, sump tanks, and appurtenances, such as pumps, agitators, heaters, and distribution facilities. Glass former bins and transport equipment are also a part of this system.

The site will require approximately 120 MVA to support the operations of the facility cases. A new power line will be provided to the 200 Area site. This will be accomplished by providing a new 230 KV power line approximately 2-km long that will feed to the TWRS Treatment Complex Switch Yard.

Figure E-1 Disturbed Areas.

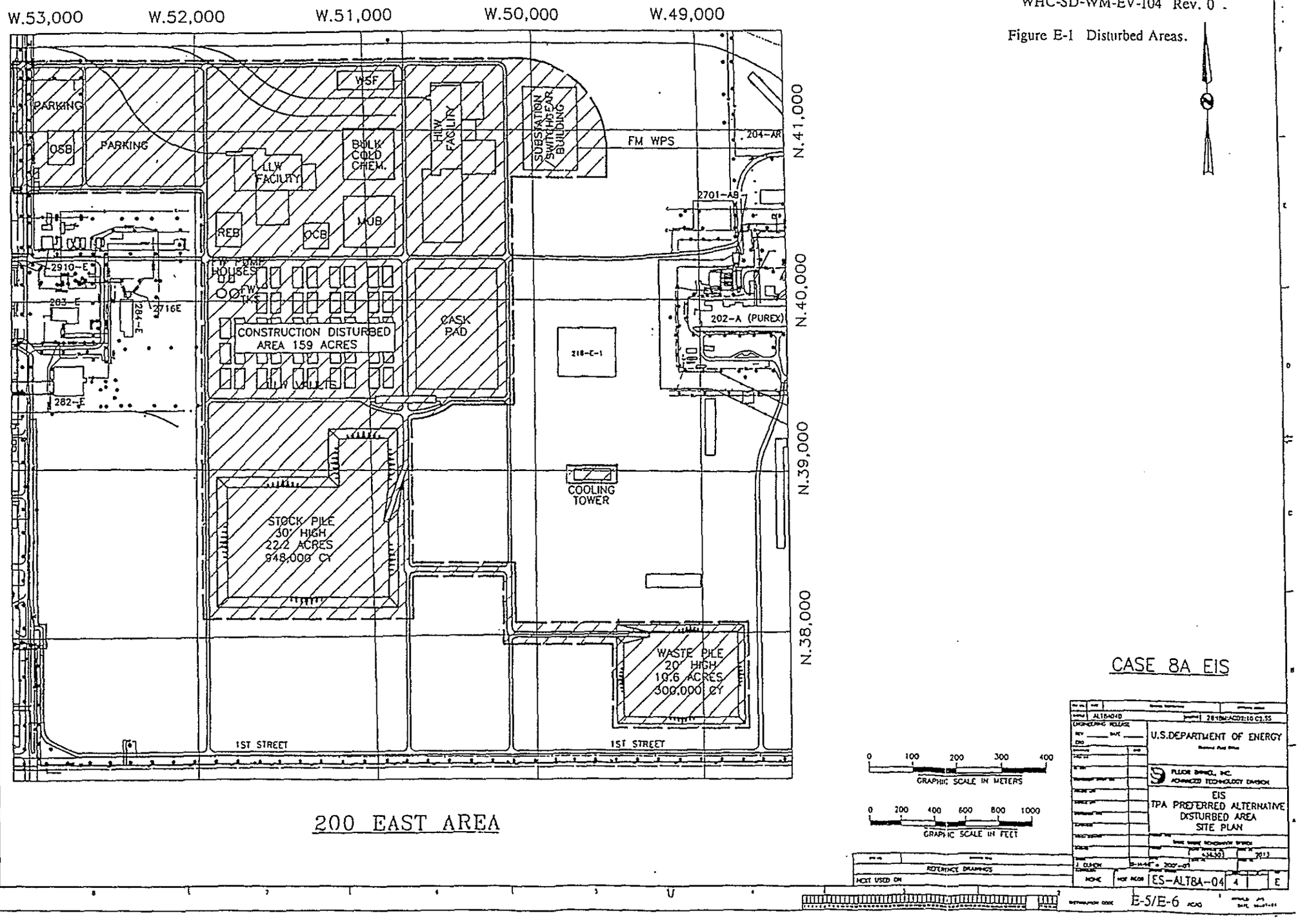

Figure E-2. Temporary Facilities.

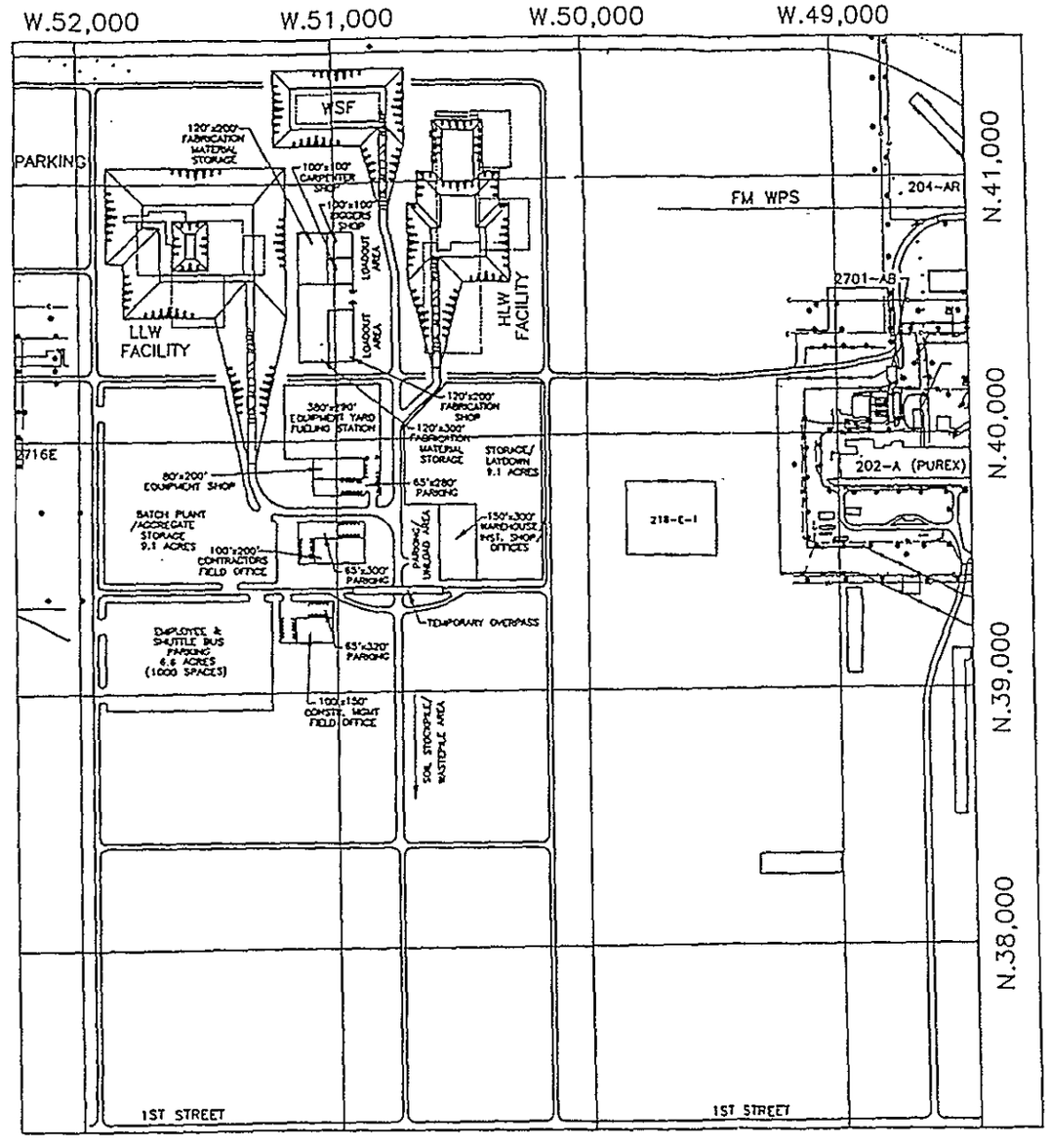

200 EAST AREA

CASE 8A EIS

0 100 200 300 400
GRAPHIC SCALE IN METERS

0 200 400 600 800 1000
GRAPHIC SCALE IN FEET

U.S. DEPARTMENT OF ENERGY

FLUOR DANIEL, INC. ADVANCED TECHNOLOGY DIVISION

EIS
TPA PREFERRED ALTERNATIVE
TEMPORARY FACILITIES
SITE PLAN

ES-ALT8A-04 | 3 | E

E-7/E-8

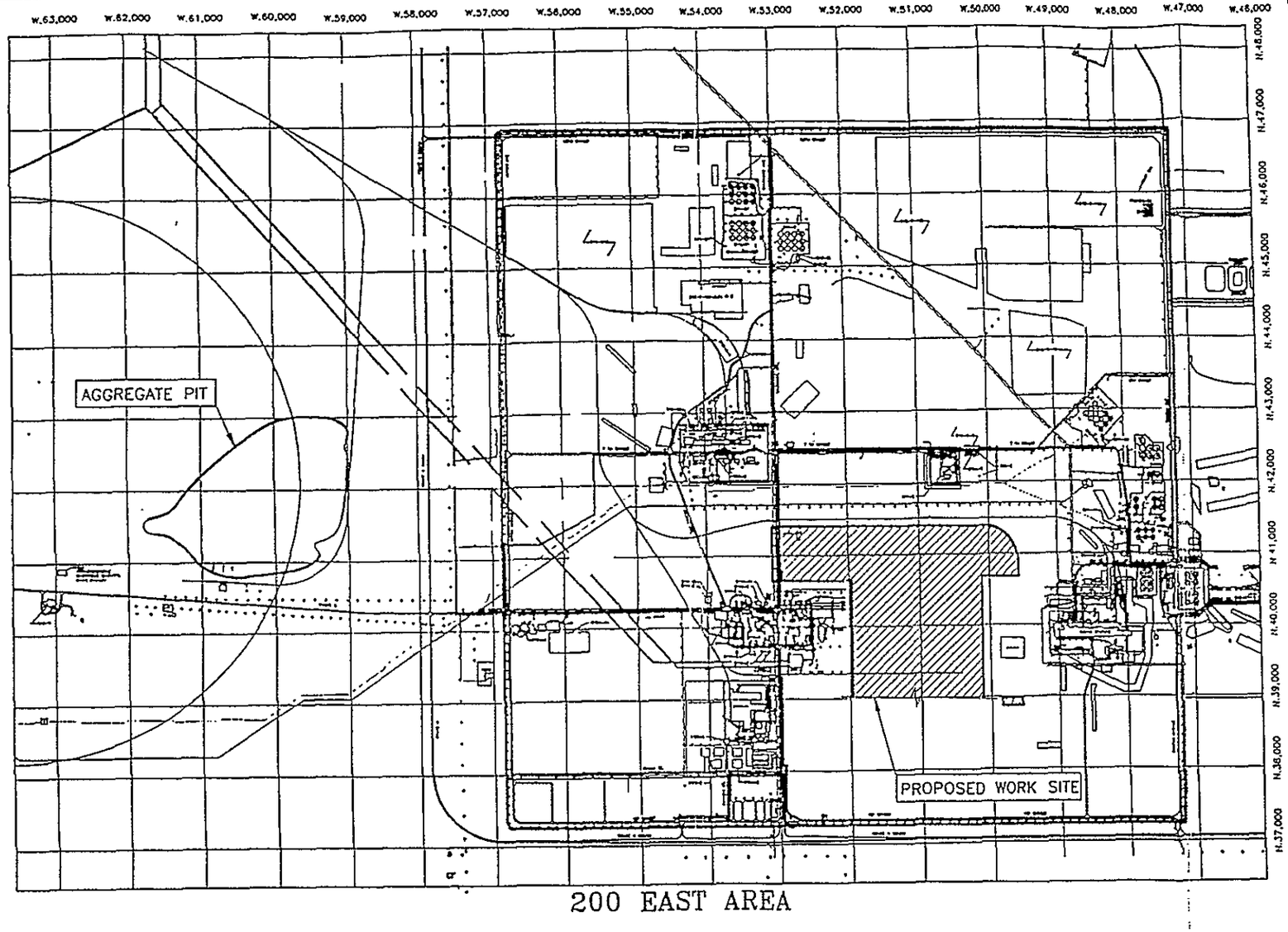

Figure E-3. Aggregate Pit Location.

CASE 8A EIS

0 500 1500 2500 3500 4500
1000 2000 3000 4000 5000
GRAPHIC SCALE IN FEET

180 360 720 1080 1440
GRAPHIC SCALE IN METERS

U.S.DEPARTMENT OF ENERGY

FLUOR DANIEL, INC.
ADVANCED TECHNOLOGY DIVISION

EIS
NO PRETREAT./TPA PREF. ALT.
AGGREGATE PIT
SITE PLAN

ES-ALT8A-04 | 5 | 5 | 8

E.2 SUPPORT BUILDINGS

The process facilities share support buildings/facilities. These facilities provide space for non-process activities and for personnel when not working in the process plant.

- Operations Support Building (OSB)
- Regulated Entrance Building (REB)
- Operations Control Building (OCB)
- Bulk Cold Chemical Building
- Switch Gear/Generator Building
- Mechanical Utilities Building
- Cooling Tower
- Fabrication and Mock-up Shops
- Warehouses
- Switchyard
- Railroads

The OSB serves as the administration building for the complex. The OSB has 5,574 m^2 combined facilities space. About 40 percent (2,308 m^2) of the floor area is office space. The remaining 60 percent of the floor area (3,266 m^2) consists of a lunch room, conference rooms, storage and equipment areas, and other personnel spaces. The other personnel spaces consist of operations supply room, clean and dirty laundry storage, tool rooms, miscellaneous storage rooms, and copier rooms.

The REB is the single point of entry into the facility for maintenance and operating personnel. The REB provides the health physics controlled entry and exit, change room, lunch rooms, conference rooms, and first aid clinic. The REB provides 6,503 m^2 office space for 131 (114 + 15 percent contingency) workers in 1,462 m^2 of office area. In addition, the REB provides 4,112 m^2 support for the office workers and 225 other workers. These 225 workers do not require office space.

The OCB houses the central control rooms for the entire TWRS Treatment Complex. The required size for the OCB to accommodate combined process facilities is 2,090 m^2. It contains 1 central control room, 1 health physics control room, 2 safety class rooms, 2 electrical equipment rooms and 2 HVAC equipment rooms.

The bulk cold chemical building is a one story facility approximately 91 m by 91 m provides 8,361 m^2 of space. This floor space houses anhydrous NH_3, kerosene, HNO_3, sulfur, DCPD, CPD oligomer, and NaOH storage equipment. Chemical make-up will also be located in this facility.

The Switchgear/Generator Building is a one story facility approximately 91 m by 91 m provides 8,281 m^2 floor space. This floor space houses switchgear and generator which will service the TWRS Treatment Complex. This facility will be unoccupied.

The Mechanical Utilities Building is a one-story facility approximately 91 m by 91 m, with a floor space of 8,281 m^2. The utility systems residing in this building are (1) the plant air system, used for spargers, jets, and general maintenance; (2) the instrument air system for pneumatically controlled components in the plant; (3) the chilled water system used by the HVAC and process; (4) the demineralized water system used as make-up to the process cooling water, melter cooling water expansion tank; and (5) process steam and condensate system.

Four small buildings or shelters external to the Mechanical Utilities Building support water distribution of the raw water and fire water. These buildings include the booster pumphouses (used to increase the low pressure water source to that required for cooling tower make-up and fire protection), fire water pumphouse, and manifold shelter building. The cooling tower is located at one end or corner of the TWRS Treatment Complex. The approximate size of the cooling tower is 61 m by 61 m.

The support buildings also consist of two shops and three warehouses. The Fabrication Shop is a one-story facility approximately 46 m by 91 m for a floor area of 4,181 m^2. The Mock-Up Shop is a one-story facility approximately 46 m by 91 m for a total of 4,181 m^2 of floor area. The three warehouses that are one-story facilities approximately 46 m by 91 m, for a total of 4,181 m^2 of floor area each.

The switch yard/substation serving the TWRS Treatment Complex consists of incoming 230 kV transmission dead end towers feeding a double-ended bus with a single tie breaker. The high-voltage circuit breakers (transformer feeders and tie) are SF6 type. The bus feeds redundant transformers rated 230 kV to 13.8 kV, with a capacity of approximately 100 MVA. The 13.8 kV transformer secondaries feed a double-ended switchgears located in a switchgear building, which also include utility monitoring and control equipment. The substation will be approximately 119 m by 149 m or 17,748 m^2.

APPENDIX F

ACCOMPANYING DATA FOR DATA TABLES

This page intentionally left blank.

APPENDIX F - ACCOMPANYING DATA FOR DATA TABLES

The following data defines the basis/rationale on how the values reported in the Data Tables were obtained. If a section for a data table is not present, it is because the footnotes for the table are adequate enough to define the calculational bases used.

The following is a miniature table of contents to ease the reader's quest in finding backup information for a specific data table.

Table of Contents

F.1 Backup for Table 9-2 . . . . . F-4

F.2 Backup for Table 9-3 . . . . . F-7

F.3 Backup for Table 9-4 . . . . . F-10

F.4 Backup for Table 9-5 . . . . . F-13

F.5 Backup for Tables 9-8 and 9-9 . . . . . F-15

F.6 Backup for Table 9-10 . . . . . F-52

F.7 Backup for Table 9-11 . . . . . F-59

F.8 Backup for Table 9-12 . . . . . F-89

F.9 Backup for Table 9-13 . . . . . F-90

F.10 Backup for Tables 9-14 and 9-15 . . . . . F-91

F.11 Backup for Table 9-16 . . . . . F-92

F.12 Backup for Table 9-18 . . . . . F-94

F.13 Backup for Table 9-19 . . . . . F-98

F.1 Backup for Table 9-2

Table F-1 outlines the assumptions used to obtain the values given in Table 9-2.

Table F-1. Staffing Requirements for Table 9-2.

Staffing Category	Years	Staff Per Year	Total Staff-Years	Total Staff-Hours
Dual operation	10	708	7080	1.28e+07
Pretreatment/LLW only	5	618	3090	5.60e+06
HLW only	4	509	2036	3.69e+06
Indirect staffing	19	29	551	9.98e+05
Pretreatment/LLW start-up	1.5	618	927	1.68e+06
HLW start-up	1.5	509	763.5	1.38e+06
Pretreatment/LLW D&D	2	618	1236	2.24e+06
HLW D&D	2	509	1018	1.84e+06
HLW monitoring and maintenance	6	10	60	1.09e+05
HLW transportation	- -	- -	280	5.07e+05
Total				3.11e+07

Notes:

D&D = decontamination and decommissioning
HLW = high-level waste
LLW = low-level waste

It is assumed that during operations the Pretreatment/LLW facility will run for 5 years before the HLW facility comes online, then both facilities will operate for 10 years, with the HLW facility running solo for an additional 4 years. The staffing levels for each of these three modes of operation are taken from the *Tank Waste Remediation System Facility Configuration Study* (TWRS FCS) (Boomer 1994) and are included at the end of this table description.

The staffing levels in Table 9-2 also include staffing for start-up, monitoring and maintenance, and decontamination and decommissioning, as well as indirect staffing. The staffing needs for start-up and decontamination and decommissioning were set equal to 1.5 and 2.0 years of staff, respectively, based on engineering judgement. The staff per year for HLW monitoring and maintenance and the total staff for HLW transportation were factored from the draft *Tank Waste Remediation System Multi-Year Program Plan* (MYPP) (WHC 1994). The values for indirect staffing were taken from the FCS.

All staff-hours are based on a staff-year equalling 1812 hours.

For the dual operation case, the following factors in Table F-2 were calculated to determine the staffing necessary for the three distinct processes (Pretreatment, LLW, HLW) and for common areas:

Table F-2. Staffing Breakdown by Process.

	Low-Level Waste	Pretreatment	High-Level Waste	Common Areas
Factor	35%	21%	26%	17%

The same factors were used when only one facility is assumed to be in operation except that they were factored to total 100 percent. For example if the HLW facility is the only one in operation, then the following factors were used - HLW Only 60% [26%/(26%+17%)] and Common Areas 40% [17%/(26%+17%)]. By employing this method Table F-3 was created.

Table F-3. Staffing Staffhours by Process.

	Low-Level Only	Pretreatment Only	High-Level Only	Common Areas Only
Dual operation	4.49e+06	2.69e+06	3.46e+06	2.18e+06
Pretreatment/LLW only	2.68e+06	1.61e+06		1.30e+06
HLW only			2.23e+06	1.46e+06
Indirect staffing	3.33e+05	3.33e+05	3.33e+05	
Pretreatment/LLW start-up	8.05e+05	4.83e+05		3.91e+05
HLW start-up			8.37e+05	5.47e+05
Pretreatment/LLW D&D	1.07e+06	6.44e+05		5.22e+05
HLW D&D			1.12e+06	7.29e+05
HLW monitoring and maintenance			1.09e+05	
HLW transportation			5.07e+05	

Notes:

D&D = decontamination and decommissioning
HLW = high-level waste
LLW = low-level waste

Table F-4 is a summary table for the previous table. The same factoring approach was used to distribute the common area staff between LLW processing and pretreatment processing.

Table F-4. Breakdown of Common Area Staff.

	Total	Common Area
Low-level waste process	9.39e+06	2.11e+06
Pretreatment Process	5.77e+06	1.56e+06
High-level waste process	8.60e+06	3.46e+06
Subtotal	2.36e+07	7.13e+06

Table F-5 distributes the staffing requirements by process calculated in the previous table to staffing requirements by unit process.

Table F-5. Staffing Requirements by Process.

	Process	Common Area	Total
Sludge washing	1.83e+06	4.96e+05	2.33e+06
Cesium ion exchange	3.93e+06	1.06e+06	4.99e+06
LLW vitrification	9.15e+06	2.06e+06	1.12e+07
LLW disposal	2.32e+05	5.22e+04	2.84e+05
HLW vitrification	7.98e+06	3.46e+06	1.14e+07
HLW transportation	6.16e+05		6.16e+05
Subtotal	2.37e+07	7.13e+06	3.08e+07

Notes:

HLW = high-level waste
LLW = low-level waste

Previous work, which was based on engineering judgement, set the necessary workers per year equal to 14 for sludge washing, 30 for cesium ion exchange, 316 for LLW vitrification, 8 for LLW disposal, and 340 for HLW vitrification. HLW transportation was not addressed. These values were used to factor the personnel requirements to obtain the values in the table (i.e., for Pretreatment, 32% [14/(14+30)] of staff requirements for sludge washing and 68% [30/(14+30)] for cesium ion exchange). The HLW transportation values were set to the amount necessary for monitoring and maintenance and HLW transportation given in the TWRS MYPP. HLW vitrification was set equal to the remainder.

F.2 Backup for Table 9-3

The following outlines the assumptions used to obtain the values given in Table 9-3.

Table 9-3 was simplified by assuming that all exempt and bargaining unit employees will be radiation workers. All non-exempt personnel are assumed to be nonradiation workers.

Table F-6 is identical to Table F-1 in the backup for Table 9-2.

Table F-6. Staffing Requirements.

Staffing Category	Years	Staff Per Year	Total Staff-Years	Total Staff-hours
Dual operation	10	708	7080	1.28e+07
Pretreatment/LLW only	5	618	3090	5.60e+06
HLW only	4	509	2036	3.69e+06
Indirect staffing	19	29	551	9.98e+05
Pretreatment/LLW start-up	1.5	618	927	1.68e+06
HLW start-up	1.5	509	763.5	1.38e+06
Pretreatment/LLW D&D	2	618	1236	2.24e+06
HLW D&D	2	509	1018	1.84e+06
HLW monitoring and maintenance	6	10	60	1.09e+05
HLW transportation	- -	- -	280	5.07e+05
Total				3.08e+07

Notes:

D&D = decontamination and decommissioning
HLW = high-level waste
LLW = low-level waste

Table F-7 gives the breakdown for the three processing options (Pretreatment/LLW only, dual operation, and HLW only) in terms of exempt, nonexempt, and bargaining unit employees per year. Also given in the table is the percentage of the total for each employee type. The employee breakdown for each operational mode can be found in the calculational description for Table 9-2 contained in this appendix.

Table F-7. Staffing Breakdown by Worker Unit.

Operational Mode	Exempt	Nonexempt	Bargaining Unit	Exempt	Nonexempt	Bargaining Unit
Pretreatment/ LLW only	227	53	338	37%	9%	55%
Dual operation	253	53	402	36%	7%	57%
HLW only	200	51	258	39%	10%	51%

Notes:

HLW = high-level waste
LLW = low-level waste

Table F-8 calculates the breakdown of the total hours calculated in Table F-6 using the percentages in Table F-7. For indirect staffing it was assumed that all workers would be nonexempt employees. For monitoring and maintenance it was assumed that one worker would be exempt, one bargaining unit, and the remaining eight nonexempt. 100 of the workers for HLW transportation were assumed to be exempt, 100 bargaining units, and the remaining 80 nonexempt.

Table F-8. Staffing Breakdown by Nonradiation/Radiation Worker.

Staffing Category	Radiation Worker	Nonradiation Worker
Dual operation	1.19e+07	9.60e+05
Pretreatment/LLW only	5.12e+06	4.80e+05
HLW only	3.32e+06	3.70e+05
Indirect staffing		9.98e+05
Pretreatment/LLW start-up	1.54e+06	1.44e+05
HLW start-up	1.24e+06	1.39e+05
Pretreatment/LLW D&D	2.05e+06	1.92e+05
HLW D&D	1.66e+06	1.85e+05
HLW monitoring and maintenance	2.18e+04	8.72e+04
HLW transportation	3.62e+05	1.45e+05
Total	2.72e+07	3.72e+06

Notes:

D&D = decontamination and decommissioning
HLW = high-level waste
LLW = low-level waste

F.3 Backup for Table 9-4

The following outlines the assumptions used to obtain the values given in Table 9-4.

Most of the values for Table 9-4 were taken from the material balances given in Appendix A. This section only addresses the calculation details for the water and electrical requirements.

Sanitary Water

The calculation of the sanitary water requirements are shown in Table F-9.

Table F-9. Sanitary Water Usage

Sanitary Waste Usage (in m^3)	High-Level Waste Processing	Pretreatment/ Low-Level Waste Processing	Common Area
Heating, Ventilation, and Air Conditioning (HVAC)	7,025	12,400	36,100
Utility water	2,000	3,970	
Subtotal	9,025	16,370	36,100
Multiply by 14	126,350	229,180	505,400
Personnel usage			219,000
Grand Total	126,350	229,180	724,400

The HVAC and utility water values are based upon detailed annual utility consumptions for the two facilities. The values are multiplied by 14 to convert the annual utility consumption values to life time utility consumption values. Personnel usage is calculated by assuming 708 workers for 10 years, 509 workers for 4 years, 618 workers for 5 years, and an additional 29 workers (indirect staffing) for 19 years (see Table 9-2 backup). It is assumed that these workers will use 20 gallons per day of sanitary water. Assuming 8 hours per work day and

1812 hours per year one calculates 57.8 million gallons (2.19e+5 cubic meters) consumed over the processing life. The personnel consumption value was placed in common areas to simplify the calculations.

This gives a life time consumption of 1.07e+6 cubic meters of sanitary water.

Raw Water

The detailed annual raw water consumption estimates for the two facilities were based on processing the waste at 100 percent capacity at 100 percent total operating efficiency. To convert from this type of an annual basis to a life total one must use different multiplication factors than 14 years. For this and all cases that are based on the 100-100 operational scheme, the multiplication factors will be 8.71 and 5.5 for the HLW facility and Pretreatment/LLW facility respectively. Table F-10 calculates the life time total raw water usage.

Table F-10. Raw Water Usage.

Raw Water Usage (in m^3)	High-Level Waste Processing	Pretreatment/ Low-Level Waste Processing	Common Area
Process water	40,200	111,700	24,300
Cooling water			1,650,000
Subtotal	40,200	111,700	1,674,300
Common area process water	3,300	21,000	
Common area cooling water	250,000	1,400,000	
Subtotal	293,500	1,532,700	
Factor for multiplication	8.71	5.5	
Grand Total	2,556,400	8,430,000	

Since the same multiplication factor was not used for all processes, the common area raw water usage had to be divided between the other two processes. Engineering judgement set the amount of common area raw water for Pretreatment/LLW processing purposes equal to 85 percent of its total.

The total raw water usage over the lifetime is 1.10e+07 cubic meters.

Electricity Usage

The data in Table F-11 was extracted from detailed annual electrical load calculations.

Table F-11. Electricity Usage.

Usage	Overall Electrical Load For Tri-Party Agreement Alternative (GWh/year)
Process	712
HVAC	229
Mechanical	7
Electrical	71
Total	1,019

Process usage includes the Joule-heated melter, electric heaters, pumps, agitators, and similar equipment. HVAC usage includes HVAC usage for the process buildings and all ancillary buildings. Mechanical usage is for the operation of cranes and similar mechanical equipment. Electrical usage includes lighting and other miscellaneous electrical equipment.

All of the above electrical usage categories except for process was assumed to be independent of the processing scheme. In other words, they could be multiplied by 14 years to convert to an overall basis; however, the process usage is very dependant on the processing scheme. Therefore, the process usage must be divided between the two facilities and the multiplication factors defined in the previous section (5.5 and 8.71) must be employed. The process electrical usage for the Pretreatment/LLW facility was set to 90 percent of the usage for the "No Separations" alternative (510 GWh/year). These two options have the same maximum glass throughput put the total glass throughput for the Pretreatment/LLW facility is approximately 90 percent of the "No Separations" alternative. Therefore the process electrical usage for the Pretreatment/LLW facility is 459 GWh/year and is 253 GWh/year for the HLW facility.

The overall electrical usage for the Tri-Party Agreement alternative is:

(229 + 7 + 71)GWh/yr*14 yr + 459 GWh/yr*5.5 yr + 253 GWh/yr*8.71 yr
= 9,026 GWh

F.4 Backup for Table 9-5

ADDITIONAL EMISSION CALCULATIONS/NOTES:

- Operating emissions were calculated and presented with two significant digits. No construction emissions were calculated. Emissions were based on the maximum annual operating capacity of the alternative plants given on the material balances in Appendix A, which give the following ratio factors for the alternatives:

  HLW plant - 0.1148 (8.71 year plant life at 100%)
  Basis: The design of the HLW treatment facility is based on a production of 20 Mg/d (20 metric tons/day) of HLW glass, at a nominal waste oxide loading of 25 weight percent, as prescribed by Westinghouse Hanford Company material balance "Case 3B - Stand Alone 20 Ton/Day HLW Facility - Water Wash 3/8/94." The total production of HLW glass over the life of the facility is projected to be 63,600 Mg (metric tons).

  LLW plant - 0.1825 (5.5 year plant life at 100%)
  Basis: The design of the LLW treatment facility is based on a production of 200 Mg/d (200 metric tons/day) of LLW glass, at a nominal Na_2O loading of 25 weight percent, as prescribed by Westinghouse Hanford Company material balance "Case 4 - Combined Pretreatment/LLW Facility - Sodium Hydroxide Wash 3/8/94." The total production of LLW glass over the life of the facility is projected to be 400,000 Mg (metric tons).

  Pretreatment - 0.1825 (5.5 year plant life at 100%)
  Basis: The design of the Pretreatment facility has the same basis as that of the LLW facility.

  Main process emissions are based on the material balances unless otherwise stated.

- Emission from sulfur cement handling is assumed to be controlled in a manner that will result in less than 100 kg/yr of any single pollutant (hydrogen sulfide, sulfur, total particulate).

- Emissions from standby power diesel engines, diesel tanks, and welding are all considered to result in emission of less than 100 kg/year for the pollutants being analyzed.

- The are no "pollutant" emissions from the oxygen plant, and emissions from the pretreatment plant are negligible.

- Emissions from the cooling towers are estimated as follows:

  21,000 gpm/9000 gpm (HWVP) x 2067 lbs/yr = 4823 lbs/yr (2187 kg/yr)
  2187 kg/yr/0.95 (see assumption 2) = 2300 kg/yr (two sig. digits)

- Emissions for the kerosene tank is estimated as follows:

  (Assumptions for Kerosene Emissions - From AP-42)

  Tank size = 535,000 gallons

Throughput

No separations alternative	-	5,200,000 gal/yr
Tri-Party Agreement alternative	-	5,545,000 gal/yr

Note: Throughput difference is not significant so only the Tri-Party Agreement alternative was calculated and emissions were considered identical for base cases (to 2 sig. digits).

Working Loss Equation Variable Values

K_n = 1
K_p = 1
M_v = 130 lb/lb-mole
P_{va} = 0.011 psia (70°F)
Q = 132,024 bbls/yr (42 gal/bbl)
WL = $0.001\ M_v\ P_{va}\ Q\ K_n\ K_p$

Standing (breathing) Loss Variable Values

V_v = 17,881 ft^3 (1/2 of tank volume)

$$W_v = 2.519 \times 10^{-4}\ \text{lb/ft}^3 = \frac{M_v\ P_{va}}{T_{la}\ R} = \frac{130(0.011)}{530(10.751)}$$

$$K_c = \frac{40}{530} = 0.075 \quad \text{where } 40°R = \Delta T \text{ daily temp change}$$

$$K_s = 0.995 = \frac{1}{1 + 0.053\ P_{va}\ H_{vo}} = \frac{1}{1 + 0.053(0.011)(8.25)}$$

H_{vo} = 8.25 ft

SL = $365\ (V_v)(W_v)(K_c)(K_s)$

WL = (0.001)(130)(0.011)(132,024)(1.0)(1.0) ≅ 189 lb/yr

SL = 365 (17,881)(2.519 x 10^{-4})(0.075)(0.995) ≅ 123 lb/yr

Total ≅ 189 lb/yr + 123 lb/yr ≅ 312 lb/yr

Total ≅ 312 lb/yr x .4536 kg/lb ≅ 141 kg/yr

Total ≅ 141 kg/yr = 140 kg/yr to 2 sig digits

Calculating to a total lifetime basis:

Total ≅ 140 kg/yr x 5.5 yr ≅ 770 kg

F.5 Backup for Tables 9-8 and 9-9

Construction personnel requirements are calculated using the design cost estimates. The staff hours estimate is categorized as follows:

- Equipment/facility installation
- Subcontracts
- Construction and project management
- Engineering.

A. Calculation: Total MT from Equipment/Facility Installation

Staff-hours for total project:

Pretreatment/LLW	=	5,998,220
20T/D HLW Facility	=	5,918,565
Centralized Facility	=	1,893,147
		13,809,932

From Cost Estimate total, installation of equipment and materials including facility fabrication. Calculated via equipment list and facility construction materials.

Overhead (OH) = 20%

Based on cost estimating judgment via typical experience to fabricate nuclear facilities (i.e., management, clerks, etc.)

Contingency = 40%

Based on engineering judgement on design uncertainties.

Calculation Equation

(Staff hours from above)(1.20 OH)(1.40 Cont.)

Pretreatment/LLW	=	10,077,010
20T/D HLW Facility	=	9,943,189
Centralized Facility	=	3,180,487
		23,200,686 => **Equation 1**

B. Calculation: Total MT from Subcontracts

Subcontract Value for Total Project:

Pretreatment/LLW	=	$9,440,000 (MT 3 - Appendix C)
20T/D HLW Facility	=	$0 (MT 3 - Appendix C)
Centralized Facility	=	$33,565,500 (MT 3 - Appendix C)
		$43,005,500

From Cost Estimate total for subcontracts.

% of subcontract for labor = 60%

Based on cost estimating judgement.

Standard Labor Rate For Subcontracts = $60 /hr

Based on cost estimating judgement

Contingency = 40%

Based on engineering judgement on design uncertainties.

Operational Overhead = 10%

Based on cost estimating judgement.

Calculation Equation

$$\frac{\text{(Subcontract Value from above)(.60 Labor)(1.10 OH)(1.40 Contingency)}}{\text{($60 /hr)}}$$

Pretreatment/LLW	=	145,375
20T/D HLW Facility	=	0
Centralized Facility	=	516,909
		662,285 => **Equation 2**

C. Calculation: Total MT For Construction and Project Management By Maintenance and Operation (M&O) Contractor

		PT/LLW	20T/D	CENT.F
Total Labor	=	$188,943,943	$186,434,799	$59,634,131
Total Material	=	$105,550,250	$116,905,668	$54,152,639
Total Equipment	=	$311,926,395	$169,901,640	$38,934,126

Each value above from Cost Estimate totals (w/o OH's, eng., & cont.). See Appendix C.

Estimating Allowances:

Labor Overhead (for staff hour calculations only)
= 20% for labor
5% for material and equipment
10% for subcontracts

Contingency = 40%

Labor rate for contracts = $85/hr

% of total that is construction management = 10%

% of total that is for engineering = 40%

% of total that is project management = 10%

Based on cost estimating judgement.
"Total" includes overhead and contingency.

Construction Management:

Calculation Equation

$$\frac{\text{(Labor from above)(1.20 OH's)(0.10 CM)(1.40 Cont.)}}{\$85} + \frac{\text{(Material+Equipment from above)(1.05 OH's)(0.10 CM)(1.40 Cont.)}}{\$85} + \frac{\text{(Subcontract Value from Section B)(1.10 OH's)(.10 CM)(1.40 Cont.)}}{\$85}$$

Pretreatment/LLW	=	1,112,534
20T/D HLW Facility	=	864,491
Centralized Facility	=	339,663
		2,316,688 => **Equation 3**

Project Management:

Calculation Equation

$$\frac{\text{(Labor from above)(1.20 OH's)(0.10 CM)(1.40 Cont.)(1.40 Eng.)}}{\$85}$$

$$+$$

$$\frac{\text{(Material+Equipment from above)(1.05 OH's)(0.10 CM)(1.40 Cont.)(1.40 Eng.)}}{\$85}$$

$$+$$

$$\frac{\text{(Subcontract Value from Section B)(1.10 OH's)(.10 CM)(1.40 Cont.)(1.40 Eng.)}}{\$85}$$

Pretreatment/LLW	=	1,557,548
20T/D HLW Facility	=	1,210,287
Centralized Facility	=	475,529
		3,243,364 => **Equation 4**

D. Calculation: Total MT For Engineering

ENGINEERING:

Engineering Value for Total Project:

Pretreatment/LLW	=	$295,000,000	(MT 1 - Appendix C)
20T/D HLW Facility	=	$235,000,000	(MT 1 - Appendix C)
Centralized Facility	=	$ 90,000,000	(MT 1 - Appendix C)
		$620,000,000	

From Cost Estimate total for engineering.

Contingency = 40%

Labor rate for contracts = $85 /hr

Based on cost estimating judgement.

Calculation Equation

$$\frac{\text{(Engineering from above)(1.40 Cont.)}}{\$85}$$

Pretreatment/LLW	=	4,858,824
20T/D HLW Facility	=	3,870,588
Centralized Facility	=	1,482,353
		10,211,765 => **Equation 5**

Calculation: Total All Staff Hours

Equation 1	23,200,686	Equipment/Facility Install MT
Equation 2	662,285	Subcontract MT
Equation 3	2,316,688	Construction Management MT
Equation 4	3,243,364	Project Management MT
Equation 5	10,211,765	Engineering
	39,634,787	

Table F-12. TWRS Facility Configuration Evaluation Case 4C-R1. Pretreatment/LLW Vitrification Building S1 - Estimate Summary by MT (Job No. 436302) (9 Sheets)

MT	Description	Staff Hours	Labor	Equipment Usage	Material	Sub-contract	Equipment	Overhead and Profit	Total Dollars
111000	Engineering	0	0	0	0	295000000	0	0	295000000
	Subtotal 111 Engineering	0	0	0	0	295000000	0	0	295000000
	Subtotal 11 Engineering	0	0	0	0	295000000	0	0	295000000
	Subtotal 1 Engineering	0	0	0	0	295000000	0	0	295000000
231120	Feed Preparation	0	0	0	0	0	14592886	729644	15322530
231130	Melter	0	0	0	0	0	37220106	1861006	39081112
231140	Melter Off-gas	0	0	0	0	0	26052025	1302601	27354626
231150	Vessel Off-gas	0	0	0	0	0	5173322	258666	5431988
231180	Off-spec Cullet Handling	0	0	0	0	0	14583184	729159	15312343
231200	Radioactive Liquid Waste	0	0	0	0	0	18559926	927997	19487923
231210	Process Equipment Decon	0	0	0	0	0	10564400	528220	11092620
231220	Melter Feed	0	0	0	0	0	9623306	481165	10104471
231230	Cullet Transfer	0	0	0	0	0	1329174	66458	1395632
231240	Cullet Handling	0	0	0	0	0	12916596	645830	13562426
231250	Cullet Screening And Drying	0	0	0	0	0	7691530	384577	8076107
231260	Sulfur Mixing	0	0	0	0	0	1197658	59883	1257541
231630	Process Sampling/ Analytical Facility	0	0	0	0	0	26913348	1345667	28259015
	Subtotal 231 In-cell Equipment (LLW)	0	0	0	0	0	186417461	9320873	195738334

Table F-12. TWRS Facility Configuration Evaluation Case 4C-R1. Pretreatment/LLW Vitrification Building S1 - Estimate Summary by MT (Job No. 436302) (9 Sheets)

MT	Description	Staff Hours	Labor	Equipment Usage	Material	Sub-contract	Equipment	Overhead and Profit	Total Dollars
232050	HVAC	0	0	0	0	0	9454060	472703	9926763
232060	Support Equipment Repair and Maintenance	0	0	0	0	0	536844	26842	563686
232190	Cullet Air Drying Supply	0	0	0	0	0	19276796	963840	20240636
232270	Claus Sulfur Plant	0	0	0	0	0	52822	2641	55463
232320	Electrical Distribution	0	0	0	0	0	9086462	454323	9540785
232420	Medium Pressure Steam	0	0	0	0	0	14014	701	14715
232430	Process Steam	0	0	0	0	0	2737042	136852	2873894
232450	Process Cooling Water	0	0	0	0	0	459228	22961	482189
232460	Melter Cooling Water	0	0	0	0	0	116424	5821	122245
232470	Process Chilled Water	0	0	0	0	0	43120	2156	45276
232480	Process Water	0	0	0	0	0	21560	1078	22638
232520	Potential Rad Liquid Waste	0	0	0	0	0	300762	15038	315800
232540	Cold Chemicals	0	0	0	0	0	2312310	115616	2427926
232560	Cold Feed Vent	0	0	0	0	0	33418	1671	35089
232580	Glass Former Prep and Feed	0	0	0	0	0	157927	7896	165823
232610	DCS	0	0	0	0	0	8286586	414329	8700915
232620	Health Physics	0	0	0	0	0	13578488	678924	14257412
232660	Mis System	0	0	0	0	0	1708630	85432	1794062

Table F-12. TWRS Facility Configuration Evaluation Case 4C-R1. Pretreatment/LLW Vitrification Building S1 - Estimate Summary by MT (Job No. 436302) (9 Sheets)

MT	Description	Staff Hours	Labor	Equipment Usage	Material	Sub-contract	Equipment	Overhead and Profit	Total Dollars
232710	Cranes and Hoists	0	0	0	0	0	10826354	541318	11367672
232720	Cold Handling Equipment	0	0	0	0	0	762146	38107	800253
	Subtotal 232 Out-of-cell Equip (LLW)	0	0	0	0	0	79764993	3988249	83753242
233110	Feed Receipt and Storage	0	0	0	0	0	2240731	112037	2352768
	Subtotal 233 Waste Staging Support Equipment	0	0	0	0	0	2240731	112037	2352768
	Subtotal 23 GFE Procurement (LLW)	0	0	0	0	0	268423185	13421159	281844344
241200	In Facility Operations	0	0	0	0	0	19547236	977362	20524598
241242	Resin Export (Spent)	0	0	0	0	0	674828	33741	708569
	Subtotal 241 In-cell Equipment (P/T)	0	0	0	0	0	2022206	1011103	21233167
242004	Filter Material (Process)	0	0	0	0	0	107908	5395	113303
242012	Water	0	0	0	0	0	97559	4878	102437
242020	Demin. Water	0	0	0	0	0	51205	2560	53765
242027	Electrical Distribution	0	0	0	0	0	1515409	75770	1591179
242028	CCTV	0	0	0	0	0	3697540	184877	3882417
242060	Structure	0	0	0	0	0	2322659	116133	2438792
242200	In Facility operations	0	0	0	0	0	2552866	127644	2680510
242230	Process Instrumentation	0	0	0	0	0	12936000	646800	13582800

Table F-12. TWRS Facility Configuration Evaluation Case 4C-R1. Pretreatment/LLW Vitrification Building S1 - Estimate Summary by MT (Job No. 436302) (9 Sheets)

MT	Description	Staff Hours	Labor	Equipment Usage	Material	Sub-contract	Equipment	Overhead and Profit	Total Dollars
	Subtotal 242 Out-of-cell Equip (P/T)	0	0	0	0	0	23281146	1164057	24445203
	Subtotal 24 GFE Procurement (P/T)	0	0	0	0	0	43503210	2175160	45678370
	Subtotal 2 Procurement	0	0	0	0	0	311926395	15596319	327522714
313050	HVAC	304200	9582300 0	10327096	0	0	5594973		25504369
313060	Support Equip Repair and Maintenance	3500	110250	0	25872	0	0	59727	195849
313099	Construction Acceptance testing	174700	5503050	0	0	0	0	2916617	8419667
313120	Feed Preparation	49900	1571850	0	1316238	0	0	898893	3786981
313130	Melter	91600	2885400	0	1467158	0	0	1602620	5955178
313140	Melter Off-gas	184700	5818050	0	3339615	0	0	3250547	12408212
313150	Vessel Off-gas	63900	2012850	0	2057902	0	0	1169706	5240458
313180	Off-spec Cullet Handling	65100	2050650	0	455994	0	0	1109645	3616289
313190	Cullet Air Drying Supply	126600	3987900	0	11272546	0	0	2677214	17937660
313200	Radioactive Liquid Waste	119000 3748500	0	2787568	0	0	2126084		8662152
313210	Process Equipment Decon	253200	7975800	0	2797733	0	0	4367061	15140594
313220	Melter Feed	38300	1206450	0	734118	0	0	676125	2616693
313230	Cullet Transfer	8500	267750	0	22638	0	0	143040	433428
313240	Cullet Handling	57600	1814400	0	404250	0	0	981845	3200495

Table F-12. TWRS Facility Configuration Evaluation Case 4C-R1. Pretreatment/LLW Vitrification Building S1 - Estimate Summary by MT (Job No. 436302) (9 Sheets)

MT	Description	Staff Hours	Labor	Equipment Usage	Material	Sub-contract	Equipment	Overhead and Profit	Total Dollars
313250	Cullet Screening and Drying	37800	1190700	0	265188	0	0	644330	2100218
313260	Sulfur Mixing	39000	1228500	0	1322706	0	0	717240	3268446
313270	Claus Sulfur Plant	4400	138600	0	187572	0	0	82837	409009
313320	Electrical Distribution	54000	1701000	0	68992	0	0	904980	2674972
313420	Medium Pressure Steam	41000	1291500	0	1517824	0	0	760386	3569710
313450	Process Cooling Water	19700	620550	0	1309770	0	0	394381	2324701
313460	Melter Cooling Water	13300	418950	0	598290	0	0	251959	1269199
313470	Process Chilled Water	1400	44100	0	47432	0	0	25745	117277
313480	Process Water	3400	107100	0	70070	0	0	60267	237437
313520	Potential Rad Liquid Waste	20400	642600	0	689920	0	0	375074	1707594
313540	Cold Chemicals	187500	5906250	0	6273960	0	0	3444011	15624221
313560	Cold Feed Vent	3800	119700	0	576730	0	0	92278	788708
313580	Glass Former Prep and Feed	6800	214200	0	319088	0	0	129480	662768
313610	DCS	7700	242550	0	66836	0	0	131894	441280
313620	Health Physics	49600	1562400	0	749210	0	0	865533	3177143
313630	Analytical Facilities	195500	6158250	0	1404643	0	0	3334105	10896998
313660	Mis System	2300	72450	0	11858	0	0	38992	123300
313710	Remote Handling Equipment	5000	157500	0	7546	0	0	83852	248898
313720	Cold Handling Equipment	2200	69300	0	10780	0	0	37268	117348

Table F-12. TWRS Facility Configuration Evaluation Case 4C-R1. Pretreatment/LLW Vitrification Building S1 - Estimate Summary by MT (Job No. 436302) (9 Sheets)

MT	Description	Staff Hours	Labor	Equipment Usage	Material	Sub-contract	Equipment	Overhead and Profit	Total Dollars
	Subtotal 313 LLW Equipment Install	2235600	70421400	0	52507143	0	0	39948709	162877252
314004	Filter (Process) Material	3799	119669	0	114046	0	0	69128	302843
314005	IX Material	5333	167990	0	137403	0	0	95905	401298
314006	Sodium Nitrite	1524	48007	0	40241	0	0	27455	115703
314007	Sodium Hydroxide	4911	154697	0	766982	0	0	120339	1042018
314008	Nitric Acid	2274	71631	0	57051	0	0	40816	169498
314012	Water	4066	128079	0	40268	0	0	69896	238243
314016	Cooling Water & Monitoring	3346	105399	0	243615	0	0	68042	417056
314020	Demin. Water	10498	330687	0	269621	0	0	188745	789053
314021	Raw Site Water (Process)	1719	54149	0	26893	0	0	30043	111085
314022	Potable Water	1012	31878	0	10597	0	0	17425	59900
314023	Process Air	1182	37233	0	8913	0	0	20179	66325
314024	Instrument Air	3040	95760	0	53145	0	0	53410	202315
314026	Breathing Air	3000	94500	0	22625	0	0	51216	168341
314027	Electrical Power	26720	841683	0	438160	0	0	468000	1747843
314028	CCTV	3640	114660	0	37730	0	0	62657	215047
314050	Maintenance Equipment (Active)	8461	266522	0	173994	0	0	149956	590472
314055	Plant Wash Facilities	15675	493763	0	363566	0	0	279872	1137201

Table F-12. TWRS Facility Configuration Evaluation Case 4C-R1. Pretreatment/LLW Vitrification Building S1 - Estimate Summary by MT (Job No. 436302) (9 Sheets)

MT	Description	Staff Hours	Labor	Equipment Usage	Material	Sub-contract	Equipment	Overhead and Profit	Total Dollars
314060	Structure	7570	238455	0	0	0	0	126381	364836
314070	Flask Out Bay	1050	33075	0	56246	0	0	20343	109664
314071	Gas Storage Bldg	1809	56984	0	73018	0	0	33854	163856
314073	Spent Resin Flasking Bldg	17831	561677	0	380689	0	0	316725	1259091
	Subtotal 3140 Utilities/cold Chemical	128460	4046498	0	3314803	0	0	2310387	9671688
314200	In Facility Operations	186557	5876547	0	176494	2759000	0	3399292	12211333
314210	Main Process IX	8232	259308	0	143200	0	0	144593	547101
314215	Main Process Evaporation To DST	511	16097	0	30555	0	0	10060	56712
314220	Fluidic Pump Systems	23016	725004	0	1323284	0	0	450416	2498704
314225	Cell Monitoring/empty	8983	282965	0	289501	0	0	164446	736912
314230	Process Instrumentation	130228	4102182	0	103634	0	0	2179339	6385155
314235	Recycle Acid	893	28130	0	24753	0	0	16147	69030
314240	Product Export	2407	75821	0	165087	0	0	48439	289347
314242	Resin (Spent) Export	4937	155516	0	52827	0	0	85065	293408
314243	Spent Filter Media	406	12789	0	4802	0	0	7018	24609
	Subtotal 3142 In Facility Operations	366170	11534359	0	2314137	2759000	0	6504815	23112311
314720	Filter Wash	1429	45014	0	18671	0	0	24791	88476
	Subtotal 3147 Vessel Ventilation	1429	45014	0	18671	0	0	24791	88476

Table F-12. TWRS Facility Configuration Evaluation Case 4C-R1. Pretreatment/LLW Vitrification Building S1 - Estimate Summary by MT (Job No. 436302) (9 Sheets)

MT	Description	Staff Hours	Labor	Equipment Usage	Material	Sub-contract	Equipment	Overhead and Profit	Total Dollars
	Subtotal 314 P/t Equipment Installation	496059	15625871	0	5647611	2759000	0	8839993	32872475
319010	Structures	2224400	70068600	0	28232234	0	0	38547970	136848804
319040	Fire Protection and Detection	18300	576450	0	491212	0	0	330079	1397741
319320	Electrical Distribution	110000	3465000	0	1119988	0	0	1892450	6477438
	Subtotal 319 Facility Structure	2352700	74110050	0	29843434	0	0	40770499	144723983
	Subtotal 31 Process Facility	5084359	160157321	0	87998188	2759000	0	89559201	340473710
322010	Structure	574673	18102200	0	7755406	0	0	9981935	35839541
322050	HVAC	45300	1426950	0	1840577	0	0	848313	4115840
322110	Feed Receipt and Storage	86740	2732310	0	1583582	6690000	0	2196304	13202196
	subtotal 322 Staging/sampling Facility and T	706713	22261460	0	11179565	6690000	0	13026552	53157577
325010	Structures	75030	2363445	0	1067978	0	1306024		4737447
	Subtotal 325 Contact Filter Blower Room	75030	2363445	0	1067978	0	0	1306024	4737447
327010	Structures	98784	3111696	0	4517769	0	0	1875087	9504552
327040	Fire Protection and Detection	4234	133371	0	111922	0	0	76283	321576
327050	HVAC	29100	916650	0	674828	0	0	519566	2111044
	Subtotal 327 Fan House Filter Bldg	132118	4161717	0	5304519	0	0	2470936	11937172

Table F-12. TWRS Facility Configuration Evaluation Case 4C-R1. Pretreatment/LLW Vitrification Building S1 - Estimate Summary by MT (Job No. 436302) (9 Sheets)

MT	Description	Staff Hours	Labor	Equipment Usage	Material	Sub-contract	Equipment	Overhead and Profit	Total Dollars
	Subtotal 32 Dedicated Facilities	913861	28786622	0	17552062	6690000	0	16803512	69832196
	Subtotal 3 Construction	5998220	188943943	0	105550250	9449000	0	106362713	410305906
411000	Construction Management	0	0	0	0	74000000	0	0	74000000
	Subtotal 411 Construction Management	0	0	0	0	74000000	0	0	74000000
	Subtotal 41 Construction Management	0	0	0	0	74000000	0	0	74000000
	Subtotal 4 Construction Management	0	0	0	0	74000000	0	0	74000000
511000	Project Management	0	0	0	0	111000000	0	0	111000000
	Subtotal 511 Project Management	0	0	0	0	111000000	0	0	111000000
	subtotal 51 Project Management	0	0	0	0	111000000	0	0	111000000
	Subtotal 5 Project Management	0	0	0	0	111000000	0	0	111000000
	Project Total	5998220	188943943	0	105550250	489449000	311926395	121959032	1217828620

Table F-13. TWRS Facility Configuration Evaluation Case 3B-R1. 20T/D HLW Facility - Detached S1 - Estimate Summary By MT (Job No. 436302) (7 Sheets)

MT	Description	Staff Hours	Labor	Equipment Usage	Material	Sub-contract	Equipment	Overhead and Profit	Total Dollars
111000	Engineering	0	0	0	0	235000000	0	0	235000000
	Subtotal 111 Engineering	0	0	0	0	235000000	0	0	235000000
	Subtotal 11 Engineering	0	0	0	0	235000000	0	0	235000000
	Subtotal 1 Engineering	0	0	0	0	235000000	0	0	235000000
221120	Feed Preparation	0	0	0	0	0	17232908	861645	18094553
221130	Melter	0	0	0	0	0	7003766	350188	7353954
221140	Melter Off-gas	0	0	0	0	0	6883030	344152	7227182
221150	Vessel Off-gas	0	0	0	0	0	5145294	257265	5402559
221160	Cask Decon	0	0	0	0	0	64680	3234	67914
221170	Cask Welding	0	0	0	0	0	1361514	68076	1429590
221180	Off-spec Cullet Handling	0	0	0	0	0	5136670	256834	5393504
221200	Radioactive Liquid Waste	0	0	0	0	0	8643404	432170	9075574
221210	Process Equipment Decon	0	0	0	0	0	3080924	154046	3234970
221220	Melter Feed	0	0	0	0	0	2134440	106722	2241162
221230	Cask Handling and Inspection	0	0	0	0	0	1604064	80206	1684270
221240	Cask Filling	0	0	0	0	0	5040728	252037	5292765
221250	Cullet Screening and Drying	0	0	0	0	0	2917068	145853	3062921
221630	Process Sampling/analytical	0	0	0	0	0	19704762	985238	20690000

Table F-13. TWRS Facility Configuration Evaluation Case 3B-R1. 20T/D HLW Facility - Detached S1 - Estimate Summary By MT (Job No. 436302) (7 Sheets)

MT	Description	Staff Hours	Labor	Equipment Usage	Material	Sub-contract	Equipment	Overhead and Profit	Total Dollars
221710	Remote Handling Equipment	0	0	0	0	0	10451210	522561	10973771
	Subtotal 221 In-cell Equipment	0	0	0	0	0	96404462	4820227	101224689
222050	HVAC	0	0	0	0	0	15837976	791899	16629875
222060	Support Equip Repair and Maint	0	0	0	0	0	976668	48833	1025501
222110	Feed Receipt and Storage	0	0	0	0	0	31262	1563	32825
222190	Cullet Air Drying Supply	0	0	0	0	0	696388	34819	731207
222270	Claus Sulfur Plant	0	0	0	0	0	52822	2641	55463
222320	Electrical Distribution	0	0	0	0	0	8492700	424635	8917335
222420	Medium Pressure Steam	0	0	0	0	0	14014	701	14715
222430	Process Steam	0	0	0	0	0	616616	30831	647447
222450	Process Cooling Water	0	0	0	0	0	167090	8355	175445
222460	Melter Cooling Water	0	0	0	0	0	103488	5174	108662
222470	Process Chilled Water	0	0	0	0	0	16170	809	16979
222480	Process Water	0	0	0	0	0	21560	1078	22638
222520	Potentially Rad Liquid Waste	0	0	0	0	0	303996	15200	319196
222540	Cold Chemicals	0	0	0	0	0	264110	13206	277316
222560	Cold Feed Vent	0	0	0	0	0	30184	1509	31693
222570	Canister Receipt and Handling	0	0	0	0	0	144452	7223	151675

Table F-13. TWRS Facility Configuration Evaluation Case 3B-R1. 20T/D HLW Facility - Detached S1 - Estimate Summary By MT (Job No. 436302) (7 Sheets)

MT	Description	Staff Hours	Labor	Equipment Usage	Material	Sub-contract	Equipment	Overhead and Profit	Total Dollars
222580	Glass Former Prep and Feed	0	0	0	0	0	58212	2911	61123
222610	DCS	0	0	0	0	0	10761674	538084	11299758
222620	Health Physics	0	0	0	0	0	15518888	775944	16294832
222660	Mis	0	0	0	0	0	2219602	110980	2330582
222720	Cold Handling Equipment	0	0	0	0	0	762146	38107	800253
	Subtotal 222 Out-of-cell Equip	0	0	0	0	0	57090018	2854502	59944520
223110	Feed Receipt and Storage	0	0	0	0	0	16407160	820358	17227518
	Subtotal 223 Waste Staging Tankage	0	0	0	0	0	16407160	820358	17227518
	Subtotal 22 Gfe Procurement	0	0	0	0	0	169901640	8495087	178396727
	Subtotal 2 Procurement	0	0	0	0	0	169901640	8495087	178396727
312010	Structures	3016550	95021325	0	61065466	0	0	53414576	209501367
312040	Fire Prot and Detect	27459	864959	0	704914	0	0	493674	2063547
312050	HVAC	316400	9966600	0	10726258	0	0	5818611	26511469
312060	Support Equip Repair and Maint	6800	214200	0	49588	0	0	116005	379793
312099	Construction Acceptance Testing	172000	5418000	0	0	0	0	2871540	8289540
312120	Feed Preparation	58900	1855350	0	1554476	0	0	1061060	4470886
312130	Melter	17200	541800	0	275968	0	0	300952	1118720
312140	Melter Off-gas	49000	1543500	0	885038	0	0	862307	3290845

Table F-13. TWRS Facility Configuration Evaluation Case 3B-R1. 20T/D HLW Facility - Detached S1 - Estimate Summary By MT (Job No. 436302) (7 Sheets)

MT	Description	Staff Hours	Labor	Equipment Usage	Material	Sub-contract	Equipment	Overhead and Profit	Total Dollars
312150	Vessel Off-gas	63500	2000250	0	2046044	0	0	1162435	5208729
312160	Cask Decon	500	15750	0	15092	0	0	9103	39945
312170	Cask Welding	6100	192150	0	43120	0	0	103996	339266
312180	Off-spec Cullet Handling	22900	721350	0	160622	0	0	390347	1272319
312190	Cullet Air Drying Supply	17300	544950	0	407484	0	0	309198	1261632
312200	Radioactive Liquid Waste	61100	1924650	0	1431584	0	0	1091644	4447878
312210	Process Equipment Decon	122900	3871350	0	1357189	0	0	2119675	7348214
312220	Melter Feed	8500	267750	0	162778	0	0	150047	580575
312230	Cask Handling and Inspection	10300	324450	0	26950	0	0	173307	524707
312240	Cask Filling	22500	708750	0	157388	0	0	383507	1249645
312250	Cullet Screening and Drying	13000	409500	0	91630	0	0	221617	722747
312270	Claus Sulfur Plant	4400	138600	0	187572	0	0	82837	409009
312320	Electrical Distribution	185314	5837391	0	1794139	0	0	3183525	10815055
312420	Medium Pressure Steam	200	6300	0	7546	0	0	3716	17562
312430	Process Steam	9200	289800	0	340648	0	0	170626	801074
312450	Process Cooling Water	7200	226800	0	476476	0	0	144028	847304
312460	Melter Cooling Water	13000	409500	0	587510	0	0	246411	1243421
312470	Process Chilled Water	500	15750	0	18326	0	0	9264	43340
312480	Process Water	3400	107100	0	70070	0	0	60267	237437

Table F-13. TWRS Facility Configuration Evaluation Case 3B-R1. 20T/D HLW Facility - Detached S1 - Estimate Summary By MT (Job No. 436302) (7 Sheets)

MT	Description	Staff Hours	Labor	Equipment Usage	Material	Sub-contract	Equipment	Overhead and Profit	Total Dollars
312520	Potentially Rad Liquid Waste	20600	648900	0	697466	0	0	378790	1725156
312540	Cold Chemicals	21400	674100	0	716870	0	0	393117	1784087
312560	Cold Feed Vent	3400	107100	0	520674	0	0	82797	710571
312570	Canister Receipt and Handling	400	12600	0	1078	0	0	6732	20410
312580	Glass Former Prep and Feed	1600	50400	0	72226	0	0	30323	152949
312610	DCS	27100	853650	0	315854	0	0	468228	1637732
312620	Health Physics	34500	1086750	0	520674	0	0	602012	2209436
312630	Process Sampling/analytical	143100	4507650	0	1028310	0	0	2440470	7976430
312650	Communications	13768	433692	0	196745	0	0	239694	870131
312660	Mis	65400	2060100	0	1110464	0	0	1147376	4317940
312710	Remote Handling Equipment	7500	236250	0	11858	0	0	125806	373914
312720	Cold Handling Equipment	2200	69300	0	10780	0	0	37268	117348
	Subtotal 312 Vitrification Bldg	4577091	144178367	0	89846875	0	0	80906888	314932130
	Subtotal 31 Process Facility	4577091	144178367	0	89846875	0	0	80906888	314932130
321010		574673	18102200	0	7755406	0	0	9981935	35839541
321050		45300	1426950	0	1840577	0	0	848313	4115840
321110		84100	2649150	0	1583582	0	0	1483229	5715961

Table F-13. TWRS Facility Configuration Evaluation Case 3B-R1. 20T/D HLW Facility - Detached S1 - Estimate Summary By MT (Job No. 436302) (7 Sheets)

MT	Description	Staff Hours	Labor	Equipment Usage	Material	Sub-contract	Equipment	Overhead and Profit	Total Dollars
		704073	22178300	0	11179565	0	0	12313477	45671342
323010		150407	4737821	0	2432015	0	0	2632647	9802483
		150407	4737821	0	2432015	0	0	2632647	9802483
325010		23160	7295400	0	3217591	0	0	4027442	14540433
325050		0	0	0	0	0	0	0	0
		231600	7295400	0	3217591	0	0	4027442	14540433
327010		164640	5186160	0	7529614	0	0	3125146	15840920
327040		7056	222264	0	186537	0	0	127127	535928
327050		48500	1527750	0	1125432	0	0	865980	3519162
		220196	6936174	0	8841583	0	0	4118253	19896010
328010		35198	1108737	0	1388039	0	0	657033	3153809
		35198	1108737	0	1388039	0	0	657033	3153809
		1341474	42256432	0	27058793	0	0	23748852	93064077
		5918565	186434799	0	16905668	0	0	104655740	407996207
411000		0	0	0	0	59000000	0	0	59000000
		0	0	0	0	59000000	0	0	59000000

Table F-13. TWRS Facility Configuration Evaluation Case 3B-R1. 20T/D HLW Facility - Detached S1 - Estimate Summary By MT (Job No. 436302) (7 Sheets)

MT	Description	Staff Hours	Labor	Equipment Usage	Material	Sub-contract	Equipment	Overhead and Profit	Total Dollars
		0	0	0	0	59000000	0	0	59000000
		0	0	0	0	59000000	0	0	59000000
511000		0	0	0	0	87700000	0	0	87700000
		0	0	0	0	87700000	0	0	87700000
		0	0	0	0	87700000	0	0	87700000
		0	0	0	0	87700000	0	0	87700000
		5918565	186434799	0	116909568	381700000	1696901640	113150827	968092934

Table F-14. TWRS Facility Configuration Evaluation. Centralized Support Facilities and Sitework, Rev. 1
S1 - Estimate Summary by MT (Job No. 436302) (5 Sheets)

MT	Description	Staff Hours	Labor	Equipment Usage	Material	Sub-contract	Equipment	Overhead and Profit	Total Dollars
111000	Engineering	0	0	0	0	90000000	0	0	90000000
	Subtotal 111 Engineering	0	0	0	0	90000000	0	0	90000000
	Subtotal 11 Engineering	0	0	0	0	90000000	0	0	90000000
	Subtotal 1 Engineering	0	0	0	0	90000000	0	0	90000000
292320	Normal Electrical Distribution	0	0	0	0	0	22343706	1117185	23460891
292410	Compressed Air	0	0	0	0	0	1321628	66081	1387709
292420	Ion Exchange	0	0	0	0	0	73304	3665	76969
292440	Cooling Tower	0	0	0	0	0	1450988	72549	1523537
292480	Demineralizer	0	0	0	0	0	177870	8894	186764
292490	Sanitary Water	0	0	0	0	0	61446	3072	64518
292500	Raw Water/fire Water	0	0	0	0	0	1524292	76215	1600507
292510	Sanitary Sewer	0	0	0	0	0	49588	2479	52067
292530	Non-radioactive Liquid Waste Proc	0	0	0	0	0	1037036	51852	1088888
292540	Chemical Receipt and Make-up	0	0	0	0	0	1688148	84407	1772555
292550	Bulk Cold Chemical Vent System	0	0	0	0	0	21560	1078	22638
292580	Glass Former Preparation	0	0	0	0	0	7379988	368999	7748987
292590	Cryogenic Oxygen	0	0	0	0	0	1198736	59937	1258673
292620	HPS Vacuum System	0	0	0	0	0	549780	27489	577269

Table F-14. TWRS Facility Configuration Evaluation. Centralized Support Facilities and Sitework, Rev. 1
S1 - Estimate Summary by MT (Job No. 436302) (5 Sheets)

MT	Description	Staff Hours	Labor	Equipment Usage	Material	Sub-contract	Equipment	Overhead and Profit	Total Dollars
292720	System 72 Cold Handling	0	0	0	0	0	56056	2803	58859
	Subtotal 292 Centralized Facility Equip	0	0	0	0	0	38934126	1946705	40880831
	Subtotal 29 Centralized Facilities	0	0	0	0	0	38934126	1946705	40880831
	Subtotal 2 Procurement	0	0	0	0	0	38934126	1946705	40880831
33A010	Structures	402647	12683381	0	6821875	0	0	7063286	26568542
	Subtotal 33A Vit Regulated Entrance Bldg	402647	12683381	0	6821875	0	0	7063286	26568542
33B010	Structures	0	0	0	0	6000000	0	600000	6600000
	Subtotal 33B Operations Support Bldg	0	0	0	0	6000000	0	600000	6600000
33C010	Structures	0	0	0	0	7000000	0	700000	7700000
	Subtotal 33C Regulated Entrance Bldg	0	0	0	0	7000000	0	700000	7700000
33D010	Structures	0	0	0	0	2250000	0	225000	2475000
	Subtotal 33D Operations Control Bldg	0	0	0	0	2250000	0	225000	2475000
33E010	Structures	54000	1701000	0	1940400	0	0	998550	4639950
33E020	Fire Protection,hvac and Lighting	0	0	0	0	1151000	0	115100	1266100
	Subtotal 33E Cold Chemical Bldg	54000	1701000	0	1940400	1151000	0	1113650	5906050
33F010	Structures	54000	1701000	0	1940400	0	0	998550	4639950
33F020	Fire Protection, HVAC and Lighting	0	0	0	0	1151000	0	115100	1266100

Table F-14. TWRS Facility Configuration Evaluation. Centralized Support Facilities and Sitework, Rev. 1
S1 - Estimate Summary by MT (Job No. 436302) (5 Sheets)

MT	Description	Staff Hours	Labor	Equipment Usage	Material	Sub-contract	Equipment	Overhead and Profit	Total Dollars
	Subtotal 33F Mechanical Utilities Bldg	54000	1701000	0	1940400	1151000	0	1113650	5906050
33G010	Structures	261000	8221500	0	3395700	0	0	4527180	16144380
33G020	Fire Protection, HVAC and Lighting	0	0	0	0	6345000	0	634500	6979500
	Subtotal 33G Switchgear Generator Bldg	261000	8221500	0	3395700	6345000	0	5161680	23123880
33H010	Structures	22500	708750	0	1309770	0	0	441127	2459647
	Subtotal 33H Fabrication Shop	22500	708750	0	1309770	0	0	441127	2459647
33I010	Structures	22500	708750	0	1309770	0	0	441127	2459647
	Subtotal 33I Mock-up Shop	22500	708750	0	1309770	0	0	441127	2459647
33J010	Structures	70500	2220750	0	2356508	0	0	1294823	5872081
	Subtotal 33J Warehouses	70500	2220750	0	2356508	0	0	1294823	5872081
33K800	Feed and Effluent Transfer	30800	970200	0	1709708	0	0	599691	3279599
	Subtotal 33K Feed and Effluent Transfer	30800	970200	0	1709708	0	0	599691	3279599
33L310	Primary Electrical Distribution	74500	2346750	0	5868632	0	0	1537210	9752592
	Subtotal 33L Switchyard and Power Lines	74500	2346750	0	5868632	0	0	1537210	9752592
33N099	Construction Acceptance Testing	45000	1417500	0	0	0	0	751275	2168775
33N320	Normal Electrical Distribution	87700	2762550	0	98098	0	0	1469057	4329705
33N410	Compressed Air	32800	1033200	0	772926	0	0	586242	2392368

Table F-14. TWRS Facility Configuration Evaluation. Centralized Support Facilities and Sitework, Rev. 1
S1 - Estimate Summary by MT (Job No. 436302) (5 Sheets)

MT	Description	Staff Hours	Labor	Equipment Usage	Material	Sub-contract	Equipment	Overhead and Profit	Total Dollars
33N430	Ion Exchange	900	28350	0	12936	0	0	15673	56959
33N440	Cooling Tower	37300	1174950	0	1015476	0	0	673498	2863924
33N480	Demineralizer	2600	81900	0	70070	0	0	46911	198881
33N490	Sanitary Water	900	28350	0	24794	0	0	16266	69410
33N500	Raw Water/fire Water	141500	4457250	0	3270698	0	0	2525878	10253826
33N510	Sanitary Sewer	700	22050	0	19404	0	0	12657	54111
33N530	Non-radioactive Liquid Waste Proc	24800	781200	0	651112	0	0	446592	1878904
33N540	Chemical Receipt and Make-up	50100	1578150	0	1728034	0	0	922822	4229006
33N550	Bulk Cold Chemical Vent System	2100	66150	0	128282	0	0	41474	235906
33N580	Glass Former Preparation	104300	3285450	0	2841580	0	0	1883367	8010397
33N590	Cryogenic Oxygen	21800	686700	0	673750	0	0	397639	1758089
33N600	Shared Facility Utility Piping	73000	2299500	0	1642872	0	0	1300879	5243251
33N620	HPS Vacuum System	900	28350	0	53900	0	0	17721	99971
33N720	System 72 Cold Handling	400	12600	0	2156	0	0	6786	21542
	Subtotal 33N Shared Utilities	626800	19744200	0	13006088	0	0	11114737	43865025
	Subtotal 33 Centralized Facilities	1619247	51006281	0	39658851	23897000	0	31405981	145968113
340010	Sitework	273900	8627850	0	14493788	9668500	0	6264302	39054440
	Subtotal 340 Sitework	273900	8627850	0	14493788	9668500	0	6264302	39054440

Table F-14. TWRS Facility Configuration Evaluation. Centralized Support Facilities and Sitework, Rev. 1
S1 - Estimate Summary by MT (Job No. 436302) (5 Sheets)

MT	Description	Staff Hours	Labor	Equipment Usage	Material	Sub-contract	Equipment	Overhead and Profit	Total Dollars
	Subtotal 34 Sitework	273900	8627850	0	14493788	9668500	0	6264302	39054440
	Subtotal 3 Construction	1893147	59634131	0	54152639	33565500	0	37670283	185022553
411000	Construction Management	0	0	0	0	20000000	0	0	20000000
	Subtotal 411 Construction Management	0	0	0	0	20000000	0	0	20000000
	Subtotal 41 Construction Management	0	0	0	0	20000000	0	0	20000000
	Subtotal 4 Construction Management	0	0	0	0	20000000	0	0	20000000
511000	Project Management	0	0	0	0	35000000	0	0	35000000
	Subtotal 511 Project Management	0	0	0	0	35000000	0	0	35000000
	Subtotal 51 Project Management	0	0	0	0	35000000	0	0	35000000
	Subtotal 5 Project Management	0	0	0	0	35000000	0	0	35000000
	Project Total	1893147	59634131	0	54152639	178565500	38934126	39616988	370903384

Table F-15. TWRS Facility Configuration Evaluation - Case 1A. Detached Separations Facility Low Cs Removal S1 - Estimate Summary by MT (Job No. 4675.840 Rev. 1) (5 Sheets)

MT	Description	Staff Hours	Labor	Equipment Usage	Material	Sub-contract	Equipment	Overhead & Profit	Total Dollars
111000	Engineering Title I, II, III	0	0	0	0	73732000	0	0	73732000
	Subtotal 11 Engineering Title I, II, II	0	0	0	0	73732000	0	0	73732000
	Subtotal 1 Engineering	0	0	0	0	73732000	0	0	73732000
241200	In Facility Operations	0	0	0	0	0	24937866	1246894	26184760
241242	Resin Export (Spent)	0	0	0	0	0	674828	33741	708569
241700	Process Vessel Ventilation	0	0	0	0	0	2683358	134168	2817526
241900	HVAC	0	0	0	0	0	2868127	143406	3011533
241910	HVAC	0	0	0	0	0	2312310	115616	2427926
	Subtotal 241 In-cell Equipment	0	0	0	0	0	33476489	1673825	35150314
242004	Filter Material (Process)	0	0	0	0	0	107908	5395	113303
242012	Water	0	0	0	0	0	426457	21323	447780
242015	Chilled Water and Monitoring	0	0	0	0	0	1671439	83572	1755011
242020	Demin. Water	0	0	0	0	0	51205	2560	53765
242027	Electrical Distribution	0	0	0	0	0	1515409	75770	1591179
242028	CCTV	0	0	0	0	0	539000	26950	565950
242060	Structure	0	0	0	0	0	12651866	632594	13284460
242072	Steam Generation	0	0	0	0	0	1293600	64680	1358280
242200	In Facility Operations	0	0	0	0	0	2659728	132986	2792714

Table F-15. TWRS Facility Configuration Evaluation - Case 1A. Detached Separations Facility Low Cs Removal S1 - Estimate Summary by MT (Job No. 4675.840 Rev. 1) (5 Sheets)

MT	Description	Staff Hours	Labor	Equipment Usage	Material	Sub-contract	Equipment	Overhead & Profit	Total Dollars
242230	Process Instrumentation	0	0	0	0	0	17357956	867898	18225854
242800	Process Condensate	0	0	0	0	0	916839	45842	962681
	Subtotal 242 Out-of-cell Equipment	0	0	0	0	0	39191407	1959570	41150977
	Subtotal 24 GFE Procurement	0	0	0	0	0	72667896	3633395	76301291
	Subtotal 2 Procurement	0	0	0	0	0	72667896	3633395	76301291
314004	Filter Material (Process)	3799	119669	0	114046	0	0	69128	302843
314005	IX Material	5333	167990	0	137403	0	0	95905	401298
314006	Sodium Nitrite	1524	48007	0	40241	0	0	27455	115703
314007	Sodium Hydroxide	4911	154697	0	766982	0	0	120339	1042018
314008	Nitric Acid	2274	71631	0	57051	0	0	40816	169498
314012	Water	4306	135639	0	40268	0	0	73902	249809
314015	Chilled Water and Monitoring	23820	750331	0	551623	140000	0	439256	1881210
314016	Cooling Water and Monitoring	3346	105399	0	243615	0	0	68042	417056
314017	Steam and Condensate Monitoring	14843	467555	0	840614	0	0	289835	1598004
314018	Steam Once Thru	7422	233793	0	420307	0	0	144926	799026
314019	Fire Protection	7524	237007	0	186566	0	0	134942	558515
314020	Demin. Water	10498	330687	0	269621	0	0	188745	789053
314021	Raw Site Water (Process)	1719	54149	0	26893	0	0	30043	111085

Table F-15. TWRS Facility Configuration Evaluation - Case 1A. Detached Separations Facility Low Cs Removal S1 - Estimate Summary by MT (Job No. 4675.840 Rev. 1) (5 Sheets)

MT	Description	Staff Hours	Labor	Equipment Usage	Material	Sub-contract	Equipment	Overhead & Profit	Total Dollars
314022	Potable Water	1012	31878	0	10597	0	0	17425	59900
314023	Process Air	1182	37233	0	8913	0	0	20179	66325
314024	Instrument Air	3040	95760	0	53145	0	0	53410	202315
314026	Breathing Air	3000	94500	0	22625	0	0	51216	168341
314027	Electrical Distribution	26720	841683	0	438160	0	0	468000	1747843
314028	CCTV	360	11340	0	5390	0	0	6280	23010
314050	Maintenance Equipment	8461	266522	0	173994	0	0	149956	590472
314052	Health Physics	1429	45014	0	18671	0	0	24791	88476
314055	Plant Wash Facilities	15675	493763	0	363566	0	0	279872	1137201
314056	Local Control Systems and Panels	3907	123071	0	48875	0	0	67672	239618
314060	Structure	722958	22773180	0	13319176	0	0	12735747	48828103
314070	Flask Out Bay	1050	33075	0	56246	0	0	20343	109664
314071	Gas Storage Bldg	1809	56984	0	72908	0	0	33849	163741
314072	Steam Generation	7169	225824	0	84118	100000	0	133894	543836
314073	Spent Resin Flasking Bldg	17831	561677	0	380689	0	0	316725	1259091
	Subtotal 3140 Utilities/ Cold Chemical	906922	28568058	0	18752303	240000	0	16102693	63663054
314200	In Facility Operations	190203	5991396	0	176494	9099000	0	4094165	19361055
314205	Sampling System	13059	411359	0	154610	0	0	225750	791719

Table F-15. TWRS Facility Configuration Evaluation - Case 1A. Detached Separations Facility Low Cs Removal S1 - Estimate Summary by MT (Job No. 4675.840 Rev. 1) (5 Sheets)

MT	Description	Staff Hours	Labor	Equipment Usage	Material	Sub-contract	Equipment	Overhead & Profit	Total Dollars
314210	Main Process IX	8232	259308	0	143200	0	0	144593	547101
314215	Main Process Evaporation to DST	511	16097	0	30555	0	0	10060	56712
314220	Fluidic Pump Systems	23016	725004	0	1323284	0	0	450416	2498704
314225	Cell Monitoring/Empty	8983	282965	0	289501	0	0	164446	736912
314230	Process Instrumentation	173028	5450382	0	103634	0	0	2893885	8447901
314235	Recycle Acid	893	28130	0	24753	0	0	16147	69030
314240	Product Export	2407	75821	0	165087	0	0	48439	289347
314242	Resin Export (Spent)	4937	155516	0	52827	0	0	85065	293408
314243	Spent Filter Media	406	12789	0	4802	0	0	7018	24609
	Subtotal 3142 In Facility Operations	425675	13408767	0	2468747	9099000	0	8139984	33116498
314700	Process Vessel Ventilation	2811	88547	0	9335	0	0	47399	145281
314710	Process Vessel Vent	1849	58244	0	159992	0	0	38869	257105
314720	Filter Wash	1429	45014	0	18671	0	0	24791	88476
	Subtotal 3147 Vessel Ventilation	6089	191805	0	187998	0	0	111059	490862
314800	Process Condensate	1128	35532	0	5185	0	0	19093	59810
314810	Main Process Collect and Adjust	5470	172305	0	375198	0	0	110081	657584
314820	Condensate Export	450	14175	0	25473	0	0	8786	48434
314830	Process Recycle	2188	68922	0	150079	0	0	44033	263034

Table F-15. TWRS Facility Configuration Evaluation - Case 1A. Detached Separations Facility Low Cs Removal S1 - Estimate Summary by MT (Job No. 4675.840 Rev. 1) (5 Sheets)

MT	Description	Staff Hours	Labor	Equipment Usage	Material	Sub-contract	Equipment	Overhead & Profit	Total Dollars
	Subtotal 3148 Process Condensate	9236	290934	0	555935	0	0	181993	1028862
314900	HVAC	2392	75348	0	0	0	0	39934	115282
314910	HVAC	110948	3494863	0	3623315	0	0	2033445	9151623
314930	Building Vent	2127	67001	0	343742	0	0	52698	463441
	Subtotal 3149 HVAC	115467	3637212	0	3967057	0	0	2126077	9730346
	Subtotal 314 Pretreatment Bldg	1463389	46096776	0	25932040	9339000	0	26661806	108029622
	Subtotal 31 CF Construction	1463389	46096776	0	25932040	9339900	0	26661806	108029622
	Subtotal 3 Construction	1463389	46096776	0	25932040	9339900	0	26661806	108029622
411000	General Construction Contractor	0	0	0	0	18433000	0	0	18433000
	Subtotal 41 General Construction Contract	0	0	0	0	18433000	0	0	18433000
	Subtotal 4 Construction Management	0	0	0	0	18433000	0	0	18433000
511000	Project Management	0	0	0	0	27650000	0	0	27650000
	Subtotal 51 Project Management	0	0	0	0	27650000	0	0	27650000
	Subtotal 5 Project Management	0	0	0	0	27650000	0	0	27650000
	Project Total	1463389	46096776	0	25932040	129154000	72667896	30295201	304145913

Table F-16. TWRS Facility Configuration Evaluation - Case 2B-R1. 200T/D LLW,F/S - Detached (Cullet in Sulfur) S1 - Estimate Summary by MT (Job No. 436302) (6 Sheets)

MT	Description	Staff Hours	Labor	Equipment Usage	Material	Sub-contract	Equipment	Overhead and Profit	Total Dollars
111000	Engineering	0	0	0	0	234000000	0	0	234000000
	Subtotal 111 Engineering	0	0	0	0	234000000	0	0	234000000
	Subtotal 11 Engineering	0	0	0	0	234000000	0	0	234000000
	Subtotal 1 Engineering	0	0	0	0	234000000	0	0	234000000
231120	Feed Preparation	0	0	0	0	0	14508802	725440	15234242
231130	Melter	0	0	0	0	0	37220106	1861006	39081112
231140	Melter Off-gas	0	0	0	0	0	26052025	1302601	27354626
231150	Vessel Off-gas	0	0	0	0	0	5173322	258666	5431988
231180	Off-spec Cullet Handling	0	0	0	0	0	14574560	728728	15303288
231200	Radioactive Liquid Waste	0	0	0	0	0	18290426	914522	19204948
231220	Melter Feed	0	0	0	0	0	9623306	481165	10104471
231230	Cask Handling and Inspection	0	0	0	0	0	1329174	66458	1395632
231240	Cask Filling	0	0	0	0	0	12916596	645830	13562426
231250	Cullet Screening and Drying	0	0	0	0	0	7691530	384577	8076107
231260	Sulfur Mixing	0	0	0	0	0	569184	28459	597643
231630	Process Sampling/analytical Facility	0	0	0	0	0	22796466	1139823	23936289
	Subtotal 231 In-cell Equipment	0	0	0	0	0	170745497	8537275	179282772

Table F-16. TWRS Facility Configuration Evaluation - Case 2B-R1. 200T/D LLW,F/S - Detached (Cullet in Sulfur) S1 - Estimate Summary by MT (Job No. 436302) (6 Sheets)

MT	Description	Staff Hours	Labor	Equipment Usage	Material	Sub-contract	Equipment	Overhead and Profit	Total Dollars
232050	HVAC	0	0	0	0	0	7565404	378270	7943674
232060	Support Equipment Repair and Maintenance	0	0	0	0	0	536844	26842	563686
232190	Cullet Air Drying Supply	0	0	0	0	0	19276796	0	19276796
232270	Claus Sulfur Plant	0	0	0	0	0	52822	2641	55463
232320	Electrical Distribution	0	0	0	0	0	9086462	454323	9540785
232420	Medium Pressure Steam	0	0	0	0	0	14014	701	14715
232430	Process Steam	0	0	0	0	0	1764686	88234	1852920
232450	Process Cooling Water	0	0	0	0	0	434434	21722	456156
232460	Melter Cooling Water	0	0	0	0	0	116424	5821	122245
232470	Process Chilled Water	0	0	0	0	0	43120	2156	45276
232480	Process Water	0	0	0	0	0	21560	1078	22638
232520	Potentially Rad Liquid Waste	0	0	0	0	0	300762	15038	315800
232540	Cold Chemicals	0	0	0	0	0	2306920	115346	2422266
232560	Cold Feed Vent	0	0	0	0	0	33418	1671	35089
232570	Canister Receipt and Handling	0	0	0	0	0	144452	7223	151675
232580	Glass Former Prep and Feed	0	0	0	0	0	125048	6252	131300
232610	DCS	0	0	0	0	0	7533064	376653	7909717
232620	Health Physics	0	0	0	0	0	10293822	514691	10808513

Table F-16. TWRS Facility Configuration Evaluation - Case 2B-R1. 200T/D LLW,F/S - Detached (Cullet in Sulfur) S1 - Estimate Summary by MT (Job No. 436302) (6 Sheets)

MT	Description	Staff Hours	Labor	Equipment Usage	Material	Sub-contract	Equipment	Overhead and Profit	Total Dollars
232660	Mis System	0	0	0	0	0	1553398	77670	1631068
232720	Cold Handling Equipment	0	0	0	0	0	762146	38107	800253
	Subtotal 232 Out-of-cell Equipment	0	0	0	0	0	61965596	2134439	64100035
233110	Feed Receipt and Storage	0	0	0	0	0	14758898	737945	15496843
	Subtotal 233 Waste Staging Tankage	0	0	0	0	0	14758898	737945	15496843
	Subtotal 23 GFE Procurement	0	0	0	0	0	247469991	11409659	258879650
	Subtotal 2 Procurement	0	0	0	0	0	247469991	11409659	258879650
313010	Structures	1910774	60189381	0	29449722	0	0	33372858	123011961
313040	Fire Prot and Detect	2054	647294	0	552533	0	0	370693	1570520
313050	HVAC	243400	7667100	0	8246767	0	0	4475901	20389768
313060	Support Equipment Repair and Maint	3500	110250	0	25872	0	0	59727	195849
313099	Construction Acceptance Testing	137000	4315500	0	0	0	0	2287215	6602715
313120	Feed Preparation	47600	1499400	0	1255870	0	0	857476	3612746
313130	Melter	91600	2885400	0	1467158	0	0	1602620	5955178
313140	Melter Off-gas	184700	5818050	0	3339615	0	0	3250547	12408212
313150	Vessel Off-gas	63900	2012850	0	2057902	0	0	1169706	5240458
313180	Off-spec Cullet Handling	64600	2034900	0	453838	0	0	1101189	3589927

Table F-16. TWRS Facility Configuration Evaluation - Case 2B-R1. 200T/D LLW,F/S - Detached (Cullet in Sulfur) S1 - Estimate Summary by MT (Job No. 436302) (6 Sheets)

MT	Description	Staff Hours	Labor	Equipment Usage	Material	Sub-contract	Equipment	Overhead and Profit	Total Dollars
313190	Cullet Air Drying Supply	126600	3987900	0	11272546	0	0	2677214	17937660
313200	Radioactive Liquid Waste	122800	3868200	0	2877906	0	0	2194042	8940148
313220	Melter Feed	38300	1206450	0	734118	0	0	676125	2616693
313230	Cask Handling and Inspection	8500	267750	0	22638	0	0	143040	433428
313240	Cask Filling	57600	1814400	0	404250	0	0	981845	3200495
313250	Cullet Screening and Drying	37700	1187550	0	265188	0	0	642661	2095399
313260	Sulfur Mixing	39000	1228500	0	1322706	0	0	717240	3268446
313270	Claus Sulfur Plant	4400	138600	0	187572	0	0	82837	409009
313320	Electrical Distribution	54000	1701000	0	68992	0	0	904980	2674972
313420	Medium Pressure Steam	26500	834750	0	980980	0	0	491467	2307197
313450	Process Cooling Water	18700	589050	0	1238622	0	0	374128	2201800
313460	Melter Cooling Water	13300	418950	0	598290	0	0	251959	1269199
313470	Process Chilled Water	1400	44100	0	47432	0	0	25745	117277
313480	Process Water	3400	107100	0	70070	0	0	60267	237437
313520	Potentially Rad Liquid Waste	20400	642600	0	689920	0	0	375074	1707594
313540	Cold Chemicals	187100	5893650	0	6259568	0	0	3436613	15589831
313560	Cold Feed Vent	3700	116550	0	576730	0	0	90609	783889
313570	Canister Receipt and Handling	400	12600	0	1078	0	0	6732	20410
313580	Glass Former Prep and Feed	6800	214200	0	319088	0	0	129480	662768

Table F-16. TWRS Facility Configuration Evaluation - Case 2B-R1. 200T/D LLW,F/S - Detached (Cullet in Sulfur) S1 - Estimate Summary by MT (Job No. 436302) (6 Sheets)

MT	Description	Staff Hours	Labor	Equipment Usage	Material	Sub-contract	Equipment	Overhead and Profit	Total Dollars
313610	DCS	19000	598500	0	220990	0	0	328255	1147745
313620	Health Physics	37600	1184400	0	568106	0	0	656137	2408643
313630	Analytical Facilities	165600	5216400	0	1189101	0	0	2824147	9229648
313660	Mis System	45700	1439550	0	777238	0	0	801824	3018612
313720	Cold Handling Equipment	2200	69300	0	10780	0	0	37268	117348
	Subtotal 313 Vitrification Bldg	3808323	119962175	0	77553186	0	0	67457621	264972982
	Subtotal 31 Process Facility	3808323	119962175	0	77553186	0	0	67457621	264972982
322010	Structures	574673	18102200	0	7755406	0	0	9981935	35839541
322050	HVAC	45300	1426950	0	1840577	0	0	848313	4115840
322110	Feed Receipt and Storage	84100	2649150	0	1583582	0	0	148322	5715961
	Subtotal 322 LLW Waste Staging/sampling	704073	22178300	0	11179565	0	0	12313477	45671342
325010	Structures	60030	1890945	0	854455	0	0	1044924	3790324
325050	HVAC	0	0	0	0	0	0	0	0
	Subtotal 325 Contact Filter Blower Room	60030	1890945	0	854455	0	0	1044924	3790324
327010	Structures	98784	3111696	0	4517769	0	0	1875087	9504552
327040	Fire Protection and Detection	4234	133371	0	111922	0	0	76283	321576
327050		29100	916650	0	674828	0	0	519566	2111044

Table F-16. TWRS Facility Configuration Evaluation - Case 2B-R1. 200T/D LLW,F/S - Detached (Cullet in Sulfur) S1 - Estimate Summary by MT (Job No. 436302) (6 Sheets)

MT	Description	Staff Hours	Labor	Equipment Usage	Material	Sub-contract	Equipment	Overhead and Profit	Total Dollars
		132118	4161717	0	5304519	0	0	2470936	11937172
		896221	28230962	0	17338539	0	0	15829337	61398838
		4704544	148193137	0	94891725	0	0	83286958	326371820
411000		5	0	0	0	59000000	0	0	59000000
		5	0	0	0	59000000	0	0	59000000
		5	0	0	0	59000000	0	0	59000000
		5	0	0	0	59000000	0	0	59000000
511000		0	0	0	0	88000000	0	0	88000000
		0	0	0	0	88000000	0	0	88000000
		0	0	0	0	88000000	0	0	88000000
		0	0	0	0	88000000	0	0	88000000
		4704549	148193137	0	94891725	381000000	247469991	94696617	966251470

F.6 Backup for Table 9-10

The values given below are for the construction of facilities only. Vault construction will be detailed separately. The values in Table 9-10 are a summation for the construction of the facilities and the vaults.

Detailed estimates for the five categories listed in the following table were created for the No Separations alternative and the Tri-Party Agreement alternative. From these estimates for the No Separations alternative, the needed values for its construction resource requirements were calculated. The scale factors given in the following table were then employed to calculate the construction resource requirements for the Tri-Party Agreement alternative without the need for additional detailed estimates.

Table F-17. Facility Construction Categories and Multiplication Factors.

Item	No Separations Alternative	Tri-Party Agreement Alternative	Multiplication Factor
1. Clear & Grub	148 acre	200 acre	1^{35}
2. Excavation for buildings.	1,020,000 cy	1,138,000 cy	1^{12}
Haul to stockpile	750,000 cy	862,000 cy	1^{15}
Average haul	1,200 feet	1,400 feet	1^{17}
Haul to wastepile	270,000 cy	276,000 cy	1^{02}
Average haul	2,200 feet	3,300 feet	1^{50}
3. Structural backfill	750,000 cy	862,000 cy	1^{15}
4. Concrete	207,000 m^3	313,000 m^3	1^{51}
Steel	61,000 Mg	95,000 Mg	1^{56}
5. Schedule	5 years	10 years	1^{5}*

Note:

*Twice the time ≠ twice the effort. Arbitrary use 1^{5} cy is cubic yards.

Surface Committed Temporarily

From plot for area disturbed: 200 acres
1 hectare = 2.47 acres
200 acres = 200 ÷ 2.47 = 80.97

Use 81 Hectares (81,000 m^2)

Water Usage

Table F-18. Water Usage for Construction.

In Thousands of Gallons	No Separations	Factor	Tri-Party Agreement Preferred
Structural backfill	24,163	1^{15}	27,790
Water roads for earthwork	14,800	1^{35}*	19,980
Water roads for remainder of construction	7,500	1^{50}**	11,250
Wet screen for aggregate	933	1^{51}	1,410
Mix concrete	7,308	1^{51}	11,040
Washout trucks	450	1^{51}	680
Concrete cure	1,050	1^{51}	1,590
Daily water usage	3,600	1^{50}**	5,400
Total			79,140

Notes:

*1^{15} more quantity + 1^{17} longer haul = 1^{35}
**2^{0} longer schedule @ slower pace ≈ 1^{50}

79,140,000 gal = (79,140,000 gal)(0.1337 cubic foot/gal)
= 10,581,000 cubic foot
= 243 acre-foot

243 acre-foot ÷ 8.10 ac ft/hectare meter
= 30 Hectare meters
= 30,000 cubic meters

Energy

Use an overall factor increase of 1.5.

30 Gwh x 1.5 = 45 Gwh

Fuel Usage

Table F-19. Fuel Usage for Construction.

	No Separations		Factor	Tri-Party Agreement	
	Diesel (thousands of gallons)	Gas (thousands of gallons)		Diesel (thousands of gallons)	Gas (thousands of gallons)
Earthwork	626.9	8.5	1.35	846.3	11.5
Concrete	387.6	0.4	1.51	585.3	0.6
General	680.0	720.0	1.5	1020.0	1080.0
General	1046.1	37.3	1.5	1569.2	56.0
General	378.0	570.8	1.5	567.0	856.21

Convert to liters

Diesel

4,587,800 x 3.788 = 17,378,586
Say 17.4E+06 liters

Gas

2,004,300 x 3.788 = 7,592,288
Say 7.6E+06 liters

Materials

Table F-20. Concrete/Steel Usage for Construction.

Prime Account	High-Level Waste	Pretreatment/ Low-Level Waste	Centralized Facilities	Receipt/Sample Facility	Total
Concrete	169,348 m^3	96,770 m^3	27,762 m^3	18,640 m^3	312,520 m^3
Steel					
C.S.					
Rebar	27,450	17,614	1,684	3,393	50,140
Piping	504	492	1,890	54	2,940
Equipment	1,317	1,544	7,526	399	10,786
Structure	2,920	1,717	3,864	1,971	10,472
Misc.@5%	1,610	1,068	748	291	3,717
S.S					
Piping	370	436	473	91	1,369
Equipment	4,985	4,010	1,218	1,719	11,933
Jump/EMB	310			127	437
Cell liner	267	186			453
Misc.@5%	297	232	85	97	710
Hastelloy					
Piping	7	11			19
Equipment	1,518	625			2,143
Jump/EMB	10				10
Misc.@5%	77	32			109
Total	41,641	27,968	17,488	8,140	95,237

Notes:

All units are in metric tons unless otherwise noted.
All values exclude contingency.

Detailed estimates for the five categories listed in the following table were created for the No Separations alternative and the construction of the first double row of sulfur vaults. From these estimates for the No Separations alternative the needed values for its construction resource requirements were calculated. The scale factors given in the following table were then employed to calculate the construction resource requirements for the vaults without the need for additional detailed estimates.

Table F-21. Vault Construction Categories and Multiplication Factors.

	No Separations	First Double Row of Sulfur Vaults	Multiplication Factor
Clear & Grub	148 acre	0 acre	0
Excavation	1,020,000 cy	305,000 cy	0.30
Backfill	750,000 cy	209,000 cy	0.28
Concrete	207,000 m^3	43,000 m^3	0.21
Steel	61,000 Mg	5,000 Mg	0.08

Water Usage

Table F-22. Water Usage for Vault Construction.

	No Separations (Gallons)	Multiplication Factor	First Double Row of Sulfur Vaults (Gallons)
Structural backfill	24,163,000	0.28	6,766,000
Water roads during earthwork	14,800,000	0.30	4,440,000
Wet screen for aggregate	933,000	0.21	196,000
Mix concrete	7,308,000	0.21	1,535,000
Wash out mixer trucks	450,000	0.21	95,000
Cure concrete	1,050,000	0.21	221,000
Total			13,253,000

13,253,000 gal x 0.1337 cubic foot/gal ÷ 43560 square foot/acre = 40.7 acre foot

40.7 acre foot ÷ 8.10 acre foot/hectare meter = 5.02 hectare meter

Say 5.0 hectare meters

Electrical Usage

Use an average factor increase of 0.25

30 Gwh x 0.25 = 7.5 Gwh

Fuel Usage

Table F-23. Fuel Usage for Vault Construction.

Fuel Usage	No Separations		Multiplication Factor	First Double Row of Sulfur Vaults	
	Diesel (Gallons)	Gasoline (Gallons)		Diesel (Gallons)	Gasoline (Gallons)
Excavation, backfill, general support	599,700	7,800	0.29	173,900	2,300
Concrete	387,600	400	0.21	81,400	100
Total				255,300	2,400

Convert to liters

Diesel:
255,300 gals x 3.788 gals/liter = 967,100 liters

Gasoline:
2,400 gals x 3.788 gals/liter = 9,100 liters

Last Three Double Rows

The last three double rows of sulfur vaults will roughly represent:

34/12 = 2.83 times more activity

For the last three double rows the results for the first double row quantities were multiplied by 2.83.

F.7 Backup for Table 9-11

Table F-24. Summary of Construction Emissions.

Period of Release During Construction	Carbon Monoxide (CO)	Exhaust[1] Hydrocarbons (Hydrocarbons)	Fugitive[1] Hydrocarbons (Hydrocarbons)	Nitrogen Oxides as NO_2 (NOx)	Aldehydes as HCHO (Aldehydes)	Sulfur Oxides as SO_2 (SOx)	Particulate Matter (PM_{10})[2] (Particulate)
Year 1 (Table F-26)	46510.8	6431.14	217.577	92510.6	2817.39	2834.9	7746.52
Years 2-4 (Table F-27)	40398.5	5331.53	2.478	96685.2	2492.64	1752.9	6135.2
5-Year Duration (Table F-28)	344346	49170.9	3080.9	404620	8113.84	4730.6	33157.6
5-Year Duration (Table F-29)	31869115	1091332	478297	1121044	39606.6	1709.3	73430.4
5-Year Duration (Table F-30)	83749.8	8484.49	5466.72	21206.6	0	3075.0	0
Totals	32384120.1	1160750.06	487064.68	1736066.4	53030.47	14102.7	120469.72

Notes:

[1]AP-42 emission factors present separate exhaust hydrocarbon and fugitive hydrocarbons emission factors for gasoline powered engines. The total hydrocarbon emissions is the sum of these two emissions.

[2]Exhaust particulate is assumed to be PM_{10}.

Table F-25. Summary of Fugitive Dust Emissions.

Total PM_{10} Fugitive Emissions (metric tons)		
	No Separations	Tri-Party Agreement
1. Clear and Grub		
A. Bulldozer grading	5.1	
B. Paved road traffic	7.8	
2. Construction Site Excavation		
A. Unpaved road traffic	176	
B. Scraper unloading	2.6	
C. Dozer grading	6.4	
D. Wind erosion (storage and waste piles)	42.1	
3. Aggregate Borrow Pit Excavation		
A. Dump truck loading, truck unloading and crusher loading	1.6	
B. Unpaved road traffic	1.4	
4. Batch Plant Operation		
A. Dump truck unloading	Included in IIIA	
B. Batch plant operation	10.4	
C. Wind erosion (aggregate and sand piles)	0.1	
D. Paved road traffic	100.2	
E. Unpaved road traffic	0.86	
TOTAL (tonnes)	355	497[1]

Note:

[1]Tri-Party Agreement fugitive dust emissions = 1.4 x no separations emissions.

Table F-26. Construction Equipment Non-Radiological Emissions Estimates Tri-Party Agreement Alternative Linearly Scaled Against No Separations Alternative Baseline (1 year).

Equipment Description	Rated Power (hp)	AP-42 Category	Number of Units	Total Usage	Emission Factor	Carbon Monoxide		Exhaust Hydrocarbons		Fugitive Hydrocarbons		Nitrogen Oxides as NO_2		Aldehydes as HCHO		Sulfur Oxides as SO_2*		Particulate Matter	
					units	fact	emiss	fact	emiss	fact	emiss	fact	emiss	fact	emiss	fact	emiss	fact	emiss
¾ ton pickup	250	LDGT1	1	64800 mi	g/mi	10.25	664.2	0.81	52.488	0.59	38.232	1.06	68.688	-	-	-	-	-	-
D8 dozer	335	wheeled dozer D	4	3770 hr	g/hr	816.8	3079.37	86.84	327.387	-	0	1889	7122.13	29.5	111.215	-	-	75	282.75
Cat 966 loader	200	wheeled loader D	1	120 hr	g/hr	259.6	31.1496	113.2	13.5804	-	0	858.2	102.983	18.8	2.256	-	-	77.9	9.348
10 cy dump truck	250	off-highway truck D	8	960 hr	g/hr	816.8	784.138	86.84	83.3664	-	0	1889	1813.59	51	48.96	-	-	116	111.36
Cat D9 dozer	460	wheeled dozer D	2	2800 hr	g/hr	816.8	2287.07	86.84	243.152	-	0	1889	5289.65	29.5	82.6	-	-	75	210
Cat 637E scraper	450	scraper D	6	7780 hr	g/hr	568.2	4420.52	128.2	997.007	-	0	1741	13543	65	505.7	-	-	184	1431.52
(Twin engine)	250	scraper D	6	7780 hr	g/hr	568.2	4420.52	128.2	997.007	-	0	1741	13543	65	505.7	-	-	184	1431.52
Towed vibratory roller	50	roller G	1	1400 hr	g/hr	6080	8512	277	387.8	83.7	117.18	164	229.6	7.57	10.598	-	-	11.8	16.52
Cat 14G Motor Grader	200	motor grader D	2	4370 hr	g/hr	68.46	299.17	18.07	78.9659	-	0	324.4	1417.76	5.54	24.2098	-	-	27.7	121.049
Cat 235B Backhoe	215	misc. D	1	80 hr	g/hr	306.4	24.5096	69.35	5.548	-	0	767.3	61.384	13.9	1.112	-	-	63.2	5.056
Cat 623E Elevating Scraper	330	scraper D	4	6270 hr	g/hr	568.2	3562.55	128.2	803.501	-	0	1741	10914.4	65	407.55	-	-	184	1153.68
Cat 815B Compactor	210	misc. D	1	1570 hr	g/hr	306.4	481.001	69.35	108.88	-	0	767.3	1204.66	13.9	21.823	-	-	63.2	99.224
5000 gal Water Tanker	300	off-highway truck D	1	1570 hr	g/hr	816.8	1282.39	86.84	136.339	-	0	1889	2965.98	51	80.07	-	-	116	182.12

Table F-26. Construction Equipment Non-Radiological Emissions Estimates Tri-Party Agreement Alternative Linearly Scaled Against No Separations Alternative Baseline (1 year).

Equipment Description	Rated Power (hp)	AP-42 Category	Number of Units	Total Usage	Emission Factor	Carbon Monoxide		Exhaust Hydrocarbons		Fugitive Hydrocarbons		Nitrogen Oxides as NO_2		Aldehydes as HCHO		Sulfur Oxides as SO_x*		Particulate Matter	
					units	fact	emiss	fact	emiss	fact	emiss	fact	emiss	fact	emiss	fact	emiss	fact	emiss
Mechanics Truck	250	off-highway truck D	1	1650 hr	g/hr	816.8	1347.74	86.84	143.286	-	0	1889	3117.11	51	84.15	-	-	116	191.4
Fuel/Lube Truck	250	off-highway truck D	1	2480 hr	g/hr	816.8	2025.69	86.84	215.363	-	0	1889	4685.12	51	126.48	-	-	116	287.68
Totals			40	No Separations Baseline			33222		4593.7		155.4		66079		2012.4		2025		5533.2
Tri-Party Agreement Scale Factor							1.4		1.4		1.4		1.4		1.4		1.4		1.4
Emissions							46511		6431.1		217.6		92511		2817.4		2835		7746.5

Notes:

LDG = light duty gasoline
HDG = heavy duty gasoline
LDD = light duty diesel
HDD = heavy duty diesel
D = diesel
G = gasoline

Emissions are estimated using U.S. Environmental Protection Agency "AP-42" emission factors. The equipment list and usage estimates were obtained from Bob Campbell, Fluor Daniel Inc.

*SOx emissions are estimated using a fuel specific emission factor of 3.23 grams(SOx)/gallon of diesel burned (0.00712 lbs(SOx)/gal). This factor is based upon "Clean Air Act" maximum permissible diesel fuel sulfur content of 0.05% (by weight). Diesel fuel usage for this equipment is estimated to be 626,911 gallons.

Prepared by: Andy Kimbrough, Fluor Daniel Inc.

Table F-27. Years 2-4 of Construction. Construction Equipment Non-Radiological Emissions Estimates Tri-Party Agreement Alternative Linearly Scaled Against No Separations Alternative Baseline.

Equipment Description	Rated Power (hp)	AP-42 Category	Number of Units	Total Usage	Emiss Factor Units	Carbon Monoxide		Exhaust Hydrocarbons		Fugitive Hydrocarbons		Nitrogen Oxides as NO_x		Aldehydes as HCHO		Sulfur Oxides as SO_x		Particulate Matter	
						fact	emiss (kg)	fact	emiss (kg)	fact	emiss (kg)	fact	emiss (kg)	fact	emiss (kg)	fact	emiss (kg)	fact	emiss (kg)
D8 dozer	335	wheeled dozer D	1	920 hr	g/hr	816.8	751.465	86.84	79.8928	-	0	1889	1738.03	29.5	27.14	-	-	75	69
966 FE loader	200	wheeled loader D	4	8160 hr	g/hr	259.6	2118.17	113.2	923.467	-	0	858.2	7002.83	18.8	153.408	-	-	77.9	635.66
10 cy dump truck	250	off-highway truck D	10	12730 hr	g/hr	816.8	10398	86.84	1105.47	-	0	1889	24049	51	649.23	-	-	116	1476.7
Cat 623E scraper	330	scraper D	4	610 hr	g/hr	568.2	346.596	128.2	78.1715	-	0	1741	1061.85	65	39.65	-	-	184	112.24
Cat 14G motor grader	200	motor grader D	1	150 hr	g/hr	68.46	10.269	18.07	2.7105	-	0	324.4	48.6645	5.54	0.831	-	-	27.7	4.155
¾ ton pickup	250	LDGT1	1	3000 mi	g/mi	10.25	30.75	0.81	2.43	0.59	1.77	1.06	3.18	-	-	-	-	-	-
Cat D6 dozer	165	wheeled dozer D	1	1810 hr	g/hr	816.8	1478.43	86.84	157.18	-	0	1889	3419.38	29.5	53.395	-	-	75	135.75
8 cy concrete mixer trucks	250	off-highway truck D	4	16800 hr	g/hr	816.8	13722.4	86.84	1458.91	-	0	1889	31737.9	51	856.8	-	-	116	1948.8
Totals			26	No Separations Baseline			28856.1		3808.24		1.77		69060.8		1780.5		1252		4382.3
Tri-Party Agreement Scale Factor							1.4		1.4		1.4		1.4		1.4		1.4		1.4
Emissions							40398.5		5331.53		2.478		96685.2		2492.6		1753		6135.2

Table F-27. Years 2-4 of Construction. Construction Equipment Non-Radiological Emissions Estimates Tri-Party Agreement Alternative Linearly Scaled Against No Separations Alternative Baseline.

Notes:

LDG	=	light duty gasoline
HDG	=	heavy duty gasoline
LDD	=	light duty diesel
HDD	=	heavy duty diesel
D	=	diesel
G	=	gasoline

Emissions are estimated using U.S. Environmental Protection Agency "AP-42" emission factors. The equipment list and usage estimates were obtained from Bob Campbell, Fluor Daniel Inc.

*SOx emissions are estimated using a fuel specific emission factor of 3.23 grams(SOx)/gallon of diesel burned (0.00712 lbs(SOx)/gal). This factor is based upon "Clean Air Act" maximum permissible diesel fuel sulfur content of 0.05% (by weight). Diesel fuel usage for this equipment is estimated to be 626,911 gallons.

Prepared by: Andy Kimbrough, Fluor Daniel Inc.

Table F-28. 5-Year Duration of Construction. Equipment Nonradiological Emissions Estimates Tri-Party Agreement Alternative Linearly Scaled Against No Separations Alternative Baseline.

Equipment Description	Rated Power (hp)	AP-42 Category	Number of Units	Total Usage	Emission factor	Carbon Monoxide		Exhaust Hydrocarbons		Fugitive Hydrocarbons		Nitrogen Oxides as NO_2		Aldehydes as HCHO		Sulfur Oxides as SO_2†		Particulate Matter	
					units	fact	emiss (kg)	fact	emiss (kg)	fact	emiss (kg)	fact	emiss (kg)	fact	emiss (kg)	fact	emiss (kg)	fact	emiss (kg)
Utility dozer	65	wheeled dozer D	5	16000 hr	g/hr	816.8	13069	86.84	1389.44	-	0	1889	30226.6	29.5	472	-	-	75	1200
Utility loader/ backhoe	65	wheeled loader D	6	19000 hr	g/hr	259.6	4932.02	113.2	2150.23	-	0	858.2	16305.6	18.8	357.2	-	-	77.9	1480.1
Backhoe-1 cy	65	wheeled loader D	4	10000 hr	g/hr	259.6	2595.8	113.2	1131.7	-	0	858.2	8581.9	18.8	188	-	-	77.9	779
Backhoe-2 cy	120	wheeled loader D	2	3000 hr	g/hr	259.6	778.74	113.2	339.51	-	0	858.2	2574.57	18.8	56.4	-	-	77.9	233.7
Loader-2 cy	120	wheeled loader D	4	10000 hr	g/hr	259.6	2595.8	113.2	1131.7	-	0	858.2	8581.9	18.8	188	-	-	77.9	779
Loader-4 cy	200	wheeled loader D	2	3000 hr	g/hr	259.6	778.74	113.2	339.51	-	0	858.2	2574.57	18.8	56.4	-	-	77.9	233.7
Crane-15 ton	150	misc. D	10	64000 hr	g/hr	306.4	19607.7	69.35	4438.4	-	0	767.3	49107.2	13.9	889.6	-	-	63.2	4044.8
Crane-25 ton	185	misc. D	10	48000 hr	g/hr	306.4	14705.8	69.35	3328.8	-	0	767.3	36830.4	13.9	667.2	-	-	63.2	3033.6
Crane-50 ton	200	misc. D	5	16000 hr	g/hr	306.4	4901.92	69.35	1109.6	-	0	767.3	12276.8	13.9	222.4	-	-	63.2	1011.2
Crane-100 ton	300	misc. D	2	6000 hr	g/hr	306.4	1838.22	69.35	416.1	-	0	767.3	4603.8	13.9	83.4	-	-	63.2	379.2
Forklift-2 ton	60	wheeled loader D	10	56000 hr	g/hr	259.6	14536.5	113.2	6337.52	-	0	858.2	48058.6	18.8	1052.8	-	-	77.9	4362.4
Forklift-4 ton	70	wheeled loader D	6	29000 hr	g/hr	259.6	7527.82	113.2	3281.93	-	0	858.2	24887.5	18.8	545.2	-	-	77.9	2259.1
Forklift-6 ton	100	wheeled loader D	4	16000 hr	g/hr	259.6	4153.28	113.2	1810.72	-	0	858.2	13731	18.8	300.8	-	-	77.9	1246.4
Forklift-10 ton	130	wheeled loader D	4	13000 hr	g/hr	259.6	3374.54	113.2	1471.21	-	0	858.2	11156.5	18.8	244.4	-	-	77.9	1012.7
Forklift-15 ton	150	wheeled loader D	4	10000 hr	g/hr	259.6	2595.8	113.2	1131.7	-	0	858.2	8581.9	18.8	188	-	-	77.9	779
Motor grader	125	motor grader D	4	22000 hr	g/hr	68.46	1506.12	18.07	397.54	-	0	324.4	7137.46	5.54	121.88	-	-	27.7	609.4
Pumps-1 in.	2	IC gasoline	40	128000 hr	g/hp * hr	199	50944	6.68	1710.08	2.99	765.44	5.16	1320.96	0.22	56.32	-	-	0.327	83.712
Pumps-2 in.	5	IC gasoline	20	64000 hr	g/hp * hr	199	63680	6.68	2137.6	2.99	956.8	5.16	1651.2	0.22	70.4	-	-	0.327	104.64

Table F-28. 5-Year Duration of Construction. Equipment Nonradiological Emissions Estimates Tri-Party Agreement Alternative Linearly Scaled Against No Separations Alternative Baseline.

Equipment Description	Rated Power (hp)	AP-42 Category	Number of Units	Total Usage	Emission factor units	Carbon Monoxide		Exhaust Hydrocarbons		Fugitive Hydrocarbons		Nitrogen Oxides as NO_2		Aldehydes as HCHO		Sulfur Oxides as SO_x†		Particulate Matter	
						fact	emiss (kg)	fact	emiss (kg)	fact	emiss (kg)	fact	emiss (kg)	fact	emiss (kg)	fact	emiss (kg)	fact	emiss (kg)
Pumps-6 in.	10	IC gasoline	10	16000 hr	g/hp * hr	199	31840	6.68	1068.8	2.99	478.4	5.16	825.6	0.22	35.2	-	-	0.327	52.32
Totals			152	No Separations Baseline			245962		35122.1		2200.64		289014		5795.6		3379.0		23684
Tri-Party Agreement Scale Factor							1.4		1.4		1.4		1.4		1.4		1.4		1.4
Emissions							344346		49170.9		3080.9		404620		8113.84		4730.6		33158

Notes:

LDG = light duty gasoline
HDG = heavy duty gasoline
LDD = light duty diesel
HDD = heavy duty diesel
D = diesel
G = gasoline

Emissions are estimated using U.S. Environmental Protection Agency "AP-42" emission factors. The equipment list and usage estimates were obtained from Bob Campbell, Fluor Daniel Inc.

*SOx emissions are estimated using a fuel specific emission factor of 3.23 grams(SOx)/gallon of diesel burned (0.00712 lbs(SOx)/gal). This factor is based upon "Clean Air Act" maximum permissible diesel fuel sulfur content of 0.05% (by weight). Diesel fuel usage for this equipment is estimated to be 626,911 gallons.

Prepared by: Andy Kimbrough, Fluor Daniel Inc.

Table F-29. 5-Year Duration of Construction. Construction Equipment Non-Radiological Emissions Estimates Tri-Party Agreement Alternative linearly scaled against No Separations Alternative Baseline.

Equipment Description	Rated Power (hp)	AP-42 Category	Number of Units	Total Usage	Emission Factor	Carbon Monoxide		Exhaust Hydrocarbons		Fugitive Hydrocarbons		Nitrogen Oxides as NO2		Aldehydes as HCHO		Sulfur Oxides as SO2		Particulate Matter	
					units	fact	emiss (kg)	fact	emiss (kg)	fact	emiss (kg)	fact	emiss (kg)	fact	emiss (kg)	fact	emiss (kg)	fact	emiss (kg)
Air Comp - 100 cfm	50	IC gasoline	20	112000	g/hp/hr	199	1114400	6.68	37408	2.99	16744	5.16	28896	0.22	1232	-	-	0.327	1831.2
Air Comp - 250 cfm	90	IC diesel	20	80000	g/hp/hr	3.03	21816	1.12	8064	0.02	144	14	100800	0.21	1512	-	-	1	7200
Air Comp - 600 cfm	180	IC diesel	10	24000	g/hp/hr	3.03	13089.6	1.12	4838.4	0.02	86.4	14	60480	0.21	907.2	-	-	1	4320
Welders - 200 amp	100	IC gasoline	60	336000	g/hp/hr	199	6686400	6.68	224448	2.99	100464	5.16	173376	0.22	7392	-	-	0.327	10987.2
Welders - 400 amp	200	IC gasoline	80	320000	g/hp/hr	199	12736000	6.68	427520	2.99	191360	5.16	330240	0.22	14080	-	-	0.327	20928
Generators - 0.5 kW	5	IC gasoline	20	96000	g/hp/hr	199	95520	6.68	3206.4	2.99	1435.2	5.16	2476.8	0.22	105.6	-	-	0.327	156.96
Generators - 5 kW	10	IC gasoline	20	64000	g/hp/hr	199	127360	6.68	4275.2	2.99	1913.6	5.16	3302.4	0.22	140.8	-	-	0.327	209.28
Generators - 10 kW	20	IC gasoline	15	36000	g/hp/hr	199	143280	6.68	4809.6	2.99	2152.8	5.16	3715.2	0.22	158.4	-	-	0.327	235.44
Generators - 100 kW	75	IC diesel	10	16000	g/hp/hr	3.03	3636	1.12	1344	0.02	24	14	16800	0.21	252	-	-	1	1200
Generators - 250 kW	150	IC diesel	10	16000	g/hp/hr	3.03	7272	1.12	2688	0.02	48	14	33600	0.21	504	-	-	1	2400
Light Plants - 10 kW	20	IC gasoline	50	280000	g/hp/hr	199	1114400	6.68	37408	2.99	16744	5.16	28896	0.22	1232	-	-	0.327	1831.2
Compactors - Walk	5	IC gasoline	60	192000	g/hp/hr	199	191040	6.68	6412.8	2.99	2870.4	5.16	4953.6	0.22	211.2	-	-	0.327	313.92
Compactors - Ride	40	IC gasoline	20	64000	g/hp/hr	199	509440	6.68	17100.8	2.99	7654.4	5.16	13209.6	0.22	563.2	-	-	0.327	837.12
Totals			395	No Separations Baseline			22763654		779523		341641		800746		28290.4		1220.9		52450.3
Tri-Party Agreement Scale Factor							1.4		1.4		1.4		1.4		1.4		1.4		1.4
Emissions							31869115		1091332		478297		1121044		39606.6		1709.3		73430.4

Table F-29. 5-Year Duration of Construction. Construction Equipment Non-Radiological Emissions Estimates Tri-Party Agreement Alternative linearly scaled against No Separations Alternative Baseline.

Notes:

LDG	=	light duty gasoline
HDG	=	heavy duty gasoline
LDD	=	light duty diesel
HDD	=	heavy duty diesel
D	=	diesel
G	=	gasoline

Emissions are estimated using U.S. Environmental Protection Agency "AP-42" emission factors. The equipment list and usage estimates were obtained from Bob Campbell, Fluor Daniel Inc.

*SOx emissions are estimated using a fuel specific emission factor of 3.23 grams(SOx)/gallon of diesel burned (0.00712 lbs(SOx)/gal). This factor is based upon "Clean Air Act" maximum permissible diesel fuel sulfur content of 0.05% (by weight). Diesel fuel usage for this equipment is estimated to be 626,911 gallons.

Prepared by: Andy Kimbrough, Fluor Daniel Inc.

Table F-30. 5-Year Duration of Construction. Construction Equipment Non-Radiological Emissions Estimates Tri-Party Agreement alternative linearly scaled against No Separations Alternative Baseline.

Equipment Description	Rated Power (hp)	AP-42 Category	Number of Units	Total Usage	Emission Factor Units	Carbon Monoxide		Exhaust Hydrocarbons		Fugitive Hydrocarbons		Nitrogen Oxides as NO2		Aldehydes as HCHO		Sulfur Oxides as SO2†		Particulate Matter	
						fact	emiss (kg)	fact	emiss (kg)	fact	emiss (kg)	fact	emiss (kg)	fact	emiss (kg)	fact	emiss (kg)	fact	emiss (kg)
½ ton Pickup	200	LDGT1	50	1600000	g/mi	10.25	16400	0.81	1296	0.59	944	1.06	1696	-	-	-	-	-	-
¾ ton Pickup	250	LDGT1	25	800000	g/mi	10.25	8200	0.81	648	0.59	472	1.06	848	-	-	-	-	-	-
3 ton Flat bed	300	HDGV	20	800000	g/mi	16.16	12928	1.42	1136	1.59	1272	5.1	4080	-	-	-	-	-	-
5 ton Flat bed	350	HDGV	10	320000	g/mi	16.16	5171.2	1.42	454.4	1.59	508.8	5.1	1632	-	-	-	-	-	-
40' Float and Tractor	350	HDDV	10	320000	g/mi	8.67	2774.4	2.53	809.6	-	0	11.44	3660.8	-	-	-	-	-	-
Low Boy with Tractor	400	HDDV	2	15000	g/mi	8.67	130.05	2.53	37.95	-	0	11.44	171.6	-	-	-	-	-	-
Shuttle Bus	250	LDGT1	10	480000	g/mi	10.25	4920	0.81	388.8	0.59	283.2	1.06	508.8	-	-	-	-	-	-
Van	200	LDGT1	10	720000	g/mi	10.25	7380	0.81	583.2	0.59	424.8	1.06	763.2	-	-	-	-	-	-
Fuel/Service Truck	250	LDDT	5	400000	g/mi	1.53	612	0.63	252	-	0	1.09	436	-	-	-	-	-	-
Mechanic's Truck	250	LDDT	5	400000	g/mi	1.53	612	0.63	252	-	0	1.09	436	-	-	-	-	-	-
Water Trucks	300	HDDV	2	80000	g/mi	8.67	693.6	2.53	202.4	-	0	11.44	915.2	-	-	-	-	-	-
Totals			149	No Separations Baseline			59821.3		6060.35		3904.8		15147.6		0		2196.4		0
Tri-Party Agreement Scale Factor							1.4		1.4		1.4		1.4		1.4		1.4		1.4
Emissions							83749.8		8484.49		5466.7		21206.6		0		3075.0		0

Table F-30. 5-Year Duration of Construction. Construction Equipment Non-Radiological Emissions Estimates Tri-Party Agreement alternative linearly scaled against No Separations Alternative Baseline.

Notes:

LDG	=	light duty gasoline
HDG	=	heavy duty gasoline
LDD	=	light duty diesel
HDD	=	heavy duty diesel
D	=	diesel
G	=	gasoline

Emissions are estimated using U.S. Environmental Protection Agency "AP-42" emission factors. The equipment list and usage estimates were obtained from Bob Campbell, Fluor Daniel Inc.

*SOx emissions are estimated using a fuel specific emission factor of 3.23 grams(SOx)/gallon of diesel burned (0.00712 lbs(SOx)/gal). This factor is based upon "Clean Air Act" maximum permissible diesel fuel sulfur content of 0.05% (by weight). Diesel fuel usage for this equipment is estimated to be 626,911 gallons.

Prepared by: Andy Kimbrough, Fluor Daniel Inc.

Fugitive dust (PM_{10} emissions) resulting from the construction of the No Separations alternative and Tri-Party Agreement alternative facilities are divided into four categories of construction activities - (1) clearing and grubbing, (2) construction site excavation, (3) aggregate borrow pit excavation, and (4) batch plant operation. All equations used to estimate particulate emissions, unless otherwise indicated, are taken from the EPA Air/Superfund National Technical Guidance Study Series, "Estimation of Air Impacts from Area Sources of Particulate Matter Emissions at Superfund Sites," EPA-451/R-93-004, April 1993. This document is referred to as "Ref. Doc." throughout the calculation.

The following calculations will estimate the fugitive dust (PM_{10}) emissions for the No Separations alternative. Fugitive dust emissions for the Tri-Party Agreement alternative will be based on a 1.4 ratio of the No Separations emissions. The Tri-Party Agreement scale factor of 1.4 is based on construction equipment usage estimates obtained from Bob Campbell, Fluor Daniel Inc.

Emission Calculations

<u>1. Clearing and Grubbing</u> - Emission sources include (A) dust resulting from clearing and grubbing by a bulldozer and (B) travel by a dump truck on a paved road to dump the collected vegetation. It is assumed dust emissions from the loading and dumping of collected vegetation is negligible when compared to dust emissions resulting from clearing and grubbing.

A. Clear and Grub. Soil clearing and grubbing is assumed to be the same as soil grading. PM_{10} emissions from soil grading by a bulldozer is given by the following:

$$ER = 0.094 \frac{s^{1.5}}{\left(X_{H_2O}\right)^{1.4}}$$

where

ER	=	PM_{10} emission rate [g/sec]
0.094	=	empirical constant [g/sec]
s	=	percent silt content [%] = 15 %
X_{H_2O}	=	percent moisture content [%] = 3%

Substituting for silt and moisture content yields:

$$ER = 0.094 \frac{(15)^{1.5}}{(3)^{1.4}} = 1.2 \text{ g/sec}$$

It is estimated that clearing and grubbing will take 1,181 hours of bulldozer operation. Total soil grading emissions are given by the following:

$$\text{clear - grub emissions} = 1.2 \text{ g/sec} \times 1{,}181 \text{ hrs} \times \frac{3600 \text{ sec}}{1 \text{ hr}}$$

$$= 5.1 \text{ E+06 g}$$

$$= 5.1 \text{ tonnes}$$

where "tonne" is a metric ton which is defined as 1.0E+06 g.

B. Paved Road Vehicle Traffic. To determine the particulate emission rate due to traffic on paved roads, the following equation is used:

$$EF = 220 \left(\frac{sL}{12}\right)^{0.3}$$

EF	=	PM_{10} emission factor [g/km]
220	=	empirical constant [g/km]
sL	=	silt surface loading [g/m^2]
	=	15 g/m^2 (engineering judgement; expected range is 0.3 - 30)
12	=	empirical constant [g/m^2]
0.3	=	empirical constant [unitless]

For this case:

$$EF = 220\left(\frac{15}{12}\right)^{0.3} = 235 \ \frac{\text{g}}{\text{km}}.$$

The total emissions due to traffic on paved roads is:

$$235 \ \frac{\text{g}}{\text{km}} \times 5 \ \frac{\text{miles}}{\text{trip}} \times 4{,}100 \text{ trips} \times \frac{1.609 \text{ km}}{1 \text{ mile}}$$

$$= 7.8 \text{ E+06 grams}$$

$$= 7.8 \text{ tonnes}$$

2. Construction Site Excavation - Excavation is performed by push loaded scrapers. Once filled, the scrapers travel 2,000 ft on a gravel road to dump their load. A dozer with a vibratory roller grades and compacts the dumped soil. Also, scrapers will be used for backfill activities. Emission sources include (A) vehicle travel on a unpaved road, (B) scraper unloading, (C) dozer grading, and (D) wind erosion of storage piles. Because the scraper is filled from the bottom up, it is assumed that dust emissions from the filling of the scraper bowl is negligible when compared to emissions resulting from other excavation activities.

A. Unpaved Road Vehicle Travel. The PM_{10} emission factor is given as follows for travel on unpaved roads.

$$EF = 610 \left(\frac{s}{12}\right) \left(\frac{S}{48}\right) \left(\frac{W}{2.7}\right)^{0.7} \left(\frac{w}{4}\right)^{0.5} \left(\frac{365 - p}{365}\right) \left(\frac{100 - c}{100}\right)$$

EF	=	PM_{10} emission factor [g/km]
610	=	empirical constant [g/km]
s	=	percent silt content of road surface [%]
	=	15 %
12	=	empirical constant [unitless]
S	=	mean vehicle speed [km/hr]
	=	25 mi/hr = 40.2 km/hr
48	=	empirical constant [km/hr]
W	=	mean vehicle weight [Mg]
	=	103,500 lbs = 46.95 Mg
2.7	=	empirical constant [Mg]
w	=	mean number of wheels per vehicle [unitless]
	=	4
4	=	empirical constant [unitless]
365	=	number of days per year [days]
p	=	number of days with $\geq$ 0.01 inches of [days] precipitation
	=	90 days (Fig. 1 of Ref. Doc.)
c	=	control efficiency of road watering [percent]
	=	81.5% (from EPA "Emission Control Technologies and Emission Factors for Unpaved Road Fugitive Emission",1987)

Where:

$$c = 100 - \left(\frac{0.8 - pdt}{i}\right)$$

p	=	potential average hourly daytime [mm/hr] evaporation rate
	=	0.51 mm/hr assuming 85% of annual evaporation (60 inches) occurs during 7 month spring, summer, fall site excavation period and occurs during daylight hours (12 hours/day)
d	=	average hourly daytime traffic rate [hr^{-1}]
	=	263 assuming 7 months, 5 days/week, 10 hrs/day with a total of 400,400 trips (one way total)
t	=	time between applications [hr]
	=	0.5 hrs (2 application/hour)
i	=	application intensity [l/m^2]
	=	2.9 l/m^2 based on 0.07 gallons per square foot

The emissions factor for travel on unpaved roads is calculated as follows:

$$EF = 610 \left(\frac{15}{12}\right) \left(\frac{40.2}{48}\right) \left(\frac{46.95}{2.7}\right)^{0.7} \left(\frac{4}{4}\right)^{0.5} \left(\frac{365 - 90}{365}\right) \left(\frac{100 - 81.5}{100}\right) \frac{g}{km},$$

$$= 657 \frac{g}{km}$$

The emissions factor is then used to calculate the total emissions. One scraper travels an average of 2,000 feet from the excavation pit to the storage and the waste piles. It is estimated to take 100 feet for a scraper to fill it's bowl and another 100 feet to get to the road that leads to the storage pile. A one-way trip is 2,200 feet (0.6706 km) long. 116,800 one-way trips are required to complete excavation and 83,400 one-way trips are required for backfill. Two one-way trips make one round-trip. PM_{10} emission is given by the following:

$$657 \frac{g}{km} \times 0.6706 \frac{km}{trip} \times 2 \times (116{,}800 + 83{,}400) \text{ trips}$$

$$= 1.76 \text{ E+08 g}$$

$$= 176 \text{ tonnes.}$$

B. Scraper Unloading. Scraper unloading is a transfer operation. The emission of PM_{10} from all transfer operations is given by the following:

$$E = \frac{k\ (0.0016)\ (M) \left[\frac{U}{2.2}\right]^{1.3}}{\left[\frac{X_{H_2O}}{2}\right]^{1.4}}$$

E	=	PM emissions [g]
k	=	particle size multiplier [unitless]
	=	.35 (see below)
0.0016	=	empirical constant [g/kg]
M	=	mass of soil handled [kg]
	=	2.341 E+09 kg (see below)
U	=	mean wind speed [m/sec]
	=	5.68 m/sec (See Appendix 1)
2.2	=	empirical constant [m/sec]
X_{H20}	=	percent moisture content [%] = 3%

The particle size multiplier, k, for several sizes of particles for use with the above equation are:

Table F-31. Particle Size Multiplier.

size (microns)	multiplier, k
<50	1.0
<30	0.74
<15	0.48
<10	0.35
<5	0.20
<2.5	0.11

The mass of soil involved in scraper unloading is equal to the sum of soil excavated (1,020,000 yd^3) and the soil used in backfill (750,000 yd^3) since both operations will be done with scrapers.

Total soil unloaded by scraper = 1,020,000 + 750,000 = 1,770,000 yd^3

The conversion to units of kg is shown in the following:

1,770,000 yd^3 x 108 lb/ft^3 x 27 ft^3/yd x .4536 kg/lb= 2.341E+09 kg

PM_{10} emissions resulting from scraper unloading is given by the following:

$$E = \frac{(.35)\ (0.0016)\ (2.341E{+}09) \left[\frac{5.68}{2.2}\right]^{1.3}}{\left[\frac{3}{2}\right]^{1.4}}$$

$$= 2.6\ E{+}06\ g$$

$$= 2.6\ tonnes$$

C. Dozer Grading. Dozer grading of the storage and waste piles also creates PM_{10} emissions. The following equation is used to predict these emissions:

$$ER = \frac{0.094\ S^{1.5}}{\left(X_{H_2O}\right)^{1.4}},$$

ER	= PM_{10} emission rate [g/sec]
0.094	= empirical constant [g/sec]
S	= percent silt content [%] = 15 %
X_{H20}	= percent moisture content [%] = 3 %

For this case:

$$ER = \frac{0.094\ (15)^{1.5}}{3^{1.4}} = 1.2\ \frac{g}{sec}.$$

It is estimated that grading for the storage and waste piles will take 1,480 hours. Total PM_{10} emissions for pile grading is given by the following:

$$\text{pile grading emissions} = 1.2\ \frac{g}{sec} \times 1{,}480\ \text{hrs} \times \frac{3600\ \text{sec}}{\text{hr}}$$

$$= 6.4\ E{+}06\ g$$

$$= 6.4\ \text{tonnes}$$

D. Wind Erosion. The storage and waste piles are continuously active piles. Total suspended particulates (TSP) from wind erosion of continuously active piles are estimated by the following:

$$EF = 1.9 \left(\frac{s}{15}\right) \frac{(365 - p)}{235} \left(\frac{f}{15}\right).$$

EF	=	PM_{10} emission factor [g/m²·day]
1.9	=	empirical constant [g/m²·day]
s	=	percent silt of aggregate = 15 % [%]
1500	=	empirical constant [unitless]
365	=	number of days per year [days]
p	=	number of days of precipitation [days] > 0.01 inches per year
	=	90 days (Fig. 1 of Ref. Document)
235	=	empirical constant [days]
f	=	fraction of time wind > 5.4 m/sec at [unitless] mean pile height
	=	.4016 (See Appendix 1)
15	=	empirical constant [unitless]

Inserting the values, the emission factor is calculated as:

$$EF = 1.9 \left(\frac{15}{15}\right) \left(\frac{365 - 90}{235}\right) \left(\frac{.4016}{15}\right)$$

$$= 0.060 \frac{g}{m^2 \cdot day}$$

For the storage pile, the area is 20.8 acres (906,048 ft²) and the pile will exist for a 2 year period. Per page 8 of the Ref. Doc., the fraction of TSP that is PM_{10} can be assumed to be 50%.

$$PM_{10} = 0.060 \frac{g}{m^2 \cdot day} \; x \; 906{,}048 \; ft^2 \; x \; 2 \; yrs \; x \; 365 \frac{days}{yrs} \; x \; .5$$

$$= 1.98 \; E{+}07 grams$$

$$= 19.8 \; tonnes$$

For the waste pile, the area is 10.8 acres (407,448 ft^2) and the pile will exist for a 5 year period. Per page 8 of the Ref. Doc., the fraction of TSP that is PM_{10} can be assumed to be 50%.

$$PM_{10} = 0.060 \frac{g}{m^2 \cdot day} \; x \; 407{,}448 \; ft^2 \; x \; 5 \; yrs \; x \; 365 \; \frac{days}{yrs} \; x \; .5$$

$$= 2.23 \; E{+}07 grams$$

$$= 22.3 \; tonnes$$

3. Aggregate Borrow Pit Excavation. A front-end loader excavates the soil and loads a dump truck. The dump truck travels 500 ft to a crusher and dumps its load into a pile. Another front-end loader feeds the crusher. The crusher produces aggregate and reject. Both materials are moved on separate conveyor belts to form separate storage piles. Both materials exist the crusher "dripping wet." Concerning reject, a front-end loader transfers reject from its pile to a dump truck which hauls and dumps the material back into the borrow pit. After the crusher, aggregate material is transferred from its storage pile by a front-end loader into a dump truck. The dump truck travels five miles over paved roads to the batch plant located on the construction site and dumps it load.

Emission sources include (A) material transfers and (B) unpaved road vehicle travel. It is assumed that because a wet crushing process is used, crusher emissions will be reduced to a negligible level in comparison to other borrow pit excavation activities. Also, since the processed material leaves the crusher "dripping wet," it is assumed negligible dust emissions are released from the conveyor belt and from the drop of the material from the conveyor belt to the storage pile.

A. Material Transfers. The transfer of unprocessed aggregate from a front-end loader to the dump truck, the truck dumping its load, the feeding of material into the crusher, the loading of processed aggregate and reject into dump trucks with front-end loaders and the dumping of the truck loads, results in handling the same quantity of raw aggregate material 5 times. The emissions of PM from all transfer operations is given by the following:

$$E = \frac{k \; (0.0016) \; (M) \left[\frac{U}{2.2}\right]^{1.3}}{\left[\frac{X_{H_2O}}{2}\right]^{1.4}}$$

E	= PM emissions [g]
k	= particle size multiplier [unitless]
	= .35 (see below)
0.0016	= empirical constant [g/kg]
M	= mass of soil handled [kg]
	= 1.50 E+09 kg (see below)

U	= mean wind speed [m/sec]
	= 5.68 m/sec (Appendix 1)
2.2	= empirical constant [m/sec]
X_{H2O}	= percent moisture content [%] = 3%

The particle size multiplier, k, for several sizes of particles for use with Equation 1 are:

Table F-32. Particle Size Multiplier.

size (microns)	multiplier, k
<50	1.0
<30	0.74
<15	0.48
<10	0.35
<5	0.20
<2.5	0.11

Mass of material handled (excavated material x5)

= 226,400 yd^3 x 108 lb/ft^3 x 27 ft^3/yd x .4536 kg/lb x 5

= 1.50 E+09 kg

Substituting in values:

$$E = \frac{(.35)\ (0.0016)\ (1.50E+09)\ \left[\frac{5.68}{2.2}\right]^{1.3}}{\left[\frac{3}{2}\right]^{1.4}}$$

= 1.6 *E*+06 *g*

= 1.6 *tonnes*

B. Unpaved Road Vehicle Traffic. For unpaved roads, the PM_{10} emission model is given by the following:

$$EF = 610 \left(\frac{s}{12}\right) \left(\frac{S}{48}\right) \left(\frac{W}{2.7}\right)^{0.7} \left(\frac{w}{4}\right)^{0.5} \left(\frac{365 - p}{365}\right).$$

EF	=	PM_{10} emission factor [g/km]
610	=	empirical constant [g/km]
s	=	percent silt content of road surface [%]
	=	10 %
12	=	empirical constant [unitless]
S	=	mean vehicle speed [km/hr]
	=	10 mi/hr = 16.09 km/hr
48	=	empirical constant [km/hr]
W	=	mean vehicle weight [Mg]
	=	32,000 lbs = 14.52 Mg
2.7	=	empirical constant [Mg]
w	=	mean number of wheels per vehicle [unitless]
	=	10
4	=	empirical constant [unitless]
365	=	number of days per year [days]
p	=	number of days with $\geq$ 0.01 inches of [days] precipitation
	=	90 days (Fig. 1 of Ref. Doc.)

The emissions factor for travel on unpaved roads is calculated as follows:

$$EF = 610 \left(\frac{10}{12}\right) \left(\frac{16.09}{48}\right) \left(\frac{14.52}{2.7}\right)^{0.7} \left(\frac{10}{4}\right)^{0.5} \left(\frac{365 - 90}{365}\right) \frac{g}{km},$$

$$= 659 \frac{g}{km}.$$

The emissions factor is then used to calculate the total emissions for the 7,000 round trips required to excavate the required quantity of aggregate. Another 2,000 round trips are required to dump the reject back into the borrow pit. Once loaded, the dump truck carries the excavated raw aggregate an average of 500 feet (.152 km) to the crusher. The same distance is traveled to truck the reject back into the borrow pit.

$$\text{unpaved road emissions} = 659 \frac{g}{km} \times 0.1524 \frac{km}{trip} \times 14{,}000 \text{ trips},$$

$$= 1.4 \text{ E+06 g}$$

$$= 1.4 \text{ tonnes}$$

4. Batch Plant Operation. The batch plant is a central mix plant that would be set up at the construction site. Aggregate, sand, and cement will be mixed and trucks will carry the concrete to the pour site. Emission sources include (A) material transfers, (B) fugitive emissions from the operation of the batch plant, (C) wind erosion of the aggregate and sand storage piles, (D) vehicle traffic on paved road surfaces, and (E) vehicle traffic on unpaved road surfaces.

A. Material Transfers. Dust resulting from the dump truck unloading of feed aggregate for the batch plant has been included in section 3.A.

B. Fugitive Emissions from Batch Plant Operation. Particulate emissions consist primarily of cement, aggregate, and sand dust emissions. Fugitive emissions include the transfer of cement, sand and aggregate, mixer and weigh hopper loading and wind erosion from sand and aggregate storage piles. The vent on the cement silo is assumed to have a filter. Consequently, dust emissions from the silo vent will be reduced to negligible levels. From the EPA document "Compilation of Air Pollutant Emission Factors Volume I: Stationary Point and the Area Sources, Fourth Edition, Updated 10/86," Table 8.10-1, the following emission factors are listed (kg/Mg):

Sand and aggregate transfer to elevated bin -	0.014
Weigh hopper loading -	0.01
Mixer loading (central mix) -	0.02
Total -	0.044 kg/Mg

A total of 77,578 tons of cement, 185,555 tons of sand and 258,594 tons of aggregate will be mixed at the batch plant. The sum of the tonnage gives the total amount of material mixed at the plant:

$$77{,}578 + 185{,}555 + 258{,}594 = 521{,}727 \text{ tons}$$

Assuming that 50% of the particulate matter released is PM_{10}, the total quantity of PM_{10} released during the operation of the batch plant is given by the following:

$$521{,}727\ tons\ x\ 9.072\ E{+}05\ \frac{g}{ton}\ x\ \frac{1\ Mg}{1\ E{+}06\ g}\ x$$

$$0.044\ \frac{kg}{Mg}\ x\ \frac{1{,}000\ g}{1\ kg}\ x\ \frac{1\ tonne}{1\ E\ {+}06\ g}\ x\ .5 = 10.4\ tonnes$$

C. Wind Erosion of the Aggregate and Sand Storage Piles. The aggregate and sand storage piles are continuously active piles (cement is not stored in an open pile). Total suspended particulates (TSP) from wind erosion of continuously active piles are estimated by the following:

$$EF = 1.9 \left(\frac{s}{15}\right) \frac{(365 - p)}{235} \left(\frac{f}{15}\right).$$

EF	=	PM_{10} emission factor [g/m²·day]
1.9	=	empirical constant [g/m²·day]
s	=	percent silt [%]
		aggregate = .2 %; sand = 1%
1500	=	empirical constant [unitless]
365	=	number of days per year [days]
p	=	number of days of precipitation [days]
		$\geq$ 0.01 inches per year
	=	90 days (Fig. 1 of Ref. Doc.)
235	=	empirical constant [days]
f	=	fraction of time wind > 5.4 m/sec at [unitless]
		mean pile height
	=	.4016 (See Appendix 1)
15	=	empirical constant [unitless]

For aggregate, inserting the values, the emission factor is calculated as:

$$EF = 1.9 \left(\frac{0.2}{15}\right) \left(\frac{365 - 90}{235}\right) \left(\frac{.4016}{15}\right)$$

$$= 7.94\ E\text{-}04\ \frac{g}{m^2 \cdot day}$$

For sand, inserting the values, the emission factor is calculated as:

$$EF = 1.9 \left(\frac{1}{15}\right) \left(\frac{365 - 90}{235}\right) \left(\frac{.4016}{15}\right)$$

$$= 3.97\ E\text{-}03\ \frac{g}{m^2 \cdot day}$$

For the aggregate pile, the area is 2.0 acres (87,120 ft^2) and the pile will exist for a 3-year period. Per page 8 of the Ref. Doc., the fraction of TSP that is PM_{10} can be assumed to be 50%.

$$PM_{10} = 7.94\ E{-}04\ \frac{g}{m^2 \cdot day}\ x\ 87{,}120\ ft^2\ x\ 3\ yrs\ x\ 365\ \frac{days}{yrs}\ x\ .5$$

$$= 3.79\ E{+}04 grams$$

$$= 0.04\ tonnes$$

For the sand pile, the area is 1.0 acres (43,560 ft^2) and the pile will exist for a 3-year period. Per page 8 of the Ref. Doc., the fraction of TSP that is PM_{10} can be assumed to be 50%.

$$PM_{10} = 3.97\ E{-}03 \frac{g}{m^2 \cdot day}\ x\ 43{,}560\ ft^2\ x\ 3\ yrs\ x\ 365\ \frac{days}{yrs}\ x\ .5$$

$$= 9.47\ E{+}04\ grams$$

$$= 0.09\ tonnes$$

D. Paved Road Vehicle Traffic - Aggregate Transfer from the Borrow Pit to the Batch Plant. To determine the particulate emission rate due to traffic on paved roads, the following equation is used:

$$EF = 220 \left[\frac{sL}{12}\right]^{0.3}$$

EF	= PM_{10} emission factor [g/km]
220	= empirical constant [g/km]
sL	= silt surface loading [g/m^2]
	= 15 g/m^2 (engineering judgement; expected range is 0.3 - 30)
12	= empirical constant [g/m^2]
0.3	= empirical constant [unitless]

For this case:

$$EF = 220\left(\frac{15}{12}\right)^{0.3} = 235\ \frac{g}{km}.$$

It is estimated that 26,500 round trips are required to transport the needed aggregate to the batch plant. The total emissions due to traffic on paved roads over the one-way distance of 5 miles is:

$$235\ \frac{g}{km} \times 5\ \frac{miles}{trip} \times 53{,}000\ trips \times \frac{1.609\ \text{km}}{1\ \text{mile}}$$

$$= 1.0\ E{+}08\ grams,$$

$$= 100.2\ tonnes$$

E. Unpaved Road Vehicle Traffic - Concrete Transfer to the Construction Site. For unpaved roads, the PM_{10} emission model is given by the following:

$$EF = 610 \left[\frac{s}{12}\right] \left[\frac{S}{48}\right] \left[\frac{W}{2.7}\right]^{0.7} \left[\frac{w}{4}\right]^{0.5} \left[\frac{365 - p}{365}\right] \left[\frac{100 - c}{100}\right]$$

EF	=	PM_{10} emission factor [g/km]
610	=	empirical constant [g/km]
s	=	percent silt content of road surface [%]
	=	15 %
12	=	empirical constant [unitless]
S	=	mean vehicle speed [km/hr]
	=	10 mi/hr = 16.09 km/hr
48	=	empirical constant [km/hr]
W	=	mean vehicle weight [Mg]
	=	(54,000+26,000)/2 = 40,000 lbs = 18.14 Mg
2.7	=	empirical constant [Mg]
w	=	mean number of wheels per vehicle [unitless]
	=	10
4	=	empirical constant [unitless]
365	=	number of days per year [days]
p	=	number of days with < 0.01 inches of [days] precipitation
	=	275 days (Fig. 1 of Ref. Document; 365 - 90 = 275)
c	=	control efficiency of road watering [percent]
	=	98.1% (from EPA "Emission Control Technologies and Emission Factors for Unpaved Road Fugitive Emission",1987)

Where:

$$c = 100 - \left(\frac{0.8 - pdt}{i}\right)$$

p	=	potential average hourly daytime [mm/hr] evaporation rate
	=	0.35 mm/hr average annual basis 60 inches evaporation assuming it occurs during daylight hours (12 hours/day)
d	=	average hourly daytime traffic rate [hr^{-1}]
	=	10 assuming 5 days/week and 10 hrs/day with a total of 78,600 trips (one way total) over 3 year period
t	=	time between applications [hr]
	=	2 hrs
i	=	application intensity [l/m^2]
	=	2.9 l/m^2 based on 0.07 gallons per square foot

The emissions factor for travel on unpaved roads is calculated as follows:

$$EF = 610 \left(\frac{15}{12}\right) \left(\frac{16.09}{48}\right) \left(\frac{18.14}{2.7}\right)^{0.7} \left(\frac{10}{4}\right)^{0.5} \left(\frac{365 - 90}{365}\right) \left(\frac{100 - 98.1}{100}\right) \frac{g}{km},$$

$$= 22.3 \frac{g}{km}.$$

This emission factor is used to calculate the dust created from the transfer of concrete from the batch plant to the construction site. To place all the concrete needed, 39,300 round trips on a unpaved road will be made over the one-way distance of 1,600 feet (.488 km).

$$\text{unpaved road emissions} = 22.3 \frac{g}{km} \times 0.488 \frac{km}{trip} \times 78{,}600 \text{ trips},$$

$$= 8.55 \text{ E+05 g}$$

$$= .86 \text{ tonnes}$$

Appendix 1: HWVP EIS Meteorological Data Summary
Peak Gust Wind Speed Statistics for 1993
Hourly Observations from 93-Jan-1-00:00 through 93-Dec-8-08:00
Fluor Daniel Inc.
Prepared by: Andy Kimbrough

Total Number of Observations = 8,192

Average Peak Gust Wind Speed = 5.68 m/sec
standard deviation = 3.38 m/sec

Number of Observations Exceeding 5.4 m/sec = 3,290

Fraction of Observations Exceeding 5.4 m/sec = 0.4016

The calculations are performed using data from the following files:

met93_q1.wk4	observations for the first quarter of 1993,
met93_q2.wk4	second quarter of 1993,
met93_q3.wk4	third quarter of 1993,
met93_q4.wk4	fourth quarter (through December 8, 08:00 hours) of 1993.

Assumptions (pretreatment case):

1. 3,118,569 gallons diesel (from construction, Bob Campbell)

2. 1,336,905 gallons gasoline (from construction, Bob Campbell)

3. Diesel - 140,000 Btu/gallon HHV (engineering assumption for 0.05% sulfur fuel)

4. Gasoline - 127,650 Btu/gallon HHV (calculated from Handbook of Chemistry and Physics)

5. 25% overall efficiency of HHV to useful work, or 75% released as thermal loss for diesel engines (from maximum efficiencies quoted in Perry's Chemical Engineering Handbook and "Thermodynamics" (Kenneth Wark) assuming non-ideal operating conditions).

6. 20% overall efficiency of HHV to useful work, or 80% released as thermal loss for diesel engines (from maximum efficiencies quoted in "Thermodynamics" (Kenneth Wark) assuming non-ideal operating conditions for gasoline engine vehicle and near ideal operating conditions for stationary gasoline engines).

7. Other heat sources (electric equipment, concrete heat of formation, etc.) are negligible in comparison to the heat released from the diesel and gasoline powered equipment.

Calculation (pretreatment case):

3,118,569 gallons x 140,000 Btu/gallon x 1055.1 Joule/Btu x 0.75 thermal loss +
1,336,905 gallons x 127,650 Btu/gallon x 1055.1 Joule/Btu x 0.80 thermal loss =

$\underline{4.90 \times 10^{14} \text{ Joules}}$

Calculation (Tri-Party Agreement case):

4.90×10^{14} Joules x 1.4 = $\underline{6.86 \times 10^{14} \text{ Joules}}$

Table F-33. Fugitive Dust Emissions During Plant Operation.

Construction Emissions during Plant Operation - Tri-Party Agreement Preferred Alternative PM_{10} Fugitive Emissions (metric tons/sulfur vault row).[1]	
1. Clear and Grub	
A. Bulldozer grading	0
B. Paved road traffic	0
2. Construction Site Excavation	
A. Unpaved road traffic	51.0
B. Scraper unloading	0.8
C. Dozer grading	1.9
D. Wind Erosion (storage & waste piles.	12.2
3. Aggregate Borrow Pit Excavation	
A. Dump truck loading, truck unloading & crusher loading	0.3
B. Unpaved road traffic	0.3
4. Batch Plant Operation	
A. Dump truck unloading	Included in IIIA
B. Batch plant operation	2.1
C. Wind erosion (aggregate & sand piles.	<0.1
D. Paved road traffic	21.0
E. Unpaved road traffic	0.2
TOTAL (tonnes)	89.8

Notes:

[1]The Tri-Party Agreement Preferred Alternative Sulfur Vault construction emissions (per double row of vaults - 12 vaults. are based on the no separations emission calculations, as presented in the support calculations, using the following scaling factors:

1. Clear and Grub. No significant additional clear and grub for Sulfur Vault construction.

2. Construction Site Excavation. 0.29 factor

3. Aggregate Borrow Pit Excavation. 0.21 factor

4. Batch Plant Operation. 0.21 factor

The emissions for the remaining sulfur vaults were calculated by employing a 2.83 multiplication factor.

F.8 Backup for Table 9-12

- "Total No. of trips" is the total round trips over a 3-year period. "Average" and "peak" do not apply.

- See drawing ES-ALT8A-04 Sheet 5 for onsite borrow pit. The borrow (concrete aggregate. pit probable location information was obtained in a telecon from R. B. Campbell to Craig Swenson (Westinghouse Hanford Company) on September 7, 1994.

- Load volumes were based on concrete aggregate, and therefore aggregate haul, being "strung-out" over 3 years. It will not be a "production" show, but will be done on an "as-convenient" basis. Consequently "production" trucks will not be mobilized to do the work. The haul will be done with the most readily available equipment, which is 10 cy dump trucks. A 10 cy dump truck does not carry 10 cy, without special loading conditions. Normal loading practice (with a rubber tired front-end loader. yields 7 to 8 cy of pay load. This calculation uses 8 cy/round trip = 6.1 m^3/round trip.

- Quantity of aggregate required/hauled is based on:

  - Concrete quantities obtained from the construction quantity backup table.

  - Hanford HWVP actual 4000 psi concrete mix design.

  - Assumed 2% concrete wastage.

- Above applies to the No Separations alternative. The facilities for the Tri-Party Agreement alternative and the sulfur vaults were factored from No Separations.

F.9 Backup for Table 9-13

Transportation of Other Construction Material

Total number of trips is the total over a 3½ year period.

Concrete Sand is hauled from a commercial gravel plant in the Tri-Cities area. Total cubic yards of sand were calculated, based on Jack Donnelly's concrete quantities rounded up 2%. An actual Hanford HWVP 4000 psi concrete design was used to determine sand content. The sand haul would be a production show, so tractors with 20 cubic yard trailers (pay load 16-17 cubic yards) would be used at 17 cubic yards/round trip.

Construction consumables (lumber, hardware, visqueen, bond breaker, temporary steel, hand tools, etc.) were assumed at 2,800 truck loads.

Construction items from the Tri-Cities.

Table F-34. Concrete Loads for Construction.

	No Separations Loads	Factor	Tri-Party Agreement Preferred Loads
Concrete Sand	7,782	1[51]	11,751
Construction Consumables	5,000	1[51]	7,550
			19,301
	Say		19,000

Steel items were assumed to be trucked to site from either Portland or Seattle. Total steel quantities were obtained from the construction quantity backup table, and a 45,000 pound capacity trailer hauling at an assumed average 30,000 pounds/round trip.

Steel items from Portland and Seattle.

Table F-35. Steel Loads for Construction.

	No Separations Loads	Factor	Tri-Party Agreement Preferred Loads
Steel	5,000	1[56]	7,800
	Say		8,000

F.10 Backup for Tables 9-14 and 9-15

- Plant has been operated without accident.
- Spills have been properly cleaned up and have been decontaminated.
- The cell liner has not been breached during plant operation.
- The vitrification buildings, their dedicated facilities and the receipt/sample facilities:
  - 5% of concrete is contaminated.
  - 5% of carbon steel is contaminated.
  - 85% of stainless steel is contaminated.
  - 100% of hastelloy/inconnel is contaminated.
- Centralized facilities:
  - No concrete contamination.
  - No steel contamination.
- No soil contamination
- Debris = 5% of contaminated/non-contaminated concrete + steel quantities.
- One M^3 of concrete = 732 kilograms, say .75 kilotons.
- All installed quantities of concrete and steel are taken from the construction quantity backup table.

F.11 Backup for Table 9-16

Table F-36. Total Cost by Unit Operation.

	Construction	Labor	Equipment	Materials and Supplies			Low-Level Vaults	HLW Canisters	Research and Development	Repository Fee	Totals
				Start-up	D and D	Operations					
Sludge wash	$43	$129	$6	$2	$12	$6			$9		$207
Cesium removal	$380	$276	$57	$21	$105	$56			$83		$975
Centralized facilities	$520										$520
LLW vitrification	$1,300	$624	$179	$68	$332	$176			$264		$2,934
LLW disposal		$16	$9	$4	$17	$9	$225		$14		$294
HLW vitrification	$1,400	$639	$70	$78	$384	$126			$260		$2,957
HLW transportation		$31									$24
HLW disposal								$239		$5,619	$5,858
Total	$3,643	$1,716	$322	$173	$886	$373	$225	$239	$630	$5,619	$13,826

Notes:

Table values are in millions of 1995 dollars.

The backup for Table 9-8 and Table 9-9 in this appendix contains capital cost for Pretreatment/LLW combined. To separate sludge wash and cesium removal from LLW vitrification, other cost estimates were employed. Cost estimates were found for a detached pretreatment facility and a detached LLW facility (these are contained in Table 9-8 and Table 9-9 backup). The total capital cost for each were taken and added together. This total was then divided into each staff hour value separately. The calculation was as follows:

Detached Separations	-	Total Capital Cost	=	$304,145,913
Detached LLW	-	Total Capital Cost	=	$966,251,470
		Total	=	$1,270,397,383

% separations = $304,145,913/$1,270,397,383 = 0.239 => **Value used is 25 %**

Therefore % LLW = **75%**

This value was used to divide all costs that lumped Pretreatment/LLW together. Engineering judgement set the sludge wash capital cost equal to 10% of the total for separations (see above).

Engineering judgement set the cesium removal capital cost equal to 90% of the total for separations (see above).

Construction includes labor and materials. Total value was taken from Table 9-18.

Labor is operating labor only. It includes direct and indirect staffing. Total value was taken from Table 9-19.

Equipment cost is assumed cost for replacement equipment during operations. Total value was taken from Table 9-19 (including local purchases).

Material and supply cost covers start-up, operations, and decontamination and decommissioning. Total value was taken from Table 9-19 (including local purchases).

Values for the cost of the LLW Vaults and the HLW Canisters were taken from the backup for Table 9-4.

Totals for research and development costs were taken from Table 9-17.

F.12 Backup for Table 9-18

Capital costs are calculated using the design cost estimates (see Appendix C). The cost estimate is categorized as follows:

- Estimated labor, material, and equipment for both the M&O contractor and subcontracts
- Overhead and profit
- Construction and project management
- Engineering
- Contingency.

A. Calculation: Labor, Material, and Equipment for M&O Contractor and Subcontracts.

Costs for Total Project:

M&O Contractor		Labor	Material	Equipment
Pretreatment/LLW	=	$188,943,943	$105,550,250	$311,926,395
20T/D HLW Facility	=	$186,434,799	$116,905,668	$169,901,640
Centralized Facility	=	$59,634,131	$54,152,639	$38,934,126

From Cost Estimate (see Appendix C). Labor and material values came from MT 3. Equipment values taken from MT 2.

Subcontracts				
Pretreatment/LLW	=	$3,779,600	$5,669,400	$0
20T/D HLW Facility	=	$0	$0	$0
Centralized Facility	=	$13,426,200	$20,139,300	$0

Totals from Cost Estimate (see Appendix C. from MT 3. Estimating judgement set the labor and material values to 40% and 60% of the total, respectively.

B. Calculation: Overhead and Profit

% of M&O contractor labor for Overhead and Profit = 53%
% of M&O contractor material for Overhead and Profit = 5%
% of M&O contractor equipment for Overhead and Profit = 5%
% of Subcontract labor for Overhead and Profit = 10%
% of Subcontract material for Overhead and Profit = 10%

Based on cost estimating judgement.

M&O Contractor		Labor	Material	Equipment
Pretreatment/LLW	=	$100,140,290	$5,277,513	$15,596,320
20T/D HLW Facility	=	$98,810,443	$5,845,283	$8,495,082
Centralized Facility	=	$31,606,089	$2,707,632	$1,946,706
Subcontracts				
Pretreatment/LLW	=	$566,940	$377,960	$0
20T/D HLW Facility	=	$0	$0	$0
Centralized Facility	=	$2,013,930	$1,342,620	$0

C. Calculation: Construction and Project Management

Construction Management is set to 10% of the summation of the capital cost and the overhead and profit.

Based on cost estimating judgement.

M&O Contractor		Labor	Material	Equipment
Pretreatment/LLW	=	$28,908,423	$11,082,776	$32,752,271
20T/D HLW Facility	=	$28,524,524	$12,275,095	$17,839,672
Centralized Facility	=	$9,124,022	$5,686,027	$4,088,083
Subcontracts				
Pretreatment/LLW	=	$623,634	$415,756	$0
20T/D HLW Facility	=	$0	$0	$0
Centralized Facility	=	$2,215,323	$1,476,882	$0

Project Management is set to 10% of the summation of the capital cost, the overhead and profit, and the construction management plus 40% of 10% of the summation of the capital cost and the overhead and profit.

Based on cost estimating judgement.

M&O Contractor		Labor	Material	Equipment
Pretreatment/LLW	=	$43,362,635	$16,624,164	$49,128,407
20T/D HLW Facility	=	$42,786,786	$18,412,643	$26,759,508
Centralized Facility	=	$13,686,033	$8,529,041	$6,132,125
Subcontracts				
Pretreatment/LLW	=	$935,451	$623,634	$0
20T/D HLW Facility	=	$0	$0	$0
Centralized Facility	=	$3,322,985	$2,215,323	$0

D. Calculation: Engineering

Engineering is set to 40% of the summation of the capital cost and the overhead and profit.

Based on cost estimating judgement.

M&O Contractor		Labor	Material	Equipment
Pretreatment/LLW	=	$115,633,693	$44,331,105	$131,009,086
20T/D HLW Facility	=	$114,098,097	$49,100,381	$71,358,689
Centralized Facility	=	$36,496,088	$22,744,108	$16,352,333
Subcontracts				
Pretreatment/LLW	=	$2,494,536	$1,663,024	$0
20T/D HLW Facility	=	$0	$0	$0
Centralized Facility	=	$8,861,292	$5,907,528	$0

E. Calculation: Contingency

Contingency is set to 40% of the summation of the capital cost, overhead and profit, construction and project management, and engineering.

Based on cost estimating judgement.

M&O Contractor		Labor	Material	Equipment
Pretreatment/LLW	=	$190,795,594	$73,146,323	$216,164,992
20T/D HLW Facility	=	$188,261,860	$81,015,628	$117,741,837
Centralized Facility	=	$60,218,545	$37,527,779	$26,981,349
Subcontracts				
Pretreatment/LLW	=	$4,115,984	$2,743,990	$0
20T/D HLW Facility	=	$0	$0	$0
Centralized Facility	=	$14,621,132	$9,747,421	$0

F. Calculation: Overall Totals

M&O Contractor		Labor	Material	Equipment
Pretreatment/LLW	=	$667,784,578	$256,012,131	$756,577,471
20T/D HLW Facility	=	$658,916,510	$283,554,698	$412,096,428
Centralized Facility	=	$210,764,909	$131,347,226	$94,434,723
Subcontracts				
Pretreatment/LLW	=	$14,405,945	$9,603,964	$0
20T/D HLW Facility	=	$0	$0	$0
Centralized Facility	=	$51,173,961	$34,115,974	$0
Overall Total				
Pretreatment/LLW	=	$682,190,523	$265,616,095	$756,577,471
20T/D HLW Facility	=	$658,916,510	$283,554,698	$412,096,428
Centralized Facility	=	$261,938,870	$165,463,200	$94,434,723
		$1,603,045,904	$714,633,993	$1,263,108,622

Totals may not match totals from Table 9-17, but will be within 1%. Errors are caused by over generalization of cost estimating parameters.

To calculate for local purchases:

Local Purchases = 15% x (Equipment + Material/Supplies)

Local Purchases = $296,661,392

Which leaves:

Equipment = 85% x (Equipment)

Equipment = $607,438,894

and

Material/Supplies = 85% x (Material/Supplies)

Material/Supplies = $1,073,642,329

F.13 Backup for Table 9-19

Resource Requirements

Table F-37 gives the consumable resource requirements for the Tri-Party Agreement alternative data package. Where possible the information for resource usage was taken from the material balances in Appendix A. Exceptions are ion exchange media, decon chemicals, glycolic acid, raw and sanitary water, and electricity. How these values were obtained is defined in the Table 9-4 footnotes or backup. The raw material prices were taken from the "Chemical Marketing Reporter" or from the Facility Configuration Study.

Table F-38 gives the miscellaneous resource requirements for the Tri-Party Agreement alternative data package. All of the costs for the items were taken from the Facility Configuration Study except for solid waste. This value is based upon engineering judgement. The total cost for the LLW vaults in Table F-38 is a total cost which includes staffing for construction as well as consumable resources.

Table F-37. Operating Cost for Consumables.

		Unit	Pretreatment/LLW		HLW		Total	
Material	Unit	Cost	Amount	Cost	Amount	Cost	Amount	Cost
Frit	Megagram	$3,860	52	$200,720		$0	52	$200,720
Flocculent	Megagram	$100	85	$8,500		$0	85	$8,500
Ion Exchange	Cubic Meter	$11,000	224	$2,464,000		$0	224	$2,464,000
NaNO2	Megagram	$210	54	$11,340		$0	54	$11,340
Sulfur	Megagram	$370	127,000	$46,990,000		$0	127,000	$46,990,000
DCPD*	Megagram	$150	3,360	$504,000		$0	3,360	$504,000
CPD**	Megagram	$150	3,360	$504,000		$0	3,360	$504,000
NaOH	Megagram	$250	26,200	$6,550,000		$0	26,200	$6,550,000
HNO3	Megagram	$160	4,190	$670,400		$0	4,190	$670,400
NH3	Megagram	$350	8,480	$2,968,000	277	$96,950	8,757	$3,064,950
Decon Chemicals	Megagram	$401	2,114	$847,714	3,171	$1,271,571	5,285	$2,119,285
Kerosene	Megagram	$150	57,800	$8,670,000		$0	57,800	$8,670,000
SiO2	Megagram	$40	229,000	$9,160,000	11,300	$452,000	240,300	$9,612,000
Al2O3	Megagram	$500	13,200	$6,600,000		$0	13,200	$6,600,000
CaO	Megagram	$60	38,700	$2,322,000		$0	38,700	$2,322,000

Table F-37. Operating Cost for Consumables.

		Unit	Pretreatment/LLW		HLW		Total	
Material	Unit	Cost	Amount	Cost	Amount	Cost	Amount	Cost
B2O3	Megagram	$1,000		$0	1,750	$1,750,000	1,750	$1,750,000
Li2O	Megagram	$5,000		$0	500	$2,500,000	500	$2,500,000
Glycolic Acid	Megagram	$1,740		$0	3,500	$6,090,000	3,500	$6,090,000
Sanitary Water	Cubic Meter	$0.03	797,000	$23,910	303,000	$9,090	1,100,000	$33,000
Raw Water	Cubic Meter	$0.03	9,878,900	$296,367	1,121,100	$33,633	11,000,000	$330,000
Steam	Megagram	$5		$0		$0		$0
Electricity	Megawatt-Hours	$30	5,310,000	$159,300,000	3,690,000	$110,700,000	9,000,000	$270,000,000
Subtotal				$248,090,951		$122,903,244		$370,994,195

Notes:

*Dicyclopentadiene
**Cyclopentadiene

HLW = high-level waste
LLW = low-level waste

Table F-38. Other Operating Costs.

		Unit	Pretreatment/LLW		HLW		Total	
Material	Unit	Cost	Amount	Cost	Amount	Cost	Amount	Cost
Solid Waste	Cubic Meter	$1,000	1,000	$1,000,000	1,000	$1,000,000	2,000	$2,000,000
Equipment	Per Year	14 year	$18,000,000	$252,000,000	$5,000,000	$70,000,000		$322,000,000
Vaults	Per	$5,000,000	45	$225,000,000			45	$225,000,000
Canisters	Per	$10,000			6,820	$68,200,000	6,820	$68,200,000
Containers	Per	$25,000			1,705	$42,625,000	1705	$42,625,000
Casks	Per	$60,000			1,705	$102,300,000	1705	$102,300,000
Pads	Per	$26,000,000			1	$26,000,000	1	$26,000,000
Subtotal				$478,000,000		$310,125,000		$788,125,000
Total From Table F-37				$248,090,951		$122,903,244		$370,994,195
Grand Total				$726,090,951		$433,028,244		$1,159,119,195
Grand Total Minus Equipment				$474,090,951		$363,028,244		$837,119,195

Note:

HLW = high-level waste
LLW = low-level waste

Staffing

The staffing requirements for the Tri-Party Agreement alternative data package are given in Table F-39. This table is identical to the table used to calculate the operating personnel requirements by unit process (Table 9-3). The staffing requirements include the staffing for start-up operations, decontamination and decommissioning, and monitoring and maintenance. Staffing for the construction of the LLW vaults is included in the cost per vault in Table F-38.

Table F-39. Staffyears for Operation.

Staffing Category	Years	Staff Per Year	Total Staff-Years
Dual Operation	10	708	7080
Pretreatment/LLW Only	5	618	3090
HLW Only	4	509	2036
Indirect Staffing	19	29	551
Pretreatment/LLW Start-up	1.5	618	927
HLW Start-up	1.5	509	763.5
Pretreatment/LLW Decontamination and Decommissioning	2	618	1236
HLW Decontamination and Decommissioning	2	509	1018
HLW Monitoring and Maintenance	6	10	60
HLW Transportation	- -	- -	280

Notes:

HLW = high-level waste
LLW = low-level waste

The staffing breakdown for each operational mode is given in Table F-40. The staffing values in this table are identical to the ones used for the calculation of the operating personnel requirements (Table 9-3). The total cost per year was calculated by assuming that the average annual salaries are $130,000 for exempt, $60,000 for nonexempt, and $90,000 for bargaining unit employees (Boomer 1994).

Table F-40. Cost per Year by Process.

Operational Mode	Exempt	Nonexempt	Bargaining Unit	Cost Per Year (In Millions)
Pretreatment/low-level waste only	227	53	338	$63
Dual operation	253	53	402	$72
High-level waste only	200	51	258	$52

Table F-41 gives the total calculated cost for operating labor using the totals from Tables F-39 and F-40 with the following exceptions. For indirect staffing, it was assumed that all workers would be nonexempt employees. For monitoring and maintenance, it was assumed that one worker would be exempt, one would be bargaining unit, and the remaining eight would be nonexempt. 100 of the total workers for HLW transportation are assumed to be exempt, 100 bargaining units, and the remaining 80 nonexempt.

Table F-41. Staffing Operating Cost.

Staffing Category	Total Cost (In Millions)
Dual operation	$723
Pretreatment/low-level waste only	$316
HLW only	$209
Indirect Staffing	$33
Pretreatment/low-level waste start-up	$95
High-level waste start-up	$78
Pretreatment/low-level waste decontamination and decommissioning	$126
High-level waste decontamination and decommissioning	$105
High-level waste monitoring and maintenance	$4
High-level waste transportation	$27
Total	$1,716

Start-Up Costs

The total start-up cost for each facility is arbitrarily set to three times the annual staffing requirements for each facility. The staffing requirements for start-up of each facility has been set to one and a half years of the annual. This leaves one and a half years of staff cost ($95 million + $78 million = $173 million) for materials and supplies for start-up.

Decontamination and Decommissioning

The decontamination and decommissioning (D&D) cost for each facility is arbitrarily set equal to three years of staff cost plus thirty percent of the total capital cost minus the contingency. The staffing requirements for each facility has been set to two years of the annual. This leaves one year of staff cost ($63 million + $52 million = $115 million) plus thirty percent of the capital for material and supplies.

The total capital is equal to the capital plus a forty percent contingency factor. Therefore the capital value to be used for the decontamination and decommissioning cost for materials and supplies is equal to:

Capital = $3,600 million / 140% = $2,571 million

The total capital cost is taken from Table 9-18.

The cost based upon the capital is:

Capital D&D = $2,571 million * 30% = $771 million

Thus the total D&D cost for materials and supplies is set to $886 million.

Summations

Labor is set equal to the total value calculated in Table F-41:

Labor = $1,716 million

The total cost for materials and supplies is:

Operating	=	$837 million (Table F-38)
Start-up	=	$173 million
Decontamination and Decommissioning	=	$886 million
Total	=	$1,896 million

Equipment purchase is set equal to the total value calculated in Table F-41:

Equipment = $322 million

However local purchases are set equal to 15 percent of the total equipment and materials and supplies cost. Therefore the values entered on Table 9-19 are:

Materials and supplies	=	$1,612 million
Equipment	=	$274 million
Local purchases	=	$332 million