START

9513360.1505

0041749

DOE/RL-94-67
Draft B

100-HR-3 Operable Unit Focused Feasibility Study

United States
Department of Energy
Richland, Washington

JUL 1995
RECEIVED
EDMC

Approved for Public Release

THIS PAGE INTENTIONALLY
LEFT BLANK

9513560.1506

TRADEMARK DISCLAIMER

Reference herein to any specific commercial product, process, or service by trade name, trademark, manufacturer, or otherwise, does not necessarily constitute or imply its endorsement, recommendation, or favoring by the United States Government or any agency thereof or its contractors or subcontractors.

This report has been reproduced from the best available copy.

Printed in the United States of America

DISCLM-4.CHP (1-91)

THIS PAGE INTENTIONALLY
LEFT BLANK

9513360.1307

DOE/RL-94-67
Draft B

100-HR-3 Operable Unit Focused Feasibility Study

Date Published
July 1995

United States
Department of Energy
P.O. Box 550
Richland, Washington 99352

Approved for Public Release

THIS PAGE INTENTIONALLY
LEFT BLANK

EXECUTIVE SUMMARY

This focused feasibility study (FFS) report presents the detailed analysis of alternatives for interim remedial measures (IRM) for the 100-HR-3 Operable Unit. The 100-HR-3 Operable Unit is one of seven operable associated with the 100-D/DR and 100-H Areas of the Hanford Site. Three of the 100-D/DR operable units (100-DR-1, DR-2, and DR-3), two of the 100-H operable units (100-HR-1 and HR-2), and the 100-IU-4 Operable Unit are source units. The 100-HR-3 Groundwater Operable Unit includes the groundwater beneath the source operable units and the adjacent groundwater, surface water, fluvial sediments, and aquatic biota impacted by the overlying source operable unit. The 100-HR-3 Operable Unit also includes that portion of the 600 Area that lies between the 100-D/DR and 100-H Reactors.

The key assumptions that form the basis for the FFS are as follows:

- The purpose of the IRM is to address an identified threat to human health or the environment.

- The objectives of the IRM are to protect ecological receptors in the Columbia River and to abate offsite migration of contaminants.

- ~~To meet the objectives, the alternatives are aimed at containment and control of contaminent plumes. (The alternatives are not designed for mass reduction or aquifer cleanup.)~~

- To meet the objectives, remediation alternatives are targeted at plume containment and control, and removal of contaminants from the aquifer.

- ~~The occasional use scenario is assumed for the operable unit.~~

- ~~For purposes of cost estimates, the FFS uses a finite lifecycle for the IRM to the year 2008. At this time it is assumed that any final action will be implemented, be it a continuation of the IRM or a redirection of the action.~~

- Cost estimates used for alternatives comparison are based on a finite lifecycle for the IRM of 12 years. An additional estimate for a 5-year operation of a pump and treat system using ion exchange technology is presented also, to be consistent with CERCLA National Contingency Plan methods.

- The *100 Area Feasibility Study Phases 1 & 2* (DOE-RL 1994a) forms the basis for the alternatives evaluated in the FFS. Additional alternatives or deviations from the alternatives are only considered when the defined alternative does not meet the operable unit specifics. The *Comprehensive Environmental Response, Compensation, and Liability Act* (CERCLA) does, however, allow the flexibility of specifying different process options at any point in the remedial investigation/feasibility study process if warranted by site circumstances.

- Disposal to the Environment Restoration Disposal Facility is assumed for all solid wastes generated. This includes the assumption that sufficient space is available and that the facility will be operating on a schedule consistent with the IRM.

Based on the qualitative risk assessment performed for the operable unit, analyses ~~under~~ based on the occasional-use scenario resulted in the identification of tritium in the 100-D/DR Area, technetium-99 in the 100-H Area, and arsenic in the 600 Area as human health contaminants of potential concern (COPC); however, it should be noted that all these COPC had incremental cancer risks in the low or very low range (<1E-4). Therefore, none of these COPC represent an unacceptable human health risk under this exposure scenario. Based on a frequent-use scenario, the qualitative risk assessment indicated that several additional radionuclides and inorganic constituents would be considered as contaminants of potential concern for human health risk. Contaminants associated with human health risks will be addressed in other IRMs or final remediation activities.

Ecological scenarios were evaluated using biological receptors which live in or near the Columbia River. The ecological risk assessment identified potential risks from bis(2-ethylhexyl) phthalate, chromium, and sulfide in the 100-D/DR Area based on exceedances of Ambient Water Quality Criteria. In the 100-H Area, chromium, iron, and sulfide were identified. These exceedances were based on the maximum concentrations detected in the near river wells. ~~No allowance was made for environmental fate. These constituents were not identified in the river; the concentrations are significantly reduced by the mixing and dilution action of the river. No ecological assessment was conducted for the 600 Area because the groundwater is not impacting the river.~~ ~~Based on~~ Following an additional analysis of limited field investigation data, chromium is identified as the contaminant of concern (COC) for the ecological receptors in the operable unit. In the context of the FFS, COC are those constituents that must be addressed by remedial actions.

The FFS process includes an evaluation of remedial action objectives (RAO). The RAO are medium-specific or operable unit-specific objectives for protecting human health and the environment. The RAO are based on the land-use, COC, applicable or relevant and appropriate requirements (ARAR), and exposure pathways and include specific remediation goals so that an appropriate range of remedial options can be developed for analysis.

The RAO for environmental protection are as follows:

- ~~control groundwater movement to minimize release of COC from groundwater to surface water that would result in concentrations in the river in excess of Ambient Water Quality Criteria~~

- ~~prevent destruction of critical habitat; minimize destruction of noncritical habitat; prevent adverse impacts to threatened or endangered species~~

- ~~prevent erosion of soil during remediation that would contribute to surface water concentrations greater than the Ambient Water Quality Criteria for the COC in surface water.~~

- Control groundwater movement to minimize the release of contaminants of concern into surface waters that would result in concentrations in the Columbia River in excess of the EPA Ambient Water Quality Criteria

- Control groundwater movement to preclude the release of radionuclides in the Columbia River that would result in a dose to an ecological receptor that would exceed 1 rad per day

- Prevent erosion of soil during remediation that would contribute to surface water concentrations exceeding Ambient Water Quality Criteria

- Prevent destruction of sensitive wildlife habitat, minimize the destruction or disruption of wildlife habitat in general, and prevent adverse impacts to threatened or endangered species

~~The preliminary remediation goal (PRG) is 50 μg/L measured in two consecutive sampling rounds in the near-river wells as established in the Tri-Party Agreement Change Control Form M-15-93-02 (Ecology et al. 1994). Chromium concentrations below the chronic Ambient Water Quality Criterion of 11 μg/L as measured in the substrate are considered alternate PRG. These PRG represent screening criteria for the FFS. Final remediation goals will be set in the record of decision.~~

The preliminary remediation goal (PRG) at the location of exposure (e.g., riverbed sediments used as salmon spawning habitat) is 11 ug/L hexavalent chromium (EPA Ambient Water Quality Criteria for Protection of Freshwater Aquatic Life). Monitoring water quality in riverbed sediments is logistically difficult, and efforts will be made to develop alternative sampling methodologies for performance monitoring. PRGs for alternative sampling locations along the shoreline and in near-river wells will be refined as new information from pre-remedial design activities are completed.

In the *100 Area Feasibility Study Phases 1 and 2* (DOE-RL 1994a), alternatives were developed and screened for the 100 Area as a whole. The FFS modifies these alternatives to meet site-specific conditions. The alternatives considered in the FFS are:

- GW-1 - no action
- GW-2 - institutional controls/continued current actions
- GW-3 - containment
- GW-4 - in situ treatment
- GW-5 - removal, treatment, disposal using ion exchange
- GW-6 - removal, treatment, disposal using reverse osmosis.

Table ES-1 lists the processes included in each alternative. Alternative GW-4 was not considered in the FFS because this alternative applies to organic contaminants and nitrate, neither of which are COC for the operable unit.

The alternatives are defined in detail in the FFS to facilitate the detailed analysis. The detailed analysis is presented in tables where each alternative is compared to seven of the nine CERCLA criteria. These criteria are as follows:

- overall protectiveness
- compliance with ARAR
- long-term effectiveness
- reduction of toxicity, mobility, or volume
- short-term effectiveness
- implementability
- cost.

The comparative analysis uses the results of the detailed analysis to compare alternatives to each other for their relative ability to meet the CERCLA criteria. The results of the detailed and comparative analyses are summarized in Table ES-2. The FFS will support the proposed plan for the IRM in the operable unit.

Table ES-1 Alternatives and Process Options

ALTERNATIVE	PROCESSES
GW-1: No Action	Groundwater monitoring
GW-2: Institutional Controls/ Continued Current Actions	Access restrictions Groundwater monitoring Evaluation of results of current actions - pilot-scale treatability test - Columbia River Comprehensive Impact Evaluation - river/groundwater interaction studies - chromium speciation studies
GW-3: Containment	Sheet pile Extraction wells
GW-5: Removal, Treatment, and Disposal Using Ion Exchange	Removal - extraction wells Physical treatment: - filtration - ion exchange Stabilization/solidification: - cement-based solidification Liquid disposal: - river discharge or injection into an aquifer Solids disposal: - ERDF, W-025, or other site Monitoring
GW-6: Removal, Treatment, and Disposal Using Reverse Osmosis	Removal: - extraction wells Physical treatment: - filtration - reverse osmosis - forced evaporation Stabilization/solidification: - cement-based solidification Liquid disposal: - crib disposal - river disposal - injection to aquifer Solids disposal: - ERDF, W-025, or other site Monitoring

ERDF - Environmental Restoration Disposal Facility

Table ES-2
Summary of Comparitive Analysis
HR-3 Operable Unit

Remedial Action	CERCLA Evaluation Criteria							
	Overall Protection of Human Health and Environment	Compliance with ARARs	Long Term Effectiveness and Permanence	Reduction in Toxicity, Mobility, and Volume	Short Term Effectiveness	Implementability	Cost (Present Worth in millions)	
							H Area	D/DR Area
No Action	Poor - Ecological risks not quantified and not expected to significantly reduce concentrations of chromium in groundwater.	Poor - Chromium concentrations will exceed ambient water quality criteria in near-river wells and possibly in salmon spawning habitat.	Fair - Potential ecological risks to river will remain, but alternative comaptible with potential final actions.	Poor - no significant reduction during IRM period	Fair - no additional adverse impacts, but threat to river not mitigated.	Good - groundwater monitoring technology well established	0	0
Institutional Control/Continue Current Action	Poor - Ecological risks not quantified and not expected to significantly reduce concentrations of chromium in groundwater	Poor - Chromium concentrations will exceed ambient water quality criteria in near-river wells and possibly in salmon spawning habitat.	Fair - Potential ecological risks to river will remain, but alternative comaptible with potential final actions.	Poor - no significant reduction during IRM period	Fair - no additional adverse impacts, but threat to river not mitigated.	Good - groundwater monitoring technology well established.	1.0	1.0
Containment	Good - immediate reduction in chromium concentrations in concentrations of chromium entering the river in contained areas.	Poor - Chromium concentrations in groundwater will decrease due to natural process, and may fall below AWQC.	Fair - Groundwater may eventually migrate around barrier	Fair - mobility reduced, but toxicity and volume not affected	Fair - chromium will immediately be prevented from migrating towards river. However, some environmental impacts due in installation of barrier wall.	Poor - Cannot drive sheet piles in H Area; uncertain in D/DR Area. Option may require future remedial action to remove chromium.	10.0	23.3
Removal/Ion Exchange Treatment/Disposal	Good - immediate reduction in chromium mass in groundwater expected, with likely reduction in chromium concentrations entering river	Fair - Chromium mass in groundwater will decrease, and concentrations may fall below AWQC at river. ARARs must also be met for disposal of removed chromium.	Good - chromium permanently removed from system. IRM system could be expanded to meet changing objectives.	Good - chromium removed from system, mobility limited by groundwater extraction wells	Good - potential risks to environment and to workers are expected to be minimal	Good - technology well established; equipment and specialists are available.	10.9	10.2
Removal/Reverse Osmosis Treatment/Disposal	Good - immediate reduction in chromium mass in groundwater expected, with likely reduction in chromium concentrations entering river	Fair - Chromium mass in groundwater will decrease, and concentrations may fall below AWQC at river. ARARs must also be met for disposal of removed chromium and sludge from membrane.	Fair - Reverse osmosis system may not be effective at removing chromium if groundwater discharge rates are increased, and may require updating or replacement.	Good - chromium removed from system, mobility limited by groundwater extraction wells	Fair - potential risks to environment and to workers are expected to be minimal, but more land required for sludge disposal.	Fair - Requires installation of high pressure pumps, more difficult and expensive to implement than ion exhchange.	28.2	18.4

ACRONYMS

ARAR	applicable or relevant and appropriate requirement
BAT	best available technology
CAD	computer-aided design
CERCLA	*Comprehensive Environmental Response, Compensation, and Liability Act*
CFR	Code of Federal Regulations
COPC	contaminants of potential concern
COC	contaminants of concern
CRCIA	*Columbia River Comprehensive Impact Assessment*
CSCF	continuously stirred continuous flow
CSTR	continuously stirred - tank bioreactors
DF	decontamination factor
DOE	U.S. Department of Energy
DOE-RL	U.S. Department of Energy, Richland Operations Office
DOT	U.S. Department of Transportation
Ecology	Washington State Department of Ecology
EPA	U.S. Environmental Protection Agency
EHQ	environmental hazard quotient
ERA	expedited response action
ERDF	Environmental Restoration Disposal Facility
FBR	fluidized-bed bioreactors
FFS	focused feasibility study
FS	feasibility study
GRA	general response action
HEIS	Hanford Environmental Information System
HMOC	Hybrid Method of Characteristics
HQ	hazard quotient
HRA-EIS	Hanford Remedial Action Environmental Impact Statement
HSRAM	Hanford Site Risk Assessment Methodology
ICR	incremental lifetime cancer risk
IRM	interim remedial measures
LFI	limited field investigation
LOEL	lowest observable effects level
MCL	maximum contaminant level
MMOC	modified method of characteristics
MOC	method of characteristics
NEPA	*National Environmental Policy Act*
NCP	*National Contingency Plan*
NPDES	National Pollutant Discharge Elimination System
NPL	National Priorities List
O&M	operations and maintenance
PNL	Pacific Northwest Laboratory
QRA	qualitative risk assessment
RAO	remedial action objective
RCRA	Resource Conservation and Recovery Act

ACRONYMS (Continued)

RI	remedial investigation
ROD	record of decision
SIP	Strongly Implicit Procedure
SDWA	*Safe Drinking Water Act*
SVE	soil vapor extraction
TBC	to be considered
Tri-Party Agreement	*Hanford Federal Facility Agreement and Consent Order*
TSS	total suspended solids
USGS	United States Geological Service
VOC	volatile organic compounds
WAC	Washington Administrative Code

CONTENTS

1.0 INTRODUCTION 1-1
1.1 PURPOSE AND SCOPE 1-1
1.2 REPORT ORGANIZATION 1-2
1.3 SUMMARY OF THE HANFORD PAST-PRACTICE STRATEGY 1-3
1.4 SUMMARY OF 100 AREA FEASIBILITY STUDY PHASES 1 AND 2 . . 1-3

1.5 100 AREA WIDE AND AGGREGATE AREA STUDIES 1-5
1.5.1 Hanford Site Background 1-5
1.5.2 Hanford Remedial Action Environmental Impact Statement 1-5
1.5.3 Ecological Summary 1-5
1.5.4 Groundwater/River Interaction 1-6
1.5.5 Columbia River Comprehensive Impact Assessment 1-7
1.5.6 Investigations of Chromium in Groundwater 1-7
1.6 SUMMARY OF 100 AREA GROUNDWATER TREATABILITY STUDIES 1-8
1.6.1 Precipitation/Reduction 1-9
1.6.2 Ion Exchange 1-10
1.7 PILOT-SCALE TREATABILITY STUDY 1-11
1.8 KEY ASSUMPTIONS FOR FFS 1-13

2.0 OPERABLE UNIT BACKGROUND 2-1
2.1 LIMITED FIELD INVESTIGATION 2-3
2.2 QUALITATIVE RISK ASSESSMENT 2-4
2.3 CULTURAL REVIEW 2-6
2.4 ONGOING ACTIONS 2-6

3.0 REMEDIAL ACTION OBJECTIVES 3-1
3.1 DEVELOPMENT OF REMEDIAL ACTION OBJECTIVES 3-6
3.2 LAND USE 3-8
3.3 RECEPTORS AND EXPOSURE PATHWAYS 3-9
3.4 CONTAMINANTS OF POTENTIAL CONCERN 3-11
3.5 POTENTIAL APPLICABLE OR RELEVANT AND APPROPRIATE REQUIREMENTS 3-13
3.6 INTERIM REMEDIAL MEASURE GOAL AND POINTS OF COMPLIANCE 3-13

4.0 ALTERNATIVES DEVELOPMENT 4-1
4.1 ALTERNATIVE GW-1: NO ACTION 4-1
4.1.1 Baseline Description 4-2
4.1.2 Application to the 100-HR-3 Operable Unit 4-2
4.2 ALTERNATIVE GW-2: INSTITUTIONAL CONTROLS 4-3
4.2.1 Access Restrictions 4-3
4.2.2 Monitoring 4-3
4.2.3 Continued Current Actions 4-3

4.3 ALTERNATIVE GW-3: CONTAINMENT 4-4
4.3.1 Baseline Description 4-5
4.3.2 Application to the 100-HR-3 Operable Unit 4-5
4.4 ALTERNATIVE GW-4: IN SITU TREATMENT 4-10
4.5 ALTERNATIVE GW-5: REMOVAL, TREATMENT, AND DISPOSAL USING ION EXCHANGE 4-10
4.5.1 Baseline Description 4-10
4.5.2 Treatment System Modification 4-11
4.6 ALTERNATIVE GW-6: REMOVAL, TREATMENT, AND DISPOSAL USING REVERSE OSMOSIS 4-14
4.6.1 Size and Configuration 4-15
4.6.2 Site-Specific Implementation 4-15
4.6.3 Operational Considerations 4-16
4.6.4 Modeling Results 4-17
4.7 UNCERTAINTY ISSUES 4-17
4.7.1 Alternative GW-1 4-18
4.7.2 Alternative GW-2 4-18
4.7.3 Alternative GW-3 4-18
4.7.4 Alternative GW-4 4-19
4.7.5 Alternative GW-5 4-19
4.7.6 Alternative GW-6 4-20

5.0 MODELING RESULTS 5-1
5.1 GROUNDWATER FLOW MODELS 5-1
5.1.1 Model Design 5-1
5.2 100-D/DR AREA GROUNDWATER FLOW MODEL 5-3
5.2.1 100-D/DR Area Model Grid 5-3
5.2.2 Boundary Conditions 5-3
5.2.3 Initial Conditions 5-4
5.2.4 Bottom Elevations of Model Grid 5-4
5.2.5 Recharge 5-4
5.2.6 Aquifer Hydraulic Conductivity 5-4
5.2.7 ~~Storage Coefficient and Porosity~~ 5-5
5.2.8 River Nodes 5-5

5.2.9 Model Calibration 5-6
5.3 100-H AREA GROUNDWATER FLOW MODEL 5-6
5.3.1 100-H Area Model Grid 5-6
5.3.2 Boundary Conditions 5-7
5.3.3 Initial Conditions 5-7
5.3.4 Bottom Elevations of Model 5-8
5.3.5 Recharge 5-8
5.3.6 Aquifer Hydraulic Conductivity 5-8
5.3.7 ~~Storage Coefficient and Porosity~~ Specific Yield and Porosity 5-8
5.3.8 River Nodes 5-9
5.3.9 Model Calibration 5-9

5.4 SOLUTE TRANSPORT MODELS 5-9
5.4.1 Model Design 5-9
5.4.2 100-D/DR Area Technical Approach 5-10
5.4.3 100-H Area Technical Approach 5-11
5.5 MODELING RESULTS 5-11
5.5.1 100-D/DR Area No Action Alternative 5-11
5.5.2 100-D/DR Area Vertical Barrier Alternative 5-11
5.5.3 100-D/DR Area Groundwater Extraction and Treatment Alternative 5-12
5.5.4 100-H Area No Action Alternative 5-13
5.5.5 100-H Area Vertical Barrier Alternative 5-13
5.5.6 100-H Area Hydraulic Control Alternative 5-14
5.5.7 100-H Area Groundwater Extraction and Treatment Alternative . 5-15

6.0 DETAILED ANALYSIS OF ALTERNATIVES 6-1
6.1 METHODOLOGY AND CRITERIA 6-1
6.1.1 Overall Protection of Human Health and the Environment 6-1
6.1.2 Compliance with ARAR 6-1
6.1.3 Long-Term Effectiveness and Permanence 6-2
6.1.4 Reduction of Toxicity, Mobility, or Volume Through Treatment . . 6-3
6.1.5 Short-Term Effectiveness 6-4
6.1.6 Implementability 6-4
6.1.7 Cost 6-5
6.1.8 Regulatory Acceptance 6-6
6.1.9 Community Acceptance 6-6
6.2 COMMON EVALUATION CONSIDERATIONS 6-6
6.2.1 Resources 6-7
6.2.2 Issues 6-10
6.3 DETAILED ANALYSIS 6-19

7.0 QUALITATIVE SENSITIVITY ANALYSIS 7-1

8.0 COMPARATIVE ANALYSIS 8-1
8.1 OVERALL PROTECTIVENESS OF HUMAN HEALTH AND THE ENVIRONMENT 8-1
8.2 COMPLIANCE WITH ARAR 8-2
8.3 LONG-TERM EFFECTIVENESS AND PERMANENCE 8-2
8.4 REDUCTION OF TOXICITY, MOBILITY, OR VOLUME 8-3
8.5 SHORT-TERM EFFECTIVENESS 8-4
8.6 IMPLEMENTABILITY 8-5
8.7 COST 8-6

9.0 REFERENCES 9-1

APPENDICES:
A - APPLICABLE OR RELEVANT AND APPROPRIATE REQUIREMENTS A-1
B - DETAILED DESCRIPTIONS OF REMEDIAL ALTERNATIVES FROM THE

100 AREA FEASIBILITY STUDY PHASES 1 AND 2 . . . . . B-1
C - MODELING DETAILS C-1
D - COST ESTIMATES D-1

FIGURES:

TABLES:

B-2 100-H Area Calibrated Groundwater Flow Model Statistics B-7
B-3 100-D/DR Area Sensitivity Analysis Data B-8
B-4 Summary of H Area Transport Calibration Runs B-10
B-5 Summary of H Area Model Results B-11
B-6 Statistics of H Area Model Runs B-12

1.0 INTRODUCTION

This focused feasibility study (FFS) is in support of the *Comprehensive Environmental Response, Compensation, and Liability Act of 1980* (CERCLA) remedial investigation/ feasibility study (RI/FS) activities for the 100-HR-3 Groundwater Operable Unit. The RI/FS process is described in the *Guidance for Conducting Remedial Investigations and Feasibility Studies Under CERCLA* (EPA 1988). The 100 Area is one of four areas on the Hanford Site that are on the U.S. Environmental Protection Agency's (EPA) National Priorities List (NPL) under CERCLA (Figure 1-1). The 100-HR-3 Operable Unit is one of seven operable units associated with the 100-D/DR and 100-H Areas of the Hanford Site (Figure 1-2). Three of the 100-D/DR operable units (100-DR-1, DR-2, and DR-3), two of the 100-H operable units (100-HR-1 and HR-2), and the 100-IU-4 Operable Unit are source units. The 100-HR-3 Groundwater Operable Unit includes the groundwater beneath the source operable units and the adjacent groundwater, surface water, fluvial sediments, and aquatic biota impacted by the overlying source operable units. The 100-HR-3 Operable Unit also includes that portion of the 600 Area that lies between the 100-D/DR and 100-H Reactors.

The approach for the RI/FS activities for the 100 Area operable units has been further defined in the *Hanford Past-Practice Strategy* (DOE-RL 1991). This strategy streamlines the past-practice remedial action process with a bias for action through optimizing the use of interim remedial measures (IRMs) and expedited response actions (ERAs).

All work conducted at the 100 Area waste sites is in accordance with the conditions set forth in the *Hanford Federal Facility Agreement and Consent Order* (Tri-Party Agreement) (Ecology et al. 1990), and its amendments, signed by the Washington State Department of Ecology (Ecology), EPA, and the U.S. Department of Energy (DOE).

1.1 PURPOSE AND SCOPE

The *Hanford Past-Practice Strategy* (DOE-RL 1991) defines the FFS as an evaluation of a limited number of alternatives that are focused to the scope of the response action planned. The FFS constitutes the detailed analysis phase that completes the FS evaluation process for the targeted IRM. In addition to the alternative evaluation in the *100 Area Feasibility Study Phases 1 and 2* (DOE-RL 1994a), the detailed analysis phase in this FFS integrates the results of area-wide studies such as river impact, shoreline, ecological, cultural resources, treatability, and background studies as well as information from operable unit-specific limited field investigations (LFI) and qualitative risk assessments (QRA).

The FFS does the following things:

- Updates and refines remedial action objectives (RAO), contaminants of concern (COC), applicable or relevant and appropriate requirements (ARAR), and remedial alternatives based on new information developed since the *100*

Area Feasibility Study Phases 1 and 2 (DOE-RL 1994a). ~~(additional risk assessment may be used to refine RAO and COC)~~

- Performs detailed and comparative analyses of IRM alternatives.

The FFS is performed primarily to provide a detailed analysis of remedial action alternatives for sites remaining on the IRM pathway as identified in the LFI.

The objective of the FFS is to provide decisionmakers sufficient information on waste site conditions and remedial alternatives to allow them to make an appropriate and timely decision on remediation of sites to be addressed through IRM. The FFS evaluates alternatives identified in the *100 Area Feasibility Study Phases 1 and 2* (DOE-RL 1994a) and considers new information on technologies, operable unit characteristics, and areawide studies.

Concurrently, FFS's are being prepared for some of the 100 Area source operable units. Source cleanup is integral to successful remediation of groundwater; therefore, the cleanup of groundwater is closely tied to the cleanup of the sources of contamination. The source FFS's currently under preparation are aimed at the high priority sites, mainly the liquid waste sites. Remediation of these sites may play a major role in cleanup of the groundwater by eliminating a pathway for continued contamination.

1.2 REPORT ORGANIZATION

The FFS is organized into the following sections:

- Section 1.0--introduction and discussion of purpose of report; summaries of 100 Area studies that support the FFS
- Section 2.0--operable unit background and summaries of operable-unit specific reports
- Section 3.0--discussion of RAO, including land use, COC, ARAR, and remediation goals
- Section 4.0--detailed descriptions of the groundwater remedial alternatives identified in the 100 Area FS, including any modifications to the alternatives based on new information concerning contaminants or technologies; discussion of uncertainties associated with the alternatives
- ~~Section 5.0--discussion of modeling efforts for FFS~~
- ~~Section 6.0--discussion of detailed analysis methodology; detailed analysis tables comparing each alternative to the nine CERCLA criteria~~
- ~~Section 7.0--a discussion of the sensitivities of the report assumptions~~

- ~~Section 8.0--comparative analysis of alternatives using the CERCLA nine criteria~~

- Section 5.0--description of groundwater flow modeling conducted for the various remediation alternatives

- Section 6.0--detailed evaluation of remedial alternatives using CERCLA evaluation criteria

- Section 7.0--qualitative sensitivity analysis of FSS assumptions

- Section 8.0--comparative analysis of remedial alternatives using CERCLA criteria

- Section 9.0--a list of references used in the FFS

- Appendix A--a tabulation of ARAR

- Appendix B--detailed descriptions of technologies developed and screened in the 100 Area FS, Phases 1 and 2.

- Appendix C--modeling details

- Appendix D--cost models.

1.3 SUMMARY OF THE HANFORD PAST-PRACTICE STRATEGY

The strategy streamlines the past-practice remedial action process with a bias for action through the use of expedited response actions and IRM. The strategy focuses on reaching early decisions to initiate and complete clean-up projects, maximizing the use of existing data, coupled with focused, short time-frame investigations where necessary.

Figure 1-3 depicts the interrelationships and sequencing of steps and activities that must be integrated to bring an operable unit from field investigation through record of decision (ROD). The diagram is consistent with the approach outlined in the *Hanford Past-Practice Strategy* (DOE-RL 1991). This chart provides a graphical description of the entire process of characterization activities, risk assessments, treatability studies, and FS for the high and low priority sites within an operable unit and for the operable unit as a whole.

To aid in understanding each of the figure activity elements and their interrelationships, each element is described in the *100 Area Feasibility Study Phases 1 and 2* (DOE-RL 1994a).

1.4 SUMMARY OF 100 AREA FEASIBILITY STUDY PHASES 1 AND 2

The 100 Area FS, Phases 1 and 2, evaluated the known characteristics of the Hanford 100 Area and identified the range of remedial alternatives that were most appropriate for protection of human health and the environment for the entire aggregate area. The purpose of the 100 Area FS was as follows:

- To provide a generalized view of applicable and workable remedial technologies as applied to the site contamination problems as a whole
- To evaluate groups of sites based on similarity, as opposed to geographical location and operable unit designation
- To develop and screen remedial alternatives to be used in the detailed analysis phase of the FFS for IRM or the final FS for individual operable units.

The 100 Area FS, Phases 1 and 2, consisted of the following four principal tasks:

- Identify contaminants of concern for the media of concern
- Identify ARARs pertinent to all general response actions (GRA)
- Develop remedial alternatives (Phase 1) applicable to the 100 Area including development of RAO, development of GRA, identification and screening of technologies and process options, and assembly of remedial alternatives from representative technology types
- Screen alternatives (Phase 2) developed in Phase 1 for implementability, effectiveness, and costs to identify those alternatives that warrant advancement to the detailed analysis phase of future FFS.

Contaminants of potential concern (COPCs) and ARARs identified in 100 Area FS, Phases 1 and 2, are refined in the FFS based on the evaluation of additional operable unit- and waste site-specific information gathered in the LFI. General response actions and alternatives retained as a result of the 100 Area FS are evaluated in detail in the FFS. General response actions were identified as follows:

- No action
- Institutional actions
- Containment actions
- In situ treatment actions
- Removal/treatment/disposal actions.

Alternatives retained from the 100 Area FS, Phases 1 and 2, are listed in Table 1-1.

1.5 100 AREA WIDE AND AGGREGATE AREA STUDIES

The 100 Area aggregate studies and Hanford Site studies, such as the Hanford Site background studies, provide integrated analyses of selected issues on a scale larger than an operable unit. The 100 Area groundwater operable unit work plans (DOE-RL 1992a-d) address studies common to the 100 Area covering topics such as river impact, shoreline ecology, and cultural resources. These studies are reported individually and provide data for the selection of IRMs. Results of these studies are summarized below. Details of the studies can be found in the corresponding references.

1.5.1 Hanford Site Background

The natural inorganic chemical composition of groundwater in the unconfined aquifer system beneath the Hanford Site is presented in *Hanford Site Groundwater Background* (DOE-RL 1992e). The characterization effort identifies the types and concentrations of inorganic analytes that exist naturally in the groundwater. Provisional threshold levels for 40 inorganic analytes developed in this effort are listed in the LFI. Background values for most radionuclides and organic constituents have not been developed.

1.5.2 Hanford Remedial Action Environmental Impact Statement

In accordance with DOE Order 5400.4 and Chapter 10 Code of Federal Regulations (CFR) Part 1021, the values of the *National Environmental Policy Act* (NEPA) of 1969 are to be incorporated in the CERCLA process. Many of the NEPA values are addressed in the detailed analysis of remedial alternatives within this FFS; however, Hanford Site and area-wide impacts are being addressed by the *Hanford Remedial Action Environmental Impact Statement* (HRA-EIS).

The HRA-EIS analyzes the impacts caused by remediating the CERCLA/*Resource Conservation and Recovery Act* past-practice waste sites on the Hanford Site. The NEPA strategy follows a tiered approach that allows the issues addressed in the HRA-EIS to be incorporated into subsequent assessments by reference alone (40 CFR 1502.20). ~~A draft of the HRA-EIS is scheduled for public review in August 1994. The final ROD for the HRA-EIS is scheduled for April 1995.~~

1.5.3 Ecological Summary

Bird, mammal, and plant surveys were conducted and reported in Sackschewsky and Landeen (1992). ~~Current contamination data has been compiled from other sources, along with ecological pathways and lists of all wildlife and plants at the site, including threatened and endangered species (Weiss and Mitchell 1992).~~ Current contamination data, including ecological pathways and lists of all wildlife and plants at the Site, have been compiled from a variety of sources. These sources include individual project reports and routine environmental monitoring reports produced by Pacific Northwest Laboratory and

Westinghouse Hanford Company. A comprehensive bibliography of sources is presented in Weiss ~~and~~ Mitchell (1992). Another report (Cadwell 1994) discusses aquatic species on the Hanford Reach of the Columbia River; mapping activities of vegetation on the site, and efforts to survey species of concern; shrub-steppe bird surveys; and mule deer and elk population monitoring. Report conclusions state that intrusive activities, such as remedial actions, that are conducted inside the controlled-area fences will not have a significant impact on the wildlife. Intrusive activities outside the controlled-area fences should have minimal impact on wildlife if the recommendations contained in the three documents listed below are followed (Landeen et al 1993):

- *Bald Eagle Management Plan* (Fitzner and Weiss 1992)
- *Biological Assessment of Threatened and Endangered Species* (Fitzner et al. 1992)
- *Biological Assessment for State Candidate and Monitor Species* (Stegen 1992).

The ecology of the riverine and riparian zones associated with the Columbia River is summarized in the *Columbia River Impact Evaluation Plan* (DOE-RL 1993a). Additional information sources are included as references in the evaluation plan. The DOE policy also states that site-specific ecological surveys will be conducted at all sites where cleanup and remedial actions are performed.

1.5.4 Groundwater/River Interaction

Several projects are contributing to a better understanding of how contaminated groundwater from the Hanford Site enters the Columbia River along the 100 Areas. This topic was included in an earlier Tri-Party Agreement milestone that addressed general investigations in the 100 Areas (M-30-00 series). A submilestone required the installation of equipment and the initiation of monitoring activities to perform long-term evaluation of river/aquifer interaction; both milestone requirements were completed by September 1993. ~~There are no subsequent milestones, however, to present the results of the evaluation of interaction.~~ Information from these activities will be incorporated into the conceptual site model that is used to support remedial design, including establishing appropriate performance monitoring activities.

Automated equipment is installed in wells at each reactor area to measure water levels at hourly intervals. Similar stations are operating at four reactor areas to measure river stage changes. Selected stations also contain sensors to record temperature and electrical conductivity. In the 100-H Area, simultaneous recording of water levels, temperature, and conductivity are being made in the nearshore river, in riverbank seepage, and in a shoreline monitoring well. All of these stations will be operated for a time period sufficient to describe daily, weekly, and seasonal river cycles ~~(most stations will have met this objective by Fall 1994)~~. Operation of the equipment and selected results are described in annual progress reports (e.g., Campbell 1994).

Monitoring activities include data collection by the equipment just described, as well as data collection for operable unit sampling tasks, as listed in work plans. Groundwater, riverbank seepage, and shoreline sediments are all sampled as part of operable unit sampling. Non-environmental restoration program activities, such as RCRA groundwater monitoring and Sitewide Environmental surveillance conducted under DOE Order 5400.1, also contribute data that are relevant to river/aquifer interaction investigations. A summary of water quality data from near-river monitoring wells, riverbank seepage, and nearshore river water is present in Peterson and Johnson (1992). Riverbank seepage, shoreline sediment, and river water data for sampling activities conducted for the environmental restoration program are published in DOE-RL (1992f) and WHC (1993a). The data are also available from the Hanford Environmental Information System (HEIS).

Interpretation of river/aquifer interaction data is in progress. Initial results show that groundwater is affected by river stage changes in several ways. River fluctuations can be observed as water level changes in wells throughout the reactor areas, with a time lag and amplitude decrease occurring as the well's distance from the river increases. This information has potential use for inferring aquifer hydraulic properties (e.g., McMahon and Peterson 1992). River stage changes also affect water quality, but only within several hundred feet of the river, and to varying degrees depending on the magnitude and duration of stage changes. Evidence for some degree of groundwater dilution by river water prior to crossing the channel interface is found in riverbank seepage concentrations of contaminants. Seepage concentrations are almost always intermediate between values in shoreline wells and nearshore river water (Peterson and Johnson 1992).

An understanding of the physical and chemical environment at the aquifer/river interface, and of the processes occurring at the interface, is fundamental for assessing the impact of Hanford Site groundwater on the Columbia River water quality and ecosystems. It is also relevant in assessing the performance of remediation activities. Continued investigation of aquifer/river exchange is strongly encouraged to support future RODs for environmental restoration.

1.5.5 Columbia River Comprehensive Impact Assessment

The *Columbia River Comprehensive Impact Assessment* (CRCIA), established in *Tri-Party Agreement* Milestone M-13-80 (subsequently changed to M-15-80), will evaluate the current human and ecological risks associated with the Columbia River and attributable to past and present activities on the Hanford Site. The CRCIA is being conducted by Pacific Northwest Laboratory (PNL). Human risk from exposure to radioactive and hazardous materials will be addressed for a range of river use options. Ecological risk will be evaluated relative to the health of the current river ecosystem (Eslinger et al. 1994).

1.5.6 Investigations of Chromium in Groundwater

Chromium has been introduced to groundwater in the 100 Areas from several sources. Known sources for chromium in the 100-HR-3 operable unit are (1) coolant water leakage from the retention basins and underground piping; (2) sodium dichromate stock solution leakage associated with preparing coolant water; (3) decontamination solution disposal in

cribs, french drains, and trenches; and (4) leakage and/or spillage of waste solutions placed ~~in the 183-H~~ Solar Evaporation Basins. Groundwater containing chromium has moved from the 100-D/DR Area, where sources (1) through (3) above were present until the mid-1960s, into the 100-H Area, and the region immediately north. Wells located in the 600 Area between 100-D/DR and 100-H reactor areas (699-97-43, 699-46-43, and 699-91-46) are monitored semiannually for chemical and radiological waste indicators to help track this plume.

Several projects have been completed or are underway that contribute to a better understanding of groundwater contamination by chromium in the 100-HR-3 Operable Unit. Estimates for the volume of contaminated groundwater, the mass of chromium within that volume, and the changes in characteristics between 1988 and 1992 in the 100-H Area are presented in Peterson and Connelly (1993). ~~Their estimates suggest the existence of a chromium plume in excess of 100 ppb (EPA drinking water standard) that has a volume of approximately 180,000 m^3 and contains approximately 26 kg of chromium. The estimates indicate a slight increase in the plume during the time interval analyzed, and three possible reasons were offered. The most likely cause is the influx of chromium-bearing groundwater from the west into the 100-H Area, resulting from past disposal in the 100-D Area. Other possible causes are unidentified continuing sources in the 100-H Area and increased release from the soil column.~~ Their estimates suggest a chromium plume with concentrations in excess of 50 ug/L that has a volume of approximately 310,000 m^3 and contains approximately 36 kg of chromium. The results indicate a slight increase in the plume size during the time interval studied. Three explanations for this apparent increase were suggested: Influx of chromium-bearing groundwater from upgradient sources, an unidentified continuing source in the 100-H Area, and an increased release from the soil column (Peterson and Connelly, 1992).

An effort is under way to describe how chromium moves with groundwater and where chromium fixation might occur (DOE-RL 1993a). This study of chromium speciation looks at the concentrations and valence state of chromium in the unconfined aquifer, at the interface between the aquifer and the river, and in the nearshore river. Analysis of the various valence states in sediments and periphyton coatings on sediments is included, along with tests involving potential changes in valence state that occur when groundwater is mixed with river water. Initial interpretations suggest that some hexavalent chromium in groundwater is reduced to the less-toxic and less-mobile trivalent state at the aquifer/river interface.

1.6 SUMMARY OF 100 AREA GROUNDWATER TREATABILITY STUDIES

~~Treatability tests were conducted on groundwater samples collected from the 100-HR-3 Groundwater Operable Unit to collect data on treatment technologies. The 100-HR-3 Operable Unit consists of the groundwater beneath the 100-H and 100-D/DR Areas; the contaminants in the operable unit include chromium, nitrate, and uranium.~~ Treatability tests were conducted for several of the contaminants of potential concern listed in the 100-HR-3 limited field investigation report (DOE-RL 1993b {DOE/RL-93-43}). Bench-scale tests of biodenitrification used batch studies to determine if biodenitrification could reduce

the nitrate concentration to a residual of <45 mg/L (as NO_3), the current maximum contaminant level (MCL) as defined in the *Safe Drinking Water Act* (SDWA) (40 CFR 141). The tests were conducted under the *100-HR-3 Groundwater Treatability Test Plan* (DOE-RL 1992g), the *Treatability Study Program Plan* (DOE-RL 1992h), and the *100 Area Groundwater Biodenitrification Bench-Scale Treatability Study Procedures* (Peyton and Martin 1993). The results of the test are presented in *100 Area Groundwater Biodenitrification Bench-Scale Treatability Study -- Final Report* (Peyton 1994). Because the treatability test was directed at nitrates and organics, the information is not relevant to the COC for the 100-HR-3 Operable Unit. Therefore, no additional discussion of the treatability test is provided in the FFS.

Treatability tests were also conducted to test the removal of chromate, nitrate, and uranium (VI) using precipitation/reduction and/or ion exchange treatments. The tests are described in the *100-HR-3 Groundwater Treatability Test Plan* (DOE-RL 1992g). Procedures for the tests are specified in *100-HR-3 Area Groundwater Treatment Tests for Ex Situ Removal of Chromate, Nitrate, and Uranium (VI) by Precipitation/Reduction and/or Ion Exchange* (WHC 1993b); results are presented in *Treatment Tests for Ex Situ Removal of Chromate, Nitrate, and Uranium (VI) from Hanford (100-HR-3) Groundwater Final Report* ~~(WHC-1993e)~~ (Beck and Duncan, 1994). Results of each test are summarized below.

~~The detection limit for treatability study for chromium was 19 μg/L. The goal of the study was the MCL of 100 μg/L, so this detection limit was adequate. The Contract Required Detected Limit (CRDL) for chromium is 10 μg/L (EPA 1991).~~

The performance goals adopted for the *100-HR-3 Groundwater Treatability Test Plan* are: Total chromium (100 ug/L); nitrate (45,000 ug/L); and uranium (22 ug/L) (DOE-RL 1992g {DOE/RL-92-73}). Detection limits for analyses conducted during the testing are: Total chromium (29 ug/L); nitrate (10,000 ug/L); and uranium (1 ug/L) (Beck and Duncan, 1994, Table 1 {WHC-SD-ER-DTR-001, Rev. 0}).

1.6.1 Precipitation/Reduction

1.6.1.1 Sulfide Precipitation. A ferrous sulfate/sodium sulfide method was tested to first reduce the chromium (VI) to chromium (III) and then to coprecipitate the reduced chromium with the resulting ferric hydroxide and/or ferric sulfide (WHC 1993c). The possible reduction and/or precipitation of uranium was also investigated. The ferrous sulfate/sodium sulfide treatment was effective at removing the chromium (decontamination factor [DF] of 64); however, the treatment failed to remove uranium or nitrate and generated significant quantities of sludge. (The DF is defined as the original concentration of the contaminant divided by the concentration after treatment. A DF less than 2 is considered insignificant.) The method resulted in a colloidal suspension, which was not removed by centrifugation.

1.6.1.2 Brushite Coprecipitation. Disodium hydrogen phosphate was used to precipitate brushite from the contained calcium ion naturally present in the groundwater to determine the potential for removing uranium. The incidental removal of chromate from solution by coprecipitation with brushite was also investigated. The brushite treatment produced significant DF for uranium (DF = 32). This treatment did not result in significant DF (>2)

for chromate and had little effect on nitrate concentrations. Because neither precipitation method resulted in removal of both chromate and uranium, and because both generated significant quantities of sludge or flocculent, no further tests were conducted.

1.6.2 Ion Exchange

Three different strong-base anion exchange resins were tested based on recommendations of resin manufacturers (Dowex 21k™ from Dow Chemical Company and Amberlite 402™ and 410™ from Rohm and Haas Company). All three resins had excellent DF for uranium (90±70 to 110±70) and chromate (60±46 to 90±12). The Dowex 21K™ had a much higher DF for nitrate (40±20) than the Amberlite 410™ (12±2) or Amberlite 402™ (6±1). The Dowex 21K™ removed the high concentration of contaminants down to the level of detection for several hundred column volumes.

The test was a full factorial experiment, which means that all combinations of the variables of interest were explored. Tests conducted included batch tests, equilibrium tests, and breakthrough tests. ~~Equilibrium tests showed that the adsorption potential for Dowex 21k™ for uranium and chromate was far higher than the amount of groundwater available for spiking.~~

The following summarizes the results of the anion exchange resin test results.

- No pretreatment requirements were identified in the treatability tests; however, a prefilter is recommended for field application.

- Based on the results of the test, the optimum resin for treatment of chromate, nitrate, and uranium is Dowex 21K™, a strong-base anion exchange resin.

- No breakthrough was observed in water from Well 199-H4-4 for chromium or uranium after a total of 1660 column runs. Nitrate showed breakthrough after 445 column volumes. The concentrations from this well were 84,600 ppb nitrate, 49 ppb uranium, ~~65.5~~ 66 ppb chromate, and ~~79.4~~ 79 ppb total chromium.

- Breakthrough for water from Well 199-D5-15 occurred at 450 column volumes for nitrate and 1,100 column volumes for chromium. Initial concentrations were 49,700 ppb nitrate, 12 ppb uranium, 1,930 ppb chromate, and 2,025 ppb total chromium. ~~Breakthrough for chromium occurred at 100 ppb; therefore, 1925 ppb was taken up by the ion exchange resin~~. When breakthrough for chromium was first observed, the effluent concentration was 100 ppb chromium. The capacity of the Dowex 21K™ is 2.79 μg chromium per mg of resin, based on the test results for this well water.

- No degradation of resin or resin life was noted during multiple cycles.

- During the multiple cycles, the contaminant concentrations were below the performance goals, with the exception of uranium. This may not be too

significant, because the levels of uranium introduced in the test were much higher (8 times) than typical 100 Area groundwater uranium concentrations.

- The ion exchange was eluted with 4 to 5 column volumes of 4 M sodium chloride, then washed with one to two column volumes to regenerate the resin for reuse. The concentrations in the eluate were typically several hundred thousand ppb chromium, ten million ppb nitrate, and thirty thousand ppb uranium. Both the eluate and wash contained uranium and were considered mixed waste.

As part of the breakthrough tests, a low flow rate (16 column volumes per hour [3.4E-4 gal/min]) test using groundwater spiked with 700 ppb uranium, 1,700 ppb chromium (VI), 2,020 ppb total chromium, and 192,300 ppb nitrate showed that 1,800 column volumes were insufficient to show breakthrough for uranium. Chromium concentrations at 1,800 column volumes were near the performance level at 3% to 4% of original concentrations. Nitrate showed breakthrough at 350 column volumes, which corresponds to a resin loading capacity of 1.2 meq/mL for the Dowex 21K™ resin. (Breakthrough is defined as 50% of the original concentration.)

A high flow rate (27 column volumes per hour [5.7E-4 gal/min]) test using groundwater spiked with 820 ppb uranium, 2,100 ppb chromium, 1,990 ppb chromate, and 212,700 ppb nitrate showed no breakthrough for chromium; however, the test was ended prematurely due to equipment failures. Uranium concentrations were slightly higher in the effluent than in the slow flow rate test, which may indicate that the kinetics of uranium adsorption are slow. The uranium concentration was always less than the performance level (22 μg/L).

1.7 PILOT-SCALE TREATABILITY STUDY

Milestone M-15-06E required that DOE begin pilot-scale pump and treat operations for the 100-HR-3 Operable Unit by August 1994. The pilot scale study is to address chromium. Assuming that the pilot scale pump-and-treat operation is successful, it would continue to operate until the ROD. Full-scale operation would be implemented if it were determined to be the selected remedy under the 100-HR-3 ROD. If the pump and treat operation is the selected remedy under the ROD, it would continue until the three parties evaluated the operation using the following criteria, operation using the following criteria, as quoted from TPA Change Control Form, Change Number M-15-93-02, dated January 25, 1994:

1) Hexavalent chromium measured in wells near the Columbia River fall below the Model Toxics Control Act (MTCA) standard for chromium of 50 μg/L for two consecutive sampling periods.

NOTE:

In the 100-D/DR Area, the closest wells to the river are 199-D5-20, 199-D8-55, 199-D8-54, and 199-D8-53. Routinely monitored riverbank seepage locations are SP-110-1 and SP-110-2.

In the 100-H Area, the closest wells to the river are 199-H4-10, 199-H4-15, 199-H4-12, 199-H4-4, 199-H4-11, and 199-H4-13. Riverbank seepage locations include SP-150-1, SP-152-2/3, and SP-153-1.

2) Sampling of water occurring in the river bottom substrate environment, where springs are suspected to discharge contaminated groundwater, in concentrations representative of the plume, indicates that hexavalent chromium in this environment is below, and will remain below, the chronic Ambient Water Quality Criterion for protection of freshwater aquatic life for hexavalent chromium (11 μg/L) set by the EPA.

3) Groundwater/Columbia River interaction studies, numerical models, or physical models indicate that predicted levels of hexavalent chromium within the riverbed substrate environment, where contaminated groundwater is suspected to discharge, in concentrations representative of the plume, are below the chronic Ambient Water Quality Criterion for the protection of freshwater aquatic life for hexavalent chromium (11 μg/L) set by the EPA.

4) Biological surveys, such as aerial photographic records, of Columbia River sections where contaminated groundwater discharges may reasonably be expected to occur, indicate that contemporary salmonid redd distributions are at concentrations and locations expected if hexavalent chromium were not an influence.

5) The effectiveness (including cost/unit of hexavalent chromium removed) of the treatment technology does not justify further operation.

6) An alternate treatment technique, such as chemical reduction of the hexavalent chromium to a less toxic valence, that is more effective or is less costly is substituted.

Assumptions associated with the Tri-Party Agreement Change Control Form (Ecology et al. 1994) for the pilot-scale treatability test are as follows.

- The LFI activities do not identify hexavalent chromium data inconsistent with data to date.
- The QRA justifies the need for remediation.
- Treated effluent containing contaminants above state water quality standards can be disposed of in the soil column or aquifer.
- Hazardous, radioactive, and/or mixed waste (e.g., resins) will be stored and/or disposed of on site at locations agreed to by the three parties.

- Bench-scale tests will confirm treatment assumptions.

- The pilot-scale treatability test will be performed in accordance with the *100-HR-3 Groundwater Treatability Test Plan* (DOE-RL 1992h).

The *Pilot-Scale Treatability Test Plan for the 100-HR-3 Operable Unit* (DOE-RL 1994b) provides an outline for the pilot-scale test using the Dowex 21K™ resin in an ion exchange pump-and-treat system.

1.8 KEY ASSUMPTIONS FOR FFS

The key assumptions that form the basis for the FFS are as follows.

- The purpose of the IRM is to address an identified threat to human health or the environment.

- The objectives of the ~~FFS~~ IRM are to protect ecological receptors in the Columbia River and to abate offsite migration of contaminants.

- To meet the objectives, the alternatives are aimed at containment and control of contaminant plumes. ~~(The alternatives are not designed for mass reduction or aquifer cleanup.)~~

- ~~The occasional use scenario is assumed for the operable unit.~~

- ~~For purposes of cost estimates, the FFS uses a finite lifecycle for the IRM to the year 2008. It is assumed that any final action will be implemented by that time, be it a continuation of the IRM or a redirection of the action.~~

- Cost estimates used for alternative comparisons are based on a finite lifecycle for the IRM of 12 years. An additional estimate for a 5-year operation of a pump and treat system using ion exchange technology is presented also, to be consistent with CERCLA National Contingency Plan methods.

- The *100 Area Feasibility Study Phases 1 & 2* (DOE-RL 1994a) forms the basis for the alternatives evaluated in the FFS. Additional alternatives or deviations from the alternatives are only considered when the defined alternative does not match the operable unit characteristics. CERCLA does, however, allow the flexibility of specifying different process options at any point in the RI/FS process if warranted by site circumstances.

- Disposal to the Environmental Restoration Disposal Facility (ERDF) is assumed for all solid wastes generated. This includes the assumption that sufficient space is available and that the facility will be operating on a schedule consistent with the IRM.

Each of these key assumptions is discussed in Sections 2.0 through 6.0 of the FFS. The sensitivities associated with these assumptions are discussed in Section 7.0.

Figure 1-1. Hanford Site.

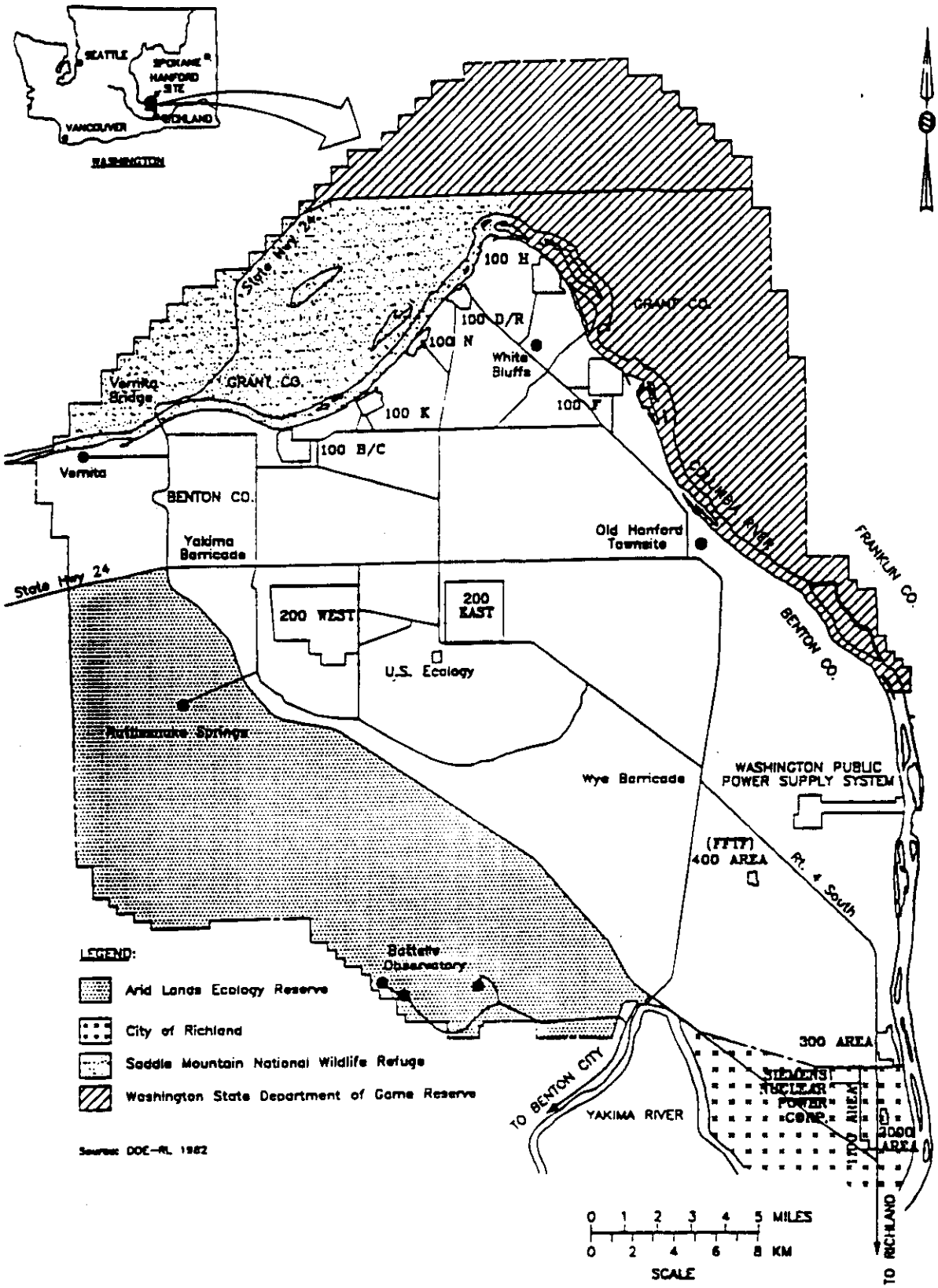

Figure 1-2. 100-HR-3 Operable Unit.

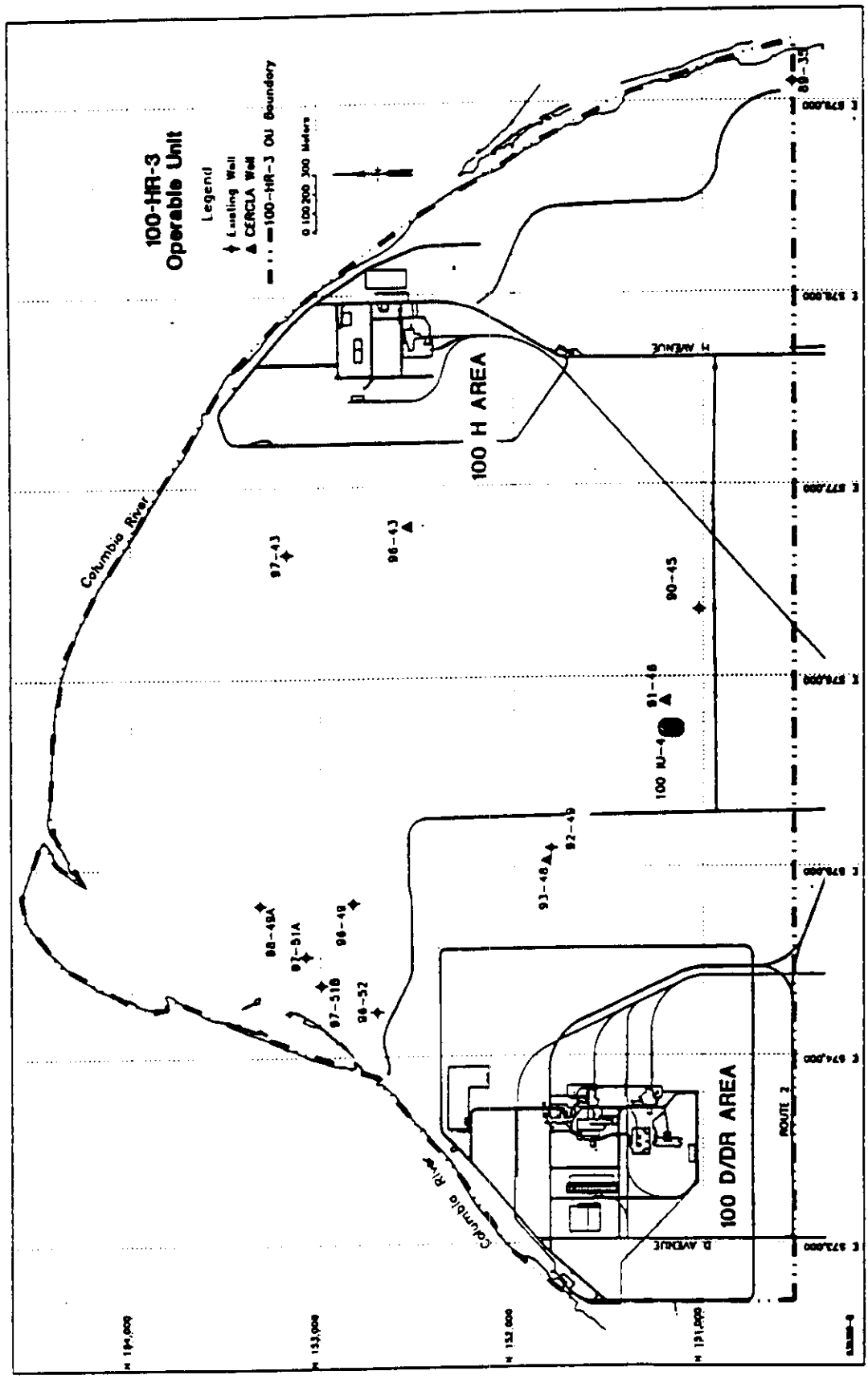

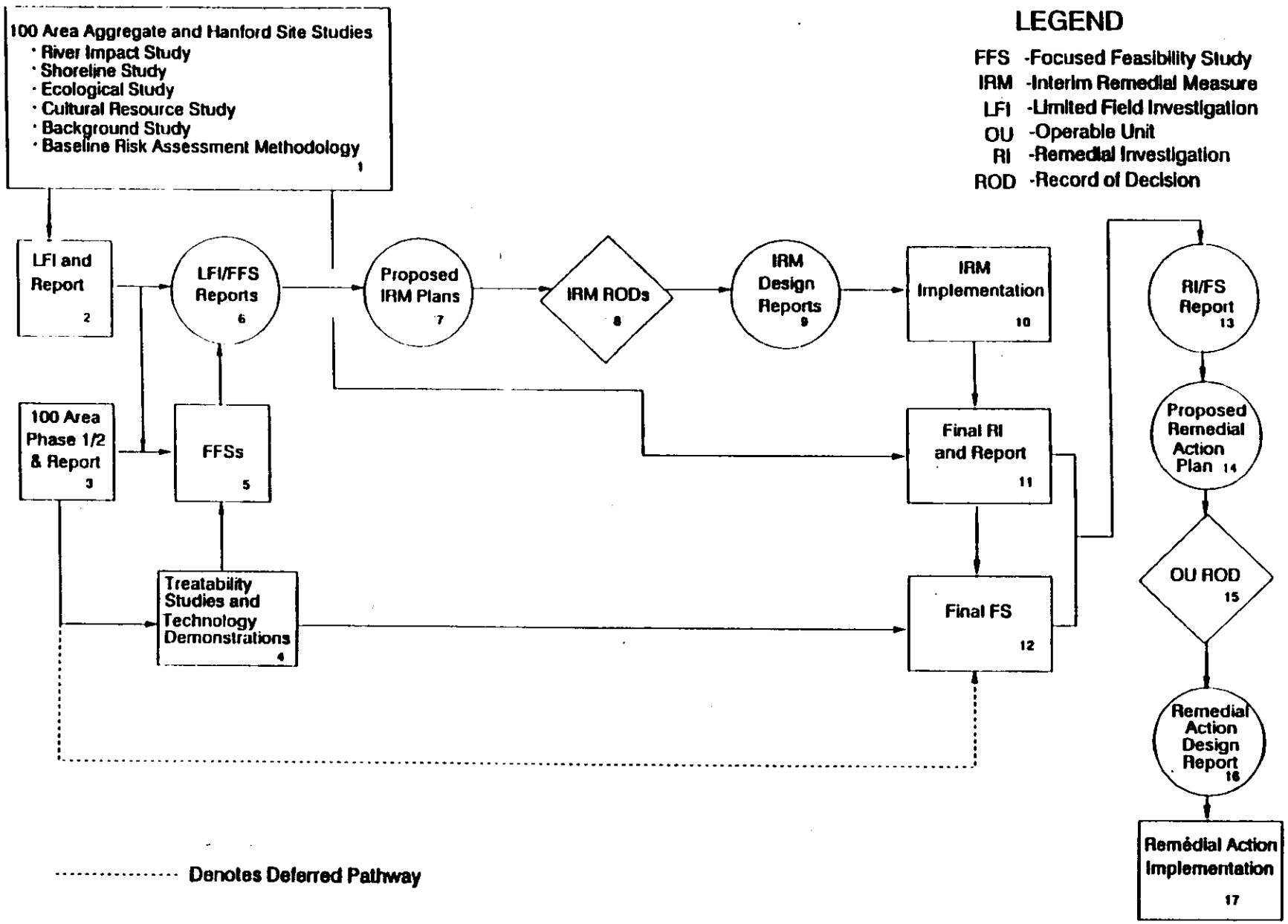

Figure 1-3. Hanford Past-Practice Strategy Diagram.

Table 1-1. Alternatives Retained from the 100 Area Feasibility Study.

Alternative	Description		Recommendation
GW-1	No Action		Retain for detailed analysis and risk assessment data.
GW-2	Institutional:	Water rights and deed restrictions Groundwater monitoring Columbia River as alternate water supply	Retain to preserve range of GRA to be evaluated in FFS.
GW-3	Containment:	Slurry walls Extraction wells	Retain to preserve range of GRA to be evaluated in FFS.
GW-4	In Situ Treatment:	Biodenitrification Air stripping	Retain as an in situ treatment action.
GW-5	Removal, Treatment, & Disposal:	Extraction wells Biodenitrification Chemical oxidation, precipitation, and chemical reduction Media filtration and ion exchange Cement-based solidification Injection into aquifer ERDF	Retain as a removal, treatment, and disposal action based on chemical treatment processes.
GW-6	Removal, Treatment, & Disposal:	Extraction Wells Biodenitrification Air stripping, forced evaporation, media filtration, and reverse osmosis Cement-based solidification Crib disposal, vaults, and trenches/pits ERDF	Retain as a removal, treatment, and disposal action based on physical treatment processes.

GRA = general response action
FFS = focused feasibility study
ERDF = Environmental Restoration Disposal Facility

2.0 OPERABLE UNIT BACKGROUND

The 100-HR-3 Operable Unit is located in the north-central portion of the Hanford Site along the southern shoreline of the Columbia River (see Figures 1-1 and 1-2). The southern boundary of the Operable Unit is the southern edge of Sections 21, 22, 23 and 24 of T 14 N, R 26 E of the Willamette Meridian and continuing east along the southern edge of Sections 19 and 20, T 14 N, R 27 E of Willamette Meridian to the Columbia River. The operable unit includes outfall structures and effluent pipelines that extend into the Columbia River, but excludes that portion (116-N-3 Crib) of the 100-NR-2 Operable Unit that extends north of the southern boundary. The outfall structures and river effluent pipelines are being addressed ~~by an ERA~~ as part of the river pipeline Expedited Response Action.

Since the preparation of the *100 Area Feasibility Study Phases 1 & 2* report (DOE-RL 1994a), additional data have been collected relevant to the 100 Area in general, as well as to the 100-D/DR and 100-H Areas and the 100-HR-3 Operable Unit. An LFI has been conducted and reported in *Limited Field Investigation Report for the 100-HR-3 Operable Unit* (DOE-RL 1993b). A QRA (WHC 1993d) and a variety of aggregate area studies were performed to evaluate risk, cultural resources, the area's ecosystem, the Columbia River, and the river sediments.

~~2.1 LIMITED FIELD INVESTIGATION~~

~~As part of the LFI, 22 new groundwater monitoring wells were installed in the 100-HR-3 Operable Unit. These wells were constructed to help define groundwater quality in areas of potential public or environmental exposure and immediately downgradient of priority source operable unit waste sites.~~

~~Groundwater samples were collected from these wells and existing monitoring wells (Figures 2-1 and 2-2). A total of 262 samples, exclusive of duplicates and splits, was collected over four rounds of sampling. Analyses were conducted for organic, inorganic, and radioactive constituents. Soil samples were collected during well drilling activities and analyzed for physical properties. The data derived from this sampling and analysis effort were used to perform a QRA (WHC 1993d). Tables 2-1 and 2-2 present the maximum concentrations found in the chromium plumes, in near river wells, in springs and seeps, and in the Columbia River for the 100-H and 100-D Areas.~~

~~2.2 QUALITATIVE RISK ASSESSMENT~~

~~The QRA for the 100-HR-3 Operable Unit focuses on a limited set of human and environmental exposure scenarios. The QRA provides an analysis that will aid in making defensible decisions regarding the need to conduct IRM.~~

~~The QRA used the first three rounds of LFI groundwater sampling data. The data were evaluated for consistency and compliance with EPA guidance (EPA 1989). Data from~~

~~all wells were used to identify a maximum concentration. This maximum concentration was then used in the calculation of human health risk.~~

~~For the ecological evaluation, maximum concentration data from near river wells only were used. This data represented the best available estimate of concentrations available for biological exposure at the groundwater/river interface (such as springs and seeps).~~

~~Frequent- and occasional-use exposure scenarios were evaluated in the human health QRA to provide bounding estimates of risk consistent with the residential and recreational exposure scenarios presented in the *Hanford Site Risk Assessment Methodology* (HSRAM) (DOE-RL 1994c). Human exposure was limited to ingestion of contaminated groundwater, inhalation of volatile contaminants during water use, and external exposure to radionuclides.~~

~~The results of the human health risk estimations for carcinogens are grouped into the following categories based on lifetime incremental cancer risk (ICR):~~

- ~~High $> 1 \times 10^{-2}$~~
- ~~Medium 1×10^{-4} to 1×10^{-2}~~
- ~~Low 1×10^{-6} to 1×10^{-4}~~
- ~~Very low $< 1 \times 10^{-6}$.~~

~~The results of the QRA for human health and ecological evaluations are presented by area (100-D/DR, 100-H, and 600) in Tables 2-1 through 2-5. Human health risk associated with the occasional-use scenario of medium or high ICR or a hazard index (HI) > 1 keeps a waste site on the IRM pathway. The results of the ecological risk assessment were evaluated in terms of an ecological hazard quotient (EHQ). Any contaminant with an EHQ > 1 was identified as COPC.~~

~~The frequent-use scenario assessment identified tritium, strontium-90, ammonia, chromium, manganese, and nitrate as COPC in the 100-D/DR Area through the ingestion and inhalation (ammonia only) pathways. For the 100-H Area, tritium, carbon-14, strontium-90, technetium-99, uranium-233/234, uranium-238, americium-241, ammonia, chloroform, chromium, fluoride, manganese, and nitrate were identified as COPC under the frequent-use scenario through the ingestion and inhalation pathways. Frequent-use COPC in the 600 Area were identified as tritium, arsenic, and chromium through the ingestion pathway.~~

~~The occasional-use scenario resulted in the identification of tritium in the 100-D/DR Area, technetium-99 in the 100-H Area, and arsenic in the 600 Area as human health COPCs; however, it should be noted that all of these COPCs had ICRs in the "low" or "very low" ranges. Therefore, none of these COPCs represent an unacceptable human health risk under this exposure scenario.~~

~~Ecological scenarios were evaluated using biological receptors that live in or near the Columbia River. The ecological risk assessment identified potential risks from bis(2-ethylhexyl) phthalate, chromium, and sulfide in the 100-D/DR Area based on exceedances of Ambient Water Quality Criteria. In the 100-H Area, chromium, iron, and sulfide were identified. These exceedances were based on the maximum concentrations~~

~~detected in the near-river wells. No allowance was made for environmental fate. These constituents were not identified in the river; the concentrations are significantly reduced by the mixing and dilution action of the river. The QRA presents a discussion of the uncertainties associated with the ecological risk assessment. No ecological assessment was conducted for the 600 Area, because the groundwater is not impacting the river.~~

~~While the ecological portion of the QRA conservatively estimated risk based on near-river well concentrations, no analysis has been performed on the risks to salmon redds and fry in the substrate of the river. Chromium in concentrations above 11 μg/L potentially cause negative impacts to these receptors. However, because data are unavailable for this ecological pathway, great uncertainty exists in the potential risk associated with this media.~~

2.1 LIMITED FIELD INVESTIGATION

The Limited Field Investigation (LFI) is an integral part of the RI/FS process and is based on Hanford-specific agreements discussed in the Hanford Federal Facility and Consent Order (Fourth Amendment) (Ecology et al. 1994), the Hanford Site Risk Assessment Methodology (HSRAM) (DOE-RL 1995), the RCRA Facility Investigation/Corrective Measures Study Work Plan for the 100-HR-3 Operable Unit (DOE-RL 1992c), and the Hanford Past-Practice Strategy (HPPS) (DOE-RL 1991). The HPPS emphasizes initiating and completing waste site cleanup through interim actions.

The primary purpose of the LFI at the 100-HR-3 Operable Unit (DOE-RL 1993b) was to collect sufficient data to determine if the groundwater below the 100-H and 100-D/DR Areas was contaminated to the extent that an interim remedial measure (IRM) was warranted. The data gathered during the LFI were also used to conduct a qualitative risk assessment for human and ecological receptors (see the following subsection) and evaluate the remedial alternatives in this FFS.

As part of the LFI, 22 new groundwater wells were installed in the 100-HR-3 Operable Unit. These wells were constructed to help define groundwater quality in areas downgradient of the priority source waste sites in the area, and estimate groundwater quality at locations where human and ecological receptors may be exposed to groundwater.

Groundwater samples were collected from these new wells and existing monitoring wells (Figures 2-1 and 2-2). A total of 262 samples, exclusive of duplicates and splits, was collected over four rounds of sampling. These samples were analyzed for organic, inorganic, and radioactive constituents. Soil samples were collected during well drilling activities and analyzed for physical properties. Tables 2-1, 2-2, and 2-3 present the maximum concentrations found in groundwater samples, in springs and seeps, and in the Columbia River in and adjacent to the 100-H and 100-D/DR Areas. The maximum concentrations of the constituents in the groundwater, river, and springs or seeps were used to evaluate risks to receptors according to the QRA protocol in the HSRAM (DOE 1995).

2.2 QUALITATIVE RISK ASSESSMENT

A Qualitative Risk Assessment (QRA) was performed as part of the LFI, and determined the principal risk drivers at the 100-HR-3 Operable Unit (WHC 1993d). Another purpose of the QRA was to qualitatively evaluate human health and environmental ~~exposure scenarios~~ risks to help determine if the Operable Unit is a candidate for an interim remedial measure. The QRA evaluated risks for a predefined set of human and environmental exposure scenarios, and if the estimated risks exceeded certain thresholds, interim remedial measures were considered necessary, as described in the HPPS (DOE-RL 1991), to reduce the risks posed by the contaminants. The QRA is not intended to replace or be a substitute for the baseline risk assessment that will be conducted in association with determining the final action at the site. The QRA used the groundwater data from the first three rounds of the LFI sampling. The data were evaluated for consistency and compliance with EPA guidance (EPA 1989).

The QRA considered only two human health exposure scenarios (frequent- and occasional-use) and two pathways (groundwater ingestion and inhalation of volatile contaminants during groundwater use), based on the methodology in the HSRAM (DOE-RL 1995). The inhalation pathway is evaluated only in the frequent-use scenario because it is assumed that exposure to volatile contaminants would occur during domestic water use within the confines of a residence, and would not be expected to occur in a occasional-use (recreational) setting.

The ecological evaluation in the QRA assessed the potential effects of contaminants on selected animals present in and near the Columbia River, such as fish and herons. Total daily doses to animals in aquatic and riparian habitats from radiological contaminants are estimated using the CRITR2 computer code (Baker and Soldat 1992). ~~These doses are then compared to the DOE benchmark of 1 rad per day (DOE Order 5400.2). For the inorganic and organic contaminants, the maximum representative groundwater concentrations are compared to EPA's acute and chronic Ambient Water Quality Criteria (AWQC) for the protection of aquatic organisms.~~ In addition, the ecological evaluation includes a review of the contaminants in the Columbia River and the springs and seeps near the river with the maximum representative groundwater concentrations.

For the human health risk assessment, frequent- and occasional-use scenarios were evaluated to provide bounding estimates of risks consistent with the residential (frequent) and recreational (occasional) exposure scenarios presented in the Hanford Site Risk Assessment Methodology (DOE 1995). ~~Human exposure was limited to ingestion of contaminated groundwater, and inhalation of volatile contaminants during groundwater use.~~ Lifetime incremental cancer risks (ICR) were calculated for the radionuclides and carcinogenic inorganic and organic contaminants, and hazard indices (HI) were calculated for the inorganic and organic contaminants that posed systemic health risks. ~~An IRM greater than 1E-04 or a hazard index greater than 1.0 was considered to be an indicator of risk requiring an interim remedial measure. EPA generally considers ICRs in the range of 1E-06 (one in a million) to 1E-04 (one in ten thousand) as not requiring remedial action unless there is a potential for offsite migration of the contaminant(s), ecological risks, or other extenuating circumstances.~~

The results of the QRA for human health risks are presented by area (100-D/DR, 100-H, and 600 areas) in Tables 2-4 through 2-6. The risk assessment based on the frequent-use scenario identified tritium, strontium-90, ammonia, chromium, manganese, and nitrate as contaminants of potential concern in the 100-D/DR Area. For the 100 H Area, tritium, carbon-14, strontium-90, technetium-99, uranium-233/234, uranium-238, americium-241, ammonia, chloroform, chromium, fluoride, manganese, and nitrate were identified as contaminants of potential concern based on frequent-use. In the 600 Area, three ~~contaminants exceeded the 1E-04 ICR or the HI of 1.0~~ constituents were identified as contaminants of potential concern; these were tritium, arsenic, and chromium.

Based on the occasional-use scenario, only two radionuclides (tritium in the 100-D/DR Area and technetium-99 in the 100-H Area), and one inorganic (arsenic in the 600 Area), were identified as contaminants of potential concern (Tables 2-4 through 2-5).

Ecological risks were evaluated based on the exposure of biological receptors that live in or near the Columbia River to contaminants in surface water, as a result of contaminated groundwater flowing into the river. Sampling efforts at Hanford have shown that it is very difficult to get water samples that are representative of the conditions at the groundwater-river water interface. Therefore, for the purposes of the QRA, maximum concentrations of the contaminants from near-river well samples were used to represent concentrations potentially available for aquatic receptors at the groundwater-river water interface. Concentrations of contaminants in the open water column within the river are lower than concentrations observed in the near-river wells. However, an important exposure point for several aquatic receptors is the river sediments, and the pore water within those sediments. The QRA presents a discussion of the uncertainties associated with the ecological risk assessment. ~~No ecological risk assessment was conducted for the 600 Area because the groundwater in that area apparently flows through the 100-H Area prior to entering the river.~~ The QRA considered the area between, and including, the 100-D/DR and 100-H Areas.

The ecological risk assessment, based on the QRA protocol, identified potential risks from a few inorganic and organic constituents, but none of the radionuclides were present in concentrations that exceeded the 1 rad per day DOE benchmark. The ecological contaminants of potential concern that exceeded AWQC included bis(2-ethylhexyl)phthalate, chromium, and sulfide in the 100-D/DR Area and chromium, iron, and sulfide in the 100-H Area.

The contaminants of potential concern identified above, for both human and ecological receptors, are evaluated further to determine if risks are at a level that warrant an interim remedial measure. Fro human health risks, an ICR greater than 1E-04 or a hazard index greater than 1.0 is considered to be an indicator of risk requiring an interim remedial measure. EPA generally considers ICRs in the range of 1E-06 (one in a million) to 1E-04 (one in ten thousand) as not requiring remedial action unless there is a potential for offsite migration of the contaminant(s), an ecological risk, or other extenuating circumstances. For ecological receptors, the total radiological dose estimated using CRITR2 is compared to the DOE benchmark of 1 rad per day (DOE Order 5400.2). For the inorganic and organic contaminants, the maximum representative groundwater concentrations are compared to EPA's acute and chronic Ambient Water Quality Criteria (AWOC) for the protection of

aquatic organisms. If groundwater concentrations exceed the 1 rad per day benchmark or the AWQC, an ecological risk requiring an IRM was assumed to occur.

Based on the above analyses, and using an occasional-use exposure scenario for humans, the QRA data (Tables 2-4 through 2-7) indicate that human health risks at the 100-HR-3 Operable Unit do not exceed levels that warrant interim action. However, there are a few inorganic contaminants such as chromium that pose an ecological risk requiring an interim remedial measure. The ecological risk analyses indicated that mone of the ecological receptors living in or near the Columbia River that were addressed in the QRA will receive a radiological dose in excess of the one rad per day benchmark (DOE Order 5400.5).

Sampling of pore-water from the Columbia River sediments was conducted recently, to obtain samples from salmon spawning areas adjacent to the 100-H Area. The samples were analyzed specifically for chromium, which is a toxic and mobile contaminant that is known to migrate via groundwater into the river. The results of this effort along a 5,000 foot reach of the river, indicated that at a few locations, the chromium concentrations exceeded the AWQC for hexavalent chromium.

2.3 CULTURAL REVIEW

As part of a comprehensive cultural resources review of the 100 Area operable unit, several archeological surveys have been conducted in the 100-HR-3 Operable Unit. These surveys included literature and record reviews, as well as pedestrian surveys of the area. Figure 2-1 shows those areas of the operable unit which have been surveyed. These efforts were conducted following the procedures set forth in the *Hanford Cultural Resources Management Plan* (Chatters 1989). These surveys have located three historic and five prehistoric sites within the 100-D/DR and 100-H Areas that could potentially be impacted by IRM activities.

Two historic sites (3-176 and 3-178) have the potential of being impacted by activities in the 100-H Area by construction and support activities associated with remedial actions. One historic site, 3-180, and one prehistoric site, 45BN176, have the potential of being impacted by activities in the 100-D/DR Area. Four prehistoric sites--45BN147, 45BN148, 45BN439, 45BN459 and 45BN176--are near the river in the 100-D/DR Area in the potential zone of remedial activities. Three of these sites are village sites with pit houses.

All of the potential impact sites within the 100-HR-3 Operable Unit will need to be evaluated for National Register of Historic Places eligibility. Any sites found eligible for listing should be avoided during activities or plans for data recovery/mitigation will be required.

2.4 ONGOING ACTIONS

Aquifer tests are planned for the operable unit as documented in the *Aquifer Test Plan for the 100-HR-3 Operable Unit* (Swanson 1994). New wells were completed in August 1994, and field tests are scheduled to begin in September 1994. In addition, seven wells in

the 100-D/DR Area were pumped in June 1994 to determine their capacity for producing water in support of the treatability test in the 100-HR-3 Operable Unit. The withdrawal tests were of short duration, approximately 1 to 2 hours, and produced results similar to earlier estimates.

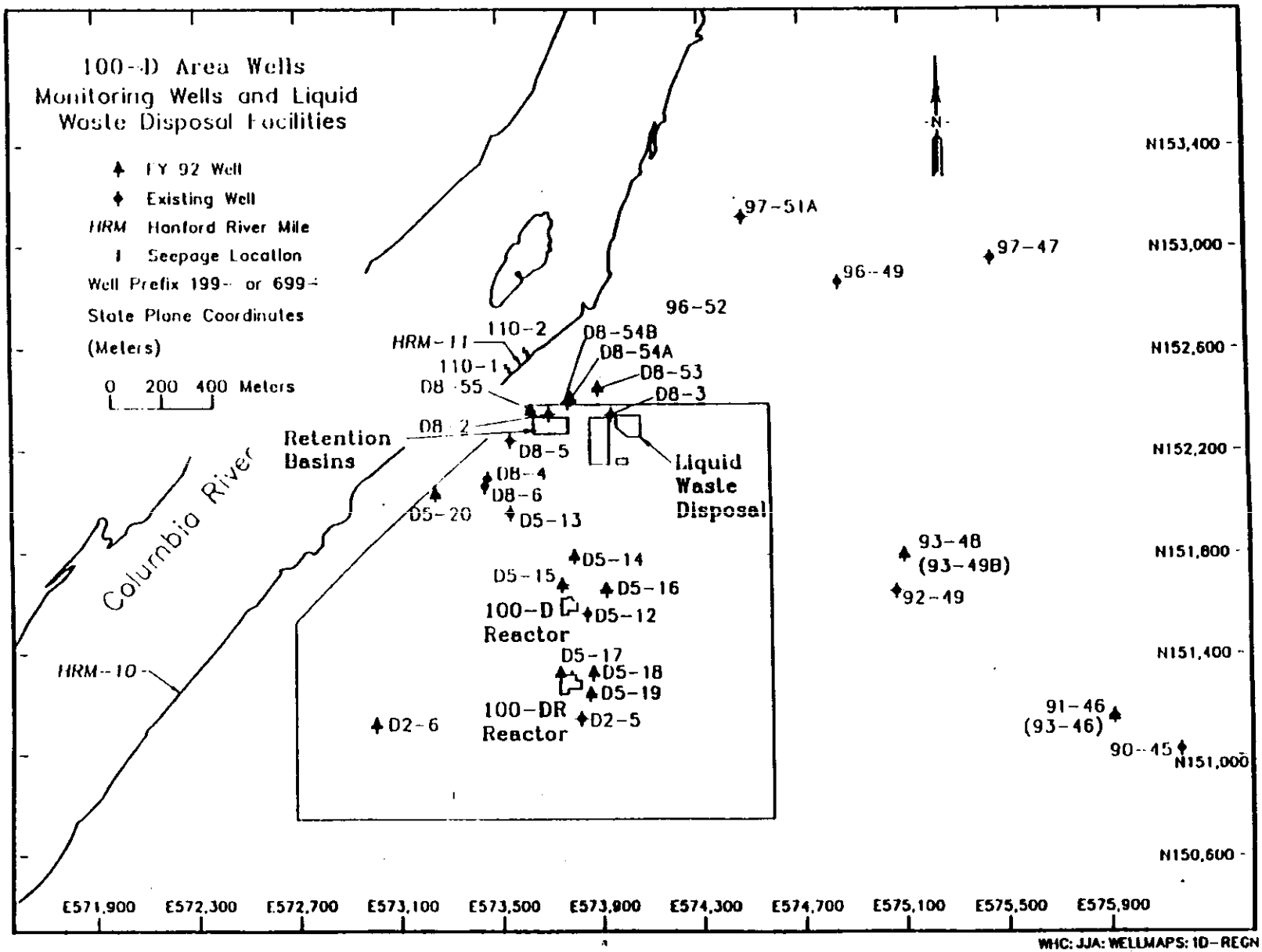

Figure 2-1. Well Location Map for the 100-D/DR Area.

Figure 2-2. Well Location Map for the 100-H Area.

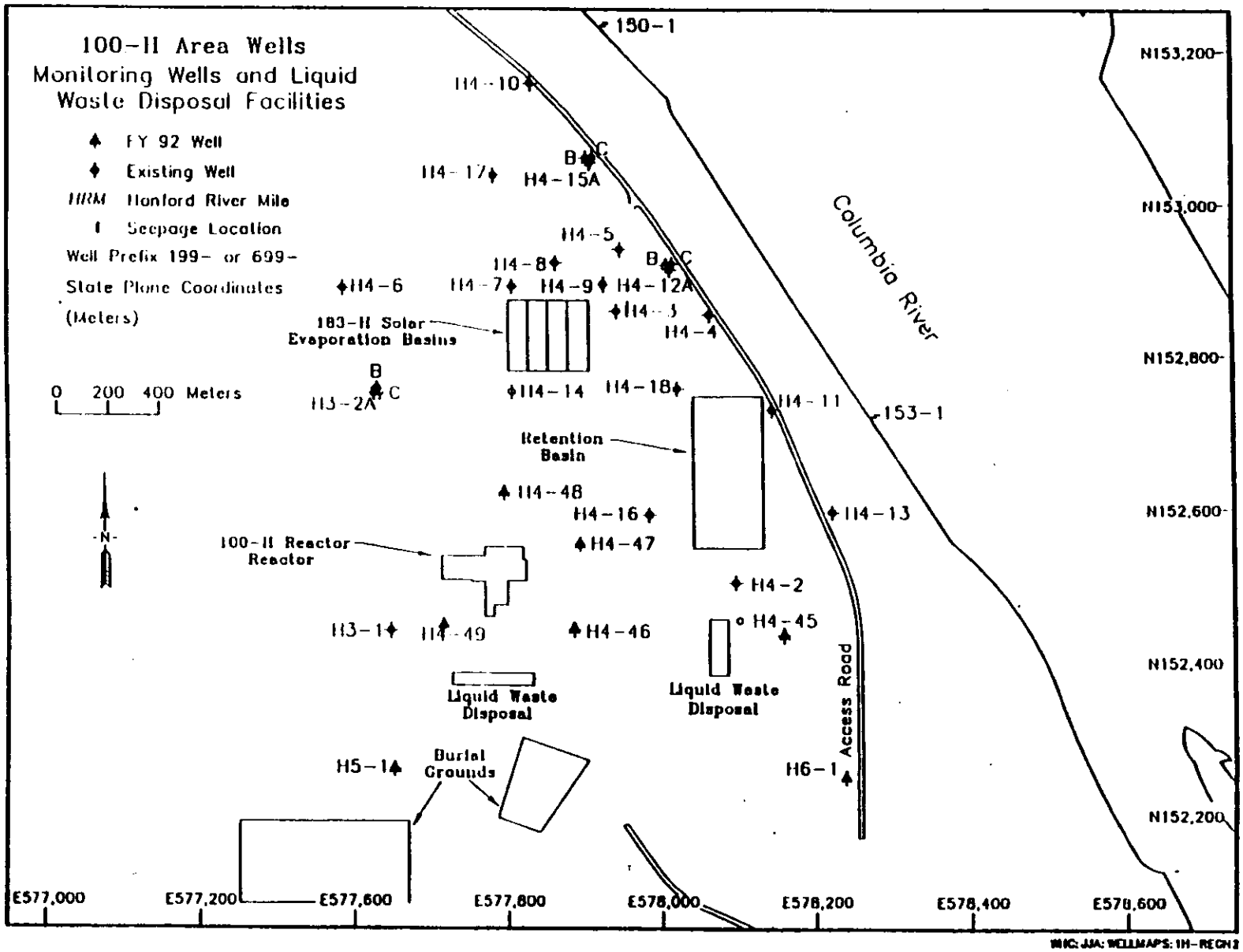

Figure 2-3. Cultural Survey Areas for the 100-D/DR Area.

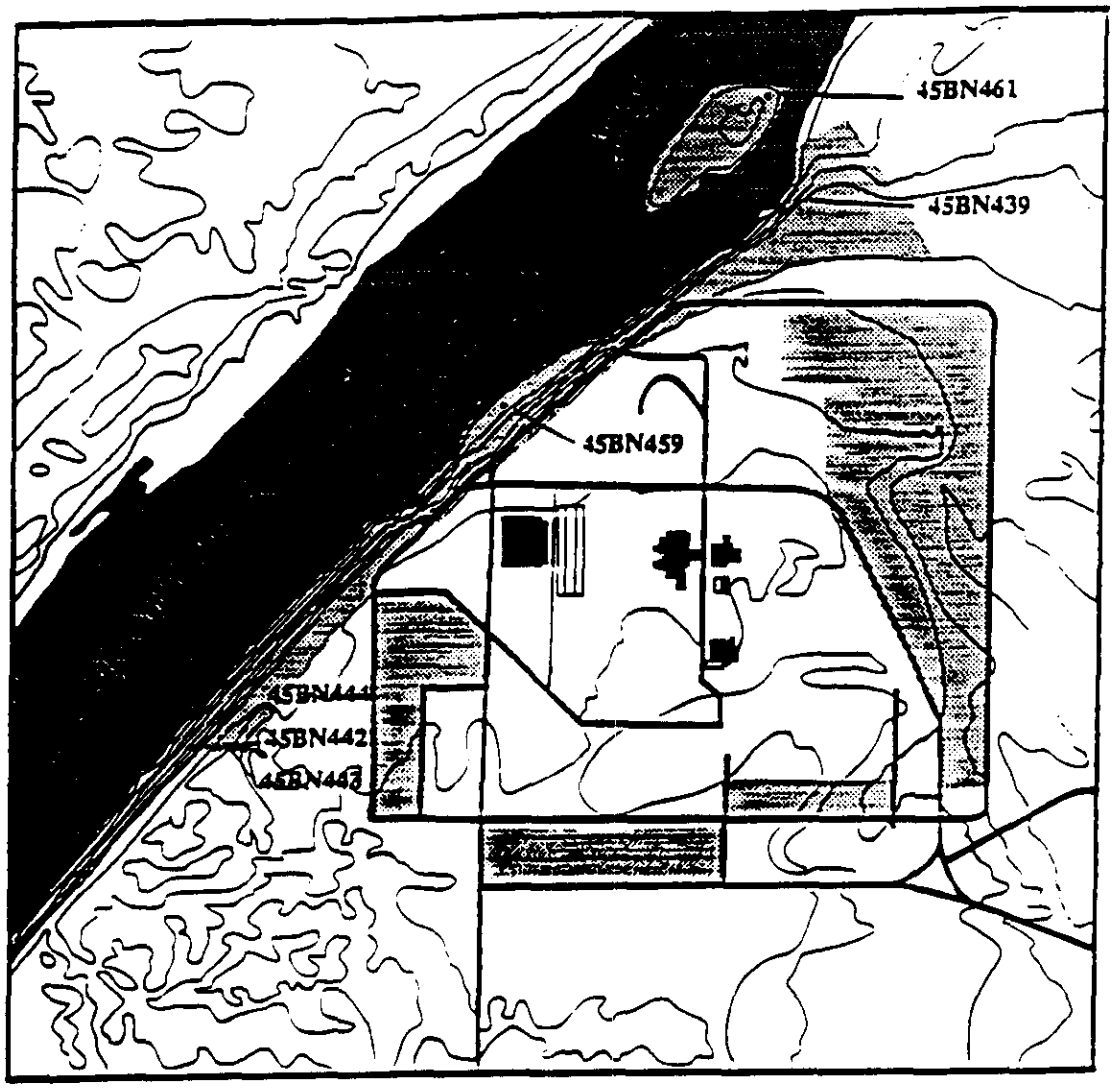

Figure 2-4. Cultural Survey Areas for the 100-H Area.

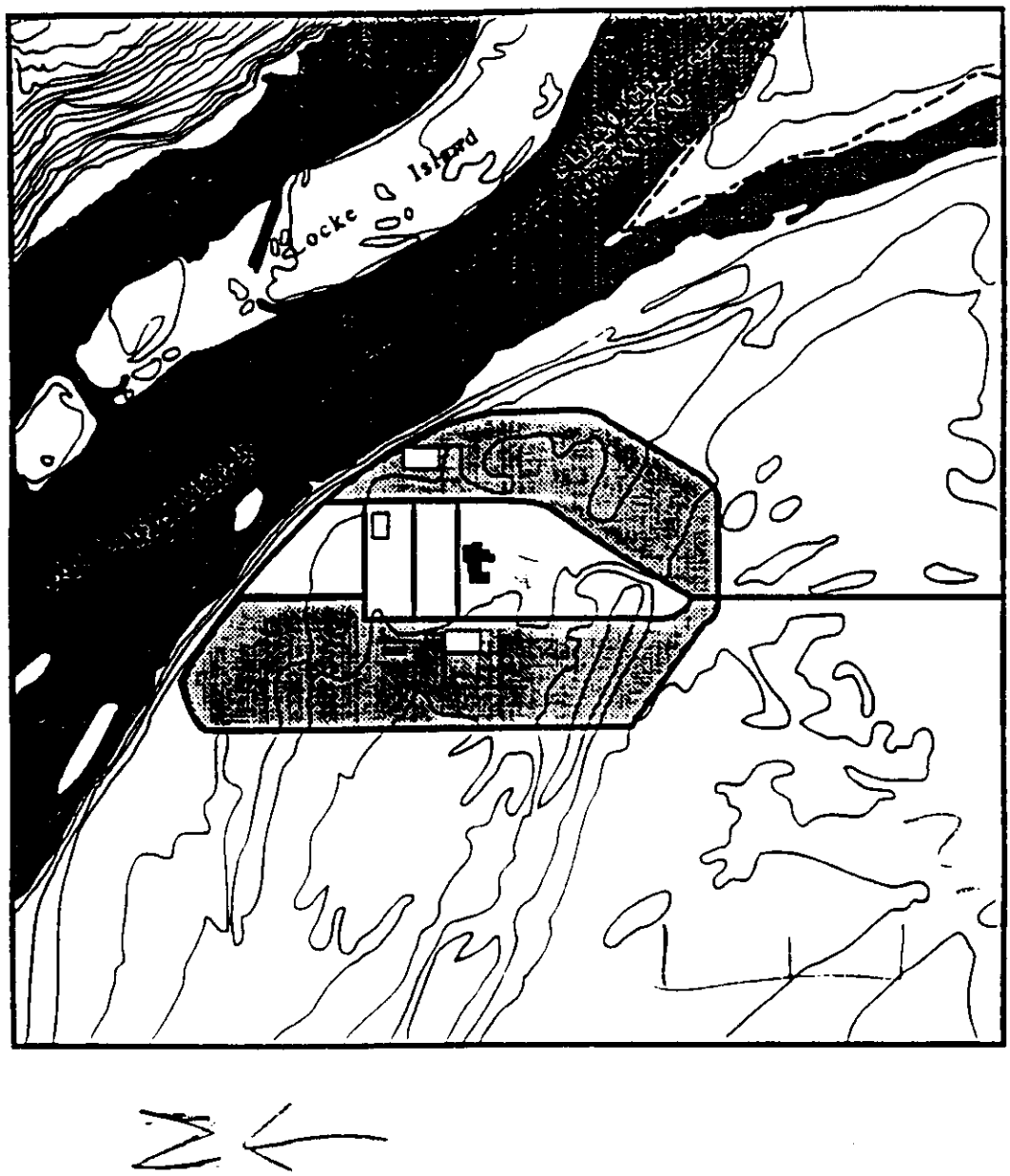

Table 2-1. Summary of Maximum Concentrations for Contaminants of Potential Concern for the 100-D/DR Area.

Groundwater Contaminants	All Groundwater Wells	Near-River Groundwater Wells	D/DR Area Springs	D/DR Area Columbia River	MCL (pCi/L or mg/L)
Radionuclides (pCi/L)					
Tritium	78,000	19,000	3,100	<200	20,000[a,b]
Strontium-90	41(J)	7.6	4.5	<1	8[a,b]
Inorganics (mg/L)					
Chromium	2.09	0.44(J)	0.12	0.09(U)	0.05[b]
Manganese	0.19	0.09	0.04(B)	0.07(U)	0.05[b,c]
Anions (mg/L)					
Ammonia	0.75	0.1	0.1(J)	<0.5(UJ)	0.27[d]
Nitrate	32.7	14.1	3.99(J)	<0.1(J)	10[a,b]

[a] 40 CFR 141 (Primary MCL)
[b] WAC 173-200-040 (Primary MCL)
[c] 40 CFR 143 (Secondary MCL)
[d] Concentration in mg/L at an inhalation Hazard Quotient of 1.0.
(J) Estimated value
(B) Analyte detected at a concentration below the contract required detection limit but above the instrument detection limit.
(U) Undetected

Table 2-2 Summary of Maximum Concentrations for Contaminants of Potential Concern for the 100-H Area

Groundwater Contaminants	All Groundwater Wells	Near-River Groundwater Wells	H Area Springs	H Area Columbia River	MCL (pCi/L or mg/L)
Radionuclides (pCi/L)					
Tritium	11,000	7,100	3,800(J)	400(J)	20,000[b,c]
Carbon-14	72	72	NA	NA	2,000[d]
Strontium-90	33	33	12.7	0.7(J)	8[b,c]
Technitium-99	2,270	500	12	3.4	900[d]
Uranium-233/234	26.8	26.8	NA	NA	NA
Uranium-238	18.6	18.6	1.22[a]	0.53[a]	NA
Americium-241	0.28(J)	0.28(J)	NA	NA	NA
Inorganics (mg/L)					
Chromium	0.49	0.046	0.052	0.006(U)	0.05[c]
Manganese	0.18	0.002(B)	0.038	0.012(B)	0.05[c,e]
Organics (mg/L)					
Chloroform	0.053	0.031	NA	NA	0.0017[c]
Anions (mg/L)					
Fluoride	1.3	0.21	0.21	0.45	4.0[b,c]
Nitrate	760	6.9	4.58(J)	4.58(J)	10[b,c]

a Value for total Uranium reported
b 40 CFR 141 (Primary MCL)
c WAC 173-200-040 (Primary MCL)
d Calculated based on annual average concentration yielding 4 mrem/yr for 2 liter/day daily intake (National Interim Primary Drinking Water Regulations, EPA-570/9-76-03).
e 40 CFR 143 (Secondary MCL)
f Concentration in mg/L at an inhalation Hazard Quotient of 1.0.
(J) Estimated value
(B) Analyte detected at a concentration below the contract required detection limit but above the instrument detection limit.
(U) Undetected
NA Not Analyzed For or Not Available

Table 2-3 Summary of Maximum Concentrations for Contaminants of Potential Concern for the 600 Area

Groundwater Contaminants	All Groundwater Wells	Near-River Groundwater Wells	600 Area Springs	600 Area Columbia River	MCL (pCi/L or mg/L)
Radionuclides (pCi/L)					
Tritium	11,000	(a)	NS	NS	20,000[a,b]
Inorganics (mg/L)					
Arsenic	0.012	(a)	NS	NS	0.05[a]
Chromium	0.17	(a)	NS	NS	0.05[b]

[a] 40 CFR 141 (Primary MCL)
[b] WAC 173-200-040 (Primary MCL)

Table 2-4. Human Health Risk Assessment Summary for the 100-D/DR Area

Contaminant Type	Frequent-Use Scenario[b]		Occasional-Use Scenario[c]	
	Refined COPC	Incremental Cancer Risk or Hazard Quotient[a]	Refined COPC	Incremental Cancer Risk or Hazard Quotient[a]
Radioactive	Tritium Strontium-90 Total ICR for all radioactive contaminants	9E-05 3E-05 1E-04	Tritium Total ICR for all radioactive contaminants	2E-06 3E-06
Nonradioactive. Carcinogenic	None of the Nonradioactive Carcinogenic Chemicals exceeded an ICR of 1E-06		None of the Nonradioactive Carcinogenic Chemicals exceeded an ICR of 1E-06	
Nonradioactive, Noncarcinogenic	Ammonia[e] Chromium Manganese Nitrate Hazard Index	30 3 2 1 37	None of the Inorganic or Organic Chemicals exceeded a Hazard Quotient of 1.0	

a Based on maximum contaminant concentrations in groundwater.
b Frequent-use scenario is based on residential exposure parameters (DOE-RL 1995).
c Occasional-use scenario is based on recreational exposure parameters (DOE-RL 1995).
d The inhalation pathway is evaluated for volatile nonradioactive contaminants only.
e Ammonia is evaluated in the ingestion and inhalation pathways. All other contaminants are evaluated in the ingestion pathway only. Also, the laboratory analysis and reporting for ammonia may not be the same as the use in the reference dose for ammonia; associated risks may be over-estimated.

Table 2-5. Human Health Risk Assessment Summary for the 100-H Area

Contaminant Type	Frequent-Use Scenario[b]		Occasional-Use Scenario[c]	
	Key Contaminants	Incremental Cancer Risk or Hazard Quotient[a]	Key Contaminants	Incremental Cancer Risk or Hazard Quotient[a]
Radioactive	Tritium Carbon-14 Strontium-90 Technetium-99 Uranium-233/234 Uranium 238 Americium-241 Total ICR for all radioactive contaminants	1E-05 1E-06 3E-05 6E-05 9E-06 1E-06 1E-06 1E-04	Technetium-99 Total ICR for all radioactive contaminants	1E-06 2E-06
Nonradioactive, Carcinogenic	Chloroform[d]	1E-05	None of the Nonradioactive Carcinogenic Chemicals exceeded an ICR of 1E-06	
Nonradioactive, Noncarcinogenic	Ammonia[e] Chromium Fluoride Manganese Nitrate Hazard Index	1 6 1 2 7 17	None of the Inorganic or Organic Chemicals exceeded a Hazard Quotient of 1.0	

a Based on maximum contaminant concentrations in groundwater.
b Frequent-use scenario is based on residential exposure parameters (DOE-RL 1995).
c Occasional-use scenario is based on recreational exposure parameters (DOE-RL 1995).
d This compound is a common laboratory contaminant, therefore the concentrations identified for this compound may not be representative of groundwater in the 100 H area, and the associated risks may be over-estimated.
e Ammonia is evaluated in the ingestion and inhalation pathways. All other contaminants are evaluated in the ingestion pathway only. Also, the laboratory analysis and reporting for ammonia may not be the same as the use in the reference dose for ammonia; associated risks may be over-estimated.

Table 2.6. Human Health Risk Assessment Summary for the 600 Area

Contaminant Type	Frequent-Use Scenario[b]		Occasional-Use Scenario[c]	
	Key Contaminants	Incremental Cancer Risk or Hazard Quotient[a]	Key Contaminants	Incremental Cancer Risk or Hazard Quotient[a]
Radioactive	Tritium	1E-05	None of the Radioactive Chemicals exceeded an ICR of 1E-06	
	Total ICR for all radioactive contaminants	1E-05		
Nonradioactive, Carcinogenic	Arsenic[d]	2E-04	Arsenic[e]	5E-06
	Total ICR for all radioactive contaminants	2E-04	Total ICR for all radioactive contaminants	5E-06
Nonradioactive, Noncarcinogenic	Arsenic	2	None of the Inorganic or Organic Chemicals exceeded a Hazard Quotient of 1.0	
	Chromium	2		
	Hazard Index	5		

a Based on maximum contaminant concentrations in groundwater.
b Frequent-use scenario is based on residential exposure parameters.
c Occasional-use scenario is based on recreational exposure parameters.
d The ICR for arsenic includes background contribution. The ICR for arsenic subtracting background contribution is 3E-05.
e The ICR for arsenic includes background contribution. The ICR for arsenic subtracting background contribution is 6E-07.

Table 2-7. Ecological Risk Assessment Summary for Radionuclides.

Radionuclides	Near-River Wells	
	Dose >EHQ	
	100-D/DR	100-H
Americium-241	Not Detected	NO
Carbon-14	Not Detected	NO
Strontium-90	NO	NO
Technetium-99	Not Detected	NO
Tritium	NO	NO
Uranium-233/234	NO	NO
Uranium-235	Not Detected	NO
Uranium-238	NO	NO
Total Dose	NO	NO

Table 2-8. Ecological Risk Assessment for Nonradionuclides.

Chemical	Near-River Wells	
	100-D/DR	100-H
Bis(2-ethylhexyl) phthalate	Above Chronic LOEL-Yes	Not Detected
Barium	Above Background - No Value for LOEL	Above Background - No Value for LOEL
Chromium	Above Acute and Chronic LOEL - Yes	Above Acute and Chronic LOEL - Yes
Fluoride	Below Background	No LOEL
Iron	Below Background	Above Acute LOEL
Nitrate as N	No Value for LOEL	No Value for LOEL
Manganese	No Value for LOEL	Below Background
Sulfide	Above Chronic LOEL - Yes	Above Chronic LOEL-Yes
Vanadium	No Value for LOEL	Below Background
Note: All other concentrations were below the Acute and Chronic LOEL or below background levels.		

THIS PAGE INTENTIONALLY
LEFT BLANK

3.0 REMEDIAL ACTION OBJECTIVES

~~Remedial action objectives (RAO) are medium-specific or operable unit-specific objectives for protecting human health and the environment. The RAOs are based on the land use, COC, ARAR, and exposure pathways. They specify remediation goals so that an appropriate range of remedial options can be developed for analysis. This section presents the steps taken in refining the initial RAOs (defined in the 100 Area FS [DOE-RL 1994a]) based on a more thorough evaluation of the 100 Area groundwater operable unit data from the LFI reports.~~

~~The RAO refinement process begins with the refinement of COPC for the groundwater operable unit. This information is used to ensure that remedial alternatives being considered in this FFS can adequately address the types of contaminants and to facilitate the refinement of ARAR. The RAOs also provide the basis for developing the GRA that will satisfy the objectives of protecting human health and the environment. The RAOs are defined as specifically as possible without limiting the range of GRA that can be applied.~~

~~The RAOs for protecting human receptors express both a contaminant level and an exposure route. Remedial action objectives for protecting the environment are expressed in terms of the medium of interest and target clean-up levels, because the intent of the remedial action is to preserve or restore the medium of interest.~~

~~Remedial action objectives are based on CERCLA guidance (EPA 1988). The following are assumptions used to develop RAOs for the 100 HR-3 Operable Unit.~~

- ~~The main objectives are the protection of the river and the abatement of migration of contaminated groundwater plumes outside the operable unit.~~
- ~~The recreational exposure scenario is assumed.~~
- ~~The IRM will continue to the year 2008, at which time the final action for the operable unit will be implemented, or until cleanup goals are met. (This assumption is for costing purposes and does not represent the final cleanup period.)~~
- ~~Based on the QRA for the occasional use scenario, all identified COPC were within acceptable risk ranges (i.e., incremental cancer risk of 1×10^{-4} to 1×10^{-6} or a hazard quotient [HQ] < 1).~~

~~The RAOs for environmental protection are as follows.~~

- ~~Control groundwater movement to prevent the release of COC from groundwater to surface water that would result in concentrations in the river exceeding Ambient Water Quality Criteria~~

- ~~Prevent destruction of critical habitat, minimize destruction of noncritical habitat, and prevent adverse impacts to threatened or endangered species.~~

- ~~Prevent erosion of soil during remediation that would contribute to surface water concentrations greater than Ambient Water Quality Criteria for the COC in surface water.~~

~~Discussion supporting the RAO is given in the subsections below.~~

~~3.1 LAND USE~~

~~Although the QRA uses frequent- and occasional-use scenarios (corresponding to residential and recreational uses, respectively), there are no residential or recreational land uses in the 100 Area at this time. The Hanford Future Site Uses Working Group (HFSUWG 1992) recommended that the 100 Area be considered for the following four potential future land uses:~~

- ~~Native American uses~~

- ~~Limited recreation, recreation related commercial uses, and wildlife~~

- ~~B Reactor as a museum/visitor center~~

- ~~Wildlife and recreation.~~

~~None of the group's recommendations included potential future residential use by definition; however, the scenarios include a range of restricted and unrestricted uses. The DOE currently limits the access to the 100 Area; this access restriction is assumed to continue during the IRM period. Therefore, for purposes of the FFS and given the relative timeframe of the IRM, the recreational scenario will be used to determine remedial action goals for the IRM. As defined in the past practice strategy, the 100 Area will be reevaluated in the future (by methods including a comprehensive baseline risk assessment) for removal from the NPL. Land use will be revisited at that time.~~

~~3.2 CONTAMINANTS OF CONCERN~~

~~This section refers to two groups of contaminants: COPCs and COCs. The first group, COPCs, was initially identified in the LFI (DOE-RL 1994c) as contaminants with the potential of having an adverse impact on human health or the~~

~~environment. The second group consists of the COCs, which are refined from the list of COPCs. In the context of FFS, COCs are those constituents that must be addressed by remedial actions. CERCLA requires that actions selected to remediate hazardous waste sites be protective of human health and the environment. In order to support this requirement, COPCs identified in the LFI are refined to COCs for the FFS.~~

~~The COPCs were determined in the LFI for both human and ecological receptors based on the QRA and additional analysis of the data. For the occasional use scenario (corresponding to recreational use), no human health COPCs were identified in the QRA. It should be noted that the ecological COPCs were identified in the near river wells. This resulted in a very conservative COPC list, because the risks associated with the actual river/groundwater interface has not been determined or no allowance has been made for mixing and dilution of the contaminant concentrations by the river. The quantification of risk at this interface would aid in understanding the real threats to the environment so that they could be more properly addressed.~~

~~The COPCs were identified in the QRA as follows:~~

- ~~100-H Area - Ecological: chromium, iron, and sulfide~~
- ~~100-D/DR Area - Ecological: bis(2-ethylhexyl) phthalate, chromium, and sulfide~~
- ~~600 Area - Human health: arsenic.~~

~~As part of the FFS, the COPCs are further evaluated to ensure that remediation addresses the major contaminants. Based on this analysis, sulfides, bis(2-ethylhexyl) phthalate, iron, and arsenic are not included as contaminants of concern (COCs) in this FFS for the following reasons.~~

- ~~Arsenic - No Hanford Site related uses of arsenic are known. The 600 Area portion of 100-HR-3 Operable Unit was used extensively for agricultural purposes prior to Hanford Site operations, and arsenic may have been used as a pesticide/herbicide. The ICR for arsenic, as determined in the QRA, included the background contribution. The ICR for arsenic is 6E-07 when background contributions are subtracted. This risk is well within the acceptable 10^{-4} risk level.~~
- ~~Bis(2-ethylhexyl) phthalate - The data for this constituent are not consistent. The hits were qualified with "B" (blank contamination) and "J" qualifiers (estimated values at the detection limit). The erratic values of the constituent are not a reflection of aquifer conditions, but are more likely a result of laboratory contamination.~~

- ~~Iron - Only three samples taken in 1993 and 1994 had concentrations above the chronic Ambient Water Quality Criteria of 1,000 μg/L. All three samples were taken from wells completed with carbon steel casing. One sample was collected from well H4-4 in January 1993; its concentration was measured to be 18,000 μg/L. The next highest concentration in a sample from that well was 1,600 μg/L, measured in September 1993. The most recent concentration measured in a sample from that well was 180 μg/L, measured in June 1994. Twenty seven iron samples were collected from well H4-4 during this time period. A sample collected in April 1993 from well H4-5 had a concentration of 1,700 μg/L for iron. The next highest concentration in a sample from that well was 530 μg/L, measured in January 1993. The most recent concentration measured in a sample from that well was 380 μg/L, measured in a sample collected in April 1994. Ten samples were collected from well H4-5 in this time frame.~~

- ~~Sulfides - Sulfides were not detected (<1 mg/L) in most of the samples reported in the Hanford Environmental Information System (HEIS). Of 107 samples analyzed for sulfides in the 100-H Area, 5 samples were below 1 mg/L and 1 sample was above 1 mg/L (this sample, at 26 mg/L, was determined to be inconsistent and eliminated from consideration in the LFI). The remainder of the samples had concentrations of 1 mg/L, 74 of which were qualified with nondetect qualifiers. The data show only random detects at the detection limit. Therefore, sulfides will be excluded from the FFS until additional data are available showing them to be truly present.~~

~~3.3 APPLICABLE OR RELEVANT AND APPROPRIATE REQUIREMENTS~~

~~Section 121 of CERCLA requires that any remedial action selected for a Superfund site be protective of human health and the environment. A component of an action's protectiveness is its ability to comply with ARAR. An ARAR is a promulgated Federal or state environmental cleanup standard, standard of control, substantive environmental protection requirement, criteria, or limitation. It must be one of the following:~~

- ~~"Applicable" (i.e., specifically addressing the substances, location, or action being considered)~~

- ~~"Relevant and appropriate" (i.e., addressing a situation sufficiently similar to one encountered at the CERCLA site that its use is well suited to the particular site). A standard or criterion must be both relevant and appropriate to be an ARAR.~~

~~There are three categories of ARARs, as follows:~~

- ~~Chemical-specific ARAR – numerical values or methodologies used to determine acceptable concentrations of a contaminant~~

- ~~Location-specific ARAR – requirements that dictate or restrict actions at or surrounding the CERCLA site because of sensitive or unique conditions~~

- ~~Action-specific ARAR – technology or activity-based requirements or limitations on actions taken with respect to hazardous waste.~~

~~In addition to ARARs, to be considered (TBC) guidance consists of nonpromulgated criteria, advisories, guidelines, or proposed regulations. Since TBC guidance is not legally binding, it does not have the status of ARARs; however, TBCs are identified and considered if ARAR do not exist for the substances or situations of concern, or if an ARAR alone would not be sufficiently protective.~~

~~The ARARs and TBCs used in the analysis of alternatives for the groundwater operable unit FFS are identified in Appendix A. Table 3-1 lists the chemical-specific ARARs and TBCs for the COPCs for the operable unit.~~

~~The implementation and operation of the remedial alternatives may result in the generation of low-level or mixed waste. The proposed disposal for these wastes would utilize the Environmental Restoration Disposal Facility (ERDF). If ERDF is unavailable to meet the required schedule, then existing facilities (such as W-025) would be used until the ERDF is available. The ARARs and TBCs for the ERDF are not included in the ARAR tables for the FFS. They are instead addressed in the *Remedial Investigation and Feasibility Study Report for the Environmental Restoration Disposal Facility* (DOE-RL 1994d). Waste acceptance criteria have not yet been developed for ERDF.~~

~~3.4 PRELIMINARY REMEDIATION GOALS AND POINTS OF COMPLIANCE~~

~~Because protection of the river is the goal of the FFS and because the greatest perceived threat is to the eggs and fry of the fish, the point of compliance should be at the groundwater/river interface. However, monitoring of this interface is difficult. Therefore, the proposed point of compliance consists of the near-river wells, as defined in the QRA. The preliminary remediation goal (PRG) for this compliance point would be 50 μg/L, measured in two consecutive sampling rounds, as established in the Tri-Party Agreement Change Control Form M-15-93-02 (Ecology et al. 1994). Chromium concentrations below the chronic Ambient Water Quality Criterion of 11 μg/L, as measured in the substrate, are considered alternate PRGs. These PRGs represent screening criteria for the FFS. Final remediation goals will be set in the ROD.~~

3.1 DEVELOPMENT OF REMEDIAL ACTION OBJECTIVES

Remedial action objectives are based on CERCLA guidance (EPA 1988), and are general descriptions of the objectives the remedial action is expected to accomplish. The remedial action objectives provide a basis to evaluate the ability of a specific remedial alternative or interim remedial measure (IRM) to achieve compliance with ARARs or an intended level of risk to human or ecological receptors. Remedial action objectives, therefore, are developed before evaluating remedial alternatives or IRMs. The remedial action objectives are defined as specifically as possible, without limiting the range of IRMs that could be applied, and address the following:

- The media of interest (groundwater)
- The types of contaminants at the site (radionuclides, inorganic chemicals, and organic chemicals)
- The potential receptors (humans and ecological receptors)
- The possible exposure pathways
- The levels of contaminants acceptable after remediation

Remedial action objectives were initially developed in the 100 Area Feasibility Study Phases 1 and 2 report (DOE-FL 1993a) for soils, solid wastes, groundwater, and riverbank sediments. Because this Groundwater FFS addresses actions primarily to remediate groundwater (in order to protect riverbank sediments and surface water in the Columbia River), the initial remedial action objectives for groundwater and surface water as presented in Table 4-2 in the Feasibility Study Phases 1 and 2 report (DOE-RL 1993a), serve as a starting point for this Groundwater FFS. These initial remedial action objectives have been refined below in light of the additional information that has become available since the Phases 1 and 2 Report was completed.

Once the remedial action objectives have been established, they can be numerically expressed as preliminary remediation goals. For this FFS, the preliminary remediation goals are chemical and radionuclide concentrations in groundwater and surface water that protect human health and the environment. These preliminary remediation goals consider exposure pathways, the locations where the receptors come in contact with the contaminants of concern, and the mechanisms whereby the receptors take up the contaminants (e.g., ingestion or exposure to ionizing radiation). The numeric remediation goals developed in this Groundwater FFS are preliminary and serve as a basis to define the extent of contamination, to compare interim remedial measure alternatives, and to establish a set of goals for monitoring the progress of the interim remedial measure that will be implemented. The final remediation goals will be defined when final land use and appropriate exposure scenarios are defined.

The assumptions used to develop the remedial action objectives for the 100-HR-3 Operable Unit are as follows:

- The main objective of the interim remedial action at the 100-HR-3 Operable Unit is protection of ecological receptors in the Columbia River and abatement of migration of contaminated groundwater to areas outside the Operable Unit.

- To estimate human health risks, an occasional use exposure scenario was considered most appropriate for the interim remedial measure period. Other exposure scenarios, including frequent use, will be addressed in additional IRMs or selection of the final remedy.

- The results of the Qualitative Risk Assessment (WHC 1993d) for human health, using the occasional use scenario, indicated that none of the potential contaminants at the 100-HR-3 Operable Unit exceeded an Incremental Cancer Risk of 1E-04 or a Hazard Quotient of 1.0. The QRA for ecological receptors, however, indicated that some contaminants exceeded an Environmental Hazard Quotient of 1.0. Therefore, the contaminants at this Operable Unit are a concern because of their potential ecological risks, not because of their potential human health risk.

- The IRM will continue for several years, during which time the final action for the Operable Unit will be evaluated, selected, and implemented. As long as wastes remain within the Operable Unit, the CERCLA requires a review of the interim or final remedial action at 5 year intervals. ~~For estimating costs to compare the alternatives, the operation and maintenance costs are based on a 5 year period.~~

The remedial action objectives of the 100-HR-3 Operable Unit are:

- Control groundwater movement to prevent the release of contaminants into surface waters that would result in concentrations in the Columbia River in excess of EPA's Ambient Water Quality Criteria (EPA 1986).

- Control groundwater movement to preclude the release of radionuclides in the Columbia River that would result in a dose to an ecological receptor that would exceed 1 rad per day.

- Prevent erosion of soil during remediation that would contribute to surface water concentrations exceeding AWQC.

- Prevent destruction of sensitive wildlife habitat, minimize the destruction or disruption of wildlife habitat in general, and prevent adverse impacts to threatened or endangered species.

3.2 LAND USE

Hanford Site Land Use. The Hanford Site encompasses 1,450 square kilometers (560 square miles) and includes several DOE operational areas. The major areas are:

- The entire Hanford Site has been designated a National Environmental Research Park.

- The 100 Area, bordering the south shore of the Columbia River, is the site of the nine retired plutonium production reactors. The 100 Area encompasses about 68 square km (26 square mi).

- The 200 West and 200 East Areas are located on a plateau about 8 and 11 km (5 and 7 mi), respectively, from the Columbia River (Figure 1-1). These areas have been dedicated to waste management and disposal activities. The 200 Areas cover about 16 square km (6.2 square mi).

- The 300 Area, located just north of the City of Richland, is the site of nuclear research and development. This are encompasses 1.5 square km (0.6 square mi).

- The 400 Area is about 8 km (5 mi) north of the 300 Area and is the site of the Fast Flux Facility formerly used in the testing of breeder reactor systems. Also included in this area is the Fuels and Material Examination Facility.

- The 1100 Area includes the 3000 Area and Horn Rapids Landfill. It is used for Hanford Site support services.

- The 600 Area includes all of the Hanford Site not occupied by the 100, 200, 300, 400, or 1100 Areas. Land uses within the 600 Area include the Fitzner-Eberhardt Arid Land Ecology Reserve, a U. S. Fish and Wildlife Service wildlife refuge, support facilities for controlled access areas, and other lands leased to the State of Washington and the Washington Public Power Supply System (Cushing 1994).

100 Area Land Use. Existing land use in the 100 Area includes land with support facilities, land for waste management, and undeveloped land. Facilities support activities include operations such as water treatment, storage of nuclear fuels, and maintenance of the reactor buildings. The waste management use results from past-practice waste sites such as the contaminated soil and solid waste sites. There are undeveloped lands located throughout the 100 Area. These undeveloped lands are the least disturbed areas, contain very few structures, but do include roads and other infrastructure. The immediate shoreline of the Columbia River is largely undeveloped and is a valued ecological area.

The Hanford Future Site Uses Working Group (DOE-RL 1992a) has recommended that the 100 Area be considered for the following four future use options:

- Native American uses
- Limited recreation, recreation-related commercial use, and wildlife use
- B Reactor as a museum and visitor center
- Wildlife and recreation.

Furthermore, the Final River Conservation Study (National Park Service 1994) and Environmental Impact Statement for the Hanford Reach of the Columbia River (National Park Service 1993) has proposed that the Hanford Reach of the Columbia River and approximately 102,000 acres of adjacent lands be designated as a National Wild and Scenic River and a National Wildlife Refuge, respectively.

None of the Working Group's recommendations included potential future residential use by definition; however, the scenarios include a range of restricted and unrestricted uses. The DOE currently limits the access to the 100 Area, and this access restriction is assumed to continue during the IRM period. Therefore, for purposes of this FFS, and given the relative timeframe of the IRM, an occasional-use scenario has been used to determine remedial action goals for the IRM. As defined in the Hanford Past-Practice Strategy, the 100 Area will be reevaluated in the future for removal from the National Priority List. Land use will be reevaluated at that time, including a comprehensive baseline risk assessment.

3.3 RECEPTORS AND EXPOSURE PATHWAYS

Because remedial action objectives can be met by reducing contaminant concentrations at the site and/or by reducing or eliminating exposure to those contaminants; the receptors, exposure pathways, points of contact, and uptake mechanisms must all be considered during development of remedial action objectives. This section describes the receptors and exposure pathways considered in the development of remedial action objectives and the assessment of risks for the groundwater Operable Unit.

Human Health Risks. The HPPS promotes the use of interim remedial measures to expedite the reduction of human health or environmental risks, if those risks exceed certain benchmark values and the proposed IRMs are consistent with the possible final action at the Operable Unit. At the 100 Area Operable Units, DOE will retain control of the land during the time that the IRMs are implemented and operated. Therefore, land use controls, similar to existing conditions, are expected to continue throughout the IRM period. These land use restrictions preclude residential use of the land in the 100 Areas, and limit public access to the 100 Areas.

The Hanford Reach of the Columbia River, adjacent to the 100 Areas, is open to the public for recreational uses such as fishing and water skiing, but use of the land along the river is restricted. Since there are springs and seeps along the river shoreline

where groundwater surfaces and flows into the Columbia River, there is the potential for humans to occasionally come in contact with contaminated groundwater. However, during the time that the IRMs are conducted in the 100 Areas, frequent-use exposure scenarios like the residential scenario described in the HSRAM (DOE-RL 1995) are not appropriate for assessing potential risks to humans, or for comparing the relative risk of the possible interim remedial measures. The occasional-use scenario, based on the recreational-use scenario described in the HSRAM is appropriate for the IRM time period, and is used in this FFS to determine if risks at the 100-HR-3 Operable Unit exceed levels that would require the use of an IRM. The occasional-use scenario also provides appropriate human health risk estimates for comparing the relative risks of the remedial alternatives considered for interim action.

For the purposes of establishing the preliminary remediation goals, the human receptors are assumed to be limited to individuals that will visit the site for recreational or other occasional-use purposes. Site workers who would work in the area to conduct the remediation are not considered as receptors for purposes of developing preliminary remediation goals because the preliminary remediation goals define site conditions after remediation is completed. Short-term risks to workers who will be involved in the remedial actions are addresses in Section 5.?.? in this Groundwater FFS.

Ecological Risks. The Hanford Reach of the Columbia River, including the land adjacent to the river, is a valuable ecological resource largely because the natural habitats have been preserved as a result of the establishment of the Hanford Nuclear Reservation. Ecological receptors in the area, with respect to contaminated groundwater, include fish and aquatic macroinvertebates living in the river; muskrats, waterfowl, and shorebirds that use the river and adjacent marsh areas; and predators such as herons and mergansers that eat fish. These receptors may come in contact with contaminants in groundwater as the groundwater flows into and mixes with the surface water in the river, or as groundwater surfaces through springs and seeps and then flows into the river. The contaminants are also transferred through the food web. One critical point of contact is the river sediments because the concentrations of contaminants are expected to be higher in the sediment pore-water than in the open water column in the river. Chinook salmon spawn in the river sediments along the Hanford Reach and the eggs are deposited in redds (nests) dug several inches into the sediments. Furthermore, the salmon eggs and young alevin are generally more sensitive to radionuclides and inorganic contaminants than the adult salmon. Aquatic macroinvertebrates living in the river sediments are also important receptors to consider because they form the food base for many species of aquatic and semiaquatic organisms.

Summary. Based on the above human and ecological conceptual exposure models, the occasional-use exposure scenario is used to assess potential human health risks associated with groundwater contamination at the 100-HR-3 Operable Unit, and the exposure of aquatic and semi-aquatic species that live in and adjacent to the Columbia River is used to assess potential ecological risks.

3.4 CONTAMINANTS OF POTENTIAL CONCERN

The contaminants of potential concern for the 100-HR-3 groundwater operable unit were defined in the LFI and QRA (DOE-RL 1993b and WHC 1993d). These contaminants of potential concern are specifically those contaminants in groundwater that were identified by the QRA as exceeding one or both of the following criteria:

- o Exceedance of Hanford Site Background (95% upper tolerance limit for inorganic constituents).

- o Exceedance of preliminary human health risk-based screening values based on a 1E-07 incremental cancer risk and a noncancer hazard quotient of 0.1 (developed using a frequent use exposure scenario).

To identify the contaminants of potential concern for ecological receptors, the constituents were screened only against background concentrations. No risk-based screening was used because there are numerous species of ecological receptors, and there are no standard EPA recognized risk-based levels for animals for all the potential radionuclide and chemical contaminants within the operable unit.

Since CERCLA requires that actions selected to remediate hazardous waste sites be protective of human health and the environment, the contaminants of potential concern identified in the QRA were further evaluated to see which of these would pose a risk to human and animal receptors, based on the exposure scenarios discussed in section 3.3.

Based on the occasional-use exposure for humans, none of the contaminants of potential concern exceeded an incremental cancer risk of 1E-04 or a hazard quotient of 1.0. Interim remedial measures, therefore, are not required on the basis of human health risks.

The ecological contaminants of concern for the 100-HR-3 Operable Unit, identified by comparing the maximum concentrations of the contaminants of potential concern to DOE's radiological exposure limit of 1 rad/day or EPA's Ambient Water Quality Criteria for the protection of aquatic organisms, are:

- o For the 100-H Area: chromium, iron, and sulfides
- o For the 100-D/DR Area: chromium, sulfides, and bis(2-ethylhexyl) phthalate
- o For the 600 Area: no ecological contaminants of concern

As part of the FFS, the contaminants of concern identified in the QRA are further evaluated to ensure that the data and site information support the selection of site contaminants of concern. Based on this additional analysis, iron, sulfides, and bis (2-ethylhexyl) phthalate were deleted from the list of contaminants of potential

concern developed in the QRA (WHC 1993d). The rationale for deleting these three ~~are~~ as follows:

o Iron: Only three groundwater well samples taken in 1993 and 1994 had concentrations above the chronic AWQC of 1,000 ug/L. All three of those samples were taken from wells completed with carbon steel casings. Two of the samples exceeding the AWQC were from well H4-4; a January 1993 sample at 18,000 ug/L and a September 1993 sample at 1,600 ug/L. During the January 1993 through June 1994 period 27 samples were analyzed for iron and only those two exceeded 1,000 ug/L. A more recent sample in June 1994 from this well had a concentration of 180 ug/L. A sample collected in April 1993 from well H4-5 had an iron concentration of 1,700 ug/L. Ten samples were collected from this well during the January 1993 through June 1994 period, and only this sample exceeded the AWQC; the next highest concentration detected from this well was 530 ug/L, and a more recent sample had a concentration of 380 ug/L.

o Bis(2-ethylhexyl) phthalate: The data for this constituent were not consistent, and bis(2-ethylhexyl) phthalate is a common laboratory contaminant. The data from several samples were qualified because of contamination in blanks (B qualifier) or were considered estimated values at the detection limit (J qualifier). The erratic values for this constituent were considered to be a result of laboratory contamination rather than a reflection of aquifer conditions.

o Sulfides: The sulfide concentrations in most of the groundwater samples were at or below the 1 mg/L level of detection. One sample had a concentration of 26 mg/L, but was determined to be inconsistent with the remaining samples and eliminated from the data set in the LFI. Of 107 samples analyzed for sulfides, 74 were qualified with nondetect qualifiers. Since the concentrations in nonqualified samples were at or below the level of detection, sulfides will not be considered as contaminants of concern in this FFS. Additional data will be collected and evaluated and this decision will be reevaluated in the future.

As a result of htis final analysis, chromium is the contaminant of concern for ecological risks for the 100-HR-3 Operable Unit.

Data from groundwater wells in the undeveloped 600 Area between the 100-D/DR and 100-H Areas indicated that arsenic concentrations in some groundwater samples exceeded incremental cancer risk levels of 1E-06 for humans, based on an occasional-use scenario. However, if the normal background levels of arsenic are subtracted from the total concentrations, the ICR for arsenic is 6E-07. This is well below the range EPA uses for considering remediation. Arsenic was not considered to be a contaminant of potential concern for human health for the 100-HR-3 Operable Unit because 1) arsenic was apparently not used during the operation of the reactors in the 100 Area (based on records and interviews), 2) arsenic was likely used as a pesticide or herbicide for agricultural purposes in the 600 Area prior to Hanford Site operations, and 3) the presence of natural arsenic contributes to the concentrations measured in groundwater samples.

3.5 POTENTIAL APPLICABLE OR RELEVANT AND APPROPRIATE REQUIREMENTS

Section 121 of CERCLA requires that any remedial action selected for a Superfund site be protective of human health and the environment. A component of an action's protectiveness is its ability to comply with ARARs. An ARAR is a promulgated Federal or State environmental cleanup standard, standard of control, substantive environmental protection requirement, criteria, or limitation. It must be either:

- o "Applicable" (i.e., specifically addressing the substances, locations, or action being considered), or

- o "Relevant and Appropriate" (i.e., addressing a situation sufficiently similar to that encountered at the CERCLA site that its use is well suited to the particular site). A standard or criterion must be both relevant and appropriate to be an ARAR.

There are three categories of ARARs:

1) Chemical-specific - numerical values or methodologies used to determine acceptable concentrations or doses of a contaminant

2) Location-specific - requirements that dictate or restrict actions at or surrounding the CERCLA site because of sensitive or unique conditions

3) Action-specific - technology- or activity-based requirements or limitations on actions taken with respect to hazardous wastes.

In addition to ARARS, to be considered (TBC) guidance consists of nonpromulgated criteria, advisories, guidelines, or proposed regulations. Since TBC guidance is not legally binding, it does not have the status of ARARS. However, TBCs are identified and considered if ARARs do not exist for the substance or situations of concern , or the ARAR alone would not be sufficiently protective.

Appendix A discusses the major ARARs, and lists the ARARs and TBC requirements that have been identified for the 100-HR-3 Operable Unit. Table 3-1 lists the chemical-specific ARARs and TBCs for the contaminants of potential concern for this Operable Unit.

3.6 INTERIM REMEDIAL MEASURE GOAL AND POINTS OF COMPLIANCE

The interim remediation measure (IRM) goal for the 100-HR-3 Operable Unit is to conduct activities that are protective of the Columbia River and its sensitive

ecological receptors. This may include activities that will contain chromium plumes in their present locations; retard the movement of plumes toward the river; and reduce the amount of chromium in groundwater that is entering the river. Alternatives for an IRM are targeted to accomplish one or more of the above.

Performance of the preferred alternative may be measured at the location of exposure for sensitive ecological receptors in the river, and/or inferred from other techniques for estimating the exposure at receptor locations. For the pilot-scale chromium treatability test being conducted in the 100-D/DR reactor area, the Tri-Parties agreed to using six criteria for evaluating the success of future full-scale operation of the system (TPA Milestone M-15-06, Change Number M-15-93-02, January 25, 1994). These six criteria are:

1) Hexavalent chromium measured in wells near the Columbia River fall below the MTCA standard (50 ug/L) for two consecutive sampling periods.

2) Sampling of water occurring in the river bottom substrate environment, where springs are suspected to discharge contaminated groundwater, in concentrations representative of the plume, indicates that hexavalent chromium in this environment is below and will remain below the chronic ambient water quality criterion for the protection of freshwater aquatic life for hexavalent chromium (11 ug/L) set by the EPA.

3) Groundwater/Columbia River interaction studies, numerical models, or physical models indicate that predicted levels of hexavalent chromium within the riverbed substrate environment, where contaminated groundwater is suspected to discharge, in concentrations representative of the plume, are below the chronic ambient water quality criterion for the protection of freshwater aquatic life for hexavalent chromium (11 ug/L) set by the EPA.

4) Biological surveys, such as aerial photographic records, of Columbia River sections where contaminated groundwater discharges may be reasonably expected to occur, indicate that contemporary salmonid redd distributions are at concentrations and locations expected if hexavalent chromium were not an influence.

5) The effectiveness (including cost/unit of hexavalent chromium removed) of the treatment technology does not justify further operation.

6) An alternative treatment technique, such as chemical reduction of the hexavalent chromium to a less toxic valence, that is more effective or is less costly, is substituted.

These six criteria should be considered when performance goals for the IRM are established in the record of decision.

Performance goals for the IRM include reducing the concentration of chromium at locations in the Columbia River where sensitive ecological receptors may be exposed. The target concentration is the EPA Ambient Water Quality Criteria for Protection of Freshwater Aquatic Life, which for chromium is 11 ug/L, as measured at the location of exposure. The criterion applies to the riverbed sediments that are used by chinook salmon for spawning habitat.

During the IRM, the concentration of chromium in groundwater will be monitored in the extraction well network, along the river shoreline, and within the salmon spawning habitat in the vicinity of chromium plumes. Since sampling the spawning habitat is logistically very difficult, an alternative performance monitoring methodology will be developed that is based on samples from locations along the shoreline and from existing near-river monitoring wells. Evaluation of the new monitoring data may reveal an acceptable alternative to monitoring at the location of exposure in the riverbed sediments.

A preliminary remediation goal (PRG) at the location of exposure (e.g., salmon spawning habitat in the riverbed sediments) is 11 ug/L hexavalent chromium, as established by the EPA criteria. PRGs for other sampling locations along the shoreline and in near-river wells will be refined as new information from pre-remedial design activities are completed.

Table 3-1. Chemical-Specific ARARs and TBCs.

Constituent	Safe Drinking Water Act				RCRA Subpart F (e)	MTAC (groundwater/ surface water) (f)	EPA Water Quality Criteria (chronic/acute) (g)	Washington Water Quality Standards (chronic/acute) (h)
	Primary MCL (a)	MCLG (b)	Secondary MCL (c)	Proposed MCL (d)				
Tritium	20,000	--	--	60,900	--	--	--	--
Technetium-99	2,400	--	--	3,790	--	--	--	--
Chromium	100	100	--	--	50	80/810	11/16	11/16
Iron	--	--	300	--	--	1000	--	--
Bis(2 ethylhexyl) phthalate	6	0	--	--	--	6.25/6.56	360/400(i)	--
Arsenic	50	--	--	--	50	0.05/0.084	190/360(j)	--
Sulfide	--	--	--	--	--	--	--	--

NOTE: All units for radionuclides in pCi/L; all other units in μg/L
(a) 40 CFR 141.16 (radionuclides), 40 CFR 141.16 (organics), 40 CFR 141.62 (inorganics), as amended at 56 FR 31838 July 17, 1992
(b) 40 CFR 141.50 and 51 as amended at 56 FR 31838 July 17, 1992
(c) 40 CFR 143.3 as amended at 56 FR 3597 January 30, 1991 - TBC under federal regulations, possible ARAR under MTCA
(d) 56 FR 33120 July 18, 1991 - Proposed rules - TBC
(e) 40 CFR 264.94
(f) WAC 173-340-720, Model Toxics Control Act, Groundwater Cleanup Standards, Method B and WAC 173-340-730 Surface Water Cleanup Standards, Method B
(g) EPA's "Quality Criteria for Water 1986" and EPA's "Upgrade #2 to Quality Criteria for Water 1986" - TBCs for surface waters only
(h) WAC 173-201-047, Toxic Substances - applies to surface waters only
(i) Proposed
(j) For the trivalent form

4.0 ALTERNATIVES DEVELOPMENT

The alternatives considered for treatment of the 100 Area groundwater operable units were developed and screened in the *100 Area Feasibility Study Phases 1 and 2* (DOE-RL 1994a). These alternatives (referred to as the baseline alternatives) provide a range of remedial actions applicable to the 100 Area groundwater operable units. The baseline alternatives are intended to be generally applicable anywhere in the 100 Area. In this FFS, the baseline alternatives are further defined and modified based on additional information from the 100-HR-3 Operable Unit LFI (DOE-RL 1993b), 100 Area aggregate studies, treatability testing, and refined RAOs.

This section of the FFS presents detailed descriptions of each groundwater alternative retained from the 100 Area FS for more detailed analysis. Descriptions for the baseline alternatives are expanded from the information presented in the 100 Area FS and are modified as needed to reflect new information gathered since the preparation of the FS. The baseline descriptions are then refined to reflect 100-HR-3 Operable Unit site-specific requirements and characteristics. This section specifically describes the groundwater alternatives relative to interim ~~action~~ remedial measure at the 100-HR-3 Operable Unit.

The DOE's Environmental Management (EM) Office of Technology Development (OTD) (EM-50) is managing an aggressive national program for applied research, development, demonstration, testing, and evaluation. The objective of this program is to develop technologies to clean up the DOE nuclear production and manufacturing sites and to manage DOE-generated wastes more cost effectively than current environmental cleanup technologies. The program is addressing several major problem areas, including groundwater and soil cleanup, and waste retrieval and processing. ~~There is a suite of mutually complimentary technologies for environmental restoration in various stages of development and demonstration that will be ready for implementation in the near future.~~
General descriptions of the various integrated programs within DOE's EM-50 office are published in Technical Summary reports (e.g. DOE 199__ {In Situ Remediation Integrated Program, DOE-EM-0202}).

New and emerging treatment technologies may be incorporated into operable unit restoration activities as they become available. They would be introduced as an additional IRM or as part of the final remedy. One new technology involves a method to immobilize hexavalent chromium in the aquifer; it is currently undergoing testing in the 100-H Area (Fruchter et al., 1995 {Final Draft: Test Plan for the 100-H Area In Situ Redox Manipulation Experiment: Part I Bromide Tracer Experiment, Revision 1, May 1995 --?referencable?})

4.1 ALTERNATIVE GW-1: NO ACTION

Alternative GW-1, the no action alternative, is required by the National Contingency Plan (NCP) to serve as a baseline for evaluation of other alternatives.

The no action alternative may be selected for sites where contamination does not exceed the level of unacceptable risk, where site contamination is in compliance with ARARs, where short-term risks associated with the remedial action exceed the risk of no action, or where the cost of remediation is excessive compared to the benefit gained in risk reduction.

~~The no action alternative for the groundwater operable units consists of continued groundwater monitoring that is currently ongoing at the site. The contamination is allowed to dissipate through natural attenuation processes. For radionuclides, this is mainly natural radioactive decay. The effectiveness of the natural attenuation process is related to the half-life of the radionuclide and the affinity of the radionuclide to adsorb to the Hanford Site soils. For other contaminants, such as chromium, the major attenuation factor is advection/dispersion, which depends on natural groundwater flow and the river flushing action to reduce concentrations.~~

~~Application of the no action alternative is independent of any site-specific considerations, as this alternative requires no restrictions, controls, or active remedial measures. Therefore, the baseline description for this alternative is directly applicable to the 100-HR-3 Operable Unit without modification.~~

4.1.1 Baseline Description

The no action alternative assumes no further action at a site. For example, no action for the groundwater operable unit consists of continued existing access controls and groundwater monitoring events through 2008, at which time these activities cease. The contamination is allowed to dissipate through natural attenuation processes. For radionuclides, this is mainly natural radioactive decay. The effectiveness of the natural attenuation process is related to the half-life of the radionuclide and the affinity of the radionuclide to adsorb to the Hanford Site soils. For other contaminants, such as chromium, the major attenuation factor is advection/dispersion, which depends on natural groundwater flow and the river flushing action to reduce concentrations.

4.1.2 Application to the 100-HR-3 Operable Unit

Application of the no action alternative is independent of any site-specific considerations, as this alternative requires no restrictions, controls, or active remedial measures. Therefore, the baseline description for this alternative is directly applicable to the 100-HR-3 Operable Unit without modification. Contaminant plumes within the 100-D/DR Area, 100-H Area, and the 600 Area of the 100-HR-3 Operable Unit are allowed to dissipate through natural attenuation processes. Existing access controls and monitoring activities are continued through the IRM period (year 2008).

4.2 ALTERNATIVE GW-2: INSTITUTIONAL CONTROLS

Alternative GW-2 has been developed as an institutional controls GRA. This alternative was initially developed in the 100 Area FS Phases 1 and 2 (DOE-RL 1994a) to prevent access to contaminated groundwater plumes beneath the 100 Area. The following process options are specified for the alternative:

- Access restrictions
  - Deed restrictions
  - Water rights restrictions

- Monitoring
  - Groundwater monitoring

- Continued current actions
  - Pilot-scale treatability test in the ~~100-HR-3 Operable Unit~~ 100-D/DR reactor area
  - Groundwater/river interaction studies
  - Chromium speciation ~~studies~~ investigation
  - Columbia River Comprehensive Impact ~~Evaluation study~~ Assessment
  - In Situ Redox Manipulation Experiment in the 100-H reactor area.

4.2.1 Access Restrictions

The access restrictions included in this alternative are unique to groundwater media. Government control of the Hanford Site, and therefore the operable unit, is anticipated through the IRM period. Sitewide access restriction measures already existing at the Hanford Site, such as security fences and guarded entrances, will ensure that 100-HR-3 groundwater is not accessible to the general public. Deed restrictions and water rights are not required during the period of government control. The institutional controls alternative therefore does not require implementation, but only continued maintenance and enforcement.

4.2.2 Monitoring

In addition to restricting groundwater use and access to groundwater, the institutional action alternative also includes groundwater and environmental monitoring. Monitoring will be required to determine if and when institutional controls to restrict access to groundwater are no longer necessary.

4.2.3 Continued Current Actions

The continued current actions listed are efforts currently under way to ~~complete~~ refine the conceptual site models for the groundwater operable units and to generate more certain technology performance data. These efforts support the

selection of the most appropriate remedial action for the 100 Area groundwater operable units. The treatability test will provide data on technology performance and optimization, on waste generation, and possibly on aquifer response. The river/groundwater interaction studies will help describe the mixing zone to better predict the hydrologic actions affecting concentrations. The speciation studies will better quantify the amount of chromium (VI) to provide a more realistic conceptual model of contaminant movement in the aquifer and interaction with the sediments. The river impact assessment will provide risk assessment data specific to the receptors in the river. The in situ redox manipulation experiment will provide new information on remediation alternatives for chromium. All the information will be assessed to determine the best solution for the remediation of the operable unit. When the results of the current actions are available, the conceptual site models may be complete enough to identify a final action for the operable unit.

4.3 ALTERNATIVE GW-3: CONTAINMENT

The containment alternative consists of remedial actions designed to ensure the containment of contaminated groundwater plumes. ~~The general description of this alternative (Section 1.3 of Appendix C B) presents describes several subsurface barrier (cutoff wall) technologies that are potentially applicable in the 100 Area. The most appropriate cutoff wall technology for application at the 100 BC 5 Operable Unit is determined on the basis of site specific implementation requirements. These requirements include consideration of the site geologic formation and wall depth requirements.~~ For the FFS, groundwater modeling results were used to estimate the optimum configuration of the cutoff wall and hydraulic control wells for evaluating alternatives (Note: additional detailed modeling would be required for remedial system design).

The containment options described in Alternative GW-3 rely on various characteristics of the geology and hydrogeology of each reactor area for their success. Intercepting contamination that is migrating along with groundwater toward the Columbia River requires a knowledge of the geometry of the sedimentary units containing the contamination, as well as the pathways that the flow follows. Construction of some of the containment systems requires a detailed understanding of the sediment physical properties at the actual site. Also, when assessing the performance of the containment system by numerical modeling, the accuracy of the model output is determined by the level of detail in the geometry and hydraulic characteristics of the aquifer.

Background information on the geology and hydrology of the 100-HR-3 Operable Unit can be found in Lindsey and Jaeger (1993) and Hartman and Peterson (1992), respectively. Cross sections drawn through monitoring wells located along the 100-D/DR and 100-H shorelines are shown in Figures 4-1 and 4-2 (see Figures 2-1 and 2-2 for monitoring well locations).

4.3.1 Baseline Description

Alternative GW-3 was initially developed in 100 Area FS Phases 1 and 2 (DOE-RL 1994a)~~. The alternative that was initially developed forms the baseline from which modifications are made for application to the 100-HR-3 Operable Unit. The baseline description of this alternative~~ and is based on remedial technologies and associated process options ~~specified in the 100 Area FS~~ for containment of contaminated groundwater plumes (Section 1.3 of Appendix B). These technologies and process options are:

- Vertical barriers
  - cutoff walls
- Hydraulic control
  - Extraction wells
  - Injection wells (as necessary)
- Monitoring
  - Groundwater monitoring.

4.3.2 Application to the 100-HR-3 Operable Unit

~~This subsection describes the application of the containment alternative to the 100-HR-3 Operable Unit.~~ The appropriate ~~cutoff wall technology~~ containment option for use at the 100-HR-3 Operable Unit is determined on the basis of site-specific implementation requirements at the 100-D/DR and 100-H Areas. These requirements include consideration of the site geologic formation and wall depth requirements. Detailed groundwater modeling results would be used to design the optimum configuration of the cutoff walls and hydraulic control wells in the 100-D/DR and 100-H Areas.

Selection of the cutoff wall technology considered most appropriate for the 100-HR-3 Operable Unit is based primarily on the following requirements:

- The technology must be implementable to a depth sufficient to key in the uppermost confining layer beneath the unconfined aquifer, (i.e., the Ringold Formation Upper Mud Unit).
- The technology must be implementable in the Ringold Formation, Unit E (sandy, gravelly sediments).
- Application of the technology must minimize exposure to contaminated soil and groundwater during implementation.

- The technology must be implementable within the spatial constraints imposed by proximity of the Columbia River and the past practice disposal facilities (e.g., retention basins, cribs, and trenches).

- Construction must occur close to the shoreline, to minimize penetration of the Hanford gravels.

4.3.2.1 100-D/DR Area Cutoff Wall Selection. The cutoff wall technology considered most appropriate for the 100-D/DR Area is a sheet pile. Sheet pile technology is not applicable in the Hanford Formation, which consists of cobbles and boulders. ~~exists, soils beneath the ground surface adjacent to the river are predominantly Ringold Formation.~~ The sandy gravels and silty sands comprising Ringold soils are amenable to the pile driving associated with sheet pile construction. Based on the ~~15 m (50 ft) depth requirement~~ 23 to 30 m (75 to 100 ft) depth to the confining unit in the 100-D/DR Area, sheet pile construction is considered readily implementable. A technical implementation concern involves an area along the river in the 100-D/DR Area where the riverbank becomes steep before flattening out again. Along this area of the river, excavation may be required to facilitate sheet pile installation. Other wall installation methods could be used at the 100-D/DR Area; however, the sheet pile wall presents the best option as far as intercepting flow to the river, ease of future removal (if needed), and minimal disturbance to the environment.

The primary drawback to slurry wall construction at the 100-HR-3 Operable Unit is the unavoidable contact with contaminated groundwater and soil within the unconfined aquifer. Downgradient placement of a slurry wall to intercept migration of the contaminants of potential concern plume into the river would require excavation into the contaminated portion of the aquifer. This would result in significant contamination control requirements, as well as handling and disposal of excavated soils and excess slurry. Slurry wall technology is, therefore, not considered for use at the 100-HR-3 Operable Unit due to unavoidable contact with contamination resulting in waste generation (contaminated slurry and excavated spoils).

While the conventional slurry wall, the grout injection barrier, and the deep soil mixed barrier would likely be implementable at the 100-D/DR Area and perform comparably to the sheet pile wall, the retrievability of these methods is considered more difficult than that of the sheet pile wall. Retrieval of any of these barriers would require excavation, drilling, or blasting to penetrate the barrier.

4.3.2.2 100-D/DR Area Containment System Configuration. Within the 100-HR-3 Operable Unit, groundwater in the unconfined aquifer generally flows towards the Columbia River (DOE-RL 1993b). In the 100-D/DR Area, groundwater will flow parallel to the Columbia River during high river stages (DOE-RL 1993b). Therefore, down gradient placement of the cutoff wall as close to the river as reasonably possible is proposed. Based on the near river topography in the 100-D/DR Area, the location proposed for placement of the cutoff wall is between the river and the 9 m (30 ft) high riverbank. This space is approximately 15 m (50 ft) wide, except for a small

area where the space between the river and the embankment narrows before widening out again. This area may require excavation to enable emplacement of the cutoff wall. The subsurface in this region is comprised primarily of Ringold Formation soils, which do not contain boulders that would otherwise inhibit pile driving activities.

Immediately adjacent to the river, the unconfined aquifer is just below the ground surface. Assuming that the thickness of the aquifer is similar to other locations in the 100-D/DR Area, the aquifer will range from 4 to 7 m (13 to 24 ft) thick (Figure 4-1). The clay/silt layer beneath the unconfined aquifer provides a less permeable zone into which to key the wall. The required depth of the wall at this location will be approximately 8 m (26 ft). This depth includes an additional 1 m (3 ft) for key-in to the clay/silt layer.

The 100-D/DR Area cutoff wall will be constructed along the Columbia River and will span the length of the chromium plume identified in the LFI (DOE-RL 1993b). This wall will also contain the other contaminant plumes identified at the 100-D/DR Area that coexist within the larger chromium plume (e.g., nitrate, tritium, and strontium-90). The configuration of the cutoff wall must also account for groundwater flow parallel to the Columbia River during high river stages. Groundwater modeling indicates the length of the wall required for the 100-D/DR Area to be approximately 1,300 m (4,300 ft).

The hydraulic gradient in the ~~100-HR-3 Operable Unit~~ 100-D/DR Area may be sufficiently small to eliminate the need for hydraulic control wells. However, results of groundwater modeling indicate that locating a pumping well at each end of the cutoff wall enhances plume containment by preventing contaminated groundwater from escaping around the ends of the wall. Since the extracted groundwater will likely contain chromium (and possibly other contaminants), reinjection in the upgradient portion of the contaminant plume is required to prevent contamination spread.

4.3.2.3 100-D/DR Area Containment System Implementation. Implementation of a sheet piling wall at the 100-D/DR Area will involve pile driving thick steel sheets into the soils of the Ringold Formation near the bank of the Columbia River. The sheet piles will be constructed with sealable joints to ensure that a continuous cutoff wall can be formed. To accomplish this, each sheet pile is constructed such that the contacting edges between successive sheet piles form an annulus that can be injected with a sealant (such as cement). Sheet pile construction equipment requirements include a hoist truck (to place sheet pilings), a mobile crane (to perform pile driving), and a generator (Waterloo Center for Groundwater Research 1992). Sheet pile installation will not require excavation or large construction areas.

The specified sheet piling cutoff wall must provide strength to maintain structural integrity and sufficiently reduced permeability relative to the unconfined aquifer to ensure containment. Steel sheet thicknesses of 11 mm to 15 mm are considered applicable for constructing a cutoff wall to depths of 100 feet (Waterloo

Center for Groundwater Research 1992). The hydraulic conductivity of the unconfined aquifer along the river in the 100-HR-3 Operable Unit ranges from 3.6×10^{-3} to 2.0×10^{-1} cm/sec (DOE-RL 1993b). Sealable joint sheet piling walls can attain hydraulic conductivities between 10^{-7} to 10^{-10} cm/s depending on the joint sealant material (Starr et al. 1992).

4.3.2.4 100-D/DR Area Containment System Modeling Results. Groundwater modeling results indicate that the containment system described above can significantly reduce the mass of chromium entering the Columbia River. In comparison to the ~~baseline, or~~ no action alternative, a 95% reduction in chromium entering the river can be achieved during the period of interim action. Although the chromium concentrations in groundwater entering the river remain above the EPA Ambient Water Quality Criteria level of 11 ppb, the flow rate of contaminated groundwater is significantly reduced and dilution with the river still occurs. ~~These modeling results are based on the assumption that the required sheet pile wall can be successfully implemented.~~

4.3.2.5 100-H Area Cutoff Wall Selection. Similarly to the 100-D/DR area, the cutoff wall technology should be able to reach the confining layer beneath the unconfined aquifer, if constructed adjacent to the shoreline. Boring logs from the near river wells in the 100-H Area indicate that the uppermost, continuous confining layer beneath the unconfined aquifer is approximately 18 m (60 ft) below the surface. However, construction in the Hanford Formation is unavoidable, ~~due to the near river topography that precludes construction directly adjacent to the river.~~ since the water table, and the hydrologic unit containing contaminants, is in the Hanford Formation.

Due to the construction in the Hanford Formation, none of the cutoff wall technologies described in the baseline containment alternative are considered implementable in the 100-H Area. Based on the need to penetrate the Hanford Formation, the sheet pile cutoff wall technology specified for use in the 100-D/DR Area is not applicable. Deep soil mixing has been applied to depths of 200 ft (in limestone), however, the technology is not considered feasible because of the depth and nature of the Hanford Formation (i.e., cobbles and boulders that can jam the auger or deviate the direction of the boring). Slurry wall construction can be impacted by slurry losses into the porous, unconsolidated soils of the Hanford Formation. Furthermore, poorly sorted, unconsolidated soils could result in trench collapse during slurry wall construction, especially at the required depth.

Based on the technical difficulties associated with implementing a cutoff wall in the 100-H Area, hydraulic controls are specified for containment of the chromium plume in the 100-H Area. As described in the methodology document, hydraulic control involves the use of extraction and reinjection to contain contaminant plumes. Groundwater modeling is used to determine the most effective configuration of extraction and injection wells to contain the 100-H Area chromium plume.

The advantages of the hydraulic control system include ease of installation, compatibility with final pump and treat remedial actions (if required), versatility in

well depth (i.e., it does not have to extend to a confining layer), and lesser impact to ecological and cultural resources. Because the contaminants are removed near the river and injected upgradient, the magnitude of risk in the near-river zone is reduced by the increased travel time for the chromium to reach the river. Disadvantages include difficulty maintaining hydraulic control so near the river, which experiences daily fluctuations up to 2.4 m (8 ft), removal and injection of contaminated water with no intermediate treatment, and the need for long-term maintenance. In addition, because chromium is persistent in the environment, the hydraulic barrier would have to be maintained until other actions are taken to address the contaminant or until the risk from the chromium is determined to be acceptable through additional assessment. Because the injected water is not treated, well scaling and biofouling may be more of a problem than for the injection of treated water.

One consideration that cannot be addressed because of the lack of information is the use of a hanging wall. This is a vertical barrier that does not extend to a confining layer but is installed to a depth below the contamination (i.e., the contamination is confined to the upper layers of the aquifer). ~~Current data suggest that the contamination extends deep into the aquifer; however, these data are somewhat uncertain.~~ Additional borings to characterize the partitioning of the chromium contamination in the formation would be required to determine the suitability of the hanging wall. If the contamination is confined to the upper portion of the aquifer, then the vertical barrier becomes a viable option at the 100-H Area.

4.3.2.6 100-H Area Containment System Configuration. The containment system configuration required at the 100-H Area consists primarily of a line of extraction wells placed along the Columbia River and a line of injection wells placed in an upgradient region of the chromium plume. Approximately seven wells spaced 200 m (650 ft) apart, as close as reasonably possible to the Columbia River, are required for extraction. The total extraction rate required from the wells is approximately 350 gpm. Three injection wells with the same injection rate (350 gpm) are required along the upgradient end of the plume. Placement of the injection wells is such that the size and location of the chromium plume is not significantly influenced. This hydraulic control system will also contain other contaminant plumes identified at the 100-H Area that coexist within the larger chromium plume (e.g., nitrate, strontium-90, technetium-99, uranium-238).

4.3.2.7 100-H Area Containment System Implementation. The containment system selected above involves the use of extraction wells to remove chromium-contaminated groundwater before it enters the Columbia River. Implementation of injection and extraction wells is relatively simple compared to cutoff wall construction. Construction concerns involve proper well screening to capture the chromium plume and plumbing between extraction and injection wells. Figure ~~4-1~~ 4-3 illustrates the approximate location of the well system, based on groundwater modeling results.

Chromium contamination in the 100-H Area is assumed to exist throughout the vertical depth of the aquifer. Based on this assumption, extraction and injection wells

would need to be screened across the depth of the unconfined aquifer. Additional characterization to verify this assumption may be appropriate. In the event that contamination is limited to the upper portion of the aquifer, the construction depth and pumping rate of the extraction and injection wells may be decreased.

4.3.2.8 100-H Area Containment System Modeling Results. Groundwater modeling results for Alternative GW-3 in the 100-H Area are similar to the modeling results obtained for the 100-D/DR Area. Essentially, containment can significantly reduce the mass of chromium entering the Columbia River during the period of interim action. Modeling results for the 100-H Area show a 92% reduction in the mass of chromium entering the river in comparison to the baseline (no action). ~~The results of modeling are based on the assumption that successful implementation and operation of a hydraulic control system is achieved.~~

4.4 ALTERNATIVE GW-4: IN SITU TREATMENT

The general description of Alternative GW-4 (see Section 1.4 of Appendix ~~C~~ B) includes remedial technologies for in situ treatment of nitrate and volatile organic compounds in the groundwater beneath the 100 Area. This alternative is not considered applicable to the 100-HR-3 Operable Unit, because the contaminants addressed by this alternative are not COPCs for the operable unit. On this basis, no further discussion of the in situ treatment alternative is ~~necessary~~ presented.

4.5 ALTERNATIVE GW-5: REMOVAL, TREATMENT, AND DISPOSAL USING ION EXCHANGE

Alternative GW-5 has been developed as a removal, treatment, and disposal GRA. The objective of Alternative GW-5 is to contain the contaminant plumes from reaching the river or migrating outside the operable unit and to eliminate source to receptor pathways by removing, treating, and disposing of contaminated groundwater. Alternative GW-5 is designed to remove contaminant plumes from the unconfined aquifer, treat extracted groundwater to the levels established by remedial action goals, isolate and dispose of treatment residuals from the accessible environment, and inject treated groundwater into the unconfined aquifer or discharge it to the river.

4.5.1 Baseline Description

The general description of Alternative GW-5 presented in Section 1.5 of Appendix ~~C~~ B specifies remedial technologies for removal, treatment, and disposal of contaminated groundwater beneath the 100 Area. Modifications to the baseline description are required based on the COPC identified in the 100-HR-3 Operable Unit LFI (DOE-RL 1993b). Since the removal, disposal, and monitoring aspects of this alternative are independent of the site-specific conditions at each 100 Area

groundwater operable unit, modifications to the baseline alternative are specific to the proposed treatment system.

4.5.2 Treatment System Modification

The baseline treatment system described for Alternative GW-5 is modified initially on the basis of COC identified in the 100-D/DR Area and 100-H Area groundwater. Chromium is identified as the COC in both 100-D/DR Area and 100-H Area groundwater. ~~Tritium at the 100-D/DR Area has a peak concentration of 78,000 pCi/L.~~ Since there are no organic COCs identified in 100-D/DR Area or 100-H Area groundwater, the chemical oxidation process for the destruction of organic contaminants can be eliminated from the baseline treatment system. Similarly, since nitrate is not identified as a COC in 100-D/DR Area or 100-H Area groundwater based on the occasional-use scenario, the biodenitrification process can be eliminated from the baseline treatment system. The results of the ion exchange treatability study did, however, show that nitrate is removed by the ion exchange media.

The baseline treatment system can be further modified on the basis of treatability study results. Chemical precipitation and ion exchange were investigated for removal of chromate, nitrate, and uranium-238 from 100-HR-3 groundwater (WHC 1993c). Although nitrate and uranium-238 are present in 100-HR-3 groundwater, only chromium is specifically identified as a COC. Results of this treatability study indicate ion exchange to be more effective than precipitation for removal of chromium (as well as nitrate and uranium-238). Ion exchange reduced chromium levels in 100-HR-3 groundwater to below the detection limits of the chemical analysis techniques used in the studies (29 ppb total chromium, 19 ppb hexavalent chromium ~~(VI)~~) (WHC 1993c). The chemical precipitation process generated larger quantities of secondary waste requiring disposal than did ion exchange. Hexavalent chromium had to be reduced to its trivalent state before it could be precipitated. Hence, the process generated greater amounts of secondary waste. In addition, the precipitants formed were found to be difficult to separate from the groundwater (WHC 1993c). Based on these results, the chemical precipitation and reduction processes can be eliminated from the baseline treatment system.

The modifications described above reduce the baseline treatment system to a single treatment process consisting of ion exchange. Filtration of the groundwater feed entering the treatment system is required to remove particulate and suspended solids. Resin regeneration is performed, as necessary, with annual recharge of all resin vessels. Spent resin is pneumatically blown from the exchange columns into a dewatering vessel, followed by load-out into disposal containers. Cement solidification is retained for treatment of secondary wastes (such as settling tank sludge and resin regeneration solids) on an as-needed basis.

Based on the high concentrations of iron detected in 100-H Area groundwater, the treatment system developed for Alternative GW-5 must provide a means for iron removal. Based on the presence of iron and chromium within the same location in

the unconfined aquifer, a condition in which iron is in the ferrous ion (Fe^{+2}) state and chromium is in the hexavalent state is highly improbable. Chromium would have been reduced to the trivalent state in the presence of dissolved ferrous ion. The EQ3/6 model, developed by the Lawrence Livermore National Laboratory, was used to determine the chemistry of this situation. The model predicted the speciation of iron and chromium in the groundwater using thermodynamic data of the chemical components present in the groundwater. As an input to the model, iron was assumed to be present as the ferrous ion in a dissolved state. The model predicted that the iron would be oxidized to the ferric state and the hexavalent chromium would be reduced to the trivalent state. It is also important to note that the unfiltered samples were used for the chemical analysis. These findings suggest that iron is most likely present as the ferrous ion and contained within suspended solids in the 100-H Area groundwater. The iron could thus be removed by the use of filtration methods prior to the ion exchange columns.

The ion exchange treatment system will be applicable to both 100-D/DR Area and 100-H Area groundwater. Figure 4-5 presents a conceptual flow diagram of the modified treatment system proposed for application of Alternative GW-5 to the 100-HR-3 Operable Unit.

4.5.2.2 Size and Configuration. Several options are available for implementing groundwater treatment, including a single treatment facility for all contaminated groundwater within the 100 Area or separate treatment facilities for each groundwater operable unit. Although past practices at the 100 Area reactor sites may have resulted in the release of the same contaminants to the environment, sampling and analysis indicates that the concentrations of contaminants in each operable unit are not the same. Therefore, separate treatment facilities at each operable unit are ~~considered~~ recommended to prevent cross-contamination and enable tailoring treatment systems to specific contaminants of concern at each ~~operable unit~~ reactor area.

4.5.2.3 Site Specific Implementation. Alternative GW-5 can be implemented as a single treatment system for the entire 100-HR-3 Operable Unit or as separate treatment systems at the 100-D/DR Area and 100-H Area. Separate treatment systems eliminate potential cross contamination between 100-D/DR and 100-H Area groundwater, reduce the distance over which contaminated groundwater is transported, minimize environmental impacts due to pipeline construction between the 100-D/DR and 100-H Areas, and enable tailoring system designs to the COC and capacity requirements at each area. Cost-benefit analyses and other engineering studies beyond the scope of this FFS would be required to establish the optimum location of a single treatment system. Therefore, due to the distance separating 100-D/DR and 100-H Area contaminant plumes and the diversity of contamination within those plumes, and for the purpose of developing costs for this FFS, Alternative GW-5 is assumed to be applied separately at the 100-D/DR Area and 100-H Area.

Application of Alternative GW-5 to the 100-D/DR Area was simulated by groundwater modeling to facilitate optimization of implementation design parameters. Modeling results indicate that a line of five extraction wells placed 30 m (100 ft) from

the Columbia River and spaced approximately 200 m (650 ft) apart maximized capture of the chromium plume and minimized leakage into the river. An additional extraction well located near the 105-D reactor facility was included to reduce the peak concentration in the chromium plume. The combined extraction rate of all six wells is approximately 56 gpm.

Application of Alternative GW-5 to the 100-H Area was also simulated by groundwater modeling to facilitate optimization of implementation design parameters. Modeling results indicate that a line of seven extraction wells placed 30 m (100 ft) from the Columbia River and spaced approximately 200 m (650 ft) apart maximized capture of the chromium plume and minimized leakage into the river. The peak concentration within the chromium plume occurs within the radius of influence of the wells placed along the river. The combined extraction rate of all seven wells is approximately 350 gpm.

4.5.2.4 Operational Considerations. Although the COCs identified in 100-D/DR Area groundwater are limited to chromium, low concentrations of other contaminants such as nitrate and strontium-90 are also present (DOE-RL 1993b). Similarly, low concentrations of nitrate, strontium-90, technetium-99, and uranium-238 also coexist within the chromium plume in 100-H Area groundwater (DOE-RL 1993b). The potential for these additional contaminants to enter the treatment system must be considered.

Based on treatability study results, the anion exchange system required to remove chromium will also remove other anionic contaminants such as nitrates, technetium-99, and uranium-238. Although these contaminants will compete with chromium for binding sites on the resin, no significant operational impacts to the system will result. Treatability study results indicate that no interaction between chromium, nitrate, and uranium occur with Dowex 21k resin. Interactions with other constituents in the groundwater are possible and can be minimized with appropriate pretreatment (filtration, pH adjustment, etc.). Effluent monitoring will enable determination of chromium breakthrough that will require resin changeout or regeneration.

Strontium-90 exists in groundwater as a cation and will not be removed in the anion exchange system. However, the peak concentration of strontium-90 is only 41 pCi/L[1] (DOE-RL 1993b) in the 100-D/DR Area and 33 pCi/L in the 100-H Area. Once groundwater from the line of extraction wells is combined prior to entering the ion exchange treatment system in each area, concentrations of strontium-90 will be diluted to negligible levels. That is, the plume is small, with an even smaller area at the peak concentration; ~~pilling~~ reinjecting water from the entire front of the chromium plume will dilute the area of peak concentration for the strontium-90.

The baseline description of Alternative GW-5 specifies reinjection into the unconfined aquifer for effluent from treatment systems that contains tritium activity

[1]This concentration is qualified with a "J" or estimated qualifer.

concentrations above the SDWA MCL (20,000 pCi/L). The location of reinjection ~~will~~ be sufficiently upgradient from the Columbia River to ensure that natural radioactive decay will reduce tritium levels to below the SDWA MCL prior to reaching the Columbia River. This situation may potentially occur in the 100-D/DR Area, where the peak concentration of tritium has been ~~determined~~ observed to be approximately 78,000 pCi/L (DOE-RL 1993b).

4.5.2.5 Modeling Results. Groundwater modeling results indicate the benefit of the removal, treatment, and disposal alternatives to be twofold. The extraction system acts as an effective hydraulic control measure by minimizing further migration of the chromium plume, and the treatment system effectively reduces the concentration of chromium within the extracted groundwater. Modeling results are independent of the treatment system because the groundwater model does not account for above-ground activities. However, the ion exchange treatability study results have demonstrated that the treatment system for Alternative GW-5 can effectively remove chromium from groundwater extracted from the 100-HR-3 Operable Unit.

In comparison to the baseline (no action), an approximate 97% reduction in the mass of chromium entering the river from 100-D/DR Area and 100-H Area groundwater is achieved during the ~~period of interim action~~ interim remedial measure. Although the modeling results show that chromium concentrations in groundwater entering the river will remain above the EPA Ambient Water Quality Criteria level of 11 ppb, the hydraulic effects of the extraction system significantly reduce the flow rate of contaminated groundwater into the river.

The disposal aspect of this alternative is not included in the groundwater modeling results. Effluent from the treatment systems is to be discharged directly into the Columbia River (if at acceptable levels for such discharge) or reinjected to the aquifer. Based on the results of the ion exchange treatability study (WHC 1993c), chromium concentrations below 29 ppb total chromium and 19 ppb chromium (VI) are achievable[2]. If injection into the aquifer becomes a necessary alternative to discharge into the river, additional detailed hydrologic analysis and numerical modeling will be conducted to simulate the effects. This detailed modeling will be conducted as part of the design of the pump and treatment system well network.

4.6 ALTERNATIVE GW-6: REMOVAL, TREATMENT, AND DISPOSAL USING REVERSE OSMOSIS

Althernative GW-6 is similar to Alternative GW-5 in that both alternatives specify remedial technologies for the removal, treatment, and disposal of contaminated groundwater beneath the 100 Area. The primary difference between these alternatives is the treatment technologies specified. Therefore, the general

[2]These are the detection limits for the treatability study. The Contract Required Detection Limit (CRDL) for chromium is 10 μg/L (REF).

description of Alternative GW-6 also requires modification for application to the COCs identified in the 100-HR-3 Operable Unit. Since the removal, disposal, and monitoring aspects of this alternative are independent of the site specific conditions at each 100 Area groundwater operable unit, modifications to the baseline alternative are specific to the proposed treatment system. The aspects of Alternative GW-6 that are different from GW-5 are summarized below.

- ~~Biological treatment - No biological treatments are specified in GW-6.~~
- Chemical treatment - No chemical treatments are specified in GW-6.
- Physical treatment - Only physical treatments are specified in GW-6.
- Disposal - Crib disposal is specified in GW-6 to allow flexibility in disposal options.

The general treatment system described for Alternative GW-6 (see Section 1.6 of Appendix ~~C~~ B) is modified on the basis of the COCs identified in 100-HR-3 groundwater. As described for Alternative GW-5, no organic COCs are identified in 100-HR-3 groundwater. Therefore, the air stripping/carbon adsorption process for removal of organic contaminants can be eliminated from the baseline treatment system. No other modifications to the baseline treatment system for Alternative GW-6 are required.

The modification described above reduces the baseline treatment system to reverse osmosis followed by evaporation. Groundwater feed into the treatment system is pretreated by pH adjustment and a crystallization inhibitor to maximize the efficiency of reverse osmosis. Cement solidification is retained for treatment of concentrate from the evaporator and other secondary wastes (settling tank sludge). Liquid effluent from the process is disposed as described in the baseline description of this alternative. The iron removal process specified in Alternative GW-5 for 100-H Area groundwater is also applicable to this alternative. The reverse osmosis/evaporation treatment system will be applicable to the 100-D/DR Area and 100-H Area groundwater. Figure 4-5 presents a conceptual flow diagram of the modified treatment system proposed for application of Alternative GW-6 to the 100-HR-3 Operable Unit.

4.6.1 Size and Configuration

The same description for Alternative GW-5 applies to GW-6.

4.6.2 Site-Specific Implementation

The site-specific implementation discussion for Alternative GW-6 is the same as that described previously for Alternative GW-5.

4.6.3 Operational Considerations

In addition to the chromium identified in 100-D/DR Area groundwater, low concentrations of other constituents such as nitrate, strontium-90, and tritium are also present (DOE-RL 1993b). Similarly, nitrate, strontium-90, technetium-99, and uranium-238 also coexist within the chromium plume in 100-H Area groundwater (DOE-RL 1993b). The potential for these additional constituents to enter the treatment system must be considered. In the absence of treatability study data, the effect of additional contaminants on each treatment process is assessed below on the basis of whether the technology has been previously applied to the COCs in similar situations.

Reverse osmosis is specified as a best available technology (BAT) for removing chromium and nitrate to MCL in the SDWA [40 CFR 141.62(c)]. Reverse osmosis has been effectively demonstrated for removing inorganic contaminants such as hexavalent chromium, trivalent chromium, nitrates, and uranium (Porter 1990, Huxstep and Sorg 1988). Decontamination factors over 100 have been achieved for removing strontium by reverse osmosis (Ebra et al. 1987). Similarly, reverse osmosis has been shown to achieve >95% removal of uranium from groundwater (Huxstep and Sorg 1988). The effectiveness of reverse osmosis to reject other radionuclides is considered high on the basis of engineering judgment. The effectiveness of reverse osmosis to treat to the Ambient Water Quality Criteria for chromium of 11 μg/L is uncertain. Treatability testing on a pilot scale would be required to develop cost and performance data to this level.

Evaporation technologies have been used extensively for treatment of radioactive liquid wastes. As discussed in the baseline description of this alternative, the purpose of the evaporation process is to reduce the volume of contaminated groundwater requiring further treatment. Contaminated water from the Three Mile Island accident was treated with a vapor recompression evaporator. The evaporation process also included an auxiliary evaporator, flash vaporizer, and a concentrate dryer. The process was shown to effectively concentrate strontium-90, technetium-99, and uranium isotopes, as well as other radionuclides (Williams and Strand 1990). The process resulted in a 56:1 volume reduction (Williams and Strand 1990). Nonradioactive contaminants such as chromium can also be expected to concentrate in the evaporator bottoms, but nitrate will likely be volatilized with water vapor.

Effluent from the reverse osmosis/evaporation treatment system that is contaminated with tritium at concentrations above the SDWA MCL (20,000 pCi/L) is disposed as described previously for Alternative GW-5 (see Section 4.1.5.3). Based on a peak tritium concentration of 78,000 pCi/L in the 100-D/DR Area, disposal of tritium-contaminated groundwater may be necessary.

4.6.4 Modeling Results

The groundwater modeling results described previous for Alternative GW-5 (see Section 4.1.5.4) are also applicable to Alternative GW-6. As noted previously, the results presented are independent of the treatment process because the groundwater model does not include the effects of aboveground activities. Due to the effectiveness of reverse osmosis for chromium removal, the groundwater modeling results are considered valid for this alternative. The effect of removal, treatment, and disposal is significantly reduced chromium concentrations in the contaminant plumes and minimized plume migration.

4.7 UNCERTAINTY ISSUES

Application of the groundwater alternatives at the 100-HR-3 Operable Unit involves some degree of uncertainty as to implementability and effectiveness. Although other considerations such as community and regulatory acceptance of an alternative will also be uncertain, only technical uncertainty will be addressed here. The following sections describe the uncertainty associated with each alternative relative to the 100-HR-3 Operable Unit.

Technical uncertainties that are common to each alternative include the following:

- Horizontal and vertical extent of the plumes;
- Heterogeneity in aquifer hydraulic properties, including hydraulic conductivity, retardation mechanisms, and preferential pathways;
- Locations and identity of sensitive ecological receptors in the Columbia River;
- Processes that occur in the zone of interaction between contaminated groundwater and river water that might influence sensitive receptor exposure; and
- Effectiveness of groundwater withdrawal systems to capture contamination from the aquifer.

These uncertainties limit the completeness of the conceptual site model for contamination at each reactor area. They also place significant limitations on numerical modeling results used to simulate groundwater flow and contaminant transport, and to compare alternatives for remedial actions.

As part of planning the interim remedial measure, new information will be obtained to lessen the technical uncertainties associated with remedial design. A more detailed analysis of the hydrologic framework for each plume will be conducted,

which will improve the conceptual site model and provide a better basis for the numerical groundwater flow model that supports design of the extraction and injection well networks. Field activities to measure chromium concentrations in salmon spawning habitat and to collect data on the zone of interaction between groundwater and river water, will continue during the IRM. Performance monitoring during the initial operation of active remediation systems will be used to evaluate the effectiveness of the alternative, and to refine its design if appropriate.

4.7.1 Alternative GW-1

~~There is no uncertainty associated with the implementation of this alternative because no action is required.~~ The objective of the interim ~~action~~ remedial measure (protection of the Columbia River) will not be achieved with no action. Uncertainty exists in the COCs identified for the operable unit. Because the COCs are based on the concentrations in the near-river wells, they may not represent accurate concentrations available for uptake by biological resources. The uncertainty could be lessened by modeling the interface between the river and the groundwater to determine an appropriate mixing value. This uncertainty applies to all the alternatives and is a major factor in the analysis of benefits versus costs.

4.7.2 Alternative GW-2

Implementation of the institutional controls alternative is relatively straightforward, requiring only administrative effort and legal enforcement. Since the Hanford Site will remain under government control throughout the interim action period (year 2008), this alternative is essentially in place. ~~The institutional controls alternative is considered to be equivalent to no action and is, therefore, not addressed as a separate alternative.~~ Uncertainty issues are similar to GW-9.

4.7.3 Alternative GW-3

The uncertainty associated with the containment alternative in the 100-D/DR Area is the ability to implement a sheet piling wall along the bank of the Columbia River. Construction of a sheet piling wall requires pile driving steel sheets into the soil formation directly adjacent to the river. These soils are considered to be predominately Ringold Formation soils. However, the presence of subsurface obstructions, such as cobbles or boulders, can inhibit pile driving activities. Excavation may be applicable for infrequent subsurface obstruction removal requirements. An additional concern involves the ability to construct the sheet piling wall in the area along the river where a steep embankment exists close to the river. Excavation of this embankment may be required to enable construction of the sheet pile wall in this area. Additional characterization of the 100-D/DR Area along the riverbank, and treatability testing, may be required to verify implementability of the sheet piling wall.

The primary concern associated with the containment system specified for the 100-H Area is the ability of hydraulic control wells to effectively contain the chromium plume. The extent of contamination in the vertical direction within the unconfined aquifer is important to effective hydraulic control. The well system (screening) should only extract and inject groundwater within the plume area. Extraction and injection throughout the vertical extent of the aquifer could result in the spread of contamination and ineffective containment. Withdrawal of water from near the river will result in induced flow from the river. This portion of river water will then be added to the groundwater, resulting in a net increase in the quantity of water in the flow system and an increase in hydraulic gradient. Daily and seasonal fluctuations in the river stage will add to the operational difficulties associated with the use of hydraulic control in the 100-H Area. Additional characterization of 100-H Area groundwater will enable more precise definition of the chromium plume and, consequently, of the containment system.

An additional consideration for the 100-H Area is the suitability of a hanging wall. Data concerning deep contamination may show that keying in to a confining layer is not necessary, and that the vertical barrier is an acceptable alternative at 100-H Area.

4.7.4 Alternative GW-4

The in situ treatment alternative is not applicable to the conditions in the 100-HR-3 Operable Unit (see Section 4.4). Therefore, no discussion of uncertainties is presented for this alternative.

4.7.5 Alternative GW-5

The primary uncertainty associated with this alternative is the effectiveness of pump and treat in satisfying RAOs for preventing the migration of contaminated groundwater into the Columbia River. Groundwater modeling results for the 100-D/DR Area indicate a significant reduction in the mass of chromium and volume of contaminated groundwater reaching the river. However, the concentration of chromium in groundwater entering the river remains above the EPA Ambient Water Quality Criteria level (11 ppb). Conventional pump and treat methods have been shown to reduce contaminant mass and prevent further migration, but the ability to reduce contaminant levels to drinking water standards has been limited (PE 1993). Contaminants adsorbed onto soil particles may dissolve into the groundwater once pumping stops, thereby recontaminating the aquifer.

The adsorption characteristics of chromium in the unconfined aquifer beneath the 100-D/DR and 100-H Areas are critical to the evaluation of the pump and treat alternatives. Chromium must be removable from the aquifer in order for pump and treat to be effective and efficient. Because of the site-specific variability of contaminant adsorption coefficients, additional site characterization or testing could be

performed to more accurately determine the ability to remove chromium from the unconfined aquifer.

4.7.6 Alternative GW-6

The uncertainties associated with this alternative are identical to those identified for Alternative GW-5. Alternatives GW-5 and GW-6 are essentially the same, except for the technologies specified for treating contaminated groundwater. Uncertainty exists in the ability of reverse osmosis to treat to the 11 ppb level. Treatability testing of operable unit-specific groundwater would help resolve the uncertainty.

Figure 4-1. Cross-Section Through Near-River Wells, 100-D/DR Area.

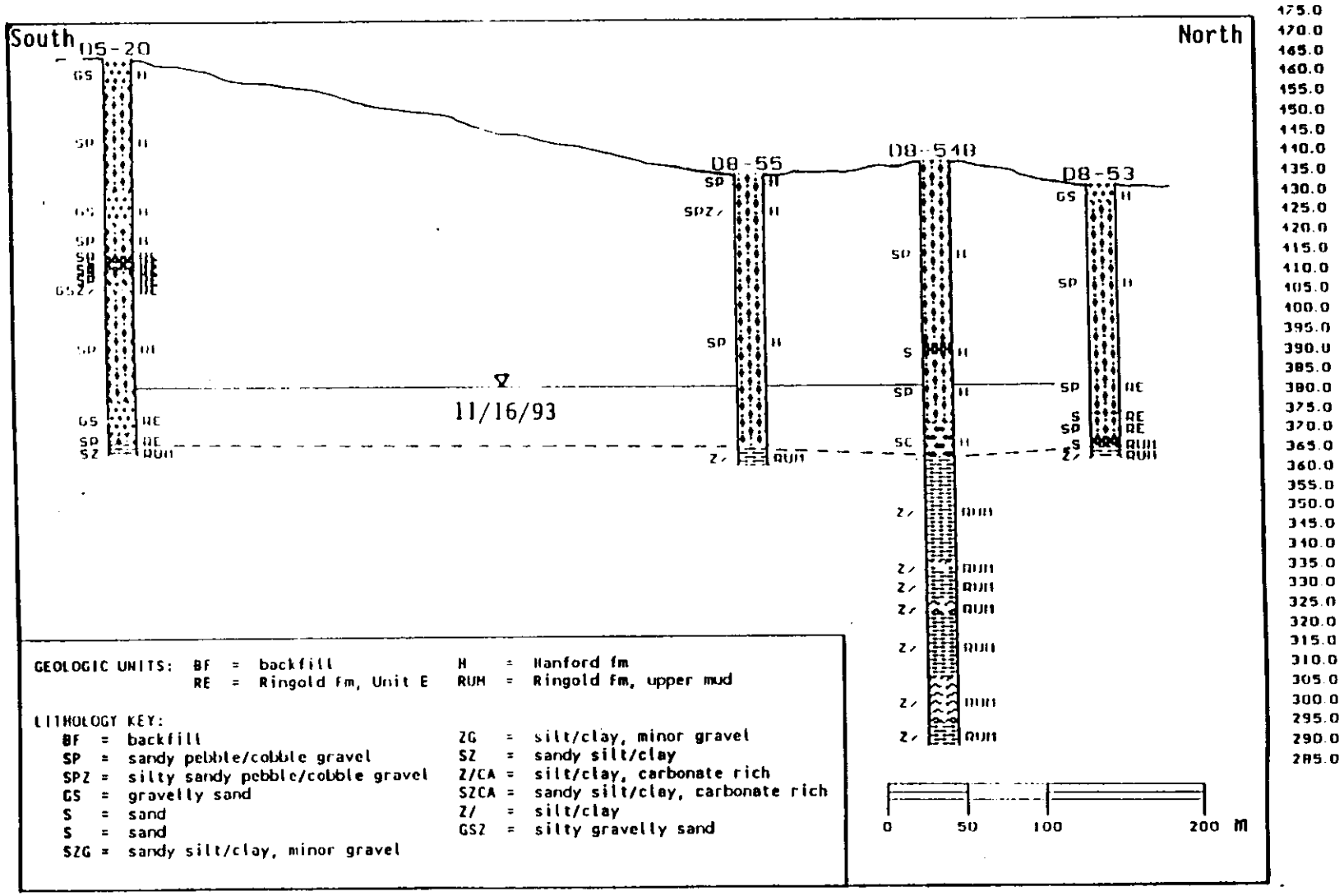

Figure 4-2. Cross-Section Through Near-River Wells, 100-H Area.

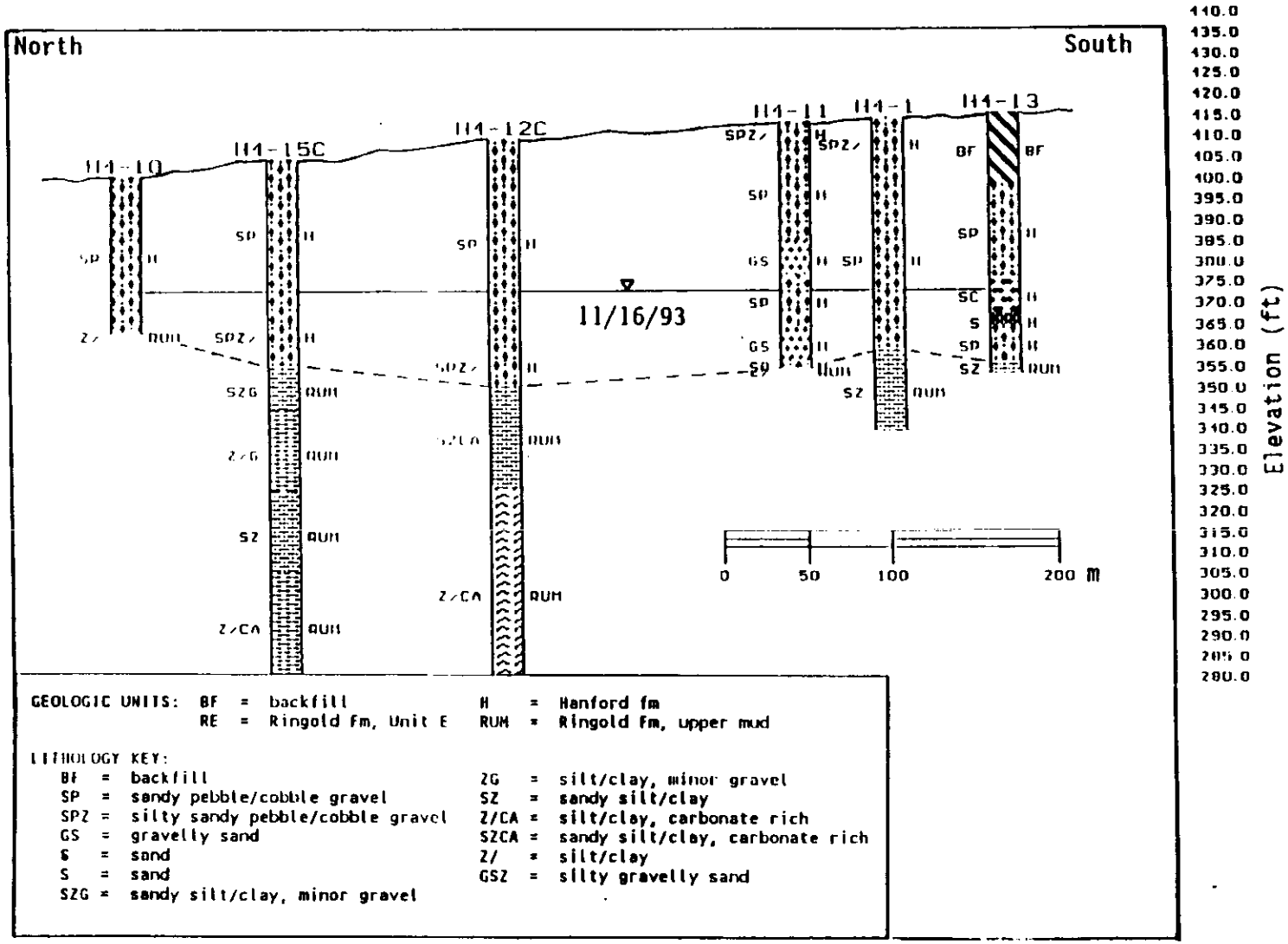

Figure 4-3. Conceptual Containment System at 100-H Area.

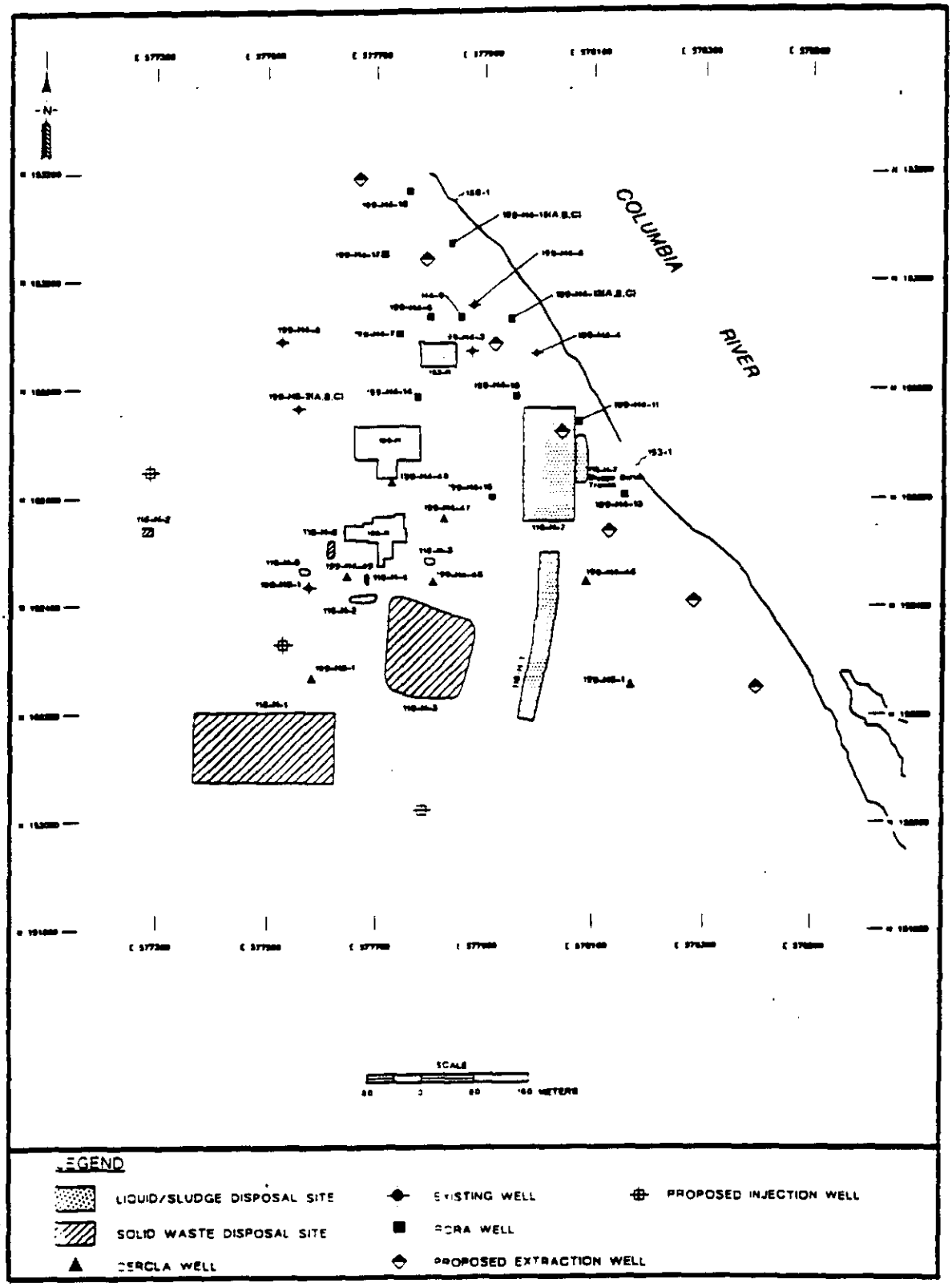

Figure 4-4. Conceptual Process Flow Diagram for Alternative GW-5 Application at 100-HR-3 Operable Unit (Page 1 of 2).

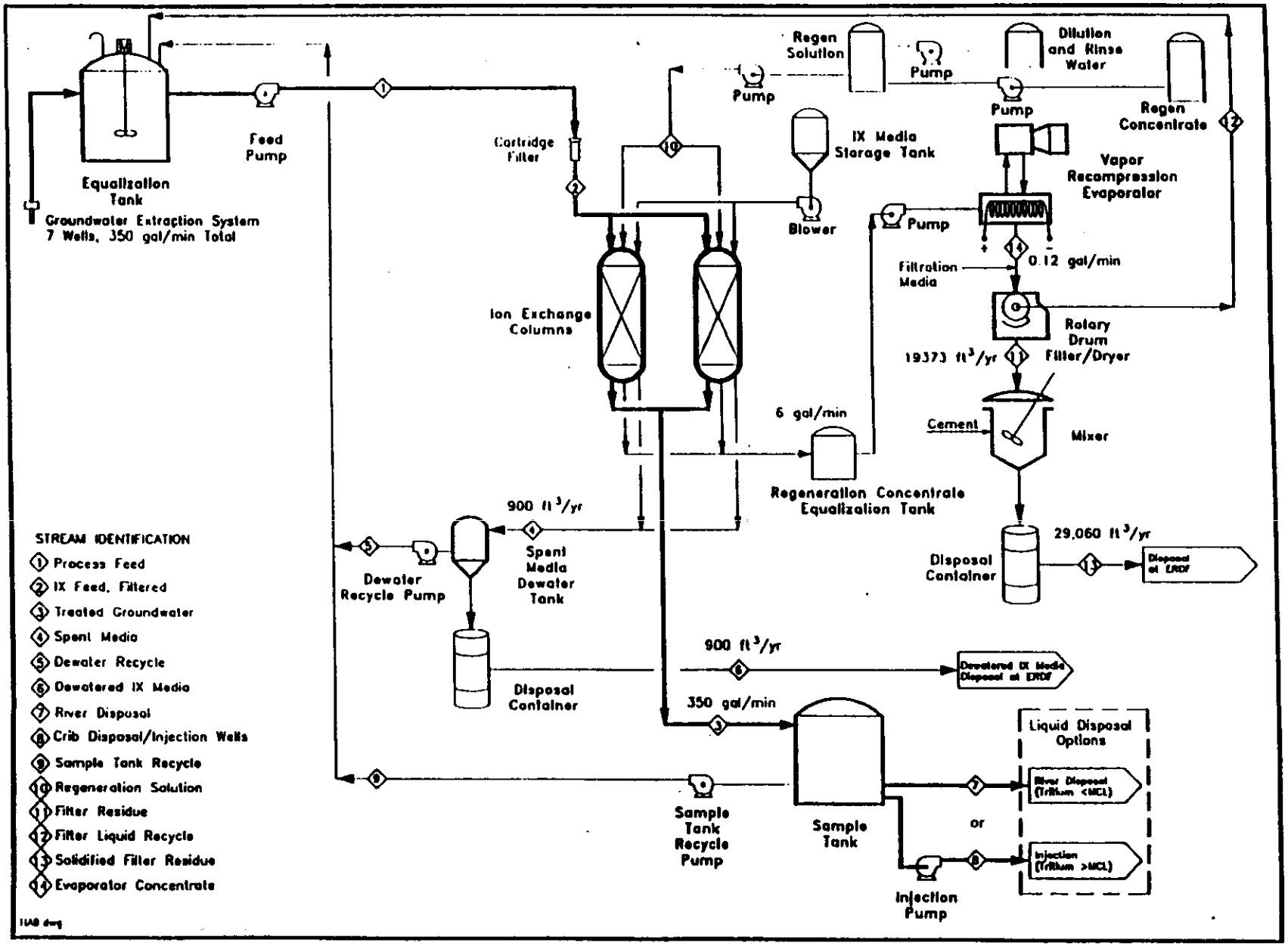

Figure 4-4. Conceptual Process Flow Diagram for Alternative GW-5 Application at 100-HR-3 Operable Unit (Page 2 of 2).

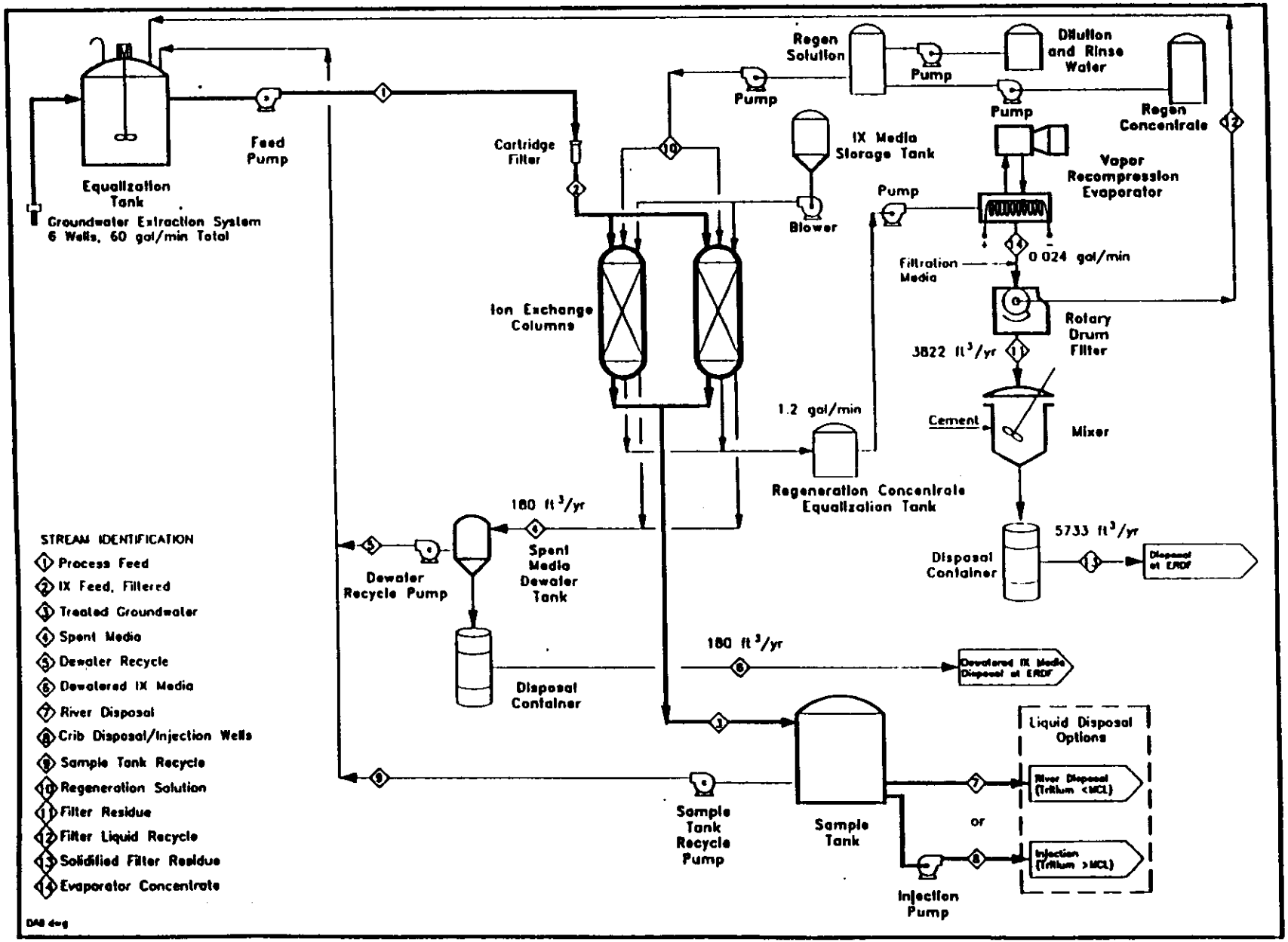

Figure 4-5. Conceptual Process Flow Diagram for Alternative GW-6 Application at 100-HR-3 Operable Unit (Page 1 of 2).

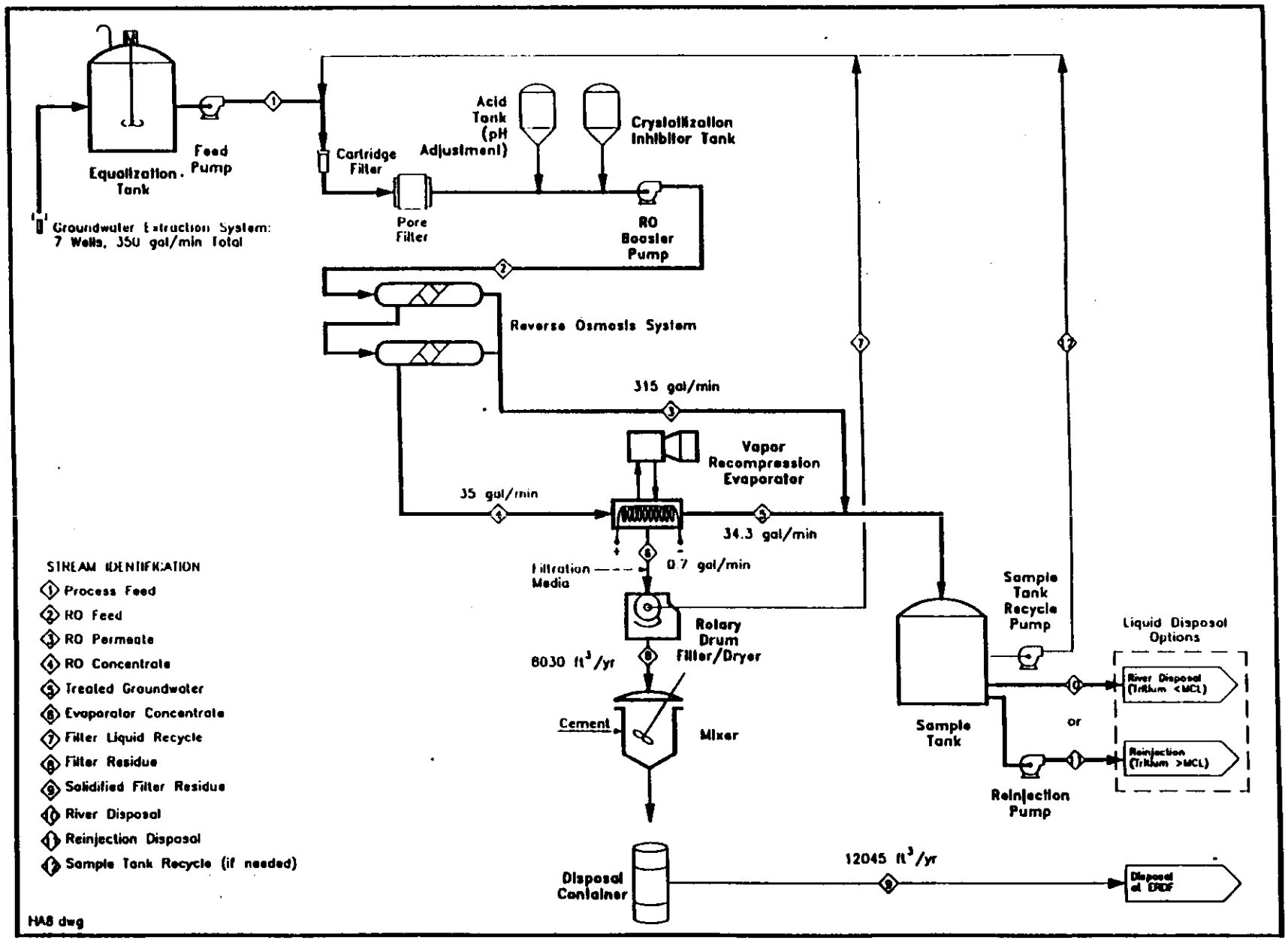

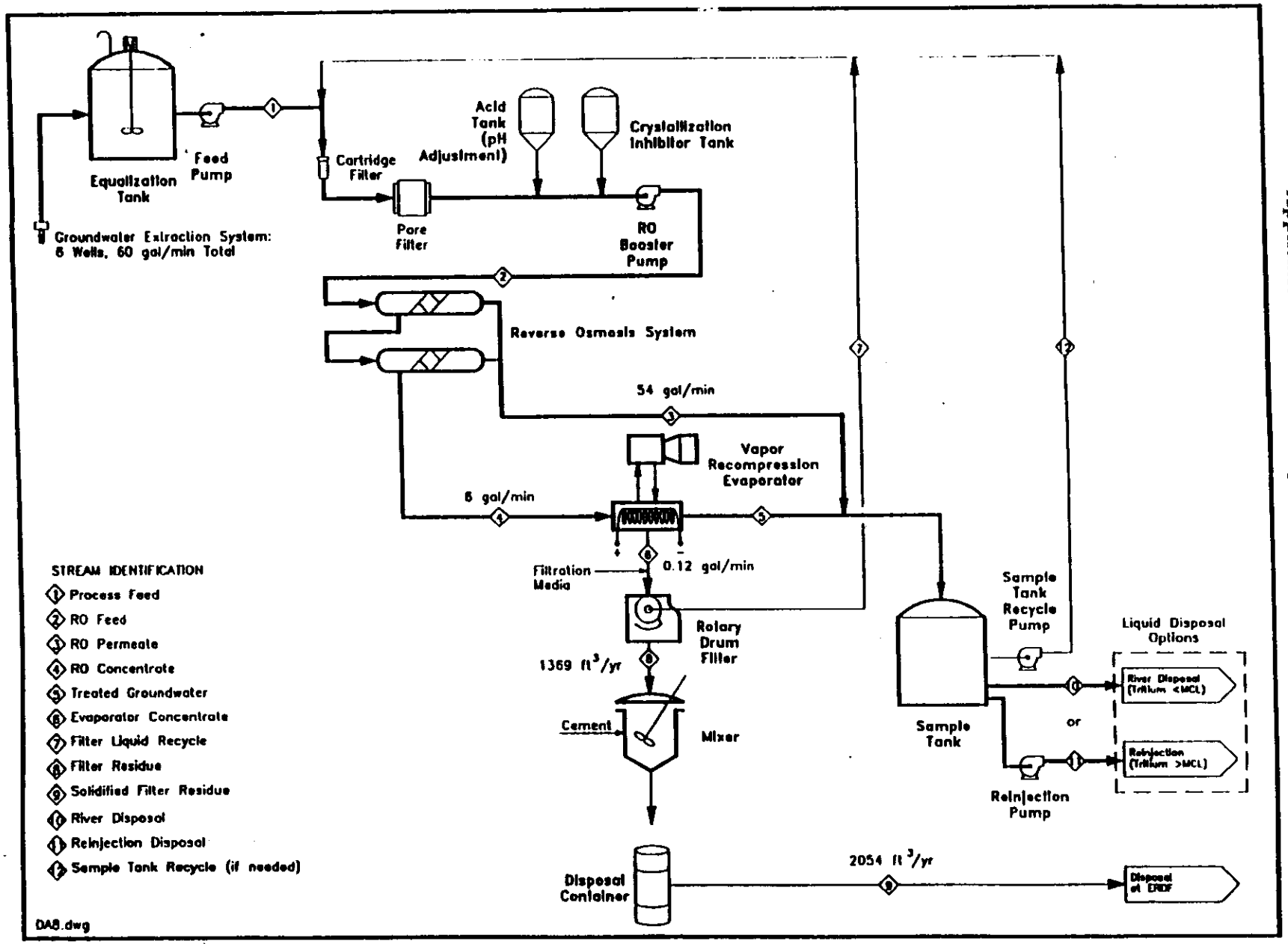

Figure 4-5. Conceptual Process Flow Diagram for Alternative GW-6 Application at 100-HR-3 Operable Unit (Page 2 of 2).

THIS PAGE INTENTIONALLY
LEFT BLANK

5.0 MODELING RESULTS

Numerical groundwater flow and solute transport models of the unconfined groundwater flow systems in the 100-D/DR and 100-H Areas were developed to evaluate alternative remedial actions for minimizing further migration of chromium to the Columbia River. Existing data and information were not sufficient ot support more than a qualitative comparison of the alternatives, especially when the uncertainties generally associated with modeling are factored in. The results and predictions provide a relative basis for comparison, but the values should not be considered absolute, nor a reliable estimate of alternative effectiveness or efficiency. The model results provide the description of intended impacts to the aquifer and contaminant plumes, and the numbers provide a basis to convey the anticipated magnitude of change. This section describes the design of these numerical models and the assumptions used in constructing the models.

5.1 GROUNDWATER FLOW MODELS

5.1.1 Model Design

One groundwater flow model was developed for the 100-H Area, and one model was developed for the 100-D/DR Area. Both groundwater flow models were designed and constructed with ModelCad^{386}™, a computer-aided design (CAD) software package for groundwater modeling (Geraghty and Miller 1993). ModelCad^{386}™ has an interactive graphical interface, which provides a fast and accurate method for designing and constructing numerical groundwater flow models.

5.1.1.1 Model Code. The groundwater flow code that was used for the 100-D/DR and 100-H Area models was MODFLOW (McDonald and Harbaugh 1988), a finite-difference groundwater flow model code developed by the United States Geological Survey (USGS). MODFLOW was selected for this evaluation because it is capable of simulating the unconfined aquifer on a personal computer. The code can be linked to MT3d, a well documented transport code. ~~Because the purpose of the modeling effort was to support detailed analysis of alternatives, a simple, personal computer based model was desired.~~ The intent was to ~~quantify~~ describe in relative terms the ~~effectiveness~~ impact of the alternatives. The modeling serves only as a tool for ~~analysis~~ comparison.

5.1.1.2 Assumptions of Model Design. All exact hydrogeologic conditions that control the movement of groundwater in an aquifer system are not known. Therefore, some assumptions and simplifications must be made in constructing numerical models that simulate groundwater flow. The following assumptions were made in the construction of the groundwater flow models.

- The unconfined aquifer receives recharge by infiltration of precipitation.

- There is no vertical flow of groundwater between the unconfined aquifer and the underlying layers.

- The Columbia River has a uniform streambed thickness and a uniform depth along the entire reach of the river within the model grid; it can be adequately simulated with the River Package in MODFLOW.

- The groundwater flow can be adequately simulated using steady state conditions, given the objective of the modeling effort (to evaluate the relative effectiveness of alternatives).

- The contaminants are uniformly distributed vertically throughout the aquifer.

The scope of the modeling effort was to develop models to compare the relative effectiveness of the various alternatives, not for design purposes, or quantifying measures of effectiveness or efficiency. Therefore, it was not feasible to model all of the details of the aquifer system, in particular the large daily and seasonal variations in the Columbia River stage. Because all of the alternatives are simulated in the same manner and use the average river stage, the modeling is adequate for the comparison of the relative ~~effectiveness~~ performance of alternatives. ~~The mixing zone between the aquifer and the river was not simulated, so the results are conservative, with more chromium going to the Columbia River than if the chromium was diluted in the mixing zone.~~ To date, little vertical profiling of the contamination has been performed in the 100 Areas, so the contamination was assumed to be uniformly distributed vertically. The modeling did not include dilution effects at the river-aquifer interface, where water from the river and water from the aquifer mix, or contaminant mobilizaiton from the vadose zone during periods of high river stage. While the contaminant concentration would decrease because of the dilution, the concentration would tend to increase where and when contaminants were mobilized from the vadose zone into the aquifer. Because these effects were considered beyond the scope and intent of the purpose of the modeling, and the magnitude of these effects is currently unknown, they were not included in the modeling effort.

Rigorous and thorough calibration of the models was neither intended or attempted. Data and information were sufficient to support only a rough approximation of the hydrologic conditions. Estimated values for hydraulic properties range over as many as three orders of magnitude, and aquifer testing and analysis to map out the heterogeneities has not been performed. Consequently, only a simple calibration to hydraulic head, as determined from water table maps, was considered adequate. The modeling results are intended to provide a relative basis for comparison, not an absolute estimate or evaluation of any alternative's performance or effectiveness. The calibration is intended to show that the model, using the

information that is available, can simulate each remedial alternative for the purpose of relative comparison.

5.2 100-D/DR AREA GROUNDWATER FLOW MODEL

5.2.1 100-D/DR Area Model Grid

A 135-row by 95-column, two-dimensional (one-layer), finite-difference grid was constructed for the 100-D/DR Area groundwater flow model (Figure 5-1). The grid was uniformly spaced, with a row and column spacing of 20 m (66 ft). The y-direction of the grid was oriented in a north-south direction, approximately parallel to the principal direction of groundwater flow in the 100-D/DR Area.

5.2.2 Boundary Conditions

The boundary conditions of a model define the head elevation or groundwater flow rate along the boundaries of the model domain and were used to simulate hydrogeologic conditions that control the flow of groundwater in an aquifer system. The boundary conditions used in the 100-D/DR Area groundwater flow model were as follows:

- Top of the model - Water table (free-surface boundary)
- Bottom of the model - No flow
- Northeast, south, southwest and east boundaries - Constant head
- Northwest boundary - River nodes (head-dependent flow).

The lower boundary of the model grid was represented as a no-flow boundary because the unconfined aquifer in the 100-D/DR area is underlain by low-hydraulic-conductivity clays (DOE-RL 1993a). It was necessary to simulate the northeast, south, southwest, and east boundaries as constant head boundaries because of the unusual groundwater flow patterns in this area (i.e., flow is not perpendicular to the Columbia River).

The Columbia River was simulated in the model as river nodes, a type of head-dependent flow boundary. The model adjusted the direction and rate of flow across the river nodes, based on the difference in the groundwater levels simulated by the model and the stage elevations of the river nodes. When the simulated groundwater levels were higher than the stage elevations of the river nodes, flow was outward from the model along the nodes. When the simulated groundwater levels were lower than the stage elevations of the river nodes, flow was inward to the model along the nodes. The river nodes were used to simulate, in a simplified manner, the

hydraulic interaction between the Columbia River and the unconfined aquifer in the ~~100~~-D/DR Area~~.~~

5.2.3 Initial Conditions

~~Head elevations along the constant head boundaries and river stage elevations in the river nodes were specified as initial conditions for the 100-D/DR Area groundwater flow model.~~ The head elevations for the constant-head boundaries were estimated by constructing a groundwater elevation contour map of the unconfined aquifer from water levels measured in the monitoring wells on November 16, 1993, and projecting the elevation contours to the model grid boundaries. River stage elevations were estimated by extrapolating the mean daily stage elevation recorded at the 100-N gaging station on November 16, 1993, to the 100-D/DR Area using the river gradient measured on the USGS Vernita Bridge and Coyote Rapids 1:24,000 scale topographic quadrangle maps of the area. The November 1993 time period was selected because a review of river stage data showed that the November stage was near the yearly average. In addition, no large seasonal variations were occurring at that time. November 16 was selected because it corresponded with the date of groundwater elevation measurement (Figure 5-2).

5.2.4 Bottom Elevations of Model Grid

A contour map of the bottom elevations of the unconfined aquifer (Unit E of the Ringold Formation) (Lindsey and Jaeger 1993) was constructed from the geologic logs of the monitoring wells in the 100-D/DR Area using the computer graphics software package SURFER™ (Golden Software 1991). The bottom elevation contour map was discretized to the model grid nodes for input to MODFLOW using ModelCad^{386}™ (Figure 5-3).

5.2.5 Recharge

The aquifer recharge is reported to range from 0 to 10 cm/yr (Gee 1987). A uniform recharge of 5 cm/yr (2 in/yr) was used in the flow model. This recharge rate was determined by calibration of the flow model under steady-state flow conditions.

5.2.6 Aquifer Hydraulic Conductivity

The hydraulic conductivities of the 100-D/DR Area are reported to range from 3 to 160 m/d (10 to 530 ft/d) (Hartman and Peterson 1992). Two values of aquifer hydraulic conductivity were used in the flow model. A hydraulic conductivity of 5 m/d (16 ft/d) was used in model grid in the vicinity of wells 199-D5-13, 199-D5-20, 199-D8-4, and 199-D8-6. A hydraulic conductivity of 15 m/day (49 ft/day) was used

elsewhere in the model grid. These two zones of hydraulic conductivity were used to provide the best match between model-predicted and observed water-level elevations.

5.2.7 ~~Storage Coefficient and Porosity~~ Specific Hield and Porosity

~~A uniform storage coefficient of 0.02 (dimensionless) and a porosity of 20% was used in the flow model for the transient simulations. The storage coefficients for the unconfined aquifer at the Hanford Site are reported to range from 0.01 to 0.2 (Hartman and Peterson 1992).~~

For the transient flow modeling performed to describe the changes to the aquifer caused by some of the alternatives, a value of 0.02 was input for the specific yield. For the contaminant transport modeling, a value of 0.20 was used for the porosity to calculate the apparent velocity of the groundwater and groundwater contaminants. Hartman and Peterson (1992) reported that specific yield values calculated from data collected from the unconfined aquifer ranged from 0.01 to 0.20 at the Hanford Site.

5.2.8 River Nodes

The MODFLOW River Package is used to simulate the Columbia River in the flow model. This package simulates the interaction of the Columbia River with the unconfined aquifer in the 100-D/DR Area. The River Package requires the following as input for each node simulating the Columbia River in the model grid:

- River stage elevation
- Bottom elevation of the river bed
- Hydraulic conductance of the river bed.

River stage elevations were estimated by extrapolating the mean daily stage elevation recorded at the 100-N gaging station on November 16, 1993, to the 100-D/DR Area. A uniform river depth of 4 m (13 ft) was assumed to estimate the elevation of the river bed bottom at each river node.

The river bed hydraulic conductance is defined by the following equation (McDonald and Harbaugh 1988):

$$C_{RIV} = K\ L\ W\ /\ M$$

where:

C_{RIV} = hydraulic conductance of the river bed
K = vertical hydraulic conductivity of the river bed material
L = length of the river reach within the model grid cell
W = width of the river reach within the model grid cell
M = thickness of the river bed or distance between the river bed and adjacent aquifer node, depending on whether the head losses occur across a discrete streambed layer or are distributed more gradually throughout the aquifer.

The hydraulic conductance of the river nodes representing the Columbia River in the flow model was calculated assuming a uniform river bed thickness of 1 m (3 ft) for the river in the 100-D/DR Area. A vertical hydraulic conductivity of 5 m/d (16 ft/d) for the river bed was used in the river bed conductance calculations for the model. The ~~vertical hydraulic conductivity~~ river bed hydraulic conductance was adjusted in the calibration process to determine the best match between model-predicted and observed groundwater elevations.

5.2.9 Model Calibration

The 100-D/DR Area groundwater flow model was calibrated to the water levels in the monitoring wells measured on November 16, 1993. The stage of the Columbia River, which is controlled by upstream dam releases, can vary daily from 1.8 to 2.5 m (6 to 8 ft) and seasonally from 2.5 to 3.1 m (8 to 10 ft) (DOE-RL 1993a). Groundwater flow direction is primarily to the north. This flow direction varies during the year based on river stage and recharge.

The flow model was calibrated by inputing initial estimates of recharge, aquifer hydraulic conductivity, and river bed conductance into the flow model, then solving the model for steady-state flow conditions. These estimated input parameters were then varied in successive simulations until the steady-state head solution output by the model reasonably matched the November 1993 water levels in the monitoring wells (see Figure 5-4). A comparison of the steady-state head solution of the calibrated model and the November 1993 water levels is presented in Table 5-1. Additional calibration details are provided in Appendix C.

5.3 100-H AREA GROUNDWATER FLOW MODEL

5.3.1 100-H Area Model Grid

A 160-row by 106-column, three-dimensional (two-layer), finite-difference grid was constructed for the 100-H Area groundwater flow model (Figure 5-5). Most of the grid was uniformly spaced, with a row and column spacing of 10 m (30 ft). A variable row spacing (ranging from 15 to 85 m [49 to 280 ft]) was used in the

Columbia River to reduce the number of elements. The grid was rotated 52° so that the Columbia River was parallel to the X axis.

5.3.2 Boundary Conditions

The boundary conditions used in the 100-H Area groundwater flow model were as follows.

- Top of the model - Water table (free-surface boundary)
- Bottom of the model - No flow
- Southwest boundary - Constant head
- northeast boundary - River nodes (head-dependent flow)
- Southeast and northwest boundaries - No flow (parallel to groundwater flow).

The bottom of the model was represented as a no-flow boundary because the unconfined aquifer in the 100-H Area is underlain by low-hydraulic-conductivity sediments (Lindsey and Jaeger 1993). The southeast and northwest boundaries are represented as no-flow boundaries because the groundwater flow is parallel to the boundary; therefore, there is no flow acorss the boundary.

The Columbia River was simulated in the model with river nodes, as discussed previously.

The southwest boundary was determined by extrapolating the water table data for November 16, 1993. This boundary was simulated as constant head because it is perpendicular to the groundwater flow direction.

~~The southeast and northwest boundaries were no flow because they are parallel to the groundwater flow direction.~~

5.3.3 Initial Conditions

~~Head elevations along the constant head boundaries and river stage elevations in the river nodes were specified as initial conditions for the 100-H Area groundwater flow model.~~ The head elevations for the constant-head boundaries were estimated by constructing a groundwater elevation contour map of the unconfined aquifer from water levels measured in the monitoring wells in November 1993, and projecting the elevation contours to the model grid boundaries. River stage elevations were obtained from the 100-H Area gauge. A gradient was then imposed in the river based on the gradient measured from the USGS Vernita Bridge and Coyote Rapids 1:24,000 scale

topographic quadrangle maps. The November 1993 time period was selected because a review of river stage data showed that the November stage was near the yearly average. In addition, no large seasonal variations were occurring at that time. November 16 was selected because it corresponded with the date of groundwater elevation measurement.

5.3.4 Bottom Elevations of Model

The Ringold/Hanford Formation contact formed the base of model Layer 1. A contour map of the Ringold/Hanford Formation contact was constructed from the geologic logs of the monitoring wells in the 100-H Area, using the computer graphics software package SURFER™ (Golden Software 1991). This contour map was discretized to the model grid nodes for input to MODFLOW using ModelCad^{386}™. The bottom of model Layer 2 was set at a constant elevation of 55.5 m (182 ft) based on average bottom of Ringold Unit E data from Lindsey and Jaeger (1993).

5.3.5 Recharge

The aquifer recharge is reported to range from 0 to 10 cm/yr (Gee 1987). A uniform recharge of 7.3 cm/yr (3 in/yr) was used in the flow model. This recharge rate was determined by calibration of the flow model under steady-state flow conditions.

5.3.6 Aquifer Hydraulic Conductivity

The hydraulic conductivities in the 100-H Area are reported to range from 21 to 37 m/d (70 to 120 ft/d) for the Hanford Formation and from 0.04 to 107 m/d (0.14 to 350 ft/d) for the Ringold Formation (Hartman and Peterson 1992). A hydraulic conductivity of 28.6 m/d (94 ft/d) was used for Layer 1 (the Hanford Formation) and a hydraulic conductivity of 2.86 m/day (9 ft/day) was for Layer 2 (Ringold Unit E). These values of aquifer hydraulic conductivity were determined by calibration of the flow model under steady-state flow conditions.

5.3.7 ~~Storage Coefficient and Porosity~~ Specific Yield and Porosity

~~A uniform storage coefficient of 0.02 (dimensionless) and a porosity of 20% was used in the flow model for the transient simulations.~~

For the transient flow modeling performed to describe the changes to the aquifer caused by some of the alternatives, a value of 0.02 was input for the specific yield. For the contaminant transport modeling, a value of 0.20 was used for the porosity to calculate the apparent velocity of the groundwater and groundwater contaminants. Hartman and Peterson (1992) reported that specific yield values

calculated from data collected from the unconfined aquifer ranged from 0.01 to 0.20 at the Hanford Site.

5.3.8 River Nodes

The MODFLOW River Package is used to simulate the Columbia River in the flow model. River stage elevations were estimated by extrapolating the stage data recorded at the 100-H gauging station from the time period of groundwater level data collection on November 16, 1993. A uniform river depth of 3 m (10 ft) was assumed to estimate the elevation of the river bed bottom at each river node.

The hydraulic conductance of the river nodes representing the Columbia River in the flow model was calculated assuming a uniform river bed thickness of 1 m (3 ft). A vertical hydraulic conductivity of 2.86 m/d (9 ft/d) for the river bed was used in the river bed conductance calculations for the model. This ~~vertical hydraulic conductivity~~ river bed hydraulic conductance was adjusted in the calibration process to determine the best match between model-predicted and observed groundwater elevations.

5.3.9 Model Calibration

Groundwater flow directions in the 100-H Area are primarily to the northeast. Flow reversals occur occassionally during periods of high river stage. The 100-H Area groundwater flow model was calibrated to the water levels in the monitoring wells measured on November 16, 1993. The flow model was calibrated by inputing initial estimates of recharge, aquifer hydraulic conductivity, and river bed conductance into the flow model, then solving the model for steady-state flow conditions. These estimated input parameters were then varied in successive simulations until the steady-state head solution output by the model reasonably matched the November 16, 1993, water levels in the monitoring wells. A comparison of the steady-state head solution of the calibrated model and the November 1993 water levels is presented in Table 5-2, and the calibrated water table surface is shown in Figure 5-7. Additional calibration details are provided in Appendix C.

5.4 SOLUTE TRANSPORT MODELS

5.4.1 Model Design

The 100-D/DR and 100-H Area solute transport models were designed and constructed with ModelCad^{386}™ (Geraghty and Miller 1993).

5.4.1.1 Transport Code. The solute transport code that was used for the 100-D/DR and 100-H Areas was MT3D, a finite-difference code developed by S. S. Papadopulos and Associates (1991). MT3D simulates the advection, dispersion, and chemical

reactions of dissolved contaminants in groundwater flow systems. The code uses a combination of the method of characteristics (MOC) and the modified method of characteristics (MMOC) for the solution of the advection-dispersion-reaction equation. The MOC technique was originally developed for solute transport models by the USGS (Konikow and Bredehoeft 1978). MT3D was selected for this evaluation because it is well documented and is designed to be used in conjunction with the groundwater flow model code MODFLOW.

5.4.2 100-D/DR Area Technical Approach

Solute transport models are typically developed by calibration of the models to both past and present water quality conditions in a groundwater flow system. Because the available historical water quality data from the 100-D/DR Area are very limited, a different approach was used to develop the transport model for this area. The solute transport model for the 100-D/DR Area was developed by first performing a sensitivity analysis of the model to the transport parameters porosity, dispersivity, and retardation. The remedial action alternatives were then evaluated using a range of values for the transport parameters to which the model solution was determined to be sensitive.

5.4.2.1 Sensitivity Analysis. A sensitivity analysis was performed on the 100-D/DR Area solute transport model to determine the uncertainty of the model solutions due to the uncertainty in the estimates of the transport parameters used in the model. Transport simulations were run using a range of porosities, dispersivities, and retardation factors to determine the sensitivity of the model solutions to these transport parameters.

The October-December 1992 unfiltered chromium concentrations (DOE-RL 1993b) were used as initial concentrations for the transport simulations. No source term was simulated due to the lack of data. In addition, the model assumes that no chromium is added to the groundwater system after 1997. Migration of the chromium plume was simulated for a period of 16 years (to 2008) using the flow field solution from the calibrated steady-state flow model. Sensitivity simulations were run using porosities of 15%, 20%, and 25%; longitudinal to transverse dispersivities of 10/1 m (30/3 ft) and 100/10 m (300/30 ft); and retardation factors of 10, 25, and 50. The porosities, dispersivities, and retardation factors used in the sensitivity simulations were considered to represent the widest plausible range of values for the unconfined aquifer in the 100-D/DR Area, based on solute transport modeling at other areas within the Hanford site (for example, Connelly [1991]).

The sensitivity analyses indicated that the transport model solutions were sensitive to both dispersivity and retardation. The model solutions were most sensitive to the dispersivity and less sensitive to the retardation factor used in the simulations. The model solutions were not significantly sensitive to porosity at retardation factors >10 or to retardation values >25. The results of the sensitivity analysis are presented in Table 5-3 and are discussed in more detail in Appendix C.

5.4.3 100-H Area Technical Approach

The 100-H Area solute transport model was developed by inputing 1987 unfiltered chromium data as initial conditions and calibrated by matching 1992 data. The 1987 data set was selected for the initial concentrations because that time period marked the beginning of RCRA monitoring. Therefore, it was the oldest data set with sufficient data to develop initial conditions. The 1992 data set was used for calibration because there are some uncertainties in more recent metals data (Peterson 1993). No source term was simulated due to the lack of data. The model assumes that there no chromium has been added to the groundwater system since 1987.

The initial concentration data were input to the model and the retardation and dispersivity were adjusted to obtain the best match between observed and model-predicted chromium concentrations. The best match was obtained with a longitudinal dispersivity of 5 m (16 ft), a transverse dispersivity of 0.5 m (1.6 ft), and a retardation of 25. Because a calibration approach was used for the 100-H Area model, a separate sensitivity analysis was not performed. Calibration details are provided in Appendix C.

5.5 MODELING RESULTS

5.5.1 100-D/DR Area No Action Alternative

For the no action alternative, chromium plume migration was simulated to the year 2008. The October-December 1992 unfiltered chromium concentrations were used as the initial concentrations for the solute transport simulation. Plume migration was simulated using the flow field solution from the calibrated steady-state groundwater flow model. The transport simulation was run using a porosity of 20%, longitudinal to transverse dispersivities of 10/1 m (30/3 ft) and 100/10 m (300/30 ft), and retardation factors of 10 and 25. Total simulation time was 16 years (to 2008).

The chromium concentration contour map from the transport simulation solution using 20% porosity, 10 m (30 ft) longitudinal dispersivity, 1 m (3 ft) transverse dispersivity, and a retardation factor or 25 is shown in Figure 5-8.

5.5.2 100-D/DR Area Vertical Barrier Alternative

The vertical barrier alternative consisted of a vertical, low permeability wall placed near the Columbia River to act as a barrier for the further migration of contaminated groundwater into the river. In the model, a single groundwater extraction well was simulated at each end of the vertical barrier to minimize the migration of groundwater around the ends of the wall.

For the barrier wall simulations, the calibrated groundwater flow model was modified by changing the aquifer hydraulic conductivity in a line of grid nodes along the Columbia River to 1 x 10^{-6} cm/s to represent the barrier wall. Based on the grid size, the effective width of the wall is 20 m (66 ft) and the wall is 1,300 m (4,300 ft) long. The 20 m (66 ft) width and 10^{-6} cm/s hydraulic conductivity result in a conservative estimate of chromium entering the river. If the actual barrier used was the sheet pile, the effective hydraulic conductivity would be lower. Two well nodes were also added to the model near the ends of the simulated barrier wall to represent the groundwater extraction wells. The discharge rate of the well nodes was set at 109 m^3/d (20 gpm). Plume migration was then simulated using the flow field solution from the modified calibrated groundwater flow model. Transport simulations were run using the same range of transport parameters as for the no action alternative. Total simulation time was 16 years for both the flow and transport simulations.

The chromium concentration contour map from the barrier wall simulation solution using 20% porosity, 10 m (30 ft) longitudinal dispersivity, 1 m (3 ft) transverse dispersivity, and a retardation factor or 25 is shown in Figure 5-9. ~~The chromium concentration contours extending from the wall to the river in this figure represent residual contamination in this zone.~~ Chromium concentration contours shown in the figure to extend from the wall to the river represent chromium which began the simulation between the barrier wall and the river, and which remained in place because the barrier wall eliminated the hydraulic gradient transporting it to the river. The water table map for this simulation is shown in Figure 5-10. ~~In the barrier wall simulations, the amount of chromium going to the river is reduced by 94 to 96% with 1.3 to 12.8 kg of chromium removed by the wells over 16 years.~~ The vertical barrier wall simulations showed that the barrier wall, with the two wells located near the ends, reduced the amount of chromium entering the river by about 95 percent. Such a high percentage of reduction indicates that under the conditions simulated by the model, the vertical barrier wall would block the path of the majority of chromium to the river. Compared with the no action simulations, these simulations indicate that a vertical barrier wall would be effective in minimizing further migration of contaminated groundwater into the Columbia River.

5.5.3 100-D/DR Area Groundwater Extraction and Treatment Alternative

Modeling the groundwater extraction and treatment alternative consisted of a line of extraction wells along the Columbia River to control further migration of the contaminated groundwater into the river. A single groundwater extraction well was also installed near the 105-D reactor facility to reduce contaminant concentrations in this area.

For the groundwater extraction and treatment simulations, the calibrated groundwater flow model was modified by adding six well nodes to the model to represent the boundary control and reactor facility extraction wells. Five well nodes were placed along the Columbia River. The locations, spacing, and discharge rates of these well nodes were varied in successive simulations to maximize plume capture and

to minimize the leakage of water from the river nodes simulating the Columbia River ~~due~~ to the well nodes (minimizing the uptake of river water by the boundary control wells). The discharge rates of the well nodes were also restricted so that the water levels in the grid cells with the well nodes were at least 2 m (7 ft) above the bottom of the model, allowing sufficient water for operation of the pumps in the extraction wells. A well spacing of approximately 200 m (660 ft) with discharge rates between 38 and 82 m^3/day (7 and 15 gpm) maximized plume capture and minimized the river leakage in the model due to the well nodes.

Plume migration was then simulated using the flow field solution from the modified calibrated groundwater flow model. Transport simulations were run using the same range of transport parameters as for the no action alternative. Total simulation time was 16 years for both the flow and transport simulations.

The chromium concentration contour map from the extraction and treatment simulation solution using 20% porosity, 10 m (30 ft) longitudinal dispersivity, 1 m (3 ft) transverse dispersivity, and a retardation factor of 25 is shown in Figure 5-11. The water table map for this simulation is shown in Figure 5-12. ~~In the extraction and treatment simulations, the discharge of chromium to the Columbia River was reduced by 96 to 98% over the 16 year time period of the simulations.~~ The extraction and treatment simulations showed that the well network reduced the amount of chromium entering the river by over 95 percent. Such a high percentage of reduction indicates that under the conditions simulated by the model, the extraction and treatment system would intercept the path of the majority of chromium to the river. Compared with the no action simulations, these simulations indicate that a groundwater extraction and treatment system would be effective in minimizing further migration of contaminated groundwater into the Columbia River. ~~The contamination extending to the river in Figure 5-11 is residual chromium that was present prior to pumping.~~ Chromium concentration contours shown in figure 5-11 to extend from the extraction and treatment system to the river represent chromium which began the simulation between the system and the river, and which remained in place because the pumping eliminated the hydraulic gradient transporting it to the river.

5.5.4 100-H Area No Action Alternative

For the no action alternative, chromium plume migration was simulated to the year 2008. The 1987 unfiltered chromium concentrations were used as the initial concentrations for the solute transport simulation. Plume migration was simulated using the flow field solution from the calibrated steady-state groundwater flow model. The chromium concentration contour map for the no action simulation in 2008 is shown in Figure 5-13.

5.5.5 100-H Area Vertical Barrier Alternative

The vertical barrier alternative consisted of a vertical, low permeability wall placed near the Columbia River, which would act as a barrier for the further migration of contaminated groundwater into the river. In the model, a single groundwater extraction well was installed at each end of the vertical barrier to minimize migration of groundwater around the ends of the wall.

For the barrier wall simulations, the calibrated groundwater flow model was modified by changing the aquifer hydraulic conductivity in a line of grid nodes along the Columbia River to 1 x 10^{-6} cm/s to represent the barrier wall. Based on the grid size, the effective width of the wall is 10 m (33 ft) and the wall is 1,300 m (4,300 ft) long. Two well nodes were also added to the model near the ends of the simulated barrier wall to represent the groundwater extraction wells. The discharge rate of the well nodes was set at 136 m^3/d (25 gpm). Plume migration was then simulated using the flow field solution from the modified calibrated groundwater flow model. The simulation was run with the 1994 concentrations from the no action simulation to represent the installation of the wall in 1994. The total simulation time was for both the flow and transport simulations was 14 years (to 2008).

The chromium concentration map and water table map from the barrier wall simulation at 2008 are shown in Figures 5-14 and 5-15. The wall is not specifically marked on Figure 5-11, but the location can be identified by the bunched contours parallel to the river. ~~In the barrier wall simulation, the amount of chromium going to the river was reduced by 92%, with 40 kg of chromium removed by the two wells over the 14 year simulation period.~~ The vertical barrier wall simulations showed that the barrier wall, with the two wells located near the ends, reduced the amount of chromium entering the river by over 90 percent. Such a high percentage of reduction indicates that under the conditions simulated by the model, the vertical barrier wall would block the path of the majority of chromium to the river. Compared with the no action simulation, this simulation indicates that a vertical barrier wall would be effective in minimizing further migration of contaminated groundwater into the Columbia River.

5.5.6 100-H Area Hydraulic Control Alternative

The hydraulic control alternative model consisted of a line of extraction wells along the Columbia River to control further migration of the contaminated groundwater into the river. For the groundwater extraction simulations, the calibrated groundwater flow model was modified by adding seven well nodes along the Columbia River. Three injection wells were simulated upgradient of the pumping wells near the edge of the chromium plume.

The location, spacing, and discharge rates of these well nodes were varied in successive simulations to maximize plume capture and to minimize the additional leakage of water from the river nodes simulating the Columbia River due to the well nodes (minimizing the uptake of river water by the boundary control wells). The well pumping was split between the two layers, and 80% of the water was extracted from

the lower layer (Ringold Formation) and 20% from the upper layer (Hanford Formation). A well spacing of approximately 200 m (660 ft) with a discharge rate of 270 m^3/day (50 gpm) from wells 1, 4, 5, 6, and 7 and a rate of 135 m^3/d (25 gpm) from wells 2 and 3 maximized plume capture and minimized the river leakage in the model due to the well nodes. The lower pumping rate at wells 2 and 3 were needed to keep them from going dry. The amount of river water being pumped was minimal compared to the total amount of extracted water. The extracted water was injected back to the aquifer in 3 upgradient wells at a rate of 545 m^3/d (100 gpm) per well.

Plume migration was then simulated using the flow field solution from the modified calibrated groundwater flow model. The total simulation time was 21 years (from 1987 to 2008) for both the flow and transport simulations, with the pumping beginning in 1994 (note that 1992 was the year for calibration).

~~This simulation reduced the amount of chromium going to the river by 97%. Increasing the pumping rate to 100 gpm reduced the discharge of chromium to the Columbia River by 98% over the no action alternative.~~ The hydraulic barrier simulations showed that the barrier wells pumping at 50 gpm reduced the amount of chromium entering the river by over 95 percent. Increasing the pumping rate to 100 gpm showed no significant improvement in performance. Such a high percentage of reduction indicates that under the conditions simulated by the model, the hydraulic barrier would block the path of the majority of chromium to the river. Compared with the no action simulation, this simulation indicates that a hydraulic barrier wall would be effective in minimizing further migration of contaminated groundwater into the Columbia River.

5.5.7 100-H Area Groundwater Extraction and Treatment Alternative

The model for the groundwater extraction and treatment alternative consisted of a line of extraction wells along the Columbia River to control further migration of the contaminated groundwater into the river.

For the groundwater extraction and treatment simulations, the calibrated groundwater flow model was modified by adding seven well nodes along the Columbia River.

The location, spacing, and discharge rates of these well nodes were varied in successive simulations to maximize plume capture and to minimize the additional leakage of water from the river nodes simulating the Columbia River due to the well nodes (minimizing the uptake of river water by the boundary control wells). The well pumping was split between the two layers, with 80% of the water coming from the lower layer and 20% from the upper layer. A well spacing of approximately 200 m (660 ft) with a discharge rate of 270 m^3/day (50 gpm) maximized plume capture and minimized the additional river leakage in the model due to the well nodes. The amount of river water being pumped was minimal compared to the total amount of

water pumped. The capture zone, as defined by a drawdown of 0.1 m (0.3 ft), is shown in Figure 5-16.

Plume migration was then simulated using the flow field solution from the modified calibrated groundwater flow model. The total simulation time was 21 years (to 2008) for both the flow and transport simulations, with the pumping beginning in 1994.

The chromium concentration map and the water table map from the seven well extraction system at 2008 are shown Figures 5-17 and 5-18. ~~This simulation reduced the amount of chromium going to the river by 97%. Increasing the pumping rate to 100 gpm reduced the discharge of chromium to the Columbia River by 98% over the no action alternative. The chromium discharge to the Columbia River is reduced by a greater percentage with pumping than with the vertical barrier, because the chromium located between the wall and the river is still available to discharge to the river. Compared with the no action simulation, this simulation indicates that a vertical barrier wall would be effective in minimizing further migration of contaminated groundwater into the Columbia River. Decreasing the pumping rate to 135 m³/d (25 gpm) results in an 88% decrease in the amount of chromium discharging to the river.~~ The extraction and treatment simulations showed that the well network pumping at 50 gpm reduced the amount of chromium entering the river by over 95 percent. Increasing the pumping rate to 100 gpm showed no significant improvement in performance. Decreasing the pumping rate to 25 gpm reduced the amount of chromium entering the river by less than 90 percent, so there may be a difference in performance at that pumping rate. In any case, such a high percentage of reduction indicates that under the conditions simulated by the model, the extraction and treatment system would intercept the path of the majority of chromium to the river.

Figure 5-1. 100-D/DR Area Model Grid.

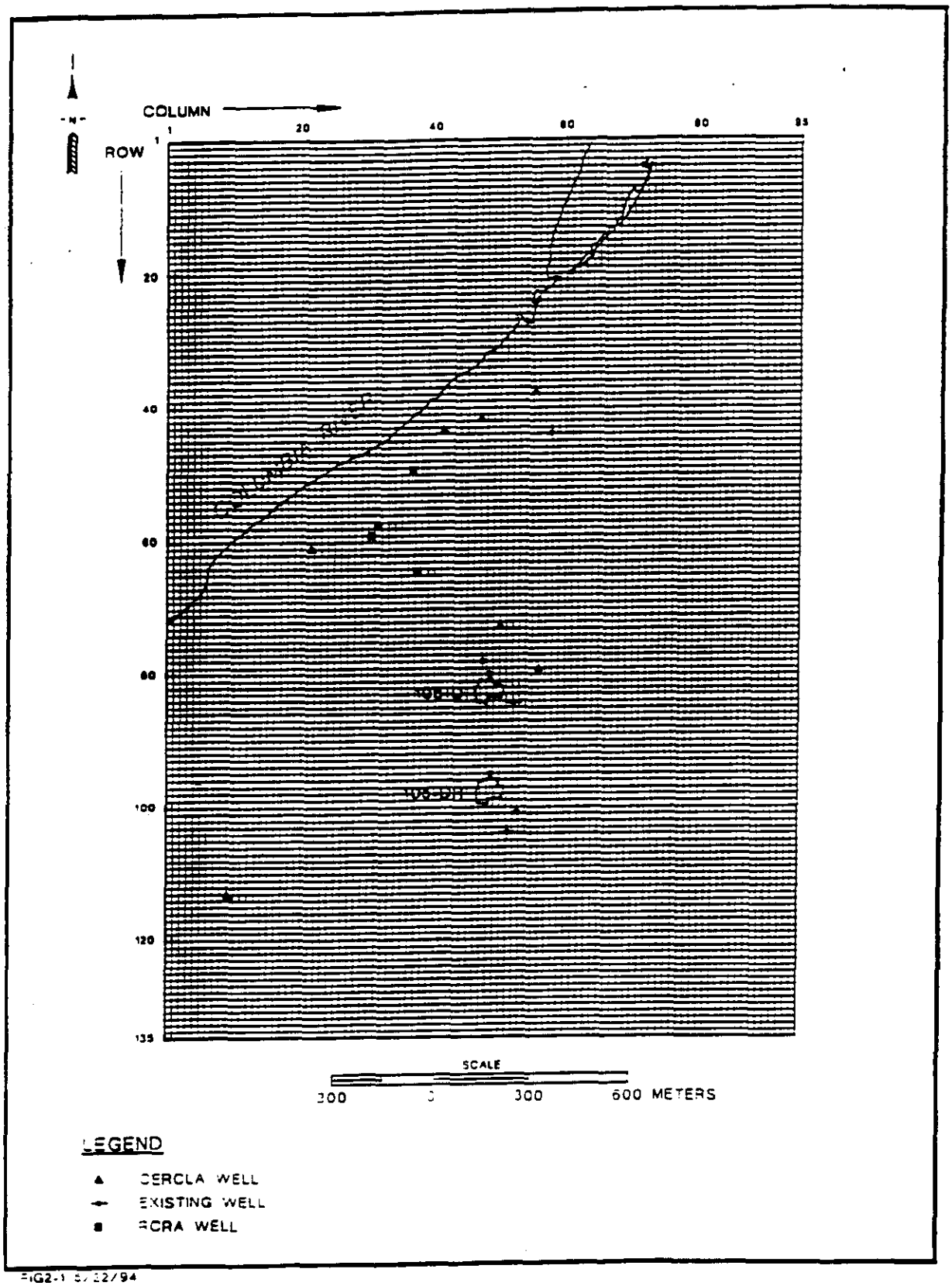

FIG2-1 5/22/94

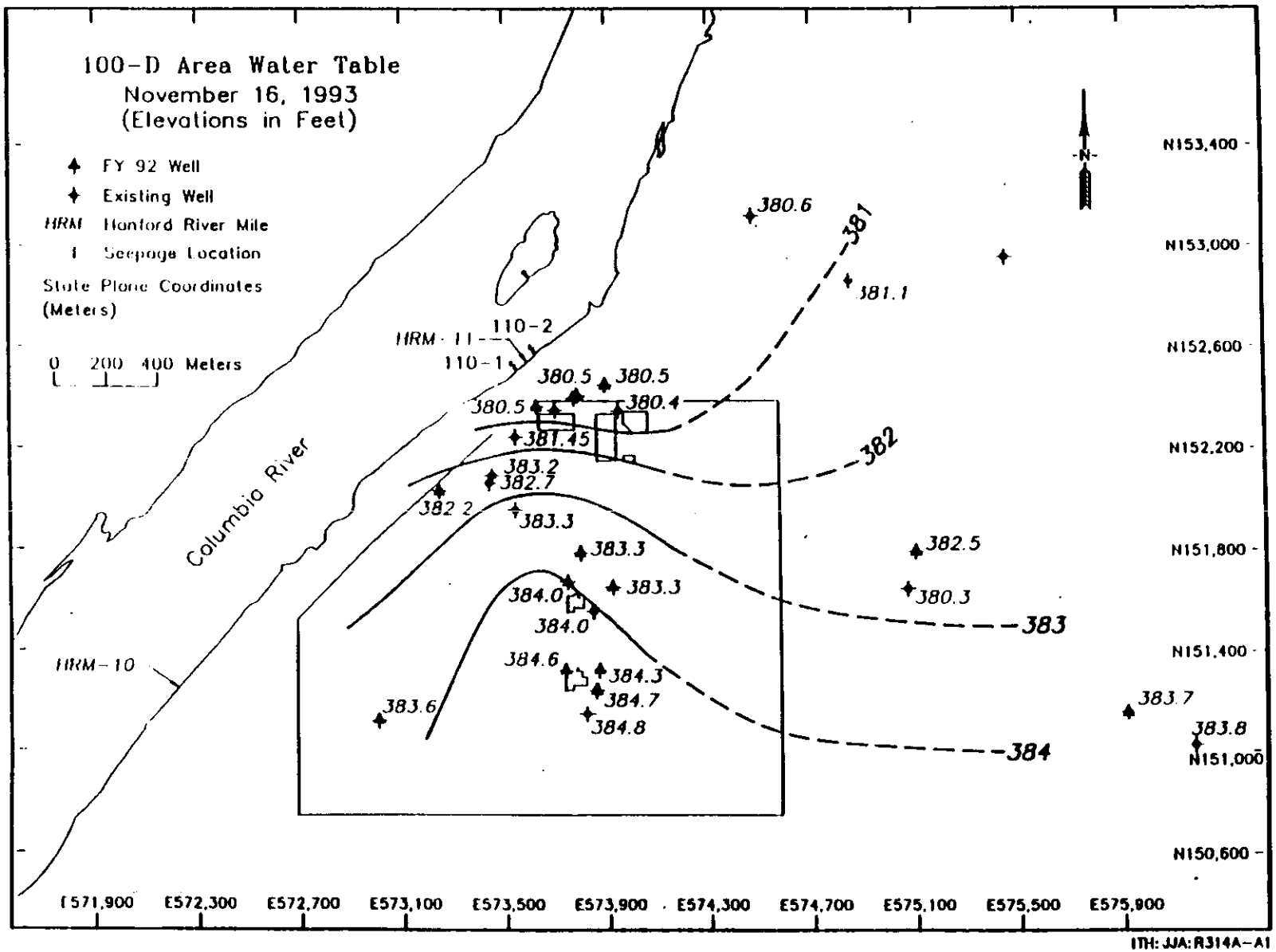

Figure 5-2. 100-D/DR Area Water Table, November 16, 1993.

Figure 5-3. Base of Unit E of the Ringold Formation.

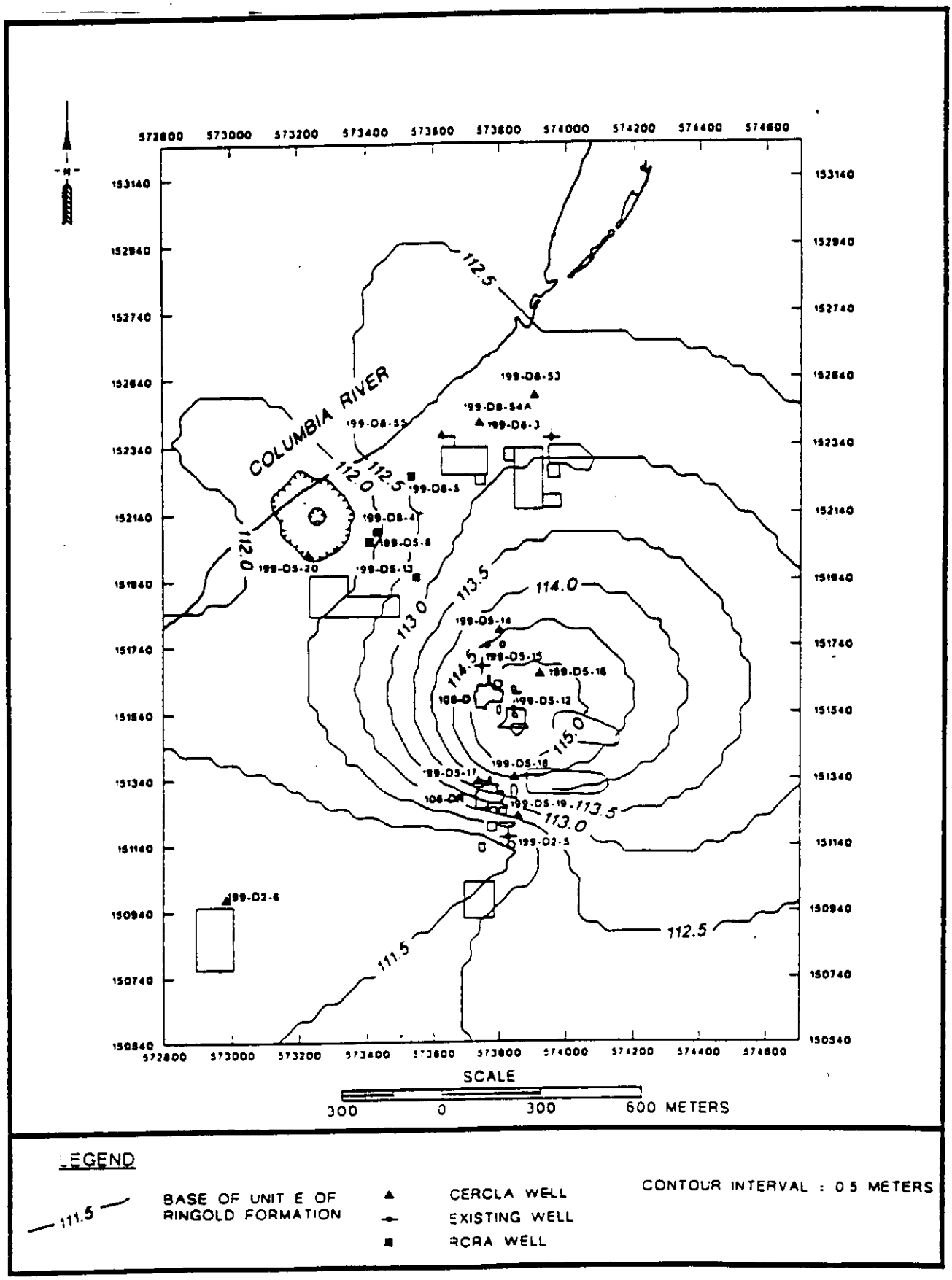

Figure 5-4. Model Calibrated Water Table for the 100-D/DR Area.

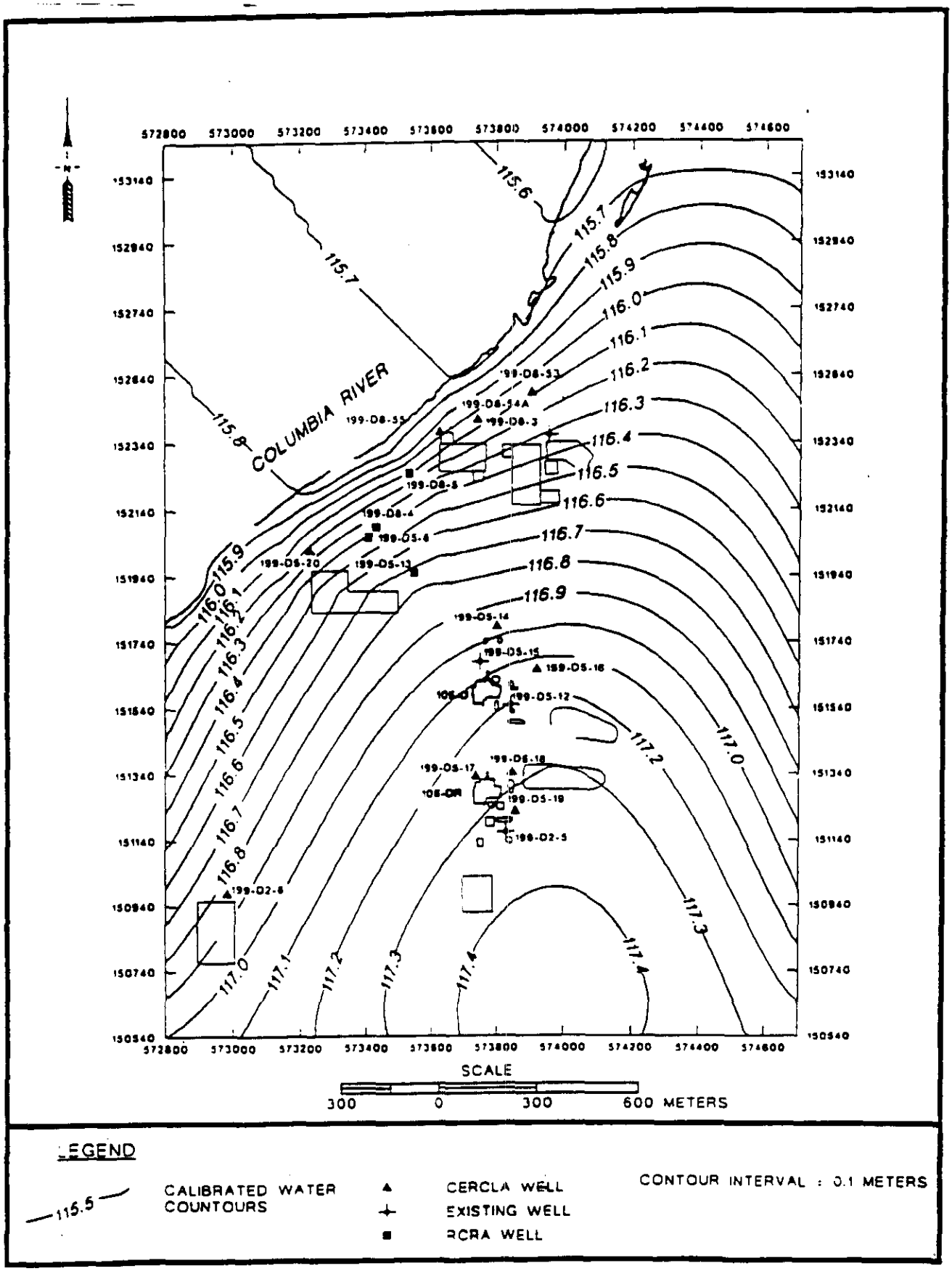

Figure 5-5. 100-H Area Model Grid.

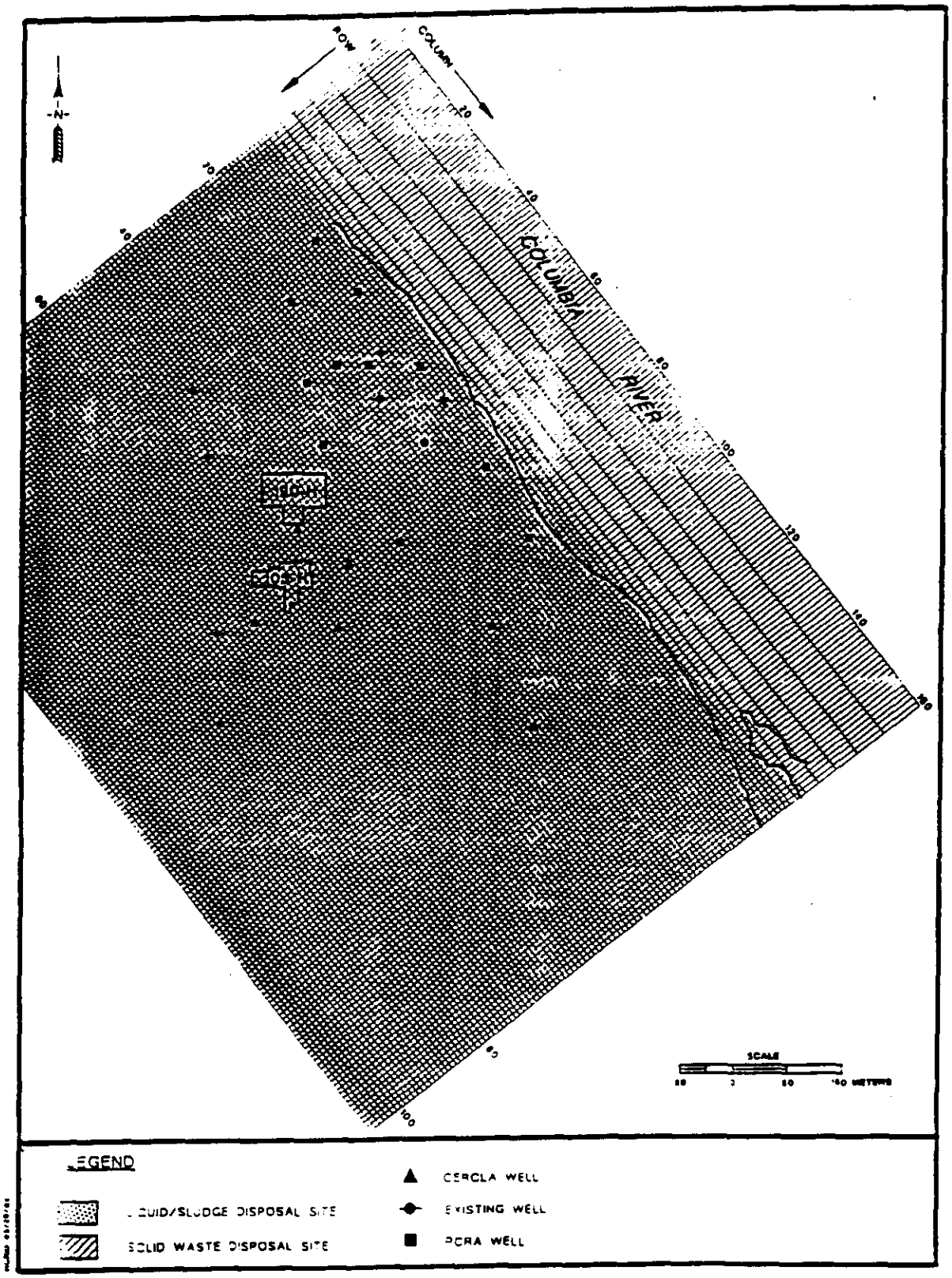

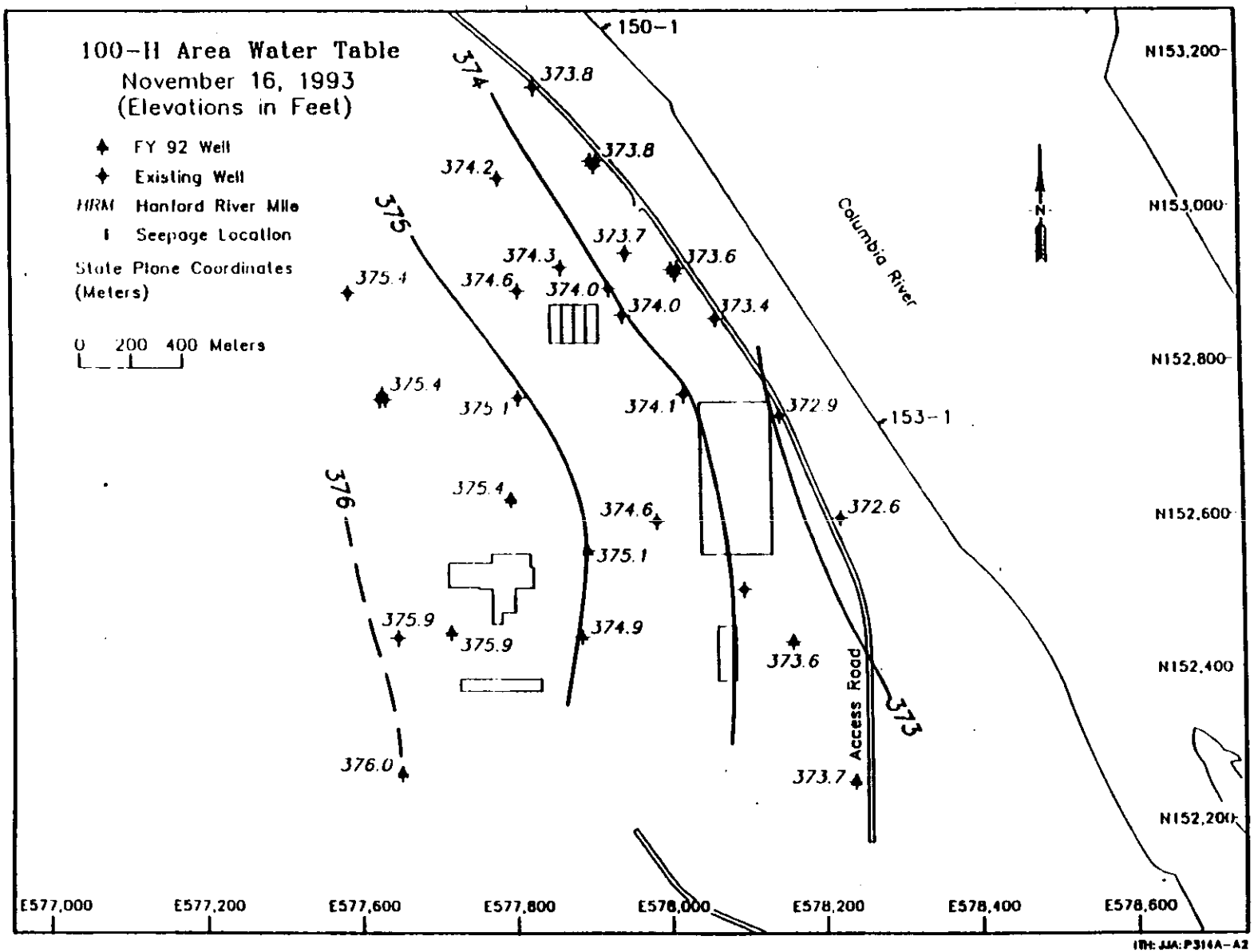

Figure 5-6. 100-H Area Water Table, November 16, 1993.

Figure 5-7. Model Calibrated 1992 Chromium Plume for the 100-H Area.

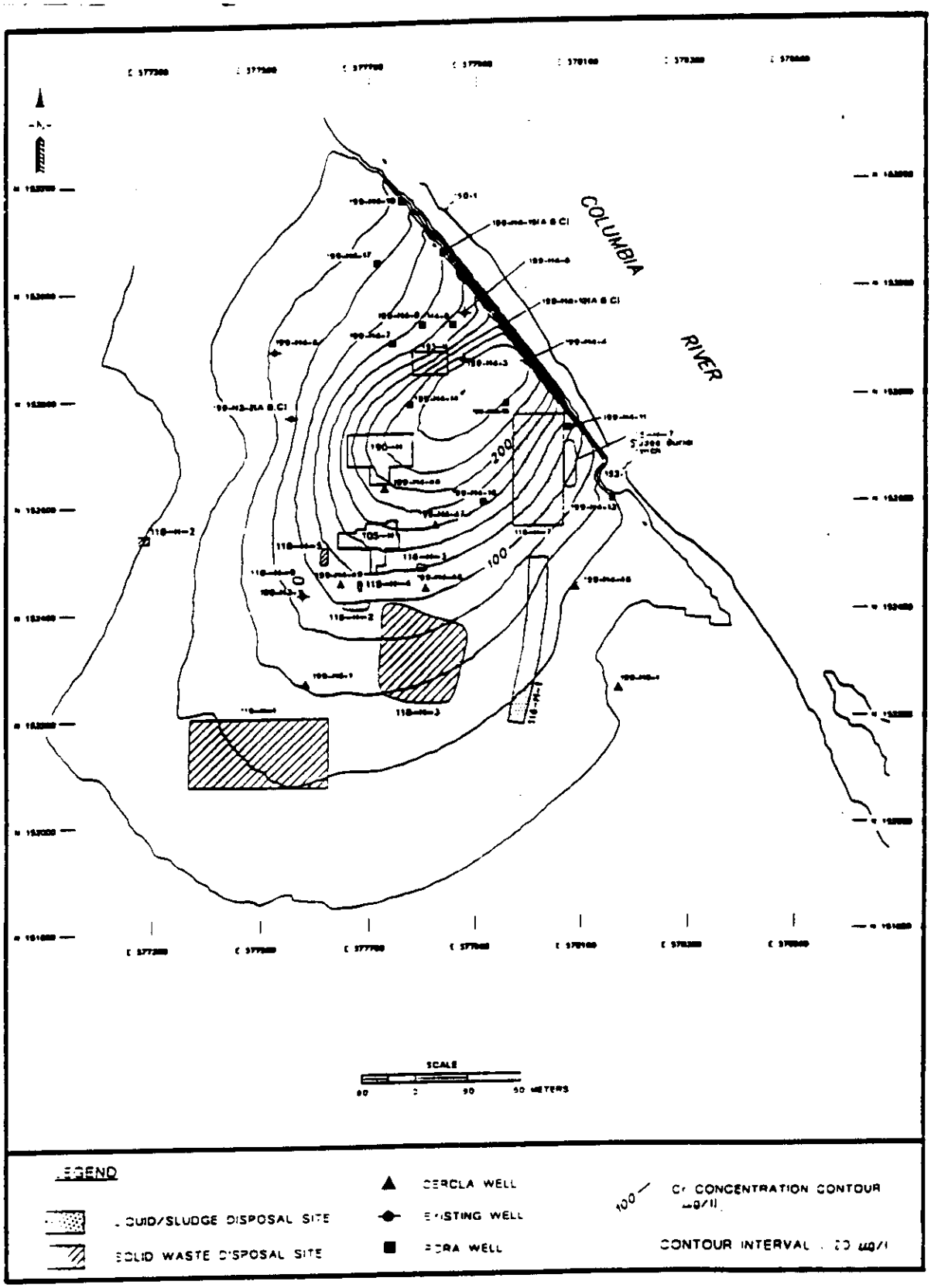

Figure 5-8. Chromium Concentrations in 2008 for the 100-D/DR Area –No Action Scenario (Concentrations in ppb).

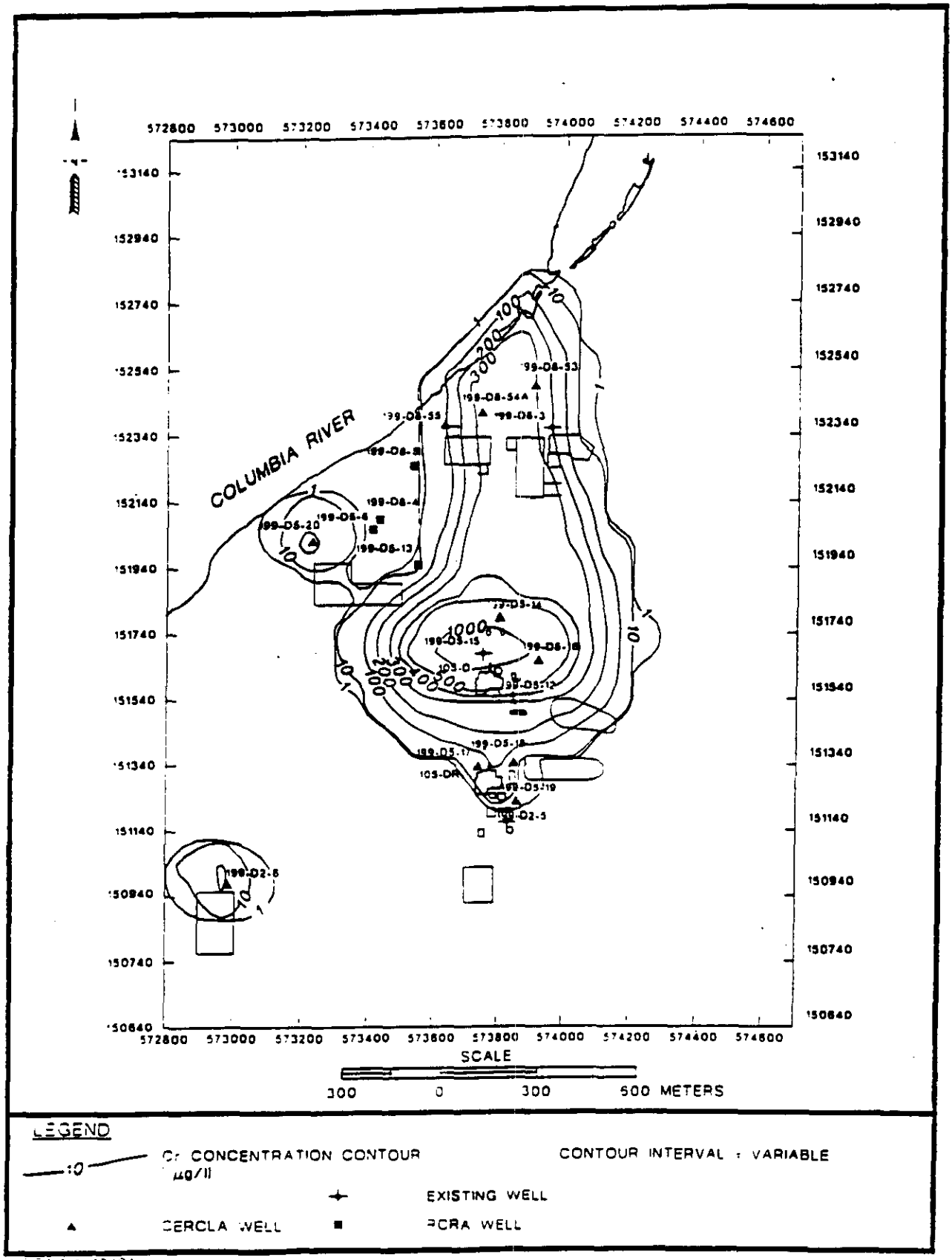

Figure 5-9. Chromium Concentrations in 2008 for the 100-D/DR Area Barrier Wall Simulation (Concentrations in ppb).

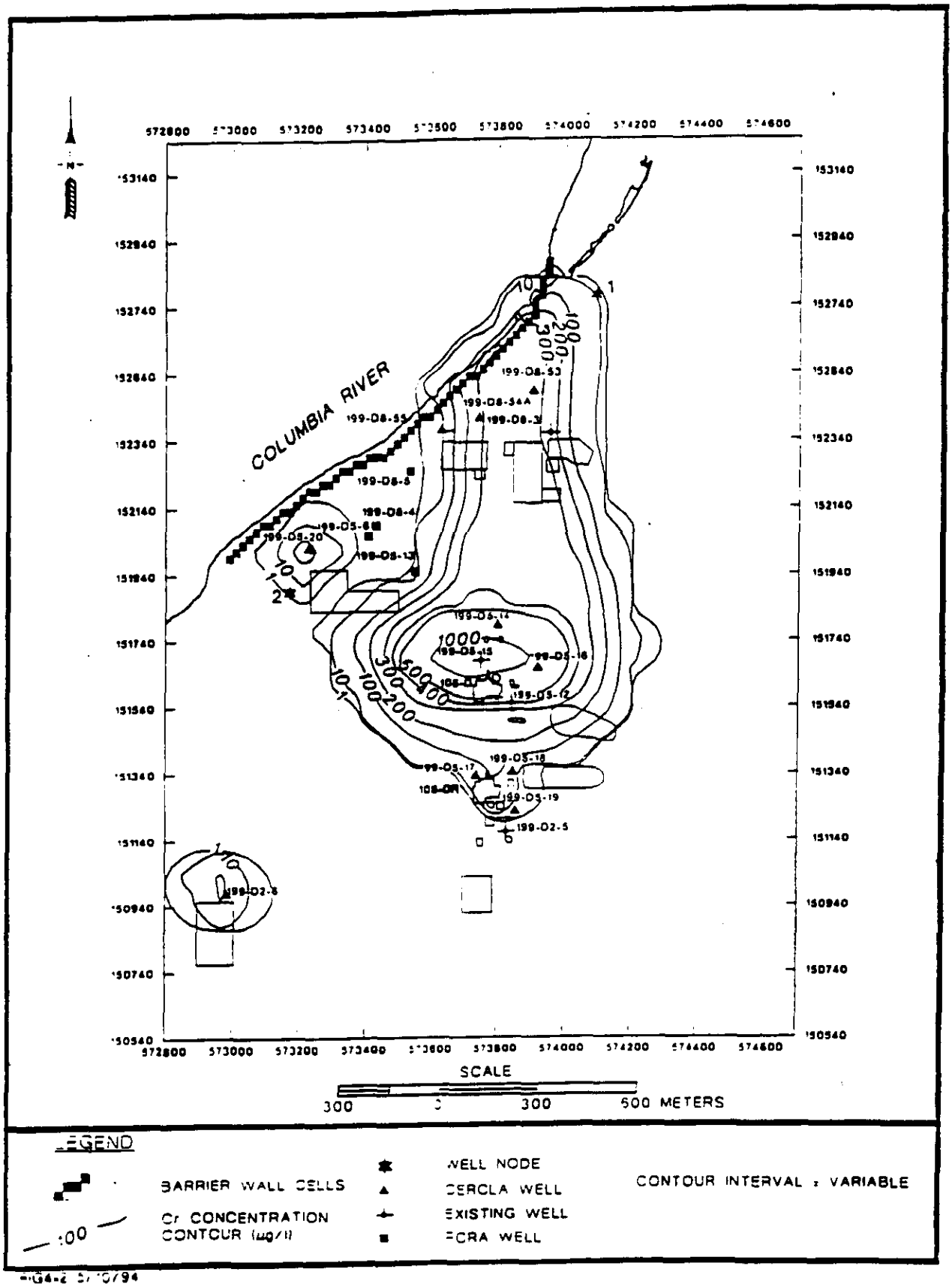

Figure 5-10. Water Table Elevations in 2008 for the 100-D/DR Area Barrier Wall Simulation (Elevations in Meters).

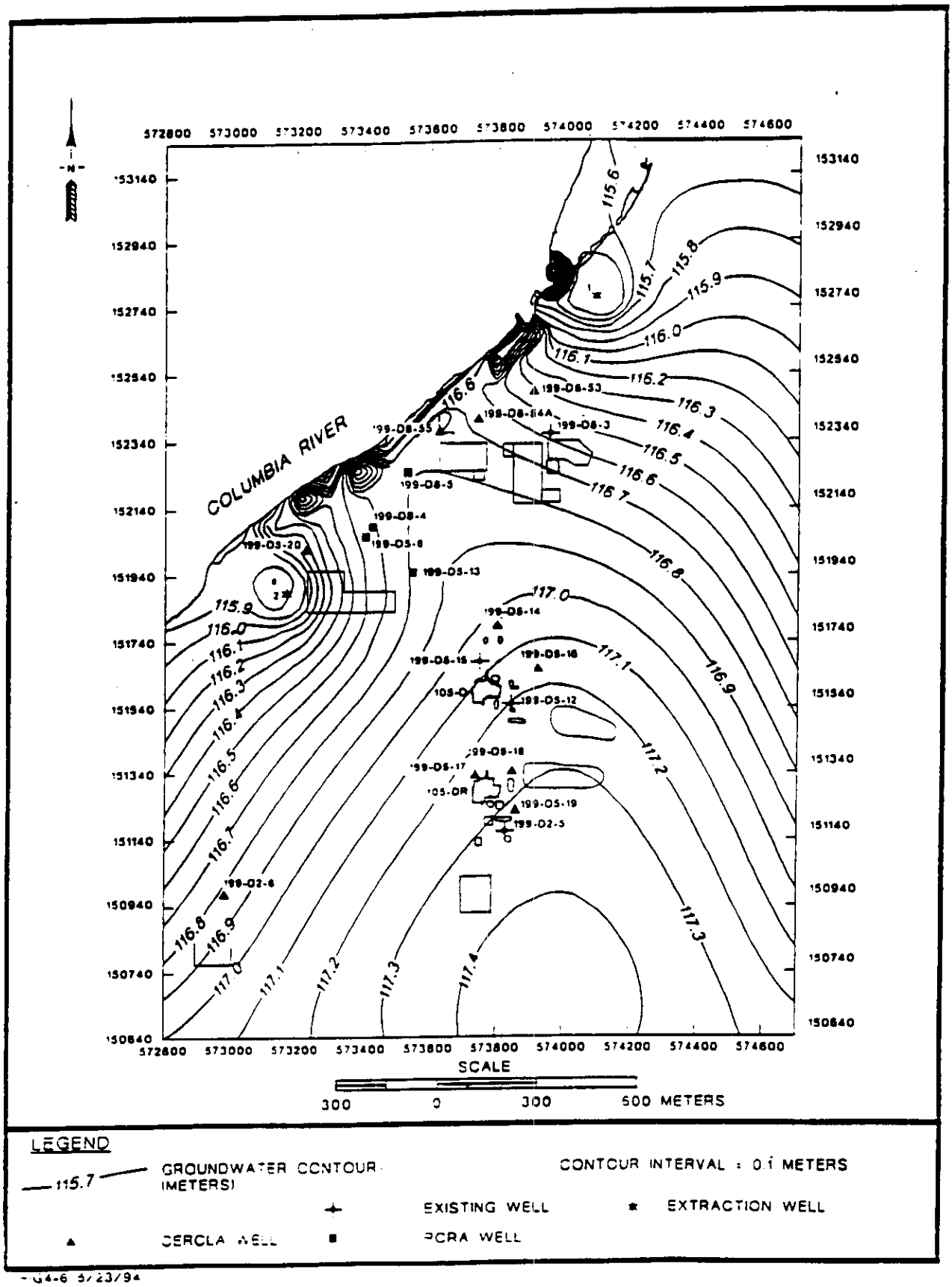

Figure 5-11. Chromium Concentrations in 2008 for the 100-D/DR Area Pump and Treat Simulation (Concentrations in ppb).

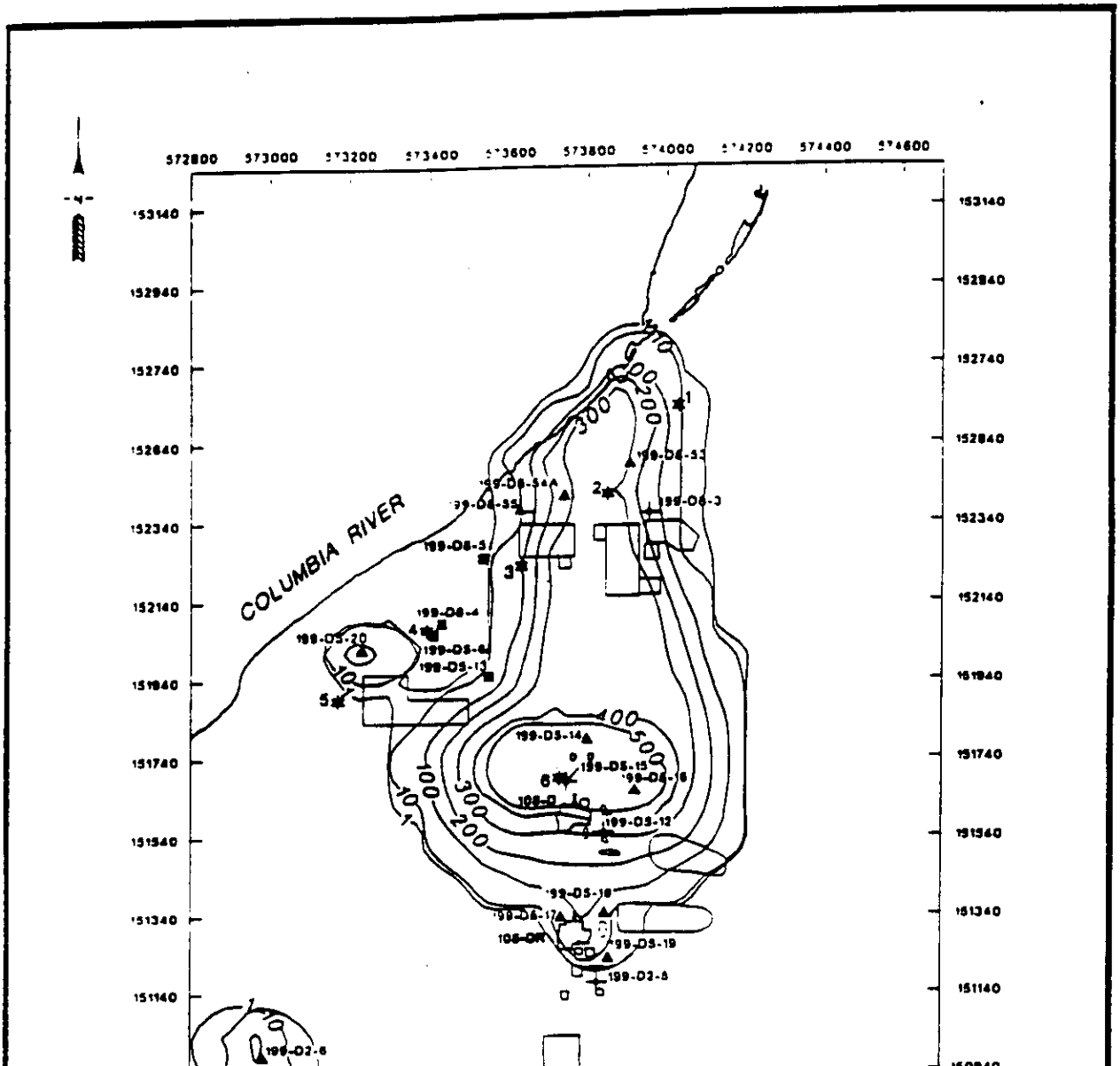

Figure 5-12. Water Table Elevations in 2008 for the 100-D/DR Area Pump and Treat Simulation (Elevations in Meters).

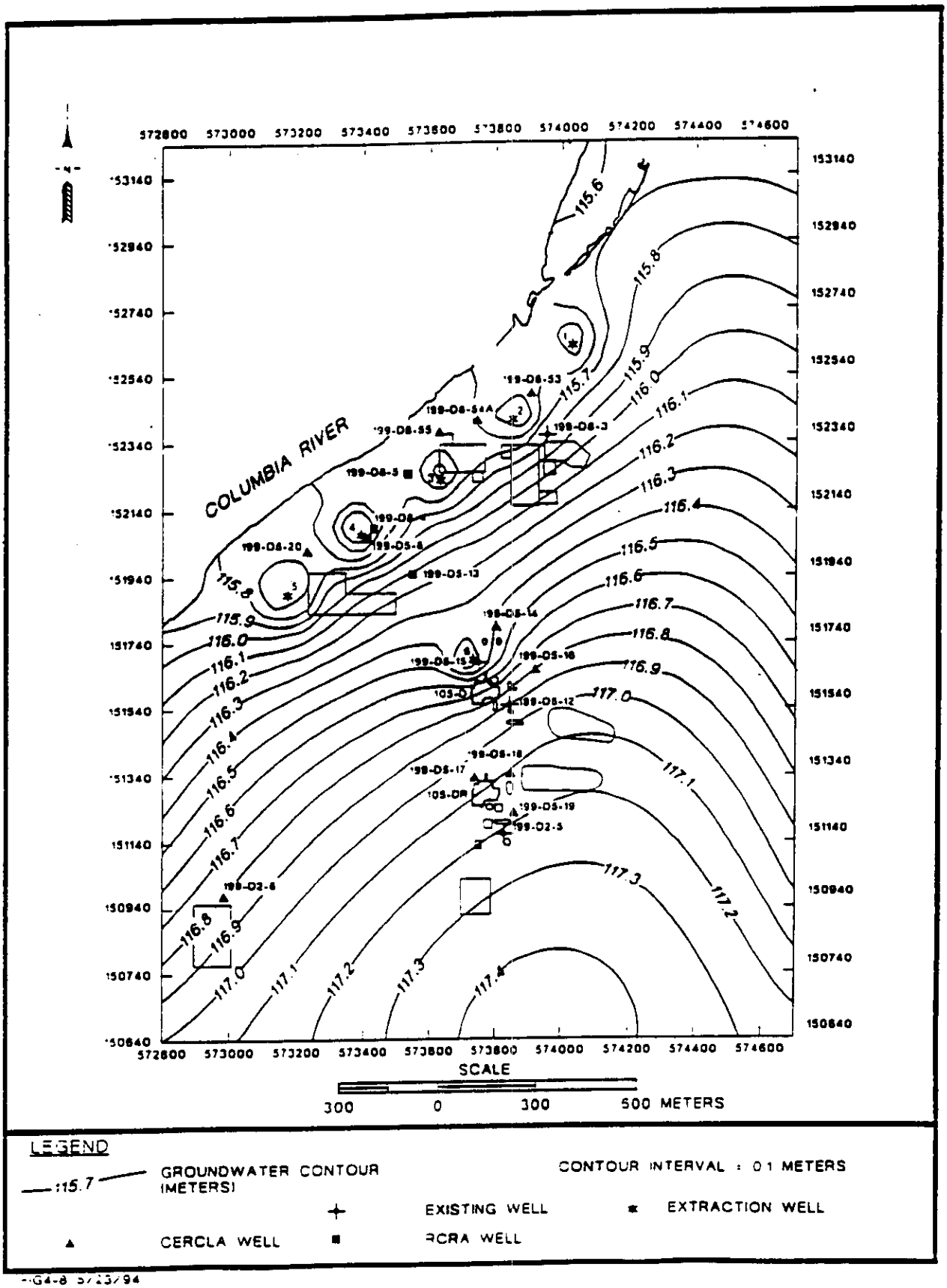

Figure 5-13. Chromium Concentrations in 2008 for the 100-H Area -No Action Scenario (Concentrations in ppb).

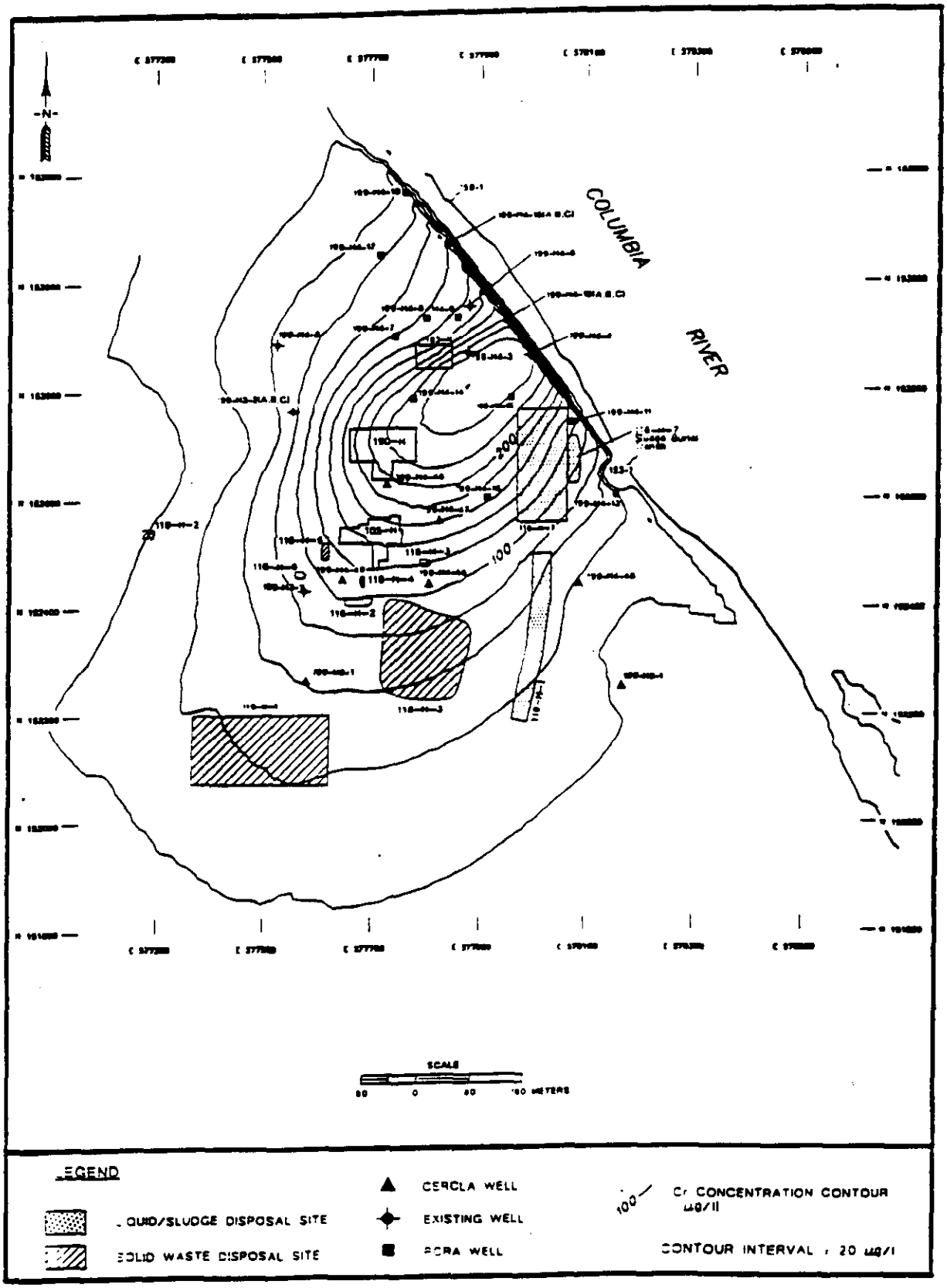

Figure 5-14. Chromium Concentrations in 2008 for the 100-H Area Barrier Wall Simulation (Concentrations in ppb).

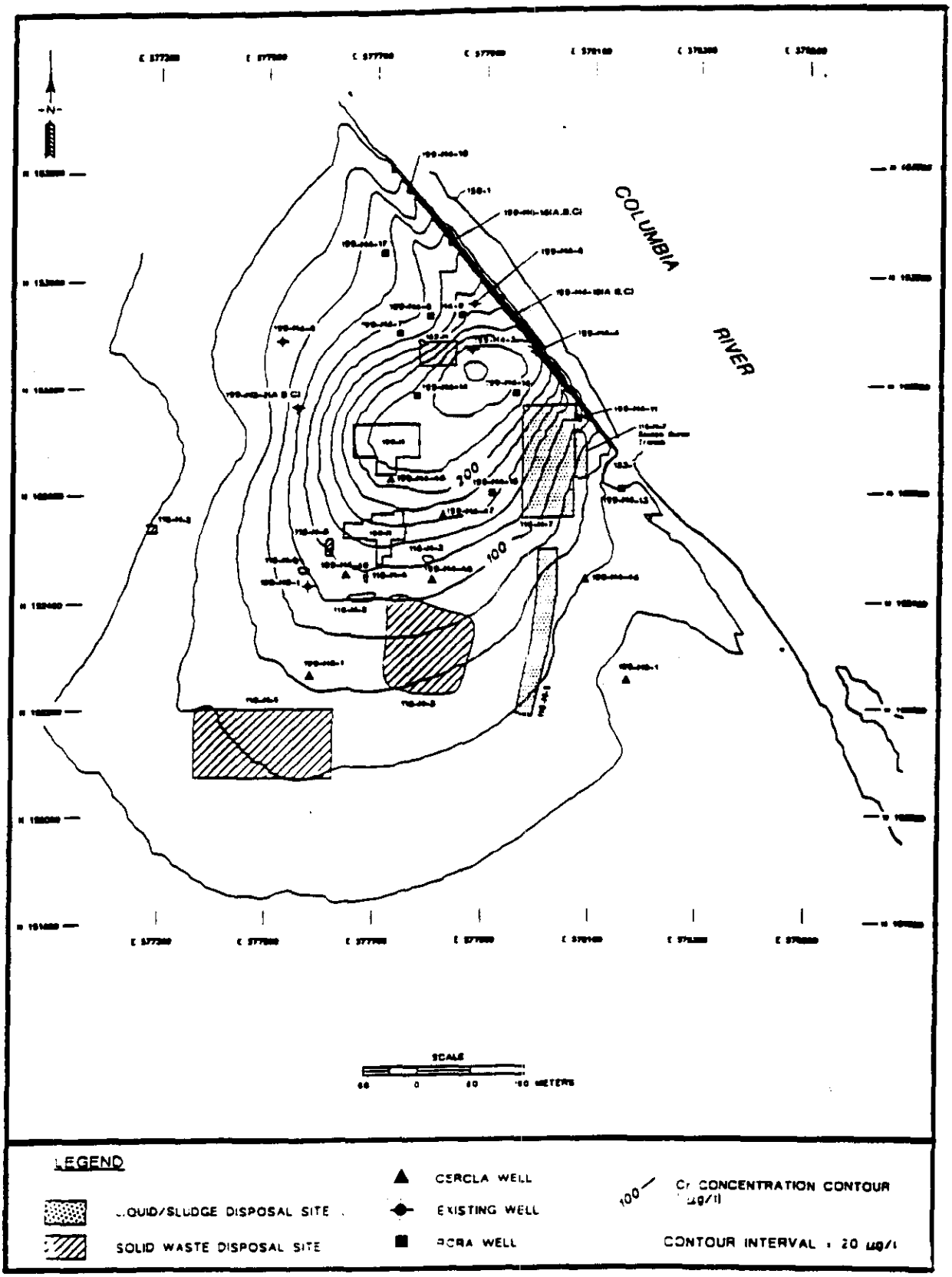

Figure 5-15. Water Table Elevations in 2008 for the 100-H Area Barrier Wall Simulation (Elevations in Meters).

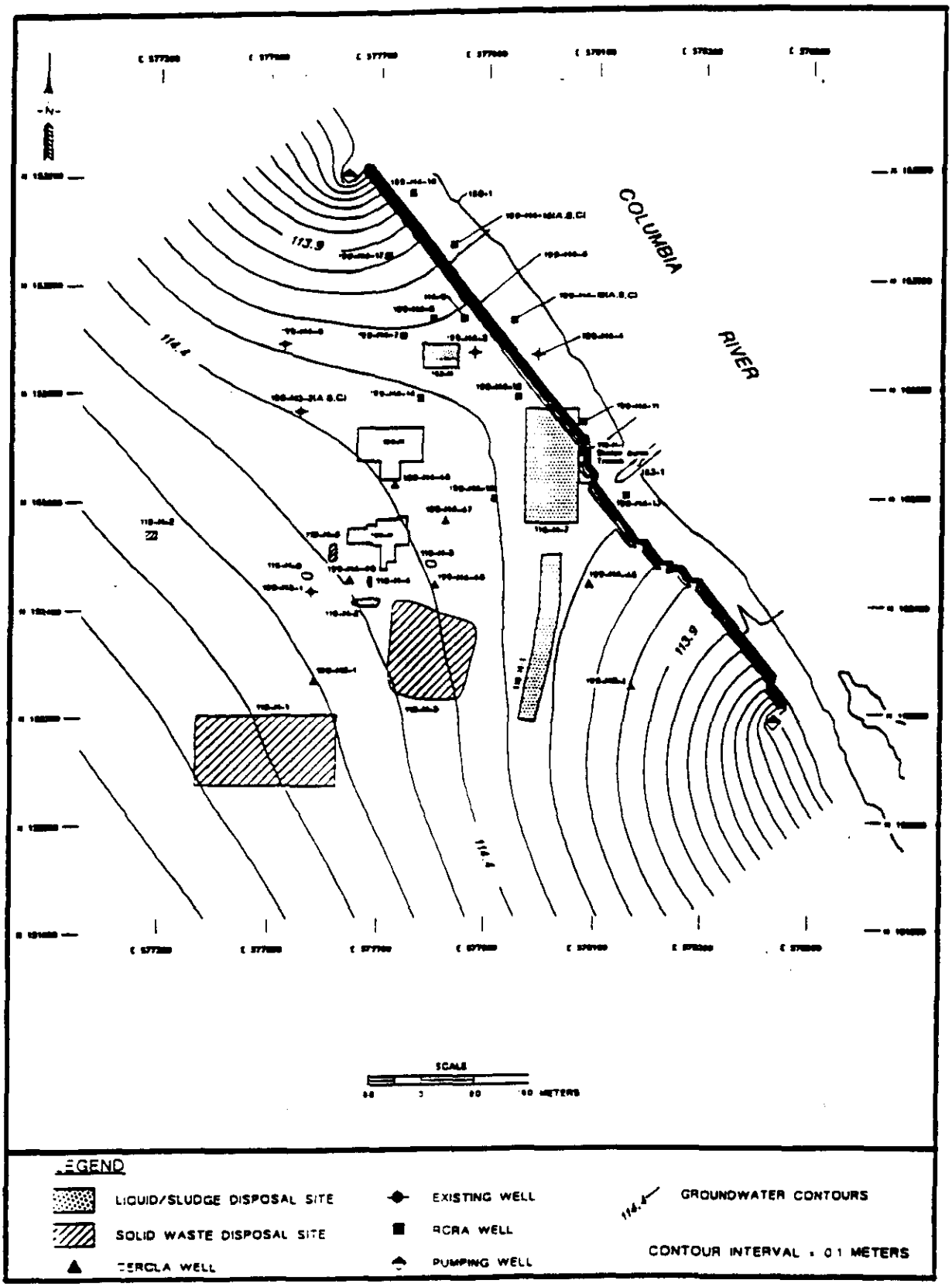

Figure 5-16. Water Table Drawdown for the 100-H Area Pump and Treat Simulation (Elevations in Meters).

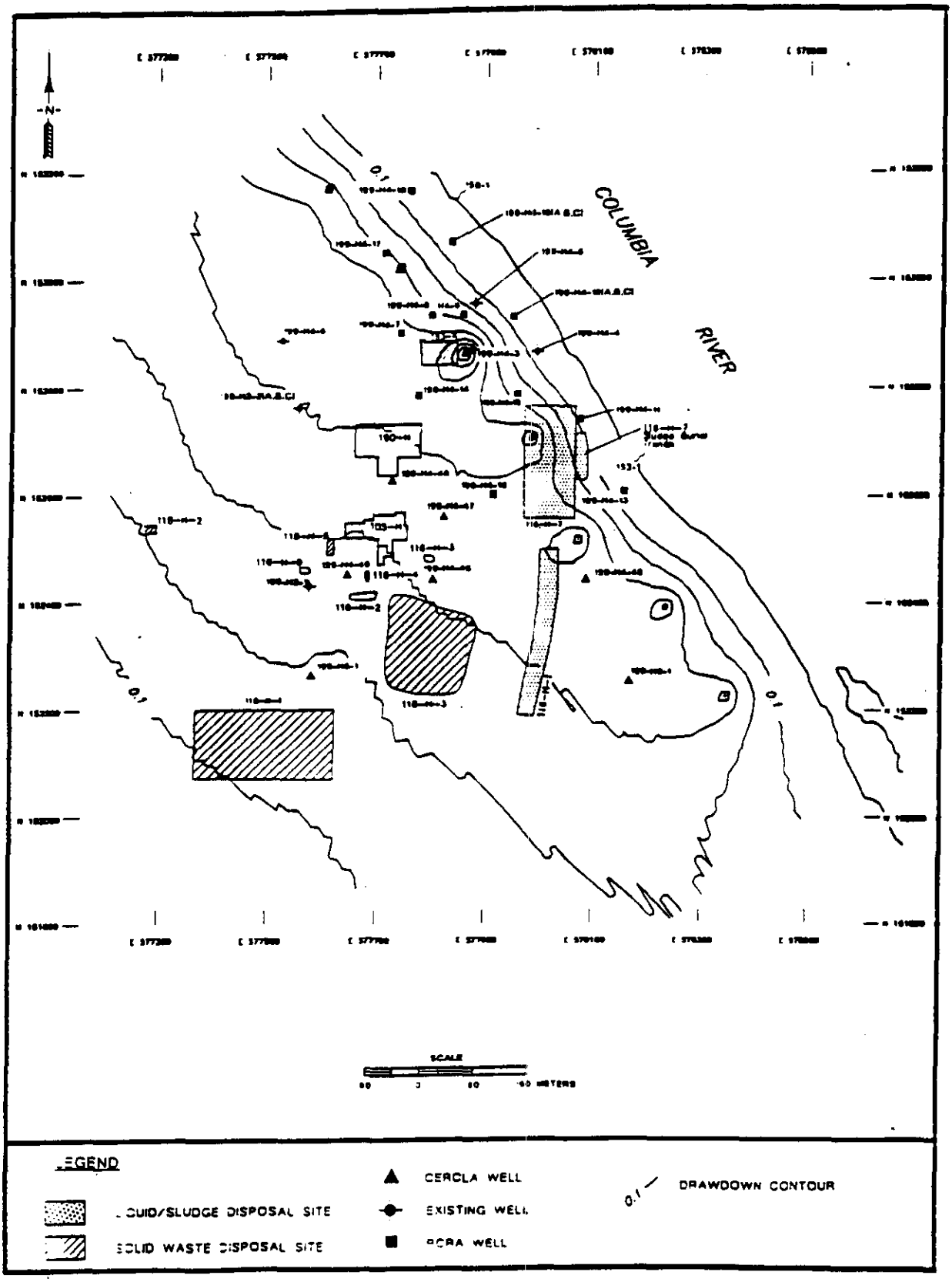

Figure 5-17. Chromium Concentrations in 2008 for the 100-H Area Pump and Treat Simulation (Concentrations in ppb).

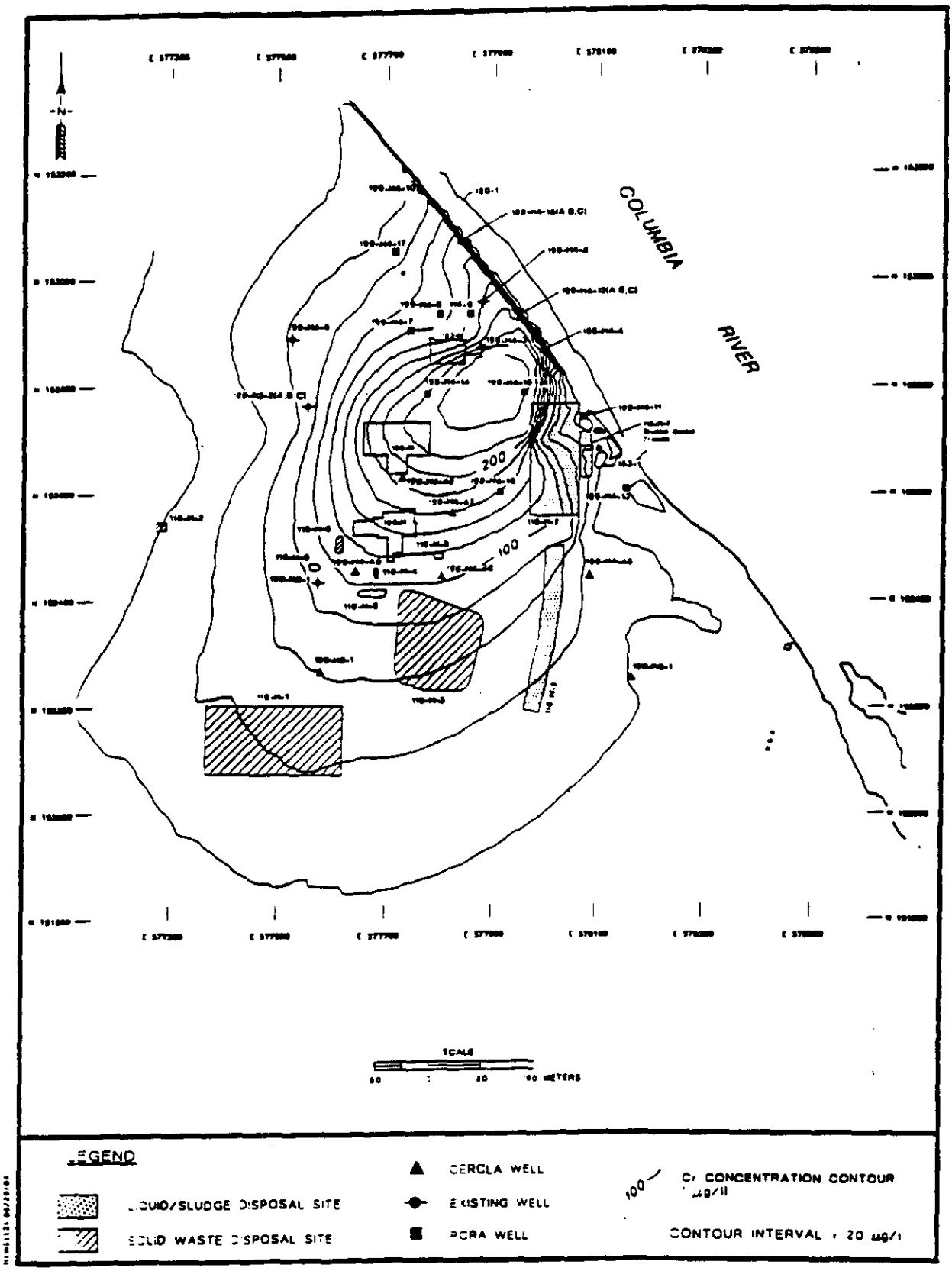

Figure 5-18. Water Table Elevations in 2008 for the 100-H Area Pump and Treat Simulation (Elevations in Meters).

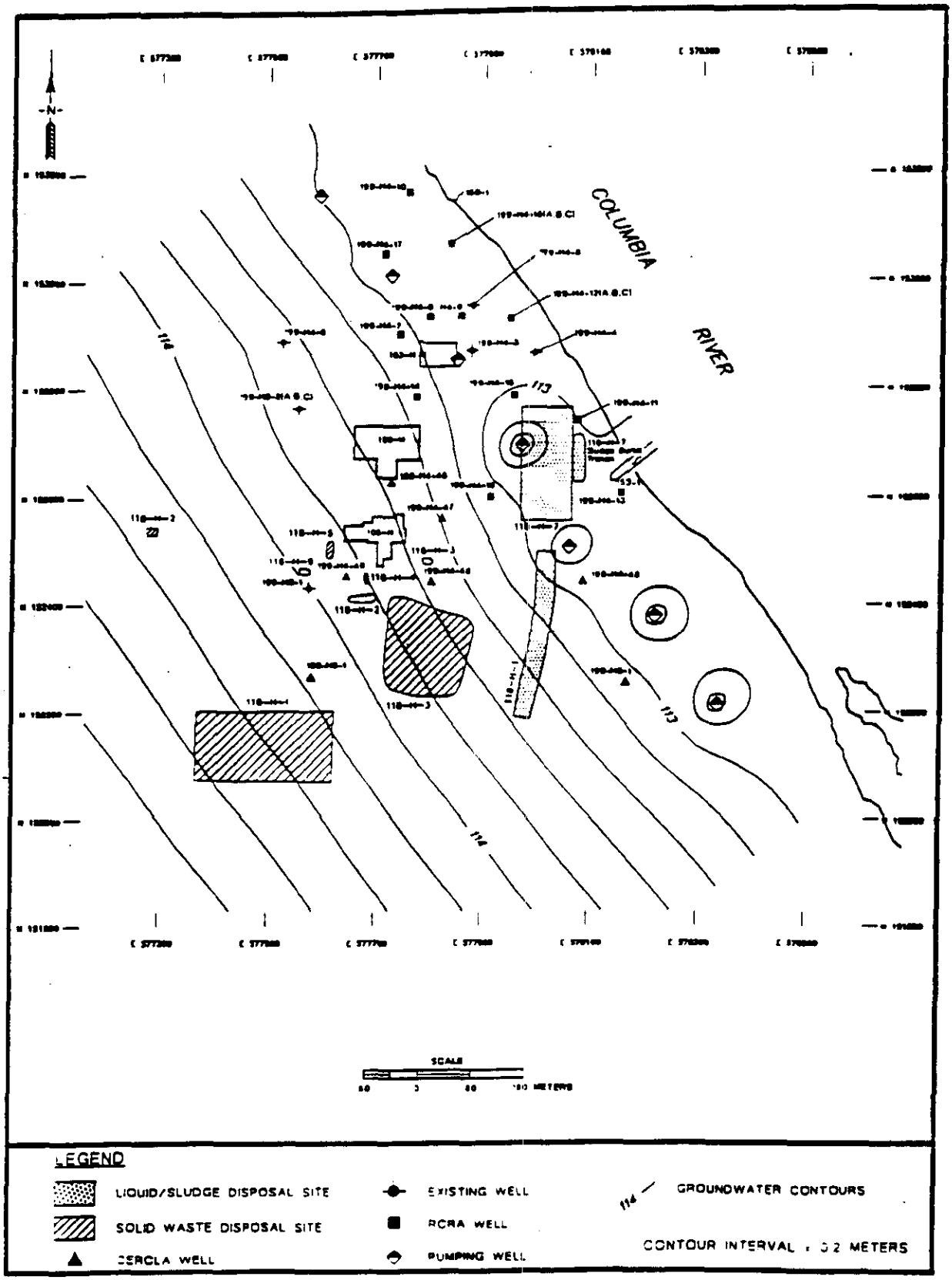

Table 5-1. Comparison of Model Predicted vs. Observed Water Level Elevations for the 100-D/DR Area.
for the 100 D/DR Area

Well Number	Observed Groundwater Head (meters)	Modeled Groundwater Head (meters)	Model Error (meters)
199-D2-5	117.31	117.34	0.03
199-D2-6	116.91	116.85	-0.06
199-D5-12	117.07	117.21	0.14
199-D5-13	116.83	116.73	-0.10
199-D5-14	116.90	116.96	0.06
199-D5-15	117.03	117.06	0.03
199-D5-16	116.94	117.14	0.20
199-D5-17	117.22	117.25	0.03
199-D5-18	117.13	117.29	0.16
199-D5-19	117.25	117.32	0.07
199-D5-20	116.49	116.24	-0.25
199-D8-3	115.97	116.32	0.35
199-D8-5	116.27	116.10	-0.17
199-D8-53	115.96	116.08	0.12
199-D5-54A	115.97	116.03	0.06
199-D8-55	115.97	115.97	0.00
199-D8-6	116.66	116.43	-0.23
Mean Error		0.03 meters	
Mean Absolute Error		0.12 meters	
Root Mean Square Error		0.15 meters	

Table 5-2. Comparison of Model Predicted vs. Observed Water Level Elevations for the 100-H Area.

Well Number	Observed Groundwater Head (meters)	Modeled Groundwater Head (meters)	Model Error (meters)
199-H3-1	114.59	114.41	0.18
199-H3-2A	114.45	114.14	0.31
199-H4-4	113.64	113.15	0.49
199-H4-7	114.04	113.69	0.35
199-H4-8	113.93	113.51	0.42
199-H4-9	113.83	113.44	0.39
199-H4-10	113.78	113.24	0.54
199-H4-11	113.51	113.14	0.37
199-H4-12A	113.72	113.17	0.55
199-H4-13	113.41	113.12	0.29
199-H4-14	114.19	113.82	0.37
199-H4-15A	113.78	113.21	0.57
199-H4-45	113.87	113.54	0.33
199-H5-1	114.58	114.59	-0.01
199-H6-1	113.90	113.64	0.26
Mean Error		0.36 meters	
Error Standard Deviation		0.15 meters	

Table 5-3 Sensitivity Analysis Results

Remedial Action Alternative	Model Simulation	Initial Concentrations	Porosity	Retardation Factor	Dispersivity		Simulation Time (Years)	Mass Removed at River Nodes (Kg)	Mass Removed at Well Nodes (Kg)
					Longitudinal (Meters)	Transverse (Meters)			
No Action	MTNA11	Oct.-Dec 1992	0.20	25	10	1	16	76.61	na
	MTNA15	Oct.-Dec 1992	0.20	10	10	1	16	88.83	na
	MTNA21	Oct.-Dec 1992	0.20	25	100	10	16	88.50	na
	MTNA24	Oct.-Dec 1992	0.20	10	100	10	16	93.84	na
Vertical Barrier Wall	MTBW211	Oct.-Dec 1992	0.20	25	10	1	16	3.03	1.30
	MTBW212	Oct.-Dec 1992	0.20	10	10	1	16	3.16	12.77
	MTBW221	Oct.-Dec 1992	0.20	25	100	10	16	5.01	10.65
	MTBW222	Oct.-Dec 1992	0.20	10	100	10	16		
Groundwater Extraction and Treatment	MTPT11	Oct.-Dec 1992	0.20	25	10	1	16	1.88	418.20
	MTPT12	Oct.-Dec 1992	0.20	10	10	1	16	1.72	346.50
	MTPT21	Oct.-Dec 1992	0.20	25	100	10	16	3.32	377.12
	MTPT22	Oct.-Dec 1992	0.20	10	100	10	16		

THIS PAGE INTENTIONALLY
LEFT BLANK

6.0 DETAILED ANALYSIS OF ALTERNATIVES

This section presents the methodology and criteria to be used in the detailed analysis and then presents the evaluation of alternatives against the CERCLA evaluation criteria.

6.1 METHODOLOGY AND CRITERIA

Nine evaluation criteria have been identified in EPA guidance to evaluate remedial actions. The evaluation criteria are the basis for the detailed analysis task during the FS. The criteria, as defined in *Guidance for Conducting Remedial Investigations and Feasibility Studies Under CERCLA* (EPA 1988), are discussed below.

6.1.1 Overall Protection of Human Health and the Environment

This criterion provides an assessment of whether or not each alternative provides adequate protection of human health and the environment. Evaluation focuses on a specific alternative's ability to achieve adequate protection, and describes how the site risks posed through each pathway being evaluated by the FFS are eliminated, reduced, or controlled through natural processes, treatment, engineering, or institutional controls. This evaluation also allows for the consideration of any unacceptable short-term or cross-media impacts associated with each alternative. The following questions represent the information included in the analysis of this criterion.

- Will risk be at acceptable levels?
- What is the time frame to achieve acceptable levels?
- Will additional threats be minimized?

6.1.2 Compliance with ARAR

This criterion is used to determine whether or not each alternative will meet Federal and state ARARs and TBCs, and whether or not there is justification for an ARAR waiver. The CERCLA defines six types of ARAR waivers, as follows:

- Interim actions
- Greater risk to health and the environment
- Technical impracticability

- Equivalent standard of performance
- Inconsistent application of state requirements
- Fund-balancing.

Questions concerning compliance with ARARs that are addressed in the detailed analysis include the following.

- Are ARARs available?
- What are the potential ARARs?
- Will the potential ARARs be met and how?
- What is the basis for waivers?
- If ARARs are not available, what are the potential TBCs?
- Is the alternative consistent with the potential TBCs?

6.1.3 Long-Term Effectiveness and Permanence

This criterion addresses the risk remaining at the site after RAOs have been met. The primary focus of this evaluation is the extent and effectiveness of the controls that may be required to manage the risk posed by treatment residuals and/or untreated wastes. The following questions are addressed in the detailed analysis.

- What is the magnitude of the remaining risk?
- What remaining sources of risk can be identified? How much is due to treatment residuals and how much is due to untreated residual contamination?
- Will a 5-year review be required?
- What is the likelihood that the technologies will meet required process efficiencies of performance specifications?
- What type and degree of long-term management is required?
- What are the requirements for long-term monitoring?
- What operation and maintenance functions must be performed?

- What difficulties and uncertainties may be associated with long-term operation and maintenance?
- What is the potential need for replacement of technical components?
- What is the magnitude of the threats or risks should the remedial action need replacement?
- What is the degree of confidence that controls can adequately handle potential problems?
- What are the uncertainties associated with land disposal of residuals and untreated waste?

6.1.4 Reduction of Toxicity, Mobility, or Volume Through Treatment

The goal of this criterion is to address the statutory preference for remedial actions employing treatment technologies that permanently and significantly reduce toxicity, mobility, and volume. This evaluation focuses on the following questions.

- Does the treatment process employed address the principal threats?
- Are there any special requirements for the treatment process?
- What portion (mass, volume) of contaminated material is destroyed?
- What portion (mass, volume) of contaminated material is treated?
- To what extent is the total mass of toxic contaminants reduced?
- To what extent is the mobility of toxic contaminants reduced?
- To what extent is the volume of toxic contaminants reduced?
- To what extent are the effects of treatment irreversible?
- What residuals remain?
- What are their quantities and characteristics?
- What risks do treatment residuals pose?
- Are principal threats within the scope of the action?
- Is treatment used to reduce inherent hazards posed by principal threats at the site?

6.1.5 Short-Term Effectiveness

This evaluation criterion addresses the effects of the alternative during the construction and implementation phase until RAOs are met. The following factors should be addressed, as appropriate, for each alternative.

- The health and safety of the community during remedial actions
- The health and safety of workers during remedial actions
- Environmental impacts
- Time until remedial response objectives are achieved.

6.1.6 Implementability

The implementability criterion addresses the technical and administrative feasibility of implementing an alternative, as well as the availability of various services and materials required during its implementation. This criterion involves analysis of the following factors:

- Technical feasibility
  - Construction and operation
  - Reliability of technology
  - Ease of undertaking additional remedial action
  - Monitoring considerations
  - Ability of technology to meet PRGs, including detection limits
- Administrative feasibility
  - Activities needed to coordinate with other offices and agencies
- Availability of services and materials
  - Availability of adequate offsite treatment, storage capacity, and disposal services
  - Availability of necessary equipment and specialists, and provisions to ensure any necessary additional resources
  - Availability of services and materials plus the potential for obtaining competitive bids, which may be particularly important for innovative technologies
  - Availability of prospective technologies.

6.1.7 Cost

This criterion addresses capital costs, both direct and indirect; annual operations and maintenance (O&M) costs; the accuracy of the cost estimate; a present worth analysis; and a cost sensitivity analysis of alternatives.

6.1.7.1 Direct Capital Costs. Direct capital costs include the following:

- Construction costs
- Equipment costs
- Land and site development costs
- Buildings and services costs
- Relocation expenses
- Disposal costs.

6.1.7.2 Indirect Capital Costs. Indirect capital costs include the following:

- Engineering expenses
- License or permit costs
- Startup and shakedown costs
- Contingency allowances.

6.1.7.3 Annual O&M Costs. Annual operations and maintenance costs include the following:

- Operating labor costs
- Maintenance materials and labor costs
- Auxiliary material and energy
- Disposal of residues
- Purchased services
- Administrative costs
- Insurance, taxes, and licensing costs

- Maintenance reserve and contingency funds
- Rehabilitation costs
- Costs of periodic site reviews.

6.1.7.4 Accuracy of Cost Estimates. Study estimates of costs are expected to provide an accuracy of +50% to -30% and are prepared using data available from the LFI, treatability studies, and ongoing projects.

6.1.7.5 Present Worth Analysis. Present worth analysis is used to evaluate expenditures that occur over different time periods by discounting all future costs to a common base year, usually the current year. This allows all alternatives to be assessed based on current costs of the remedial action. The present worth analysis requires assumptions to be made regarding the discount rate and the period of performance. A discount rate of 5%, before taxes and after inflation, is recommended. The period of performance should not exceed 30 years.

6.1.8 Regulatory Acceptance

Regulatory acceptance evaluates the technical and administrative concerns of the regulating agency. These concerns are generally addressed in the ROD by the regulatory agencies, so they will not be addressed in this FFS.

6.1.9 Community Acceptance

This is an evaluation of the concerns of the public and is addressed by the regulatory agencies in the ROD.

6.2 COMMON EVALUATION CONSIDERATIONS

In addition to the nine CERCLA criteria, specific environmental resources (such as air quality) and NEPA issues (such as cumulative impacts) are considered during the selection of Remedial Alternatives. Consideration of environmental resources and NEPA issues are required to meet the DOE Secretarial Policy on NEPA, and provide a complete evaluation of the Remedial Alternatives. Several of the CERCLA evaluation criteria involve consideration of environmental resources, but the emphasis is frequently directed at the potential effects of chemical contaminants on living organisms. Environmental resources in the NEPA context also includes consideration of potential effects on resources, such as transportation, air quality, ~~socioeconomic~~ surface water, and visual resources. Also, the NEPA process involves consideration of several issues, such as indirect and cumulative impacts, the irreversible and irretrievable commitment of resources, and the actions that may be taken to avoid or mitigate environmental impacts. The NEPA-related resources and issues are described in Section ~~5.2.1~~6.2.1 and ~~5.2.2~~6.2.2 below.

~~5.2.1~~6.2.1 Resources

~~5.2.1.1~~6.2.1.1 Transportation Impacts. The ~~proposed~~ Remedial Alternatives evaluated in this FFS are not expected to create any long-term negative transportation impacts. If adverse impacts to transportation are detected, remedial activities will be modified or stopped until the problem is mitigated.

The No Action and Institutional Control Alternatives will not affect transportation. These alternatives will not require the transport of any equipment, construction materials, or waste. Commuter traffic flow would not increase or decrease.

The Containment~~, Removal/Disposal, In-Situ Treatment,~~ and Removal/Treatment/ Disposal Alternatives will require transport of equipment, construction materials and solid waste that could result in transportation impacts, primarily within the boundaries of the Hanford Site. The construction-related ~~and commuter (worker)~~ traffic ~~flow~~ for the Containment/Removal/Disposal and ~~Removal/Treatment/Disposal~~ Alternatives would be higher than for the Removal/Treatment/Disposal ~~containment and In-Situ Treatment~~ Alternatives

6.2.1.2 Ecological Impacts.~~5.2.1.2 Ecological Impacts~~. The No Action and Institutional Control Alternatives would not affect existing natural resource conditions. However, these alternatives do not include revegetation or other habitat enhancement actions. Without revegetation or other habitat enhancement efforts, most sites would not be restored to a native condition.

The Containment~~, Removal/Disposal, In-Situ Treatment, and Removal/Treatment/ Disposal~~ and Removal/Treatment/Disposal Alternatives would destroy some existing vegetation ~~at~~in the 100 Area as a ~~waste site~~result of surface activities such as construction of access roads, pile driving, well installation, and treatment system construction.— In most cases, this is a minor impact because most waste sites in the 100 Area have already been severely disturbed, and because the surface areas required to implement the actions are relatively small. ~~Contaminant removal or onsite containment,removal of contamination followed by revegetation and~~ Restoration efforts following installation of containment wallswould benefit natural resources in the long term.

~~5.2.1.3~~6.2.1.3 Air Quality Impacts. Hanford Site air quality is generally good. The proposed remediation alternatives are not expected to cause long-term negative impacts to existing air quality. Site restoration ~~and revegetation~~ efforts will preclude long-term wind erosion problems due to remediation activities.

The No Action and Institutional Control Alternatives would not affect short-term air quality. However, the Containment~~, Removal/Disposal, In-Situ Treatment,~~ and Removal/Treatment/Disposal Alternatives will generate fugitive dust. Dust controls and other mitigative measures will be used as needed to ensure that short-term impacts on air quality are minimized.

~~5.2.1.4~~6.2.1.4 **Cultural Resource Impacts.**– ~~For 100 Area waste sites where~~Where cultural resources are present, mitigative measures will be implemented to ensure that cultural resource concerns are properly addressed.

The No Action and Institutional Control Alternatives are not expected to disturb cultural resources. However, if cultural resources are contaminated or legitimate access to cultural resources is denied due to contamination levels, these ~~alternatives may not be appropriate~~ activities may be considered as impacts on cultural resources.

The Containment and ~~In Situ Treatment~~Removal/Treatment/Disposal Alternatives ~~would contain or treat the wastes in place, and therefore would also leave any existing~~could potentially impact cultural resources ~~in~~during the construction phase. ~~However,~~Actions to mitigate potential adverse impacts to significant cultural resources ~~are not expected to occur at waste sites that have already been disturbed~~would be required before initiating these alternatives.

There is latitude regarding where the wells and treatment units are located for the Removal/Treatment/Disposal Alternative, while there is little latitude regarding the placement of the barrier wall for the Containment Alternative. Therefore, the potential impact on known cultural resources could be more easily mitigated by the Removal/Treatment/Disposal Alternative.

~~**The alternatives would generally result in the protection of cultural resources adjacent to the waste site because remedial activities would be confined primarily within the boundary of the waste site**~~.

~~The potential for the Removal/Disposal and Removal/Treatment/Disposal Alternatives to disturb cultural resources would be high. Actions to mitigate adverse impacts to significant cultural resources would be required before initiating these alternatives.~~

6.2.1.5 Socioeconomic Impacts. The outlook for the Tri-Cities economy is uncertain. The local economy could decline or grow in the next 30 years depending on economic activity not directly related to DOE and the Hanford Site. Near-term reductions in the Hanford Site work force will probably have a negative impact on the local economy.

If the No Action and Institutional Control Alternatives are implemented, activities in the 100 Area would be limited to maintenance, security and routine monitoring. These alternatives fail to achieve the principles adopted by the Hanford Advisory Board Work Group for cultural/socioeconomic impacts. There would be no transition of the work force to provide economic stability. These alternatives would do little to provide economic diversification because of the minimum employment levels. The demand for recreational services, social services, facilities, and activities exerted by the few employees associated with the 100 Area and their families would be minimal.

The socioeconomic impacts of the Containment and ~~In-Situ Treatment~~Removal/Treatment/Disposal Alternatives would be relatively minimal. Workers would be employed for several years to perform the work associated with these alternatives. These alternatives meet the principles established by the Hanford Advisory Board Work Group for cultural/socioeconomic impacts. These alternatives allow for work force transition from scientific/engineering to the excavation and construction trades. Effects on social services and recreation would probably be imperceptible because of the few employees involved. The effects on public services such as water supplies and waste water treatment facilities would be minimal.

~~**If the Removal/Disposal and Removal/Treatment/Disposal Alternatives are implemented, workers would be employed to remove contaminated material, perform site restoration, and transport contaminated materials to a disposal site**~~**6.2.1.6 Noise and Visual Resources Impacts.** ~~The number~~No long-term noise impacts are anticipated from any of ~~employees involved in these activities would be higher than employment levels for the containment and the In-Situ Treatment~~the Remedial Alternatives under consideration. ~~Nonetheless~~For the Containment and Removal/Treatment/Disposal Alternatives, ~~the impact~~contruction activities would ~~be minor compared to the overall Tri-City area employment~~cause a temporary increase in noise. ~~The growth in the local government tax base associated with increases in housing and commercial activity resulting from these alternatives~~However, noise levels would ~~be insignificant~~return to near background levels following construction.~~— These alternatives achieve the principles adopted by the Hanford Advisory Board Working Group for cultural and socioeconomic impacts. The demand for recreation, social services, and public services caused by employees and families associated with these alternatives would be many times that exerted by the No Action Alternative and about three times greater than the Containment Alternative. Nevertheless, the demand would still have only a very small effect on the Tri-Cities capacity to accommodate these needs.~~

~~**5.2.1.6 Noise and Visual Resources Impacts.** No long-term noise or visual resource impacts are anticipated from any of the Remedial Alternatives under consideration. The installation of above grade barriers could potentially impact visual resources. Noise increases in the 100 Area would return to background levels following remediation. Visual impacts will be mitigated through site revegetation and habitat restoration actions.~~

Noise mitigation would be instituted to minimize short-term impacts. All equipment and vehicles would be equipped with mufflers or other noise-reduction devices.

The Containment and Removal/Treatment/Disposal alternatives would have an impact on visual resources. Extraction and reinjection wells, above ground piping, and water treatment equipment would be visible during operation of a groundwater Removal/Treatment/Disposal system. A hydraulic containment system would also contain wells and piping, which would have a visual impact. Visual impact from a

barrier wall is expected to be minimal. For both the Removal/Treatment/Disposal and Containment options, access roads and maintainence and monitoring facilities would have visual impacts during the period in which the remediation system is operating.

If the DOE relinquishes control of the 100 Area, long-term impacts are anticipated for noise and visual resources for all the alternatives, except the No Action Alternative. The anticipated impacts would be from increased noise levels and/or impacts to visual resources from developments (e.g., housing, agriculture) of the 100 Area.

No adverse short-term impacts to noise or visual resources are anticipated for the No Action or Institutional Control Alternatives. Sporadic and temporary short-term impacts to noise levels would occur because of transportation and construction activities under any of the action alternatives. Short-term visual resource impacts are anticipated during site remediation. These short-term impacts could be mitigated by minimizing the ~~footprint~~ size of the remediation zone and the number of aboveground facilities to the extent possible.

~~**The Containment, Removal/Disposal, In Situ Treatment, and Removal/Treatment/Disposal Alternatives are expected to affect short-term noise levels in the 100 Area**~~

6.2.2 Issues

6.2.2.1 Mitigation Measures. ~~Noise mitigation would be instituted to minimize short-term impacts. All equipment and vehicles would be equipped with mufflers or other noise reduction devices.~~

~~**5.2.2 Issues**~~

~~**5.2.2.1 Mitigation Measures.**~~ The primary objective of mitigation is avoidance. If adverse impacts cannot be avoided, remedial action planning should minimize adverse impacts to the extent practicable through implementation of mitigation measures. Mitigation measures may also include restoring or protecting other areas within or off the Hanford Site to compensate for damages that may be incurred during the cleanup effort.

Natural resources, for the purposes of mitigation, are considered to be physical resources such as land, water, and air; biological resources such as wildlife habitat or plants and animals; human resources such as remedial workers, and cultural resources such as Indian artifacts or historical sites. Studies have been conducted at the operable units within the 100 Area to characterize these resources. There are current ongoing and planned studies to complete the characterization of these resources where necessary. With this information, the natural resources will be fully described before developing the conceptual designs for remedial action.

This ~~Process Document~~section presents information on general mitigation approaches and actions. However, because the ~~Process Document deals with waste site groups rather than specific waste sites, and the~~ remedial alternative has not been selected yet, this report does not present specific mitigation plans. The completion of detailed mitigation plans will occur during the conceptual and preliminary design of the selected remedial alternative.

Natural resources can be impacted in a variety of ways during implementation of remedial actions. For example, excavation, treatment, and construction activities can unnecessarily destroy wildlife habitat; disrupt normal breeding, nesting, or feeding activities of animals; increase wind and water erosion; or unearth native Indian artifacts. Final mitigation measures, to either eliminate or reduce the adverse consequences of the remedial activities, will be developed as an integral component of the remedial design and ~~The mitigation plans will be~~ incorporated into the design specifications. ~~and also made part of the contractual obligations for remedial contractors working on the site.~~ In that way, mitigation becomes an integral component of the remedial activities.

The following general mitigation measures are examples of actions that may be taken to protect the physical, biological, human, and cultural resources that occur in the 100 Area:

Physical Resources

- Stockpile topsoil when possible.
- Minimize the width of construction corridors, the size of equipment yards and parking lots, and the amount of cut and fill required.
- Place equipment yards, treatment systems, and support services in formerly disturbed areas when possible.
- Develop and implement erosion control plans.
- Curtail or halt operations during high wind periods.
- Suppress fugitive dust with water, commercial suppressants, or temporary mulches.
- Prevent runoff and sediment transport to wetlands and the Columbia River.

Biological Resources

- Avoid wetlands, riparian habitats, and other sensitive areas when possible.
- Restrict the removal or destruction of trees.
- ~~Use native species for revegetation or,~~ Plan for successional replacement of temporary ground cover with native species, when possible.
- Comply with the bald eagle management plan.
- Schedule construction activities to avoid breeding, nesting, winter roosting, and other sensitive seasonal activities of wildlife.
- Prepare biological resource management plans.
- Work with DOE, the U.S. Fish and Wildlife Service, and the U.S. Army Corps of Engineers to mitigate impacts to wetlands.
- When possible, rectify impacts that cannot be avoided or minimized.

Human Resources

- Develop health and safety plans to protect onsite workers.
- Implement rigorous health and safety protocols.
- Minimize exposure to contaminants.
- Minimize generation of fugitive dust.
- Monitor air quality.
- Practice ALARA.

Cultural Resources

- Complete cultural resource surveys of areas to be remediated before implementing any action.
- Develop cultural resource action plans for each reactor area.
- Complete data recovery and analysis plans, have these approved by the State Historic Preservation Office, and conduct data recovery and analysis before initiating remedial actions.
- Train construction workers to recognize and report potential cultural resources.

- Work with the Indian nations to identify traditional use sites, prepare cultural resource mitigation plans, and evaluate the sensitivity of each waste site area.

~~5.2.2.2~~6.2.2.2 Irreversible and Irretrievable Commitment of Resources.– ~~The alternatives that leave contaminated material in an operable unit would result in~~Remediation of groundwater in the 100 Area will require the irreversible commitment of ~~land to waste management, institutional controls, and monitoring~~millions of federal dollars. ~~Although contamination left in place could be removed in the future, such removal would waste money spent~~Depending on ~~a surface barrier or in situ treatment~~the remedial alternative, other irreversible commitments of resources would be necessary, include using consumables such as fuel, electricity, chemicals, and ~~would be more expensive than immediate removal~~disposable protective equipment.

~~Selection of an alternative that leaves contamination in the operable unit should be considered an irreversible and irretrievable commitment of land to waste management.~~

~~Remediation of the 100 Area will require the irreversible commitment of millions of federal dollars. Depending on the Remedial Alternative, other irreversible commitments of resources include importing soil and rock for barriers and using consumables such as fuel, electricity, chemicals, and disposable protective equipment.~~If sensitive habitats or cultural resources are involved in remedial actions, mitigation measures will be taken to minimize impacts. However, irreversible damage could occur to habitats, flora, and fauna during remediation. It is also possible that cultural resources could be destroyed during the remedial action.

~~5.2.2.3~~6.2.2.3 Indirect and Cumulative Impacts. Based on improvements to the overall protection of human health and the environment, the net cumulative impact of the remedial actions is expected to be positive. Remedial actions will remove or isolate the contaminants, make land in the 100 Area available for other uses, and generally restore natural resources. Negative impacts from remediating the operable units within the 100 Area, as discussed in Sections ~~5.0 and 6.0~~ 6.0, 7.0, and 8.0, are expected to be minor and short term. However, there is potential for indirect and cumulative impacts as a result of remediating any one operable unit within the 100 Area.

Remedial activities ~~at any one of the Operable Units~~ in the 100 Area may potentially involve cumulative impacts due to interactions with other projects within the 100 Area, as well as interactions with other projects within the Hanford Site or along the Columbia River. For the purposes of this ~~Source~~ Groundwater Operable Unit FFS, it was assumed that interactions with projects outside the Hanford Site, except for the Columbia River, would be insignificant because of the remote location of the 100 Area relative to the Tri-Cities and major agricultural operations in the region.

The potential indirect and cumulative impacts of remedial actions and other activities within the 100 Area will be dependent upon the scheduling of the remedial action at one site relative to the remedial actions at the other numerous operable units, and the scheduling of other activities within the 100 Area. Indirect and cumulative impacts may result from the interaction of activities at:

- Other ~~soureegroundwater~~ operable units
- ~~Groundwater~~Source operable units
- D&D activities
- Treatability studies
- Expedited response actions

Cumulative and indirect impacts in the 100 Area will generally be greater if remedial activities at several operable units occur at the same time. Conversely, if the work can be properly sequenced cumulative impacts can be reduced or avoided. Because most of the above remedial actions and activities are still in the planning stage, coordination during the planning and initial implementation of the various projects will be necessary to reduce indirect and cumulative impacts.

Indirect and cumulative impacts may also occur because of interactions with projects outside of the 100 Area. Remedial actions, treatability studies, and D&D work are also occurring in the 200 and 300 Areas, and other portions of the Hanford Site. Also, there are two central disposal facilities (located within the 200 Area) that are currently being developed to accept wastes from most of the waste sites ~~(if disposal is a component of the remedial action)~~, including drilling spoils or other types of wastes that may be generating during construction activities. Likewise, clean fill materials needed to remediate many of the waste sites may come from a limited number of borrow pits. The schedules, demands on labor and equipment resources, requirements for disposal volume and fill material, and budget needs must all be considered under the issue of cumulative impacts. The indirect effects of these numerous projects on transportation, restoration of natural resources, and future land use must also be considered.

~~Remediation~~Implementation of an IRM for groundwater in the 100 Area ~~operable units~~ should lead to long-term cumulative benefits to natural resources as a result of removing or controlling contaminants, revegetating currently disturbed and denuded areas, and restoring natural habitats. The Columbia River and the riparian ecosystem along the river should also benefit from the cumulative actions at the 100 Area and other portions of the Hanford Site.

~~5.2.2.4~~6.2.2.4 Environmental Justice. The Environmental Justice Executive Order (E.O. 12898, February 1994) states:

> "Each federal agency shall make achieving environmental justice part of its mission by identifying and addressing as appropriate, disproportionately high and adverse human health or environmental effects of its programs,

policies, and activities on minority populations and low-income populations."

Low-income and minority populations involved in Hanford Site remedial actions include members of the Native American groups and local agricultural employees. The proposed alternatives have been assessed for potential disproportionate impacts to these low-income and/or minority populations.

The objectives of the Environmental Justice Executive Order may not be met by the No Action and Institutional Control Alternatives. Native American groups that use the Columbia River for fishing, hunting, and ~~wildlife~~ recreation are concerned about potential adverse human health effects from contaminants located on the Hanford Site. These contaminants would remain under the No Action and Institutional Control Alternatives. Compared to other alternatives, the No Action and Institutional Control Alternatives represent a low risk of inadvertent excavation of Native American cultural resources.

The Containment~~, Removal/Disposal, In Situ Treatment,~~ and Removal/Treatment/ Disposal Alternatives comply with the objectives of the Environmental Justice Executive Order. Construction activities would provide employment for the low-income workers, including a small number of new general labor (unskilled) jobs. However, drilling, excavation, and pile-driving activities always poses the risk of ~~unearthing~~disturbing Native American burials. Consequently, the risk of an adverse impact on Native Americans is disproportionately large compared to other segments of the population. The containment or removal alternatives, however, reduce or preclude the possibility of long-term lateral migration of contaminants from current locations to the Columbia River. These alternatives, with appropriate mitigation actions, will generally address Native American concerns.

~~5.2.2.5~~6.2.2.5 Short-term Impacts to Human Health.
Short-term impacts to human health during implementation of a remedial action can be grouped either as potential impacts to workers performing the remedial action, or potential impacts to the community. Potential impacts to workers performing the remedial action include physical hazards associated with construction activities and exposure to chemical and radionuclide contaminants. Physical hazards to workers include slips, trips and falls, operation of motor vehicles, excavation and trenching, drilling hazards, sharp objects, lifting hazards, heat and cold stress and noise. Contaminant exposure hazards include incidental ingestion of soil, inhalation of fugitive dust generated during remedial action and external exposure to radionuclides. Potential impacts to the community would largely be associated with inhalation of fugitive dust generated during remedial action. Generally, remedial alternatives would involve very little dust generation, hence potential impacts to the community are anticipated to be very low for all alternatives. Relative comparisons of the physical and contaminant exposure risks to workers associated with each alternative are presented below.

Institutitional controls would involve relatively low physical and contaminant exposure hazards to workers. This alternative is unlikely to bring workers in proximity regularly with contaminants; involves limited operation of heavy equipment or vehicles. Containment would involve low contaminant exposure hazards, but medium physical hazards. Installation of sheet pilings would involve increased use of heavy equipment, potentially increasing noise and other physical hazards to workers. Both of the removal/treatment and disposal alternatives would involve medium contaminant exposure and physical hazards. Both alternatives would involve heavy equipment operation and vehicle traffic, noise and physical hazards from installation of extraction wells, pipelines and treatment plant. Treatment plant operation would involve potential exposures to contaminants in groundwater and chemical reagents. Exposures to contaminants in soils are unlikely under all alternatives; contaminants in soils are limited to defined source areas, which are not likely to be sites for work locations or pipeline corridors.

~~Short-term impacts to human health during implementation of a remedial action can be grouped either as potential impacts to workers performing the remedial action or potential impacts to the community. Potential impacts to workers include physical hazards associated with construction activities, and exposures to chemical or radionuclide contaminants. Physical hazards to workers include slip, trip and falls, operation of heavy equipment, excavation and trenching, sharp objects, operation of motor vehicles, lifting hazards, heat and cold stress and noise. Contaminant exposure hazards include incidental ingestion of soil, inhalation of fugitive dust generated during remedial action and external exposure to radionuclides. Potential impacts to the community would largely be associated with inhalation of fugitive dust generated during remedial action.~~

~~Physical and contaminant exposure hazards to workers will vary with the magnitude of contamination in soil and the type of remedial action to be performed at a site. In general, potential hazards to workers will be lower for Remedial Alternatives that do not involve extensive contact with contaminated soils and wastes. The relative risks to workers potentially associated with the different Remedial Alternatives were evaluated with an activity hazard analysis. Remedial Alternatives assessed in the activity hazard analysis were as follows:~~

- ~~Institutional Controls, which include security and monitoring~~
- ~~Containment, which includes RCRA barrier construction, surface runoff control, groundwater monitoring and deed restrictions~~
- ~~In Situ Treatment, which includes grout injection, compaction, or vitrification~~
- ~~Removal and Disposal, which includes site preparation, excavation, possible demolition, and transport to an approved disposal facility~~

- ~~Removal, Ex-Situ Treatment, and Disposal, which includes site preparation, excavation, treatment, and disposal of residuals.~~

~~Specific work activities were identified for each Remedial Alternative, based on FFS-level information. Each work activity was evaluated to determine which of the following hazards could be associated with that activity.~~

- ~~Slip, trips, and falls~~
- ~~Heat and cold stress~~
- ~~Heavy equipment operation~~
- ~~Excavation and trenching~~
- ~~Sharp objects~~
- ~~Vehicular operation~~
- ~~Lifting and materials handling~~
- ~~Noise~~
- ~~Contaminant exposure.~~

~~The severity of these potential hazards were evaluated qualitatively by review of the anticipated work activities for each alternative. For example, alternatives involving removal could involve greater hazards associated with heavy equipment and vehicular operation because of the excavation and transport of wastes to treatment and disposal facilities. Alternatives involving removal also have hazards associated with excavation, that are not likely to be present with other Remedial Alternatives. Finally, each alternative other than institutional controls are associated with potential contaminant exposure hazards by bringing workers into proximity with contaminated soils and wastes. Potential exposures of workers in proximity to radionuclides in soil at site 116-C-5 were evaluated using the RESRAD model. The modeling results indicate that potential exposures from external exposure at this site could exceed the DOE standard for worker exposure of 5 rem/year. These estimated exposures are less likely to be associated with the Institutional Control Alternative, because work activities for this alternative do not bring workers into proximity with contaminated soils and wastes.~~

~~The ranking of risks to workers associated with each Remedial Alternative, based on the activity hazard analysis, is summarized in Table 5-1.~~

~~As discussed previously, potential impacts to the surrounding communities are associated with emissions of airborne contaminants, either in fugitive dust generated during remedial action, or during treatment activities. Information developed in the *Hanford Emergency Response Plan* indicates that the closest residents are located 3 miles from the Hanford Site. A small portion of a sparsely populated area of southern Grant County represents the community closest to the 100 Area. Potential airborne contaminant exposures to offsite residents were evaluated for contaminants at site 116-C-5, assuming that remedial action produces a continuous concentration of 0.2 mg/m^3 of dust in air. This dust concentration, based on assumptions presented in the RESRAD model (Yu et al. 1993), accounts for relatively short periods of time of high dust emissions to the air (such as during excavation) along with lower levels of dust emissions associated with other work activities and windblown dust. Dust~~

~~emissions were assumed to occur entirely from contaminated soils. The results from this analysis indicate that onsite concentrations of radionuclides in air were less than 1% of the DOE standards for protection of the offsite public. Concentrations at offsite locations are likely to be lower because of dilution in air. Therefore, airborne contaminants associated with remedial actions are not likely to represent an impact to offsite communities.~~

~~5.3 DETAILED ANALYSIS OF ALTERNATIVES~~

~~The group profiles, defined in Section 3.0, are compared against the applicability criteria and enhancements for each alternative defined in Section 4.0. Tables 4-1 and 4-2 show the results of this comparison and summarize applicable alternatives for each waste site group. In this section, each alternative is then evaluated in terms of the CERCLA threshold and balancing criteria (EPA 1988) (Tables 5-2 through 5-10).~~

~~A cost estimate is prepared for each waste site group based on a representative waste site. Appendix B includes a summary of the cost estimates for each waste site group, a table indicating the present worth calculations, and a graph presenting the effect of disposal cost on the alternative cost. The cost models created for the 100 Area FFS are presented in *100 Area Source Operable Unit Focused Feasibility Study Cost Models* (WHC 1994d).~~

~~5.3.1 No Action~~

~~The applicability criteria defined in Section 4.2.1 and shown in Table 4-2 must be met before implementing the No Action Alternative. The only waste site groups that meet the applicability criteria are the seal pit cribs and the D&D facilities.~~

~~Based on the discussion concerning D&D facilities presented in Section 3.1.7, and the existing data on seal pit cribs, it is assumed that there is no current threat warranting an interim action. Therefore, the CERCLA threshold criteria are met because current contamination levels are assumed to be at acceptable levels. Table 5-2 presents the analysis of the No Action Alternative for the seal pit cribs and D&D facilities. Because none of the other waste site groups meet the applicability criteria for no action, implementing no action would leave levels of contaminants at the waste site that may pose human health or environmental risks, and may not comply with ARARs. No action, in this case, would not provide long-term protection, and would not reduce mobility, toxicity, or the volume of the wastes.~~

~~5.3.2 Institutional Controls~~

~~The applicability criteria defined in Section 4.2.2 and shown in Table 4-2 must be met before implementing the institutional controls alternative. No waste site groups meet the applicability criteria; therefore, this alternative is not evaluated any further in this Process Document. If a specific waste site meets the applicability~~

Table 6-1. Detailed Analysis for GW-1, No Action Alternative. (Page 1 of 16)

OVERALL PROTECTION OF HUMAN HEALTH AND THE ENVIRONMENT	ALTERNATIVE GW-1: NO ACTION	
	D/DR Area	H Area
Will risk be at acceptable levels?	Human Health: Yes, current human health risk is low (ICR 10^{-6} to 10^{-4}, HQ < 1) for the occasional use scenario, based on the QRA. Environment: Uncertain, potential ecological risk exists based on chromium concentrations in near river wells exceeding ecological ARAR level (EPA Ambient Water Quality Criteria of 11 μg/L). Near-river well concentrations do not account for mixing at river-aquifer interface; chromium levels in the Columbia River are generally nondetectable (DOE-RL 1993c). Recent pore water samples collected from river sediments indicate that chromium concentrations in pore water exceed 11 ug/L at some locations (BHI, 1995). No actual ecological risk has been derived based on actual concentrations at the river-aquifer interface, and no quantification of risk in the substrate has been made.	Human Health: Yes, current human health risk is low (ICR 10^{-6} to 10^{-4}, HQ < 1) for the occasional use scenario, based on the QRA. Environment: Same as D/DR Area for chromium. Near-river well concentrations do not account for mixing at river-aquifer interface.
Timeframe to achieve acceptable levels?	The no action alternative will not achieve acceptable chromium levels by the end of the interim action period (year 2001). Although mixing within the river results in nondetectable chromium levels, concentrations in near-river wells are approximately 400 μg/L (DOE-RL 1993b). Groundwater modeling results indicate that chromium concentrations are not likely to decrease significantly by the year 2001.	The no action alternative will not achieve acceptable chromium levels by the end of the IRM period (year 2001). Although mixing within the river results in non-detectable chromium levels, the maximum concentrations in near river wells is approximately 500 μg/L (DOE-RL 1993b). Groundwater modeling results indicate that chromium concentrations are not likely to decrease significantly by the year 2001.
Will additional threats be minimized?	No additional threats result from implementation of this alternative.	Same as the D/DR Area.

~~criteria for institutional controls based on information in an operable unit specific FFS, then this alternative will be analyzed in that FFS.~~

~~5.3.3 Containment~~

~~The applicability criteria defined in Section 4.2.3 and shown in Table 4-2 must be met before implementing the Containment Alternative. The waste site groups that meet the applicability criteria are as follows:~~

- ~~Dummy decontamination cribs/french drains~~

6.3 DETAILED ANALYSIS

The detailed analysis for the 100-HR-3 Operable Unit is presented in Tables 6-1 through 6-5. Tables 6-1 through 6-5 also include a summary of estimated costs for each alternative. ~~For all alternatives,~~ Because the IRM period was originally planned to last 12 years, the cost estimates assume an interim remediation period of ~~12 years (~~1996-2008~~)~~. Costs for alternative GW-5 (groundwater removal and treatment with ion exchange) were also estimated assuming a 5-year IRM period (1996-2001) to support the DOE and EPA planning and review process and incorporate lessons learned from a similar pump and treat remediation in Washington State (EPA 1995); these costs are presented in Section 8.0. An analysis of the compliance with ARARs is presented in Table 6-6. Cost details are presented in Appendix D.

Table 6-1. Detailed Analysis for GW-1, No Action Alternative.
(Page 3 of 16)

COMPLIANCE WITH ARAR	ALTERNATIVE GW-1: NO ACTION	
	D/DR Area	H Area
What are the potential ARAR?	See Table 6-5.	See Table 6-5.
Will the potential ARAR be met? How?	See Table 6-5.	See Table 6-5.
Basis for waivers?	This alternative may represent an interim action preceding a final remedial action to be implemented by the year 2001. The final remedial action will be selected to ensure compliance with ARAR. Reduction of chromium concentrations in groundwater entering the Columbia River to below the EPA Ambient Water Quality Criteria level of 11 μg/L may be technically impractical. Although the purpose of the interim action is not aquifer restoration, contaminant concentrations in the aquifer represent the contaminant concentrations potentially entering the river. Due to the persistence of chromium in the environment, removal would be the only means of ensuring permanent compliance with ARAR. However, conventional pump-and-treat may never result in sufficient chromium reduction in the aquifer to comply with ARAR.	This alternative may represent an interim action preceding a final remedial action to be implemented by the year 2001. The final remedial action will be selected to ensure compliance with ARAR. Reduction of chromium concentrations in groundwater entering the Columbia River to below the EPA Ambient Water Quality Criteria level of 11 μg/L may be technically impractical. Although the purpose of the interim action is not aquifer restoration, contaminant concentrations in the aquifer represent the contaminant concentrations potentially entering the river. Due to the persistence of chromium in the environment, removal would be the only means of ensuring permanent compliance with ARAR. However, conventional pump-and-treat may never result in sufficient chromium reduction in the aquifer to comply with ARAR.
What are the potential TBC?	See Table 6-5.	See Table 6-5.
Is the alternative consistent with TBC listed above	See Table 6-5.	See Table 6-5.

Table 6-1. Detailed Analysis for GW-1, No Action Alternative. (Page 2 of 16)

OVERALL PROTECTION OF HUMAN HEALTH AND THE ENVIRONMENT	ALTERNATIVE GW-1: NO ACTION	
	D/DR Area	H Area
Will the alternative pose any unacceptable short-term or cross-media impacts?	Yes, groundwater will remain contaminated and contamination may spread to the Columbia River.	Yes, groundwater will remain contaminated and contamination may spread to the Columbia River.
What restoration actions may be necessary?	No restoration is proposed.	No restoration is proposed.
Will residual contamination (following remediation) be a potential problem?	Not Applicable.	Not Applicable.

Table 6-1. Detailed Analysis for GW-1, No Action Alternative. (Page 5 of 16)

LONG-TERM EFFECTIVENESS AND PERMANENCE	ALTERNATIVE GW-1: NO ACTION	
	D/DR Area	H Area
What is the magnitude of the remaining risk?	The potential ecological risk identified in the QRA will remain. Chromium concentrations in the near-river wells will not be significantly reduced from the current 400 μg/L levels. Groundwater modeling results indicate the near-river well concentrations will not significantly change during the IRM period.	The potential ecological risk identified in the LFI QRA will remain. Chromium levels in the near river wells will not be reduced from the approximate 500 ppb level (LFI 1993). Groundwater modeling results indicate the near-river well concentrations will not significantly change during the IRM period.
What remaining sources of risk can be identified?	The source of risk remaining after implementation of the no action alternative will be the chromium concentrations above the EPA Ambient Water Quality Criteria level of 11 μg/L in the near river wells. The concentrations in the near river wells are assumed to be the concentrations entering the Columbia River (without accounting for mixing). Actual ecological risk from the chromium has not been quantified.	The source of risk remaining after implementation of the no action alternative will be the chromium concentrations above the EPA Ambient Water Quality Criteria levels of 11 μg/L in the near-river wells. The near-river well concentrations are assumed to be the concentrations entering the Columbia River, without accounting for mixing.
What is the likelihood that the technologies will meet performance needs?	Remedial technologies are not included in the no action alternative. However, monitoring of the site is assumed to continue through 2001. The no action alternative does not ensure protection of the Columbia River.	Remedial technologies are not included in the no action alternative. However, monitoring of the site is assumed to continue through 2001. The no action alternative does not ensure protection of the Columbia River.
What type and degree of long-term management is required?	No long-term management requirements are required for this alternative. Monitoring of the operable unit is conducted under existing programs. Long-term management requirements beyond the IRM period will be addressed by the final remedial action.	No long-term management requirements are required for this alternative. Monitoring of the operable unit is conducted under existing programs. Long-term management requirements beyond the IRM period will be addressed by the final remedial action.

Table 6-1. Detailed Analysis for GW-1, No Action Alternative. (Page 4 of 16)

COMPLIANCE WITH ARAR	ALTERNATIVE GW-1: NO ACTION	
	D/DR Area	H Area
Will implementation of the alternative comply with ARARs regarding protection, restoration, and enhancement of natural resources and protection of cultural resources?	See Table 6-6.	See Table 6-6.
What difficulties may be associated with compliance to ARARs?	See Table 6-6.	See Table 6-6.

Table 6-1. Detailed Analysis for GW-1, No Action Alternative.
(Page 7 of 16)

LONG-TERM EFFECTIVENESS AND PERMANENCE	ALTERNATIVE GW-1: NO ACTION	
	D/DR Area	H Area
What are potential final actions?	Potential final actions likely include no action, institutional controls, and pump and treat for mass reduction. The vertical barrier option is not considered for final action because chromium is persistent in the environment and does not readily degrade. The wall will contain the chromium by lengthening the travel time for the contaminants to reach the river; however, the contamination will eventually migrate around the wall.	Same as D/DR Area. The hydraulic barrier is not considered because of the logistics of maintaining the barrier indefinitely due to the persistence of the chromium.
Is the alternative for the IRM compatible with potential final actions?	Yes. The no action alternative for IRM would allow time for source cleanup and additional information collection through the treatability test in 100-HR-3 prior to implementing a final action. The no action alternative is compatible with both the no action and institutional controls final actions in that these are simply an extension of the IRM no action alternative.	Yes. The no action alternative for IRM would allow time for source cleanup and additional information collection through the treatability test in 100-HR-3 prior to implementing a final action. The no action alternative is compatible with both the no action and institutional controls final actions in that these are simply an extension of the IRM no action alternative.
What are the uncertainties associated with land disposal of residuals and untreated wastes?	Not Applicable.	Not Applicable.
Will the alternative provide long-term protection of natural resources?	No, the no-action alternative provides no restoration or environmental enhancements.	No, the no-action alternative provides no restoration or environmental enhancements.
Will terrestrial habitats be degraded or enhanced?	There will be no change from current terrestrial habitat quality.	There will be no change from current terrestrial habitat quality.

Table 6-1. Detailed Analysis for GW-1, No Action Alternative. (Page 6 of 16)

LONG-TERM EFFECTIVENESS AND PERMANENCE	ALTERNATIVE GW-1: NO ACTION	
	D/DR Area	H Area
What are the requirements for long-term monitoring?	The current monitoring program will continue through the duration of the interim action period (year 2001). Evaluations will be made periodically (i.e. every 5 years) to determine need for additional remedial action or changes to the monitoring program. Long-term monitoring requirements beyond the IRM period will be addressed by the final remedial action selected.	The current monitoring program will continue through the duration of the interim action period (year 2001). Evaluations will be made periodically (i.e. every 5 years) to determine need for additional remedial action or changes to the monitoring program. Long-term monitoring requirements beyond the IRM period will be addressed by the final remedial action selected.
What O&M functions must be performed?	No O&M functions will be required.	No O&M functions will be required.
What difficulties may be associated with long-term O&M?	None.	None.
What is the potential need for replacement of technical components?	None.	None.
What is the magnitude of risk should the remedial action need replacement?	No different than current risk.	No different than current risk.
What is the degree of confidence that controls can adequately handle potential problems?	The number of monitoring wells currently in place is considered adequate to effectively monitor migration of contaminant plumes within the 100 D/DR Area. The frequency of sampling and the number of samples taken ensure accurate monitoring results.	The number of monitoring wells currently in place is considered adequate to effectively monitor migration of contaminant plumes within the 100 D/DR Area. The frequency of sampling and the number of samples taken ensure accurate monitoring results.
How is the removed contamination disposed of?	Not applicable. No contaminants are removed from the aquifer (other than for monitoring).	Not applicable. No contaminants are removed from the aquifer (other than for monitoring).

Table 6-1. Detailed Analysis for GW-1, No Action Alternative. (Page 9 of 16)

REDUCTION OF TOXICITY, MOBILITY, OR VOLUME	ALTERNATIVE GW-1: NO ACTION	
	D/DR Area	H Area
Does the treatment process address the principal threats?	The principal threat (chromium release into the river) is not addressed by this alternative.	The principal threat (chromium release into the river) is not addressed by this alternative.
Are there any special requirements for the treatment process?	No special requirements are associated with this alternative.	No special requirements are associated with this alternative.
What portion of the contaminated material is treated/destroyed?	Contaminated material is neither treated nor destroyed.	Contaminated material is neither treated nor destroyed.
To what extent is total mass of toxic contaminants reduced?	The mass of chromium entering the river is not significantly affected by this alternative. Groundwater modeling results indicate that chromium concentrations will not change significantly during the IRM period (until 2001).	The mass of chromium entering the river is not significantly affected by this alternative. Groundwater modeling results indicate that chromium concentrations will not change significantly during the IRM period (until 2001).
To what extent is the mobility of toxic contaminants reduced?	Contaminant mobility is not reduced.	Contaminant mobility is not reduced.
To what extent is the volume of toxic contaminants reduced?	Contaminant volume is not reduced.	Contaminant volume is not reduced.
To what extent are the effects of the treatment irreversible?	Contaminant migration into the river as well as movement of contaminant plumes is irreversible.	Contaminant migration into the river as well as movement of contaminant plumes is irreversible.
What are the quantities of residuals and characteristics of the residual risks?	No treatment residuals result from this alternative.	No treatment residuals result from this alternative.
What risks do treatment of residuals pose?	No risk from treatment is associated with this alternative.	No risk from treatment is associated with this alternative.

Table 6-1. Detailed Analysis for GW-1, No Action Alternative. (Page 8 of 16)

LONG-TERM EFFECTIVENESS AND PERMANENCE	ALTERNATIVE GW-1: NO ACTION	
	D/DR Area	H Area
How will the remedial action affect the overall quality of the ecosystem?	Because no action is taken, the quality of the ecosystem will remain in its current state.	Because no action is taken, the quality of the ecosystem will remain in its current state.

Table 6-1. Detailed Analysis for GW-1, No Action Alternative.
(Page 11 of 16)

REDUCTION OF TOXICITY, MOBILITY, OR VOLUME	ALTERNATIVE GW-1: NO ACTION	
	D/DR Area	H Area
Will long-term maintenance and monitoring of mitigation/restoration efforts be necessary?	Not Applicable.	Not Applicable.

Table 6-1. Detailed Analysis for GW-1, No Action Alternative. (Page 10 of 16)

REDUCTION OF TOXICITY, MOBILITY, OR VOLUME	ALTERNATIVE GW-1: NO ACTION	
	D/DR Area	H Area
Is treatment used to reduce inherent hazards posed by principal threats at the site?	The inherent hazards associated with the principal threat are not reduced by this alternative. No treatment is included in this alternative.	The inherent hazards associated with the principal threat are not reduced by this alternative. No treatment is included in this alternative.
How does the proposed treatment impact natural resources?	Not Applicable.	Not Applicable.
Does the alternative result in a gain or loss of quality at the site for natural resources?	Existing groundwater is contaminated and a loss of natural resource quality will result with the spread of contamination.	Existing groundwater is contaminated and a loss of natural resource quality will result with the spread of contamination.
Will implementation of the alternative result in short-term impacts to natural resources (e.g., exposure of ecological receptors to physical or chemical impacts, noise, intrusion to habitat and special breeding areas, temporary displacement, or seasonal restrictions on habitat use)?	Not Applicable.	Not Applicable.
Will the natural resource restoration activities associated with this alternative be easily implemented?	Not Applicable.	Not Applicable.

Table 6-1. Detailed Analysis for GW-1, No Action Alternative. (Page 13 of 16)

SHORT-TERM EFFECTIVENESS	ALTERNATIVE GW-1: NO ACTION	
	D/DR Area	H Area
How long until remedial action objectives are achieved?	The RAO (protection of the river) will not be achieved by this alternative within the time frame of the IRM (year 2001), due to continued unrestricted migration of chromium contamination into the Columbia River. The final remedial action should ensure the RAO are appropriate to changes in objectives and achieved within a selected reasonable timeframe.	The RAO (protection of the river) will not be achieved by this alternative within the time frame of the IRM (year 2001), due to continued unrestricted migration of chromium contamination into the Columbia River. The final remedial action should ensure the RAO are appropriate to changes in objectives and achieved within a selected reasonable timeframe.

Table 6-1. Detailed Analysis for GW-1, No Action Alternative. (Page 12 of 16)

SHORT-TERM EFFECTIVENESS	ALTERNATIVE GW-1: NO ACTION	
	D/DR Area	H Area
What are the risks to the community during remedial actions that must be addressed?	None.	None.
How will the risks to the community be addressed and mitigated?	See above.	See above.
What risks remain to the community that cannot be readily controlled?	None.	None.
What are the risks to the workers that need to be addressed?	None.	None.
What risks remain to the workers that cannot be readily controlled?	None.	None.
How will the risks to the workers be addressed and mitigated?	None.	None.
What environmental impacts are expected with the construction and implementation of the alternative?	None, based on the use of existing monitoring wells.	None, based on the use of existing monitoring wells.
What are the impacts that cannot be avoided should the alternative be implemented?	None.	None.

Table 6-1. Detailed Analysis for GW-1, No Action Alternative. (Page 15 of 16)

IMPLEMENTABILITY	ALTERNATIVE GW-1: NO ACTION	
	D/DR Area	H Area
What additional equipment and specialists are required and what are their potential impacts to implementation?	None.	None.
Are technologies under consideration generally available and sufficiently demonstrated?	Yes, groundwater monitoring technology is well established technology and readily available.	Yes, groundwater monitoring technology is well established technology and readily available.
Will technologies require further development before they can be applied at the site?	No.	No.
Will more than one vendor be available to provide a competitive bid?	Yes, groundwater monitoring equipment and services are commercially available.	Yes, groundwater monitoring equipment and services are commercially available.

Table 6-1. Detailed Analysis for GW-1, No Action Alternative. (Page 14 of 16)

IMPLEMENTABILITY	ALTERNATIVE GW-1: NO ACTION	
	D/DR Area	H Area
What difficulties and uncertainties are associated with construction?	None.	None.
What is the likelihood that technical problems will lead to schedule delays?	None.	None.
What likely future remedial actions are anticipated?	None anticipated within the time frame of interim action (year 2001), final remedial actions should be determined by year 2001.	None anticipated within the time frame of interim action (year 2001), final remedial actions should be determined by year 2001.
What risks of exposure exist should monitoring be insufficient to detect failure?	Since this alternative does not involve the use of active remedial measures, groundwater monitoring failure would not result in exposure risks other than what is currently present (chromium migration into the Columbia River at concentrations above ecological ARAR, EPA Water Quality Criteria of 11 μg/L).	Since this alternative does not involve the use of active remedial measures, groundwater monitoring failure would not result in exposure risks other than what is currently present (chromium migration into the Columbia River at concentrations above ecological ARAR, EPA Water Quality Criteria of 11 μg/L).
What activities are proposed which require coordination with other agencies?	None.	None.
Are adequate treatment, storage capacity, and disposal services available?	Treatment, storage, and disposal are not applicable to this alternative.	Treatment, storage, and disposal are not applicable to this alternative.
Are the necessary equipment and specialists available?	Yes, groundwater monitoring is well established technology; equipment and specialists are readily available.	Yes, groundwater monitoring is well established technology; equipment and specialists are readily available.

Table 6-1. Detailed Analysis for GW-1, No Action Alternative.
(Page 16 of 16)

COST COMPONENT	ALTERNATIVE GW-1: NO ACTION	
	D/DR Area	H Area
Capital?	$0	$0
Operation and Maintenance?	$0	$0
Present Worth?	$0	$0

Table 6-2. Detailed Analysis for GW-2, Institutional Controls/ Continued Current Actions. (Page 1 of 16)

OVERALL PROTECTION OF HUMAN HEALTH AND THE ENVIRONMENT	ALTERNATIVE GW-2: INSTITUTIONAL CONTROLS/CONTINUED CURRENT ACTIONS	
	D/DR Area	H Area
Will risk be at acceptable levels?	Human Health: Yes, current human health risk is low (ICR 10^{-6} to 10^{-4}, HQ < 1) for the occasional use scenario, based on the QRA. Environment: Uncertain; potential ecological risk exists based on chromium concentrations in near river wells exceeding ecological ARAR level (EPA Ambient Water Quality Criteria of 11 μg/L). Near-river well concentrations do not account for mixing at river-aquifer interface; chromium levels in the Columbia River are nondetectable (DOE-RL 1993c). Pore water samples collected recently from river sediments indicate that chromium concentrations exceed 11 μg/L at some locations (BHI 1995). No actual ecological risk has been derived based on actual concentrations at the river aquifer interface, and no quantification of risk associated with the substrate has been made.	Human Health: Yes, current human health risk is low (ICR 10^{-6} to 10^{-4}, HQ < 1) for the occasional use scenario, based on the QRA. Environment: Uncertain; potential ecological risk exists based on chromium concentrations in near river wells exceeding ecological ARAR level (EPA Ambient Water Quality Criteria of 11 μg/L). Near-river well concentrations do not account for mixing at river-aquifer interface; chromium levels in the Columbia River are nondetectable (DOE-RL 1993c). Pore water samples collected recently from river sediments indicate that chromium concentrations exceed 11 μg/L at some locations (BHI 1995). No actual ecological risk has been derived based on actual concentrations at the river aquifer interface, and no quantification of risk associated with the substrate has been made.
Timeframe to achieve acceptable levels?	The institutional controls/continued current actions alternative will not achieve acceptable chromium levels by the end of the interim action period (year 2001). Although mixing within the river results in nondetectable chromium levels, concentrations in near-river wells are approximately 400 μg/L (DOE-RL 1993b). Groundwater modeling results indicate that chromium concentrations in near river wells will not change significantly during the interim action period.	The no action alternative will not achieve acceptable chromium levels by the end of the interim action period (year 2001). Although mixing within the river results in non-detectable chromium and iron levels, maximum concentrations in near river wells are approximately 500 μg/L (DOE-RL 1993b). Groundwater modeling results indicate that chromium concentrations in near river wells will not change significantly during the interim action period.
Will additional threats be minimized?	No additional threats result from implementation of this alternative.	Same as the D/DR Area.

Table 6-2. Detailed Analysis for GW-2, Institutional Controls/ Continued Current Actions. (Page 2 of 16)

OVERALL PROTECTION OF HUMAN HEALTH AND THE ENVIRONMENT	ALTERNATIVE GW-2: INSTITUTIONAL CONTROLS/CONTINUED CURRENT ACTIONS	
	D/DR Area	H Area
Will the alternative pose any unacceptable short-term or cross-media impacts?	Yes, groundwater will remain contaminated and contamination may spread to the Columbia River.	Yes, groundwater will remain contaminated and contamination may spread to the Columbia River.
What restoration actions may be necessary?	No restoration is proposed.	No restoration is proposed.
Will residual contamination (following remediation) be a potential problem?	Not Applicable	Not Applicable

Table 6-2. Detailed Analysis for GW-2, Institutional Controls/ Continued Current Actions. (Page 3 of 16)

COMPLIANCE WITH ARAR	ALTERNATIVE GW-2: INSTITUTIONAL CONTROLS/CONTINUED CURRENT ACTIONS	
	D/DR Area	H Area
What are the potential ARAR?	See Table 6-5.	See Table 6-5.
Will the potential ARAR be met? How?	See Table 6-5.	See Table 6-5.
Basis for waivers?	This alternative may represent an interim action preceding a final remedial action to be implemented by the year 2001. The final remedial action will be selected to ensure compliance with ARAR. Reduction of chromium concentrations in groundwater entering the Columbia River to below the EPA Ambient Water Quality Criteria level of 11 μg/L may be technically impractical. Although the purpose of the interim action is not aquifer restoration, contaminant concentrations in the aquifer represent the contaminant concentrations potentially entering the river. Due to the persistence of chromium in the environment, removal would be the only means of ensuring permanent compliance with ARAR. However, conventional pump-and-treat may never result in sufficient chromium reduction in the aquifer to comply with ARAR.	This alternative may represent an interim action preceding a final remedial action to be implemented by the year 2001. The final remedial action will be selected to ensure compliance with ARAR. Reduction of chromium concentrations in groundwater entering the Columbia River to below the EPA Ambient Water Quality Criteria level of 11 μg/L may be technically impractical. Although the purpose of the interim action is not aquifer restoration, contaminant concentrations in the aquifer represent the contaminant concentrations potentially entering the river. Due to the persistence of chromium in the environment, removal would be the only means of ensuring permanent compliance with ARAR. However, conventional pump-and-treat may never result in sufficient chromium reduction in the aquifer to comply with ARAR. (also applies to iron).
What are the potential TBC?	See Table 6-5.	See Table 6-5.
Is the alternative consistent with TBC listed above	See Table 6-5.	See Table 6-5.

Table 6-2. Detailed Analysis for GW-2, Institutional Controls/ Continued Current Actions. (Page 4 of 16)

COMPLIANCE WITH ARAR	ALTERNATIVE GW-2: INSTITUTIONAL CONTROLS/CONTINUED CURRENT ACTIONS	
	D/DR Area	H Area
Will implementation of the alternative comply with ARARs regarding protection, restoration, and enhancement of natural resources and protection of cultural resources?	See Table 6-6.	See Table 6-6.
What difficulties may be associated with compliance to ARARs?	See Table 6-6.	See Table 6-6.

Table 6-2. Detailed Analysis for GW-2, Institutional Controls/ Continued Current Actions. (Page 5 of 16)

LONG-TERM EFFECTIVENESS AND PERMANENCE	ALTERNATIVE GW-2: INSTITUTIONAL CONTROLS/CONTINUED CURRENT ACTIONS	
	D/DR Area	H Area
What is the magnitude of the remaining risk?	The potential ecological risk identified in the QRA will remain. Chromium concentrations in the near-river wells will not be significantly reduced from the current 400 μg/L levels. Groundwater modeling results indicate the near-river well concentrations will not significantly change during the IRM period.	The potential ecological risk identified in the LFI QRA will remain. Chromium levels in the near river wells will not be reduced from the approximate 500 ppb level (LFI 1993). Groundwater modeling results indicate the near-river well concentrations will not significantly change during the IRM period.
What remaining sources of risk can be identified?	The source of risk remaining after implementation of the no action alternative will be the chromium concentrations above the EPA Ambient Water Quality Criteria level of 11 μg/L in the near river wells. The concentrations in the near river wells are assumed to be the concentrations entering the Columbia River (without accounting for mixing). Actual ecological risk from the chromium has not been quantified.	Same as D/DR Area.
What is the likelihood that the technologies will meet performance needs?	Remedial technologies are not included in the no action alternative. However, monitoring and government control of the site is assumed to continue through 2001. These actions will ensure restriction against public access and warning of changes in contaminant concentration migration. However, no action does not ensure protection of the Columbia River.	Remedial technologies are not included in the no action alternative. However, monitoring and government control of the site is assumed to continue through 2001. These actions will ensure restriction against public access and warning of changes in contaminant concentration migration. However, no action does not ensure protection of the Columbia River.

Table 6-2. Detailed Analysis for GW-2, Institutional Controls/ Continued Current Actions. (Page 6 of 16)

LONG-TERM EFFECTIVENESS AND PERMANENCE	ALTERNATIVE GW-2: INSTITUTIONAL CONTROLS/CONTINUED CURRENT ACTIONS	
	D/DR Area	H Area
What type and degree of long-term management is required?	Long-term management requirements for this alternative involve continued access restriction enforcement and groundwater monitoring through the duration of the interim action period (year 2001). Remedial actions beyond the interim action period will be addressed by a comprehensive risk assessment and final remedial action; no other long-term management is required. Long-term management requirements beyond 2001 will be addressed by the final remedial action.	Long-term management requirements for this alternative involve continued access restriction enforcement and groundwater monitoring through the duration of the interim action period (year 2001). Remedial actions beyond the interim action period will be addressed by a comprehensive risk assessment and final remedial action; no other long-term management is required. Long-term management requirements beyond 2001 will be addressed by the final remedial action.
What are the requirements for long-term monitoring?	The current monitoring program will continue through the duration of the interim action period (year 2001). Evaluations will be made periodically (i.e. every 5 years) to determine need for additional remedial action or changes to the monitoring program. Long-term monitoring requirements beyond 2001 will be addressed by the final remedial action selected.	The current monitoring program will continue through the duration of the interim action period (year 2001). Evaluations will be made periodically (i.e. every 5 years) to determine need for additional remedial action or changes to the monitoring program. Long-term monitoring requirements beyond 2001 will be addressed by the final remedial action selected.
What O&M functions must be performed?	O&M will be required throughout the interim action period to perform and maintain groundwater monitoring activities.	O&M will be required throughout the interim action period to perform and maintain groundwater monitoring activities.
What difficulties may be associated with long-term O&M?	None foreseeable, based on government control maintained through the IRM period.	None foreseeable, based on government control maintained through the IRM period.
What is the potential need for replacement of technical components?	Periodic replacement or refurbishing of groundwater monitoring wells may be required on an as needed basis.	Periodic replacement or refurbishing of groundwater monitoring wells may be required on an as needed basis.

Table 6-2. Detailed Analysis for GW-2, Institutional Controls/ Continued Current Actions. (Page 7 of 16)

LONG-TERM EFFECTIVENESS AND PERMANENCE	ALTERNATIVE GW-2: INSTITUTIONAL CONTROLS/CONTINUED CURRENT ACTIONS	
	D/DR Area	H Area
What is the magnitude of risk should the remedial action need replacement?	Negligible risk is associated with maintenance or replacement of groundwater monitoring wells. These activities primarily involve physical hazards to workers such as those associated with drilling activities.	Negligible risk is associated with maintenance or replacement of groundwater monitoring wells. These activities primarily involve physical hazards to workers such as those associated with drilling activities.
What is the degree of confidence that controls can adequately handle potential problems?	The number of monitoring wells currently in place is considered adequate to effectively monitor migration of contaminant plumes within the 100 D/DR Area. The frequency of sampling and the number of samples taken ensure accurate monitoring results.	The number of monitoring wells currently in place is considered adequate to effectively monitor migration of contaminant plumes within the 100 D/DR Area. The frequency of sampling and the number of samples taken ensure accurate monitoring results.
How is the removed contamination disposed of?	Not applicable. No contaminants are removed from the aquifer (other than for monitoring).	Not applicable. No contaminants are removed from the aquifer (other than for monitoring).
What are potential final actions?	Potential final actions likely include no action, institutional controls, and pump and treat for mass reduction. The vertical barrier option is not considered for final action because chromium is persistent in the environment and does not readily degrade. The wall will contain the chromium by lengthening the travel time for the contaminants to reach the river; however, the contamination will eventually migrate around the wall.	Same as D/DR Area. The hydraulic barrier is not considered because of the logistics of maintaining the barrier indefinitely due to the persistence of the chromium.

Table 6-2. Detailed Analysis for GW-2, Institutional Controls/ Continued Current Actions. (Page 8 of 16)

LONG-TERM EFFECTIVENESS AND PERMANENCE	ALTERNATIVE GW-2: INSTITUTIONAL CONTROLS/CONTINUED CURRENT ACTIONS	
	D/DR Area	H Area
Is the alternative for the IRM compatible with potential final actions.	Yes. The institutional controls/continued current actions alternative for IRM would allow time for source cleanup and additional information collection through the treatability test in 100-HR-3 prior to implementing a final action. The institutional controls/continued current actions alternative is compatible with both the no action and institutional controls final actions in that these are simply an extension of the IRM institutional controls/continued current actions alternative.	Yes. The institutional controls/continued current actions alternative for IRM would allow time for source cleanup and additional information collection through the treatability test in 100-HR-3 prior to implementing a final action. The institutional controls/continued current actions alternative is compatible with both the no action and institutional controls final actions in that these are simply an extension of the IRM institutional controls/continued current actions alternative.
What are the uncertainties associated with land disposal of residuals and untreated wastes?	Not Applicable	Not Applicable
Will the alternative provide long-term protection of natural resources?	No, this alternative provides no restoration or environmental enhancements, although continuing current action will help develop technology performance data for identifying a final action for the operable unit.	No, this alternative provides no restoration or environmental enhancements, although continuing current action will help develop technology performance data for identifying a final action for the operable unit.
Will terrestrial habitats be degraded or enhanced?	There will be no change from current terrestrial habitat quality.	There will be no change from current terrestrial habitat quality.
How will the remedial action affect the overall quality of the ecosystem?	Because no remedial action is taken, the quality of the ecosystem will remain in its current state.	Because no remedial action is taken, the quality of the ecosystem will remain in its current state.

Table 6-2. Detailed Analysis for GW-2, Institutional Controls/ Continued Current Actions. (Page 9 of 16)

REDUCTION OF TOXICITY, MOBILITY, OR VOLUME	ALTERNATIVE GW-2: INSTITUTIONAL CONTROLS/CONTINUED CURRENT ACTIONS	
	D/DR Area	H Area
Does the treatment process address the principal threats?	The principal threat (chromium release into the river) is not addressed by this alternative.	The principal threat (chromium release into the river) is not addressed by this alternative.
Are there any special requirements for the treatment process?	No special requirements are associated with this alternative.	No special requirements are associated with this alternative.
What portion of the contaminated material is treated/destroyed?	Contaminated material is neither treated nor destroyed.	Contaminated material is neither treated nor destroyed.
To what extent is total mass of toxic contaminants reduced?	The mass of chromium entering the river is not affected by this alternative. Groundwater modeling results indicate the contaminant concentrations in near-river wells do not significantly change during the interim action period.	The mass of chromium and iron entering the river will not be affected by this alternative. Groundwater modeling results indicate the contaminant concentrations in near-river wells do not significantly change during the interim action period.
To what extent is the mobility of toxic contaminants reduced?	Contaminant mobility is not reduced.	Contaminant mobility is not reduced.
To what extent is the volume of toxic contaminants reduced?	Contaminant volume is not reduced.	Contaminant volume is not reduced.
To what extent are the effects of the treatment irreversible?	Contaminant migration into the river as well as movement of contaminant plumes is irreversible.	Contaminant migration into the river as well as movement of contaminant plumes is irreversible.
What are the quantities of residuals and characteristics of the residual risks?	No treatment residuals result from this alternative.	No treatment residuals result from this alternative.

Table 6-2. Detailed Analysis for GW-2, Institutional Controls/ Continued Current Actions. (Page 10 of 16)

REDUCTION OF TOXICITY, MOBILITY, OR VOLUME	ALTERNATIVE GW-2: INSTITUTIONAL CONTROLS/CONTINUED CURRENT ACTIONS	
	D/DR Area	H Area
What risk do treatment of residuals pose?	No risk from treatment is associated with this alternative.	No risk from treatment is associated with this alternative.
Is treatment used to reduce inherent hazards posed by principal threats at the site?	The inherent hazards associated with the principal threat are not reduced by this alternative. No treatment is included in this alternative.	The inherent hazards associated with the principal threat are not reduced by this alternative. No treatment is included in this alternative.
How does the proposed treatment impact natural resources?	Not Applicable.	Not Applicable.
Does the alternative result in a gain or loss of quality at the site for natural resources?	Existing groundwater is contaminated and a loss of natural resource quality will result with the spread of contamination.	Existing groundwater is contaminated and a loss of natural resource quality will result with the spread of contamination.
Will implementation of the alternative result in short-term impacts to natural resources (e.g., exposure of ecological receptors to physical or chemical impacts, noise, intrusion to habitat and special breeding areas, temporary displacement, or seasonal restrictions on habitat use)?	Not Applicable	Not Applicable
Will the natural resource restoration activities associated with this alternative be easily implemented?	Not Applicable	Not Applicable

Table 6-2. Detailed Analysis for GW-2, Institutional Controls/ Continued Current Actions. (Page 11 of 16)

REDUCTION OF TOXICITY, MOBILITY, OR VOLUME	ALTERNATIVE GW-2: INSTITUTIONAL CONTROLS/CONTINUED CURRENT ACTIONS	
	D/DR Area	H Area
Will long-term maintenance and monitoring of mitigation/restoration efforts and activities be necessary?	Not Applicable	Not Applicable

Table 6-2. Detailed Analysis for GW-2, Institutional Controls/ Continued Current Actions. (Page 12 of 16)

SHORT-TERM EFFECTIVENESS	ALTERNATIVE GW-2: INSTITUTIONAL CONTROLS/CONTINUED CURRENT ACTIONS	
	D/DR Area	H Area
What are the risks to the community during remedial actions that must be addressed?	None.	None.
How will the risks to the community be addressed and mitigated?	See above.	See above.
What risks remain to the community that cannot be readily controlled?	None.	None.
What are the risks to the workers that need to be addressed?	Risks to workers are associated with groundwater monitoring. Minimal exposure risks are anticipated with monitoring activities. The exposure duration associated with monitoring is estimated to be approximately 12 hours per year per worker.	Risks to workers are associated with groundwater monitoring. Minimal exposure risks are anticipated with monitoring activities. The exposure duration associated with monitoring is estimated to be approximately 12 hours per year per worker.
What risks remain to the workers that cannot be readily controlled?	None.	None.
How will the risks to the workers be addressed and mitigated?	Workers involved with monitoring activities will be required to undergo extensive training in sample collection and handling procedures. Health and safety protocols will be established and enforced, such as specification of personal protection equipment, safe work practices, contamination control measures, and decontamination procedures.	Workers involved with monitoring activities will be required to undergo extensive training in sample collection and handling procedures. Health and safety protocols will be established and enforced, such as specification of personal protection equipment, safe work practices, contamination control measures, and decontamination procedures.

Table 6-2. Detailed Analysis for GW-2, Institutional Controls/ Continued Current Actions. (Page 13 of 16)

SHORT-TERM EFFECTIVENESS	ALTERNATIVE GW-2: INSTITUTIONAL CONTROLS/CONTINUED CURRENT ACTIONS	
	D/DR Area	H Area
What environmental impacts are expected with the construction and implementation of the alternative?	None, based on the use of existing monitoring wells. Negligible impacts are anticipated if periodic well maintenance is required.	None, based on the use of existing monitoring wells. Negligible impacts are anticipated if periodic well maintenance is required.
What are the impacts that cannot be avoided should the alternative be implemented?	Impacts are minimal.	Impacts are minimal.
How long until remedial action objectives are achieved?	The RAO (protection of the river) will not be achieved by this alternative within the time frame of the interim remedial action (year 2001), due to continued unrestricted migration of chromium contamination into the Columbia River. The final remedial action should ensure the RAO are appropriate to changes in objectives and achieved within a selected reasonable timeframe.	The RAO (protection of the river) will not be achieved by this alternative within the time frame of the interim remedial action (year 2001), due to continued unrestricted migration of chromium contamination into the Columbia River. The final remedial action should ensure the RAO are appropriate to changes in objectives and achieved within a selected reasonable timeframe.

Table 6-2. Detailed Analysis for GW-2, Institutional Controls/ Continued Current Actions. (Page 14 of 16)

IMPLEMENTABILITY	ALTERNATIVE GW-2: INSTITUTIONAL CONTROLS/CONTINUED CURRENT ACTIONS	
	D/DR Area	H Area
What difficulties and uncertainties are associated with construction?	None.	None.
What is the likelihood that technical problems will lead to schedule delays?	None.	None.
What likely future remedial actions are anticipated?	None anticipated within the time frame of interim action (year 2001), final remedial actions should be determined by year 2001.	None anticipated within the time frame of interim action (year 2001), final remedial actions should be determined by year 2001.
What risks of exposure exist should monitoring be insufficient to detect failure?	Since this alternative does not involve the use of active remedial measures, groundwater monitoring failure would not result in exposure risks other than what is currently present (chromium migration into the Columbia River at concentrations above ecological ARAR, EPA Water Quality Criteria of 11 μg/L).	Since this alternative does not involve the use of active remedial measures, groundwater monitoring failure would not result in exposure risks other than what is currently present (chromium migration into the Columbia River at concentrations above ecological ARAR, EPA Water Quality Criteria of 11 μg/L).
What activities are proposed which require coordination with other agencies?	None.	None.
Are adequate treatment, storage capacity, and disposal services available?	Treatment, storage, and disposal are not applicable to this alternative.	Treatment, storage, and disposal are not applicable to this alternative.
Are the necessary equipment and specialists available?	Yes, groundwater monitoring is well established technology; equipment and specialists are readily available.	Yes, groundwater monitoring is well established technology; equipment and specialists are readily available.

Table 6-2. Detailed Analysis for GW-2, Institutional Controls/ Continued Current Actions. (Page 15 of 16)

IMPLEMENTABILITY	ALTERNATIVE GW-2: INSTITUTIONAL CONTROLS/CONTINUED CURRENT ACTIONS	
	D/DR Area	H Area
What additional equipment and specialists are required and what are their potential impacts to implementation?	None.	None.
Are technologies under consideration generally available and sufficiently demonstrated?	Yes, groundwater monitoring technology is well established technology and readily available.	Yes, groundwater monitoring technology is well established technology and readily available.
Will technologies require further development before they can be applied at the site?	No.	No.
Will more than one vendor be available to provide a competitive bid?	Yes, groundwater monitoring equipment and services are commercially available.	Yes, groundwater monitoring equipment and services are commercially available.

Table 6-2. Detailed Analysis for GW-2, Institutional Controls/ Continued Current Actions (Page 16 of 16)

COST COMPONENT	ALTERNATIVE GW-2: INSTITUTIONAL CONTROLS/CONTINUED CURRENT ACTIONS	
	D/DR Area	H Area
Capital?	$0	$0
Operation and Maintenance?	$1,300,000	$1,000,000
Present Worth?	$960,000	$950,000

Table 6-3. Detailed Analysis for GW-3, Containment Alternative. (Page 1 of 23)

OVERALL PROTECTION OF HUMAN HEALTH AND THE ENVIRONMENT	ALTERNATIVE GW-3: CONTAINMENT	
	D/DR Area	H Area
Will risk be at acceptable levels?	Human Health: Yes, the QRA indicates current risk to human health is low (ICR 10^{-6} to 10^{-4}, HQ < 1). Environment: Uncertain. Groundwater modeling results indicate the sheet piling cutoff wall in combination with hydraulic control will effectively intercept the chromium plume upgradient of the Columbia River. Groundwater modeling suggests that containment will prevent most of the chromium from reaching the Columbia River. However, chromium located between the containment system and the river will not be obstructed from reaching the river. The risk associated with the substrate of the Columbia River has not been quantified.	Human Health: Yes, the 100-HR-3 Operable Unit LFI QRA indicates current risk to human health is low (ICR 10^{-6} to 10^{-4}, HQ < 1). Environment: Groundwater modeling results indicate that hydraulic control (downgradient extraction followed by upgradient injection) will effectively intercept the chromium plume upgradient of the Columbia River. Groundwater modeling suggests that containment will prevent most of the chromium from reaching the Columbia River. However, chromium located between the containment system and the river will not be obstructed from reaching the river. The risk associated with the substrate of the Columbia River has not been quantified.

Table 6-3. Detailed Analysis for GW-3, Containment Alternative.
(Page 2 of 23)

OVERALL PROTECTION OF HUMAN HEALTH AND THE ENVIRONMENT	ALTERNATIVE GW-3: CONTAINMENT	
	D/DR Area	H Area
Timeframe to achieve acceptable levels?	The timeframe to achieve reduction in chromium mass entering the Columbia River is equivalent to the time required for implementation, i.e., the implementation of the wall immediately prevents chromium behind the wall from reaching the river. However, chromium located between the wall and the river will not be obstructed from reaching the river. Procurement and construction time for installation of the sheet piling cutoff wall and hydraulic control wells is estimated to be approximately 1 year. However, the time required to obtain the necessary permits and agreements to perform construction activities along the river is unknown.	The timeframe to achieve reduction in chromium mass entering the Columbia River is equivalent to the time required for implementation. Procurement and construction time for installation of the hydraulic control wells is estimated to be approximately 1 year. Due to the limited construction activity associated with well installation, the time required to obtain the necessary permits and agreements to perform installation is considered negligible.
Will additional threats be minimized?	Additional threats to workers resulting from implementation of this alternative will be minimized by developing health and safety protocols defining training requirements, safe work practices, and personal protection equipment, contamination control measures, and decontamination procedures. Additional threats to the environment resulting from implementation of this alternative will be minimized by limiting habitat disturbances to the extent possible and performing construction activities during seasons when threatened or endangered species, such as the bald eagle, do not inhabit the area.	Additional threats to workers resulting from implementation of this alternative will be minimized by developing health and safety protocols defining training requirements, safe work practices, and personal protection equipment, contamination control measures, and decontamination procedures. Additional threats to the environment resulting from implementation of this alternative will be minimized by limiting habitat disturbances to the extent possible and performing construction activities during seasons when threatened or endangered species, such as the bald eagle, do not inhabit the area.

Table 6-3. Detailed Analysis for GW-3, Containment Alternative. (Page 3 of 23)

OVERALL PROTECTION OF HUMAN HEALTH AND THE ENVIRONMENT	ALTERNATIVE GW-3: CONTAINMENT	
	D/DR Area	H Area
Will the alternative pose any unacceptable short-term or cross-media impacts?	All contaminants are left in place or returned to the aquifer, so additional media are not impacted. Placement of the surface barrier will temporarily disrupt wildlife.	Contaminants are left in place or returned to the aquifer, so additional media are not impacted. Placement of the surface barrier will temporarily disrupt wildlife.
What restoration actions may be necessary?	Revegetation of excavated area will be necessary. Revegetation techniques are well established, but arid lands require time.	Revegetation of excavated area will be necessary. Revegetation techniques are well established, but arid lands require time.
Will residual contamination (following remediation) be a potential problem?	Contaminants will remain at the site. Monitoring is required because of possible offsite migration.	Contaminants will remain at the site. Monitoring is required because of possible offsite migration.

Table 6-3. Detailed Analysis for GW-3, Containment Alternative. (Page 4 of 23)

COMPLIANCE WITH ARAR	ALTERATIVE GW-3: CONTAINMENT	
	D/DR Area	H Area
What are the potential ARAR?	See Table 6-5.	See Table 6-5.
Will the potential ARAR be met? How?	See Table 6-5.	See Table 6-5.
Basis for waivers?	This alternative may represent an interim action preceding a final remedial action. The final remedial action will be selected to ensure compliance with ARAR. Reduction of chromium concentrations in groundwater entering the Columbia River to below the EPA Ambient Water Quality Criteria level of 11 μg/L may be technically impractical. Although the purpose of the interim action is not aquifer restoration, contaminant concentrations in the aquifer represent the contaminant concentrations potentially entering the river. Due to the persistence of chromium in the environment, removal would be the only means of ensuring permanent compliance with ARAR. However, conventional pump and treat may never result in sufficient chromium reduction in the aquifer to comply with ARAR.	This alternative may represent an interim action preceding a final remedial action. The final remedial action will be selected to ensure compliance with ARAR. Reduction of chromium concentrations in groundwater entering the Columbia River to below the EPA Ambient Water Quality Criteria level of 11 μg/L may be technically impractical. Although the purpose of the interim action is not aquifer restoration, contaminant concentrations in the aquifer represent the contaminant concentrations potentially entering the river. Due to the persistence of chromium in the environment, removal would be the only means of ensuring permanent compliance with ARAR. However, conventional pump and treat may never result in sufficient chromium reduction in the aquifer to comply with ARAR.
What are the potential TBC?	See Table 6-5.	See Table 6-5.
Is the alternative consistent with TBC listed above	See Table 6-5.	See Table 6-5.

Table 6-3. Detailed Analysis for GW-3, Containment Alternative. (Page 5 of 23)

COMPLIANCE WITH ARAR	ALTERATIVE GW-3: CONTAINMENT	
	D/DR Area	H Area
Will implementation of the alternative comply with ARARs regarding protection, restoration, and enhancement of natural resources and protection of cultural resources?	See Table 6-6.	See Table 6-6.
What difficulties may be associated with compliance to ARARs?	See Table 6-6.	See Table 6-6.

Table 6-3. Detailed Analysis for GW-3, Containment Alternative. (Page 6 of 23)

LONG-TERM EFFECTIVENESS AND PERMANENCE	ALTERATIVE GW-3: CONTAINMENT	
	D/DR Area	H Area
What is the magnitude of the remaining risk?	Although groundwater modeling results indicate this alternative can reduce the mass of chromium entering the Columbia River during the interim action period, chromium contaminated groundwater will remain in the unconfined aquifer. The integrity of the containment system (sheet piling cutoff wall and hydraulic control wells) can be maintained through the duration of the interim action period, but final remedial action will likely be required to address the remaining chromium contaminated groundwater.	Although groundwater modeling results indicate this alternative can reduce the mass of chromium entering the Columbia River during the interim action period, chromium contaminated groundwater will remain within the unconfined aquifer. Hydraulic containment using downgradient extraction followed by upgradient injection can be maintained through the duration of the interim action period, but final remedial action will likely be required to address the remaining chromium contaminated groundwater.
What remaining sources of risk can be identified?	Chromium contaminated groundwater contained by the sheet piling wall will remain at concentrations above the 11 μg/L EPA Ambient Water Quality Criteria level.	Chromium contaminated groundwater contained by the sheet piling wall will remain at concentrations above the 11 μg/L EPA Ambient Water Quality Criteria level.
What is the likelihood that the technologies will meet performance needs?	Sheet piling cutoff wall technology is well developed. The use of hydraulic control measures (extraction wells at the ends of the sheet piling wall) can enhance the effectiveness of the wall. Groundwater modeling results indicate this containment system will be effective in reducing the mass of chromium entering the river. However, since chromium contamination within the aquifer is not reduced, additional remedial actions would be required in the future.	Hydraulic control within aquifers by downgradient extraction wells and upgradient injection wells is well developed technology. Groundwater modeling results indicate this containment system will be effective in reducing the mass of chromium entering the river. However, since chromium contamination within the aquifer is not reduced, additional remedial actions would be required in the future.

Table 6-3. Detailed Analysis for GW-3, Containment Alternative. (Page 7 of 23)

LONG-TERM EFFECTIVENESS AND PERMANENCE	ALTERATIVE GW-3: CONTAINMENT	
	D/DR Area	H Area
What type and degree of long-term management is required?	Long-term (through year 2001) management requirements for this alternative include monitoring and maintenance of the containment system. Groundwater monitoring between the river and the sheet piling wall can be used to determine unacceptable leakage from the cutoff wall. Additional sheet piles can be installed where leakage is identified.	Long-term (through year 2001) management requirements for this alternative include monitoring and maintenance of the containment system. Groundwater monitoring near the river will be required to identify unacceptable contamination leakage past the extraction wells. Additional extraction or injection wells, or maintenance (such as pump replacement) of existing wells may be required.
What are the requirements for long-term monitoring?	Groundwater monitoring as well as sheet piling wall integrity monitoring is required to assess the effectiveness of the containment system for as long as containment is required.	Groundwater monitoring is required to assess the effectiveness of the containment system. Continuous process monitoring of the extraction and injection system is required to ensure operation within design parameters (flow rate, pressure, etc.). Due to above ground transport of contaminated groundwater (from extraction wells to injection wells), unanticipated equipment failures within the system (such as pumps) must be corrected promptly.

Table 6-3. Detailed Analysis for GW-3, Containment Alternative. (Page 8 of 23)

LONG-TERM EFFECTIVENESS AND PERMANENCE	ALTERATIVE GW-3: CONTAINMENT	
	D/DR Area	H Area
What O&M functions must be performed?	Operating requirements are specific to monitoring activities. Maintenance of the monitoring system as well as the components of the containment system is required on an as needed basis.	An extraction and injection system will require continuous operation as long as containment is required. Although the system will be automated (to the extent possible), utility requirements will be high to maintain pumping operations. Personnel will be required to continuously monitor system operations and perform any immediately needed maintenance requirements to the system (such as pump replacements or plumbing repair). Monitoring well O&M requirements are the same as described for D/DR Area.
What difficulties may be associated with long-term O&M?	No O&M difficulties are anticipated during the period of interim action (through year 2001). Final remedial actions will be selected and implemented to reflect changes to objectives and reasonable and timely schedules.	Operational difficulties may result from seasonal as well as daily fluctuations in the hydrologic conditions of the unconfined aquifer. Groundwater flow near the river is strongly influenced by variations in Columbia River stage (DOE-RL 1993b). Frequent adjustments to the containment system operating conditions (such as pumping rates) may be required to ensure the effectiveness of the containment system. In addition, uncertainties in the hydraulic properties and heterogeneities in the hydrology of the unconfined aquifer may also result in long-term O&M difficulties.

Table 6-3. Detailed Analysis for GW-3, Containment Alternative. (Page 9 of 23)

LONG-TERM EFFECTIVENESS AND PERMANENCE	ALTERATIVE GW-3: CONTAINMENT	
	D/DR Area	H Area
What is the potential need for replacement of technical components?	Assuming proper installation of the sheet piling wall, replacement will not likely be required within the IRM timeframe (year 2001). However, maintenance and repair requirements as described above may be necessary on an as needed basis. Replacement of groundwater monitoring wells and equipment may also be required on an as needed basis.	Replacement of extraction or injection system components are anticipated only on a maintenance specific basis. Similarly, groundwater monitoring components may require replacement on an as needed basis.
What is the magnitude of risk should the remedial action need replacement?	The magnitude of risk to workers and the environment during replacement of the sheet piling wall would be equivalent to the risk during initial installation. However, migration of the chromium plume during replacement will likely result in additional contamination release to the river.	The magnitude of risk to workers and the environment during replacement of the sheet piling wall would be equivalent to the risk during initial installation. However, migration of the chromium plume during replacement will likely result in additional contamination release to the river.
What is the degree of confidence that controls can adequately handle potential problems?	Sheet piling wall technology is considered well established. Groundwater monitoring downgradient from the wall can effectively determine potential problems associated with the containment system. Repair of the wall is relatively simple and involves installation of additional sheet piles.	Groundwater control by extraction and injection is considered well established technology. Groundwater monitoring between the extraction wells and the river can effectively determine potential problems associated with the containment system. Repair may involve maintenance of the well system or installation of additional wells.

Table 6-3. Detailed Analysis for GW-3, Containment Alternative. (Page 10 of 23)

LONG-TERM EFFECTIVENESS AND PERMANENCE	ALTERATIVE GW-3: CONTAINMENT	
	D/DR Area	H Area
How is the removed contamination disposed of?	Sheet piling wall construction will not require contact with contaminated soil. Installation of hydraulic control wells may generate contaminated material in the form of drill cuttings. Sonic drilling may be used to reduce the generation of cuttings requiring disposal. In the event well installations, monitoring activities, or standard operations generate contaminated materials, ERDF is the specified disposal site. (W-025 or another site will be used if ERDF is unavailable.)	Installation of hydraulic control wells for extraction and injection may generate contaminated materials in the form of drill cuttings. Sonic drilling may be used to reduce the generation of cuttings requiring disposal. In addition, equipment may become contaminated as a result of operation. In the event well installation, monitoring activities, or maintenance generates contaminated materials, ERDF is the specified disposal site. (W-025 or another site will be used if ERDF is unavailable.)
What are potential final actions?	Potential final actions likely include no action, institutional controls, and pump and treat for mass reduction. The vertical barrier option is not considered for final action because chromium is persistent in the environment and does not readily degrade. The wall will contain the chromium by lengthening the travel time for the contaminants to reach the river; however, the contamination will eventually migrate around the wall.	Same as D/DR Area. The hydraulic barrier is not considered because of the logistics of maintaining the barrier indefinitely due to the persistence of the chromium.

Table 6-3. Detailed Analysis for GW-3, Containment Alternative. (Page 11 of 23)

LONG-TERM EFFECTIVENESS AND PERMANENCE	ALTERATIVE GW-3: CONTAINMENT	
	D/DR Area	H Area
Is the alternative for the IRM compatible with potential final actions?	Yes. The vertical barrier is compatible with all the potential final actions. If the barrier is installed as an IRM, it will not have an adverse effect on a no action or institutional controls final action and in fact will provide additional protection above and beyond that provided by no action or institutional controls. The wall would augment the mass reduction pump and treat by reducing the effects of the river on the pumping system and the amount of river water extraction. The wall would contain the plume pending source remediation and treatability test results. This would allow optimization of the pump and treat system based on maximum information.	Same as D/DR Area. Hydraulic control may mobilize and relocate contaminants to the upgradient segment of the plume. The technology can be readily modified to a pump and treat system for final action.
What are the uncertainties associated with land disposal of residuals and untreated wastes?	Untreated wastes will be contained at the site. Containment will not be complete.	Untreated wastes will be contained at the site. Containment will not be complete.
Will the alternative provide long-term protection of natural resources?	This alternative can reduce contamination to the Columbia River, but the contaminated groundwater will remain.	This alternative can reduce contamination to the Columbia River, but the contaminated groundwater will remain.
Will terrestrial habitats be degraded or enhanced?	Terrestrial habitats will be restored to natural habitat after construction; sensitive habitats will be avoided as much as possible.	Terrestrial habitats will be restored to natural habitat after construction; sensitive habitats will be avoided as much as possible.

Table 6-3. Detailed Analysis for GW-3, Containment Alternative. (Page 12 of 23)

LONG-TERM EFFECTIVENESS AND PERMANENCE	ALTERATIVE GW-3: CONTAINMENT	
	D/DR Area	H Area
How will the remedial action affect the overall quality of the ecosystem?	Contamination entering the Columbia River will be reduced; groundwater will still be contaminated; the revegetation and restoration of natural habitat will enhance the environment.	Contamination entering the Columbia River will be reduced; groundwater will still be contaminated; the revegetation and restoration of natural habitat will enhance the environment.

Table 6-3. Detailed Analysis for GW-3, Containment Alternative. (Page 13 of 23)

REDUCTION OF TOXICITY, MOBILITY, OR VOLUME	ALTERATIVE GW-3: CONTAINMENT	
	D/DR Area	H Area
Does the treatment process address the principal threats?	Yes. The majority of chromium contaminated groundwater within the unconfined aquifer would be contained and therefore prevented from entering the Columbia River. However, due to the persistence of chromium in the environment, groundwater contained by the sheet piling wall will remain contaminated.	Yes. The majority of chromium contaminated groundwater within the unconfined aquifer would be contained and therefore prevented from entering the Columbia River. However, due to the persistence of chromium in the environment, groundwater contained by the extraction and injection system will remain contaminated until additional remedial actions are implemented.
Are there any special requirements for the treatment process?	The effectiveness of the sheet piling wall requires key-in to a confining geologic formation (aquitard) below the unconfined aquifer. This requires wall construction adjacent to the Columbia River to approximately 15 m (50 ft) below the surface.	None foreseeable.
What portion of the contaminated material is treated/destroyed?	The purpose of this alternative is containment; therefore contaminated material is neither treated or destroyed.	The purpose of this alternative is containment; therefore contaminated material is neither treated or destroyed.
To what extent is total mass of toxic contaminants reduced?	The total mass of chromium will not be reduced by this alternative. However, the majority of chromium contamination within the unconfined aquifer will be prevented from migrating into the Columbia River.	The total mass of chromium will not be reduced by this alternative. However, the majority of chromium contamination within the unconfined aquifer will be prevented from migrating into the Columbia River.
To what extent is the mobility of toxic contaminants reduced?	Contaminant mobility is significantly reduced by the sheet piling wall. The hydraulic conductivity of the wall (10^{-7} to 10^{-10} cm/sec) will be several orders of magnitude less than the hydraulic conductivity of the unconfined aquifer near the river (10^{-2} cm/sec).	The extraction and injection system will reduce the mobility of chromium contaminated groundwater in the H Area by isolation within the existing plume boundary.

Table 6-3. Detailed Analysis for GW-3, Containment Alternative.
(Page 14 of 23)

REDUCTION OF TOXICITY, MOBILITY, OR VOLUME	ALTERATIVE GW-3: CONTAINMENT	
	D/DR Area	H Area
To what extent is the volume of toxic contaminants reduced?	The volume of contamination is not reduced by containment.	The volume of contamination is not reduced by containment.
To what extent are the effects of the treatment irreversible?	Isolation of chromium contaminated groundwater by installation of a sheet piling wall and hydraulic control wells is reversible. Isolation is temporary and dependent on maintaining the integrity of the containment system.	Isolation of chromium and iron contaminated groundwater by operation of an extraction and injection well system is reversible. Isolation is temporary and dependent on maintaining operation of the well system.
What are the quantities of residuals and characteristics of the residual risks?	The majority of chromium contaminated groundwater will remain isolated by the containment system. The chromium concentrations within the contained plume will be above the EPA Ambient Water Quality Criteria of 11 μg/L level.	The majority of chromium contaminated groundwater will remain isolated by the containment system. The chromium concentrations within the contained plume will be above the EPA Ambient Water Quality Criteria of 11 μg/L level.
What risks do treatment of residuals pose?	The contaminated groundwater isolated by the containment system will not be treated during the interim action period. Selection and implementation of the final remedial action will address the disposition of isolated chromium contaminated groundwater.	The contaminated groundwater isolated by the containment system will not be treated during the interim action period. Selection and implementation of the final remedial action will address the disposition of isolated chromium contaminated groundwater.
Is treatment used to reduce inherent hazards posed by principal threats at the site?	This alternative does not involve treatment and therefore does not reduce the inherent hazards posed by the contaminated groundwater.	This alternative does not involve treatment and therefore does not reduce the inherent hazards posed by the contaminated groundwater.
How does the proposed treatment impact natural resources?	Containment will reduce contamination entering the Columbia River; the groundwater will still be contaminated. Habitat along the river will be impacted.	Containment will reduce contamination entering the Columbia River; the groundwater will still be contaminated. Habitat along the river will be impacted.

Table 6-3. Detailed Analysis for GW-3, Containment Alternative. (Page 15 of 23)

REDUCTION OF TOXICITY, MOBILITY, OR VOLUME	ALTERATIVE GW-3: CONTAINMENT	
	D/DR Area	H Area
Does the alternative result in a gain or loss of quality at the site for natural resources?	The Columbia River will gain in natural resource quality while the groundwater will remain contaminated. The riparian habitat will be impacted.	The Columbia River will gain in natural resource quality while the groundwater will remain contaminated. The riparian habitat will be impacted.
Will implementation of the alternative result in short-term impacts to natural resources (e.g., exposure of ecological receptors to physical or chemical impacts, noise, intrusion to habitat and special breeding areas, temporary displacement, or seasonal restrictions on habitat use)?	At the present time, the majority of waste site are severely disturbed, therefore, short-term impacts would be moderate. The containment alternative will cause more impacts than other alternatives because physical structures must be located next to the river. Mitigation efforts will include scheduling activities to reduce intrusion during sensitive life stages, controlling fugitive dust, and establishing buffer zones if needed.	At the present time, the majority of waste site are severely disturbed, therefore, short-term impacts would be moderate. The containment alternative will cause more impacts than other alternatives because physical structures must be located next to the river. Mitigation efforts will include scheduling activities to reduce intrusion during sensitive life stages, controlling fugitive dust, and establishing buffer zones if needed.
Will the natural resource restoration activities associated with this alternative be easily implemented?	Revegetation of excavated area will be necessary. Revegetation techniques are well established.	Revegetation of excavated area will be necessary. Revegetation techniques are well established.
Will long-term maintenance and monitoring of mitigation/restoration efforts and activities be necessary?	No.	No.

Table 6-3. Detailed Analysis for GW-3, Containment Alternative. (Page 16 of 23)

SHORT-TERM EFFECTIVENESS	ALTERATIVE GW-3: CONTAINMENT	
	D/DR Area	H Area
What are the risks to the community during remedial actions that must be addressed?	Construction of the sheet piling wall will pose minimal risk to the surrounding communities. Due to the remote location of the 100 D/DR Area, construction activities are not expected to impact the surrounding community. Based on the nature of sheet piling wall construction, no contact with contamination is required.	Based on previous well construction activities at the Hanford Site, construction of the hydraulic containment system will pose negligible risk to the surrounding communities. Due to the remote location of the 100 H Area, construction activities are not expected to impact the surrounding community.
How will the risks to the community be addressed and mitigated?	No risks to the community result from implementation of this alternative.	No risks to the community result from implementation of this alternative.
What risks remain to the community that cannot be readily controlled?	Potential risks to humans through contact with spring water with elevated chromium concentrations.	Potential risks to humans through contact with spring water with elevated chromium concentrations.
What are the risks to the workers that need to be addressed?	The primary risk to workers during implementation of this alternative is physical hazards relating to construction activities. These physical hazards are associated with pile driving, handling and placement of the sheet pilings, and vehicle operations. Contaminated materials in the form of drill cuttings from the installation of hydraulic control wells may also present risk to workers, however, these can be reduced by the use of sonic drilling. The containment alternative has the greatest potential for impacts to the worker. Use of heavy equipment and the physical size of the project result in a medium to high worker risk from physical hazards. Exposure risks are expected to be low.	The primary risk to workers during implementation of this alternative is physical hazards relating to construction activities. These physical hazards are associated with drilling, pipeline installation, and vehicle operations. Contaminated materials in the form of drill cuttings from the installation of hydraulic control wells may also present risk to workers, however, these can be reduced by the use of sonic drilling. Risks to workers from groundwater extraction and handling are expected to be low.

Table 6-3. Detailed Analysis for GW-3, Containment Alternative. (Page 17 of 23)

SHORT-TERM EFFECTIVENESS	ALTERATIVE GW-3: CONTAINMENT	
	D/DR Area	H Area
What risks remain to the workers that cannot be readily controlled?	None.	None.
How will the risks to the workers be addressed and mitigated?	Health risks to workers resulting from physical hazards associated with construction activities will be minimized by development of health and safety protocols defining training requirements, safe work practices, and personal protection equipment.	Health risks to workers resulting from physical hazards associated with construction activities will be minimized by development of health and safety protocols defining training requirements, safe work practices, and personal protection equipment.

Table 6-3. Detailed Analysis for GW-3, Containment Alternative. (Page 18 of 23)

SHORT-TERM EFFECTIVENESS	ALTERATIVE GW-3: CONTAINMENT	
	D/DR Area	H Area
What environmental impacts are expected with the construction and implementation of the alternative?	The primary environmental impacts from this alternative will result from implementation of the sheet piling wall. The wall is to be construction near the shore of the Columbia River. In the area surrounding the location of the wall, physical disturbances to habitat will result from equipment and vehicle operations. These disturbances may temporarily impact the endangered species such as the bald eagle. However, construction during seasons when such species are not within the area will minimize potential impacts. The barrier would be located in a potential wetland/ floodplain zone. Assessment of impacts would be required prior to implementation. Other threatened and endangered species would need to be identified in the proposed zone of construction. Impacts would be minimized by proper place of design. This alternative presents the greatest potential for environmental impacts through implementation. The barrier wall alternative has the greatest potential for adverse impacts to both ecological and cultural resources. The implementation of the wall would require several pieces of heavy equipment to construct roads and access ways for the actual wall installation. Impacts to habitat would occur along the entire proposed length of the wall. Cultural resources have been identified in the area near the proposed wall locations; additional assessment of these resources would be necessary to optimize the wall placement.	Environmental impacts resulting from installation of the extraction and injection well containment system are considered minimal. The primary impacts are associated with well drilling activities and construction of the piping system connecting the wells. These activities will likely result in physical disturbances to habitat potentially inhabited by bald eagles. However, construction during seasons when such species are not within the area will minimize potential impacts. Environmental and cultural surveys required prior to implementation.

Table 6-3. Detailed Analysis for GW-3, Containment Alternative. (Page 19 of 23)

SHORT-TERM EFFECTIVENESS	ALTERATIVE GW-3: CONTAINMENT	
	D/DR Area	H Area
What are the impacts that cannot be avoided should the alternative be implemented?	Environmental impacts resulting from sheet piling wall construction cannot be avoided. Physical disturbances to habitat will be temporary and limited to approximately 1,300 m of the Columbia River shoreline. No significant impacts such as disturbances to threatened or endangered species are anticipated.	Environmental impacts resulting from construction of the extraction/injection containment system cannot be avoided. Physical disturbances to habitat will be temporary and limited to surface area above the location of the contaminant plume. No significant impacts such as disturbances to threatened or endangered species are anticipated.
How long until remedial action objectives are achieved?	The RAO for protection of the Columbia River will be achieved upon installation of the sheet piling wall and operation of the hydraulic control wells for the zone behind the wall. However, contamination between the wall and the river will continue to migrate to the river. As noted previously, procurement and installation of this containment system is estimated to require approximately one year. However, the time required to obtain the required permits and agreements to begin construction is unknown.	The RAO for protection of the Columbia River will be achieved upon operation of the extraction and injection well system. As noted previously, procurement and installation of this containment system is estimated to require approximately one year. However, the time required to obtain the required permits and agreements to begin construction is unknown.

Table 6-3. Detailed Analysis for GW-3, Containment Alternative.
(Page 20 of 23)

IMPLEMENTABILITY	ALTERATIVE GW-3: CONTAINMENT	
	D/DR Area	H Area
What difficulties and uncertainties are associated with construction?	The primary uncertainty associated with construction of the sheet piling wall is the presence of subsurface obstructions in the formation below the specified location of the wall. Sheet piling wall construction is not considered implementable in the Hanford formation. However, near the Columbia River shore the geologic formation is primarily the Ringold Formation. Since the distinction between the formations is not exact, the presence of subsurface obstructions could damage or deflect the piles and render the wall ineffective.	No uncertainties or difficulties are associated with construction of the extraction and injection wells specified for containment of chromium contaminated groundwater in the H Area.
What is the likelihood that technical problems will lead to schedule delays?	Sheet piling wall construction is well established. However, if the presence of subsurface obstructions have not been determined prior to installation, such problems will lead to schedule delays. Subsurface obstructions could be removed by excavation on a limited basis, otherwise the wall may not be implementable.	Based on previously installed wells throughout the Hanford Site, no difficulties are anticipated. Any difficulties that may arise would not be considered significant to affect schedule.
What likely future remedial actions are anticipated?	Since the containment system proposed in this alternative does not reduce chromium concentrations in the groundwater, future remedial actions after the interim action period may ben required. These include pump and treat, innovative in situ techniques, or other alternatives. Current activities are being directed at defining true risks to the river and the future need for remedial actions.	Since the containment system proposed in this alternative does not reduce chromium concentrations in the groundwater, future remedial actions after the interim action period may ben required. These include pump and treat, innovative in situ techniques, or other alternatives. Current activities are being directed at defining true risks to the river and the future need for remedial actions.

Table 6-3. Detailed Analysis for GW-3, Containment Alternative. (Page 21 of 23)

IMPLEMENTABILITY	ALTERATIVE GW-3: CONTAINMENT	
	D/DR Area	H Area
What risks of exposure exist should monitoring be insufficient to detect failure?	Failure of the sheet piling wall containment system would result in the continued chromium release into the river at concentrations above EPA Ambient Water Quality Criteria levels (11 μg/L). The resulting exposure risk would be no greater than the current conditions at the 100 D/DR Area.	Failure of the extraction/injection containment system would result in the continued chromium release into the river at concentrations above EPA Ambient Water Quality Criteria levels (11 μg/L). The resulting exposure risk would be no greater than the current conditions at the 100 H Area.
What activities are proposed which require coordination with other agencies?	Construction of the sheet piling wall immediately adjacent to the shore of the Columbia River may require permission from other agencies such as the U.S. Army Corps of Engineers, the Washington State Department of Fish and Wildlife, and the National Park Service.	None.
Are adequate treatment, storage capacity, and disposal services available?	Containment does not involve contact with contamination, and therefore does not require treatment, storage, and disposal services.	Containment does not involve contact with contamination, and therefore does not require treatment, storage, and disposal services.
Are the necessary equipment and specialists available?	Yes, sheet piling cutoff wall construction equipment and specialists are commercially available. All other equipment and specialists required are available with the Hanford Site contractors.	Yes, well and piping construction equipment and specialists are considered available within the Hanford Site contractors.
What additional equipment and specialists are required and what are their potential impacts to implementation?	Sheet piling wall construction specialists and equipment are required to ensure proper installation.	None required.

Table 6-3. Detailed Analysis for GW-3, Containment Alternative. (Page 22 of 23)

IMPLEMENTABILITY	ALTERATIVE GW-3: CONTAINMENT	
	D/DR Area	H Area
Are technologies under consideration generally available and sufficiently demonstrated?	Yes, however treatability studies would be needed to demonstrate the implementability of sheet piling walls in the Hanford Site conditions. This activity may be conducted at N Springs.	Yes, hydraulic control using extraction and injection well systems is well developed technology.
Will technologies require further development before they can be applied at the site?	No, however treatability studies to demonstrate the implementability of sheet piling walls would be needed.	No, hydraulic control using extraction and injection well systems is well developed technology.
Will more than one vendor be available to provide a competitive bid?	Yes, sheet piling wall construction technology is commercially available.	Yes, groundwater well construction technology is commercially available.

Table 6-3. Detailed Analysis for GW-3, Contianment Alternative (Page 23 of 23)

COST COMPONENT	ALTERATIVE GW-3: CONTAINMENT	
	D/DR Area	H Area
Capital?	$11,000,000	$3,900,000
Operation and Maintenance?	$16,600,000	$8,000,000
Present Worth?	$23,000,000	$9,900,000

Table 6-4. Detailed Analysis for GW-5, Removal, Treatment, and Disposal Alternative With Ion Exchange Treatment. (Page 1 of 25)

OVERALL PROTECTION OF HUMAN HEALTH AND THE ENVIRONMENT	ALTERATIVE GW-5: REMOVAL/TREATMENT/DISPOSAL	
	D/DR Area	H Area
Will risk be at acceptable levels?	Human Health: Yes, the QRA indicates current risk to human health is low (ICR 10^{-6} to 10^{-4}, HQ > 1). Environment: Uncertain. The potential ecological risk identified in the LFI QRA from chromium concentrations in near river wells exceeding the EPA Ambient Water Quality Criteria of 11 μg/L can be significantly reduced by this alternative. Treatability study results indicate ion exchange can remove hexavalent chromium from 100-HR-3 groundwater to concentrations less than 20 μg/L (based on 19 μg/L detection limit) (WHC 1993b). Groundwater modeling results indicate that a five well extraction system positioned along the Columbia River (plus an additional well located above the peak chromium concentration in the plume) can remove a significant amount of chromium entering the river relative to the baseline (no action). The risk associated with the Columbia River substrate has not been quantified.	Human Health: Yes, the LFI QRA indicates current risk to human health is low (ICR 10^{-6} to 10^{-4}, HQ > 1). Environment: The potential ecological risk identified in the LFI QRA from chromium concentrations in near river wells exceeding the EPA Ambient Water Quality Criteria of 11 μg/L can be significantly reduced by this alternative. Treatability study results indicate ion exchange can remove hexavalent chromium from 100-HR-3 groundwater to concentrations less than 20 μg/L (based on 19 μg/L detection limit) (WHC 1993b). Groundwater modeling results indicate that a seven well extraction system positioned along the Columbia River can remove a significant amount of chromium entering the river relative to the baseline (no action). The risk associated with the Columbia River substrate has not been quantified.

Table 6-4. Detailed Analysis for GW-5, Removal, Treatment, and Disposal Alternative With Ion Exchange Treatment. (Page 2 of 25)

OVERALL PROTECTION OF HUMAN HEALTH AND THE ENVIRONMENT	ALTERATIVE GW-5: REMOVAL/TREATMENT/DISPOSAL	
	D/DR Area	H Area
Timeframe to achieve acceptable levels?	Based on modeling results, operation of the pump-and-treat system in the 100 D/DR Area will be required for the duration of the IRM period (year 2001) in order to maintain protection of the Columbia River. However, reductions in the volume of chromium contaminated groundwater entering the river will be achieved once pump-and-treat is initiated. It should be noted that the intent of the pump-and-treat system is protection of the river and not aquifer restoration.	Based on modeling results, operation of the pump-and-treat system in the 100 D/DR Area will be required for the duration of the IRM period (year 2001) in order to maintain protection of the Columbia River. However, reductions in the volume of chromium contaminated groundwater entering the river will be achieved once pump-and-treat is initiated. It should be noted that the intent of the pump-and-treat system is protection of the river and not aquifer restoration.
Will additional threats be minimized?	Additional threats posed by chromium removed from groundwater will be insignificant. All treatment residuals will be disposed at ERDF, W-025, or another site. Chromium contaminated ion exchange resin may be classified as mixed waste in the event radionuclides such as technetium-99 are also removed. Other treatment residues (such as settling tank sludge) will be solidified in cement prior to disposal at ERDF.	Additional threats posed by chromium removed from groundwater will be insignificant. All treatment residuals will be disposed at ERDF, W-025, or another site. Chromium contaminated ion exchange resin may be classified as mixed waste in the event radionuclides such as technetium-99 are also removed. Other treatment residues (such as settling tank sludge) will be solidified in cement prior to disposal at ERDF.
Will the alternative pose any unacceptable short-term or cross-media impacts?	No. Chromium concentrations in groundwater and in the Columbia River are expected to decline.	No. Chromium concentrations in groundwater and in the Columbia River are expected to decline.
What restoration actions may be necessary?	If the system is removed following remediation, regrading and revegetation may be necessary to restore the area.	If the system is removed following remediation, regrading and revegetation may be necessary to restore the area.

Table 6-4. Detailed Analysis for GW-5, Removal, Treatment, and Disposal Alternative With Ion Exchange Treatment. (Page 3 of 25)

OVERALL PROTECTION OF HUMAN HEALTH AND THE ENVIRONMENT	ALTERATIVE GW-5: REMOVAL/TREATMENT/DISPOSAL	
	D/DR Area	H Area
Will residual contamination (following remediation) be a potential problem?	Not applicable for interim action. It is anticipated that final remedial action will address residual contamination.	Not applicable for interim action. It is anticipated that final remedial action will address residual contamination.

Table 6-4. Detailed Analysis for GW-5, Removal, Treatment, and Disposal Alternative With Ion Exchange Treatment. (Page 4 of 25)

COMPLIANCE WITH ARAR	ALTERATIVE GW-5: REMOVAL/TREATMENT/DISPOSAL	
	D/DR Area	H Area
What are the potential ARAR?	See Table 6-5.	See Table 6-5.
Will the potential ARAR be met? How?	See Table 6-5.	See Table 6-5.

Table 6-4. Detailed Analysis for GW-5, Removal, Treatment, and Disposal Alternative With Ion Exchange Treatment. (Page 5 of 25)

COMPLIANCE WITH ARAR	ALTERATIVE GW-5: REMOVAL/TREATMENT/DISPOSAL	
	D/DR Area	H Area
Basis for waivers?	This alternative may represent an interim action preceding a final action. The final remedial action will be selected to ensure compliance with ARAR. Reduction of chromium concentrations in groundwater entering the Columbia River to below the EPA Ambient Water Quality Criteria level of 11 μg/L may be technically impractical. Although the purpose of the interim action is not aquifer restoration, contaminant concentrations in the aquifer represent the contaminant concentrations potentially entering the river. Due to the persistence of chromium in the environment, removal would be the only means of ensuring permanent compliance with ARAR. However, conventional pump-and-treat may never result in sufficient chromium reduction in the aquifer to comply with ARAR. Ion exchange treatability study results for chromium removal from 100-HR-3 OU groundwater do not indicate the 11 μg/L EPA Ambient Water Quality Criteria level can be achieved. Although chromium concentrations could be significantly reduced (below 20 μg/L hexavalent chromium and 29 μg/L total chromium), concentration reductions were not sufficient to meet the 11 μg/L ARAR.	This alternative may represent an interim action preceding a final action. The final remedial action will be selected to ensure compliance with ARAR. Reduction of chromium concentrations in groundwater entering the Columbia River to below the EPA Ambient Water Quality Criteria level of 11 μg/L may be technically impractical. Although the purpose of the interim action is not aquifer restoration, contaminant concentrations in the aquifer represent the contaminant concentrations potentially entering the river. Due to the persistence of chromium in the environment, removal would be the only means of ensuring permanent compliance with ARAR. However, conventional pump-and-treat may never result in sufficient chromium reduction in the aquifer to comply with ARAR. Ion exchange treatability study results for chromium removal from 100-HR-3 OU groundwater do not indicate the 11 μg/L EPA Ambient Water Quality Criteria level can be achieved. Although chromium concentrations could be

Table 6-4. Detailed Analysis for GW-5, Removal, Treatment, and Disposal Alternative With Ion Exchange Treatment. (Page 6 of 25)

COMPLIANCE WITH ARAR	ALTERATIVE GW-5: REMOVAL/TREATMENT/DISPOSAL	
	D/DR Area	H Area
What are the potential TBC?	See Table 6-5.	See Table 6-5.
Is the alternative consistent with TBC listed above	See Table 6-5.	See Table 6-5.
Will implementation of the alternative comply with ARARs regarding protection, restoration, and enhancement of natural resources and protection of cultural resources?	See Table 6-6.	See Table 6-6.
What difficulties may be associated with compliance to ARARs?	See Table 6-6.	See Table 6-6.

Table 6-4. Detailed Analysis for GW-5, Removal, Treatment, and Disposal Alternative With Ion Exchange Treatment. (Page 7 of 25)

LONG-TERM EFFECTIVENESS AND PERMANENCE	ALTERATIVE GW-5: REMOVAL/TREATMENT/DISPOSAL	
	D/DR Area	H Area
What is the magnitude of the remaining risk?	Reduction of chromium concentrations in groundwater extracted from the unconfined aquifer can be reduced to the levels achieved in the ion exchange treatability study (detection limits, 29 μg/L total chromium and 19 μg/L chromium (VI)). Groundwater modeling results indicate the mass of chromium entering the river can be reduced relative to no action. However, groundwater modeling results also indicate pump-and-treat would be required beyond the period of interim action (year 2001) in order to maintain protection of the river.	Reduction of chromium concentrations in groundwater extracted from the unconfined aquifer can be reduced to the levels achieved in the ion exchange treatability study (detection limits, 29 μg/L total chromium and 19 μg/L chromium (VI)). Groundwater modeling results indicate the mass of chromium entering the river can be reduced relative to no action. However, groundwater modeling results also indicate pump-and-treat would be required beyond the period of interim action (year 2001) in order to maintain protection of the river.
What remaining sources of risk can be identified?	Untreated groundwater remaining in the aquifer, treated groundwater discharged to the Columbia River, and untreated groundwater leakage past the extraction system are the remaining sources of risk. However, final remedial action will address risk due to chromium contaminated groundwater remaining in the aquifer after the IRM period.	Untreated groundwater remaining in the aquifer, treated groundwater discharged to the Columbia River, and untreated groundwater leakage past the extraction system are the remaining sources of risk. However, final remedial action will address risk due to chromium contaminated groundwater remaining in the aquifer after the IRM period.

Table 6-4. Detailed Analysis for GW-5, Removal, Treatment, and Disposal Alternative With Ion Exchange Treatment. (Page 8 of 25)

LONG-TERM EFFECTIVENESS AND PERMANENCE	ALTERATIVE GW-5: REMOVAL/TREATMENT/DISPOSAL	
	D/DR Area	H Area
What is the likelihood that the technologies will meet performance needs?	Groundwater modeling results indicate the extraction system can reduce the mass of chromium entering the Columbia River relative to the baseline. Treatability study results indicate chromium removal from 100-HR-3 groundwater by ion exchange can reduce concentrations to below 20 μg/L.	Groundwater modeling results indicate the extraction system can reduce the mass of chromium entering the Columbia River relative to the baseline. Treatability study results indicate chromium removal from 100-HR-3 groundwater by ion exchange can reduce concentrations to below 20 μg/L.
What type and degree of long-term management is required?	Long-term management is required for the duration of the interim action period to maintain operation of the ion exchange treatment system and extraction wells, satisfy annual reporting requirements, and perform periodic groundwater monitoring.	Long-term management is required for the duration of the interim action period to maintain operation of the ion exchange treatment system and extraction wells, satisfy annual reporting requirements, and perform periodic groundwater monitoring.
What are the requirements for long-term monitoring?	The current monitoring program will continue through the IRM period. Evaluations will be made periodically to ensure the effectiveness of the treatment is maintained.	The current monitoring program will continue through the IRM period. Evaluations will be made periodically (i.e. every 5 years) to ensure the effectiveness of the treatment is maintained.
What O&M functions must be performed?	O&M will be required for the duration of the IRM period (year 2001) to ensure continuous treatment and monitoring.	O&M will be required for the duration of the IRM period (year 2001) to ensure continuous treatment and monitoring.
What difficulties may be associated with long-term O&M?	None foreseeable within the timeframe of the IRM period (year 2001).	None foreseeable within the timeframe of the IRM period (year 2001).

Table 6-4. Detailed Analysis for GW-5, Removal, Treatment, and Disposal Alternative With Ion Exchange Treatment. (Page 9 of 25)

LONG-TERM EFFECTIVENESS AND PERMANENCE	ALTERATIVE GW-5: REMOVAL/TREATMENT/DISPOSAL	
	D/DR Area	H Area
What is the potential need for replacement of technical components?	Periodic replacement of ion exchange system components (e.g., pumps, columns), materials (resins), extraction wells, monitoring wells, and associated ancillary equipment will be required.	Periodic replacement of ion exchange system components (e.g., pumps, columns), materials (resins), extraction wells, monitoring wells, and associated ancillary equipment will be required.
What is the magnitude of risk should the remedial action need replacement?	The time required to replace treatment system components is not considered significant. However, in the event treatment is unavailable for extended periods, untreated contaminated groundwater could enter the river.	The time required to replace treatment system components is not considered significant. However, in the event treatment is unavailable for extended periods, untreated contaminated groundwater could enter the river.
What is the degree of confidence that controls can adequately handle potential problems?	Potential problems associated with operation of the treatment system include equipment failure, leaks or spills, and contaminant removal inefficiency. Control measures can adequately protect human health and the environment should such problems arise. The treatment system will be equipped with automated shut-down controls, secondary containment measures, and effluent concentration monitoring.	Potential problems associated with operation of the treatment system include equipment failure, leaks or spills, and contaminant removal inefficiency. Control measures can adequately protect human health and the environment should such problems arise. The treatment system will be equipped with automated shut-down controls, secondary containment measures, and effluent concentration monitoring.

Table 6-4. Detailed Analysis for GW-5, Removal, Treatment, and Disposal Alternative With Ion Exchange Treatment. (Page 10 of 25)

LONG-TERM EFFECTIVENESS AND PERMANENCE	ALTERATIVE GW-5: REMOVAL/TREATMENT/DISPOSAL	
	D/DR Area	H Area
How is the removed contamination disposed of?	Spent ion exchange resins will be disposed following dewatering. Other treatment residuals (such as settling tank sludge and solids from the regeneration loop) will be solidified in cement. All treatment residuals will be disposed on the Hanford Site at ERDF, W-025, or another site.	Spent ion exchange resins will be disposed following dewatering. Other treatment residuals (such as settling tank sludge and solids from the regeneration loop) will be solidified in cement. All treatment residuals will be disposed on the Hanford Site at ERDF, W-025, or another site.
What are potential final actions?	Potential final actions likely include no action, institutional controls, and pump and treat for mass reduction. The vertical barrier option is not considered for final action because chromium is persistent in the environment and does not readily degrade. The wall will contain the chromium by lengthening the travel time for the contaminants to reach the river; however, the contamination will eventually migrate around the wall.	Potential final actions likely include no action, institutional controls, and pump and treat for mass reduction. The vertical barrier option is not considered for final action because chromium is persistent in the environment and does not readily degrade. The wall will contain the chromium by lengthening the travel time for the contaminants to reach the river; however, the contamination will eventually migrate around the wall.

Table 6-4. Detailed Analysis for GW-5, Removal, Treatment, and Disposal Alternative With Ion Exchange Treatment. (Page 11 of 25)

LONG-TERM EFFECTIVENESS AND PERMANENCE	ALTERATIVE GW-5: REMOVAL/TREATMENT/DISPOSAL	
	D/DR Area	H Area
Is the alternative for the IRM compatible with potential final actions?	The pump and treat alternative for containment and some mass reduction as proposed in this FFS is consistent with future pump and treat scenarios for mass removal. The IRM system can be expanded to meet changing objective, such as significant mass removal. This situation is similar to that proposed in the 100-HR-3 treatability test where a small pump and treat system will be installed to obtain information about the technology specific to the chromium plume in the operable unit. The proposed plan is to expand the treatability system to an IRM if results are favorable for the technology. The IRM system is not very compatible with the no action and institutional controls alternatives because of the expense involved in installing and operating the pumping system during the IRM period only to shut it down for final action.	The pump and treat alternative for containment and some mass reduction as proposed in this FFS is consistent with future pump and treat scenarios for mass removal. The IRM system can be expanded to meet changing objective, such as significant mass removal. This situation is similar to that proposed in the 100-HR-3 treatability test where a small pump and treat system will be installed to obtain information about the technology specific to the chromium plume in the operable unit. The proposed plan is to expand the treatability system to an IRM if results are favorable for the technology. The IRM system is not very compatible with the no action and institutional controls alternatives because of the expense involved in installing and operating the pumping system during the IRM period only to shut it down for final action.
What are the uncertainties associated with land disposal of residuals and untreated wastes?	Residuals and wastes will be disposed at existing or new waste management facilities at Hanford. It is anticipated that the facilities will remain in operation during the IRM period.	Residuals and wastes will be disposed at existing or new waste management facilities at Hanford. It is anticipated that the facilities will remain in operation during the IRM period.

Table 6-4. Detailed Analysis for GW-5, Removal, Treatment, and Disposal Alternative With Ion Exchange Treatment. (Page 12 of 25)

LONG-TERM EFFECTIVENESS AND PERMANENCE	ALTERATIVE GW-5: REMOVAL/TREATMENT/DISPOSAL	
	D/DR Area	H Area
Will the alternative provide long-term protection of natural resources?	Yes. Contribution of chromium to the Columbia River will be reduced during the IRM period. Some chromium will be removed from groundwater, but it is anticipated that final action will be required to address residual contamination.	Yes. Contribution of chromium to the Columbia River will be reduced during the IRM period. Some chromium will be removed from groundwater, but it is anticipated that final action will be required to address residual contamination.
Will terrestrial habitats be degraded or enhanced?	There will be some degradation of terrestrial habitat during the construction phase. Habitat impacts during system operation will be minor.	There will be some degradation of terrestrial habitat during the construction phase. Habitat impacts during system operation will be minor.
How will the remedial action affect the overall quality of the ecosystem?	This alternative will improve the quality of the ecosystem by reducing the flux of chromium to the Columbia River.	This alternative will improve the quality of the ecosystem by reducing the flux of chromium to the Columbia River.

Table 6-4. Detailed Analysis for GW-5, Removal, Treatment, and Disposal Alternative With Ion Exchange Treatment. (Page 13 of 25)

REDUCTION OF TOXICITY, MOBILITY, OR VOLUME	ALTERATIVE GW-5: REMOVAL/TREATMENT/DISPOSAL	
	D/DR Area	H Area
Does the treatment process address the principal threats?	Yes. The ion exchange resin selected would be highly effective for hexavalent chromium removal as well as other ionic contaminants (such as nitrates).	Yes. The ion exchange resin selected would be highly effective for hexavalent chromium removal as well as other ionic contaminants (such as nitrates).
Are there any special requirements for the treatment process?	Pretreatment such as filtration prior to the ion exchange column will be required. Process monitoring and control capabilities will also be required. Resins that are disposable at ERDF or other acceptable sites will be required, i.e., only non-hazardous resins would be used.	Pretreatment such as filtration prior to the ion exchange column will be required. Process monitoring and control capabilities will also be required. Resins that are disposable at ERDF or other acceptable sites will be required, i.e., only non-hazardous resins would be used.
What portion of the contaminated material is treated/destroyed?	The volume of chromium contaminated groundwater treated would be equivalent to the design flow rate (60 gal/min) multiplied by the operation time. Assuming continuous operation throughout the duration of the IRM period (1996 to 2001), the volume of contaminated groundwater treated would be approximately 1.6×10^8 gallons.	The volume of chromium and iron contaminated groundwater treated would be equivalent to the design flow rate (350 gal/min) multiplied by the operation time. Assuming continuous operation for the duration of the interim action period (1996 to 2001), the volume of contaminated groundwater treated would be approximately 1.0×10^9 gallons.

Table 6-4. Detailed Analysis for GW-5, Removal, Treatment, and Disposal Alternative With Ion Exchange Treatment. (Page 14 of 25)

REDUCTION OF TOXICITY, MOBILITY, OR VOLUME	ALTERATIVE GW-5: REMOVAL/TREATMENT/DISPOSAL	
	D/DR Area	H Area
To what extent is total mass of toxic contaminants reduced?	Groundwater modeling indicates the effects of the extraction system can reduce the mass of chromium entering the Columbia River relative to the baseline (no action). The concentration of chromium in the treatment effluent will be reduced to the levels indicated by the treatability studies for ion exchange. Results of the treatability study indicate chromium concentrations can be reduced to at least 29 μg/L total chromium and 19 μg/L hexavalent chromium, based on the limitations of the analytical methods used (WHC 1993b).	Same as the D/DR Area.
To what extent is the mobility of toxic contaminants reduced?	The mobility of chromium removed by ion exchange will be minimized by subsequent disposal at an approved facility. Other treatment residuals (such as settling tank sludge and resin regeneration sludge) will be solidified in cement prior to disposal. The mobility of residual chromium remaining in treated groundwater or that has leaked past the extraction system will not be reduced. Only nontoxic resins will be used.	The mobility of chromium removed by ion exchange will be minimized by subsequent disposal at an approved facility. Other treatment residuals (such as settling tank sludge and resin regeneration sludge) will be solidified in cement prior to disposal. The mobility of residual chromium remaining in treated groundwater or that has leaked past the extraction system will not be reduced. Only nontoxic resins will be used.
To what extent is the volume of toxic contaminants reduced?	The reduction in volume of contaminated groundwater is equal to the volume treated, approximately 1.6×10^8 gallons by the end of the interim action period (year 2001).	The reduction in volume of contaminated groundwater is equal to the volume treated, approximately 1.0×10^9 gallons by the end of the interim action period (year 2001).

Table 6-4. Detailed Analysis for GW-5, Removal, Treatment, and Disposal Alternative With Ion Exchange Treatment. (Page 15 of 25)

REDUCTION OF TOXICITY, MOBILITY, OR VOLUME	ALTERATIVE GW-5: REMOVAL/TREATMENT/DISPOSAL	
	D/DR Area	H Area
To what extent are the effects of the treatment irreversible?	Removal of chromium from the unconfined aquifer is considered irreversible.	Removal of chromium from the unconfined aquifer is considered irreversible.
What are the quantities of residuals and characteristics of the residual risks?	The volume of chromium treatment residuals will be dependent on the treatment system design and chromium concentration in the feed stream. Spent ion exchange resin is the primary source of treatment residuals. Preliminary estimates indicate that 180 cu ft of spent resin and 5,733 cu ft of resin regeneration solids will be produced each year of operation.	Preliminary estimates indicate that 900 cu ft of spent resin and 29,060 cu ft of resin regeneration solids will be produced each year of operation.
What risks do treatment of residuals pose?	Spent resins will be dewatered and then disposed without additional treatment. Cement solidification of other treatment residuals (such as settling tank sludge and resin regeneration solids) is well developed and used for both radioactive and hazardous wastes. Thus, risk from residuals treatment is considered minimal.	Spent resins will be dewatered and then disposed without additional treatment. Cement solidification of other treatment residuals (such as settling tank sludge and resin regeneration solids) is well developed and used for both radioactive and hazardous wastes. Thus, risk from residuals treatment is considered minimal.

Table 6-4. Detailed Analysis for GW-5, Removal, Treatment, and Disposal Alternative With Ion Exchange Treatment. (Page 16 of 25)

REDUCTION OF TOXICITY, MOBILITY, OR VOLUME	ALTERATIVE GW-5: REMOVAL/TREATMENT/DISPOSAL	
	D/DR Area	H Area
Is treatment used to reduce inherent hazards posed by principal threats at the site?	Yes. Chromium removal from 100 D/DR Area OU groundwater will reduce the threat posed by chromium migration into the river. Treatment residuals will pose minimal risk to human health and the environment based on disposal at an approved facility. Although ion exchange resins may be disposed without additional treatment, cement solidification will be available for other treatment residuals such as settling tank sludge and resin regeneration solids. Only non-hazardous resins would be used.	Yes. Chromium removal from 100 D/DR Area OU groundwater will reduce the threat posed by chromium migration into the river. Treatment residuals will pose minimal risk to human health and the environment based on disposal at an approved facility. Although ion exchange resins may be disposed without additional treatment, cement solidification will be available for other treatment residuals such as settling tank sludge and resin regeneration solids. Only non-hazardous resins would be used.
How does the proposed treatment impact natural resources?	Reduction of chromium flux to the Columbia River and removal of chromium from groundwater will reduce potential exposure of aquatic organisms to chromium.	Reduction of chromium flux to the Columbia River and removal of chromium from groundwater will reduce potential exposure of aquatic organisms to chromium.
Does the alternative result in a gain or loss of quality at the site for natural resources?	The reduction of chromium concentrations in groundwater entering the Columbia River will have a positive impact on natural resources. There will be some negative impacts during construction of the removal/treatment system.	The reduction of chromium concentrations in groundwater entering the Columbia River will have a positive impact on natural resources. There will be some negative impacts during construction of the removal/treatment system.

Table 6-4. Detailed Analysis for GW-5, Removal, Treatment, and Disposal Alternative With Ion Exchange Treatment. (Page 17 of 25)

REDUCTION OF TOXICITY, MOBILITY, OR VOLUME	ALTERATIVE GW-5: REMOVAL/TREATMENT/DISPOSAL	
	D/DR Area	H Area
Will implementation of the alternative result in short-term impacts to natural resources (e.g., exposure of ecological receptors to physical or chemical impacts, noise, intrusion to habitat and special breeding areas, temporary displacement, or seasonal restrictions on habitat use)?	Some minor impacts due to noise and intrusion on terrestrial habitats are possible during construction. Only minor impacts are likely during system operation.	Some minor impacts due to noise and intrusion on terrestrial habitats are possible during construction. Only minor impacts are likely during system operation.
Will the natural resource restoration activities associated with this alternative be easily implemented?	Yes. Some revegetation and grading may be required.	Yes. Some revegetation and grading may be required.
Will long-term maintenance and monitoring of mitigation/restoration efforts and activities be necessary?	No.	No.

Table 6-4. Detailed Analysis for GW-5, Removal, Treatment, and Disposal Alternative With Ion Exchange Treatment. (Page 18 of 25)

SHORT-TERM EFFECTIVENESS	ALTERNATIVE GW-5: REMOVAL/TREATMENT/DISPOSAL	
	D/DR Area	H Area
What are the risks to the community during remedial actions that must be addressed?	None.	None.
How will the risks to the community be addressed and mitigated?	Not applicable.	Not applicable.
What risks remain to the community that cannot be readily controlled?	None.	None.
What are the risks to the workers that need to be addressed?	Risks to worker are associated with handling treatment residuals, operation and maintenance of treatment process equipment, and groundwater monitoring. The risks to workers associated with groundwater extraction and handling is considered to be low.	Risks to worker are associated with handling treatment residuals, operation and maintenance of treatment process equipment, and groundwater monitoring. The risks to workers associated with groundwater extraction and handling is considered to be low.
What risks remain to the workers that cannot be readily controlled?	None.	None.

Table 6-4. Detailed Analysis for GW-5, Removal, Treatment, and Disposal Alternative With Ion Exchange Treatment. (Page 19 of 25)

SHORT-TERM EFFECTIVENESS	ALTERNATIVE GW-5: REMOVAL/TREATMENT/DISPOSAL	
	D/DR Area	H Area
How will the risks to the workers be addressed and mitigated?	Standard operating procedures will be established to define proper treatment system operating parameters and maintenance requirements. Health and safety plans will establish training requirements, identify personal protection equipment needs, specify treatment residual handling procedures, and define general safe work practices.	Standard operating procedures will be established to define proper treatment system operating parameters and maintenance requirements. Health and safety plans will establish training requirements, identify personal protection equipment needs, specify treatment residual handling procedures, and define general safe work practices.

Table 6-4. Detailed Analysis for GW-5, Removal, Treatment, and Disposal Alternative With Ion Exchange Treatment. (Page 20 of 25)

SHORT-TERM EFFECTIVENESS	ALTERNATIVE GW-5: REMOVAL/TREATMENT/DISPOSAL	
	D/DR Area	H Area
What environmental impacts are expected with the construction and implementation of the alternative?	Environmental impacts resulting from treatment system construction are considered minimal. The primary impact to the environment will be associated with installation of extraction wells and construction of a piping system to transport groundwater to and from wells. These activities may result in physical disturbances of habitat potentially inhabited by threatened or endangered species (such as bald eagles). These however will be of short duration. The treatment process (ion exchange) will likely reside within the facilities area of the 100 D/DR Area and therefore will not result in additional impacts to the environment. Ecological and cultural surveys required prior to implementation. A floodplain/wetlands assessment may also be required. The installation of extraction, injection, and monitoring wells would have minimal impact on ecological and cultural resources. There is enough flexibility in the placement of wells that sensitive areas and cultural resources could be avoided through prudent location of wells.	Environmental impacts resulting from treatment system construction are considered minimal. The primary impact to the environment will be associated with installation of extraction wells and construction of a piping system to transport groundwater to and from wells. These activities may result in physical disturbances of habitat potentially inhabited by threatened or endangered species (such as bald eagles). These however will be of short duration. The treatment process (ion exchange) will likely reside within the facilities area of the 100 D/DR Area and therefore will not result in additional impacts to the environment. Ecological and cultural surveys required prior to implementation. A floodplain/wetlands assessment may also be required. The installation of extraction, injection, and monitoring wells would have minimal impact on ecological and cultural resources. There is enough flexibility in the placement of wells that sensitive areas and cultural resources could be avoided through prudent location of wells.

Table 6-4. Detailed Analysis for GW-5, Removal, Treatment, and Disposal Alternative With Ion Exchange Treatment. (Page 21 of 25)

SHORT-TERM EFFECTIVENESS	ALTERNATIVE GW-5: REMOVAL/TREATMENT/DISPOSAL	
	D/DR Area	H Area
What are the impacts that cannot be avoided should the alternative be implemented?	Physical disturbances to habitat resulting from construction activities will be unavoidable. However, construction activities will be conducted to avoid or minimize such impacts (such as during seasons when endangered species such as the bald eagle are not present in the area).	Physical disturbances to habitat resulting from construction activities will be unavoidable. However, construction activities will be conducted to avoid or minimize such impacts (such as during seasons when endangered species such as the bald eagle are not present in the area).
How long until remedial action objectives are achieved?	Since the primary goal of the IRM is protection of the river as opposed to aquifer restoration, pump-and-treat will be required for the duration of the IRM period to maintain protection of the river. Aquifer restoration will be addressed by the final remedial action selected.	Since the primary goal of the IRM is protection of the river as opposed to aquifer restoration, pump-and-treat will be required for the duration of the IRM period to maintain protection of the river. Aquifer restoration will be addressed by the final remedial action selected.

Table 6-4. Detailed Analysis for GW-5, Removal, Treatment, and Disposal Alternative With Ion Exchange Treatment. (Page 22 of 25)

IMPLEMENTABILITY	ALTERATIVE GW-5: REMOVAL/TREATMENT/DISPOSAL	
	D/DR Area	H Area
What difficulties and uncertainties are associated with construction?	None. Construction of extraction wells and ion exchange treatment systems is well developed technology.	None. Construction of extraction wells and ion exchange treatment systems is well developed technology.
What is the likelihood that technical problems will lead to schedule delays?	Since ion exchange treatment and groundwater extraction are well developed technologies, technical problems are not likely to cause significant delays. One potential problem considered possible is the potential for the system to fail to achieve performance objectives (effluent chromium concentration). This situation could result in schedule delays.	Since ion exchange treatment and groundwater extraction are well developed technologies, technical problems are not likely to cause significant delays. One potential problem considered possible is the potential for the system to fail to achieve performance objectives (effluent chromium concentration). This situation could result in schedule delays.
What likely future remedial actions are anticipated?	No additional remedial actions are considered necessary during the IRM period. Since modeling results indicate pump-and-treat will be required for the duration of IRM, a final remedial action may be required. The final remedial action will be addressed through a final risk assessment and feasibility study.	No additional remedial actions are considered necessary during the IRM period (year 2001). Since modeling results indicate pump-and-treat will be required for the duration of IRM, a final remedial action may be required. The final remedial action will be addressed through a final risk assessment and feasibility study.

Table 6-4. Detailed Analysis for GW-5, Removal, Treatment, and Disposal Alternative With Ion Exchange Treatment. (Page 23 of 25)

IMPLEMENTABILITY	ALTERATIVE GW-5: REMOVAL/TREATMENT/DISPOSAL	
	D/DR Area	H Area
What risks of exposure exist should monitoring be insufficient to detect failure?	Monitoring failure could lead to prematurely ending treatment operations. The resulting risk would depend on the extent of treatment up to that point in time, but would be no greater than the baseline conditions identified in the QRA.	Monitoring failure could lead to prematurely ending treatment operations. The resulting risk would depend on the extent of treatment up to that point in time, but would be no greater than the baseline conditions identified in the QRA.
What activities are proposed which require coordination with other agencies?	Discharge of treated groundwater into the Columbia River will likely require coordination with other agencies, such as EPA, Ecology, U.S. Army Corps of Engineers, National Parks Department, or the Washington State Department of Fish and Wildlife.	Discharge of treated groundwater into the Columbia River will likely require coordination with other agencies, such as EPA, Ecology, U.S. Army Corps of Engineers, National Parks Department, or the Washington State Department of Fish and Wildlife.
Are adequate treatment, storage capacity, and disposal services available?	Ion exchange treatment services are commercially available. Disposal services will be available within the Hanford Site at ERDF.	Ion exchange treatment services are commercially available. Disposal services will be available within the Hanford Site at ERDF.
Are the necessary equipment and specialists available?	Yes. Ion exchange equipment and specialists are available within DOE and private industry.	Yes. Ion exchange equipment and specialists are available within DOE and private industry.

Table 6-4. Detailed Analysis for GW-5, Removal, Treatment, and Disposal Alternative With Ion Exchange Treatment. (Page 24 of 25)

IMPLEMENTABILITY	ALTERATIVE GW-5: REMOVAL/TREATMENT/DISPOSAL	
	D/DR Area	H Area
What additional equipment and specialists are required and what are their potential impacts to implementation?	No adverse impacts to implementation are anticipated, equipment and specialists are available.	No adverse impacts to implementation are anticipated, equipment and specialists are available.
Are technologies under consideration generally available and sufficiently demonstrated?	Yes. Ion exchange is well developed and proven effective for 100-HR-3 groundwater in recently conducted treatability studies (WHC 1993b). Groundwater extraction and monitoring are well developed technologies.	Yes. Ion exchange is well developed and proven effective for 100-HR-3 groundwater in recently conducted treatability studies (WHC 1993b). Groundwater extraction and monitoring are well developed technologies.
Will technologies require further development before they can be applied at the site?	No.	No.
Will more than one vendor be available to provide a competitive bid?	Yes.	Yes.

Table 6-4. Detailed Analysis for GW-4, Removal, Treatment, and Disposal Alternative with Ion Exchange. (Page 25 of 25)

COST COMPONENT	ALTERATIVE GW-5: REMOVAL/TREATMENT/DISPOSAL	
	D/DR Area	H Area
Capital?	$2,600,000	$2,600,000
Operation and Maintenance?	$10,300,000	$11,200,000
Present Worth?	$10,200,000	$10,900,000

Table 6-5. Detailed Analysis for GW-6, Removal, Treatment, and Disposal Alternative With Reverse Osmosis Treatment. (Page 1 of 21)

OVERALL PROTECTION OF HUMAN HEALTH AND THE ENVIRONMENT	ALTERNATIVE GW-6: REMOVAL/TREATMENT/DISPOSAL	
	D/DR Area	H Area
Will risk be at acceptable levels?	Human Health: Yes, the QRA indicates current risk to human health is low (ICR 10^{-6} to 10^{-4}, HQ > 1). Environment: Uncertain; the potential ecological risk identified in the QRA from chromium concentrations in near river wells exceeding the EPA Ambient Water Quality Criteria of 11 μg/L may be significantly reduced by this alternative. Reverse osmosis has been shown to obtain rejection efficiencies for chromium (VI) in groundwater between 95 and 99 percent (Huxstep and Sorg 1988). This would correspond to a reduction from 2,090 μg/L [highest concentration reported in LFI (DOE-RL 1993b)] to between 21 and 104 μg/L. Groundwater modeling results indicate that a five well extraction system positioned along the Columbia River (plus an additional well located above the peak chromium concentration in the plume) can remove enough contaminated groundwater to reduce the mass of chromium entering the river relative to the baseline (no action). The risks associated with the substrate of the Columbia River has not been quantified.	Human Health: Yes, the QRA indicates current risk to human health is low (ICR 10^{-6} to 10^{-4}, HQ > 1). Environment: Uncertain; the potential ecological risk identified in the QRA from chromium concentrations in near river wells exceeding the EPA Ambient Water Quality Criteria of 11 μg/L may be significantly reduced by this alternative. Reverse osmosis has been shown to obtain rejection efficiencies for chromium (VI) in groundwater between 95 and 99 percent (Huxstep and Sorg 1988). This would correspond to a reduction from 490 μg/L [highest concentration reported in LFI (DOE-RL 1993b)] to between 5 and 25 μg/L. Groundwater modeling results indicate that a seven well extraction system positioned along the Columbia River can remove enough contaminated groundwater to reduce the mass of chromium entering the river relative to the baseline (no action). The risks associated with the substrate of the Columbia River has not been quantified.

Table 6-5. Detailed Analysis for GW-6, Removal, Treatment, and Disposal Alternative With Reverse Osmosis Treatment. (Page 2 of 21)

OVERALL PROTECTION OF HUMAN HEALTH AND THE ENVIRONMENT	ALTERNATIVE GW-6: REMOVAL/TREATMENT/DISPOSAL	
	D/DR Area	H Area
Timeframe to achieve acceptable levels?	Based groundwater modeling results, operation of the pump-and-treat system in the 100 D/DR Area will be required for the duration of the IRM period (year 2001) in order to maintain protection of the Columbia River. However, reductions in chromium contaminated groundwater entering the river will be achieved once pump-and-treat is initiated. It should be noted that the intent of the pump-and-treat system is protection of the river and not aquifer restoration.	Based groundwater modeling results, operation of the pump-and-treat system in the 100 D/DR Area will be required for the duration of the IRM period (year 2001) in order to maintain protection of the Columbia River. However, reductions in chromium contaminated groundwater entering the river will be achieved once pump-and-treat is initiated. It should be noted that the intent of the pump-and-treat system is protection of the river and not aquifer restoration.
Will additional threats be minimized?	Additional threats posed by chromium removed from groundwater will be insignificant. All treatment residuals will be disposed at ERDF, W-025, or another site. Although concentrate from the reverse osmosis/evaporation treatment may be classified as mixed waste, solidification in cement followed by disposal at an approved facility will minimize potential threats.	Additional threats posed by chromium removed from groundwater will be insignificant. All treatment residuals will be disposed at ERDF, W-025, or another site. Although concentrate from the reverse osmosis/evaporation treatment may be classified as mixed waste, solidification in cement followed by disposal at an approved facility will minimize potential threats.
Will the alternative pose any unacceptable short-term or cross-media impacts?	No. Chromium concentrations in groundwater and in the Columbia River are expected to decline.	Same as D/DR Area
What restoration actions may be necessary?	If the system is removed following remediation, some regrading and revegetation of a may be necessary to restore the a area to its natural state.	If the system is removed following remediation, some regrading and revegetation of a may be necessary to restore the a area to its natural state.

Table 6-5. Detailed Analysis for GW-6, Removal, Treatment, and Disposal Alternative With Reverse Osmosis Treatment. (Page 3 of 21)

OVERALL PROTECTION OF HUMAN HEALTH AND THE ENVIRONMENT	ALTERNATIVE GW-6: REMOVAL/TREATMENT/DISPOSAL	
	D/DR Area	H Area
Will residual contamination (following remediation) be a potential problem?	Not applicable for interim action. It is anticipated that final remedial action will address residual contamination.	Not applicable for interim action. It is anticipated that final remedial action will address residual contamination.

Table 6-5. Detailed Analysis for GW-6, Removal, Treatment, and Disposal Alternative With Reverse Osmosis Treatment. (Page 4 of 21)

COMPLIANCE WITH ARAR	ALTERNATIVE GW-6: REMOVAL/TREATMENT/DISPOSAL	
	D/DR Area	H Area
What are the potential ARARs?	See Table 6-5.	See Table 6-5.
Will the potential ARARs be met? How?	See Table 6-5.	See Table 6-5.
Basis for waivers?	This alternative may represent an interim action preceding a final action. The final remedial action will be selected to ensure compliance with applicable ARAR. Reduction of chromium concentrations in groundwater entering the Columbia River to below the EPA Ambient Water Quality Criteria level of 11 μg/L may be technically impractical. Although the purpose of the interim action is not aquifer restoration, contaminant concentrations in the aquifer represent the contaminant concentrations potentially entering the river. Due to the persistence of chromium in the environment, removal would be the only means of ensuring permanent compliance with ARARs. However, conventional pump-and-treat may never result in sufficient chromium reduction in the aquifer to comply with ARAR.	This alternative may represent an interim action preceding a final action. The final remedial action will be selected to ensure compliance with applicable ARAR. Reduction of chromium concentrations in groundwater entering the Columbia River to below the EPA Ambient Water Quality Criteria level of 11 μg/L may be technically impractical. Although the purpose of the interim action is not aquifer restoration, contaminant concentrations in the aquifer represent the contaminant concentrations potentially entering the river. Due to the persistence of chromium in the environment, removal would be the only means of ensuring permanent compliance with ARARs. However, conventional pump-and-treat may never result in sufficient chromium reduction in the aquifer to comply with ARAR.

Table 6-5. Detailed Analysis for GW-6, Removal, Treatment, and Disposal Alternative With Reverse Osmosis Treatment. (Page 5 of 21)

COMPLIANCE WITH ARAR	ALTERNATIVE GW-6: REMOVAL/TREATMENT/DISPOSAL	
	D/DR Area	H Area
Basis for waivers? (continued)	Reverse osmosis is specified as a Best Available Technology (BAT) for chromium treatment within the SDWA, based on the SDWA MCL for chromium (100 μg/L). Previous studies have shown reverse osmosis to remove chromium (VI) in groundwater with 95 to 99 percent efficiency (Huxstep and Sorg 1988). However, the ability of reverse osmosis to satisfy the 11 μg/L EPA Ambient Water Quality Criteria is unknown.	Reverse osmosis is specified as a Best Available Technology (BAT) for chromium treatment within the SDWA, based on the SDWA MCL for chromium (100 μg/L). Previous studies have shown reverse osmosis to remove chromium (VI) in groundwater with 95 to 99 percent efficiency (Huxstep and Sorg 1988). However, the ability of reverse osmosis to satisfy the 11 μg/L EPA Ambient Water Quality Criteria is unknown.
What are the potential TBC?	See Table 6-5.	See Table 6-5.
Is the alternative consistent with TBC listed above?	See Table 6-5.	See Table 6-5.
Will implementation of the alternative comply with ARARs regarding protection, restoration, and enhancement of natural resources and protection of cultural resources?	See Table 6-6.	See Table 6-6.
What difficulties may be associated with compliance to ARARs?	See Table 6-6.	See Table 6-6.

Table 6-5. Detailed Analysis for GW-6, Removal, Treatment, and Disposal Alternative With Reverse Osmosis Treatment. (Page 6 of 21)

LONG-TERM EFFECTIVENESS AND PERMANENCE	ALTERNATIVE GW-6: REMOVAL/TREATMENT/DISPOSAL	
	D/DR Area	H Area
What is the magnitude of the remaining risk?	Reduction of chromium concentrations in groundwater extracted from the unconfined aquifer may be significantly reduced by reverse osmosis (at least to the 100 μg/L SDWA MCL). Groundwater modeling results indicate the mass of chromium entering the river can be reduced relative to no action. However, groundwater modeling results also indicate pump-and-treat would be required beyond the IRM period of in order to maintain protection of the river.	Reduction of chromium concentrations in groundwater extracted from the unconfined aquifer may be significantly reduced by reverse osmosis (at least to the 100 μg/L SDWA MCL). Groundwater modeling results indicate the mass of chromium entering the river can be reduced relative to no action. However, groundwater modeling results also indicate pump-and-treat would be required beyond the IRM period of in order to maintain protection of the river.
What remaining sources of risk can be identified?	Untreated groundwater remaining in the aquifer, treated groundwater discharged to the Columbia River, and untreated groundwater leakage past the extraction system are the remaining sources of risk. However, final remedial action will address risk due to chromium contaminated groundwater remaining in the aquifer after the IRM period.	Untreated groundwater remaining in the aquifer, treated groundwater discharged to the Columbia River, and untreated groundwater leakage past the extraction system are the remaining sources of risk. However, final remedial action will address risk due to chromium contaminated groundwater remaining in the aquifer after the IRM period.
What is the likelihood that the technologies will meet performance needs?	Groundwater modeling results indicate the extraction system can reduce the mass of chromium entering the Columbia River relative to the baseline. Specification of reverse osmosis as a BAT within the SDWA indicates chromium reduction to the 100 μg/L MCL is reasonably achievable. The ability of RO to meet the 11 μg/L Ambient Water Quality Criteria is uncertain.	Groundwater modeling results indicate the extraction system can reduce the mass of chromium entering the Columbia River relative to the baseline. Specification of reverse osmosis as a BAT within the SDWA indicates chromium reduction to the 100 μg/L MCL is reasonably achievable. The ability of RO to meet the 11 μg/L Ambient Water Quality Criteria is uncertain.

Table 6-5. Detailed Analysis for GW-6, Removal, Treatment, and Disposal Alternative With Reverse Osmosis Treatment. (Page 7 of 21)

LONG-TERM EFFECTIVENESS AND PERMANENCE	ALTERNATIVE GW-6: REMOVAL/TREATMENT/DISPOSAL	
	D/DR Area	H Area
What type and degree of long-term management is required?	Long-term management is required for the duration of the IRM period to maintain operation of the reverse osmosis treatment system and extraction wells, satisfy annual reporting requirements, and conduct periodic groundwater monitoring. Increases in groundwater extraction rate may require replacement or addition of treatment components.	Long-term management is required for the duration of the IRM period to maintain operation of the reverse osmosis treatment system and extraction wells, satisfy annual reporting requirements, and conduct periodic groundwater monitoring. Increases in groundwater extraction rate may require replacement or addition of treatment components.
What are the requirements for long-term monitoring?	The current monitoring program will continue through the IRM period. Evaluations will be made periodically to ensure the effectiveness of the treatment is maintained.	The current monitoring program will continue through the IRM period. Evaluations will be made periodically to ensure the effectiveness of the treatment is maintained.
What O&M functions must be performed?	O&M will be required for the duration of the IRM period to ensure continuous treatment and monitoring.	O&M will be required for the duration of the IRM period to ensure continuous treatment and monitoring.
What difficulties may be associated with long-term O&M?	None foreseeable within the timeframe of the IRM.	None foreseeable within the timeframe of the IRM.
What is the potential need for replacement of technical components?	Periodic replacement of reverse osmosis/evaporation system components (e.g., reverse osmosis membrane, evaporator heat exchanger), extraction wells, monitoring wells, and associated ancillary equipment will be required.	Periodic replacement of reverse osmosis/evaporation system components (e.g., reverse osmosis membrane, evaporator heat exchanger), extraction wells, monitoring wells, and associated ancillary equipment will be required.

Table 6-5. Detailed Analysis for GW-6, Removal, Treatment, and Disposal Alternative With Reverse Osmosis Treatment. (Page 8 of 21)

LONG-TERM EFFECTIVENESS AND PERMANENCE	ALTERNATIVE GW-6: REMOVAL/TREATMENT/DISPOSAL	
	D/DR Area	H Area
What is the magnitude of risk should the remedial action need replacement?	The time required to replace components of the treatment system is not considered significant. However, in the event treatment is unavailable for extended periods, untreated chromium contaminated groundwater could enter the river.	The time required to replace components of the treatment system is not considered significant. However, in the event treatment is unavailable for extended periods, untreated chromium contaminated groundwater could enter the river.
What is the degree of confidence that controls can adequately handle potential problems?	Potential problems associated with operation of the treatment system include equipment failure, leaks or spills, and chromium removal inefficiency. Control measures can adequately protect human health and the environment should such problems arise. The treatment system will be equipped with automated shut-down controls, secondary containment measures, and effluent chromium concentration monitoring.	Potential problems associated with operation of the treatment system include equipment failure, leaks or spills, and chromium removal inefficiency. Control measures can adequately protect human health and the environment should such problems arise. The treatment system will be equipped with automated shut-down controls, secondary containment measures, and effluent chromium concentration monitoring.
How is the removed contamination disposed of?	Chromium contaminated sludge discharged from the rotary drum filter will be solidified in cement. These solidified residues will be disposed on the Hanford Site.	Chromium contaminated sludge discharged from the rotary drum filter will be solidified in cement. These solidified residues will be disposed on the Hanford Site.
What are potential final actions?	Potential final actions likely include no action, institutional controls, and pump and treat for mass reduction. The vertical barrier option is not considered for final action because chromium is persistent in the environment and does not readily degrade. The wall will contain the chromium by lengthening the travel time for the contaminants to reach the river; however, the contamination will eventually migrate around the wall.	Same as D/DR Area. The hydraulic barrier is not considered because of the logistics of maintaining the barrier indefinitely due to the persistence of the chromium.

Table 6-5. Detailed Analysis for GW-6, Removal, Treatment, and Disposal Alternative With Reverse Osmosis Treatment. (Page 9 of 21)

LONG-TERM EFFECTIVENESS AND PERMANENCE	ALTERNATIVE GW-6: REMOVAL/TREATMENT/DISPOSAL	
	D/DR Area	H Area
Is the alternative for the IRM compatible with potential final actions?	The pump and treat alternative for containment and some mass reduction as proposed in this FFS is consistent with future pump and treat scenarios for mass removal. The IRM system can be expanded to meet changing objective, such as significant mass removal. This situation is similar to that proposed in the 100-HR-3 treatability test where a small pump and treat system will be installed to obtain information about the technology specific to the chromium plume in the operable unit. The proposed plan is to expand the treatability system to an IRM if results are favorable for the technology. However, for reverse osmosis, considerable costs may be incurred should the system require expansion to treat increased flows if the groundwater extraction system is expanded. The IRM system is not very compatible with the no action and institutional controls alternatives because of the expense involved in installing and operating the pumping system during the IRM period only to shut it down for final action.	The pump and treat alternative for containment and some mass reduction as proposed in this FFS is consistent with future pump and treat scenarios for mass removal. The IRM system can be expanded to meet changing objective, such as significant mass removal. This situation is similar to that proposed in the 100-HR-3 treatability test where a small pump and treat system will be installed to obtain information about the technology specific to the chromium plume in the operable unit. The proposed plan is to expand the treatability system to an IRM if results are favorable for the technology. However, for reverse osmosis, considerable costs may be incurred should the system require expansion to treat increased flows if the groundwater extraction system is expanded. The IRM system is not very compatible with the no action and institutional controls alternatives because of the expense involved in installing and operating the pumping system during the IRM period only to shut it down for final action.
What are the uncertainties associated with land disposal of residuals and untreated wastes?	Residuals and wastes will be disposed at existing waste management facilities at Hanford. It is anticipated that the facilities will remain in operation during the IRM period.	Residuals and wastes will be disposed at existing waste management facilities at Hanford. It is anticipated that the facilities will remain in operation during the IRM period.

Table 6-5. Detailed Analysis for GW-6, Removal, Treatment, and Disposal Alternative With Reverse Osmosis Treatment. (Page 10 of 21)

LONG-TERM EFFECTIVENESS AND PERMANENCE	ALTERNATIVE GW-6: REMOVAL/TREATMENT/DISPOSAL	
	D/DR Area	H Area
Will the alternative provide long-term protection of natural resources?	Yes. Contribution of chromium to the Columbia River will be reduced during the IRM period. Some chromium will be removed from groundwater, but it is anticipated that final action will be required to address residual contamination.	Yes. Contribution of chromium to the Columbia River will be reduced during the IRM period. Some chromium will be removed from groundwater, but it is anticipated that final action will be required to address residual contamination.
Will terrestrial habitats be degraded or enhanced?	There will be some degradation of terrestrial habitat during the construction phase. Habitats will not be impacted during system operation.	There will be some degradation of terrestrial habitat during the construction phase. Habitats will not be impacted during system operation.
How will the remedial action affect the overall quality of the ecosystem?	This alternative will improve the quality of the ecosystem by reducing the flux of chromium to the Columbia River.	This alternative will improve the quality of the ecosystem by reducing the flux of chromium to the Columbia River.

Table 6-5. Detailed Analysis for GW-6, Removal, Treatment, and Disposal Alternative With Reverse Osmosis Treatment. (Page 11 of 21)

REDUCTION OF TOXICITY, MOBILITY, OR VOLUME	ALTERNATIVE GW-6: REMOVAL/TREATMENT/DISPOSAL	
	D/DR Area	H Area
Does the treatment process address the principal threats?	Yes. Reverse osmosis has been shown to result in 95 to 99 percent rejection of hexavalent chromium in groundwater (Huxstep and Sorg 1988).	Same as D/DR Area for chromium contamination.
Are there any special requirements for the treatment process?	Pretreatment is required to prevent fouling the reverse osmosis membrane(s) due to high solids content or salts precipitation. Filtration will be used to remove suspended solids. Crystal inhibitors (sodium hexametaphosphate) and pH adjustment will prevent salts from precipitating within the reverse osmosis unit.	Same as D/DR Area for chromium contamination.
What portion of the contaminated material is treated/destroyed?	The volume of chromium contaminated groundwater treated will be equivalent to the design flow rate (60 gal/min) multiplied by the operation time. Assuming continuous operation throughout the duration of the IRM period (1996 to 2001), the volume of treated would be approximately 1.6×10^8 gallons.	The volume of chromium and iron contaminated groundwater treated would be equivalent to the design flow rate (350 gpm) multiplied by the operation time. Assuming continuous operation for the duration of the interim action period (1996 to 2001), the volume treated would be approximately 1.0×10^9 gallons.
To what extent is total mass of toxic contaminants reduced?	Groundwater modeling indicates the effects of the extraction system can reduce the mass of chromium entering the Columbia River relative to the baseline (no action). The concentration of chromium in the treatment effluent may be reduced to the levels achievable by reverse osmosis. The reverse osmosis treatment system is assumed to effectively reduce chromium concentration in extracted groundwater to at least 100 μg/L (based on the SDWA specification of reverse osmosis as BAT for chromium). Previous studies have shown reverse osmosis to reject chromium (VI) in groundwater with 95 to 99 percent efficiency (Huxstep and Sorg 1988).	Same as D/DR Area for chromium contamination.

Table 6-5. Detailed Analysis for GW-6, Removal, Treatment, and Disposal Alternative With Reverse Osmosis Treatment. (Page 12 of 21)

REDUCTION OF TOXICITY, MOBILITY, OR VOLUME	ALTERNATIVE GW-6: REMOVAL/TREATMENT/DISPOSAL	
	D/DR Area	H Area
To what extent is the mobility of toxic contaminants reduced?	The mobility of chromium removed by the reverse osmosis treatment system will be minimized by subsequent solidification in cement followed by disposal at an approved facility. The mobility of untreated groundwater or residual chromium remaining in treated groundwater will not be reduced.	The mobility of chromium removed by the reverse osmosis treatment system will be minimized by subsequent solidification in cement followed by disposal at an approved facility. The mobility of untreated groundwater or residual chromium remaining in treated groundwater will not be reduced.
To what extent is the volume of toxic contaminants reduced?	The reduction in volume of contaminated groundwater is equal to the volume treated, approximately 1.6×10^8 gallons by the end of the interim action period (year 2001).	The reduction in volume of contaminated groundwater is equal to the volume treated, approximately 1.0×10^9 gallons by the end of the interim action period.
To what extent are the effects of the treatment irreversible?	Removal of chromium from the unconfined aquifer is considered irreversible.	Same as D/DR Area for chromium.
What are the quantities of residuals and characteristics of the residual risks?	Reverse osmosis will reduce the volume of Cr contaminated groundwater by approximately 10 to 1. Based on a 60 gal/min flow rate, this volume reduction results in approximately 6 gal/min into the evaporator. The evaporator will result in additional volume reduction based on an approximate 50% solids concentration. Concentrate from the evaporator will be solidified in cement which will result in a subsequent volume increase of approximately 1.5 to 1. Preliminary estimates indicate that 4,160 cu ft of spent filters and 2,054 of evaporator cake will be generated each year.	Preliminary estimates indicate that 4,160 cu ft of spent filters and 16,060 cu ft of evaporator cake will be generated each year.

Table 6-5. Detailed Analysis for GW-6, Removal, Treatment, and Disposal Alternative With Reverse Osmosis Treatment. (Page 13 of 21)

REDUCTION OF TOXICITY, MOBILITY, OR VOLUME	ALTERNATIVE GW-6: REMOVAL/TREATMENT/DISPOSAL	
	D/DR Area	H Area
What risks do treatment of residuals pose?	Cement solidification is well developed and used for both radioactive and hazardous wastes. Thus, risk from residuals treatment is considered minimal.	Cement solidification is well developed and used for both radioactive and hazardous wastes. Thus, risk from residuals treatment is considered minimal.
Is treatment used to reduce inherent hazards posed by principal threats at the site?	Yes. Chromium removal from 100 D/DR Area Operable Unit groundwater will reduce the threat posed by Cr migration into the river. Treatment residuals will pose minimal risk to human health and the environment based on cement solidification followed by disposal at ERDF.	Yes. Chromium removal from 100 D/DR Area Operable Unit groundwater will reduce the threat posed by Cr migration into the river. Treatment residuals will pose minimal risk to human health and the environment based on cement solidification followed by disposal at ERDF.
How does the proposed treatment impact natural resources?	Reduction of chromium flux to the Columbia River and removal of chromium from groundwater will reduce potential exposures of aquatic organisms to chromium.	Reduction of chromium flux to the Columbia River and removal of chromium from groundwater will reduce potential exposures of aquatic organisms to chromium.
Does the alternative result in a gain or loss of quality at the site for natural resources?	The reduction of chromium concentrations in groundwater entering the Columbia River will have a positive impact on natural resources. There will be some negative impacts during construction of the removal/treatment system.	The reduction of chromium concentrations in groundwater entering the Columbia River will have a positive impact on natural resources. There will be some negative impacts during construction of the removal/treatment system.

Table 6-5. Detailed Analysis for GW-6, Removal, Treatment, and Disposal Alternative With Reverse Osmosis Treatment. (Page 14 of 21)

REDUCTION OF TOXICITY, MOBILITY, OR VOLUME	ALTERNATIVE GW-6: REMOVAL/TREATMENT/DISPOSAL	
	D/DR Area	H Area
Will implementation of the alternative result in short-term impacts to natural resources (e.g., exposure of ecological receptors to physical or chemical impacts, noise, intrusion to habitat and special breeding areas, temporary displacement, or seasonal restrictions on habitat use)?	Some minor impacts due to noise and intrusion on terrestrial habitats are possible during construction. No impacts are likely during system operation.	Some minor impacts due to noise and intrusion on terrestrial habitats are possible during construction. No impacts are likely during system operation.
Will the natural resource restoration activities associated with this alternative be easily implemented?	Yes. Some revegetation and grading may be required.	Yes. Some revegetation and grading may be required.
Will long-term maintenance and monitoring of mitigation/restoration efforts and activities be necessary?	No.	No.

Table 6-5. Detailed Analysis for GW-6, Removal, Treatment, and Disposal Alternative With Reverse Osmosis Treatment. (Page 15 of 21)

SHORT-TERM EFFECTIVENESS	ALTERNATIVE GW-6: REMOVAL/TREATMENT/DISPOSAL	
	D/DR Area	H Area
What are the risks to the community during remedial actions that must be addressed?	None.	None.
How will the risks to the community be addressed and mitigated?	Not applicable.	Not applicable.
What risks remain to the community that cannot be readily controlled?	None.	None.
What are the risks to the workers that need to be addressed?	Risks to workers are associated with handling treatment residuals, operation and maintenance of treatment process equipment, and groundwater monitoring. Worker risks associated with groundwater extraction and handling are considered low.	Risks to workers are associated with handling treatment residuals, operation and maintenance of treatment process equipment, and groundwater monitoring. Worker risks associated with groundwater extraction and handling are considered low.
What risks remain to the workers that cannot be readily controlled?	None.	None.
How will the risks to the workers be addressed and mitigated?	Standard operating procedures will be established to define proper treatment system operating parameters and maintenance requirements. Health and safety plans will establish training requirements, identify personal protection equipment needs, specify treatment residual handling procedures, and define general safe working practices.	Standard operating procedures will be established to define proper treatment system operating parameters and maintenance requirements. Health and safety plans will establish training requirements, identify personal protection equipment needs, specify treatment residual handling procedures, and define general safe working practices.

Table 6-5. Detailed Analysis for GW-6, Removal, Treatment, and Disposal Alternative With Reverse Osmosis Treatment. (Page 16 of 21)

SHORT-TERM EFFECTIVENESS	ALTERNATIVE GW-6: REMOVAL/TREATMENT/DISPOSAL	
	D/DR Area	H Area
What environmental impacts are expected with the construction and implementation of the alternative?	Environmental impacts resulting from treatment system construction are considered minimal. The primary impact to the environment will be associated with installation of extraction wells and construction of the piping system to transport groundwater to and from wells. These activities will likely result in physical disturbances to habitat potentially inhabited by threatened or endangered species (such as bald eagles). The treatment process (reverse osmosis/evaporation) will likely reside within the facilities area of the 100 D/DR Area and therefore will not result in additional impacts to the environment. Ecological and cultural evaluations required prior to implementation. Floodplain/wetlands assessment may also be necessary. The installation of extraction, injection, and monitoring wells would have minimal impact on ecological and cultural resources. There is enough flexibility in the placement of wells that sensitive areas and cultural resources could be avoided through prudent location of wells.	Environmental impacts resulting from treatment system construction are considered minimal. The primary impact to the environment will be associated with installation of extraction wells and construction of the piping system to transport groundwater to and from wells. These activities will likely result in physical disturbances to habitat potentially inhabited by threatened or endangered species (such as bald eagles). The treatment process (reverse osmosis/evaporation) will likely reside within the facilities area of the 100 D/DR Area and therefore will not result in additional impacts to the environment. Ecological and cultural evaluations required prior to implementation. Floodplain/wetlands assessment may also be necessary. The installation of extraction, injection, and monitoring wells would have minimal impact on ecological and cultural resources. There is enough flexibility in the placement of wells that sensitive areas and cultural resources could be avoided through prudent location of wells. environment will be associated with installation of extraction wells and construction of the piping system to transport groundwater to and from wells. These activities will likely result in physical disturbances to habitat potentially inhabited by threatened or endangered species (such as bald eagles). The treatment process (reverse osmosis/evaporation) will likely reside within the facilities area of the 100 D/DR Area and therefore will not result in additional impacts to the environment. Ecological and cultural evaluations required prior to implementation. Floodplain/wetlands assessment may also be necessary. The installation of extraction, injection, and monitoring wells would have minimal impact on ecological and cultural resources. There is enough flexibility in the placement of wells that sensitive areas and cultural resources could be avoided through

Table 6-5. Detailed Analysis for GW-6, Removal, Treatment, and Disposal Alternative With Reverse Osmosis Treatment. (Page 17 of 21)

SHORT-TERM EFFECTIVENESS	ALTERNATIVE GW-6: REMOVAL/TREATMENT/DISPOSAL	
	D/DR Area	H Area
What are the impacts that cannot be avoided should the alternative be implemented?	Physical disturbances to habitat resulting from construction activities will be unavoidable. However, construction activities will be conducted to avoid or minimize such impacts (such as during seasons when endangered species such as the bald eagle are not present in the area).	Physical disturbances to habitat resulting from construction activities will be unavoidable. However, construction activities will be conducted to avoid or minimize such impacts (such as during seasons when endangered species such as the bald eagle are not present in the area).
How long until remedial action objectives are achieved?	Since the primary goal of the interim action is protection of the river as opposed to aquifer restoration, pump-and-treat will be required for the duration of the IRM period to maintain protection of the river. Aquifer restoration will be addressed by the final remedial action selected (which may be continued pump-and-treat).	Since the primary goal of the interim action is protection of the river as opposed to aquifer restoration, pump-and-treat will be required for the duration of the IRM period to maintain protection of the river. Aquifer restoration will be addressed by the final remedial action selected (which may be continued pump-and-treat).

Table 6-5. Detailed Analysis for GW-6, Removal, Treatment, and Disposal Alternative With Reverse Osmosis Treatment. (Page 18 of 21)

IMPLEMENTABILITY	ALTERNATIVE GW-6: REMOVAL/TREATMENT/DISPOSAL	
	D/DR Area	H Area
What difficulties and uncertainties are associated with construction?	None. Construction of extraction wells and reverse osmosis treatment systems is well developed technology.	None. Construction of extraction wells and reverse osmosis treatment systems is well developed technology.
What is the likelihood that technical problems will lead to schedule delays?	Because the components of the treatment system (reverse osmosis, evaporation, cement solidification, and pumping wells) are well developed technologies, technical problems are not likely to cause significant delays. One potential problem is that the treatment system could fail to achieve performance objectives (effluent chromium concentrations). This situation could result in schedule delays.	Because the components of the treatment system (reverse osmosis, evaporation, cement solidification, and pumping wells) are well developed technologies, technical problems are not likely to cause significant delays. One potential problem is that the treatment system could fail to achieve performance objectives (effluent chromium concentrations). This situation could result in schedule delays.
What likely future remedial actions are anticipated?	No additional remedial actions are considered necessary during the IRM period. Because modeling results indicate pump-and-treat will be required for the duration of interim action, a final remedial action will be required. The final remedial action will address the need for future remedial actions.	No additional remedial actions are considered necessary during the IRM period. Because modeling results indicate pump-and-treat will be required for the duration of interim action, a final remedial action will be required. The final remedial action will address the need for future remedial actions.

Table 6-5. Detailed Analysis for GW-6, Removal, Treatment, and Disposal Alternative With Reverse Osmosis Treatment. (Page 19 of 21)

IMPLEMENTABILITY	ALTERNATIVE GW-6: REMOVAL/TREATMENT/DISPOSAL	
	D/DR Area	H Area
What risks of exposure exist should monitoring be insufficient to detect failure?	Monitoring failure could lead to prematurely ending treatment operations. The resulting risk would depend on the extent of treatment up to that point in time, but would be no greater than the baseline conditions identified in the QRA.	Monitoring failure could lead to prematurely ending treatment operations. The resulting risk would depend on the extent of treatment up to that point in time, but would be no greater than the baseline conditions identified in the QRA.
What activities are proposed which require coordination with other agencies?	None.	None.
Are adequate treatment, storage capacity, and disposal services available?	Reverse osmosis treatment services are commercially available. Storage and disposal services are considered available within the Hanford Site (at ERDF).	Reverse osmosis treatment services are commercially available. Storage and disposal services are considered available within the Hanford Site (at ERDF).
Are the necessary equipment and specialists available?	Yes. Reverse osmosis equipment and specialists are available within DOE and private industry.	Yes. Reverse osmosis equipment and specialists are available within DOE and private industry.
What additional equipment and specialists are required and what are their potential impacts to implementation?	No adverse impacts to implementation are anticipated.	No adverse impacts to implementation are anticipated.

Table 6-5. Detailed Analysis for GW-6, Removal, Treatment, and Disposal Alternative With Reverse Osmosis Treatment. (Page 20 of 21)

IMPLEMENTABILITY	ALTERNATIVE GW-6: REMOVAL/TREATMENT/DISPOSAL	
	D/DR Area	H Area
Are technologies under consideration generally available and sufficiently demonstrated?	Yes. Reverse osmosis is specified as a BAT within the SDWA and has been applied to radioactive wastewater applications in the commercial nuclear industry. However, the application of reverse osmosis to the site specific conditions at the 100 D/DR Area groundwater operable unit will require treatability testing to establish pretreatment requirements, operating conditions, and membrane type and configuration such that optimum chromium removal is obtained.	Yes. Reverse osmosis is specified as a BAT within the SDWA and has been applied to radioactive wastewater applications in the commercial nuclear industry. However, the application of reverse osmosis to the site specific conditions at the 100 D/DR Area groundwater operable unit will require treatability testing to establish pretreatment requirements, operating conditions, and membrane type and configuration such that optimum chromium removal is obtained.
Will technologies require further development before they can be applied at the site?	No. Treatability testing is required to optimize reverse osmosis system design and performance based on the water quality (chemical composition) specific to 100 D/DR Area groundwater.	No. Treatability testing is required to optimize reverse osmosis system design and performance based on the water quality (chemical composition) specific to 100 D/DR Area groundwater.
Will more than one vendor be available to provide a competitive bid?	Yes.	Yes.

Table 6-5. Detailed Analysis for GW-6, Removal, Treatment, and Disposal Alternative with Reverse Osmosis Treatment. (Page 21 of 21)

COST COMPONENT	ALTERNATIVE GW-6: REMOVAL/TREATMENT/DISPOSAL	
	D/DR Area	H Area
Capital?	$3,300,000	$7,100,000
Operation and Maintenance?	$20,400,000	$28,400,000
Present Worth?	$18,400,000	$28,200,000

Table 6-6. Compliance with ARAR (Page 1 of 5)

ARAR	ALTERNATIVE AFFECTED	REQUIREMENT	HOW ARE REQUIREMENTS MET
40 CFR 122	GW-3, GW-5, GW-6	Sets discharge limits to surface waters.	No treated water will be discharged to the river which exceeds drinking water standards or ambient water quality criteria.
40 CFR 110	GW-3, GW-5, GW-6	Prohibits discharge of oil above water quality standards or that causes a sheen on water surface.	Runoff control will be implemented during all activities. All tanks will be bermed.
40 CFR 261	GW-3, GW-5, GW-6	Chromium may be a hazardous waste.	Chromium will be treated as a hazardous waste for disposal purposes.
40 CFR 262.34	GW-3, GW-5, GW-6	Allows accumulation of hazardous waste for 90 days or less without a permit.	
40 CFR 262.11	All	List procedures and methods used to characterize waste generated.	These methods would be pertinent to shipment of hazardous waste.
40 CFR 263.30	All	Action to be taken in the event of a discharge	The appropriate notifications, documentation and clean-ups will be implemented.
40 CFR 268	GW-3, GW-5, GW-6	Prohibits placement of RCRA wastes in landfill unless treated.	All hazardous wastes will be treated prior to disposal or will be disposed in a camu, or a waiver will be sought.
40 CFR 50.6	GW-3, GW-5, GW-6	$\leq$50 $\mu g/m^3$ annual average concentration of particulate emissions or 150 $\mu g/m^3$ per 24-hr period.	Excavation and drilling activities will use dust control measures as required. No other particulate emissions are anticipated from the treatment systems.

Table 6-6. Compliance with ARAR (Page 2 of 5)

ARAR	ALTERNATIVE AFFECTED	REQUIREMENT	HOW ARE REQUIREMENTS MET
16 U.S.C. 469	GW-3, GW-5, GW-6	Requires recovery or preservation of artifacts.	Only a few sites have been identified in the area of potential action. Consideration of these sites would be given in placing a vertical barrier in this area. Additional testing of these sites may be required. Impacts from extraction wells could be minimized by prudent placement.
50 CFR 17, 222, 225, 226, 227, 402, 424	GW-3, GW-5, GW-6	Actions must not threaten the continued existence of a listed species or destroy critical habitat.	Fish and Wildlife Service will be consulted prior to actions.
16 U.S.C. 461	All	Requirements for preservation of historic sites, buildings, or objects of national significance. Undesirable impacts must be mitigated.	See 16 U.S.C. 469.
16 U.S.C. 470 et seq.	All	Prohibits impacts and requires mitigation for unavoidable impacts on cultural resources.	See 16 U.S. C. 469.
40 CFR 257.3-1	GW-3, GW-5, GW-6	Prohibits facilities or practices from restricting flow of base flood, reducing temporary storage capacity of floodplain, or causing washout of solid waste.	Vertical barrier may have some impact on local ground and surface water flow. However, the wall is relatively short and should not impact the base flood. Other alternatives do not significantly impact floodplain.

Table 6-6. Compliance with ARAR (Page 3 of 5)

ARAR	ALTERNATIVE AFFECTED	REQUIREMENT	HOW ARE REQUIREMENTS MET
40 CFR 257.3-2	GW-3, GW-5, GW-6	Prohibits facilities or practices from causing or contributing to the taking of endangered or threatened species.	Activities will be scheduled to avoid impacts to eagles. Runoff control will be employed to prevent construction contaminants form impacting river biota; minimal impacts would be attributable to the pump and treat alternative; the vertical barrier would disturb an area near the river for implementation. This area would be restored after implementation.
16 U.S.C. 1271	GW-3, GW-5, GW-6	Prohibits federal agencies from recommending authorization of water resource projects that would have a direct and adverse affect on the qualities of the wild and scenic river.	Impacts from the pumping system would be minimal. The vertical barrier would present a short duration impact to visual resources; however, after implementation the site would be restored to provide the visual aesthetics.
RCRA 3020 (b)	GW-5, GW-6	Allows reinjection of hazardous or radioactive waste exceeding drinking water standards pursuant to (1) RCRA or CERCLA corrective action; (2) treatment to substantially reduce hazardous constituents; (3) CERCLA or RCRA effort will protect human health and environment.	Will allow reinjection of groundwater after pump and treat technology.

Table 6-6. Compliance with ARAR (Page 4 of 5)

ARAR	ALTERNATIVE AFFECTED	REQUIREMENT	HOW ARE REQUIREMENTS MET
WAC 232-12-292	All	Requires protection of bald eagle habitat.	All activities will be scheduled to avoid impacts to the eagles during nesting; remedial actions will not result in destruction of eagle nesting habitat.
WAC 232-12-297	All	Prescribes actions to protect wildlife defined as endangered or threatened.	Activities will be scheduled to avoid impacts to eagles. Runoff control will be employed to prevent construction contaminants from impacting river biota; minimal impacts would be attributable to the pump and treat alternative; the vertical barrier would disturb an area near the river for implementation. This area would be restored after implemention.
WAC 173-400-040	GW-3, GW-5, GW-6	Requires best available control technology to control emissions of dust; restricts emitted particles to Hanford Site; requires control of odors.	Dust control measures will be used as required.
WAC 173-340-360	All	Establishes cleanup requirements; identifies treatment technologies.	Cleanup technologies are considered by consideration of a range of general response actions; feasibility studies and proposed plans are prepared with input from regulatory agencies.
WAC 173-304-200	GW-3, GW-5, GW-6	Sets requirements for containers and vehicles to be used on site to store or transport solid waste.	Any solid waste generated on site as a result of remedial action will be handled according to requirements.

9513560.1437

Table 6-6. Compliance with ARAR (Page 5 of 5)

ARAR	ALTERNATIVE AFFECTED	REQUIREMENT	HOW ARE REQUIREMENTS MET
WAC 173-160	GW-3, GW-5, GW-6	Establishes minimum standards for wells.	All wells will be installed, operated, and closed according to requirements.
TBC			
Section 400-060	GW-3, GW-5, GW-6	Prohibits emissions > 0.10 grain per ft^3	
10 CFR 1022	GW-3, GW-5, GW-6	Requires federal agencies to avoid adverse effects associated with development of floodplains.	Only temporary effects associated with vertical barrier installation. The wall will be below land surface; land above the wall altered during installation can be restored.
P.L. 100-605	All	Requires minimization of direct and adverse effects on the valves for which a river is under study.	Impacts from barrier installation will be relatively short term: disturbed areas can be restored after installation.

ARAR = applicable or relevant and appropriate requirements
IRM = interim remedial measure
CERCLA = *Comprehensive Environmental Response, Compensation, and Liability Act*
ERDF = Environmental Restoration Disposal Facility
RCRA = *Resource Conservation and Recovery Act*
* These ranges equate to water hardness between 90 and 250 mg/L

7.0 QUALITATIVE SENSITIVITY ANALYSIS

The sensitivities associated with the key assumptions for the FFS are presented qualitatively in Table 7-1. This table identifies each key assumption and the impacts that the assumption has on the direction of the FFS and on the associated costs. Additional discussions on uncertainties and sensitivities is included in Section 4.0 and in Appendix C. The details of the cost assumptions used in defining alternative costs are included in the detailed cost model printouts in Appendix D.

Table 7-1. Qualitative Sensitivity Analysis of Key Assumptions (Page 1 of 3).

ASSUMPTIONS	IMPACT
The purpose of the IRM is to address an identified threat to human health or the environment.	The LFI recommended that the operable unit remain on the IRM pathway based on the QRA ecological risk estimation. The ecological risk assessment used concentrations in the near-river wells to determine the EHQ. This resulted in very conservative estimate of risks. If the ecological risk is sufficiently overestimated then the need for remedial action may be artificial. If the risk estimation is underestimated, then additional RAO may be required along with corresponding changes in alternative design. The overestimation of risk results in overexpenditure for potentially unnecessary remedial actions. This overexpenditure would be equivalent to the cost of the remedial action selected for implementation.
The objectives the FFS are to protect the Columbia River and to abate offsite migration of contaminants.	The costs developed in the FFS are based on this assumption. If the objectives were to clean up the aquifer and reduce the mass of contaminant then the remedial systems would have to be redesigned or potentially eliminated in the case of the vertical barrier. The barrier does not perform well in the long term with persistent mobile contaminant. The wall will hold up the contaminants in the short term, but the contamination will eventually travel around the wall to the river. If mass reduction is the objective, then the well number, placement, and pumping rates would have to be adjusted to meet the objective. The costs for pump and treat are mainly influenced by well installation costs and pumping rate. The mass reduction scenario would likely require more wells than currently proposed and increased pumping rates. This scenario would probably result in significant increases to both the pump and treat options.
To meet the objectives, the alternatives are aimed at containment and control of contaminant plumes. (The alternatives are not designed for mass reduction or aquifer cleanup.)	The same sensitivities apply to this assumption as to the previous assumption.

Table 7-1. Qualitative Sensitivity Analysis of Key Assumptions (Page 2 of 3).

ASSUMPTIONS	IMPACT
The occasional-use scenario is assumed for the operable unit.	This assumption does not include drinking water wells. The frequent-use scenario does include drinking water wells and would have an effect on RAO and objectives for the IRM. The frequent-use scenario results in the identification of additional COC for human health. The treatment processes for the pump and treat scenarios would have to be modified to address these additional COC and the objectives of the IRM would be modified to include both protection of the river and mass reduction. Alternate water supplies could be considered. The technical practicability of achieving these RAO through pump and treat is uncertain. Additional testing may be required to determine aquifer response and surface treatment. The cost of the alternatives would increase somewhat to account for system changes. Additional costs would be incurred determining aquifer response and for system modification to address RAO.
The lifecycle for the FFS is assumed to be to 2008.	The present worth calculations are tied to this timeframe. The capital costs, O&M costs, and present worths for each year can be seen on the present worth tables presented in Appendix C. Costs associated with years past 2008 can be extrapolated from the tables.

Table 7-1 Qualitative Sensitivity Analysis of Key Assumptions (Page 3 of 3)

ASSUMPTIONS	IMPACT
The *100 Area Feasibility Study Phases 1 & 2* (DOE-RL 1994a) forms the basis for the alternatives evaluated in the FFS. Additional alternatives or deviations from the alternatives are only considered when the defined alternative does not meet the operable unit specifics. The Comprehensive Environmental Response, Compensation, and Liability Act (CERCLA) does, however, allow the flexibility of specifying different process options at any point in the remedial investigation/feasibility study circumstances.	The sensitivities to this assumption are small because most of the emerging technologies are not yet implementable in field applications. Research and development activities are proceeding and could lead to significant cost savings to the remedial actions if these innovative technologies become field ready. The technologies can be integrated into the IRM program as data and new techniques become available.
ERDF has sufficient space for operable unit waste and is available to meet schedule.	The disposal costs for the ion exchange resins are not a major cost factor when using the Boomsnub data on resin capacities. The resin will not be required to be changed over the project life. The reverse osmosis costs for disposal are higher due to dispersal of replacement filters, but this is also not a major cost factor.

8.0 COMPARATIVE ANALYSIS

The comparative analysis is an evaluation of the relative performance of each alternative using the nine CERCLA criteria. This analysis compares Alternatives GW-1 (no action), GW-2 (institutional controls/continued current actions), GW-3 (containment), GW-5 (pump and treat with ion exchange), and GW-6 (pump and treat with reverse osmosis). Alternative GW-4 is not included in this analysis because the alternative addresses contaminants in situ that are not COCs for 100-HR-3. ~~Figure~~ Table 8-1 summarizes the comparative analysis.

8.1 OVERALL PROTECTIVENESS OF HUMAN HEALTH AND THE ENVIRONMENT

The current human health risk associated with the 100-HR-3 Operable Unit is low (ICR 10^{-6} to 10^{-4}, HQ <1) for the occasional use scenario, based on the QRA. However, a potential ecological risk exists based on chromium concentrations in near-river wells that exceed an ecological ARAR level (EPA Ambient Water Quality Criteria of 11 μg/L) and the recommended performance objective of 50 μ/L. Protection of the Columbia River is the primary focus of the IRM. Groundwater modeling results show that the no action and institutional controls/continued current actions alternatives have little effect on the current concentrations of chromium in the near-river wells during the IRM period. However, the vertical barrier and pump and treat alternatives were shown to significantly reduce ~~(i.e., >90%)~~ the mass of chromium entering the river, relative to the baseline (no action). The magnitude of the ecological risk is uncertain; in addition, the risk associated with the substrate of the river has not been quantified. Therefore, the overall protectiveness of the alternatives is dependent on the true risk associated with the operable unit. For example, if the risk determined in the QRA is representative, then the pump and treat and vertical barrier options offer greater protectiveness. However, if the risk is exaggerated, then the no action or institutional controls/continued current actions alternatives may be sufficiently protective. This uncertainty would be addressed by the institutional controls/continued current actions alternative, as time would be allowed for additional information to better direct the IRM selection.

The primary goal of the IRM is the protection of the Columbia River. Groundwater modeling indicates that the pump and treat alternatives can potentially reduce chromium concentrations in near-river wells ~~below the Ambient Water Quality Criteria of 11 μg/L level~~ during the IRM period. The pump and treat alternatives not only provide protection of the river by formation of a hydraulic barrier, but they also reduce the inherent risk associated with the contaminated groundwater by removing chromium through treatment. The containment alternative may provide protection of the river, but it does not reduce the risk associated with the contaminated groundwater. The no action and institutional controls/continued current actions alternatives essentially result in no change from the existing conditions.

8.2 COMPLIANCE WITH ARAR

It is possible that ~~n~~None of the alternatives will meet the EPA Ambient Water Quality Criteria for chromium in the Columbia River (11 μg/L). Compliance with this ARAR may be waived on the following basis.

- Reduction of chromium concentrations in groundwater entering the Columbia River to below the EPA Ambient Water Quality Criteria level of 11 μg/L may be technically impractical. Although effective treatment technologies for chromium-contaminated groundwater exist (ion exchange and reverse osmosis), the ability to remove chromium from the unconfined aquifer to the 11 μg/L level may not be practical due to uncertainties in the adsorption characteristics of chromium in the unconfined aquifer. As discussed in Section 3, a performance objective of 50 μ/L is recommended for near-river wells.

- The preferred alternative selected from this FFS may be an interim action preceding a final remedial action that will ensure compliance with the Ambient Water Quality Criteria level of 11 μg/L for chromium ARAR.

Although the purpose of the interim action is not aquifer restoration, contaminant concentrations in the aquifer represent the contaminant concentrations potentially entering the river. Due to the persistence of chromium in the environment, removal may be the only means of ensuring permanent compliance with the EPA Ambient Water Quality Criteria ARAR.

8.3 LONG-TERM EFFECTIVENESS AND PERMANENCE

The lifecycle of the IRM is likely to be set at ~~12~~ five years (1996-2001). In this time frame, none of the alternatives meet the 11 μg/L Ambient Water Quality Criteria at the river. However, the barrier and pump and treat alternatives result in ~~>90%~~ a reduction in mass of chromium reaching the river. Concentrations in near river wells may approach the recommended performance objective of 50 μ/L. Long-term effectiveness beyond the year 2008 will be addressed in the final remedial action for the 100-HR-3 Operable Unit. Long-term effectiveness in this FFS is intended to be through the IRM period. The final FS for the final action will consider this criterion beyond the IRM period.

The pump and treat alternatives provide the most long-term effectiveness by actively removing contaminants from the groundwater. The location of the extraction system along the Columbia River prevents contaminated groundwater from entering the river. Removal of chromium (by ion exchange or reverse osmosis) from the extracted groundwater reduces potential risk. The pump and treat alternatives, however, will be O&M intensive throughout the IRM period.

Based on recent experience at a similar site containing chromium in groundwater, the reverse osmosis treatment technology may not be capable of meeting project perfromance criteria if groundwater discharge rates are increased (EPA,1995). For this reason, the long-term effectiveness and performance of reverse osmosis is judged to be only fair compared to ion exchange, which has performed well in treatability studies and under field conditions at analogous sites.

Although groundwater modeling results indicate that the containment alternative can provide protection of the river in both the 100-H and 100-D/DR Areas in the short term, the chromium is a persistent contaminant in the environment and will continually travel around the wall to the river. The containment system proposed for the 100-H Area will be O&M intensive through the IRM period. The hydraulic control system (extraction and injection wells) will require constant operational control to account for changes in the hydraulic conditions near the Columbia River caused by seasonal and daily fluctuations in the river stage. Although the proposed containment system for the 100-D/DR Area involves a sheet pile cutoff wall (which is not O&M intensive), the system also uses hydraulic control wells to prevent leakage at the ends of the cutoff wall.

Groundwater modeling results indicate that the no action and institutional controls/continued current actions alternatives have little effect on the concentrations of chromium in the near-river wells during the IRM period. Essentially, these alternatives result in no change to the existing conditions during the IRM period. This result may be significant in the event that current conditions are not considered detrimental to human health and the environment. The institutional controls/continued current actions alternative would allow time to assimilate additional information and select a final remedial action.

8.4 REDUCTION OF TOXICITY, MOBILITY, OR VOLUME

The pump and treat alternatives have the most significant impact on the reduction of toxicity, mobility, and volume of contaminants in the groundwater. They also satisfy the statutory preference for treatment as a principal element. Pump and treat reduces mobility by hydraulically controlling contaminated groundwater migration near the river. In addition, the ~~treatment technologies specified~~ ion exchange and reverse osmosis treatment technology reduces the mass of chromium groundwater removed from the aquifer. As discussed in Section 8.3, reverse osmosis may be less effective in removing chromium from groundwater. Although chromium removed from the groundwater will remain in the hexavalent form, disposal of treatment residues (such as ion exchange resins and solidified treatment effluent) at ERDF ensures isolation from the accessible environment.

The containment alternative reduces the mobility of contaminants, but does not affect volume or toxicity due to the persistence of chromium in the environment. The no action and institutional controls/continued current actions alternatives have no direct effect on these parameters, but they do allow chromium to dissipate by

migration into the river. However, groundwater modeling results indicate that continued migration into the river has little effect on chromium concentrations in the unconfined aquifer.

8.5 SHORT-TERM EFFECTIVENESS

~~The short-term effectiveness criterion is reasonably well met by all the containment and removal/treatment/disposal alternatives. The no-action and institutional control alternative will not be effective in meeting remedial objectives.~~ None of the alternatives are likely to have an impact on the surrounding communities due to the remoteness of the 100-D/DR and 100-H Areas. Risk to workers is primarily due to physical hazards during construction activities. Implementation of the containment alternative in the 100-D/DR Area (sheet pile cutoff wall) has the highest potential worker risk due to pile driving activities and excavation to facilitate installation of the cutoff wall (i.e., removing subsurface obstructions and re-contouring the riverbank). Risk to workers from implementation of the containment alternative in the 100-H Area (hydraulic control wells) is due to installation of extraction and injection wells. The short-term risk to workers from implementation of the pump and treat alternatives is also due to well installation. Physical hazards associated with implementation of any of the alternatives can be minimized by adherence to stringent health and safety protocols.

Short-term impacts to the environment are physical disturbances to habitat resulting from construction activities. The no action alternative does not require implementation and, therefore, does not impact the environment.

Implementation of the containment alternative in the 100-D/DR Area (sheet pile cutoff wall) has the highest potential environmental impact due to construction of the sheet pile cutoff wall along the bank of the Columbia River. Impacts to the environment from implementation of the containment alternative in the 100-H Area (hydraulic control wells) is considered minimal based on the installation of extraction and injection wells and associated piping. Environmental impacts from implementation of the pump and treat alternatives is also due to well and piping installation. Physical disturbances to habitat from implementation of the containment and pump and treat alternatives is unavoidable. Environmental impacts from construction can be minimized to the extent possible by requiring offsite pre-fabrication of system components (such as piping and skid mounted treatment systems) whenever possible, by avoiding nesting seasons, or by the revegetation or transplantation of plants in other locations. Optimized placement of remedial systems considering ecological factors can minimize impacts.

Although the objective of the pump and treat alternatives during interim action at the 100-HR-3 Operable Unit is not aquifer restoration, the concentrations in the aquifer represent the potential risk to the environment. Groundwater modeling results of the pump and treat alternatives do not show significant reductions in the concentrations of chromium in the unconfined aquifer during the interim action period~~. , because aquifer restoration is not the intent.~~ However, long-term and

permanent protection of the river will likely require aquifer restoration to be the goal of pump and treat. Uncertainty in the adsorption characteristics of chromium in the unconfined aquifer results in uncertainty in the long-term effectiveness of pump and treat for aquifer cleanup.

8.6 IMPLEMENTABILITY

The no action and institutional controls/continued current actions alternatives are considered to be already in place (i.e., access restrictions and monitoring) and therefore do not involve any implementability concerns. The pump and treat alternatives are also considered easily implementable; however, the effectiveness of these alternatives is uncertain. Although both ion exchange and reverse osmosis are considered BATs for meeting the SDWA MCL of 100 μg/L for chromium, the ability of these treatment technologies to achieve the EPA Ambient Water Quality Criteria level of 11 μg/L is unknown. The treatability study conducted using ion exchange indicates that this treatment is effective for removing chromium from 100-HR-3 groundwater to less than 20 μg/L (based on 19 μg/L detection limit) (WHC 1993c). Ion exchange technology has also been successfully implemented at an analogous site in Washington State (EPA, 1995). Treatability testing with reverse osmosis would be required to establish accurate performance data. Uncertainty also exists in the ability to remove chromium from the unconfined aquifer. Effective and efficient chromium removal from the unconfined aquifer is dependent on the adsorption characteristics of chromium. The adsorption characteristics of chromium in the unconfined aquifer are uncertain and will require additional site characterization to accurately define. Reverse osmosis also requires the use of high pressure pumps and may be mroe difficult to implement than ion exchange.

Implementation of a vertical barrier at 100-H Area is considered impracticable. The proposed alternate containment action is the hydraulic control alternative. Although groundwater modeling results indicate this alternative to be effective for controlling the flux of chromium to the river, operability of the hydraulic control system is questionable. Operational difficulties are anticipated due to continuously changing hydrologic conditions in the unconfined aquifer near the river. Daily and seasonal fluctuations in the river stage will result in corresponding fluctuations in the water table elevation, hydraulic gradient, and direction of the hydraulic gradient. Containment of a persistent contaminant such as chromium would eventually lead to additional remedial actions (i.e., pump and treat) or alternate cleanup levels would have to be negotiated. Operation of the extraction/injection of contaminated groundwater may encounter regulatory resistance in the absence of treatment. However, the goal of the alternative is to contain the contaminant plume without incurring the massive treatment costs associated with the pump and treat alternatives.

Implementability of the sheet pile cutoff at 100-D/DR Area is considered difficult due to potential subsurface obstructions and recontouring areas of the river bank. Treatability testing may be required to establish the implementability of a sheet pile cutoff wall in the 100-D/DR Area. In addition, the containment system proposed for the 100-D/DR Area also involves hydraulic control to prevent leakage near the

ends of the cutoff wall. Operation of these hydraulic control wells will involve the same operational difficulties described above for the proposed hydraulic containment system in the 100-H Area.

Evaluation of the alternatives for use as IRMs requires some forethought into the potential final remedial actions. As an IRM, the institutional controls/continued current actions alternative would allow additional time for conducting treatability studies and defining parameters (adsorption of chromium) required to support selection of a final remedial action. Due to the persistence of chromium in the environment, containment would not reduce the potential risk associated with 100-HR-3 groundwater. Therefore, selection of the containment alternative as an IRM for the 100-HR-3 Operable Unit would require a final remedial action involving removal. The pump and treat alternatives could be used as IRMs to protect the river while also reducing the risk associated with the contaminated groundwater. Depending on the goal of the pump and treat system used during the interim action period (aquifer restoration or protection of the river), continued operation or expansion to capture the entire plume may be required as the final remedial action. Pump and treat may be the only means of ensuring long-term protection of the river and reducing the potential ecological risk associated with 100-HR-3 groundwater.

8.7 COST

Costs for the alternatives are compared in Tables 8-1 and 8-2. Additional details and assumptions for the costs are presented in Appendix D. For all alternatives, the cost estimates assume an interim remediation period of 12 years (1996-2008). Costs for alternative GW-5 (groundwater removal and treatment with ion exchange) were also estimated assuming a 5-year IRM period (1996-2001) to support the DOE and EPA planning and review process and to incorporate data from recent experience with ion exchange at an analogous site in Washington State (EPA 1995). The costs developed for this FFS cover only the implementation and operation of the IRM. Consideration of the final action costs is outside the scope of the FFS; however, some general statements are provided for consideration as follows.

- Costs for the continuation of the IRM as a final action can be extrapolated from the FFS costs.

- Costs for combining alternatives (such as a vertical barrier in conjunction with pump and treat) can be assumed to be additive (on an order of magnitude basis).

Figure 8-1. Summary of Comparative Analysis.

Evaluation Criteria	100-HR-3 Groundwater Operable Unit				
	Alternatives[1]				
	GW-1	GW-2	GW-3	GW-5	GW-6
Overall Protection of Human Health and Environment					
Compliance with ARAR[2]					
Long-Term Effectiveness and Permanence					
Reduction of Toxicity, Mobility, and Volume					
Short-Term Effectiveness					
Implementability					
Present Worth - H Area ($ millions)	0	1.0	10.0	23.4	28.2
Present Worth - D/DR Area ($ millions)	0	1.0	23.3	14.7	18.4

Notes:

1. Alternatives are summarized as follows:
   - GW-1 No Interim Action
   - GW-2 Institutional Control/Continue Current Actions
   - GW-3 Containment
   - GW-5 Removal/Ion Exchange Treatment/Disposal
   - GW-6 Removal/Reverse Osmosis Treatment/Disposal
2. ARAR - applicable or relevant and appropriate requirement

Note: GW-4 (In Situ Treatment) was not evaluated.

Key:

E940829.7b

Table 8-1
Summary of Comparitive Analysis
HR-3 Operable Unit

Remedial Action	CERCLA Evaluation Criteria							
	Overall Protection of Human Health and Environment	Compliance with ARARs	Long Term Effectiveness and Permanence	Reduction in Toxicity, Mobility, and Volume	Short Term Effectiveness	Implementability	Cost (Present Worth in millions)	
							H Area	D/DR Area
No Action	Poor - Ecological risks not quantified and not expected to significantly reduce concentrations of chromium in groundwater.	Poor - Chromium concentrations will exceed ambient water quality criteria in near-river wells and possibly in salmon spawning habitat.	Fair - Potential ecological risks to river will remain, but alternative comaptible with potential final actions.	Poor - no significant reduction during IRM period	Fair - no additional adverse impacts, but threat to river not mitigated.	Good - groundwater monitoring technology well established	0	0
Institutional Control/Continue Current Action	Poor - Ecological risks not quantified and not expected to significantly reduce concentrations of chromium in groundwater	Poor - Chromium concentrations will exceed ambient water quality criteria in near-river wells and possibly in salmon spawning habitat.	Fair - Potential ecological risks to river will remain, but alternative comaptible with potential final actions.	Poor - no significant reduction during IRM period	Fair - no additional adverse impacts, but threat to river not mitigated.	Good - groundwater monitoring technology well established.	1.0	1.0
Containment	Good - immediate reduction in chromium concentrations in concentrations of chromium entering the river in contained areas.	Poor - Chromium concentrations in groundwater will decrease due to natural process, and may fall below AWQC.	Fair - Groundwater may eventually migrate around barrier	Fair - mobility reduced, but toxicity and volume not affected	Fair - chromium will immediately be prevented from migrating towards river. However, some environmental impacts due in installation of barrier wall.	Poor - Cannot drive sheet piles in H Area; uncertain in D/DR Area. Option may require future remedial action to remove chromium.	10.0	23.3
Removal/Ion Exchange Treatment/Disposal	Good - immediate reduction in chromium mass in groundwater expected, with likely reduction in chromium concentrations entering river	Fair - Chromium mass in groundwater will decrease, and concentrations may fall below AWQC at river. ARARs must also be met for disposal of removed chromium.	Good - chromium permanently removed from system. IRM system could be expanded to meet changing objectives.	Good - chromium removed from system, mobility limited by groundwater extraction wells	Good - potential risks to environment and to workers are expected to be minimal	Good - technology well established; equipment and specialists are available.	10.9	10.2
Removal/Reverse Osmosis Treatment/Disposal	Good - immediate reduction in chromium mass in groundwater expected, with likely reduction in chromium concentrations entering river	Fair - Chromium mass in groundwater will decrease, and concentrations may fall below AWQC at river. ARARs must also be met for disposal of removed chromium and sludge from membrane.	Fair - Reverse osmosis system may not be effective at removing chromium if groundwater discharge rates are increased, and may require updating or replacement.	Good - chromium removed from system, mobility limited by groundwater extraction wells	Fair - potential risks to environment and to workers are expected to be minimal, but more land required for sludge disposal.	Fair - Requires installation of high pressure pumps, more difficult and expensive to implement than ion exhchange.	28.2	18.4

Table 8-2. Comparison of Capital, O&M, and Present Worth Costs for the 100-D/DR Area.

IRM Period (years)	Alternative	Capital Costs	O&M Costs	Present Worth
12	GW-1 No Action	$0	$0	$0
12	GW-2 Institutional Controls/Continued Current Actions	$0	$1,300,000	$960,000
12	GW-3 Containment	$11,000,000	$16,600,000	$23,000,000
12	GW-5 Removal, Treatment, Disposal Using Ion Exchange	$2,600,000	$10,300,000	$10,200,000
12	GW-6 Removal, Treatment, Disposal Using Reverse Osmosis	$3,300,000	$20,400,000	$18,400,000
5	GW5-5 Removal, Treatment, Disposal Using Ion Exchange	$2,600,000	$7,400,000	$8,900,000

Note: Cost assumptions are described in Appendix D.

Table 8-3. Comparison of Capital, O&M, and Present Worth Costs for the 100-H Area.

IRM Period (years)	Alternative	Capital Costs	O&M Costs	Present Worth
12	GW-1 No Action	$0	$0	$0
12	GW-2 Institutional Controls/Continued Current Actions	$0	$1,000,000	$950,000
12	GW-3 Containment	$3,900,000	$8,000,000	$9,900,000
12	GW-5 Removal, Treatment, Disposal Using Ion Exchange	$2,600,000	$11,200,000	$10,900,000
12	GW-6 Removal, Treatment, Disposal Using Reverse Osmosis	$7,100,000	$28,400,000	$28,200,000
5	GW-5 Removal, Treatment, Disposal Using Ion Exchange	$2,600,000	$7,900,000	$9,500,000

Note: Cost assumptions are described in Appendix D.

9.0 REFERENCES

Brouns, T. M., S. S. Koegler, J. K. Fredrickson, S. P. Luttrell, and K. A. Borgeson, 1991, *On-Site Bioreclamation, Processes for Zenobiotic and Hydrocarbon Treatment*, Butterworth-Heinemann, Stoneham, Massachusetts, pp. 477-482.

Cadwell, L. L., 1994, *Wildlife Studies on the Hanford Site: 1993 Highlights Report*, PNL-7380, Pacific Northwest Laboratory, Richland, Washington.

Campbell, M. D., 1994, *Monitoring Groundwater and River Interaction Along the Hanford Reach of the Columbia River*, PNL-9437, Pacific Northwest Laboratory, Richland, Washington.

Chatters, J. C., 1989, *Hanford Cultural Resources Management Plan*, PNL-6942, Pacific Northwest Laboratory, Richland, Washington.

Connelly, M., 1991, *Numerical Simulation of Strontium-90 Transport form the 100-N Area Liquid Wastes Disposal Facilities*, WHC-SD-ER-TA-001, Westinghouse Hanford Company, Richland, Washington.

Corbitt, R. A., 1990, *Standard Handbook of Environmental Engineering*, McGraw-Hill Publishing Company, New York, New York.

DOE, 1988, *Low-Level Radioactive Waste Volume Reduction and Stabilization Technologies Resource Manual*, U.S. Department of Energy, Idaho Operations Office.

DOE-RL, 1994a, *100 Area Feasibility Study Phases 1 and 2*, Rev. 0, DOE/RL-92-11, U.S. Department of Energy, Richland, Washington.

DOE-RL, 1994b, *Pilot-Scale Treatability Test Plan for the 100-HR-3 Operable Unit*, Decisional Draft, DOE/RL-94-54, U.S. Department of Energy, Richland, Washington.

DOE-RL, 1994c, *Hanford Site Risk Assessment Methodology*, Rev. 3, DOE/RL-91-45, U.S. Department of Energy, Richland, Washington.

DOE-RL, 1994d, *Remedial Investigation and Feasibility Study Report for the Environmental Restoration Disposal Facility*, DOE/RL-93-99, Decisional Draft, U.S. Department of Energy, Richland, Washington.

DOE-RL, 1993a, *Columbia River Impact Evaluation Plan*, Rev. 0, DOE/RL-92-28, U.S. Department of Energy, Richland, Washington.

DOE-RL, 1993b, *Limited Field Investigation Report for the 100-HR-3 Operable Unit*, DOE/RL-93-43, Draft A, U.S. Department of Energy, Richland, Washington.

DOE-RL, 1992a, *Remedial Investigation/Feasibility Study Work Plan for the 100-FR-3 Operable Unit, Hanford Site, Richland, Washington*, DOE/RL-91-53, Rev. 0, U.S. Department of Energy, Richland Operations Office, Richland, Washington.

DOE-RL, 1992b, *Remedial Investigation/Feasibility Study Work Plan for the 100-KR-4 Operable Unit, Hanford Site, Richland, Washington*, DOE/RL-90-21, Rev. 0, U.S. Department of Energy, Richland Operations Office, Richland, Washington.

DOE-RL, 1992c, *RCRA Facility Investigation/Corrective Measures Study Work Plan for the 100-HR-3 Operable Unit*, DOE/RL-88-36, Rev. 0, U.S. Department of Energy, Richland Operations Office, Richland, Washington.

DOE-RL, 1992d, *Remedial Investigation/Feasibility Study Work Plan for the 100-BC-5 Operable Unit, Hanford Site, Richland, Washington*, DOE/RL-90-08, Rev. 0, U.S. Department of Energy, Richland Operations Office, Richland, Washington.

DOE-RL, 1992e, *Hanford Site Groundwater Background*, DOE/RL-92-23, U.S. Department of Energy, Richland Operations Office, Richland, Washington.

DOE-RL, 1992f, *Sampling and Analysis of 100 Areas Springs*, DOE/RL-92-12, prepared by IT Corporation for Westinghouse Hanford Company, Richland, Washington.

DOE-RL, 1992g, *100-HR-3 Groundwater Treatability Test Plan*, DOE/RL-92-73, Draft A, U.S. Department of Energy, Richland Operations Office, Richland, Washington.

DOE-RL, 1992h, *Treatability Study Program Plan*, DOE/RL-92-48, Draft A, U.S. Department of Energy, Richland Operations Office, Richland, Washington.

DOE-RL, 1991, *Hanford Past-Practice Strategy*, DOE/RL-91-40, Draft A, U.S. Department of Energy, Washington, D.C.

Driscoll, F. G., 1986, *Groundwater and Wells*, Second Addition, Johnson Division, St. Paul, Minnesota.

Ebra, M. A., J. P. Bibler, B. S. Johnston, L. L. Kilpatrick, F. L. Poy, R. M. Wallace, and E. I. du Pont de Nemours and Company, 1987, *New Treatment Facility for Low Level Process Effluents at the Savannah River Site,* Savannah River Laboratory, Aiken, South Carolina.

Ecology et al., 1994, *Hanford Federal Facility Agreement and Consent Order, Change Order Control Form M-15-93-02*, Washington State Department of Ecology, Olympia, Washington, U.S. Environmental Protection Agency, Region X, Seattle, Washington, and U.S. Department of Energy, Richland Operations Office, Richland, Washington.

Ecology et al., 1990, *Hanford Federal Facility Agreement and Consent Order*, Washington State Department of Ecology, Olympia, Washington, U.S. Environmental Protection Agency, Region X, Seattle, Washington, and U.S. Department of Energy, Richland Operations Office, Richland, Washington.

EPA, 1987, *A Compendium of Technologies Used in the Treatment of Hazardous Wastes*, U.S. Environmental Protection Agency, Cincinnati, Ohio.

EPA, 1988, *Guidance for Conducting Remedial Investigations and Feasibility Studies under CERCLA*, EPA/540/G-89/004, Environmental Protection Agency, Office of Emergency and Remedial Response, Washington, DC.

EPA, 1989, *Risk Assessment Guidance for Superfund, Volume 1 - Human Health Evaluation Manual*, Part A, Interim Final, U.S. Environmental Protection Agency, Washington, DC.

EPA, 1991, *USEPA Contract Laboratory Program, Statement of Work for Inorganic Analysis*, ILM02.0, U.S. Environmental Protection Agency, Washington, DC.

EPA, 1993, *perox-pure™ Chemical Oxidation Technology Peroxidation Systems, Inc.*, U.S. Environmental Protection Agency, Washington, DC.

Eslinger, P. W., L. R. Huesties, A. D. Maughan, T. B. Miley, and W. H. Walters, 1994, *Data Compendium for the Columbia River Comprehensive Impact Assessment*, PNL-9785/UC-630, Pacific Northwest Laboratory, Richland, Washington.

Fitzner, R. E. (Pacific Northwest Laboratory), and S. G. Weiss (Westinghouse Hanford Company), 1992, *Bald Eagle Site Management Plan for the Hanford Site, South-Central Washington,* WHC-EP-0510, Westinghouse Hanford Company, Richland, Washington

Fitzner, R. E. (Pacific Northwest Laboratory), S. G. Weiss and J. A. Stegen (Westinghouse Hanford Company), 1992, *Biological Assessment for Threatened and Endangered Species,* WHC-EP-0513, Westinghouse Hanford Company, Richland, Washington.

Freeman, H. M., 1989, *Standard Handbook of Hazardous Waste Treatment and Disposal*, McGraw-Hill Book Company, New York, New York.

Gee, G. W., 1987, *Recharge at the Hanford Site: Status Report,* PNL-6403, Pacific Northwest Laboratories, Richland, Washington.

Geraghty and Miller, Inc., 1993, *Computer Aided Design Software for Groundwater Modeling,* Model Cad^{386TM}, Version No. 2.14, Serial No. 538.

Golden Software, 1991, *Surfer®*, Version 4, Serial No. 28609.

Hartman, M. J., and R. E. Peterson, 1992, *Hydrologic Information Summary for the Northern Hanford Site,* WHC-SD-EN-TI-023, Rev. 0, Westinghouse Hanford Company, Richland, Washington.

Hanford Future Site Uses Working Group, 1992, *Future for Hanford: Uses and Cleanup*, Richland, Washington.

Hazardous Waste Consultant, 1993, *Advances in Air Sparging Design*, January/February 1993, pp. 1.1-1.10.

Huxstep, M. R., and T. J. Sorg, 1988, *Project Summary, Reverse Osmosis Treatment to Remove Inorganic Contaminants from Drinking Water*, EPA/600/S2-87/109, U.S. Environmental Protection Agency, Cincinnati, Ohio.

Konikow, L. F., and J. D. Bredehoeft, 1978, *Computer Model of Two-Dimensional Solute Transport and Dispersion in Groundwater,* U.S. Geological Survey Water Resource Investigations, Book 7, Chapter C2.

Landeen, D. S., M. R. Sackschewsky, and S. G. Weiss, 1993, *100 Areas CERCLA Ecological Investigations*, WHC-EP-0620, Westinghouse Hanford Company, Richland, Washington.

Lindsey, K. A., and G. K. Jaeger, 1993, *Geologic Setting of the 100-HR-3 Operable Unit, Hanford Site, South-Central Washington,* WHC-SD-EN-TI-001, Rev. 0, Westinghouse Hanford Company, Richland, Washington.

McDonald, J. M., and A. W. Harbaugh, 1988, "Modular Three-Dimensional Finite-Difference Groundwater Flow Model," *MODFLOW, Techniques of Water Resources Investigations of the U.S. Geological Survey*, Book 6.

McMahon, W. J., and R. E. Peterson, 1992, *Estimating Aquifer Hydraulic Properties Using the Ferris Method, Hanford Site, Washington*, DOE/RL-92-64, Rev. 0, U.S. Department of Energy, Richland Operations Office, Richland, Washington.

Moghissi, A. A., H. W. Godbee, and S. A. Hobart, 1986, *Radioactive Waste Technology*, American Society of Mechanical Engineers.

Nonveiller, E., 1989, *Grouting Theory and Practice*, Elsevier Science Publishers, Amsterdam, The Netherlands.

P. E., 1993, "Moving Beyond Pump-and-Treat," *Pollution Engineering*, March 1993.

Peterson, R. E., 1993, "183-H Solar Evaporation Basins," in Geosciences, *Annual Report for RCRA Groundwater Monitoring Projects at Hanford Site Facilities for 1991,* DOE/RL-93-09, Rev. 0, February 1993, U.S. Department of Energy, Richland, Washington.

Peterson, R. E., and M. P. Connelly, 1992, *Characterization of a Chromium Plume in Groundwater Along the Columbia River Shoreline, Hanford Site, Washington*, WHC-SA-1674-VA, Westinghouse Hanford Company, Richland, Washington.

Peterson, R. E., and V. G. Johnson, 1992, *Riverbank Seepage of Groundwater Along the Hanford Reach of the Columbia River, Washington*, WHC-EP-0609, Westinghouse Hanford Company, Richland, Washington.

Peyton, B. M., 1994, *100 Area Groundwater Biodentrification Bench-Scale Treatability Study -- Final Report*, WHC-SD-EN-ES-043, prepared by Pacific Northwest Laboratory for Westinghouse Hanford Company, Richland, Washington.

Peyton, B. M., and K. R. Martin, 1993, *100 Area Groundwater Biodenitrification Bench-Scale Treatability Study Procedures*, PNL-8610, Pacific Northwest Laboratory, Richland, Washington.

Porter, M. C., 1990, *Handbook of Industrial Membrane Technology*, Noyes Publications, Mill Road, New Jersey.

Reese, J. S., 1992, *Cleaning Water With Low Profile Strippers*, IT Corporation, Ocala, Florida.

Sachschewsky, M. R., and D. S. Landeen, 1992, *Fiscal Year 1991 100 Areas CERCLA Ecology Investigations*, WHC-EP-0448, Westinghouse Hanford Company, Richland, Washington.

Skeen, R. S., S. P. Luttrell, T. M. Brouns, B. S. Hooker, and J. N. Petersen, 1993, *In-Situ Bioremediation of Hanford Groundwater*, pp. 353-367.

Spooner, P., R. Wetzel, C. Spooner, C. Furman, E. Tokarski, G. Hunt, V. Hodge, and T. Robinson, 1985, *Slurry Trench Construction for Pollution Migration Control*, Noyes Publications, Mill Road, New Jersey.

S. S. Papadopulos and Associates, 1991, *A Modular Three-Dimensional Transport Model for Simulation of Advection, Dispersion and Chemical Reactions of Contaminants in Groundwater Systems*, MT3D, Version 1.5.

Starr, R. C., J. A. Cherry, and E. S. Vales, 1992, *A New Type of Steel Sheet Piling with Sealed Joints for Groundwater Control*, University of Waterloo, Waterloo Ontario.

Stegen, J. A., 1992, *Biological Assessment for State Candidates and Monitored Wildlife Species Related to CERCLA*, WHC-SD-EN-TI-009, Rev. 0, Westinghouse Hanford Company, Richland, Washington

Waterloo Center for Groundwater Research, 1992, *A New Method for Groundwater Pollution Control by cutoff Walls: The Waterloo Barrier*, Draft, University of Waterloo, Waterloo, Ontario.

Weinstein, H. C., H. L. Stone, and T. B. Kwan, 1969, "Iterative Process for Solutions of Systems of Parabolic and Elliptic Equations in Three Dimensions," *Industrial Engineering Chemistry Fundamentals*, Vol. 8, Number 2, pg. 281-287.

Weiss, S., and R. M. Mitchell, 1992, *A Synthesis of Ecological Data from the 100 Areas of the Hanford Site*, WHC-EP-0601, Westinghouse Hanford Company, Richland, Washington.

WHC, 1993a, *100 Area Columbia River Sediment Sampling*, WHC-SD-EN-TI-198, Rev. 0, Westinghouse Hanford Company, Richland, Washington.

WHC, 1993b, *100-HR-3 Area Groundwater Treatment Tests for Ex Situ Removal of Chromate, Nitrate, and Uranium (VI) by Precipitation/Reduction and/or Ion Exchange*, WHC-SD-EN-TC-003, Rev. 1, Westinghouse Hanford Company, Richland, Washington.

WHC, 1993c, *Treatment Tests for Ex Situ Removal of Chromate, Nitrate, and Uranium (VI) from Hanford (100-HR-3) Groundwater Final Report*, WHC-SD-ER-DTR-001, Rev. 0, Westinghouse Hanford Company, Richland, Washington.

WHC, 1993d, *Qualitative Risk Assessment for the 100-HR-3 Operable Unit*, WHC-SD-EN-RA-007, Rev. 0, Westinghouse Hanford Company, Richland, Washington.

Williams, R., and G. Strand, 1990, *Radioactive Liquid Waste Volume Reduction System,* Pacific Nuclear Systems, Inc., NuPac Services Division, Inc., Columbia, South Carolina.

Winterkorn, H. F., and H. Fang, 1975, *Foundation Engineering Handbook*, Van Nostrand Reinhold Company, New York, New York.

APPENDIX A

APPLICABLE OR RELEVANT AND APPROPRIATE REQUIREMENTS

APPLICABLE OR RELEVANT AND APPROPRIATE REQUIREMENTS

Applicable or relevant and appropriate requirements (ARARs) in federal or state law must be met or waived for remedial actions as required by Section 121 of CERCLA. A component of an action's protectiveness is its ability to comply with ARARs. This appendix consists of a written discussion of major federal and state ARARs, followed by tables listing ARARs that are pertinent to interim remedial activities evaluated in the FFS. Identification of ARARs is directly impacted by characteristics of the site, contaminants present, and Remedial Alternatives developed; therefore, only specific sections of the regulations may be an ARAR.

PRIMARY ARARS

1. EFFLUENT DISCHARGE STANDARDS - REMOVAL, TREATMENT, AND DISPOSAL ALTERNATIVES

The primary issue associated with the removal, treatment, and disposal alternatives would involve the return of treated groundwater to the aquifer. It is anticipated that this effluent may contain constituents above the MCLs (Constituents not being treated could remain above MCL's or constituents that are reduced in concentration through treatment but still not to MCLs), 40 Code of Federal Regulations (CFR) 141.

At CERCLA sites, RCRA Section 3020(b) allows discharge of hazardous or radioactive waste and/or effluent exceeding drinking water standards into injection wells provided that the reinjection: (1) is done pursuant to CERCLA or RCRA corrective action authority; (2) includes treatment of contaminated water to substantially reduce hazardous constituents prior to reinjection; and (3) the CERCLA or RCRA effort will, upon completion, be sufficient to protect human health and the environment. Reinjection of treated effluent would be allowable pursuant to RCRA Section 3020b). In a similar manner, and notwithstanding the general prohibition of 40 CFR 144.13(a), 40 CFR 144.13(c) allows injection of treated groundwater into the same formation from which it was drawn when such actions are done pursuant to CERCLA or RCRA authority.

2. HAZARDOUS/DANGEROUS WASTE MANAGEMENT STANDARDS

The pump-and-treat technologies may generate RCRA hazardous waste. If so, substantive RCRA and WAC 173-303 standards would apply to the generated waste.

The Resource Conservation and Recovery Act (RCRA) regulates the generation, transportation, storage, treatment, and disposal of hazardous waste. This law also provides authority for the cleanup of spills and environmental releases of hazardous waste to the environment as a result of past practices. Hazardous waste management regulations promulgated pursuant to RCRA are codified at 40 CFR 260 through 270. The regulations include chemical-specific standards for the designation of hazardous wastes, as well as standards for treatment of these wastes prior to disposal. Washington State Dangerous Waste Regulations

implement the federal hazardous waste regulations and are administered by Ecology. RCRA requirements are applicable to those remediation activities that may generate, treat, store, or dispose of hazardous waste.

Land disposal restrictions (LDRs), outlined in 40 CFR 268, identify hazardous wastes that are restricted from land disposal and prescribes treatment standards for such wastes. Applicable treatment standards would be met unless such wastes were disposed pursuant to the RCRA corrective action management unit regulations or a treatment waiver or variance were obtained.

3. AIR STANDARDS

Under 40 CFR Part 61, Subpart H and WAC 246-247, radionuclide airborne emissions from all combined operations at the Hanford Site may not exceed 10 mrem/year effective dose equivalent to the hypothetical offsite maximally exposed individual. The WAC 173-460 establishes acceptable source impact levels for more than 500 carcinogenic acutely toxic air pollutants.

The radionuclide emission requirements would apply to all fugitive, diffuse, and point source air emissions of radionuclides generated by the pump and treat technologies described in the removal, treatment, and disposal alternatives. If either the pump-and-treat technology or the containment technology alternatives generated an increase of toxic air pollutants to the atmosphere above the small quantity emission rates, implementation of Best Available Control Technology for Toxics (T-BACT) would be required. If radionuclides exist in the groundwater and emissions do not exceed small quantity emissions rates, Reasonably Available Control Technology would be required at a minimum.

MISCELLANEOUS ARARS AND TO-BE-CONSIDERED REQUIREMENTS

The Water Well Construction Act - 18.104 RCW promulgated at WAC 173-160

The Standards for Construction and Maintenance of Wells (WAC 173-160) establishes a minimum standard for design, construction, capping, and sealing of all wells; sets additional requirements including disinfection of equipment, abandonment of wells, and quality of drilling water. All wells in the 100-HR-3 Operable unit will comply with this standard.

The *National Historic Preservation Act of 1966* - 16 USC 470 et seq.

The *National Historic Preservation Act* requires that historically significant properties be protected. The Act requires that impacts posed to property listed on or eligible for inclusion on the National Register of Historic Places must be evaluated. The National Register of Historic Places is a list of sites, buildings, or other resources identified as significant to United States history. If facilities within the operable units are determined to be of historical significance, this Act is applicable to alternatives that may cause ground disturbance.

The *Archeological and Historic Preservation Act* - 16 USC 469a

This Act is similar to the National Historic Preservation Act but differs in that it mandates only protection of historic or archaeologic data and not the actual archaeologic or historical site. If activities in

connection with any federal project or federally approved project may cause irreparable loss to significant scientific, prehistorical, or archeological data, the Act requires that the agency responsible for the project preserve the data. This Act requires that actions conducted at a waste site must not cause the loss of any archeological and historic data. There are known and potential archeological sites in the 100 Area. This Act is, therefore, applicable.

The *Endangered Species Act* - 16 USC 1531

The *Endangered Species Act of 1973* establishes requirements to protect species threatened by extinction and habitats important to their survival. The *Endangered Species Act* is designed as a means for the conservation of flora and fauna that are threatened with extinction. Endangered species are identified under the Act as species that are in danger of extinction throughout all or a significant portion of their range. Threatened species are identified as species that are anticipated to be in danger of extinction within the foreseeable future. The Endangered Species Act provides for the designation of critical habitat, defined as "specific areas within the geographical area occupied by the (endangered or threatened) species ... on which are found those physical or biological features essential to the conservation of the species..." This Act is applicable because some threatened and endangered species are residents or seasonal visitors with the 100 Area.

Floodplain/Wetlands Environmental Review Requirements 10 CFR 1022

This regulation requires DOE and other federal agencies to comply with the requirements of Executive Order 11990 - Protection of Wetlands, and Executive Order 11988 - Floodplain Management. Executive Order 11988 requires DOE procedures to ensure that any action conducted in a floodplain shall consider alternatives to avoid adverse effects in the floodplains. Executive Order 11990 requires protection of wetlands from destruction. This regulation requires federal agencies to implement these considerations through existing federal standards, such as the *National Environmental Policy Act*. The U.S. Army Corp of Engineers has established a nationwide permitting program for actions that impact wetlands. Under CERCLA, onsite actions are not required to comply with administrative permit requirements of federal, state and local regulations; however, CERCLA actions must comply with substantive portions of the regulations. There are wetlands within the 100 Area operable units. The substantive requirements of these Orders are, therefore, relevant and appropriate.

***Department of Game State Environmental Policy Act* Procedures - WAC 232-012**

The regulations include the State of Washington Department of Fish and Wildlife procedures for compliance with the *Washington State Environmental Policy Act* (SEPA). The Act requires that management plans be developed if threatened, endangered, or sensitive wildlife or habitat are affected by remedial actions at the site. Even though the majority of these requirements are administrative in nature, remedial activities are required to meet the substantive aspects of the regulation and to adhere to the goals of protecting and enhancing wildlife resources. Since state-listed threatened and endangered species have been identified in the 100 Area, this Act is applicable. The Washington State Department of Fish and Wildlife will be consulted to determine management policies and any mitigation that may be necessary to minimize ecological impacts.

Hanford Reach Study Act, P.L. 100-605

The Hanford Reach Study Act is a TBC requirement that provides for a comprehensive river conservation study. It prohibits the construction of any dam, channel, or navigation project by a federal agency for 8 years after enactment. New federal and nonfederal projects and activities are required, to the extent practicable, to minimize direct and adverse effects on the values for which the river is under study and to utilize existing structures.

Radiation Protection of the Public and Environment - DOE Order 5400.5

Radiation protection and radioactive waste management requirements issued under the *Atomic Energy Act* are implemented at DOE facilities as DOE Orders. Under CERCLA these standards are TBC for remedial activities because they are not promulgated regulations.

DOE Order 5400.5, "Radiation Protection of the Public and Environment," establishes the standards and requirements for radiation protection of the public and the environment at DOE and DOE contractor facilities. This DOE Order defines members of the public as persons not occupationally associated with the DOE facility or operations. However, this DOE Order is discussed because it presents exposure limits for airborne and liquid effluent that may be useful as comparisons to occupational limits. This DOE policy is to implement all legally applicable radiation protection standards, and to adopt or consider recommendations from authoritative organizations, such as the National Council on Radiation Protection and Measurements and the ICRP. This DOE policy also includes implementation of standards generally consistent with NRC for DOE facilities not subject to NRC regulation.

The DOE Order applies the "As Low As is Reasonably Achievable" (ALARA) process to radiation protection. The ALARA process is not a dose-based limit, but a feasibility limit, in that exposures should be as far below applicable limits as practical. The feasibility limit should account for social, economic, technical, and public policy considerations. As part of the ALARA process, DOE operations monitor routine and non-routine exposure and assess the dose to members of the public. The ALARA process includes procedures for evaluating alternative operations and other factors to reduce radiation exposures.

This DOE Order adopts radiation protection dose standards consistent with the 1977 ICRP guidance that has been adopted and implemented world wide by countries with nuclear programs. Dose limits presented in this DOE Order are expressed both in terms of effective dose equivalents (ICRP guidance) and dose equivalents to specific organs or whole body to be consistent with pre-1977 standards or public dose limits established by EPA for selected exposure pathways or sources.

The DOE primary standard for allowable effective dose equivalent to members of the public in a year is 0.1 rem. The DOE-Headquarters is to be notified if an annual public exposure in excess of 0.01 rem occurs or is anticipated to occur. This dose considers all exposure modes resulting from DOE activities. "Effective Dose Equivalent", developed by the ICRP, is calculated by the weighted summation of doses to various organs of the body. The 0.1 rem effective dose equivalent in a year is the sum of all exposures from external sources plus the committed effective dose equivalent from sources taken into the body during the year. The public dose limit does not include medical exposures, exposure resulting from

consumer products, residual fallout from past nuclear accidents and weapons tests, or naturally occurring radiation sources.

The DOE Order 5400.5 identifies circumstances where supplemental limits or exceptions to the standards may be implemented. A temporary public dose limit higher than 0.1 rem, but not to exceed 0.5 rem for the year, may be approved from the DOE Operations office in coordination with its Program Office. Situations identified by DOE that may warrant use of a supplemental standard include situations where remedial action would pose a clear and present risk to workers or members of the public using reasonable measures to reduce or avoid the risk.

The DOE Order presents derived concentration guides (DCG) for conducting radiological environmental monitoring programs at DOE facilities. The DCGs are presented for three exposure modes: ingestion of water, inhalation of air, and immersion in a gaseous cloud. The DCGs are not designed as occupational intake limits. The DCGs for internal exposure are based on a committed effective dose equivalent of 0.1 rem/year for radionuclides taken into the body through ingestion or inhalation. The DCGs may be used for evaluating compliance to the drinking water limit of 0.004 rem/year by using 4% of the DCG for ingestion. The exposure conditions used for development of the ingestion and inhalation DCGs are presented with the DCGs in table format.

The proposed DOE rule, Radiation Protection of the Public and the Environment (10 CFR 834), published in the March 23, 1993 Federal Register (58 FR 16268), promulgates the standards presently found in DOE Order 5400.5. The proposed rule retains the substantive portions of the DOE Order and differs from the existing DOE Order in format, enhanced emphasis on the ALARA process, and changes in the usage of DCGs. The proposed rule identifies DCGs not as "acceptable" discharge limits, but to be used as reference values for estimating potential dose and determining compliance with the requirements of the proposed rule.

Table A-1 Federal Chemical-Specific ARAR

Description	Citation	A/R&A*	Requirements	Remarks	Alternatives Potentially Affected
Solid Waste Disposal Act, as amended by the Resource Conservation and Recovery Act (RCRA)	42 U.S.C. 6901 et. seq		Establishes the basic framework for federal regulation of solid and hazardous waste.		
Groundwater Protection Standards	40 CFR 264.92 (WAC 173-303-6 45)[1]	A	A facility shall not contaminate the uppermost aquifer underlying the waste management area beyond the point of compliance, which is a vertical surface located at the hydraulically downgradient limit of the waste management area that extends down into the uppermost aquifer underlying the regulated area. The concentration of certain chemicals shall not exceed background levels, certain specified maximum concentrations, or alternate concentration limits, whichever is higher. µg/l Arsenic 50 Chromium 50 Lead 50 Silver 50	Groundwater concentration limits in this section do not exceed 40 CFR 141, except for chromium which has a limit of 50 µg/L.	GW-5, GW-6

*NOTE: A = Applicable R&A = Relevant and Appropriate

[1]These are State of Washington regulatory citations which are equivalent to the Title 40 Code of Federal Regulations, Parts 264 and 268 as stated in Washington Administrative Code 173-303.

Table A-2 Federal Action-Specific ARAR

Description	Citation	A/R&A*	Requirements	Remarks	Alternatives Potentially Affected
Federal Water Pollution Control Act (FWPCA), as amended by the Clean Water Act of 1977 (CWA)	33 U.S.C. 1251 et seq.		Creates the basic national framework for water pollution control and water quality management in the United States.	Applicable to discharges of pollutants to navigable waters.	
The National Pollutant Discharge Elimination System (NPDES)	40 CFR Part 122	A	Part 122 covers establishing technology-based limitations and standards, control of toxic pollutants, and monitoring of effluent to assure limits are not exceeded.	Applicable if remediation includes wastewater discharge; also applies to storm water runoff associated with industrial activities. Effluent limitations established by EPA and included in NPDES permit.	GW-5, GW-6
NPDES Criteria and Standards	40 CFR 125.104		Best management practices program shall be developed in accordance with good engineering practice.		
Discharge of Oil	40 CFR Part 110	A	Prohibits discharge of oil that violates applicable water quality standards or causes a sheen of oil on water surface.	Runoff from site will need control for oily waste discharge to waters of the United States.	GW-3, GW-5, GW-6
Solid Waste Disposal Act as amended by the Resource Conservation and Recovery Act (RCRA)	Section 3020	A	Allows reinjection of hazardous or radioactive waste exceeding drinking water standards pursuant to (1) RCRA or CERCLA corrective action; (2) treatment to substantially reduce hazardous constituents; (3) CERCLA or RCRA effort will protect human health and environment.	Will allow reinjection of groundwater after pump and treat technology.	GW-5, GW-6
Solid Waste Disposal Act as amended by the Resource Conservation and Recovery Act (RCRA)	42 U.S.C. 6901 et seq.		Establishes the basic framework for federal regulation of solid waste. Subpart C of RCRA controls the generation, transportation, treatment, storage, and disposal of hazardous waste through a comprehensive "cradle to grave" system of hazardous waste management techniques and requirements.	Hazardous waste generated by site remediation activities must meet RCRA generator and treatment, storage, or disposal (TSD) requirements.	
Identification and Listing of Hazardous Waste	40 CFR Part 261 (WAC 173-303-016)	A	Identifies by both listing and characterization, those solid wastes subject to regulation as hazardous wastes under Parts 261-265, 268, and 270.	Applicable if remediation techniques result in generation of hazardous wastes.	GW-5, GW-6

Table A-2 Federal Action-Specific ARAR

Description	Citation	A/R&A*	Requirements	Remarks	Alternatives Potentially Affected
Accumulation Time	40 CFR 262.34 (WAC 173-303-200)	A	Allows a generator to accumulate hazardous waste onsite for 90 days or less without a permit, provided that all waste is containerized and labeled.	Hazardous waste removed from the 100 Area operable unites, and waste treatment residues, are subject to the 90-day generator accumulation requirements if the waste is stored onsite for 90 days or less. If hazardous waste is stored for more than 90 days, the full standards for TSD facilities must be met.	GW-5, GW-6
Hazardous Waste Determination	40 CFR 262.11	R&A	Lists procedures and methods used to characterize waste generated.	These methods would be pertinent to shipment of hazardous waste.	
Hazardous Waste Determination	40 CFR 262.14	R&A	Lists procedures and methods used to characterize waste generated.	These methods would be pertinent to shipment of hazardous waste.	
Standards for Owners and Operators of Hazardous Waste Treatment, Storage, and Disposal Facilities	40 CFR Part 264 (WAC 173-303)		Establishes requirements for operating hazardous waste treatment, storage, and disposal facilities.	Substantive requirements apply if remediation technique results in onsite treatment, storage, or disposal of hazardous waste.	
Land Disposal Restrictions (LDR)	40 CFR Part 268 (WAC 173-303-140 WAC 173-303-141)	A	Establishes treatment standards that must be met prior to land disposal.	Applicable if RCRA hazardous wastes are land disposed.	GW-5, GW-6
Hazardous Waste Discharges	40 CFR 263.30 Subpart C	R&A	Establishes actions to be taken in the event of a hazardous waste discharge.	The appropriate, notification, documentation, and cleanup will be implemented	All
Clean Air Act, as amended	42 U.S.C. 7401 et seq.		A comprehensive environmental law designed to regulate any activities that affect air quality, providing the national framework for controlling air pollution.		
National Primary and Secondary Ambient Air Quality Standards	40 CFR Part 50		Sets National Ambient Air Quality Standards for ambient pollutants which are regulated within a region.		
Air Standards for Particulates	40 CFR 50.6	A	Prohibits average concentrations of particulate emissions in excess of 50 micrograms/m^3 annually or 150 micrograms/m^3 per 24-hr period.	A potential for particulate emissions exists during material handling or treatment, including incineration.	GW-5, GW-6

Table A-2 Federal Action-Specific ARAR					
Description	Citation	A/R&A*	Requirements	Remarks	Alternatives Potentially Affected
National Emissions Standards for Hazardous Air Pollutants (NESHAP)	40 CFR Part 61		Establishes numerical standards for hazardous air pollutants		

*NOTE: A = Applicable R&A = Relevant and Appropriate

Table A-3 State Action-Specific ARAR

Description	Citation	A/R&A*	Requirements	Remarks	Alternatives Potentially Affected
Department of Ecology	43.21A RCW		Vests the Washington Department of Ecology with the authority to undertake the state air regulation and management program.		
Air Pollution Regulations	WAC 173-400		Establishes requirements for the control and/or prevention of the emission of air contaminants.	Applicable if emission sources are created during remedial action.	
Standards for Maximum Emissions	WAC 173-400-040	A	Requires best available control technology be used to control fugitive emissions of dust from materials handling, construction, demolition, or any other activities that are sources of fugitive emissions. Restricts emitted particulates from being deposited beyond Hanford. Requires control of odors emitted from the source. Prohibits masking or concealing prohibited emissions. Requires measures to prevent fugitive dust from becoming airborne.	Applicable to dust emissions from cutting of concrete and metal and vehicular traffic during remediation	GW-3, GW-5, GW-6
Emission Limits for Radionuclides	WAC 173-480		Controls air emissions of radionuclides from specific sources.	Applicable to remedial activities that result in air emissions.	
New and Modified Emission Units	WAC 173-480-060	A	Requires the best available radionuclide control technology be utilized in planning, constructing, installing, or establishing a new emission unit.	Applicable to remedial actions that result in air emissions.	GW-3, GW-5, GW-6
Washington Clean Air Act	RCW 70.94				
Controls for New Sources of Toxic Air Pollutants	WAC 173-460		Establishes systematic control of new sources emitting toxic air pollutants.		
Demonstrating Ambient Impact Compliance	WAC 173-460-080	A	Requires the owner or operator of a new source to complete an acceptable source impact level analysis using dispersion modeling to estimate maximum incremental ambient impact of each Class A or B toxic air pollutants. Establishes numerical limits for small quantity emission rates.	Applicable to remedial alternative with the potential to release toxic air pollutants.	GW-3, GW-5, GW-6

Table A-3 State Action-Specific ARAR

Description	Citation	A/R&A*	Requirements	Remarks	Alternatives Potentially Affected
Hazardous Waste Management Act of 1976 as amended in 1980 and 1983[1]	70.105 RCW		Establishes a statewide framework for the planning, regulation, control, and management of hazardous waste.		
Dangerous Waste Regulations	WAC 173-303		Establishes the design, operation, and monitoring requirements for management of hazardous waste.	Includes requirements for generation of dangerous waste. Dangerous waste includes the full universe of wastes regulated by WAC 173-303 including extremely hazardous waste.	
Solid Waste Management Act	70.59 RCW		Establishes a statewide program for solid waste handling, recovery, and/or recycling.	Applicable if management of solid waste occurs during remediation. Solid waste controlled by this Act includes garbage, industrial waste, construction waste, ashes, and swill.	
Minimum Functional Standards for Solid Waste Handling	WAC 173-304		Establishes requirements to be met statewide for the handling of all solid waste.		
Onsite Containerized Storage, Collection, and Transportation Standards	WAC 173-304-200	R&A	Sets requirements for containers and vehicles to be used onsite; requires monthly inspections and retention of inspection records for at least two years.		GW-3, GW-5, GW-6
Water Well Construction Act	18.104 RCW				
Standards for Construction and Maintenance of Wells	WAC 173-160	A	Establishes minimum standards for design, construction, capping, and sealing of all wells; sets additional requirements including disinfection of equipment, abandonment of wells, and quality of drilling water.	Applicable if water supply wells, monitoring wells, or other wells are utilized during remediation.	GW-2, GW-3, GW-5, GW-6

*NOTE: A = Applicable R&A = Relevant and Appropriate

[1]The Hazardous Waste Management Act and regulations pursuant to the Act provide the statutory and regulatory basis for state authorization to implement RCRA. State of Washington regulations that are equivalent to RCRA regulations are cited in brackets in the federal ARARs. The WAC 173-303 regulations cited in this section are those judged to be more stringent than RCRA regulations.

Table A-4 Federal Location-Specific ARAR

Description	Citation	A/R&A*	Requirements	Remarks	Alternatives Potentially Affected
Archaeological and Historical Preservation Act of 1974	16 U.S.C. 469	A	Requires action to recover and preserve artifacts in areas where activity may cause irreparable harm, loss, or destruction of significant artifacts.	Applicable when remedial action threatens significant scientific, prehistorical, historical, or archeological data.	GW-2, GW-3, GW-5, GW-6
Endangered Species Act of 1973	16 U.S.C. 1531 et seq.		Prohibits federal agencies from jeopardizing threatened or endangered species or adversely modifying habitats essential to their survival.		
Fish and Wildlife Services List of Endangered and Threatened Wildlife and Plants	50 CFR Parts 17, 222, 225, 226, 227, 402, 424	A	Requires identification of activities that may affect listed species. Actions must not threaten the continued existence of a listed species or destroy critical habitat.	Requires consultation with the Fish and Wildlife Service to determine if threatened or endangered species could be impacted by activity.	GW-3, GW-5, GW-6
Historic Sites, Buildings, and Antiques Act	16 U.S.C. 461	A	Establishes requirements for preservation of historic sites, building, or objects of national significance. Undesirable impacts to such resources must be mitigated.		GW-3, GW-5, GW-6
National Historic Preservation Act of 1966, as amended.	16 U.S.C. 470 et seq.	A	Prohibits impacts on cultural resources. Where impacts are unavoidable, requires impact mitigation through design and data recovery.	Applicable to properties listed in the National Register of Historic Places, or eligible for such listing.	GW-3, GW-5, GW-6
Solid Waste Disposal Act, as amended by the Resource Conservation and Recovery Act (RCRA)	42 U.S.C. 6901 et seq.		Establishes the basic framework for federal regulation of solid and hazardous waste.		
Floodplains	40 CFR 257.3-1	A	Prohibits facilities or practices in floodplains from restricting the flow of the base flood, reducing the temporary water storage capacity of the floodplain, or causing washout of solid waste, so as to pose a hazard to human life, wildlife, or land or water resources.		GW-3, GW-5, GW-6
Endangered Species	40 CFR 275.3-2	A	Prohibits facilities or practices from causing or contributing to the taking of any endangered or threatened species of plants, fish, or wildlife. Prohibits destruction or adverse modification of habitat of endangered or threatened species.		GW-3, GW-5, GW-6

Table A-4 Federal Location-Specific ARAR					
Description	Citation	A/R&A*	Requirements	Remarks	Alternatives Potentially Affected
Wild and Scenic Rivers Act	16 U.S.C. 1271	R&A	Prohibits federal agencies from recommending authorization of any water resource project that would have a direct and adverse effect on the values for which a river was designated as a wild and scenic river or included as a study area.	The Hanford Reach of the Columbia River is under study for inclusion as a wild and scenic river.	GW-3, GW-5, GW-6

*NOTE: A = Applicable R&A = Relevant and Appropriate

Table A-5 State Location-Specific ARAR

Description	Citation	A/R&A*	Requirements	Remarks	Alternatives Potentially Affected
Habitat Buffer Zone for Bald Eagle Rules	RCW 77.12.655				
Bald Eagle Protection Rules	WAC 232-12-292	A	Prescribes action to protect bald eagle habitat, such as nesting or roost sites, through the development of a site management plan.	Applicable if the sites of remedial activities includes bald eagle habitat.	GW-3, GW-5, GW-6
Regulating the Taking or Possessing of Game	RCW 77.12.040				
Endangered, Threatened, or Sensitive Wildlife Species Classification	WAC 232-12-297	A	Prescribes action to protect wildlife classified as endangered, threatened, or sensitive, through development of a site management plan.	Applicable if wildlife classified as endangered, threatened, or sensitive are present in areas impacted by remedial activities.	GW-3, GW-5, GW-6

*NOTE: A = Applicable, R&A = Relevant and Appropriate

Table A-6 To be Considered (TBC) Requirements

Description	Citation	Requirements	Remarks	Alternatives Potentially Affected
Solid Waste Disposal Act, as amended by RCRA	42 U.S.C. 6901 et seq.			
Corrective Action for Solid Waste Management Units	40 CFR 264 Subpart S, proposed	Establishes requirements for investigation and corrective action for releases of hazardous waste from solid waste management units.		GW-5, GW-6
U.S. Department of Energy Orders				
Radiation Protection of the Public and the Environment	DOE 5400.5	Establishes radiation protection standards for the public and environment.		
Radiation Dose Limit (All Pathways)	DOE 5400.5, Chapter 11, Section 1a	The exposure of the public to radiation sources as a consequence of all routine DOE activities shall not cause, in a year, an effective dose equivalent greater than 100 mrem from all exposure pathways, except under specified circumstances.	Pertinent if remedial activities are "routine DOE activities."	All
U.S. Department of Energy Orders				
Radiation Protection of the Public and the Environment	DOE 5400.5	Establishes standards and requirements for operation of DOE and DOE contractors respecting protection of the public and the environment against undue risk of radiation.		All
Floodplains/Wetlands Environmental Review	10 CFR Part 1022	Requires federal agencies to avoid, to the extent possible, adverse effects associated with the development of a floodplain or the destruction or loss of wetlands.	Pertinent if remedial activities take place in a floodplain or wetlands.	GW-3, GW-5, GW-6
Hanford Reach Study Act	P.L. 100-605	Provides for a comprehensive river conservation study. Prohibits the construction of any dam, channel, or navigation project by a federal agency for 8 years after enactment. New federal and non-federal projects and activities are required, to the extent practicable, to minimize direct and adverse effects on the values for which the river is under study and to utilize existing structures.	This law was enacted November 4, 1988.	GW-3, GW-4, GW-5, GW-6

THIS PAGE INTENTIONALLY
LEFT BLANK

APPENDIX B

DETAILED DESCRIPTIONS OF REMEDIAL ALTERNATIVES FROM THE 100 AREA FEASIBILITY STUDY PHASES 1 AND 2

1.0 GROUNDWATER REMEDIAL ALTERNATIVE DESCRIPTIONS

The alternatives considered for treatment of the 100 Area groundwater operable unit were developed and screened in the *100 Area Feasibility Study Phases 1 and 2* (DOE-RL 1994a). This appendix presents detailed descriptions of each groundwater alternative retained from the 100 Area FS for more detailed analysis. The descriptions for these alternatives (referred as the general alternatives) are expanded from the information presented in the 100 Area FS and are modified, as needed, to reflect new information gathered since preparation of the FS. These alternative descriptions will be modified, as needed, to reflect site specifics in the individual operable unit FFS.

1.1 ALTERNATIVE GW-1

1.1.1 Description

Alternative GW-1, the no action alternative, is required by the NCP to serve as a baseline for the evaluation of other alternatives. The no action alternative may be selected for sites where contamination does not exceed the level of unacceptable risk, where site contamination is in compliance with ARAR, where short-term risks associated with the remedial action exceed the risk of no action, or where the cost of remediation is excessive compared to the benefit gained in risk reduction. The no action alternative assumes no further action at a site. For example, no action for the groundwater operable unit consists of continued existing groundwater monitoring events. The contamination is allowed to dissipate through natural attenuation processes. For radionuclides, this is mainly natural radioactive decay. The effectiveness of the natural attenuation process is related to the half-life of the radionuclide and the affinity of the radionuclide to sorb to the Hanford soils. For other contaminants, such as chromium, the major attenuation factor is advection/dispersion, which depends on natural groundwater flow and the river flushing action to reduce concentrations.

1.2 ALTERNATIVE GW-2

A single alternative has been developed for the general response action (GRA) of institutional controls (designated Alternative GW-2). The remedial technologies and associated process options specified for this alternative in the 100 Area FS Phases 1 and 2 (DOE-RL 1994a) have been modified. Based on the requirement to consider only the recreational use scenario, identification of an alternate water supply for residential, industrial, or agricultural use is no longer necessary. Therefore, the institutional controls proposed to prevent access to contaminated groundwater plumes beneath the 100 Area are as follows:

- Access restrictions
  - Deed restrictions
  - Water rights restrictions
- Monitoring

- Groundwater monitoring.

1.2.1 Description

The institutional controls alternative for groundwater involves restricting access to contaminated sites within the 100 Area. The restrictions included in this alternative are unique to groundwater media. Types of restrictions are defined as follows.

- Deed restrictions may be established to place limitations on groundwater use. These limitations could specify restrictions on acceptable groundwater uses and may take the form of covenants that limit activities resulting in human contact. Deed restrictions may include a prohibition on groundwater use or less stringent limitations on use for off-site farming and industrial activities.

- Water rights restrictions limit access to contaminated groundwater. The water rights restrictions could be imposed by deed restrictions, as discussed above, or by designated use, should the title to the 100 Area remain with the federal government. Water-rights restrictions merely designate the acceptable use of 100 Area groundwater (if at all) for recreational use, such as temporary drinking water. This action may require an additional change in water rights administration to be effective. At this time, no state water rights restrictions are necessary if consumptive use is less than 5,000 gal/day (Washington Administrative Code [WAC] 173-160-040).

In addition to restricting groundwater use and access to groundwater, the institutional action alternative also includes groundwater and environmental monitoring. Monitoring will be required to determine if and when institutional controls to restrict access to groundwater are no longer necessary.

Institutional control are assumed to be in place during the period of DOE control. After DOE release of the site, deed and water rights restrictions can be implemented to prevent access.
****

1.3 ALTERNATIVE GW-3

Alternative GW-3 has been developed as a containment GRA. The objective of Alternative GW-3 is to eliminate source to receptor pathways by preventing migration of contaminated groundwater to environmental resources, such as the Columbia River, and preventing further migration of contaminated groundwater outside the operable unit. In order to achieve this objective, Alternative GW-3 is designed to isolate and contain existing contaminant plumes. Through the use of cutoff walls and extraction/injection wells, contaminant plumes would be contained to prevent migration and isolated to prevent further contamination of the unconfined aquifer. In addition to containment and isolation of contaminant plumes, this remedial action would be implemented to minimize overall effects on the general hydrologic conditions of the unconfined aquifer. The containment alternative objectives must be maintained until natural attenuation reduces concentrations to acceptable levels or until alternate cleanup standards can be negotiated

and agreed upon by the parties to the Tri-Party Agreement. Contaminants that are persistent in the environment especially may require additional remedial action or determination of alternate cleanup levels.

1.3.1 Baseline Description

Alternative GW-3 was initially developed in the 100 Area FS Phases 1 and 2 (DOE-RL 1994a). The alternative initially developed forms the baseline from which modifications are made for application to the 100-HR-3 Operable Unit. The baseline description of this alternative is based on the remedial technologies and associated process options specified in the 100 Area FS for containment of contaminated groundwater plumes beneath the 100 Area:

- vertical barriers:
  - cutoff walls
- hydraulic control:
  - extraction wells
  - injection wells (as necessary)
- monitoring:
  - groundwater monitoring.

1.3.1.1 Cutoff Wall Options. The baseline description of this alternative includes several subsurface barrier (cutoff wall) technologies that are potentially applicable in the 100 Area. A cutoff wall is a subsurface barrier designed to prevent the flow of contaminated groundwater. Several cutoff wall technologies are available that may be applicable in the 100 Area depending on site-specific conditions and requirements. Each technology has advantages and disadvantages based on the specific applications. Therefore, no one specific cutoff wall technology will be universally applicable in the 100 Area. The cutoff wall
technologies considered potentially applicable in the 100 Area are:

- slurry wall
- deep soil mixing
- sheet piling
- injection grouting.

The specific cutoff wall technology selected to represent the containment alternative will be determined on an operable unit-specific basis. In this manner, the cutoff wall technology most applicable to operable unit site-specific conditions and requirements can be specified.

In situations where subsurface barriers may not be applicable due to technical limitations such as wall depth requirements, hydraulic control measures may be specified as the method of contaminant plume containment. Hydraulic control provides containment by extraction of contaminated groundwater from the downgradient front of the plume followed by reinjection in the upgradient portion of the plume. Continuous extraction and injection can effectively isolate contaminant plumes, but are considered operating

and maintenance intensive compared to vertical barriers. This method of containment would only be used in situations where the use of a subsurface barrier is not applicable. This alternative does not represent a complete solution for persistent contaminants but is consistent with the IRM approach and with the final remedy.

1.3.1.1.1 Slurry Walls. Typical slurry wall construction involves trench excavation under a slurry. The slurry provides hydraulic shoring to maintain the integrity of the trench while at the same time forming a low permeability filter cake on the trench walls that prevents fluid loss into the surrounding soil. Once a portion of the trench has been excavated to depth, a backfill material is added. In this manner, excavation and backfilling occur simultaneously until the wall is complete. The completed wall is designed to be less permeable than the surrounding native soil and thereby forms a barrier to groundwater flow.

Backfill materials commonly used in slurry wall construction include mixtures of bentonite slurry and soil, or mixtures of cement, bentonite, and water. Slurry walls constructed of soil/bentonite are generally the least permeable, least susceptible to contaminant degradation, and least expensive (Spooner et al. 1985). Slurry walls constructed of cement/bentonite are generally easier to install, provide more strength, and can be installed to greater depths (Spooner et al. 1985).

The depth of a slurry wall is dependent on the depth of the aquitard beneath the contaminant plume. To ensure effective containment of contaminant plumes, slurry walls must be keyed-in to a low permeability or aquitard zone beneath the aquifer. In the case of the 100 Area, this aquitard may be a silty sand zone that separates the coarse sand and gravel zones in the unconfined aquifer or a paleosol/overbank deposit at the base of the unconfined aquifer. However, if contaminant plumes extend throughout the Ringold aquifers, the clay, silt, and fine sand of the Ringold lower mud unit ("Blue Clay") may be the nearest aquitard. In any case, the required depth of the slurry wall will depend on the nearest aquitard.

Filter cake formation regulates the amount of slurry lost to the surrounding soils. Formation of the filter cake depends on the permeability of the soil, pore size, type of slurry, and any additives used. In gravel beds, which allow groundwater velocities of 1 to 10 cm/sec, the pores are too large to be easily closed. Fines, such as sand, are used in these cases to assist pore space blockage. Slurries are typically mixed with up to 10% fines to assist formation of the filter cake. The Hanford formation is classified as a sandy gravelly unit with a water movement rate of about 0.1 cm/sec (DOE-RL 1993b). Generally, a bentonite/soil slurry would be chosen because of its low permeability; however, sand or other fines may be added to the slurry to increase filter cake formation. Testing must be done on the specific soil conditions to determine the need to add fines.

The equipment used for excavating slurry wall trenches is also dependent on the required wall depth and the former is limited by the maximum digging depth capabilities of the machinery. In general, long-reach type backhoe equipment can provide excavation depth up to approximately 24 m (80 ft) (Spooner et al. 1985). Draglines or clamshell excavation equipment is typically required for depths >24 m (>80 ft) (Spooner et al. 1985). The presence of large rock or boulders can present problems during the implementation phase. The potential for large boulders is reduced by placing the wall as close to the river as possible because the Hanford formation has often been eroded in this area. Most of the large boulders are associated with the Hanford formation; the Ringold Formation generally does not contain these

boulders. By placing the barrier close to the river, the effectiveness is increased and the need to excavate through the Hanford formation is minimized.

Slurry preparation and placement generally requires raw material areas, mixing equipment, transport equipment, storage ponds, and cleaning equipment. Raw materials required for a slurry mixture include water, bentonite, cement (if specified), and soil (engineered if necessary). Formation of the slurries can be accomplished with venturi (flash) mixers or paddle (vortex) mixers (Spooner et al. 1985). Storage ponds provide surge capacity for continuous application of slurry into excavation trenches. Pumps, pipes, valves, hoses, and other associated fitting and tools are required to move the slurry from mixing area to the storage pond or from storage pond to the excavation.

Backfill preparation and placement also requires raw materials storage, mixing, transport, and placement equipment. Backfilling is generally less complicated than slurry preparation and placement. Raw materials include bentonite, soil, and cement (if necessary). Mixing is generally carried out with bucket loaders or bulldozers, but can also be accomplished mechanically with a pugmill. Initial placement of backfill in the trench requires a clamshell to lower the material to the bottom. This prevents segregation of backfill particles and entrapment of slurry pockets with the backfill (Spooner et al. 1985). Thereafter, a bulldozer or bucket loader can simply push backfill into the trench.

Should future removal of the slurry wall be required, the wall can be excavated, drilled and perforated, or broken by blasting in order to allow groundwater movement through the barrier similar to initial conditions (prior to remedial action).

1.3.1.1.2 Deep Soil Mixing. Deep soil mixing is a commercially available technology for construction of vertical barriers with properties similar to slurry walls. The deep soil mixing technique uses a crane-mounted boring/mixing tool containing injection nozzles. The tool is initially driven into the soil formation to the required cutoff wall depth. The tool is then partially withdrawn (approximately half the cutoff wall depth) to begin injection of slurry material. As injection continues the tool is driven back down to the required cutoff wall depth. Injection is continued until the tool is completely withdrawn. The tool mixes the slurry and soil throughout the injection process. The slurry materials selected for injection are typically cement, bentonite, or cement-bentonite mixtures, depending on the required permeability. The cutoff wall is formed by installation of a continuous series of overlapping columns.

The primary advantage of deep soil mixing is that the technique does not require removal of contaminated soil. Mixing occurs in the subsurface without exposing workers and the environment to contaminated soil and groundwater. The technique essentially eliminates disposal requirements, handling contaminated materials, as well as worker and environmental exposures.

The operational depth of deep soil mixing is dependent on the equipment specifications and the geologic formation in which the cutoff wall is to be installed. The deep soil mixing method performs poorly in formations with boulders. The presence of large rock or boulders (>18") in the Hanford formation can present problems during implementation. Large boulders can be removed by pre-excavation or worked around by offsetting the columns. A typical deep soil mixing system requires and area of 130' x 50' to accommodate set up and tear down the crane. Operation of the system also requires an on-site

support area and an adjacent equipment decontamination pad. The soil formation must be able to support the system (crane and mixing tool), approximately 15 pounds per square foot.

Removal of the deep soil mixed barrier would be accomplished in the same manner as the slurry wall.

1.3.1.1.3 Sheet Pile. Sheet piling is a commercially available technology that has been widely used for earth retaining structures such as dock walls bulkheads, river walls piers and dry dock walls. The technology has more recently become used for contaminated groundwater control as seepage cutoff walls. Sheet steel piling consists of hot-rolled steel sections provided with clutches or interlocks for connecting successive piles to one another such that a continuous wall can be formed. The sheet piles are usually driven in pairs using hammers of the double acting type or diesel hammers. The driving of each new sheet is started once the neighbor sheet has been about one-third driven. Since the sheet pile is assumed not to undergo bending moments, the anticipated soil resistance to be overcome during driving will determine the thickness of steel required in the cross section, as well as the quality of steel from which the piles should be manufactured. The interlock (or annulus) between sheet piles is completely soil tight and can be injected with a sealant (such as grout) to ensure an appropriate impermeability.

Characteristics of the geologic formation can impose some limitations in the applicability of the sheet pile technique. Splitting the web during driving is not uncommon, particularly when obstructions or dense granular soils are being penetrated. Driving sheet piles becomes difficult and often times impracticable in formations which contain large boulders. Corrosion is another factor to be taken into consideration when evaluating the use of sheet pile cutoff walls. Groundwater chemistry will have the most significant impact on corrosion of a sheet pile wall, however, a protective coating can be applied if necessary. Depth limitations exist for the sheet pile technology with walls currently extending <30 m (100 ft) in depth.

The sheet pile wall can be removed by pulling the sheets out under vibration. This process is more difficult when the joints are grouted. A sheet pile wall is being designed for N Springs. Information from this application should be useful for the other 100 Area groundwater operable units. If this information is not available in time to meet the schedules for groundwater IRM, then additional testing of the implementability of the sheet pile wall may be necessary in conjunction with a geotechnical investigation.

1.3.1.1.4 Jet Grouting. Grouting technology has wide applications in engineering practice. Grout curtains are typically used as containment barriers to control seepage through dam foundations, protect excavations conducted under groundwater level, and prevent contaminant migration. Injection grouting has also been used for other engineering applications such as soil improvement, pre-stressing of rock and lifting and leveling of structures. Grout injection is a technique used to force grout into voids and fissures of a soil formation to obtain a desired property, such as reduced permeability.

Jet grouting typically involves drilling boreholes into a formation and then injecting grout under pressure until the voids around the injected section are filled to satisfy a specified design condition. The properties of the grout vary with the application, and often times a combination of different grouts are selected based on the specific characteristics of the site. Grouting consists of the following sequence of operations (Nonveiller 1989):

- drilling injection boreholes in a predetermined arrangement and depth
- preparation, proportioning, weighing and mixing of the selected grout suspension
- injecting the prepared suspension into the designated section of the borehole such that soil voids are filled.

The spacing of the injection holes is based on the results obtained from test grouting plots injected at the site. Rotary or percussion rotary drilling rigs are used for drilling the injection holes. Rotary percussion drill rigs can be used for depths up to 180 m (500 ft) with drilling speeds of 20 m/h (66 ft/h) (Nonveiller 1989). Rotary percussion is considered the most suitable drilling method in Hanford formation due to the potential for subsurface boulders.

The appropriate grouting compound for a specific project is dependent upon the characteristics and properties of the geologic formation in which the cutoff wall is to be installed. Thick cement, clay and bentonite suspensions are typically recommended for the grouting compounds used for uniform medium sand and gravel (Nonveiller 1989). Other suspensions such as clay cement, bentonite gel and clay gel are used in similar applications. Treatability studies would be required to determine the optimum grouting compound for use in the geologic formation of the 100 Area.

The efficiency of injection grouting depends on the maximum pressure at which a grouted section of a borehole will become saturated. Low saturation pressures will permeate only a small volume of the soil whereas high pressures will cause hydrofracturing. The injection pressure must always be higher than the overburden stress at the level of injection. Formulae to calculate injection pressures are provided in literature (Nonveiller 1989).

In granular soils, the discharge of grouting decreases as the injection process takes place (at constant injection pressure). This decrease in permeability is a function of three parameters: the grain size of solids elements of the grout, the percentage of dry materials, and the state of flocculation (Winterkorn and Fang 1975). Laboratory experiments have demonstrated that slightly loaded grouts would more easily penetrate a soil than a highly loaded grout. Therefore, engineering practice shows that the cement quantity should be minimized to obtain the desired resistance into the soil. Stability of the grout can be ensured by low percentages of ultracolloidal clay (i.e., bentonite). Typical cement-bentonite grouts used to form low permeability soils will contain approximately 170 kg (374 lb) of dry materials for 1 m^3 (35 cu ft) grout.

The state of flocculation is also a parameter of concern. A stable suspension penetrates the soil more easily when it contains few grains or when the diameters of the grains is small. This means that slightly loaded grouts without any cement (i.e., clay and bentonite grout) are used for impermeability requirements. Clay or bentonite should be dispersed in the grout as elementary grains and not in flocculated form.

The total grout volume necessary is based on the void volume of the soil. However, the radius of grout flow is typically irregular and usually involves significant losses of grout into unintended areas of the formation. Permeable formations, such as Hanford formation, can result in large losses of grout if the grouting selection has not been carefully planned.

The depth limitation of injection grouting is that of the drilling and pressure unit devices. Depths of up to 200 m (656 ft) have been reported in literature (Nonveiller 1989).

The grout wall is likely the hardest to remove; the method of removal would be the same as the slurry wall and deep soil mixed barrier.

1.3.1.2 Containment System Configuration. The containment response action can be implemented in a number of different ways. The optimum number and location of cutoff walls and extraction/injection wells required to contain contaminant plumes in the 100 Area will be determined by hydrologic modeling. Cutoff walls can be constructed to completely surround contaminant plumes; to divert uncontaminated groundwater around contaminant plumes; or to prevent migration of contaminant plumes. Extraction wells can be operated to produce an artificial gradient that stagnates movement of contaminant plumes, to intercept uncontaminated groundwater before contacting contaminant plumes, or to intercept contaminated groundwater movement around the barrier. In general, the combination of cutoff walls and extraction/injection wells will be located such that contaminated groundwater plumes are isolated and contained.

It is assumed for purposes of this FS that the containment alternative is implemented as follows: cutoff walls would be built to prevent migration of contaminant plumes; groundwater extraction wells, if necessary, would be placed to intercept contaminated groundwater at the ends of the wall; and injection wells would be placed to minimize the effects on the overall hydrologic conditions of the unconfined aquifer, if necessary. The baseline concept of Alternative GW-3 is presented graphically in Figure 4-1.

All the barrier options are assumed to have expected useful lines much greater than the IRM period.

1.3.1.3 Disposal Distances and Location. Wastes requiring disposal may result from drilling activities and/or construction of the cutoff walls. Slurry wall construction would result in generation of more significant quantities of waste than the other cutoff wall technologies. During slurry wall construction, the addition of slurry agents results in a net excess of soil. Approximately 33% of the total excavated volume for a soil-bentonite wall and up to 60% for a soil-bentonite-cement wall would require disposal (Spooner et al. 1985). To minimize the volume of contaminated soil produced, materials could be segregated so that the uncontaminated vadose zone soil would make up most of the excess soil.

Radiologically and/or chemically contaminated soils will be transported by truck or rail to the ERDF, W-025, or another site for disposal. It is anticipated that all wastes will meet ERDF waste acceptance criteria only preliminary guidelines for waste acceptance criteria have been identified in the ERDF conceptual design reports.

Liquid waste disposal is not applicable to Alternative GW-3. Although hydraulic control (extraction) wells may be used to remove groundwater to stop contaminant migration around the ends of the wall, this water would be reinjected into the aquifer in a recycle loop.

1.3.1.4 Monitoring. The containment-action alternative also includes groundwater and environmental monitoring. Monitoring will be required to evaluate the long-term effectiveness of slurry walls and provide information to base subsequent decisions regarding the continued need for containment actions.

1.4 ALTERNATIVE GW-4

A single alternative has been developed for the in situ treatment GRA (designated GW-4). The remedial technologies and associated process options selected in the 100 Area FS Phases 1 and 2 (DOE-RL 1994a) for in situ groundwater treatment are:

- biological treatment:
  - biodenitrification (nitrates)
- physical treatment:
  - air sparging (this may be combined with soil vapor extraction (SVE) to eliminate venting organics to the atmosphere)
- monitoring:
  - groundwater monitoring.

1.4.1 Objective

The objective of Alternative GW-4 is to eliminate source to receptor pathways by in situ remediation of contaminated groundwater plumes. In order to achieve this objective, Alternative GW-4 is designed to eliminate nitrate and organic contaminated groundwater in situ. Biodenitrification and air sparging are the in situ treatment technologies specified to remove nitrate and volatile organic compound (VOC) contamination, respectively. Other in situ treatment technologies such as biodegradation may be required on a case-by-case basis to remove semi- or non-volatile organics that may also be present in contaminated groundwater plumes. It is noted here that the objective of this alternative will not be completely satisfied due to limitations in the current status of in situ remedial technologies. Currently there are no proven or innovative in situ treatment technologies capable of reducing or eliminating the health and environmental risks from metals and radionuclides.

1.4.2 System Configuration

Although nitrates are expected at each of the 100 Area groundwater operable unit, the location of organic contamination is not as well defined. The LFI for the groundwater operable unit describe the contamination present in 100 Area groundwater.

Air sparging and biodenitrification systems can be implemented in several different ways. Each system requires an injection well system to ensure treatment encompasses the entire plume. Extraction well systems are generally not necessary since treatment occurs below ground. However, extraction wells can be used to facilitate treatment or satisfy regulatory requirements. In situ air sparging systems can utilize extraction wells (i.e., soil vapor extraction) to prevent VOC from venting into the atmosphere (potential regulatory requirement) or to facilitate vertical migration of volatilized contaminants. In situ

bioremediation systems utilize extraction wells to facilitate effective mixing of nutrients, microbes, and contaminants.

The size and configuration of Alternative GW-4 treatment systems will be determined by the extent of nitrate and organic contamination in 100 Area groundwater. Optimizing the number and location of treatment systems will be determined by hydrologic modeling. Optimizing operating parameters of the treatment systems will be determined by laboratory and pilot-scale testing as well as treatability studies.

1.4.3 Unit Operations

The concept of in situ treatment technologies specified for Alternative GW-4 are presented graphically in Figure B-2. Process operations, equipment requirements, and design considerations are described below.

1.4.3.1 In Situ Biodenitrification. Development and demonstration of in situ bioremediation of nitrates and carbon tetrachloride by indigenous microbes in Hanford groundwater is currently ongoing (Skeen et al. 1993). The process under development involves stimulating indigenous microorganisms to reduce nitrates to nitrogen gas during metabolization of organic carbon. To facilitate this process for remediation of 100 Area nitrate plumes, additions of nutrients (e.g. phosphorus) and a carbon source (acetate or methanol) may be required. The denitrification process is chemically represented according to the following simplified reaction:

$$NO_3^{-1} \xrightarrow{\text{Bacterial Metabolic Process}} N_2\uparrow$$

The in situ biodenitrification process proposed involves a combination of extraction and injection wells. Placement of these wells is specified such that a closed pumping circuit is developed between extraction and injection wells. Well-to-well interaction is achieved by using one well for injection and nutrient addition and another well for extraction (Skeen et al. 1993). Extracted groundwater is transferred to a series of nutrient mixing tanks before injection back into the aquifer. The interaction between wells enhances flow and ensures proper mixing between wells (Skeen et al. 1993). Concentrations of additives required are based on pilot tests and continuous monitoring of extracted groundwater.

Equipment required for the in situ bioremediation scheme includes extraction wells, injections wells, nutrient feed tanks, mixing tanks, and associated pumps, piping, valves, monitoring and control systems. Due to the potential for leaks and spills in any hazardous liquid system, secondary containment measures may also be required in the event of an accident. Such measures could include double walled piping, berms around tanks, and overflow collection equipment.

The number and location of injection and extraction wells would be determined on the basis of hydrologic modeling. Design, installation, and operation requirements for the extraction and injection wells

will be similar to standard production water wells. The primary design consideration for these wells is locating and sizing the screened area such that only that portion of the aquifer containing nitrate contamination is affected and the interaction between wells facilitates the closed pumping circuit concept described above.

Prior to injecting groundwater and additives back into the aquifer, mixing is required to ensure homogeneity. Nutrient mixing tanks utilizing mechanical agitation by a motor driven internal impeller are specified for this purpose. The specified mixing tanks operate on a continuous basis with the capability of maintaining a design residence time.

Nutrient feed can be made directly into the mixing tanks or the piping leading to the mixing tanks. Nutrient feed tanks are sized according to the required capacity of the system. A small capacity pump or gravity feed system will be required to inject nutrients at the specified location in the system.

1.4.3.2 Air Sparging. Air sparging is proposed for remediation of isolated plumes of VOC contamination in 100 Area groundwater. This remediation technology is similar to air stripping and involves injecting air into the soil or strata below contaminated groundwater plumes. Volatile organic compounds dissolved in groundwater and adsorbed onto soils are
volatilized into the gas phase as air bubbles flow upward through the water column (Hazardous Waste Consultant 1993). A crude air stripping process is developed where the soil in the aquifer acts as tower packing that maximizes water surface area contact with air. Stripped contaminants are either drawn upward and collected with a vapor extraction system or, if permissible, allowed to naturally migrate to the surface and enter the atmosphere. An additional effect of injecting air into the aquifer is that natural aerobic biodegradation may be enhanced.

Air sparging is generally most effective in coarse-grained soils. Fine-grained soils tend to require greater air injection pressures that can result in lateral rather than vertical dispersion of air (Hazardous Waste Consultant 1993). Air movement in heterogeneous soils will follow the path of least resistance and can therefore short circuit the intended area of influence. The potential effects of short circuiting include missing target contamination due to vertical channeling and/or horizontal migration of contamination (Hazardous Waste Consultant 1993).

An additional concern involves the heterogeneity of vadose zone soils which range in particle size from boulders to silt. The heterogeneity of vadose zone soils may prevent effective natural migration of stripped VOC to the surface for venting to the atmosphere. Potential for horizontal channelling may result in contaminant migration without venting to the atmosphere. To eliminate this potential, installation of a soil vapor extraction system is required with well screens located just above the saturated zone. The vapor extraction system will capture volatilized contaminants before lateral migration in the vadose zone can occur.

The number, location, and spacing of injection and extraction wells will be determined on the basis of modeling and pilot tests. Pilot tests are used to determine the radius of influence of injection and extraction wells within the subsurface of the area of contamination. In general, the radius of influence is larger in highly permeable soils and smaller in low permeability soils (Hazardous Waste Consultant 1993).

To ensure effective contaminant removal, injection and extraction wells are spaced such that the radius of influence of each system is overlapping.

There are four types of well configurations used for in situ air sparging: spaced wells, nested wells, horizontal wells, and combined horizontal/vertical wells (Hazardous Waste Consultant 1993). The spaced well configuration is most common and involves the use of independent vertical wells to perform extraction and injection. The nested well configuration involves the use of a single vertical borehole to perform both injection and extraction. The horizontal well configuration utilizes horizontal drilling techniques or trenching to install injection and extraction wells. Combined horizontal/vertical wells uses a combination of both vertical and horizontal wells to perform injection and extraction. The configuration best suited for remediation of 100 Area sites must be determined on a case-by-case basis.

Equipment requirements for the proposed in situ air sparging system include an extraction/injection well network, vapor abatement system (if necessary), air compressor or blower, vacuum pump, and associated piping, valves, monitoring and control equipment. The compressor or blower size is typically based on a design maximum expected flow rate and pressure. Each injection well requires pressure measurement and regulation controls to maintain the design operating conditions. Typical well construction materials include metal or PVC piping. Injection well screens are generally 0.3 to 1 m (1 to 3 ft) in length and must be properly sealed to prevent air flow into the borehole (Hazardous Waste Consultant 1993). Due to the elevated temperature of air leaving the compressor, steel and/or rubber air hose is recommended for the pressurized air distribution system (Hazardous Waste Consultant 1993). Captured vapor will be released to the atmosphere unless an abatement system using carbon adsorption, thermal treatment, or chemical oxidation is used.

In situ air sparging may artificially elevate the water table. This effect should be considered if floating free product is present or if elevating the water table would impact the direction of plume migration.

1.4.3.3 Groundwater Monitoring System. Post-treatment monitoring of nitrate and organic contaminant plumes will be necessary to ensure that established remediation levels have been satisfied. The number and location of monitoring wells required will be determined based on contaminant distribution. Monitoring well design, equipment requirements, and installation are unique due to periodic use and the necessity to obtain representative groundwater samples.

Monitoring wells are typically operated at low, intermittent pumping rates and therefore require much smaller pumps than production-type extraction wells. Wells will be installed to ensure that samples taken are representative and do not include contaminants resulting from materials used for well installation. Also of concern is potential interactions between construction materials and the groundwater being sampled. The design of monitoring wells therefore must specify construction materials that are inert to the chemistry of groundwater being sampled.

1.4.4 Disposal Distances and Location

Wastes requiring disposal include well drilling and construction wastes and vapor treatment wastes. All other treatment processes are in situ treatment techniques, thereby eliminating any other disposal requirements.

1.5 ALTERNATIVE GW-5

Alternative GW-5 has been developed as a removal, treatment, and disposal GRA. The remedial technologies and associated process options that comprise this alternative were initially specified in the 100 Area FS Phases 1 and 2 (DOE-RL 1994a). Based on review of additional information (LFI, 100 Area aggregate studies, treatability testing, and refined RAO), no modifications to this alternative are required. Therefore, the remedial

technologies and associated process options are as initially developed:

- removal:
  - extraction wells
- biological treatment:
  - biodenitrification (nitrates)
- chemical treatment:
  - chemical oxidation (organics)
  - precipitation (heavy metals and radionuclides)
  - chemical reduction (hexavalent chromium)
- physical treatment:
  - filtration (remove precipitates and suspended solids)
  - ion exchange (polishing for removal of any remaining ionic contaminants)
- stabilization/solidification:
  - cement-based solidification (secondary waste streams)
- liquid disposal:
  - river discharge or reinjection into an aquifer
- solids disposal:
  - ERDF, W-025, or another site
- monitoring
  - groundwater monitoring.

1.5.1 Objective

The objective of Alternative GW-5 is to contain the contaminant plumes from reaching the river or migrating outside the operable unit and to eliminate source to receptor pathways by removing, treating, and disposing of contaminated groundwater. Alternative GW-5 is designed to remove contaminant plumes from the unconfined aquifer; treat contaminated groundwater to the levels established by remedial action goals; isolate and dispose treatment residuals from the accessible environment; and reinject treated groundwater into the unconfined aquifer or discharge it to the river.

1.5.2 Size and Configuration

Several options are available for implementing groundwater treatment, including a single treatment facility for all contaminated groundwater within the 100 Area or separate treatment facilities for each groundwater operable unit. Although past practices at the 100 Area reactor sites may have resulted in the

same contaminants being released to the environment, sampling and analysis indicates the concentrations of contaminants in each operable unit are not the same. Therefore, separate treatment facilities at each operable unit are considered to prevent cross-contamination and enable tailoring treatment systems to specific COC at each operable unit.

Pump and treat alternatives have variable life cycles depending on remediation goals and technology performance for specific sites, i.e., the system can run until goals are met or until the technology limitations are met.

1.5.3 Unit Operations

Figure B-3 is a conceptual flow diagram of the unit operations proposed for Alternative GW-5. Each unit operation, equipment requirements and options, and design considerations are described below.

1.5.3.1 Groundwater Extraction System. The belowground portion of the groundwater extraction system will consist of a series of extraction wells. The extraction wells proposed for removing contaminated groundwater from beneath the 100 Area will be similar to standard production-type water wells used for domestic and industrial applications. The number and location of extraction wells required for each contaminant plume will be determined by hydrologic modeling.

An extraction well consists of vertical borehole tapping the contaminated aquifer. The depth of the well is determined by the vertical extent of contamination and the characteristics of the aquifer. Casing materials would conform to DOE and state requirements for well completion. The casing serves to maintain the borehole integrity and support the pumping mechanism. The well casing is grouted into place so it will not be a conduit for the downward migration of additional contamination.

Extraction wells should be completed using stainless steel, continuous wire-wrapped well screens. The screen prevents sediment uptake and provides support for loose formation material (Driscoll 1986). The screen slot size is specifically designed for the aquifer materials to minimize entrance velocity and prevent the influx of aquifer fines after development. The screened interval of the well must be developed following installation and before it is used for remediation. Development consists of optimizing the flow characteristics of the well screen/aquifer interface by the removal of aquifer fines through surging, over-pumping, or other means.

Any commonly available well pump may be used for extraction of contaminated groundwater. Selection of pump type and power are determined by the response of the aquifer to pumping, the movement of contaminants and the capacity of the remediation system. Typical systems, in order of decreasing capacity and/or pumping depth capability, include:

- line-shaft turbines
- submersible turbines
- jet
- centrifugal
- positive displacement

- peristaltic.

Centrifugal and peristaltic pumps are generally not applicable for suction (i.e., inlet) lifts exceeding 6 m (20 ft) (Driscoll 1986).

The above-ground portion of the groundwater extraction system will consist of a piping network that connects each extraction well to a manifold. From the manifold a single pipeline will bring contaminated groundwater to a storage tank near the treatment area. The storage tank will allow flow equalization and settling of suspended solids that may interfere with subsequent treatment operations. The piping system will be of double-walled construction to ensure leak protection. A single-walled, above-ground storage tank is specified with secondary containment provided by an engineered berm. Pumps, valves, sampling, and monitoring equipment will be specified as needed for the capacity and requirements of the system.

1.5.3.2 Chemical Oxidation System. Chemical oxidation is the initial unit operation proposed for destruction of organic contamination in 100 Area groundwater. Groundwater and reagents, such as hydrogen peroxide and ozone, are pumped into a process vessel where organic contaminants are oxidized (the reaction may be enhanced by ultraviolet light). A simplified reaction (for a hydrocarbon) of this process is:

$$C_xH_y + H_2O_2/O_3 \xrightarrow{uv} xCO_2\uparrow + \frac{y}{2}H_2O$$

Groundwater entering the chemical oxidation system is filtered to remove suspended solids. Two cartridge filters arranged in parallel are specified for this application to allow for continuous operation during maintenance or filter replacement. After filtration the oxidizing reagent is combined with the groundwater and passed through a static mixer to ensure the feed into the oxidation reactor is homogeneous. A static mixer is selected for this application for simplicity, as such a unit has no moving parts and requires no maintenance or operating costs.

Once the groundwater and reagents have been combined, the mixture is fed into the oxidation reactor vessel. Inside the reactor this mixture is exposed to ultra violet lamps that catalyze the oxidation process. Organic contaminants are oxidized to form carbon dioxide and water (assuming 100% reaction efficiency). A hydrochloric acid scrubber is required if chlorinated organics are present[3]. An acid or base may be required to adjust pH before and after the oxidation reactor to optimize the efficiency of oxidizing organic contaminants (EPA 1993).

1.5.3.3 Precipitation System. Following chemical oxidation, chemical precipitation is proposed to remove radionuclides and heavy metals. In general, metal contaminants can be precipitated from solution as hydroxides, sulfides, carbonates, or other insoluble salts (EPA 1987). Common precipitation reagents

[3]Hydrochloric acid is a byproduct of oxidation of chlorinated organics.

include lime, caustics such as sodium hydroxide, sulfides such as sodium bisulfide, ferrous sulfide, calcium carbonate, and sodium carbonate (Corbitt 1990). However, because contaminant concentrations are so dilute, most of the precipitating species will consist of common water minerals. Common methods for precipitation involve addition of precipitation reagents or pH adjustment.

Specification of precipitation reagents and pH is contaminant dependent. A precipitation reaction resulting in the formation of an insoluble form of strontium-90 occurs as described by the following simplified reaction:

$$^{90}Sr + CO_3 \rightarrow {}^{90}SrCO_3\downarrow$$

A conceptual chemical precipitation process consists of a mixing tank, a reagent feed system, and a clarifier tank. Associated piping, pumps, valves, and monitoring and control equipment complete the equipment requirements. The process stream and precipitation reagents are combined in a continuously stirred continuous flow (CSCF) reactor vessel. The mixture is then pumped to the clarifier tank where the resulting insoluble salts are separated from the process stream as a concentrate. The process stream or overflow from the clarifier is then pumped to chromium reduction process.

The concentrate from the CSCF reactor is pumped to a rotary drum filter for dewatering. A filtration media such as diatomaceous earth is added to the concentrate to facilitate the filtration process. The resulting filter cake is collected and transported to the solidification system. The liquid effluent from dewatering is combined with the process stream from the clarifier for subsequent treatment in the chromium reduction process.

1.5.3.4 Chromium Reduction System. Following chemical precipitation unit operations, chromium reduction is proposed to reduce hexavalent chromium. Hexavalent chromium can be reduced from the soluble hexavalent state to the less soluble trivalent state (pH ≤ 3) and precipitated under basic conditions (pH of 8 to 9) (Corbitt 1990). Chromium may also be reduced by reaction with reagents such as sulfur dioxide, sulfite salts (such as sodium metabisulfite), and ferrous sulfate (Corbitt 1990). Hexavalent chromium can be reduced by reacting with sulfur dioxide and then precipitated as a hydroxide according to the following reactions:

$$Cr_2O_7^{2-} + 6Fe^{2+} + 6SO_4^{2-} + 14H^+ \rightarrow 2Cr^{3+}(SO_4^{2-})_3 \downarrow + 6Fe^{3+}$$

The chemical reduction process is similar to the chemical precipitation process described previously. Separate process equipment is required to perform chemical reduction because of the conditions and reagents under which the required reaction occurs. The process stream, reducing agent, and precipitation reagent are combined in a CSCF reactor vessel. The mixture is then pumped to the clarifier tank where the

resulting insoluble salt is separated from the process stream as a concentrate. The process stream or overflow from the clarifier is then pumped to the biodenitrification system.

The concentrate from the CSCF is pumped to a rotary drum filter for dewatering. A filtration media such as diatomaceous earth is added to the concentrate to facilitate the filtration system. The resulting filter cake is transferred to the solidification process to be prepared for disposal. The liquid effluent from dewatering is combined with the process stream from the clarifier for subsequent treatment in the biodenitrification system.

1.5.3.5 Biodenitrification System. Following chemical reduction, biodenitrification is proposed to reduce nitrates to elemental nitrogen. The growth of microorganisms is dependent on the availability of nutrients and a carbon source (Corbitt 1990). In the denitrification process, bacteria use nitrates as an electron acceptor. Denitrification occurs according to the following simplified reaction:

$$NO_3^{-1} \xrightarrow{\text{Bacterial Metabolic Process}} N_2\uparrow$$

The biodenitrification treatment process requires a feed system, reactor vessel, clarifier, and monitoring and control equipment (Brouns et al. 1991). Piping, pumps, and valves are required as needed for the capacity requirements of the system.

The feed system adds nitrate contaminated groundwater plus a carbon source, such as acetate or methanol, into a reactor vessel. Depending on the type of bioreactor, recycling biomass or growth of the original culture will preclude the need for addition of bacteria. Off-gas chemistry, pressure, temperature, and pH are monitored to control the denitrification process.

Bioreactors are generally classified into two categories: suspended-growth systems and fixed-growth systems (Corbitt 1990). Suspended-growth systems, such as a continuously stirred-tank bioreactors (CSTR), or fixed-growth systems, such as a fluidized-bed bioreactors (FBR), can be used for denitrification applications (Brouns et al. 1991). The CSTR vessel mixes contaminated groundwater with suspended biomass to maximize contact between contaminants and microorganisms. The FBR vessel contains biomass attached to a support media, such as anthracite coal. Contaminated groundwater passes through the support media where nitrate contaminants contact microorganisms.

Effluent from the reactor vessel is sent to a settling tank. In the case of the CSTR, suspended biomass is removed for recovery and recycled back into the reactor. The settling tank clarifies the effluent for subsequent processing in the ion exchange process.

1.5.3.6 Ion Exchange System. Following biodenitrification, ion exchange is proposed to remove radionuclides not readily precipitated (either by pH adjustment or by redox), such as cesium-137 and technetium-99. The ion exchange process is the final unit operation applied to contaminated groundwater prior to reinjection into an aquifer. Both cation and anion exchange resins are proposed to ensure removal

of any contaminants that may still remain in trace concentrations. The proposed ion exchange process consists of media filtration followed by separate cation and anion exchange columns, and a resin regeneration loop.

The performance of ion exchange resins will be impaired by the presence of suspended solids, bacteria, colloids, or oily materials in the feed stream (Corbitt 1990, Moghissi et al. 1986). Therefore, the process design specifies that the feed stream is filtered prior to entering the exchange columns. Two cartridge filters arranged in parallel are specified for this application to allow for continuous operation during maintenance or filter replacement. Pressure monitoring equipment is required to identify when replacement is necessary due to particulate loading.

The proposed ion exchange design will utilize a separate-bed system as opposed to a mixed-bed system in order to facilitate resin regeneration. The separate-bed system involves two vessels arranged in series. The first vessel containing the cation exchange resin and the second vessel containing the anion exchange resin. The separate-bed system is preferred for removing specific radionuclides (Moghissi et al. 1986). Similar to the cartridge filter design, two separate-bed systems may be arranged in parallel to allow for continuous operation during maintenance, regeneration, or resin replacement.

Specification of ion exchange resins for this process will depend on the type of contaminants to be removed, the contaminant concentration remediation levels, and the presence of other ions in the feed stream that may interfere with the efficiency of removing contaminants (Corbitt 1990). There are four general types of ion exchange resins that include strong- and weak-acid cation resins and strong- and weak-base anion exchange resins (Corbitt 1990). Ion specific exchange resins are available for isotopes of Cs^{+}, Co^{+2}, Sr^{+2}, and Mn^{+2} (Moghissi et al. 1986). Ion-selective exchange resins can be used to remove any one or more these specific contaminants. Selective resins are typically zeolite and glass-based materials. The primary benefit of ion-selective exchange resins is a reduction in the amount of resin spent on removing ions from the process stream that are not of concern.

Strong-acid cation and strong-base anion exchange resins have a low regeneration efficiency (Moghissi et al. 1986). Therefore, regeneration of these resins can result in large quantities of regenerative waste. Conversely, weak-acid cation and weak-base anion exchange resins can be regenerated with near stoichiometric quantities of regenerants (Moghissi et al. 1986). Another option is a chabazite zeolite cation exchange resin. The zeolite resin is nonregenerable and would be discarded after loading. The benefit from using the zeolite resin is that it is not regenerated and thus no liquid regeneration wastes are generated. The only waste product is the contaminated solid zeolite. These once-through zeolites are economical because the secondary waste is a solid waste rather than a liquid waste which must be further processed (at considerable additional cost).

A regeneration loop is included in the ion exchange process to maximize the life of the ion exchange resins. A design variation may avoid regeneration by specifying disposal of spent resins (e.g., chabazite zeolite); however, regeneration is assumed in this application for conservatism. Monitoring the conductivity of the effluent from each ion exchange vessel will identify when the resins will require regeneration. Regeneration is accomplished by stripping contaminant ions from exhausted resin beds with concentrated acid, caustic, or other reagent solutions. In this process, contaminant cations are replaced with innocuous cations, such as hydronium (H^{+}), and contaminant anions are replaced with innocuous anions, such as hydroxide (OH^{-}) (Corbitt 1990). The equipment requirements to perform regeneration

include acid and caustic storage tanks, regenerative waste storage tank, and any associated piping, pumps, valves, and monitoring equipment.

The regeneration loop results in secondary liquid waste requiring solidification prior to disposal. Therefore, liquid regenerative wastes will be sent to a cement-based solidification process.

1.5.3.7 Cement-Based Solidification System. Cement-based solidification is proposed for all liquid-, sludge-, or slurry-type waste streams generated as a result of treating contaminated groundwater prior to disposal. Secondary waste streams such as spent ion exchange resins may or may not require solidification prior to disposal depending on the requirements of the ERDF waste acceptance criteria. The secondary waste streams generated from each treatment process are summarized in Table B-1.

Cement is the most commonly used material for solidification of radioactive wastes (DOE 1988). The types of cement used for waste solidification are Portland cement, masonry cement, and gypsum (DOE 1988). Special additives have been developed to enhance the capabilities of cement-based solidification such as waste loading, contaminant leachability, compressive strength, and setting characteristics.

Filter cake, ion exchange resins, and decontamination solutions are compatible with cement-based solidification (DOE 1988). However, cement-based solidification of each secondary waste stream generated from treatment of 100 Area groundwater is likely to require development of separate recipes or formulations. Differences in cement formulations may require separate solidification systems for each secondary waste stream or batch processing each secondary waste stream separately. The equipment requirements for cement-based solidification depend on pretreatment requirements, physical form, and waste volume.

Pretreatment such as pH adjustment of liquid wastes may be required. Resin regenerative wastes may require addition of an acid or caustic for pH adjustment prior to solidification. The physical form of secondary wastes will influence equipment specifications for items such as piping, pumps, and storage tanks for liquids. Conveying equipment and storage bins or silos may also be required.

The volume of secondary wastes generated will be used to determine whether solidification can be accomplished directly within containers or whether larger more complex mixing equipment is required. In-container mixing processes are generally applicable to small volume waste streams. These processes involve simply adding cement and waste (in predetermined proportions) directly into the disposal container and mixing. Mixing can be accomplished by placing a mixing weight into the container, sealing the container, and then using a drum tumbler or shaker until the contents are thoroughly mixed. Motor driven mixing rods are available in which the mixing rod can be either reused or simply left in the container (DOE 1988).

Large volume waste streams require mixing waste and cement in large vessels. This type of system consists of storage tanks for liquid wastes, feed hoppers for solid wastes and dry materials such as cement and additives. Waste, cement, and water (if necessary) are combined in larger mixing vessels. The resulting mixture is then metered and fed into disposal containers. This type of solidification process enables continuous processing or may be used on a batch-type basis.

Secondary waste streams which do not require solidification in cement, such as filter cartridges, will be packaged directly into disposal containers and transported to ERDF.

1.5.4 Disposal Distances and Location

1.5.4.1 Liquid Disposal. Treated groundwater is the only liquid effluent generated by this alternative and it will be discharged to the Columbia River or reinjected to the aquifer. The treatment train described above treats the groundwater for every contaminant except tritium (no practicable treatment is currently available for tritium). The tritium levels in most plumes in the 100 Area are already below the MCL, thus the water can be discharge directly to the river. However, if tritium levels in the effluent exceed the MCL, then the effluent cannot be discharged to a surface water (i.e., it doesn't meet drinking water standards).

Effluent contaminated by tritium above the MCL will be reinjected into the groundwater. This establishes an extraction/injection loop which allows time for natural radioactive decay of the tritium. The injection point can be chosen such that the travel time to the river is sufficient for the tritium to radioactively decay below the MCL before reaching the river. Both river discharge and reinjection process options are discussed below.

1.5.4.1.1 River Discharge. The treated water will be collected in a surge tank to determine if is below MCL for the contaminants. If so, the treated water will be directed to the river via a buried gravity flow pipeline. It is assumed that the flow would be routed via an existing river outfall (such as 009 in the 100 N Area) or a new outfall. An analysis of the condition of existing pipelines and outfalls would be required prior to implementation.

River discharge may require an National Pollutant Discharge Elimination System (NPDES) permit. Although some outfalls have been operating under existing NPDES permits, additional permitting requirements, if any, have not yet been established for river disposal of treated water. Establishing permitting requirements would require discussions with regulators. In addition, the Tri-Party Agreement Milestone M-17 requiring cessation of liquid effluent discharges by 1995 may affect treated water disposal options.

1.5.4.1.2 Reinjection System. Following treatment, effluent with tritium levels above MCL is to be reinjected into the aquifer beneath the 100 Area. The number and location of injection wells will be determined on the basis of hydrologic modeling and required flow rates. Design, installation, and equipment requirements for such an injection system will similar to the equipment described previously for extraction wells. Treated groundwater will be pumped in a single pipeline. At the injection point, a manifold will be used to feed the treated groundwater to each injection well.

The primary design considerations involved with injection wells are efficiency and well life (Driscoll 1986). The efficiency of an injection well is dependent on the selection and location of the screen. The well screen should be located in the area of the aquifer and/or vadose zone that has the greatest hydraulic conductivity. Screen openings should be as large as possible such that treated groundwater can enter the formation without excessive pressure build-up. Material selection can be an important consideration for

ensuring adequate well life. However, due to the quality of treated groundwater exiting the ion exchange process, this should not be a major concern.

1.5.4.2 Disposal of Solidified Residues. Solid wastes generated as a result of treating contaminated groundwater are disposed in the ERDF (approximately 9 miles from the 100 Area). Solidified waste is transported by truck for disposal. Radioactive and mixed secondary waste will meet ERDF acceptance criteria.

1.5.5 Groundwater Monitoring

Post-treatment monitoring of 100 Area groundwater will be necessary to ensure that established remediation levels have been satisfied and additional sources of contamination are not discovered. The number and location of monitoring wells required will be determined based on contaminant distribution. Monitoring well design, equipment requirements, and installation were described previously under Alternative GW-4.

1.6 ALTERNATIVE GW-6

Alternative GW-6 has been developed as a removal, treatment, and disposal general response action. The remedial technologies and associated process options initially specified for this alternative in the 100 Area FS Phases 1 and 2 (DOE-RL 1994a) have been significantly modified. The biodenitrification and ion exchange processes initially specified have been determined to be redundant and no longer necessary. This determination is based on the capabilities of reverse osmosis for removing contaminants applicable to biodenitrification and ion exchange treatment. Based on these modifications, Alternative

GW-6 now consists of the following remedial technologies and associated process options:

- removal:
  - extraction wells
- physical treatment:
  - air stripping/carbon adsorption (organics)
  - filtration (remove suspended solids)
  - forced evaporation (for volume reduction prior to solidification)
  - reverse osmosis (high molecular weight inorganic contaminants)
- stabilization/solidification:
  - cement-based solidification (secondary waste streams)
- liquid disposal:
  - crib disposal
- solids disposal:
  - ERDF, W-025, or another site
- monitoring
  - groundwater monitoring (100 Area groundwater).

1.6.1 Objective

The objective of Alternative GW-6 is identical to that described previously for Alternative GW-5. Source to receptor pathways are to be eliminated by complete removal, treatment, and disposal of contaminants in the 100 Area. Alternative GW-6 satisfies this objective in the same manner as Alternative GW-5 except for the methods of treatment. Alternative GW-6 is designed to remove contaminant plumes from the unconfined aquifer; treat contaminated groundwater to the levels established by remedial action goals; isolate and dispose treatment residuals from the accessible environment; and dispose treated groundwater by reinjection to the unconfined aquifer or to the river.

1.6.2 Size and Configuration

Alternatives GW-6 and GW-5 are similar in that both alternatives are developed as removal, treatment, and disposal general response actions. The primary difference between these alternatives is the treatment technologies specified to achieve RAO. The aspects of alternative GW-6 that are differ from alternative GW-5 are summarized below:

- biological treatment - no biological treatments are specified in GW-6
- chemical treatment - no chemical treatment are specified in GW-6
- physical treatment - only physical treatments are specified in GW-6

- disposal - crib disposal as an option to injection or river disposal.

The primary components of the unit operations required for alternative GW-6 are presented schematically in Figure B-4.

1.6.3 Unit Operations

Figure B-4 is a conceptual flow diagram of the unit operations proposed for Alternative GW-6. As noted previously, the biodenitrification and ion exchange unit operations initially specified for this alternative in the 100 Area FS Phases 1 and 2 (DOE-RL 1994a) are no longer included. In addition, the location within the treatment train initially specified for the evaporator has also been changed. Since operable unit-specific treatment processes are being considered as opposed to a single 100 Area treatment facility, the primary purpose of the evaporator has changed from volume reduction of groundwater entering the treatment system to volume reduction of liquid effluent from the reverse osmosis process. Unit operations, equipment requirements and options, and design considerations are described below.

1.6.3.1 Groundwater Extraction System. The groundwater extraction system proposed for Alternative GW-6 is identical to the system described for Alternative GW-5. Refer to the description presented previously for Alternative GW-5 for details.

1.6.3.2 Air Stripping/Carbon Adsorption. Air stripping followed by carbon adsorption is the initial series of unit operations proposed in this alternative for treating 100 Area groundwater. This process removes low concentrations of VOC from contaminated groundwater. Due to the extent and type of organic contamination in 100 Area groundwater, the process would be required only on an as needed basis. Air stripping is generally applicable to dilute aqueous wastes with VOC concentrations less than approximately 100 mg/L (Freeman 1989). The VOC are removed from groundwater by countercurrent gas-liquid desorption. Once removed from the groundwater, VOC can then adsorbed onto activated carbon.

Groundwater entering the process is filtered to remove suspended solids. Two cartridge filters arranged in parallel are specified for this application to allow for continuous operation during maintenance or filter replacement. After filtration, groundwater is pumped to the air stripper.

Several air stripper designs are currently available, however, the most common or conventional air strippers are vertical towers filled with a packing media. In this design contaminated water enters the top of the tower and falls by gravity through the packing media to a collection sump. Simultaneously, uncontaminated air enters from the bottom of the tower and is discharged at the top. The packing media maximizes the liquid surface area exposed to air flowing countercurrent to the liquid. Depending on water quality, packed-tower air strippers can be susceptible to fouling from scaling or solids deposition.

Newer designs involve low-profile air strippers which are essentially diffused aerators that bubble air up through a chamber filled with contaminated water (Reese 1992). Low-profile air strippers offer several advantages over conventional packed-tower designs: reduced potential for fouling; less maintenance requirements; and higher efficiency at lower contaminant concentrations. However, the low-profile design

uses higher air/water ratios that require higher horsepower blowers and result in increased off-gas volume requiring treatment.

Liquid effluent from the air stripper is pumped to the reverse osmosis system for inorganic contaminant removal while VOC laden off-gas is treated in carbon adsorption units. Two carbon beds in parallel are placed in series with one polishing carbon bed for removing VOC from the air stripper off-gas. Vapor phase carbon adsorption beds are available in disposable canisters or larger reusable vessels. Large activated carbon beds can be regenerated or disposed once saturated with contaminants. Treated air is discharged to the atmosphere.

1.6.3.3 Reverse Osmosis System. Following the organics treatment system, reverse osmosis is proposed to remove soluble inorganic contaminants, especially those of higher molecular weight. Reverse osmosis is a cross-flow membrane separation process that purifies contaminated water by application of high pressure which forces pure water through a semipermeable membrane, but leaves the contaminants in a concentrated waste stream (EPA 1987). The process is commercially available and highly effective for purifying water containing dissolved ions and radionuclides. However, a chief disadvantage is the generation of a substantial volume of secondary liquid waste that must be volume reduced and solidified prior to disposal.

Reverse osmosis membranes are typically either spiral wound into a cylindrical configuration or are fabricated into hollow fibers. The membranes provide a pore size in the range of one to ten angstroms (0.0001 - 0.001 microns). There are essentially three types of reverse osmosis membranes: cellulose acetate, aromatic polyamides, and thin-film composites (Freeman 1989). The thin-film composite type membranes are generally considered to be the most effective.

An reverse osmosis system may consist of three separate components. The first component in the system provides pretreatment of the feed stream to comply with the reverse osmosis membrane manufactures specifications. The second component is the reverse osmosis treatment vessel which, depending on the final system design, may consist of multiple reverse osmosis vessels. The third component provides post-treatment to the purified effluent to meet reuse standards or to prepare for additional treatment. The third component is not considered applicable to this system as any treatment required for additional unit operations will be considered pretreatment for that particular system.

Pretreatment requirements are based on the type and manufacturer of the reverse osmosis membrane specified and the condition of the feed stream. If necessary, pretreatment will maximize reverse osmosis membrane operating efficiency and reduce the potential for fouling. Pretreatment requirements may include (Porter 1990, Freeman 1989, Moghissi et al. 1986):

- elimination of suspended solids 1 micrometer or larger
- pH adjustment to between 4 and 6
- addition of precipitation inhibitors
- removal of oxidizing compounds
- elimination of organic contaminants
- temperature elevation.

The reverse osmosis portion of the system consists primarily of a high pressure pump, reverse osmosis module (containing the reverse osmosis membrane), piping, valves, and control and monitoring equipment. The high pressure pump pressurizes feed water to above osmotic pressures such that the reverse osmosis phenomenon occurs. The reverse osmosis module contains the membrane packaging and is categorized into four possible designs: plate and frame, spiral-wound, tubular, and hollow fine fiber (Porter 1990). The tubular design reverse osmosis module is least susceptible to fouling, has the highest tolerance to suspended solids, and has the possibility of mechanical membrane cleaning (Porter 1990).

1.6.3.4 Evaporation System. Following the reverse osmosis process, forced evaporation is proposed to reduce the volume of reverse osmosis concentrate requiring cement solidification. Depending on the type of evaporation system specified, concentrations of up to 50% total solids can be achieved (DOE 1988). Evaporation technology has been used for liquid radioactive waste treatment for several decades (Moghissi et al. 1986). The evaporation process involves the use of heat to vaporize water, thereby leaving a concentrated solution containing nonvolatile contaminants. The resulting concentrated solution requires additional treatment while vaporized water is simply condensed and sent for disposal.

Evaporators generally fall into one of two categories, either natural circulation or forced circulation. Natural or forced refers to the way in which liquid waste is circulated through the heat exchanger and vapor body. Natural circulation evaporators include rising-film and fixed-film types. Forced circulation evaporators include evaporative crystallizer, wiped-film, and extruder types. The evaporative crystallizer is the most commonly used evaporator for radioactive waste applications (DOE 1988).

Forced circulation evaporators have proven to be more effective in concentrating solids than natural circulation evaporators (DOE 1988). In addition, forced circulation evaporators allow separation of the heat transfer, vapor-liquid separation, and crystallization functions (Moghissi et al. 1986), thereby facilitating maintenance operations.

Evaporator energy requirements can be substantially reduced by recycling heated vapor generated by the evaporator back into the heat exchanger to facilitate evaporation of additional feed waste. Not only is the energy stored in the steam reused to heat feed waste, but the need for a condenser is eliminated. This process is commonly referred to as vapor recompression. Vapor recompression can reduce energy consumption by up to 80% (DOE 1988).

The evaporation system specified for application to Hanford 100 Area groundwater is the forced circulation, evaporative crystallizer with mechanical recompression. Due to the low capacity of typical evaporators, multiple evaporators may be required. Each evaporator system consists of a heat exchanger, vapor body (or flash chamber), recirculation pump, entrainment separator, and condenser (or compressor for recompression). Associated piping, valves, feed and effluent pumps, and control and monitoring equipment will be required as needed.

Concentrate from the evaporator is fed to a rotary vacuum drum filter for dewatering. A filtration media such as diatomaceous earth is added to the concentrate to facilitate the filtration process. The resulting filter cake is collected in a hopper which can be transported with industrial equipment such as a forklift to the solidification system. Liquid effluent from the rotary drum filter is recirculated back into the feed stream entering the reverse osmosis system.

1.6.3.5 Cement-Based Solidification System. As described previously for Alternative GW-5, cement-based solidification is proposed for liquid-, sludge-, or slurry-type waste streams generated as a result of treating contaminated groundwater (see Table B-2). Solidified wastes will be transported to the 200 Area for disposal. The secondary waste streams generated from each treatment system are summarized as follows:

The secondary waste streams generated by the treatment systems proposed for Alternative GW-6 are similar to those generated from the Alternative GW-5 treatment systems. Those secondary waste streams unique to Alternative GW-6 include fouled packing material from the air stripping tower, spent activated carbon beds, and fouled reverse osmosis membranes from the carbon adsorption units. Secondary waste streams in solid form such as filter cartridges, air stripper packing material, spent carbon, and fouled reverse osmosis membranes, will generally be packaged directly into containers suitable for disposal. However, if solidification is required for any of these materials (based on ERDF requirements), size reduction may be necessary to ensure complete encapsulation in cement.

The cement solidification system and materials described previously for Alternative GW-5 would be identical to the cement solidification system requirements for this alternative. In general, the applicable secondary waste streams will be pretreated (if necessary), mixed with cement, and placed in Department of Transportation (DOT) approved containers. After the appropriate curing time has elapsed, solidified wastes will be transported by truck to the ERDF, W-025, or another site for disposal.

1.6.4 Disposal Distances and Location

1.6.4.1 Liquid Disposal. Disposal of liquid effluents generated by implementation of Alternative GW-6 is nearly identical to the previous discussion for Alternative GW-5. Surface discharge into cribs is specified for Alternative GW-6 as opposed to the reinjection/river discharge technique specified for Alternative GW-5.

1.6.4.2 Disposal of Solidified Residues. Disposal of solidified waste generated by implementation of Alternative GW-6 is identical to the previous discussion for Alternative GW-5.

1.6.5 Groundwater Monitoring

As described previously in Alternative GW-5, post-treatment monitoring of 100 Area groundwater will be necessary to ensure that established remediation levels have been satisfied and additional sources of contamination are not discovered. The number and location of monitoring wells required will be determined based on contaminant distribution. Monitoring well design, equipment requirements, and installation are the same as described previously in Alternative GW-4.

Figure B-1. Conceptual Vertical Barrier Alternative GW-3.

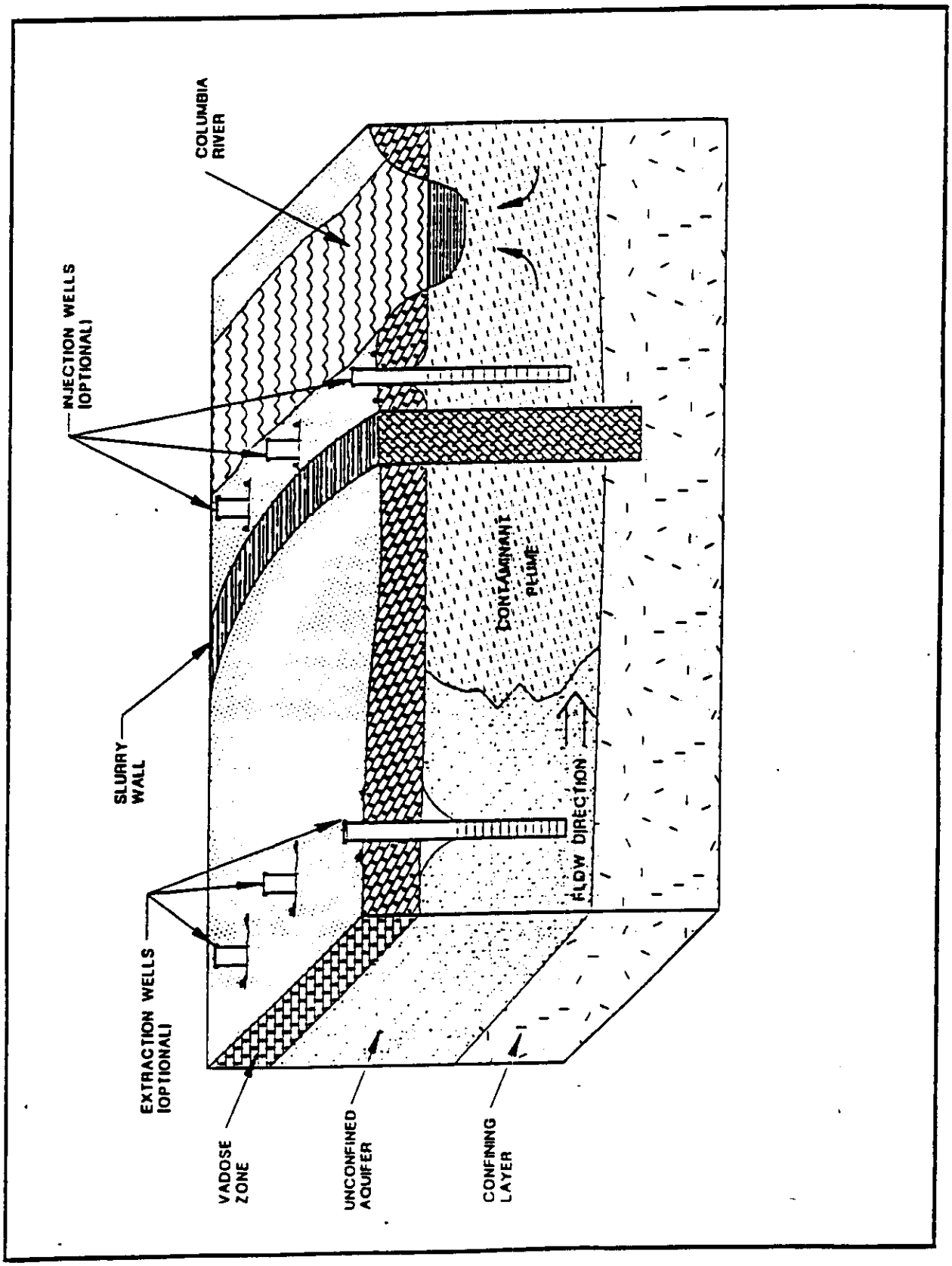

Figure B-2. Conceptual In Situ Treatment Alternative GW-4.

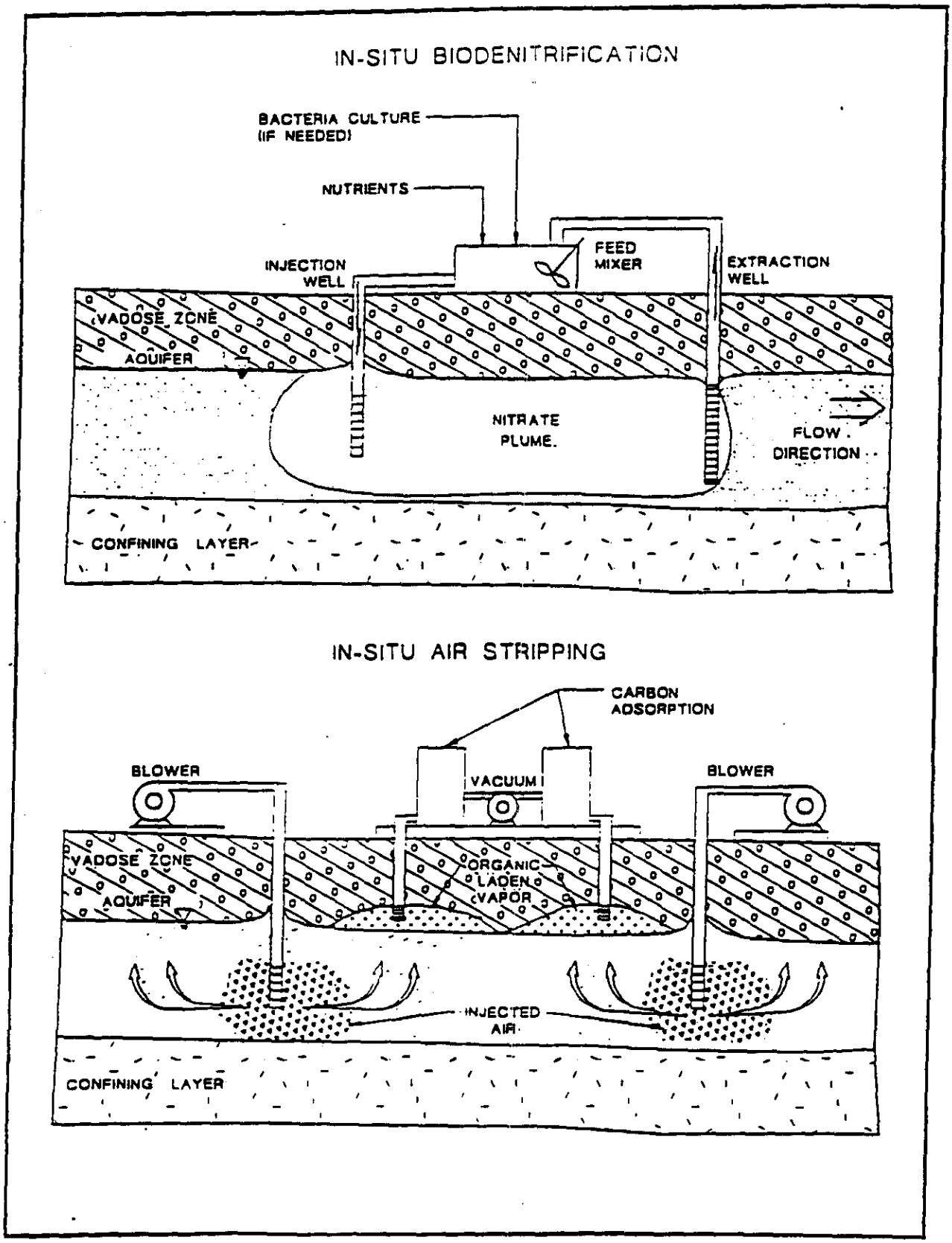

Figure B-3. Conceptual Ion Exchange Treatment System for Alternative GW-5.

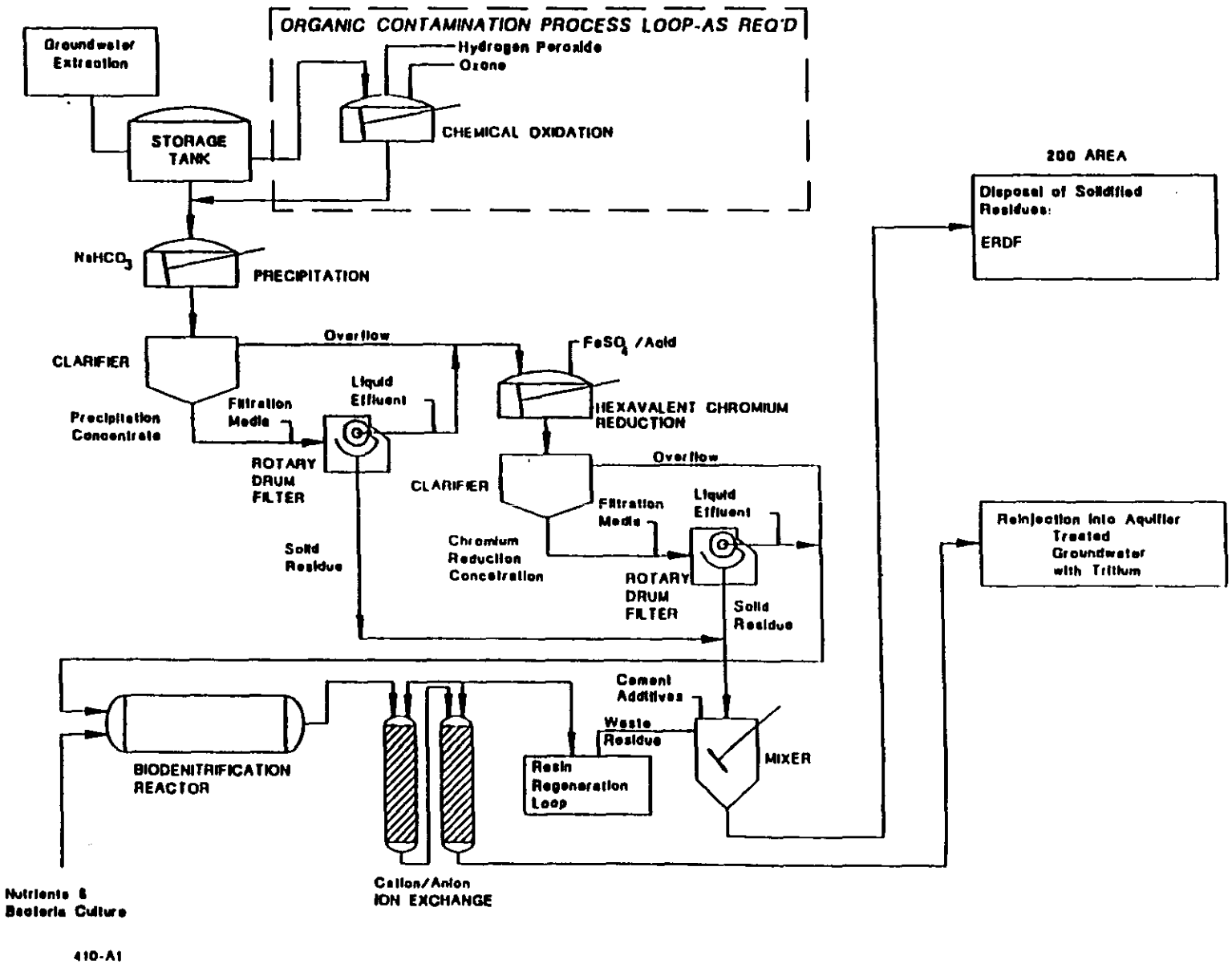

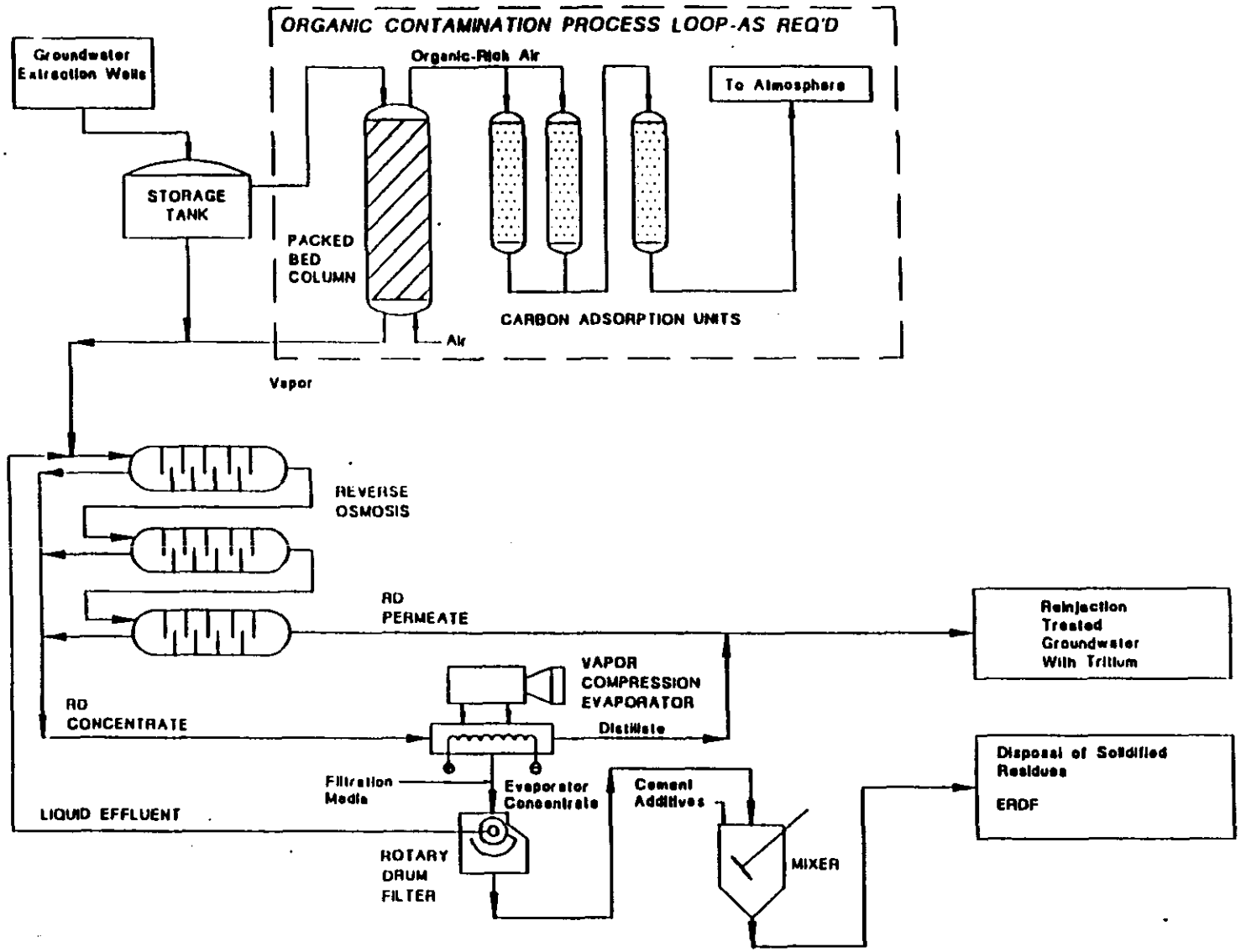

Figure B-4. Conceptual Reverse Osmosis Treatment System for Alternative GW-6.

Table B-1. Secondary Waste Streams for Alternative GW-5.

Treatment Process	Description	Physical Form
Equalization storage tank	Tank bottoms	Sludge
Chemical oxidation	Filter cartridges	Solid
Chemical precipitation	Rotary drum filter cake	Filter cake
Chemical reduction	Rotary drum filter cake	Filter cake
Biodenitrification	Clarifier concentrate	Slurry
Ion exchange	Filter cartridges	Solid
	Spent ion exchange resins	Solid
	Regenerative waste	Slurry

Table B-2. Secondary Waste Stream for Alternative GW-6.

Treatment Process	Description	Physical Form
Equalization storage tank	Tank bottoms	Sludge
Air stripping	Filter cartridges	Solid
	Fouled packing	Solid
	Activated carbon	Solid
Reverse osmosis	Fouled membranes	Solid
Evaporator	Rotary drum filter cake	Filter cake

APPENDIX C

MODELING DETAILS

1.0 GROUNDWATER FLOW AND SOLUTE TRANSPORT MODEL DESIGN, CALIBRATION, AND SENSITIVITY ANALYSIS

Groundwater flow and solute transport models were developed for both the 100-D/DR and 100-H Areas. A general discussion of the modeling was presented in the text. The purpose of this appendix is to discuss the details of the modeling. The models were developed using ModelCad386™, a computer-aided design program for groundwater modeling developed by Geraghty and Miller (1993). ModelCad386™ has an interactive graphical interface that provides a fast and accurate method for constructing and calibrating complex groundwater flow models.

1.1 GROUNDWATER FLOW MODELS

1.1.1 Groundwater Flow Code

The groundwater flow code used in this evaluation was MODFLOW, a three-dimensional, finite-difference, groundwater flow model code developed by the USGS (McDonald and Harbaugh 1988). The numerical method used in the code to the groundwater flow equation results in a series of equations where the hydraulic head at each node of the model grid is primarily unknown. The equations are then solved for the head at every node using an algebraic procedure for the solution of simultaneous linear equaitons. The Strongly Implicit Procedure (SIP) solver, which is based on algebraic procedure developed by Weinstein et al. (1969(, was used in the D/DR and H Area models because of its relatively fast execution speed. A complete discussion of the solution method used in the SIP module is provided in the MODFLOW documentation (McDonald and Harbaugh 1988).

1.1.2 Model Setup

The boundary conditions, grid, layering, and model assumptions are discussed in the main document. The base of the model for the D/DR Area was constructed by contouring geologic datea for the base of Ringold Unit E using SURFER (Golden Software 1991). The SURFER data were then directly input to MODFLOW using ModelCad386™. For the H Area, the Hanford/Ringold interface was contoured using SURFER and input to MODFLOW as the base of Layer 1 which ranges in elevation from 107 to 114 m (350 to 374 ft). The base of Layer 2 and the base of the model were set to an elevation of 55.5 m (182 ft) which corresponds to the top of the Ringold Lower Mud Unit. For the D/DR Area simulation, water can exit at the Columbia River and at the constant head boundaries (depending on the surrounding heads). For the H Area simulation, water can only exit at the Columbia River.

1.1.3 H Area Leakance between Layers

MODFLOW requires input on the leakance between layers when more than one layer is simulated. The leakance is based in the thickness of the layers and the vertical hydraulic conductivity. For the H Area model, the leakance value at each node was calculated by ModelCad using these parameters.

1.1.4 Flow Model Calibration

For the D/DR Area model, the model was run in the steady-state mode using initial data input. The horizontal hydraulic conductivity was adjusted to obtain the best match between model predicted and observed water level elevations. The head in the vicinity of wells 199-D5-13, 199-D5-20, 199-D8-4, and 199 D8-6 remained too low; therefore the conductivity in this area was decreased to 5 m/d (16 ft/d). This resulited in the heads shown in table B-1. Because this match appeared to be adequate, the recharge and river bed conductance were not changed from the initial inputs.

The H Area model was initially setup as a 2-dimensional model with the Hanford/Ringold contact as the base of the aquifer. This resulted in model-predicted heads which were considerably lower than the observed heads. Therefore, an additional layer was added to the model to represent a portion of the Ringold Formation and allow the upward movement of water to the Hanford formation. The horizontal hydraulic conductivity of the aquifers were adjusted to provide the best match between observed and model predicted water-level elevations (as shown in Table B-2). The model predicted heads do not match the observed heads as well as in the D/DR Area. Because the only way to increase the model heads is to decrease the hydraylic conductivity and because the conductivities were as low as seemed reasonable, the calibration was determined to be adequate.

1.2 SOLUTE TRANSPORT MODEL

1.2.1 Solute Transport Code

The solute transport models were setup using ModelCad^{386}™. The transport code used was MT3D™ (S.S. Papadopulos & Associates 1992), a modular three-dimensional transport code for the simulation of advection, dispersion, and chemical reactions of dissolved constituents in groundwater. MT3D™ uses a mixed Eulerian-Lagrangian approach to the solution fo the three-dimensional advective-dispersion-reactive equation. The solution was performed with the Hybrid Method of Characteristics (HMOC). MT3D™ works in conjuction with any block-centered finite difference model, such as MODFLOW.

1.2.2 Initial Conditions

The initial conditions for the D/DR Area were developed using the October through December 1992 contoured chromium concentrations from the LFI (DOE-RL 1993b). The 1992 data set was selected for the initial conditions because there are some uncertainties in more recent metals data (Peterson 1993).

The initial conditions for the H Area were developed by contouring the 1987 chromium data with SURFER. The 1987 data set was selected because it marked the beginning of the RCRA monitoring program and adequate data were available to develop contour maps. The SURFER data were then directly input to MT3D using ModelCad[386TM].

1.2.3 D Area Sensitivity Analysis

As mentioned in the main document, a variety of transport parameters were run to evaluate the sensitivity of the model to porosity, dispersivity, and retardation. The results from all of these runs are shown in Table B-3. This table indicates that the model is not very sensitive to porosity or retardation. The model is the most sensitive to dispersivity.

1.2.4 H Area Calibration

The H Area model was calibrated by running the model with the initial conditions for 5 years and attempting to match October/November 1992 chromium data. The calibration was performed by adjusting the dispersivity, retardation, and porosity. A summary of the calibration runs is shown in Table B-4. A summary of the results from these runs is shown in Tables B-5 and B-6. Run 10 was selected to perform the remedial alternative analyses because it has the lowest mean error of the three runs which simulated the river with the river package. The river package is believed to best represent the interaction between the aquifer and the Columbia River; comparing runs 10 and 11 shows that there is very little difference in the contaminant distribution between the two boundary options.

Table C-1 100 D/DR Area Calibrated Groundwater Flow Model Statistics

Well Name	Observed Head (m)	Model Predicted Head (m)	Error (m)
199-D2-6	116.91	116.85	0.06
199-D2-5	117.31	117.34	-0.03
199-D5-19	117.25	117.32	-0.07
199-D5-18	117.13	117.29	-0.16
199-D5-17	117.22	117.25	-0.03
199-D5-12	117.07	117.21	-0.14
199-D5-15	117.03	117.06	-0.03
199-D5-14	116.90	116.96	-0.06
199-D5-16	116.94	117.14	-0.20
199-D5-13	116.83	116.73	0.10
199-D5-20	116.49	116.24	0.25
199-D8-6	116.66	116.43	0.23
199-D8-5	116.27	116.10	0.17
199-D8-55	115.97	115.97	-0.00
199-D8-53	115.96	116.08	-0.12
199-D8-3	115.97	116.32	-0.35
199-D8-54A	115.97	116.03	-0.06

Mean Error = -0.026
Error Standard Deviation = 0.152

Table C-2 100 H Area Calibrated Groundwater Flow Model Statistics

Well Name	Observed Head (m)	Model Predicted Head (m)	Error (m)
199-H4-15A	113.78	113.21	0.57
199-H4-8	113.93	113.51	0.42
199-H4-7	114.04	113.69	0.35
199-H4-4	113.64	113.15	0.49
199-H4-12A	113.72	113.17	0.55
199-H4-10	113.78	113.24	0.54
199-H4-11	113.51	113.14	0.37
199-H4-14	114.19	113.82	0.37
199-H3-2A	114.45	114.14	0.31
199-H3-1	114.59	114.41	0.18
199-H4-45	113.87	113.54	0.33
199-H6-1	113.90	113.64	0.26
199-H5-1	114.58	114.59	-0.01
199-H4-13	113.41	113.12	0.29
199-H4-9	113.83	113.44	0.39

Mean Error = 0.359
Error Standard Deviation = 0.148

C-3. 100 D/DR Area Sensitivity Analysis and Data

Remedial Alternative	Porosity	Retardation Factor	Dispersivity Dl/Dt (m)	Mass Removed at River Nodes (kg)	Mass Removed at Wells (kg)	Comments
No Action	0.20	25	10/1	76.61	na	Base Case
	0.15	25	10/1	81.61	na	Model not sensitive to porosity (n) at R = 25
	0.25	25	10/1	72.44	na	Model not sensitive to n at R = 25
	0.20	1	10/1	78.83	na	No sorption, simulated plume unrealistic
	0.20	10	10/1	88.83	na	
	0.15	10	10/1	90.75	na	Model not sensitive to n at R = 10
	0.25	10	10/1	86.70	na	Model not sensitive to n at R = 10
	0.25	50	10/1	61.38	na	Model not sensitive to R at R > 25
	0.20	25	100/10	88.5	na	
	0.15	25	100/10	90.59	na	Model not sensitive to n at R = 25
	0.25	25	100/10	86.68	na	Model not sensitive to n at R = 25
	0.20	10	100/10	93.84	na	
	0.15	10	100/10	94.66	na	Model not sensitive to n at R = 10
	0.25	10	100/10	92.91	na	Model not sensitive to n at R = 10

Remedial Alternative	Porosity	Retardation Factor	Dispersivity Dl/Dt (m)	Mass Removed at River Nodes (kg)	Mass Removed at Wells (kg)	Comments
No Action	0.25	50	100/10	82.25	na	Model not sensitive to R at R > 25
Barrier Wall	0.20	25	10/1	3.04	na	
	0.20	10	10/1	3.14	na	
	0.20	25	100/10	4.87	na	
	0.20	10	100/10	5.18	na	Barrier Wall can be shortened on north end
Pump and Treat	0.20	25	10/1	1.88	418.2	Better containment than wall
	0.20	10	10/1	1.72	346.5	
	0.20	25	100/10	3.32	377.12	
	0.20	10	100/10			Large mass balance error
Barrier Wall with Pumping Wells	0.20	25	10/1	3.03	1.30	
	0.20	10	10/1	3.16	12.77	
Shortened Barrier Wall and Pumping Wells	0.20	25	100/10	5.01	10.65	
	0.20	10	100/10			Large mass balance error

na = Not Applicable
n = porosity
R = retardation

Table C-4 Summary of H Area Transport Calibration Runs

Run Number	Longitudinal Dispersivity (m)	Transverse Dispersivity (m)	Porosity	Retardation	River Boundary
1	1	0.1	0.20	100	Constant Head
2	10	1	0.20	100	Constant Head
3	10	1	0.20	50	Constant Head
4	10	1	0.20	25	Constant Head
5	100	50	0.30	17	River Boundary
6	100	10	0.20	25	Constant Head
7	10	1	0.20	13	Constant Head
8	30	3	0.20	25	Constant Head
9	5	0.5	0.30	17	River Boundary
10	5	0.5	0.20	25	River Boundary
11[a]	5	0.5	0.20	25	Constant Head

[a] Same as run 10 with the river as a constant head boundary

Table C-5 Summary of H Area Model Results

Well Number	Oct/Nov 199	Run 1	Run 2	Run 3	Run 4	Run 5	Run 6	Run 7	Run 8	Run 9	Run 10	Run 11
199-H4-15A	120	136.16	129.4	117.45	94.01	128	12.557	62.09	53.734	126.93	126.9	127.76
199-H4-5	80	174.91	158.04	132.44	94.531	158	9.7287	48.301	41.91	154.9	154.98	156.57
199-H4-12	290	217.25	205.4	190.63	166.21	220	22.715	117.57	95.074	219.07	218.8	221.26
199-H4-8	130	116.51	99.761	84.607	63.467	124	4.9609	43.078	21.775	124.3	124.18	122.32
199-H4-7	110	136.94	122.21	110.3	93.736	137	9.3497	71.564	46.294	137.28	137.21	137.32
199-H4-6	110	59.346	56.746	53.6	46.993	57.2	9.306	34.455	31.192	58.272	57.982	57.4
199-H4-9	75	169.44	141.2	117.43	84.397	177	6.7393	49.617	25.414	177.61	177.52	174.91
199-H4-3	44	285.82	231.03	178.23	115.85	265	9.3664	61.282	34.279	261.32	259.51	265.9
199-H4-4	110	275.96	257.75	237.78	203.78	267	25.562	141.33	115.37	268.87	269.03	267.24
199-H3-2A	50	40.153	41.399	39.589	36.37	44.1	14.176	30.952	30.126	42.345	42.401	43.491
199-H4-14	360	NA	239.08	224.32	204.07	242	43.714	165.91	143.41	241.56	242.29	241.8
199-H4-8	210	NA	209.45	169.28	116.25	255	9.3828	59.179	36.008	254.5	255.76	255.74
199-H4-11	110	NA	113.3	109.33	103.65	125	21.075	90.057	70.763	124.69	124.75	125.39
199-H4-13	84	NA	32.59	33.135	32.778	44.2	7.8158	33.617	23.022	40.262	40.171	39.926
199-H4-48	4.5	NA	172.91	164.4	146.65	171	41.179	117.12	107.89	172.35	172.18	170.81
199-H4-49	66	NA	95.773	90.677	80.316	92.6	25.962	64.343	60.951	93.65	93.533	92.839
199-H4-47	4.3	158.55	151.72	142.3	126.86	151	30.06	102.4	89.597	151.91	151.85	150.17
199-H4-46	52.7	99.137	95.478	91.289	83.388	98	22.451	68.449	60.234	98.2	98.165	97.914
199-H5-1	84.4	40.076	41.23	39.812	36.976	42.1	15.724	32.288	31.365	40.478	40.972	42.125
199-H6-1	45.6	19.838	19.103	18.265	16.897	19.7	5.7464	16.759	13.304	19.817	19.83	20.002

Table C-6 Statistics of H Area Model Runs ***

Well Number	Oct/Nov 199	Run 1	Run 2	Run 3	Run 4	Run 5	Run 6	Run 7	Run 8	Run 9	Run 10	Run 11
199-H4-15A	120	16.16	9.4	-2.55	-25.99	8	-107.443	-57.91	-66.266	6.93	6.9	7.76
199-H4-5	80	94.91	78.04	52.44	14.531	78	-70.2713	-31.699	-38.09	74.9	74.98	76.57
199-H4-12	290	-72.75	-84.6	-99.37	-123.79	-70	-267.285	-172.43	-194.926	-70.93	-71.2	-68.74
199-H4-8	130	-13.49	-30.239	-45.393	-66.533	-6	-125.039	-86.922	-108.225	-5.7	-5.82	-7.68
199-H4-7	110	26.94	12.21	0.3	-16.264	27	-100.65	-38.436	-63.706	27.28	27.21	27.32
199-H4-6	110	-50.654	-53.254	-56.4	-63.007	-52.8	-100.694	-75.545	-78.808	-51.728	-52.018	-52.6
199-H4-9	75	94.44	66.2	42.43	9.397	102	-68.2607	-25.383	-49.586	102.61	102.52	99.91
199-H4-3	44	241.82	187.03	134.23	71.85	221	-34.6336	17.282	-9.721	217.32	215.51	221.9
199-H4-4	110	165.96	147.75	127.78	93.78	157	-84.438	31.33	5.37	158.87	159.03	157.24
199-H3-2A	50	-9.847	-8.601	-10.411	-13.63	-5.9	-35.824	-19.048	-19.874	-7.655	-7.599	-6.509
199-H4-14	360	NA	-120.92	-135.68	-155.93	-118	-316.286	-194.09	-216.59	-118.44	-117.71	-118.2
199-H4-8	210	NA	-0.55	-40.72	-93.75	45	-200.617	-150.821	-173.992	44.5	45.76	45.74
199-H4-11	110	NA	3.3	-0.67	-6.35	15	-88.925	-19.943	-39.237	14.69	14.75	15.39
199-H4-13	84	NA	-51.41	-50.865	-51.222	-39.8	-76.1842	-50.383	-60.978	-43.738	-43.829	-44.074
199-H4-48	4.5	NA	168.41	159.9	142.15	166.5	36.679	112.62	103.39	167.85	167.68	166.31
199-H4-49	66	NA	29.773	24.677	14.316	26.6	-40.038	-1.657	-5.049	27.65	27.533	26.839
199-H4-47	4.3	154.25	147.42	138	122.56	146.7	25.76	98.1	85.297	147.61	147.55	145.87
199-H4-46	52.7	46.437	42.778	38.589	30.688	45.3	-30.249	15.749	7.534	45.5	45.465	45.214
199-H5-1	84.4	-44.324	-43.17	-44.588	-47.424	-42.3	-68.676	-52.112	-53.035	-43.922	-43.428	-42.275
199-H6-1	45.6	-25.762	-26.497	-27.335	-28.703	-25.9	-39.8536	-28.841	-32.296	-25.783	-25.77	-25.598
Mean Error		44.58	23.65	10.22	-9.67	33.87	-89.65	-36.51	-50.44	33.39	33.38	33.52

9513360.1481

APPENDIX D

COST ESTIMATES

1.0 COST MODEL DETAILS AND ASSUMPTIONS

This appendix presents the details of the cost estivates for the 100-HR-3 OU FFS. Included are assumptions and other criteria used to establish costs of implementing each remedial alternative. Four subsections are provided that include:

Section 1.1 Present Worth Tables
Capital expenditures and operation and maintenance costs are tabluated by year and linked with the discount factors to arrive at a present worth for that remedial technology. Dollar amounts for capital and operation and maintenance are taken from Cost Summary Sheets provided in Section 1.3.

Section 1.2 Cost Model Assumptions
Included are assumptions for each remedial alternative by task/subtask/sub-subtask. The source for costs associated with the task/subtask/sub-subtask assumption(s) are also provided.

Section 1.3 Cost Summary Sheets
The cost summary tables provide a link between the remedial alternative cost models and their respective present worth. It is here that capital and operation and maintenance costs are summed by year for subsequent entry into the present worth tables.

Section 1.4 Remedial Alternative Cost Models
Cost elements of each remedial alternative are listed by task/subtask/sub-subtask using the MCACES cost model software. Additional details such as lineal feet of pipe, pump size, and flow capacity of equipment are also included.

Adders such as tax, project management costs, and contingencies are introduced into the remedial alternative cost at this stage.

Note: This section contains detailed output from cost model analysis. Due to the length of this section, it has not been reproduced for this review. It will be included in the final document and is available upon request.

SECTION 1.1 PRESENT WORTH TABLES

PRESENT WORTH CALCULATIONS

100 D/DR AREA: INSTITUTIONAL CONTROLS

ANNUAL DISCOUNT RATE = 5%

YEAR	CAPITAL COST	O&M COST	DISCOUNT FACTOR	ANNUAL EXPENDITURE	PRESENT WORTH
0	$0	$0	1.0000	$0	$0
1	$0	$107,931	0.9524	$107,931	$102,793
2	$0	$107,931	0.9070	$107,931	$97,893
3	$0	$107,931	0.8638	$107,931	$93,231
4	$0	$107,931	0.8227	$107,931	$88,795
5	$0	$107,931	0.7835	$107,931	$84,564
6	$0	$107,931	0.7462	$107,931	$80,538
7	$0	$107,931	0.7107	$107,931	$76,707
8	$0	$107,931	0.6768	$107,931	$73,048
9	$0	$107,931	0.6446	$107,931	$69,572
10	$0	$107,931	0.6139	$107,931	$66,259
11	$0	$107,931	0.5847	$107,931	$63,107
12	$0	$107,931	0.5568	$107,931	$60,096
TOTALS	$0	$1,295,172			$956,603

TOTAL COST OF THE ALTERNATIVE: $956,603

PRESENT WORTH CALCULATIONS

100 D/DR AREA: SHEET PILE BARRIER

ANNUAL DISCOUNT RATE = 5%

YEAR	CAPITAL COST	O&M COST	DISCOUNT FACTOR	ANNUAL EXPENDITURE	PRESENT WORTH
0	$11,018,880	$0	1.0000	$11,018,880	$11,018,880
1	$0	$1,402,172	0.9524	$1,402,172	$1,335,429
2	$0	$1,367,492	0.9070	$1,367,492	$1,240,315
3	$0	$1,426,602	0.8638	$1,426,602	$1,232,299
4	$0	$1,367,492	0.8227	$1,367,492	$1,125,036
5	$0	$1,367,492	0.7835	$1,367,492	$1,071,430
6	$0	$1,426,602	0.7462	$1,426,602	$1,064,530
7	$0	$1,367,492	0.7107	$1,367,492	$971,877
8	$0	$1,367,492	0.6768	$1,367,492	$925,519
9	$0	$1,426,602	0.6446	$1,426,602	$919,588
10	$0	$1,367,492	0.6139	$1,367,492	$839,503
11	$0	$1,367,492	0.5847	$1,367,492	$799,573
12	$32,200	$1,367,492	0.5568	$1,399,692	$779,349
TOTALS	$11,051,080	$16,621,914			$23,323,326

TOTAL COST OF THE ALTERNATIVE: $23,323,326

PRESENT WORTH CALCULATIONS

100 D/DR AREA: REMOVAL, TREATMENT, AND DISPOSAL ALTERNATIVE WITH ION EXCHANGE

ANNUAL DISCOUNT RATE = 5%

YEAR	CAPITAL COST	O&M COST	DISCOUNT FACTOR	ANNUAL EXPENDITURE	PRESENT WORTH
0	$2,549,250	$0	1.0000	$2,549,250	$2,549,250
1	$0	$907,713	0.9524	$907,713	$864,506
2	$0	$806,417	0.9070	$806,417	$731,420
3	$0	$986,417	0.8638	$986,417	$852,067
4	$0	$806,417	0.8227	$806,417	$663,439
5	$0	$806,417	0.7835	$806,417	$631,828
6	$0	$986,417	0.7462	$986,417	$736,064
7	$0	$806,417	0.7107	$806,417	$573,121
8	$0	$806,417	0.6768	$806,417	$545,783
9	$0	$986,417	0.6446	$986,417	$635,844
10	$0	$806,417	0.6139	$806,417	$495,059
11	$0	$806,417	0.5847	$806,417	$471,512
12	$25,060	$807,583	0.5568	$832,643	$463,616
TOTALS	$2,574,310	$10,319,466			$10,213,509

TOTAL COST OF THE ALTERNATIVE: ***$10,213,509***

PRESENT WORTH CALCULATIONS

100 D/DR AREA: REMOVAL, TREATMENT, AND DISPOSAL ALTERNATIVE WITH ION EXCHANGE

ANNUAL DISCOUNT RATE = 5%

YEAR	CAPITAL COST	O&M COST	DISCOUNT FACTOR	ANNUAL EXPENDITURE	PRESENT WORTH
0	$2,549,250	$0	1.0000	$2,549,250	$2,549,250
1	$0	$1,515,980	0.9524	$1,515,980	$1,443,819
2	$0	$1,414,684	0.9070	$1,414,684	$1,283,118
3	$0	$1,594,684	0.8638	$1,594,684	$1,377,488
4	$0	$1,414,684	0.8227	$1,414,684	$1,163,861
5	$25,060	$1,415,850	0.7835	$1,440,910	$1,128,953
6	$0	$0	0.7462	$0	$0
7	$0	$0	0.7107	$0	$0
8	$0	$0	0.6768	$0	$0
9	$0	$0	0.6446	$0	$0
10	$0	$0	0.6139	$0	$0
11	$0	$0	0.5847	$0	$0
12	$0	$0	0.5568	$0	$0
TOTALS	$2,574,310	$7,355,882			$8,946,489

TOTAL COST OF THE ALTERNATIVE: ***$8,946,489***

PRESENT WORTH CALCULATIONS

100 D/DR AREA: REMOVAL, TREATMENT, AND DISPOSAL ALTERNATIVE WITH REVERSE OSMOSIS

ANNUAL DISCOUNT RATE = 5%

YEAR	CAPITAL COST	O&M COST	DISCOUNT FACTOR	ANNUAL EXPENDITURE	PRESENT WORTH
0	$3,291,910	$0	1.0000	$3,291,910	$3,291,910
1	$0	$1,729,582	0.9524	$1,729,582	$1,647,254
2	$0	$1,654,352	0.9070	$1,654,352	$1,500,497
3	$0	$1,832,412	0.8638	$1,832,412	$1,582,837
4	$0	$1,654,352	0.8227	$1,654,352	$1,361,035
5	$0	$1,654,352	0.7835	$1,654,352	$1,296,185
6	$0	$1,832,412	0.7462	$1,832,412	$1,367,346
7	$0	$1,654,352	0.7107	$1,654,352	$1,175,748
8	$0	$1,654,352	0.6768	$1,654,352	$1,119,865
9	$0	$1,832,412	0.6446	$1,832,412	$1,181,173
10	$0	$1,654,352	0.6139	$1,654,352	$1,015,607
11	$0	$1,654,352	0.5847	$1,654,352	$967,300
12	$32,330	$1,654,352	0.5568	$1,686,682	$939,145
TOTALS	$3,324,240	$20,461,634			$18,445,702

TOTAL COST OF THE ALTERNATIVE: ***$18,445,702***

PRESENT WORTH CALCULATIONS

100 H AREA: INSTITUTIONAL CONTROLS

ANNUAL DISCOUNT RATE = 5%

YEAR	CAPITAL COST	O&M COST	DISCOUNT FACTOR	ANNUAL EXPENDITURE	PRESENT WORTH
0	$0	$0	1.0000	$0	$0
1	$0	$107,931	0.9524	$107,931	$102,793
2	$0	$107,931	0.9070	$107,931	$97,893
3	$0	$107,931	0.8638	$107,931	$93,231
4	$0	$107,931	0.8227	$107,931	$88,795
5	$0	$107,931	0.7835	$107,931	$84,564
6	$0	$107,931	0.7462	$107,931	$80,538
7	$0	$107,931	0.7107	$107,931	$76,707
8	$0	$107,931	0.6768	$107,931	$73,048
9	$0	$107,931	0.6446	$107,931	$69,572
10	$0	$107,931	0.6139	$107,931	$66,259
11	$0	$107,931	0.5847	$107,931	$63,107
12	$0	$107,931	0.5568	$107,931	$60,096
TOTALS	$0	$1,295,172			$956,603

TOTAL COST OF THE ALTERNATIVE: **$956,603**

PRESENT WORTH CALCULATIONS

100 H AREA: HYDRAULIC CONTROL

ANNUAL DISCOUNT RATE = 5%

YEAR	CAPITAL COST	O&M COST	DISCOUNT FACTOR	ANNUAL EXPENDITURE	PRESENT WORTH
0	$3,896,880	$0	1.0000	$3,896,880	$3,896,880
1	$0	$656,640	0.9524	$656,640	$625,384
2	$0	$626,560	0.9070	$626,560	$568,290
3	$0	$833,670	0.8638	$833,670	$720,124
4	$0	$626,560	0.8227	$626,560	$515,471
5	$0	$626,560	0.7835	$626,560	$490,910
6	$0	$833,670	0.7462	$833,670	$622,085
7	$0	$626,560	0.7107	$626,560	$445,296
8	$0	$626,560	0.6768	$626,560	$424,056
9	$0	$833,670	0.6446	$833,670	$537,384
10	$0	$626,560	0.6139	$626,560	$384,645
11	$0	$626,560	0.5847	$626,560	$366,350
12	$32,230	$626,560	0.5568	$658,790	$366,814
TOTALS	$3,929,110	$8,170,130			$9,963,688

TOTAL COST OF THE ALTERNATIVE: ***$9,963,688***

PRESENT WORTH CALCULATIONS

100 H AREA: REMOVAL, TREATMENT, AND DISPOSAL ALTERNATIVE WITH ION EXCHANGE

ANNUAL DISCOUNT RATE = 5%

YEAR	CAPITAL COST	O&M COST	DISCOUNT FACTOR	ANNUAL EXPENDITURE	PRESENT WORTH
0	$2,615,750	$0	1.0000	$2,615,750	$2,615,750
1	$0	$1,063,287	0.9524	$1,063,287	$1,012,675
2	$0	$867,223	0.9070	$867,223	$786,571
3	$0	$1,060,223	0.8638	$1,060,223	$915,821
4	$0	$867,223	0.8227	$867,223	$713,464
5	$0	$867,223	0.7835	$867,223	$679,469
6	$0	$1,060,223	0.7462	$1,060,223	$791,138
7	$0	$867,223	0.7107	$867,223	$616,335
8	$0	$867,223	0.6768	$867,223	$586,937
9	$0	$1,060,223	0.6446	$1,060,223	$683,420
10	$0	$867,223	0.6139	$867,223	$532,388
11	$0	$867,223	0.5847	$867,223	$507,065
12	$25,060	$870,331	0.5568	$895,391	$498,554
TOTALS	$2,640,810	$11,154,548			$10,939,587

TOTAL COST OF THE ALTERNATIVE: ***$10,939,587***

PRESENT WORTH CALCULATIONS

100 H AREA: REMOVAL, TREATMENT, AND DISPOSAL ALTERNATIVE WITH ION EXCHANGE

ANNUAL DISCOUNT RATE = 5%

YEAR	CAPITAL COST	O&M COST	DISCOUNT FACTOR	ANNUAL EXPENDITURE	PRESENT WORTH
0	$2,615,750	$0	1.0000	$2,615,750	$2,615,750
1	$0	$1,703,824	0.9524	$1,703,824	$1,622,722
2	$0	$1,507,760	0.9070	$1,507,760	$1,367,538
3	$0	$1,700,760	0.8638	$1,700,760	$1,469,116
4	$0	$1,507,760	0.8227	$1,507,760	$1,240,434
5	$25,060	$1,510,868	0.7835	$1,535,928	$1,203,400
6	$0	$0	0.7462	$0	$0
7	$0	$0	0.7107	$0	$0
8	$0	$0	0.6768	$0	$0
9	$0	$0	0.6446	$0	$0
10	$0	$0	0.6139	$0	$0
11	$0	$0	0.5847	$0	$0
12	$0	$0	0.5568	$0	$0
TOTALS	$2,640,810	$7,930,972			$9,518,961

TOTAL COST OF THE ALTERNATIVE: ***$9,518,961***

PRESENT WORTH CALCULATIONS

100 H AREA: REMOVAL, TREATMENT, AND DISPOSAL ALTERNATIVE WITH REVERSE OSMOSIS

ANNUAL DISCOUNT RATE = 5%

YEAR	CAPITAL COST	O&M COST	DISCOUNT FACTOR	ANNUAL EXPENDITURE	PRESENT WORTH
0	$7,161,350	$0	1.0000	$7,161,350	$7,161,350
1	$0	$2,388,125	0.9524	$2,388,125	$2,274,450
2	$0	$2,312,895	0.9070	$2,312,895	$2,097,796
3	$0	$2,520,435	0.8638	$2,520,435	$2,177,152
4	$0	$2,312,895	0.8227	$2,312,895	$1,902,819
5	$0	$2,312,895	0.7835	$2,312,895	$1,812,153
6	$0	$2,520,435	0.7462	$2,520,435	$1,880,749
7	$0	$2,312,895	0.7107	$2,312,895	$1,643,774
8	$0	$2,312,895	0.6768	$2,312,895	$1,565,367
9	$0	$2,520,435	0.6446	$2,520,435	$1,624,672
10	$0	$2,312,895	0.6139	$2,312,895	$1,419,886
11	$0	$2,312,895	0.5847	$2,312,895	$1,352,350
12	$32,300	$2,312,895	0.5568	$2,345,195	$1,305,805
TOTALS	$7,193,650	$28,452,590			$28,218,323

TOTAL COST OF THE ALTERNATIVE: ***$28,218,323***

SECTION 1.2 COST MODEL ASSUMPTIONS

D/DR INSTITUTIONAL CONTROLS/CURRENT ACTION

TASK NUMBER	ASSUMPTIONS	JUSTIFICATION
ANA:02.08.02. Ground Water Analysis (Yrs 1-12)	• Assume sampling of 7 monitoring wells on a semiannual basis for the 12-year lifecycle (14 samples/yr) • All on-site sample analyses performed by WHC mobile lab. • 10% off-site verification analysis of reduced analyte list with CLP protocol. (10% of 14 = 1 ea)	DOE Cost Meeting
WHC:02.08.02. Ground Water Analysis (Yrs 1-12)	• Assume sampling of 7 monitoring well on a semiannual basis for the 12-year lifecycle (14 samples/yr) - Total samples = 14 • 90% of samples for analysis at mobile lab (90% of 14 = 13)	DOE Cost Meeting
WHC:02.08.04. Ground Water Monitor Samples	• Assume sampling of 7 monitoring wells on a semiannual basis for the 12-year lifecycle. (14 samples/yr) • Assume 2 field technicians for 6 hours on a semiannual basis for the 12-year lifecycle. (24 hrs/yr)	DOE Cost Meeting
WHC:13.21.11 Prepare Annual Report (Yrs 1-12)	• Assume 2 FTE's for 6 months each year	HR-3 Cost Workshop

D AREA SHEET PILE

TASK NUMBER	ASSUMPTIONS	JUSTIFICATION
ANA:02.08.02. Ground Water Analysis Yr 1-12	• Assume sampling of 7 monitoring wells on a semiannual basis for the 12-year lifecycle. (14 samples)	Best professional judgement
	• Assume monthly performance monitoring of 7 wells for the 12-year lifecycle. (84 Samples) - Total samples = 98	Best professional judgement
	• All on-site sample analyses performed by WHC mobile lab	DOE Cost Meeting
	• 10% off-site verification analysis of reduced analyte list with CLP protocol. (10% of 98 = 10 ea)	DOE Cost Meeting
SUB:01.02. Mobilize Trailers	• Includes mobilization of field office, storage, and decontamination trailers	Best professional judgement
SUB:01.04. Setup Trailers	• Includes setup of field office, storage, and decontamination trailers	Best professional judgement
SUB:01.04.02. Construct Decon Area	• Work to be Performed: Construct decontamination area/pad for equipment and vehicles • Crew and Equipment: Fixed Price Contractor:1 Group 6 Operator, 3 Group 1 Laborers, and 3 Group 2 Laborers Equipment: 1 Backhoe, 1 pickup truck Output: Assumed duration for this activity is 3 crew days. • Allowance for Tank Assume 1000 gal plastic tank for water collection	Best professional judgement
SUB:01.04.03. Site Survey	• Survey site for construction	Best professional judgement

TASK NUMBER	ASSUMPTIONS	JUSTIFICATION
SUB:01.05. Construct Temporary Utilities	• Includes connections for temporary electricty, telephone, water, and sewer facilities	Best professional judgement
SUB:01.06 Pre-Construction Submittals	• Includes pre-construction submittals by fixed-price contractor	Best professional judgement
SUB:03.03. Earthwork	• Includes dirtwork to prepare site	Best professional judgement
SUB:03.04. Roads/Parking/ Curbs/Walks	• Access Roads to Wells Assume 1500 lf of road per well, 10 ft wide, native materials 1500 lf/well x 4 wells = 6000 lf	Wall length and well spacing utilized to estimate road placement, Richardson Cost Estimating Guide
SUB:06.01.01. Well Drilling & Construction	• Drill/Install Extr/Inject Wells Note: 2 new extraction wells and 2 new injection wells, 100 ft deep, 8 in diameter, screened for 50 ft. Unit cost is assumed to include handling and packaging of contaminated well cuttings, transport to the disposal facility and associated disposal fees. • Allowance well Head Covers Assume manhole type cover at each well head • Allowance for Well Pumps-20 gpm • Allowance for Water Level Monitoring Instrumentation Assume 5 piezometers per extraction well using well points • Allowance for Well Testing	Modelling, geological reports, and actual costs from WHC RCRA drilling program Best professional judgement Best professional judgement Best professional judgement Best professional judgement
SUB:06.01.04. Operations and Maintenance 3,6,9	• Allowance for Well Workover Assume 1 every 3 years for each well for the 12-year lifecycle. Workovers in years 3,6,9 • Allowance for Well Pump Assume 1 pump replacement per extraction well every three years for the 12-year lifecycle. Pump replacement in years 3,6,9.	Best professional judgement Best professional judgement

TASK NUMBER	ASSUMPTIONS	JUSTIFICATION
SUB:06.01.9X. Site Piping	• Allowance for Piping from extraction well to consolidation facility. Assume 1500 lf of double-wall PVC piping per extraction well. 1500 lf/well x 2 wells = 3000 lf • Allowance for Force Main Discharge Piping Assume 1500 lf of double-wall PVC piping per injection well. 1500 lf/well x 2 wells = 3000 lf	Wall length and well spacing used to estimate flowline length, best professional judgement
SUB:06.03. Sheet Pile	• Construct Sheet Pile Wall Assume 50 ft deep x 4300 lf Includes mob of equipment, excavation, and installation of sheet piles.	Vendor quote
SUB:20.04. Site Restoration	• Includes revegetation at end of project	Best professional judgement
SUB:21.02.02 Demobilize Personnel and Equipment	• Includes demobilization of field office, storage, and decontamination trailers	Best professional judgement
SUB:21.04.02. Demobilize Temp Facilities	• Includes decomobilization of field office, storage, and decontamination trailers • Crew and Equipment: Fixed Price Contractor:1 Group 6 Operator, 3 Group 1 Laborer, and 3 Group 2 Laborers • Equipment: 1 backhoe, 1 pickup truck • Output: Assumed duration for this activity is 1 crew day	Best professional judgement
SUB:21.05 Disconnect Temporary Utilities	• Includes disconnecting electricity, telephone, water, and sewer services	Best professional judgement

TASK NUMBER	ASSUMPTIONS	JUSTIFICATION
SUB:21.04.02. Remove Decon Area	• Crew and Equipment: Fixed Price Contractor:1 Group 6 Operator, 3 Group 1 Laborers, and 3 Group 2 Laborers Equipment: 1 backhoe, 1 pickup Output: Assumed duration for this activity is 1 crew day.	Best professional judgement
SUB:21.06. Post-Construction Submittals	• Includes post-construction submittals by fixed-price contractor	Best professional judgement
WHC:02.08.02. Ground Water Analysis	• Assume sampling of 7 monitoring wells on a semiannual basis for the 12-year lifecycle. (14 samples) • Assume monthly performance monitoring of 7 wells for the 12-year lifecycle. (84 samples) - Total samples = 98 • 90% of samples analyzed by mobile lab (90% of 98 = 88) • All on-site samples analyses performed by WHC mobile lab	DOE Cost Meeting Best professional judgement DOE Cost Meeting DOE Cost Meeting
WHC:02.08.03. Take Ground Water Samples	• Assume sampling of 7 monitoring wells on a semiannual basis for the 12-year lifecycle. (14 samples) • Assume 2 Field Technicians for 6 hours on a semiannual basis for the 12-year lifecycle. (24 hrs/yr)	DOE Cost Meeting Best professional judgement
WHC:06.03. Vertical Barrier (Sheet Pile Wall), Yr 1	• Assume WHC QA and Safety oversite for the construction project.	Best professional judgement

TASK NUMBER	ASSUMPTIONS	JUSTIFICATION
WHC:06.05. Operation and Maintenance	• WHC Allowance for Electricity Wells: 147 kW-h/d Assume 24 hr/day x 365 days/yr Total = 53,600 kW-h/yr	Vendor catalogs, vendor quotes
WHC:13.21.11 Prepare Annual Report Yr 1	• Assume 2 FTE's for 6 months per year	HR-3 Cost Workshop
WHC: 13.21.11. Prepare Annual Report Yrs 2-12	• Assume 2 FTE's for 4 months per year	HR-3 Cost Workshop

D AREA ION EXCHANGE

TASK NUMBER	ASSUMPTIONS	JUSTIFICATION
ANA:02.08.02. Ground Water Analysis Yr - 1	• Assume shake-down period with following sampling of treatment system: - First 2 days: Sample each day of influent and effluent (4 samples) - Next 4 weeks: 1 sample per week of influent and effluent (8 samples)	Best professional judgement
	• 1 sample every 2 weeks of the influent and effluent for the remainder of year 1 (48 samples/yr)	Best professional judgement
	• Assume sampling of 7 monitoring wells on a semiannual basis for the 5-year lifecycle (14 samples/yr)	Best professional judgement
	• All onsite sample analyses performed by mobile lab	DOE Cost Meeting
	• 10% offsite verification analysis of reduced analyte list with CLP protocol.	DOE Cost Meeting
ANA:02.08.03. Ground Water Analysis Yrs 2-5	• Assume 1 sample every 2 weeks of influent and effluent for the 5-yr lifecycle. (52 samples/yr)	Best professional judgement
	• Assume sampling of 7 monitoring wells on a semiannual basis for the 5-yr lifecycle (14 samples/yr)	Best professional judgement
	• All onsite samples analyses performed by mobile lab	DOE Cost Meeting
	• 10% offsite verification analysis of reduced analyte list with CLP protocol	DOE Cost Meeting
SUB:01.02.02 Mobilize Trailers	• Includes mobilization of field office, storage, and decontamination trailers	Best professional judgement
SUB:01.04.01 Setup Trailers	• Includes setup of field office, storage, and decontamination trailers	Best professional judgement

TASK NUMBER	ASSUMPTIONS	JUSTIFICATION
SUB:01.04.02. Construct Decon Area	• Work to be Performed: Construct decontamination area/pad for equipment and vehicles. • Crew and Equipment Fixed Price Contractor: 1 Group 6 Operator, 3 Group 1 Laborers, and 3 Group 2 Laborers Equipment: 1 backhoe, 1 pickup truck • Output: Assumed duration for this activity is 3 crew days • Allowance for Tank Assume 1000 gal plastic tank for water collection	Best professional judgement
SUB:01.04.03 Site Survey	• Survey for artifacts	Best professional judgement
SUB:01.05 Construct Temporary Utilities	• Includes connections for temporary electricity, telephone, water, and sewer facilities	Best professional judgement
SUB:01.06 Pre-Construction Submittals	• Includes pre-construction submittals by fixed-price contractor	Best professional judgement
SUB:03.03 Earthwork	• Includes dirtwork to prepare site	Best professional judgement
SUB:03.04. Roads/Parking/Curbs/ Walks	• Access Roads to Wells Assume 10 ft wide, native materials	Well spacing utilized to estimate road placement, Richardson Cost Estimating Guide
SUB:03.05. Fencing	• Allowance for Permanent Fencing Assume 7 ft high security fence	Industry standard, Best professional judgement

TASK NUMBER	ASSUMPTIONS	JUSTIFICATION
SUB:06. Groundwater Collection and Control	• Drill/install extraction wells Note: 5 new extraction wells 80 ft deep and 5 new injection wells, 100 ft deep, 8 in. diameter. Unit cost is assumed to include handling and packaging of contaminated well cuttings, transport to the disposal facility, and associated disposal fees. • Allowance for Well Pumps and Installation - 10 GPM • Allowance for Controls and Connections at Well Heads • Allowance for Water Level Monitoring Instrumentation • Assume refurbishing existing wells. • Allowance for Well Head Covers Assume manhole type cover at each well head • Allowance for Well Testing	Modelling, geological reports, and actual costs from WHC RCRA drilling program Richardson Cost Estimating Guide, Best professional judgement Best professional judgement Best professional judgement Best professional judgement Best professional judgement
SUB:06.01.04. Operations and Maintenance 3	• Allowance for Well Workover Assume 1 workover every 3 years for each well for the 5-year lifecycle. Workovers in year 3 • Allowance for Well Pump Replacement Assume one pump replacement and installation per well every 3 years for the 5-year lifecycle Replacement in year 3	Best professional judgement Best professional judgement
SUB:06.01.9X. Site Piping	• Allowance for Piping from Well Head to Treatment Plant - double-wall PVC piping • Allowance for Leak Detection • Allowance for Force Main Discharge Piping - single wall PCV piping	Well spacing utilized to estimate flow line length, Best professional judgement

TASK NUMBER	ASSUMPTIONS	JUSTIFICATION
SUB:12. Chemical Treatment	• Excavate and prepare site for construction Assume a tent structure complete with frame, doors, and roll-up doors.	Vendor quote
	• Ion Exchange Equipment/Staging Includes 1 x 150 gpm treatment system. Resin included in O&M.	Vendor quote, results from treatability study
	• Allowance for Bldg Electrical Includes lighting, fixtures, motor starters, controllers, junction boxes, transformer, chart recorders, annunciators, panels, conduit, and wiring.	Best professional judgement
	• Allowance for Bldg Mechanical Includes equipment installation and connections, controls/instrumentation, interior piping (plastic), floor drains and piping.	Best professional judgement
SUB:20.04 Site Restoration	• Includes revegetation at end of project	Best professional judgement
SUB:21.04. Demobilze Temp Facilities	• Includes removal of decontamination area • Crew and Equipment: Fixed Price Contractor:1 Group 6 Operator, 3 Group 1 Laborer, and 3 Group 2 Laborers • Equipment: 1 backhoe, 1 pickup truck • Output: Assumed duration for this activity is 1 crew day	Best professional judgement
SUB:21.05 Disconnect Temporary Utilities	• Includes disconnecting electricity, telephone, water, and sewer services	Best professional judgement
SUB:21.06 Post-Construction Submittals	• Includes post-construction submittals by fixed-price contractor	Best professional judgement

TASK NUMBER	ASSUMPTIONS	JUSTIFICATION
WHC:02.08.02. Ground Water Analysis Yr - 1	• Assume shake-down period with following sampling of treatment system: - First 2 days: Sample each day of influent and effluent (4 samples) - Next 5 weeks: 1 sample per week of influent and effluent (8 samples) • 1 sample every 2 weeks of influent and effluent for remainder of year (48 samples/yr) • 90% of samples analyzed a mobile lab • HACH kit samples are taken 2 per day for the 5-yr lifecycle plus an additional 48 samples during the shake-down period.	Best professional judgement, cost meeting DOE Cost Meeting DOE Cost Meeting
WHC:02.08.03. Ground Water Analysis Yr 2 - 5	• Assume 1 sample every 2 weeks of the influent and effluent for the 5-yr lifecycle. (104 samples/yr) • Assume sampling of 7 monitoring wells on a semiannual basis for the 5-year lifecycle. (14 samples/yr) • 90% of samples analyzed at mobile lab • HACH kit samples are taken 2 per day for the 5-yr lifecycle.	Best professional judgement DOE Cost Meeting DOE Cost Meeting DOE Cost Meeting
WHC:02.08.04. Ground Water Monitor Samples	• Assume sampling of 7 monitoring wells on a semiannual basis for the 5-year lifecycle. (14 samples/yr) • Assume 2 field technicians for 12 hours on a semiannual basis for the 5-year lifecycle. (24 hrs/yr)	DOE Cost Meeting Best professional judgement
WHC:12.05.06 Personnel Training	• Includes operator time and allowance to attend 40-hour training	Best professional judgement

TASK NUMBER	ASSUMPTIONS	JUSTIFICATION
WHC:12.05.08 Operations & Maintenance Yrs 1-5	• Treatment facility will be fully staffed with 2 FTE's per shift, 1 shift per day, 7 days per week. (365 days/yr x 8 hrs/day = 2,920 hrs/yr)	Best professional judgement
	• Ion exchange media for chromium treatment	Vendor quote, treatability test report results
	• 2 FTE crew will be composed of the following members: 0.25 ea - supervisor 1.00 ea - operator 0.50 - engineering support 0.25 ea - maintenance engineer	
	• Allowance for electricity Wells: 806 kW-hr/d Ion Exchange Plant: 1594 kW-hr/d Assume 24 hrs/day x 365 days/yr Total = 875,737 kW-hr/yr	Vendor catalogs, vendor quotes
	• Ion Exchange Media will not require replacement during the 5-year lifecycle	Boomsnub data, best professional judgement
	• pH adjustment	Boomsnub data

TASK NUMBER	ASSUMPTIONS	JUSTIFICATION
WHC:12.05.08 Operation and Maintenance	• Disposal Fee for ion exchange media Assume disposal at ERDF for year 5	HR-3 Cost Workshop
WHC:12.05.11. Prepare Annual Report Yr 1	• Assume 2 FTEs for 6 months each year	HR-3 Cost Workshop
WHC:12.05.12. Prepare Annual Report Yrs 2-5	• Assume 2 FTEs for 4 months each year	HR-3 Cost Workshop

This page intentionally left blank.

D AREA REVERSE OSMOSIS

TASK NUMBER	ASSUMPTIONS	JUSTIFICATION
ANA:02.08.02. Ground Water Analysis (YR 1)	• Assume shake-down period with the following sampling schedule for the treatment system: - First 2 days: Samples every four hours of influent and effluent (24 samples) - Next 5 days: 1 sample per day of influent and effluent (10 samples) - Next 7 weeks: 1 sample per week of influent and effluent (14 samples)	Best professional judgement
	• 1 sample per filter change out (1 week) of the influent and effluent for the 12-yr lifecycle (104 samples/yr)	Best professional judgement
	• Assume sampling of 7 monitoring wells on a semiannual basis for the 12-year lifecycle (14 samples/yr) - Total samples = 166	Best professional judgement
	• All on-site samples analyses performed by WHC mobile lab	DOE Cost Meeting
	• 10% off-site verification analysis of reduced analyte list with CLP protocol. (10% of 166 = 17 ea)	DOE Cost Meeting
ANA:02.08.03. Ground Water Analysis (YRS 2-12)	• Assume 1 sample per filter change out (1 week) of the influent and effluent for the 12-yr lifecycle. (104 samples/yr)	Best professional judgement
	• Assume sampling of 7 monitoring wells on a semiannual basis for the 12-year lifecycle (14 samples/yr) - Total Samples = 118	Best professional judgement
	• All on-site sample analyses performed by WHC mobile lab	DOE Cost Meeting
	• 10% off-site verification analysis of reduced analyte list with CLP protocol (10% of 118 = 12)	DOE Cost Meeting
SUB:01.02.02 Mobilize Trailers	• Includes mobilization of field office, storage, and decon trailers	Best professional judgement
SUB:01.04.01. Setup/Construct Temporary Facilities	• Includes setup of field office, storage, and decon trailers	Best professional judgement

TASK NUMBER	ASSUMPTIONS	JUSTIFICATION
SUB:01.04.02. Construct Decon Area	• Work to be performed: Construct decontamination area/pad for equipment and vehicles. • Crew and Equipment • Fixed Price Contractor: 1 Group 6 Operator, 3 Group 1 Laborers, 3 Group 2 Laborers Equipment: 1 backhoe, 1 pickup truck Assumed duration for this activity is 3 crew days. • Allowance for Tank Assume 1000 gal plastic tank for water collection	Best professional judgement
SUB:01.04.03. Site Survey	• Survey site for construction	Best professional judgement
SUB:01.05. Construct Temporary Utilities	• Includes connections for temporary electricity, telephone, water, and sewer services	Best professional judgement
SUB:01.06. Pre-Construction Submittals	• Includes pre-construction submittals by fixed-price contractor	Best professional judgement
SUB:03.03. Earthwork	• Includes dirtwork to prepare site	Best professional judgement
SUB:03.04. Roads/Parking/ Curbs/Walks	• Assume 1500 lf of access road per well. 10 ft wide, native materials 1500 lf/well x 12 wells = 18,000 lf	Well spacing utilized to estimate road placement, Richardson Cost Estimating Guide
SUB:03.05. Fencing	• Allowance for Permanent Fencing Assume 7 ft high security fence	Industry standard, Best professional judgement
SUB:03.06 Electrical Distribution	• Includes pulling power to site	Best professional judgement

TASK NUMBER	ASSUMPTIONS	JUSTIFICATION
SUB:06. Groundwater Collection & Control	• Drill/Install Extr/Inject Wells Note: 6 new extraction wells and 6 new injection wells, 100 ft deep, 8 in diameter, screened for 50 ft. Unit cost is assumed to include handling and cuttings, transport to the disposal facility, and associated disposal fees. • Allowance for Well Pumps - 10 gpm • Allowance for Water Level Monitoring Instrumentation Assume 5 peizometers per extraction well using well points • Allowance for Well Head Covers Assume manhole type cover at each well head • Allowance for Well Testing	Modelling, geological reports, and actual costs from WHC RCRA Drilling Program Richardson Cost Estimating Guide, Best professional judgement Best professional judgement Best professional judgement
SUB:06.01.04 Operations and Maintenance 3,6,9	• Allowance for Well Workover Assume 1 workover for every 3 yrs. for each well; workovers in years 3,6,9 • Allowance for Well Pump Replacement. Assume 1 pump replacement per extraction well every 3 years; pump replacements in years 3,6,9	Best professional judgement Best professional judgement
SUB:06.01.9X. Site Piping	• Allowance for Piping from Well Head to Treatment Plant Assume 1500 lf of double-wall PVC piping per extraction well. 1500 lf/well x 6 wells = 9000 lf • Allowance for Force Main Discharge Piping Assume 1500 lf of single-wall PVC for each injection well. 1500 lf/well x 6 wells - 9000 lf	Well spacing utilized to estimate flow line length, Best professional judgement

TASK NUMBER	ASSUMPTIONS	JUSTIFICATION
SUB:13.21.04. Construction of Permanent Plant	• Excavate and Install Building Foundation • Install Butler Building Assume a prefabricated heated building complete with frame, doors, roll up doors, gutters, insulation, and roof vent. • Reverse Osmosis Equipment/Staging Includes 1 - 60 gpm treatment system, 225 psi inlet pressure, 10% reject • Vapor Recompression Evaporator Capacity = 60 gpm x 0.1 = 6 gpm, includes startup boiler, 2% reject • Rotary Drum Filter/Dryer Liquid loading: 60 gpm x 0.1 x 0.02 = 0.12 gpm = 60 lbs/hr Drying area = 10 sf • Steam Generator Evaporate 0.12 gpm = 60 lbs/hr 103,000 BTU • Allowance for Bldg Electrical Includes lighting, fixtures, motor starters, controllers, junction boxes, transformer, chart recorders, annunciators, panels, conduit, and wiring. • Allowance for Bldg Mechanical Includes equipment installation and connections, controls/instrumentation, interior piping (plastic), floor drains and piping, and HVAC.	Best professional judgement Vendor quote Vendor quote Richardson Cost Estimating Guide Vendor catalog Best professional judgement Best professional judgement
SUB: 20.04 Site Restoration	• Includes revegetation at end of project	Best professional judgement
SUB: 21.02.02 Demobilization	• Demobilize field office, storage, and decontamination trailers	Best professional judgement
SUB: 21.04.02. Remove Decon Area-Yr 12	• Includes removal of decontamination area • Crew and Equipment: Fixed Price Contractor:1 Group 6 Operator, 3 Group 1 Laborers, and 3 Group 2 Laborers Equipment: 1 backhoe, 1 pickup Output: Assumed duration for this activity is 1 crew day	Best professional judgement

TASK NUMBER	ASSUMPTIONS	JUSTIFICATION
SUB 21.05 Disconnect Temporary Utilities	• Includes disconnecting electricity, telephone, water, and sewer services.	Best professional judgement
SUB 21.06 Post-Construction Submittals	• Includes post-construction submittals by fixed-price contractor	Best professional judgement
WHC:02.08.02. Ground Water Analysis-Yr 1	• Assume shake-down period with the following sampling of treatment system: - First 2 days: Sample every four hours of influent and effluent (24 samples) - Next 5 days: 1 sample per day of influent and effluent (10 samples) - Next 7 weeks: 1 sample per week of influent and effluent (14 samples)	Best professional judgement, cost meeting
	• 1 sample per filter change out (1 week) of the influent and effluent for the 12-yr lifecycle (104 samples/yr)	Best professional judgement
	• Assume sampling of 7 monitoring wells on a semiannual basis for the 12-year lifecycle (14 samples/yr) - Total samples = 166	Best professional judgement
	• 90% of samples for analysis at mobile lab (90% of 166 = 149)	
	• HACH kit samples are taken 1 per shift for the 12-yr lifecycle plus an additional 48 samples during the shake-down period. (1143 samples)	DOE cost meeting
	• HACH Kit Replacement Assume 1 per yr	DOE cost meeting

TASK NUMBER	ASSUMPTIONS	JUSTIFICATION
WHC:02.08.03. Ground Water Analysis-Yrs 2-12	• 1 sample per filter change out (1 week) of the influent and effluent for the 12-yr lifecycle (104 samples/yr)	Best professional judgement
	• Assume sampling of 7 monitoring wells on a semiannual basis for the 12-year lifecycle (14 samples/yr) - Total samples = 118	DOE cost meeting
	• 90% of samples for analysis at mobile lab (90% of 118 = 106)	
	• HACH kit samples are taken 1 per shift for the 12-yr lifecycle (1143 samples)	DOE cost meeting
	• WHC HACH kit Replacement Assume 1 per yr	DOE cost meeting
WHC:02.08.04. Ground Water Monitor Samples	• Assume sampling of 7 monitoring wells on a semiannual basis for the 12-year lifecycle. (14 samples/yr)	DOE cost meeting
	• Assume 2 field technicians for 6 hours on a semiannual basis for the 12-year lifecycle. (24 hrs/yr)	Best professional judgement
WHC:13.21.06. Personnel Training	• Note: This account to allow for operator time and an allowance for 40 hour training course	Best professional judgement
WHC:13.21.08. Operation and Maint-Yrs 1-12	• Treatment facility will be fully staffed with 2 FTE's per shift, 3 shifts per day, 7 days per week. (365 days/year x 24 hrs/day = 8760 hrs)	Best professional judgement
	• Reverse Osmosis filters will be replaced every week for the 12-year lifecycle.	Best professional judgement
	• 2 FTE crew will be composed of the following members: 0.25 ea - supervisor 1.00 ea - operator 0.50 ea - TP tech support 0.25 ea - maintenance supervisor	

TASK NUMBER	ASSUMPTIONS	JUSTIFICATION
WHC:13.21.08. Operation and Maint-Yrs 1-12 (Continued)	• Allowance for Electricity Wells: 161 kW-hr/d RO System: 237 kW-hr/d Recompr Evap: 691 kW-hr/d Rotary Filter/Drum: 722 kW-hr/d Assume 24 hrs/day x 365 days/yr Total = 661,015 kW-hr/yr	Vendor catalogs, vendor quotes
	• RO System Chemicals Includes scale inhibitors, $0.29/1000 gal 60 gpm x 1440 m/d x 365 d/y = 31.5 MMgpy	Vendor quote
	• Reverse Osmosis Filter Replacement Assume replacement of 2 filters on a weekly basis for the 12-year lifecycle. (52 wk/yr x 2 filters/wk)	Best professional judgement
	• Disposal Fee for Reverse Osmosis Filters Assume disposal at ERDF for years 1 - 12 of the 12-year lifecycle. Assume each filter to be 40 cu ft.	HR-3 Cost Workshop
	• Disposal Fee - Evaporation Cake 60 gpm x 325 ppm = 3.75 cf/day 3.75 cf/day x 365 days = 1369 cf/year	Best professional judgement
	Assume 50% volume increase to stabilize evaporation cake 1.5 x 1369 cf/yr = 2054 cf/yr	HR-3 Cost Workshop
	• Allowance for Water Usage. Assume 1000 gal per month usage for the 12 year lifecycle	Best professional judgement
WHC:13.21.11. Prepare Annual Report (Yr-1)	• Assume 2 FTE's for 6 months each year	HR-3 Cost Workshop
WHC:13.21.12. Prepare Annual Report (Yrs 2-12)	• Assume 2 FTE's for 4 months each year	HR-3 Cost Workshop

H AREA INSTITUTIONAL CONTROLS/CURRENT ACTION

TASK NUMBER	ASSUMPTIONS	JUSTIFICATION
ANA:02.08.02. Ground Water Analysis (Yrs 1-12)	• Assume sampling of 7 monitoring wells on a semiannual basis for the 12-year lifecycle (14 samples/yr) • All on-site sample analyses performed by WHC mobile lab. • 10% off-site verification analysis of reduced analyte list with CLP protocol. (10% of 14 = 1 ea)	DOE Cost Meeting
WHC:02.08.02. Ground Water Analysis (Yrs 1-12)	• Assume sampling of 7 monitoring well on a semiannual basis for the 12-year lifecycle (14 samples/yr) - Total samples = 14 • 90% of samples for analysis at mobile lab (90% of 14 = 13)	DOE Cost Meeting
WHC:02.08.04. Ground Water Monitor Samples	• Assume sampling of 7 monitoring wells on a semiannual basis for the 12-year lifecycle. (14 samples/yr) • Assume 2 field technicians for 6 hours on a semiannual basis for the 12-year lifecycle. (24 hrs/yr)	DOE Cost Meeting
WHC:13.21.11 Prepare Annual Report (Yrs 1-12)	• Assume 2 FTE's for 6 months each year	HR-3 Cost Workshop

H AREA HYDRAULIC CONTROL

TASK NUMBER	ASSUMPTIONS	JUSTIFICATION
ANA:02.08.02. Ground Water Analysis Yr 1-12	• Assume sampling of 7 monitoring wells on a semiannual basis for the 12-year lifecycle. (14 samples)	Best professional judgement
	• Assume monthly performance monitoring of 7 wells for the 12-year lifecycle. (84 Samples)	Best professional judgement
	- Total samples = 98	
	• All on-site sample analyses performed by WHC mobile lab	DOE Cost Meeting
	• 10% off-site verification analysis of reduced analyte list with CLP protocol. (10% of 98 = 10 ea)	DOE Cost Meeting
SUB:01.02.02 Mobilize Trailers	• Includes mobilization of field office, storage, and decontamination trailers	Best professional judgement
SUB:01.04.01 Setup Trailers	• Includes setup of field office, storage, and decontamination trailers	Best professional judgement
SUB:01.04.02. Construct Decon Area	• Construct decontamination area/pad for equipment and vehicles	Best professional judgement
	• Crew and Equipment: Fixed Price Contractor: 1 Group 6 Operator, 3 Group 1 Laborers, and 3 Group 2 Laborers Equipment: 1 Backhoe, 1 pickup truck Output: Assumed duration for this activity is 3 crew days.	
	• Allowance for Tank Assume 1000 gal plastic tank for water collection	
SUB:01.04.03 Site Survey	• Survey site for construction	Best professional judgement
SUB:01.05 Construct Temporary Utilities	• Includes connections for temporary electricity, telephone, water, and sewer facilities	Best professional judgement

TASK NUMBER	ASSUMPTIONS	JUSTIFICATION
SUB:01.06 Pre-Construction Submittals	• Includes pre-construction submittals by fixed-price contractor	Best professional judgement
SUB:03.03 Earthwork	• Includes dirtwork to prepare site	Best professional judgement
SUB:03.04. Roads/Parking/ Curbs/Walks	• Access Roads to Wells Assume 1500 lf of road per well, 10 ft wide, native materials 1500 lf/well x 14 wells - 21,000 lf	Well spacing utilized to estimate road placement, Richardson Cost Estimating Guide
SUB:06.01.01. Groundwater Collection and Control	• Drill/Install Extr/Inject Wells Note: 7 new extraction wells and 7 new injection wells, 233 ft deep, 8 in diameter, screened for 50 ft. Unit cost is assumed to include handling and packaging of contaminated well cuttings, transport to the disposal facility and associated disposal fees. • Allowance for well Head Covers Assume manhole type cover at each well head • Allowance for Well Pumps-50 gpm • Allowance for Controls and Connections at Well Heads • Allowance for Water Level Monitoring Instrumentation • Assume 5 piezometers per extraction well using well points • Allowance for well testing	Modelling, geological reports, and actual costs from the WHC RCRA drilling program Best professional judgement Richardson Cost Estimating Guide, Best professional judgement Best professional judgement Best professional judgement Best professional judgement
SUB:06.01.04. Operations and Maintenance 3,6,9	• Allowance for Well Workover Assume 1 every 3 years for each well for the 12-year lifecycle. Workovers in years 3,6,9 • Allowance for Well Pump Assume 1 pump replacement per extraction well every three years for the 12-year lifecycle. Pump replacement in years 3,6,9.	Best professional judgement Best professional judgement

TASK NUMBER	ASSUMPTIONS	JUSTIFICATION
SUB:06.01.9X. Site Piping	• Allowance for Piping from extraction well to consolidation facility. Assume 1500 lf of double-wall PVC piping per extraction well. 1500 lf/well x 7 wells = 10500 lf • Allowance for leak detection • Allowance for Force Main Discharge Piping Assume 10,500 lf double-wall PVC piping per injection well. 1500lf/well x 7 wells = 10500 lf	Well spacing utilized to estimate flow line length, Best professional judgement
SUB:20.04 Site Restoration	• Includes revegetation at end of project	Best professional judgement
SUB:21.02.02 Demobilize Trailers	• Demobilize field office, storage, and decontamination trailers	Best professional judgement
SUB:21.04.02. Remove Decon Area	• Work to be performed: Remove decontamination area/pad for equipment and vehicles • Crew and Equipment: Fixed Price Contractor: 1 Group 6 Operator, 3 Group 1 Laborers, and 3 Group 2 Laborers Equipment: 1 backhoe, 1 pickup Output: Assumed duration for this activity is 1 crew day.	Best professional judgement
SUB:21.05 Disconnect Temporary Utilities	• Includes disconnecting electricity, telephone, water, and sewer services	Best professional judgement
SUB:21.06 Post-Construction Submittals	• Includes post-construction submittals by fixed-price contractor	Best professional judgement

TASK NUMBER	ASSUMPTIONS	JUSTIFICATION
WHC:02.08.02. Ground Water Analysis	• Assume sampling of 7 monitoring wells on a semiannual basis for the 12-year lifecycle. (14 samples) • Assume monthly performance monitoring of 7 wells for the 12-year lifecycle. (84 samples) - Total samples = 98 • 90% of samples analyzed by mobile lab (90% of 98 = 88) • All on-site samples analyses performed by WHC mobile lab	DOE Cost Meeting
WHC:02.08.03. Take Ground Water Samples	• Assume sampling of 7 monitoring wells on a semiannual basis for the 12-year lifecycle. (14 samples) • Assume 2 Field Technicians for 6 hours on a semiannual basis for the 12-year lifecycle. (24 hrs/yr)	DOE Cost Meeting Best Professional Judgement
WHC:06.03. Hydraulic Control, Yrs 1-12	• Assume WHC QA and safety oversite for the construction project.	Best professional judgement
WHC:06.05. Operation and Maintenance	• Allowance for Electricity Wells: 1266 kW-h/d Assume 24 hr/day x 365 days/yr Total = 462,090 kW-h/yr	Vendor catalogs, vendor quotes
WHC: 13.21.11. Prepare Annual Report (Yr 1)	• Assume 2 FTE's for 6 months per year	HR-3 Cost Workshop
WHC: 13.21.12 Prepare Annual Report (Yrs. 2-12)	• Assume 2 FTE's for 4 months per year	HR-3 Cost Workshop

H AREA ION EXCHANGE

TASK NUMBER	ASSUMPTIONS	JUSTIFICATION
ANA:02.08.02. Ground Water Analysis Yr - 1	• Assume shake-down period with following sampling of treatment system: - First 2 days: Sample each day of influent and effluent (4 samples) - Next 4 weeks: 1 sample per week of influent and effluent (8 samples)	Best professional judgement
	• 1 sample every 2 weeks of the influent and effluent for remainder of year (48 samples/yr)	Best professional judgement
	• Assume sampling of 7 monitoring wells on a semiannual basis for the 5-year lifecycle (14 samples/yr)	Best professional judgement
	• All onsite sample analyses performed by mobile lab	DOE Cost Meeting
	• 10% offsite verification analysis of reduced analyte list with CLP protocol.	DOE Cost Meeting
ANA:02.08.03. Ground Water Analysis Yrs 2-5	• Assume 1 sample every 2 weeks of influent and effluent for the 5-yr lifecycle. (52 samples/yr)	Best professional judgement
	• Assume sampling of 7 monitoring wells on a semiannual basis for the 5-yr lifecycle (14 samples/yr)	Best professional judgement
	• All onsite samples analyses performed by mobile lab	DOE Cost Meeting
	• 10% offsite verification analysis of reduced analyte list with CLP protocol	DOE Cost Meeting
SUB:01.02.02 Mobilize Trailers	• Includes mobilization of field office, storage, and decontamination trailers	Best professional judgement
SUB:01.04.01 Setup Trailers	• Includes setup of field office, storage, and decontamination trailers	Best professional judgement

TASK NUMBER	ASSUMPTIONS	JUSTIFICATION
SUB:01.04.01 Setup Trailers	• Includes setup of field office, storage, and decontamination trailers	Best professional judgement
SUB:01.04.02. Construct Decon Area	• Work to be Performed: Construct decontamination area/pad for equipment and vehicles. • Crew and Equipment Fixed Price Contractor: 1 Group 6 Operator, 3 Group 1 Laborers, and 3 Group 2 Laborers • Output: Assumed duration for this activity is 3 crew days • Allowance for Tank Assume 1000 gal plastic tank for water collection	Best professional judgement
SUB:01.04.03 Site Survey	• Survey for artifacts	Best professional judgement
SUB:01.05 Construct Temporary Utilities	• Includes connections for temporary electricity, telephone, water, and sewer facilities	Best professional judgement
SUB:01.06 Pre-Construction Submittals	• Includes pre-construction submittals by fixed-price contractor	Best professional judgement
SUB:03.03 Earthwork	• Includes dirtwork to prepare site	Best professional judgement
SUB:03.04. Roads/Parking/Curbs/ Walks	• Access Roads to Wells Assume 10 ft wide, native materials	Well spacing utilized to estimate road placement, Richardson Cost Estimating Guide
SUB:03.05. Fencing	• Allowance for Permanent Fencing Assume 7 ft high security fence	Industry standard, Best professional judgement

TASK NUMBER	ASSUMPTIONS	JUSTIFICATION
SUB:06. Groundwater Collection and Control	• Drill/install extraction wells Note: 3 new injection wells, 60 ft deep, 8 in diameter. Unit cost is assumed to include handling and packaging of contaminated well cuttings, transport to the disposal facility, and associated disposal fees. • Allowance for Well Pumps and Installation - 50 GPM • Allowance for Controls and Connections at Well Heads • Allowance for Water Level Monitoring Instrumentation • Assume refurbishing existing wells. • Allowance for Well Head Covers Assume manhole type cover at each well head • Allowance for Well Testing	Modelling, geological reports, and actual costs from WHC RCRA drilling program Richardson Cost Estimating Guide, Best professional judgement Best professional judgement Best professional judgement Best professional judgement Best professional judgement
SUB:06.01.04. Operations and Maintenance 3	• Allowance for Well Workover Assume 1 workover every 3 yrs for each well for the 5-year lifecycle. Workovers in year 3 • Allowance for Well Pump Replacement Assume one pump replacement and installation per well every 3 years for the 5-year lifecycle Replacement in years 3	Best professional judgement Best professional judgement
SUB:06.01.9X. Site Piping	• Allowance for Piping from Well Head to Treatment Plant - double-wall PVC piping • Allowance for Leak Detection • Allowance for Force Main Discharge Piping - single-wall PVC piping	Well spacing utilized to estimate flow line length, Best professional judgement

TASK NUMBER	ASSUMPTIONS	JUSTIFICATION
SUB:12. Chemical Treatment	• Excavate and prepare site for construction Assume a tent structure complete with frame, doors, and roll-up doors.	Vendor quote
	• Ion Exchange Equipment/Staging Includes 1 x 300 gpm treatment system. Resin included in O&M.	Vendor quote, results from treatability study
	• Allowance for Bldg Electrical Includes lighting, fixtures, motor starters, controllers, junction boxes, transformer, chart recorders, annunciators, panels, conduit, and wiring.	Best professional judgement
	• Allowance for Bldg Mechanical Includes equipment installation and connections, controls/instrumentation, interior piping (plastic), floor drains and piping.	Best professional judgement
SUB:20.04 Site Restoration	• Includes revegetation at end of project	Best professional judgement
SUB:21.04. Demobilze Temp Facilities	• Includes removal of decontamination area • Crew and Equipment: Fixed Price Contractor:1 Group 6 Operator, 3 Group 1 Laborer, and 3 Group 2 Laborers • Equipment: 1 backhoe, 1 pickup truck • Output: Assumed duration for this activity is 1 crew day	Best professional judgement
SUB:21.05 Disconnect Temporary Utilities	• Includes disconnecting electricity, telephone, water, and sewer services	Best professional judgement
SUB:21.06 Post-Construction Submittals	• Includes post-construction submittals by fixed-price contractor	Best professional judgement

TASK NUMBER	ASSUMPTIONS	JUSTIFICATION
WHC:02.08.02. Ground Water Analysis Yr - 1	• Assume shake-down period with following sampling of treatment system: - First 2 days: Sample each day of influent and effluent (4 samples) - Next 4 weeks: 1 sample per week of influent and effluent (8 samples)	Best professional judgement, cost meeting
	• 1 sample every 2 weeks of influent and effluent for remainder of year (48 samples/yr)	Best professional judgement
	• 90% of samples analyzed a mobile lab	DOE Cost Meeting
	• HACH kit samples are taken 2 per day for the 5-yr lifecycle plus an additional 48 samples during the shake-down period.	DOE Cost Meeting
WHC:02.08.03. Ground Water Analysis Yr 2 - 5	• Assume 1 sample every 2 weeks of the influent and effluent for the 5-yr lifecycle. (52 samples/yr)	Best professional judgement
	• Assume sampling of 7 monitoring wells on a semiannual basis for the 5-year lifecycle. (14 samples/yr)	DOE Cost Meeting
	• 90% of samples analyzed at mobile lab	DOE Cost Meeting
	• HACH kit samples are taken 2 per day for the 5-yr lifecycle.	DOE Cost Meeting
WHC:02.08.04. Ground Water Monitor Samples	• Assume sampling of 7 monitoring wells on a semiannual basis for the 5-year lifecycle. (14 samples/yr)	DOE Cost Meeting
	• Assume 2 field technicians for 6 hours on a semiannual basis for the 5-year lifecycle. (24 hrs/yr)	Best professional judgement
WHC:12.05.06 Personnel Training	• Includes operator time and allowance to attend 40-hour training	Best professional judgement

TASK NUMBER	ASSUMPTIONS	JUSTIFICATION
WHC:12.05.08 Operations & Maintenance Yrs 1-5	• Treatment facility will be fully staffed with 2 FTE's per shift, 1 shift per day, 7 days per week. (365 days/yr x 8 hrs/day = 2,920 hrs/yr)	Best professional judgement
	• Ion exchange media to be regenerated every 7 days for chromium treatment	Vendor quote, treatability test report results
	• 2 FTE crew will be composed of the following members: 0.25 ea - supervisor 1.00 ea - operator 0.50 - engineering support 0.25 ea - maintenance engineer	
	• Allowance for electricity Wells: 591 kW-hr/d Ion Exchange Plant: 1594 kW-hr/d Assume 24 hrs/day x 365 days/yr Total = 797,318 kW-hr/yr	Vendor catalogs, vendor quotes
	• Ion Exchange Media will not require replacement during the 5-year lifecycle.	Boomsnub data, best professional judgement
	• pH adjustment	Boomsnub data

TASK NUMBER	ASSUMPTIONS	JUSTIFICATION
WHC:12.05.08 Operation and Maintenance	• Disposal Fee for ion exchange media Assume disposal at ERDF for year 5	HR-3 Cost Workshop
WHC:12.05.11. Prepare Annual Report Yr 1	• Assume 2 FTE's for 6 months each year	HR-3 Cost Workshop
WHC:12.05.12. Prepare Annual Report Yrs 2-5	• Assume 2 FTE's for 4 months each year	HR-3 Cost Workshop

This page intentionally left blank.

H AREA REVERSE OSMOSIS

TASK NUMBER	ASSUMPTIONS	JUSTIFICATION
ANA:02.08.02. Ground Water Analysis (YR 1)	• Assume shake-down period with the following sampling schedule for the treatment system: - First 2 days: Samples every four hours of influent and effluent (24 samples) - Next 5 days: 1 sample per day of influent and effluent (10 samples) - Next 7 weeks: 1 sample per week of influent and effluent (14 samples)	Best professional judgement
	• 1 sample per filter change out (1 week) of the influent and effluent for the 12-yr lifecycle (104 samples/yr)	Best professional judgement
	• Assume sampling of 7 monitoring wells on a semiannual basis for the 12-year lifecycle (14 samples/yr) - Total samples = 166	Best professional judgement
	• All on-site samples analyses performed by WHC mobile lab	DOE Cost Meeting
	• 10% off-site verification analysis of reduced analyte list with CLP protocol. (10% of 166 = 17 ea)	DOE Cost Meeting
ANA:02.08.03. Ground Water Analysis (YRS 2-12)	• Assume 1 sample per filter change out (1 week) of the influent and effluent for the 12-yr lifecycle. (104 samples/yr)	Best professional judgement
	• Assume sampling of 7 monitoring wells on a semiannual basis for the 12-year lifecycle (14 samples/yr) - Total Samples = 118	Best professional judgement
	• All on-site sample analyses performed by WHC mobile lab	DOE Cost Meeting
	• 10% off-site verification analysis of reduced analyte list with CLP protocol (10% of 118 = 12)	DOE Cost Meeting
SUB:01.02.02 Mobilize Trailers	• Includes mobilization of field office, storage, and decon trailers	Best professional judgement
SUB:01.04.01. Setup/Construct Temporary Facilities	• Includes setup of field office, storage, and decon trailers	Best professional judgement

TASK NUMBER	ASSUMPTIONS	JUSTIFICATION
SUB:01.04.02. Construct Decon Area	• Work to be performed: Construct decontamination area/pad for equipment and vehicles. • Crew and Equipment • Fixed Price Contractor: 1 Group 6 Operator, 3 Group 1 Laborers, 3 Group 2 Laborers Equipment: 1 backhoe, 1 pickup truck Assumed duration for this activity is 3 crew days. • Allowance for Tank Assume 1000 gal plastic tank for water collection	Best professional judgement
SUB:01.04.03. Site Survey	• Survey site for construction	Best professional judgement
SUB:01.05. Construct Temporary Utilities	• Includes connections for temporary electricity, telephone, water, and sewer services	Best professional judgement
SUB:01.06. Pre-Construction Submittals	• Includes pre-construction submittals by fixed-price contractor	Best professional judgement
SUB:03.03. Earthwork	• Includes dirtwork to prepare site	Best professional judgement
SUB:03.04. Roads/Parking/ Curbs/Walks	• Assume 1500 lf of access road per well. 10 ft wide, native materials 1500 lf/well x 14 wells = 21,000 lf	Well spacing utilized to estimate road placement, Richardson Cost Estimating Guide
SUB:03.05. Fencing	• Allowance for Permanent Fencing Assume 7 ft high security fence	Industry standard, Best professional judgement
SUB:03.06 Electrical Distribution	• Includes pulling power to site	Best professional judgement

TASK NUMBER	ASSUMPTIONS	JUSTIFICATION
SUB:06. Groundwater Collection & . Control	• Drill/Install Extr/Inject Wells Note: 7 new extraction wells and 7 new injection wells, 233 ft deep, 8 in diameter, screened for 50 ft. Unit cost is assumed to include handling and cuttings, transport to the disposal facility, and associated disposal fees. • Allowance for Well Pumps - 50 gpm • Allowance for Water Level Monitoring Instrumentation Assume 5 peizometers per extraction well using well points • Allowance for Well Head Covers Assume manhole type cover at each well head • Allowance for Well Testing	Modelling, geological reports, and actual costs form WHC RCRA Drilling Program Richardson Cost Estimating Guide, Best professional judgement Best professional judgement Best professional judgement
SUB:06.01.04 Operations and Maintenance 3,6,9	• Allowance for Well Workover Assume 1 workover for every 3 yrs. for each well; workovers in years 3,6,9 • Allowance for Well Pump Replacement. Assume 1 pump replacement per extraction well every 3 years; pump replacements in years 3,6,9	Best professional judgement Best professional judgement
SUB:06.01.9X. Site Piping	• Allowance for Piping from Well Head to Treatment Plant Assume 1500 lf of double-wall PVC piping per extraction well. 1500 lf/well x 7 wells = 10,500 lf • Allowance for Force Main Discharge Piping Assume 1500 lf of single-wall PVC for each injection well. 1500 lf/well x 7 wells - 10,500 lf	Well spacing utilized to estimate flow line length, Best professional judgement

TASK NUMBER	ASSUMPTIONS	JUSTIFICATION
SUB:13.21.04. Construction of Permanent Plant	• Excavate and Install Building Foundation • Install Butler Building Assume a prefabricated heated building complete with frame, doors, roll up doors, gutters, insulation, and roof vent. • Reverse Osmosis Equipment/Staging Includes 1 - 350 gpm treatment system, 225 psi inlet pressure, 10% reject • Vapor Recompression Evaporator Capacity = 350 gpm x 0.1 = 35 gpm, includes startup boiler, 2% reject • Rotary Drum Filter/Dryer Liquid loading: 350 gpm x 0.1 x 0.02 = 0.7 gpm = 350 lbs/hr Drying area = 35 sf • Steam Generator Evaporate 0.7 gpm = 350 lbs/hr 600,000 BTU • Allowance for Bldg Electrical Includes lighting, fixtures, motor starters, controllers, junction boxes, transformer, chart recorders, annunciators, panels, conduit, and wiring. • Allowance for Bldg Mechanical Includes equipment installation and connections, controls/instrumentation, interior piping (plastic), floor drains and piping, and HVAC.	Best professional judgement Vendor quote Vendor quote Richardson Cost Estimating Guide Vendor catalog Best professional judgement Best professional judgement
SUB: 20.04 Site Restoration	• Includes revegetation at end of project	Best professional judgement
SUB: 21.02.02 Demobilization	• Demobilize field office, storage, and decontamination trailers	Best professional judgement
SUB: 21.04.02. Remove Decon Area-Yr 12	• Includes removal of decontamination area • Crew and Equipment: Fixed Price Contractor:1 Group 6 Operator, 3 Group 1 Laborers, and 3 Group 2 Laborers Equipment: 1 backhoe, 1 pickup Output: Assumed duration for this activity is 1 crew day	Best professional judgement

TASK NUMBER	ASSUMPTIONS	JUSTIFICATION
SUB 21.05 Disconnect Temporary Utilities	• Includes disconnecting electricity, telephone, water, and sewer services.	Best professional judgement
SUB 21.06 Post-Construction Submittals	• Includes post-construction submittals by fixed-price contractor	Best professional judgement
WHC:02.08.02. Ground Water Analysis-Yr 1	• Assume shake-down period with the following sampling of treatment system: - First 2 days: Sample every four hours of influent and effluent (24 samples) - Next 5 days: 1 sample per day of influent and effluent (10 samples) - Next 7 weeks: 1 sample per week of influent and effluent (14 samples)	Best professional judgement, cost meeting
	• 1 sample per filter change out (1 week) of the influent and effluent for the 12-yr lifecycle (104 samples/yr)	Best professional judgement
	• Assume sampling of 7 monitoring wells on a semiannual basis for the 12-year lifecycle (14 samples/yr) - Total samples = 166	Best professional judgement
	• 90% of samples for analysis at mobile lab (90% of 166 = 149)	
	• HACH kit samples are taken 1 per shift for the 12-yr lifecycle plus an additional 48 samples during the shake-down period. (1143 samples)	DOE cost meeting
	• HACH Kit Replacement Assume 1 per yr	DOE cost meeting

TASK NUMBER	ASSUMPTIONS	JUSTIFICATION
WHC:02.08.03. Ground Water Analysis-Yrs 2-12	• 1 sample per filter change out (1 week) of the influent and effluent for the 12-yr lifecycle (104 samples/yr)	Best professional judgement
	• Assume sampling of 7 monitoring wells on a semiannual basis for the 12-year lifecycle (14 samples/yr) - Total samples = 118	DOE cost meeting
	• 90% of samples for analysis at mobile lab (90% of 118 = 106)	
	• HACH kit samples are taken 1 per shift for the 12-yr lifecycle (1143 samples)	DOE cost meeting
	• WHC HACH kit Replacement Assume 1 per yr	DOE cost meeting
WHC:02.08.04. Ground Water Monitor Samples	• Assume sampling of 7 monitoring wells on a semiannual basis for the 12-year lifecycle. (14 samples/yr)	DOE cost meeting
	• Assume 2 field technicians for 6 hours on a semiannual basis for the 12-year lifecycle. (24 hrs/yr)	Best professional judgement
WHC:13.21.06. Personnel Training	• Note: This account to allow for operator time and an allowance for 40 hour training course	Best professional judgement
WHC:13.21.08. Operation and Maint-Yrs 1-12	• Treatment facility will be fully staffed with 2 FTE's per shift, 3 shifts per day, 7 days per week. (365 days/year x 24 hrs/day = 8760 hrs)	Best professional judgement
	• Reverse Osmosis filters will be replaced every week for the 12-year lifecycle.	Best professional judgement
	• 2 FTE crew will be composed of the following members: 0.25 ea - supervisor 1.00 ea - operator 0.50 ea - TP tech support 0.25 ea - maintenance supervisor	

TASK NUMBER	ASSUMPTIONS	JUSTIFICATION
WHC:13.21.08. Operation and Maint-Yrs 1-12 (Continued)	• Allowance for Electricity Wells: 1266 kW-hr/d RO System: 1382 kW-hr/d Recompr Evap: 4032 kW-hr/d Rotary Filter/Drum: 4213 kW-hr/d Assume 24 hrs/day x 365 days/yr Total = 3,975,945 kW-hr/yr	Vendor catalogs, vendor quotes
	• RO System Chemicals Includes scale inhibitors, $0.29/1000 gal 350 gpm x 1440 m/d x 365 d/y = 184 MMgpy	Vendor quote
	• Reverse Osmosis Filter Replacement Assume replacement of 2 filters on a weekly basis for the 12-year lifecycle. (52 wk/yr x 2 filters/wk)	Best professional judgement
	• Disposal Fee for Reverse Osmosis Filters Assume disposal at ERDF for years 1 - 12 of the 12-year lifecycle. Assume each filter to be 40 cu ft.	HR-3 cost workshop
	• Disposal Fee - Evaporation Cake 350 gpm x 325 ppm = 22 cf/day 22 cf/day x 365 days = 8030 cf/year	Best professional judgement
	Assume 50% volume increase to stabilize evaporation cake 1.5 x 8030 cf/yr = 12,045 cf/yr	HR-3 Cost Workshop
	• Allowance for Water Usage. Assume 1000 gal per month usage for the 12 year lifecycle	Best professional judgement
WHC:13.21.11. Prepare Annual Report (Yr-1)	• Assume 2 FTE's for 6 months each year	HR-3 Cost Workshop
WHC:13.21.12. Prepare Annual Report (Yrs 2-12)	• Assume 2 FTE's for 4 months each year	HR-3 Cost Workshop

SECTION 1.3 COST SUMMARY TABLES

Cost Summary for D/DR Area			Cost[b]						
Cost Element			Type		Year(s) Applicable	Institutional Controls/ Continued Current Actions	Vertical Barrier (Sheet Pile)	Pump and Treat with Ion Exchange	Pump and Treat with Reverse Osmosis
			CAP	O&M					
ANA: Off-Site Analytical Services									
ANA:02	Monitoring, Sampling, and Analysis	Offsite Yr 1		x	1	4210	42,100	33,680	71,570
		Offsite Yrs 2-12		x	2-12	4210	42,100	29,470	50,520
SUB: Fixed Price Contractor									
SUB:01	Mobilization & Preparatory		x		0	-	37,810	29,430	37,970
SUB:03	Site Work		x		0	-	27,910	72,860	87,500
SUB:06	Groundwater Collection and Control	Drilling	x		0	-	282,680	690,000	1,393,540
		O&M 3,6,9		x	3,6,9	-	59,110	180,000	178,060
		Piping	x		0	-	145,190	446,960	389,680
		Sheet Pile	x		0	-	10,525,290	-	-
SUB:12	Chemical Treatment		x		0	-	-	1,310,000	-
SUB:13	Physical Treatment		x		0	-	-	-	1,383,220
SUB:20	Site Restoration		x		12	-	12,850	10,000	12,900
SUB:21	Demobilization		x		12	-	19,350	15,060	19,430
WHC:Westinghouse Hanford Company									
WHC:02	Monitoring, Sampling, & Analysis	Yr 1		x	1	5860	2300	28,080	60,410
		Yrs 2-12		x	2-12	5860	-	25,230	43,210
		Yrs 1-12		x	1-12	-	35,860	660	660

Cost Summary for D/DR Area			Cost[b]						
Cost Element			Type		Year(s) Applicable	Institutional Controls/ Continued Current Actions	Vertical Barrier (Sheet Pile)	Pump and Treat with Ion Exchange	Pump and Treat with Reverse Osmosis
			CAP	O&M					
WHC:06	Groundwater Collection and Control	Yr 1		x	1	-	2300	-	-
		Yrs 1-12		x	1-12	-	2140	-	-
WHC:12	Chemical Treatment	Training Yr 1		x	1	-	-	6,900	-
		O&M Yrs 1-12		x	1-12	-	-	314,930	-
		Annual Rpt Yr 1		x	1	90,150	90,150	90,150	-
		Annual Rpt Yrs 2-12		x	2-12	90,150	60,070	60,070	-
WHC:13	Physical Treatment[a]	Training Yr 1		x	1	-	-	-	6900
		O&M Yrs 1-12		x	1-12	-	-	-	1,007,500
		Annual Rpt Yr 1		x	1	-	-	-	90,150
		Annual Rpt Yrs 2-12		x	2-12	-	-	-	60,070
Miscellaneous	Overhead			x	1-12	-	136,906	43,610	42,977
	Profit			x	1-12	-	55,594	19,803	19,515
	Bond			x	1-12	-	4458	2,195	1811
	B&O Tax			x	1-12	-	4331	1,388	1365
	Material/Supply MPR			x	1-12	-	-	348	4572
	Subcontractor MPR			x	1-12	-	67,587	21,646	21,306
	Project Management/Construction Management			x	1-12	1200	151,397	54,353	62,836

Cost Summary for D/DR Area			Cost[b]					
Cost Element			Type		Year(s) Applicable	Institutional Controls/ Continued Current Actions	Vertical Barrier (Sheet Pile)	Pump and Treat with Ion Exchange	Pump and Treat with Reverse Osmosis
			CAP	O&M					
	General & Admin/Common Support Pool			x	1-12	2347	295,980	106,258	122,844
	Contingency			x	1-12	4164	511,069	184,878	215,166
	Total Miscellaneous					7711	1,227,322	434,479	492,392
					SUMMARY				
	Capital	Year 0				0	11,018,880	2,549,250	3,291,910
		Year 12				0	32,200	25,060	32,330
	Annual O&M	Year 1				107,931	1,402,172	907,713	1,729,582
		Years 2,4,5,7 8,10,11				107,931	1,367,492	806,417	1,654,352
		Year 12						807,583	
		Years 3,6,9				107,931	1,426,602	986,417	1,832,412
	Present Worth					956,603	23,323,326	10,213,509	18,445,702

(a) For Institutional Controls/Continued Current Actions and Vertical Barrier (Sheet Pile) = Annual Report
(b) Costs for task/subtask/sub-subtask elements are obtained from the Contract Cost column in the Level 5 Project Owner Summaries (MCACES Cost Model Runs-Section 1.4). Yearly Miscellaneous Costs are obtained by taking 1/12 of the individual line-item Miscellaneous Costs from the Total Cost column of the Level 1 Project Direct Summaries (12 years is the project duration).
(c) Pump and Treat with Ion Exchange option was run for a 12- and 5-year project duration. Costs shown in this table represent the 12-year duration.
CAP Capital
O&M Operation & Maintenance

Cost Summary for H Area			Cost[b]						
Cost Element			Type		Year(s) Applicable	Institutional Controls/ Continued Current Actions	Hydraulic Control	Pump and Treat with Ion Exchange	Pump and Treat with Reverse Osmosis
			CAP	O&M					
ANA: Off-Site Analytical Services									
ANA:02	Monitoring, Sampling, and Analysis	Offsite Yr 1		x	1	4210	42,100	33,680	71,570
		Offsite Yrs 2-12		x	2-12	4210	42,100	29,470	50,520
SUB: Fixed Price Contractor									
SUB:01	Mobilization & Preparatory		x		0	-	37,850	29,430	37,930
SUB:03	Site Work		x		0	-	68,850	50,950	95,610
SUB:06	Groundwater Collection and Control	Drilling	x		0	-	3,297,500	301,000	3,304,370
		O&M 3,6,9		x	3,6,9	-	207,110	193,000	207,540
		Piping	x		0	-	492,680	264,370	453,100
SUB:12	Chemical Treatment		x		0	-	-	1,970,000	-
SUB:13	Physical Treatment		x		0	-	-	-	3,270,340
SUB:20	Site Restoration		x		12	-	12,860	10,000	12,890
SUB:21	Demobilization		x		12	-	19,370	15,060	19,410
WHC:Westinghouse Hanford Company									
WHC:02	Monitoring, Sampling, & Analysis	Yr 1		x	1	5860	35,860	28,080	60,410
		Yrs 2-12		x	2-12	5860	35,860	25,230	43,210
		Yrs 1-12		x	1-12	-	-	660	660

Cost Summary for H Area			Cost[b]						
Cost Element			Type		Year(s) Applicable	Institutional Controls/ Continued Current Actions	Hydraulic Control	Pump and Treat with Ion Exchange	Pump and Treat with Reverse Osmosis
			CAP	O&M					
WHC:06	Groundwater Collection and Control	Yr 1		x	1	-	18,480	-	-
		Yrs 2-12		x	2-12	-	18,480	-	-
WHC:12	Chemical Treatment	Training Yr 1		x	1	-	-	6900	-
		O&M Yrs 1-12		x	1-12	-	-	450,060	-
		Annual Rpt Yr 1		x	1	-	-	90,150	-
		Annual Rpt Yrs 2-12		x	2-12	-	-	60,070	-
WHC:13	Physical Treatment[a]	Training Yr 1		x	1	-	-	-	6900
		O&M Yrs 1-12		x	1-12	-	-	-	1,222,100
		Annual Rpt Yr 1		x	1	90,150	90,150	-	90,150
		Annual Rpt Yrs 2-12		x	2-12	90,150	60,070	-	60,070
Miscellaneous	Overhead			x	1-12	-	50,911	44,868	90,907
	Profit			x	1-12	-	22,161	20,374	41,279
	Bond			x	1-12	-	2051	2,243	3231
	B&O Tax			x	1-12	-	1612	1,428	2885
	Material/Supply MPR			x	1-12	-	-	929	4572
	Subcontractor MPR			x	1-12	-	25,162	22,270	45,024
	Project Management/Construction Management			x	1-12	1200	58,034	57,503	117,812

Cost Summary for H Area			Cost[b]					
Cost Element			Type		Year(s) Applicable	Institutional Controls/ Continued Current Actions	Hydraulic Control	Pump and Treat with Ion Exchange	Pump and Treat with Reverse Osmosis
			CAP	O&M					
	General & Admin/Common Support Pool			x	1-12	2347	113,457	112,420	230,322
	Contingency			x	1-12	4164	196,662	195,490	400,303
Total Miscellaneous					1-12	7711	470,050	457,525	936,335
SUMMARY									
	Capital	Year 0				0	3,896,880	2,615,750	7,161,350
		Year 12				0	32,230	25,060	32,300
	Annual O&M	Year 1				107,931	656,640	1,063,287	2,388,125
		Years 2,4,5,7 8,10,11				107,931	626,560	867,223	2,312,895
		Year 12						870,331	
		Years 3,6,9				107,931	833,670	1,060,223	2,520,435
	Present Worth					956,603	9,963,688	10,939,587	28,218,323

(a) For Institutional Controls/Continued Current Actions and Hydraulic Control = Annual Report

(b) Costs for task/subtask/sub-subtask elements are obtained from the Contract Cost column of the level 5 Project Owner Summaries (MCACES Cost Model Runs-Section 1.4). Yearly Miscellaneous Costs are obtained by taking 1/12 of the individual line-item Miscellaneous Costs from the Total Cost Column of the Level 1 Project Direct Summaries (12 years is the project duration).

(c) Pump and Treat with Ion Exchange options was run for a 12- and 5-year project duration. Costs shown in this table represent the 12-year duration.

CAP Capital

O&M Operation & Maintenance

THIS PAGE INTENTIONALLY
LEFT BLANK