9413358.0640

0040911

Mr. John Grantham
State of Washington
Department of Ecology
Nuclear & Mixed Waste Program
P. O. Box 47600
Olympia, WA 98504-7600

FLUOR DANIEL, INC.

Date: May 6, 1994

Reference: Hanford Waste Vitrification Plant
DOE Contract DE-AC06-86RL10838
Fluor Contract 8457

Transmittal No.: WDOE-922

Dear Mr. Grantham:

TRANSMITTAL

We enclose 2 copy of the items listed below. These are issued per US-DOE request.

Response due to Fluor: N/A
Responds to: A170 PACKAGE

NUMBER	REV	DATE	TITLE
DCN - #0188	0	05/06/94	DCN TITLE: **ADD PAD MOUNTED GEAR TO PRIMARY 13.8 KV FEEDER FOR OAB/TOB BLDG.** "APPROVED FOR CONSTRUCTION"

Reference: FRP-1439, FUP-857
Distribution:
R. L. Long: DOE-RL, w/0
TWP/AME Corresp Cntrl Cntr, MSIN A5-10 (A170 PACKAGE), w/0
P. Felise, WHC-RL (MSIN G6-06), w/1
Environmental Data Management Center (MSIN H6-08), w/1
D. Duncan, US EPA, Region X, w/0
M.D. Talbot, WHC -w/0

Very truly yours,

Nazy Eshraghi for/

R.S. Poulter
Project Director

RSP:KKS:nre

MAY 1994
RECEIVED
EPIC

9513358.0641

FLUOR DANIEL

US DEPARTMENT OF ENERGY
HANFORD WASTE VITRIFICATION PLANT

DESIGN CHANGE NOTICE

DCN - 0188	REV 0	PAGE 1 OF 13
DCN TITLE ADD PAD MOUNTED GEAR TO PRIMARY 13.8 kV FEEDER FOR OAB/TOB BLDG		DATE INITIATED 05/05/94
		PACKAGE NO. A170

SECTION 1: DESCRIPTION OF CHANGE

ADD PAD MOUNTED GEAR NORTH OF MH-P51

FOR PRIMARY 13.8 kV FEEDER FOR OAB/TOB BUILDING.

CAUSE OF CHANGE

- ☐ Field Change Request
- ☐ Supplier Disposition
- ☐ Deficiency Report
- ☐ Design Development
- ☒ Change Request
- ☐ Other: _____

HWVP-1109
Initiating Document(s)

FOR LIST OF AFFECTED DOCUMENTS, SEE SECTIONS 6 AND 7.

SECTION 2: EVALUATION

ARE ANY OF THE FOLLOWING AFFECTED?			IF "YES" REVIEW REQUIRED BY:	REVIEWER COMMENTS/SIGNATURE/DATE
WAPA	☒ NO	☐ YES		
QUALITY LEVEL I	☒ NO	☐ YES		
SAFETY CLASS 1 OR 2	☒ NO	☐ YES		
SYSTEMS ANALYSES	☒ NO	☐ YES		
MULTI-DISCIPLINE	☐ NO	☒ YES	STRUCTURAL	NO COMMENTS D. Snyder 5/6/94

DCN Evaluated by: Systems Patricia Grant 5/6/94 ADM B. Cimbrin Others _____

SECTION 3: APPROVED FOR CONSTRUCTION

Originator: Shane J. L. West / [illegible] 5/6/94 — Date

Project/Resident Engineer: P. J. Bedell by B. Cimbrin 5/6/94 — Date

SECTION 4: CONCURRENCE

Project Management	Date
Systems	Date
Independent Safety	Date
Quality Assurance	Date
Configuration Management	Date

SECTION 5: RELEASED FOR CONSTRUCTION

PE STAMP REQUIRED? ☐ NO ☑ YES

WHC	Date
UCAT	Date
DOE	Date

COMMENTS:

9513358.0642

FLUOR DANIEL

US DEPARTMENT OF ENERGY
HANFORD WASTE VITRIFICATION PLANT

DESIGN CHANGE NOTICE

DCN	REV	DISCIPLINE	PKG. NO.	PAGE
DCN - 0188	0	ELECTRICAL	A170	2

PREPARED BY: H. SPRUENGLI Date: 05/05/94

DISCIPLINE ENGINEER: Y. SHANE Date: 05/05/94

SECTION 6: CONSTRUCTION DOCUMENTS AFFECTED

DOCUMENT NUMBER	SHT/ PAGE	REV NO	DOCUMENT NAME	INCLD Y/N	DESCRIPTION OF CHANGE
SPECIFICATION B-595-C-A170 -16111 ATTACHMENT A	1,2	0	CONDUIT SCHEDULE	Y	ADDED CONDUITS TO & FROM MH-P51 TO PAD MOUNTED GEAR
ATTACHMENT B	1	0	CABLE SCHEDULE	Y	ADDED CABLES TO PAD MOUNTED GEAR
H-2-122126	1	3	ELECTRICAL CONSTRUCTION UTILITIES OVERALL DISTRIBUTION PLAN	Y	ADDED PAD MOUNTED GEAR
H-2-122134	1	3	ELECTRICAL CONSTRUCTION UTILITIES DETAILS	Y	ADDED CONDUIT ENTRANCE TO MH-P51. REVISED ONE LINE. ADDED INSTALLATION DIAGRAM
H-2-122134	3	3	ELECTRICAL CONSTRUCTION UTILITIES DETAILS	Y	ADDED PAD WITH STUB-UPS FOR PAD MOUNTED GEAR

SECTION 7: NON-CONSTRUCTION DOCUMENTS AFFECTED

This section references affected items such as P&IDs or calculations/analyses, but they are generally not included in DCN package.

DOCUMENT NUMBER	SHT/ PAGE	REV NO	DOCUMENT NAME	DESCRIPTION OF CHANGE
NONE				

9513358.0643

FLUOR DANIEL

US DEPARTMENT OF ENERGY
HANFORD WASTE VITRIFICATION PLANT

DESIGN CHANGE NOTICE

DCN	REV	DISCIPLINE	PKG. NO.	PAGE
0188	0	STRUCTURAL	A170	3

PREPARED BY: H. SPRUENGLI Date: 05/06/94

DISCIPLINE ENGINEER: D. SAYLOR Date: 05/06/94

SECTION 6: CONSTRUCTION DOCUMENTS AFFECTED

DOCUMENT NUMBER	SHT/ PAGE	REV NO	DOCUMENT NAME	INCLD Y/N	DESCRIPTION OF CHANGE
H-2-118063	1	2	DISCONNECT SWITCH PAD FOUNDATION	Y	ADDED PAD FOUNDATION FOR PAD MOUNTED GEAR NORTH OF MH-P51

SECTION 7: NON-CONSTRUCTION DOCUMENTS AFFECTED

This section references affected items such as P&IDs or calculations/analyses, but they are generally not included in DCN package.

DOCUMENT NUMBER	SHT/ PAGE	REV NO	DOCUMENT NAME	DESCRIPTION OF CHANGE

Electrical Conduit Schedule for Package Number A170

REV NO.	BLDG NO.	RACEWY NO.	FOR	FROM		TO		RACEWAY DATA			INCLUDED CABLE NOs.
				EQUIPMENT NUMBER OR LOCATION	PLAN DRAWING	EQUIPMENT NUMBER OR LOCATION	PLAN DRAWING	SIZE	TYPE	MATERIAL OF CONSTR	
0	00	P8300	POWER	DD-32A-099	DCN-0090	MH-P50	DCN-0090	4"	COND	PVC	P8300A,B,C
0	00	P8300A	POWER	MH-P50	DCN-0090	MH-P51	DCN-0090	4"	COND	PVC	P8300A,B,C
0	00	P8300B	POWER	MH-P51	DCN-0090	XT-32A-099	DCN-0090	4"	COND	PVC	P8304A,B,C DCN-0188
0	00	P8301	SPARE	POLE 105	DCN-0090	MH-P50	DCN-0090	4"	COND	PVC	
0	00	P8301A	SPARE	MH-P50	DCN-0090	MH-P51	DCN-0090	4"	COND	PVC	
0	00	P8301B	SPARE	MH-P51	DCN-0090	XT-32A-099	DCN-0090	4"	COND	PVC	
0	00	P8302	SPARE	POLE 105	DCN-0090	MH-P50	DCN-0090	4"	COND	PVC	
0	00	P8302A	SPARE	MH-P50	DCN-0090	MH-P51	DCN-0090	4"	COND	PVC	
0	00	P8302B	SPARE	MH-P51	DCN-0090	XT-32A-099	DCN-0090	4"	COND	PVC	
0	00	P8303	POWER	XT-32A-099	DCN-0090	SB-32A-099	DCN-0090	5"	COND	RGS	P8301A,B,C,G,N
0	00	P8304	POWER	XT-32A-099	DCN-0090	SB-32A-099	DCN-0090	5"	COND	RGS	P8302A,B,C,G,N
0	00	P8305	SPARE	XT-32A-099	DCN-0090	SB-32A-099	DCN-0090	5"	COND	RGS	
0	00	P8306	SPARE	XT-32A-099	DCN-0090	SB-32A-099	DCN-0090	5"	COND	RGS	
0	00	P8307	POWER	XT-32A-099	DCN-0090	SB-32A-099	DCN-0090	5"	COND	RGS	P8303A,B,C,G,N
0	00	P8308	SPARE	SB-32A-099	DCN-0090	STUB-OUT	DCN-0090	5"	COND	RGS	
0	00	P8309	SPARE	SB-32A-099	DCN-0090	STUB-OUT	DCN-0090	5"	COND	RGS	
0	00	P8310	SPARE	SB-32A-099	DCN-0090	STUB-OUT	DCN-0090	5"	COND	RGS	

9513358.0944

DCN-0188
PAGE 4 OF 13

Electrical Conduit Schedule for Package Number A170

REV NO.	BLDG NO.	RACEWY NO.	FOR	FROM		TO		RACEWAY DATA			INCLUDED CABLE NOs.
				EQUIPMENT NUMBER OR LOCATION	PLAN DRAWING	EQUIPMENT NUMBER OR LOCATION	PLAN DRAWING	SIZE	TYPE	MATERIAL OF CONSTR	
0	00	P8311	SPARE	SB-32A-099	DCN-0090	STUB-OUT	DCN-0090	5"	COND	RGS	
0	00	P8312	SPARE	SB-32A-099	DCN-0090	STUB-OUT	DCN-0090	5"	COND	RGS	
0	00	P8313	SPARE	SB-32A-099	DCN-0090	STUB-OUT	DCN-0090	5"	COND	RGS	
0	00	P8314	SPARE	SB-32A-099	DCN-0090	STUB-OUT	DCN-0090	5"	COND	RGS	
0	00	P8315	SPARE	SB-32A-099	DCN-0090	STUB-OUT	DCN-0090	5"	COND	RGS	
0	00	P8316	SPARE	SB-32A-099	DCN-0090	STUB-OUT	DCN-0090	5"	COND	RGS	
0	00	P8317	SPARE	SB-32A-099	DCN-0090	STUB-OUT	DCN-0090	2"	COND	RGS	
0	00	P8318	SPARE	SB-32A-099	DCN-0090	STUB-OUT	DCN-0090	2"	COND	RGS	
0	00	P8319	SPARE	SB-32A-099	DCN-0090	STUB-OUT	DCN-0090	2"	COND	RGS	
0	00	G8320	SPARE	SB-32A-099	DCN-0090	STUB-OUT	DCN-0090	2"	COND	RGS	
1	00	P8321	SPARE	MH-P51	DCN-0188	DD-32A-100	DCN-0188	4"	COND	PVC	
1	00	P8322	POWER	MH-P51	DCN-0188	DD-32A-100	DCN-0188	4"	COND	PVC	P8300A,B,C
1	00	P8323	POWER	DD-32A-100	DCN-0188	MH-P51	DCN-0188	4"	COND	PVC	P8304A,B,C
1	00	P8324	SPARE	DD-32A-100	DCN-0188	MH-P51	DCN-0188	4"	COND	PVC	

DCN-0188

DCN-0188
PAGE 5 OF 13

9513358.0645

Electrical Cable Schedule for Package Number A170

DCN-0188

REV NO.	BLDG NO.	CABLE NO.	FROM		TO		CABLE DATA				ONE LINE DIAGRAM NO. H-2-	VIA
			EQUIPMENT NUMBER OR LOCATION	CONNECTION DRAWING	EQUIPMENT NUMBER OR LOCATION	CONNECTION DRAWING	SYS VOLT	NO. COND	SIZE	CABLE CODE		
0	00	P8300A	DD-32A-099		DD-32A-100		15 kV	1	1/0	FS03		P8300,P8300A,P8322
0	00	P8300B	DD-32A-099		DD-32A-100		15 kV	1	1/0	FS03		P8300,P8300A,P8322
0	00	P8300C	DD-32A-099		DD-32A-100		15 kV	1	1/0	FS03		P8300,P8300A,P8322
0	00	P8301A	XT-32A-099		SB-32A-099	DCN-0188	600V	1	750	AZ07		P8303
0	00	P8301B	XT-32A-099		SB-32A-099		600V	1	750	AZ08		P8303
0	00	P8301C	XT-32A-099		SB-32A-099		600V	1	750	AZ09		P8303
0	00	P8301N	XT-32A-099		SB-32A-099		600V	1	750	AZ06		P8303
0	00	P8301G	XT-32A-099		SB-32A-099		600V	1	4/0	AV02		P8303
0	00	P8302A	XT-32A-099		SB-32A-099		600V	1	750	AZ07		P8304
0	00	P8302B	XT-32A-099		SB-32A-099		600V	1	750	AZ08		P8304
0	00	P8302C	XT-32A-099		SB-32A-099		600V	1	750	AZ09		P8304
0	00	P8302N	XT-32A-099		SB-32A-099		600V	1	750	AZ06		P8304
0	00	P8302G	XT-32A-099		SB-32A-099		600V	1	4/0	AV02		P8304
0	00	P8303A	XT-32A-099		SB-32A-099		600V	1	750	AZ07		P8307
0	00	P8303B	XT-32A-099		SB-32A-099		600V	1	750	AZ08		P8307
0	00	P8303C	XT-32A-099		SB-32A-099		600V	1	750	AZ09		P8307
0	00	P8303N	XT-32A-099		SB-32A-099		600V	1	750	AZ06		P8307
0	00	P8303G	XT-32A-099		SB-32A-099		600V	1	4/0	AV02		P8307
0	00	P8304A	DD-32A-100		XT-32A-099		15kV	1	1/0	FS03		P8323 P8300B
0	00	P8304B	DD-32A-100		XT-32A-099		15kV	1	1/0	FS03		P8323 P8300B
0	00	P8304C	DD-32A-100		XT-32A-099		15kV	1	1/0	FS03		P8323 P8300B

DCN-0188

A170-16111

DCN-0188
PAGE 6 OF 13

9513358.0647

DRAWING LIMIT N 43660 MATCH LINE N 43660 DWG H-2-122126 SH 2

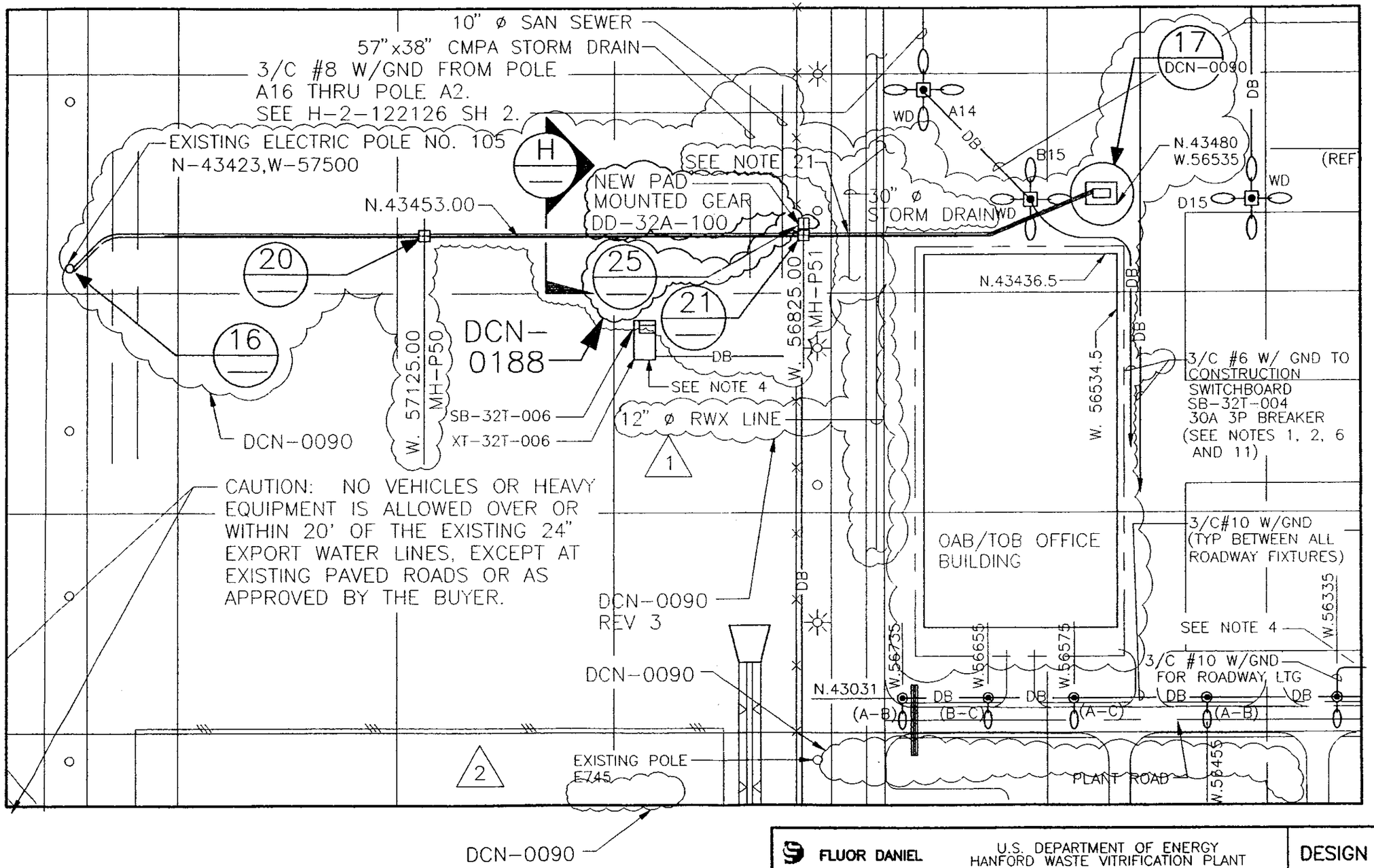

FLUOR DANIEL	U.S. DEPARTMENT OF ENERGY HANFORD WASTE VITRIFICATION PLANT	DESIGN CHANGE NOTICE		
DESCRIPTION OF CHANGE: ADD PAD MOUNTED GEAR TO PRIMARY 13.8 kV FEEDER FOR OAB/TOB BUILDING		BASE DOC. NO. H-2-122126 SHT/PG. 1 REV. 3 CR NO. HWVP-1109 DISCIPLINE: ELECTRICAL		
PREPARED BY: H. Ahuerd	DATE: 05/06/94	DCN - 0188	REV. 0	PAGE 7
DISCIPLINE ENGINEER: Justin Crane	DATE: 05/06/94			

HS

9513358.0648

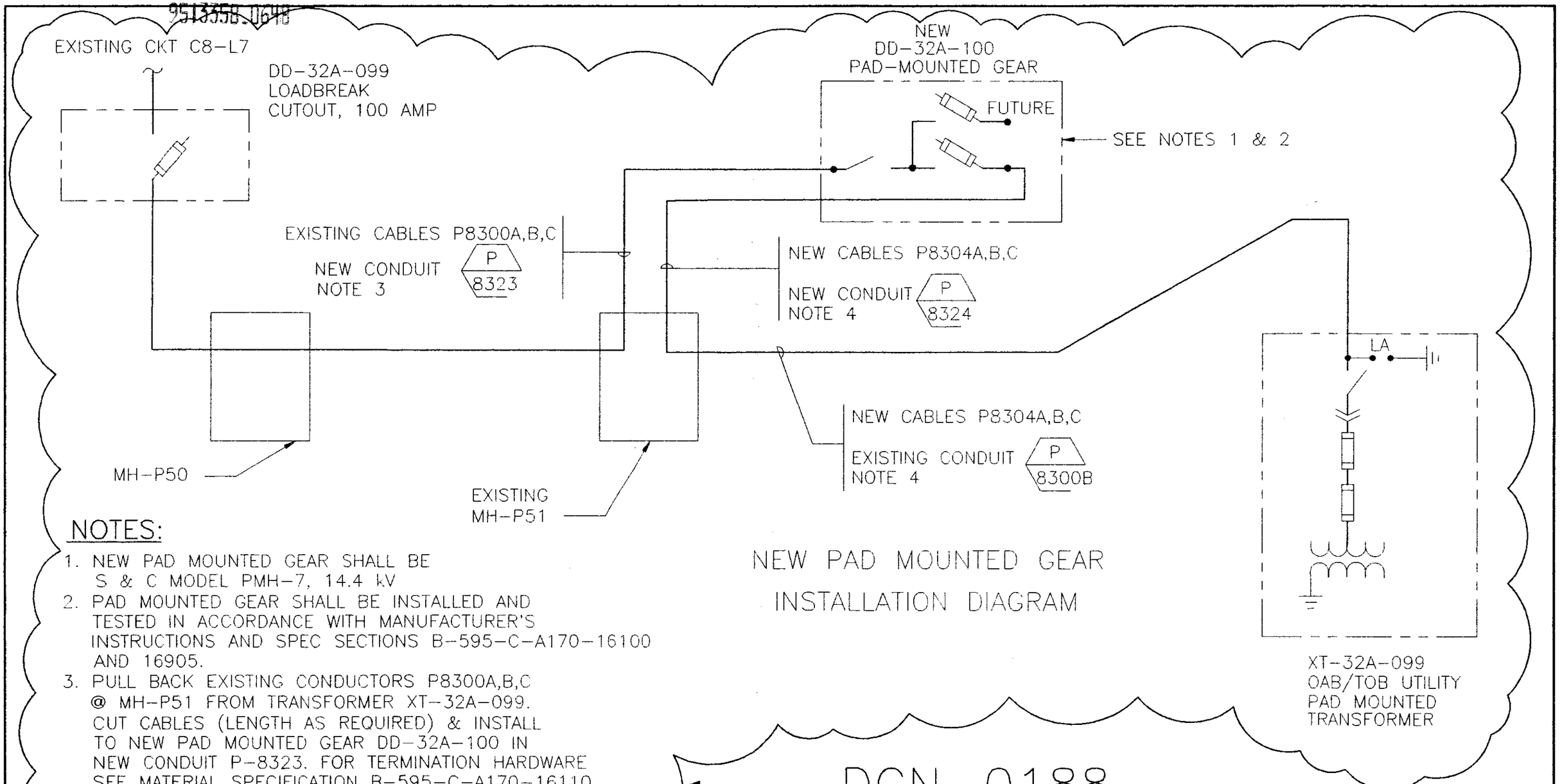

NEW PAD MOUNTED GEAR
INSTALLATION DIAGRAM

NOTES:

1. NEW PAD MOUNTED GEAR SHALL BE S & C MODEL PMH-7, 14.4 kV
2. PAD MOUNTED GEAR SHALL BE INSTALLED AND TESTED IN ACCORDANCE WITH MANUFACTURER'S INSTRUCTIONS AND SPEC SECTIONS B-595-C-A170-16100 AND 16905.
3. PULL BACK EXISTING CONDUCTORS P8300A,B,C @ MH-P51 FROM TRANSFORMER XT-32A-099. CUT CABLES (LENGTH AS REQUIRED) & INSTALL TO NEW PAD MOUNTED GEAR DD-32A-100 IN NEW CONDUIT P-8323. FOR TERMINATION HARDWARE SEE MATERIAL SPECIFICATION B-595-C-A170-16110.
4. INSTALL NEW CONDUCTORS P8304A,B,C FROM NEW PAD MOUNTED GEAR DD-32A-100 TO TRANSFORMER XT-32A-099 VIA MANHOLE MH-P51
5. CONDUIT & CABLE INSTALLATION SHALL BE PER SPECIFICATION B-595-C-A170-16100.
6. CONDUCTORS P8300A,B,C AND P8304A,B,C SHALL BE TESTED AFTER INSTALLATION IN ACCORDANCE WITH SPECIFICATION SECTION B-595-C-A170-16905.

DCN-0188

FLUOR DANIEL — U.S. DEPARTMENT OF ENERGY, HANFORD WASTE VITRIFICATION PLANT		DESIGN CHANGE NOTICE
DESCRIPTION OF CHANGE: ADD PAD MOUNTED GEAR TO PRIMARY 13.8 kV FEEDER FOR OAB/TOB BUILDING		BASE DOC. NO. H-2-122134; SHT/PG. 1; REV. 3; CR NO. HWVP-1109; DISCIPLINE: ELECTRICAL
PREPARED BY: [signature]	DATE: 05/06/94	
DISCIPLINE ENGINEER: [signature]	DATE: 05/06/94	DCN - 0188; REV. 0; PAGE 8

9513358.0640

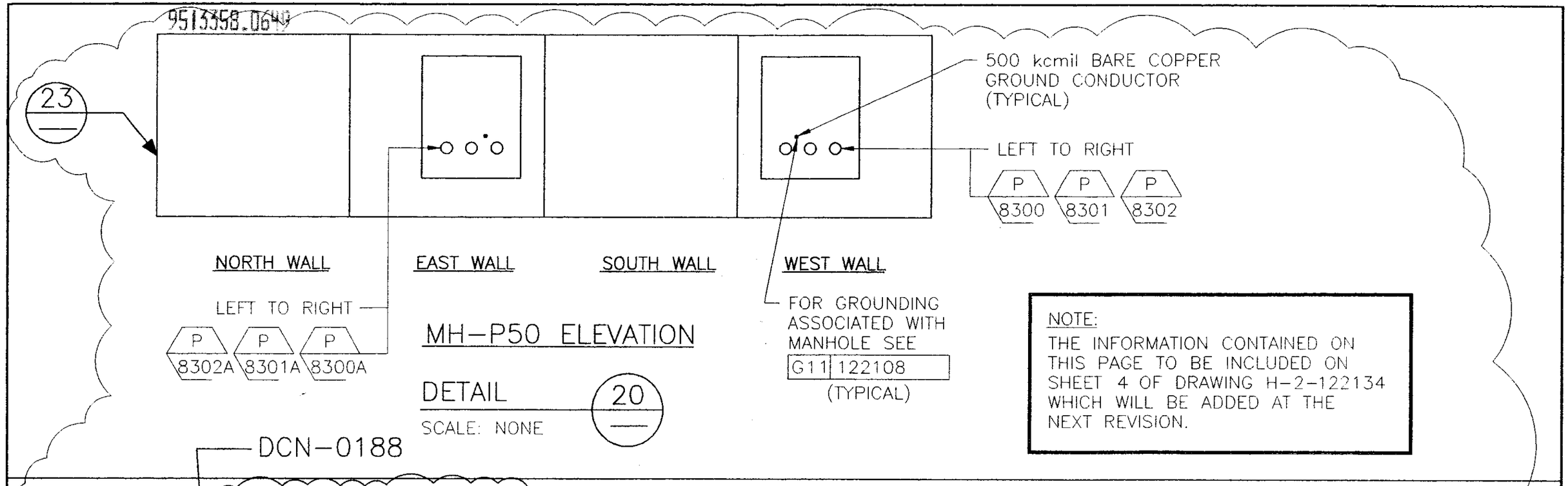

MH–P50 ELEVATION

DETAIL 20

SCALE: NONE

NOTE:
THE INFORMATION CONTAINED ON THIS PAGE TO BE INCLUDED ON SHEET 4 OF DRAWING H–2–122134 WHICH WILL BE ADDED AT THE NEXT REVISION.

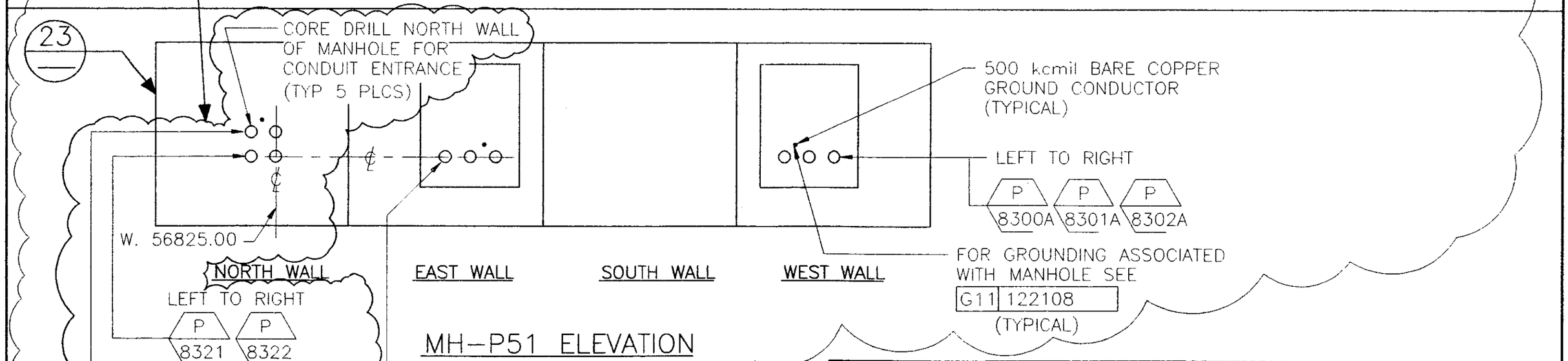

MH–P51 ELEVATION

DETAIL 21

SCALE: NONE

FLUOR DANIEL — U.S. DEPARTMENT OF ENERGY, HANFORD WASTE VITRIFICATION PLANT		DESIGN CHANGE NOTICE
DESCRIPTION OF CHANGE: ADD PAD MOUNTED GEAR TO PRIMARY 13.8 kV FEEDER FOR OAB/TOB BUILDING		BASE DOC. NO. H–2–122134; SHT/PG. 1; REV. 3; CR NO. HWVP–1109; DISCIPLINE: ELECTRICAL
PREPARED BY: [signature]	DATE: 05/06/94	DCN – 0188 · REV. 0 · PAGE 9
DISCIPLINE ENGINEER: [signature]	DATE: 05/06/94	

ACAD HS 05/06/94

9513358.0650

OAB/TOB SERVICE ONE LINE DIAGRAM

EXISTING CKT C8-L7

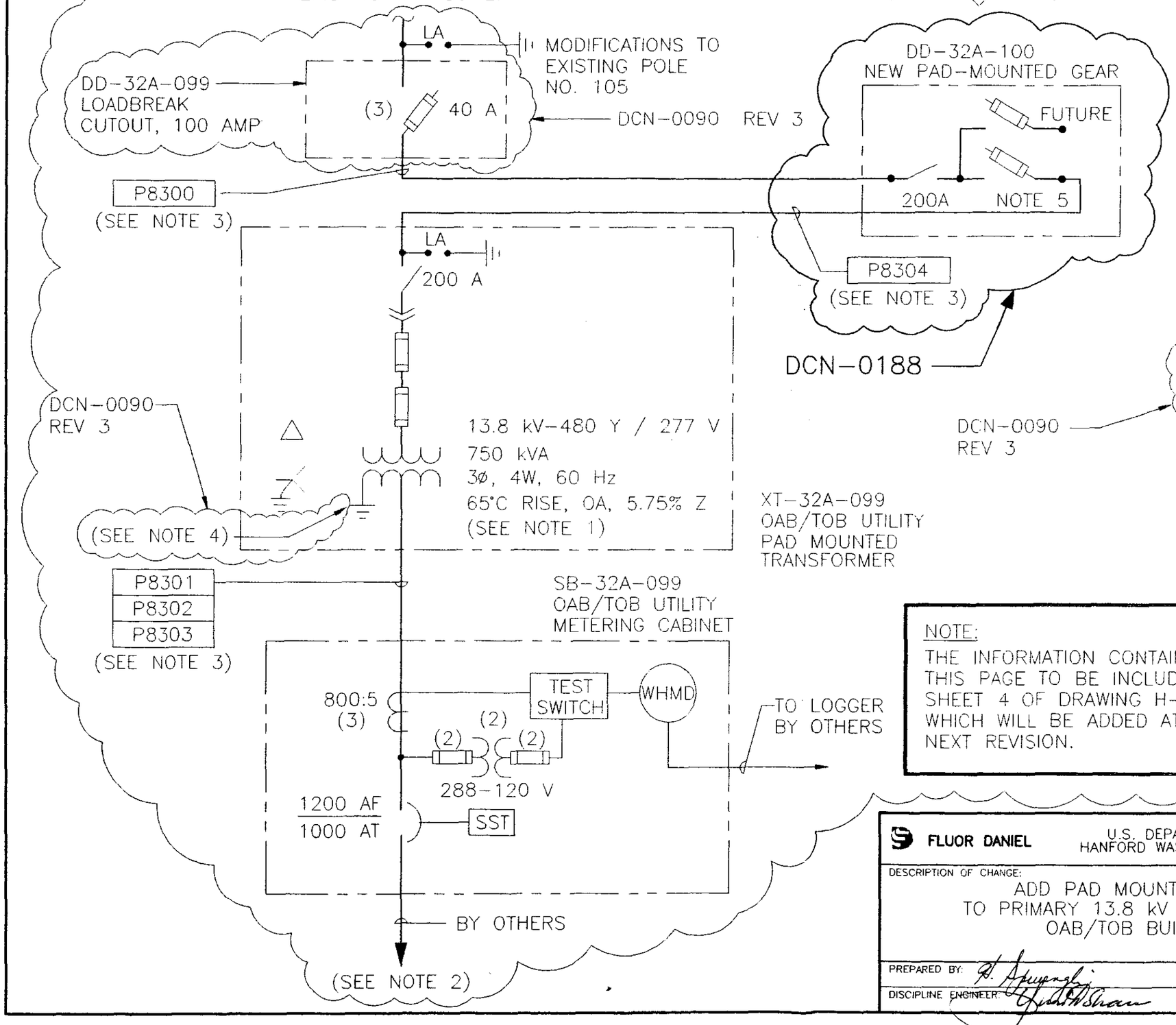

NOTES:

1. UTILITY TRANSFORMER SIZED BY WHC EU, BASED ON A FUTURE DEMAND LOAD OF 500 kVA (REF. RTC-681)
2. TO OAB/TOB SERVICE ENTRANCE EQUIPMENT BY OTHERS.
3. CABLE NUMBERS REFLECT THE ASSIGNED NUMBER ALONG WITH A, B, C SUFFIXES FOR EACH PHASE, N SUFFIX FOR NEUTRAL AND G SUFFIX FOR GROUND IF APPLICABLE. SEE CONDUIT/CABLE SCHEDULE SPECIFICATION SECTION 16111 FOR SPECIFIC WIRE INFORMATION.
4. THE TRANSFORMER NEUTRAL GROUND IS NOT IN ACCORDANCE WITH ARTICLE 250 OF THE NEC.
5. FUSE SIZE & COORDINATION BY WHC EU.

DCN-0090 REV 3

NOTE:
THE INFORMATION CONTAINED ON THIS PAGE TO BE INCLUDED ON SHEET 4 OF DRAWING H-2-122134 WHICH WILL BE ADDED AT THE NEXT REVISION.

DCN-0090 REV 3

FLUOR DANIEL — U.S. DEPARTMENT OF ENERGY, HANFORD WASTE VITRIFICATION PLANT		DESIGN CHANGE NOTICE
DESCRIPTION OF CHANGE: ADD PAD MOUNTED GEAR TO PRIMARY 13.8 kV FEEDER FOR OAB/TOB BUILDING		BASE DOC. NO. H-2-122134; SHT/PG 1; REV. 3; CR NO. HWVP-1109; DISCIPLINE: ELECTRICAL
PREPARED BY: R. Spurgin	DATE: 05/06/94	DCN - 0188 — REV. 0 — PAGE 10
DISCIPLINE ENGINEER: Judith Shaw	DATE: 05/06/94	

ACAD JTW 04/28/94

9513358.0651

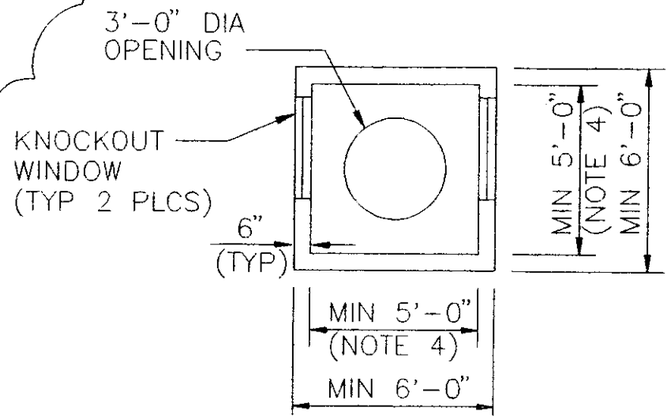

PLAN VIEW

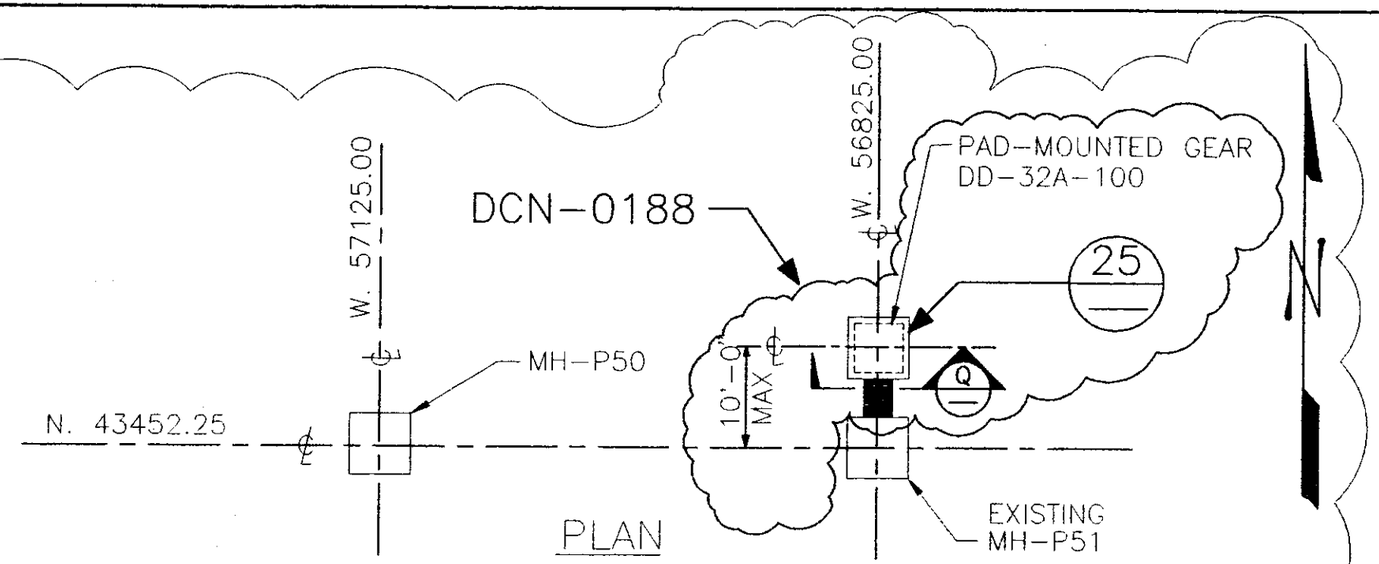

PLAN

NOTE:
THE INFORMATION CONTAINED ON THIS PAGE TO BE INCLUDED ON SHEET 4 OF DRAWING H-2-122134 WHICH WILL BE ADDED AT THE NEXT REVISION.

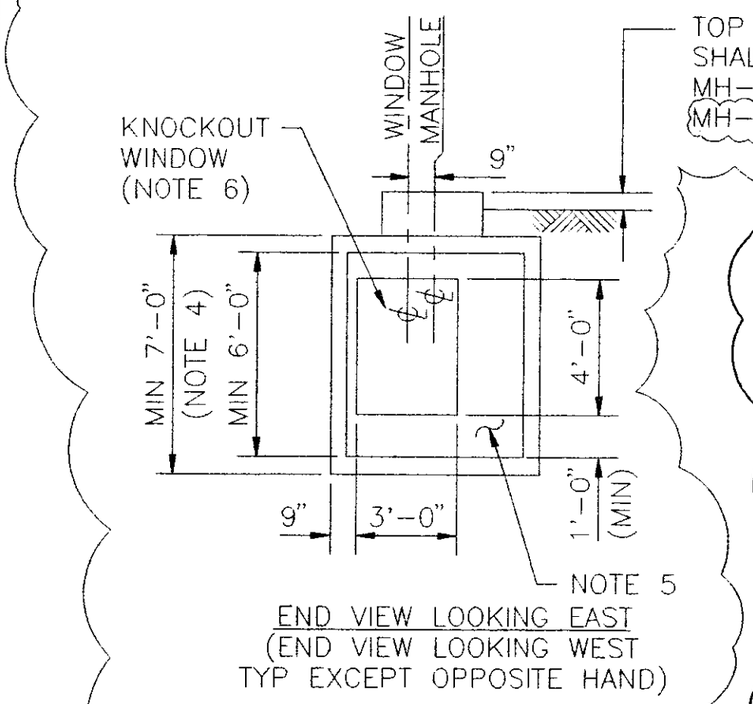

END VIEW LOOKING EAST
(END VIEW LOOKING WEST
TYP EXCEPT OPPOSITE HAND)

MANHOLES
MH-P50 & MH-P51

DETAIL 23

SCALE: NONE

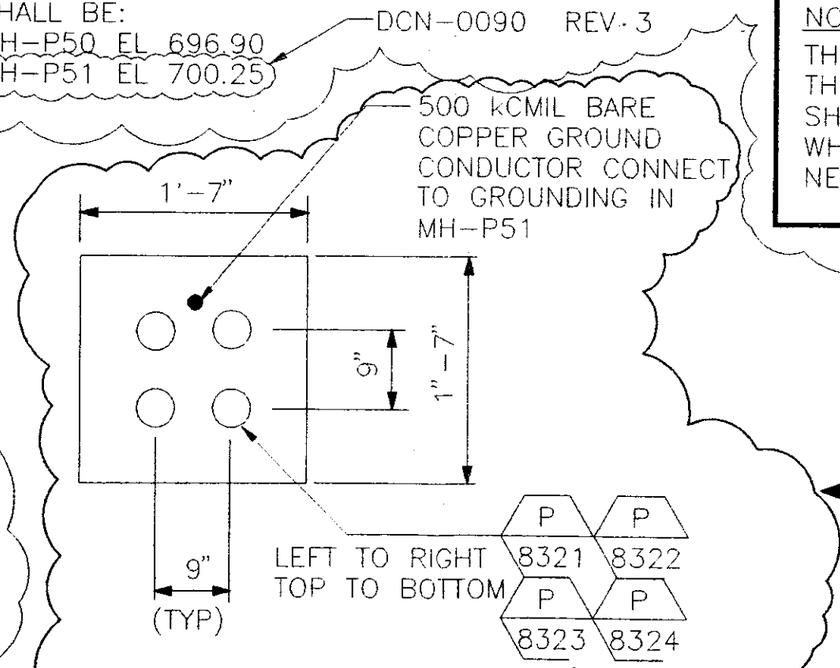

SECTION Q

SCALE: NONE

DCN-0090 REV 3

DCN-0188

FLUOR DANIEL — U.S. DEPARTMENT OF ENERGY, HANFORD WASTE VITRIFICATION PLANT		DESIGN CHANGE NOTICE
DESCRIPTION OF CHANGE: ADD PAD MOUNTED GEAR TO PRIMARY 13.8 kV FEEDER FOR OAB/TOB BUILDING		BASE DOC. NO. H-2-122134; SHT/PG. 3; REV. 3; CR NO. HWVP-1109; DISCIPLINE: ELECTRICAL
PREPARED BY: H. Spurgin	DATE: 05/06/94	
DISCIPLINE ENGINEER: Gunter Thorne	DATE: 05/06/94	DCN - 0188; REV. 0; PAGE 11

ACAD HS

9513358.0652

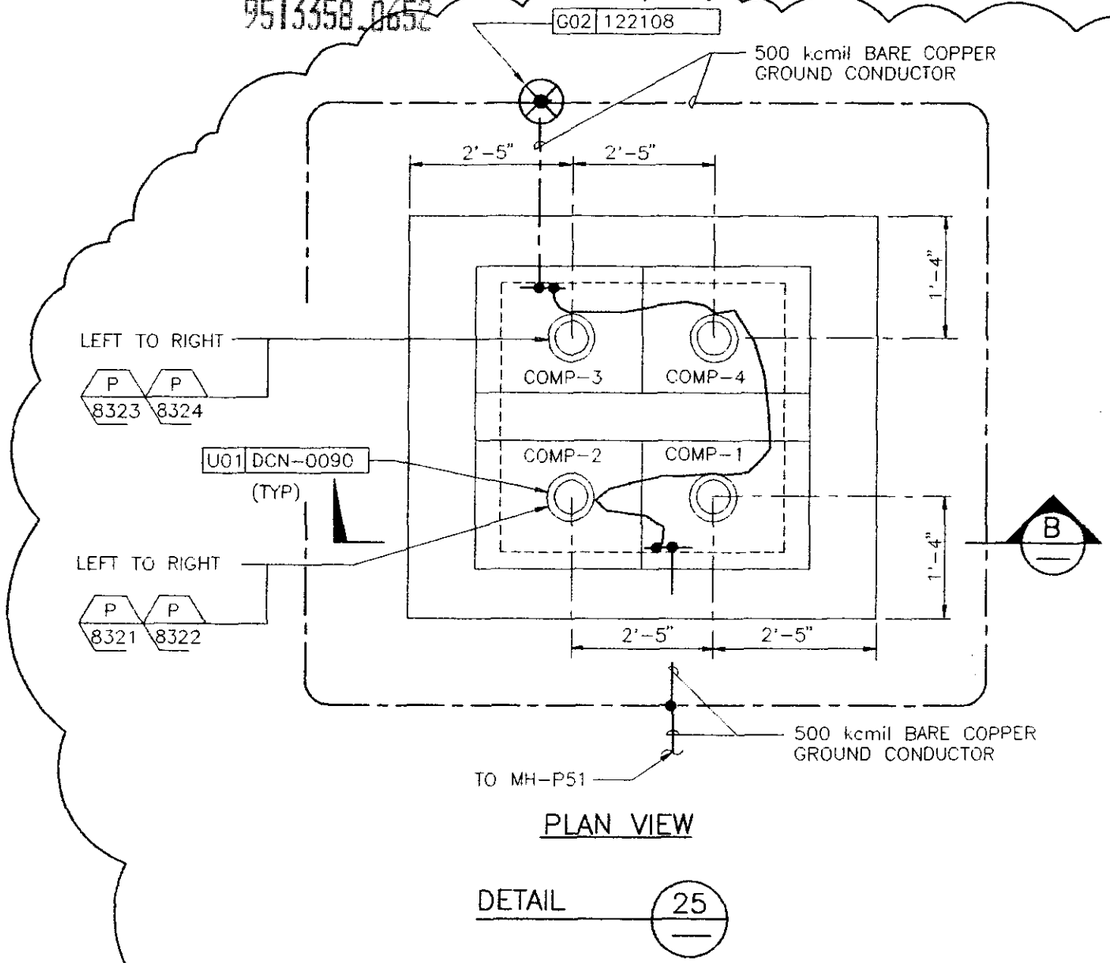

PLAN VIEW

DETAIL 25

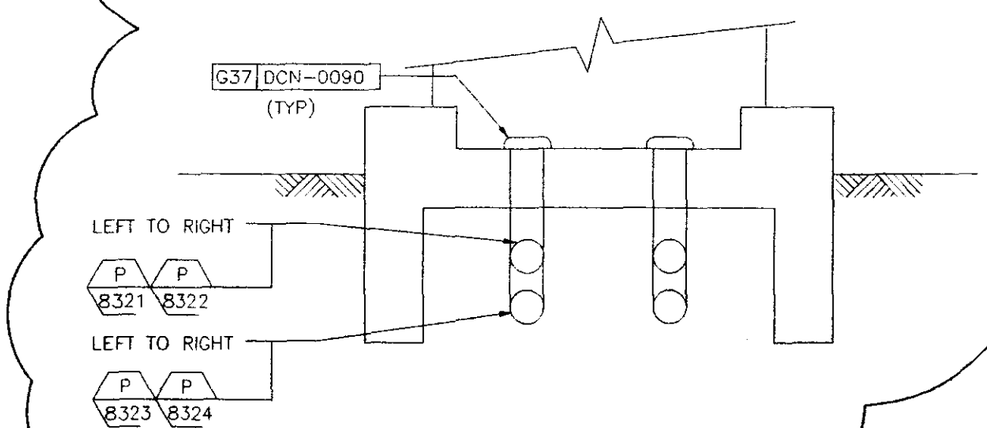

SECTION "B-B"

DCN-0188

FLUOR DANIEL	U.S. DEPARTMENT OF ENERGY HANFORD WASTE VITRIFICATION PLANT	DESIGN CHANGE NOTICE
DESCRIPTION OF CHANGE: ADD PAD MOUNTED GEAR TO PRIMARY 13.8 kV FEEDER FOR OAB/TOB BUILDING		BASE DOC. NO. H-2-122134 SHT/PG. 3 REV. 3 CR NO. HWVP-1109 DISCIPLINE: ELECTRICAL
PREPARED BY:	DATE: 05/06/94	
DISCIPLINE ENGINEER:	DATE: 05/06/94	DCN - 0188 REV. 0 PAGE 12

9513358.0653

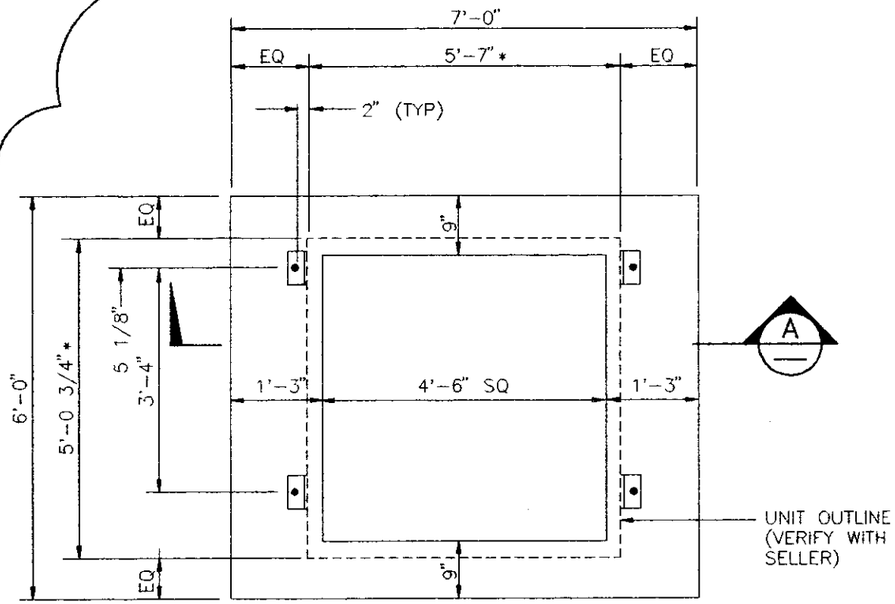

PLAN VIEW

* TO BE VERIFIED BY SELLER TO CORRESPOND TO ACTUAL EQUIPMENT

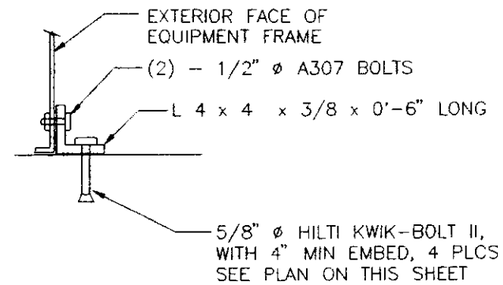

DETAIL A

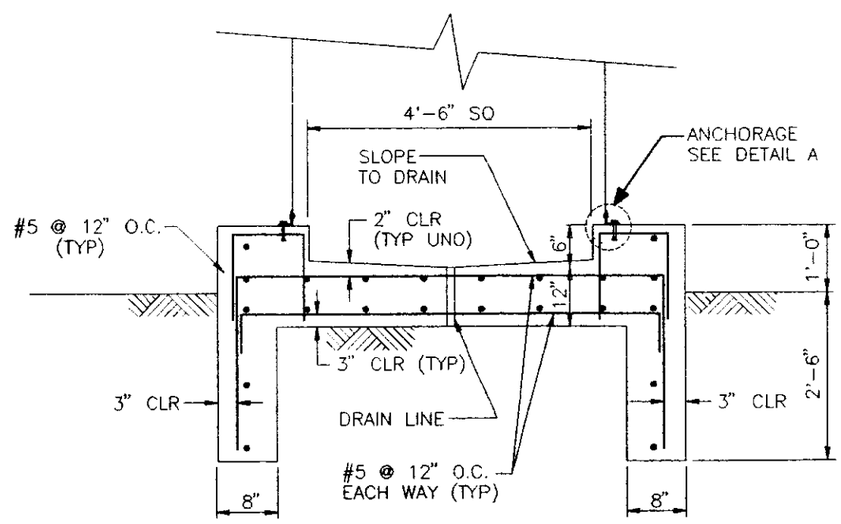

SECTION "A-A"

DCN-0188

NOTE: SEE SHEET H-2-118060 SHEET 1 FOR STRUCTURAL GENERAL NOTES & TYPICAL DETAILS.

FLUOR DANIEL	U.S. DEPARTMENT OF ENERGY HANFORD WASTE VITRIFICATION PLANT	DESIGN CHANGE NOTICE
DESCRIPTION OF CHANGE: ADD PAD MOUNTED GEAR TO PRIMARY 13.8 Kv FEEDER FOR OAB/TOB BUILDING		BASE DOC. NO. H-2-118063 SHT/PG. 1 REV. 2 CR NO. HWVP-1109 DISCIPLINE: STRUCTURAL
PREPARED BY: H. Spuenzi	DATE: 05/06/94	DCN - 0188 REV. 0 PAGE 13
DISCIPLINE ENGINEER: D. A. Taylor	DATE: 05/06/94	