START 9513358.0809 0040950

Mr. John Grantham
State of Washington
Department of Ecology
Nuclear & Mixed Waste Program
P. O. Box 47600
Olympia, WA 98504-7600

FLUOR DANIEL, INC.

Date: June 30, 1994

Reference: Hanford Waste Vitrification Plant
DOE Contract DE-AC06-86RL10838
Fluor Contract 8457

Transmittal No.: WDOE-962

Dear Mr. Grantham:

TRANSMITTAL

We enclosed 2 copy of the items listed below. These are issued per US-DOE request.

[] Approval [] Reference [] Review and Comment [X] DCN-RFC

Response due to Fluor: N/A
Responds to: A160 PACKAGE

NUMBER	REV	DATE	TITLE
DCN - 0153	3	06/27/94	DCN TITLE: **HOLD ON A/G PWR & GNDG FOR PX-500-001A/B AND ADD FIREWATER PUMP ALARM SYSTEM** "RELEASED FOR CONSTRUCTION"

Reference: FRP-1465, FUP-883
Distribution:
R. L. Long - DOE-RL, w/0
TWP/AME Corresp Cntrl Cntr MSIN A5-10
(A160 PACKAGE), w/0
P. Felise - WHC-RL (MSIN G6-06), w/1
Environmental Data Management Center
([redacted]), w/1
D. Duncan - US EPA, Region X, w/0
M. D. Talbot, WHC - w/0

Very truly yours,

Nazy Eshraghi for
R.S. Poulter
Project Director

RSP:JTS:AMc:KKS:fps

JUL 1994
RECEIVED
EPIC

9516358.0010

FLUOR DANIEL

US DEPARTMENT OF ENERGY
HANFORD WASTE VITRIFICATION PLANT

DESIGN CHANGE NOTICE

DCN - 0153	REV 3	REV. 3 CHANGE → PAGE 1 OF 46
DCN TITLE: Hold on A/G Pwr & Gndg for PX-500-001A/B and add Firewater Pump Alarm System		DATE INITIATED: 12-20-93
		PACKAGE NO.: A160

SECTION 1: DESCRIPTION OF CHANGE

REV 1 CHANGE

1. Add Conduits/Cables for firewater alarm system.
2. Place Hold No. 450 on A/G power and grounding for Pump PX-500-001A/B. (Raw Water Booster Pump).
3. Add heat tracing for Line SWX-10"-490-001-R and revise heat tracing design for SWX-10-490-064-R.
4. Add annunciator for remote monitoring of the firewater system.

Rev. 1
Correct Hold Number to 450 above in Item No. 2 (typical throughout DCN), add Sheet 12A and 12B.
Page 18 and 25: Revised raceway/cable KK and equipment designations.

Rev. 2
Revised Page Nos. 2, 3, 4, 5 and 12 as noted.

Rev. 3
Revised Page Nos. 2, 3, 5, 10 & 11. Added Pages 5A, 5B, 5C & 41.
REVISED NOMENCLATURE OF SWITCH FUNCTION
FOR LIST OF AFFECTED DOCUMENTS, SEE SECTIONS 6 AND 7.

REV. 2 CHANGE
REV. 3 CHANGE

CAUSE OF CHANGE:

- ☐ Field Change Request
- ☐ Supplier Disposition
- ☐ Deficiency Report
- ☐ Design Development
- ☒ Change Request
- ☒ TBD/Hold
- ☒ Other TITLE III REVIEW

CR-1069R1 & 1006
Initiating Document(s)

SECTION 2: EVALUATION

REV 3 CHANGE

			IF "YES", ADDITIONAL REVIEW REQUIRED BY:	REVIEWER COMMENTS AND SIGNATURE/DATE
WAPA DWG/SPEC?	☒ NO	☐ YES		
QUALITY LEVEL I DWG/SPEC?	☒ NO	☐ YES		
SAFETY CLASS 1 OR 2 DWG/SPEC?	☒ NO	☐ YES		
SYSTEMS ANALYSES AFFECTED?	☒ NO	☐ YES	CONTROL SYSTEMS	
MULTI-DISCIPLINE CHANGE?	☐ NO	☒ YES	PIPING	

DCN Evaluated by: Systems [signature] 4/13/94 ADM [signature] Others

SECTION 3: APPROVED FOR CONSTRUCTION

[signature] A. McWhorter [signature] 4/12/94 — Originator, Date

P.J. Bedell per telcon [signature] 4/13/94 — Project/Resident Engineer, Date

SECTION 4: CONCURRENCE

[signature] 6-17-94 — Project Management, Date

Homer E. Savage 6-15-94 — Systems, Date

[signature] 6-17-94 — Independent Safety, Date

Eugene Dingsday for J. Kelly 6-16-94 — Quality Assurance, Date

Frances Stokes 6-16-94 — Configuration Management, Date

SECTION 5: RELEASED FOR CONSTRUCTION

PE STAMP REQUIRED? ☐ NO ☒ YES

[signature] 6/23/94 — WHC, Date

[signature] 6-22-94 — UCAT, Date

[signature] 22 JUN 94 — DOE, Date

COMMENTS:

FORM REV. 09/23/93
P:\B457\DCNS\153 - 1 04/11/94 12:01pm

9513358.0811

FLUOR DANIEL

US DEPARTMENT OF ENERGY
HANFORD WASTE VITRIFICATION PLANT

DESIGN CHANGE NOTICE

DCN - 0153	REV 3	DISCIPLINE Electrical	PKG. NO. A160	PAGE 2

PREPARED BY: Maggie Weimer Date: 12-27-93

DISCIPLINE ENGINEER: Kumar Srivastava Date: 12-27-93

SECTION 6: CONSTRUCTION DOCUMENTS AFFECTED

DOCUMENT NUMBER	SHT/ PAGE	REV NO	DOCUMENT NAME	INCLD Y/N	DESCRIPTION OF CHANGE
H-2-122082	5	0	Electrical Standard Details	Y	Added Detail G33
H-2-122085	1	2	Electrical U/G Conduit and Grounding Plan	Y	Added ground plate for grounding
H-2-122087	1	1	Instrument Conduit Routing Plan	Y	Added Conduits for Instruments (REV. 2 CHANGE)
H-2-122087	2	1	Instrument Conduit Routing Plan	Y	Added Conduits for Instruments and placed Hold No. 450
H-2-122089	1	3	Electrical Pwr, Gndg, Ht Tr and Ltng Protection Plan	Y	Placed Hold No. 450 and added heat tracing
H-2-122094	1	1	Pwr. Ltg. & Heat Tracing Sections & Details	Y	Added spare conduits. (REV. 1 CHANGE)
H-2-122098	1	2	Electrical Panel Schedule	Y	Revised panel schedule for heat tracing (REV 3 CHANGE)
H-2-122099	1	2	Electrical Elementary Diagram	Y	Added elementary diagrams for PX-500-002A (REV. 2 CHANGE)
H-2-122099	2	1	Electrical Elementary Diagram	Y	Added elementary diagrams for PX-500-002B (REV. 2 CHANGE)
H-2-122100	1	1	ELECTRICAL CONNECTION DIAGRAMS	Y	ADDED TERMINAL BOX WIRING DIAGRAM
H-2-122100	2	1	Electrical Connection Diagrams	Y	Placed Hold No. 450
H-2-122100	3	0	Electrical Connection Diagrams	Y	Added instrument cable
H-2-122100	4	0	Electrical Connection Diagrams	Y	Added instrument cable
H-2-122100	7	0	Electrical Connection Diagrams	Y	Placed Hold No. 450 (REV. 1 CHANGE)
Specification B-595-C-A160-16111 Attachment A	1,,6,7,9, 10,11,17 (REV. 1 CHANGE)	2	Conduit Schedule	Y	Added conduit for instruments and placed Hold No. 450 Revised designations on P. 17

(Continued on Page 3)

SECTION 7: NON-CONSTRUCTION DOCUMENTS AFFECTED

This section references affected items such as P&IDs or calculations/analyses, but they are generally not included in DCN package.

DOCUMENT NUMBER	SHT/ PAGE	REV NO	DOCUMENT NAME	DESCRIPTION OF CHANGE

N/A

9513350.0812

FLUOR DANIEL

US DEPARTMENT OF ENERGY
HANFORD WASTE VITRIFICATION PLANT

DESIGN CHANGE NOTICE

DCN – 0153	REV 3	DISCIPLINE Electrical	PKG. NO. A160	PAGE 3

PREPARED BY: Maggie Weimer Date: 1-14-94

DISCIPLINE ENGINEER: Kumar Srivastava Date: 1-14-94

SECTION 6: CONSTRUCTION DOCUMENTS AFFECTED

DOCUMENT NUMBER	SHT/ PAGE	REV NO	DOCUMENT NAME	INCLD Y/N	DESCRIPTION OF CHANGE
Attachment B	4,5,7,8 12,13,20	2	Cable Schedule	Y	Added cable for instruments and placed Hold No. 450 Revised designations on P. 20
Specification B-595-C-A160-17801	28	2	Mechanical Site Utilities Instrumentation	Y	Revised Para. 2.2.6.3.6
B-595-C-A160-15540	13	1	Firewater System Pumps	Y	Revised Para. 2.2.10.B
B-595-C-A160-17704 Attachment B	2	2	General Instrumentation Installation and Testing	Y	Revised Instrument Tag No.
B-595-C-A160-17704 Attachment B	3	2	General Instrumentation Installation and Testing	Y	Revised Instrument Tag No.
B-595-C-A160-17704 Attachment C	2	2	General Instrumentation Installation and Testing	Y	Added Points/Instrument Tag No.
B-595-C-A160-17704 Attachment C	3	2	General Instrumentation Installation and Testing	Y	Added Points/Instrument Tag No.
B-595-C-A160-15061 Attachment C	2	2	Piping Material, Fabrication, Erection & Pressure Testing	Y	Revised Gate Valve Description
B-595-C-A160-15540	11	1	Firewater System Pumps	Y	Revised Para. 2.2.10.B
B-595-C-A160-15540	12	1	Firewater System Pumps	Y	Revised Para 2.2.10.B
H-2-121656	1	0	LP-500-002A & 002B Instrument Panel Layout	Y	Revised Nameplate Inscriptions

Rev. 1 Change

Rev. 2 Change

Rev. 3 Change

SECTION 7: NON-CONSTRUCTION DOCUMENTS AFFECTED

This section references affected items such as P&ID: or calculations/analyses, but they are generally not included in DCN package.

DOCUMENT NUMBER	SHT/ PAGE	REV NO	DOCUMENT NAME	DESCRIPTION OF CHANGE
N/A				

9513358.0813

2.26.3.3 Terminal blocks for instrument and control wiring shall be in accordance with Specification Section 16110 - Electrical Materials and Devices. A termination for TALL-FWX-005B, shall be provided and labeled on the terminal block.

REV. 2 CHANGE

REV. 2 CHANGE.

FLUOR DANIEL	U.S. DEPARTMENT OF ENERGY HANFORD WASTE VITRIFICATION PLANT	DESIGN CHANGE NOTICE
DESCRIPTION OF CHANGE Hold on A/G Pwr & Gndg for PX-500-001A/B and add Firewater Pump Alarm System		BASE DOC. NO. B-595-C-A160-17801 SHT/PG. 28 REV. 2 DISCIPLINE: Electrical
PREPARED BY: Maggie Weimer	DATE: 01/11/94	REV 3 PAGE ~~8~~ 4
DISCIPLINE ENGINEER: K. Srivastava/J.B. Bunning	DATE: 01/11/94	DCN - 0153

KKS 2/16/94

FORM REV. 09/23/93
P:\8457\DCNS\153 - 5 02/16/94 9:06am

9513358.0814

2.2.10.B 13) Terminal Block for external signal inputs/outputs. Terminal blocks shall also be provided and labeled for:

(PX-500-002A) [PX-500-002B] Pump Running
(PX-500-002A) [PX-500-002B] Controller Power Available
(PX-500-002A) [PX-500-002B] Phase Reversal
(ZAL-FWX-017-1B) [ZAL-FWX-017-2B] Discharge Valve NOT FULLY OPEN
(ZAL-FWX-012-1B) [ZAL-FWX-012-2B] Suction Valve NOT FULLY OPEN
(PAL-FWX-018) Low Fire Water Header Pressure

Seller shall also furnish panel-mounted annunciator. Microprocessor based annunciator shall be 4 cells high by 4 cells wide, operate from 120 VAC, 60 Hz, accept 24 VDC field contacts, and shall be mounted behind a NEMA 4 enclosure. Rochester Instrument Systems, Inc., Model AN-3100C-4HX4W-INTB-2/4-8/40-W-A-X-B-NR-TX-NEMA, or equal. Window engraving and installation shall be by Buyer.

REV. 2 CHANGE

REV. 3 CHANGE

REV. 2 CHANGE

REV. 3 CHANGE

FLUOR DANIEL	U.S. DEPARTMENT OF ENERGY HANFORD WASTE VITRIFICATION PLANT	DESIGN CHANGE NOTICE
DESCRIPTION OF CHANGE Hold on A/G Pwr & Gndg for PX-500-001A/B and add Firewater Pump Alarm System		BASE DOC. NO. B-595-C-A160 15540 SHT/PG. 13 REV. 1 DISCIPLINE: Electrical

PREPARED BY: Maggie Weimer	DATE: 01/11/94		REV	PAGE
DISCIPLINE ENGINEER: Kumar Srivastava/J.B. Bunning	DATE: 01/11/94	DCN - 0153	3	5

BLG 2/16/94

FORM REV. 09/23/93
P:\8457\DCNS\153 - 4 02/16/94 9:01am

4) Power Available indicating light.

5) Power Available auxiliary contact. This shall be wired to terminal blocks.

6) Low Discharge Pressure indicating light (PL-FWX-388B).

7) Terminal Block for external inputs.

8) High Pressure indicating light (PL-FWX-387B).

9) YC-FWX-383 Loop 287 logic.

Refer to Drawing H-2-121657, Sheet 1 for panel layout and nameplate descriptions.

B. Fire Water Pumps (PX-500-002A) [PX-500-002B]

The Fire Water Pumps are normally in auto standby mode while the fire water header pressure is being maintained by the jockey pump (PX-500-004). When the header pressure drops to 85 psig (PSL-FWX-018) [PSL-FWX-019] persistently for 15 seconds (KS-FWX-018), PX-500-002A starts automatically. If PX-500-002A is not available or low pressure persists for 20 seconds (KS-FWX-019) due to excessive demand, PX-500-002B starts automatically to supply the necessary water pressure. For each pump, if the suction valve switch (ZSL-FWX-012-1) (ZSL-FWX-012-2) or the discharge valve switch (ZSL-FWX-017-1) (ZSL-FWX-017-2) indicates the respective valve is NOT FULLY OPEN, THE respective alarm light for the suction valve (ZAL-FWX-012-1) (ZAL-FWX-012-2) or discharge valve (ZAL-FWX-017-1) (ZAL-FWX-017-2) will light. At the same time, an alarm horn on the outside of the pump house will sound. Also, pumps (PX-500-002A) [PX-500-002B] are inhibited from starting if their respective inlet and/or outlet valves are NOT FULLY OPEN, AN operator action is required to shutdown the pumps. The status of both pumps is indicated in the DCS (by Buyer).

Seller shall furnish an FM-approved or UL-listed fire pump flowmeter. This flowmeter shall be of the averaging pitot tube-type. The fire pump flowmeter shall be used as a permanent installation to measure the fire pump flow performance.

REV 3 CHANGE

The flow indicator shall have a 6 inch (minimum) dial, with a scale reading directly in GPM. The measurement accuracy shall be within ±1 percent over a scale range of 750 to 3000 GPM.

The primary flow element shall be of the averaging pitot differential pressure type which consists of a fabricated sensing tube with two internal chambers. The flow element shall be designed to measure the flow in a 10 inch diameter schedule 40 pipe. The flow element shall be furnished with instrument isolation valves and a mounting coupling.

The fire pump flowmeter shall be a Dieterich Standard (Eagle Eye flow meter, system model number FP-1500-10 or equal; with annubar model number GCR-25 or equal).

The indicator shall be tagged as FI-FWX-021. The flow element shall be tagged as FE-FWX-021.

Manual stop and start of the Fire Water Pumps is done at the local panels (LP-500-002A)[LP-500-002B].

Refer to Drawing H-2-121656, Sheet 1 for panel layout and nameplate descriptions.

Each Fire Water Pump shall be furnished with a local control panel (LP-500-002A)[LP-500-002B]. At minimum, these local control panels shall be furnished with the following:

1) STOP-START-AUTO Switches (HS-FWX-013-1)(HS-FWX-013-2).

2) STOP-START-AUTO indicating lights. REV 3 CHANGE

3) Suction Valve NOT FULLY OPEN (ZAL-FWX-012-1)(ZAL-FWX-012-2).

4) Discharge Valve NOT FULLY OPEN (ZAL-FWX-017-1)(ZAL-FWX-017-2,

5) Time Delay Relay Set (KS-FWX-018)(KS-FWX-019) @ (15 sec)[20 sec].

6) Magnetic Contactor. This shall have auxiliary contacts wired to terminal blocks for external use.

7) Current transmitter with 4-20 mA output, wired to the terminal block for external use (II-FWX-013-1) (IT-FWX-013-2) and ammeter (IT-FWX-013B-1) (II-FWX-013B-2). These items shall be mounted on the panel front.

8) Power Available indicating light.

9) Phase Reversed indicating light.

10) Logic (YC-FWX-013-1) (YC-FWX-013-2)

DCN-0153 REV 3
PAGE 5B

Rev. 2

SYSTEM NO. 50
SHEET NO. 1 OF 2, REV. 1
DATE 7/15 /92, BY CI

SP/ _/_____

THIS SYMBOL ON FLOW DIAGRAMS OR DRAWINGS DENOTES A PIPING SPECIALTY ITEM NOT OTHERWISE COVERED BY PIPING SPECIFICATIONS.

REV.	SP NUMBER	SIZE	FLOW DIAGRAM	LINE NUMBER	DESCRIPTION
1	50001	1"	H-2-123358 SHEET 3 OF 3	500-008	AUTOMATIC BALL DRIP VALVE, BRONZE, THREADED, NPT INLET X FPT OUTLET, UL LABELLED AS CONFORMING TO UL 1726. GRINNELL 1687 OR EQUAL.
1	50002	14" 10"	H-2-123358 SHEET 2 OF 3	500-029 500-030	GATE VALVE CL 150 FLANGED, OS&Y. CARBON STEEL BODY WITH API 600 #1 TRIM, UL LABELLED AS CONFORMING TO UL 262. PROVIDED WITH A LOCK-OPEN DEVICE (WITH PADLOCK AND TWO KEYS), AND A CLOSED POSITION INDICATOR SWITCH (NEMA 4, DOUBLE POLE, DOUBLE THROW, 125 VOLTS, 5 AMPERES, POTTER OR EQUAL). SWITCH AT PUMP PX-500-002A INLET SHALL BE TAGGED "ZSL-012-1". SWITCH AT PUMP PX-500-002B INLET SHALL BE TAGGED "ZSL-012-2". SWITCH AT PUMP PX-500-002A OUTLET SHALL BE TAGGED "ZSL-017-1". SWITCH AT PUMP PX-500-002B SHALL BE TAGGED "ZSL-017-2". TAGGING SHALL BE PER SPECIFICATION SECTION 17801. CRANE FP-47 OR EQUAL.

NOT FULLY OPEN

ONE SWITCH, SWITCH CLOSED WHEN VALVE FULLY OPEN

REV 3 CHANGE

05/24/93 10:50am
106\VOL5...\SPECS\A160\15061.ATT\C00-2

A160-15061

ATTACHMENT C
Page 2 of 4

FLUOR DANIEL

U.S. DEPARTMENT OF ENERGY
HANFORD WASTE VITRIFICATION PLANT

DESIGN CHANGE NOTICE

DESCRIPTION OF CHANGE CHANGED LIMIT SWITCH REQUIREMENT.

BASE DOC. NO. 15061 ATTACHMENT C
SHT/PG. 2 REV 2

DISCIPLINE: MATERIAL ENGINEERING

PREPARED BY: [signature] DATE: 2/25/93

DISCIPLINE ENGINEER: R. A. Calaya DATE: 3/29/93

DCN - 153 REV 3 PAGE 5C

05/17/93
P:\8457\MANUALS\DCPM\FORMS\6-17-3.EXH

U.S. DEPARTMENT OF ENERGY
HANFORD WASTE VITRIFICATION PLANT
RICHLAND, WASHINGTON
DOE CONTRACT DE-AC06-86RL10838

D=DIRECT
E=ELECTRICAL
P=PROCESS PIPING
C=COMBINATION

INSTALLATION INDEX
SPECIFICATION SECTION 17704, ATTACHMENT B
PAGE 2
05/26/93

REV			P&ID		(NEW) INSTRUMENT TAG NUMBER	PNL \ RACK	INSTL TYPE	LOCATION PLAN DWG	INSTALLATION ASSEMBLIES				ELECTRICAL	TEST PRESS	NOTES
	BDG	RM	NUMBER	SHT					PROCESS	PNEUMATIC	IAS	SUPPORT	INSTL ASSY		
1	20	--	123358	02	TI-FWX-002	NA	D	121203	---	---	---	---	---	---	---
1	20	--	123358	02	TW-FWX-002	NA	D	W/TI	---	---	---	---	---	---	---
1	20	--	123358	02	LI-FWX-003	NA	P	121203	121422/5	---	---	---	---	---	---
1	20	--	123358	02	TSHL-FWX-004	NA	C	121203	---	---	---	---	X02	---	---
1	20	--	123358	02	TW-FWX-004	NA	D	W/TSHL	---	---	---	---	---	---	---
1	20	--	123358	02	HS-LPW-004-1	LP-500-005A	E	121203	---	---	---	---	---	---	2
1	20	--	123358	02	KS-LPW-004-1	LP-500-005A	E	121203	---	---	---	---	---	---	2
1	20	--	123358	02	YC-LPW-004-1	LP-500-005A	E	121203	---	---	---	---	---	---	2
1	20	--	123358	02	HS-LPW-004-2	LP-500-005B	E	121203	---	---	---	---	---	---	2
1	20	--	123358	02	KS-LPW-004-2	LP-500-005B	E	121203	---	---	---	---	---	---	2
1	20	--	123358	02	YC-LPW-004-2	LP-500-005B	E	121203	---	---	---	---	---	---	2
1	20	--	123358	02	TALL-FWX-005	LP-500-007	E	121203	---	---	---	---	---	---	---
1	20	--	123358	02	TSLL-FWX-005A	NA	C	121203	---	---	---	---	X02	---	---
1	20	--	123358	02	TW-FWX-005	NA	D	W/TSLL	---	---	---	---	---	---	---
2	20	--	123358	02	PI-LPW-005-1	NA	P	121203	121422/3	---	---	---	---	138	---
2	20	--	123358	02	PI-LPW-005-2	NA	P	121203	121422/3	---	---	---	---	138	---
1	20	--	123358	02	LE-FWX-006	NA	C	121203	---	---	---	---	X14	---	---
1	20	--	123358	02	LSH-FWX-006	NA	E	121203	---	---	---	---	W/LE	---	6
1	20	--	123358	02	LSL-FWX-006A	NA	E	121203	---	---	---	---	W/LE	---	6
1	20	--	123358	02	LSL-FWX-006B	NA	E	121203	---	---	---	---	W/LE	---	6
1	20	--	123358	02	ZAL-FWX-012-1A	LP-500-002A	E	121203	---	---	---	---	---	---	2
1	20	--	123358	02	ZSL-FWX-012-1	NA	E	121203	---	---	---	---	X13	---	3
1	20	--	123358	02	ZAL-FWX-012-2A	LP-500-002B	E	121203	---	---	---	---	---	---	2
1	20	--	123358	02	ZSL-FWX-012-2	NA	E	121203	---	---	---	---	X13	---	3
1	20	--	123358	02	HS-FWX-013-1	LP-500-002A	E	121203	---	---	---	---	---	---	2
1	20	--	123358	02	IT-FWX-013-1	LP-500-002A	E	121203	---	---	---	---	---	---	2

DCN-0153

DBASE\A160\I_A160.FRM

DCN-0153 REV 3
PAGE 6

9513358.0818

U.S. DEPARTMENT OF ENERGY
HANFORD WASTE VITRIFICATION PLANT
RICHLAND, WASHINGTON
DOE CONTRACT DE-AC06-86RL10838

D=DIRECT
E=ELECTRICAL
P=PROCESS PIPING
C=COMBINATION

INSTALLATION INDEX
SPECIFICATION SECTION 17704, ATTACHMENT B

05/26/93

REV			P&ID		(NEW) INSTRUMENT TAG NUMBER	PNL \ RACK	INSTL TYPE	LOCATION PLAN DWG	INSTALLATION ASSEMBLIES				ELECTRICAL	TEST PRESS	NOTES
	BDG	RM	NUMBER	SHT					PROCESS	PNEUMATIC	IAS	SUPPORT	INSTL ASSY		
1	20	--	123358	02	YC-FWX-013-1	LP-500-002A	E	121203	---	---	---	---	---	---	2
1	20	--	123358	02	HS-FWX-013-2	LP-500-002B	E	121203	---	---	---	---	---	---	2
1	20	--	123358	02	IT-FWX-013-2	LP-500-002B	E	121203	---	---	---	---	---	---	2
1	20	--	123358	02	YC-FWX-013-2	LP-500-002B	E	121203	---	---	---	---	---	---	2
1	20	--	123358	02	II-FWX-0138-1	LP-500-002A	E	121203	---	---	---	---	---	---	2
1	20	--	123358	02	II-FWX-0138-2	LP-500-002B	E	121203	---	---	---	---	---	---	2
1	20	--	123358	02	PSV-FWX-014-1	NA	P	124033	---	---	---	---	---	---	1
1	20	--	123358	02	PSV-FWX-014-2	NA	P	124033	---	---	---	---	---	---	1
1	20	--	123358	02	PI-FWX-015-1	NA	P	121203	121422/3	---	---	---	---	165	---
1	20	--	123358	02	PI-FWX-015-2	NA	P	121203	121422/3	---	---	---	---	165	---
1	20	--	123358	02	ZAL-FWX-017-1A	LP-500-002A	E	121203	---	---	---	---	---	---	2
1	20	--	123358	02	ZSL-FWX-017-1	NA	E	121203	---	---	---	---	X13	---	3
1	20	--	123358	02	ZAL-FWX-017-2A	LP-500-002B	E	121203	---	---	---	---	---	---	2
1	20	--	123358	02	ZSL-FWX-017-2	NA	E	121203	---	---	---	---	X13	---	3
1	20	--	123358	02	KS-FWX-018	LP-500-002A	E	121203	---	---	---	---	---	---	2
1	20	--	123358	02	PSL-FWX-018	NA	C	121203	121422/2	---	---	121380/2	X02	165	3
1	20	--	123358	02	KS-FWX-019	LP-500-002B	E	121203	---	---	---	---	---	---	2
1	20	--	123358	02	PSL-FWX-019	NA	C	121203	121422/2	---	---	121380/2	X02	165	3
1	20	--	123358	02	PI-FWX-020	NA	P	121203	121422/6	---	---	W/PSL-018	---	165	---
1	20	--	123358	02	FE-FWX-021	NA	D	121203	---	---	---	---	---	---	---
1	20	--	123358	02	FI-FWX-021	NA	P	121203	121423/2	---	---	W/PSL-019	---	165	---
2	20	--	123358	02	FO-LPW-022	NA	D	124036	---	---	---	---	---	---	1
1	20	--	123358	02	HS-FWX-363	LP-500-007	E	121203	---	---	---	---	---	---	---
1	20	--	123358	02	YC-FWX-363	LP-500-007	E	121203	---	---	---	---	---	---	---
1	20	--	123358	02	PI-FWX-364	NA	P	121203	121422/3	---	---	---	---	165	---
1	20	--	123358	02	HS-FWX-367	LP-500-006	E	121203	---	---	---	---	---	---	2

DBASE\A160\I_A160.FRM

DCN-0153

PAGE 7
DCN-0153 REV 3

9513358.0819

U.S. DEPARTMENT OF ENERGY
HANFORD WASTE VITRIFICATION PLANT
RICHLAND, WASHINGTON
DOE CONTRACT DE-AC06-86RL10838

SPECIFICATION SECTION 17704 ATTACHMENT C
ENGINEERING INSTRUMENT INDEX
05/26/93

P&ID NUMBER	SHT	SFTY CLS	INSTRUMENT TAG NUMBER	SERVICE DESCRIPTION	DCS I\O	PNL \ RACK	BLDG NO	ROOM NO.	SPEC NO	CNST PKG	CWBS	QUAL LEVEL	WAPA	INSTRUMENT TYPE	REV
123358	02	3	TI-FWX-002	FIRE WATER STORAGE TANK	N	NA	20	--	17801	A160	A160	2	N	TEMP IND.	1
123358	02	3	TW-FWX-002	FIRE WATER STORAGE TANK	N	NA	20	--	17801	A160	A160	2	N	THERMOWELL	1
123358	02	3	LI-FWX-003	FIRE WATER STORAGE TANK	N	NA	20	--	17801	A160	A160	2	N	FLOAT AND TAPE LEVEL	1
123358	02	3	TSHL-FWX-004	FIRE WATER STORAGE TANK	N	NA	20	--	17801	A160	A160	2	N	TEMP SWITCH	1
123358	02	3	TW-FWX-004	FIRE WATER STORAGE TANK	N	NA	20	--	17801	A160	A160	2	N	THERMOWELL	1
123358	02	3	HS-LPW-004-1	PROCESS WATER PUMP A	N	LP-500-005A	20	--	15540	A160	A160	2	N	HAND SWITCH	1
123358	02	3	KS-LPW-004-1	PROCESS WATER PUMP A	N	LP-500-005A	20	--	15540	A160	A160	2	N	TIMING RELAY	1
123358	02	3	YC-LPW-004-1	PROCESS WATER PUMP A	1	LP-500-005A	20	--	15540	A160	A160	2	N	PLC SOFT	1
123358	02	3	HS-LPW-004-2	PROCESS WATER PUMP B	N	LP-500-005B	20	--	15540	A160	A160	2	N	HAND SWITCH	1
123358	02	3	KS-LPW-004-2	PROCESS WATER PUMP B	N	LP-500-005B	20	--	15540	A160	A160	2	N	TIMING RELAY	1
123358	02	3	YC-LPW-004-2	PROCESS WATER PUMP B	1	LP-500-005B	20	--	15540	A160	A160	2	N	PLC SOFT	1
~~123358~~	~~02~~	~~3~~	~~TALL-FWX-005A~~	~~FIRE WATER STORAGE TANK~~	~~N~~	~~LP-500-007~~	~~20~~	~~--~~	~~17801~~	~~A160~~	~~A160~~	~~2~~	~~N~~	~~TEMP ALARM LOW LOW~~	~~1~~
123358	02	3	TALL-FWX-005B	FIRE WATER STORAGE TANK	N	NA	--	--	17801	A160	A160	2	N	TEMP ALARM LOW LOW	
~~123358~~	~~02~~	~~3~~	~~TSLL-FWX-005~~	~~FIRE WATER STORAGE TANK~~	~~N~~	~~NA~~	~~20~~	~~--~~	~~17801~~	~~A160~~	~~A160~~	~~2~~	~~N~~	~~TEMP SWITCH LOW LOW~~	~~1~~
123358	02	3	TW-FWX-005	FIRE WATER STORAGE TANK	N	NA	20	--	17801	A160	A160	2	N	THERMOWELL	1
123358	02	3	PI-LPW-005-1	FIRE WATER PUMP A DISCHARGE	N	NA	20	--	17801	A160	A160	2	N	PRESS GAUGE	2
123358	02	3	PI-LPW-005-2	PROCESS WATER PUMP B DISCHARGE	N	NA	20	--	17801	A160	A160	2	N	PRESS GAUGE	2
123358	02	3	LE-FWX-006	FIRE WATER STORAGE TANK	N	NA	20	--	17801	A160	A160	2	N	CAP LEVEL PROBE	1
123358	02	3	LSH-FWX-006	FIRE WATER STORAGE TANK	N	NA	20	--	17801	A160	A160	2	N	CAP LEVEL SWITCH	1
123358	02	3	LSL-FWX-006A	FIRE WATER STORAGE TANK	N	NA	20	--	17801	A160	A160	2	N	CAP LEVEL SWITCH	1
123358	02	3	LSL-FWX-006B	FIRE WATER STORAGE TANK	N	NA	20	--	17801	A160	A160	2	N	CAP LEVEL SWITCH	1
~~123358~~	~~02~~	~~3~~	~~ZAL-FWX-012-1A~~	~~FIRE WATER PUMP A SUCTION VALVE~~	~~N~~	~~LP-500-002A~~	~~20~~	~~--~~	~~15540~~	~~A160~~	~~A160~~	~~2~~	~~N~~	~~VLV POSITION ALARM~~	~~1~~
123358	02	3	ZAL-FWX-012-1B	FIRE WATER PUMP A SUCTION VALVE	N	NA	--	--	15540	A160	A160	2	N	VLV POSITION ALARM	
~~123358~~	~~02~~	~~3~~	~~ZSL-FWX-012-1~~	~~FIRE WATER PUMP A SUCTION VALVE~~	~~N~~	~~NA~~	~~20~~	~~--~~	~~15061~~	~~A160~~	~~A160~~	~~2~~	~~N~~	~~VLV LIMIT SWITCH~~	~~1~~
~~123358~~	~~02~~	~~3~~	~~ZAL-FWX-012-2A~~	~~FIRE WATER PUMP B SUCTION VALVE~~	~~N~~	~~LP-500-002B~~	~~20~~	~~--~~	~~15540~~	~~A160~~	~~A160~~	~~2~~	~~N~~	~~VLV POSITION ALARM~~	~~1~~
123358	02	3	ZAL-FWX-012-2B	FIRE WATER PUMP B SUCTION VALVE	N	NA	--	--	15540	A160	A160	2	N	VLV POSITION ALARM	
~~123358~~	~~02~~	~~3~~	~~ZSL-FWX-012-2~~	~~FIRE WATER PUMP B SUCTION VALVE~~	~~N~~	~~NA~~	~~20~~	~~--~~	~~15061~~	~~A160~~	~~A160~~	~~2~~	~~N~~	~~VLV LIMIT SWITCH~~	~~1~~
123358	02	3	HS-FWX-013-1	FIRE WATER PUMP A	N	LP-500-002A	20	--	15540	A160	A160	2	N	HAND SWITCH	1
123358	02	3	IT-FWX-013-1	FIRE WATER PUMP A MOTOR	1	LP-500-002A	20	--	15540	A160	A160	2	N	CURRENT XMTR	1
123358	02	3	YC-FWX-013-1	FIRE WATER PUMP A	1	LP-500-002A	20	--	15540	A160	A160	2	N	PLC SOFT	1

DCN-0153

DCN-0153 REV 3
PAGE 8

9513358.0820

U.S. DEPARTMENT OF ENERGY
HANFORD WASTE VITRIFICATION PLANT
RICHLAND, WASHINGTON
DOE CONTRACT DE-AC06-86RL10838

SPECIFICATION SECTION 11704, ATTACHMENT C
ENGINEERING INSTRUMENT INDEX
05/26/93

P&ID NUMBER	P&ID SHT	SFTY CLS	INSTRUMENT TAG NUMBER	SERVICE DESCRIPTION	DCS I\O	PNL \ RACK	BLDG NO	ROOM NO.	SPEC NO	CNST PKG	CWBS	QUAL LEVEL	WAPA	INSTRUMENT TYPE	REV
123358	02	3	HS-FWX-013-2	FIRE WATER PUMP B	N	LP-500-002B	20	--	15540	A160	A160	2	N	HAND SWITCH	1
123358	02	3	IT-FWX-013-2	FIRE WATER PUMP B MOTOR	1	LP-500-002B	20	--	15540	A160	A160	2	N	CURRENT XMTR	1
123358	02	3	YC-FWX-013-2	FIRE WATER PUMP B	N	LP-500-002B	20	--	15540	A160	A160	2	N	PLC SOFT	1
123358	02	3	II-FWX-013B-1	FIRE WATER PUMP A MOTOR	N	LP-500-002A	20	--	15540	A160	A160	2	N	AMMETER	1
123358	02	3	II-FWX-013B-2	FIRE WATER PUMP B MOTOR	1	LP-500-002B	20	--	15540	A160	A160	2	N	AMMETER	1
123358	02	3	PSV-FWX-014-1	FIRE WATER PUMP A OUTLET	N	NA	20	--	17801	A160	A160	2	N	RELIEF VALVE (F)	1
123358	02	3	PSV-FWX-014-2	FIRE WATER PUMP A OUTLET	N	NA	20	--	17801	A160	A160	2	N	RELIEF VALVE (F)	1
123358	02	3	PI-FWX-015-1	FIRE WATER PUMP A DISCHARGE	N	NA	20	--	17801	A160	A160	2	N	PRESS GAUGE	1
123358	02	3	PI-FWX-015-2	FIRE WATER PUMP B DISCHARGE	N	NA	20	--	17801	A160	A160	2	N	PRESS GAUGE	1
123358	02	3	ZAL-FWX-017-1A	FIRE WATER PUMP A SUCTION VALVE	N	LP-500-002A	20	--	15540	A160	A160	2	N	VLV POSITION ALARM	1
123358	02	3	ZAL-FWX-017-1B	FIRE WATER PUMP A SUCTION VALVE	N	NA	--	--	15540	A160	A160	2	N	VLV POSITION ALARM	
123358	02	3	ZSC-FWX-017-1	FIRE WATER PUMP A SUCTION VALVE	N	NA	20	--	15061	A160	A160	2	N	VLV LIMIT SWITCH	1
123358	02	3	ZAL-FWX-017-2A	FIRE WATER PUMP B SUCTION VALVE	N	LP-500-002B	20	--	15540	A160	A160	2	N	VLV POSITION ALARM	1
123358	02	3	ZAL-FWX-017-2B	FIRE WATER PUMP B SUCTION VALVE	N	NA	--	--	15540	A160	A160	2	N	VLV POSITION ALARM	
123358	02	3	ZSC-FWX-017-2	FIRE WATER PUMP B DISCHARGE VALVE	N	NA	20	--	15061	A160	A160	2	N	VLV LIMIT SWITCH	1
123358	02	3	KS-FWX-018	FIRE WATER PUMP A	N	LP-500-002A	20	--	15540	A160	A160	2	N	TIMING RELAY	1
123358	02	3	PSL-FWX-018	FIRE WATER HEADER	N	NA	20	--	17801	A160	A160	2	N	PRESS SWITCH	1
123358	02	3	PAL-FWX-018	FIRE WATER HEADER	N	NA	--	--	15540	A160	A160	2	N	PRESS ALARM LOW	
123358	02	3	KS-FWX-019	FIRE WATER PUMP B	N	LP-500-002B	20	--	15540	A160	A160	2	N	TIMING RELAY	1
123358	02	3	PSL-FWX-019	FIRE WATER HEADER	N	NA	20	--	17801	A160	A160	2	N	PRESS SWITCH	1
123358	02	3	PI-FWX-020	FIRE WATER PUMPS HEADER	N	NA	20	--	17801	A160	A160	2	N	PRESS GAUGE	1
123358	02	3	FE-FWX-021	FIRE WATER PUMP SYSTEM DISCHARGE	N	NA	20	--	15540	A160	A160	2	N	ANNUBAR	1
123358	02	3	FI-FWX-021	FIRE WATER PUMP SYSTEM DISCHARGE	N	NA	20	--	15540	A160	A160	2	N	DP GAUGE	1
123358	02	3	FO-LPW-022	PROCESS WATER PUMPS MINIMUM FLOW	N	NA	20	--	17801	A160	A160	2	N	RESTRICTION ORIF	2
123358	02	3	HS-FWX-363	FIRE WATER HEATER PUMP	N	LP-500-007	20	--	17801	A160	A160	2	N	HAND SWITCH	1
123358	02	3	YC-FWX-363	FIRE WATER HEATER PUMP	N	LP-500-007	20	--	17801	A160	A160	2	N	PLC SOFT	1
123358	02	3	PI-FWX-364	FIRE WATER HEATER PUMP DISCHARGE	N	NA	20	--	17801	A160	A160	2	N	PRESS GAUGE	1
123358	02	3	HS-FWX-367	FIRE WATER TANK HEATER	N	LP-500-006	20	--	15505	A160	A160	2	N	HAND SWITCH	1
123358	02	3	JIC-FWX-367	FIRE WATER TANK HEATER	N	LP-500-006	20	--	15505	A160	A160	2	N	ELECT PWR CONT	1
123358	02	3	TE-FWX-367	FIRE WATER TANK HEATER	N	NA	20	--	15505	A160	A160	2	N	RTD	1

DCN-0153

DCN-0153 REV 3
PAGE 9

9513358.0821

9513358.0822

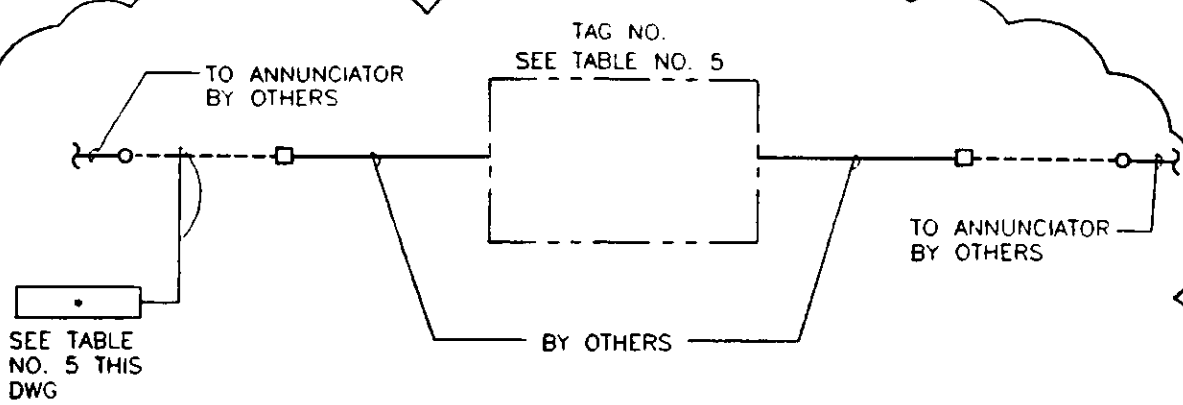

TABLE NO. 5		
TAG NO.	DESCRIPTION	CABLE NO. • (2/C)
XL-FWX-•••B	PUMP PX-500-002A RUNNING	A0912
	PUMP PX-500-002A CONTROLLER PWR AVAILABLE	A0913
	PUMP PX-500-002A PHASE REVERSAL	A0914
ZAL-FWX-017-1B	PUMP PX-500-002A DISCHARGE VALVE NOT FULLY OPEN	A0915
ZAL-FWX-012-1B	PUMP PX-500-002A SUCTION VALVE NOT FULLY OPEN	A0916
PAL-FWX-005B	LOW FIRE WATER HEADER PRESSURE	A0917

DCN-0153 REV 3

○ TERMINAL @ TERMINAL BOX TB-20-A2

□ TERMINAL @ FIRE WATER PUMP PANEL LP-500-002A

••• INDICATES A VENDOR FURNISHED INSTRUMENT TAG NUMBER

ELEMENTARY DIAGRAM 21
FOR PX-500-002A REMOTE OUTPUTS 122083

DCN-0153

FLUOR DANIEL	U.S. DEPARTMENT OF ENERGY HANFORD WASTE VITRIFICATION PLANT	DESIGN CHANGE NOTICE
DESCRIPTION OF CHANGE: HOLD ON A/G PWR & GNDG FOR PX-500-001A/B & ADD FIREWATER PUMP ALARM SYSTEM		BASE DOC. NO. H-2-122099 SHT/PG. 1 REV. 2 CR NO. 1069 R1 & 1006 DISCIPLINE: ELECTRICAL
PREPARED BY: R. Spinangli DISCIPLINE ENGINEER: K. K. Jassowalia	DATE: 12/23/93 DATE: 2/16/94	DCN-0153 REV. 3 PAGE 10

9513358.0823

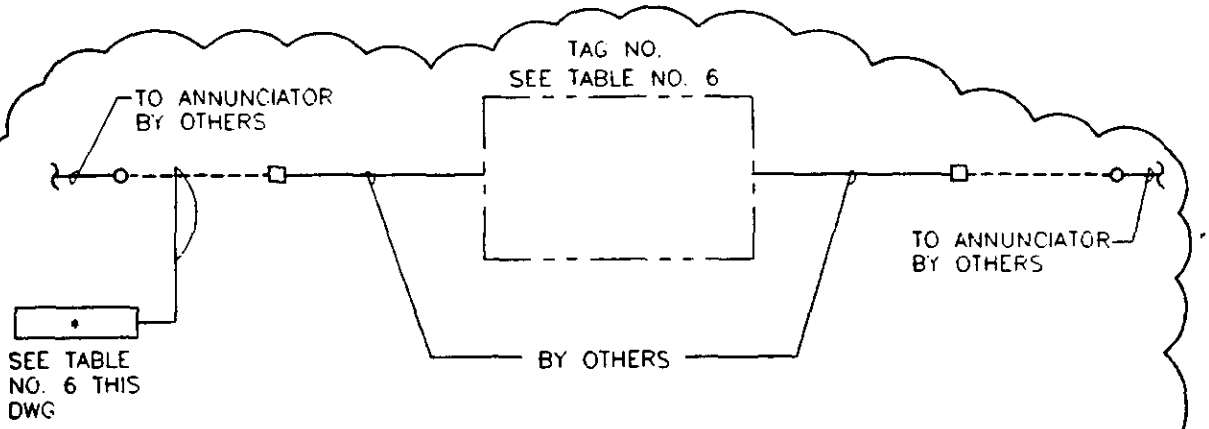

TABLE NO. 6		
TAG NO.	DESCRIPTION	CABLE NO. • (2/C)
XL-FWX-•••B	PUMP PX-500-002B RUNNING	A0918
	PUMP PX-500-002B CONTROLLER PWR AVAILABLE	A0919
	PUMP PX-500-002B PHASE REVERSAL	A0920
ZAL-FWX-017-2B	PUMP PX-500-002B DISCHARGE VALVE NOT FULLY OPEN	A0921
ZAL-FWX-012-2B	PUMP PX-500-002B SUCTION VALVE NOT FULLY OPEN	A0922
TALL-FWX-005B	FIRE & PROCESS WATER STORAGE TANK LEVEL	A0923

DCN-0153 REV 3

○ TERMINAL @ TERMINAL BOX TB-20-A2

□ TERMINAL @ FIRE WATER PUMP PANEL LP-500-002B (TALL-FWX-0005B TERMINAL @ LP-500-007)

••• INDICATES A VENDOR FURNISHED INSTRUMENT TAG NUMBER

ELEMENTARY DIAGRAM 25
FOR PX-500-002B REMOTE OUTPUTS 122083

DCN-0153

FLUOR DANIEL	U.S. DEPARTMENT OF ENERGY HANFORD WASTE VITRIFICATION PLANT	DESIGN CHANGE NOTICE
DESCRIPTION OF CHANGE: HOLD ON A/G PWR & GNDG FOR PX-500-001A/B & ADD FIREWATER PUMP ALARM SYSTEM		BASE DOC NO. H-2-122099 SHT/PG 2 REV. 1 REV. 2 CHANGE CR NO. 1069 R1 & 1006
		DISCIPLINE: ELECTRICAL
PREPARED BY:	DATE: 12/23/93	DCN-0153 REV. 3 PAGE 11
DISCIPLINE ENGINEER:	DATE: 2/7/94	

9513358.0824

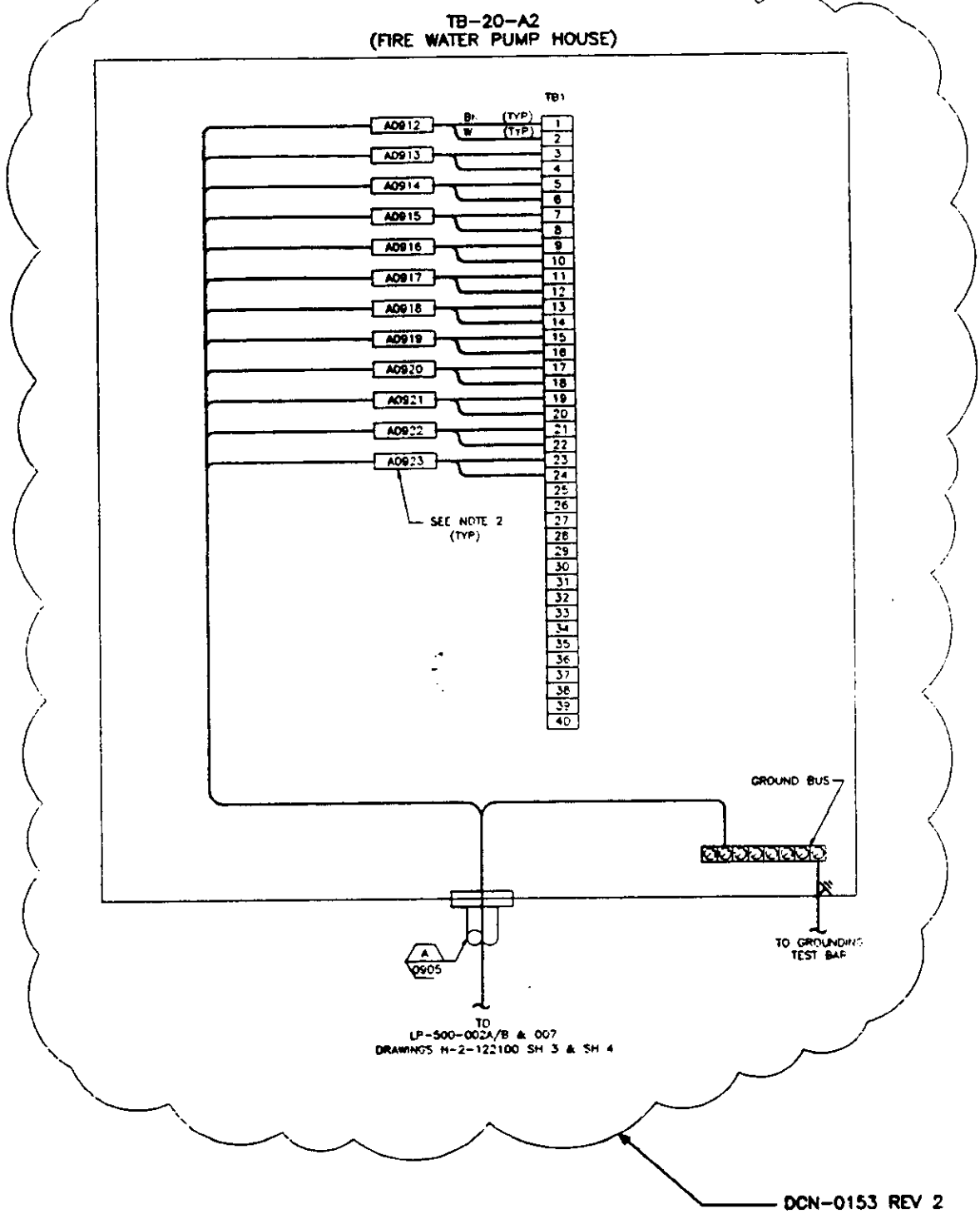

DCN-0153 REV 2

FLUOR DANIEL	U.S. DEPARTMENT OF ENERGY HANFORD WASTE VITRIFICATION PLANT	DESIGN CHANGE NOTICE
DESCRIPTION OF CHANGE: HOLD ON A/G PWR & GNDG FOR PX-500-001A/B & ADD FIREWATER PUMP ALARM SYSTEM		BASE DOC NO. H-2-122100 SHT/PG 1 REV. 1 CR NO. 1069 R1 & 1006 DISCIPLINE: ELECTRICAL
PREPARED BY: H. Spinnaghi	DATE: 12/23/93	DCN-0153 REV 3 PAGE 12
DISCIPLINE ENGINEER: K. K. [illegible]	DATE: 2/16/94	

9513358.0825

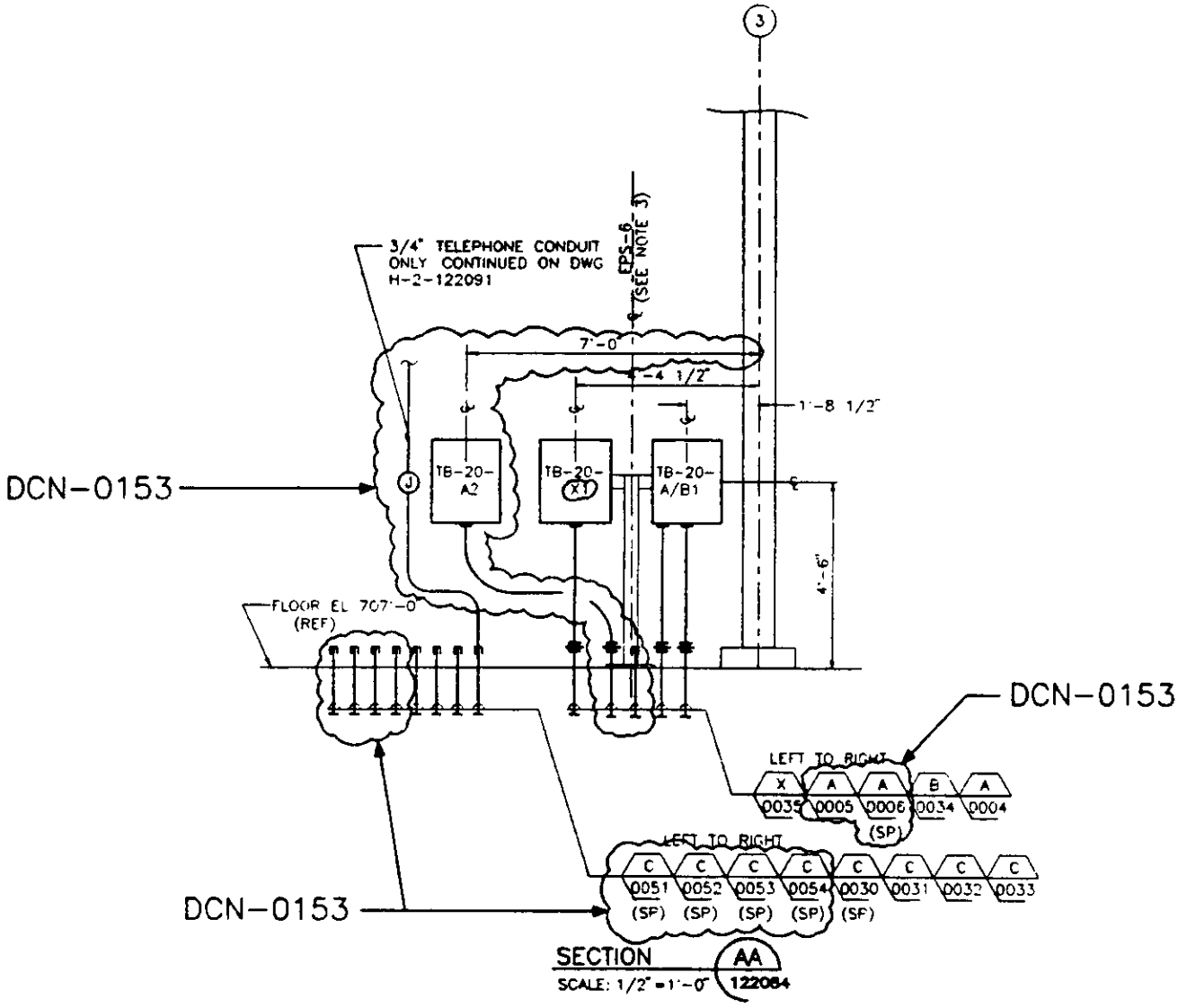

THIS PAGE ADDED PER REV 1

FLUOR DANIEL	U.S. DEPARTMENT OF ENERGY HANFORD WASTE VITRIFICATION PLANT	DESIGN CHANGE NOTICE
DESCRIPTION OF CHANGE: HOLD ON A/G PWR & GNDG FOR PX-500-001A/B & ADD FIREWATER PUMP ALARM SYSTEM		BASE DOC. NO. H-2-122094 SHT/PG 1 REV. 1 CR NO. DISCIPLINE: ELECTRICAL
PREPARED BY: G. Spuenghi	DATE: 01/20/94	DCN-0153 REV 3 PAGE 12A
DISCIPLINE ENGINEER: K.K. Gosvardia	DATE: 2/16/94	

DCN-0153 REV 1

Electrical Raceway Schedule for Package Number A160

REV NO.	BLDG NO.	RACEWY NO.	FOR	FROM		TO		RACEWAY DATA			INCLUDED CABLE NOs.
				EQUIPMENT NUMBER OR LOCATION	PLAN DRAWING	EQUIPMENT NUMBER OR LOCATION	PLAN DRAWING	SIZE	TYPE	MATERIAL OF CONSTR	
2	23	A0001	ALARM	LS-510-001	H-2-122093	STUB-OUT	H-2-122093	2"	COND	RSG	
2	23	A0002	ALARM	TB-23-A/B1	H-2-122085	PB-P3	H-2-122085	2"	COND	PVC	BY OTHERS (TBD HOLD #376)
2	21	A0003	ALARM	TB-21-A/B1	H-2-122085	PB-C1	H-2-122085	2"	COND	PVC	BY OTHERS
2	20	A0004	ALARM	TB-20-A/B1	H-2-122084	MM-P3	H-2-122084	2"	COND	PVC	BY OTHERS
NA 2-16-94 ~~2~~	20	A0005	ALARM	MM-P3	H-2-122084	TB-20-A2	H-2-122084	4"	COND	PVC	DCN-0133
~~2~~	20	A0006	SPARE	MM-P3	H-2-122084	BLDG 20	H-2-122084	4"	COND	PVC	DCN-0133
2	20	A0000	ALARM	TB-20-A01	H-2-122087-1	A0000A	H-2-122087-1	1-1/2"	COND	IMC	A0L00,A0001
2	20	A0000A	ALARM	A0000	H-2-122087-1	LSL/H-DRX-501	H-2-122087-1	1-1/2"	COND	IMC	A0L00,A0001
2	20	A0000B	ALARM	LSL-DRX-501	H-2-122087-1	A0000C	H-2-122087-1	1/2"	COND	FLEX	A0L03
2	20	A0000C	ALARM	A0000B	H-2-122087-1	A0000D	H-2-122087-1	3/4"	COND	IMC	A0L03
2	20	A0000D	ALARM	A0000C	H-2-122087-1	LE-DRX-501	H-2-122087-1	1/2"	COND	FLEX	A0L03
2	20	A0001	ALARM	LP-500-007	H-2-122087-1	A0001A,A0001C	H-2-122087-1	1"	COND	IMC	A0L06,A0007
2	20	A0001A	ALARM	A0001,A0001C	H-2-122087-1	A0001B	H-2-122087-1	3/4"	COND	FLEX	A0L06
2	20	A0001B	ALARM	A0001A	H-2-122087-1	TSW-FWX-368	H-2-122087-1	1/2"	COND	FLEX	A0L06
2	20	A0001C	ALARM	A0001,A0001A	H-2-122087-1	A0001D	H-2-122087-1	3/4"	COND	IMC	A0L07
2	20	A0001D	ALARM	A0001C	H-2-122087-1	TSEL-FWX-005	H-2-122087-1	1/2"	COND	FLEX	A0L07
2	20	A0002	ALARM	TB-20-A/B1	H-2-122087-1	A0002A,A0002C	H-2-122087-1	1"	COND	IMC	A0L[illegible],A0005

REV.2 CHANGE

THIS PAGE ADDED PER REV.1

DCN-0153 REV 3
PAGE 12

9513358.0826

Electrical Raceway Schedule for Package Number A160

REV NO.	BLDG NO.	RACEWY NO.	FOR	FROM		TO		RACEWAY DATA			INCLUDED CABLE NOs.
				EQUIPMENT NUMBER OR LOCATION	PLAN DRAWING	EQUIPMENT NUMBER OR LOCATION	PLAN DRAWING	SIZE	TYPE	MATERIAL OF CONSTR	
2	20	B0812	CONTR	LP-500-007	W-2-122087-1	B0812A,B0812B	W-2-122087-1	1"	COND	IMC	B0832,B0833
2	20	B0812A	CONTR	B0812,B0812B	W-2-122087-1	LP-500-005B	W-2-122087-1	3/4"	COND	IMC	B0833
2	20	B0812B	CONTR	B0812,B0812A	W-2-122087-1	LP-500-005A	W-2-122087-1	3/4"	COND	IMC	B0832
2	20	B0813	CONTR	LP-500-007	W-2-122087-1	B0813A,B0813B	W-2-122087-1	1"	COND	IMC	B0826,B0843,B0844,B0845,B0846,B0847, B0848,B0849,G0001
2	20	B0813A	CONTR	B0813,B0813B	W-2-122087-1	LP-500-006	W-2-122087-1	3/4"	COND	IMC	B0826
2	20	B0813B	CONTR	B0813,B0813A	W-2-122087-1	PX-003-MC	W-2-122087-1	3/4"	COND	IMC	B0843,B0844,B0845,B0846,B0847,B0848, B0849,G0001
2	21	B0900	CONTR	LP-500-001B	W-2-122087-2	B0900A,B0900B	W-2-122087-2	1-1/2"	COND	IMC	B0904,B0905,B0906,B0907
2	21	B0900A	CONTR	B0900,B0900B	W-2-122087-2	LP-500-001A	W-2-122087-2	1-1/2"	COND	IMC	B0900
2	21	B0900B	CONTR	B0900,B0900A	W-2-122087-2	B0900C,B0900F	W-2-122087-2	1-1/2"	COND	IMC	B0904,B0905,B0906,B0907,B0900
2	21	B0900C	CONTR	B0900B,B0900F	W-2-122087-2	B0900D,B0900E	W-2-122087-2	1-1/2"	COND	IMC	B0905,B0906,B0907
2	21	B0900D	CONTR	B0900C,B0900E	W-2-122087-2	ZSH/ZSL-RWX-049	W-2-122087-2	1"	COND	FLEX	B0905,B0906
2	21	B0900E	CONTR	B0900C,B0900D	W-2-122087-2	YY-RWX-049	W-2-122087-2	3/4"	COND	FLEX	B0907
2	21	B0900F	CONTR	B0900B,B0900C	W-2-122087-2	B0900G	W-2-122087-2	1"	COND	IMC	B0900,B0904
2	21	B0900G	CONTR	B0900F	W-2-122087-2	PSL-RWX-051	W-2-122087-2	1"	COND	FLEX	B0900,B0904
2	21	B0901	CONTR	LP-500-001A	W-2-122087-2	LP-500-001B	W-2-122087-2	1"	COND	IMC	B0901
2	21	B0902	CONTR	LP-500-001A	W-2-122087-2	B0902A,B0902B	W-2-122087-2	3/4"	COND	IMC	B0902

DCN-0153 REV 1

HOLD NO.
HWVP-FD-450
DCN-0153

DCN-0153 REV 3
PAGE 13

9513358.0827

Electrical Raceway Schedule for Package Number A160

REV NO.	BLDG NO.	RACEWY NO.	FOR	FROM		TO		RACEWAY DATA			INCLUDED CABLE NOs.
				EQUIPMENT NUMBER OR LOCATION	PLAN DRAWING	EQUIPMENT NUMBER OR LOCATION	PLAN DRAWING	SIZE	TYPE	MATERIAL OF CONSTR	
2	21	B0902A	CONTR	LP-500-001B	H-2-122087-2	B0902B,B0902	H-2-122087-2	3/4"	COND	IMC	B0908
2	21	B0902B	CONTR	B0902,B0902A	H-2-122087-2	TB-21-B1	H-2-122087-2	1"	COND	IMC	B0902,B0908
2	21	B0903	CONTR	TB-21-B1	H-2-122087-2	B0903A	H-2-122087-2	1-1/2"	COND	IMC	B0910,B0911,B0912
2	21	B0903A	CONTR	LSL/H-DRX-402	H-2-122087-2	B0903B	H-2-122087-2	3/4"	COND	FLEX	B0913
2	21	B0903B	CONTR	B0903A	H-2-122087-2	B0903C	H-2-122087-2	3/4"	COND	IMC	B0913
2	21	B0903C	CONTR	B0903B	H-2-122087-2	LE-DRX-402	H-2-122087-2	3/4"	COND	FLEX	B0913
2	23	B0950	CONTR	B0950A,B0950L	H-2-122087-2	TB-23-A/B1	H-2-122087-2	1-1/2"	COND	IMC	B0954,B0955
2	23	B0950A	CONTR	B0950/C	H-2-122087-2	B0950B	H-2-122087-2	3/4"	COND	IMC	B0955
2	23	B0950B	CONTR	B0950A	H-2-122087-2	PY-RWX-004	H-2-122087-2	3/4"	COND	FLEX	B0955
2	23	B0950C	CONTR	B0950/A	H-2-122087-2	B0950D	H-2-122087	3/4"	COND	IMC	B0954
2	23	B0950D	CONTR	B0950C	H-2-122087-2	PSL-RWX-007	H-2-122087-2	3/4"	COND	FLEX	B0954
2	23	B0951A	CONTR	LSL/H-DRX-601, LSHH-DRX-601	H-2-122087-2	B0951B	H-2-122087-2	1/2"	COND	FLEX	B0958
2	23	B0951B	CONTR	B0951A	H-2-122087-2	B0951C	H-2-122087-2	3/4"	COND	IMC	B0958
2	23	B0951C	CONTR	B0951B	H-2-122087-2	LE-DRX-601	H-2-122087-2	1/2"	COND	FLEX	B0958
2	20	C0030	SPARE	MH-C1	H-2-122084	BLDG 20	H-2-122084	2"	COND	PVC	
2	20	C0031	LAN	MH-C1	H-2-122084	BLDG 20	H-2-122084	2"	COND	PVC	
2	20	C0032	PA	MH-C1	H-2-122084	BLDG 20	H-2-122084	2"	COND	PVC	

HOLD NO.
HWVP-FD-450
DCN-0153

DCN-0153
REV 1

DCN-0153 REV 3
PAGE 14

9513358.0828

Electrical Raceway Schedule for Package Number A160

REV NO.	BLDG NO.	RACEWY NO.	FOR	FROM		TO		RACEWAY DATA			INCLUDED CABLE NOs.
				EQUIPMENT NUMBER OR LOCATION	PLAN DRAWING	EQUIPMENT NUMBER OR LOCATION	PLAN DRAWING	SIZE	TYPE	MATERIAL OF CONSTR	
2	20	P0006	POWER	LP-500-004	H-2-122084	P0006A	H-2-122084	2"	COND	PVC	P0007A,P0007B,P0007C,P0007G
2	20	P0006A	POWER	P0006	H-2-122084	PX-500-004	H-2-122088	1"	COND	FLEX	P0007A,P0007B,P0007C,P0007G
2	20	P0007	SPARE	MM-P1	H-2-122084	BLDG 20	H-2-122084	2"	COND	PVC	
2	20	P0008	POWER	MM-P1	H-2-122084	LP-500-006	H-2-122084	2"	COND	PVC	P0008
2	20	P0009	POWER	MM-P1	H-2-122084	PX-530-015-MC	H-2-122084	2"	COND	PVC	P0010
2	20	P0010	POWER	PX-530-015-MC	H-2-122088-1	P0010A	H-2-122088-1	3/4"	COND	IMC	P0011A,P0011B,P0011C,P0011G
2	20	P0010A	POWER	P0010	H-2-122088-1	PX-530-015	H-2-122088-1	3/4"	COND	FLEX	P0011A,P0011B,P0011C,P0011G
2	20	P0011	SPARE	MM-P1	H-2-122084	BLDG 20	H-2-122084	2"	COND	PVC	
2	21	P0012	POWER	PB-P1	H-2-122085	LP-500-001A	H-2-122085	3"	COND	PVC	P0012
2	21	P0013	POWER	LP-500-001A	H-2-122085	SPLICE BOX @ PX-500-001A	H-2-122085	3"	COND	PVC	P0013A,P0013B,P0013C,P0013G
2	21	P0013A	POWER	SPLICE BOX	H-2-122089	CAPACITOR	H-2-122089	3/4"	COND	IMC	P0039A,P0039B,P0039C
2	21	P0013B	POWER	SPLICE BOX	H-2-122089	P0013C	H-2-122089	3"	COND	IMC	P0013A,P0013B,P0013C,P0013G
2	21	P0013C	POWER	P0013B	H-2-122089	PX-500-001A	H-2-122089	3"	COND	FLEX	P0013A,P0013B,P0013C,P0013G
2	20	P0014	SPARE	MM-P1	H-2-122084	BLDG 20	H-2-122084	2"	COND	PVC	
2	20	P0015	POWER	MM-P1	H-2-122084	LP-500-002A	H-2-122084	4"	COND	PVC	P0014
2	20	P0016	POWER	LP-500-002A	H-2-122084	BOX @ PX-500-002A	H-2-122084	5"	COND	PVC	P0015A,P0015B,P0015C,P0015G,P0046A, P0046B,P0046C

HOLD NO
HWVP-FD-450
DCN-0153

DCN-0153 REV1

DCN-0153 REV3
PAGE 15

9513358.0829

Electrical Raceway Schedule for Package Number A160

REV NO.	BLDG NO.	RACEWY NO.	FOR	FROM		TO		RACEWAY DATA			INCLUDED CABLE NOs.
				EQUIPMENT NUMBER OR LOCATION	PLAN DRAWING	EQUIPMENT NUMBER OR LOCATION	PLAN DRAWING	SIZE	TYPE	MATERIAL OF CONSTR	
2	20	P0016A	POWER	BOX @ PX-500-002A	H-2-122088-1	PX-500-002A	H-2-122088-1	4"	COND	FLEX	P0015A,P0015B,P0015C,P0015G,P0046A, P0046B,P0046C
2	20	P0017	POWER	MH-P1	H-2-122084	LP-500-005A	H-2-122084	2"	COND	PVC	BY OTHERS
2	20	P0018	POWER	LP-500-005A	H-2-122084	SPLICE BOX @ PX-500-005A	H-2-122084	2"	COND	PVC	P0041A,P0041B,P0041C,P0041G
2	20	P0018A	POWER	SPLICE BOX	H-2-122088-1	CAPACITOR	H-2-122088-1	3/4"	COND	IMC	P0042A,P0042B,P0042C
2	20	P0018B	POWER	SPLICE BOX	H-2-122088-1	P0018C	H-2-122088-1	1-1/2"	COND	IMC	P0041A,P0041B,P0041C,P0041G
2	20	P0018C	POWER	P0018B	H-2-122088-1	PX-500-005A	H-2-122088-1	1-1/2"	COND	FLEX	P0041A,P0041B,P0041C,P0041G
2	20	P0019	POWER	MH-P2	H-2-122084	LP-500-005B	H-2-122084	2"	COND	PVC	BY OTHERS
2	20	P0020	POWER	LP-500-005B	H-2-122084	SPLICE BOX @ PX-500-005B	H-2-122084	2"	COND	PVC	P0043A,P0043B,P0043C,P0043G
2	20	P0020A	POWER	SPLICE BOX	H-2-122088-1	CAPACITOR	H-2-122088-1	3/4"	COND	IMC	P0044A,P0044B,P0044C
2	20	P0020B	POWER	SPLICE BOX	H-2-122088-1	P0020C	H-2-122088-1	1-1/2"	COND	IMC	P0043A,P0043B,P0043C,P0043G
2	20	P0020C	POWER	P0020B	H-2-122088-1	PX-500-005B	H-2-122088-1	1-1/2"	COND	FLEX	P0043A,P0043B,P0043C,P0043G
2	21	P0021	POWER	MH-P2	H-2-122085	LP-500-001B	H-2-122085	3"	COND	PVC	P0016
2	21	P0022	POWER	LP-500-001B	H-2-122085	SPLICE BOX @ PX-500-001B	H-2-122085	3"	COND	PVC	P0017A,P0017B,P0017C,P0017G
2	21	P0022A	POWER	SPLICE BOX	H-2-122089	CAPACITOR	H-2-122089	3/4"	COND	IMC	P0045A,P0045B,P0045C
2	21	P0022B	POWER	SPLICE BOX	H-2-122089	P0022C	H-2-122089	3"	COND	IMC	P0017A,P0017B,P0017C,P0017G

DCN-0153 REV 1

DCN-0153 REV 3
PAGE 16

HOLD NO.
HWVP-FD 450
DCN-0153

9513358.0830

U.S. DEPARTMENT OF ENERGY
Waste Vitrification Plant
Richland, Washington
DOE Contract DE-AC06-86RL10838
Rev. 2

ATTACHMENT A
SPECIFICATION SECTION 16111
PAGE 1. OF 17

Fluor DANIEL, INC.
Advanced Technology Division
Fluor Contract 8457
11/10/93

HOLD NO.
HWVP-FD-450
DCN-0153

DCN-0153 REV 1

Electrical Raceway Schedule for Package Number A160

REV NO.	BLDG NO.	RACEWY NO.	FOR	FROM		TO		RACEWAY DATA			INCLUDED CABLE NOs.
				EQUIPMENT NUMBER OR LOCATION	PLAN DRAWING	EQUIPMENT NUMBER OR LOCATION	PLAN DRAWING	SIZE	TYPE	MATERIAL OF CONSTR	
2	21	P0022C	POWER	P0022B	H-2-122089	PX-500-001B	H-2-122089	3"	COND	FLEX	P0017A,P0017B,P0017C,P0017G
2	21	P0023	POWER	PB-P2	H-2-122085	PX-530-013A-MC	H-2-122085	2"	COND	PVC	P0018
2	21	P0023A	POWER	PX-530-013A-MC	H-2-122089	P0023B	H-2-122089	3/4"	COND	IMC	P0019A,P0019B,P0019C,P0019G
2	21	P0023B	POWER	P0023A	H-2-122089	PX-530-013A	H-2-122089	3/4"	COND	FLEX	P0019A,P0019B,P0019C,P0019G
2	21	P0024	POWER	PB-P1	H-2-122085	PX-530-013B-MC	H-2-122085	2"	COND	PVC	P0020
2	21	P0024A	POWER	PX-530-013B-MC	H-2-122089	P0024B	H-2-122089	3/4"	COND	IMC	P0021A,P0021B,P0021C,P0021G
2	21	P0024B	POWER	P0024A	H-2-122089	PX-530-013B	H-2-122089	3/4"	COND	FLEX	P0021A,P0021B,P0021C,P0021G
2	21	P0025	POWER	PB-P2	H-2-122085	DA-32A-B02	H-2-122085	3"	COND	PVC	P0022
2	23	P0026	POWER	PB-P3	H-2-122085	PX-530-016-MC	H-2-122085	2"	COND	PVC	P0025 (TBD HOLD #376)
2	23	P0026A	POWER	PX-500-016-MC	H-2-122089	P0026B	H-2-122089	3/4"	COND	IMC	P0026A,P0026B,P0026C,P0026G
2	23	P0026B	POWER	P0026A	H-2-122089	PX-530-016	H-2-122089	3/4"	COND	FLEX	P0026A,P0026B,P0026C,P0026G
2	23	P0027	POWER	PB-P3	H-2-122085	TB-23-B1	H-2-122094	2"	COND	PVC	P0027 (TBD HOLD #376)
2	20	P0028	POWER	MH-P2	H-2-122084	LP-500-002B	H-2-122084	4"	COND	PVC	P0031
2	20	P0029	POWER	LP-500-002B	H-2-122084	BOX @ PX-500-002B	H-2-122084	5"	COND	PVC	P0032A,P0032B,P0032C,P0032G,P0049A, P0049B,P0049C
2	20	P0029A	POWER	BOX @ PX-500-002B	H-2-122088-1	PX-500-002B	H-2-122088-1	4"	COND	FLEX	P0032A,P0032B,P0032C,P0032G,P0049A, P0049B,P0049C
2	21	P0036	SPARE	PB-P1	H-2-122085	BLDG 21	H-2-122085	2"	COND	PVC	

DCN-0153 REV 3
PAGE 17

9513358.0831

Electrical Raceway Schedule for Package Number A160

REV NO.	BLDG NO.	RACEWY NO.	FOR	FROM		TO		RACEWAY DATA			INCLUDED CABLE NOs.
				EQUIPMENT NUMBER OR LOCATION	PLAN DRAWING	EQUIPMENT NUMBER OR LOCATION	PLAN DRAWING	SIZE	TYPE	MATERIAL OF CONSTR	
2	20	X0035	INSTR	MH-C1	H-2-122084	TB-20-B1	H-2-122084	2"	COND	PVC	BY OTHERS
2	21	X0038	INSTR	PB-P2	H-2-122085	TB-21-X1	H-2-122085	2"	COND	PVC	BY OTHERS
2	20	X0805	INSTR	LP-500-007	H-2-122087-1	20-XTB-01	H-2-122087-1	3/4"	COND	IMC	X0827
2	20	X0810	INSTR	TB-20-X1	H-2-122087-1	X0810A,X0810C	H-2-122087-1	1"	COND	IMC	X0828,X0829
2	20	X0810A	INSTR	X0810,X0810C	H-2-122087-1	X0810B	H-2-122087-1	3/4"	COND	IMC	X0828
2	20	X0810B	INSTR	X0810A	H-2-122087-1	LIT-FWX-001	H-2-122087-1	1/2"	COND	FLEX	X0828
2	20	X0810C	INSTR	X0810,X0810A	H-2-122087-1	X0810D	H-2-122087-1	3/4"	COND	IMC	X0829
2	20	X0810D	INSTR	X0810C	H-2-122087-1	FIT-SWX-711	H-2-122087-1	1/2"	COND	FLEX	X0829
2	20	X0811	INSTR	TB-20-X1	H-2-122087-1	X0811A,B0811B	H-2-122087-1	1"	COND	IMC	X0825,X0826
2	20	X0811A	INSTR	X0811,X0811B	H-2-122087-1	LP-500-002B	H-2-122087-1	3/4"	COND	IMC	B0825
2	20	X0811B	INSTR	X0811,X0811A	H-2-122087-1	LP-500-002A	H-2-122087-1	3/4"	COND	IMC	B0826
2	21	X0904	INSTR	TB-21-X1	H-2-122087-2	X0904A,X0904B	H-2-122087-2	1"	COND	IMC	X0903,X0909
	20	A0905A	INSTR	LP-500-002A	H-2-122087-2	A0905B/C	H-2-122087-2	1"	COND	IMC	A0912,A0913,A0914,A0915,A0916,A0917
2	21	X0904A	INSTR	X0904,X0904B	H-2-122087-2	LP-500-001A	H-2-122087-2	1"	COND	IMC	X0903
	20	A0905B	INSTR	LP-500-002B	H-2-122087-2	A0905A/C	H-2-122087-2	1"	COND	IMC	A0918,A0919,A0920,A0921,A09 22
2	21	X0904B	INSTR	X0904,X0904A	H-2-122087-2	LP-500-001B	H-2-122087-2	1"	COND	IMC	X0909
	20	A0905C	INSTR	A0905A/B	H-2-122087-2	A0905/D	H-2-122087-2	1"	COND	IMC	A0912 THRU A0922
2	20	Y0800	INSTR	LP-500-006	H-2-122087-1	Y0800A	H-2-122087-1	1"	COND	IMC	Y0800
	20	A0905D	INSTR	LP-500-007	H-2-122087-2	A0905/C	H-2-122087-2	1"	COND	IMC	A0923
2	20	Y0800A	INSTR	Y0800	H-2-122087-1	TE-FWX-367	H-2-122087-1	1"	COND	FLEX	Y0800
1	20	A0905	INSTR	TB-20-A2	H-2-122087-1	A0905C/D	H-2-122087-2	1½"	COND	IMC	A0912 THRU A0923

HOLD NO. HWVP-FD-450 DCN-0153 REV 1

DCN-0153 REV 3 DCN-0153 REV 1
PAGE 18

9513358.0832

Electrical Cable Schedule for Package Number A160

REV NO.	BLDG NO.	CABLE NO.	FROM		TO		CABLE DATA				ONE LINE DIAGRAM NO. N-2-	VIA
			EQUIPMENT NUMBER OR LOCATION	CONNECTION DRAWING	EQUIPMENT NUMBER OR LOCATION	CONNECTION DRAWING	SYS VOLT	NO. COND	SIZE	CABLE CODE		
2	20	B0830	LP-500-004	N-2-122100-6	PSL-FWX-388	X05/N-2-122082-3	120V ac	2	14	AE		B0803,B0803A,B0803B
2	20	B0831	NOT USED								DCN-0153 REV1	
2	20	B0832	LP-500-005A, YC-HPW-004-1	N-2-122100-5	LP-500-007	N-2-122100-3	120V ac	2	14	AE		B0812,B0812B
2	20	B0833	LP-500-005B, YC-HPW-004-2	N-2-122100-5	LP-500-007	N-2-122100-3	120V ac	2	14	AE		B0812,B0812A
2	20	B0834	NOT USED								HOLD NO. HWVP-FD-450 DCN-0153	
2	20	B0835	NOT USED									
2	20	B0840	LP-500-007	N-2-122100-3	TWSL-FWX-004	X04/N-2-122082-5	120V ac	2	14	AE		B0802,B0802A,B0802B, B0802C
2	20	B0841	LP-500-005A, KS-HPW-004-1	N-2-122100-5	TB-20-B1	N-2-122100-1	120V ac	2	14	AE		B0809,B0809B,B0809D, B0809F
2	20	B0842	LP-500-005B, KS-HPW-004-2	N-2-122100-5	TB-20-B1	N-2-122100-1	120V ac	2	14	AE		B0809,B0809B,B0809D, B0809E
2	21	B0900	LP-500-001A	N-2-122100-7	PSL-RWX-051	X04/N-2-122082-5	120V ac	2	14	AE		B0900A,B0900B,B0900F, B0900G
2	21	B0901	LP-500-001A, YC-RWX-049	N-2-122100-7	LP-500-001B	N-2-122100-7	120V ac	2	14	AE		B0901
2	21	B0902	LP-500-001A, YI-RWX-017-1	N-2-122100-7	TB-21-B1	N-2-122100-2	120V ac	2	14	AE		B0902,B0902B
2	21	B0904	LP-500-001B	N-2-122100-7	PSL-RWX-051	X04/N-2-122082-5	120V ac	2	14	AE		B0900,B0900B,B0900F, B0900G
2	21	B0905	LP-500-001B	N-2-122100-7	ZSL-RWX-049	X15/N-2-122082-3	120V ac	2	14	AE		B0900,B0900B,B0900C, B0900D
2	21	B0906	LP-500-001B	N-2-122100-7	ZSH-RWX-049	X15/N-2-122082-3	120V ac	2	14	AE		B0900,B0900B,B0900C, B0900D

* Coaxial Cable Furnished By Vendor

DCN-0153 REV 3

9513358.0835

Electrical Cable Schedule for Package Number A160

REV NO.	BLDG NO.	CABLE NO.	FROM		TO		CABLE DATA				ONE LINE DIAGRAM NO. N-2-	VIA
			EQUIPMENT NUMBER OR LOCATION	CONNECTION DRAWING	EQUIPMENT NUMBER OR LOCATION	CONNECTION DRAWING	SYS VOLT	NO. COND	SIZE	CABLE CODE		
2	21	B0907	LP-500-001B	N-2-122100-7	YT-RWX-049	X04/N-2-122082-5	120V ac	2	14	AE		B0900,B0900B,B0900C, B0900E
2	21	B0908	LP-500-001B, YI-RWX-017-2	N-2-122100-7	TB-21-B1	N-2-122100-2	120V ac	2	14	AE		B0902A,B0902B
2	21	B0910	NOT USED									
2	21	B0911	NOT USED									
2	21	B0912	NOT USED									
2	21	B0913	LSL/N-DRX-402, LSHH-DRX-402	N-2-122100-2	LE-DRX-402	X14/N-2-122082-3	mV	*	*	*		B0903B,B0903C
2	23	B0954	TB-23-A/B1	N-2-122100-2	PSL-RWX-007	X05/N-2-122082-3	120V ac	2	14	AE		B0950,B0950C,B0950D
2	23	B0955	TB-23-A/B1	N-2-122100-2	PY-RWX-004	X01/N-2-122082-3	120V ac	2	14	AE		B0950,B0950A,B0950B
2	23	B0956	NOT USED									
2	23	B0957	NOT USED									
2	23	B0958	LSL/N-DRX-601, LSHH-DRX-601	N-2-122100-2	LE-DRX-601	X14/N-2-122082-3	mV	*	*	*		B0951B,B0951C,B0951D
2	20	P0001	SB-32T-001		DA-32A-B01		480V/277	4	4/0	EV	N-2-122083-1	DB,MM-P1,P0001
2	20	P0002A	DA-32A-B01		XT-32A-B01		480V ac	1	10	AM	N-2-122083-1	P0106
2	20	P0002B	DA-32A-B01		XT-32A-B01		480V ac	1	10	AM	N-2-122083-1	P0106
2	20	P0002C	DA-32A-B01		XT-32A-B01		480V ac	1	10	AM	N-2-122083-1	P0106
2	20	P0002G	DA-32A-B01		XT-32A-B01		480V ac	1	10	AM	N-2-122083-1	P0106

HOLD NO.
HWVP-FD-450
DCN-0153

DCN-0153 REV 1

* Special Cable Furnished By Vendor

DCN-0153 REV3
PAGE 20

9513358.0834

Electrical Cable Schedule for Package Number A160

REV NO.	BLDG NO.	CABLE NO.	FROM		TO		CABLE DATA				ONE LINE DIAGRAM NO. N-2-	VIA
			EQUIPMENT NUMBER OR LOCATION	CONNECTION DRAWING	EQUIPMENT NUMBER OR LOCATION	CONNECTION DRAWING	SYS VOLT	NO. COND	SIZE	CABLE CODE		
2	20	P0010	SB-321-001		PX-530-015-MC		480V ac	3	12	CL	N-2-122083-1	DB,MM-P1,P0009
2	20	P0011A	PX-530-015-MC		PX-530-015		480V ac	1	12	AL	N-2-122083-1	P0010,P0010A
2	20	P0011B	PX-530-015-MC		PX-530-015		480V ac	1	12	AL	N-2-122083-1	P0010,P0010A
2	20	P0011C	PX-530-015-MC		PX-530-015		480V ac	1	12	AL	N-2-122083-1	P0010,P0010A
2	20	P0011G	PX-530-015-MC		PX-530-015		480V ac	1	12	AL	N-2-122083-1	P0010,P0010A
2	21	P0012	SB-321-001		LP-500-001A		480V ac	3	350	CX	N-2-122083-1	DB,PB-P1,P0012
2	21	P0013A	LP-500-001A		PX-500-001A		480V ac	1	250	AW	N-2-122083-1	P0013,P0013A
2	21	P0013B	LP-500-001A		PX-500-001A		480V ac	1	250	AW	N-2-122083-1	P0013,P0013A
2	21	P0013C	LP-500-001A		PX-500-001A		480V ac	1	250	AW	N-2-122083-1	P0013,P0013A
2	21	P0013G	LP-500-001A		PX-500-001A		480V ac	1	2	AQ	N-2-122083-1	P0013,P0013A
2	20	P0014	SB-321-001		LP-500-002A		480V ac	3	4/0	CV	N-2-122083-1	DB,MM-P1,P0015
2	20	P0015A	LP-500-002A	HOLD NO.	PX-500-002A		480V ac	1	4/0	AV	N-2-122083-1	P0016,P0016A
2	20	P0015B	LP-500-002A	HWVP-FD	PX-500-002A	DCN-0153	480V ac	1	4/0	AV	N-2-122083-1	P0016,P0016A
2	20	P0015C	LP-500-002A	-450	PX-500-002A	REV 1	480V ac	1	4/0	AV	N-2-122083-1	P0016,P0016A
2	20	P0015G	LP-500-002A	DCN-0153	PX-500-002A		480V ac	1	2	AQ	N-2-122083-1	P0016,P0016A
2	21	P0016	SB-321-002		LP-500-001B		480V ac	3	250	CW	N-2-122083-2	DB,PB-P2,P0021
2	21	P0017A	LP-500-001B		PX-500-001B		480V ac	1	250	AW	N-2-122083-2	P0022,P0022A

[illegible] cable furnished By Vendor

DCN-0153 REV 3
PAGE 21

9513358.0835

Electrical Cable Schedule for Package Number A160

REV NO.	BLDG NO.	CABLE NO.	FROM		TO		CABLE DATA				ONE LINE DIAGRAM NO. N-2-	VIA
			EQUIPMENT NUMBER OR LOCATION	CONNECTION DRAWING	EQUIPMENT NUMBER OR LOCATION	CONNECTION DRAWING	SYS VOLT	NO. COND	SIZE	CABLE CODE		
2	21	P0017B	LP-500-001B		PX-500-001B		480V ac	1	250	AW	N-2-122083-2	P0022,P0022A
2	21	P0017C	LP-500-001B		PX-500-001B		480V ac	1	250	AW	N-2-122083-2	P0022,P0022A
2	21	P0017D	LP-500-001B		PX-500-001B		480V ac	1	2	AO	N-2-122083-2	P0022,P0022A
2	21	P0018	SB-32T-002		PX-530-013A-MC		480V ac	3	10	CW	N-2-122083-2	DB,PB-P2,P0023
2	21	P0019A	PX-530-013A-MC		PX-530-013A		480V ac	1	10	AW	N-2-122083-2	P0023A,P0023B
2	21	P0019B	PX-530-013A-MC		PX-530-013A		480V ac	1	10	AW	N-2-122083-2	P0023A,P0023B
2	21	P0019C	PX-530-013A-MC		PX-530-013A		480V ac	1	10	AW	N-2-122083-2	P0023A,P0023B
2	21	P0019G	PX-530-013A-MC		PX-530-013A		480V ac	1	10	AW	N-2-122083-2	P0023A,P0023B
2	21	P0020	SB-32T-002		PX-530-013B-MC		480V ac	3	10	CW	N-2-122083-2	DB,PB-P1,P0024
2	21	P0021A	PX-530-013B-MC		PX-530-013B		480V ac	1	10	AW	N-2-122083-2	P0024A,P0024B
2	21	P0021B	PX-530-013B-MC		PX-530-013B		480V ac	1	10	AW	N-2-122083-2	P0024A,P0024B
2	21	P0021C	PX-530-013B-MC		PX-530-013B		480V ac	1	10	AW	N-2-122083-2	P0024A,P0024B
2	21	P0021G	PX-530-013B-MC		PX-530-013B		480V ac	1	10	AW	N-2-122083-2	P0024A,P0024B
2	21	P0022	SB-32T-002		DA-32A-802		480Y/277	4	4/0	EV	N-2-122083-2	DB,PB-P2,P0025
2	21	P0023A	DA-32A-802		XT-32A-802		480V ac	1	10	AW	N-2-122083-2	P0101
2	21	P0023B	DA-32A-802		XT-32A-802		480V ac	1	10	AW	N-2-122083-2	P0101

HOLD NO.
HWVP-FD
-450
DCN-0153

DCN-0153
REV 1

9513358.0836

DCN-0153 REV 3
PAGE 22

Electrical Cable Schedule for Package Number A160

REV NO.	BLDG NO.	CABLE NO.	FROM		TO		CABLE DATA				ONE LINE DIAGRAM NO. N-2-	VIA
			EQUIPMENT NUMBER OR LOCATION	CONNECTION DRAWING	EQUIPMENT NUMBER OR LOCATION	CONNECTION DRAWING	SYS VOLT	NO. COND	SIZE	CABLE CODE		
2	21	P0039A	SPLICE BOX B PX-500-001A		CAPACITOR		480V ac	1	8	AN	N-2-122083-1	P0013A
2	21	P0039B	SPLICE BOX B PX-500-001A		CAPACITOR		480V ac	1	8	AN	N-2-122083-1	P0013A
2	21	P0039C	SPLICE BOX B PX-500-001A		CAPACITOR		480V ac	1	8	AN	N-2-122083-1	P0013A
2	20	P0040A	NOT USED									
2	20	P0040B	NOT USED									
2	20	P0040C	NOT USED									
2	20	P0041A	LP-500-005A		PX-500-005A		480V ac	1	2	AQ	N-2-122083-1	P0018,P0018B,P0018C
2	20	P0041B	LP-500-005A		PX-500-005A		480V ac	1	2	AQ	N-2-122083-1	P0018,P0018B,P0018C
2	20	P0041C	LP-500-005A		PX-500-005A		480V ac	1	2	AQ	N-2-122083-1	P0018,P0018B,P0018C
2	20	P0041G	LP-500-005A		PX-500-005A		480V ac	1	6	AQ	N-2-122083-1	P0018,P0018B,P0018C
2	20	P0042A	SPLICE BOX B PX-500-005A		CAPACITOR		480V ac	1	10	AN	N-2-122083-1	P0018A
2	20	P0042B	SPLICE BOX B PX-500-005A		CAPACITOR		480V ac	1	10	AN	N-2-122083-1	P0018A
2	20	P0042C	SPLICE BOX B PX-500-005A		CAPACITOR		480V ac	1	10	AN	N-2-122083-1	P0018A
2	20	P0043A	LP-500-005B		PX-500-005B		480V ac	1	2	AQ	N-2-122083-1	P0020,P0020B,P0020C
2	20	P0043B	LP-500-005B		PX-500-005B		480V ac	1	2	AQ	N-2-122083-1	P0020,P0020B,P0020C
2	20	P0043C	LP-500-005B		PX-500-005B		480V ac	1	2	AQ	N-2-122083-1	P0020,P0020B,P0020C
2	20	P0043G	LP-500-005B		PX-500-005B		480V ac	1	6	AQ	N-2-122083-1	P0020,P0020B,P0020C

HOLD NO.
HWVP-FD
-450
DCN-0153

DCN-0153
REV 1

9513358.0837

Electrical Cable Schedule for Package Number A160

REV NO.	BLDG NO.	CABLE NO.	FROM		TO		CABLE DATA				ONE LINE DIAGRAM NO. H-2-	VIA
			EQUIPMENT NUMBER OR LOCATION	CONNECTION DRAWING	EQUIPMENT NUMBER OR LOCATION	CONNECTION DRAWING	SYS VOLT	NO. COND	SIZE	CABLE CODE		
2	20	P0044A	SPLICE BOX B PX-500-0058		CAPACITOR		480V ac	1	10	AM	H-2-122083-1	P0020A
2	20	P0044B	SPLICE BOX B PX-500-0058		CAPACITOR		480V ac	1	10	AM	H-2-122083-1	P0020A
2	20	P0044C	SPLICE BOX B PX-500-0058		CAPACITOR		480V ac	1	10	AM	H-2-122083-1	P0020A
2	21	P0045A	SPLICE BOX B PX-500-0018		CAPACITOR		480V ac	1	8	AM	H-2-122083	P0117
2	21	P0045B	SPLICE BOX B PX-500-0018		CAPACITOR		480V ac	1	8	AM	H-2-122083	P0117
2	21	P0045C	SPLICE BOX B PX-500-0018		CAPACITOR		480V ac	1	8	AM	H-2-122083	P0117
2	20	P0046A	LP-500-002A		PX-500-002A		480V ac	1	4/0	AV	H-2-122083-1	P0016,P0016A
2	20	P0046B	LP-500-002A		PX-500-002A		480V ac	1	4/0	AV	H-2-122083-1	P0016,P0016A
2	20	P0046C	LP-500-002A		PX-500-002A		480V ac	1	4/0	AV	H-2-122083-1	P0016,P0016A
2	20	P0048	SB-321-002		LP-500-002B		480V ac	3	500	CY	H-2-122083-2	BB,MM-P2,P0045
2	20	P0049A	LP-500-002B		PX-500-002B		480V ac	1	500	AY	H-2-122083-2	P0029,P0029A
2	20	P0049B	LP-500-002B		PX-500-002B		480V ac	1	500	AY	H-2-122083-2	P0029,P0029A
2	20	P0049C	LP-500-002B		PX-500-002B		480V ac	1	500	AY	H-2-122083-2	P0029,P0029A
2	23	P0050	SB-321-002		LS-510-001		480V ac	3	6	CO	H-2-122083	BB,P0121
2	21	P0051A	DA-32A-B02		UM-5AA-001		480V ac	1	10	AM		P0105,P0105C,P0105D
2	21	P0051B	DA-32A-B02		UM-5AA-001		480V ac	1	10	AM		P0105,P0105C,P0105D

HOLD NO. HWVP-FD-450 DCN-0153

DCN-0153 REV. 1

DCN-0153 REV 3 PAGE 24

* Coaxial Cable Furnished By Vendor

9513358.0838

DCN-0153 Rev 1

Electrical Cable Schedule for Package Number A160

REV NO.	BLDG NO.	CABLE NO.	FROM EQUIPMENT NUMBER OR LOCATION	FROM CONNECTION DRAWING	TO EQUIPMENT NUMBER OR LOCATION	TO CONNECTION DRAWING	CABLE DATA SYS VOLT	NO. COND	SIZE	CABLE CODE	ONE LINE DIAGRAM NO. N-2-	VIA
2	20	P00798	DA-32A-B01		TIC-05AB-007		480V ac	1	10	AM		P0127, P0127A
	20	A0912	LP-500-002A	H-2-122100-4	TB-20-A2	H-2-122100-1	120Vac	2	14	AE		A0905A, A0905C, A0905
2	20	P00800	TIC-05AB-007		BL-05AB-007		480V ac	1	10	AM		P0127A, P0127B, P0127C
	20	A0913	LP-500-002A	H-2-122100-4	TB-20-A2	H-2-122100-1	120Vac	2	14	AE		A0905A, A0905C, A0905
2	20	P00800	TIC-05AB-007		BL-05AB-007		480V ac	1	10	AM		P0127A, P0127B, P0127C
	20	A0914	LP-500-002A	H-2-122100-4	TB-20-A2	H-2-122100-1	120Vac	2	14	AE		A0905A, A0905C, A0905
2	20	P00800	FTG B		BL-05AB-007		480V ac	1	10	AM		P0127A, P0127B, P0127C
	20	A0915	LP-500-002A	H-2-122100-4	TB-20-A2	H-2-122100-1	120Vac	2	14	AE		A0905A, A0905C, A0905
2	20	X0825	TB-20-X1, IT-FWX-017-1	H-2-122100-1	LP-500-002B	H-2-122100-4	4-20mA	2	16	AD		X0811, X0811A
	20	A0916	LP-500-002A	H-2-122100-4	TB-20-A2	H-2-122100-1	120Vac	2	14	AE		A0905A, A0905C, A0905
2	20	X0826	TB-20-X1, IT-FWX-017-2	H-2-122100-1	LP-500-002A	H-2-122100-4	4-20mA	2	16	AD		X0811, X0811B
	20	A0917	LP-500-002A	H-2-122100-4	TB-20-A2	H-2-122100-1	120Vac	2	14	AE		A0905A, A0905C, A0905
2	20	X0827	TB-20-X1, FI-WPU-907A	H-2-122100-1	LP-500-007	H-2-122100-3	4-20mA	2	16	AD		X0805
	20	A0918	LP-500-002B	H-2-122100-4	TB-20-A2	H-2-122100-1	120Vac	2	14	AE		A0905B, A0905C, A0905
2	20	X0828	TB-20-X1, LIT-FWX-001	H-2-122100-1	LIT-FWX-001	X03/H-2-122082-3	4-20mA	2	16	AD		X0810, X0810A, X0810B
	20	A0919	LP-500-002B	H-2-122100-4	TB-20-A2	H-2-122100-1	120Vac	2	14	AE		A0905B, A0905C, A0905
2	20	X0829	TB-20-X1, FIT-SWX-711	H-2-122100-1	FIT-SWX-711	X03/H-2-122082-3	4-20mA	2	16	AD		X0810, X0810C, X0810D
	20	A0920	LP-500-002B	H-2-122100-4	TB-20-A2	H-2-122100-1	120Vac	2	14	AE		A0905B, A0905C, A0905
2	21	X0903	LP-500-001A, IT-RWX-017-1	H-2-122100-7	TB-21-X1	H-2-122100-2	4-20mA	2	16	AD		X0904, X0904A
2	21	X0909	LP-500-001B, IT-RWX-017-2	H-2-122100-7	TB-21-X1	H-2-122100-2	4-20mA	2	16	AD		X0904, X0904B
2	20	Y0800	LP-500-006	H-2-122100-6	TE-FWX-367	X11/H-2-122082-3	mV	2	16	CA		Y0800, Y0800A
	20	A0923	LP-500-007 TALL-FWX-005B	H-2-122100-8	TB-20-A2	H-2-122100-1	120Vac	2	14	AE		A0905D, A0905
	20	A0921	LP-500-002B ZAL-FWX-017-2B	H-2-122100-4	TB-20-A2	H-2-122100-1	120Vac	2	14	AE		A0905B, A0905C, A0905
	20	A0922	LP-500-002B ZAL-FWX-017-2B	H-2-122100-4	TB-20-A2	H-2-122100-1	120Vac	2	14	AE		A0905B, A0905C, A0905

* Coaxial Cable Furnished By Vendor

HOLD No. HNVP-FD-450 DCN-0153
DCN-0153 Rev 1

DCN-0153 Rev 3
PAGE 25

9513358.0839

9513358.0840

TB-21-A/B1
(RAW WATER PUMP HOUSE)

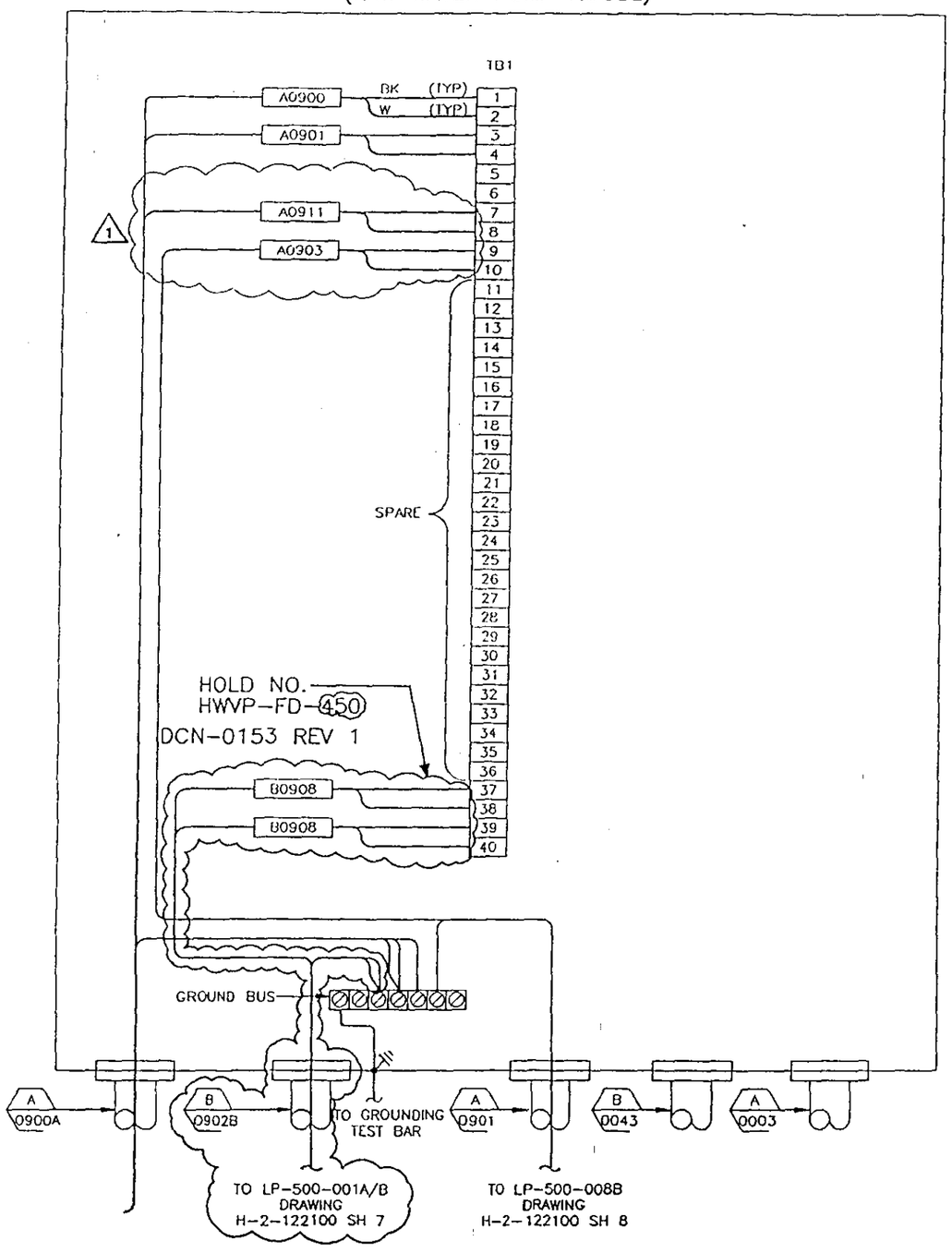

FLUOR DANIEL	U.S. DEPARTMENT OF ENERGY HANFORD WASTE VITRIFICATION PLANT	DESIGN CHANGE NOTICE
DESCRIPTION OF CHANGE: HOLD ON A/G PWR & GNDG FOR PX-500-001A/B & ADD FIREWATER PUMP ALARM SYSTEM		BASE DOC. NO. H-2-122100 SHT/PG. 2 REV. 1 CR NO. 1069 R1 & 1006 DISCIPLINE: ELECTRICAL
PREPARED BY: R. Spurgh	DATE: 01/22/94	DCN-0153
DISCIPLINE ENGINEER: K. K. [illegible]	DATE: 2/17/94	REV. 3 / PAGE 26

9513358.0841

TB-21-X1
(RAW WATER PUMP HOUSE)

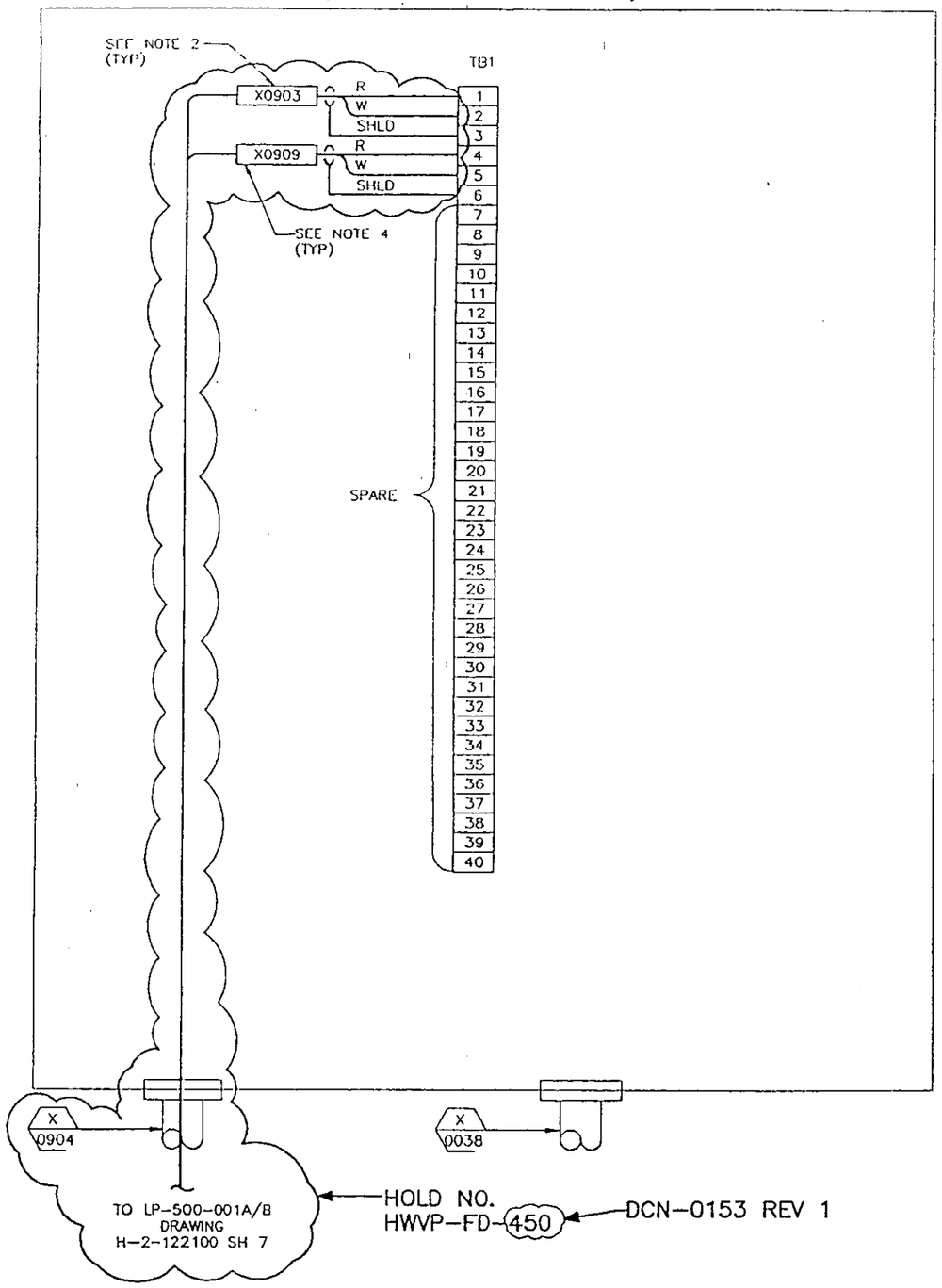

FLUOR DANIEL — U.S. DEPARTMENT OF ENERGY, HANFORD WASTE VITRIFICATION PLANT		DESIGN CHANGE NOTICE
DESCRIPTION OF CHANGE: HOLD ON A/G PWR & GNDG FOR PX-500-001A/B & ADD FIREWATER PUMP ALARM SYSTEM		BASE DOC. NO. H-2-122100 SHT/PG. 2 REV. 1 CR NO. 1069 R1 & 1006 DISCIPLINE: ELECTRICAL
PREPARED BY: H. Spurgeon	DATE: 01/22/94	DCN-0153 — REV. 3 — PAGE 27
DISCIPLINE ENGINEER: L. K. Sassaman	DATE: 2/17/94	

9513358.0842

LP-500-007
(FIRE WATER PUMP HOUSE)

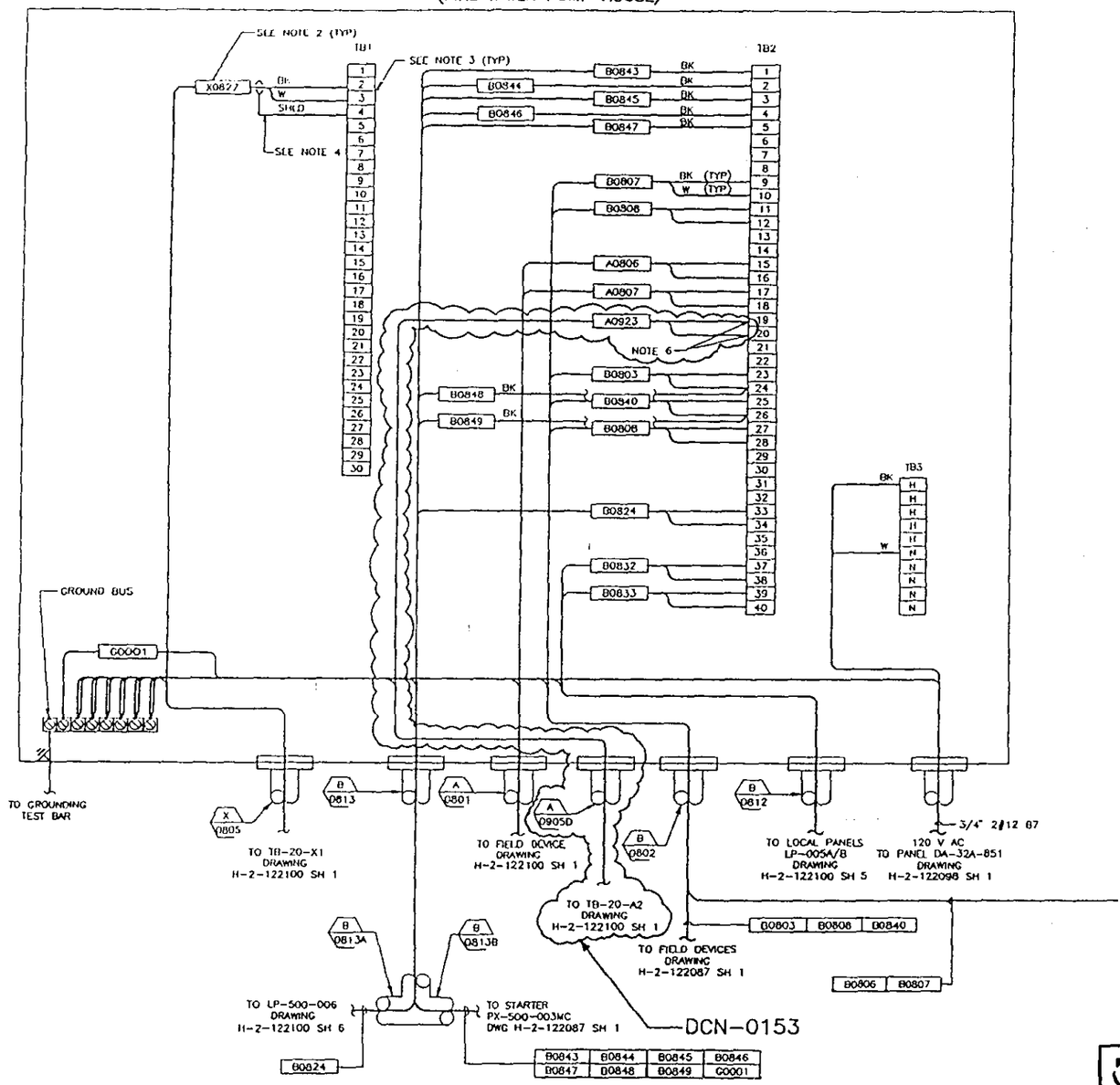

DCN-0153

NOTE:

6. FINAL TERMINATION POINTS FOR CONDUCTORS SHALL BE DETERMINED UPON RECEIPT OF FINAL VENDOR INFORMATION

FLUOR DANIEL	U.S. DEPARTMENT OF ENERGY HANFORD WASTE VITRIFICATION PLANT	DESIGN CHANGE NOTICE
DESCRIPTION OF CHANGE: HOLD ON A/G PWR & GNDG FOR PX-500-001A/B & ADD FIREWATER PUMP ALARM SYSTEM		BASE DOC. NO. H-2-122100 SHT/PG. 3 REV. 0 CR NO. 1069 R1 & 1006 DISCIPLINE: ELECTRICAL
PREPARED BY: A. Sjuvegh	DATE: 12/23/93	DCN-0153 REV. 3 PAGE 28
DISCIPLINE ENGINEER: K. K. Gosavalia	DATE: 2/17/94	

9513358.0843

LP-500-002A
(FIRE WATER PUMP HOUSE)

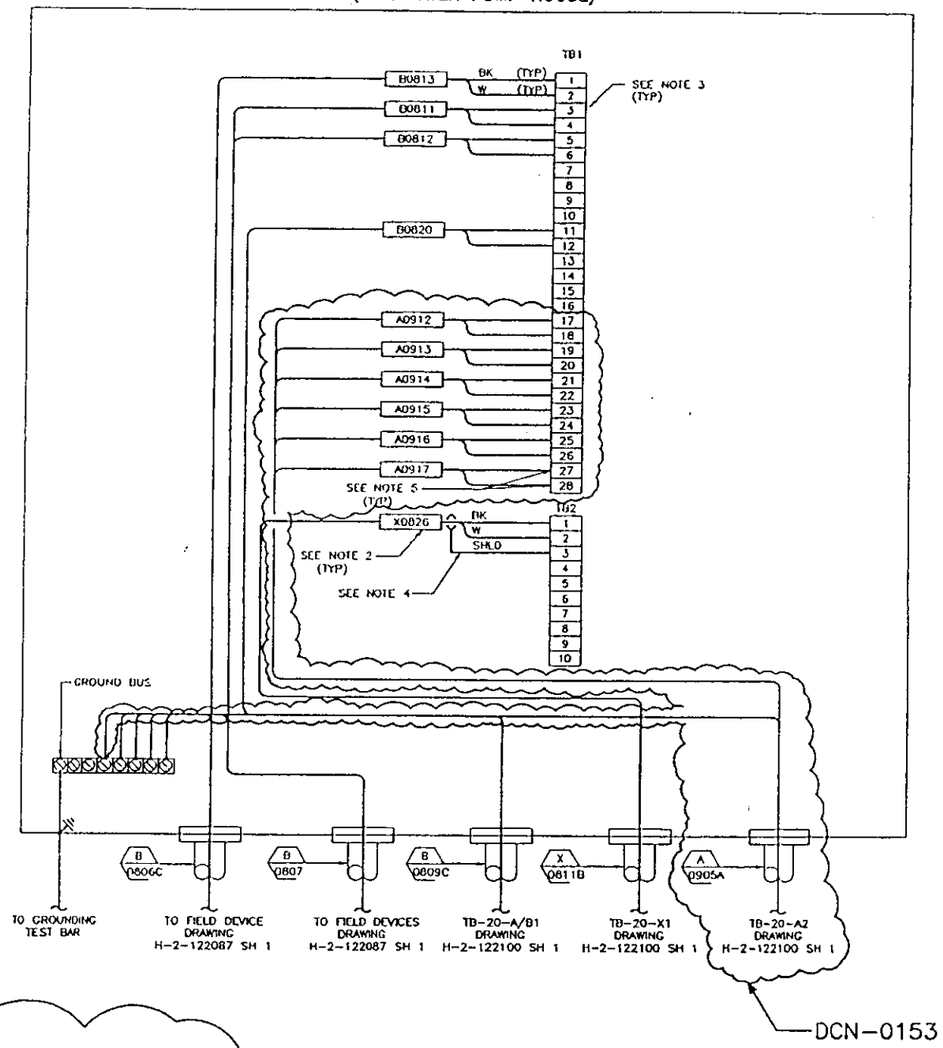

LP-500-002B
(FIRE WATER PUMP HOUSE)

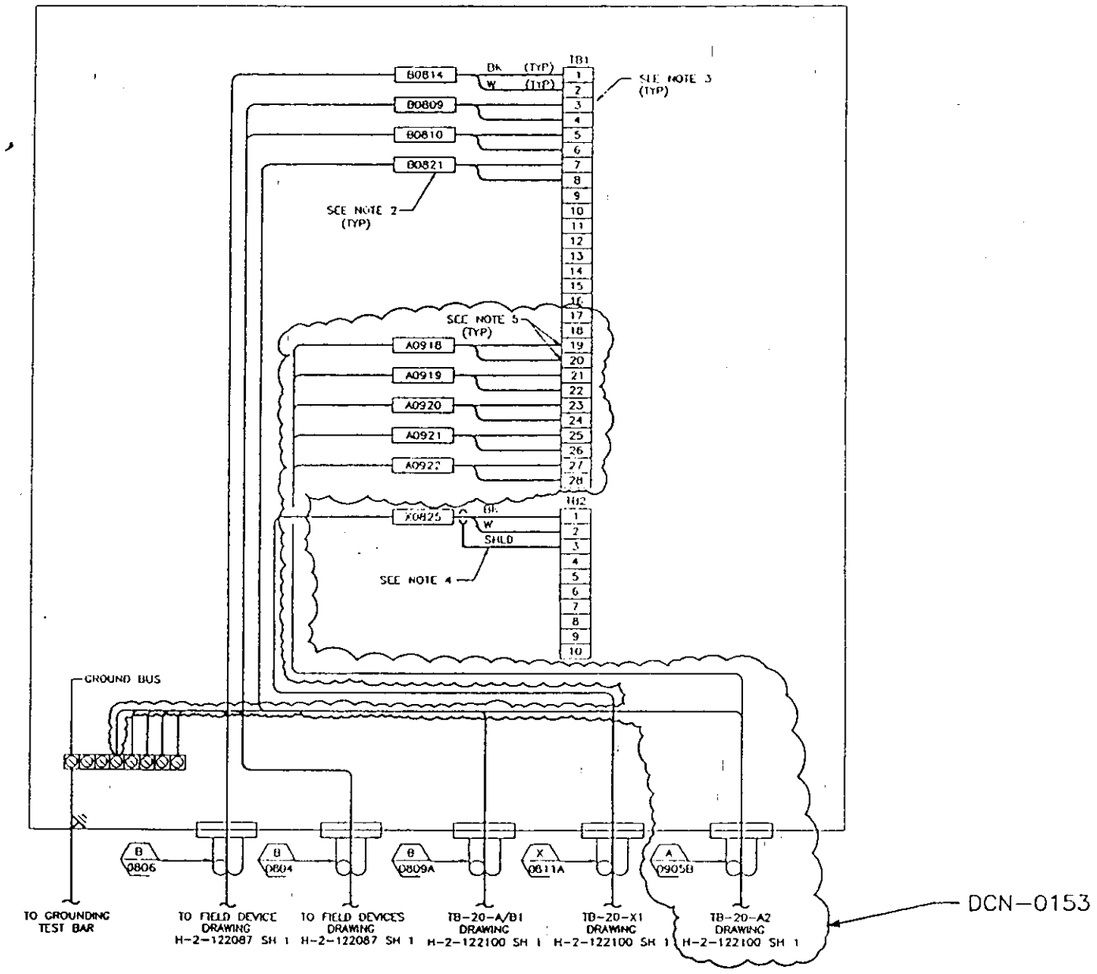

NOTES:

5. FINAL TERMINATION POINTS FOR CONDUCTORS SHALL BE DETERMINED UPON RECEIPT OF FINAL VENDOR INFORMATION.

DCN-0153

FLUOR DANIEL	U.S. DEPARTMENT OF ENERGY HANFORD WASTE VITRIFICATION PLANT	DESIGN CHANGE NOTICE
DESCRIPTION OF CHANGE: HOLD ON A/G PWR & GNDG FOR PX-500-001A/B & ADD FIREWATER PUMP ALARM SYSTEM		BASE DOC. NO. H-2-122100 SHT/PG. 4 REV. 0 CR NO. 1069 R1 & 1006 DISCIPLINE: ELECTRICAL
PREPARED BY: H. Spuenzli	DATE: 12/23/93	DCN-0153 — REV. 3 — PAGE 29
DISCIPLINE ENGINEER: K. K. Jaisomshin	DATE: 2/17/94	

9513358.0844

LP-500-001B
(RWX WATER PUMP HOUSE)

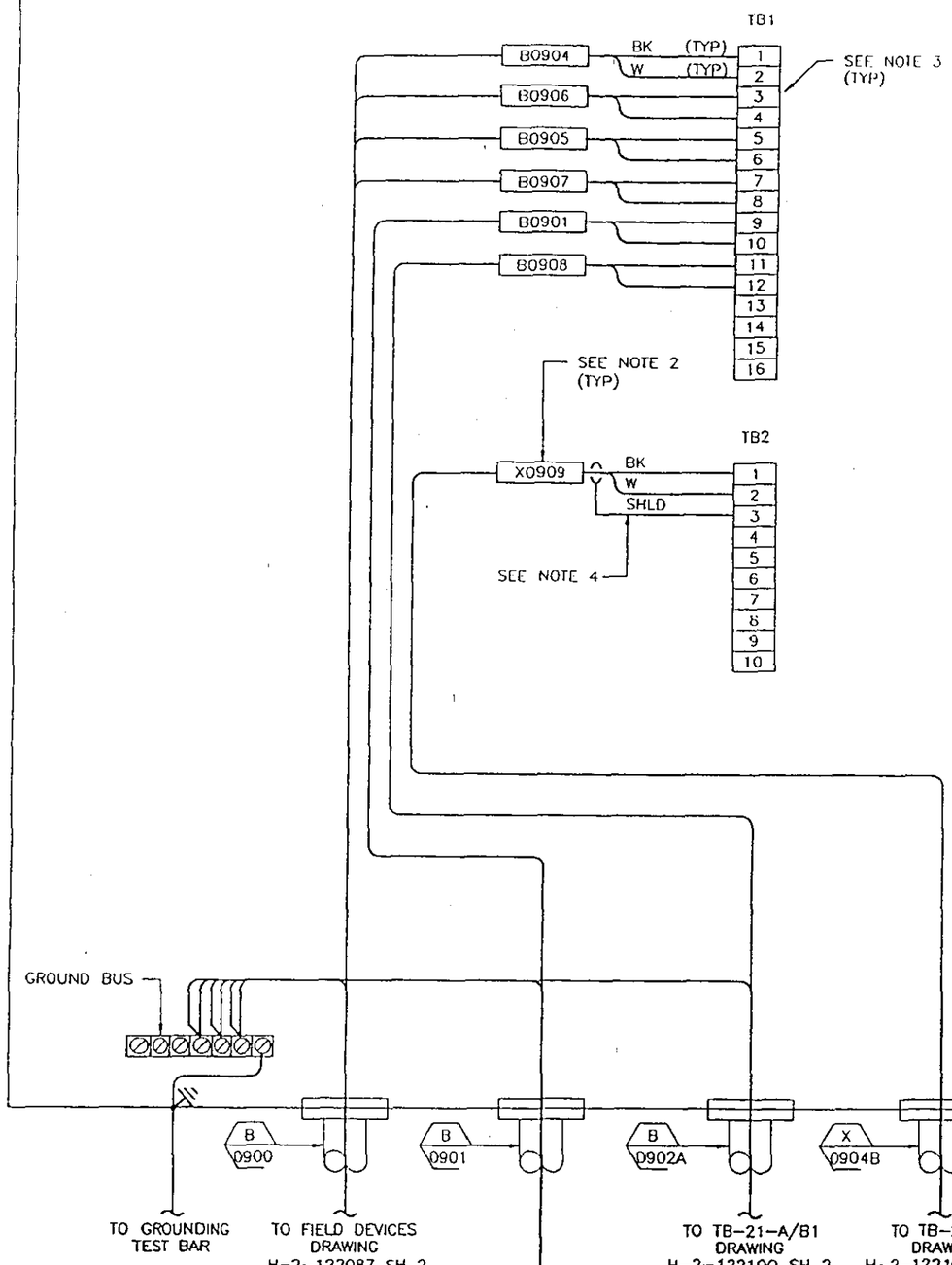

DCN-0153 REV 1

HOLD NO.
HWVP-FD-450
DCN-0153

FLUOR DANIEL	U.S. DEPARTMENT OF ENERGY HANFORD WASTE VITRIFICATION PLANT	DESIGN CHANGE NOTICE
DESCRIPTION OF CHANGE: HOLD ON A/G PWR & GNDG FOR PX-500-001A/B & ADD FIREWATER PUMP ALARM SYSTEM		BASE DOC. NO. H-2-122100 SHT/PG. 7 REV. 0 CR NO. 1069 R1 & 1006 DISCIPLINE: ELECTRICAL
PREPARED BY:	DATE: 01/22/94	DCN-0153 REV. 3 PAGE 30
DISCIPLINE ENGINEER:	DATE: 2/17/94	

9513358.0845

LP-500-001A
(RWX WATER PUMP HOUSE)

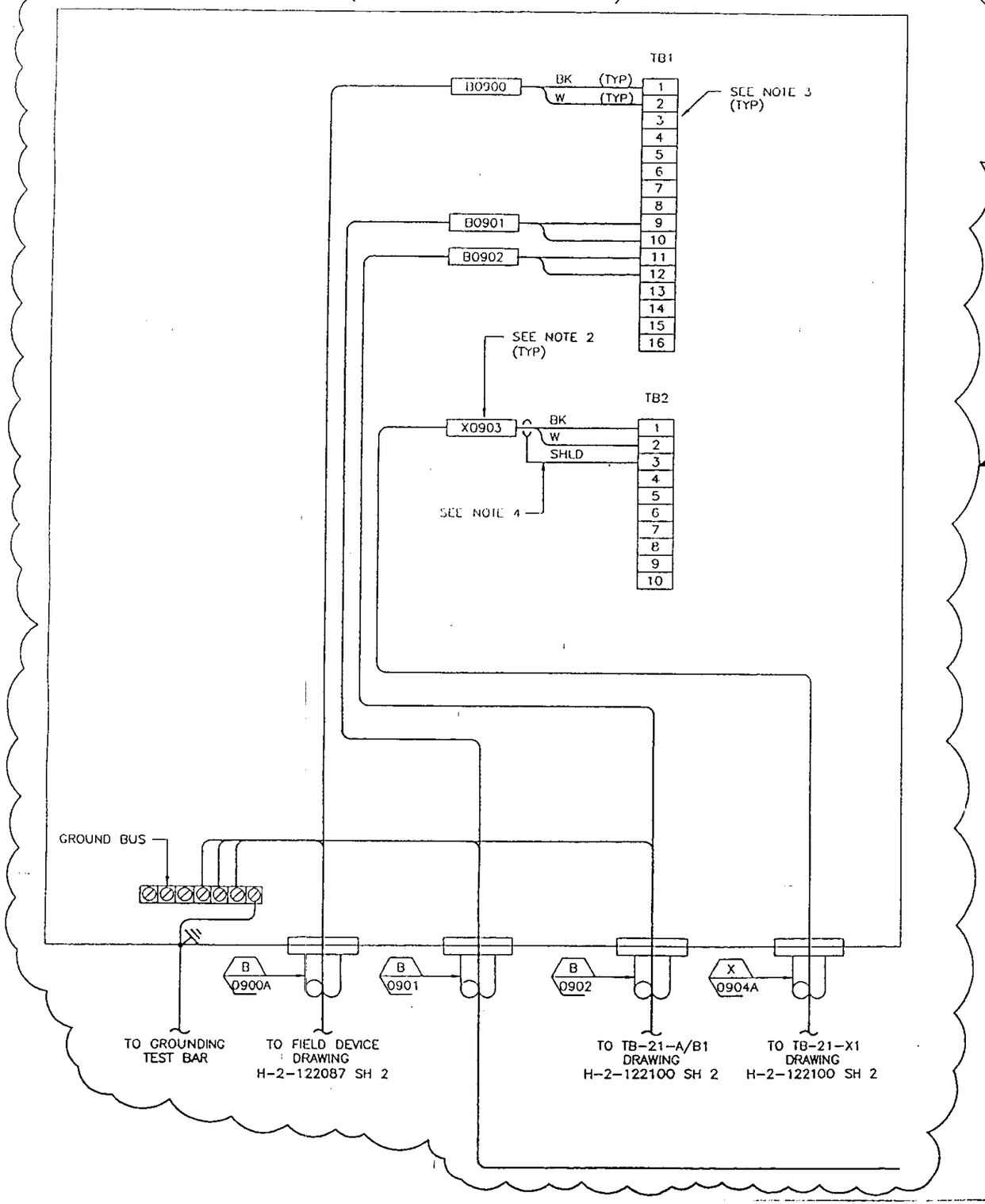

DCN-0153 REV 1

HOLD NO.
HWVP-FD-450
DCN-0153

NOTES:

1. FOR STANDARD DRAFTING SYMBOLS, ABBREVIATIONS AND GENERAL NOTES SEE DRAWING H-2-122081 SH 1 AND SH 2.
2. ALL WIRES (PAIRS) TO BE TAGGED AT EACH TERMINATION POINT. TAG TO BE IDENTICAL FROM FIELD DEVICE THRU TO FINAL TERMINATION POINT, UNLESS NOTED OTHERWISE.
3. FOR INTERNAL PANEL WIRING SEE SELLER ELECTRICAL CONNECTION DIAGRAM DRAWING(S).
4. SHIELDS TO BE INSULATED AND ISOLATED FROM OTHER SHIELDS AND GROUND.

FLUOR DANIEL	U.S. DEPARTMENT OF ENERGY HANFORD WASTE VITRIFICATION PLANT	DESIGN CHANGE NOTICE
DESCRIPTION OF CHANGE: HOLD ON A/G PWR & GNDG FOR PX-500-001A/B & ADD FIREWATER PUMP ALARM SYSTEM		BASE DOC. NO. H-2-122100 SHT/PG. 7 REV. 0 CR NO. 1069 R1 & 1006 DISCIPLINE: ELECTRICAL
PREPARED BY: A. Spinnaglia	DATE: 01/22/94	DCN-0153 REV. 3 PAGE 31
DISCIPLINE ENGINEER: K.B. Boissonlaire	DATE: 2/17/94	

9513358.0846

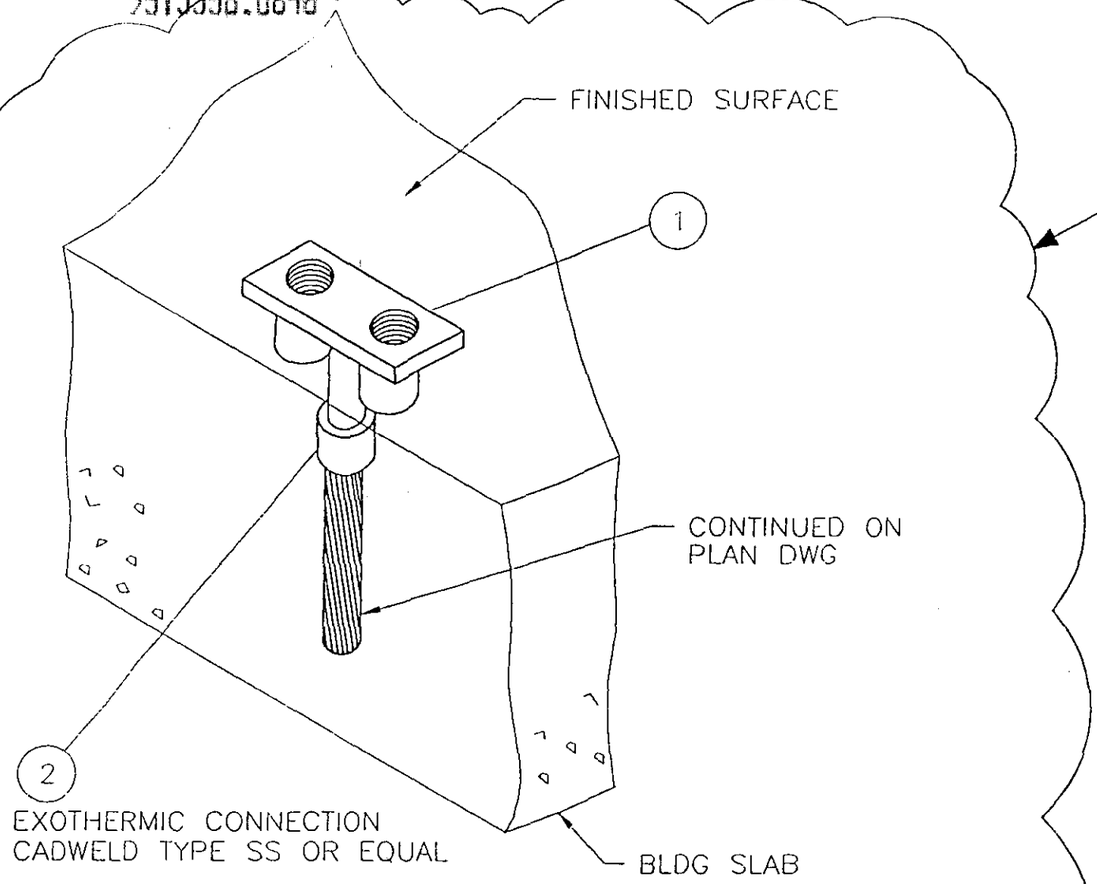

ITEM	DESCRIPTION
1	GROUND PLATE, WITH #2/0 WELDING STUD, (2) 1/2"-13, 1/2" DEEP HOLES
2	CARTRIDGE WELD METAL, STANDARD POWDER

ASSEMBLY G33

2-HOLE GROUND PLATE EMBEDDED IN FLOOR

NOTE:
THE INFORMATION CONTAINED ON THIS PAGE TO BE INCLUDED ON SHEET 6 OF DRAWING H-2-122082 WHICH WILL BE ADDED AT THE NEXT REVISION.

FLUOR DANIEL	U.S. DEPARTMENT OF ENERGY HANFORD WASTE VITRIFICATION PLANT	DESIGN CHANGE NOTICE
DESCRIPTION OF CHANGE: HOLD ON A/G PWR & GNDG FOR PX-500-001A/B & ADD FIREWATER PUMP ALARM SYSTEM		BASE DOC. NO. H-2-122082 SHT/PG. 5 REV. 0 CR NO. 1069 R1 & 1006 DISCIPLINE: ELECTRICAL
PREPARED BY: R. Springer	DATE: 01/22/94	DCN-0153 REV. 3 PAGE 32
DISCIPLINE ENGINEER: K. K. Sissoolaria	DATE: 2/17/94	

9513358.0847

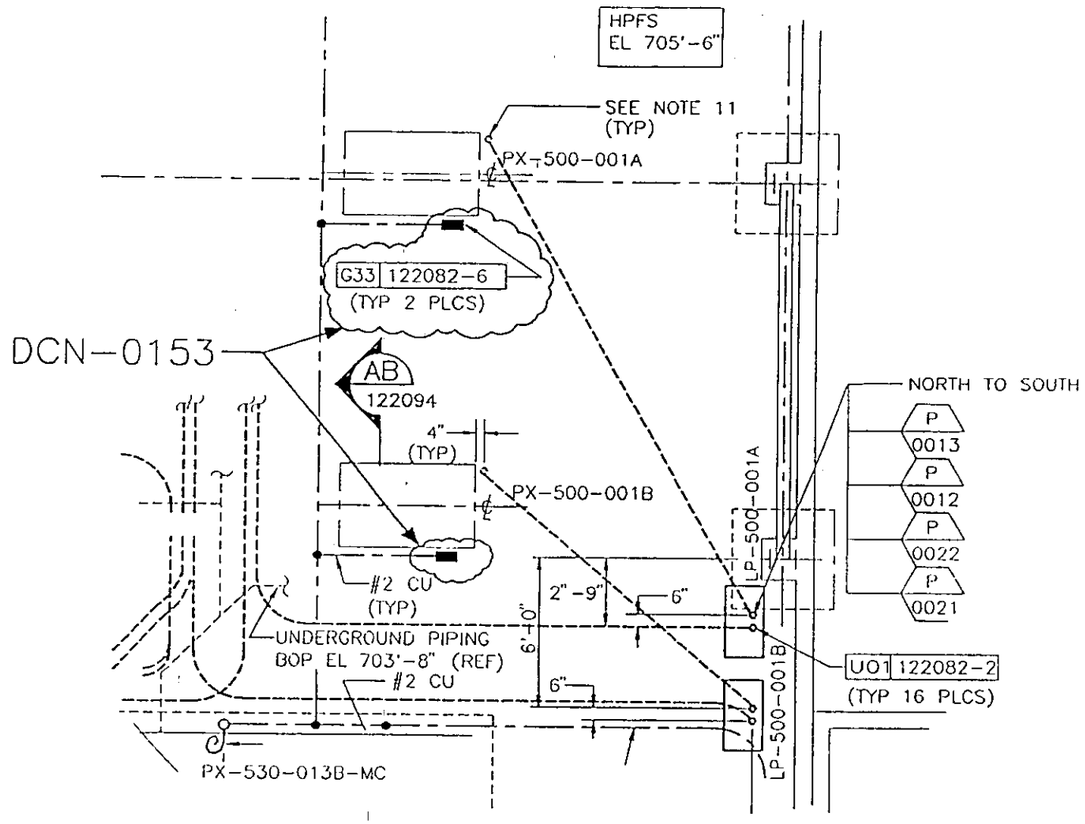

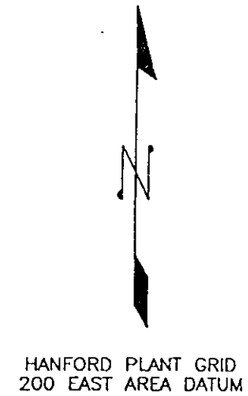

PLAN
RAW WATER PUMP HOUSE
BLDG NO. 21

FLUOR DANIEL	U.S. DEPARTMENT OF ENERGY HANFORD WASTE VITRIFICATION PLANT	DESIGN CHANGE NOTICE
DESCRIPTION OF CHANGE: HOLD ON A/G PWR & GNDG FOR PX-500-001A/B & ADD FIREWATER PUMP ALARM SYSTEM		BASE DOC. NO. H-2-122085 SHT/PG. 1 REV. 2 CR NO. 1069 R1 & 1006 DISCIPLINE: ELECTRICAL
PREPARED BY: A. Sjuerghi	DATE: 01/22/94	DCN-0153 REV. 3 PAGE 33
DISCIPLINE ENGINEER: K.K. Fossadonia	DATE: 2/17/94	

9513358.0848

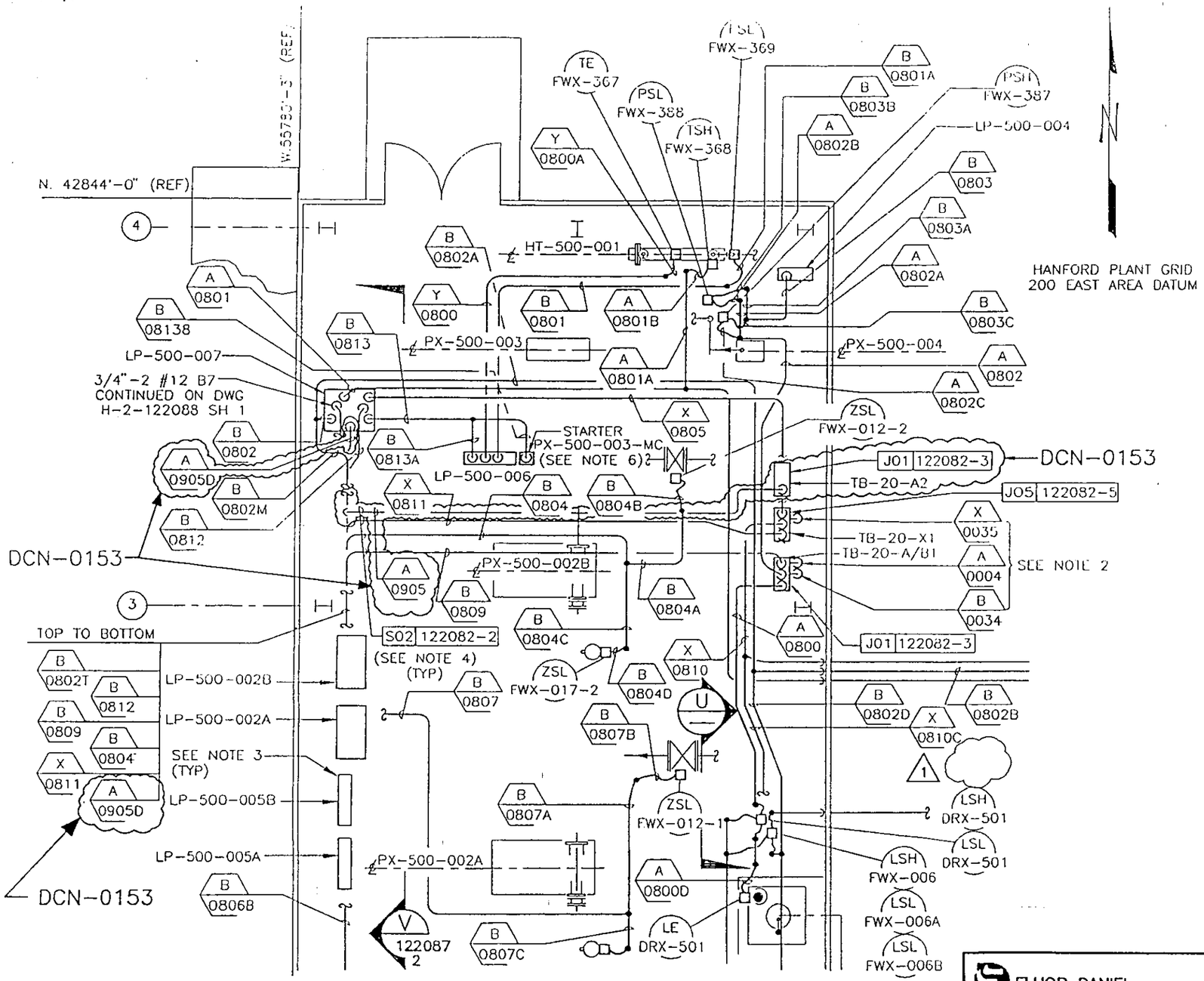

FLUOR DANIEL	U.S. DEPARTMENT OF ENERGY HANFORD WASTE VITRIFICATION PLANT	DESIGN CHANGE NOTICE
DESCRIPTION OF CHANGE: HOLD ON A/G PWR & GNDG FOR PX-500-001A/B & ADD FIREWATER PUMP ALARM SYSTEM		BASE DOC. NO. H-2-122087 SHT/PG. 1 REV. 1 CR NO. 1069 R1 & 1006 DISCIPLINE: ELECTRICAL
PREPARED BY: [signature]	DATE: 01/22/94	DCN-0153 — REV. 3 — PAGE 34
DISCIPLINE ENGINEER: [signature]	DATE: 2/17/94	

9513358.0849

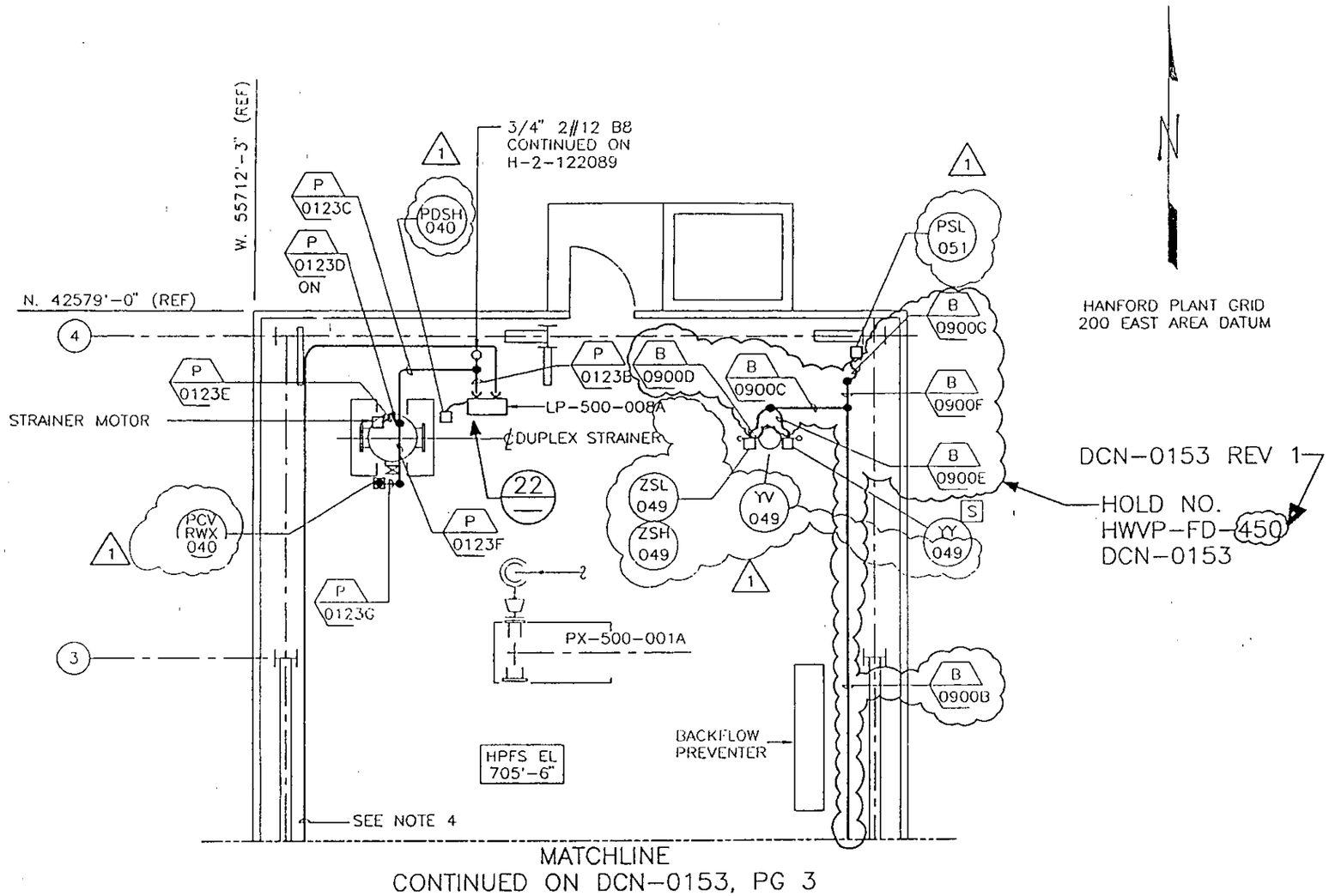

PLAN
RAW WATER PUMP HOUSE
BLDG NO. 21

FLUOR DANIEL	U.S. DEPARTMENT OF ENERGY HANFORD WASTE VITRIFICATION PLANT	DESIGN CHANGE NOTICE
DESCRIPTION OF CHANGE: HOLD ON A/G PWR & GNDG FOR PX-500-001A/B & ADD FIREWATER PUMP ALARM SYSTEM		BASE DOC. NO. H-2-122087 SHT/PG. 2 REV. 1 CR NO. 1069 & 1066 DISCIPLINE: ELECTRICAL
PREPARED BY: H. Spunagli	DATE: 01/28/94	DCN-0153 REV. 3 PAGE 35
DISCIPLINE ENGINEER: K. K. Sosamolavia	DATE: 2/17/94	

9513358.0850

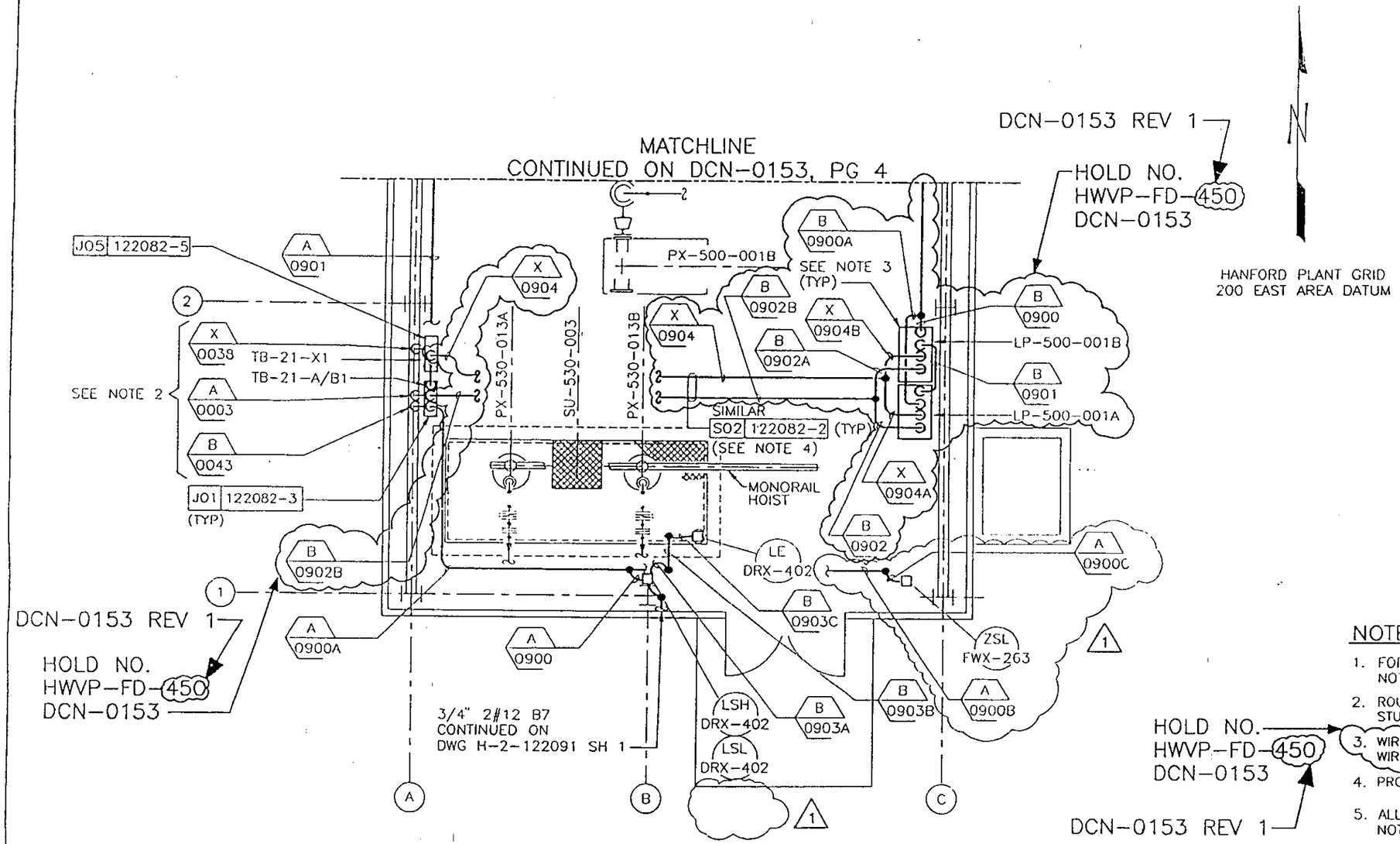

PLAN
RAW WATER PUMP HOUSE
BLDG NO. 21

NOTES:

1. FOR STANDARD DRAFTING SYMBOLS, ABBREVIATIONS AND GENERAL NOTES SEE DWG H-2-122081 SH 1 AND SH 2.
2. ROUTE CONDUIT(S) AS REQD DOWN FROM EACH TERMINAL BOX TO STUBUPS AT FLOOR. SEE DWG H-2-122085 SH 1.
3. WIRING CONNECTIONS TO "LP" PANELS SHALL BE MADE PER VENDOR WIRING DIAGRAMS.
4. PROVIDE CONDUIT SUPPORT AS REQUIRED.
5. ALL INSTRUMENTS ARE PREFIXED WITH "RWX" UNLESS OTHERWISE NOTED I.E. ZSL-023 = ZSL-RWX-023

HOLD NO.
HWVP-FD-450
DCN-0153

DCN-0153 REV 1

FLUOR DANIEL	U.S. DEPARTMENT OF ENERGY HANFORD WASTE VITRIFICATION PLANT	DESIGN CHANGE NOTICE
DESCRIPTION OF CHANGE: HOLD ON A/G PWR & GNDG FOR PX-500-001A/B & ADD FIREWATER PUMP ALARM SYSTEM		BASE DOC. NO. H-2-122087 SHT/PG. 2 REV. 1 CR NO. 1069 R1 & 1006 DISCIPLINE: ELECTRICAL
PREPARED BY: [signature]	DATE: 01/22/94	DCN-0153 — REV. 3 — PAGE 36
DISCIPLINE ENGINEER: [signature]	DATE: 2/17/94	

9513358.0851

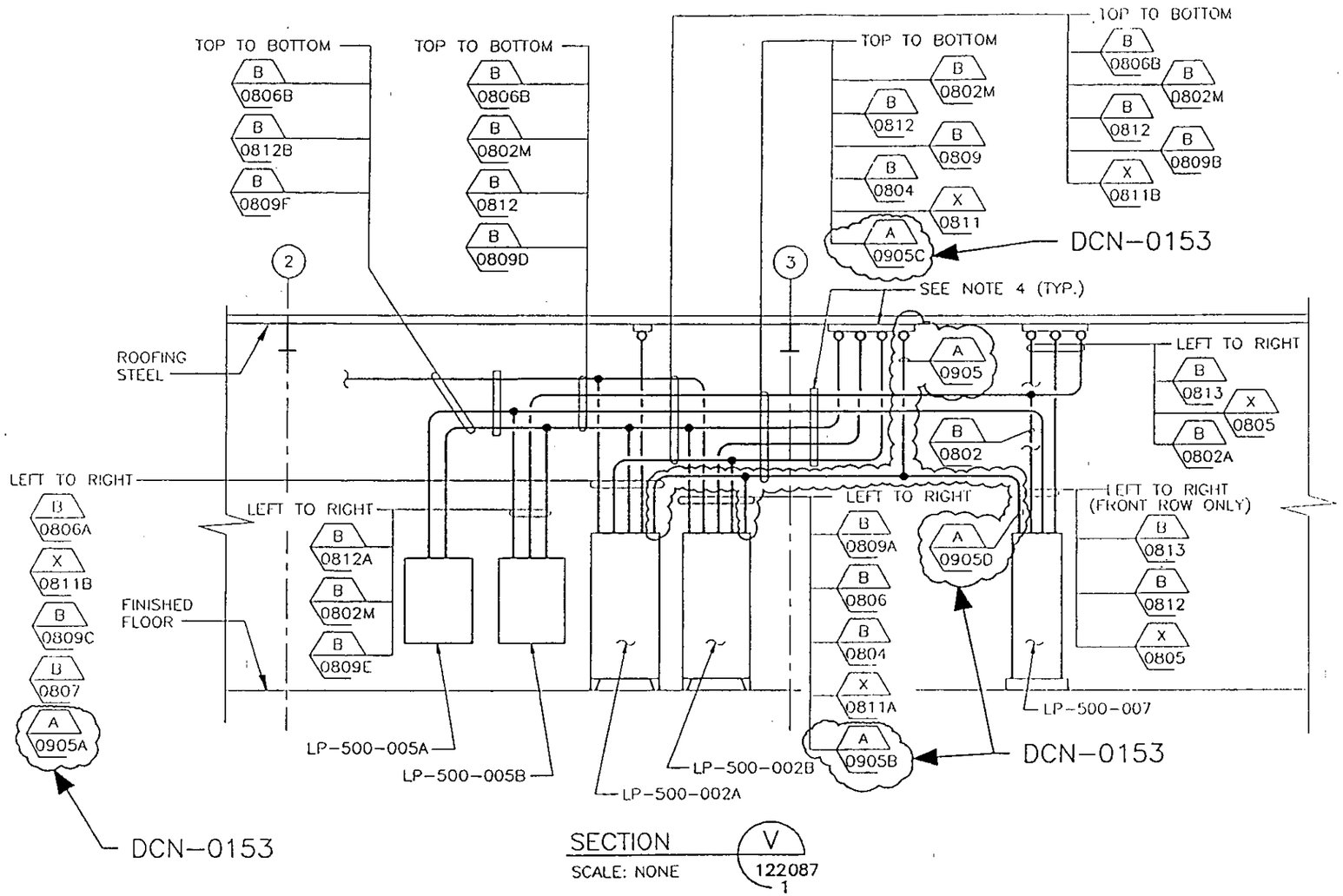

FLUOR DANIEL	U.S. DEPARTMENT OF ENERGY HANFORD WASTE VITRIFICATION PLANT	DESIGN CHANGE NOTICE
DESCRIPTION OF CHANGE: HOLD ON A/G PWR & GNDG FOR PX-500-001A/B & ADD FIREWATER PUMP ALARM SYSTEM		BASE DOC. NO. H-2-122087 SHT/PG. 2 REV. 1 CR NO. 1069 R1 & 1006 DISCIPLINE: ELECTRICAL
PREPARED BY:	DATE: 01/22/94	DCN-0153 REV. 3 PAGE 37
DISCIPLINE ENGINEER:	DATE: 2/17/94	

9513358.0852

DCN-0153 REV 1

HOLD NO.
HWVP-FD-450
DCN-0153

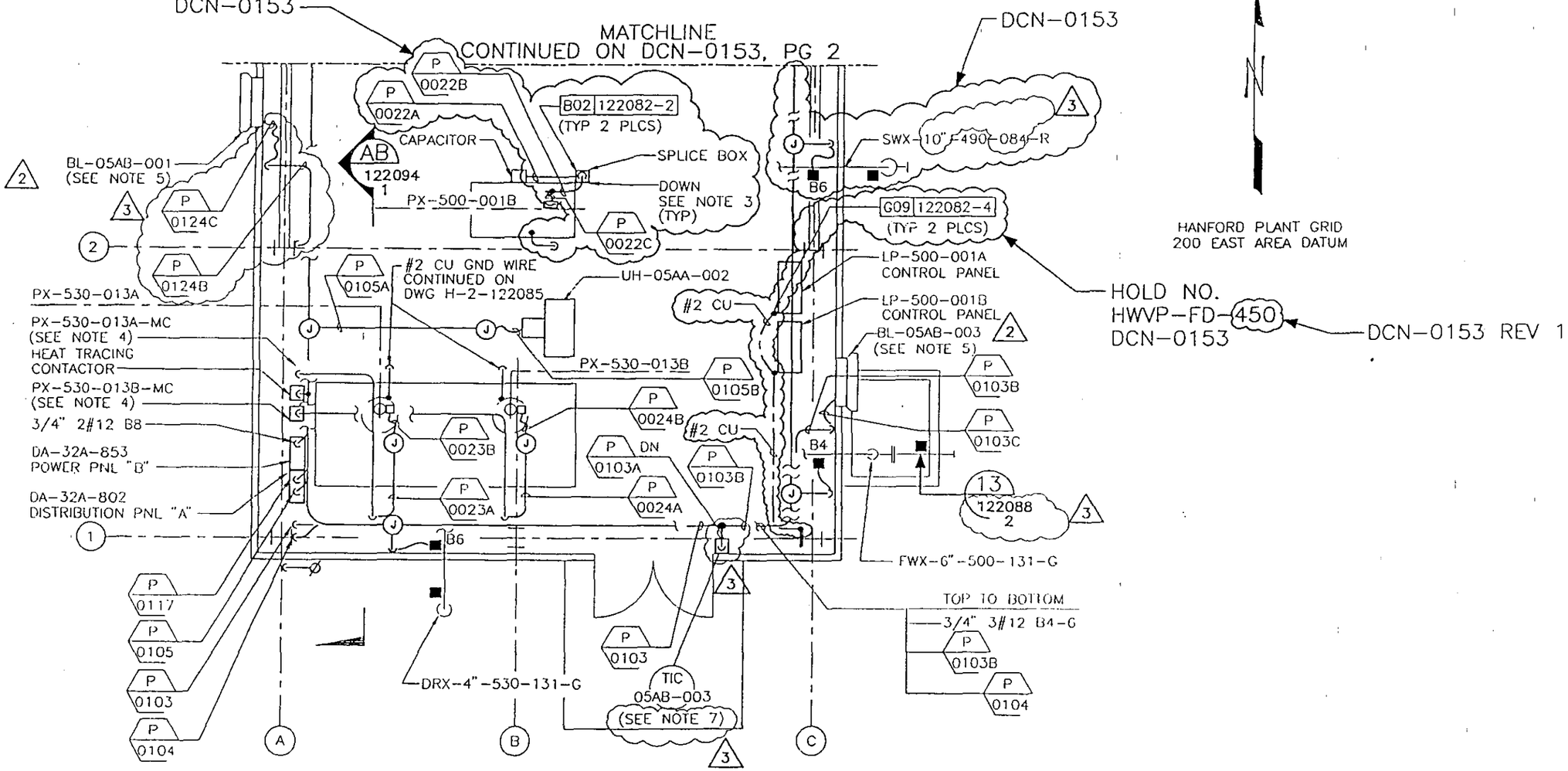

PLAN
RAW WATER PUMP HOUSE

BLDG NO. 21

FLUOR DANIEL	U.S. DEPARTMENT OF ENERGY HANFORD WASTE VITRIFICATION PLANT	DESIGN CHANGE NOTICE
DESCRIPTION OF CHANGE: HOLD ON A/G PWR & GNDG FOR PX-500-001A/B & ADD FIREWATER PUMP ALARM SYSTEM		BASE DOC. NO. H-2-122089 SHT/PG. 1 REV. 3 CR NO. 1069 R1 & 1006 DISCIPLINE: ELECTRICAL
PREPARED BY: [signature]	DATE: 01/22/94	DCN-0153 · REV. 3 · PAGE 38
DISCIPLINE ENGINEER: [signature]	DATE: 2/17/94	

9513358.0853

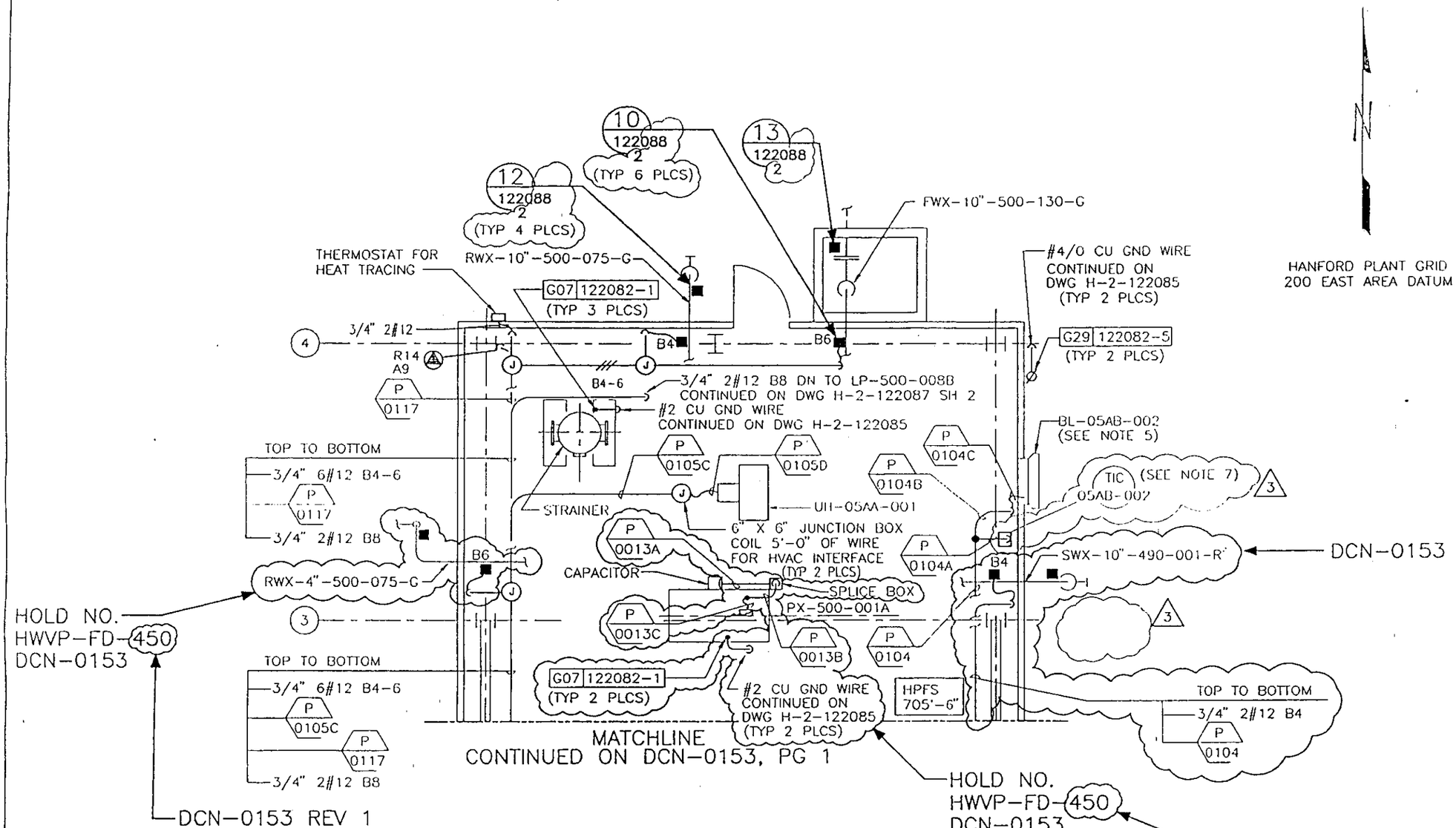

PLAN
RAW WATER PUMP HOUSE

BLDG NO. 21

FLUOR DANIEL	U.S. DEPARTMENT OF ENERGY HANFORD WASTE VITRIFICATION PLANT	DESIGN CHANGE NOTICE
DESCRIPTION OF CHANGE: HOLD ON A/G PWR & GNDG FOR PX-500-001A/B & ADD FIREWATER PUMP ALARM SYSTEM		BASE DOC. NO. H-2-122089 SHT/PG. 1 REV. 3 CR NO. 1069 R1 & 1006 DISCIPLINE: ELECTRICAL
PREPARED BY: H. Ghuraghi	DATE: 01/22/94	DCN-0153 · REV. 3 · PAGE 39
DISCIPLINE ENGINEER: K. K. Bosmolaria	DATE: 2/17/94	

9513358.0854

DA-32A-853

POWER PANEL "B"

DCN-0153

VOLTS 208Y/120 V 3PH 4 WIRES PANEL DA-32A-853 MTG SURFACE

MAIN 100AF,50AT M/B ☒ MLO ☐ LOCATION BLDG 21

LOCATION	WATTS ø A	WATTS ø B	WATTS ø C	LTG	RCPT	MISC	CKT	BRKR		BRKR	CKT	MISC	RCPT	LTG	WATTS ø A	WATTS ø B	WATTS ø C	LOCATION
RECEPTACLES	540			3			1	20		20	2	1			200			FIRE ALARM PNL (NOTE2)
SPARE		500					3	20		20	4	3				600		HEAT TRACING
SPARE			500				5	20		20	6	3					600	HEAT TRACING
LSL/H-DRX-402	100					1	7	20		20	8				500			STRAINER
SPARE		500					9	20		20	10					500		SPARE
SPARE			500				11	20		20	12						500	SPARE
SUBTOTALS	640	1000	1000												700	1100	1100	SUBTOTALS

TOTAL NON-LCL	=	4340	X	1.00	=	4340
TOTAL LCL	=	1200	X	1.25	=	1500
				TOTAL	=	5840

2

2

2

DCN-0153

1

POWER AND HEAT TRACING

RAW WATER PUMP HOUSE

BLDG NO 21

FLUOR DANIEL	U.S. DEPARTMENT OF ENERGY HANFORD WASTE VITRIFICATION PLANT	DESIGN CHANGE NOTICE
DESCRIPTION OF CHANGE: HOLD ON A/G PWR & GNDG FOR PX-500-001A/B & ADD FIREWATER PUMP ALARM SYSTEM		BASE DOC. NO. H-2-122098 SHT/PG. 1 REV. 2 CR NO. 1069 R1 & 1006 DISCIPLINE: ELECTRICAL
PREPARED BY: A. Spuenghi	DATE: 01/22/94	DCN-0153 REV 3 PAGE 40
DISCIPLINE ENGINEER: K. L. Sandoval	DATE: 2/17/94	

9513358.0855

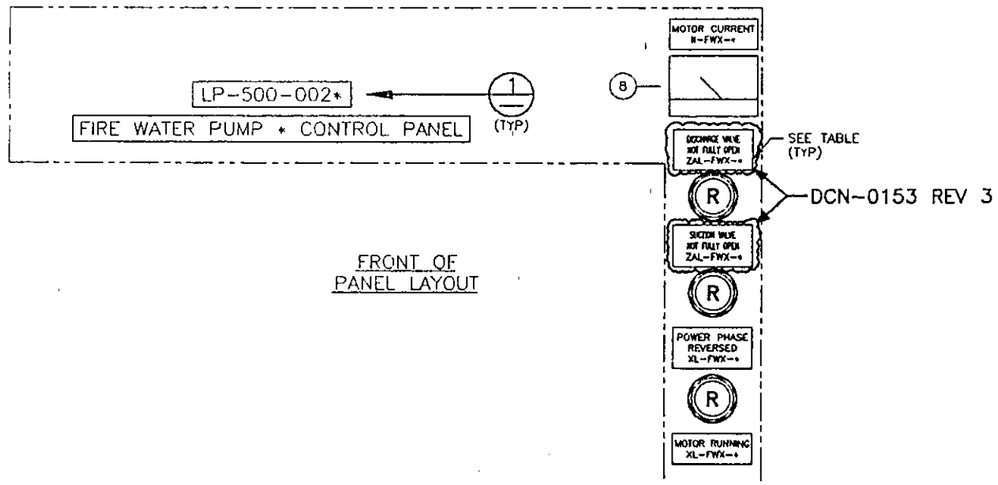

* NAMEPLATE LEGEND TABLE

PUMP	PANEL NUMBER	HANDSWITCH	INDICATOR	* POSITION ALARM LAMP	STATUS LAMP
A	LP-500-002A	HS-FWX-013-1 (START)	II-FWX-013B-1 (CURRENT)	ZAL-FWX-012-1A (SUCTION)	XL-FWX-XXX (ØREV)
		HS-FWX-XXX (STOP)	KQI-FWX-* (RUN TIME)	ZAL-FWX-017-1A (DISCHARGE)	XL-FWX-XXX (RUNNING)
		HS-FWX-XXX (AMMETER SELECT)			XL-FWX-XXX (STOPPED)
		HS-FWX-XXX (DISCONNECT)			
		HS-FWX-XXX (EMER START)			
B	LP-500-002B	HS-FWX-013-2 (START)	II-FWX-013B-2 (CURRENT)	ZAL-FWX-012-2A (SUCTION)	XL-FWX-XXX (ØREV)
		HS-FWX-XXX (STOP)	KQI-FWX-* (RUN TIME)	ZAL-FWX-017-2A (DISCHARGE)	XL-FWX-XXX (RUNNING)
		HS-FWX-XXX (AMMETER SELECT)			XL-FWX-XXX (STOPPED)
		HS-FWX-XXX (DISCONNECT)			
		HS-FWX-XXX (EMER START)			

DCN-0153 REV 3

SEE NOTE 3 (TYP)

FLUOR DANIEL	U.S. DEPARTMENT OF ENERGY HANFORD WASTE VITRIFICATION PLANT	DESIGN CHANGE NOTICE
DESCRIPTION OF CHANGE: HOLD ON A/G PWR & GNDG FOR PX-500-001A/B & ADD FIREWATER PUMP ALARM SYSTEM		BASE DOC. NO. H-2-121656 SHT/PG. 1 REV. 0 CR NO. 1069 R1 & 1006 DISCIPLINE: CONTROL SYSTEM
PREPARED BY: R. Apuenzli	DATE: 4/12/94	DCN-0153 REV. 3 PAGE 41
DISCIPLINE ENGINEER: J. Cotiga	DATE: 4/12/94	

ACAD HS 04/12/94