START

ENGINEERING CHANGE NOTICE

6012017

Page 1 of 49

1. ECN XXXXXXXXX

Proj. ECN B-714-53

2. ECN Category (mark one)	3. Originator's Name, Organization, MSIN, and Telephone No.		4. Date
Supplemental ■ Direct Revision ☐ Change ECN ☐ Temporary ☐ Supersedure ☐ Discovery ☐ Cancel/Void ☐	ROD SNOWHITE, KEH, E6-32, 6-6033		08-21-90
	5. Project Title/No./Work Order No. SEE BLOCK 12	6. Bldg./Sys./Fac. No. 218-E-16	7. Impact Level 3
	8. Document Number Affected (include rev. and sheet no.) SEE BLOCK 12	9. Related ECN No(s). SEE BLOCK 12	10. Related PO No. N/A

11a. Modification Work	11b. Work Package Doc. No.	11c. Complete Installation Work	11d. Complete Restoration (temp. ECN only)
☐ Yes (fill out Blk. 11b) ☐ No (NA Blks. 11b, 11c, 11d) UNK	UNKNOWN	Cog. Engineer Signature & Date	Cog. Engineer Signature & Date

DEC 1990 RECEIVED EDMC

12. Description of Change

Block 5: B-714, GROUT VAULT PAIR (218-E-16-102 & 103)(218-E-16-104 & 105)/EDMC
Block 9: ECN B-714-17, B-714-22, B-714-30, B-714-42
Block 8: **AFFECTED DOCUMENTS (Drawings)**

VAULTS -102 & -103

H-2-77634, SH 1, REV 0
H-2-77635, SH 1, REV 0
H-2-77635, SH 2, REV 0
H-2-77636, SH 1, REV 0
H-2-77636, SH 2, REV 0
H-2-77636, SH 3, REV 0
H-2-77636, SH 4, REV 0
H-2-77638, SH 1, REV 0
H-2-77638, SH 2, REV 0
H-2-77638, SH 3, REV 0
H-2-77639, SH 1, REV 0
H-2-77639, SH 2, REV 0
H-2-77640, SH 1, REV 0
H-2-77641, SH 1, REV 0
H-2-77642, SH 1, REV 0
H-2-77642, SH 2, REV 0
H-2-77643, SH 1, REV 0
H-2-77643, SH 2, REV 0
H-2-77646, SH 1, REV 0

VAULTS -104 & -105

H-2-78500, SH 1, REV 0
H-2-78501, SH 1, REV 0
H-2-78501, SH 2, REV 0
H-2-78502, SH 1, REV 0
H-2-78502, SH 2, REV 0
H-2-78502, SH 3, REV 0
H-2-78502, SH 4, REV 0
H-2-78504, SH 1, REV 0
H-2-78504, SH 2, REV 0
H-2-78504, SH 3, REV 0
H-2-78505, SH 1, REV 0
H-2-78505, SH 2, REV 0
H-2-78506, SH 1, REV 0
H-2-78507, SH 1, REV 0
H-2-78508, SH 1, REV 0
H-2-78508, SH 2, REV 0
H-2-78509, SH 1, REV 0
H-2-78510, SH 1, REV 0

****
DESCRIPTION OF CHANGES CONTINUED ON PAGE 3 OF THIS ECN
****

13a. Justification (mark one)	13b. Justification Details
Criteria Change ■ Design Improvement ■ Environmental ☐ As-Found ☐ Facilitate Const. ■ Const. Error/Omission ☐ Design Error/Omission ■	CRITERIA CHANGE to separate Safety Class 2 & 3 wiring; ITEM #'s 6, 7, 17, 22, 23 & 34 (Ref WHC-SD-B714-W-QAPP-001, REV 4) ALL OTHER ITEMS are miscellaneous design improvements, drawing errors, design clarification and ease of construction changes.

14. Distribution (include name, MSIN, and no. of copies)

KEH DISTRIBUTION
Const Doc Cntl E2-50
Engrg Doc Cntl E6-52

WHC DISTRIBUTION
Project Files R1-28
S. R. Briggs(PE R3-27
J. K. Epperley S0-05
STATION 10 A3-87

WHC DIST. (con't)
O. A. Halverson R3-09
J. F. Hill [2] H4-57
J. R. McGee S1-54
D. B. Powell [4] R4-03
J. E. Vanbeek R3-27

DOE
A. G. Lassila A5-18

RELEASE STAMP

OFFICIAL RELEASE BY WHC
DATE SEP 19 1990
STATION # 4
13

A-7900-013 (11/88)

9112055161

ENGINEERING CHANGE NOTICE

1. ECN (use no. from pg. 1): B-714-53

15. Design Verification Required	16. Cost Impact				17. Schedule Impact (days)
	ENGINEERING		CONSTRUCTION		
■ Yes	Additional ■	$ 7965	Additional ☐	$	Improvement ☐ NA
☐ No	Savings ☐	$	Savings ☒	$ ~~13644~~ 9111	Delay ☐

18. Change Impact Review: Indicate the related documents (other than the engineering documents identified on Side 1) that will be affected by the change described in Block 12. Enter the affected document number in Block 19.

SDD/DD	☐	Seismic/Stress Analysis	☐	Tank Calibration Manual	☐
Functional Design Criteria	☐	Stress/Design Report	☐	Health Physics Procedure	☐
Operating Specification	☐	Interface Control Drawing	☐	Spares Multiple Unit Listing	☐
Criticality Specification	☐	Calibration Procedure	☐	Test Procedures/Specification	☐
Conceptual Design Report	☐	Installation Procedure	☐	Component Index	☐
Equipment Spec.	☐	Maintenance Procedure	☐	ASME Coded Item	☐
Const. Spec.	☐	Engineering Procedure	☐	Human Factor Consideration	☐
Procurement Spec.	☐	Operating Instruction	☐	Computer Software	☐
Vendor Information	☐	Operating Procedure	☐	Electric Circuit Schedule	☐
OM Manual	☐	Operational Safety Requirement	☐	ICRS Procedure	☐
FSAR/SAR	☐	IEFD Drawing	☐	Process Control Manual/Plan	☐
Safety Equipment List	☐	Cell Arrangement Drawing	☐	Process Flow Chart	☐
Radiation Work Permit	☐	Essential Material Specification	☐	Purchase Requisition	☐
Environmental Impact Statement	☐	Fac. Proc. Samp. Schedule	☐		☐
Environmental Report	☐	Inspection Plan	☐		☐
Environmental Permit	☐	Inventory Adjustment Request	☐		☐

19. Other Affected Documents: (NOTE: Documents listed below will not be revised by this ECN.) Signatures below indicate that the signing organization has been notified of other affected documents listed below.

Document Number/Revision	Document Number/Revision	Document Number/Revision

20. Approvals

OPERATIONS AND ENGINEERING	Signature	Date	ARCHITECT-ENGINEER	Signature	Date
Cog./Project Engineer	[illegible]	9/13/90	PE	K C Bergard	9/12/90
Cog./Project Engr. Mgr.	[illegible]	9/13/90	QA	[illegible]	8-28-90 8-27-90
QA	[illegible]	9/14/90	Safety	D Lundgren	8-23-90
Safety			Design PLE	[illegible]	8/22/90
Security			Other ELEC	[illegible]	8-23-90
Proj.Prog./Dept. Mgr.			ENVIR	R Hollenbeck	8/24/90
Def. React. Div.					
Chem. Proc. Div.					
Def. Wst. Mgmt. Div.			DEPARTMENT OF ENERGY		
Adv. React. Dev. Div.					
Proj. Dept.					
Environ. Div.			ADDITIONAL		
IRM Dept.					
Facility Rep. (Ops)					
Other					

9112051516 12

ELECTRICAL CHANGES TO DRAWINGS

1) ECN B-714-17
   A) Replace pg 7 with page 11 of this ECN
   B) Replace pg 10 with page 12 of this ECN
   C) Replace pg 13 with page 13 of this ECN
   D) Replace pg 16 with page 14 of this ECN
   E) Page 24 - Delete Detail 2 from ECN
   F) Page 26, GWD111 thru GWD120: Delete ", SHLD" from WIRE NUMBERS column
   G) Replace pg 27 with page 15 of this ECN
   H) Replace pg 28 with page 16 of this ECN
   J) Page 29: • Modify MH103 ANNUNCIATOR TB as shown on page 17 of this ECN
      • Modify LEACHATE SUMP PUMP P-LS-103A & B MOTOR CONTROLLER as shown on page 18 of this ECN
      • Modify MH103 POWER TERM BOX as shown on page 18 of this ECN
   K) Page 30: • Modify LEACHATE SUMP PUMP P-LS-102A & B MOTOR CONTROLLER as shown on page 18 of this ECN
      • Modify MH102A POWER TERM BOX as shown on page 18 of this ECN
   L) Page 31: Modify - see page 19 & 20 of this ECN

2) ECN B-714-22: Delete page 42, 45 & 46

3) ECN B-714-30
   A) Page 3: Delete item 2E & 2F
   B) Replace pg 7 with page 21 of this ECN
   C) Replace pg 8 with page 22 of this ECN
   D) Replace pg 9 with page 23 of this ECN
   E) Replace pg 15 with page 24 of this ECN
   F) Replace pg 16 with page 25 of this ECN

4) ECN B-714-42
   A) Page 3, item 9A: Change to DELETE Note 1 (ZB2)
   B) Page 5, item 21A: Change to DELETE Note 1 (ZB2)

5) H-2-77634, SH 1, REV 0
   PLAN (ZE8, D8, D7, C6, D6): Modify - see page 26 of this ECN

6) H-2-77635, SH 1, REV 0
   A) PLAN (ZD2-3, E2, F3): Modify - see page 27 & 28 of this ECN
   B) NOTE 9: Change "GRAVEL COCOON" to "DIFFUSION MATERIAL"
   C) (ZC3, C7, C8, E7): Add asterisk (*) to cable & pump numbers located at Excess Water Pits

7) H-2-77635, SH 2, REV 0
   PLAN (ZD2-E3, C3): Modify - see page 29 & 30 of this ECN

8) H-2-77636, SH 1, REV 0
   A) LONG TERM LEACHATE SUMP PUMPS (ZC5): Delete D-PB-01-13C in its entirety
   B) LEACHATE SUMP LEAK DETECTION CONN DIAG (ZD3, E2-3): Modify - see page 31 of this ECN
   C) SHORT TERM LEACHATE SUMP PUMP, EXCESS WATER PUMPS & EW DIVERTER VALVE MOV-08: Delete elementary diagrams by cross-hatching. In ZD4 ADD the following note leadered to the cross-hatching: SEE DWG H-2-80976 & H-2-80978 FOR WIRING DIAGRAMS

CHANGES TO DRAWINGS CONTINUED

9) H-2-77636, SH 2, REV 0
ONE LINE DIAG (ZD-E7): Modify - see page 32 of this ECN

10) H-2-77636, SH 3, REV 0
A) SHORT TERM LEACHATE SUMP PUMP P-LS-01 & EXCESS WATER PUMPS P-EW-01, -02, -03 & -04 (ZD5-F6): Delete by cross-hatching
B) EW DIVERTER VALVE MOV-08 ELEM DIAG (ZA7-F8): Delete by cross-hatching
C) In ZC5 ADD the following note leadered to the cross-hatching: SEE DWG H-2-80976 & H-2-80978 FOR WIRING DIAGRAMS
D) LONG TERM LEACHATE SUMP PUMPS ELEM DIAG (ZC5): Delete D-PB-01-13C in its entirety
E) LEACHATE SUMP LEAK DETECTION CONN DIAG (ZE2-3, D3): Modify - see page 31 of this ECN

11) H-2-77638, SH 1, REV 0
A) DETAIL 11 (ZC8, D7): Change note to read 3/4" ROUND GRAVEL OR CRUSHED ROCK
Change note to read WOOD OR SHEET METAL FORM
B) DETAIL 10 (ZD3): Change detail bubble number from 4 to 13
C) SECTION H (ZC5): Change note to read WELL COMPACTED EARTH
D) DETAIL 3 (ZB3): Change note to read CND PLUG (FOR CONDUITS THAT WILL BE EXTENDED IN FUTURE ONLY)
E) DETAIL 9 (ZD4): Change detail bubble number from 4 to 13
Change C51 to P48
Change P48 to C51
F) NOTES (ZD1 & C2): NOTE 13 - Delete "AT W45430"
NOTE 15 - Delete "DIRECT BURIED"

12) H-2-77638, SH 2, REV 0
A) MANHOLE PLAN 102A (ZE3, F4): Delete coordinate
B) MAHHOLE PLAN 103A (ZE1, F2): Delete coordinates
C) SECTION B (ZC6): Modify - see page 33 of this ECN
D) SECTION D (ZC3): Modify - see page 33 of this ECN

13) H-2-77638, SH 3, REV 0
A) DETAIL 1 (ZF7): Modify - see page 34 of this ECN
B) DETAIL 2 (ZE5-6): Modify - see page 34 of this ECN

14) H-2-77639, SH 1, REV 0
A) ELEVATION-FRONT VIEW (ZC5-6, D7):
- Relocate conduit C51 to Pull Box I-PB-102-2 (locate to right of conduit I34)
- Delete conduit C51A in its entirety
- Delete brackets & callout for TO LEACHATE PIT and TO MANHOLE
- Under detail bubble line change to: (SEE DWG H-2-77638 SH 1 DETAIL 9 ...)

B) NOTES (ZC1, B2):
- NOTE 3: Delete NEMA 4
- NOTE 4: Delete , C51A
- NOTE 5: Delete , C52A

CHANGES TO DRAWINGS CONTINUED

15) H-2-77639, SH 2, REV 0
ELEVATION-FRONT VIEW (ZC6-7, D7, C4):
- Relocate conduit C52 to Pull Box I-PB-103-2 (locate to left of conduit I37)
- Delete conduit C52A in its entirety
- Delete brackets & callout for TO MANHOLE and TO LEACHATE PIT
- Under detail bubble line change to: (SEE DWG H-2-77638 SH 1 DETAIL 10 ...)

16) H-2-77640, SH 1, REV 0
A) ELEMENTARY DIAG (ZE7-F8): Modify - see page 35 of this ECN
B) ENGRAVING CHART (ZF5): Add the following

4A 104A SUMP LIQUID DETECTED

5A 105A SUMP LIQUID DETECTED

C) Delete NOTE 4 (ZB1-2)
D) ELEVATION C (ZD1-E2):
- Change note to read MIDGET FUSE BLOCK 3 POLE, GOULD #30313R w/2-3A FUSES #ATMR3 & 1-7A FUSE #ATMR7
- Change 1" CND to hidden line pictorally

E) Near Title Block in 1/4" letters ADD the following:

SUPERSEDES DRAWING
H-2-78506, SH 1, REV 1

17) H-2-77641, SH 1, REV 0
A) GWD53: Change "TO" column to read VAULT TRANSFORMER
B) GWD71: Change "NO OF WIRES" column to 3/C
Delete , -13C from "WIRE NUMBERS" column
C) GWD72: Change "VIA" column to read I34A, I-PB-102-2, C51, MH102A
D) GWD82: Change "VIA" column to read
EXST C33, GROUT DISPOSAL FACILITY ANN, CND NIPPLE
E) GWD83: Change "TO" column to read GROUT DISPOSAL FACILITY ANNUNCIATOR
F) GWD85: Change "FROM" column to read ANN TRANSFORMER
Change "TO" column to read GROUT DISPOSAL FACILITY ANNUNCIATOR
Change "WIRE NUMBERS" column to read H, X2, GND
G) GWD86: Delete in its entirety
H) GWD87: Change "NO OF WIRES" column to read 3/C
Delete , -13C from "WIRE NUMBERS" column
J) GWD88: Change "VIA" column to read I37A, I-PB-103-2, C52, MH103A
K) GWD100: Delete from "WIRE NUMBERS" column (CONDUIT & CABLE INSTALLATION BY OTHERS)
L) GWD105: Delete from "WIRE NUMBERS" column (CONDUIT & CABLE INSTALLATION BY OTHERS)
M) GWD108: Delete in its entirety
N) GWD109: Delete in its entirety

CHANGES TO DRAWINGS CONTINUED

P) **CONDUIT SCHEDULE:**
- Change Wire Run Numbers for P52 & P54 to "SPARE"
- After P64A ADD - P64B 1½" GWD92
- After P65A ADD - P65B 1½" GWD93
- Delete C51A & C52A in their entirety
- Add to I34A Wire Run Number GWD72
- Add to I37A Wire Run Number GWD88

Q) Delete TYPE OF WIRE NOTE 10 **(ZA8)**

18) H-2-77642, SH 1, REV 0

A) CONNECTOR SCHEDULE: LEACHATE SUMP TEMPERATURE (affects ECN B-714-17)
CHANGE/ADD columns as shown on page **36** of this ECN

B) CONNECTOR SCHEDULE: LEACHATE PIT LEAK
- CABLE NO: Delete suffix **-01**
- CONN NO: Delete **-01** in designation (typ 3 places)

C) CONNECTOR SCHEDULE: LEACHATE SUMP PUMP
- EQUIP NAME (ZD7): Change P-LS-01 to **P-P-LS**
- EQUIP CONN NO (ZD7): Delete **-01** (typ 2 places)
- CONN CABLE CABLE NO: Delete **-01** (typ 2 places)
- CONN CABLE CONN NO: Delete **-01** (typ 4 places)
- EQUIP CONN NO (ZD2): Delete **-01** (typ 2 places)

D) CONNECTOR SCHEDULE: EV DIVERTER VALVE MOV-8
- Change EV to **EW**
- Change MOV-8 to **MOV-08** (typ 7 places)

E) CONNECTOR SCHEDULE FOR LEACHATE SUMP HIGH-HIGH LEVEL:
Modify - see page **36** of this ECN

F) CONNECTOR TERMINATION CHART: LEACHATE SUMP PUMP
Delete **-01** (typ 4 places)

G) CONNECTOR TERMINATION CHART: EW DIVERTER VALVE MOV-8
- Change MOV-8 to **MOV-08** (typ 3 places)
- Delete all wire no. and replace with note: CONNECT PER DWG H-2-80978

H) CONNECTOR TERMINATION CHART: LEACHATE SUMP HIGH-HIGH LEVEL
Delete **-01** (typ 2 places)

19) H-2-77642, SH 2, REV 0

A) CONNECTOR SCHEDULE: LEACHATE SUMP TEMPERATURE
CABLE NO: **ADD** I-TE-LS-1A/2A (EXST CABLE TO BE USED FROM PREVIOUS VAULT (SEE SH 1))

B) CONNECTOR SCHEDULE: LEACHATE PIT LEAK
CABLE NO: Delete **-01**

C) CONNECTOR SCHEDULE: LEACHATE SUMP PUMP
- NAME: Change to **P-P-LS**
- CONN NO: Delete -01 (typ 2 places)
- CABLE NO: Delete -01 (typ 2 places)

D) CONNECTOR SCHEDULE: LEACHATE SUMP HIGH-HIGH LEVEL
- NAME: Delete **-01**
- CONN NO: Delete **-01**
- CABLE NO: Delete **-01**
- CONN TYPE (ZD6): Change to read **CA-3101E-18-4P-F80**

CHANGES TO DRAWINGS CONTINUED

E) CONNECTOR SCHEDULE: EV DIVERTER VALVE MOV-8
- DEVICE: Change EV to EW and MOV-8 to MOV-08
- NAME: Change MOV-8 to MOV-08
- CONN NO: Change MOV-8 to MOV-08
- CABLE NO: Change MOV-8 to MOV-08

F) CONNECTOR TERMINATION CHART: LEACHATE SUMP PUMP
Delete -01 (typ 4 places)

G) CONNECTOR TERMINATION CHART: EW DIVERTER VALVE
Delete by lining out in its entirety

H) CONNECTOR TERMINATION CHART: LEACHATE SUMP HIGH-HIGH LEVEL
Delete -01 (typ 2 places)

20) H-2-77646, SH 1, REV 0
DETAIL 4 (ZA8): Change note to read: 5/8" CONCRETE ANCHOR (TYP FOR 4)

21) H-2-78500, SH 1, REV 0 (affects ECN B-714-30, pg 12)
A) PLAN (ZE8, D6, C6): Modify - see page 37 of this ECN
B) REFERENCE BLOCK: Add H-2-77640 ELEC ELEM DIAG LEAK DET ANN

22) H-2-78501, SH 1, REV 0
A) PLAN (ZE3, E2, D2-3): Modify - see page 38 & 39 of this ECN
B) NOTE 9 (ZB1): Change "GRAVEL COCOON" to "DIFFUSION MATERIAL"
C) (ZE3): Change C-LDK-LP-01* to C-LDK-LP*

23) H-2-78501, SH 2, REV 0
PLAN (ZD-E2, C3): Modify - see page 40 & 41 of this ECN

24) H-2-78502, SH 1, REV 0
A) LONG TERM LEACHATE SUMP PUMPS ELEM DIAG (ZC5):
Delete D-PB-01-13C in its entirety
B) LEACHATE SUMP LEAK DETECTION CONN DIAG (ZE2, F2-3):
Modify - see page 42 of this ECN
C) LEACHATE SUMP HIGH-HIGH LEVEL DETECTION CONN DIAG (ZD1):
Modify - see page 43 of this ECN
D) EW DIVERTER VALVE MOV-08 ELEM DIAG (ZA7-F8):
Delete in its entirety by cross-hatching
E) SHORT TERM LEACHATE SUMP PUMP & EXCESS WATER PUMPS (ZC4-F6):
Delete in its entirety by cross-hatching
F) In ZC4 ADD the following note leadered to cross-hatching:
SEE DWG H-2-80976 & H-2-80978 FOR WIRING DIAGRAMS

25) H-2-78502, SH 2, REV 0
Modify - see page 44 of this ECN

26) H-2-78502, SH 3, REV 0
A) LONG TERM LEACHATE SUMP PUMPS ELEM DIAG (ZC5):
Delete D-PB-01-13C in its entirety
B) LEACHATE SUMP LEAK DETECTION CONN DIAG (ZD2, E2-F3):
Modify - see page 42 of this ECN
C) LEACHATE SUMP HIGH-HIGH LEVEL DETECTION CONN DIAG (ZD1):
Modify - see page 43 of this ECN

9 1 1 2 1 5 5 1 5 1 7

CHANGES TO DRAWINGS CONTINUED

D) **EW DIVERTER VALVE MOV-08 ELEM DIAG (ZA7-F8):**
Delete in its entirety by cross-hatching
E) **SHORT TERM LEACHATE SUMP PUMP & EXCESS WATER PUMPS (ZC4-F6):**
Delete in its entirety by cross-hatching
F) In **ZC5 ADD** the following note leadered to the cross-hatching:
SEE DWG H-2-80976 & H-2-80978 FOR WIRING DIAGRAMS

27) H-2-78502, SH 4, REV 0
Modify - see page 45 of this ECN

28) H-2-78504, SH 1, REV 0
A) **DETAIL 11 (ZC7, C8):** Change note to read WOOD OR SHEET METAL FORM
Change note to read 3/4" ROUND GRAVEL OR CRUSHED ROCK
B) **SECTION C (ZC5):** Change note to read WELL COMPACTED EARTH
C) **ELEVATION D (ZB3):** Change note to read CND PLUG (FOR CONDUITS THAT WILL BE EXTENDED IN FUTURE ONLY)
D) **STUB-UP DETAIL for CONTROL STA 104 (ZD4):** Change C80 to P81
Change P81 to C80
E) **NOTES (ZC1):**
- NOTE 15: Delete "DIRECT BURIED"
- ADD NOTE 17 as follows:
  17. COIL APPROXIMATELY 20 FEET OF INPUT AND OUTPUT CONDUCTORS INSIDE RECTIFIER INSTRUMENT ENCLOSURE (BEFORE CONNECTION TO RECTIFIER TERMINALS), FOR FUTURE EXTENSION BY OTHERS.

29) H-2-78504, SH 2, REV 0
SECTION C (ZC5): Modify - see page 46 of this ECN

30) H-2-78504, SH 3, REV 0
A) **ELEVATION N (ZA8, B8):** Change note to read INSTR ENCLOSURE END (SEE NOTE 17)
Change note to read 5/8" CONCRETE EXP ANCHOR (TYP OF 4)
B) **SECTION T (ZE5-6):** Delete TRANSFORMER in its entirety

31) H-2-78505, SH 1, REV 0
A) **ELEVATION-FRONT VIEW (ZC6,D6):**
- Relocate conduit C80 to Pull Box I-PB-104-2 (locate to right of I62)
- Delete brackets & callouts for TO LEACHATE PIT and TO MANHOLE
- Delete conduit C80A in its entirety

B) **NOTES (ZC1, B2):**
- NOTE 3: Delete "NEMA 4"
- NOTE 4: Delete "C80A, "
- NOTE 5: Delete "C85A , "

32) H-2-78505, SH 2, REV 0
ELEVATION-FRONT VIEW (ZC7, D7):
- Relocate conduit C85 to Pull Box I-PB-105-2 (locate to left of I75)
- Delete C85A in its entirety
- Delete brackets & callout for TO MANHOLE 105A and TO LEACHATE PIT

9 1 1 2 0 5 5 1 6 1 9

CHANGES TO DRAWINGS CONTINUED

33) H-2-78506, SH 1, REV 0 (affects B-714-30, pg 5, item 26)
Near Title Block in 1/4" letters ADD the following:

SUPERSEDED BY DRAWING
H-2-77640, SH 1, REV 1

BY:_____ **DATE:**_____

34) H-2-78507, SH 1, REV 0
A) **GWD137:** Change "VIA" column to read I62A, I-PB-104-2, C80, MH-103A
B) **GWD145:** Change "NO OF WIRES" column to 3/C
Delete , -13C from "WIRE NUMBERS" column
C) **GWD146:** Change "NO OF WIRES" column to 3/C
Delete , -13C from "WIRE NUMBERS" column
D) **GWD147:** Change "VIA" column to read I75A, I-PB-105-2, C85, MH-105A
E) **GWD176:** Change 225KVA to **VAULT** in "FROM" and "TO" column
F) **GWD177:** Delete in its entirety
G) **GWD166 thru GWD175:** Delete ", SHLD" from "WIRE NUMBERS" column
H) **CONDUIT SCHEDULE:**
- Delete C80A & C85A in their entirety
- Change P96 to P96 4" SPARE

J) Delete TYPE OF WIRE NOTE 10 **(ZA8)**

35) H-2-78508, SH 1, REV 0
A) CONNECTOR SCHEDULE: LEACHATE SUMP TEMPERATURE
CABLE NO: **ADD** I-TE-LS-1A/2A EXISTING CABLE TO BE USED FROM PREVIOUS VAULT (SEE H-2-77642, SH 1)
B) CONNECTOR SCHEDULE: LEACHATE PIT LEAK
CABLE NO: Delete **-01**
C) CONNECTOR SCHEDULE: LEACHATE SUMP PUMP
- NAME: Delete **-104-1**
- CONN NO: Delete **-104** (typ 2 places)
- CABLE NO: Delete **-01** (typ 2 places)

D) CONNECTOR SCHEDULE: LEACHATE SUMP HIGH-HIGH LEVEL
- CONN TYPE (ZD2): Change to read **CA-3102E-18-4S-F80**
- CONN TYPE (ZD6): Change to read **CA-3101E-18-4P-F80**
- CABLE: Delete **-01**
- Delete **-104** (typ 2 places)

E) CONNECTOR SCHEDULE: EV DIVERTER VALVE MOV-08
- Change EV to **EW**
- CONN TYPE (ZD2): Change to read **CA-3102E-24A24S-F80**

F) CONNECTOR TERMINATION CHART (ZB2): Delete CONN SHELL column in its entirety
G) CONNECTOR TERMINATION CHART: LEACHATE SUMP HIGH-HIGH
- **ADD** GND to column "D"
- DEVICE: **ADD** word **LEVEL** after HIGH-HIGH
- CONN NO: Change to read **J-LE-LS-1**
- WIRE NO PREFIX: Change to read **LE-LS**

H) CONNECTOR TERMINATION CHART: LEACHATE SUMP PUMP
Delete **-01** (typ 4 places)
J) CONNECTOR TERMINATION CHART: EW DIVERTER VALVE MOV-08
Delete by lining out in its entirety

CHANGES TO DRAWINGS CONTINUED

36) H-2-78508, SH 2, REV 0
- A) CONNECTOR SCHEDULE: LEACHATE SUMP TEMPERATURE
  CABLE NO: ADD I-TE-LS-1A/2A EXISTING CABLE TO BE USED FROM PREVIOUS VAULT (SEE H-2-77642, SH 1)
- B) CONNECTOR SCHEDULE: LEACHATE PIT LEAK
  CABLE NO: Delete -01
- C) CONNECTOR SCHEDULE: LEACHATE SUMP PUMP
  - NAME: Delete -105-1
  - CONN NO: Delete -105 (typ 2 places)
  - CABLE NO: Delete -01 (typ 2 places)
- D) CONNECTOR SCHEDULE: LEACHATE SUMP HIGH-HIGH LEVEL
  - CABLE NO: Delete -01
  - CONN TYPE (ZD6): Change to read CA-3101E-18-4P-F80
  - Delete -105 (typ 2 places)
- E) CONNECTOR TERMINATION CHART (ZB2): Delete CONN SHELL column in its entirety
- F) CONNECTOR TERMINATION CHART: LEACHATE SUMP HIGH-HIGH LEVEL
  - ADD GND to column "D"
  - CONN NO: Delete -01
  - WIRE NO PREFIX: Delete -01
- G) CONNECTOR TERMINATION CHART: LEACHATE SUMP PUMP
  Delete -01 (typ 4 places)
- H) CONNECTOR TERMINATION CHART: EW DIVERTER VALVE MOV-08
  Delete by lining out in its entirety

37) H-2-78509, SH 1, REV 0
Modify - see page 47 of this ECN

38) H-2-78510, SH 1, REV 0
- A) 13.8KVAC ONE LINE (ZD5-F4): Modify - see page 48 of this ECN
- B) 480VAC ONE LINE (ZC-D3): Modify - see page 49 of this ECN

KAISER ENGINEERS HANFORD	ENGINEERING CHANGE NOTICE SKETCH					
Ref. Dwg. ECN B-714-17	~~Sht.~~ P.7	~~Rev.~~	Prepared By A.R.SNOWHITE	Checked By C Dabletts	ECN No. B-714-53	Page 11/49

REF DWG H-2-77636 SH 1, REV 0

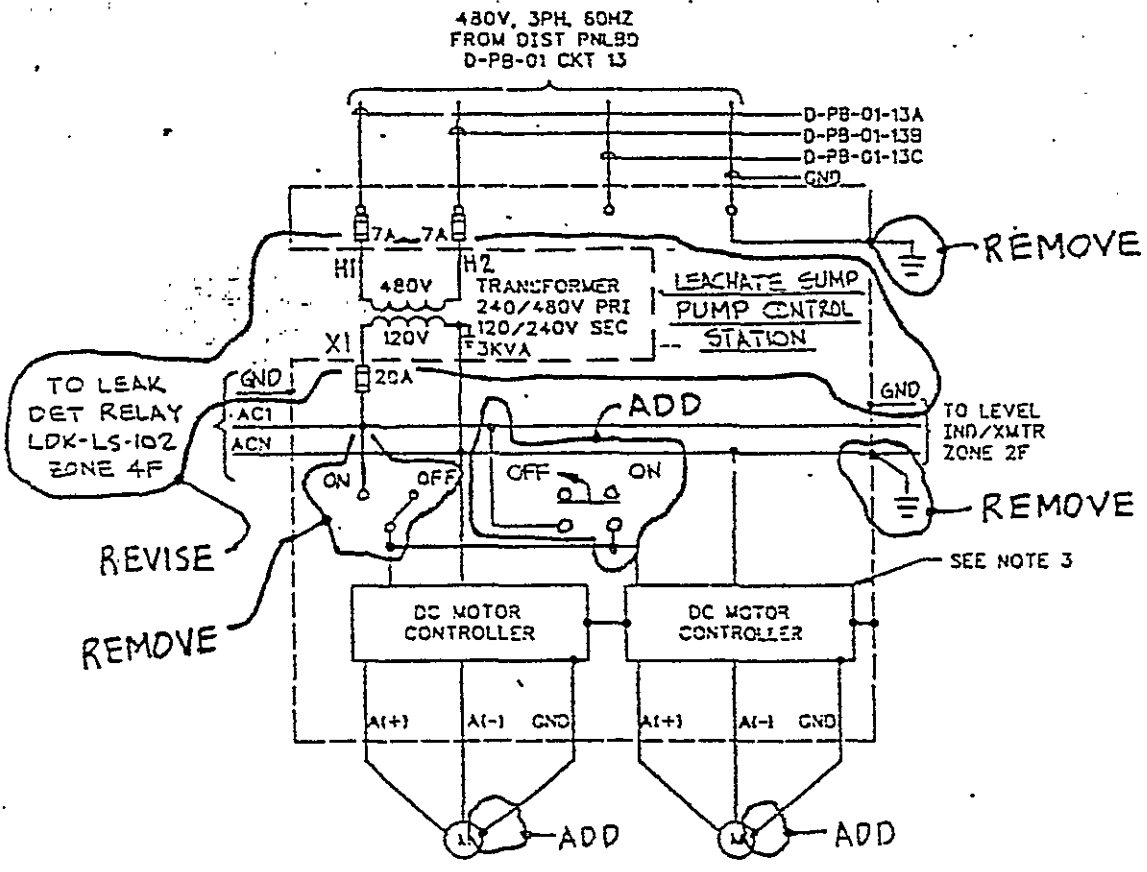

P-LS-102A. P-LS-102B

LONG TERM LEACHATE SUMP PUMPS
P-LS-102A & P-LS-102B
ELEMENTARY DIAGRAM
(PREFIX WIRE NUMBERS WITH PUMP NUMBERS).

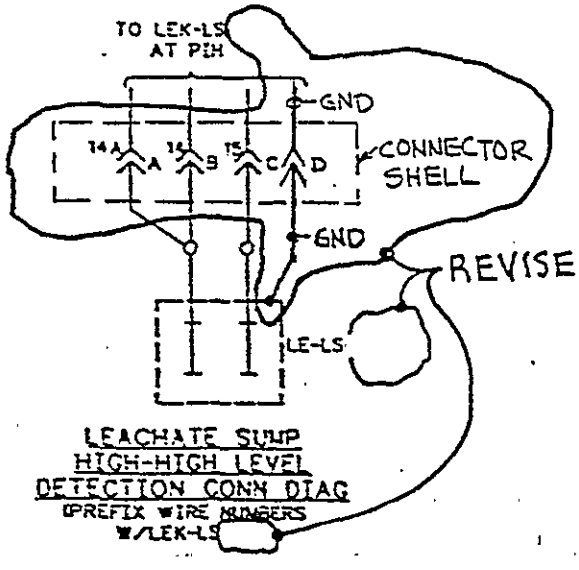

LEACHATE SUMP
HIGH-HIGH LEVEL
DETECTION CONN DIAG
(PREFIX WIRE NUMBERS
W/LEK-LS

9112055157

9 1 1 2 0 5 5 1 6 3 2

KAISER ENGINEERS
HANFORD

ENGINEERING CHANGE NOTICE SKETCH

Ref. Dwg. ECN B-714-17

Sht P.10

Prepared By A.R. SNOWHITE

Checked By C. Dubois

ECN No. B-714-53

Page 12/49

REF DWG H-2-77636 SH 2, REV 0

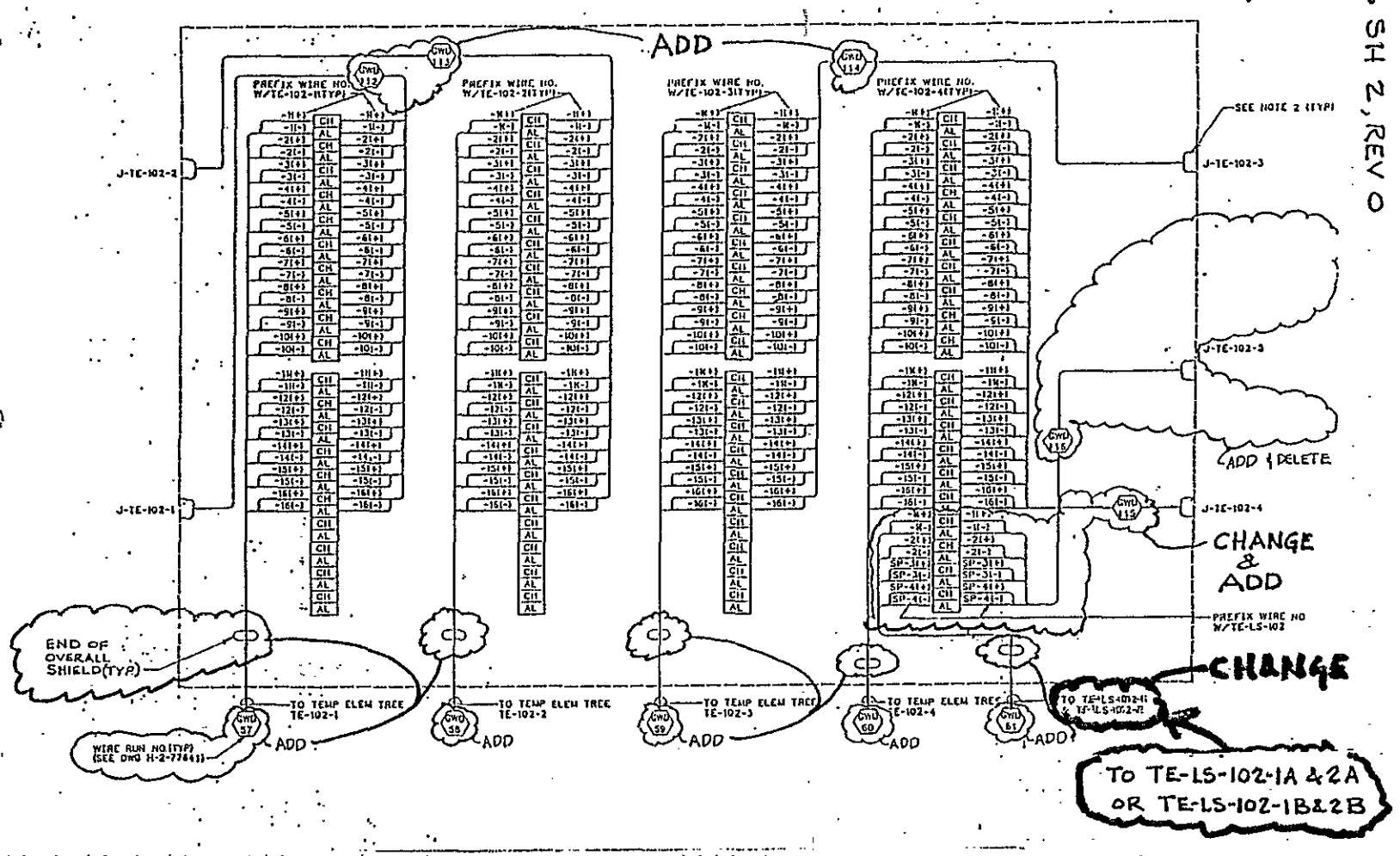

KEH-0159.00 (01/88)

KAISER ENGINEERS HANFORD	ENGINEERING CHANGE NOTICE SKETCH					
Ref. Dwg. ECN B-714-17	~~Sh.~~ R13	~~Rev.~~	Prepared By A.R. SNOWHITE	Checked By C Dubletz	ECN No. B-714-53	Page 13/49

REF DWG H-2-77636 SH 3, REV 0

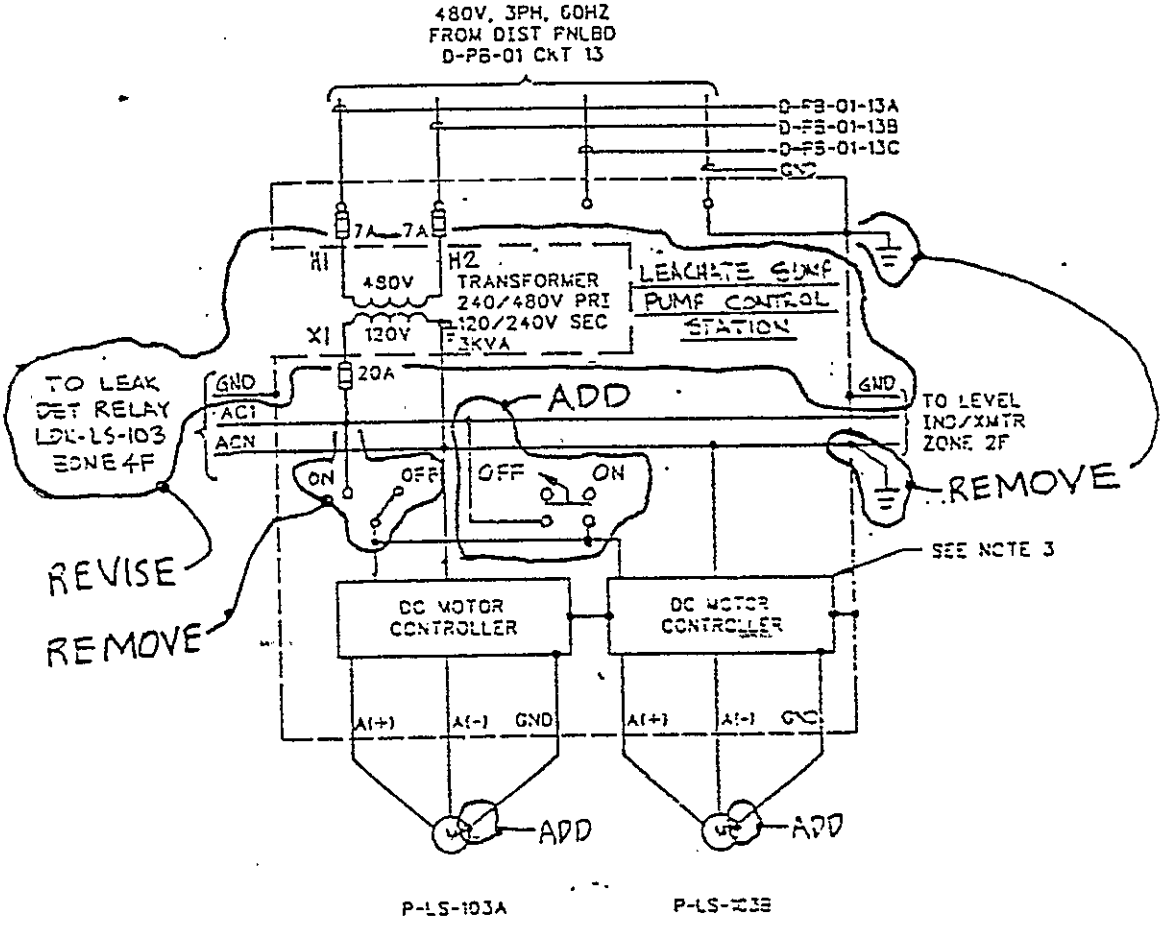

LONG TERM LEACHATE SUMP PUMPS
P-LS-103A & P-LS-103B
ELEMENTARY DIAGRAM
(PREFIX WIRE NUMBERS WITH PUMP NUMBERS)

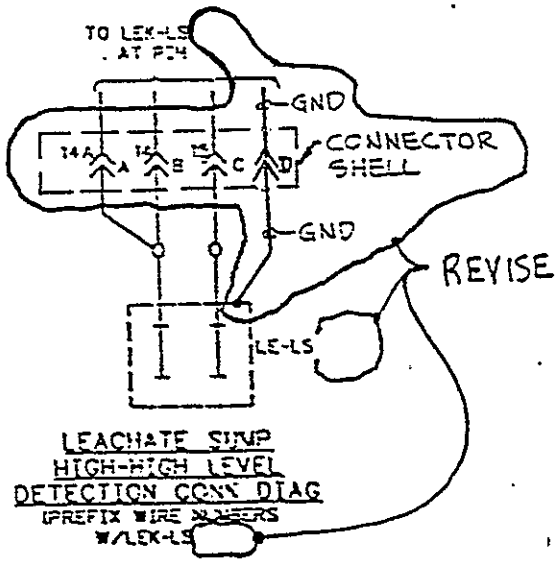

LEACHATE SUMP
HIGH-HIGH LEVEL
DETECTION CONN DIAG
(PREFIX WIRE NUMBERS
W/LEK-LS)

KAISER ENGINEERS HANFORD	ENGINEERING CHANGE NOTICE SKETCH					
Ref. Dwg. ECN B-714-17	~~Sht~~ P.16	~~Rev~~	Prepared By A.R. SNOWHITE	Checked By	ECN No. B-714-53	Page 14/49

REF DWG H-2-77636, SH 4, REV 0

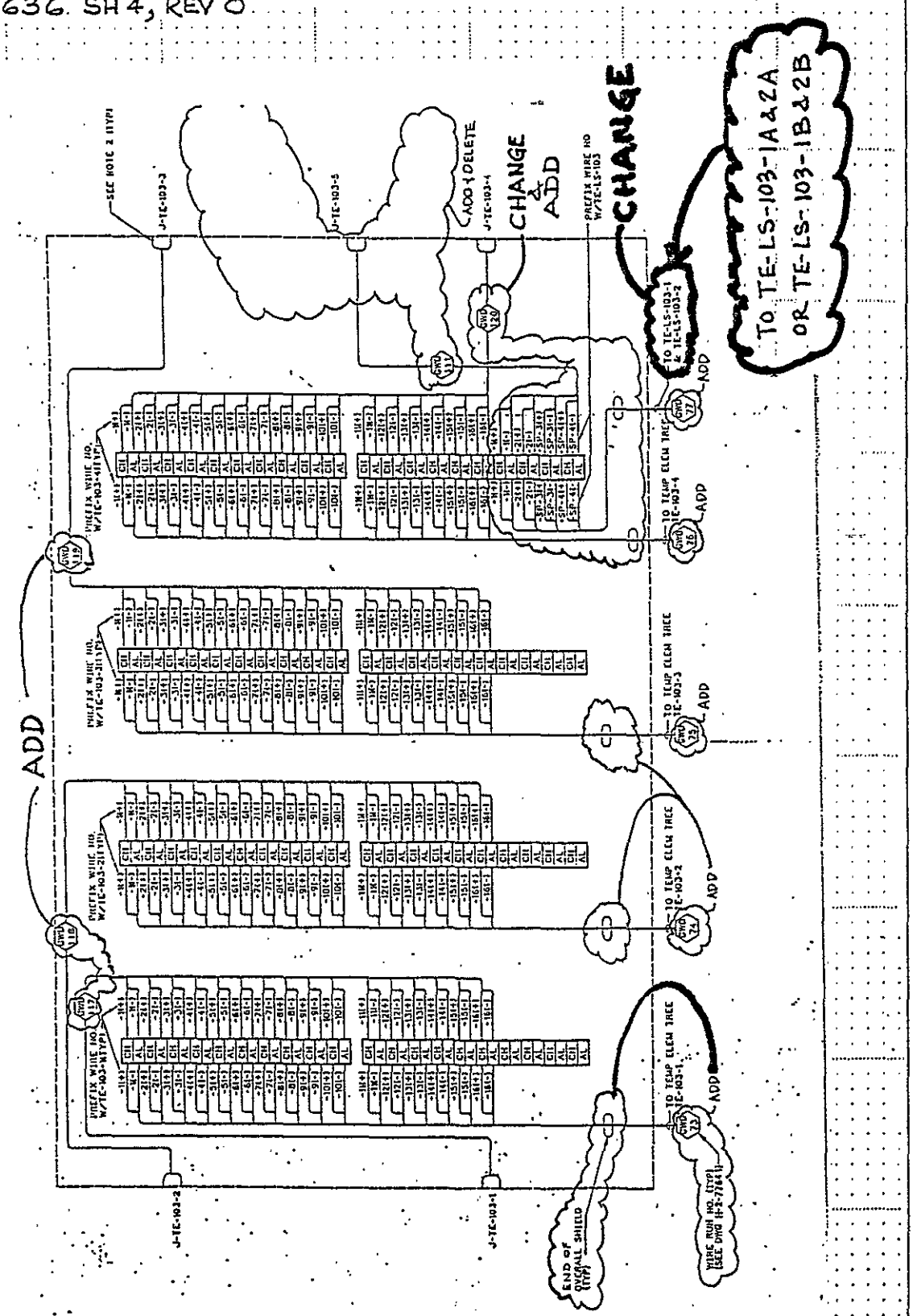

9 1 1 2 7 5 5 1 6 5 5

KAISER ENGINEERS
HANFORD

ENGINEERING CHANGE NOTICE SKETCH

Ref. Dwg. ECN B-714-17 | Sht. P27 | Rev. | Prepared By A.R. SNOWHITE | Checked By | ECN No. B-714-53 | Page 15/49

REF DWG H-2-77642 SH 1, REV 0

CONNECTOR SCHEDULE (SEE NOTE

EQUIPMENT					
DEVICE	NAME	CONN NO	CONN TYPE	CABLE NO	CONN
VAULT TEMPERATURE ELEMENT TREES TE TERMINAL BOX DWG H-2-77637 DETAIL 1	TE-102-1 (TE-102-1-1 THRU -16)	J-TE-102-1 TE TERM BOX	PV-72L18-32SL W/CAP & CHAIN SEE NOTE 3	I-TE-101	EXI SEE TO
	TE-102-2 (TE-102-2(1 THRU 16)	J-TE-102-2 TE TERM BOX	PV-72L18-32SL W/CAP & CHAIN SEE NOTE 3	I-TE-102	
	TE-102-3 (TE-102-3(1 THRU 16)	J-TE-102-3 TE TERM BOX	PV-72L18-32SL W/CAP & CHAIN SEE NOTE 3	I-TE-103	
	TE-102-4 (TE-102-4(1 THRU 16)	J-TE-102-4 TE TERM BOX	PV-72L18-32SL W/CAP & CHAIN SEE NOTE 3	I-TE-104	
LEACHATE SUMP TEMPERATURE	TE-LS-102-1A & -2A OR TE-LS-102-1B & -2B	J-TE-LS-102-4A TE TERM BOX	PV-72L18-32SL W/CAP & CHAIN SEE NOTE 3	—	

Add

CONNECTOR TERMINATION CHART

DEVICE	CONNECTOR NO	WIRE PREFIX NO.	A	B	C	D	E	F	G	H	J	h	j
VAULT TEMPERATURE ELEMENTS	J-TE-102-1	TE-102-1	1(+)	1(-)	2(+)	2(-)	3(+)	3(-)	4(+)	4(-)	5(+)	16(+)	16(-)
	J-TE-102-2	TE-102-2	1(+)	1(-)	2(+)	2(-)	3(+)	3(-)	4(+)	4(-)	5(+)	16(+)	16(-)
	J-TE-102-3	TE-102-3	1(+)	1(-)	2(+)	2(-)	3(+)	3(-)	4(+)	4(-)	5(+)	16(+)	16(-)
	J-TE-102-4	TE-102-4	1(+)	1(-)	2(+)	2(-)	3(+)	3(-)	4(+)	4(-)	5(+)	16(+)	16(-)
LEACHATE SUMP TEMPERATURE	J-TE-LS-102-4A	TE-LS-102	1(+)	1(-)	2(+)	2(-)	SP-3(+)	SP-3(-)	SP-4(+)	SP-4(-)		—	—
LEACHATE SUMP HIGH HIGH LEVEL	J-LE-LS-01-1 THRU -4	LE-LS-01	14A	14	15	GND							

ADD

KEH-0159 00 (01 88)

9 1 1 2 0 5 5 1 6 7 6

KAISER ENGINEERS HANFORD

ENGINEERING CHANGE NOTICE SKETCH

Ref. Dwg. ECN B-714-17 | Sht. P28 | Prepared By A.R. SNOWHITE | Checked By | ECN No. B-714-53 | Page 16/49

REF DWG H-2-77642 SH 2, REV 0

CONNECTOR SCHEDULE (SEE

EQUIPMENT						
DEVICE	NAME	CONN NO	CONN TYPE	CABLE NO	CONN NO	CC
VAULT TEMPERATURE ELEMENT TREES TE TERMINAL BOX DWG H-2-77637 DETAIL 1	TE-103-1(1 THRU 16)	J-TE-103-1 TE TERM BOX	PV-72L18-32SL W/CAP & CHAIN SEE NOTE 3	I-TE-101	EXISTING CABLES SEE DWG H-2-98 AND CONNECTIO'	
	TE-103-2 (TE-103-2-1 THRU 16)	J-TE-103-2 TE TERM BOX	PV-72L18-32SL W/CAP & CHAIN SEE NOTE 3	I-TE-102		
	TE-103-3 (TE-103-3-1 THRU 16)	J-TE-103-3 TE TERM BOX	PV-72L18-32SL W/CAP & CHAIN SEE NOTE 3	I-TE-103		
	TE-103-4 (TE-103-4-1 THRU 16)	J-TE-103-4 TE TERM BOX	PV-72L18-32SL W/CAP & CHAIN SEE NOTE 3	I-TE-104		
LEACHATE SUMP TEMPERATURE	TE-LS-103-1A & -2A OR TE-LS-103-1B & -2B	J-TE-LS-103-4A TETERM BOX	PV-72L18-32SL W/CAP & CHAIN SEE NOTE 3	—		

Add

DEVICE	CONNECTOR NO	WIRE PREFIX NO.	A	B	C	D	E	F	G	H	J	h	j
VAULT TEMPERATURE ELEMENTS	J-TE-103-1	TE-103-1	1(+)	1(-)	2(+)	2(-)	3(+)	3(-)	4(+)	4(-)	5(+)	16(+)	16(-)
	J-TE-103-2	TE-103-2	1(+)	1(-)	2(+)	2(-)	3(+)	3(-)	4(+)	4(-)	5(	16(+)	16(-)
	J-TE-103-3	TE-103-3	1(+)	1(-)	2(+)	2(-)	3(+)	3(-)	4(+)	4(-)	5(	16(+)	16(-)
	J-TE-103-4	TE-103-4	1(+)	1(-)	2(+)	2(-)	3(+)	3(-)	4(+)	4(-)	5(	16(+)	16(-)
LEACHATE SUMP TEMPERATURE	J-TE-LS-103-4A	TE-LS-103	1(+)	1(-)	2(+)	2(-)	SP-3(+)	SP-3(-)	SP-4(+)	SP-4(-)		—	—
LEACHATE SUMP HIGH HIGH LEVEL	J-LE-LS-01-1	LE-LS-01	14A	14	15	GND							

ADD

REV 0 '59 00 (0: 88)

KAISER ENGINEERS HANFORD	ENGINEERING CHANGE NOTICE SKETCH					
Ref. Dwg. ECN B-714-17	~~Sh.~~ P.29	~~Rev.~~	Prepared By A.R. SNOWHITE	Checked By C. Dubler	ECN No. B-714-53	Page 17/49

REF DWG H-2-77643 SH1, REV 0

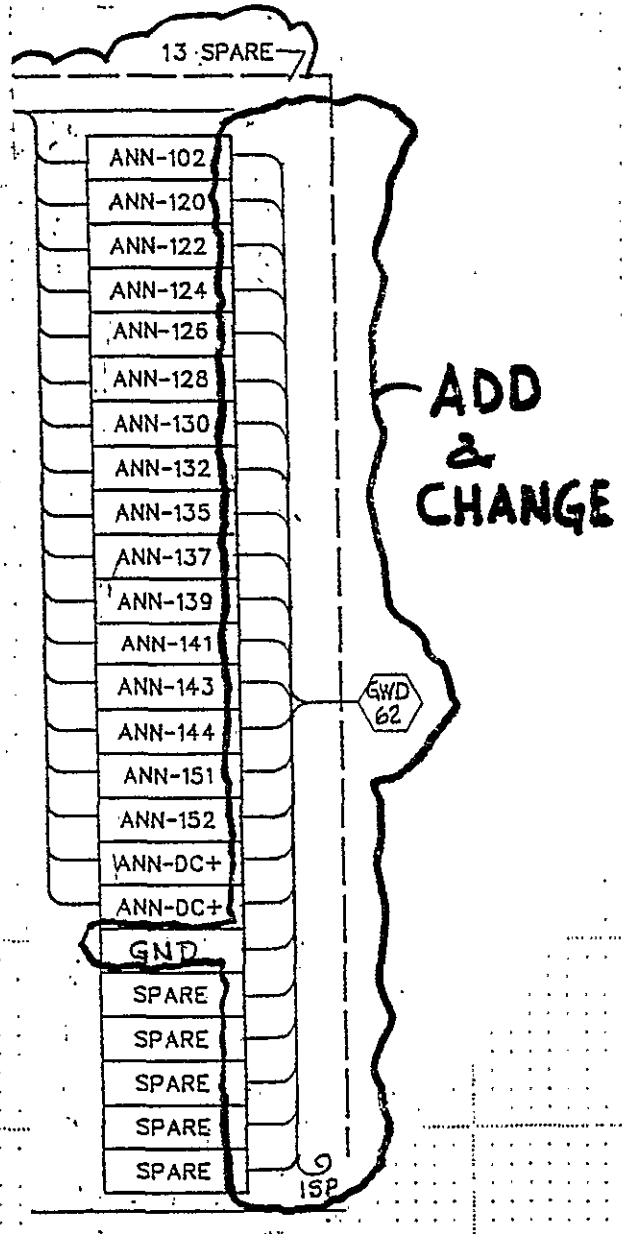

ANN-TBX-103

9 1 1 2 0 5 5 1 6 3 7

KAISER ENGINEERS HANFORD	ENGINEERING CHANGE NOTICE SKETCH					
Ref. Dwg. ECN B-714-17	~~Sht~~ P.29 + 30	~~Rev~~	Prepared By A.R. SNOWHITE	Checked By C Publett	ECN No. B-714-53	Page 18/49

REF DWG H-2-77643 SH 1, REV. 0

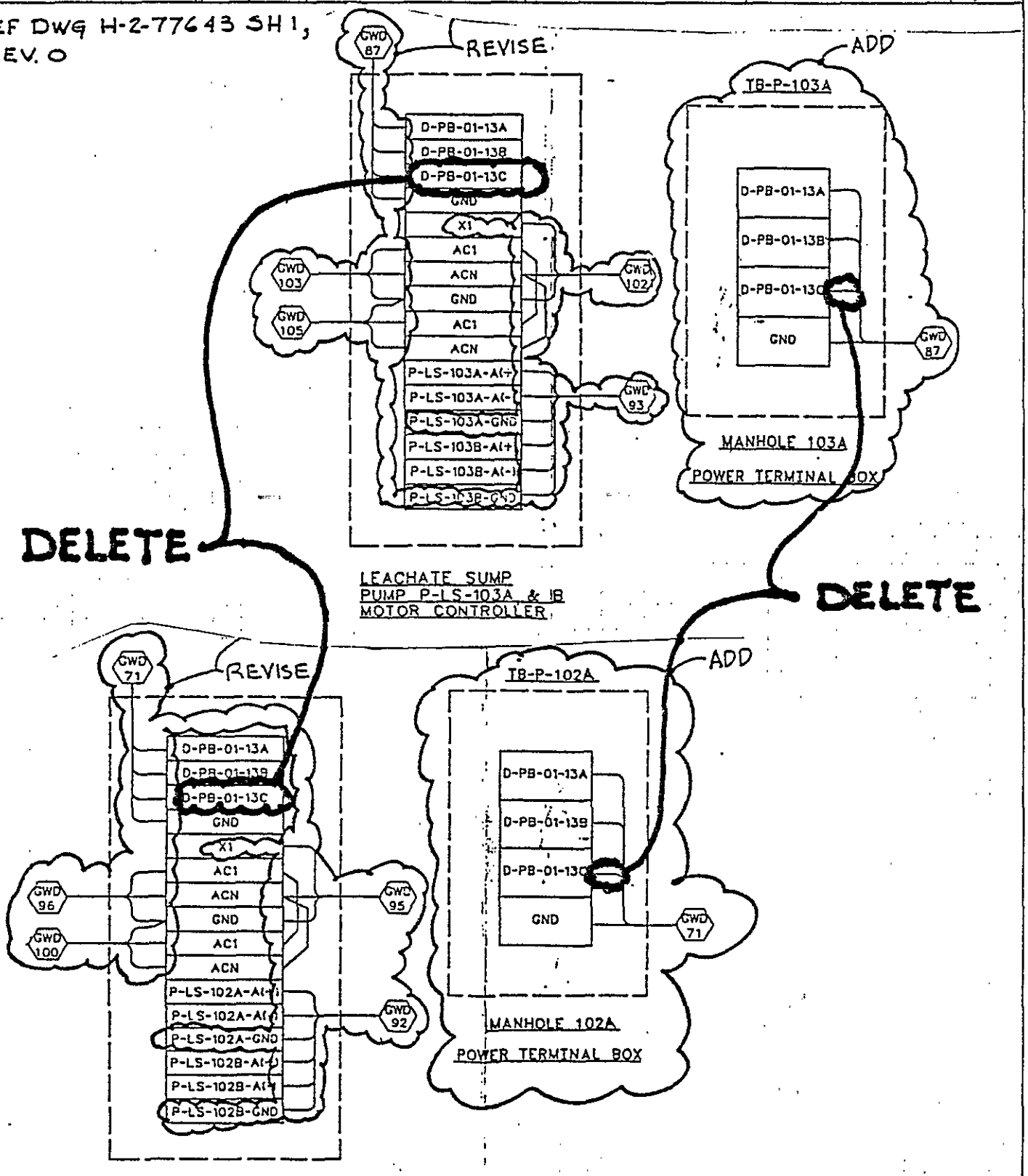

9 1 1 2 0 5 5 1 6 5 8

KAISER ENGINEERS HANFORD	ENGINEERING CHANGE NOTICE SKETCH					
Ref. Dwg. ECN B-714-17	Sh. P.31	Rev.	Prepared By A. R. SNOWHITE	Checked By	ECN No. B-714-53	Page 19/49

REF DWG H-2-77643 SH 2, REV 0

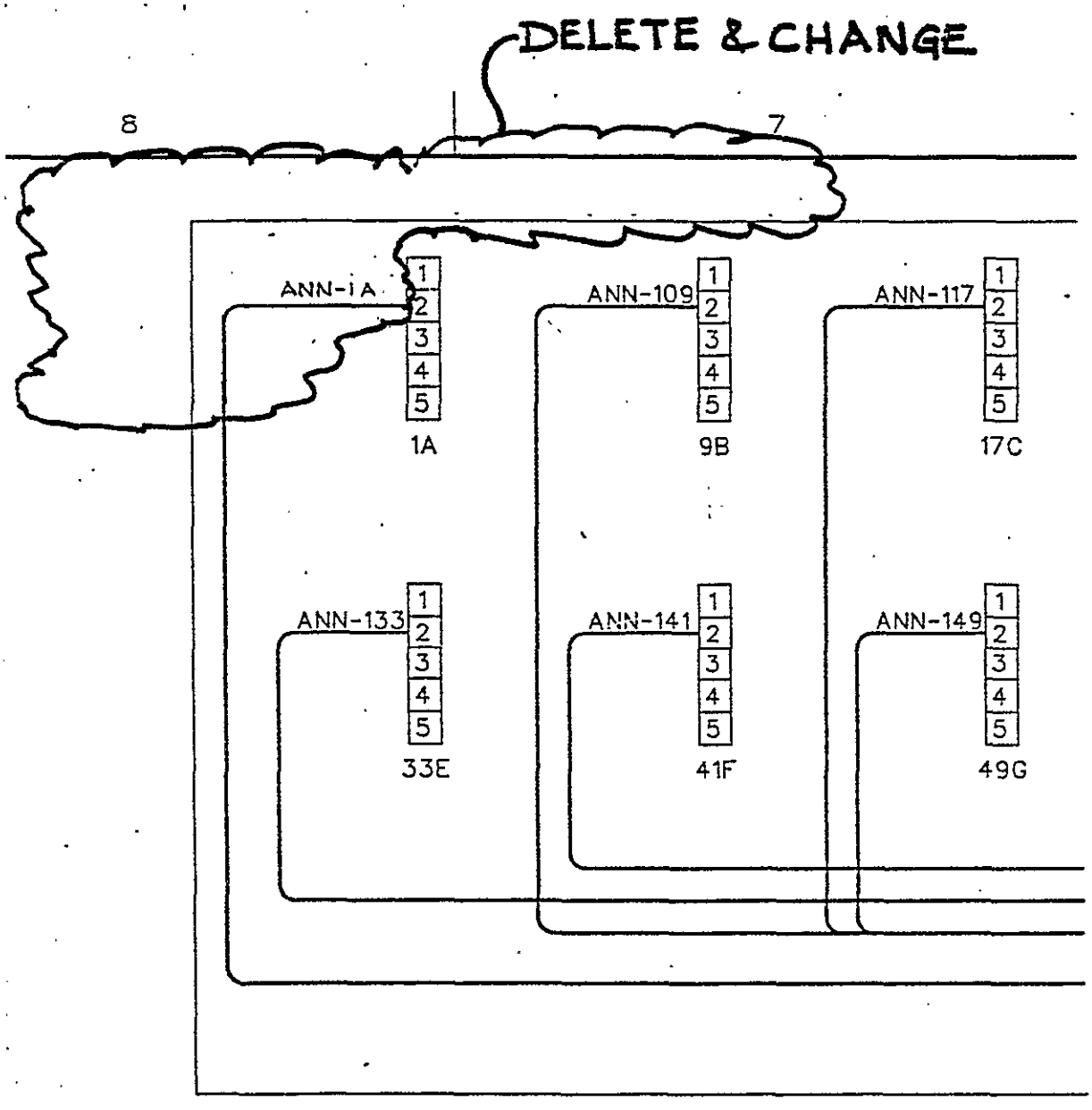

9 1 1 2 7 5 5 1 6 0

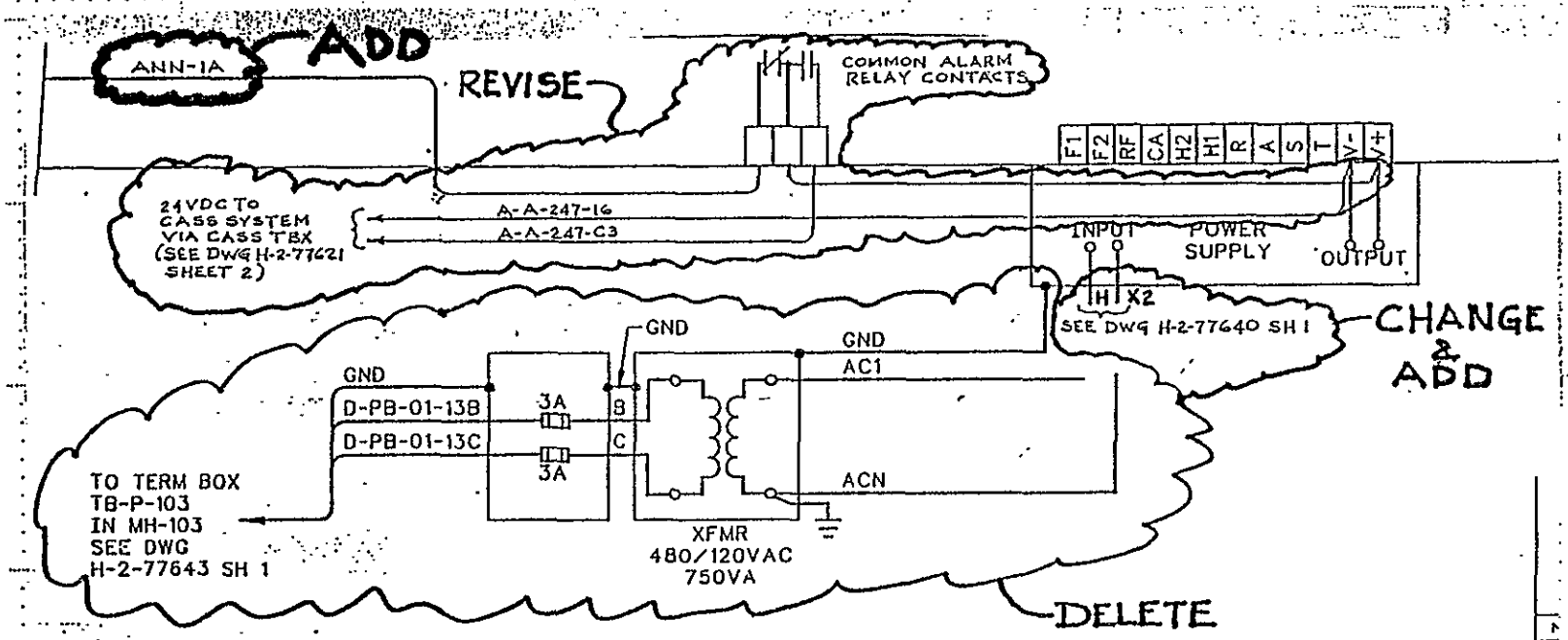

REF DWG H-2-77643 SH 2, REV 0

KAISER ENGINEERS HANFORD					ENGINEERING CHANGE NOTICE SKETCH
Ref. Dwg. ECN B-714-17	Sht. P 31	Rev.	Prepared By A.R. SNOWHITE	Checked By	ECN No. B-714-53
					Page 20/49

KEH-0159.00 (01/88)

KAISER ENGINEERS HANFORD	ENGINEERING CHANGE NOTICE SKETCH					
Ref. Dwg. ECN B-714-30	Sh. P7	~~Rev.~~	Prepared By A.R. SNOWHITE	Checked By	ECN No. B-714-53	Page 21/49

REF DWG
H-2-77636
SH 2, REV 0

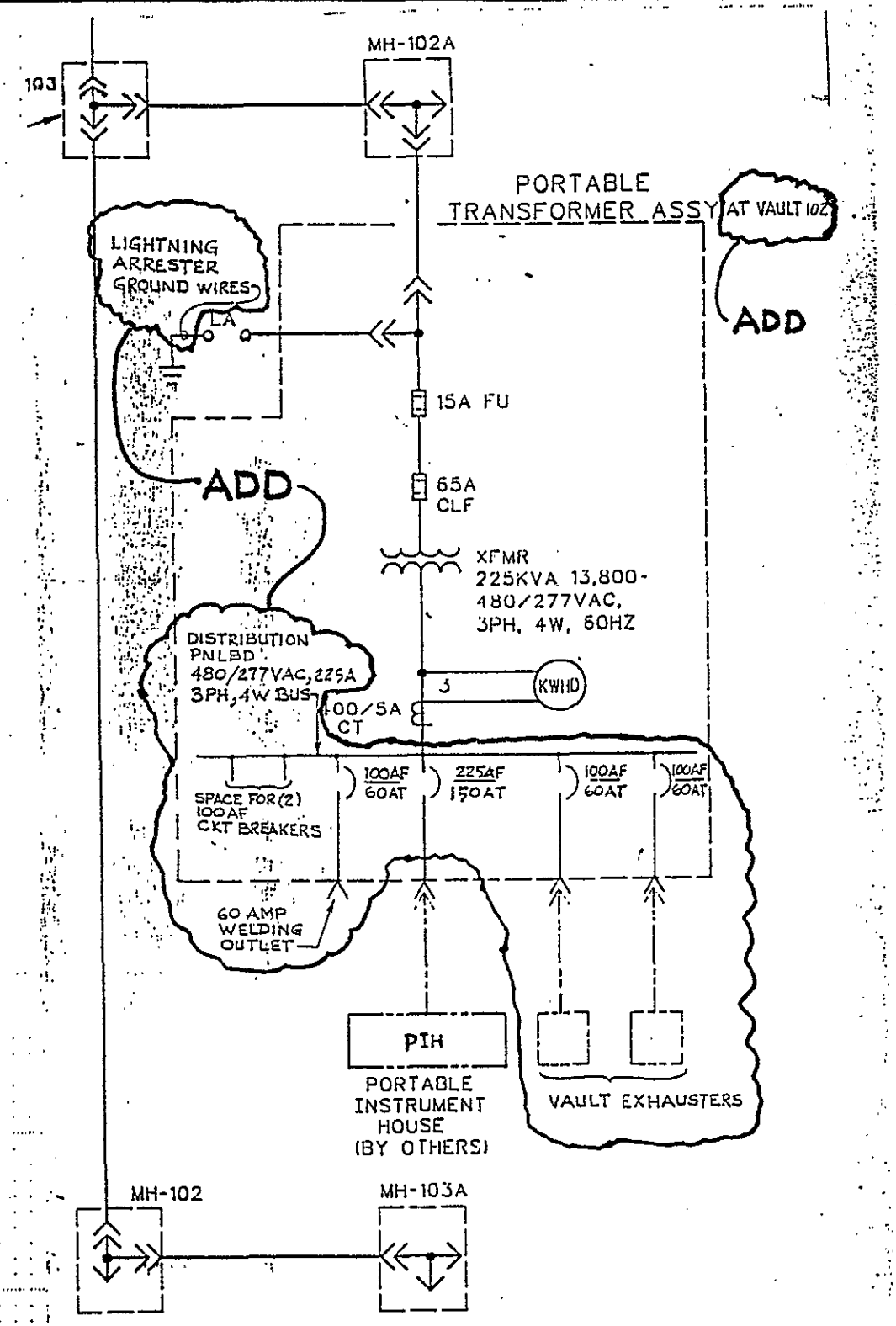

ONE LINE DIAGRAM

9 1 1 2 1 5 5 1 6 5 1

KAISER ENGINEERS HANFORD	ENGINEERING CHANGE NOTICE SKETCH					
Ref. Dwg. ECN B-714-30	Sht. R8	Rev.	Prepared By A.R. SNOWHITE	Checked By	ECN No. B-714-53	Page 22/49

REF DWG H-2-77636 SH2, REV 0

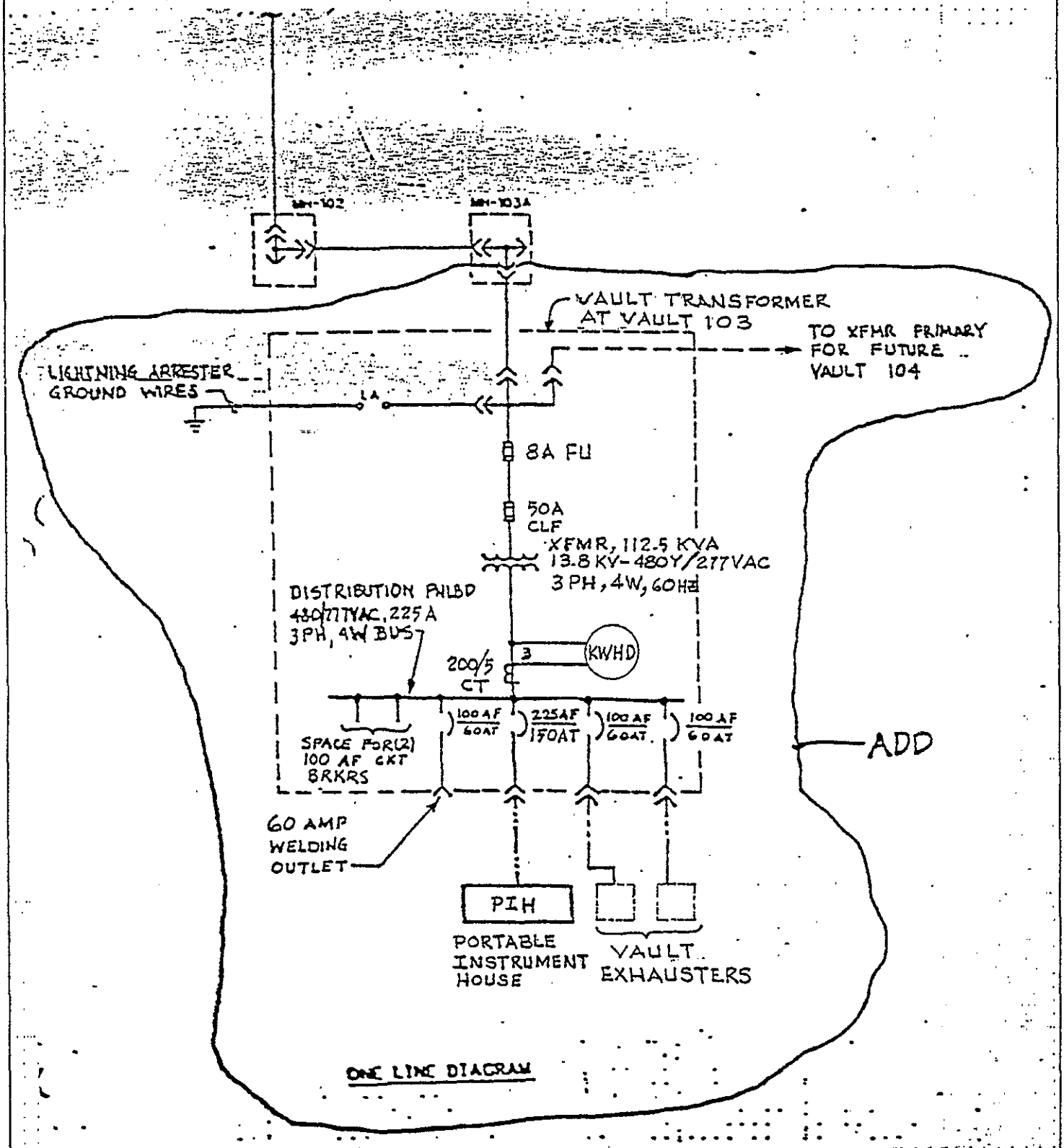

9112551612

9 1 1 2 5 5 1 6 3

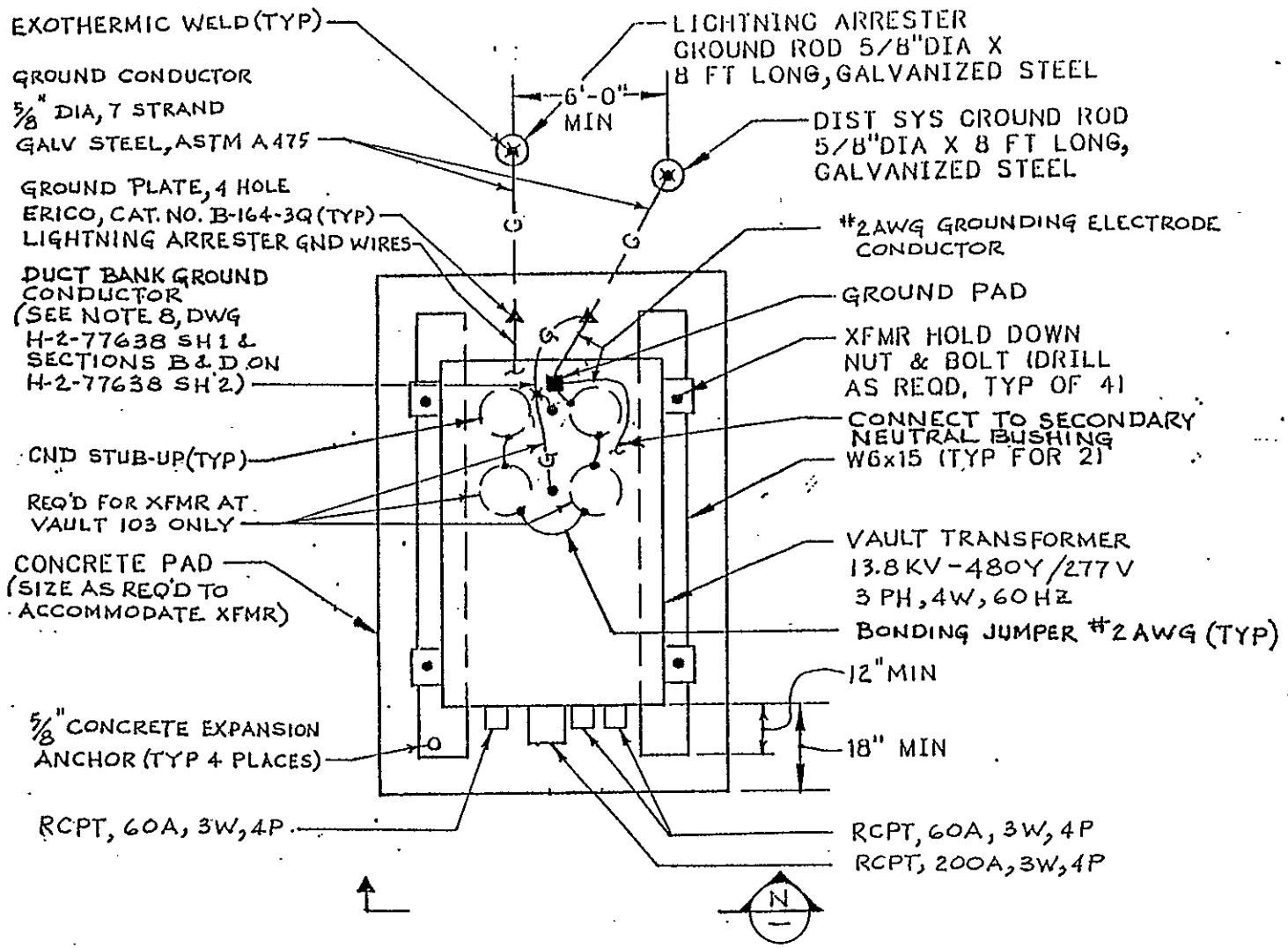

DETAIL 7

NOTE TO AS-BUILDING:
THIS DETAIL REPLACES DETAIL ON DWG

REF DWG H-2-77638 SH 3, REV 0

KAISER ENGINEERS HANFORD					ENGINEERING CHANGE NOTICE SKETCH
Ref. Dwg. ECN B-714-30	Sht. P.9	Rev.	Prepared By A. R. SNOWHITE	Checked By	ECN No. B-714-53	Page 23/49

KEH-0159.00 (01/88)

KAISER ENGINEERS HANFORD	ENGINEERING CHANGE NOTICE SKETCH					
Ref. Dwg. ECN B-714-30	~~Sh.~~ P.15	~~Rev.~~	Prepared By A.R. SNOWHITE	Checked By C Dublett	ECN No. B-714-53	Page 24/49

REF DWG H-2-78504 SH 3, REV 0

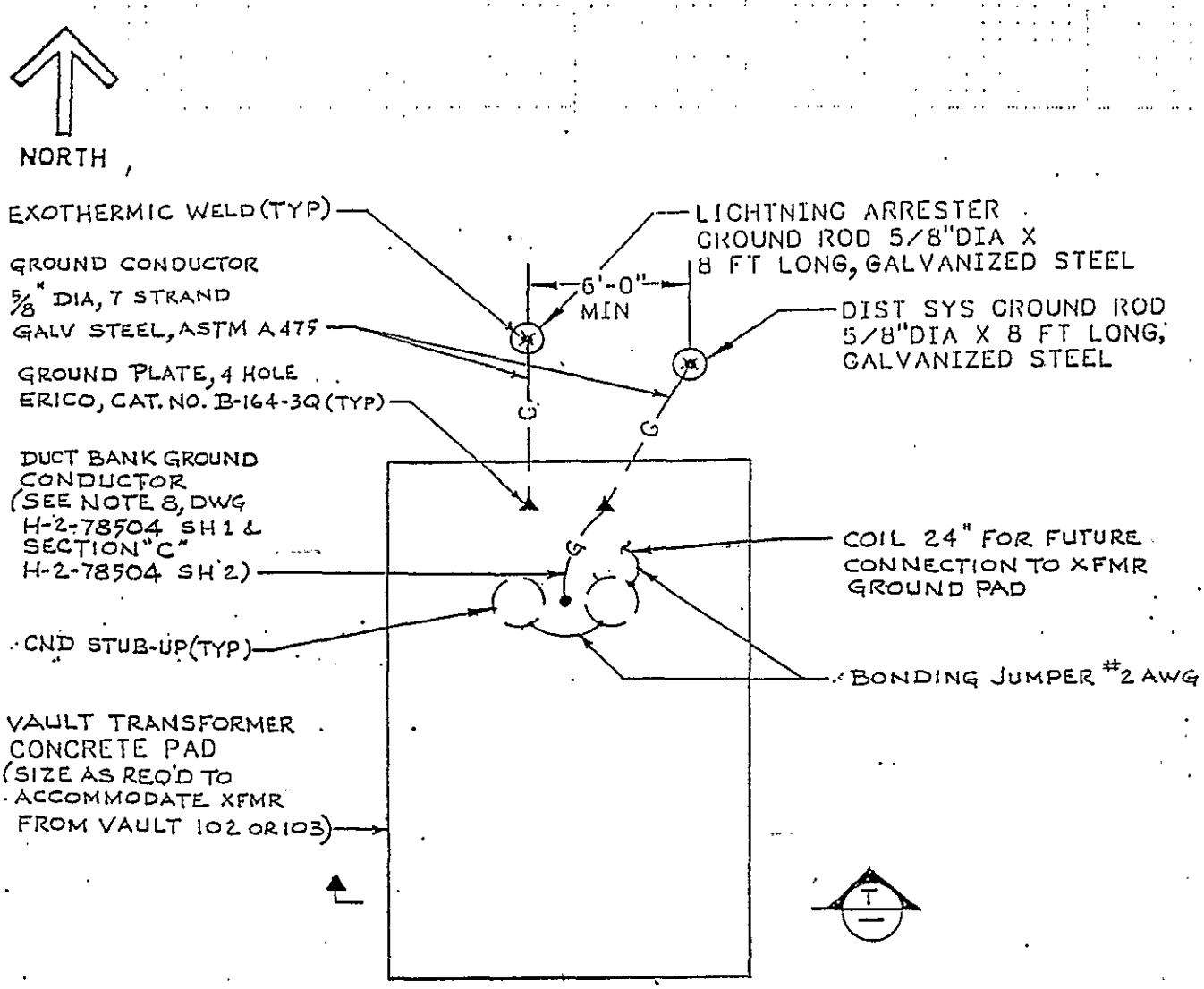

ENLARGED PLAN (1) H-2-78501 SH 2

NOTE TO AS-BUILDING:
THIS PLAN REPLACES
PLAN ON DWG

KAISER ENGINEERS HANFORD	ENGINEERING CHANGE NOTICE SKETCH					
Ref. Dwg. ECN B-714-30	~~Sht.~~ P.16	~~Rev.~~	Prepared By A.R. SNOWHITE	Checked By	ECN No. B-714-53	Page 25/49

REF DWG H-2-78510 SH 1, REV 0

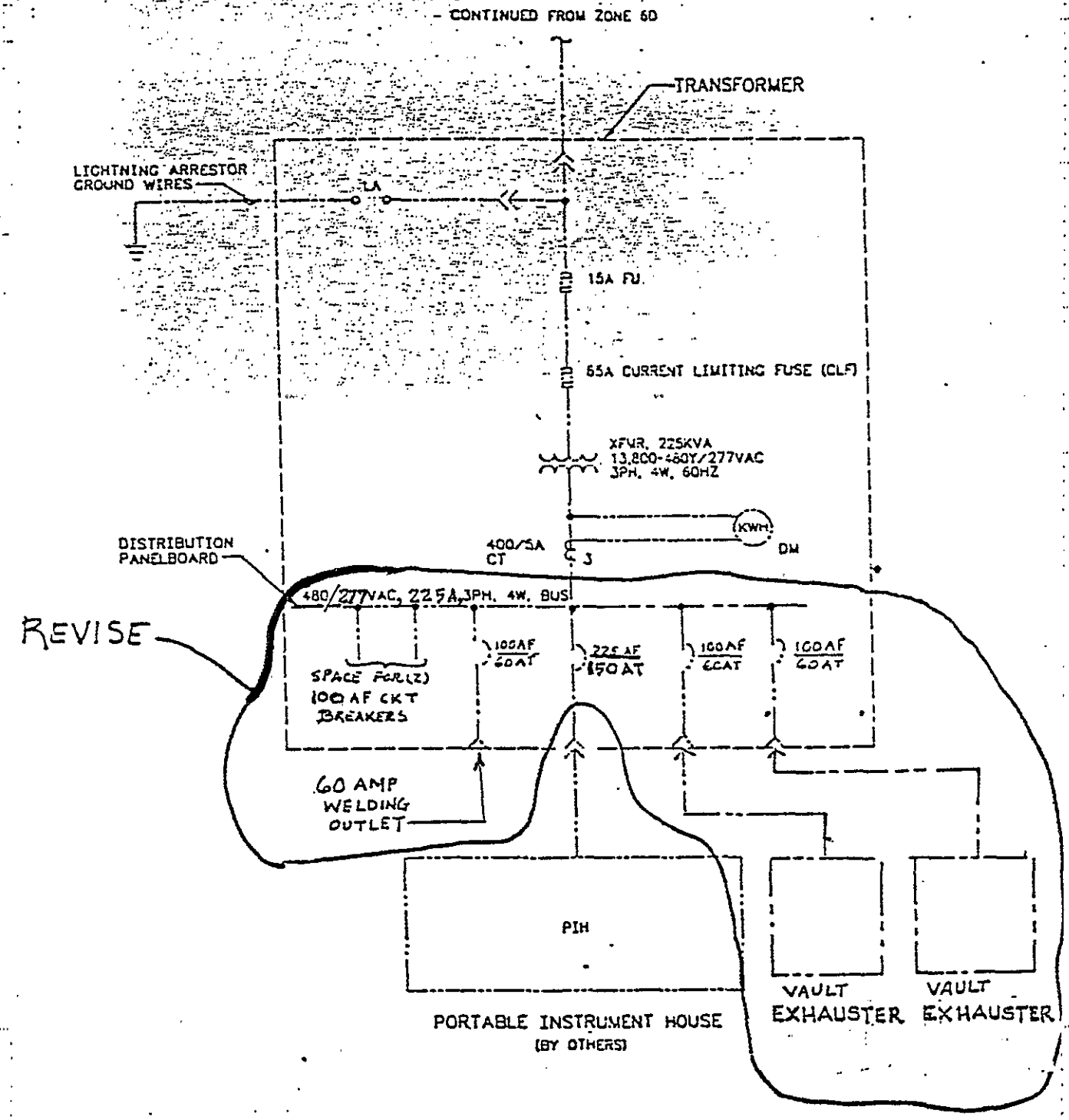

KEH-0159.00 (01/88)

KAISER ENGINEERS HANFORD	ENGINEERING CHANGE NOTICE SKETCH					
Ref. Dwg. H-2-77634	Sh. 1	Rev. 0	Prepared By A.R.SNOWHITE	Checked By	ECN No. B-714-53	Page 26/49

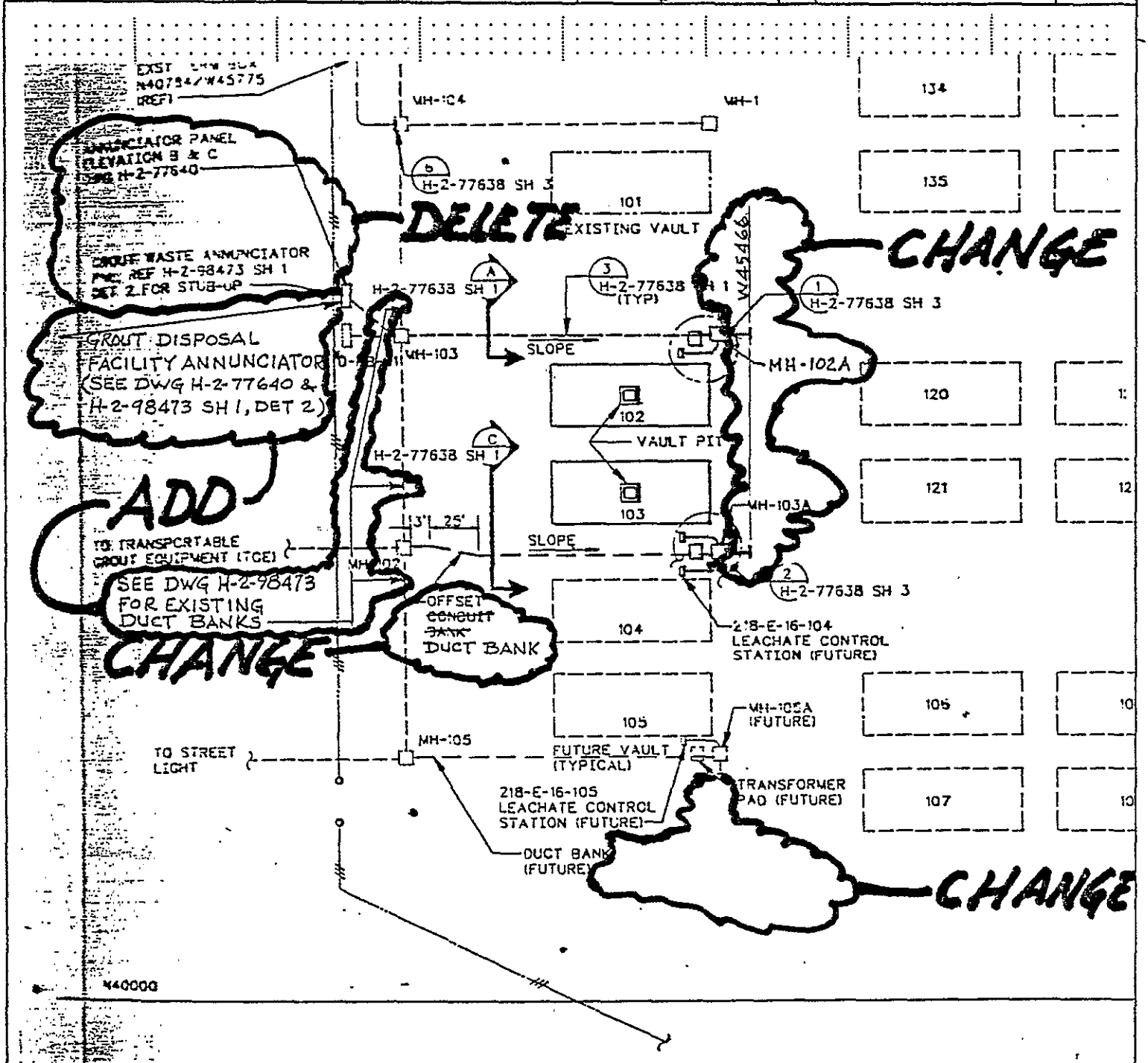

KAISER ENGINEERS HANFORD	ENGINEERING CHANGE NOTICE SKETCH					
Ref. Dwg. H-2-77635	Sh. 1	Rev. 0	Prepared By A.R. SNOWHITE	Checked By	ECN No. B-714-53	Page 27/49

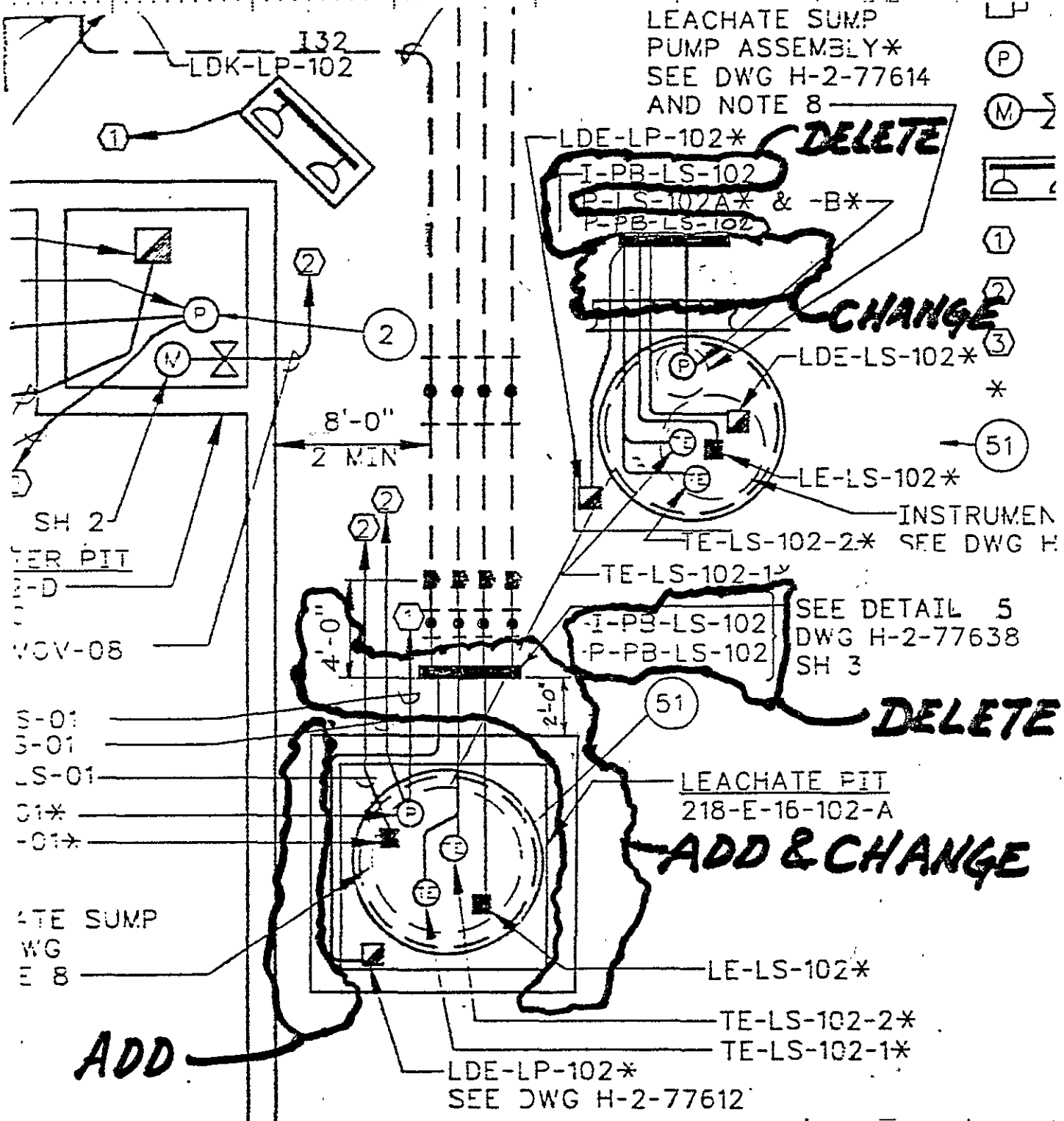

KEH-0159.00 (1/88)

KAISER ENGINEERS HANFORD	ENGINEERING CHANGE NOTICE SKETCH					
Ref. Dwg. H-2-77635	Sh. 1	Rev. 0	Prepared By A. R. SNOWHITE	Checked By C. Dubbert	ECN No. B-714-53	Page 28/49

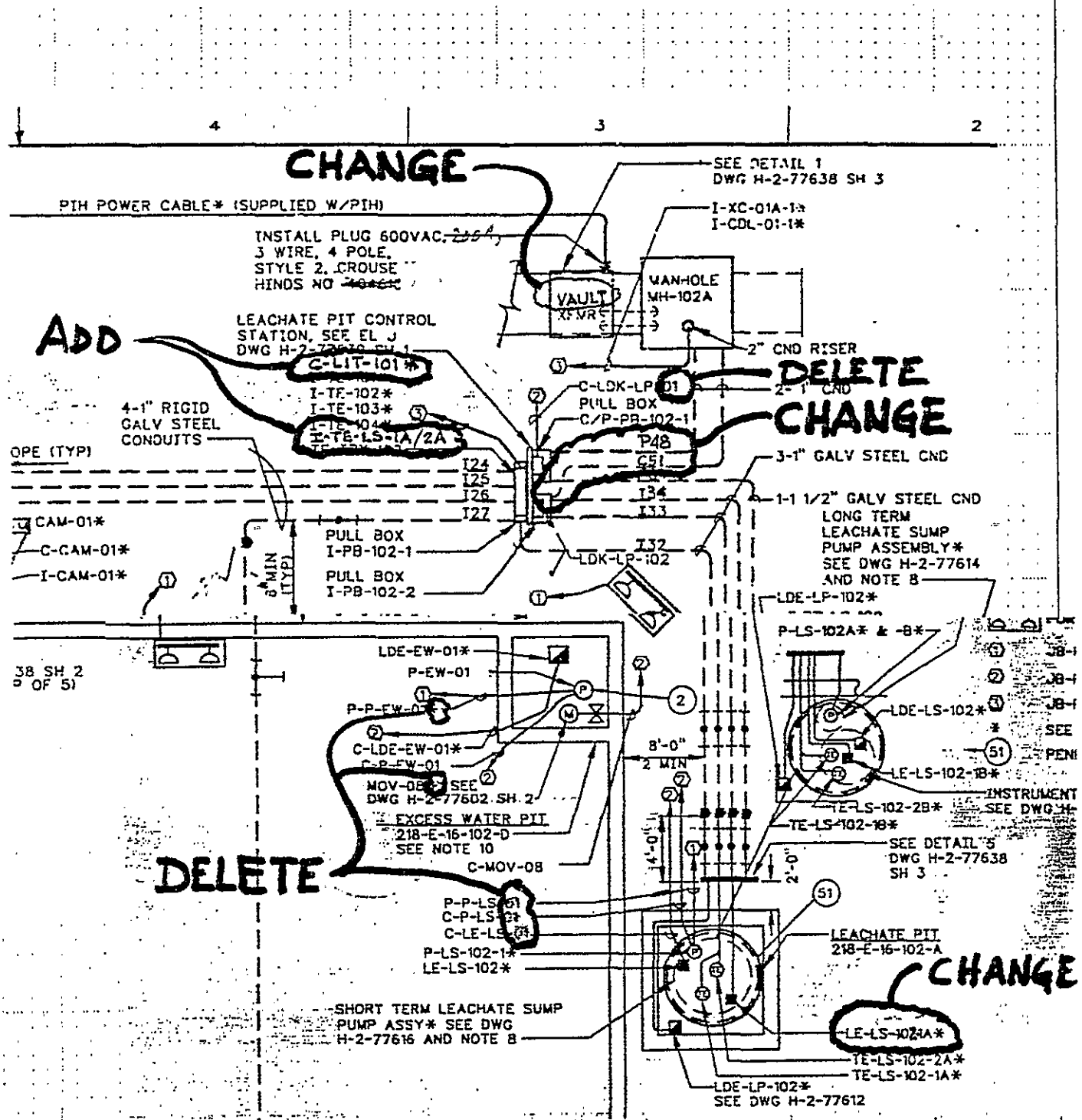

KEH-0159.00 (01/88)

KAISER ENGINEERS HANFORD	ENGINEERING CHANGE NOTICE SKETCH					
Ref. Dwg. H-2-77635	Sh. 2	Rev. 0	Prepared By A.R. SNOWHITE	Checked By	ECN No. B-714-53	Page 29/49

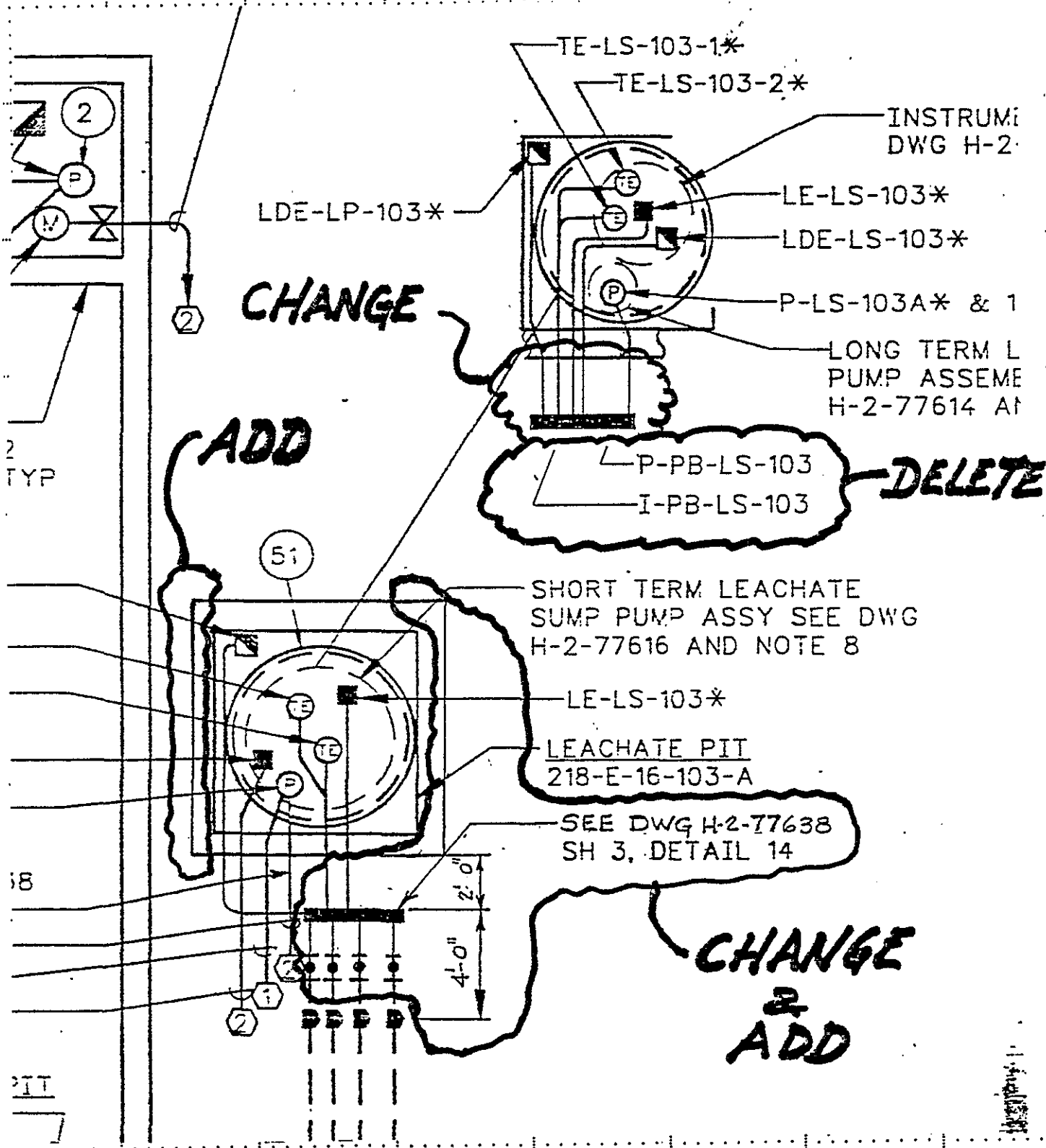

KEH-0159.00 (1/88)

KAISER ENGINEERS HANFORD	ENGINEERING CHANGE NOTICE SKETCH					
Ref. Dwg. H-2-77635	Sh. 2	Rev. 0	Prepared By A.R. SNOWHITE	Checked By	ECN No. B-714-53	Page 30/49

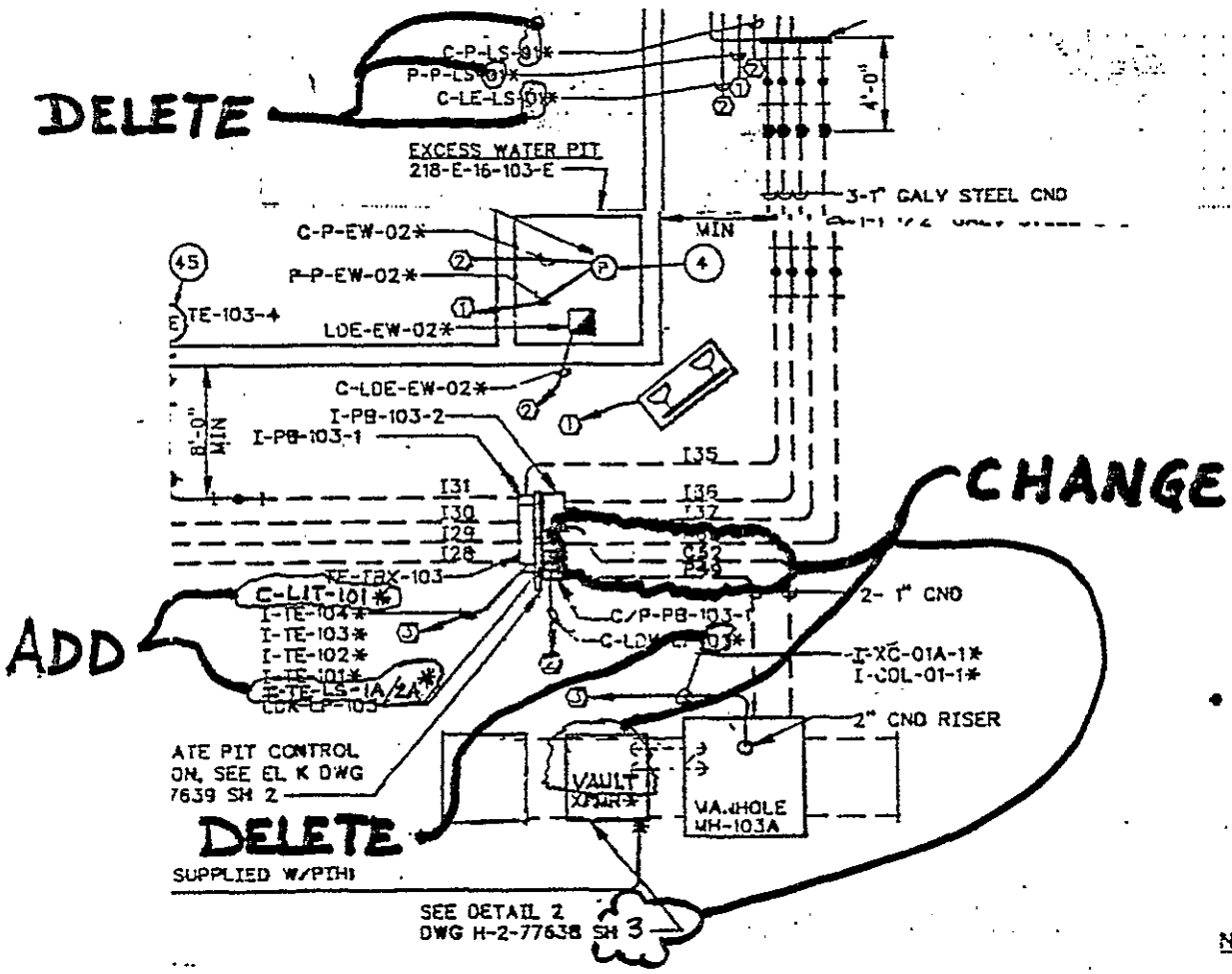

KEH-0159.00 (01/88)

9 1 1 2 0 5 5 1 6 7 1

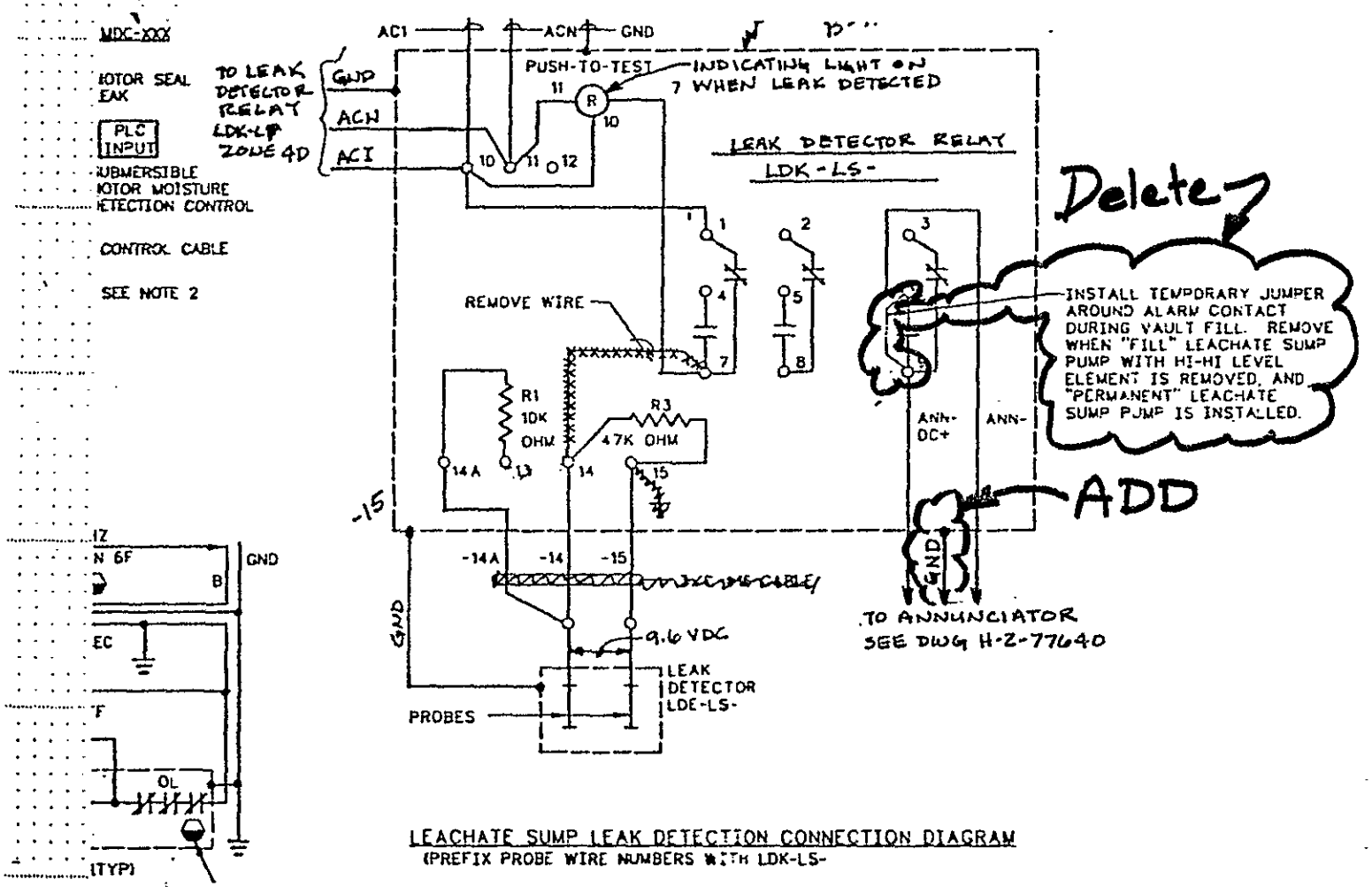

LEACHATE SUMP LEAK DETECTION CONNECTION DIAGRAM
(PREFIX PROBE WIRE NUMBERS WITH LDK-LS-

KEH-0159.00 (01/88)

KAISER ENGINEERS HANFORD	Ref. Dwg. H-2-77636	Sh. 1	Rev. 0	Prepared By TK EHRHARD
ENGINEERING CHANGE NOTICE SKETCH	H-2-77636	3	0	Checked By
				ECN No. B-714-53
				Page 31/49

KAISER ENGINEERS HANFORD	ENGINEERING CHANGE NOTICE SKETCH					
Ref. Dwg. H-2-77636	Sh. 2	Rev. 0	Prepared By A.R. SNOWHITE	Checked By [illegible]	ECN No. B-714-53	Page 32/49

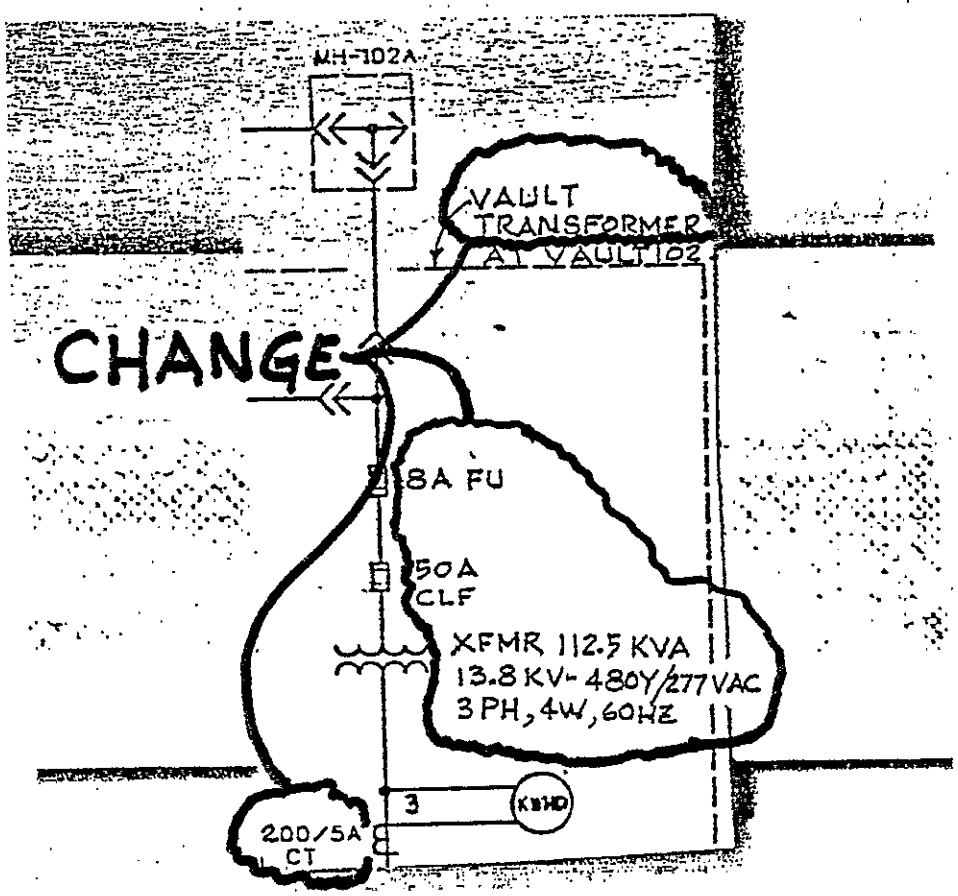

9112055167 2

KAISER ENGINEERS HANFORD	ENGINEERING CHANGE NOTICE SKETCH					
Ref. Dwg. H-2-77638	Sh. 2	Rev. 0	Prepared By A. R. SNOWHITE	Checked By	ECN No. B-714-53	Page 33/49

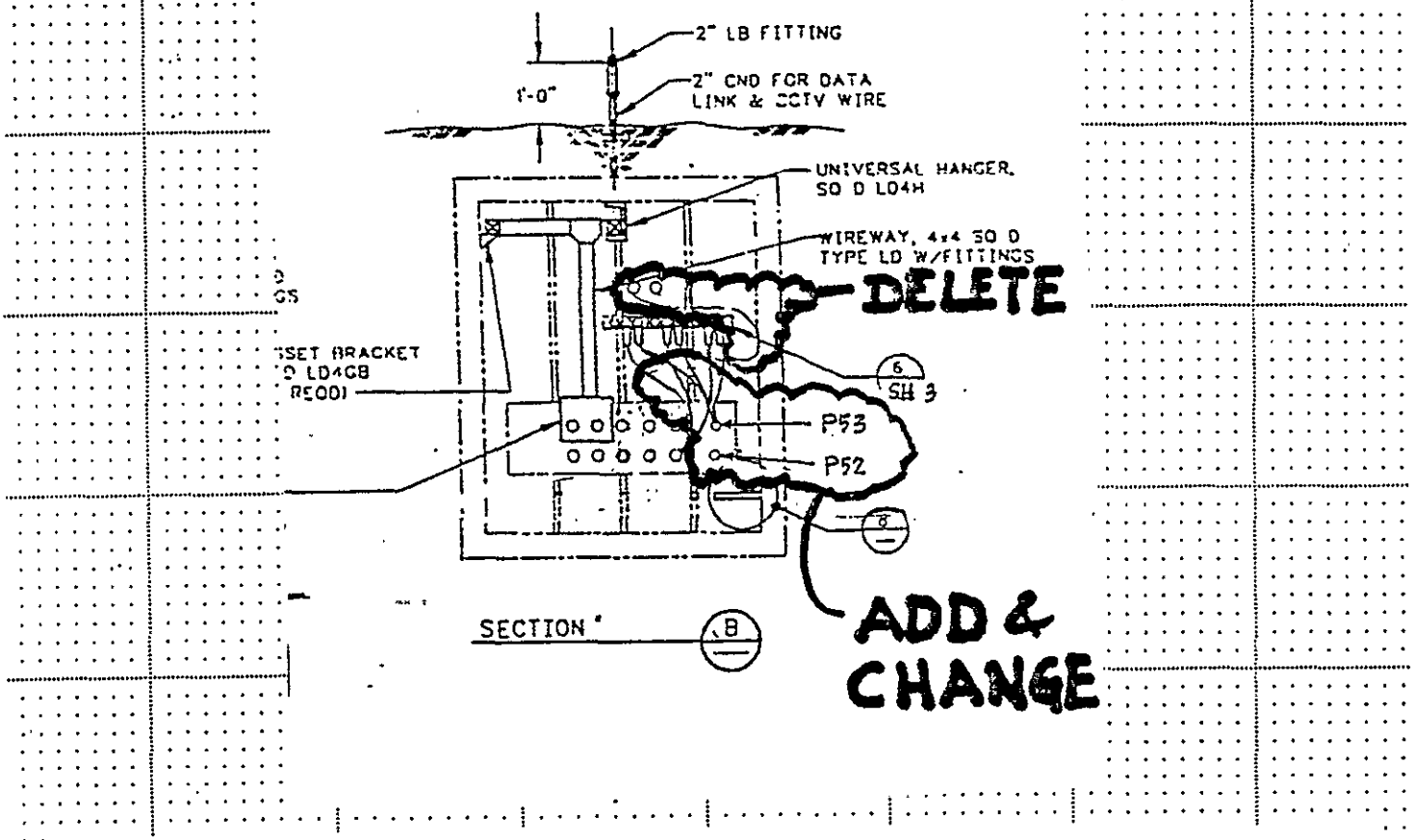

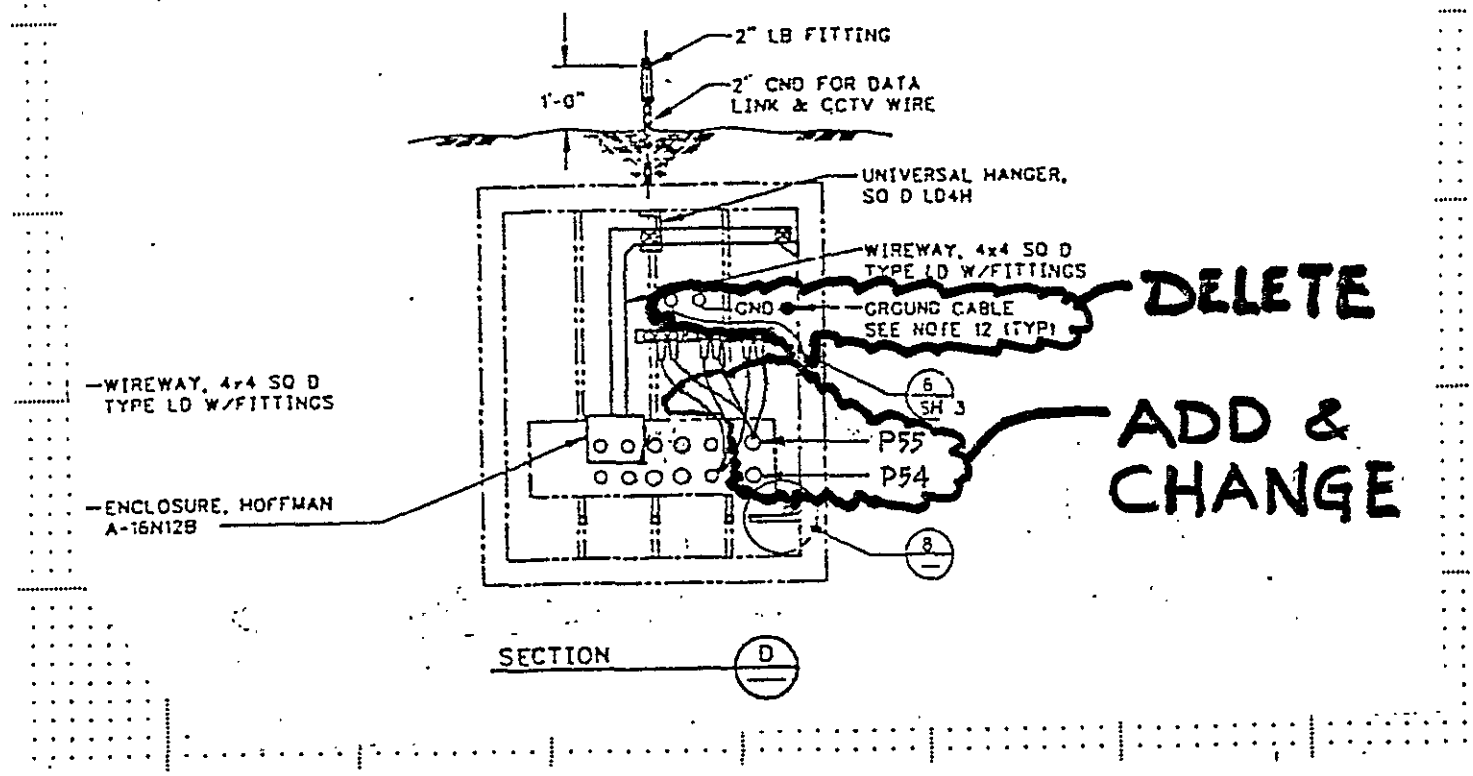

9112955173

KAISER ENGINEERS HANFORD	ENGINEERING CHANGE NOTICE SKETCH					
Ref. Dwg. H-2-77638	Sh. 3	Rev. 0	Prepared By A.R.SNOWHITE	Checked By C Hublett	ECN No. B-714-53	Page 34/49

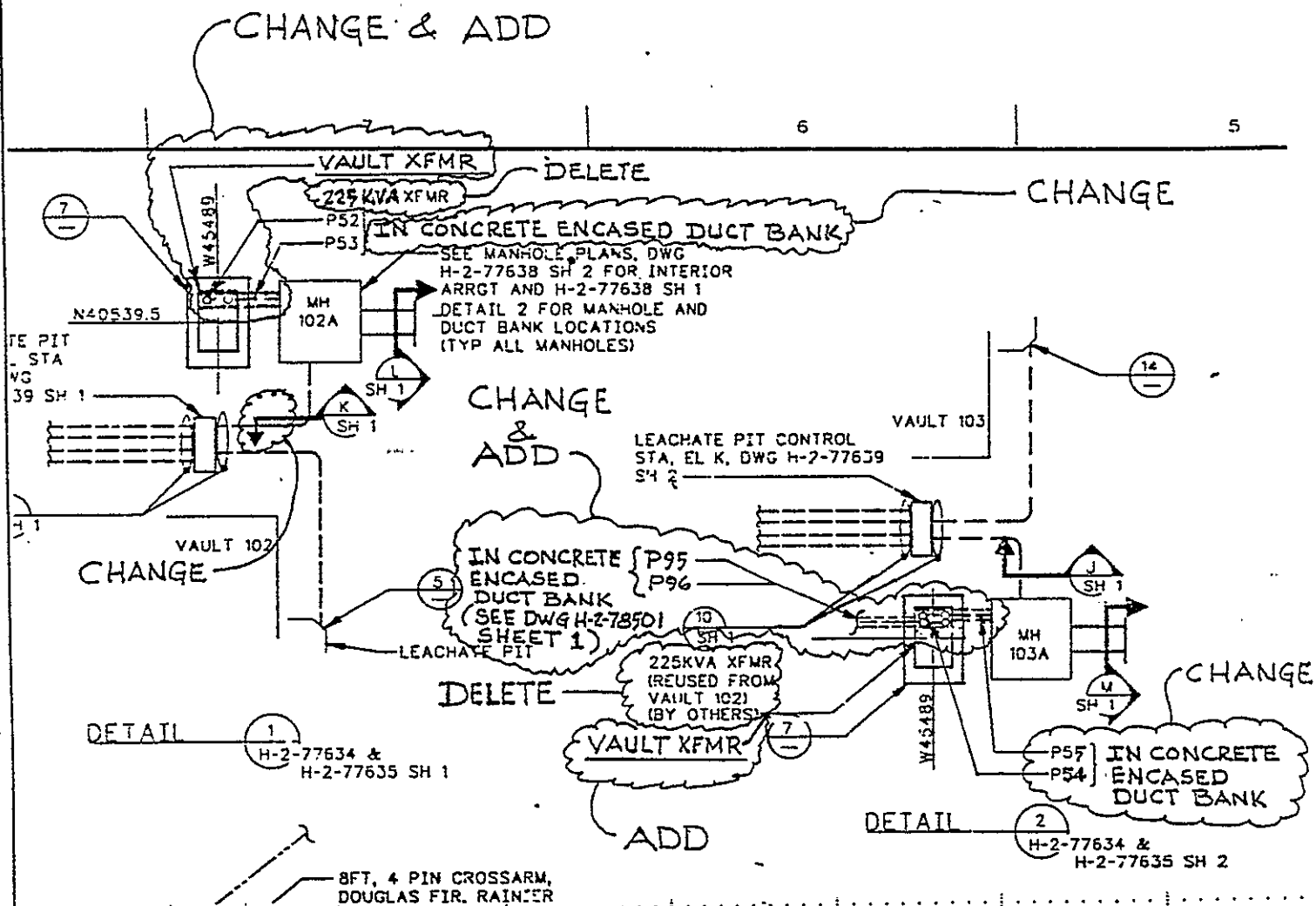

9112055174

KEH-0159.00 (1/88)

KAISER ENGINEERS HANFORD	ENGINEERING CHANGE NOTICE SKETCH					
Ref. Dwg. H-2-77640	Sh. 1	Rev. 0	Prepared By A.R. SNOWHITE	Checked By	ECN No. B-714-53	Page 35/49

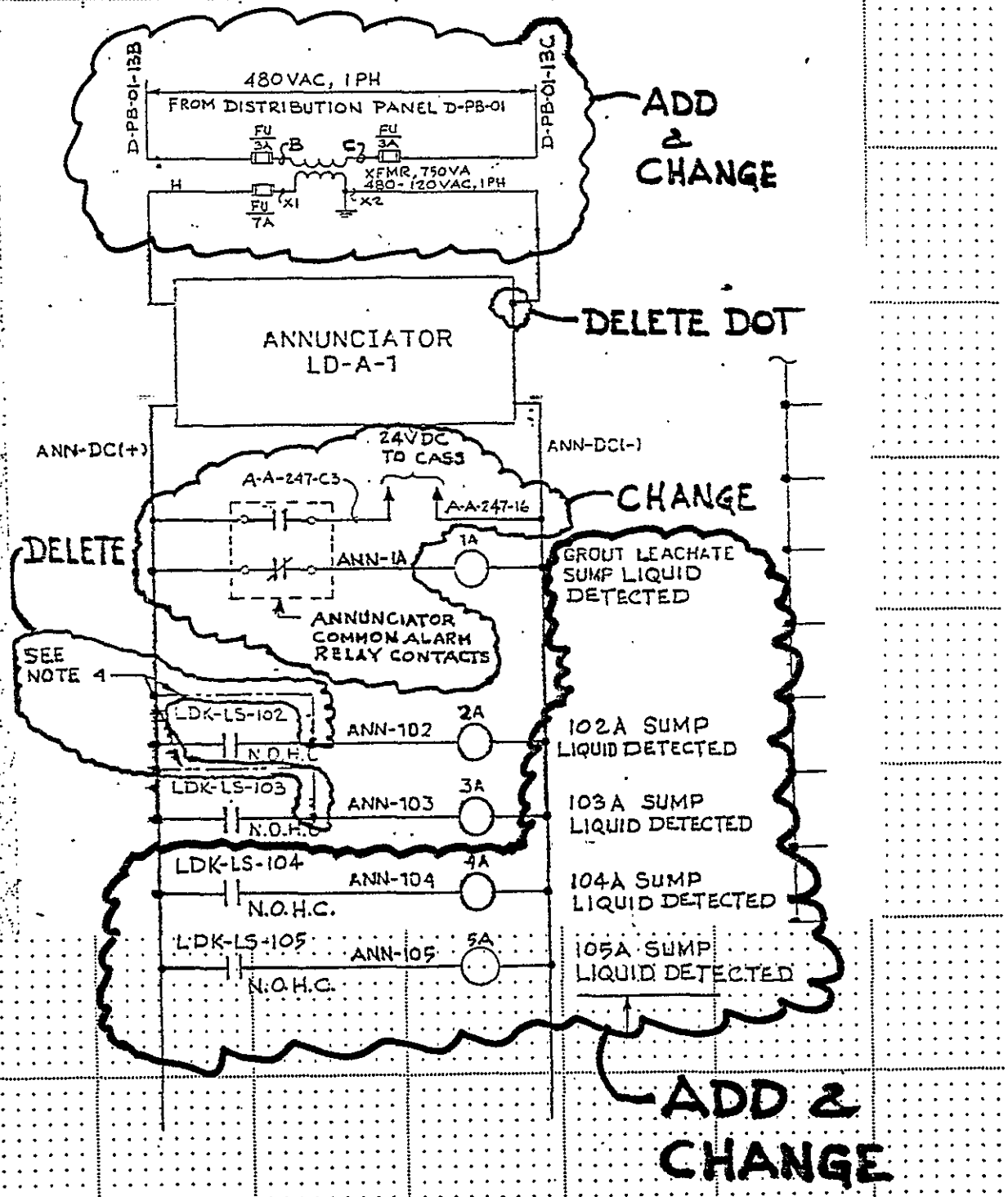

9 1 1 2 0 5 5 1 6 7 6

ADD

LEACHATE SUMP TEMPERATURE

CONNECTING CABLE						EQUIPMENT		
CABLE NO	CONN NO	CONN TYPE	CABLE	CONN NO	CONN TYPE	NAME	CONN NO	CONN TYPE
I-TE-LS-1A/2A	J-TE-LS-4A-1	PV-76L18-32PL W/CAP & CHAIN (NOTE 3)	16PR#20 TYPE KX, T/C EXT CABLE 100 FT LG, ALPHA, POLYURETHANE JACKET, PVC INSULATED CONDUCTORS	J-TE-LS-4A-2	PV-76L18-32SL W/CAP & CHAIN (NOTE 3)	PORTABLE INST HSE	J-TE-LS-4A-3	PV-72-L18-32PL W/CAP CHAIN (NOTE 3) NIC

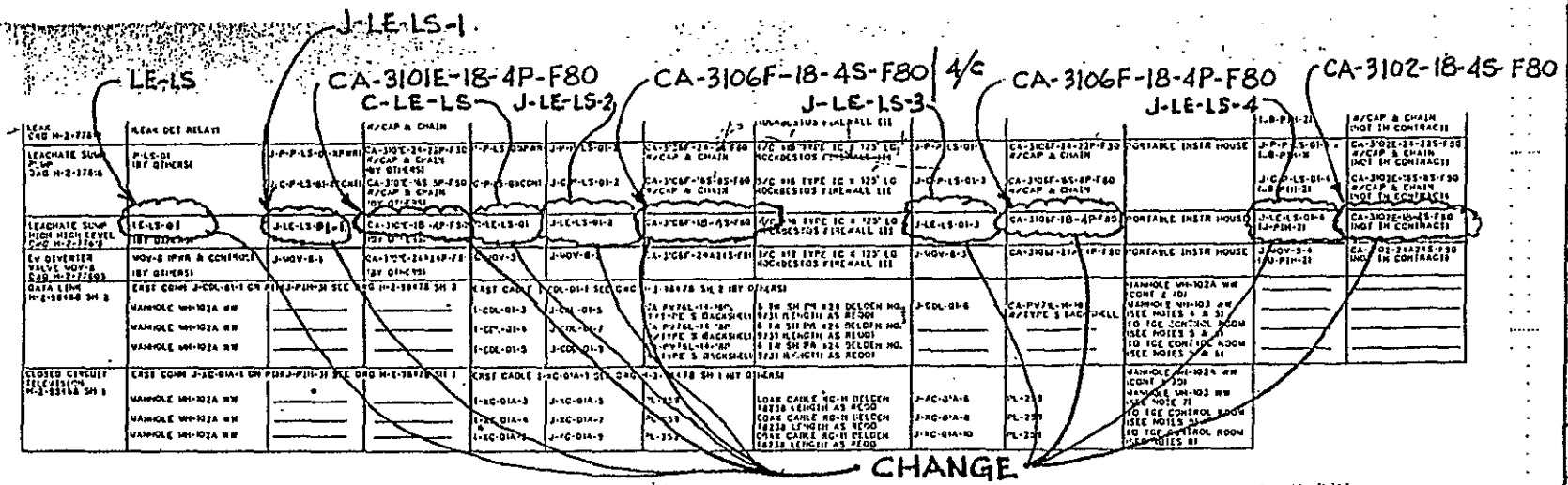

KAISER ENGINEERS
HANFORD

ENGINEERING CHANGE NOTICE SKETCH

Ref. Dwg. H-2-77642 | Sh. 1 | Rev. 0 | Prepared By A.R. SNOWHITE | Checked By | ECN No. B-714-53 | Page 36/49

KEH-0159.00 (01/88)

KAISER ENGINEERS HANFORD	ENGINEERING CHANGE NOTICE SKETCH					
Ref. Dwg. H-2-78500	Sh. 1	Rev. 0	Prepared By A.R. SNOWHITE	Checked By	ECN No. B-714-53	Page 37/49

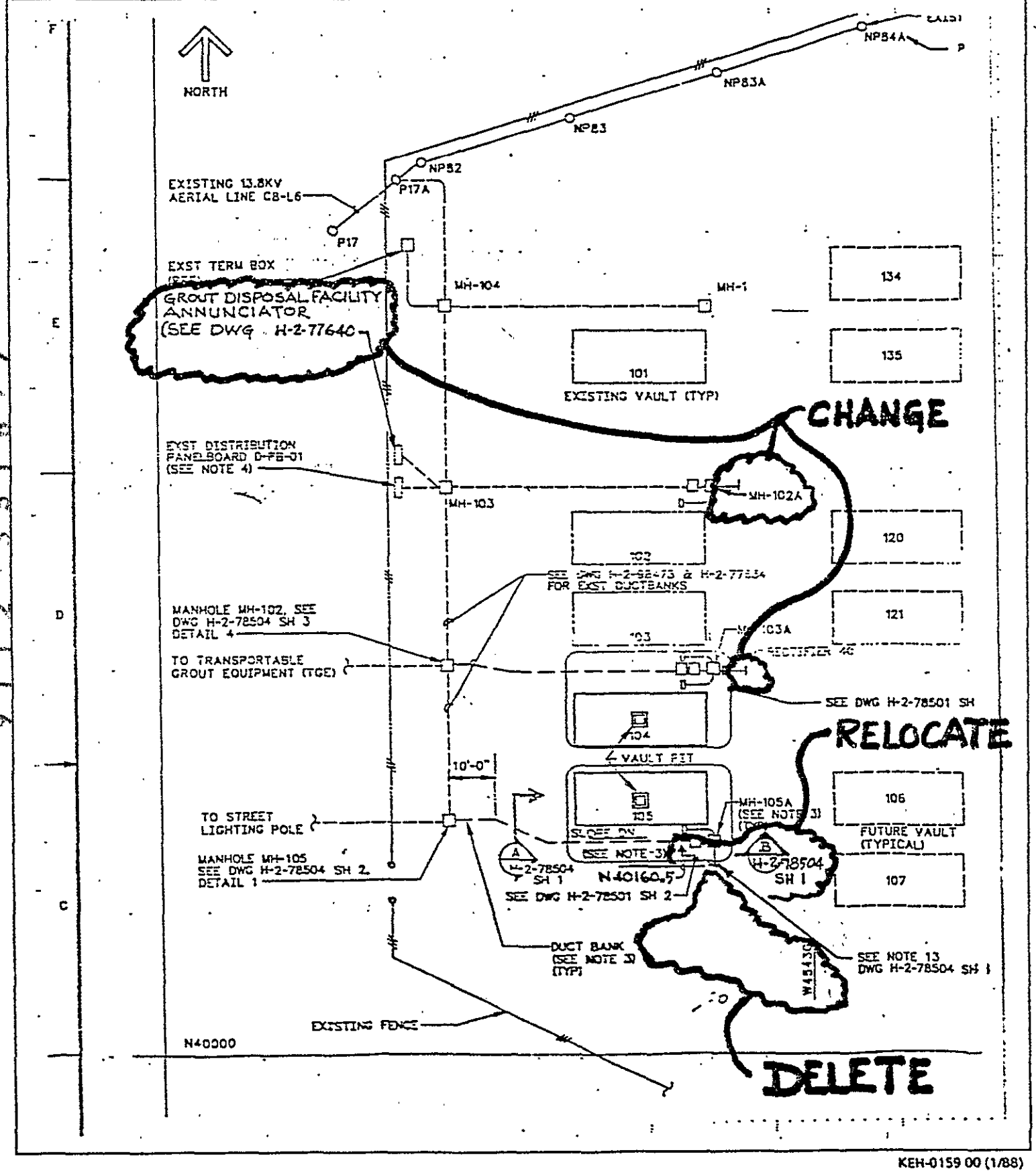

KEH-0159 00 (1/88)

KAISER ENGINEERS HANFORD	ENGINEERING CHANGE NOTICE SKETCH					
Ref. Dwg. H-2-78501	Sh. 1	Rev. 0	Prepared By A.R. SNOWHITE	Checked By	ECN No. B-714-53	Page 38/49

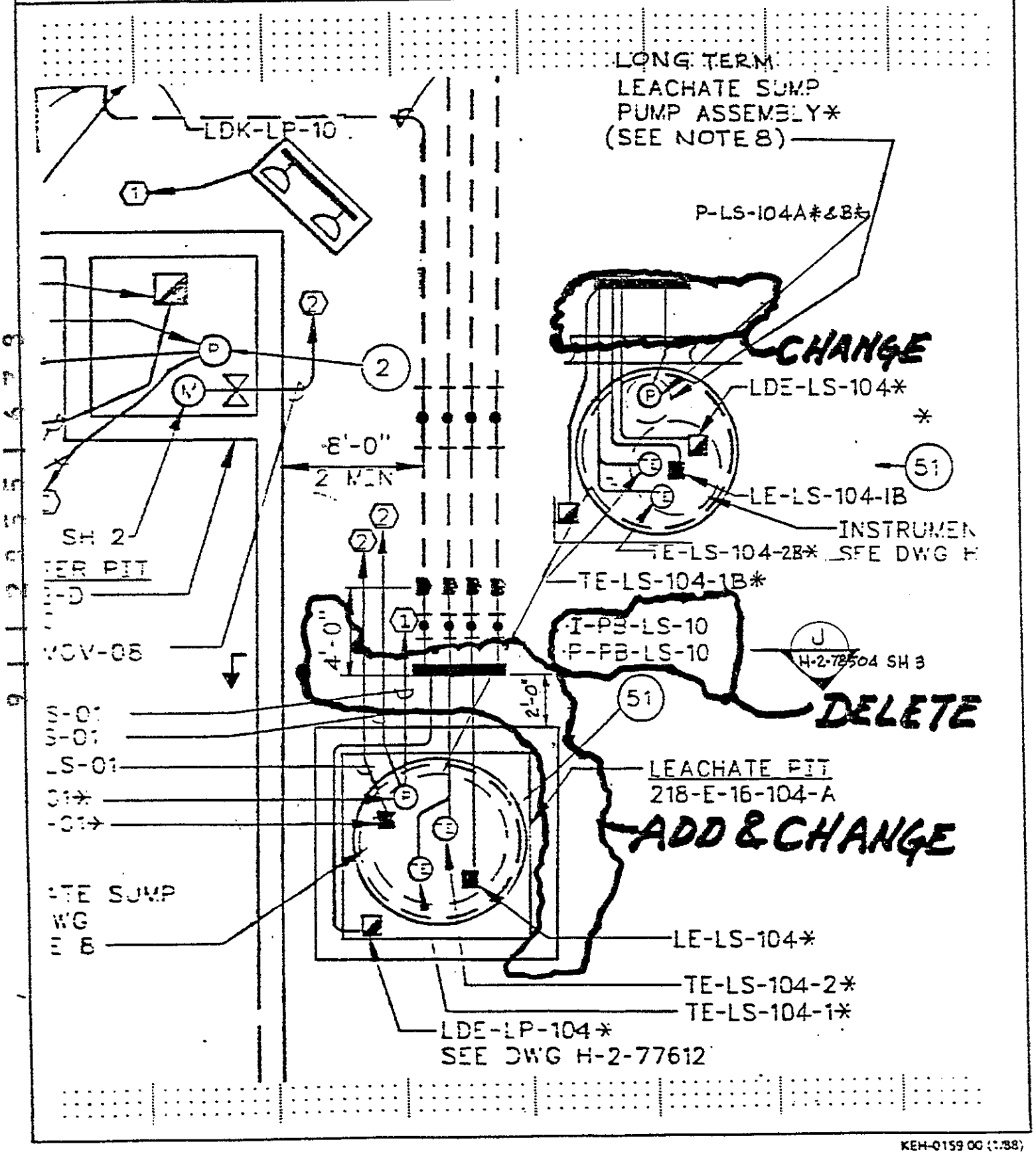

KEH-0159 00 (1/88)

KAISER ENGINEERS HANFORD	ENGINEERING CHANGE NOTICE SKETCH					
Ref. Dwg. H-2-78501	Sh. 1	Rev. 0	Prepared By A.R. SNOWHITE	Checked By	ECN No. B-714-53	Page 39/49

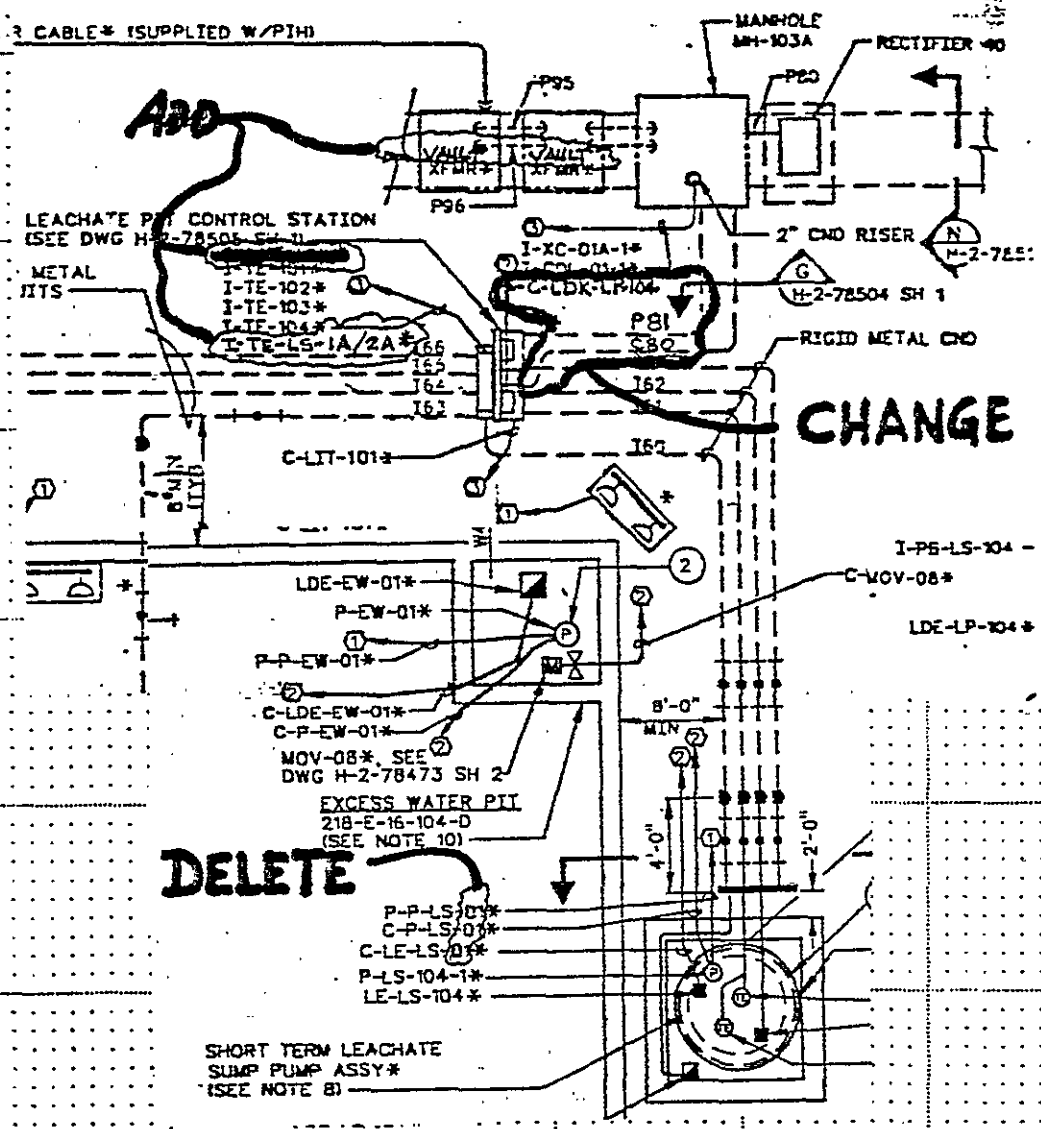

KAISER ENGINEERS HANFORD	ENGINEERING CHANGE NOTICE SKETCH					
Ref. Dwg. H-2-78501	Sh. 2	Rev. 0	Prepared By A.R. SNOWHITE	Checked By	ECN No. B-714-53	Page 40/49

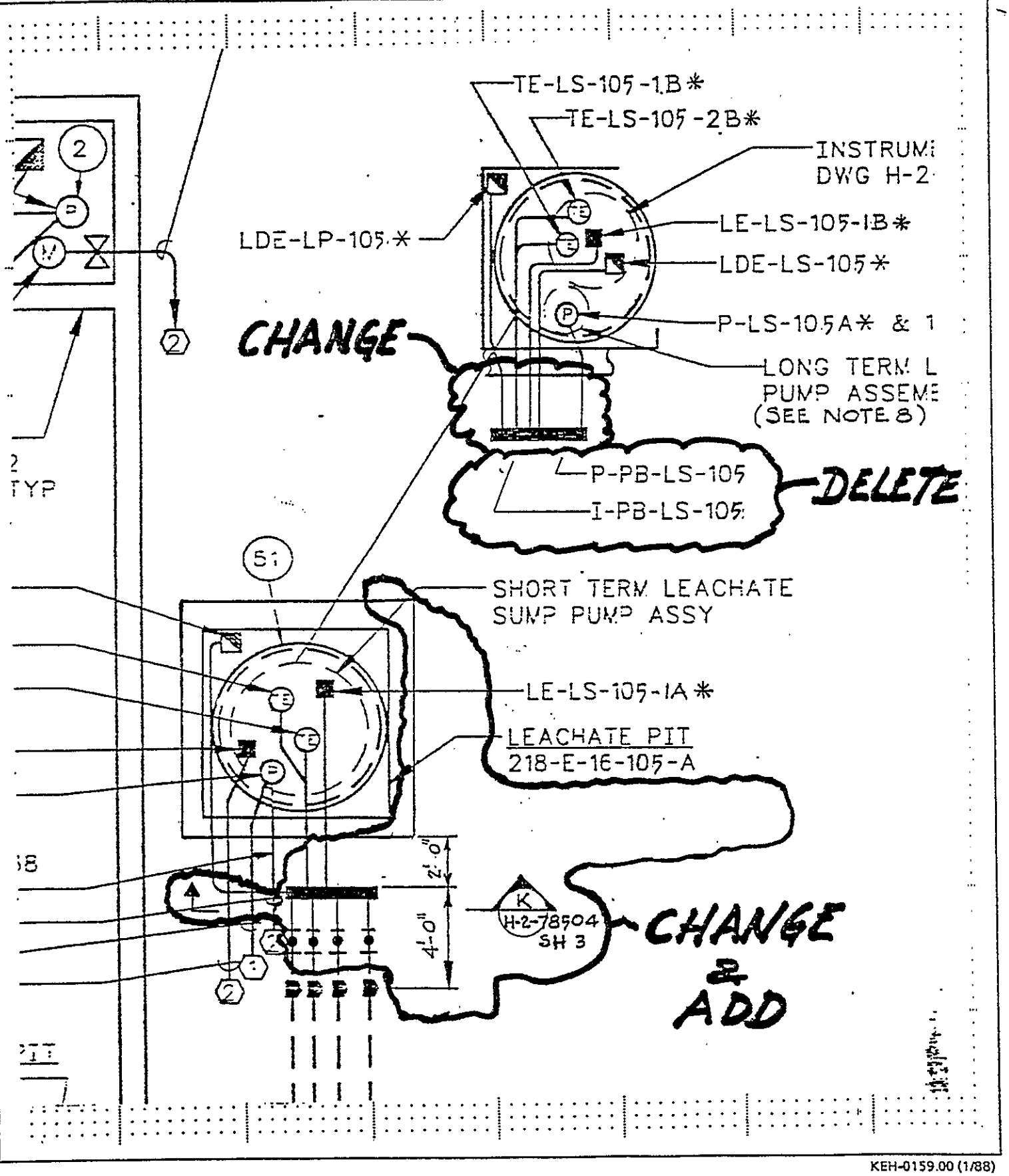

KAISER ENGINEERS HANFORD	ENGINEERING CHANGE NOTICE SKETCH					
Ref. Dwg. H-2-78501	Sh. 2	Rev. 0	Prepared By A.R. SNOWHITE	Checked By [illegible]	ECN No. B-714-53	Page 41/49

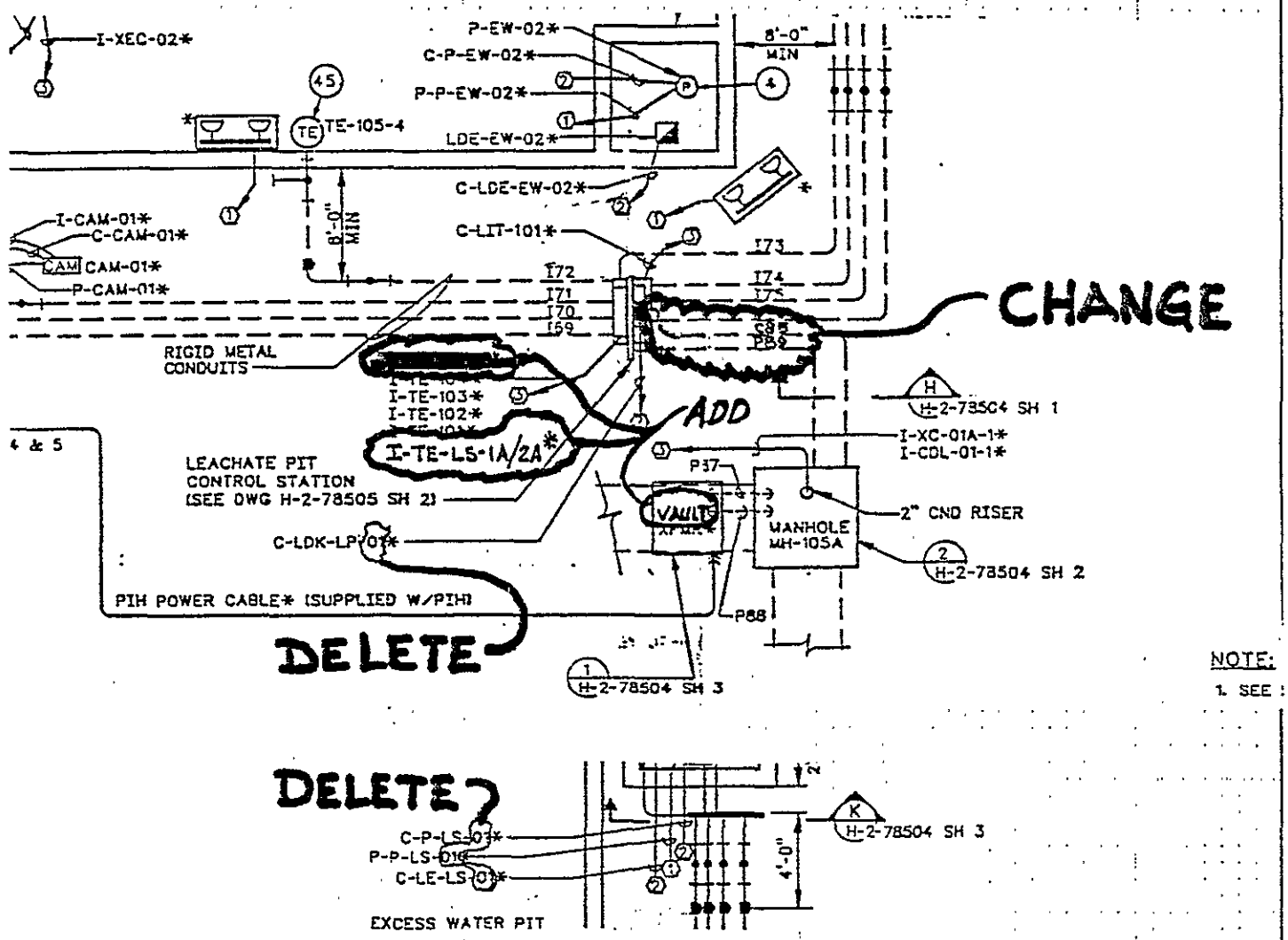

KAISER ENGINEERS HANFORD	ENGINEERING CHANGE NOTICE SKETCH					
Ref. Dwg.	Sh.	Rev.	Prepared By	Checked By	ECN No.	Page
H-2-78502	1	0	TK EHRHARD	[illegible]	B-714-53	42/49
H-2-78502	3	0				

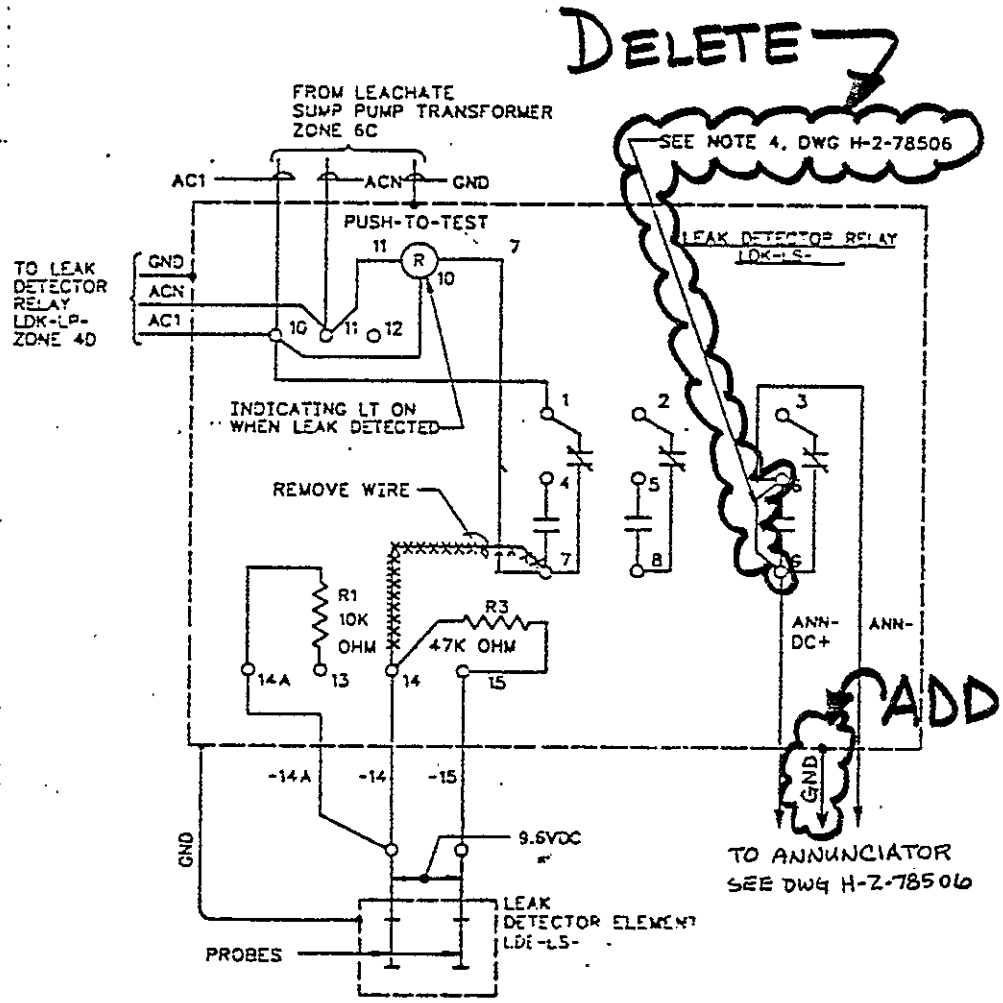

LEACHATE SUMP LEAK DETECTION CONNECTION DIAGRAM
(PREFIX PROBE WIRE NUMBERS WITH LDK-LS-

KAISER ENGINEERS HANFORD	ENGINEERING CHANGE NOTICE SKETCH					
Ref. Dwg. H-2-78502	Sh. 1	Rev. 0	Prepared By A.R. SNOWHITE	Checked By C Dublett	ECN No. B-714-53	Page 43/49
H-2-78502	3	0				

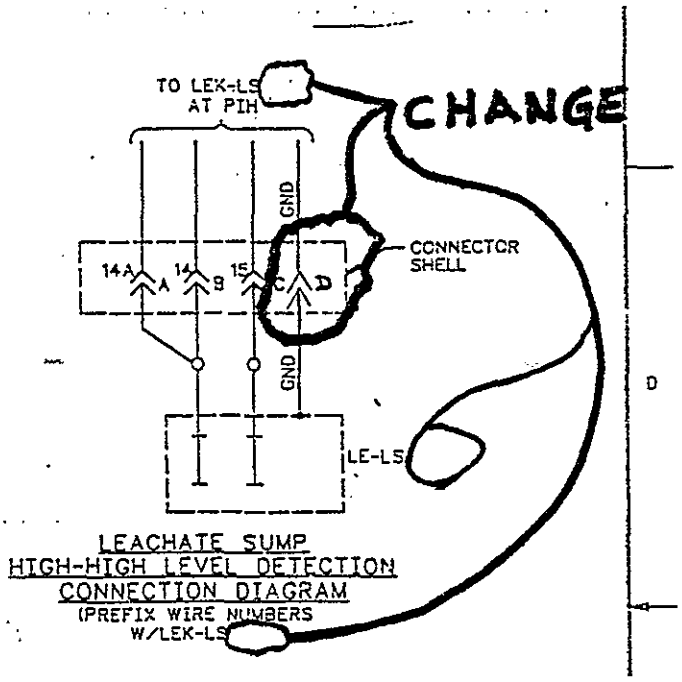

9 1 1 2 0 5 5 1 6 0 4

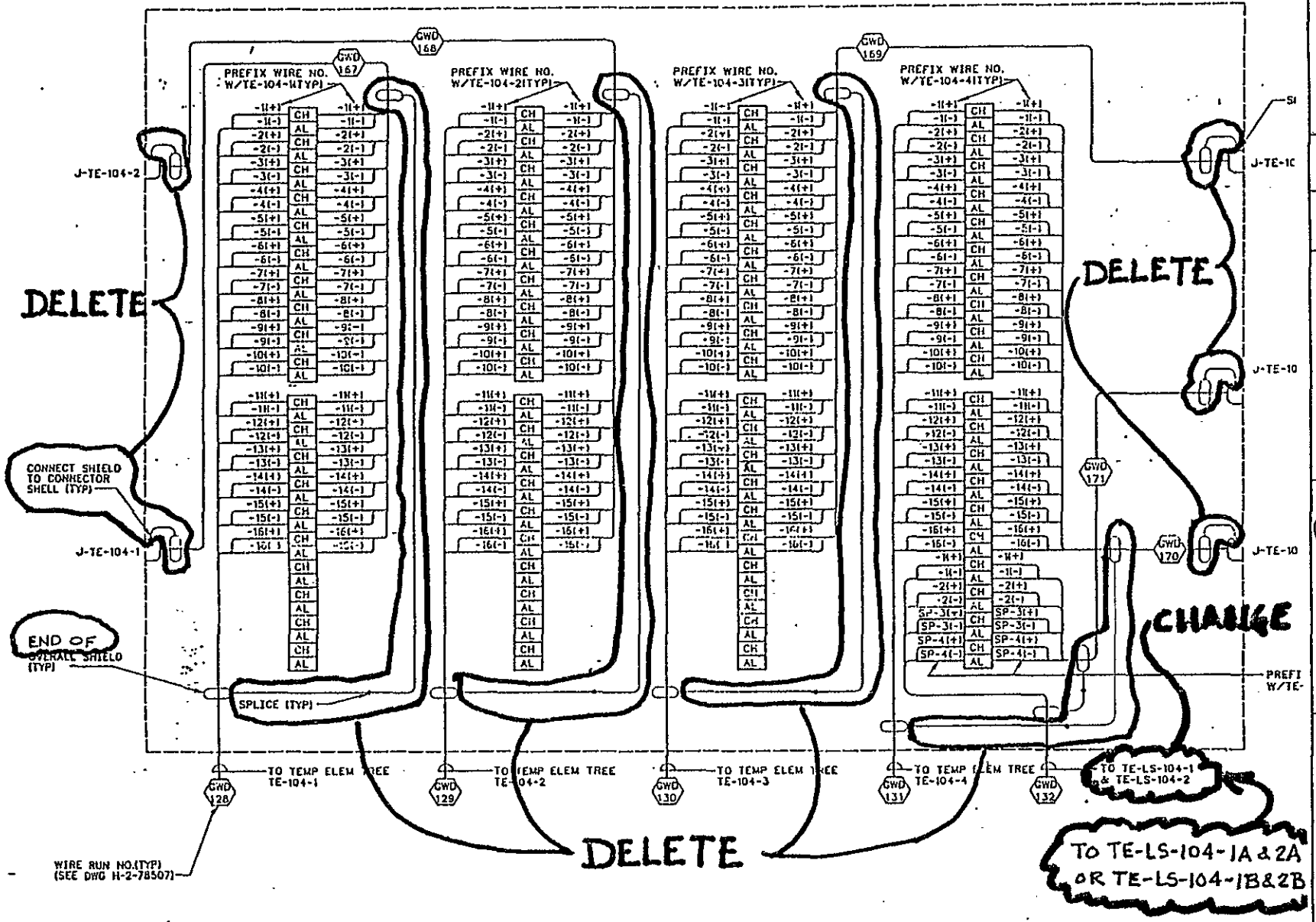

TE TERM BOX TE-TBX-104 CONNECTION DIAGRAM

KAISER ENGINEERS HANFORD

ENGINEERING CHANGE NOTICE SKETCH

Ref. Dwg.	Sh.	Rev.	Prepared By	Checked By	ECN No.	Page
H-2-78502	2	0	A.R. SNOWHITE		B-714-53	44/49

KEH-0159.00 (01/88)

9 1 1 2 0 5 5 1 6 0 5

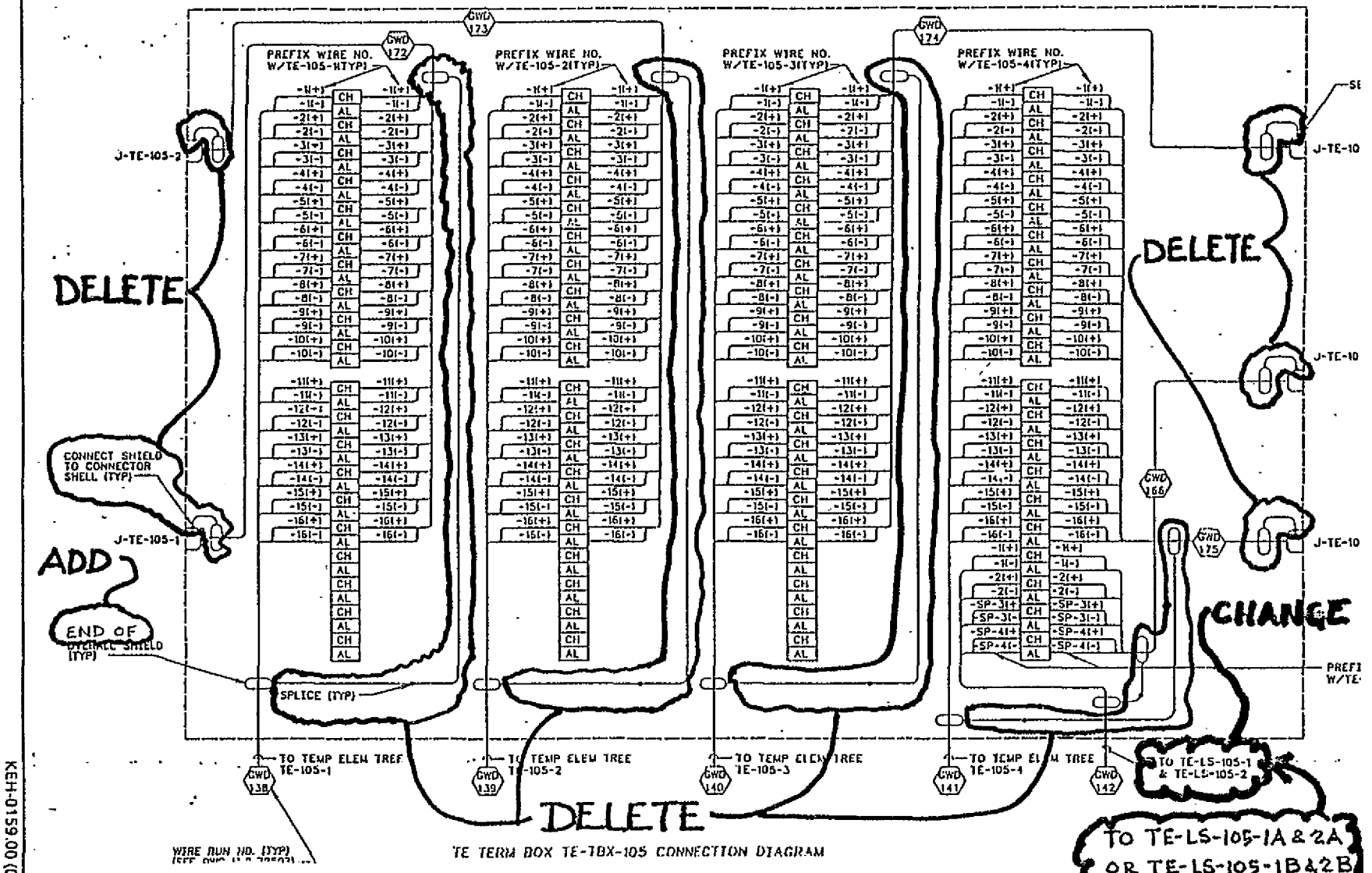

TE TERM BOX TE-TBX-105 CONNECTION DIAGRAM

KAISER ENGINEERS HANFORD

ENGINEERING CHANGE NOTICE SKETCH

Ref. Dwg.	Sh.	Rev.	Prepared By	Checked By	ECN No.	Page
H-2-78502	4	0	A.R. SNOWHITE		B-714-53	45/49

KEH-0159.00 (01/88)

KAISER ENGINEERS HANFORD	ENGINEERING CHANGE NOTICE SKETCH					
Ref. Dwg. H-2-78504	Sh. 2	Rev. 0	Prepared By A.R. SNOWHITE	Checked By C Dublett	ECN No. B-714-53	Page 49/49

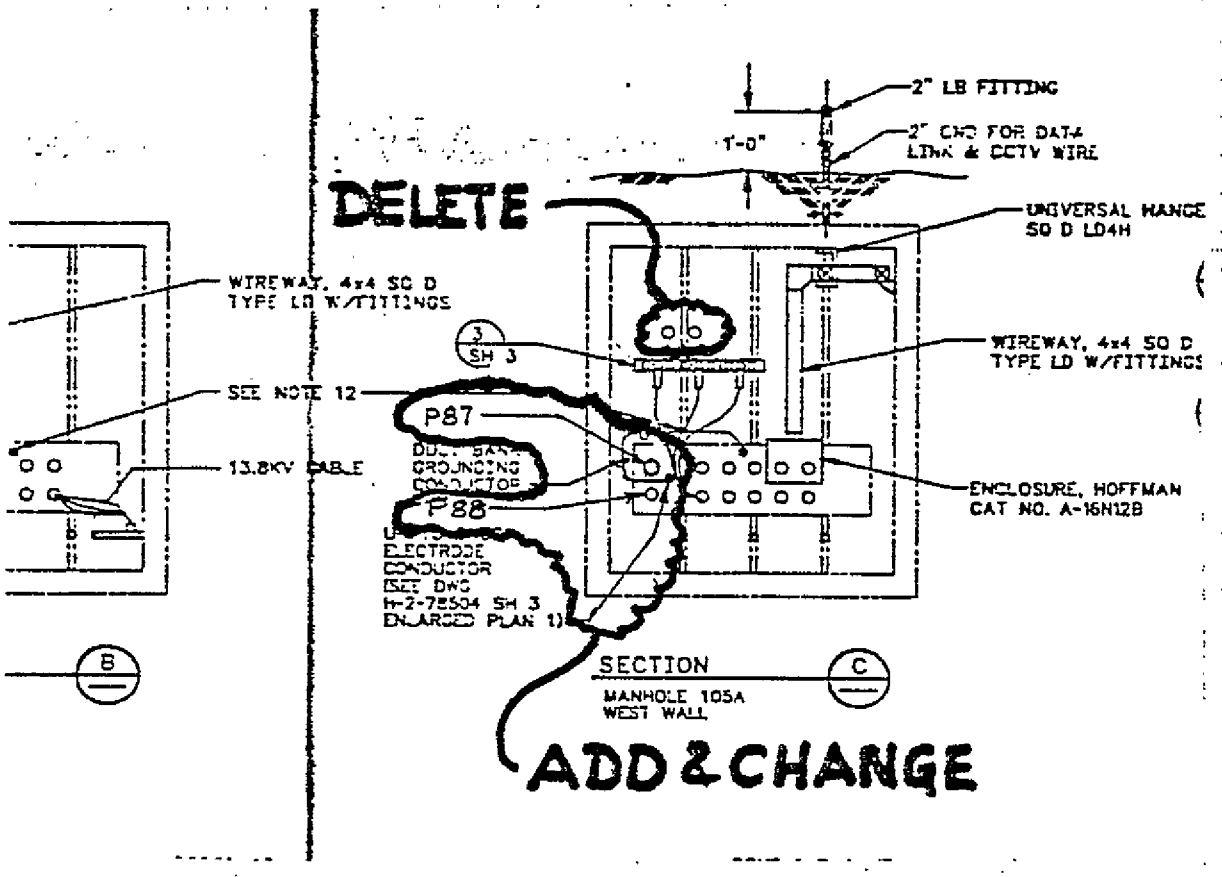

KAISER ENGINEERS HANFORD	ENGINEERING CHANGE NOTICE SKETCH					
Ref. Dwg. H-2-78509	Sh. 1	Rev. 0	Prepared By A.R. SNOWHITE	Checked By	ECN No. B-714-53	Page 47/49

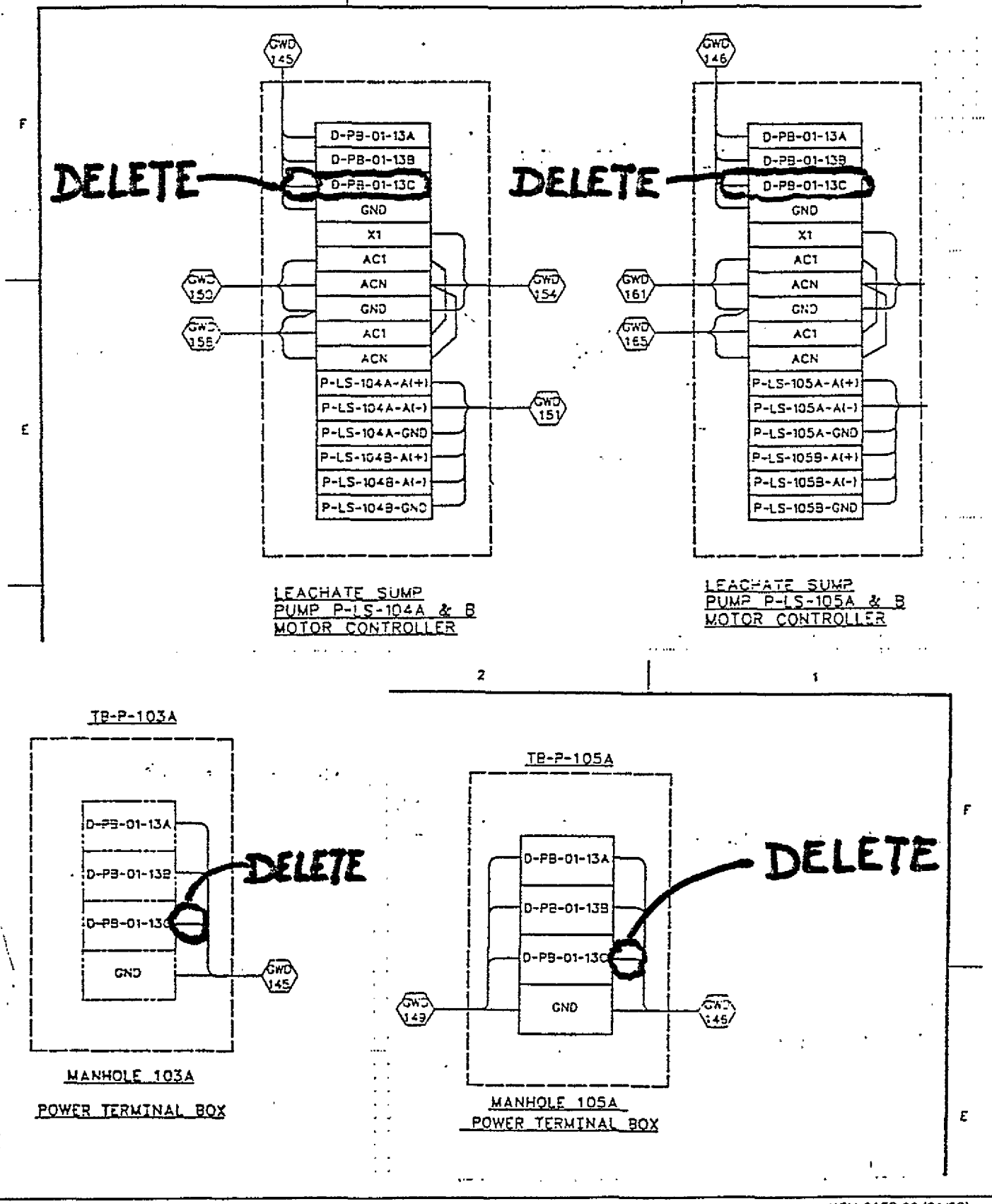

KEH-0159.00 (01/88)

KAISER ENGINEERS HANFORD	ENGINEERING CHANGE NOTICE SKETCH					
Ref. Dwg. H-2-78510	Sh. 1	Rev. 0	Prepared By A.R. SNOWHITE	Checked By C. Dubbert	ECN No. B-714-53	Page 48/49

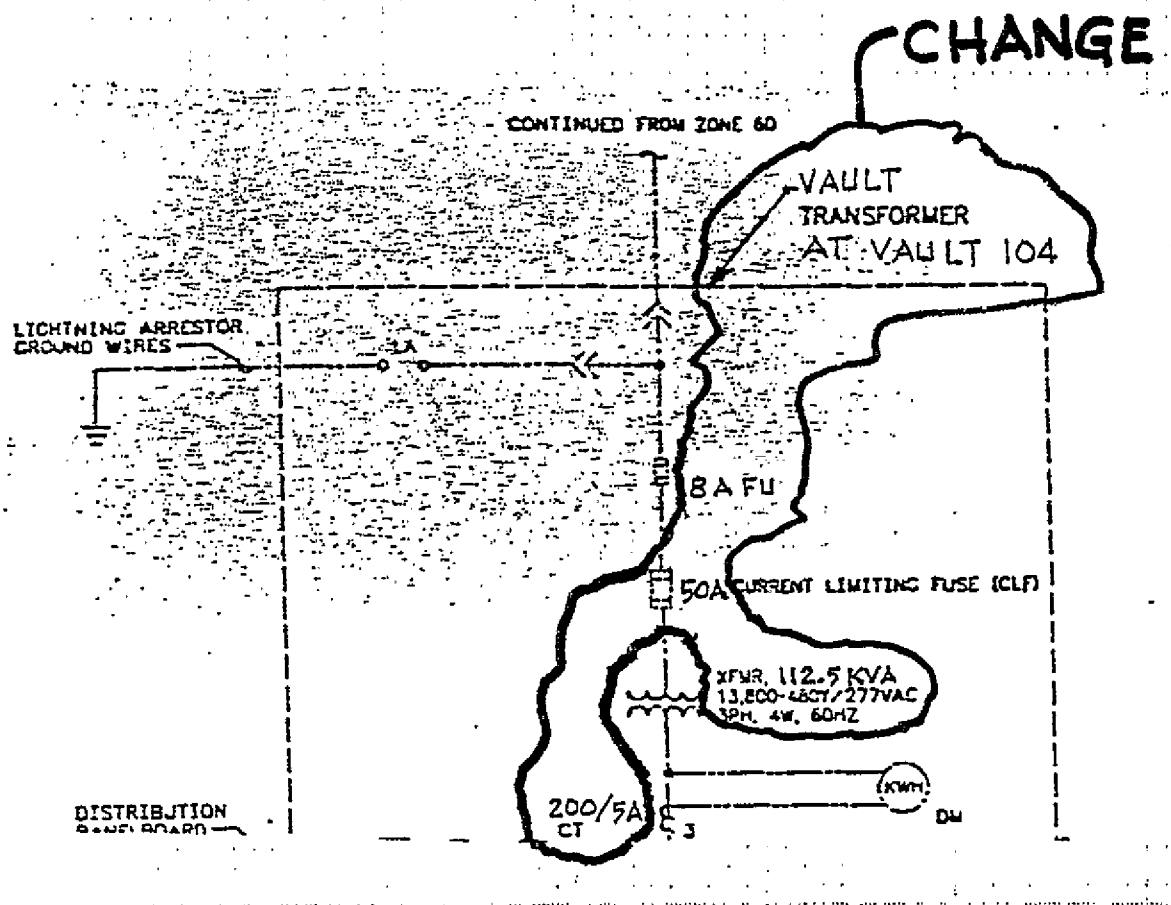

KAISER ENGINEERS HANFORD	ENGINEERING CHANGE NOTICE SKETCH					
Ref. Dwg. H-2-78510	Sh. 1	Rev. 0	Prepared By A.R. SNOWHITE	Checked By	ECN No. B-714-53	Page 49/49

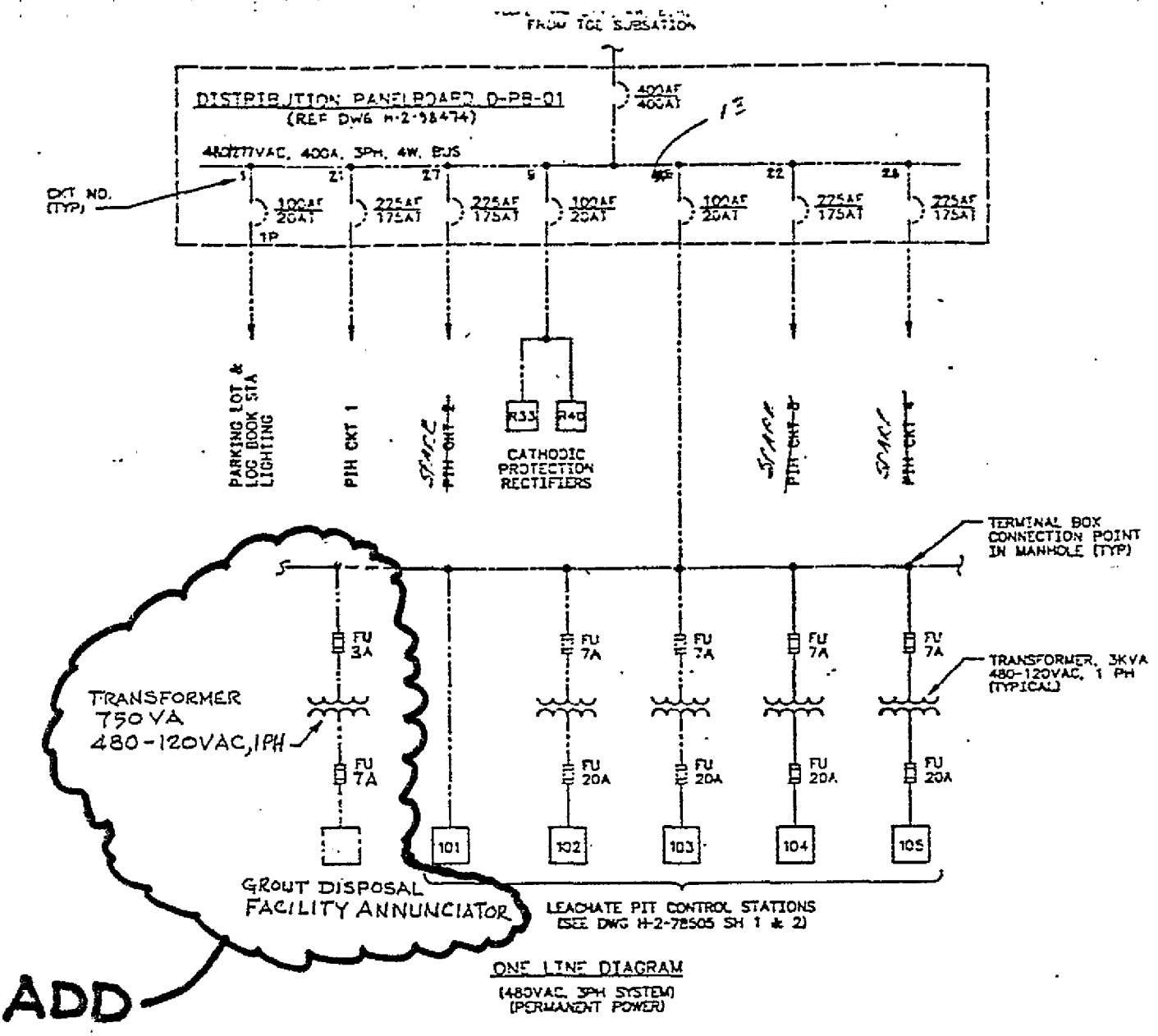

ONE LINE DIAGRAM
(480VAC, 3PH SYSTEM)
(PERMANENT POWER)