START

9513336.1561

0040196 19

9

Mr. John Grantham
State of Washington
Department of Ecology
Nuclear & Mixed Waste Program
P. O. Box 47600
Olympia, WA 98504-7600

FLUOR DANIEL, INC.

Date: October 12, 1993

Reference: Hanford Waste Vitrification Plant
DOE Contract DE-AC06-86RL10838
Fluor Contract 8457

Transmittal No.: WDOE-671

Dear Mr. Grantham:

TRANSMITTAL

We enclosed 1 copy of the items listed below. These are issued per US-DOE request.

[] Approval [] Reference [] Review and Comment [X] DCN-RFC

Response due to Fluor: N/A
Responds to: E350 PACKAGE

NUMBER	REV	DATE	TITLE
DCN - 0100	1	10/12/93	DCN TITLE: THIS DCN-0100 SUPERSEDES "DCN-0096" AND "DCN-~~0100~~ REV.1" 0096 3/15/94 sjw "RELEASED FOR CONSTRUCTION"

Reference: FRP-1245, FUP-679
Distribution:
R. L. Long - DOE-RL, w/0
TWP/AME Corresp Cntrl Cntr MSIN A5-10
(E350 PACKAGE), w/0
P. Felise - WHC-RL (MSIN G6-06), w/1
Environmental Data Management Center
(MSIN H6-08), w/1
D. Duncan - US EPA, Region X, w/0

OCT 1993
RECEIVED
EDMC

Very truly yours,

Rosalie Cadenas for

R.S. Poulter
Project Director

RSP::MJY:jjs

9513336.1562

FLUOR DANIEL

US DEPARTMENT OF ENERGY
HANFORD WASTE VITRIFICATION PLANT

DESIGN CHANGE NOTICE

DCN - 0100 | REV 1 | PAGE 1 OF 18

DCN TITLE: THIS DCN-0100 SUPERSEDES "DCN-0096" & "DCN-0096 REV 1"

DATE INITIATED: 9/8/93

PACKAGE NO.: E350

SECTION 1: DESCRIPTION OF CHANGE

THIS DCN-0100 REV 1 SUPERSEDES "DCN-0096 REV 0" DATED 8/16/93 AND "DCN-0096 REV 1/REV 0" DATED 8/26/93. THIS DCN-0100 REV 1 ALSO REMOVES TBD/HOLDS HWVP-FD-364, HWVP-FD-372, REVISES REINFORCING TO CANISTER STORAGE BUILDING WALLS, OPERATING FLOOR AND INTAKE STRUCTURES AS INDICATED BY PREVIOUSLY SUBMITTED SKETCHES AND INCORPORATES REINFORCING CHANGES NOT PREVIOUSLY SUBMITTED.

REVISE HORIZONTAL REINFORCING BAR AS INDICATED WITH "DCN-0100 REV 1" ON PAGE 14.

FOR LIST OF AFFECTED DOCUMENTS, SEE SECTIONS 6 AND 7.

CAUSE OF CHANGE:

- ☐ Field Change Request
- ☐ Supplier Disposition
- ☐ Deficiency Report
- ☒ Design Development
- ☒ Change Request
- ☐ Other _____

CR-1025
Initiating Document(s)

SECTION 2: EVALUATION

ARE ANY OF THE FOLLOWING AFFECTED?			IF "YES", REVIEW REQUIRED BY:	REVIEWER COMMENTS/SIGNATURE/DATE
WAPA	☒ NO	☐ YES		
QUALITY LEVEL I	☐ NO	☒ YES	D. SAYLOR	No Change D. Saylor 9/28/93
SAFETY CLASS 1 OR 2	☐ NO	☒ YES	D. SAYLOR	No Change D. Saylor 9/28/93
SYSTEMS ANALYSES	☒ NO	☐ YES		
MULTI-DISCIPLINE	☒ NO	☐ YES		

DCN Evaluated by: Systems D. Saylor 9/28/93 ADM [illegible] 9/28/93 Others _____

SECTION 3: APPROVED FOR CONSTRUCTION

Armando Villegas 9/28/93
Originator — Date

[illegible] SEPT 28 '93
Project/Resident Engineer — Date

SECTION 4: CONCURRENCE

Edward Jacobs 9-30-93
Project Management — Date

[illegible] 10/5/93
Systems — Date

M. J. Figueroa 10/1/93
Independent Safety — Date

[illegible] 9/29/93
Quality Assurance — Date

[illegible] 10/6/93
Configuration Management — Date

SECTION 5: RELEASED FOR CONSTRUCTION

PE STAMP REQUIRED? ☐ NO ☒ YES

10/6/93 [illegible] 10/6/93
WHC — Date

[illegible] 10-6-93
UCA — Date

[illegible] 10-7-93
DOE — Date

COMMENTS:

9513336.1563

FLUOR DANIEL

US DEPARTMENT OF ENERGY
HANFORD WASTE VITRIFICATION PLANT

DESIGN CHANGE NOTICE

DCN	REV	DISCIPLINE	PKG. NO.	PAGE
DCN-0100	1	STRUCT	E350	2

PREPARED BY: A. VILLEGAS Date: 9/8/93

DISCIPLINE ENGINEER: R. GRUBER Date: 9/8/93

SECTION 6: CONSTRUCTION DOCUMENTS AFFECTED

DOCUMENT NUMBER	SHT/ PAGE	REV NO	DOCUMENT NAME	INCLD Y/N	DESCRIPTION OF CHANGE
E350-03200	3	1	SECTION 03200 CONCRETE REINFORCEMENT	Y	REVISE REINFORCING MATERIAL SPECIFICATION. SEE PAGE 4.
H-2-119275	1	1	CSB GENERAL NOTES & TYP DETS.	Y	REVISE IV CAST IN PLACE CONC. NOTE # 3. SEE PAGE 5.
H-2-119279	1	1	CSB VAULT OPER FLR REINF PLAN	Y	REMOVE HOLD HWVP-FD-372 SEE PAGE 6.
H-2-119280	1	1	CSB VAULT OPER FLR REINF DETS	Y	REMOVE HOLD HWVP-FD-372 SEE PAGES 7 & 8.
H-2-119280	2	1	CSB VAULT OPER FLR REINF DETS	Y	REMOVE HOLD HWVP-FD-372 SEE PAGES 9 & 10.
H-2-119280	3	1	CSB OPER FLR REINF DETS AND INTAKE STRUCT DETS	Y	REMOVE HOLD HWVP-FD-372 SEE PAGES 11 & 12.
H-2-119281	1	2	CSB VAULT WALL REINF DETS	Y	REMOVE HOLD HWVP-FD-364 SEE PAGES 13 & 14. REVISE REINF. CALL OUT SEE PAGE 14.
H-2-119281	2	0	CSB REINF @ MAT COLUMN, AIRFOILS & MISC DETS	Y	REMOVE HOLD HWVP-FD-364 SEE PAGE 15
H-2-119285	1	2	CSB VAULT REINF CROSS SECT J	Y	REMOVE HOLD HWVP-FD-364, SEE PAGE 16, REVISE LAP SPLICE SEE PAGE 17.
H-2-119286	1	2	CSB VAULT REINF CROSS SECT K	Y	REVISE LAP SPLICE SEE PAGE 18.

9513236.1364

FLUOR DANIEL

US DEPARTMENT OF ENERGY
HANFORD WASTE VITRIFICATION PLANT

DESIGN CHANGE NOTICE

DCN - 0100	REV 1	DISCIPLINE STRUCT	PKG. NO. E350	PAGE 3

PREPARED BY: A. VILLEGAS Date: 9/8/93

DISCIPLINE ENGINEER: R. GRUBER Date: 9/8/93

SECTION 6: CONSTRUCTION DOCUMENTS AFFECTED

DOCUMENT NUMBER	SHT/ PAGE	REV NO	DOCUMENT NAME	INCLD Y/N	DESCRIPTION OF CHANGE

SEE PAGE 2

SECTION 7: NON-CONSTRUCTION DOCUMENTS AFFECTED

This section references affected items such as P&IDs or calculations/analyses, but they are generally not included in DCN package.

DOCUMENT NUMBER	SHT/ PAGE	REV NO	DOCUMENT NAME	DESCRIPTION OF CHANGE

N/A

2.1.1.1 Reinforcing Steel: ASTM A615, Grade 60; deformed billet steel bars, plain finish. Actual Yield Strength shall not exceed 78,000 psi and the actual ultimate tensile strength shall not exceed the actual tensile yield strength by more than 25 percent of the actual tensile yeild strength.

DCN-0100
REV 1

FLUOR DANIEL	U.S. DEPARTMENT OF ENERGY HANFORD WASTE VITRIFICATION PLANT	DESIGN CHANGE NOTICE
DESCRIPTION OF CHANGE: REVISE REINFORCING MATERIAL SPECIFICATION		BASE DOC. NO. E350-03200 SHT/PG. 3 REV. 1 CR NO. CR-HWVP-1025 DISCIPLINE: STRUCTURAL/DCN0100E
PREPARED BY: Armando Villeyas	DATE: 9/28/93	DCN - 0100 REV. 1 PAGE 4
DISCIPLINE ENGINEER: Robert D. Drucker	DATE: 9-28-93	

ACAD REM 09/28/93

9513356.1566

IV. CAST-IN-PLACE CONCRETE:

1. IMMEDIATELY PRIOR TO PLACING THE OPTIONAL MUD MAT OR FORMING AND REINFORCING, THE SUB-GRADE SHALL BE INSPECTED AND APPROVED BY THE BUYER. SUBGRADE SHALL CONFORM TO THE REQUIREMENTS OF SPECIFICATION B-595-C-B200, SECTION 02220.
2. ALL PIPING, ELECTRICAL, CONTROL SYSTEMS, AND OTHER ITEMS EMBEDDED IN OR UNDER THE CONCRETE SHALL BE IN PLACE PRIOR TO PLACING CONCRETE.
3. EXCEPT AS NOTED ON THE DRAWINGS, USE OF MECHANICAL SPLICES SHALL BE AS REQUIRED TO SUPPORT THE SELLERS WORK PLAN AND PLACEMENT SCHEDULE. LOCATIONS AND DETAILS SHALL BE SUBMITTED FOR THE BUYERS APPROVAL. MECHANICAL COUPLERS SHALL BE STAGGERED A MINIMUM OF 36". NO MORE THAN 50% OF THE BARS SHALL BE SPLICED IN THE SAME LOCATION. DCN-0100 REV 1
4. SPLICE LENGTHS SHALL BE AS INDICATED ON THE DESIGN DRAWINGS.
5. UNLESS SPECIFIED OTHERWISE ALL HOOKS SHALL BE STANDARD HOOKS AS DETAILED ON DRAWING H-2-119275, SHEET 4.
6. GROUND ONE ANCHOR BOLT FOR EACH STRUCTURAL STEEL BASE PLATE PER DETAIL DRAWING H-2-119275 SH 3. FOR ELECTRICAL GROUNDING DETAILS SEE DRAWING H-2-122732 SH 1.

FLUOR DANIEL	U.S. DEPARTMENT OF ENERGY HANFORD WASTE VITRIFICATION PLANT	DESIGN CHANGE NOTICE
DESCRIPTION OF CHANGE: REVISE CAST-IN-PLACE CONCRETE NOTE 3.		BASE DOC. NO. H-2-119275 SHT/PG. 1 REV. 1 CR NO. CR-HWVP-1025 DISCIPLINE: STRUCTURAL/TMP275A1
PREPARED BY: Armando Villegas	DATE: 9/28/93	DCN - 0100 REV. 1 PAGE 5
DISCIPLINE ENGINEER: Kale O. Anderson	DATE: 9/28/93	

ACAD REM 09/27/93

9513336.1567

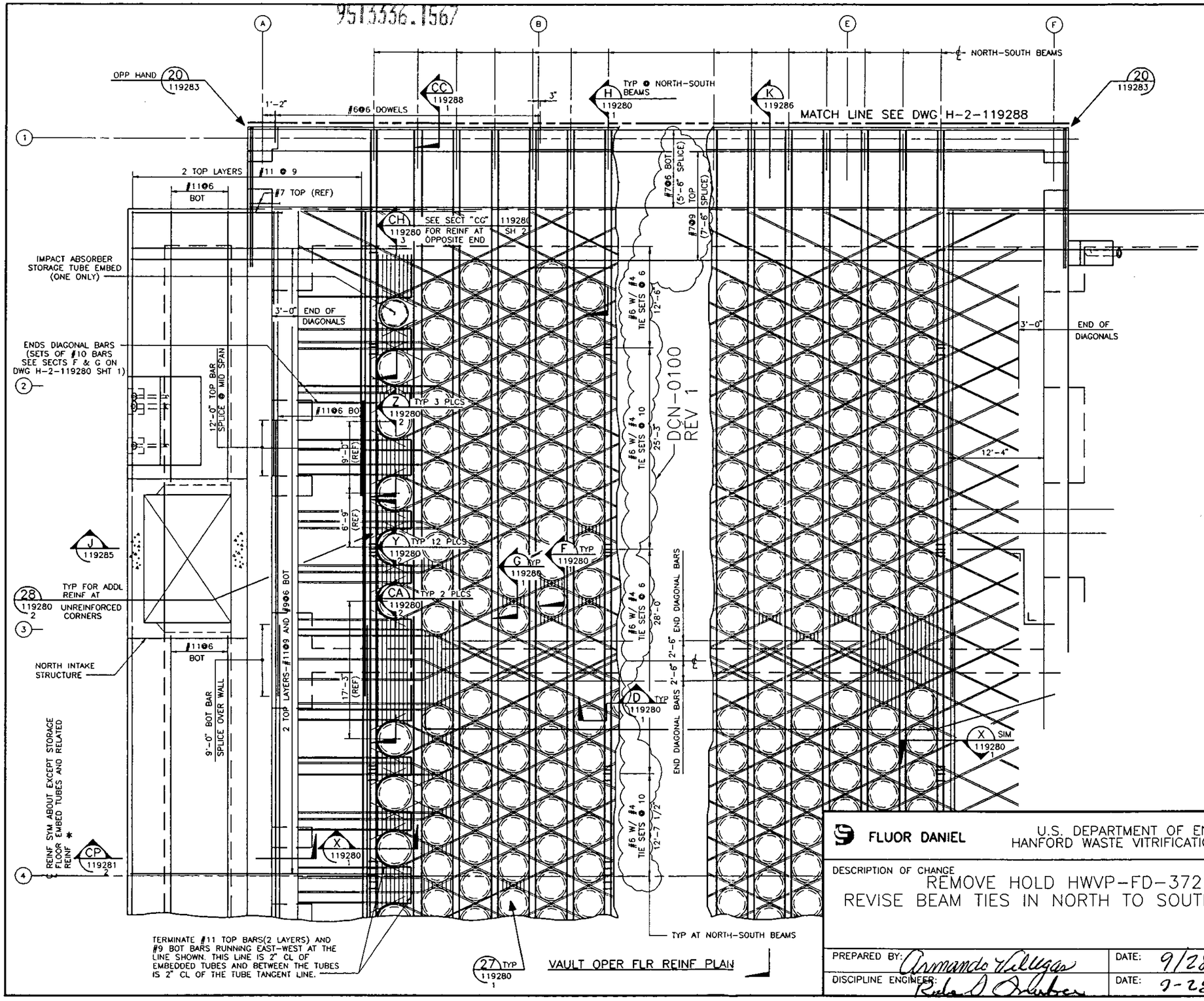

* NOTE:
REINFORCING SHOWN FOR NORTH HALF IS SIMILAR FOR SOUTH HALF.
SEE DWG H-2-119276 FOR SOUTH HALF CONFIGURATION DIFFERENCES.

FLUOR DANIEL	U.S. DEPARTMENT OF ENERGY HANFORD WASTE VITRIFICATION PLANT	DESIGN CHANGE NOTICE
DESCRIPTION OF CHANGE REMOVE HOLD HWVP-FD-372. REVISE BEAM TIES IN NORTH TO SOUTH BEAMS.		BASE DOC. NO. H-2-119279 SHT/PG. 1 REV. 1 CR NO. CR-HWVP-1025 DISCIPLINE: STRUCTURAL/DCN0096M
PREPARED BY: Armando Villegas	DATE: 9/28/93	DCN - 0100 REV. 1 PAGE 6
DISCIPLINE ENGINEER: Richard Schuber	DATE: 9-28-93	

ACAD REM 09/27/93

9513336.1568

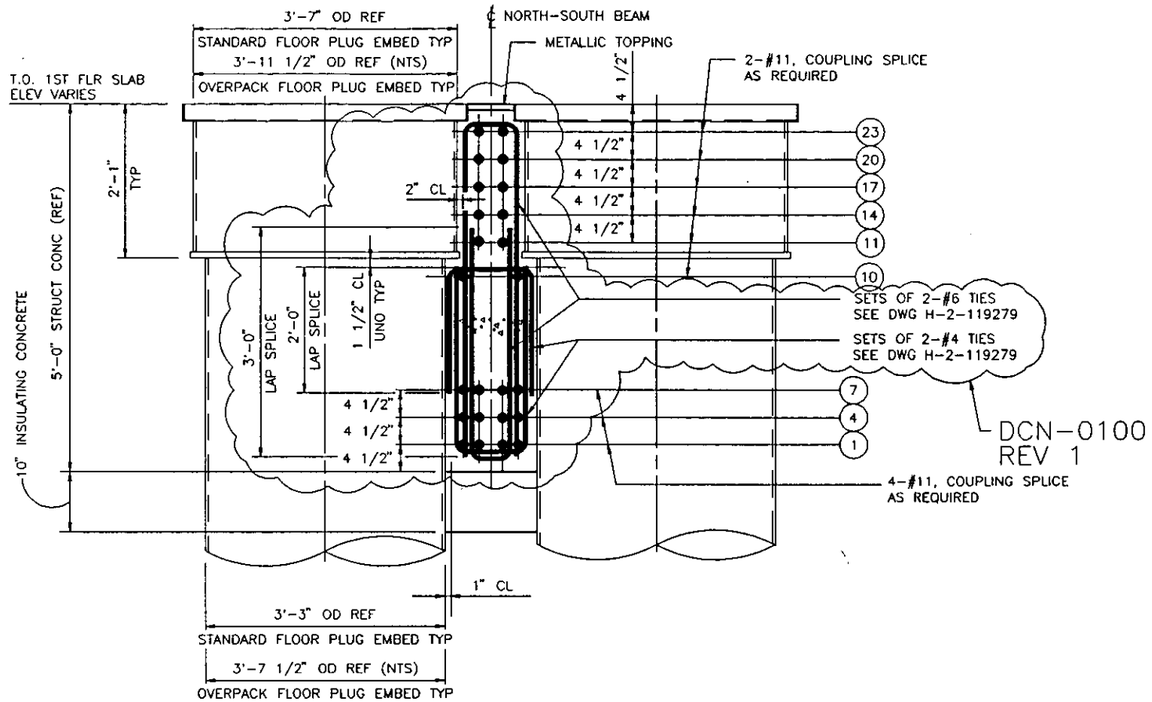

SECTION D 119279

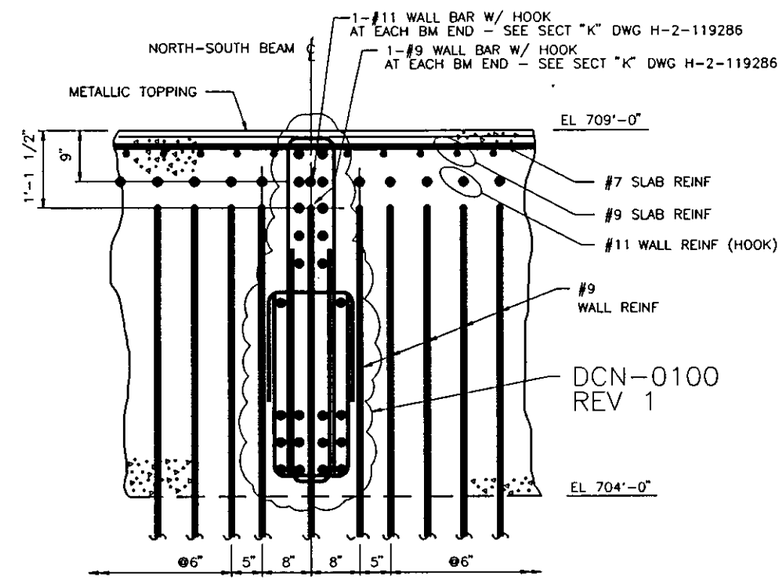

SECTION E 119286

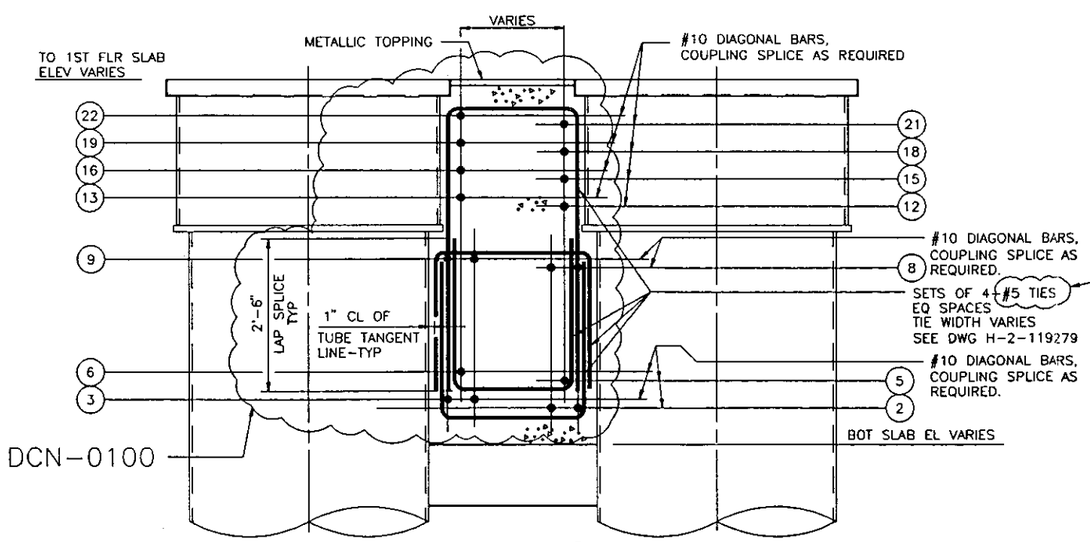

SECTION F 119279

FLUOR DANIEL — U.S. DEPARTMENT OF ENERGY, HANFORD WASTE VITRIFICATION PLANT		DESIGN CHANGE NOTICE
DESCRIPTION OF CHANGE: REMOVE HOLD HWVP-FD-372. REVISE REINFORCING TIES.		BASE DOC. NO. H-2-119280; SHT/PG. 1; REV. 1; CR NO. CR-HWVP-1025; DISCIPLINE: STRUCTURAL/DCN0096N
PREPARED BY: Armando Villegas	DATE: 9/28/93	DCN - 0100 — REV. 1 — PAGE 7
DISCIPLINE ENGINEER: Robert J. Amber	DATE: 9-28-93	

ACAD REM 09/27/93

9513336.1569

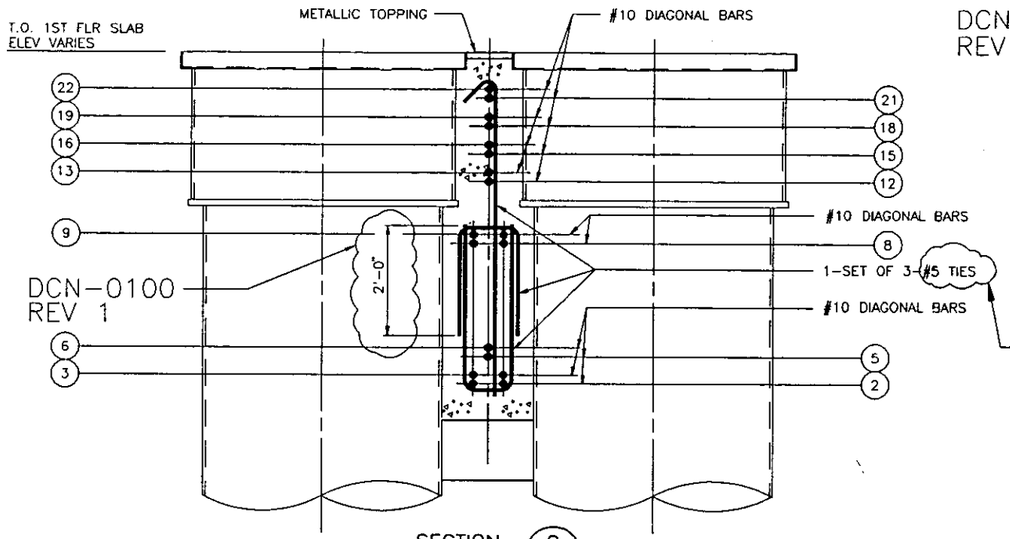

SECTION G
119279

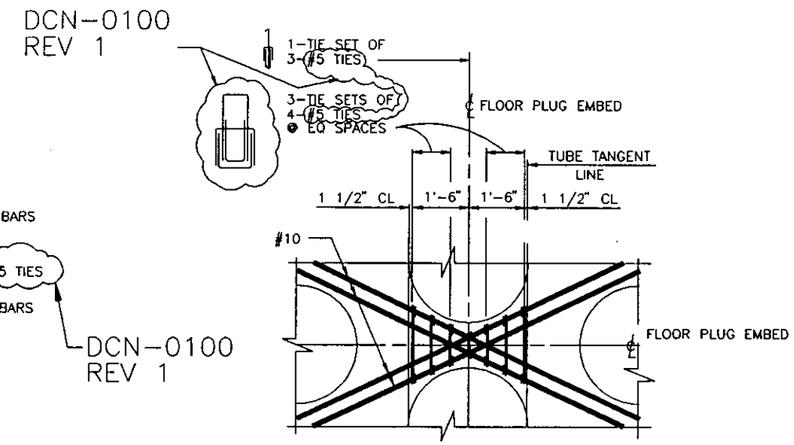

DETAIL SHOWN AT PLACEMENT LAYERS (8) AND (9)
NORTH-SOUTH BEAMS OMITTED FOR CLARITY

DETAIL 27
119279

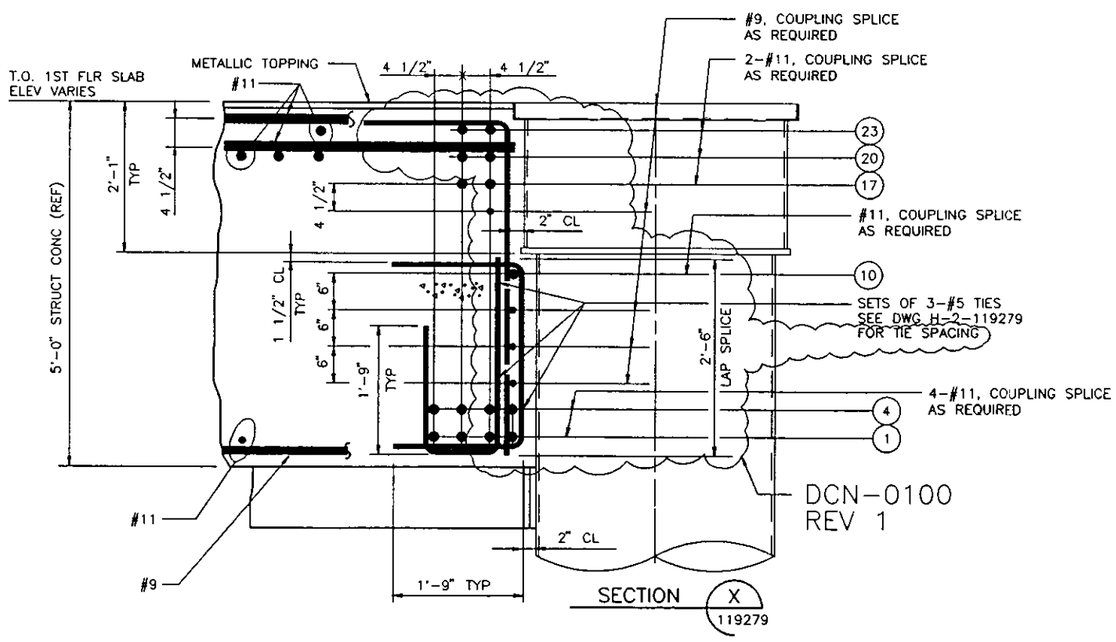

SECTION X
119279

FLUOR DANIEL — U.S. DEPARTMENT OF ENERGY, HANFORD WASTE VITRIFICATION PLANT		DESIGN CHANGE NOTICE
DESCRIPTION OF CHANGE: REMOVE HOLD HWVP-FD-372. REVISE REINFORCING TIES.		BASE DOC. NO. H-2-119280; SHT/PG. 1; REV. 1; CR NO. CR-HWVP-1025; DISCIPLINE: STRUCTURAL/DCN00960
PREPARED BY: Armando Villegas	DATE: 9/28/93	DCN - 0100
DISCIPLINE ENGINEER: Rob Dreuber	DATE: 9-28-93	REV. 1; PAGE 8

ACAD REM 09/28/93

9515556.1570

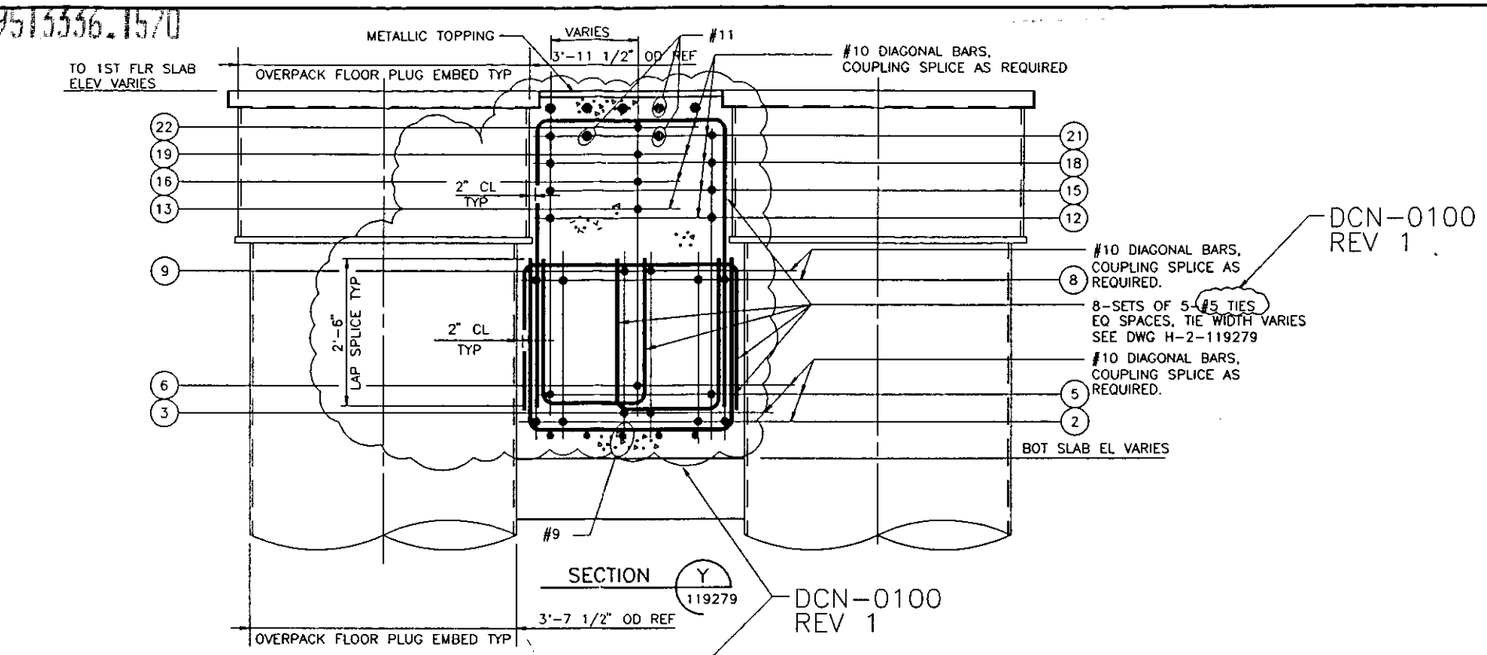

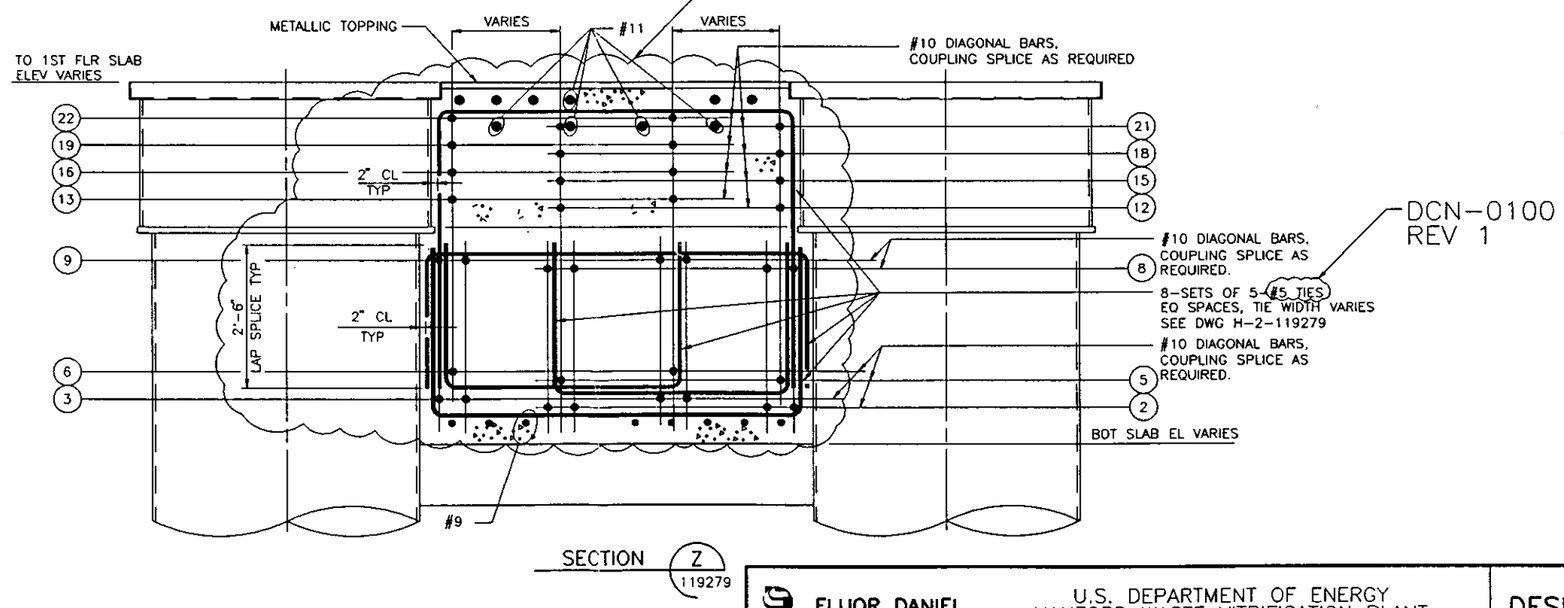

FLUOR DANIEL	U.S. DEPARTMENT OF ENERGY HANFORD WASTE VITRIFICATION PLANT	DESIGN CHANGE NOTICE
DESCRIPTION OF CHANGE REMOVE HOLD HWVP-FD-372. REVISE REINFORCING TIES.		BASE DOC. NO. H-2-119280 SHT/PG. 2 REV. 1 CR NO. CR-HWVP-1025 DISCIPLINE: STRUCTURAL/DCN0096P
PREPARED BY: Armando Villegas	DATE: 9/28/93	DCN - 0100 / REV. 1 / PAGE 9
DISCIPLINE ENGINEER: Robert J. Jaubert	DATE: 9-28-93	

ACAD REM 09/27/93

9513336.1571

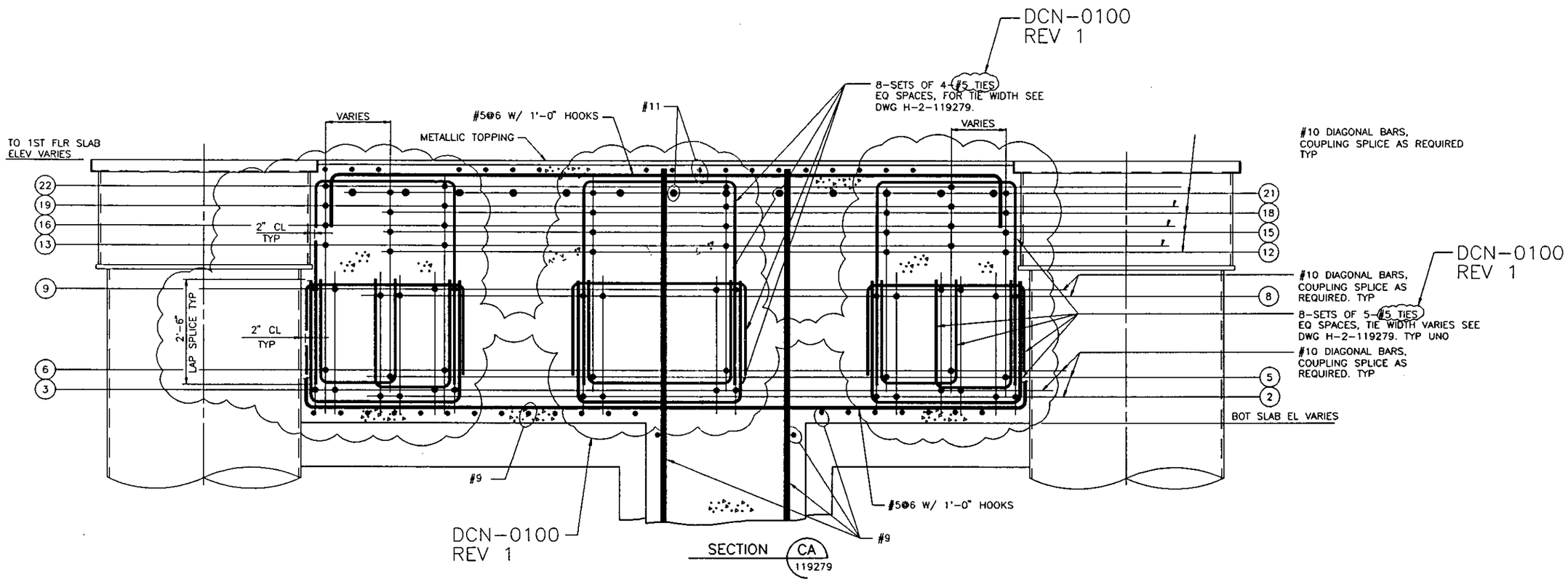

FLUOR DANIEL	U.S. DEPARTMENT OF ENERGY HANFORD WASTE VITRIFICATION PLANT	DESIGN CHANGE NOTICE
DESCRIPTION OF CHANGE REMOVE HOLD HWVP-FD-372. REVISE REINFORCING TIES.		BASE DOC. NO. H-2-119280 SHT/PG. 2 REV. 1 CR NO. CR-HWVP-1025 DISCIPLINE: STRUCTURAL/DCN0096Q
PREPARED BY: Armando Villegas	DATE: 9/28/93	DCN - 0100 / REV. 1 / PAGE 10
DISCIPLINE ENGINEER: Robert J. Gruber	DATE: 9-28-93	

ACAD

REM
09/27/93

9513556.1572

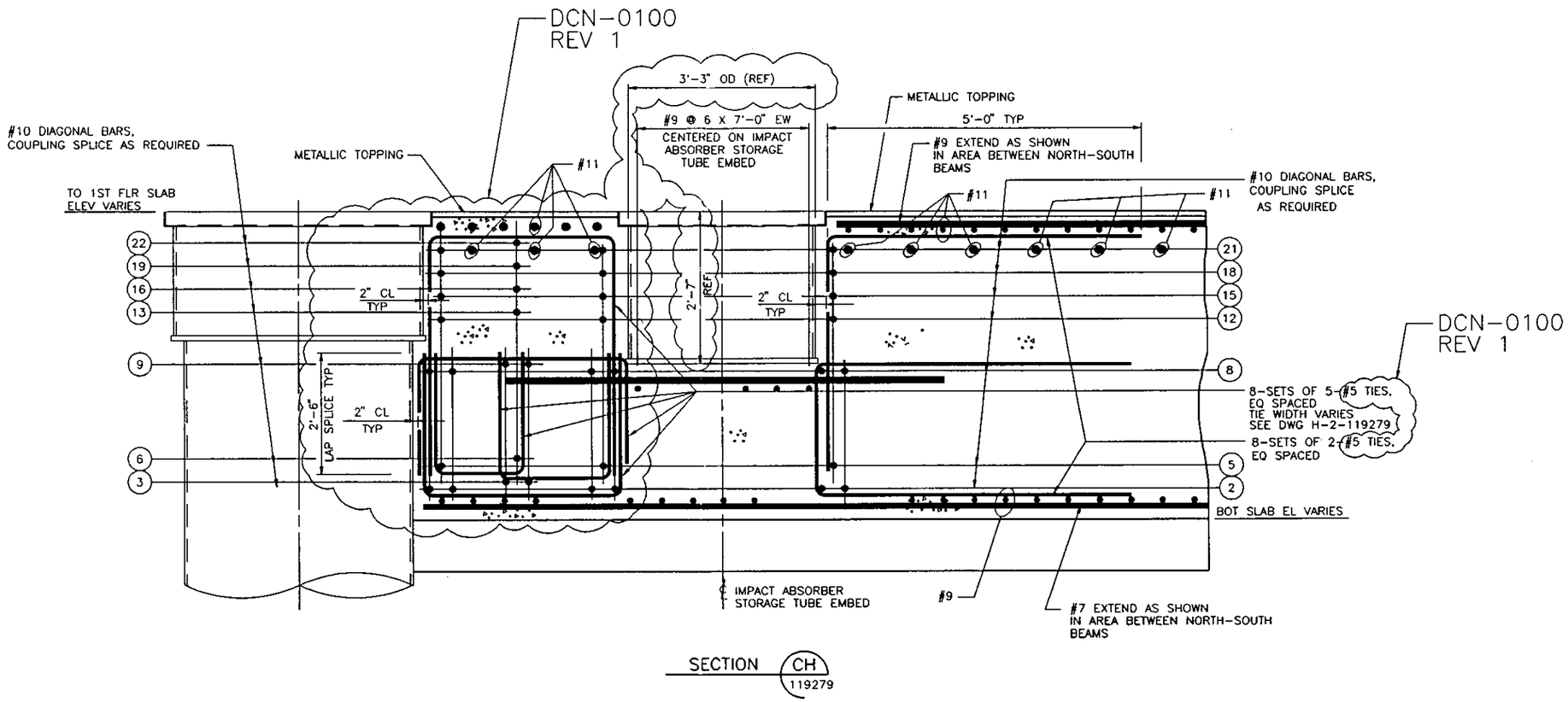

FLUOR DANIEL	U.S. DEPARTMENT OF ENERGY HANFORD WASTE VITRIFICATION PLANT	DESIGN CHANGE NOTICE
DESCRIPTION OF CHANGE REMOVE HOLD HWVP-FD-372. REVISE REINFORCING TIES. REVISE IMPACT ABSORBER STORAGE TUBE EMBED DIMENSIONS.		BASE DOC. NO. H-2-119280 SHT/PG. 3 REV. 1 CR NO. CR-HWVP-1025 DISCIPLINE: STRUCTURAL/DCN0096R
PREPARED BY: Armando Villegas	DATE: 9/28/93	DCN - 0100 REV. 1 PAGE 11
DISCIPLINE ENGINEER: Robert J. Lindberg	DATE: 9-28-93	

ACAD REM 09/27/93

9513336.1573

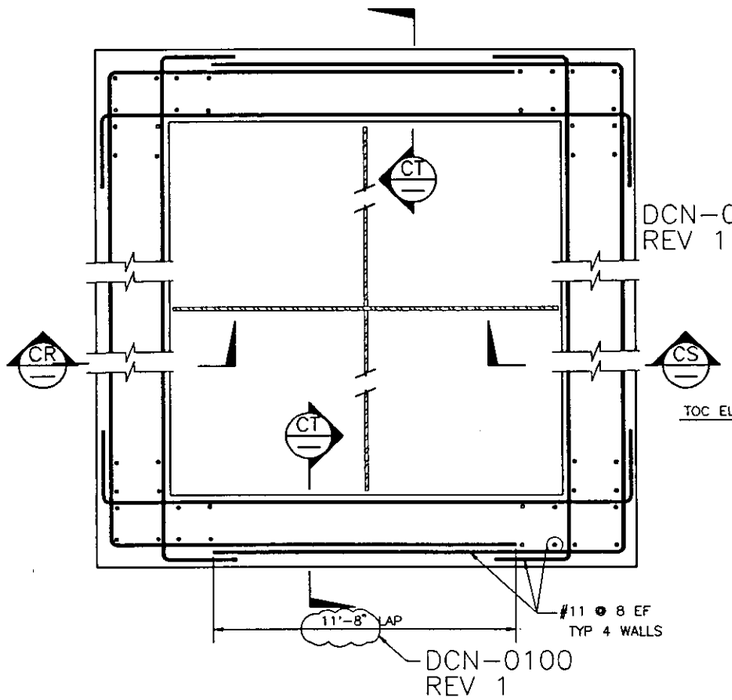

TYP SECTION THRU INTAKE STRUCTURES

DETAIL 98 / 119276

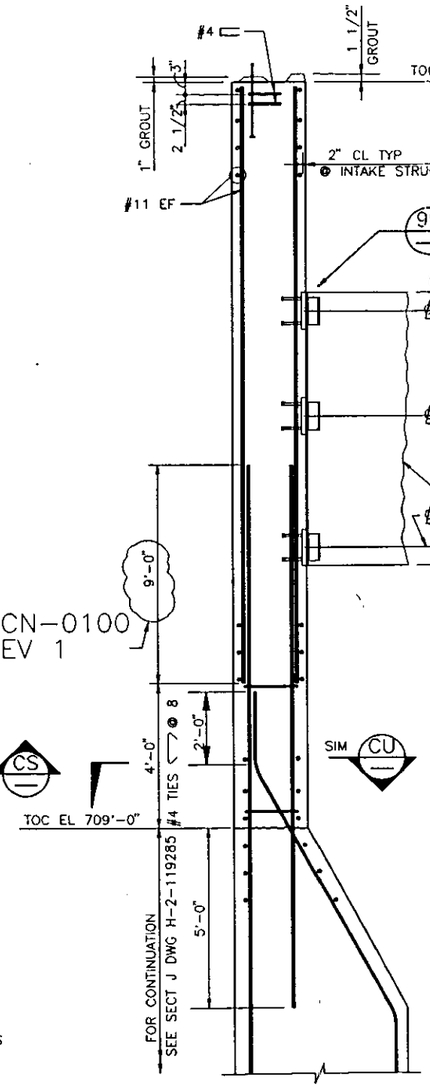

SECTION CR
NTS

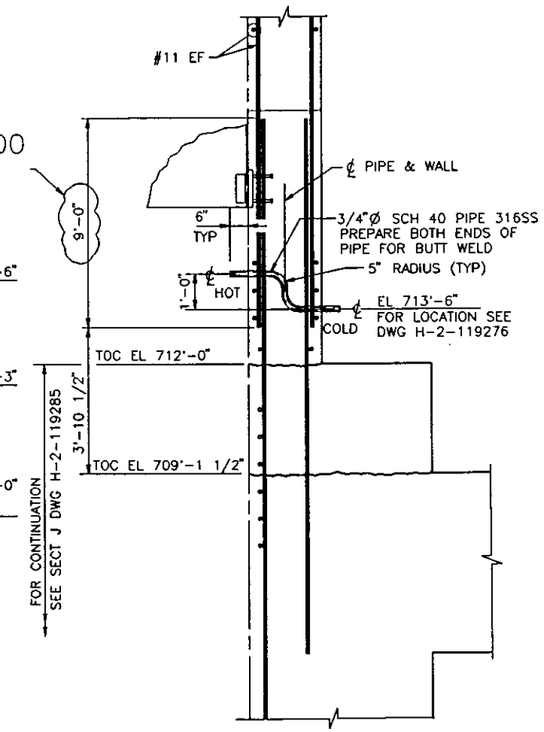

NOTE:
FOR INFORMATION NOT SHOWN SEE SECT CR THIS DWG

SECTION CS
NTS

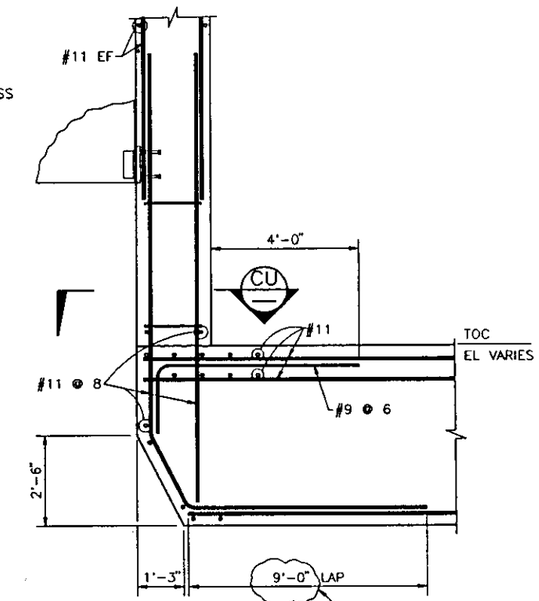

NOTE:
FOR INFORMATION NOT SHOWN SEE SECT CR THIS DWG

SECTION CT
NTS

FLUOR DANIEL	U.S. DEPARTMENT OF ENERGY HANFORD WASTE VITRIFICATION PLANT	DESIGN CHANGE NOTICE
DESCRIPTION OF CHANGE REMOVE HOLD HWVP-FD-372. REVISE REINFORCING LAPS.		BASE DOC. NO. H-2-119280 SHT/PG. 3 REV. 1 CR NO. CR-HWVP-1025 DISCIPLINE: STRUCTURAL/DCN0096S
PREPARED BY: Armando Villegas	DATE: 9/28/93	DCN - 0100 / REV. 1 / PAGE 12
DISCIPLINE ENGINEER: Robert D. Hubers	DATE: 9/28/93	

ACAD

REM 09/27/93

9513336.1574

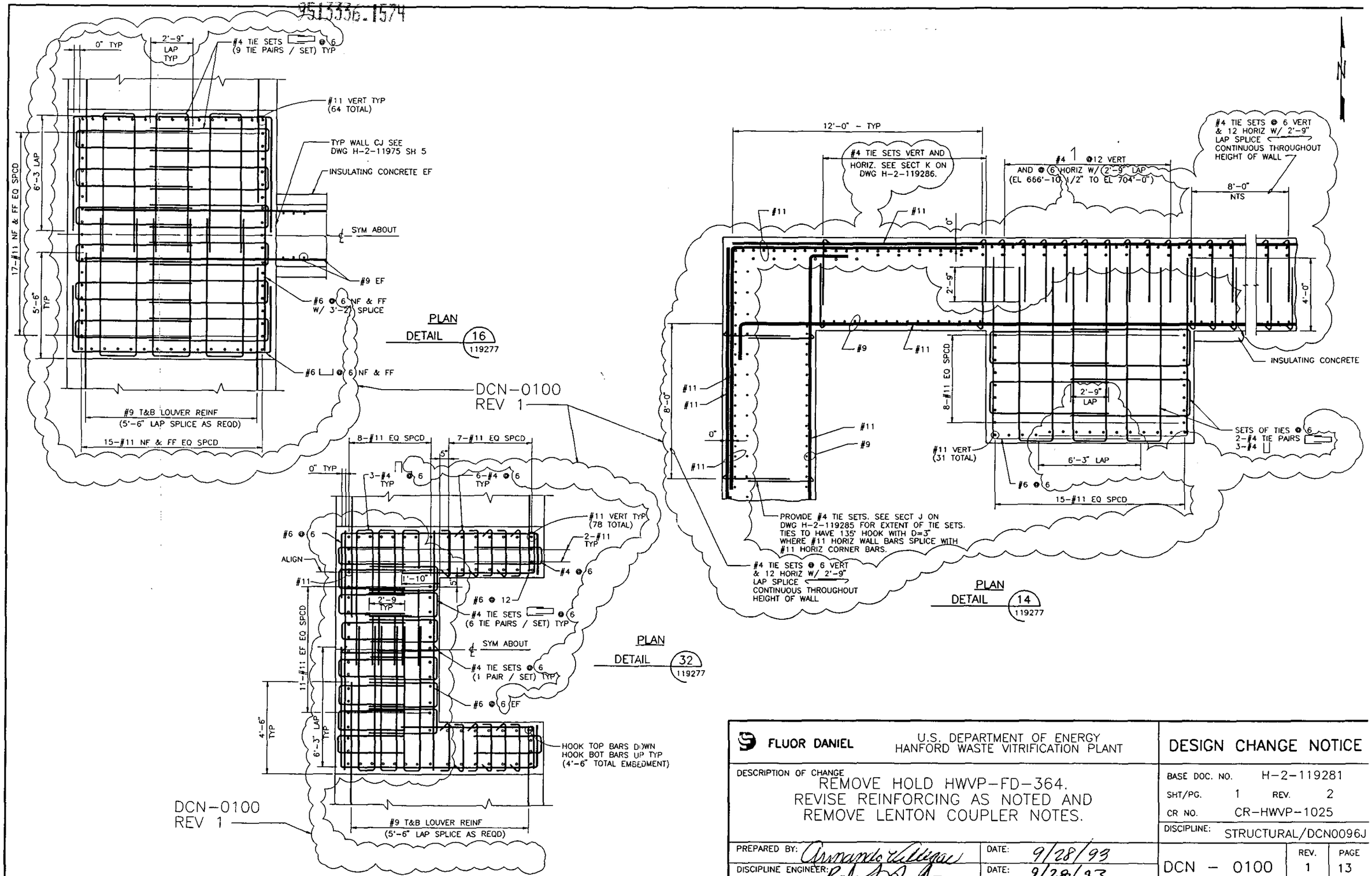

FLUOR DANIEL	U.S. DEPARTMENT OF ENERGY HANFORD WASTE VITRIFICATION PLANT	DESIGN CHANGE NOTICE
DESCRIPTION OF CHANGE REMOVE HOLD HWVP-FD-364. REVISE REINFORCING AS NOTED AND REMOVE LENTON COUPLER NOTES.		BASE DOC. NO. H-2-119281 SHT/PG. 1 REV. 2 CR NO. CR-HWVP-1025 DISCIPLINE: STRUCTURAL/DCN0096J
PREPARED BY: Armando Villegas	DATE: 9/28/93	DCN - 0100 REV. 1 PAGE 13
DISCIPLINE ENGINEER: Rolo J. Dubon	DATE: 9/28/93	

ACAD REM 09/27/93

9513336.1575

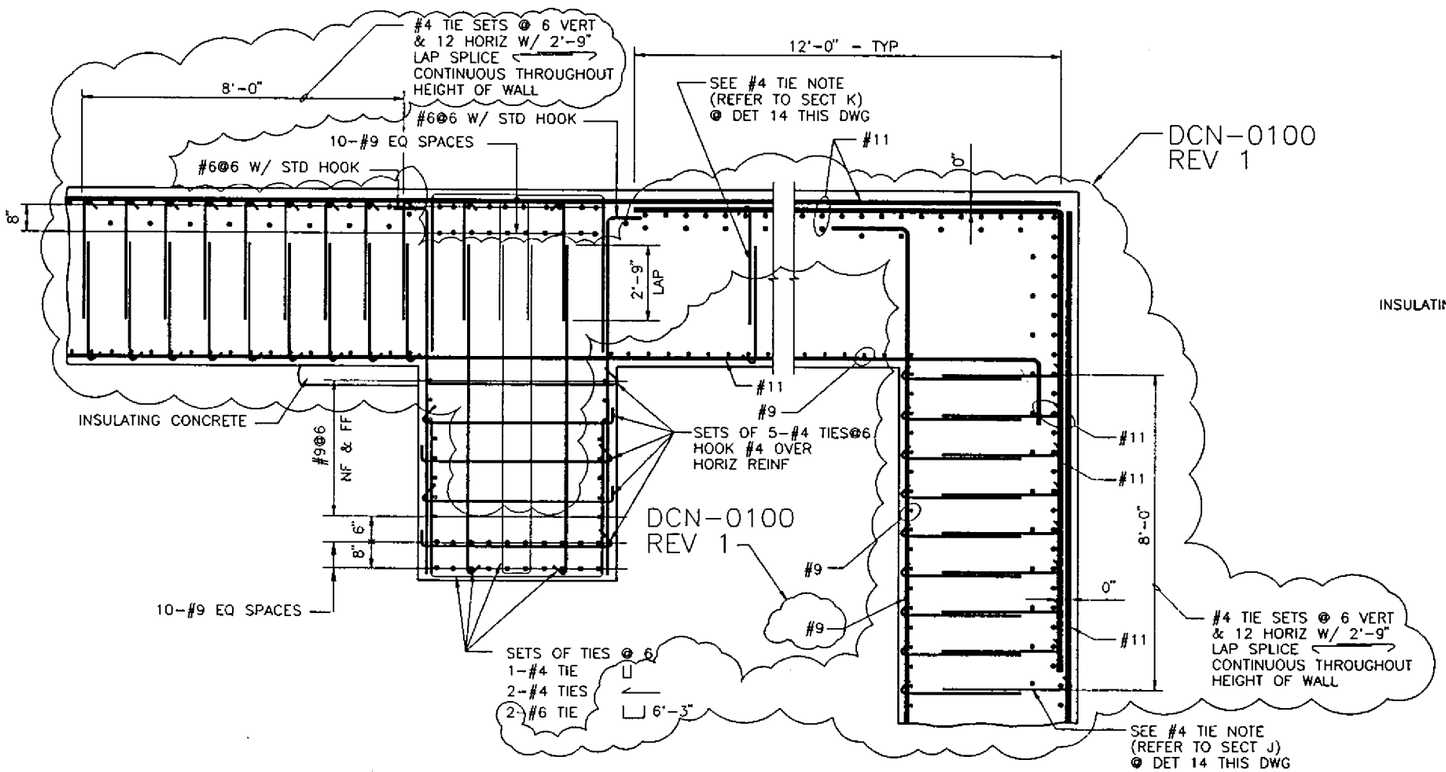

PLAN

DETAIL 15 / 119277

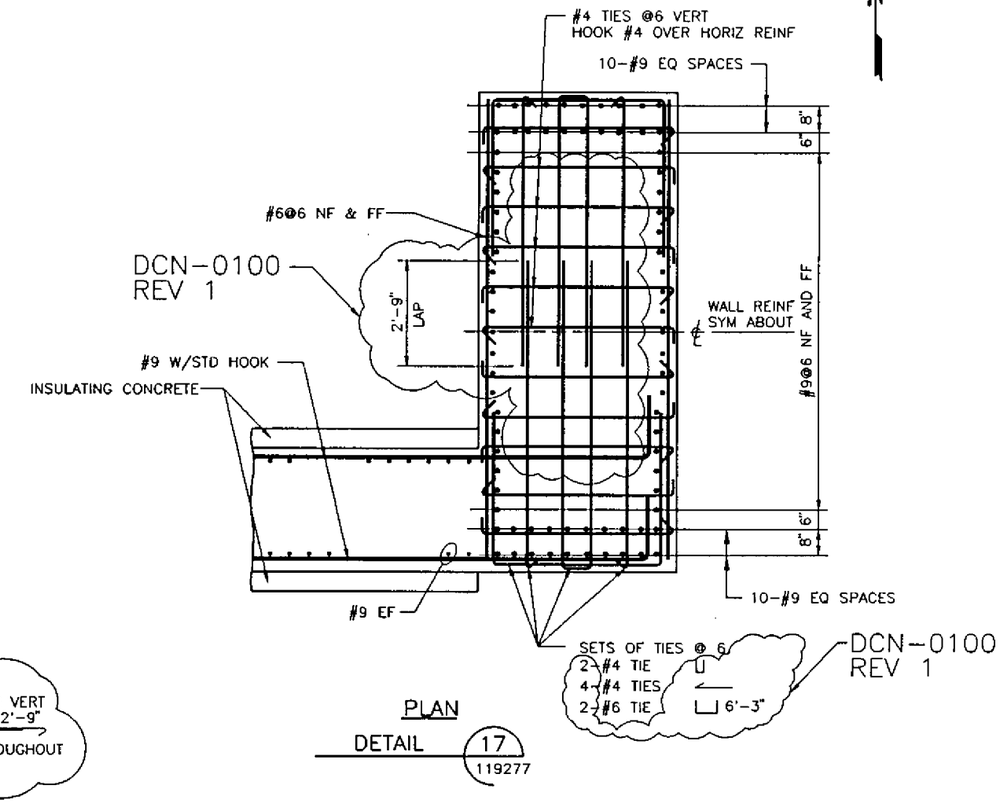

PLAN

DETAIL 17 / 119277

FLUOR DANIEL — U.S. DEPARTMENT OF ENERGY, HANFORD WASTE VITRIFICATION PLANT		DESIGN CHANGE NOTICE
DESCRIPTION OF CHANGE: REMOVE HOLD HWVP-FD-364. REVISE REINFORCING AS NOTED.		BASE DOC. NO. H-2-119281; SHT/PG. 1; REV. 2; CR NO. CR-HWVP-1025; DISCIPLINE: STRUCTURAL/DCN0096K
PREPARED BY: Armando Villegas	DATE: 9/28/93	DCN - 0100 — REV. 1 — PAGE 14
DISCIPLINE ENGINEER: Robert J. Smith	DATE: 9/28/93	

ACAD REM 09/28/93

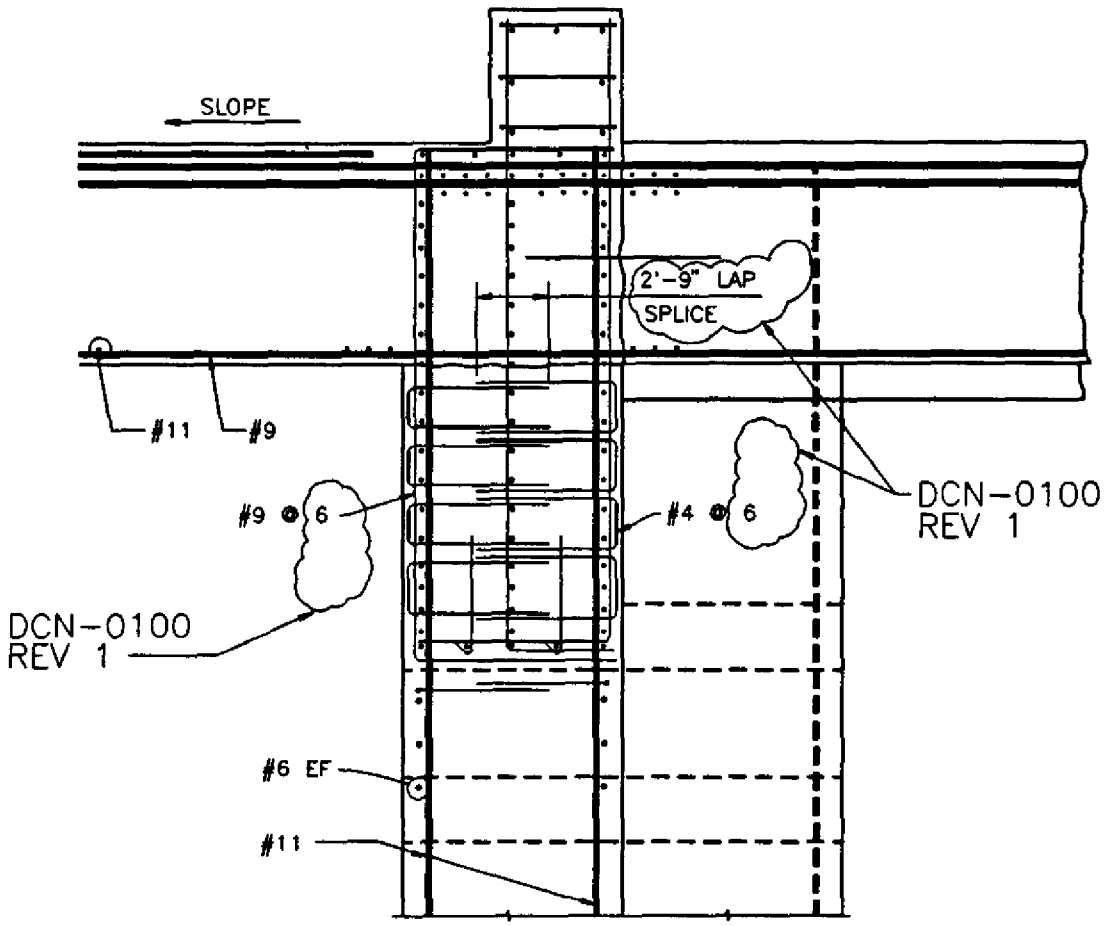

SECTION CP 119279

FLUOR DANIEL	U.S. DEPARTMENT OF ENERGY HANFORD WASTE VITRIFICATION PLANT	DESIGN CHANGE NOTICE
DESCRIPTION OF CHANGE: REMOVE HOLD HWVP-FD-364. REVISE REINFORCING SPACING AND TIE LAP AS NOTED.		BASE DOC. NO. H-2-119281 SHT/PG. 2 REV. 0 CR NO. CR-HWVP-1025 DISCIPLINE: STRUCTURAL/DCN0096H
PREPARED BY: Amanda Gillegan	DATE: 9/28/93	DCN - 0100 REV. 1 PAGE 15
DISCIPLINE ENGINEER: [signature]	DATE: 9-28-93	

ACAD REM 09/27/93

9513336.1577

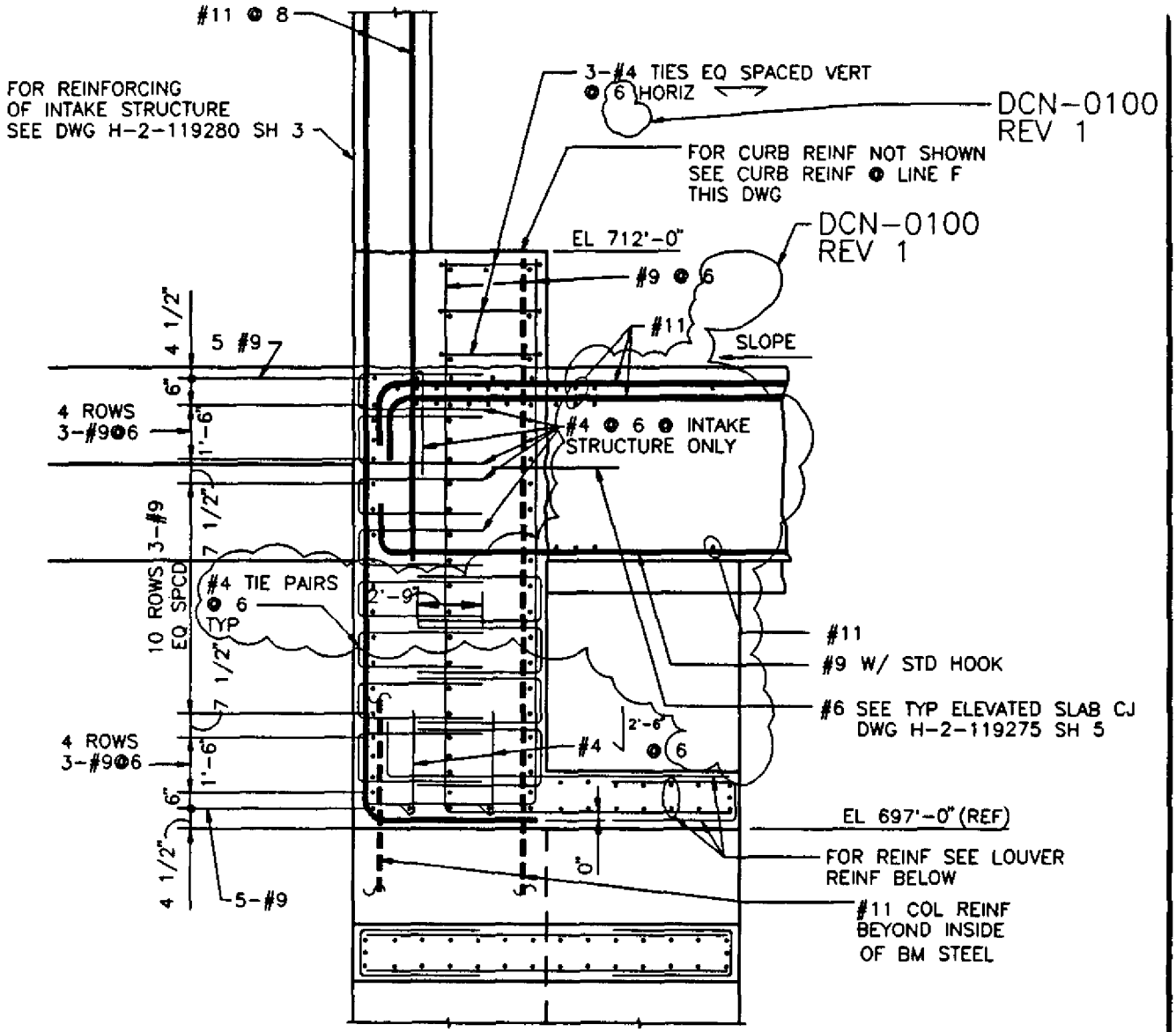

DETAIL J / 119279

FLUOR DANIEL	U.S. DEPARTMENT OF ENERGY HANFORD WASTE VITRIFICATION PLANT	DESIGN CHANGE NOTICE
DESCRIPTION OF CHANGE: REMOVE HOLD HWVP-FD-364. REVISE REINFORCING SPACING AND TIE LAP DIMENSION		BASE DOC. NO. H-2-119285 SHT/PG. 1 REV. 2 CR NO. CR-HWVP-1025 DISCIPLINE: STRUCTURAL/DCN0096E
PREPARED BY: Amanda Tillman	DATE: 9/28/93	DCN - 0100 / REV. 1 / PAGE 16
DISCIPLINE ENGINEER:	DATE: 9/28/93	

ACAD REM 09/27/93

9513556.1578

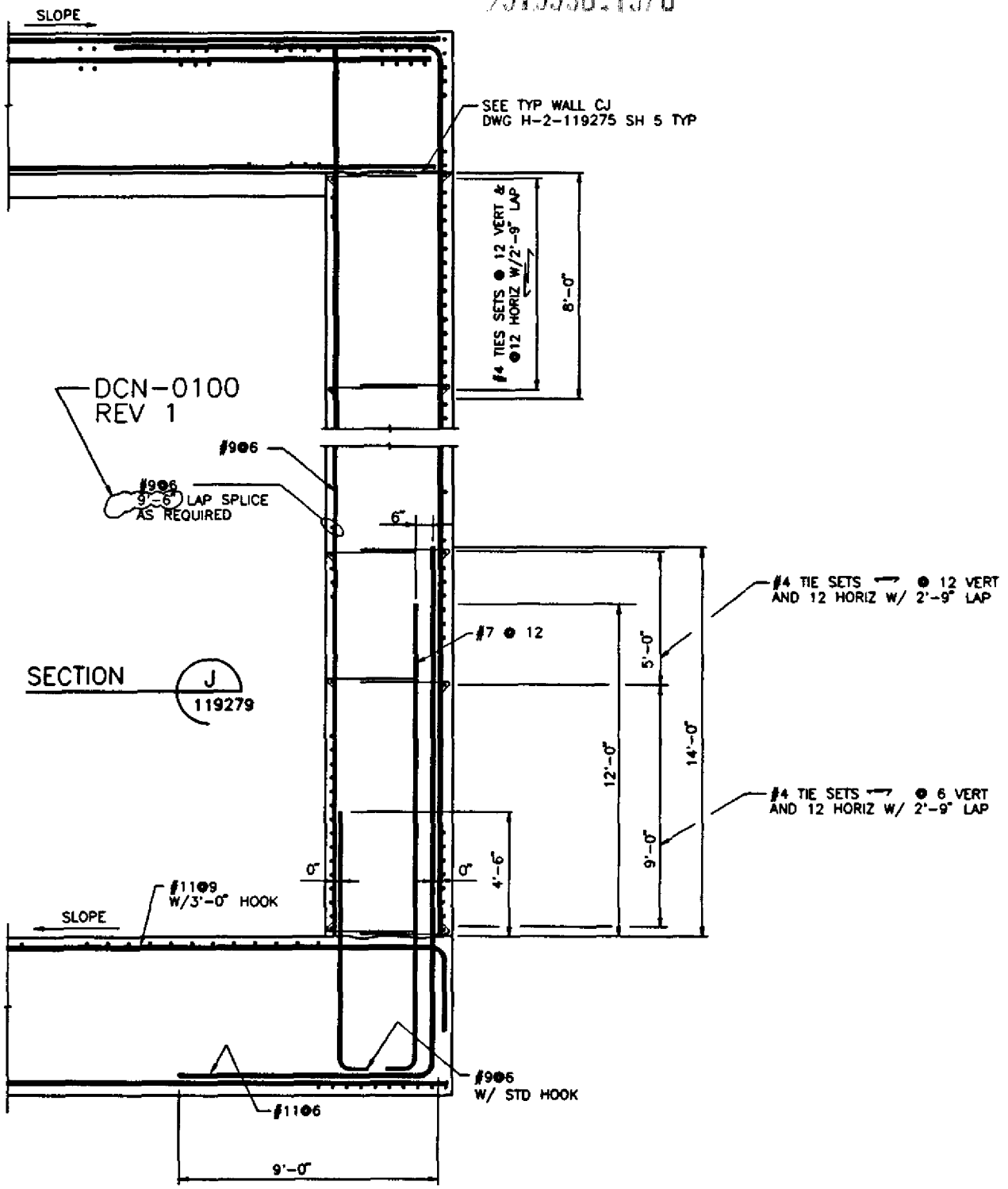

FLUOR DANIEL	U.S. DEPARTMENT OF ENERGY HANFORD WASTE VITRIFICATION PLANT	DESIGN CHANGE NOTICE
DESCRIPTION OF CHANGE: REVISE LAP SPLICE		BASE DOC. NO. H-2-119285 SHT/PG. 1 REV. 2 CR NO. CR-HWVP-1025 DISCIPLINE: STRUCTURAL/DCN0096L
PREPARED BY: Armando Villegas	DATE: 9/28/93	DCN - 0100 REV. 1 PAGE 17
DISCIPLINE ENGINEER: Robert A. Smith	DATE: 9/28/93	

ACAD REM 09/27/93

9513356.1579

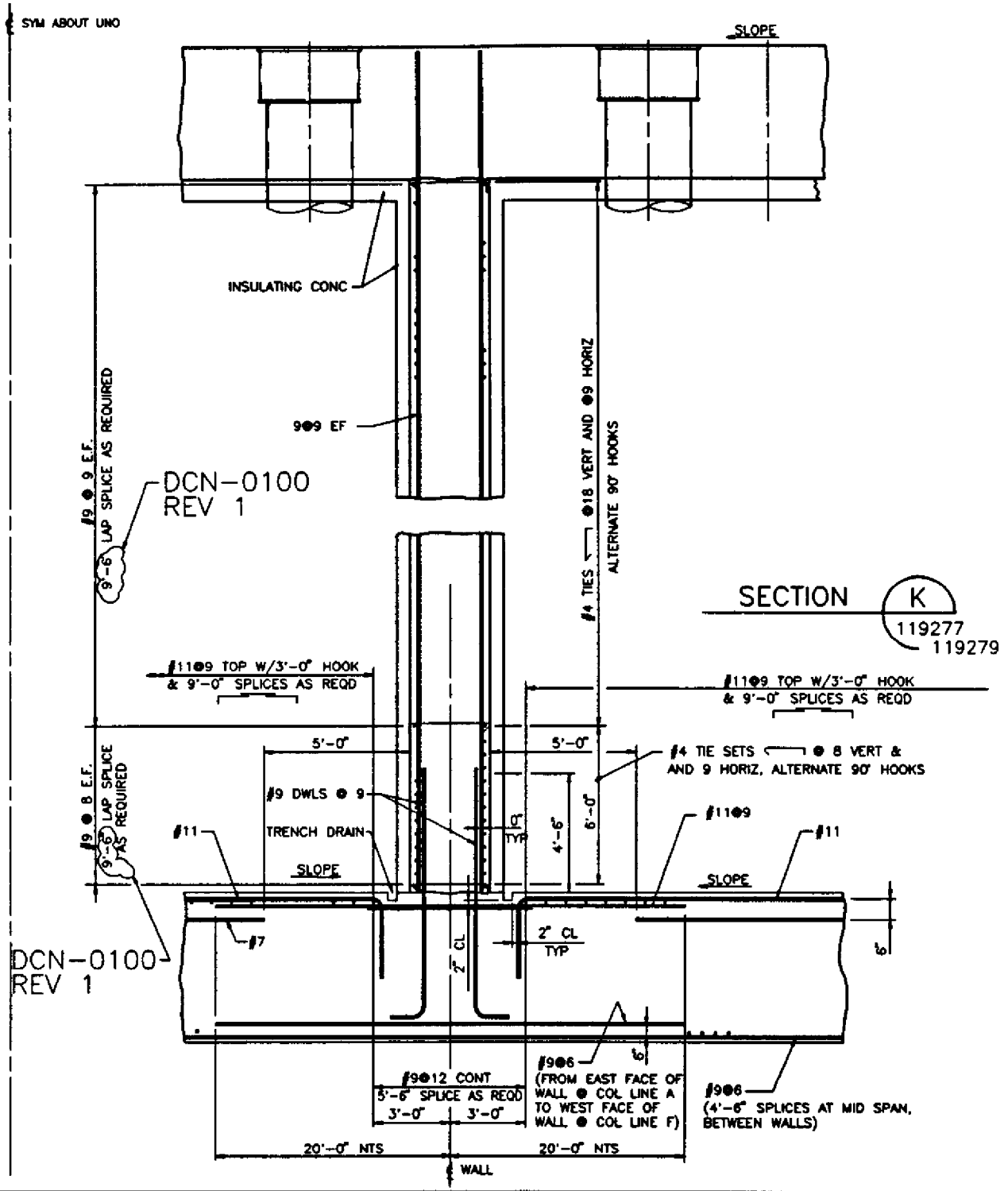

FLUOR DANIEL	U.S. DEPARTMENT OF ENERGY HANFORD WASTE VITRIFICATION PLANT	DESIGN CHANGE NOTICE
DESCRIPTION OF CHANGE: REVISE LAP SPLICE		BASE DOC. NO. H-2-119286 SHT/PG. 1 REV. 2 CR NO. CR-HWVP-1025 DISCIPLINE: STRUCTURAL/DCN0081F
PREPARED BY: Armando Villegas	DATE: 9/28/93	DCN - 0100 REV. 1 PAGE 18
DISCIPLINE ENGINEER: [signature]	DATE: 9-28-93	

ACAD REM 09/28/93