START

9513336.0764

0040120

Mr. John Grantham
State of Washington
Department of Ecology
Nuclear & Mixed Waste Program
P. O. Box 47600
Olympia, WA 98504-7600

FLUOR DANIEL, INC.

Date: April 15, 1993

Reference: Hanford Waste Vitrification Plant
DOE Contract DE-AC06-86RL10838
Fluor Contract 8457

Transmittal No.: WDOE-395

Dear Mr. Grantham:

TRANSMITTAL

We enclose * copy of the items listed below. These are issued per US-DOE request.
*2 FULLSIZE BLUELINES (ROLLED), 1 REDUCED & 2 SPECIFICATIONS

Response due to Fluor: N/A
Responds to: PACKAGE P06B

NUMBER	REV	DATE	TITLE
SEE TRANSMITTAL ATTACHMENT	-----	-----	P06B PACKAGE MELTER POUR AND DRAIN TURNTABLE

Distribution:
Reference: FRP-881, FUP-432
R. L. Long: DOE-RL w/0
TWP/AME Corresp Cntrl Cntr, MSIN A5-10
(P06B PACKAGE),w/0
P. Felise, WHC-RL (MSIN G6-16), w/1F, SPEC
Environmental Data Management Center
(MSIN H6-08), w/1F, 1 SPEC
D. Duncan, US EPA, Region X w/0

Very truly yours,

Rosalie Cadenas for

R. S. Poulter
Project Director

RSP:JM:lh

APR 1993
RECEIVED
EDMC

DATE 04/07/93
CONTRACT 80845734

Time: 10:13 AM

HANFORD WASTE VITRIFICATION PLANT
COORDS LISTING OF SPECIFICATION FOR PKG P06B

DISC	PACKAGE	SPEC NUMBER	PKG REV	SPECIFICATION TITLE	SEC REV	SECTION	SECTION TITLE	REMARKS
	P06B	B-595-P-P06B	0	MELTER POUR AND DRAIN TURNTABLE				
40					0	01730	OPERATION AND MAINTENANCE DATA	
40					0	05060	WELDING STRUCTURAL	
40					0	13252	PRECAUTIONS FOR FABRICATION, HANDLING AND STORAGE OF STAINLESS STEEL AND NICKEL ALLOYS	
40					0	14601	POUR TURNTABLE	
40					0	14602	DRAIN TURNTABLE	
40					0	14603	CABLE REEL ASSEMBLY	
40					0	14604	TRACK AND CATCH PAN ASSEMBLY	
40					0	15196	IDENTIFICATION AND TAGGING METHODS FOR MECHANICAL EQUIPMENT	
40					0	16120	SOLDERING - ELECTRICAL	
40					0	16151	MOTORS-INDUCTION FOR RADIOACTIVE SERVICE	
60					0	16610	ELECTRICAL REQUIREMENTS FOR PACKAGED EQUIPMENT	
70					0	17857	LOCAL CONTROL PANELS FOR POUR AND DRAIN TURNTABLES	
70					0	17886	INSTR FURNISHED W/MECH EQPT LOAD CELL SIGNAL CONDITIONER POUR & DRAIN TURNTABLES	

00/PIPING & INSTRUMENT DIAGRAMS, 05/CIVIL, 10/HVAC, 20/STRUCTURAL, 30/ARCHITECTURAL, 40/MECHANICAL, 50/PIPING, 51/FIRE PROTECTION, 60/ELECTRICAL, 70/CONTROL SYSTEMS, 90/MISCELLANEOUS

9513336.0765

Time: 10:13 AM

HANFORD WASTE VITRIFICATION PLANT
COORDS LISTING OF SPECIFICATION FOR PKG P06B

DISC	PACKAGE	SPEC NUMBER	PKG REV	SPECIFICATION TITLE	SEC REV	SECTION	SECTION TITLE	REMARKS
	P06B	B-595-P-P06B	0	MELTER POUR AND DRAIN TURNTABLE				
70					0	17908	INSTRUMENTS FURNISHED WITH MECHANICAL EQUIPMENT POUR AND DRAIN TURNTABLES	

TOTAL: 14

Records printed: 14

9513336.0766

00/PIPING & INSTRUMENT DIAGRAMS, 05/CIVIL, 10/HVAC, 20/STRUCTURAL, 30/ARCHITECTURAL, 40/MECHANICAL, 50/PIPING, 51/FIRE PROTECTION, 60/ELECTRICAL, 70/CONTROL SYSTEMS, 90/MISCELLANEOUS

DATE 04/07/93
CONTRACT 80845734

Time: 11:17 AM

HANFORD WASTE VITRIFICATION PLANT
COORDS LISTING OF DRAWINGS FOR PKG P06B

DISC	PACKAGE	DRAWING NUMBER	SHT NO.	REV	SIGNATURE DATE	DRAWING TITLE	REMARKS
30	P06B	H-2-116013	1	0	04/06/93	MELTER POUR & DRAIN TURNTABLE TITLE SHEET	
30	P06B	H-2-116014	1	0	04/06/93	MELTER POUR & DRAIN TURNTABLE DRAWING INDEX	
30	P06B	H-2-116014	2	0	04/06/93	MELTER POUR & DRAIN TURNTABLE DRAWING INDEX	
40	P06B	H-2-120302	1	0	04/06/93	TU-130-001 POUR TURNTABLE PARTS LIST & NOTES	
40	P06B	H-2-120302	2	0	04/06/93	TU-130-001 POUR TURNTABLE ASSEMBLY	
40	P06B	H-2-120302	3	0	04/06/93	TU-130-001 POUR TURNTABLE ASSEMBLY	
40	P06B	H-2-120302	4	0	04/06/93	TU-130-001 POUR TURNTABLE ASSEMBLY	
40	P06B	H-2-120302	5	0	04/06/93	TU-130-001 POUR TURNTABLE ASSEMBLY	
40	P06B	H-2-120302	6	0	04/06/93	TU-130-001 POUR TURNTABLE ASSEMBLY	
40	P06B	H-2-120302	7	0	04/06/93	TU-130-001 POUR TURNTABLE ASSEMBLY	
40	P06B	H-2-120302	8	0	04/06/93	TU-130-001 POUR TURNTABLE ASSEMBLY	
40	P06B	H-2-120302	9	0	04/06/93	TU-130-001 POUR TURNTABLE ASSEMBLY	
40	P06B	H-2-120302	10	0	04/06/93	TU-130-001 POUR TURNTABLE ASSEMBLY	
40	P06B	H-2-120302	11	0	04/06/93	TU-130-001 LIMIT SWITCH BRACKET WELDMENT	
40	P06B	H-2-120302	12	0	04/06/93	TU-130-001 DRIVE ARM & PLUNGER ASSEMBLIES	
40	P06B	H-2-120302	13	0	04/06/93	TU-130-001 BASE WELDMENT	
40	P06B	H-2-120302	14	0	04/06/93	TU-130-001 WHEEL COVER DETAILS	
40	P06B	H-2-120302	15	0	04/06/93	TU-130-001 WHEEL COVER ASSEMBLY	
40	P06B	H-2-120302	16	0	04/06/93	TU-130-001 BEVEL GEAR	
40	P06B	H-2-120302	17	0	04/06/93	TU-130-001 ASSEMBLY & DETAILS	
40	P06B	H-2-120302	18	0	04/06/93	TU-130-001 DETAILS	
40	P06B	H-2-120303	1	0	04/06/93	TU-130-001 CANISTER GUIDE WELDMENT	
40	P06B	H-2-120303	2	0	04/06/93	TU-130-001 CANISTER GUIDE DETAILS	
40	P06B	H-2-120304	1	0	04/06/93	TU-130-001 CART, SPIDER DRIVE SUPPORT ASSEMBLY	

00/PIPING & INSTRUMENT DIAGRAMS, 05/CIVIL, 10/HVAC, 20/STRUCTURAL, 30/ARCHITECTURAL, 40/MECHANICAL, 50/PIPING, 51/FIRE PROTECTION, 60/ELECTRICAL, 70/CONTROL SYSTEMS, 90/MISCELLANEOUS

9513336.0767

HANFORD WASTE VITRIFICATION PLANT
COORDS LISTING OF DRAWINGS FOR PKG P068

DISC	PACKAGE	DRAWING NUMBER	SHT NO.	REV	SIGNATURE DATE	DRAWING TITLE	REMARKS
40	P068	H-2-120304	2	0	04/06/93	TU-130-001 CART, SPIDER DRIVE SUPPORT DETAILS	
40	P068	H-2-120305	1	0	04/06/93	TU-130-001 POUR TURNTABLE CART DRIVE PARTS LIST & NOTES	
40	P068	H-2-120305	2	0	04/06/93	TU-130-001 CART DRIVE SUPPORT DETAILS	
40	P068	H-2-120306	1	0	04/06/93	TU-130-001 SPIDER DRIVE MOTOR PARTS LIST & NOTES	
40	P068	H-2-120306	2	0	04/06/93	TU-130-001 SPIDER DRIVE MOTOR ASSEMBLY	
40	P068	H-2-120306	3	0	04/06/93	TU-130-001 SPIDER DRIVE MOTOR ASSEMBLY	
40	P068	H-2-120306	4	0	04/06/93	TU-130-001 MOUNTING PLATE	
40	P068	H-2-120306	5	0	04/06/93	TU-130-001 LIMIT SWITCH MOUNTING ASSEMBLY	
40	P068	H-2-120306	6	0	04/06/93	TU-130-001 SPIDER DRIVE MOTOR FRAME WELDMENT	
40	P068	H-2-120306	7	0	04/06/93	TU-130-001 SPIDER DRIVE MOTOR FRAME WELDMENT	
40	P068	H-2-120306	8	0	04/06/93	TU-130-001 SPIDER DRIVE MOTOR FRAME WELDMENT	
40	P068	H-2-120306	9	0	04/06/93	TU-130-001 SPIDER DRIVE MOTOR DETAILS	
40	P068	H-2-120306	10	0	04/06/93	TU-130-001 SPIDER DRIVE MOTOR DETAILS	
40	P068	H-2-120306	11	0	04/06/93	TU-130-001 SPIDER DRIVE MOTOR DETAILS	
40	P068	H-2-120306	12	0	04/06/93	TU-130-001 SPIDER DRIVE MOTOR DETAILS	
40	P068	H-2-120306	13	0	04/06/93	TU-130-001 PILLOW BLOCK SUPPORT	
40	P068	H-2-120306	14	0	04/06/93	TU-130-001 SHAFT EXTENSION ASSEMBLY	
40	P068	H-2-120307	1	0	04/06/93	TU-130-001 OUTER RAIL PARTS LIST & NOTES	
40	P068	H-2-120307	2	0	04/06/93	TU-130-001 OUTER RAILS	
40	P068	H-2-120307	3	0	04/06/93	TU-130-001 INNER RAILS	
40	P068	H-2-120308	1	0	04/06/93	TU-130-001 CART DR MOT ASSY PARTS LIST & NOTES	
40	P068	H-2-120308	2	0	04/06/93	TU-130-001 CART DRIVE MOTOR WELDMENT	
40	P068	H-2-120308	3	0	04/06/93	TU-130-001 CART DRIVE MOTOR SPLASH GUARD ASSY	
40	P068	H-2-120308	4	0	04/06/93	TU-130-001 CART DRIVE MOTOR DETAILS	

00/PIPING & INSTRUMENT DIAGRAMS, 05/CIVIL, 10/HVAC, 20/STRUCTURAL, 30/ARCHITECTURAL, 40/MECHANICAL, 50/PIPING, 51/FIRE PROTECTION, 60/ELECTRICAL, 70/CONTROL SYSTEMS, 90/MISCELLANEOUS

9513336.0768

HANFORD WASTE VITRIFICATION PLANT
COORDS LISTING OF DRAWINGS FOR PKG P06B

DISC	PACKAGE	DRAWING NUMBER	SHT NO.	REV	SIGNATURE DATE	DRAWING TITLE	REMARKS
40	P06B	H-2-120309	1	0	04/06/93	TU-130-001 CANISTER DOLLY ASSEMBLY PARTS LIST & NOTES	
40	P06B	H-2-120309	2	0	04/06/93	TU-130-001 CANISTER DOLLY ASSEMBLY	
40	P06B	H-2-120309	3	0	04/06/93	TU-130-001 CANISTER DOLLY TRUNNION LIFTING WELDMENT & DETS	
40	P06B	H-2-120309	4	0	04/06/93	TU-130-001 CANISTER DOLLY WELDMENT	
40	P06B	H-2-120309	5	0	04/06/93	TU-130-001 CANISTER DOLLY TOP PLATE DETAIL	
40	P06B	H-2-120309	6	0	04/06/93	TU-130-001 CANISTER DOLLY BASE PLATE DETAIL	
40	P06B	H-2-120309	7	0	04/06/93	TU-130-001 CANISTER DOLLY BODY DETAILS	
40	P06B	H-2-120309	8	0	04/06/93	TU-130-001 CANISTER DOLLY WHEEL MOUNTING PLATE DETAIL	
40	P06B	H-2-120309	9	0	04/06/93	TU-130-001 CANISTER DOLLY COVER DETAIL	
40	P06B	H-2-120310	1	0	04/06/93	TU-130-001 LIFTING TRUNNION WELDMENT PARTS LIST & NOTES	
40	P06B	H-2-120310	2	0	04/06/93	TU-130-001 LIFTING TRUNNION WELDMENT DETAILS	
40	P06B	H-2-120311	1	0	04/06/93	TU-130-001 CART SUPPORT ASSEMBLY PARTS LIST & NOTES	
40	P06B	H-2-120311	2	0	04/06/93	TU-130-001 CART SUPPORT DETAILS	
40	P06B	H-2-120312	1	0	04/06/93	TU-130-001 CART DRIVE PARTS LIST & NOTES	
40	P06B	H-2-120312	2	0	04/06/93	TU-130-001 CART DRIVE ASSEMBLY	
40	P06B	H-2-120312	3	0	04/06/93	TU-130-001 SPLASH GUARD WHEEL DRIVE LEFT SIDE ASSEMBLY	
40	P06B	H-2-120312	4	0	04/06/93	TU-130-001 SPLASH GUARD WHEEL DRIVE RIGHT SIDE ASSEMBLY	
40	P06B	H-2-120312	5	0	04/06/93	TU-130-001 CLUTCH COUPLING COVER AND SUPPORT ASSEMBLY	
40	P06B	H-2-120312	6	0	04/06/93	TU-130-001 SPLASH GUARD WHEEL DRIVE LEFT SIDE DETAILS	
40	P06B	H-2-120312	7	0	04/06/93	TU-130-001 SPLASH GUARD WHEEL DRIVE RIGHT SIDE DETAILS	
40	P06B	H-2-120312	8	0	04/06/93	TU-130-001 CLUTCH COUPLING COVER DETAILS	
40	P06B	H-2-120312	9	0	04/06/93	TU-130-001 CLUTCH COUPLING DETAILS	
40	P06B	H-2-120312	10	0	04/06/93	TU-130-001 SHAFT AND SPACER DETAILS	
40	P06B	H-2-120312	11	0	04/06/93	TU-130-001 MODIFIED GEARED WHEEL DETAIL	

00/PIPING & INSTRUMENT DIAGRAMS, 05/CIVIL, 10/HVAC, 20/STRUCTURAL, 30/ARCHITECTURAL, 40/MECHANICAL, 50/PIPING, 51/FIRE PROTECTION, 60/ELECTRICAL, 70/CONTROL SYSTEMS, 90/MISCELLANEOUS

9513336.0769

HANFORD WASTE VITRIFICATION PLANT
COORDS LISTING OF DRAWINGS FOR PKG P06B

DISC	PACKAGE	DRAWING NUMBER	SHT NO.	REV	SIGNATURE DATE	DRAWING TITLE	REMARKS
40	P06B	H-2-120313	1	0	04/06/93	TU-130-001 FIXED STOP ASSEMBLY PARTS LIST & NOTES	
40	P06B	H-2-120313	2	0	04/06/93	TU-130-001 FIXED STOP WELDMENT & PLUNGER	
40	P06B	H-2-120313	3	0	04/06/93	TU-130-001 FIXED STOP DETAILS	
40	P06B	H-2-120314	1	0	04/06/93	TU-130-001 SPIDER DRIVE ASSEMBLY PARTS LIST & NOTES	
40	P06B	H-2-120314	2	0	04/06/93	TU-130-001 WELDMENT, DRIVE BASE & SUB-WELDMENT	
40	P06B	H-2-120314	3	0	04/06/93	TU-130-001 SPIDER DRIVE DETAILS	
40	P06B	H-2-120314	4	0	04/06/93	TU-130-001 SPIDER DRIVE RAIL DETAILS	
40	P06B	H-2-120314	5	0	04/06/93	TU-130-001 SPIDER DRIVE DETAILS	
40	P06B	H-2-120314	6	0	04/06/93	TU-130-001 SPIDER DRIVE WELDMENT DETAILS	
40	P06B	H-2-120314	7	0	04/06/93	TU-130-001 SPIDER DRIVE DETAILS	
40	P06B	H-2-120315	1	0	04/06/93	TU-130-001 CART ASSEMBLY PARTS LIST & NOTES	
40	P06B	H-2-120315	2	0	04/06/93	TU-130-001 CART ASSEMBLY	
40	P06B	H-2-120315	3	0	04/06/93	TU-130-001 CART ASSEMBLY	
40	P06B	H-2-120316	1	0	04/06/93	TU-130-001 UPPER FRAME ASSEMBLY PARTS LIST & NOTES	
40	P06B	H-2-120316	2	0	04/06/93	TU-130-001 UPPER FRAME ASSEMBLY	
40	P06B	H-2-120316	3	0	04/06/93	TU-130-001 UPPER FRAME ASSEMBLY	
40	P06B	H-2-120316	4	0	04/06/93	TU-130-001 UPPER FRAME ASSEMBLY	
40	P06B	H-2-120316	5	0	04/06/93	TU-130-001 SUPPORT RAIL A ASSEMBLY & DETAILS	
40	P06B	H-2-120316	6	0	04/06/93	TU-130-001 SUPPORT RAIL B ASSEMBLY & DETAILS	
40	P06B	H-2-120316	7	0	04/06/93	TU-130-001 SUPPORT RAIL C ASSEMBLY & DETAILS	
40	P06B	H-2-120316	8	0	04/06/93	TU-130-001 SUPPORT RAIL D ASSEMBLY & DETAILS	
40	P06B	H-2-120316	9	0	04/06/93	TU-130-001 UPPER FRAME DETAILS	
40	P06B	H-2-120316	10	0	04/06/93	TU-130-001 UPPER FRAME DETAILS	
40	P06B	H-2-120316	11	0	04/06/93	TU-130-001 UPPER FRAME DETAILS	

00/PIPING & INSTRUMENT DIAGRAMS, 05/CIVIL, 10/HVAC, 20/STRUCTURAL, 30/ARCHITECTURAL, 40/MECHANICAL, 50/PIPING, 51/FIRE PROTECTION, 60/ELECTRICAL, 70/CONTROL SYSTEMS, 90/MISCELLANEOUS

9513336.0770

HANFORD WASTE VITRIFICATION PLANT
COORDS LISTING OF DRAWINGS FOR PKG P06B

DISC	PACKAGE	DRAWING NUMBER	SHT NO.	REV	SIGNATURE DATE	DRAWING TITLE	REMARKS
40	P06B	H-2-120317	1	0	04/06/93	TU-130-001 LOWER FRAME ASSY PARTS LIST & NOTES	
40	P06B	H-2-120317	2	0	04/06/93	TU-130-001 POUR TURNTABLE LOWER FRAME ASSEMBLY	
40	P06B	H-2-120317	3	0	04/06/93	TU-130-001 LOWER FRAME ASSEMBLY	
40	P06B	H-2-120317	4	0	04/06/93	TU-130-001 LOWER FRAME BEAMS SECTIONS	
40	P06B	H-2-120317	5	0	04/06/93	TU-130-001 STOP FIXED HOLDER DETAILS	
40	P06B	H-2-120317	6	0	04/06/93	TU-130-001 ROLLER DRUM & BRACKET ASSY DETAILS	
40	P06B	H-2-120317	7	0	04/06/93	TU-130-001 LOWER FRAME ASSEMBLY PARTS DETAILS	
40	P06B	H-2-120317	8	0	04/06/93	TU-130-001 LOWER FRAME ASSEMBLY PARTS DETAILS	
40	P06B	H-2-120318	1	0	04/06/93	TU-130-001 CAROUSEL ASSEMBLY	
40	P06B	H-2-120318	2	0	04/06/93	TU-130-001 CAROUSEL ASSEMBLY	
40	P06B	H-2-120318	3	0	04/06/93	TU-130-001 CAROUSEL DETAILS	
40	P06B	H-2-120318	4	0	04/06/93	TU-130-001 CAROUSEL SUB-WELDMENT	
40	P06B	H-2-120319	1	0	04/06/93	TU-130-001 CONDUIT & CABLE ASSEMBLY	
40	P06B	H-2-120319	2	0	04/06/93	TU-130-001 CONDUIT & CABLE ASSEMBLY	
40	P06B	H-2-120319	3	0	04/06/93	TU-130-001 CONDUIT & CABLE ASSEMBLY	
40	P06B	H-2-120319	4	0	04/06/93	TU-130-001 CONDUIT & CABLE ASSEMBLY	
40	P06B	H-2-120319	5	0	04/06/93	TU-130-001 CONDUIT & CABLE ASSY DETAILS	
40	P06B	H-2-120319	6	0	04/06/93	TU-130-001 CONDUIT & CABLE ASSY DETAILS	
40	P06B	H-2-120319	7	0	04/06/93	TU-130-001 CONDUIT & CABLE ASSY DETAILS	
40	P06B	H-2-120320	1	0	04/06/93	TU-130-001 CART HEAT SHIELD SUPPORT	
40	P06B	H-2-120368	1	0	04/06/93	TU-130-002 DRAIN TURNTABLE PARTS LIST & NOTES	
40	P06B	H-2-120368	2	0	04/06/93	TU-130-002 DRAIN TURNTABLE ASSEMBLY	
40	P06B	H-2-120368	3	0	04/06/93	TU-130-002 DRAIN TURNTABLE ASSEMBLY	
40	P06B	H-2-120368	4	0	04/06/93	TU-130-002 DRAIN TURNTABLE ASSEMBLY	

00/PIPING & INSTRUMENT DIAGRAMS, 05/CIVIL, 10/HVAC, 20/STRUCTURAL, 30/ARCHITECTURAL, 40/MECHANICAL, 50/PIPING, 51/FIRE PROTECTION, 60/ELECTRICAL, 70/CONTROL SYSTEMS, 90/MISCELLANEOUS

HANFORD WASTE VITRIFICATION PLANT
COORDS LISTING OF DRAWINGS FOR PKG P06B

DISC	PACKAGE	DRAWING NUMBER	SHT NO.	REV	SIGNATURE DATE	DRAWING TITLE	REMARKS
40	P06B	H-2-120368	5	0	04/06/93	TU-130-002 DRAIN TURNTABLE ASSEMBLY	
40	P06B	H-2-120368	6	0	04/06/93	TU-130-002 DRAIN TURNTABLE ASSEMBLY	
40	P06B	H-2-120368	7	0	04/06/93	TU-130-002 DRAIN TURNTABLE ASSEMBLY	
40	P06B	H-2-120368	8	0	04/06/93	TU-130-002 DRAIN TURNTABLE ASSEMBLY	
40	P06B	H-2-120368	9	0	04/06/93	TU-130-002 DRAIN TURNTABLE ASSEMBLY	
40	P06B	H-2-120368	10	0	04/06/93	TU-130-002 DRIVE ARM ASSEMBLY & DETAILS	
40	P06B	H-2-120368	11	0	04/06/93	TU-130-002 WHEEL COVER ASSEMBLY & DETAILS	
40	P06B	H-2-120368	12	0	04/06/93	TU-130-002 WHEEL COVER ASSEMBLY & DETAILS	
40	P06B	H-2-120368	13	0	04/06/93	TU-130-002 BASE WELDMENT	
40	P06B	H-2-120368	14	0	04/06/93	TU-130-002 DRAIN TURNTABLE DETAILS	
40	P06B	H-2-120368	15	0	04/06/93	TU-130-002 ENCLOSURE MTG BRACKET ASSEMBLY & DETAILS	
40	P06B	H-2-120368	16	0	04/06/93	TU-130-002 DRAIN TURNTABLE DETAILS	
40	P06B	H-2-120368	17	0	04/06/93	TU-130-002 DRAIN TURNTABLE DETAILS	
40	P06B	H-2-120368	18	0	04/06/93	TU-130-002 DRAIN TURNTABLE DETAILS	
40	P06B	H-2-120368	19	0	04/06/93	TU-130-002 LIMIT SWITCH WELDMENT	
40	P06B	H-2-120368	20	0	04/06/93	TU-130-002 DRAIN TURNTABLE SECTIONS & VIEWS	
40	P06B	H-2-120369	1	0	04/06/93	TU-130-002 CANISTER GUIDE WELDMENT PARTS LIST & NOTES	
40	P06B	H-2-120369	2	0	04/06/93	TU-130-002 DRAIN TURN TABLE CANISTER GUIDE DETAILS	
40	P06B	H-2-120370	1	0	04/06/93	TU-130-002 CANISTER DOLLY ASSEMBLY PARTS LIST & NOTES	
40	P06B	H-2-120370	2	0	04/06/93	TU-130-002 CANISTER DOLLY WELDMENT	
40	P06B	H-2-120370	3	0	04/06/93	TU-130-002 LIFTING TRUNNION WELDMENT	
40	P06B	H-2-120370	4	0	04/06/93	TU-130-002 CANISTER DOLLY TOP PLATE DETAIL	
40	P06B	H-2-120370	5	0	04/06/93	TU-130-002 CANISTER DOLLY WHEEL MOUNTING DETAIL	
40	P06B	H-2-120370	6	0	04/06/93	TU-130-002 CANISTER DOLLY COVER DETAIL	

00/PIPING & INSTRUMENT DIAGRAMS, 05/CIVIL, 10/HVAC, 20/STRUCTURAL, 30/ARCHITECTURAL, 40/MECHANICAL, 50/PIPING, 51/FIRE PROTECTION, 60/ELECTRICAL, 70/CONTROL SYSTEMS, 90/MISCELLANEOUS

HANFORD WASTE VITRIFICATION PLANT
COORDS LISTING OF DRAWINGS FOR PKG P06B

DISC	PACKAGE	DRAWING NUMBER	SHT NO.	REV	SIGNATURE DATE	DRAWING TITLE	REMARKS
40	P06B	H-2-120370	7	0	04/06/93	TU-130-002 LIFTING TRUNNION DETAILS	
40	P06B	H-2-120370	8	0	04/06/93	TU-130-002 CANISTER DOLLY DETAILS	
40	P06B	H-2-120371	1	0	04/06/93	TU-130-002 DOLLY RAILS OUTER RAIL	
40	P06B	H-2-120371	2	0	04/06/93	TU-130-002 DOLLY RAILS INNER RAIL	
40	P06B	H-2-120371	3	0	04/06/93	TU-130-002 DOLLY RAILS OUTER RAILS	
40	P06B	H-2-120371	4	0	04/06/93	TU-130-002 DOLLY RAILS OUTER RAIL	
40	P06B	H-2-120372	1	0	04/06/93	TU-130-002 DIMENSIONAL RECORD DRAWING	
40	P06B	H-2-120372	2	0	04/06/93	TU-130-002 DIMENSIONAL RECORD DRAWING	
40	P06B	H-2-120372	3	0	04/06/93	TU-130-002 DIMENSIONAL RECORD DRAWING	
40	P06B	H-2-120374	1	0	04/06/93	TU-130-002 CAROUSEL ASSEMBLY	
40	P06B	H-2-120374	2	0	04/06/93	TU-130-002 CAROUSEL ASSEMBLY	
40	P06B	H-2-120374	3	0	04/06/93	TU-130-002 CAROUSEL DETAILS	
40	P06B	H-2-120374	4	0	04/06/93	TU-130-002 CAROUSEL SUB-WELDMENT	
40	P06B	H-2-120375	1	0	04/06/93	TU-130-002 CANISTER LID CLOSURE SPRT ASSY PARTS LIST & NOTES	
40	P06B	H-2-120375	2	0	04/06/93	TU-130-002 CANISTER LID CLOSURE SUPPORT DET	
40	P06B	H-2-120376	1	0	04/06/93	TU-130-002 LIFTING TRUNNION WELDMENT PARTS LIST & NOTES	
40	P06B	H-2-120376	2	0	04/06/93	TU-130-002 LIFTING TRUNNION DETAILS	
40	P06B	H-2-120377	1	0	04/06/93	TU-130-002 CART DR MOT ASSY PARTS LIST & NOTES	
40	P06B	H-2-120377	2	0	04/06/93	TU-130-002 CART DRIVE MOTOR WELDMENT	
40	P06B	H-2-120377	3	0	04/06/93	TU-130-002 CART DRIVE MOTOR WELDMENT DETAILS	
40	P06B	H-2-120377	4	0	04/06/93	TU-130-002 CART DRIVE MOTOR SPLASH GUARD ASSY	
40	P06B	H-2-120377	5	0	04/06/93	TU-130-002 CART DRIVE MOTOR SPLASH GUARD DET	
40	P06B	H-2-120378	1	0	04/06/93	TU-130-002 SPIDER DRIVE ASSEMBLY PARTS LIST & NOTES	
40	P06B	H-2-120378	2	0	04/06/93	TU-130-002 WELDMENT DRIVE BASE & SUB-WELDMENT	

HANFORD WASTE VITRIFICATION PLANT
COORDS LISTING OF DRAWINGS FOR PKG P06B

DISC	PACKAGE	DRAWING NUMBER	SHT NO.	REV	SIGNATURE DATE	DRAWING TITLE	REMARKS
40	P06B	H-2-120378	3	0	04/06/93	TU-130-002 SPIDER DRIVE DETAILS	
40	P06B	H-2-120378	4	0	04/06/93	TU-130-002 SPIDER DRIVE RAILS	
40	P06B	H-2-120378	5	0	04/06/93	TU-130-002 SPIDER DRIVE DETAILS	
40	P06B	H-2-120378	6	0	04/06/93	TU-130-002 SPIDER DRIVE DETAILS	
40	P06B	H-2-120378	7	0	04/06/93	TU-130-002 SPIDER DRIVE DETAILS	
40	P06B	H-2-120379	1	0	04/06/93	TU-130-002 DRAIN TURNTABLE CART ASSY, PARTS LIST AND NOTES	
40	P06B	H-2-120379	2	0	04/06/93	TU-130-002 DRAIN TURNTABLE CART TOP VIEW	
40	P06B	H-2-120379	3	0	04/06/93	TU-130-002 DRAIN TURNTABLE CART SIDE VIEW	
40	P06B	H-2-120380	1	0	04/06/93	TU-130-002 CART SPIDER DRIVE SPRT ASSEMBLY	
40	P06B	H-2-120380	2	0	04/06/93	TU-130-002 CART SPIDER DRIVE SUPPORT DETAILS	
40	P06B	H-2-120381	1	0	04/06/93	TU-130-002 CART BASE PARTS LIST & NOTES	
40	P06B	H-2-120381	2	0	04/06/93	TU-130-002 CART BASE ASSEMBLY	
40	P06B	H-2-120381	3	0	04/06/93	TU-130-002 CART BASE ASSEMBLY	
40	P06B	H-2-120381	4	0	04/06/93	TU-130-002 CART BASE ASSEMBLY	
40	P06B	H-2-120381	5	0	04/06/93	TU-130-002 CART BASE WELDMENT	
40	P06B	H-2-120381	6	0	04/06/93	TU-130-002 CART BASE WELDMENT	
40	P06B	H-2-120381	7	0	04/06/93	TU-130-002 CART BASE MACHINING	
40	P06B	H-2-120381	8	0	04/06/93	TU-130-002 CART BASE BEAM WELDMENT	
40	P06B	H-2-120381	9	0	04/06/93	TU-130-002 CART BASE BEAM WELDMENT	
40	P06B	H-2-120381	10	0	04/06/93	TU-130-002 CART BASE WELDMENT	
40	P06B	H-2-120381	11	0	04/06/93	TU-130-002 CART BASE DETAILS	
40	P06B	H-2-120381	12	0	04/06/93	TU-130-002 CART BASE SUPPORT RAILS	
40	P06B	H-2-120381	13	0	04/06/93	TU-130-002 CART BASE SUPPORT RAILS	
40	P06B	H-2-120381	14	0	04/06/93	TU-130-002 CART BASE SUPPORT RAIL DETAIL	

00/PIPING & INSTRUMENT DIAGRAMS, 05/CIVIL, 10/HVAC, 20/STRUCTURAL, 30/ARCHITECTURAL, 40/MECHANICAL, 50/PIPING, 51/FIRE PROTECTION, 60/ELECTRICAL, 70/CONTROL SYSTEMS, 90/MISCELLANEOUS

HANFORD WASTE VITRIFICATION PLANT
COORDS LISTING OF DRAWINGS FOR PKG P06B

DISC	PACKAGE	DRAWING NUMBER	SHT NO.	REV	SIGNATURE DATE	DRAWING TITLE	REMARKS
40	P06B	H-2-120381	15	0	04/06/93	TU-130-002 CART BASE DETAILS	
40	P06B	H-2-120381	16	0	04/06/93	TU-130-002 CART BASE DETAILS	
40	P06B	H-2-120381	17	0	04/06/93	TU-130-002 CART BASE DETAILS	
40	P06B	H-2-120381	18	0	04/06/93	TU-130-002 CART BASE DETAILS	
40	P06B	H-2-120381	19	0	04/06/93	TU-130-002 CART BASE DETAILS	
40	P06B	H-2-120381	20	0	04/06/93	TU-130-002 CART BASE DETAILS	
40	P06B	H-2-120381	21	0	04/06/93	TU-130-002 CART BASE DETAILS	
40	P06B	H-2-120381	22	0	04/06/93	TU-130-002 CART BASE DETAILS	
40	P06B	H-2-120381	23	0	04/06/93	TU-130-002 CART BASE WELDMENT & DETAILS	
40	P06B	H-2-120382	1	0	04/06/93	TU-130-002 CART DRIVE SUPPORT ASSEMBLY PARTS LIST & NOTES	
40	P06B	H-2-120382	2	0	04/06/93	TU-130-002 CART DRIVE SUPPORT DETAILS	
40	P06B	H-2-120382	3	0	04/06/93	TU-130-002 CART DRIVE SUPPORT DETAILS	
40	P06B	H-2-120383	1	0	04/06/93	TU-130-002 FIXED STOP ASSEMBLY PARTS LIST & NOTES	
40	P06B	H-2-120383	2	0	04/06/93	TU-130-002 FIXED STOP WELDMENT & PLUNGER ASSEMBLY	
40	P06B	H-2-120383	3	0	04/06/93	TU-130-002 FIXED STOP DETAILS	
40	P06B	H-2-120384	1	0	04/06/93	TU-130-002 LIMIT SWITCH ASSEMBLY PARTS LIST & NOTES	
40	P06B	H-2-120384	2	0	04/06/93	TU-130-002 LIMIT SWITCH ASSEMBLY PART DETAILS	
40	P06B	H-2-120384	3	0	04/06/93	TU-130-002 LIMIT SWITCH ASSEMBLY PARTS DETAILS	
40	P06B	H-2-120385	1	0	04/06/93	TU-130-002 CART DRIVE PARTS LIST & NOTES	
40	P06B	H-2-120385	2	0	04/06/93	TU-130-002 CART DRIVE ASSEMBLY	
40	P06B	H-2-120385	3	0	04/06/93	TU-130-002 CART DR SPLASH GUARD WHEEL DR RIGHT SIDE ASSY	
40	P06B	H-2-120385	4	0	04/06/93	TU-130-002 CART DR SPLASH GUARD WHEEL DR RIGHT SIDE DETS	
40	P06B	H-2-120385	5	0	04/06/93	TU-130-002 CART DR SPLASH GUARD WHEEL DR RIGHT SIDE DETS	
40	P06B	H-2-120385	6	0	04/06/93	TU-130-002 CART DR SPLASH GUARD WHEEL DR LEFT SIDE ASSY	

HANFORD WASTE VITRIFICATION PLANT
COORDS LISTING OF DRAWINGS FOR PKG P06B

DISC	PACKAGE	DRAWING NUMBER	SHT NO.	REV	SIGNATURE DATE	DRAWING TITLE	REMARKS
40	P06B	H-2-120385	7	0	04/06/93	TU-130-002 CART DR SPLASH GUARD WHEEL DR LEFT SIDE DETS	
40	P06B	H-2-120385	8	0	04/06/93	TU-130-002 CART DRIVE CLUTCH COUPLING COVER AND SUPPORT ASSY	
40	P06B	H-2-120385	9	0	04/06/93	TU-130-002 CART DRIVE CLUTCH COUPLING COVER DETAILS	
40	P06B	H-2-120385	10	0	04/06/93	TU-130-002 CART DRIVE CLUTCH COUPLING SUPPORT DETAILS	
40	P06B	H-2-120385	11	0	04/06/93	TU-130-002 CART DRIVE CLUTCH COUPLING SHAFT AND SPACER DETS	
40	P06B	H-2-120385	12	0	04/06/93	TU-130-002 CART DRIVE MODIFIED GEAR WHEEL DETAIL	
40	P06B	H-2-120386	1	0	04/06/93	TU-130-002 SPIDER DR MOT ASSY PARTS LIST & NOTES	
40	P06B	H-2-120386	2	0	04/06/93	TU-130-002 SPIDER DRIVE MOTOR WELDMENT	
40	P06B	H-2-120386	3	0	04/06/93	TU-130-002 SPIDER DRIVE MOTOR DETAILS	
40	P06B	H-2-120386	4	0	04/06/93	TU-130-002 SPIDER DRIVE MOTOR HEAT SHIELD ASSY	
40	P06B	H-2-120386	5	0	04/06/93	TU-130-002 SPIDER DRIVE MOTOR HEAT SHIELD DETAILS	
40	P06B	H-2-120386	6	0	04/06/93	TU-130-002 SPIDER DRIVE MOTOR HEAT SHIELD DETAILS	
40	P06B	H-2-120388	1	0	04/06/93	TU-130-002 CONDUIT & CABLE ASSEMBLY PARTS LIST & NOTES	
40	P06B	H-2-120388	2	0	04/06/93	TU-130-002 CONDUIT & CABLE ASSEMBLY	
40	P06B	H-2-120388	3	0	04/06/93	TU-130-002 CONDUIT & CABLE ASSEMBLY	
40	P06B	H-2-120388	4	0	04/06/93	TU-130-002 CONDUIT & CABLE ASSEMBLY DETAILS	
40	P06B	H-2-120388	5	0	04/06/93	TU-130-002 CONDUIT & CABLE ASSEMBLY DETAILS	
40	P06B	H-2-120388	6	0	04/06/93	TU-130-002 CONDUIT & CABLE ASSEMBLY DETAILS	
40	P06B	H-2-120388	7	0	04/06/93	TU-130-002 CONDUIT & CABLE ASSEMBLY DETAILS	
40	P06B	H-2-120390	1	0	04/06/93	TU-130-002 SUPPORT BRACKET WELDMENT PARTS LIST & NOTES	
40	P06B	H-2-120390	2	0	04/06/93	TU-130-002 LIMIT SWITCH SUPPORT DETAILS	
40	P06B	H-2-120392	1	0	04/06/93	TU-130-002 EMERGENCY PULL BAR ASSEMBLY	
40	P06B	H-2-120392	2	0	04/06/93	TU-130-002 EMERGENCY PULL BAR WELDMENT	
40	P06B	H-2-120392	3	0	04/06/93	TU-130-002 EMERGENCY PULL BAR DETAILS	

00/PIPING & INSTRUMENT DIAGRAMS, 05/CIVIL, 10/HVAC, 20/STRUCTURAL, 30/ARCHITECTURAL, 40/MECHANICAL, 50/PIPING, 51/FIRE PROTECTION, 60/ELECTRICAL, 70/CONTROL SYSTEMS, 90/MISCELLANEOUS

9514436.0776

HANFORD WASTE VITRIFICATION PLANT
COORDS LISTING OF DRAWINGS FOR PKG P06B

DISC	PACKAGE	DRAWING NUMBER	SHT NO.	REV	SIGNATURE DATE	DRAWING TITLE	REMARKS
40	P06B	H-2-120392	4	0	04/06/93	TU-130-002 EMERGENCY PULL BAR LIFTING LOOP	
40	P06B	H-2-120421	1	0	04/06/93	TU-130-001/002 CART DRIVE COUPLING ASSY PARTS LIST & NOTES	
40	P06B	H-2-120421	2	0	04/06/93	TU-130-001 TU-130-002 COUPLING ASSEMBLY & DETAILS	
40	P06B	H-2-120421	3	0	04/06/93	TU-130-001 TU-130-002 CART DRIVE COUPLING DETAILS	
40	P06B	H-2-120422	1	0	04/06/93	TU-130-001/002 EMERGENCY PULL ROPE ASSY PARTS LIST & NOTES	
40	P06B	H-2-120422	2	0	04/06/93	TU-130-001 TU-130-002 EMERGENCY PULL ROPE DETAIL	
40	P06B	H-2-120422	3	0	04/06/93	TU-130-001 TU-130-002 EMERGENCY PULL ROPE DETAILS	
40	P06B	H-2-120423	1	0	04/06/93	TU-130-001/002 DOLLY PSNG GUIDE ASSEMBLY PARTS LIST & NOTES	
40	P06B	H-2-120424	1	0	04/06/93	TU-130-001/002 STRUCTURAL TBG WELDMENT PARTS LIST & NOTES	
40	P06B	H-2-120425	1	0	04/06/93	TU-130-001/002 SPIDER DRIVE COUPLING ASSY PARTS LIST & NOTES	
40	P06B	H-2-120425	2	0	04/06/93	TU-130-001 TU-130-002 SPIDER DRIVE COUPLING DETAILS	
40	P06B	H-2-120425	3	0	04/06/93	TU-130-001 TU-130-002 SPIDER DRIVE COUPLING DETAILS	
40	P06B	H-2-120426	1	0	04/06/93	TU-130-001/002 DOLLY WHEEL ASSEMBLIES PARTS LIST & NOTES	
40	P06B	H-2-120426	2	0	04/06/93	TU-130-001 TU-130-002 DOLLY WHEEL DETAILS	
40	P06B	H-2-120426	3	0	04/06/93	TU-130-001 TU-130-002 DOLLY WHEEL DETAILS	
40	P06B	H-2-120427	1	0	04/06/93	TU-130-001 TU-130-002 CANISTER CENTERING GUIDE ASSEMBLY	
40	P06B	H-2-120427	2	0	04/06/93	TU-130-001 TU-130-002 CANISTER CENTERING GUIDE ASSEMBLY	
40	P06B	H-2-120427	3	0	04/06/93	TU-130-001 TU-130-002 CANISTER CENTERING GUIDE DETAILS	
40	P06B	H-2-120427	4	0	04/06/93	TU-130-001 TU-130-002 CANISTER CENTERING GUIDE DETAILS	
40	P06B	H-2-120428	1	0	04/06/93	TU-130-001 TU-130-002 SCALE PLATFORM ASSEMBLY	
40	P06B	H-2-120428	2	0	04/06/93	TU-130-001 TU-130-002 SCALE PLATFORM WELDMENT	
40	P06B	H-2-120428	3	0	04/06/93	TU-130-001 TU-130-002 SCALE PLATFORM RAILS	
40	P06B	H-2-120428	4	0	04/06/93	TU-130-001 TU-130-002 SCALE PLATFORM DETAILS	
40	P06B	H-2-120429	1	0	04/06/93	TU-130-001 TU-130-002 SCALE ASSEMBLY	

00/PIPING & INSTRUMENT DIAGRAMS, 05/CIVIL, 10/HVAC, 20/STRUCTURAL, 30/ARCHITECTURAL, 40/MECHANICAL, 50/PIPING, 51/FIRE PROTECTION, 60/ELECTRICAL, 70/CONTROL SYSTEMS, 90/MISCELLANEOUS

9513336.0777

HANFORD WASTE VITRIFICATION PLANT
COORDS LISTING OF DRAWINGS FOR PKG P06B

DISC	PACKAGE	DRAWING NUMBER	SHT NO.	REV	SIGNATURE DATE	DRAWING TITLE	REMARKS
40	P06B	H-2-120429	2	0	04/06/93	TU-130-001 TU-130-002 SCALE ASSEMBLY	
40	P06B	H-2-120429	3	0	04/06/93	TU-130-001 TU-130-002 SCALE ASSEMBLY BASE WELDMENT	
40	P06B	H-2-120429	4	0	04/06/93	TU-130-001 TU-130-002 SCALE ASSEMBLY BASE WELDMENT	
40	P06B	H-2-120429	5	0	04/06/93	TU-130-001 TU-130-002 SCALE ASSEMBLY BASE WELDMENT	
40	P06B	H-2-120429	6	0	04/06/93	TU-130-001 TU-130-002 SCALE ASSEMBLY BASE WELDMENT	
40	P06B	H-2-120429	7	0	04/06/93	TU-130-001 TU-130-002 SCALE ASSEMBLY BASE WELDMENT	
40	P06B	H-2-120429	8	0	04/06/93	TU-130-001 TU-130-002 SCALE ASSEMBLY DETAILS	
40	P06B	H-2-120429	9	0	04/06/93	TU-130-001 TU-130-002 SCALE ASSEMBLY DETAILS	
40	P06B	H-2-120429	10	0	04/06/93	TU-130-001 TU-130-002 SCALE ASSEMBLY DETAILS	
40	P06B	H-2-120429	11	0	04/06/93	TU-130-001 TU-130-002 SCALE ASSEMBLY DETAILS	
40	P06B	H-2-120430	1	0	04/06/93	TU-130-001 TU-130-002 LOAD CELL PARTS LIST & NOTES	
40	P06B	H-2-120430	2	0	04/06/93	TU-130-001 TU-130-002 LOAD CELL BASE WELDMENT	
40	P06B	H-2-120430	3	0	04/06/93	TU-130-001 TU-130-002 LOAD CELL DETAILS	
40	P06B	H-2-120450	1	0	04/06/93	TU-130-001/002 ENCLOSURE ASSEMBLIES PARTS LIST & NOTES	
40	P06B	H-2-120450	2	0	04/06/93	TU-130-001 TU-130-002 ENCLOSURE ASSEMBLIES	
40	P06B	H-2-120451	1	0	04/06/93	TU-130-001/002 FLEXIBLE METAL HOSE ASSY PARTS LIST & NOTES	
40	P06B	H-2-120452	1	0	04/06/93	TU-130-001 SUPPORT STRUCTURE ASSEMBLY	
40	P06B	H-2-120452	2	0	04/06/93	TU-130-001 SUPPORT STRUCTURE DETAILS	
40	P06B	H-2-120452	3	0	04/06/93	TU-130-001 SUPPORT STRUCTURE DETAILS	
40	P06B	H-2-120452	4	0	04/06/93	TU-130-001 SUPPORT STRUCTURE DETAILS	
40	P06B	H-2-120460	1	0	04/06/93	TU-130-001 PTT DIMENSIONAL RECORD DRAWING	
40	P06B	H-2-120460	2	0	04/06/93	TU-130-001 PTT DIMENSIONAL RECORD DRAWING	
40	P06B	H-2-120460	3	0	04/06/93	TU-130-001 PTT DIMENSIONAL RECORD DRAWING	
40	P06B	H-2-120550	1	0	04/06/93	RA-130-009/010 TRACK & CATCH PAN ASSEMBLY PARTS LIST & NOTES	

00/PIPING & INSTRUMENT DIAGRAMS, 05/CIVIL, 10/HVAC, 20/STRUCTURAL, 30/ARCHITECTURAL, 40/MECHANICAL, 50/PIPING, 51/FIRE PROTECTION, 60/ELECTRICAL, 70/CONTROL SYSTEMS, 90/MISCELLANEOUS

9513336.0778

HANFORD WASTE VITRIFICATION PLANT
COORDS LISTING OF DRAWINGS FOR PKG P06B

DISC	PACKAGE	DRAWING NUMBER	SHT NO.	REV	SIGNATURE DATE	DRAWING TITLE	REMARKS
40	P06B	H-2-120550	2	0	04/06/93	RA-130-009/010 TRACK & CATCH PAN DETAILS	
40	P06B	H-2-120550	3	0	04/06/93	RA-130-009/010 TRACK & CATCH PAN RAIL DETAILS	
40	P06B	H-2-120550	4	0	04/06/93	RA-130-009/010 TRACK & CATCH PAN RAIL DETAILS	
40	P06B	H-2-120550	5	0	04/06/93	RA-130-009/010 TRACK & CATCH PAN DETAILS	
40	P06B	H-2-120550	6	0	04/06/93	RA-130-009/010 TRACK & CATCH PAN DETAILS	
40	P06B	H-2-120552	1	0	04/06/93	RA-130-009/010 TRUNNION CAP ASSEMBLY PARTS LIST & NOTES	
40	P06B	H-2-120552	2	0	04/06/93	RA-130-009/010 TRUNNION CAP DETAILS	
40	P06B	H-2-120553	1	0	04/06/93	RA-130-010 SOUTH TRACK & CATCH PAN ASSY PARTS LIST & NOTES	
40	P06B	H-2-120553	2	0	04/06/93	RA-130-010 SOUTH TRACK & CATCH PAN ASSEMBLY	
40	P06B	H-2-120553	3	0	04/06/93	RA-130-010 SOUTH TRACK & CATCH PAN ASSEMBLY	
40	P06B	H-2-120553	4	0	04/06/93	RA-130-010 SOUTH TRACK & CATCH PAN ASSEMBLY	
40	P06B	H-2-120553	5	0	04/06/93	RA-130-010 SOUTH TRACK & CATCH PAN DETAILS	
40	P06B	H-2-120553	6	0	04/06/93	RA-130-010 SOUTH TRACK & CATCH PAN DETAILS	
40	P06B	H-2-120553	7	0	04/06/93	RA-130-010 SOUTH TRACK & CATCH PAN STRUCTURAL TUBING DETAILS	
40	P06B	H-2-120554	1	0	04/06/93	RA-130-009 NORTH TRACK & CATCH PAN PARTS LIST & NOTES	
40	P06B	H-2-120554	2	0	04/06/93	RA-130-009 NORTH TRACK & CATCH PAN ASSEMBLY	
40	P06B	H-2-120554	3	0	04/06/93	RA-130-009 NORTH TRACK & CATCH PAN ASSEMBLY	
40	P06B	H-2-120554	4	0	04/06/93	RA-130-009 NORTH TRACK & CATCH PAN ASSEMBLY	
40	P06B	H-2-120554	5	0	04/06/93	RA-130-009 NORTH TRACK & CATCH PAN DETAILS	
40	P06B	H-2-120554	6	0	04/06/93	RA-130-009 NORTH TRACK & CATCH PAN DETAILS	
40	P06B	H-2-120554	7	0	04/06/93	RA-130-009 NORTH TRACK & CATCH PAN DETAILS	
40	P06B	H-2-120555	1	0	04/06/93	RA-130-010 SOUTH TRACK & CATCH PAN DIMENSIONAL RECORD DWG	
40	P06B	H-2-120555	2	0	04/06/93	RA-130-009 NORTH TRACK & CATCH PAN DIMENSIONAL RECORD DWG	
40	P06B	H-2-120562	1	0	04/06/93	RA-130-007 POWER CABLE REELS PARTS LIST AND NOTES	

00/PIPING & INSTRUMENT DIAGRAMS, 05/CIVIL, 10/HVAC, 20/STRUCTURAL, 30/ARCHITECTURAL, 40/MECHANICAL, 50/PIPING, 51/FIRE PROTECTION, 60/ELECTRICAL, 70/CONTROL SYSTEMS, 90/MISCELLANEOUS

9513336.0779

HANFORD WASTE VITRIFICATION PLANT
COORDS LISTING OF DRAWINGS FOR PKG P06B

DISC	PACKAGE	DRAWING NUMBER	SHT NO.	REV	SIGNATURE DATE	DRAWING TITLE	REMARKS
40	P06B	H-2-120562	2	0	04/06/93	RA-130-007 POWER CABLE REEL ASSEMBLY	
40	P06B	H-2-120562	3	0	04/06/93	RA-130-007 POWER CABLE REEL FRAME ASSEMBLY	
40	P06B	H-2-120562	4	0	04/06/93	RA-130-007 POWER CABLE REEL CONNECTOR FOLDING BAIL WELDMENT	
40	P06B	H-2-120562	5	0	04/06/93	RA-130-007 POWER CABLE REEL DETAILS REMOVABLE LEG ASSEMBLY	
40	P06B	H-2-120563	1	0	04/06/93	RA-130-005 POWER CABLE REEL ASSY PARTS LIST AND NOTES	
40	P06B	H-2-120563	2	0	04/06/93	RA-130-005 POWER CABLE REEL ASSEMBLY	
40	P06B	H-2-120563	3	0	04/06/93	RA-130-005 POWER CABLE REEL FRAME ASSEMBLY	
40	P06B	H-2-120563	4	0	04/06/93	RA-130-005 POWER CABLE REEL REMOVABLE LEG ASSEMBLY DETAILS	
40	P06B	H-2-120563	5	0	04/06/93	RA-130-005 POWER CABLE REEL DETAILS	
40	P06B	H-2-120564	1	0	04/06/93	RA-130-006 INSTRUMENTATION CABLE REEL ASSY PART LIST & NOTES	
40	P06B	H-2-120564	2	0	04/06/93	RA-130-006 INSTRUMENTATION CABLE REEL ASSEMBLY	
40	P06B	H-2-120564	3	0	04/06/93	RA-130-006 INSTRUMENTATION CABLE REEL FRAME ASSEMBLY	
40	P06B	H-2-120564	4	0	04/06/93	RA-130-006 INSTRUMENTATION CABLE REEL FRAME WELDMENT	
40	P06B	H-2-120564	5	0	04/06/93	RA-130-006 INSTRUMENTATION CABLE REEL CABLE GUIDE ASSEMBLY	
40	P06B	H-2-120564	6	0	04/06/93	RA-130-006 INSTRUMENTATION CABLE REEL DETAILS	
40	P06B	H-2-120565	1	0	04/06/93	RA-130-008 CABLE REELS SUPPORT FRAME PARTS LIST & NOTES	
40	P06B	H-2-120565	2	0	04/06/93	RA-130-008 CABLE REELS SUPPORT FRAME WELDMENT	
40	P06B	H-2-120565	3	0	04/06/93	RA-130-008 CABLE REELS SUPPORT LOWER FRAME WELDMENT	
40	P06B	H-2-120565	4	0	04/06/93	RA-130-008 CABLE REELS SUPPORT FRAME DETAILS & WELDMENTS	
40	P06B	H-2-120565	5	0	04/06/93	RA-130-008 CABLE REELS SUPPORT FRAME LIFTING LUG WELDMENTS	
40	P06B	H-2-120565	6	0	04/06/93	RA-130-008 CABLE REELS SUPPORT FRAME LEFT LIFTING LUG DETS	
40	P06B	H-2-120565	7	0	04/06/93	RA-130-008 CABLE REELS SUPPORT FRAME RIGHT LIFTING LUG DETS	
40	P06B	H-2-120565	8	0	04/06/93	RA-130-008 CABLE REELS SUPPORT FRAME BRIDGE WELDMENT	
40	P06B	H-2-120568	1	0	04/06/93	MECHANICAL CONNECTOR HOUSING ASSEMBLY	

00/PIPING & INSTRUMENT DIAGRAMS, 05/CIVIL, 10/HVAC, 20/STRUCTURAL, 30/ARCHITECTURAL, 40/MECHANICAL, 50/PIPING, 51/FIRE PROTECTION, 60/ELECTRICAL, 70/CONTROL SYSTEMS, 90/MISCELLANEOUS

9513336.0780

HANFORD WASTE VITRIFICATION PLANT
COORDS LISTING OF DRAWINGS FOR PKG P06B

DISC	PACKAGE	DRAWING NUMBER	SHT NO.	REV	SIGNATURE DATE	DRAWING TITLE	REMARKS
60	P06B	H-2-122425	1	0	04/06/93	ELECTRICAL GENERAL NOTES AND SYMBOLS	
60	P06B	H-2-122426	1	0	04/06/93	ELECTRICAL POUR & DRAIN TURNTABLES BLOCK DIAGRAM	
60	P06B	H-2-122427	1	0	04/06/93	ELECTRICAL CONNECTION DIAGRAM TU-130-002	
60	P06B	H-2-122427	2	0	04/06/93	ELECTRICAL CONNECTION DIAGRAM TU-130-002	
60	P06B	H-2-122427	3	0	04/06/93	ELECTRICAL CONNECTION DIAGRAM TU-130-001	
60	P06B	H-2-122427	4	0	04/06/93	ELECTRICAL CONNECTION DIAGRAM TU-130-001	
70	P06B	H-2-121701	1	0	04/06/93	LP-130-001, 006 INSTRUMENT PANEL LAYOUT	
70	P06B	H-2-121702	1	0	04/06/93	LP-130-002, 007 INSTRUMENT PANEL LAYOUT	
70	P06B	H-2-121796	1	0	04/06/93	INSTRUMENT CONTROL LOGIC DIAGRAM LP-130-001,002,006 & 007	
70	P06B	H-2-121796	2	0	04/06/93	INSTRUMENT CONTROL LOGIC DIAGRAM LP-130-001,002,006 & 007	
70	P06B	H-2-121796	3	0	04/06/93	INSTRUMENT CONTROL LOGIC DIAGRAM LP-130-001,002,006 & 007	
70	P06B	H-2-121796	4	0	04/06/93	INSTRUMENT CONTROL LOGIC DIAGRAM LP-130-001,002,006 & 007	
70	P06B	H-2-121796	5	0	04/06/93	INSTRUMENT CONTROL LOGIC DIAGRAM LP-130-001,002,006 & 007	
70	P06B	H-2-121796	6	0	04/06/93	INSTRUMENT CONTROL LOGIC DIAGRAM LP-130-001,002,006 & 007	
70	P06B	H-2-121796	7	0	04/06/93	INSTRUMENT CONTROL LOGIC DIAGRAM LP-130-001,002,006 & 007	

TOTAL: 351

Records printed: 351

9513336.0782

MELTER POUR AND DRAIN TURNTABLE

B-595-P-P06B

SPECIFICATIONS

HANFORD WASTE VITRIFICATION PLANT

U.S. DEPARTMENT OF ENERGY
RICHLAND OPERATIONS OFFICE

FLUOR DANIEL
ADVANCED TECHNOLOGY DIVISION
CONTRACT 8457

DOE CONTRACT NO.
DE-AC06-86RL10838

9513336.0783

U.S. DEPARTMENT OF ENERGY
Hanford Waste Vitrification Plant
Richland, Washington
DOE Contract DE-AC06-86RL10838

FLUOR DANIEL, INC.
Advanced Technology Division
Fluor Contract 8457

MELTER POUR AND DRAIN TURNTABLE

SPECIFICATION B-595-P-P06B

APPROVED FOR CONSTRUCTION

REVISION 0

ISSUE DATE 4-6-93

APPROVED BY:

J. M. Janzen	Project Package Engineer	Date 3/31/93
H. L. Robertson	Area Project Manager	Date 3/31/93
P. J. Speidel	Engineering Project Manager	Date 3/31/93
J. L. Smets	Systems Manager	Date 4/1/93
A. K. Yee (Maurice J. Higuera for AKY)	Independent Safety Manager	Date 4/1/93
J. G. Kelley	Quality Assurance Manager	Date 4/1/93
R. S. Poulter	Project Director	Date 4/1/93

APR 7 1993

03/22/93 4:31pm
106\VOL5...\SPECS\P06B.0

MELTER POUR AND DRAIN TURNTABLE
B-595-P-P06B

TABLE OF CONTENTS
TECHNICAL SPECIFICATIONS

DIVISION 1 - GENERAL REQUIREMENTS

Section	Title	Rev. No.
01730	Operation and Maintenance Data	0

DIVISION 5 - CONCRETE

Section	Title	
05060	Welding Structural	0

DIVISION 13 - SPECIAL CONSTRUCTION

Section	Title	
13252	Precautions for Fabrication, Handling and Storage of Stainless Steel and Nickel Alloys	0

DIVISION 14 - CONVEYING SYSTEMS

Section	Title	
14601	Pour Turntable	0
14602	Drain Turntable	0
14603	Cable Reel Assembly	0
14604	Track and Catch Pan Assembly	0

DIVISION 15 - MECHANICAL

Section	Title	
15196	Identification and Tagging Methods for Mechanical Equipment	0

DIVISION 16 - ELECTRICAL

Section	Title	
16120	Soldering - Electrical	0
16151	Motors-Induction for Radioactive Service	0
16610	Electrical Requirements for Packaged Equipment	0

DIVISION 17 - INSTRUMENTATION AND CONTROLS

Section	Title	
17857	Local Control Panels for Pour and Drain Turntables	0
17886	Instruments Furnished with Mechanical Equipment Load Cell Signal Conditioner Pour and Drain Turntables	0
17908	Instruments Furnished with Mechanical Equipment Pour and Drain Turntables	0

9513336.0786

U.S. DEPARTMENT OF ENERGY
Hanford Waste Vitrification Plant
Richland, Washington
DOE Contract DE-AC06-86RL10838

FLUOR DANIEL, INC.
Advanced Technology Division
Fluor Contract 8457

SECTION 01730
OPERATION AND MAINTENANCE DATA
B-595-P-P06B-01730

APPROVED FOR CONSTRUCTION

REVISION 0
ISSUE DATE 4-6-93

WAPA YES ___ NO X
QUALITY LEVEL I ___ II X
SAFETY CLASS 1__ 2__ 3 X 4_

ORIGINATOR(S):

James D. Lowen, jr. for 29 Mar 93
J. Morey, Spec. Writer (Date)

CHECKER(S):

D. A. Buzzelli 3-29-93
D. A. Buzzelli, Lead Disc. Checker (Date)

APPROVED BY:

C J Divona 3/29/93
C. J. Divona Lead Discipline Engineer (Date)

3/29/93 12:35pm
106\VOL5...\SPECS\P06B\01730-0.

SECTION 01730
OPERATION AND MAINTENANCE DATA
B-595-P-P06B-01730

TABLE OF CONTENTS

PART		PAGE
PART 1	GENERAL	1
1.1	SUBMISSION OF OPERATION AND MAINTENANCE DATA	1
1.2	TYPES OF INFORMATION REQUIRED IN O&M DATA PACKAGES	1
1.3	SCHEDULE OF OPERATION AND MAINTENANCE DATA PACKAGES	5
PART 2	PRODUCTS	5
PART 3	EXECUTION	6

SECTION 01730
OPERATION AND MAINTENANCE DATA

PART 1 GENERAL

1.1 SUBMISSION OF OPERATION AND MAINTENANCE DATA

Submit operation and maintenance (O&M) data which is specifically applicable to this contract and a complete and concise depiction of the provided equipment or product. Data containing extraneous information to be sorted through to find applicable instructions will not be accepted. Present information in sufficient detail to clearly explain user O&M requirements at the system, equipment, component, and subassembly level. Include an index preceding each submittal. Submit the following in accordance with the Vendor Drawing and Data Requirements section of the Order/ Subcontract.

1.1.1 Package Content

For each product, system, or piece of equipment requiring submission of O&M data, submit the package required in the individual technical section. Package content shall be as required in the Paragraph 1.3, "Schedule of Operations and Maintenance Data Packages."

1.2 TYPES OF INFORMATION REQUIRED IN O&M DATA PACKAGES

1.2.1 Operating Instructions

Include specific instructions, procedures, and illustrations for the following phases of operation:

1.2.1.1 Safety Precautions

List personnel hazards and equipment or product safety precautions for all operating conditions.

1.2.1.2 Operator Prestart

Include requirements to set up and prepare each system for use.

1.2.1.3 Start-Up, Shutdown, and Post-Shutdown Procedures

Include a control sequence for each of these operations.

1.2.1.4 Normal Operations

Include control diagrams with data to explain operation and control of systems and specific equipment.

1.2.1.5 Emergency Operations

Include emergency procedures for equipment malfunctions to permit a short period of continued operation or to shut down the equipment to prevent further damage to systems and equipment. Include emergency shutdown instructions for fire, explosion, spills, or other foreseeable contingencies. Provide guidance on emergency operations of all utility systems including valve locations and portions of systems controlled.

1.2.1.6 Operator Service Requirements

Include instructions for services to be performed by the operator such as lubrication, adjustments, and inspection.

1.2.1.7 Environmental Conditions

Include a list of environmental conditions (temperature, humidity and other relevant data) which are best suited for each product or piece of equipment and describe conditions under which equipment should not be allowed to run.

1.2.2 Preventive Maintenance

Include the following information for preventive and scheduled maintenance to minimize corrective maintenance and repair.

1.2.2.1 Lubrication Data

Include lubrication data, other than instructions for lubrication in accordance with Paragraph 1.2.1.6, Operator Service Requirements.

1.2.2.2 Preventive Maintenance Plan and Schedule

Include manufacturer's schedule for routine preventive maintenance, inspections, tests and adjustments required to ensure proper and economical operation and to minimize corrective maintenance and repair. Provide manufacturer's projection of preventive maintenance man-hours on a daily, weekly, monthly, and annual basis.

1.2.3 Corrective Maintenance

Include manufacturer's recommendations on procedures and instructions for correcting problems and making repairs.

1.2.3.1 Troubleshooting Guides and Diagnostic Techniques

Include step-by-step procedures to promptly isolate the cause of typical malfunctions. Describe clearly why the checkout is

performed and what conditions are to be sought. Identify tests or inspections and test equipment required to determine whether parts and equipment may be reused or require replacement.

1.2.3.2 Wiring Diagrams and Control Diagrams

Wiring diagrams and control diagrams shall be point-to-point drawings of wiring and control circuits including factory-field interfaces. Provide a complete and accurate depiction of the actual job specific wiring and control work. On diagrams number electrical and electronic wiring and pneumatic control tubing and the terminals for each type, identically to actual installation numbering.

1.2.3.3 Maintenance and Repair Procedures

Include instructions and list tools required to restore product or equipment to proper condition or operating standards.

1.2.3.4 Removal and Replacement Instructions

Include step-by-step procedures and list required tools and supplies for removal, replacement, disassembly, and assembly of components, assemblies, subassemblies, accessories, and attachments. Provide tolerances, dimensions, settings and adjustments required. Instructions shall include a combination of text and illustrations.

1.2.3.5 Spare Parts and Supply Lists

Include lists of spare parts and supplies required for maintenance and repair to ensure continued service or operation without unreasonable delays.

1.2.3.6 Corrective Maintenance Man-Hours

Include manufacturer's projection of corrective maintenance man-hours. Corrective maintenance that requires participation of the equipment manufacturer shall be identified and tabulated separately.

1.2.4 Appendices

Provide information specified in the preceding paragraphs pertinent to the maintenance or operation of the product or equipment. Include the following:

1.2.4.1 Parts Identification

Provide identification and coverage for all parts of each component, assembly, subassembly, and accessory of the end items

subject to replacement. Include special hardware requirements, such as requirement to use high-strength bolts and nuts. Identify parts by make, model, serial number, and source of supply to allow reordering without further identification. Provide clear and legible illustrations, drawings, and exploded views to enable easy identification of the items. When illustrations omit the part numbers and description, both the illustrations and separate listing shall show the index, reference, or key number which will cross-reference the illustrated part to the listed part. Parts shown in the listings shall be grouped by components, assemblies, and subassemblies.

A. Manufacturer's Standard Commercial Practice: The parts data may cover more than one model or series of equipment, components, assemblies, subassemblies, attachments, or accessories, such as a master parts catalog, in accordance with the manufacturer's standard commercial practice.

B. Other than Manufacturer's Standard Commercial Practice (MSCP): End item manufacturer may add a cross-reference to implement components' assemblies and parts requirements when implementation in manual form varies significantly from the style, format, and method of manufacturer's standard commercial practice. Use the format in the following example:

End Item Manufacturer's Alphanumeric Sequence	Actual Manufacturer's Name and MSCP	Actual Manufacturer Part No.
100001	John Doe & Co. 00000	2000002

1.2.4.2 Warranty Information

List and explain the various warranties and include the servicing and technical precautions prescribed by the manufacturers or contract documents to keep warranties in force.

1.2.4.3 Personnel Training Requirements

Provide information available from the manufacturers to use in training designated personnel to operate and maintain the equipment and systems properly.

1.2.4.4 Testing Equipment and Special Tool Information

Include information on test equipment required to perform specified tests and on special tools needed for the operation, maintenance, and repair of components.

1.3 **SCHEDULE OF OPERATION AND MAINTENANCE DATA PACKAGES**

Furnish the O&M data packages specified in individual technical sections. The required information for each O&M data package is as follows:

1.3.1 Data Package

A. Operating instructions

B. Safety precautions

C. Operation prestart

D. Start-up, shutdown, and post shutdown

E. Normal operations

F. Emergency operations

G. Operator Service Requirements

H. Environmental conditions

I. Preventative maintenance

J. Lubrication data

K. Preventive maintenance plan and schedule

L. Corrective maintenance

M. Troubleshooting guides and diagnostic techniques

N. Wiring diagrams and control diagrams

O. Maintenance and repair procedures and man-hour requirements

P. Removal and replacement instructions

Q. Spare parts and supply list

R. Parts identification

S. Warranty information

T. Personnel training requirements

U. Testing equipment and special tool information

PART 2 PRODUCTS

(Not Used)

PART 3 EXECUTION

(Not Used)

END OF SECTION

U.S. DEPARTMENT OF ENERGY
Hanford Waste Vitrification Plant
Richland, Washington
DOE Contract DE-AC06-86RL10838

FLUOR DANIEL, INC.
Advanced Technology Division
Fluor Contract 8457

SECTION 05060
WELDING STRUCTURAL
B-595-P-P06B-05060

APPROVED FOR CONSTRUCTION

REVISION 0
ISSUE DATE 4-6-93

WAPA YES ___ NO X
QUALITY LEVEL I ___ II X
SAFETY CLASS 1__ 2__ 3X 4__

ORIGINATOR:

Andrew Estrada 3/29/93
A. Estrada, Welding Engineer Date

CHECKER:

Dale A. Buzzelli 3-29-93
D. A. Buzzelli, Lead Disc. Checker Date

APPROVED BY:

C J Divona
C. J. Divona Lead Discipline Engineer

3-29-93
Date

SECTION 05060
WELDING STRUCTURAL
B-595-P-P06B-05060

TABLE OF CONTENTS

PART		PAGE
PART 1	**GENERAL**	1
1.1	SUMMARY	1
1.2	REFERENCES	1
1.3	RELATED REQUIREMENTS	1
1.4	DEFINITIONS	2
1.5	SYSTEMS DESCRIPTION	2
1.6	SUBMITTALS	2
1.7	CLASSIFICATION OF SYSTEMS AND COMPONENTS	2
1.8	PROJECT OR SITE ENVIRONMENTAL CONDITIONS	3
PART 2	**PRODUCTS**	3
2.1	MATERIALS AND EQUIPMENT	3
2.2	FABRICATION AND MANUFACTURE	4
PART 3	**EXECUTION**	5
3.1	PREPARATION	5
3.2	INSTALLATION, APPLICATION AND ERECTION	6
3.3	FIELD QUALITY CONTROL	8
3.4	ADJUSTMENTS	8
3.5	CLEANING	8
3.6	PROTECTION	8
3.7	DEMONSTRATION	8
3.8	SCHEDULES	8

ATTACHMENTS

ATTACHMENT	TITLE
A	WELD MAP
B	WELDING PROCEDURE SUMMARY

SECTION 05060
WELDING STRUCTURAL

PART 1 GENERAL

1.1 SUMMARY

This specification section defines the welding, examination and testing requirements for shop fabrication of pour and drain turntables. The materials of construction shall be stainless steel structural shapes, tubular components and plates.

1.2 REFERENCES

The publications listed below form a part of this specification section to the extent referenced. The publications are referred to in the text by the basic designation only.

AMERICAN SOCIETY OF MECHANICAL ENGINEERS (ASME)
Boiler and Pressure Vessel Code

ASME Section V	1989 Nondestructive Examination
ASME Section IX	1989 Welding and Brazing Qualifications

AMERICAN SOCIETY OF NONDESTRUCTIVE TESTING (ASNT)

ASNT SNT-TC-1A	1988 Recommended Practice - Personnel Qualifications and Certification in Nondestructive Testing

AMERICAN WELDING SOCIETY (AWS)

AWS D1.1	1990 Structural Welding Code
AWS D9.1	1990 Sheet Metal Welding Code

1.3 RELATED REQUIREMENTS

Specification Section 13252	Precautions for the Fabrication, Handling and Storage of Stainless Steel and Nickel Alloys
Specification Section 14601	Pour Turntable
Specification Section 14602	Drain Turntable

1.4 **DEFINITIONS**

CMTR - Certified Material Test Report

NDE - Nondestructive Examination

PT - Liquid Penetrant Examination

1.5 **SYSTEMS DESCRIPTION**

(Not Used)

1.6 **SUBMITTALS**

Submit the following in accordance with the Vendor Drawing and Data Requirements section of the Order/Subcontract.

1.6.1 Welding Procedure Specifications and Procedure Qualification Records shall be submitted for Buyer approval. This requirement shall also pertain to purchased items contracted by Seller. They shall be in accordance both with the requirements of AWS D1.1 or ASME Section IX and this specification section. Seller shall review the contractor's procedures to verify their conformance to the requirements of this specification section.

1.6.2 Welder Performance Qualifications shall be submitted for information. This requirement shall also pertain to purchased items contracted by Seller. They shall be in accordance both with AWS D1.1 or ASME Section IX and this specification section.

1.6.3 Certified Material Test Reports (CMTRs) for filler metal shall be submitted for Buyer review.

1.6.4 Weld repair procedures shall be submitted for Buyer approval.

1.6.5 Final weld examination and inspection reports shall be submitted for Buyer review. These shall include visual nondestructive examination (NDE) reports.

1.6.6 Contract Drawing, weld map and weld summary sheet shall be submitted for Buyer approval. They shall specifically identify each weld joint and procedure to be used. A sample form of the weld map and weld procedure summary sheet can be found in Attachments A and B.

1.7 **CLASSIFICATION OF SYSTEMS AND COMPONENTS**

(Not Used)

1.8 **PROJECT OR SITE ENVIRONMENTAL CONDITIONS**

(Not Used)

PART 2 PRODUCTS

2.1 **MATERIALS AND EQUIPMENT**

2.1.1 Weld filler materials shall be in accordance with AWS D9.1.

2.1.2 Weld filler materials shall be used so that the principal elements in the deposited weld metal shall be of the same nominal composition as the base metal (Example: for stainless steel 304L, use AWS classification E/ER 308L filler material).

2.1.3 Solid wires for automatic welding processes shall contain the principal alloying elements required for the deposited weld metal. Welds deposited by the submerged arc process shall not derive any principal alloying elements from the flux. Alloy flux is not permitted.

2.1.4 Fluxes that the flux manufacturer recommends for single-pass shall not be used for multiple-pass welds.

2.1.5 Submerged arc welding shall be performed using the same name brand flux and the same name brand of AWS classification wire as used for the procedure qualifications.

2.1.6 Storage and handling of electrodes, fluxes and other welding material after shipping containers are opened shall be in accordance with Seller's filler materials control procedure. This procedure shall follow the guidelines of the appropriate AWS specification and the filler metal manufacturer's recommendations.

2.1.7 Tack welds shall be made with the equivalent type of filler wire that is used for the root pass.

2.1.8 Temporary backup rings or strips, when required on the Contract Drawings, shall be of the same nominal composition as the base material. They shall be in accordance with Paragraph 3.1.3.

2.1.9 For dissimilar joints in base material consisting of carbon steel on one side and austenitic stainless steel on the other, the filler metal shall be AWS classification E/ER 309L.

2.2 FABRICATION AND MANUFACTURE

2.2.1 General Requirements

2.2.1.1 Fabrication to this specification section shall be in accordance with the requirements of AWS D1.1, Section 8. Conformance to this specification section and authorization of Welding Procedure Specifications and Procedure Qualification Records shall in no way relieve Seller of the responsibility to provide welds which are sound and suited to the services for which they are intended.

2.2.1.2 Cleanliness shall be maintained during welding. All stubs, rods, flux, slag and other foreign material shall be removed from the weld area.

2.2.1.3 All arc strikes, weld spatter, burrs, etc. shall be ground to a smooth contour.

2.2.1.4 Fabrication aids, temporary supporting lugs, etc. that are removed by gouging or cutting shall not be cut closer than 1/8 inch from surface. The remaining material shall then be ground flush with the base metal. The ground area shall be inspected for possible cracks or porosity by liquid penetrant examination. Liquid penetrant examination shall be in accordance with Paragraph 3.2.6.3.

2.2.1.5 Each welder shall be assigned an identification number, letter or symbol which shall be used to identify his/her work.

2.2.1.6 Tack welds in open butt joints shall be feathered into surrounding material.

2.2.2 Welding Qualifications

2.2.2.1 Welding procedures, welders, welding operators and tackers shall be qualified in accordance either with AWS D1.1 or ASME Section IX.

2.2.2.2 At the request of the Buyer, any welder shall be retested and recertified when the work of said welder creates a reasonable doubt as to the quality of his/her workmanship.

2.2.2.3 The format of welding procedure specifications and welding procedure qualification records shall be in accordance with AWS D1.1, Appendix E or ASME Section IX, Appendix A or equivalent.

2.2.3 Acceptable Welding Processes

2.2.3.1 Welding may be achieved by any one or combination of the following welding processes:

Welding Process	AWS Letter Designation
Shielded Metal Arc Welding	SMAW
Flux-Cored Arc Welding (with Shielding Gas)	FCAW
Manual and Automatic Gas Tungsten Arc Welding	GTAW
Automatic Submerged Arc Welding	SAW

2.2.3.2 Other welding processes such as Gas Metal Arc or Manual Submerged Arc require specific written authorization by Buyer. Submit all pertinent data and intended application of said process for evaluation.

PART 3 EXECUTION

3.1 PREPARATION

3.1.1 Weld joint preparation shall be made by machining, grinding or thermal cutting. When thermal cutting is performed, the joint surfaces shall be ground to bright metal prior to welding. Oxy-fuel cutting shall not be used for joint preparation of stainless steel.

3.1.2 For structural tubular welds, longitudinal weld seams shall be parallel to the longitudinal axis and shall be complete (100 percent) penetration butt welds. Longitudinal seams of adjoining tubular members shall not be in line but shall be offset from other longitudinal seams by at least five (5) times the wall thickness of the tubular component.

3.1.3 Permanent backup strips or backing rings are not permitted without specific written authorization from the Buyer. If temporary backup strips are used and then removed, the weld area shall be dressed and examined for cracks and other defects. Examination of area shall be performed visually and by the liquid penetrant method. Examination shall be in accordance with Paragraph 3.2.6.

3.1.4 The parts to be joined shall be in accordance with the assembly requirements of AWS D1.1, Section 3.3.

3.1.5 To minimize the contamination of austenitic stainless steel, Seller shall follow the requirements of Specification Section 13252 prior to and after welding.

3.1.6 All surfaces to be welded shall be free of paint, oil, dirt, scale, oxides and other foreign materials detrimental to weld soundness.

3.1.7 Joint edges and adjacent surfaces to be welded shall be wire brushed. They shall be cleaned with an ethyl alcohol or acetone dampened lint-free cloth before welding begins.

3.1.8 Wire brushes shall be made of 300 Series austenitic stainless steel. Mechanical cleaning tools such as grinding wheels, files, deburring tools and wire brushes shall be clearly marked. Marking shall identify tools to be used on stainless steel only.

3.1.9 Grinding shall be done in such a method that overheating of stainless steel base and weld metal is minimized. Heat tint is an indication of overheating. Abrasive disks and abrasive flapper wheels are preferred over grinding disk or continuous-belt grinders.

3.1.10 Welds made by inert gas shielded methods shall be fully back-purged except where precluded by the physical arrangement. Nozzle gas shall be used to prevent oxidation on either side of the weld.

3.2 **INSTALLATION, APPLICATION AND ERECTION**

3.2.1 All welds shall be made in accordance both with Contract Drawings and Seller's fabrication drawings.

3.2.2 Flux, weld spatter and any slag shall be removed from each weld bead prior to depositing each succeeding pass.

3.2.3 Welding starts and stops in welds shall be held to a minimum. Each such stop shall be properly conditioned before continuing the weld. The use of starting and stopping plates is recommended where possible.

3.2.4 Intermittent welds are not permitted. Crevices shall, to the extent possible, be seal-welded.

3.2.5 Preheat and Interpass Temperature Control

3.2.5.1 The minimum preheat for austenitic stainless steel shall be 50°F. Interpass temperature shall not exceed 350°F.

3.2.6 Inspection and Nondestructive Examination

Specific nondestructive examination shall be performed in accordance with either Specification Section 14601 or 14602 and Seller's fabrication drawings. NDE methods, acceptance criteria and additional general requirements shall be in accordance with the following subparagraphs. All NDE, except visual examination,

shall be performed by personnel certified in accordance with ASNT SNT-TC-1A.

3.2.6.1 Inspection

A. The welding inspector shall be qualified and certified in accordance with AWS D1.1, Paragraph 6.1.3.

B. All weld inspection reports shall be submitted in accordance with Paragraph 1.6.

3.2.6.2 Visual Examination

A. Visual examination shall be performed in accordance with AWS D1.1, Section 6.

B. Seller shall visually inspect all completed welds in accordance with AWS D1.1, Section 8.15.1. Weld profiles shall be in accordance with Figure 3.4 of AWS D1.1. Defective welds shall be repaired in accordance with Seller's approved weld repair procedures.

C. In addition to visual examination of the completed weld, visual examination is required for all ground and blended welds.

D. For butt joints, the weld metal on the front surface shall in no place be lower than the adjacent base metal surfaces.

E. Groove welds shall have a uniform transition from the joined material into the weld deposit. They shall be free of undercut and unfused overlap of the weld deposit.

F. Fillet weld surfaces shall have a uniform transition from the base material into the weld deposit. They shall be free of undercut and unfused overlap.

3.2.6.3 Liquid Penetrant Examination

A. Liquid penetrant examination (PT) shall be in accordance with AWS D1.1, Section 6.7.7. Acceptance criteria shall be in accordance with AWS D1.1, Section 8.15.5.

B. Liquid penetrant examination shall be performed after welds have been ground and visually examined. Examination shall include a band of base metal no less than 1 inch wide on each side of the weld.

C. Penetrant material shall be in accordance with ASME Section V, Article 6, T-625 for sulfur and halogen content.

3.3 **FIELD QUALITY CONTROL**

(Not Used)

3.4 **ADJUSTMENTS**

3.4.1 Weld Repairs

3.4.1.1 All weld repairs shall be performed in accordance with the approved weld repair procedures.

3.4.1.2 Unacceptable indications shall be completely removed by chipping, gouging, grinding or other authorized methods (for the type of material being repaired) to clean, bright metal. The excavated areas shall then be examined by the liquid penetrant method to assure complete removal of defects. Liquid penetrant examination shall be in accordance with Paragraph 3.2.6.

3.4.1.3 The repaired areas shall be reexamined using the same inspection procedures by which the defect was originally detected, along with all other inspection called out for the particular weld.

3.4.1.4 Two repair attempts will be allowed on any one defective area. No further repair attempts shall be carried out without the authorization of Buyer.

3.5 **CLEANING**

(Not Used)

3.6 **PROTECTION**

(Not Used)

3.7 **DEMONSTRATION**

(Not Used)

3.8 **SCHEDULES**

(Not Used)

END OF SECTION

ATTACHMENT A
WELD MAP

Buyer P.O. No., Item No.

Buyer Weld Specification No.

1. Draw a single line sketch of the structural parts.
2. Identify each qualified welding procedure.

SKETCH

Seller
Address
Buyer PO#

This Form Completed By _____

Telephone No. _____

Revisions _____

Date _____

Buyer Welding Eng. Review Block

ATTACHMENT B
WELDING PROCEDURE SUMMARY DATA

Space No.	Action to be Taken
1	Enter the Buyer's Purchase Order number. A separate summary must be completed for each P.O. and suborder.
2	Enter the Buyer's item number(s). The summary sheet must reflect all items of similar construction that will have common welding procedures. Items of markedly different materials or methods of manufacture should be entered on separate WPS's.
3	Enter Seller's name.
4	Enter Seller's shop location where work will be performed.
5	Enter the date summary is compiled.
6	Enter Buyer serial number and revision (Buyer's use only).
7	Enter Welding Procedure Specification (WPS) number.
8	Enter Procedure Qualification Record (PQR) number(s) supporting the WPS.
9	Enter the welding process(es) used in performing (PQR).
10	Enter type of joint as referenced in Legend. Where (D) is used, state type of joint in space 17.
11	Enter ASME-ASTM materials to be used in fabrication.
12	Enter base metal thickness range qualified by PQR.
13	Enter post weld heat treatment information in appropriate box.
14	Enter other pertinent information in this space. Such as impacts, etc.
15	Enter current review status of weld procedure (Buyer's use only).
16	Enter date of current review status of weld procedure (Buyer's use only).
17	Enter any special design or process information regarding the item of construction in this box.

ATTACHMENT B
WELDING PROCEDURE SUMMARY

Welding Structural

SERIAL NO.	PROCEDURE NO.	SUPPORTING PQR	PROCESS	JOINT TYPE	ASME-ASTM MATERIAL	THICKNESS QUALIFIED	PHWT		COMMENTS	STATUS	DATE
							YES	NO			
6	7	8	9	10	11	12	13		14	15	16

LEGEND

JOINT TYPE DESCRIPTION
- A Groove Welding
- B Fillet Weld
- C Plug and Slot Weld
- D Other (Explain in comments section)

REVIEW TYPE
- A Commence Fabrication
- B Commence Fabrication Submit w/Corrections
- C Do Not Fabricate

REMARKS:

17

SELLER: 3

P.O. NO.: 1 ITEM(S): 2

SHOP LOCATION: 4 DATE: 5

9413336.0806

ATTACHMENT B
WELDING PROCEDURE SUMMARY

Welding Structural

SERIAL NO.	PROCEDURE NO.	SUPPORTING PQR	PROCESS	JOINT TYPE	ASME-ASTM MATERIAL	THICKNESS QUALIFIED	PHWT		COMMENTS	STATUS	DATE
							YES	NO			

LEGEND

JOINT TYPE DESCRIPTION

- A Groove Weld
- B Fillet Weld
- C Plug and Slot Weld
- D Other (Explain in comments section)

REVIEW TYPE

- A Commence Fabrication
- B Commence Fabrication Submit w/Corrections
- C Do Not Fabricate

REMARKS:

SELLER: _____ SHOP LOCATION: _____ DATE: _____

P.O. NO.: _____ ITEM(S): _____

U.S. DEPARTMENT OF ENERGY
Hanford Waste Vitrification Plant
Richland, Washington
DOE Contract DE-AC06-86RL10838

FLUOR DANIEL, INC.
Advanced Technology Division
Fluor Contract 8457

SECTION 13252
PRECAUTIONS FOR FABRICATION, HANDLING AND STORAGE OF STAINLESS STEEL AND NICKEL ALLOYS
B-595-P-P06B-13252

APPROVED FOR CONSTRUCTION

REVISION 0
ISSUE DATE 4-6-93

WAPA YES ___ NO X
QUALITY LEVEL I ___ II X
SAFETY CLASS 1__ 2__ 3 X 4__

ORIGINATOR(S): CHECKER(S):

A. Estrada, Welding Engineer 3/29/93 (Date) D. A. Buzzelli, Lead Disc. Checker 3-29-93 (Date)

APPROVED BY:

C. J. Divona Lead Discipline Engineer 3/29/93 (Date)

SECTION 13252
PRECAUTIONS FOR FABRICATION, HANDLING AND STORAGE OF STAINLESS STEEL AND NICKEL ALLOYS
B-595-P-P06B-13252

TABLE OF CONTENTS

PART		PAGE
PART 1	**GENERAL**	1
1.1	SUMMARY	1
1.2	REFERENCES	1
1.3	RELATED REQUIREMENTS	1
1.4	DEFINITIONS	1
1.5	SYSTEM DESCRIPTION	2
1.6	SUBMITTALS	2
1.7	CLASSIFICATION OF SYSTEMS AND COMPONENTS	2
1.8	PROJECT OR SITE ENVIRONMENTAL CONDITIONS	2
PART 2	**PRODUCTS**	2
2.1	MATERIALS AND EQUIPMENT	2
2.2	FABRICATION AND MANUFACTURE	5
PART 3	**EXECUTION**	6
3.1	PREPARATION	6
3.2	INSTALLATION, APPLICATION AND ERECTION	6
3.3	FIELD QUALITY CONTROL	6
3.4	ADJUSTMENTS	6
3.5	CLEANING	6
3.6	PROTECTION	6
3.7	DEMONSTRATION	6
3.8	SCHEDULES	6

SECTION 13252
PRECAUTIONS FOR FABRICATION, HANDLING AND STORAGE OF STAINLESS STEEL AND NICKEL ALLOYS

PART 1 GENERAL

1.1 SUMMARY

This specification section covers the technical requirements for handling, fabrication, shipment and storage techniques to minimize the risk of contamination of stainless steel and nickel alloys. Contaminating compounds are those which contain free iron, sulfur, chlorides and low melting point metals.

1.2 REFERENCES

The publications listed below form a part of this specification section to the extent referenced. The publications are referred to in the text by the basic designation only.

AMERICAN SOCIETY FOR TESTING AND MATERIALS (ASTM)

ASTM A380	1978 Standard Practice for Cleaning and Descaling Stainless Steel Parts, Equipment and Systems
ASTM D129	1991 Standard Test Method for Sulfur in Petroleum Products (General Bomb Method)
ASTM D808	1991 Standard Test Method of Chlorine in New and Used Products (Bomb Method)
ASTM D1552	1990 Standard Test Method for Sulfur in Petroleum Products (High Temperature Method)

AMERICAN SOCIETY OF MECHANICAL ENGINEERS (ASME)
Boiler and Pressure Vessel Code

ASME Section V	1989 Nondestructive Examination

1.3 RELATED REQUIREMENTS

(Not Used)

1.4 DEFINITIONS

ppm - Parts Per Million

1.5 **SYSTEM DESCRIPTION**

(Not Used)

1.6 **SUBMITTALS**

Submit the following in accordance with the Vendor Drawing and Data Requirement section of the Order/Subcontract.

1.6.1 Seller's procedure for handling, cleaning, isolation and storage of stainless steel and nickel alloys shall be submitted for Buyer approval. These procedures shall be submitted prior to the start of fabrication.

1.6.2 Chemical analysis for materials that are not intended to be removed after fabrication shall be submitted for information. Examples of these materials are: lubricants, thread compound, nondestructive examination materials, etc.

1.6.3 Procedure for the isolation and separation of stainless steel wire brushes and grinding material shall be submitted for Buyer approval.

1.7 **CLASSIFICATION OF SYSTEMS AND COMPONENTS**

(Not Used)

1.8 **PROJECT OR SITE ENVIRONMENTAL CONDITIONS**

(Not Used)

PART 2 PRODUCTS

2.1 **MATERIALS AND EQUIPMENT**

2.1.1 All limitations specified, e.g., percent, parts per million (ppm) etc., are to be by weight.

2.1.2 All consumables and materials used during fabrication shall meet the following general requirements unless addressed in more detail in this specification section.

2.1.2.1 Maximum chloride content shall be 250 ppm.

2.1.2.2 Maximum sulfur content shall be 1 percent.

2.1.2.3 Low melting point elements (such as cadmium, lead, mercury, tin and zinc) shall not be added.

2.1.3 Carbon Steel Contamination

2.1.3.1 Tools and equipment used to cut, form and handle stainless steel and nickel alloys shall be in accordance with one of the following requirements:

A. Tools and equipment shall be hardened tool steel or chrome plated.

B. Surfaces of non-stainless steel tools and equipment which comes into contact with stainless steel shall be covered either with paper, plastic or stainless steel sheet.

2.1.3.2 Grinding equipment and stainless steel wire brushes previously used on carbon steel shall not be used on stainless steel and nickel alloys.

2.1.3.3 Temporary attachments for welding or fabrication shall be of a similar grade material (e.g., 300 series stainless steel shall be used for a temporary attachment to 304L stainless steel) to the pressure component.

2.1.3.4 If scaffolding or ladders are used during fabrication, the contact surfaces at the stainless steel or nickel alloy interface shall be protected either by wood or plastic. No direct contact shall be permitted.

2.1.3.5 Areas used for fabrication of stainless steel and nickel alloys shall be separate from carbon steel fabrication areas. These areas shall be kept free of carbon steel shavings and grinding dust.

2.1.3.6 Where it is not possible to provide protection from carbon steel, the components shall be chemically cleaned to dissolve any carbon steel which may be embedded in the stainless steel or nickel alloy surface. The cleaning requirements shall be in accordance with ASTM A380.

2.1.3.7 Non-metallic slings shall be used when safe to do so. Lifting with carbon steel chains from lifting lugs is acceptable. Chemically clean lugs prior to shipment of equipment. Cleaning shall be in accordance with Paragraph 2.1.3.6.

2.1.3.8 Carbon steel strapping material used for shipping shall not contact stainless steel or nickel alloy equipment or piping.

2.1.3.9 Surfaces that are found to be contaminated with carbon steel shall be restored. Mechanical descaling is the preferred method. It shall be performed in accordance with ASTM A380.

2.1.3.10 Walking directly upon stainless steel surfaces shall be avoided where possible. Surfaces upon which walking access is required shall be protectively covered with kraft paper, cardboard, plastic or equivalent.

2.1.3.11 Acceptable Carbon Steel Contamination

Scattered areas of carbon steel contamination as evidenced by rust are permissible provided the aggregate area does not exceed 2 sq. in. in any 1 sq. ft. area.

2.1.4 Wrapping and Protective Covering Materials

2.1.4.1 No chloride restriction shall apply to wrapping and protective covering material (such as polyethylene and polyvinyl chloride (PVC) films) when used for packaging or storage purposes. PVC caps, plugs and packaging material shall not be reused.

2.1.4.2 No chloride restriction shall apply to pressure-sensitive tapes or adhesive-backed tapes. Pressure-sensitive tapes or adhesive-backed tapes shall not be used within 12 inches of any area where local heating or welding may increase the metal temperature to 180°F or higher.

2.1.4.3 Where tape is used during welding for back purging, the tape's chloride content shall be less than 250 ppm (Stockwell Rubber Company G-568 or equal).

2.1.4.4 After pressure-sensitive and adhesive-backed tapes are no longer required they shall be removed. Any remaining residual adhesive shall be removed. Acetone or solvent shall be used. Solvent shall be in accordance with Paragraph 2.1.7.

2.1.5 Grinding Discs, Abrasive Discs, Brushes and Material Removal Tools

2.1.5.1 Grinding discs, abrasive discs and brushes shall be designated for use on stainless steel and nickel base alloys. These materials shall not have been previously used on carbon steel, low alloy steels or nonferrous metals and their alloys.

2.1.5.2 Grinding discs, abrasive discs and belts shall be of resin-bonded alumina, silicon carbide or zirconium carbide. Sulfurized compounds shall not be used as a bonding material.

2.1.5.3 Only 300 series stainless steel brushes shall be used on stainless steel and nickel base alloys.

2.1.5.4 All material removal and cleaning tools shall be marked to identify that they are to be used on stainless steel and nickel alloys only.

2.1.6 Nondestructive Examination Materials

2.1.6.1 Sulfur and halogen content of liquid penetrant materials shall be in accordance with the requirements of ASME Section V, Article 6, T-625.

2.1.7 Cleaning Fluids

Chlorinated hydrocarbon solvents may be used for stainless steel cleaning provided they are analyzed for total residual chlorine and sulfur. The analysis process is as follows:

A. Select and weigh a glass Petri dish of 150mm nominal diameter. Note the weight.

B. Pour a 100 gram sample of the solvent into the Petri dish.

C. Heat the sample for 60 minutes. The heating temperature shall be between 194°F and 212°F, inclusive.

D. Weigh the Petri dish again. Subtract the weight noted in Step A from the new weight. This is the weight of the solvent residue.

1) If the residue is less than 0.005 grams, the solvent is acceptable. No further analysis is required.

2) If the residue weight is 0.005 grams or more, repeat Steps A through C. Test the residue for sulfur content in accordance with ASTM D129 or ASTM D1552. Test the residue for halogen content in accordance with ASTM D808.

The sulfur or chlorine shall not exceed 1 percent of the residue by weight in any case.

2.2 FABRICATION AND MANUFACTURE

2.2.1 Cleaning Requirements

All surfaces to be welded shall be free of paint, oil, grease, dirt and other foreign materials detrimental to the weld soundness. An area not less than 4 inches wide on each side of weld joint shall be cleaned. Acceptable cleaning methods shall be mechanical or chemical methods in accordance with ASTM A380.

PART 3 EXECUTION

3.1 PREPARATION

(Not Used)

3.2 INSTALLATION, APPLICATION AND ERECTION

3.2.1 After welding all foreign material such as flux, anti-spatter compound, slag and spatter shall be removed. Removal can be accomplished either by mechanical or chemical methods.

3.2.2 Heat tint and scale shall be permitted on nonprocess side of weld joint. When required, heat tint and scale can be removed either by mechanical or chemical descaling methods. For mechanical descaling, precleaning and postcleaning is required.

3.2.3 Liquid penetrant and ultrasonic examination materials shall be completely removed from surface after examination. Removal shall be in accordance both with manufacturer's recommendation and this specification section.

3.3 FIELD QUALITY CONTROL

(Not Used)

3.4 ADJUSTMENTS

(Not Used)

3.5 CLEANING

(Not Used)

3.6 PROTECTION

(Not Used)

3.7 DEMONSTRATION

(Not Used)

3.8 SCHEDULES

(Not Used)

END OF SECTION

9513336.0816

U.S. DEPARTMENT OF ENERGY
Hanford Waste Vitrification Plant
Richland, Washington
DOE Contract DE-AC06-86RL10838

FLUOR DANIEL, INC.
Advanced Technology Division
Fluor Contract 8457

SECTION 14601
POUR TURNTABLE
B-595-P-P06B-14601

APPROVED FOR CONSTRUCTION

REVISION 0
ISSUE DATE 4-6-93

WAPA YES ___ NO X
QUALITY LEVEL I ___ II X
SAFETY CLASS 1__ 2__ 3 X 4_

ORIGINATOR:

N. J. Chatelier, Mechanical Engineer Date 03/29/93

CHECKER:

D. A. Buzzelli, Lead Disc. Checker Date 3-29-93

APPROVED BY:

C. J. Divona Lead Discipline Engineer Date 3/29/93

3/25/93 2:15pm
106\VOL5...\SPECS\P06B\14601-0.

SECTION 14601
POUR TURNTABLE
B-595-P-P06B-14601

TABLE OF CONTENTS

PART		PAGE
PART 1 GENERAL		1
1.1	SUMMARY	1
1.2	REFERENCES	1
1.3	RELATED REQUIREMENTS	2
1.4	DEFINITIONS	3
1.5	SYSTEM DESCRIPTION	3
1.6	SUBMITTALS	5
1.7	CLASSIFICATION OF SYSTEMS AND COMPONENTS	6
1.8	PROJECT OR SITE ENVIRONMENTAL CONDITIONS	6
PART 2 PRODUCTS		6
2.1	MATERIALS AND EQUIPMENT	6
2.2	FABRICATION AND MANUFACTURE	10
2.3	INSPECTION AND DIMENSIONAL RECORDS	13
2.4	TESTING	15
PART 3 EXECUTION		19

ATTACHMENTS

ATTACHMENT	TITLE
A	CONTRACT DRAWINGS
B	RELATED DRAWINGS

SECTION 14601
POUR TURNTABLE

PART 1 GENERAL

1.1 SUMMARY

This specification section covers the technical requirements for the fabrication, inspection and testing of a Pour Turntable (PTT).

1.2 REFERENCES

The publications listed below form a part of this specification section to the extent referenced. The publications are referred to in the text by the basic designation only.

AMERICAN GEAR MANUFACTURING ASSOCIATION (AGMA)

AGMA 420.04	1978 Speed Reducer and Gear Drives

AMERICAN NATIONAL STANDARDS INSTITUTE (ANSI)
and/or
AMERICAN SOCIETY OF MECHANICAL ENGINEERS (ASME)

ANSI/ASME B46.1	1985 Surface Texture (Surface Roughness, Waviness, and Lay)

AMERICAN SOCIETY FOR TESTING AND MATERIALS (ASTM)

ASTM A193/A193M	1990 (Rev. A) Standard Specification for Alloy-Steel and Stainless Steel Bolting Materials for High-Temperature Service
ASTM A194/A194M	1990 (Rev. A) Standard Specification for Carbon and Alloy Steel Nuts for Bolts for High-Pressure and High-Temperature Service
ASTM A240	1991 (Rev. A) Standard Specification for Heat-Resisting Chromium and Chromium-Nickel Stainless Steel Plate, Sheet, and Strip for Pressure Vessels
ASTM A276	1990 (Rev. A) Standard Specification for Stainless and Heat-Resisting Steel Bars and Shapes

ASTM A312/A312M	1991 (Rev. A) Standard Specification for Seamless and Welded Austenitic Stainless Steel Pipe
ASTM A480/A480M	1991 (Rev. A) General Requirements for Flat Rolled Stainless and Heat-Resisting Steel Plate, Sheet, and Strip

AMERICAN SOCIETY OF MECHANICAL ENGINEERS (ASME)
Boiler And Pressure Vessel Code

ASME Section IX	1989 Welding and Brazing Qualifications

ANTI-FRICTION BEARING MANUFACTURERS ASSOCIATION (AFBMA)

AFBMA 9	1990 Load Ratings and Fatigue Life for Ball Bearings
AFBMA 11	1990 Load Ratings and Fatigue Life for Roller Bearings
AFBMA 20	1977 Metric Ball and Roller Bearings Conforming to Basic Boundary Plans
AFBMA 21.2	1978 Roller, Ball, and Thrust Bearings

OFFICE OF FEDERAL SUPPLY AND SERVICES

QQ-P-35C	Passivation Treatments for Corrosion Resistant Steel

STEEL STRUCTURES PAINTING COUNCIL (SSPC)

SSPC PA-2	1982 Paint Application Specification Number 2, Measurement of Dry Paint Thickness with Magnetic Gauges
SSPC SP-10	1989 Surface Preparation Specification Number 10, Near-White Blast Cleaning

1.3 RELATED REQUIREMENTS

Specification Section 01730	Operation and Maintenance Data
Specification Section 05060	Welding Structural
Specification Section 13252	Precautions for Fabrication, Handling and Storage of Stainless Steel and Nickel Alloys
Specification Section 14603	Cable Reel Assembly

Specification Section 14604	Track and Catch Pan Assembly
Specification Section 15196	Identification and Tagging Methods for Mechanical Equipment
Specification Section 16120	Soldering - Electrical
Specification Section 16151	Motors - Induction for Radioactive Service
Specification Section 16610	Electrical Requirements for Packaged Mechanical Equipment
Specification Section 17857	Local Control Panels for Pour and Drain Turntables
Specification Section 17886	Instruments Furnished with Mechanical Equipment Load Cell Signal Conditioner - Pour and Drain Turntables
Specification Section 17908	Instruments Furnished with Mechanical Equipment - Pour and Drain Turntables

CONTRACT DRAWINGS

Drawings as listed in Attachment A.

RELATED DRAWINGS

Drawings as listed in Attachment B.

1.4 DEFINITIONS

ATP - Acceptance Test Procedure
CMTR - Certified Material Test Report
DTT - Drain Turntable
FAT - Factory Acceptance Test
NDE - Nondestructive Examination
PT - Liquid Penetrant Examination
PTT - Pour Turntable
TID - Total Integrated Dose

1.5 SYSTEM DESCRIPTION

In the Melter Cell, highly-radioactive liquid wastes are melted in a refractory-lined steel vessel at a temperature of 2000°F. During normal operations the glass melt exits the pour spout into portable stainless steel canisters placed on the Pour Turntable (PTT).

The PTT will be stationed on tracks (part of the track and catch pan assembly, RA-130-009 and -010, Specification Section 14604) which extend under the melter. During filling of the canisters the glass level will be monitored by a turntable-mounted weighing system and an external gamma ray detection system. Electrical power to drive the PTT and positioning and weighing instrumentation will be provided by cable connected through the cable reel assembly (Specification Section 14603) mounted on a support frame at the south end of the tracks. If for any reason the melter must be emptied, it will be emptied into canisters positioned on the drain turntable (DTT). When the melter is completely drained, the PTT will be moved south on the tracks to a position clear of the melter. In the event of a drive system power failure, the turntables may be moved out from under the melter by a steel cable hooked to the overhead crane.

All canisters, assemblies and subassemblies are designed to be removed or replaced by a remotely-operated impact wrench and overhead crane. Required electrical power is supplied by jumpers and cable reels that connect each component from the wall nozzles in the Melter Cell to the PTT.

1.5.1 Turntable Cart Drive

The turntable cart drive wheels are connected through an electric clutch to a variable speed reversible 3/4 hp motor.

At high speed, the 1750 rpm motor drives a 535:1 gear reducer which drives the turntable assembly along the track at .5 in/sec. At a point approximately 9 inches from the end stop, a limit switch on the turntable contacts the end stop housing which reduces the motor speed to 175 rpm and reduces the travel speed .05 in/sec. As the adjustable stop contacts the fixed end stop on the track, a second limit switch shuts off the drive motor.

1.5.2 Turntable Spider Drive

The turntable contains a set of remoteable dollies and canisters which travel on two concentric machined rails mounted to the turntable frame. The dollies and canisters are driven by a variable speed, 3/4 hp reversible motor through a gear reducer and drive shaft. At high speed the 1750 rpm motor drives the 1167:1 gear reducer to rotate the dollies and canisters at 1/4 rpm, corresponding to a linear speed of .94 in/sec. At a point approximately 9 inches away from the pour spout centerline a limit switch is triggered to reduce the motor down to 175 rpm, which reduces the canister speed to .094 in/sec. As the canister approaches the pour spout, the trigger trips another limit switch which shuts off the motor.

1.6 **SUBMITTALS**

Submit the following in accordance with the Vendor Drawing and Data Requirements section of the Order/Subcontract.

1.6.1 Operation and maintenance data in accordance with Specification Section 01730.

1.6.2 Handling, shipping and storage procedures shall be submitted for Buyer review.

1.6.3 Acceptance Test Procedures (ATP) and checklist shall be submitted for Buyer approval in accordance with Paragraph 2.4.3.1.

1.6.4 Seller's Material Control Procedure shall be submitted for Buyer review in accordance with Paragraph 2.1.2.2.

1.6.5 Detailed Procedure for Final Dimensional Check shall be submitted for Buyer approval in accordance with Paragraph 2.3.2.2.

1.6.6 Interchangeability Dimensional Record Drawing shall be submitted for Buyer review in accordance with Paragraphs 2.2.1 and 2.3.2.1.

1.6.7 Certified Material Test Reports (CMTRs) shall be submitted for Buyer review in accordance with Paragraph 2.1.4.1.

1.6.8 Weld Repair Procedure shall be submitted for Buyer approval in accordance with Paragraph 2.2.2.1.

1.6.9 Nondestructive Examination (NDE) procedure shall be submitted for Buyer review in accordance with Paragraph 2.3.1.1.

1.6.10 Test reports and inspection results shall be submitted for Buyer approval in accordance with Paragraphs 2.1.4.1, 2.1.8.1., 2.3.1.1, 2.3.2.1 and 2.4.1.3.

1.6.11 Support facilities descriptions shall be submitted for Buyer approval in accordance with Paragraph 2.3.2.3.

1.6.12 Dimensional Records shall be submitted for Buyer approval in accordance with Paragraph 2.3.2.1.

1.6.13 Descriptions of mixing, preparation and forming methodology to be used in installing insulation materials shall be submitted for Buyer review in accordance with Paragraph 2.2.7.

1.6.14 A load test report verifying the test strength of the swivel in Contract Drawing H-2-120422 shall be submitted for Buyer review.

1.6.15 A record of heat treatment for all applicable hardware shall be submitted for Buyer review.

1.6.16 A procedure to determine defects greater than 0.012" shall be submitted for Buyer approval.

1.7 **CLASSIFICATION OF SYSTEMS AND COMPONENTS**

(Not Used)

1.8 **PROJECT OR SITE ENVIRONMENTAL CONDITIONS**

1.8.1 Climatic and Geographic Site Conditions

A.	Site Elevation	714 feet above sea level
B.	Barometric Pressure	14.3 psia

1.8.2 Operating Environment

A.	Normal Temperature Range	60°F to 104°F
B.	Design Basis Temperature	104°F
C.	Relative Humidity	Not controlled
D.	Radiation Level	3×10^8 rads (TID, 10 years)

PART 2 PRODUCTS

2.1 **MATERIALS AND EQUIPMENT**

This specification section is in reference to the following equipment:

Equipment No.	Equipment Name
RA-130-001	Pour Turntable

2.1.1 Materials

Components used in fabrication shall be in accordance with the Contract Drawings. Fabrication materials shall be as follows, unless otherwise noted in drawings.

2.1.1.1 All stainless steel plate, sheet and strip shall be in accordance with ASTM A240, Type 304L, hot rolled, annealed and pickled. Blasting as a descaling method shall not be permitted.

2.1.1.2 All stainless steel bars and shapes shall be in accordance with ASTM A276, Type 304L, Condition A and Class C.

2.1.1.3 Stainless steel structural bolts shall be in accordance with ASTM A193/A193M, Grade B6, Type 304.

2.1.1.4 Stainless steel structural nuts shall be in accordance with ASTM A194/A194M, Grade 8M or equal.

2.1.1.5 Stainless steel pipe and tubing shall be in accordance with ASTM A312/A312M.

2.1.1.6 The turntable speed reducer and gear train shall both be in accordance with AGMA 420.04.

2.1.1.7 The drive train bearings shall be in accordance with AFBMA 9, AFBMA 11, AFBMA 20 and AFBMA 21.2 as applicable.

2.1.1.8 Electrical cable and equipment shall be in accordance with Specification Sections 16120 and 16610.

2.1.2 Material Contamination

2.1.2.1 Specification Section 13252 provides requirements for materials used in contact with austenitic stainless steel and non-ferrous metals. This specification section applies to all materials.

2.1.2.2 Upon completion of fabrication, examination and tests by Seller, the metal surfaces shall be in accordance with the requirements of Specification Section 13252. Seller's Material Control Procedures shall describe the actions to be taken in the event of material contamination. They shall also address the cleaning and protection of materials as required.

2.1.3 Surface Finish

2.1.3.1 Unless otherwise specified on Contract Drawings, surface finish for various material forms shall be as follows: Plates shall be finished in accordance with ASTM A480/A480M Section 10, Paragraph 10.1.2, hot-rolled, annealed and pickled No. 1 finish. A shot or grit-blasted surface is not acceptable. Sheets shall be finished in accordance with ASTM A480/A480M Section 8, Paragraph 8.1.2, No. 2D finish. Strips shall be finished in accordance with ASTM A480/A480M Section 9, Paragraph 8.1.1, No. 2 finish.

2.1.3.2 Unless otherwise specified on the Contract Drawings, machined surfaces shall have a 125AA finish in accordance with ANSI/ASME B46.1.

2.1.3.3 No arc strikes, nicks, gouges or other surface defects are permitted. Defects greater than .012 inch in depth shall be repaired by welding and grinding to restore original surface contour. Defects of lesser depth shall be removed by grinding or

polishing. Grinding shall be performed using 125 grit or finer abrasive wheels. No defects or grinding marks deeper than those left by a 125 grit abrasive wheel are permitted.

2.1.4 Material Control

2.1.4.1 One (1) copy of Certified Material Test Reports (CMTRs) shall be provided for all material and submitted for Buyer review.

2.1.5 Equipment Provided by Seller

2.1.5.1 The equipment to be furnished shall be built to print and in accordance with the Related Requirements listed in Paragraph 1.3, the Contract Drawings and this specification section. Seller's work includes: furnish materials, manufacture, assemble, test and deliver the following components in accordance both with the Contract Drawings and this specification section:

A. A pour turntable assembly complete with cart drive, turntable drive, canister dollies, canister guides and canister weighing system.

B. All wiring, pull and junction boxes, electrical hardware, conduit and conduit installation as shown on the Contract Drawings and in accordance with Specification Section 16610.

C. Any special tools and accessories required for installation or operation.

D. Seller shall also provide facilities to measure and test the assembled turntable system as described in Paragraphs 2.3 and 2.4 of this specification section, including framework and support for dummy pour spout structure.

2.1.6 Equipment Provided by Buyer:

2.1.6.1 For testing:

Four test canisters (dummy fill not included).

2.1.6.2 For incorporation into component fabrication (equipment provided by Buyer):

A. Upper and lower electrical connectors (PUREX connectors).

B. Internal electrical components for the upper and lower connectors.

2.1.7 Contract Drawings

Buyer's Contract Drawings for the PTT assembly and components have dimensional requirements that have been established to meet definite interface points. It is imperative that these interface dimensions be achieved for operational purposes.
Drawing H-2-120302 shows the dimensional interface for the PTT.

2.1.8 Design Features, Considerations

2.1.8.1 Remoteability

Once radioactive wastes are introduced into the Melter Cell, manned entrance will no longer be possible for operation or maintenance. Therefore, all components are designed to be remotely removable (hereafter referred to as "remoteable") by means of an overhead crane into less-radioactive areas for decontamination and maintenance. Furthermore, to the extent possible, assemblies are designed with remoteable subassembly modules to allow ready replacement of components without the necessity of removing and decontaminating the entire assembly. The following turntable subassemblies shall be remoteable:

<u>Pour Turntable</u>

Spider Drive Motor Assembly
Cart Drive Assembly
Canister Guide Weldments
Canister Dolly Assemblies
Fixed Stop Assembly
Load Cell Assembly

Each of the above subassemblies incorporates a lifting bail which can be engaged with the overhead crane hook or, in the case of heavy components, with lifting trunnions which can be engaged with a special lifting yoke suspended from the crane hook.

When suspended, all remoteable assemblies and subassemblies must be level within 2 degrees by proper placement of lift points and/or by counterweighting to assure proper engagement with alignment dowels and studs, except as noted on Contract Drawings.

Seller shall demonstrate and document the remoteability and balance of all applicable components in accordance with Paragraph 2.4.3.

2.1.8.2 All purchased rotating equipment (motors, gear boxes, bearings, etc.) shall be of a design that can be lubricated with CHEVRON SRI-NLGI2 grease or equal. Seller shall clearly indicate the appropriate lubricant level on the equipment. These items shall

be cleaned and repacked with the above-mentioned lubricant at assembly prior to installation at the facility.

2.2 FABRICATION AND MANUFACTURE

The pour turntable and components shall be fabricated in accordance both with this specification section and PTT Assembly Drawing H-2-120302.

2.2.1 Interchangeability

Each remoteable assembly must be interchangeable with spare assemblies. This requires that all mounting surfaces be precisely located in three planes.

To ensure interchangeability of subsequent assemblies the close tolerance requirements shown in Contract Drawings shall be strictly adhered to. Seller must conduct all close tolerance work with respect to established datum references. Work shall be performed under controlled temperature conditions as deemed necessary in order to achieve and maintain specified dimensions and tolerances. The reference temperature for dimensions and tolerances is 68°F. Seller shall complete the Dimensional Record Drawing H-2-120460 and submit for Buyer review.

2.2.2 Welding

All welding and NDE shall be performed in accordance with Specification Section 05060.

2.2.2.1 Repairs

Seller shall prepare and submit a complete repair procedure for Buyer approval. At minimum, the repair procedure shall include:

A. Type and extent of repairable defects.

B. Defect removal methods. These shall include NDE methods to assure complete defect removal.

C. Repair method. This shall include weld preparation, treatment and reference to ASME Section IX qualified weld procedures.

2.2.2.2 Fabrication of all components and assemblies shall minimize crevices, pockets, absorbent materials or similar voids where contaminants can be trapped.

2.2.2.3 All stainless steel surfaces shall be passivated in accordance with Federal Specification QQ-P-35C.

2.2.3 Coatings

2.2.3.1 Carbon Steel Surfaces

Carbon steel surfaces which will be exposed to cell environment shall be prepared for painting in accordance with SSPC SP-10. Primer shall be an inorganic zinc-rich primer (Ameron Dimetcote 9 or equal), one coat, with a total dry film thickness of 2.5 mils plus or minus .5 mils and a minimum of 6 grams zinc per square foot of dried film. Finish coat shall be a high-build polyamide epoxy paint (Amercoat 66 or equal), two coats, with total dry film thickness of 10 mils plus or minus .5 mils. The total system dry film thickness of primer and finish coat shall be 12.5 plus or minus 1.0 mils. Surface color shall be white. Paint shall be applied in accordance with paint manufacturer's recommended methods. Typical surfaces to be painted are housings for motors, gear reducers and other components requiring surface protection.

Contact surfaces of gears, wheels, rails and bearings shall not be painted.

2.2.3.2 Stainless Steel Surfaces

Stainless steel surfaces shall be painted for the purpose of identification only.

2.2.3.3 Inspection

Dry film thickness measurements shall be verified with a calibrated magnetic thickness gauge (Nordson "Mikrotest" or equal) and shall be in accordance with SSPC PA-2.

2.2.3.4 Defects

Defects or damaged areas detected during shop assembly, handling, testing and disassembly shall be repaired. The surface cleanliness and profile shall be restored to meet the specified surface preparation requirements. Precautions shall be taken to protect adjacent coated areas from damage by cleaning. The periphery of the damaged area shall be feathered. The use of vacuum blast type equipment, needle guns and peening wheels is permitted to restore profile.

2.2.3.5 Seller shall provide one gallon each of primer and finish paint for field touch-up.

2.2.4 Nameplate

Each item of equipment shall be fitted with a stainless steel nameplate securely attached by pins of a similar material. The nameplate shall be in accordance with Specification Section 15196, Paragraph 2.2.2, Type 6.

2.2.5 Instrumentation and Controls

2.2.5.1 All instrumentation and controls shall be in accordance with Specification Sections 17857, 17886 and 17908.

2.2.6 Electrical Components

Functional requirements of electrical components, instrumentation and definition of Seller/Buyer interfaces are shown in the electrical and instrument diagrams and Contract Drawings listed in Attachment A.

2.2.6.1 Motors

Seller shall provide electric motors as specified in Specification Section 16151 and the Contract Drawings (Attachment A). Electric motor data sheet of Specification Section 16151 shall be completed by Seller.

Surface protection of motors and related components shall be in accordance with Paragraph 2.2.3.

The turntable drive motor shall be complete with a shaft extension to accommodate impact wrench operation of the turntable in the event of an electrical failure.

2.2.6.2 Wiring and Cabling

Seller shall provide and install all cables, conduit, pull and junction boxes as shown on Contract Drawings and in accordance with Specification Section 16610.

Lower electrical connectors shall be modified, mounted and located in accordance with the Contract Drawings.

2.2.7 Insulations

The insulations used on the equipment covered by this section are of the molded variety and called out in applicable Contract Drawings (Attachment A). Seller is to prepare and form the insulation in accordance with manufacturer's recommended methods. At least one month of shelf life is to remain on the product at the time of installation into the applicable equipment. Seller shall submit a description of mixing, preparation and forming

methodology to be used in installing this insulation into the equipment.

2.3 **INSPECTION AND DIMENSIONAL RECORDS**

2.3.1 Seller shall perform an inspection of all equipment supplied to verify conformance to this specification section. Buyer reserves the right to witness any or all inspections or other activities affecting this specification section and requires a written notice prior to initiation of these inspection-related activities.

2.3.1.1 Welding Inspection and Criteria

Lifting lugs, structural members and full penetration welds shall be surface examined using nondestructive examination (NDE). Inspection methods are:

100 % visual and
100 % Liquid Penetrant Examination (PT)

A final surface examination shall be performed after completion of the proof test. Buyer shall review examination results and reports in detail.

Acceptance criteria for NDE shall be in accordance with Specification Section 05060. Buyer shall review Seller's NDE procedure, material certification and reports to assure accuracy.

2.3.2 Dimensional Records

2.3.2.1 Seller shall perform a complete dimensional inspection of the PTT. A mylar copy of Drawing H-2-120460 shall be provided by the Buyer for the Seller to use for documentation and return.

Seller shall record, on the mylar copy, the actual as-built dimensions required by the drawing with respect to datums, dowel pins or holes identified. Where duplicate equipment pieces are involved, a separate serial number shall be recorded on both the piece nameplate and tracing.

X, Y and Z coordinates specified on Drawing H-2-120460 shall be measured with the pour turntable placed on the tracks supplied with the Track and Catch Pan Assembly defined in Specification Section 14604.

Dimensional inspection is to be made after proof load tests are completed as described in Paragraph 2.4.3.4.

2.3.2.2 Seller shall submit detailed final dimensional check procedures for Buyer approval. These shall include:

A. Methods of measurement applicable to specific components or assemblies.

B. Type of measuring device used.

C. Methods, frequency and verification of calibration for the precision measurement devices.

2.3.2.3 Facilities Required for Dimensional Measurements

Seller shall provide an enclosed or partitioned area in which to make dimensional measurements of the assembled PTT. Within this area there shall be no interference by any other manufacturing operation such as arc welding or equipment movement. This area will provide a 7-foot clear walkway around the equipment. This area may be the same as the test area described in Paragraph 2.4.2 but must be large enough to accommodate all equipment required for the dimensional inspection. The area must be equipped with a seven-day temperature recorder provided by the Seller to document ambient temperature control. The recorder shall have a current calibration tag. For the purpose of measurement orientation, operation and testing the position on the turntable which has the receptacle for the emergency tow cable shall be considered the South End or 6 o'clock position. The area shall be temperature controlled to 68°F ±5°F throughout the time measurements are made. Adequate lighting of at least 100-foot candle average shall be provided. An overhead crane will be required. The rated lifting capacity of this crane shall be no less than 20 tons. The crane hook shall clear the height of 39'-2" from the floor.

Seller shall supply rigid supports for optical transits and levels. These supports shall be free standing, not touching the turntable or track system. Substantial platforms, ladders, stairs, handrails, etc. which meet OSHA standards shall be provided. Seller shall submit drawings and/or equipment specifications of the following for Buyer approval:

A. Measurement enclosure area.

B. Optical instrument supports.

C. Platforms, ladders and handrails.

2.3.3 Buyer Witnessing of Dimensional Checks

Buyer shall be notified in advance of the date when final dimensional measurements are to be made. Buyer reserves the right to witness Seller's final dimensional measurements.

2.4 TESTING

2.4.1 General

2.4.1.1 A Factory Acceptance Test (FAT) shall be conducted in accordance with this specification section and applicable codes and standards at Seller's plant prior to delivery. This test shall demonstrate satisfactory operation of all equipment and control logic under simulated loading conditions. All tests shall be performed at ambient temperature. Heating of canisters or their content is not required.

2.4.1.2 Except for the equipment listed in Paragraph 2.1.6, Seller shall provide all equipment, facilities and labor necessary to meet the requirements of the FATs.

2.4.1.3 Seller shall maintain records of all test data and those observations pertinent to equipment performance. A copy of these records shall be submitted for Buyer review.

2.4.1.4 Buyer shall be informed in advance of date that all factory tests are to be conducted. Buyer reserves the right to attend and witness all factory tests.

2.4.2 Special Facilities Required for Testing

2.4.2.1 A test area of sufficient size to assemble and operate all equipment covered by this specification section.

2.4.2.2 The structural framework to support a simulated (dummy) flange of the melter pour spout assembly to demonstrate the dimensional line-up of the canisters in the pour position.

2.4.2.3 An overhead crane shall be available for testing. Rated lifting capacity of the crane shall be no less than 20 tons. A 1/2 ton electric hoist will also be required.

2.4.3 Acceptance Test Procedure

2.4.3.1 An Acceptance Test Procedure (ATP) shall be submitted for Buyer approval. The ATP shall cover, as a minimum, all activities identified below plus any other activities determined by Seller as being significant to the overall performance of the equipment. The ATP shall include demonstration of the functionality and remoteability of the PTT and its subassemblies. Seller shall submit a checklist for approval prior to beginning the tests. The checklist shall contain the tests to be performed. It shall identify all instruments and special equipment to be used and measurements to be made. The tests shall include but not be limited to the following:

A. Initial set-up of the PTT on the rail/track system.

B. Test of lifting trunnions to verify mechanical integrity.

C. Verification of interface dimensions.

D. Demonstration of PTT cart drive and rotational drive position limit switches.

E. Accuracy of the canister weighing system.

F. Remoteability of turntable sub-assemblies.

G. Record the weight of the fully-assembled PTT on Dimensional Record Drawing H-2-120460.

2.4.3.2 The following test sequence is intended as a guide to enable Seller to plan for the equipment and services to support the set-up and tests. The set-up and test area may be the same as outlined in Paragraph 2.3.2.3 and 2.4.2.

A. Test the lifting trunnions for mechanical integrity as outlined in Paragraph 2.4.3.4.

B. Verify the PTT for compliance of interface dimensions, including electrical connectors (PUREX type).

C. Test cart drive and limit switches for accuracy at predetermined locations at both ends on the rail. Repeat this test 10 times.

D. Check cart drive motor for temperature rise and full load current.

E. Return the PTT to predetermined location near pour spout dummy flange.

F. Demonstrate accuracy of the spider drive and limit switches. Repeat this test 20 times at 90 degree increments.

G. Verify temperature rise and full load current of spider drive motor.

H. Weigh the fully-assembled PTT.

2.4.3.3 Turntable and Weigh Scale Testing with Canisters in Place

The following tests require the availability of a total of four (4) canisters of a known net weight. Three (3) of the canisters shall be preloaded/filled to simulate various operating weights (lead shot or equal). Canisters shall have the following fill weights:

Canister No. 1 - No fill weight (empty)
Canister No. 2 - 2000 lbs. fill weight
Canister No. 3 - 3000 lbs. fill weight
Canister No. 4 - 4360 lbs. fill weight

The weigh scale should reflect the correct weight in each case. Glass draining and turntable operation shall be simulated by loading the canisters on the turntable. The emergency tow cable receptacle on the turntable shall be designated as the 6 o'clock position.

2.4.3.3.1 Drive PTT under pour spout flange. Adjust stop and limit switch as required to match fixed stop on track. Demonstrate repeatability of stop.

2.4.3.3.2 Extend upper pour spout bellows against pour spout flange.

2.4.3.3.3 Attach instrument connections for weigh scale. Attach air connection to bellows. (For test purposes, Seller may substitute flexible connections to the turntable rather than rigid jumpers as used in the Melter Cell.)

2.4.3.3.4 Install canisters on PTT. Rotate PTT counterclockwise to adjust rotational limit switches. Rotate PTT clockwise to verify reversibility.

2.4.3.3.5 Actuate canister positioning arm. Verify centering of canister under pour spout.

2.4.3.3.6 Verify accuracy of weigh scale. Extend lower bellows. Verify additional indicated weight based on downward force exerted by bellows.

2.4.3.3.7 Connect a vacuum line to the bellows nozzle. Verify that leakage at 25 inches of H_2O vacuum does not exceed 40 lbs/hr.

2.4.3.3.8 Repeat sequence of PTT rotation, positioning arm operation and bellows extension to verify satisfactory performance of all components. The canisters shall be loaded on the turntable (one at a time rotating the turntable in a clockwise direction) in such a manner that, on the completion of loading all four canisters, the first canister shall be in the 6 o'clock position.

2.4.3.3.9 Canisters shall then be removed one at a time starting with the canister in the 6 o'clock position, and rotating the turntable clockwise until all four canisters are removed.

2.4.3.3.10 The entire above sequence of operation shall be repeated eight (8) times. Verification of dimensional interface of flanges, accuracy of the spider drive, limit switches and weigh scale, along with drive motor temperature rise and full load current, shall be completed and documented during these tests.

2.4.3.3.11 Verify remoteability of each component in accordance with Paragraph 2.1.8.1.

2.4.3.4 Trunnion Proof Test

2.4.3.4.1 A trunnion proof test shall be performed. The test shall be based on lifting a load that is 150% greater than the weight of the PTT assembly without the canisters.

2.4.3.4.2 During each lift test the PTT shall be suspended for 10 minutes at a lift height of not less than 12 inches above the rails. This test shall be repeated 10 times with a waiting period of two (2) minutes between tests.

2.4.3.4.3 After completion of the lifting cycle an NDE inspection/evaluation shall be performed in accordance with Paragraph 2.3.1.1. The visual inspection shall include the verification for any deformation/stress cracking on the lifting trunnion and its basic load-bearing members.

2.4.3.5 Acceptance Criteria

The criteria for acceptance of the equipment by the Buyer from the Seller is as follows:

A. Satisfactory and repeatable operation of the turntable cart drive as demonstrated in Paragraphs 2.4.3.2 and 2.4.3.3.1.

B. Satisfactory and repeatable operation of the turntable spider drive as demonstrated in Paragraphs 2.4.3.2 and 2.4.3.3.

C. The ability of all remoteable assemblies defined in Paragraph 2.1.8.1 to functionally assemble over their dowel pins and studs, mate up properly with their lower connector interface, and balance when lifted by the bail within 2 degrees of vertical (or horizontal).

D. The ability of the entire turntable assembly complete with remoteable assemblies installed to balance when lifted by the trunnions within 2 degrees of vertical.

E. Satisfactory, repeatable and complete functionality of all electrical interfaces (electrical nozzles), electrically operated motors and all limit switches.

F. Satisfactory and repeatable operation of the weigh scale and load cell as demonstrated in Paragraph 2.4.3.3.

G. Satisfactory completion of proof load test and subsequent NDE inspection as described in Paragraph 2.4.3.4.

PART 3 EXECUTION

(Not Used)

END OF SECTION

ATTACHMENT A
CONTRACT DRAWINGS

DRAWING NUMBER	SHEET	OF	TITLE
H-2-120302	1	18	Pour Turntable Parts List & Notes
H-2-120302	2	18	Pour Turntable Assembly
H-2-120302	3	18	Pour Turntable Assembly
H-2-120302	4	18	Pour Turntable Assembly
H-2-120302	5	18	Pour Turntable Assembly
H-2-120302	6	18	Pour Turntable Assembly
H-2-120302	7	18	Pour Turntable Assembly
H-2-120302	8	18	Pour Turntable Assembly
H-2-120302	9	18	Pour Turntable Assembly
H-2-120302	10	18	Pour Turntable Assembly
H-2-120302	11	18	Limit Switch Bracket Weldment
H-2-120302	12	18	Drive Arm & Plunger Assemblies
H-2-120302	13	18	Base Weldment
H-2-120302	14	18	Wheel Cover Details
H-2-120302	15	18	Wheel Cover Assembly
H-2-120302	16	18	Bevel Gear
H-2-120302	17	18	Assembly & Details
H-2-120302	18	18	Details
H-2-120303	1	2	Canister Guide Weldment
H-2-120303	2	2	Canister Guide Details
H-2-120304	1	2	Cart, Spider Drive Support Assembly
H-2-120304	2	2	Cart, Spider Drive Support Details
H-2-120305	1	2	Pour Turntable Cart Drive Parts List & Notes
H-2-120305	2	2	Cart Drive Support Details
H-2-120306	1	14	Spider Drive Motor Parts List
H-2-120306	2	14	Spider Drive Motor Assembly
H-2-120306	3	14	Spider Drive Motor Assembly
H-2-120306	4	14	Mounting Plate
H-2-120306	5	14	Limit Switch
H-2-120306	6	14	Spider Drive Motor Frame Weldment
H-2-120306	7	14	Spider Drive Motor Frame Weldment
H-2-120306	8	14	Spider Drive Motor Frame Weldment
H-2-120306	9	14	Spider Drive Motor Details
H-2-120306	10	14	Spider Drive Motor Details

DRAWING NUMBER	SHEET	OF	TITLE
H-2-120306	11	14	Spider Drive Motor Details
H-2-120306	12	14	Spider Drive Motor Details
H-2-120306	13	14	Pillow Block Support
H-2-120306	14	14	Shaft Extension Assembly
H-2-120307	1	3	Outer Rail Parts List & Notes
H-2-120307	2	3	Outer Rails
H-2-120307	3	3	Inner Rails
H-2-120308	1	4	Cart Dr Mot Assy Parts List & Notes
H-2-120308	2	4	Cart Drive Motor Weldment
H-2-120308	3	4	Cart Drive Motor Splash Guard Assembly
H-2-120308	4	4	Cart Drive Motor Details
H-2-120309	1	9	Canister Dolly Assembly Parts List & Notes
H-2-120309	2	9	Canister Dolly Assembly
H-2-120309	3	9	Canister Dolly Trunnion Lifting Weldment and Details
H-2-120309	4	9	Canister Dolly Weldment
H-2-120309	5	9	Canister Dolly Top Plate Detail
H-2-120309	6	9	Canister Dolly Base Plate Detail
H-2-120309	7	9	Canister Dolly Body Details
H-2-120309	8	9	Canister Dolly Wheel Mounting Plate Detail
H-2-120309	9	9	Canister Dolly Cover Detail
H-2-120310	1	2	Weldment Lifting Trunnion Parts List & Notes
H-2-120310	2	2	Weldment Lifting Trunnion Details
H-2-120311	1	2	Cart Support Assembly Parts List & Notes
H-2-120311	2	2	Cart Support Details
H-2-120312	1	11	Cart Drive Parts List & Notes
H-2-120312	2	11	Cart Drive Assembly
H-2-120312	3	11	Splash Guard Wheel Drive Left Side Assembly
H-2-120312	4	11	Splash Guard Wheel Drive Right Side Assembly
H-2-120312	5	11	Clutch Coupling Cover and Support Assembly
H-2-120312	6	11	Splash Guard Wheel Drive Left Side Details
H-2-120312	7	11	Splash Guard Wheel Drive Right Side Details
H-2-120312	8	11	Clutch Coupling Cover Details
H-2-120312	9	11	Clutch Coupling Details
H-2-120312	10	11	Shaft and Spacer Details
H-2-120312	11	11	Modified Geared Wheel Detail
H-2-120313	1	3	Fixed Stop Assembly Parts List & Notes

DRAWING NUMBER	SHEET	OF	TITLE
H-2-120313	2	3	Fixed Weldment and Plunger
H-2-120313	3	3	Fixed Stop Details
H-2-120314	1	7	Spider Drive Assembly Parts List & Notes
H-2-120314	2	7	Weldment, Drive Base & Sub. Weldment
H-2-120314	3	7	Spider Drive Details
H-2-120314	4	7	Spider Drive Rail Details
H-2-120314	5	7	Spider Drive Details
H-2-120314	6	7	Spider Drive Weldment Details
H-2-120314	7	7	Spider Drive Details
H-2-120315	1	3	Cart Assembly Parts List & Notes
H-2-120315	2	3	Cart Assembly
H-2-120315	3	3	Cart Assembly
H-2-120316	1	11	Upper Frame Assembly Parts List & Notes
H-2-120316	2	11	Upper Frame Assembly
H-2-120316	3	11	Upper Frame Assembly
H-2-120316	4	11	Upper Frame Assembly
H-2-120316	5	11	Support Rail A Assembly Details
H-2-120316	6	11	Support Rail B Assembly Details
H-2-120316	7	11	Support Rail C Assembly Details
H-2-120316	8	11	Support Rail D Assembly Details
H-2-120316	9	11	Upper Frame Details
H-2-120316	10	11	Upper Frame Details
H-2-120316	11	11	Upper Frame Details
H-2-120317	1	8	Lower Frame Parts List & Notes
H-2-120317	2	8	Lower Frame Assembly
H-2-120317	3	8	Lower Frame Assembly
H-2-120317	4	8	Lower Frame Beams Sections
H-2-120317	5	8	Fixed Stop Holder Details
H-2-120317	6	8	Roller, Drum & Bracket Assy Details
H-2-120317	7	8	Lower Frame Assembly Parts Details
H-2-120317	8	8	Lower Frame Assembly Parts Details
H-2-120318	1	4	Carousel Assembly
H-2-120318	2	4	Carousel Assembly
H-2-120318	3	4	Carousel Details
H-2-120318	4	4	Carousel Sub-Weldment
H-2-120319	1	7	Conduit & Cable Assembly
H-2-120319	2	7	Conduit & Cable Assembly

DRAWING NUMBER	SHEET	OF	TITLE
H-2-120319	3	7	Conduit & Cable Assembly
H-2-120319	4	7	Conduit & Cable Assembly
H-2-120319	5	7	Conduit & Cable Assembly Details
H-2-120319	6	7	Conduit & Cable Assembly Details
H-2-120319	7	7	Conduit & Cable Assembly Details
H-2-120320	1	1	Cart Heat Shield Support
H-2-120421	1	3	Cart Drive Coupling Assy Parts List & Notes
H-2-120421	2	3	Cart Drive Coupling Assembly & Details
H-2-120421	3	3	Cart Drive Coupling Details
H-2-120422	1	3	Emergency Pull Rope Assy Parts List & Notes
H-2-120422	2	3	Emergency Pull Detail
H-2-120422	3	3	Emergency Pull Rope Details
H-2-120423	1	1	Dolly Positioning Gde Assy Parts List & Notes
H-2-120424	1	1	Structural Weldment Details Pl & Notes
H-2-120425	1	3	Spider Drive Coupling Assy Parts List & Notes
H-2-120425	2	3	Spider Drive Coupling Details
H-2-120425	3	3	Spider Drive Coupling
H-2-120426	1	3	Dolly Wheel Assemblies Parts List & Notes
H-2-120426	2	3	Dolly Wheel Details
H-2-120426	3	3	Dolly Wheel Details
H-2-120427	1	4	Canister Centering Guide Assembly
H-2-120427	2	4	Canister Centering Guide Assembly
H-2-120427	3	4	Canister Centering Guide Details
H-2-120427	4	4	Canister Centering Guide Details
H-2-120428	1	4	Scale Platform Assembly
H-2-120428	2	4	Scale Platform Weldment
H-2-120428	3	4	Scale Platform Rails
H-2-120428	4	4	Scale Platform Details
H-2-120429	1	11	Weigh Scale Assembly
H-2-120429	2	11	Scale Assembly
H-2-120429	3	11	Scale Assembly Base Weldment
H-2-120429	4	11	Scale Assembly Base Weldment
H-2-120429	5	11	Scale Assembly Base Weldment
H-2-120429	6	11	Scale Assembly Base Weldment
H-2-120429	7	11	Scale Assembly Base Weldment
H-2-120429	8	11	Scale Assembly Details
H-2-120429	9	11	Scale Assembly Details

DRAWING NUMBER	SHEET	OF	TITLE
H-2-120429	10	11	Scale Assembly Details
H-2-120429	11	11	Scale Assembly Details
H-2-120430	1	3	Load Cell Parts List & Notes
H-2-120430	2	3	Load Cell Base Weldment
H-2-120430	3	3	Load Cell Details
H-2-120450	1	2	Enclosure Assemblies Parts List & Notes
H-2-120450	2	2	Enclosure Assemblies
H-2-120451	1	1	Flexible Metal Hose Assy Parts List & Notes
H-2-120452	1	4	Support Structure Assembly
H-2-120452	2	4	Support Structure Details
H-2-120452	3	4	Support Structure Details
H-2-120452	4	4	Support Structure Details
H-2-120460	1	3	Pour Turntable Dimensional Record Drawing
H-2-120460	2	3	Pour Turntable Dimensional Record Drawing
H-2-120460	3	3	Pour Turntable Dimensional Record Drawing
H-2-120568	1	1	Mechanical Connector Housing Assembly

DRAWING NUMBER	SHEET	OF	TITLE
H-2-122425	1	2	Electrical General Notes Symbols and Details
H-2-122425	2	2	Electrical General Notes Symbols and Details
H-2-122426	1	1	Electrical Pour & Drain Turntables Block Diagram
H-2-122427	3	4	Electrical Connection Diagram TU-130-001
H-2-122427	4	4	Electrical Connection Diagram TU-130-001

ATTACHMENT B
RELATED DRAWINGS

DRAWING NUMBER	TITLE
H-2-120052	Melter Assembly
H-2-120368	Drain Turntable Assembly
H-2-120368	Drain Turntable Assembly
H-2-120550	Track & Catch Pan Assembly Parts List & Notes
H-2-120562	Power Cable Reel Assembly
H-2-120563	Power Cable Reel Parts List and Notes
H-2-120564	Instrumentation Cable Reel Assembly
H-2-120565	Cable Reels Support Frame Weldment
H-2-120414	Pour Spout Bellows Assembly
W747391	Canister Assembly

9513336.0843

U.S. DEPARTMENT OF ENERGY
Hanford Waste Vitrification Plant
Richland, Washington
DOE Contract DE-AC06-86RL10838

FLUOR DANIEL, INC.
Advanced Technology Division
Fluor Contract 8457

SECTION 14602
DRAIN TURNTABLE
B-595-P-P06B-14602

APPROVED FOR CONSTRUCTION

REVISION 0
ISSUE DATE 4-6-93

WAPA YES ___ NO X
QUALITY LEVEL I ___ II X
SAFETY CLASS 1__ 2__ 3 X 4__

ORIGINATOR:

N. J. Chatelier, Mechanical Engineer Date 03/29/93

CHECKER:

D. A. Buzzelli, Lead Disc. Checker Date 3-29-93

APPROVED BY:

C. J. Divona Lead Discipline Engineer

Date 3/29/93

03/25/93 2:32pm
106\VOL5...\SPECS\P06B\14602-0.

SECTION 14602
DRAIN TURNTABLE
B-595-P-P06B-14602

TABLE OF CONTENTS

PART		PAGE
PART 1 GENERAL		1
1.1	SUMMARY	1
1.2	REFERENCES	1
1.3	RELATED REQUIREMENTS	2
1.4	DEFINITIONS	3
1.5	SYSTEM DESCRIPTION	3
1.6	SUBMITTALS	5
1.7	CLASSIFICATION OF SYSTEMS AND COMPONENTS	6
1.8	PROJECT OR SITE ENVIRONMENTAL CONDITIONS	6
PART 2 PRODUCTS		6
2.1	MATERIALS AND EQUIPMENT	6
2.2	FABRICATION AND MANUFACTURE	10
2.3	INSPECTION AND DIMENSIONAL RECORDS	13
2.4	TESTING	15
PART 3 EXECUTION		18

ATTACHMENTS

ATTACHMENT	TITLE
A	CONTRACT DRAWINGS
B	RELATED DRAWINGS

SECTION 14602
DRAIN TURNTABLE

PART 1 GENERAL

1.1 SUMMARY

This specification section covers the technical requirements for the fabrication, inspection and testing of a Drain Turntable (DTT).

1.2 REFERENCES

The publications listed below form a part of this specification section to the extent referenced. The publications are referred to in the text by the basic designation only.

AMERICAN GEAR MANUFACTURING ASSOCIATION (AGMA)

AGMA 420.04	1978 Speed Reducer and Gear Drives

AMERICAN NATIONAL STANDARDS INSTITUTE (ANSI)
and/or
AMERICAN SOCIETY OF MECHANICAL ENGINEERS (ASME)

ANSI/ASME B46.1	1985 Surface Texture (Surface Roughness, Waviness, and Lay)

AMERICAN SOCIETY FOR TESTING AND MATERIALS (ASTM)

ASTM A193/A193M	1990 (Rev. A) Standard Specification for Alloy-Steel and Stainless Steel Bolting Materials for High-Temperature Service
ASTM A194/A194M	1990 (Rev. A) Standard Specification for Carbon and Alloy Steel Nuts for Bolts for High-Pressure and High-Temperature Service
ASTM A240	1991 (Rev. A) Standard Specification for Heat-Resisting Chromium and Chromium-Nickel Stainless Steel Plate, Sheet, and Strip for Pressure Vessels
ASTM A276	1990 (Rev. A) Standard Specification for Stainless and Heat-Resisting Steel Bars and Shapes

ASTM A312/A312M	1991 (Rev. A) Standard Specification for Seamless and Welded Austenitic Stainless Steel Pipe
ASTM A480/A480M	1991 (Rev. A) General Requirements for Flat Rolled Stainless and Heat-Resisting Steel Plate, Sheet, and Strip

AMERICAN SOCIETY OF MECHANICAL ENGINEERS (ASME)
Boiler and Pressure Vessel Code

ASME Section IX	1989 Welding and Brazing Qualifications

ANTI-FRICTION BEARING MANUFACTURERS ASSOCIATION (AFBMA)

AFBMA 9	1990 Load Ratings and Fatigue Life for Ball Bearings
AFBMA 11	1990 Load Ratings and Fatigue Life for Roller Bearings
AFBMA 20	1977 Metric Ball and Roller Bearings Conforming to Basic Boundary Plans
AFBMA 21.2	1978 Roller, Ball, and Thrust Bearings

OFFICE OF FEDERAL SUPPLY AND SERVICES

QQ-P-35C	Passivation Treatments for Corrosion Resistant Steel

STEEL STRUCTURES PAINTING COUNCIL (SSPC)

SSPC PA-2	1982 Paint Application Specification Number 2, Measurement of Dry Paint Thickness with Magnetic Gauges
SSPC SP-10	1989 Surface Preparation Specification Number 10, Near-White Blast Cleaning

1.3 RELATED REQUIREMENTS

Specification Section 01730	Operation and Maintenance Data
Specification Section 05060	Welding Structural
Specification Section 13252	Precautions for Fabrication, Handling and Storage of Stainless Steel and Nickel Alloys
Specification Section 14603	Cable Reel Assembly

Specification Section 14604	Track and Catch Pan Assembly
Specification Section 15196	Identification and Tagging Methods for Mechanical Equipment
Specification Section 16120	Soldering - Electrical
Specification Section 16151	Motors - Induction for Radioactive Service
Specification Section 16610	Electrical Requirements for Packaged Mechanical Equipment
Specification Section 17857	Local Control Panels for Pour and Drain Turntables
Specification Section 17886	Instruments Furnished with Mechanical Equipment Load Cell Signal Conditioner - Pour and Drain Turntables
Specification Section 17908	Instruments Furnished with Mechanical Equipment Pour and Drain Turntables

CONTRACT DRAWINGS

Drawings as listed in Attachment A.

RELATED DRAWINGS

Drawings as listed in Attachment B.

1.4 DEFINITIONS

ATP - Acceptance Test Procedure
CMTR - Certified Material Test Report
DTT - Drain Turntable
FAT - Factory Acceptance Test
NDE - Nondestructive Examination
PT - Liquid Penetrant Examination
PTT - Pour Turntable
TID - Total Integrated Dose

1.5 SYSTEM DESCRIPTION

In the Melter Cell, highly-radioactive liquid wastes are melted in a refractory-lined steel vessel at a temperature of 2000°F. During normal operations the glass melt exits the pour spout into portable stainless steel canisters placed on the Pour Turntable (PTT).

The Drain Turntable (DTT) is located under the melter drain valve. It is intended to be used only when the melter must be drained prior to replacement. The melter pour spout is stopped and the drain valve is opened to allow melt to flow into stainless steel canisters positioned on the DTT. These canisters are positioned over a weigh system. The weigh system uses a flexure beam bearing against a load cell designed such that it is positioned at a sufficient distance from the thermally-hot canister. The transducer package subassembly is shielded from heat and radiation, yet is accessible for remote replacement. The instrumentation signals for the weigh system load cell are transmitted through the instrumentation cable reel.

The DTT will be stationed on tracks (part of the Track and Catch Pan Assembly, RA-130-009 and -010, Specification Section 14604) which extend under the melter. During the filling of canisters the glass level will be monitored by a turntable-mounted weighing system and an external gamma ray detection system. DTT rotation is performed by a gear train, which drives a spider drive. Electrical power to drive the DTT and positioning and weighing instrumentation will be provided by cable connected through the cable reel assembly (Specification Section 14603) mounted on a support frame at the south end of the tracks. When the melter is completely drained, the pour turntable will be moved south on the tracks to a position clear of the melter. The DTT (with five canisters) can then be driven out until it is also clear of the melter. In the event of a drive system power failure, the turntables may be moved out from under the melter by a steel cable hooked to the overhead crane.

All canisters, assemblies and subassemblies are designed to be removed or replaced by a remotely-operated impact wrench and overhead crane. Required electrical power is supplied via lower electrical connectors and cable reels.

1.5.1 Turntable Cart Drive

The turntable cart drive wheels are connected through an electric clutch to a variable speed reversible 3/4 hp motor.

At high speed, the 1750 rpm motor drives a 535:1 gear reducer which drives the turntable assembly along the track at .5 in/sec. At a point approximately 9 inches from the end stop, a limit switch on the turntable contacts the end stop housing which reduces the motor speed to 175 rpm and reduces the travel speed .05 in/sec. As the adjustable stop contacts the fixed end stop on the track, a second limit switch shuts off the drive motor.

1.5.2 Turntable Spider Drive

The turntable contains a set of remoteable dollies and canisters which travel on two concentric machined rails mounted to the turntable frame. The dollies and canisters are driven by a variable speed, 3/4 hp reversible motor through a gear reducer and drive shaft. At high speed the 1750 rpm motor drives the 1167:1 gear reducer to rotate the dollies and canisters at 1/4 rpm, corresponding to a linear speed of .94 in/sec. At a point approximately 9 inches away from the pour spout centerline a limit switch is triggered to reduce the motor down to 175 rpm, which reduces the canister speed to .094 in/sec. As the canister approaches the pour spout, the trigger trips another limit switch which shuts off the motor.

1.6 **SUBMITTALS**

Submit the following in accordance with the Vendor Drawing and Data Requirements section of the Order/Subcontract.

1.6.1 Operation and Maintenance Data in accordance with Specification Section 01730.

1.6.2 Handling, shipping and storage procedures shall be submitted for Buyer review.

1.6.3 Acceptance Test Procedure (ATP) and checklist shall be submitted for Buyer approval in accordance with Paragraph 2.4.3.1.

1.6.4 Seller's Material Control Procedure shall be submitted for Buyer review in accordance with Paragraph 2.1.2.2.

1.6.5 Detailed procedure for Final Dimensional Check shall be submitted for Buyer approval in accordance with Paragraph 2.3.2.2.

1.6.6 Interchangeability Dimensional Record Drawing shall be submitted for Buyer review in accordance with Paragraphs 2.2.1 and 2.3.2.1.

1.6.7 Certified Material Test Reports (CMTRs) shall be submitted for Buyer review in accordance with Paragraph 2.1.4.1.

1.6.8 Weld Repair Procedure shall be submitted for Buyer approval in accordance with Paragraph 2.2.2.1.

1.6.9 Nondestructive Examination (NDE) procedure shall be submitted for Buyer review in accordance with Paragraph 2.3.1.1.

1.6.10 Test reports and inspection results shall be submitted for Buyer approval in accordance with Paragraphs 2.1.4.1, 2.1.8.1, 2.3.1.1, 2.3.2.1 and 2.4.1.3.

1.6.11 Support facilities descriptions shall be submitted for Buyer approval in accordance with Paragraph 2.3.2.3.

1.6.12 Dimensional Records shall be submitted for Buyer approval in accordance with Paragraph 2.3.2.1.

1.6.13 Descriptions of mixing, preparation and forming methodology to be used in installing insulation materials shall be submitted for Buyer review in accordance with Paragraph 2.2.7.

1.6.14 A record of heat treatment for all applicable hardware shall be submitted for Buyer review.

1.6.15 A procedure to determine defects greater than 0.012" shall be submitted for Buyer approval.

1.7 CLASSIFICATION OF SYSTEMS AND COMPONENTS

(Not Used)

1.8 PROJECT OR SITE ENVIRONMENTAL CONDITIONS

1.8.1 Climatic and Geographic Site Conditions

A.	Site Elevation	714 feet above sea level
B.	Barometric Pressure	14.3 psia

1.8.2 Operating Environment

A.	Normal Temperature Range	60°F to 104°F
B.	Design Basis Temperature	104°F
C.	Relative Humidity	Not controlled
D.	Radiation Level	3×10^8 rads (TID, 10 years)

PART 2 PRODUCTS

2.1 MATERIALS AND EQUIPMENT

This specification section is in reference to the following equipment:

Equipment No.	Equipment Name
RA-130-002	Drain Turntable

2.1.1 Materials

Components used in fabrication shall be in accordance with the Contract Drawings. Fabrication materials shall be as follows, unless otherwise noted in drawings.

2.1.1.1 All stainless steel plate, sheet and strip shall be in accordance with ASTM A240, Type 304L, hot rolled, annealed and pickled. Blasting as a descaling method shall not be permitted.

2.1.1.2 All stainless steel bars and shapes shall be in accordance with ASTM A276, Type 304L, Condition A and Class C.

2.1.1.3 Stainless steel structural bolts shall be in accordance with ASTM A193/A193M, Grade B6, Type 304.

2.1.1.4 Stainless steel structural nuts shall be in accordance with ASTM A194/A194M, Grade 8M or equal.

2.1.1.5 Stainless steel pipe and tubing shall be in accordance with ASTM A312/A312M.

2.1.1.6 The turntable speed reducer and gear train shall both be in accordance with AGMA 420.04.

2.1.1.7 The drive train bearings shall be in accordance with AFBMA 9, AFBMA 11, AFBMA 20 and AFBMA 21.2 as applicable.

2.1.1.8 Electrical materials and equipment shall be in accordance with Specification Sections 16610 and 16120.

2.1.2 Material Contamination

2.1.2.1 Specification Section 13252 provides requirements for materials used in contact with austenitic stainless steel and non-ferrous metals. This specification section applies to all materials.

2.1.2.2 Upon completion of fabrication, examination and tests by Seller the metal surfaces shall be in accordance with the requirements of Specification Section 13252. Seller's Material Control Procedures shall describe the actions to be taken in the event of material contamination. They shall also address the cleaning and protection of materials as required.

2.1.3 Surface Finish

2.1.3.1 Unless otherwise specified on Contract Drawings, surface finish for various material forms shall be as follows: Plates shall be finished in accordance with ASTM A480/A480M Section 10, Paragraph 10.1.2, hot-rolled, annealed and pickled No. 1 finish. A shot or grit-blasted surface is not acceptable. Sheets shall be finished

in accordance with ASTM A480/A480M Section 8, Paragraph 8.1.2, No. 2D finish. Strips shall be finished in accordance with ASTM A480/A480M Section 9, Paragraph 8.1.1, No. 2 finish.

2.1.3.2 Unless otherwise specified on the Contract Drawings, machined surfaces shall have a 125AA finish in accordance with ANSI/ ASME B46.1.

2.1.3.3 No arc strikes, nicks, gouges or other surface defects are permitted. Defects greater than .012 inch in depth shall be repaired by welding and grinding to restore original surface contour. Defects of lesser depth shall be removed by grinding or polishing. Grinding shall be performed using 125 grit or finer abrasive wheels. No defects or grinding marks deeper than those left by a 125 grit abrasive wheel are permitted.

2.1.4 Material Control

2.1.4.1 One (1) copy of Certified Material Test Reports (CMTRs) shall be provided for all material and submitted for Buyer review.

2.1.5 Equipment Provided by Seller

2.1.5.1 The equipment to be furnished shall be built to print and in accordance with the Related Requirements listed in Paragraph 1.3, the Contract Drawings and this specification section. Seller's work includes: furnish materials, manufacture, assemble, test and deliver the following components in accordance both with the Contract Drawings and this specification section:

A. A drain turntable assembly complete with cart drive, turntable drive, canister dollies, canister guides and canister weighing system.

B. All wiring, pull and junction boxes, electrical hardware, conduit and conduit installation as shown on the Contract Drawings and in accordance with Specification Section 16610.

C. Any special tools and accessories required for installation or operation.

D. Seller shall also provide facilities to measure and test the assembled turntable system as described in Paragraphs 2.3 and 2.4 of this specification section, including framework and support for dummy drain spout structure.

2.1.6 Equipment provided by Buyer

2.1.6.1 For testing:

Five test canisters (dummy fill not included).

2.1.6.2 For incorporation into component fabrication:

A. Upper and lower electrical connectors (PUREX connectors).

B. Internal electrical components for the electrical upper and lower connectors.

2.1.7 Contract Drawings

Buyer's Contract Drawings for the DTT assembly and components have dimensional requirements that have been established to meet definite interface points. It is imperative that these interface dimensions be achieved for operational purposes.
Drawing H-2-120368 shows the dimensional interface for the DTT.

2.1.8 Design Features, Considerations

2.1.8.1 Remoteability

Once radioactive wastes are introduced into the Melter Cell, manned entrance will no longer be possible for operation or maintenance. Therefore, all components are designed to be remotely removable (hereafter referred to as "remoteable") by means of an overhead crane into less-radioactive areas for decontamination and maintenance. Furthermore, to the extent possible, assemblies are designed with remoteable subassembly modules to allow ready replacement of components without the necessity of removing and decontaminating the entire assembly. The following turntable subassemblies shall be remoteable:

<u>Drain Turntable</u>

Spider Drive Motor Assembly
Cart Drive Assembly
Canister Guide Weldments
Canister Dolly Assemblies
Fixed Stop Assembly
Load Cell Assembly
Limit Switch Assembly

Each of the above subassemblies incorporates a lifting bail which can be engaged with the overhead crane hook or, in the case of heavy components, with lifting trunnions which can be engaged with a special lifting yoke suspended from the crane hook.

When suspended, all remoteable assemblies and subassemblies must be level within 2 degrees by proper placement of lift points and/or by counterweighting to assure proper engagement with alignment dowels and studs, except as noted on Contract Drawings.

Seller shall demonstrate and document the remoteability and balance of all applicable components in accordance with Paragraph 2.4.3.

2.1.8.2 All purchased rotating equipment (motors, gear boxes, bearings, etc.) shall be of a design that can be lubricated with CHEVRON SRI-NLGI2 grease or equal. Seller shall clearly indicate the appropriate lubricant level on the equipment. These items shall be cleaned and repacked with the above-mentioned lubricant at assembly prior to installation at the facility.

2.2 FABRICATION AND MANUFACTURE

The drain turntable and components shall be fabricated in accordance both with this specification section and DTT Assembly Drawing H-2-120368.

2.2.1 Interchangeability

Each remoteable assembly must be interchangeable with spare assemblies. This requires that all mounting surfaces be precisely located in three planes.

To ensure interchangeability of subsequent assemblies the close tolerance requirements shown in Contract Drawings shall be strictly adhered to. Seller must conduct all close tolerance work with respect to established datum references. Work shall be performed under controlled temperature conditions as deemed necessary in order to achieve and maintain specified dimensions and tolerances. The reference temperature for dimensions and tolerances is 68°F. Seller shall complete the Dimensional Record Drawing H-2-120372 and submit for Buyer review.

2.2.2 Welding

All welding and NDE shall be performed in accordance with Specification Section 05060.

2.2.2.1 Repairs

Seller shall prepare and submit a complete repair procedure for Buyer approval. At minimum, the repair procedure shall include:

A. Type and extent of repairable defects.

B. Defect removal methods. These shall include NDE methods to assure complete defect removal.

C. Repair method. This shall include weld preparation, treatment and reference to ASME Section IX qualified weld procedures.

2.2.2.2 Fabrication of all components and assemblies shall minimize crevices, pockets, absorbent materials or similar voids where contaminants can be trapped.

2.2.2.3 All stainless steel surfaces shall be passivated in accordance with Federal Specification QQ-P-35C.

2.2.3 Coatings

2.2.3.1 Carbon Steel Surfaces

Carbon steel surfaces which will be exposed to cell environment shall be prepared for painting in accordance with SSPC SP-10. Primer shall be an inorganic zinc-rich primer (Ameron Dimetcote 9 or equal), one coat, with a total dry film thickness of 2.5 mils plus or minus .5 mils and a minimum of 6 grams zinc per square foot of dried film. Finish coat shall be a high-build polyamide epoxy paint (Amercoat 66 or equal), two coats, with total dry film thickness of 10 mils plus or minus .5 mils. The total system dry film thickness of primer and finish coat shall be 12.5 mils plus or minus 1.0 mils. Surface color shall be white. Paint shall be applied in accordance with paint manufacturer's recommended methods. Typical components to be painted are motors, gear reducers, housings and other components requiring surface protection.

Contact surfaces of gears, wheels, rails and bearings shall not be painted.

2.2.3.2 Stainless Steel Surfaces

Stainless steel surfaces shall be painted for the purpose of identification only.

2.2.3.3 Inspection

Dry film thickness measurements shall be verified with a calibrated magnetic thickness gauge (Nordson "Mikrotest" or equal) and shall be in accordance with SSPC PA-2.

2.2.3.4 Defects

Defects or damaged areas detected during shop assembly, handling, testing and disassembly shall be repaired. The surface cleanliness and profile shall be restored to meet the specified surface preparation requirements. Precautions shall be taken to protect adjacent coated areas from damage by cleaning. The periphery of the damaged area shall be feathered. The use of vacuum blast type equipment, needle guns and peening wheels is permitted to restore profile.

2.2.3.5 Seller shall provide one gallon each of primer and finish paint for field touch-up.

2.2.4 Nameplate

Each item of equipment shall be fitted with a stainless steel nameplate securely attached by pins of a similar material. The nameplate shall be in accordance with Specification Section 15196, Paragraph 2.2.2, Type 6.

2.2.5 Instrumentation and Controls

2.2.5.1 All instrumentation and controls shall be in accordance with Specification Sections 17857, 17886 and 17908.

2.2.6 Electrical Components

Functional requirements of electrical components, instrumentation and definition of Seller/Buyer interfaces are shown in the electrical and instrument diagrams and Contract Drawings (Attachment A).

2.2.6.1 Motors

Seller shall provide electric motors as specified in Specification Section 16151 and the Contract Drawings (Attachment A). Electric motor data sheet of Specification Section 16151 shall be completed by Seller.

Surface protection of motors and related components shall be in accordance with Paragraph 2.2.3.

2.2.6.2 Wiring and Cabling

Seller shall provide and install all cables, conduit, pull and junction boxes as shown on Contract Drawings and in accordance with Specification Section 16610.

Lower electrical connectors shall be modified, mounted and dimensioned in accordance with the Contract Drawings.

2.2.7 Insulations

The insulations used on the equipment covered by this section are of the molded variety and called out on the Contract Drawings (Attachment A). Seller is to prepare and form the insulation in accordance with manufacturer's recommended methods. At least one month of shelf life shall remain on the product at the time of installation into the applicable equipment. Seller shall submit a description of mixing, preparation and forming methodology to be used in installing this insulation into the equipment.

2.3 INSPECTION AND DIMENSIONAL RECORDS

2.3.1 Seller shall perform an inspection of all equipment supplied to verify conformance to this specification section. Buyer reserves the right to witness any or all inspections or other activities affecting this specification section and requires a written notice prior to initiation of these inspection-related activities.

2.3.1.1 Welding Inspection and Criteria

Lifting lugs, structural members and full penetration welds shall be surface examined using nondestructive examination (NDE). Inspection methods are:

100 % visual and
100 % Liquid Penetrant Examination (PT)

A final surface examination shall be performed after completion of the proof test. Buyer is to review examination results and reports in detail.

Acceptance criteria for NDE shall be in accordance with Specification Section 05060. Buyer is to review Seller's NDE procedures, material certification and reports to assure accuracy.

2.3.2 Dimensional Records

2.3.2.1 Seller shall perform a complete dimensional inspection of the DTT. A mylar copy of Drawing H-2-120372 shall be provided by the Buyer for the Seller to use for documentation and return.

Seller shall record, on the mylar copy, the actual as-built dimensions required by the drawing with respect to datums, dowel pins or holes identified. Where duplicate equipment pieces are involved, a separate serial number shall be recorded on both the piece nameplate and tracing.

X, Y and Z coordinates specified on Drawing H-2-120372 shall be measured with the drain turntable placed on the tracks supplied with the Track and Catch Pan Assembly defined in Specification Section 14604.

Dimensional inspection is to be made after proof load tests are completed as described in Paragraph 2.4.3.4.

2.3.2.2 Seller shall submit detailed final dimensional check procedures for Buyer approval. These shall include:

A. Methods of measurement applicable to specific components or assemblies.

B. Type of measuring device used.

C. Methods, frequency and verification of calibration for the precision measurement devices.

2.3.2.3 Facilities Required for Dimensional Measurements

Seller shall provide an enclosed or partitioned area in which to make dimensional measurements of the assembled DTT. Within this area there shall be no interference by any other manufacturing operation such as arc welding or equipment movement. This area will provide a 7-foot clear walkway around the equipment. This area may be the same as the test area described in Paragraph 2.4.2 but must be large enough to accommodate all equipment required for the dimensional inspection. The area must be equipped with a seven-day temperature recorder provided by the Seller to document ambient temperature control. The recorder shall have a current calibration tag. For the purpose of measurement orientation, operation and testing the position on the turntable which has the receptacle for the emergency tow cable shall be considered the South End or 6 o'clock position. The area shall be temperature controlled to 68°F ±5°F throughout the time measurements are made. Adequate lighting of at least 100 foot-candle average shall be provided. An overhead crane will be required. The rated lifting capacity of this crane shall be no less than 20 tons. The crane hook shall clear the height of 39'-2" from the floor.

Seller shall supply rigid supports for optical transits and levels. These supports shall be free-standing, not touching the turntable or track system. Substantial platforms, ladders, stairs, handrails, etc. which meet OSHA standards shall be provided. Seller shall submit drawings and/or equipment specifications for approval of:

A. Measurement enclosure area.

B. Temporary rails/tracks to support the DTT.

C. Optical instrument supports.

D. Platforms, ladders and handrails.

2.3.3 Buyer Witnessing of Dimensional Checks

Buyer shall be notified in advance of the date when final dimensional measurements are to be made. Buyer reserves the right to witness Seller's final dimensional measurements.

2.4 **TESTING**

2.4.1 General

2.4.1.1 A Factory Acceptance Test (FAT) shall be conducted in accordance with this specification section and applicable codes and standards at Seller's plant prior to delivery. This test shall demonstrate satisfactory operation of all equipment, control logic and functional design under simulated loading conditions. All tests shall be performed at ambient temperature. Heating of canisters or their content is not required.

2.4.1.2 Except for the equipment listed in Paragraph 2.1.6, Seller shall provide all equipment, facilities and labor necessary to meet the requirements of the FATs.

2.4.1.3 Seller shall maintain records of all test data and those observations pertinent to equipment performance. A copy of these records shall be provided for Buyer review.

2.4.1.4 Buyer shall be informed in advance of date that all factory tests are to be conducted. Buyer reserves the right to attend and witness all factory tests.

2.4.2 Special Facilities Required for Testing

2.4.2.1 A test area of sufficient size to assemble and operate all equipment covered by this specification section.

2.4.2.2 The structural framework to support a simulated (dummy) flange of the melter drain spout assembly to demonstrate the dimensional line-up of the canisters in the drain position.

2.4.2.3 An overhead crane shall be available for testing. Rated lifting capacity of the crane shall be no less than 20 tons. A 1/2 ton electric hoist will also be required.

2.4.3 Acceptance Test Procedure

2.4.3.1 An Acceptance Test Procedure (ATP) shall be submitted for Buyer approval. The ATP shall cover, as a minimum, all activities identified below plus any other activities determined by Seller as being significant to the overall performance of the equipment. The ATP shall include demonstration of the functionality and remoteability of the DTT and its subassemblies. Seller shall submit a checklist for approval prior to beginning the tests containing the tests to be performed and identifying all instruments and special equipment to be used and measurements to be made. The tests shall include but not be limited to the following:

A. Initial set-up of the DTT on the rail/track system.

B. Test of lifting trunnions to verify mechanical integrity.

C. Verification of interface dimensions.

D. Demonstration/functionality of DTT cart drive and rotational drive position limit switches.

E. Accuracy of the canister weighing system.

F. Remoteability of turntable sub-assemblies.

G. Record the weight of the fully-assembled DTT on Dimensional Record Drawing H-2-120372.

2.4.3.2 The following test sequence is intended as a guide to enable Seller to plan for the equipment and services to support the set-up and tests. The set-up and test area may be the same as outlined in Paragraphs 2.3.2.3 and 2.4.2.

A. Test the lifting trunnions for mechanical integrity as outlined in Paragraph 2.4.3.4.

B. Verify the DTT for compliance of interface dimensions, including electrical connectors (PUREX type).

C. Test cart drive and limit switches for accuracy at predetermined locations at both ends on the rail. Repeat this test 10 times.

D. Check cart drive motor for temperature rise and full load current.

E. Return the DTT to predetermined location near drain spout dummy flange.

F. Demonstrate accuracy of the spider drive and limit switches. Repeat this test 20 times at 90 degree increments.

G. Verify temperature rise and full load current of spider drive motor.

H. Weigh the fully-assembled DTT.

2.4.3.3 Turntable and Weigh Scale Testing with Canisters in Place

The following tests require the availability of a total of five (5) canisters of a known net weight. Four (4) of the canisters shall be preloaded/filled to simulate various operating weights

(lead shot or equal). Canisters shall have the following fill weights:

Canister No. 1 - No fill weight (empty)
Canister No. 2 - 2000 lbs. fill weight
Canister No. 3 - 3000 lbs. fill weight
Canister No. 4 - 3800 lbs. fill weight
Canister No. 5 - 4360 lbs. fill weight

The weigh scale should reflect the correct weight in each case. Glass draining and turntable operation shall be simulated by loading the canisters on the turntable. The emergency tow cable receptacle on the turntable shall be designated as the 6 o'clock position. The canisters shall be loaded on the turntable (one at a time rotating the turntable in a clockwise direction) in such a manner that, on the completion of loading all five canisters, the first canister shall be in the 3 o'clock position.

Canisters shall then be removed one at a time starting with the canister in the 6 o'clock position, and rotating the turntable clockwise until all five canisters are removed.

The entire above sequence of operation shall be repeated eight (8) times.

Verification of dimensional interface of flanges, accuracy of the spider drive, limit switches and weigh scale, along with drive motor temperature rise and full load current shall be completed and documented during these tests.

Verify remoteability of each component in accordance with Paragraph 2.1.8.1.

2.4.3.4 Trunnion Proof Test

A trunnion proof test shall be performed. The test shall be based on lifting a load that is 150% greater than the weight of the DTT assembly without the canisters.

During each lift test the DTT shall be suspended for 10 minutes at a lift height of not less than 12 inches above the rails. This test shall be repeated 10 times with a waiting period of two (2) minutes between tests. After completion of the lifting cycle an NDE inspection/evaluation shall be performed in accordance with Paragraph 2.3.1.1. The visual inspection shall include the verification for any deformation/stress cracking on the lifting trunnion and its basic load-bearing members.

2.4.3.5 Acceptance Criteria

The criteria for acceptance of the equipment by the Buyer from the Seller is as follows:

A. Satisfactory and repeatable operation of the turntable cart drive as demonstrated in Paragraph 2.4.3.2.

B. Satisfactory and repeatable operation of the turntable spider drive as demonstrated in Paragraphs 2.4.3.2 and 2.4.3.3.

C. The ability of all remoteable assemblies defined in Paragraph 2.1.8.1 to functionally assemble over their dowel pins and studs, mate up properly with their lower connector interface, and balance when lifted by the bail within 2 degrees of vertical (or horizontal).

D. The ability of the entire turntable assembly complete with remoteable assemblies installed to balance when lifted by the trunnions within 2 degrees of vertical.

E. Satisfactory, repeatable and complete functionality of all electrical interfaces (electrical nozzles), electrically operated motors and all limit switches.

F. Satisfactory and repeatable operation of the weigh scale and load cell as demonstrated in Paragraph 2.4.3.3.

G. Satisfactory completion of proof load test and subsequent NDE inspection as described in Paragraph 2.4.3.4.

PART 3 EXECUTION

(Not Used)

END OF SECTION

ATTACHMENT A
CONTRACT DRAWINGS

DRAWING NUMBER	SHEET	OF	TITLE
H-2-120368	1	20	Drain Turntable Parts List and Notes
H-2-120368	2	20	Drain Turntable Assembly
H-2-120368	3	20	Drain Turntable Assembly
H-2-120368	4	20	Drain Turntable Assembly
H-2-120368	5	20	Drain Turntable Assembly
H-2-120368	6	20	Drain Turntable Assembly
H-2-120368	7	20	Drain Turntable Assembly
H-2-120368	8	20	Drain Turntable Assembly
H-2-120368	9	20	Drain Turntable Assembly
H-2-120368	10	20	Drive Arm Assembly & Details
H-2-120368	11	20	Wheel Cover Assembly & Details
H-2-120368	12	20	Wheel Cover Assembly & Details
H-2-120368	13	20	Base Weldment
H-2-120368	14	20	Drain Turntable Details
H-2-120368	15	20	Enclosure Mtg Bracket Assembly & Details
H-2-120368	16	20	Drain Turntable Details
H-2-120368	17	20	Drain Turntable Details
H-2-120368	18	20	Drain Turntable Details
H-2-120368	19	20	Limit Switch Weldment
H-2-120368	20	20	Drain Turntable Sections & Views
H-2-120369	1	2	Canister Guide Weldment Parts List & Notes
H-2-120369	2	2	Canister Guide Details
H-2-120370	1	8	Canister Dolly Assembly Parts List & Notes
H-2-120370	2	8	Canister Dolly Weldment
H-2-120370	3	8	Lifting Trunnion Weldment
H-2-120370	4	8	Canister Dolly Top Plate Detail
H-2-120370	5	8	Canister Dolly Wheel Mounting Detail
H-2-120370	6	8	Canister Dolly Cover Detail
H-2-120370	7	8	Lifting Trunnion Details
H-2-120370	8	8	Canister Dolly Details
H-2-120371	1	4	Dolly Rails Outer Rail
H-2-120371	2	4	Dolly Rails Inner Rail
H-2-120371	3	4	Dolly Rails Outer Rails
H-2-120371	4	4	Dolly Rails Outer Rail
H-2-120372	1	3	Drain Turntable Dimensional Record Drawing
H-2-120372	2	3	Drain Turntable Dimensional Record Drawing
H-2-120372	3	3	Drain Turntable Dimensional Record Drawing

DRAWING NUMBER	SHEET	OF	TITLE
H-2-120374	1	4	Carousel Assembly
H-2-120374	2	4	Carousel Assembly
H-2-120374	3	4	Carousel Details
H-2-120374	4	4	Carousel Sub-Weldment
H-2-120375	1	2	Canister Lid Closure Sprt Assy Parts List & Notes
H-2-120375	2	2	Canister Lid Closure Support Det
H-2-120376	1	2	Lifting Trunnion Weldment Parts List & Notes
H-2-120376	2	2	Lifting Trunnion Details
H-2-120377	1	5	Cart Dr Mot Assy Parts List & Notes
H-2-120377	2	5	Cart Drive Motor Weldment
H-2-120377	3	5	Cart Drive Motor Weldment Details
H-2-120377	4	5	Cart Drive Motor Splash Guard Assy
H-2-120377	5	5	Cart Drive Motor Splash Guard Det
H-2-120378	1	7	Spider Drive Assembly Part List & Notes
H-2-120378	2	7	Weldment Drive Base & Sub-Weldment
H-2-120378	3	7	Spider Drive Details
H-2-120378	4	7	Spider Drive Rails
H-2-120378	5	7	Spider Drive Details
H-2-120378	6	7	Spider Drive Details
H-2-120378	7	7	Spider Drive Details
H-2-120379	1	3	Drain Turntable Cart Assy Parts List & Notes
H-2-120379	2	3	Drain Turntable Cart Top View
H-2-120379	3	3	Drain Turntable Cart Side View
H-2-120380	1	2	Cart Spider Drive Support Assembly
H-2-120380	2	2	Cart Spider Drive Support Details
H-2-120381	1	23	Cart Base Parts List & Notes
H-2-120381	2	23	Cart Base Assembly
H-2-120381	3	23	Cart Base Assembly
H-2-120381	4	23	Cart Base Assembly
H-2-120381	5	23	Cart Base Weldment
H-2-120381	6	23	Cart Base Weldment
H-2-120381	7	23	Cart Base Machining
H-2-120381	8	23	Cart Base Beam Weldment
H-2-120381	9	23	Cart Base Beam Weldment
H-2-120381	10	23	Cart Base Weldment
H-2-120381	11	23	Cart Base Details
H-2-120381	12	23	Cart Base Support Rails
H-2-120381	13	23	Cart Base Support Rails
H-2-120381	14	23	Cart Base Support Rails
H-2-120381	15	23	Cart Base Details

DRAWING NUMBER	SHEET	OF	TITLE
H-2-120381	16	23	Cart Base Details
H-2-120381	17	23	Cart Base Details
H-2-120381	18	23	Cart Base Details
H-2-120381	19	23	Cart Base Details
H-2-120381	20	23	Cart Base Details
H-2-120381	21	23	Cart Base Details
H-2-120381	22	23	Cart Base Details
H-2-120381	23	23	Cart Base Weldment & Details
H-2-120382	1	3	Cart Drive Support Assembly Parts List & Notes
H-2-120382	2	3	Cart Drive Support Details
H-2-120382	3	3	Cart Drive Support Details
H-2-120383	1	3	Fixed Stop Assembly Parts List & Notes
H-2-120383	2	3	Fixed Stop Weldment & Plunger Assembly
H-2-120383	3	3	Fixed Details
H-2-120384	1	5	Limit Switch Assembly Parts List & Notes
H-2-120384	2	5	Limit Switch Parts Details
H-2-120384	3	5	Limit Switch Assembly Parts Details
H-2-120385	1	12	Cart Drive Parts List & Notes
H-2-120385	2	12	Cart Drive Assembly
H-2-120385	3	12	Cart Drive Splash Guard Wheel Drive Right Side Assembly
H-2-120385	4	12	Cart Drive Splash Guard Wheel Drive Right Side Details
H-2-120385	5	12	Cart Drive Splash Guard Wheel Drive Right Side Details
H-2-120385	6	12	Cart Drive Splash Guard Wheel Drive Left Side Assembly
H-2-120385	7	12	Cart Drive Splash Guard Wheel Drive Left Side Details
H-2-120385	8	12	Cart Drive Clutch Coupling Cover and Support
H-2-120385	9	12	Cart Drive Clutch Coupling Cover Details
H-2-120385	10	12	Cart Drive Clutch Coupling Support Details
H-2-120385	11	12	Cart Drive Clutch Coupling Shaft and Spacer Det
H-2-120385	12	12	Cart Drive Modified Gear Wheel Detail
H-2-120386	1	6	Spider Dr Mot Assy Parts List & Notes
H-2-120386	2	6	Spider Drive Motor Weldment
H-2-120386	3	6	Spider Drive Motor Details
H-2-120386	4	6	Spider Drive Motor Heat Shield
H-2-120386	5	6	Spider Drive Motor Heat Shield Details
H-2-120386	6	6	Spider Drive Motor Heat Shield Details
H-2-120388	1	7	Conduit & Cable Assembly Group Parts List & Notes
H-2-120388	2	7	Conduit and Cable Assembly
H-2-120388	3	7	Conduit and Cable Assembly
H-2-120388	4	7	Conduit and Cable Assembly

DRAWING NUMBER	SHEET	OF	TITLE
H-2-120388	5	7	Conduit and Cable Assembly
H-2-120388	6	7	Conduit and Cable Assembly
H-2-120388	7	7	Conduit and Cable Assembly
H-2-120390	1	2	Support Bracket Weldment and Parts List & Notes
H-2-120390	2	2	Limit Switch Support Details
H-2-120392	1	4	Emergency Pull Bar Assembly
H-2-120392	2	4	Emergency Pull Bar Weldment
H-2-120392	3	4	Emergency Pull Bar Details
H-2-120392	4	4	Emergency Pull Bar Lifting Loop
H-2-120421	1	3	Cart Drive Coupling Assy Parts List & Notes
H-2-120421	2	3	Cart Drive Coupling Assembly & Details
H-2-120421	3	3	Cart Drive Coupling Details
H-2-120423	1	1	Dolly Positioning Gde Assy Parts List & Notes
H-2-120424	1	1	Structural Weldment Details Pl & Notes
H-2-120425	1	3	Spider Drive Coupling Assy Parts List & Notes
H-2-120425	2	3	Spider Drive Coupling Details
H-2-120425	3	3	Spider Drive Coupling
H-2-120426	1	3	Dolly Wheel Assemblies Parts List & Notes
H-2-120426	2	3	Dolly Wheel Details
H-2-120426	3	3	Dolly Wheel Details
H-2-120427	1	4	Canister Centering Guide Assembly
H-2-120427	2	4	Canister Centering Guide Assembly
H-2-120427	3	4	Canister Centering Guide Details
H-2-120427	4	4	Canister Centering Guide Details
H-2-120428	1	4	Scale Platform Assembly
H-2-120428	2	4	Scale Platform Weldment
H-2-120428	3	4	Scale Platform Rails
H-2-120428	4	4	Scale Platform Details
H-2-120429	1	11	Weigh Scale Assembly
H-2-120429	2	11	Scale Assembly
H-2-120429	3	11	Scale Assembly Base Weldment
H-2-120429	4	11	Scale Assembly Base Weldment
H-2-120429	5	11	Scale Assembly Base Weldment
H-2-120429	6	11	Scale Assembly Base Weldment
H-2-120429	7	11	Scale Assembly Base Weldment
H-2-120429	8	11	Scale Assembly Details
H-2-120429	9	11	Scale Assembly Details
H-2-120429	10	11	Scale Assembly Details
H-2-120429	11	11	Scale Assembly Details
H-2-120430	1	3	Load Cell Parts List & Notes

DRAWING NUMBER	SHEET	OF	TITLE
H-2-120430	2	3	Load Cell Base Weldment
H-2-120430	3	3	Load Cell Details Parts List & Notes
H-2-120450	1	2	Enclosure Assemblies
H-2-120450	2	2	Enclosure Assemblies Parts List and Notes
H-2-120451	1	1	Flexible Metal Hose Assy Parts List & Notes
H-2-120568	1	1	PUREX Connector Lower Housing Assembly

DRAWING NUMBER	SHEET	OF	TITLE
H-2-122425	1	2	Electrical General Notes Symbols and Details
H-2-122425	2	2	Electrical General Notes Symbols and Details
H-2-122426	1	1	Electrical Pour & Drain Turntables Block Diagram
H-2-122427	1	4	Electrical Connection Diagram TU-130-002
H-2-122427	2	4	Electrical Connection Diagram TU-130-002

U.S. DEPARTMENT OF ENERGY
Hanford Waste Vitrification Plant
Richland, Washington
DOE Contract DE-AC06-86RL10838

FLUOR DANIEL, INC.
Advanced Technology Division
Fluor Contract 8457

Rev. 0

ATTACHMENT B
RELATED DRAWINGS

DRAWING NUMBER	TITLE
H-2-120052	Melter Assembly
H-2-120302	Pour Turntable Assembly
H-2-120302	Pour Turntable Assembly
H-2-120550	Track & Catch Pan Assembly Parts List & Notes
H-2-120562	Power Cable Reel Assembly
H-2-120563	Power Cable Reel Parts List and Notes
H-2-120564	Instrumentation Cable Reel Assembly
H-2-120565	Cable Reels Support Frame Weldment
H-2-120414	Pour Spout Bellows Assembly
W747391	Canister Assembly

9513336.0869

U.S. DEPARTMENT OF ENERGY
Hanford Waste Vitrification Plant
Richland, Washington
DOE Contract DE-AC06-86RL10838

FLUOR DANIEL, INC.
Advanced Technology Division
Fluor Contract 8457

SECTION 14603
CABLE REEL ASSEMBLY
B-595-P-P06B-14603

APPROVED FOR CONSTRUCTION

REVISION 0
ISSUE DATE 4-6-93

WAPA YES ___ NO X
QUALITY LEVEL I ___ II X
SAFETY CLASS 1__ 2__ 3 X 4__

ORIGINATOR:

N. J. Chatelier, Mechanical Engineer Date 03/29/93

CHECKER:

D. A. Buzzelli, Lead Disc. Checker Date 3-29-93

APPROVED BY:

C. J. Divona Lead Discipline Engineer Date 3/29/93

3/25/93 2:48pm
106\VOL5...\SPECS\P06B\14603-0.

SECTION 14603
CABLE REEL ASSEMBLY
B-595-P-P06B-14603

TABLE OF CONTENTS

PART		PAGE
PART 1	**GENERAL**	1
1.1	SUMMARY	1
1.2	REFERENCES	1
1.3	RELATED REQUIREMENTS	2
1.4	DEFINITIONS	3
1.5	SYSTEM DESCRIPTION	3
1.6	SUBMITTALS	4
1.7	CLASSIFICATION OF SYSTEMS AND COMPONENTS	5
1.8	PROJECT OR SITE ENVIRONMENTAL CONDITIONS	5
PART 2	**PRODUCTS**	5
2.1	MATERIALS AND EQUIPMENT	5
2.2	FABRICATION AND MANUFACTURE	8
2.3	INSPECTION AND DIMENSIONAL RECORDS	10
2.4	TESTING	12
PART 3	**EXECUTION**	14

ATTACHMENTS

ATTACHMENT	TITLE
A	CONTRACT DRAWINGS
B	RELATED DRAWINGS

SECTION 14603
CABLE REEL ASSEMBLY

PART 1 GENERAL

1.1 SUMMARY

This specification section covers the technical requirements for the fabrication, inspection and testing of a Cable Reel Assembly (CRA).

1.2 REFERENCES

The publications listed below form a part of this specification section to the extent referenced. The publications are referred to in the text by the basic designation only.

AMERICAN NATIONAL STANDARDS INSTITUTE (ANSI)

ANSI Y14.5M	1982 Dimensioning and Tolerancing

AMERICAN NATIONAL STANDARDS INSTITUTE (ANSI)
and/or
AMERICAN SOCIETY OF MECHANICAL ENGINEERS (ASME)

ANSI/ASME B46.1	1985 Surface Texture (Surface Roughness, Waviness and Lay)

AMERICAN SOCIETY FOR TESTING AND MATERIALS (ASTM)

ASTM A193/A193M	1991 (Rev. A) Standard Specification for Alloy Steel and Stainless Steel Bolting Materials for High-Temperature Service
ASTM A194/A194M	1991 (Rev. A) Standard Specification for Carbon and Alloy Steel Nuts for Bolts for High-Pressure and High-Temperature Service
ASTM A240	1991 (Rev. A) Specification for Heat Resisting Chromium and Chromium Nickel Stainless Steel Plate, Sheet, and Strip for Pressure Vessels
ASTM A276	1991 (Rev. A) Specification for Stainless and Heat Resisting Steel Bars and Shapes
ASTM A480/A480M	1991 (Rev. A) Standard Specification for General Requirements for Flat Rolled Stainless and Heat Resisting Steel Plate, Sheet, and Strip

AMERICAN SOCIETY OF MECHANICAL ENGINEERS (ASME)
Boiler and Pressure Vessel Code

ASME Section IX	1989 Welding and Brazing Qualification

OFFICE OF FEDERAL SUPPLY AND SERVICES

QQ-P-35C	Passivation Treatments for Corrosion Resistant Steel

STEEL STRUCTURES PAINTING COUNCIL (SSPC)

SSPC PA-2	1982 Paint Application Specification Number 2, Measurement of Dry Paint Thickness with Magnetic Gages
SSPC SP-10	1989 Surface Preparation Specification Number 10, Near-White Blast Cleaning

1.3 **RELATED REQUIREMENTS**

Specification Section 01730	Operation and Maintenance Data
Specification Section 05060	Welding Structural
Specification Section 13252	Precautions for Fabrication, Handling and Storage of Stainless Steel and Nickel Alloys
Specification Section 14601	Pour Turntable
Specification Section 14602	Drain Turntable
Specification Section 14604	Track and Catch Pan Assembly
Specification Section 15196	Identification and Tagging Methods for Mechanical Equipment
Specification Section 16120	Soldering - Electrical
Specification Section 16610	Electrical Requirements for Packaged Mechanical Equipment
Specification Section 17857	Local Control Panels for Pour and Drain Turntables
Specification Section 17908	Instruments Furnished with Mechanical Equipment - Pour and Drain Turntables

CONTRACT DRAWINGS

Drawings as listed in Attachment A.

RELATED DRAWINGS

Drawings as listed in Attachment B.

1.4 **DEFINITIONS**

ATP	-	Acceptance Test Procedure
CMTR	-	Certified Material Test Report
CRA	-	Cable Reel Assembly
DTT	-	Drain Turntable
FAT	-	Factory Acceptance Test
NDE	-	Nondestructive Examination
PT	-	Liquid Penetrant Examination
PTT	-	Pour Turntable
TID	-	Total Integrated Dose

1.5 **SYSTEM DESCRIPTION**

1.5.1 There shall be three cable reels of the spring-loaded design, installed on a common base to form the Cable Reel Assembly (CRA) at the south end of the melter cell facing the track-mounted turntables. There shall be two cable reels dedicated to the Drain Turntable (DTT) (Specification Section 14602), one for power and one for instrumentation. There shall be one cable reel dedicated to the Pour Turntable (PTT) (Specification Section 14601) for power and cart drive position switches as shown on the Contract Drawings.

1.5.2 Electrical power and control signals will be interfaced to the operation control center via cable jumpers.

1.5.3 The PTT power cable reel assembly is equipped with a 20-turn maximum, 17-3/4 in. minimum drum diameter, brush-type reel rated for 35 amps at 600 volts and 20 feet of 20-conductor, #12 AWG cable. This cable serves the cart drive motor; clutch, brake and positioning limit switches, the turntable spider drive motor and its positioning limit switches. The controls for the spout bellows are provided through a remoteable jumper assembly which is connected after the turntable is positioned beneath the pour spout.

1.5.4 The DTT power cable reel assembly is equipped with a 27-turn maximum, 17-3/4 in. minimum drum diameter, brush-type reel rated for 35 amps at 600 volts and 40 feet of 20-conductor, #12 AWG cable. This cable serves the cart drive; clutch, brake and positioning limit switches, the turntable spider drive motor and its positioning limit switches.

1.5.5 The DTT instrument cable reel assembly is equipped with a 2-turn minimum, brushless, continuous cable reel with a 10-3/4 in. minimum drum diameter and 40 feet of 4 Twisted Pair #16 AWG insulated cable to handle the low output signals from the weigh scale.

1.6 **SUBMITTALS**

Submit the following in accordance with the Vendor Drawing and Data Requirements section of the Order/Subcontract.

1.6.1 Operation and maintenance data in accordance with Specification Section 01730.

1.6.2 Handling, shipping and storage procedure shall be submitted for Buyer review.

1.6.3 Acceptance Test Procedure (ATP) shall be submitted for Buyer approval in accordance with Paragraph 2.4.3.1.

1.6.4 Seller's Material Control Procedure shall be submitted for Buyer review in accordance with Paragraph 2.1.2.2.

1.6.5 Detailed procedure for final dimension check shall be submitted for Buyer approval in accordance with Paragraph 2.3.2.2.

1.6.6 As-built drawings shall be submitted for Buyer review in accordance with Paragraph 2.3.2.1.

1.6.7 Certified Material Test Reports (CMTRs) shall be submitted for Buyer review in accordance with Paragraph 2.1.4.1.

1.6.8 Weld Repair Procedure shall be submitted for Buyer approval in accordance with Paragraph 2.2.2.1.

1.6.9 Nondestructive Examination (NDE) procedure shall be submitted for Buyer review in accordance with 2.3.1.1.

1.6.10 Inspection results and test reports shall be submitted for Buyer approval in accordance with Paragraphs 2.1.4.1, 2.1.8.1, 2.3.1.1, 2.3.2.1 and 2.4.1.3.

1.6.11 Support facility descriptions shall be submitted for Buyer approval in accordance with Paragraph 2.3.2.3.

1.6.12 A record of the as-built weight of each cable reel subassembly, and a record of the as-built weight of the completed assembly.

1.6.13 A record of heat treatment for all applicable hardware shall be submitted for Buyer review.

1.6.14 A procedure to determine defects greater than 0.012" shall be submitted for Buyer approval.

1.7 **CLASSIFICATION OF SYSTEMS AND COMPONENTS**

(Not Used)

1.8 **PROJECT OR SITE ENVIRONMENTAL CONDITIONS**

1.8.1 Climatic and Geographic Site Conditions

A.	Site Elevation	714 feet above sea level
B.	Barometric Pressure	14.3 psia

1.8.2 Operating Environment

A.	Normal Temperature Range	60°F to 104°F
B.	Design Basis Temperature	104°F
C.	Relative Humidity	Not controlled
D.	Radiation Level	3×10^8 rads (TID, 10 years)

PART 2 PRODUCTS

2.1 **MATERIALS AND EQUIPMENT**

This specification section is in reference to the following equipment:

Equipment No.	Equipment Name
RA-130-005	Power Cable Reel Assembly, Drain Turntable
RA-130-006	Instrumentation Cable Reel Assembly, Drain Turntable
RA-130-007	Power Cable Reel Assembly, Pour Turntable
RA-130-008	Support Assembly, Cable Reels

2.1.1 Materials

Materials and components used in fabrication shall be in accordance with the Contract Drawings listed in Attachment A. Fabrication materials shall be as follows, unless otherwise noted on Contract Drawings.

2.1.1.1 Unless stated otherwise on Contract Drawings all stainless steel plate, sheet and strip shall be in accordance with ASTM A240, Type 304L. Material shall be supplied hot rolled, annealed and pickled. Blasting as a descaling method shall not be permitted.

2.1.1.2 All stainless steel bars and shapes shall be in accordance with ASTM A276, Type 304L. Bars shall be conditioned Class A. Shapes shall be conditioned Class C.

2.1.1.3 Stainless steel structural bolts shall be in accordance with ASTM A193/A193M, Grade B6, Type 304.

2.1.1.4 Stainless steel structural nuts shall be in accordance with ASTM A194/194M, Grade 8M or Buyer-reviewed equal.

2.1.2 Material Contamination

2.1.2.1 Specification Section 13252 provides requirements for materials used in contact with austenitic stainless steel and non-ferrous metals. This specification section applies to all materials.

2.1.2.2 Upon completion of fabrication, examination and tests by Seller, the metal surfaces shall be in accordance with the requirements of Specification Section 13252. Seller's Material Control Procedures shall describe the actions to be taken in the event of material contamination. They shall also address the cleaning and protection of materials as required.

2.1.3 Surface Finish

2.1.3.1 Unless otherwise specified on Contract Drawings, surface finish for various material forms shall be as follows: Plates shall be finished in accordance with ASTM A480/A480M Section 10, Paragraph 10.1.2, hot-rolled, annealed and pickled No. 1 finish. A shot or grit-blasted surface is not acceptable. Sheets shall be finished in accordance with ASTM A480/A480M Section 8, Paragraph 8.1.2, No. 2D finish. Strips shall be finished in accordance with ASTM A480/A480M Section 9, Paragraph 9.1.2, No. 2 finish.

2.1.3.2 Unless otherwise specified on Contract Drawings, machined surfaces shall have a 125AA finish in accordance with ANSI/ASME B46.1.

2.1.3.3 No arc strikes, nicks, gouges or other surface defects are permitted. Defects greater than .012 inch in depth shall be repaired by welding and grinding to restore original surface contour. Defects of lesser depth shall be removed by grinding or polishing. Grinding shall be performed using 125 grit or finer abrasive wheels. No defects or grinding marks deeper than those left by a 125 grit abrasive wheel are permitted.

2.1.4 Material Control

2.1.4.1 One (1) copy of Certified Material Test Reports (CMTRs) shall be provided for all material and submitted for Buyer review.

2.1.5 Equipment Provided by Seller

2.1.5.1 The equipment to be furnished shall be built to print and in accordance with the Related Requirements listed in Paragraph 1.3, the Contract Drawings and this specification section. Seller's work includes: furnish materials, manufacture, assemble, test and deliver the following components in accordance both with the Contract Drawings and this specification section:

A. Cable Reel Assemblies (CRAs), base frame and sub-frames.

B. All wiring and cabling from the CRAs to the upper and lower electrical connectors (PUREX type).

C. Any special tools and accessories required for installation or operation.

D. Operator console.

2.1.5.2 Seller shall provide facilities to measure and test the assembled CRAs in accordance with Paragraphs 2.3 and 2.4.

2.1.6 Equipment Provided by Buyer

A. Upper and lower electrical connectors (PUREX type).

B. Internal electrical components for the upper and lower connectors.

2.1.7 Contract Drawings

2.1.7.1 Buyer's Contract Drawings for the CRAs and components have dimensional requirements that have been established to meet definite interface points. It is imperative that these interface dimensions be achieved for operational purposes.

2.1.7.2 Seller-furnished drawings shall be in accordance with ANSI Y14.5M.

2.1.8 Design Features, Considerations

2.1.8.1 Remoteability

Once radioactive wastes are introduced into the melt cell, manned entrance will no longer be possible for operation or maintenance. Therefore, all components are designed to be remotely removable (hereafter referred to as "remoteable") by means of an overhead

crane into less-radioactive areas for decontamination and maintenance. Remoteability applies to each part of the CRA separately and collectively. Each of the subassemblies incorporates a lifting bail which can be engaged with the overhead crane hook or, in the case of heavy components, with lifting trunnions which can be engaged with a special lifting yoke suspended from the crane hook.

When suspended, all remoteable assemblies and subassemblies must be level within 2 degrees by proper placement of lift points and/or by counterweighting to assure proper engagement with alignment dowels and studs, except as noted on Contract Drawings.

Seller shall demonstrate and document the remoteability and balance of all applicable components in accordance with Paragraph 2.4.3.

2.2 FABRICATION AND MANUFACTURE

The cable reel assemblies and components shall be fabricated in accordance with this specification section and Contract Drawings in Attachment A.

2.2.1 Interchangeability

Each remoteable assembly must be interchangeable with spare assemblies. This requires that all mounting surfaces be precisely located in three planes.

To ensure interchangeability of subsequent assemblies the close tolerance requirements shown in Contract Drawings shall be strictly adhered to. Seller must conduct all close tolerance work with respect to established datum references. Work shall be performed under controlled temperature conditions as deemed necessary in order to achieve and maintain specified dimensions and tolerances. The reference temperature for dimensions and tolerances is 68°F.

2.2.2 Welding

All welding and NDE shall be performed in accordance with Specification Section 05060.

2.2.2.1 Repairs

Seller shall prepare and submit a complete repair procedure for Buyer approval. At minimum, the repair procedure shall include:

A. Type and extent of repairable defects.

B. Defect removal methods. These shall include NDE methods to assure complete defect removal.

C. Repair method. This shall include weld preparation, treatment and reference to ASME Section IX qualified weld procedures.

2.2.2.2 Fabrication of all components and assemblies shall minimize crevices, pockets, absorbent materials or similar voids where contaminants can be trapped.

2.2.2.3 All stainless steel surfaces shall be passivated in accordance with Federal Specification QQ-P-35C.

2.2.3 Coatings

2.2.3.1 Carbon Steel Surfaces

Carbon steel surfaces which will be exposed to cell environment shall be prepared for painting in accordance with SSPC SP-10. Primer shall be an inorganic zinc-rich primer (Ameron Dimetcote 9 or equal), one coat, with a total dry film thickness of 2.5 mils plus or minus .5 mils and a minimum of 6 grams zinc per square foot of dried film. Finish coat shall be a high-build polyamide epoxy paint (Amercoat 66 or equal), two coats, with total dry film thickness of 10 mils plus or minus .5 mils. The total system dry film thickness of primer and finish coat shall be 12.5 mils plus or minus 1.0 mils. Surface color shall be white. Paint shall be applied in accordance with paint manufacturer's recommended methods. Typical components to be painted are housings and other components requiring surface protection.

2.2.3.2 Stainless Steel Surfaces

Stainless steel surfaces shall be painted for the purpose of identification only.

2.2.3.3 Inspection

Dry film thickness measurements shall be verified with a magnetic thickness gauge (Nordson "Mikrotest" or equal) and shall be in accordance with SSPC PA-2.

2.2.3.4 Defects

Defects or damaged areas detected during shop assembly, handling, testing and disassembly shall be repaired. The surface cleanliness and profile shall be restored to meet the specified surface preparation requirements. Precautions shall be taken to protect adjacent coated areas from damage by cleaning. The periphery of the damaged area shall be feathered. The use of

vacuum blast type equipment, needle guns and peening wheels is permitted to restore profile.

2.2.3.5 Seller shall provide one gallon of each paint used for field touch-up.

2.2.4 Nameplate

Each item of equipment shall be fitted with a stainless steel nameplate securely attached by pins of a similar material. The nameplate shall be in accordance with Specification Section 15196, Paragraph 2.2.2, Type 6.

2.2.5 Instrumentation and Controls

2.2.5.1 All instrumentation and controls shall be in accordance with Specification Sections 17857 and 17908.

2.2.6 Electrical Components

Functional requirements of electrical components, instrumentation and definition of Seller/Buyer interfaces are shown in the electrical and instrument diagrams and Contract Drawings listed in Attachment A.

2.2.6.1 Wiring and Cabling

Seller shall provide and install all cables and conduit as shown on the Contract Drawings and in accordance with Specification Sections 16120 and 16610.

2.2.6.2 Connectors shall be modified, mounted and located in accordance with the Contract Drawings.

2.3 **INSPECTION AND DIMENSIONAL RECORDS**

2.3.1 Seller shall perform an inspection of all equipment supplied to verify conformance to this specification section. Buyer reserves the right to witness any or all inspections or other activities affecting this specification section and requires a written notice prior to initiation of these inspection-related activities.

2.3.1.1 Welding Inspection and Criteria

Lifting lugs, structural members and full penetration welds shall be surface examined using NDE. Inspection methods are:

100 % visual and
100 % Liquid Penetrant Examination (PT).

A final surface examination shall be performed after completion of the proof test. Buyer is to review examination results and reports in detail.

Acceptance criteria for NDE shall be in accordance with Specification Section 05060. Buyer shall review Seller's NDE procedures, material certifications and reports to assure accuracy.

2.3.2 Dimensional Records

2.3.2.1 Seller shall perform a complete dimensional inspection of the CRA. Shop assembly drawings and Contract Drawings shall be corrected as necessary to reflect the as-built design. Mylar copies shall be provided by Buyer for Seller to use for recording of as-built dimensions. These mylar copies shall be returned to Buyer. Seller shall record as-built dimensions for all interfaces (such as electrical connector centerline and mating faces, dowel pins or holes, ACME studs or holes, mating plate surfaces, and trunnion centerlines and surfaces).

Measurements shall be made with the CRA placed on Seller-provided temporary base frame support pads.

2.3.2.2 Seller shall submit detailed final dimensional check procedures for Buyer approval. These shall include:

A. Methods of measurement applicable to specific components or assemblies.

B. Type of measuring device used.

C. Methods, frequency and verification of calibration for the precision measurement devices.

2.3.2.3 Facilities Required for Dimensional Measurements

Seller shall provide an enclosed or partitioned area in which to make dimensional measurements of the assembled CRA. Within this area there shall be no interference by any other manufacturing operation such as arc welding or equipment movement. This area will provide a 7-foot clear walkway around the equipment. This area may be the same as the test area. The area must be equipped with a seven-day temperature recorder provided by the Seller to document ambient temperature control. The recorder shall have a current calibration tag. For the purpose of measurement orientation, operation and testing, the side of the CRA having the two reels mounted one over the other shall be considered the west side or 9 o'clock position. The area shall be temperature controlled to 68°F ±5°F throughout the time measurements are made. Adequate lighting of at least 100 foot-candle average shall be

provided. An overhead crane will be required. The rated lifting capacity of this crane shall be at least 5 tons. The crane hook shall clear the height of 39'-2" from the floor.

Seller shall supply rigid supports for optical transits and levels. These supports shall be free-standing, not touching the CRA. Seller shall submit drawings for approval of:

A. Measurement enclosure area.

B. Temporary base frame support pads.

C. Optical instrument supports.

2.3.3 Buyer Witnessing of Dimensional Checks

Buyer shall be notified in advance of the date when final dimensional measurements are to be made. Buyer reserves the right to witness Seller's final dimensional measurements.

2.4 **TESTING**

2.4.1 General

2.4.1.1 A Factory Acceptance Test (FAT) shall be conducted in accordance both with this specification section and all applicable codes and standards at Seller's plant prior to delivery. This test shall demonstrate satisfactory operation of all equipment and control logic under simulated loading conditions. All tests shall be performed at ambient temperature.

2.4.1.2 Except for the equipment listed in Paragraph 2.1.6, Seller shall provide all equipment, facilities and labor necessary to meet the requirements of the FATs.

2.4.1.3 Seller shall maintain records of all test data and those observations pertinent to equipment performance. These records shall be provided for Buyer review during testing.

2.4.1.4 Buyer shall be informed in advance of date that all factory tests are to be conducted. Buyer reserves the right to attend and witness all factory tests.

2.4.2 Special Facilities Required for Testing

2.4.2.1 A test area of sufficient size to assemble and operate all equipment covered by this specification section.

2.4.2.2 An overhead crane shall be available. Rated lifting capacity of the crane shall be not less than 5 tons. A 1/2 ton electric hoist will also be required.

2.4.3 Acceptance Test Procedure (ATP)

2.4.3.1 An Acceptance Test Procedure shall be submitted for Buyer approval. The ATP shall cover, as a minimum, all activities identified below plus any other activities determined by Seller as being significant to the overall performance of the equipment. The ATP shall include demonstration of the functionality and remoteability of the CRA and its subassemblies. Seller shall submit a checklist for approval prior to beginning the tests. This checklist shall contain the tests to be performed. It shall identify all instruments and special equipment to be used and measurements to be made. The tests shall include but not be limited to the following:

A. Initial set-up and assembly of the cable reel assembly unit.

B. Test of lifting trunnions to verify mechanical integrity.

C. Verification of interface dimensions of guide trunnions and support pad locations.

D. Demonstration of each cable reel individually and collectively for mechanical/electrical functionality.

E. Balance of complete CRA assembly.

F. Remoteability and balance of each subsystem.

2.4.3.2 The following test sequence is intended as a guide to enable Seller to plan for the equipment and services to support the set-up and tests. The set-up and test area may be the same as outlined in Paragraphs 2.3.2.3 and 2.4.2.

A. Demonstrate that Seller-furnished temporary support pads supporting the CRA have been correctly spaced and leveled to within .010 inch.

B. Use Seller-furnished overhead crane to remotely install each of the sub-assembled CRAs.

C. Verify CRA for proper fit and mechanical alignment.

D. Verify remoteability of each individual cable reel subsystem.

E. Check mechanical functionality of the CRA. This shall include a check of:
- Cable reel tension, fully retracted.
- Cable reel tension, fully extended.

F. For electrical testing, see Specification Section 16610.

G. Verify for dimensional integrity and interface dimensions.

H. Perform visual inspection, evaluation of surface finish.

I. Test the lifting trunnions and bails for mechanical integrity in accordance with Paragraph 2.4.3.3.

2.4.3.3 Trunnion Proof Test

A trunnion proof test shall be performed. The test shall be based on lifting a load that is 150% greater than the weight of the CRA.

During each lift test the CRA shall be suspended for 10 minutes at a lift height of not less than 12 inches above the CRA support pad. This test shall be repeated 10 times with a waiting period of two (2) minutes between tests. After completion of the lifting cycle a NDE inspection/evaluation in accordance with Paragraph 2.3.1.1 shall be performed. The visual inspection shall include the verification for any deformation/stress cracking on the lifting trunnion and its basic load-bearing members.

2.4.3.4 Acceptance Criteria

The criteria for acceptance of the equipment by the Buyer from the Seller is as follows, in accordance with testing performed in Paragraphs 2.4.3.2 and 2.4.3.3:

A. The ability of the three remoteable cable reel assemblies to functionally assemble over their dowel pins and studs and balance when lifted by the bail within 2 degrees of horizontal.

B. Satisfactory, complete and repeatable functionality of all electrical interfaces (electrical connectors) and cable reels to carry electrical and instrumentation signals from the lower connectors to the upper electrical connectors attached to the cable.

C. Satisfactory and repeatable functionality of the cable and cable reels to extend and retract the cable.

D. Satisfactory completion of proof load test and subsequent NDE inspection.

PART 3 EXECUTION

(Not Used)

END OF SECTION

ATTACHMENT A
CONTRACT DRAWINGS

DRAWING NUMBER	SHEET	OF	TITLE
H-2-120562	1	5	Power Cable Reel Parts List and Notes
H-2-120562	2	5	Power Cable Reel Assembly
H-2-120562	3	5	Power Cable Reel Frame Assembly
H-2-120562	4	5	Power Cable Reel Connector Folding Rail Weldment
H-2-120562	5	5	Power Cable Reel Details and Leg Assembly
H-2-120563	1	4	Power Cable Reel Parts List & Notes
H-2-120563	2	4	Power Cable Reel Assembly
H-2-120563	3	4	Power Cable Reel Frame Assembly
H-2-120563	4	4	Power Cable Reel Details Removable Leg Assembly
H-2-120563	5	5	Power Cable Reel Details
H-2-120564	1	6	Instrumentation Cable Reel Assembly
H-2-120564	2	6	Instrumentation Cable Reel Assembly
H-2-120564	3	6	Instrumentation Cable Reel Frame Assembly
H-2-120564	4	6	Instrumentation Cable Reel Frame Weldment
H-2-120564	5	6	Instrumentation Cable Reel Assembly
H-2-120564	6	6	Instrumentation Cable Reel Details
H-2-120565	1	10	Cable Reels Support Frame Parts List & Notes
H-2-120565	2	10	Cable Reels Support Frame Weldment
H-2-120565	3	10	Cable Reels Support Frame Weldment
H-2-120565	4	10	Cable Reels Support Frame Details & Weldments
H-2-120565	5	10	Cable Reels Support Frame Lifting Lug Weldments
H-2-120565	6	10	Cable Reels Support Frame Left Lifting Lug Detail
H-2-120565	7	10	Cable Reels Support Frame Right Lifting Lug Det
H-2-120565	8	10	Cable Reels Support Frame Bridge Weldment
H-2-120568	1	1	Mechanical Connector Housing Assembly

DRAWING NUMBER	SHEET	OF	TITLE
H-2-122425	1	2	Electrical General Notes Symbols and Details
H-2-122425	2	2	Electrical General Notes Symbols and Details
H-2-122426	1	1	Electrical Pour & Drain Turntables Block Diagram
H-2-122427	1	3	Electrical Connection Diagram TU-130-002
H-2-122427	2	3	Electrical Connection Diagram TU-130-002
H-2-122427	3	3	Electrical Connection Diagram TU-130-001

ATTACHMENT B
RELATED DRAWINGS

DRAWING NUMBER	TITLE
H-2-120052	Melter Assembly
H-2-120302	Pour Turntable Assembly
H-2-120368	Drain Turntable Assembly
H-2-120422	Emergency Pull Rope
H-2-120550	Track and Catch Pan Assembly
W747391	Canister Assembly

9515336.0888

U.S. DEPARTMENT OF ENERGY
Hanford Waste Vitrification Plant
Richland, Washington
DOE Contract DE-AC06-86RL10838

FLUOR DANIEL, INC.
Advanced Technology Division
Fluor Contract 8457

SECTION 14604
TRACK AND CATCH PAN ASSEMBLY
B-595-P-P06B-14604

APPROVED FOR CONSTRUCTION

REVISION 0
ISSUE DATE 4-6-93

WAPA YES ___ NO X
QUALITY LEVEL I ___ II X
SAFETY CLASS 1__ 2__ 3 X 4__

ORIGINATOR:

R. B. Choate, Mechanical Engineer — Date 3/29/93

CHECKER:

D. A. Buzzelli, Lead Disc. Checker — Date 3-29-93

APPROVED BY:

C. J. Divona — Lead Discipline Engineer — Date 3/29/93

03/25/93 3:13pm
106\VOL5...\SPECS\P06B\14604-0.

SECTION 14604
TRACK AND CATCH PAN ASSEMBLY
B-595-P-P06B-14604

TABLE OF CONTENTS

PART		PAGE
PART 1	**GENERAL**	1
1.1	SUMMARY	1
1.2	REFERENCES	1
1.3	RELATED REQUIREMENTS	2
1.4	DEFINITIONS	2
1.5	SYSTEM DESCRIPTION	3
1.6	SUBMITTALS	3
1.7	CLASSIFICATION OF SYSTEMS AND COMPONENTS	4
1.8	PROJECT OR SITE ENVIRONMENTAL CONDITIONS	4
PART 2	**PRODUCTS**	5
2.1	MATERIALS AND EQUIPMENT	5
2.2	FABRICATION AND MANUFACTURE	7
2.3	INSPECTION AND DIMENSIONAL RECORDS	9
2.4	TESTING	12
PART 3	**EXECUTION**	14

ATTACHMENTS

ATTACHMENT	TITLE
A	CONTRACT DRAWINGS
B	RELATED DRAWINGS

SECTION 14604
TRACK AND CATCH PAN ASSEMBLY

PART 1 GENERAL

1.1 SUMMARY

This specification section covers the technical requirements for the fabrication, inspection and testing of a Track and Catch Pan Assembly Structure (T&CP).

1.2 REFERENCES

The publications listed below form a part of this specification section to the extent referenced. The publications are referred to in the text by the basic designation only.

AMERICAN NATIONAL STANDARDS INSTITUTE (ANSI)
and/or
AMERICAN SOCIETY OF MECHANICAL ENGINEERS (ASME)

ANSI/ASME B46.1	1985 Surface Texture (Surface Roughness, Waviness and Lay)

AMERICAN SOCIETY FOR TESTING AND MATERIALS (ASTM)

ASTM A193/A193M	1990 (Rev. A) Standard Specification for Alloy Steel and Stainless Steel Bolting Materials for High-Temperature Service
ASTM A194/A194M	1990 (Rev. A) Standard Specification for Carbon and Alloy Steel Nuts for Bolts for High-Pressure and High-Temperature Service
ASTM A240	1991 (Rev. A) Specification for Heat Resisting Chromium and Chromium Nickel Stainless Steel Plate, Sheet, and Strip for Pressure Vessels
ASTM A276	1990 (Rev. A) Specification for Stainless and Heat Resisting Steel Bars and Shapes
ASTM A480/A480M	1991 (Rev. A) Standard Specification for General Requirements for Flat Rolled Stainless and Heat Resisting Steel Plate, Sheet, and Strip

AMERICAN SOCIETY OF MECHANICAL ENGINEERS (ASME)
Boiler and Pressure Vessel Code

ASME Section IX	1989 Welding and Brazing Qualifications

OFFICE OF FEDERAL SUPPLY AND SERVICES

QQ-P-35C	Passivation Treatments for Corrosion Resistant Steel

STEEL STRUCTURES PAINTING COUNCIL (SSPC)

SSPC SP-10	1989 Surface Preparation Specification Number 10, Near-White Blast Cleaning

1.3 RELATED REQUIREMENTS

Specification Section 01730	Operation and Maintenance Data
Specification Section 05060	Welding Structural
Specification Section 13252	Precautions for Fabrication, Handling and Storage of Stainless Steel and Nickel Alloys
Specification Section 14601	Pour Turntable
Specification Section 14602	Drain Turntable
Specification Section 15196	Identification and Tagging Methods for Mechanical Equipment

CONTRACT DRAWINGS

Drawings as listed in Attachment A.

RELATED DRAWINGS

Drawings as listed in Attachment B.

1.4 DEFINITIONS

ATP - Acceptance Test Procedure
CMTR - Certified Material Test Report
DTT - Drain Turntable
FAT - Factory Acceptance Test
NDE - Nondestructive Examination
PT - Liquid Penetrant Examination
PTT - Pour Turntable
T&CP - Track and Catch Pan
TID - Total Integrated Dose

1.5 SYSTEM DESCRIPTION

The Track and Catch Pan (T&CP) assembly consists of two structural subassemblies, the north and south track and catch pan assemblies. These assemblies are mated together at the middle during installation in the Melter Cell. Upon installation, they are interlocked into trunnion guides.

The T&CP assembly serves as the support for both the Pour Turntable (PTT) (Specification Section 14601) and Drain Turntable (DTT) (Specification Section 14602) and contains the fixed stops against which each turntable is located. The T&CP also catches and contains any molten radioactive glass from spilling onto the Melter Cell floor. Two thin stainless steel sheets, top and bottom, separated by insulation, insulate the floor from the melter.

The T&CP assembly is not bolted to the floor but rests on 34 steel "pads". They are mounted to the assembly directly over steel embeds placed in the concrete floor. The assembly relies both on its weight and the trunnion guides placed at six points around the assembly to keep it in place.

1.6 SUBMITTALS

Submit the following in accordance with the Vendor Drawing and Data Requirements section of the Order/Subcontract.

1.6.1 Operation and Maintenance Data in accordance with Specification Section 01730.

1.6.2 Handling, shipping and storage procedures shall be submitted for Buyer review.

1.6.3 Acceptance Test Procedure (ATP) and checklist shall be submitted for Buyer approval in accordance with Paragraph 2.4.3.1.

1.6.4 Seller's Material Control Procedure shall be submitted for Buyer review in accordance with Paragraph 2.1.2.2.

1.6.5 Detailed procedure for Final Dimensional check shall be submitted for Buyer approval in accordance with Paragraph 2.3.2.2.

1.6.6 Interchangeability Dimensional Record Drawing shall be submitted for Buyer review in accordance with Paragraphs 2.2.1 and 2.3.2.1.

1.6.7 Certified Material Test Reports (CMTRs) shall be submitted for Buyer review in accordance with Paragraph 2.1.4.1.

1.6.8 Weld Repair Procedure shall be submitted for Buyer approval in accordance with Paragraph 2.2.2.1.

1.6.9 Nondestructive Examination (NDE) Procedure shall be submitted for Buyer review in accordance with Paragraph 2.3.1.1.

1.6.10 Test reports and inspection results shall be submitted for Buyer approval in accordance with Paragraphs 2.1.4.1, 2.1.8.1, 2.3.1.1, 2.3.2.1 and 2.4.1.3.

1.6.11 Support facilities descriptions shall be submitted for Buyer approval in accordance with Paragraph 2.3.2.3.

1.6.12 Dimensional records shall be submitted for Buyer approval in accordance with Paragraph 2.3.2.1.

1.6.13 Descriptions of mixing, preparation and forming methodology to be used in installing insulation materials shall be submitted for Buyer review in accordance with Paragraph 2.2.6.

1.6.14 A record of heat treatment for all applicable hardware shall be submitted for Buyer review.

1.6.15 A procedure to determine defects greater than 0.012" shall be submitted for Buyer approval.

1.7 CLASSIFICATION OF SYSTEMS AND COMPONENTS

(Not Used)

1.8 PROJECT OR SITE ENVIRONMENTAL CONDITIONS

1.8.1 Climatic and Geographic Site Conditions

A.	Site Elevation	714 feet above sea level
B.	Barometric Pressure	14.3 psia

1.8.2 Operating Environment

A.	Normal Temperature Range	60°F to 104°F
B.	Design Basis Temperature	104°F
C.	Relative Humidity	Not controlled
D.	Radiation Level	3×10^8 rads (TID, 10 years)

PART 2 PRODUCTS

2.1 MATERIALS AND EQUIPMENT

This specification section is in reference to the following equipment:

Equipment No.	Equipment Name
RA-130-009	North Track and Catch Pan Assembly
RA-130-010	South Track and Catch Pan Assembly

2.1.1 Materials

Materials and components used in fabrication shall be in accordance with the Contract Drawings listed in Attachment A. Fabrication materials shall be as follows, unless otherwise noted on drawings.

2.1.1.1 Unless stated otherwise on the Contract Drawings all stainless steel plate, sheet and strip shall be in accordance with ASTM A240, Type 304L. Material shall be supplied hot rolled, annealed and pickled. Blasting as a descaling method shall not be permitted.

2.1.1.2 All stainless steel bars and shapes shall be in accordance with ASTM A276, Type 304L. Bars shall be conditioned Class A. Shapes shall be conditioned Class C.

2.1.1.3 Stainless steel structural bolts shall be in accordance with ASTM A193/A193M, Grade B6, Type 304.

2.1.1.4 Stainless steel structural nuts shall be in accordance with ASTM A194/A194M, Grade 8M or Buyer-reviewed equal.

2.1.2 Material Contamination

2.1.2.1 Specification Section 13252 provides requirements for materials used in contact with austenitic stainless steel and non-ferrous metals. This specification applies to all materials.

2.1.2.2 Upon completion of fabrication, examination and tests by Seller, the metal surfaces shall be in accordance with the requirements of Specification Section 13252. Seller's Material Control Procedures shall describe the actions to be taken in the event of material contamination. They shall also address the cleaning and protection of materials as required.

2.1.3 Surface Finish

2.1.3.1 Unless otherwise specified on Contract Drawings, surface finish for various material forms shall be as follows: Plates shall be finished in accordance with ASTM A480/A480M, Section 10, Paragraph 10.1.2, hot-rolled, annealed and pickled No. 1 finish. A shot or grit-blasted surface is not acceptable. Sheets shall be finished in accordance with ASTM A480/A480M, Section 8, Paragraph 8.1.2, No. 2D finish. Strips shall be finished in accordance with ASTM A480/A480M Section 9, Paragraph 8.1.1, No. 2 finish.

2.1.3.2 Unless otherwise specified on Contract Drawings, machined surfaces shall have a 125AA finish in accordance with ANSI/ASME B46.1.

2.1.3.3 No arc strikes, nicks, gouges or other surface defects are permitted. Defects greater than .012 inch in depth shall be repaired by welding and grinding to restore original surface contour. Defects of lesser depth shall be removed by grinding or polishing. Grinding shall be performed using 125 grit or finer abrasive wheels. No defects or grinding marks deeper than those left by a 125 grit abrasive wheel are permitted.

2.1.4 Material Control

2.1.4.1 One (1) copy of Certified Material Test Reports (CMTRs) shall be provided for all material and submitted for Buyer review.

2.1.5 Equipment Provided by Seller

2.1.5.1 The equipment to be furnished shall be built to print and in accordance both with the Related Requirements listed in Paragraph 1.3 and Contract Drawings listed in Attachment A. Seller's work includes: Furnish materials, manufacture, assemble, test and deliver the following components in accordance both with the Contract Drawings and this specification section:

A. All structural steel framework, pan, and insulation required to provide the North and South Track and Catch Pan assemblies.

B. Any special tools and accessories required for installation or operation.

2.1.5.2 Seller shall provide facilities to measure, fit check and provide lifting load tests of the assembled T&CP assembly in accordance with Paragraphs 2.3 and 2.4.

2.1.6 Equipment Provided by Buyer

Component lifting yokes and special grapples.

2.1.7 Contract Drawings

Buyer's Contract Drawings for the T&CP assembly and components have dimensional requirements that have been established to meet definite interface points. It is imperative that these interface dimensions be achieved for operational purposes.

2.1.8 Design Features, Considerations

2.1.8.1 Remoteability

Once radioactive wastes are introduced into the Melter Cell, manned entrance will no longer be possible for operation or maintenance. Therefore, all components are designed to be remotely removable (hereafter referred to as "remoteable") by means of an overhead crane.

Each of the subassemblies incorporates lifting trunnions which can be engaged with a special lifting yoke suspended from the crane hook.

When suspended, all remoteable assemblies and subassemblies must be level within 2 degrees by proper placement of lift points and/or by counterweighting to assure good balance.

Seller shall demonstrate and document the remoteability and balance of the two assemblies in accordance with Paragraph 2.4.3.

2.2 FABRICATION AND MANUFACTURE

The Track and Catch Pan (T&CP) Assemblies and subassemblies shall be fabricated in accordance both with this specification section and T&CP Contract Drawings H-2-120550, H-2-120553 and H-2-120554.

2.2.1 Interchangeability

Each remoteable assembly must be interchangeable with spare assemblies. This requires that all mounting surfaces be precisely located in three planes.

To ensure interchangeability of subsequent assemblies the close tolerance requirements shown in Contract Drawings shall be strictly adhered to. Seller must conduct all close tolerance work with respect to established datum references. Work shall be performed under controlled temperature conditions as deemed necessary in order to achieve and maintain specified dimensions and tolerances. The reference temperature for dimensions and tolerances is 68°F. Seller shall complete the Dimensional Record Drawing H-2-120555 and submit for Buyer review.

2.2.2 Welding

All welding and NDE shall be performed in accordance with Specification Section 05060.

2.2.2.1 Repairs

Seller shall prepare and submit a complete repair procedure for Buyer approval. At minimum, the repair procedure shall include:

A. Type and extent of repairable defects.

B. Defect removal methods. These shall include NDE methods to assure complete defect removal.

C. Repair method. This shall include weld preparation, treatment and reference to ASME Section IX qualified weld procedures.

2.2.2.2 Fabrication of all components and assemblies shall minimize crevices, pockets, absorbent materials or similar voids where contaminants can be trapped.

2.2.2.3 All stainless steel surfaces shall be passivated in accordance with Federal Specification QQ-P-35C.

2.2.3 Coatings

2.2.3.1 Carbon Steel Surfaces

Carbon steel surfaces which will be exposed to cell environment shall be prepared for painting in accordance with SSPC SP-10. Primer shall be an inorganic zinc-rich primer (Ameron Dimetcote 9 or equal), one coat, with a total dry film thickness of 2.5 mils plus or minus .5 mils and a minimum of 6 grams zinc per square foot of dried film. Finish coat shall be a high-build polyamide epoxy paint (Amercoat 66 or equal), two coats, with total dry film thickness of 10 mils plus or minus .5 mils. The total system dry film thickness of primer and finish coat shall be 12.5 mils plus or minus 1.0 mils. Surface color shall be white. Paint shall be applied in accordance with paint manufacturer's recommended methods.

Contact surfaces of rails shall not be painted.

2.2.3.2 Stainless Steel Surfaces

Stainless steel surfaces shall be painted for the purpose of identification only.

2.2.3.3 Defects

Defects or damaged areas detected during shop assembly, handling, testing and disassembly shall be repaired. The surface cleanliness and profile shall be restored to meet the specified surface preparation requirements. Precautions shall be taken to protect adjacent coated areas from damage by cleaning. The periphery of the damaged area shall be feathered. The use of vacuum blast type equipment, needle guns and peening wheels is permitted to restore profile.

2.2.3.4 Seller shall provide one gallon of each paint used for field touch-up.

2.2.4 Nameplate

Each item of equipment shall be fitted with a permanent corrosion-resistant metal nameplate securely attached by pins of a similar material. The nameplate shall be in accordance with Specification Section 15196, Paragraph 2.2.2, Type 6.

2.2.5 Instrumentation and Controls

No instrumentation is mounted on the T&CP assembly.

2.2.6 Insulations

The insulations used on the equipment covered by this section are of the molded variety and called out on the Contract Drawings listed in Attachment A. Seller is to prepare and form the insulation in accordance with manufacturer's recommended methods. At least one month of shelf life shall remain on the product at the time of installation into the applicable equipment. Seller shall submit a description of mixing, preparation and forming methodology to be used in installing this insulation into the equipment.

2.3 INSPECTION AND DIMENSIONAL RECORDS

2.3.1 Seller shall perform an inspection of all equipment supplied to verify conformance to this specification section. Buyer shall be given notice, in writing, before these inspection activities are initiated. Buyer reserves the right to witness any or all inspections or other activities affecting this specification section.

2.3.1.1 Welding Inspection and Criteria

Trunnions and structural members and full penetration welds shall be surface examined. Nondestructive examination (NDE) shall be used. Seller shall submit NDE procedure, material certifications and reports for Buyer review. Inspection methods are:

100 % visual and
100 % Liquid Penetrant Examination (PT).

A final surface examination shall be performed after completion of the proof test. Detailed examination results and reports shall be submitted for Buyer review.

Acceptance criteria for NDE shall be in accordance with Specification Section 05060.

2.3.1.2 Track and Catch Pan Assembly Lifting Trunnions

The lifting trunnions and basic load bearing structural members will be subject to the following requirements:

A. The lifting trunnions for each assembly shall meet a load factor of 150 percent of the weight of the assembly.

B. Buyer shall review Seller's NDE procedures, material certifications and reports to assure accuracy.

C. Lifting trunnions shall be complete with end stops to prevent accidental slipping from lifting hooks.

2.3.2 Dimensional Records

2.3.2.1 Seller shall perform a complete dimensional inspection of the T&CP. A mylar copy of Drawing H-2-120555 shall be provided by the Buyer for the Seller to use for documentation. This copy shall be returned.

Seller shall record, on the mylar copy, the actual as-built dimensions that locate or define critical surfaces with respect to melter cell locations shown on Drawing H-2-120555. Such surfaces are track surfaces, guide pins, fixed stop surfaces, guide trunnions and "pad" surfaces.

X, Y and Z coordinates specified on Drawing H-2-120555 shall be measured with the T&CP placed on Seller-provided temporary support pads.

Dimensional inspection is to be made after proof load tests are completed as described in Paragraph 2.4.3.3.

2.3.2.2 Seller shall submit detailed final dimensional check procedures for Buyer approval. These shall include:

A. Methods of measurement applicable to specific components or assemblies.

B. Type of measuring device used.

C. Methods, frequency and verification of calibration for the precision measurement devices.

2.3.2.3 Facilities Required for Dimensional Measurements

Seller shall provide an enclosed or partitioned area in which to make dimensional measurements of the assembled T&CP. Within this area there shall be no interference by any other manufacturing operation such as arc welding or equipment movement. This area will provide a 7-foot clear walkway around the equipment. This area may be the same as the test area. The area must be equipped with a seven-day temperature recorder provided by the Seller to document ambient temperature control. The recorder shall have a current calibration tag. Orientation with reference to measurement, operation and testing shall be with respect to the points of the compass. The area shall be temperature controlled to 68°F ±5°F throughout the time measurements are made. Adequate lighting of at least 100 foot-candle average shall be provided. An overhead crane will be required. The rated lifting capacity of this crane shall be not less than 20 tons. The crane hook shall clear the height of 39'-2" from the floor.

Seller shall supply rigid supports for optical transits and levels. These supports shall be free-standing, not touching the T&CP. Seller shall submit for approval drawings of:

A. Measurement enclosure area.

B. Temporary support pads.

C. Optical instrument supports.

2.3.3 Buyer Witnessing of Dimensional Checks

Buyer shall be notified in advance of the date when final dimensional measurements are to be made. Buyer reserves the right to witness Seller's final dimensional measurements.

2.4 **TESTING**

2.4.1 General

2.4.1.1 A Factory Acceptance Test (FAT) shall be conducted in accordance both with this specification section and all applicable codes and standards at Seller's plant prior to delivery. This test shall demonstrate satisfactory operation of all equipment under simulated loading conditions. All tests shall be performed at ambient temperature.

2.4.1.2 Except for the equipment listed in Paragraph 2.1.6 Seller shall provide all equipment, facilities and labor necessary to meet the requirements of the FATs.

2.4.1.3 Seller shall maintain records of all test data and those observations pertinent to equipment performance. These records shall be provided to Buyer upon request.

2.4.1.4 Buyer shall be informed in advance of date that all FATs are to be conducted. Buyer reserves the right to attend and witness all FATs.

2.4.2 Special Facilities Required for Testing

2.4.2.1 A test area of sufficient size to assemble and operate all equipment covered by this specification section.

2.4.2.2 An overhead crane shall be available. Rated lifting capacity of the crane shall be not less than 20 tons.

2.4.3 Acceptance Test Procedure

2.4.3.1 An Acceptance Test Procedure (ATP) shall be submitted for Buyer approval. The ATP shall cover, as a minimum, all activities identified below plus any other activities determined by Seller as being significant to the overall performance of the equipment. The ATP shall include demonstration of the functionality and remoteability of the T&CP and its subassemblies. Seller shall submit a checklist for approval prior to beginning the tests. This checklist shall contain the tests to be performed. It shall identify all instruments and special equipment to be used and measurements to be made. The tests shall include but not be limited to the following:

A. Test of the north and south T&CP lifting trunnions to verify mechanical integrity.

B. Installation of the two assemblies into Seller-supplied trunnion guides. Seller shall perform installation in accordance with T&CP Assembly Drawing H-2-120550.

C. Verification of interface dimensions.

D. Remoteability of each subassembly.

E. Record the weight of the T&CP assembly on Dimensional Record Drawing H-2-120555.

2.4.3.2 The following test sequence is intended as a guide to enable Seller to plan for the equipment and services to support the set-up and tests. The set-up and test area may be the same as outlined in Paragraphs 2.3.2.3 and 2.4.2.

A. Demonstrate that Seller-furnished temporary support pads supporting the T&CP have been correctly spaced and leveled to within .010 inch.

B. Demonstrate that trunnion guides are correctly positioned to meet dimensional criteria of the system design.

C. Use Seller-furnished overhead crane to remotely install fully-assembled north and south T&CP assemblies. Buyer-furnished lifting yoke shall also be used.

D. Verify T&CP for proper fit and mechanical alignment relative to trunnion guides.

E. Verify remoteability of each individual T&CP subassembly.

F. Verify for dimensional integrity and interface dimensions.

G. Perform visual inspection, evaluation of surface finish.

H. Test the lifting trunnions for mechanical integrity in accordance with Paragraph 2.4.3.3.

I. Weigh the T&CP assembly.

2.4.3.3 Trunnion Proof Test

A trunnion proof test shall be performed. The test shall be based on lifting a load that is 150% greater than the weight of the individual T&CP subassemblies.

During each lift test the T&CP assemblies shall be suspended for 10 minutes at a lift height of not less than 12 inches above their support pads. This test shall be repeated 10 times with a waiting period of two (2) minutes between tests. After completion of the lifting cycle a NDE inspection/evaluation shall be performed in accordance with Paragraph 2.3.1.1. The visual inspection shall include the verification for any deformation/stress cracking on the lifting trunnion and its basic load-bearing members.

2.4.3.4 Acceptance Criteria

The criteria for acceptance of the equipment by the Buyer is as follows, in accordance with testing performed in Paragraphs 2.4.3.2 and 2.4.3.3:

A. The ability of the two T&CP assembly halves to mate together properly when assembled into the trunnion guides and balance when lifted by the trunnions within 2 degrees of horizontal.

B. Satisfactory completion of proof load test and subsequent NDE inspection.

PART 3 EXECUTION

(Not Used)

END OF SECTION

ATTACHMENT A
CONTRACT DRAWINGS

DRAWING NUMBER	SHEET	OF	TITLE
H-2-120550	1	6	Track & Catch Pan Assembly Parts List & Notes
H-2-120550	2	6	Track & Catch Pan Details
H-2-120550	3	6	Track & Catch Pan Rail Details
H-2-120550	4	6	Track & Catch Pan Rail Details
H-2-120550	5	6	Track & Catch Pan Details
H-2-120550	6	6	Track & Catch Pan Details
H-2-120552	1	2	Trunnion Cap Assembly Parts List & Notes
H-2-120552	2	2	Trunnion Cap Details
H-2-120553	1	7	South Track & Catch Pan Parts List & Notes
H-2-120553	2	7	South Track & Catch Pan Assy
H-2-120553	3	7	South Track & Catch Pan Assembly
H-2-120553	4	7	South Track & Catch Pan Assembly
H-2-120553	5	7	South Track & Catch Plate Pan Details
H-2-120553	6	7	South Track & Catch Plate Pan Details
H-2-120553	7	7	South Track & Catch Plate Pan Structural Tubing Details
H-2-120554	1	7	North Track & Catch Pan Parts List & Notes
H-2-120554	2	7	North Track & Catch Pan Assembly
H-2-120554	3	7	North Track & Catch Pan Assembly
H-2-120554	4	7	North Track & Catch Pan Assembly
H-2-120554	5	7	North Track & Catch Pan Details
H-2-120554	6	7	North Track & Catch Pan Details
H-2-120554	7	7	North Track & Catch Pan Details

ATTACHMENT B
RELATED DRAWINGS

POUR TURNTABLE

DRAWING NUMBER	TITLE
H-2-120302	Pour Turntable Assembly
H-2-120302	Pour Turntable Assembly
H-2-120305	Pour Turntable Cart Drive Parts List & Notes
H-2-120311	Cart Support Assembly Parts List & Notes
H-2-120312	Cart Drive Parts List & Notes
H-2-120313	Fixed Stop Assembly Parts List & Notes
H-2-120315	Cart Assembly Parts List & Notes
H-2-120317	Lower Frame Assembly

DRAIN TURNTABLE

DRAWING NUMBER	TITLE
H-2-120368	Drain Turntable Assembly
H-2-120368	Drain Turntable Assembly
H-2-120377	Cart Dr Mot Assy Parts List & Notes
H-2-120379	Drain Turntable Cart Assy Parts List & Notes
H-2-120380	Cart Spider Drive Support Assembly
H-2-120381	Cart Base Assembly
H-2-120382	Cart Drive Support Assembly Parts List & Notes
H-2-120383	Fixed Stop Assembly
H-2-120385	Cart Drive Assembly
H-2-120390	Support Bracket Weldment and Parts List & Notes

OTHER

DRAWING NUMBER	TITLE
H-2-120052	Melter Assembly
H-2-120302	Pour Turntable Assembly
H-2-120368	Drain Turntable Assembly
H-2-120422	Emergency Pull Rope
H-2-120562	Power Cable Reel Assembly, PTT
H-2-120563	Power Cable Reel Assembly, DTT
H-2-120564	Instrumentation Cable Reel Assembly, DTT
H-2-120565	Cable Reels, Support Frame
W747391	Canister Assembly

9513336.0906

U.S. DEPARTMENT OF ENERGY
Hanford Waste Vitrification Plant
Richland, Washington
DOE Contract DE-AC06-86RL10838

FLUOR DANIEL, INC.
Advanced Technology Division
Fluor Contract 8457

SECTION 15196
IDENTIFICATION AND TAGGING METHODS
FOR MECHANICAL EQUIPMENT
B-595-P-P06B-15196

APPROVED FOR CONSTRUCTION

REVISION 0
ISSUE DATE 4-6-93

WAPA YES ___ NO X
QUALITY LEVEL I ___ II X
SAFETY CLASS 1__ 2__ 3X 4__

ORIGINATOR(S):

CHECKER(S):

James D. Lowerre, Jr. 29 Mar 93
J. Lowerre, Tech. Writer (Mech.) (Date)

Dale A. Buzzelli 3-29-93
D. A. Buzzelli, Lead Disc. Checker (Date)

APPROVED BY:

C J Divona 3-29-93
C. J. Divona Lead Discipline Engineer (Date)

03/16/93 10:46am
106\VOL5...\SPECS\P06B\15196-0.

SECTION 15196
IDENTIFICATION AND TAGGING METHODS FOR MECHANICAL EQUIPMENT
B-595-P-P06B-15196

TABLE OF CONTENTS

PART		PAGE
PART 1	**GENERAL**	1
1.1	SUMMARY	1
1.2	REFERENCES	1
1.3	RELATED REQUIREMENTS	1
1.4	DEFINITIONS	1
1.5	SYSTEM DESCRIPTION	1
1.6	SUBMITTALS	2
1.7	CLASSIFICATION OF SYSTEMS AND COMPONENTS	2
1.8	PROJECT OR SITE ENVIRONMENTAL CONDITIONS	2
PART 2	**PRODUCTS**	3
2.1	MATERIALS AND EQUIPMENT	3
2.2	FABRICATION AND MANUFACTURE	3
PART 3	**EXECUTION**	8

ATTACHMENTS

ATTACHMENT	TITLE
A	LAYOUT EXHIBITS (TYPICAL)

SECTION 15196
IDENTIFICATION AND TAGGING METHODS FOR MECHANICAL EQUIPMENT

PART 1 GENERAL

1.1 SUMMARY

This specification section describes the technical requirements for the design, material and fabrication of permanent and temporary identification methods applicable to manufactured or procured parts, subassemblies and assemblies.

1.2 REFERENCES

The publications listed below form a part of this specification section to the extent referenced. The publications are referred to in the text by the basic designation only.

AMERICAN NATIONAL STANDARDS INSTITUTE (ANSI)

ANSI A13.1	1981 (Rev. 85) Scheme for the Identification of Piping Systems

MILITARY STANDARDS

MIL-STD-889B	1988 (Notice 2) Dissimilar Metals

OCCUPATIONAL SAFETY AND HEALTH ADMINISTRATION (OSHA)

OSHA 29 CFR Section 1910.96	1990 Ionizing Radiation

1.3 RELATED REQUIREMENTS

(Not Used)

1.4 DEFINITIONS

CMTR - Certified Material Test Report

ISR - Inspection/Surveillance Report

1.5 SYSTEM DESCRIPTION

(Not Used)

1.6 **SUBMITTALS**

Submit the following in accordance with the Vendor Drawing and Data Requirements section of the Order/Subcontract.

1.6.1 Seller shall submit Certified Material Test Reports (CMTRs). These shall indicate that materials used for the application and removal of marking on corrosion-resistant, stainless steel and some nickel-based alloys shall be free of halides and low melting-point elements to the extent specified in Paragraph 2.1.1 B. Written certification by the manufacturer that their product does not exceed the halide and elemental content specified in Paragraph 2.1.1 B is acceptable and shall preclude the necessity for acceptance test of that product.

1.6.2 Seller shall submit qualification of the processes used for permanent marking. Tools used to apply permanent marking and the resultant mark shall be in accordance with the applicable requirements in Paragraph 2.2. To preclude repeated examination of production marking (except as specified in Paragraph 2.2.4), tools and sample markings made by said tools shall be examined to determine accordance with applicable requirements. Upon successfully testing the tool on the material to be marked, the process shall be qualified by Seller Quality Assurance for production use on an Inspection/Surveillance Report (ISR).

1.7 **CLASSIFICATION OF SYSTEMS AND COMPONENTS**

(Not Used)

1.8 **PROJECT OR SITE ENVIRONMENTAL CONDITIONS**

1.8.1 Climatic and Geographic Site Conditions

A.	Site Elevation	714 feet above sea level
B.	Barometric Pressure	14.3 psia
C.	Outside Design Temperature	
1)	Maximum Design Temperature	110°F
2)	Minimum Design Temperature	-20°F
3)	Wet Bulb Design Temperature	68°F

1.8.2 Operating Environment

A.	Normal Temperature Range	60° to 104°F
B.	Design Basis Temperature	104°F

C. Relative Humidity — Not controlled

PART 2 PRODUCTS

2.1 MATERIALS AND EQUIPMENT

2.1.1 Material Compatibility - Materials used for permanent or temporary marking or for the removal of markings shall be physically and chemically compatible with the material to which the markings will be applied or removed. The following shall be avoided:

A. The use of dissimilar metals in permanent contact as defined in MIL-STD-889B.

B. The use on corrosion-resistant, stainless steel and some nickel-base alloys of materials containing more than:

1) one-half percent by weight of halides (chlorides and fluorides),

2) one-half percent by weight of sulfur, and

3) a sum total of one-half percent by weight of low melting-point elements such as cadmium, aluminum, lead, zinc and mercury.

C. Permanent marking of critical stainless steel components using labels, tape, paint or other marking materials that could cause crevice corrosion.

2.2 FABRICATION AND MANUFACTURE

2.2.1 Requirements

2.2.1.1 Cleanliness - Surfaces to be marked shall be cleaned of oil, grease, dirt, corrosion or any other material that would adversely affect the application or adhesion of the marking.

2.2.1.2 Legibility - All markings shall be clearly legible. Color markings, including black and white, shall contrast with the color of the surface to which it is applied. Freehand lettering for the purpose of temporary marking shall be in the printed form and be uppercase (caps).

2.2.2 Permanent Identification Methods

Type 1	Vibratory Marking
Type 2	Die Stamping
Type 3	Raised marking forged or cast into the surface
Type 4	Recessed marking forged or cast into the surface

Type 5 Electrochemical etch
Type 6 Nameplate
Type 7 Self-adhesive label
Type 8 Painting
Type 9 Packaging
Type 10 Tagging

2.2.2.1 Type 1: Vibratory Marking - Vibrating tools shall be fitted with a carbide marking point or equivalent. Tools shall be adjusted to produce a shallow, rounded impression 0.003 to .101 inch in depth. The marking tool tip minimum radius shall be 0.005 inch. The size (height) of characters produced by vibratory marking shall be selected within the range of 1/16 to 1/2 inch.

2.2.2.2 Type 2: Die Stamping - Die stamps shall be low-stress type stamps. The minimum tip radius of the dies shall be in accordance with the following character sizes:

CHARACTER SIZE (INCH)	MINIMUM TIP RADIUS (INCH)
1/16	0.005
3/32	0.006
1/8	0.007
3/16	0.008
1/4	0.010
3/8	0.012
1/2	0.014

A. Impression depth shall not exceed 0.10 inch.

B. Die stamp marking shall be applied to a flange, an integrally-cast or forged boss or pad, the base or support of the item or other visible low-stress location.

C. The material thickness of an item to be marked shall not be reduced by die stamping to less than the minimum specified on the component drawing or specification.

2.2.2.3 Types 3 and 4: Raised/Recessed Markings - Raised or recessed identification markings that are cast into the surface of the item are acceptable. Recessed markings shall not reduce the material thickness of an item to less than the minimum specified on the component drawing or specification. The size of forged or cast characters called out on the drawing or specification shall only be limited by the space available, but shall in no case be less than 0.09 inch in height.

2.2.2.4 Type 5: Electrochemical Etching - The electrolyte and neutralizer used for electrochemical etching shall be compatible with the material to be marked. The depth of etching shall be no greater

than 0.5 percent of the material thickness or 0.003 inch, whichever is less. The size of characters produced by electrochemical etching shall be selected within the range of 1/16 to 1/2 inch. However, the recommended minimum size is 0.1 inch to accommodate typing applications.

2.2.2.5 Type 6: Nameplates

A. The physical requirements (e.g., material, nameplate dimensions, character size and arrangement) for metal nameplates shall either be detailed on the applicable drawing or specification; or defined by reference to an applicable nameplate standard, specification or drawing. Metal nameplates shall be austenitic stainless steel. They shall contain not less than the following information:

Equipment description
Purchase order number
Equipment item number
Seller's name (if different from manufacturer)
Manufacturer's name
Manufacturer's model number
Manufacturer's serial number
Rated capacity
Size and type
Year built
Project identification

A typical metal nameplate layout is shown in Attachment A.

B. The attachment method and location on the item of either nameplate type shall be established on the basis of stress imposed on the item. The method shall consider possible crevice corrosion between the nameplate and the item surface. It shall also consider the radiation environment. When attached by welding, metal nameplates shall be welded in accordance with the welding requirements applicable to the item. If the welded nameplate is removed, the affected area shall be tested in accordance with the welding requirements applicable to the item.

2.2.2.6 Type 7: Self-Adhesive Labels - Self-adhesive labels may be used for identification provided they are in accordance with the requirements specified in Paragraph 2.1.1. When used to mark components in systems such as piping or electrical systems, or used as regulatory marking, self-adhesive labels shall be in accordance with applicable government, society or industry standards and codes. For example:

A. When marking a piping system, a recognized standard such as ANSI A13.1 shall be specified on the applicable drawing/ specification along with this specification section.

B. If labels are used to identify system or component radiation hazards, a standard such as OSHA 29 CFR Section 1910.96 shall be specified on the applicable drawing/specification along with this specification section.

2.2.2.7 Type 8: Painting - Paints suitable for the purpose or as specified shall be used to apply stenciled markings to items (see Paragraphs 2.1.1 and 2.2.1.2). Stenciled markings may be applied using a template or silkscreen. The size of the stenciled characters specified on the drawing/specification shall be selected within the range of 1/3 to 3 inches. The color and type of paint to be used shall also be in accordance with the drawing/specification. Crafted (freehand sign painted) application of marking in lieu of stenciling is acceptable with due consideration being given to the higher cost involved.

2.2.2.8 Type 9: Packaging - Identical items too small to be identified individually may be packaged in a box or bag marked with the item identification as shown in Paragraph 2.2.2.9 A.

2.2.2.9 Type 10: Tagging

A. Tags shall be austenitic stainless steel. They shall be impression-stamped with not less than the following information:

Purchase order number
Purchase order item number
Equipment item number

A typical tag layout is shown in Attachment A.

B. Tags shall be attached to the component they identify with stainless steel wire. Tagging is done in addition to the equipment nameplate. Equipment shipped in fully-enclosed containers shall have the information from Attachment A clearly marked on the container exterior.

C. Miscellaneous parts shall be tagged or marked with the equipment item number for which they are intended.

D. Equipment which contains insulating oils, antifreeze solutions or other liquids shall be prominently tagged at every opening. Tags shall indicate the nature of the contents and precautions for shipping and storage.

2.2.3 Temporary Identification Methods

Type A	Rubber stamp and ink
Type B	Rubber roller or wheel and ink
Type C	Felt-tip marking pen
Type D	Removable self-adhesive label or tape
Type E	Label attached with removable tape
Type F	Removable tag
Type G	Packaging
Type H	Scribing tool
Type J	Paint stick
Type K	Metal tag

2.2.3.1 Inks - Inks used for all type of temporary markings including felt-tipped pens, rubber stamps, rubber roller and rubber wheel shall be in accordance with the requirements of Paragraph 2.1.1 B.

2.2.3.2 Self-Adhesive Labels and Tape - The adhesives of self-adhesive labels and tape used for temporary marking shall be in accordance with the requirements of Paragraph 2.1.1.

2.2.3.3 Tagging - Items not suited for other methods of identification may be tagged. Tags and attaching materials shall be compatible with the item material in accordance with Paragraphs 2.1.1 A and 2.1.1 B. Materials used for temporary identification tagging shall be selected on the same basis as for permanent identification tagging (see Paragraph 2.2.2.9).

2.2.3.4 Packaging - Packaging requirements for temporary identification shall be the same as for permanent identification (see Paragraph 2.2.2.8).

2.2.3.5 Scribing Tool - Scribing tools may be used for temporary identification during fabrication or construction provided such marking is not applied to critical surfaces such as finished, machined or sealing surfaces.

2.2.3.6 Removal of Temporary Marking - All temporary marking shall be removed from stainless steel and corrosion-resistant material surfaces prior to fabrication operations which render markings inaccessible, prior to heat treatment and prior to post-manufacturing acceptance or post-installation acceptance, as appropriate. Ink markings and residue from tapes shall be removed using new or re-distilled alcohol or acetone. The removal of temporary markings shall assure cleanliness of the material and be in accordance with applicable cleanliness acceptance criteria.

2.2.4 Testing

2.2.4.1 Visual Inspection - Item surfaces and marking shall be visually inspected to determine conformance with the applicable requirements specified in Paragraphs 2.2.1.1 and 2.2.1.2.

PART 3 EXECUTION

(Not Used)

END OF SECTION

ATTACHMENT A
LAYOUT EXHIBITS (TYPICAL)

EXHIBIT 1. NAMEPLATE LAYOUT (TYPICAL)

P.O. NUMBER	ITEM NUMBER
SERIAL NUMBER	MODEL NUMBER
EQUIPMENT DESCRIPTION	
MANUFACTURED BY	
SIZE	TYPE
RATED CAPACITY	YEAR BUILT
PROJECT	

EXHIBIT 2. TAG LAYOUT (TYPICAL)

P.O. NUMBER
P.O. ITEM NUMBER
EQUIPMENT ITEM NUMBER

9513336.0917

U.S. DEPARTMENT OF ENERGY
Hanford Waste Vitrification Plant
Richland, Washington
DOE Contract DE-AC06-86RL10838

FLUOR DANIEL, INC.
Advanced Technology Division
Fluor Contract 8457

SECTION 16120
SOLDERING - ELECTRICAL
B-595-P-P06B-16120

APPROVED FOR CONSTRUCTION

REVISION 0
ISSUE DATE 4-16-93

WAPA YES ___ NO X
QUALITY LEVEL I ___ II X
SAFETY CLASS 1__ 2__ 3 X 4__

ORIGINATOR: CHECKER:

A. Estrada, Welding Engineer — Date 3/29/93
D. A. Buzzelli, Lead Disc. Checker — Date 3-29-93

APPROVED BY:

C. J. Divona — Lead Discipline Engineer — Date 3/29/93

3/22/93 8:18am
106\VOL5...\SPECS\P06B\16120-0.

SECTION 16120
SOLDERING - ELECTRICAL
B-595-P-P06B-16120

TABLE OF CONTENTS

PART		PAGE
PART 1	**GENERAL**	1
1.1	SUMMARY	1
1.2	REFERENCES	1
1.3	RELATED REQUIREMENTS	1
1.4	DEFINITIONS	1
1.5	SYSTEM DESCRIPTION	1
1.6	SUBMITTALS	1
1.7	CLASSIFICATION OF SYSTEMS AND COMPONENTS	2
1.8	PROJECT OR SITE ENVIRONMENTAL CONDITIONS	2
PART 2	**PRODUCTS**	2
2.1	MATERIALS AND EQUIPMENT	2
2.2	FABRICATION AND MANUFACTURE	3
PART 3	**EXECUTION**	4
3.1	PREPARATION	4
3.2	INSTALLATION, APPLICATION AND ERECTION	4
3.3	FIELD QUALITY CONTROL	5
3.4	ADJUSTMENTS	5
3.5	CLEANING	5
3.6	PROTECTION	5
3.7	DEMONSTRATION	6
3.8	SCHEDULES	6

SECTION 16120
SOLDERING - ELECTRICAL

PART 1 GENERAL

1.1 SUMMARY

This specification section defines the cleaning, soldering, examination and testing requirements for the electrical pin connectors.

1.2 REFERENCES

The publications listed below form a part of this specification section to the extent referenced. The publications are referred to in the text by the basic designation only.

AMERICAN SOCIETY FOR TESTING AND MATERIALS (ASTM)

ASTM B32 1989 Standard Specification for Solder Metal

MILITARY SPECIFICATION

MIL-T-13513B(AT) 1989 Terminals, Lugs and Splices, Conductor

1.3 RELATED REQUIREMENTS

(Not Used)

1.4 DEFINITIONS

NDE - Nondestructive Examination

1.5 SYSTEM DESCRIPTION

(Not Used)

1.6 SUBMITTALS

Submit the following in accordance with the Vendor Drawing and Data Requirements section of the Order/Subcontract.

1.6.1 Cleaning procedures shall be submitted for Buyer approval. These shall include precleaning and final cleaning of solder connections.

1.6.2 Soldering procedures shall be submitted for Buyer approval. A procedure shall be submitted for each type and size of electrical pin. Submittals shall include essential variables that are critical for a sound solder connection (i.e., soldering power

source, solder type, flux type, soldering technique, nondestructive examination and mechanical testing).

1.6.3 Seller shall submit all nondestructive examination (NDE) and mechanical testing procedures that will be used during production. The procedure shall indicate sample test size and frequency of testing. Submit for Buyer approval.

1.7 **CLASSIFICATION OF SYSTEMS AND COMPONENTS**

(Not Used)

1.8 **PROJECT OR SITE ENVIRONMENTAL CONDITIONS**

(Not Used)

PART 2 PRODUCTS

2.1 **MATERIALS AND EQUIPMENT**

2.1.1 Acceptable soldering materials shall be Sn60 solder and RMA rosin flux. Solder material shall be in accordance with ASTM B32.

2.1.2 Solder and flux used in production soldering shall be the same brand solder and flux referenced in submitted soldering procedure.

2.1.3 Acceptable cleaning fluids used to remove flux on electrical connectors shall be as follows:

Mild soap and water
Mineral spirits
White kerosene
VM & P Naphtha
Heptane
Hexane
Methyl isopropyl alcohol
Methyl isobutyl alcohol
Petroleum ether
Formula 409 (Registered Trademark of the Clorox Company)
Joy (Registered Trademark of Proctor & Gamble)
Top Job (Registered Trademark of Proctor & Gamble)
Palmolive Liquid (Registered Trademark of Colgate Palmolive Company)
Windex with Ammonia D (Registered Trademark of the Drackett Products Company)

2.2 **FABRICATION AND MANUFACTURE**

2.2.1 Avoid heating entire pin during soldering. The connector shall be disconnected from the plug or receptacle during soldering.

2.2.2 Each soldering technician shall be assigned a symbol or number to identify his/her work. A record log may be kept in lieu of assigned symbols or numbers. Each soldered pin/connector shall be traceable to a qualified technician.

2.2.3 Procedure Qualification

2.2.3.1 Seller shall develop a soldering procedure. The same type and size of electrical pins, power source, solder, flux and soldering technique used in production soldering shall be used to develop said procedure.

2.2.3.2 Five test specimens shall be soldered for each procedure. The specimens shall be tested in accordance with Paragraphs 3.2.1 and 3.2.2. The procedure is qualified once all five specimens pass tests.

2.2.3.3 Once production soldering is begun, any changes to the procedure shall require complete requalification.

2.2.4 Soldering Technician Certification

2.2.4.1 Soldering technicians shall be certified in accordance with Buyer-approved soldering procedure. Technicians shall be certified for each type and size of electrical connector.

2.2.4.2 Personnel certification shall include NDE and mechanical testing. During certification, mechanical testing of soldered connections shall be conducted until the technician can produce two consecutive electrical connections that do not contain any defects. NDE shall be in accordance with Paragraph 3.2.1. Mechanical testing shall be in accordance with Paragraph 3.2.2.

2.2.4.3 A record of technician certification shall be made available upon Buyer request.

2.2.4.4 At the request of the Buyer, any technician shall be tested and recertified when the work of the said technician creates a reasonable doubt as to the quality of his/her workmanship.

2.2.4.5 Technicians shall be recertified if any essential variables are changed in the soldering procedure.

PART 3 EXECUTION

3.1 PREPARATION

3.1.1 All dirt, oil, grease and contaminants detrimental to sound solder connection shall be removed from solder surface prior to soldering. Acceptable cleaning methods are hot solvent degreasing, cold liquid solvent immersion and hot alkali detergent degreasing. For alkali detergent method the connectors shall be steam or water-washed to remove all cleaning solution. Soft water is preferable to eliminate hard water deposit.

3.2 INSTALLATION, APPLICATION AND ERECTION

3.2.1 Nondestructive Examination

3.2.1.1 All soldered electrical connections shall be visually inspected.

3.2.1.2 An acceptable connection will have a shiny solder finish and display excellent wetting. Solder shall be wicked up the wire strand.

3.2.1.3 Unacceptable soldered connections will have the following characteristics:

A. Dull solder finish (indicating a cold joint).

B. Overheated or granular-looking joint.

C. Pitted or porous joint.

D. Rosin solder joints caused by rosin being trapped between the wire and connector.

E. Contaminants in the solder.

F. Fractured-looking joint.

G. Insufficient solder in the joint.

3.2.2 Mechanical Testing

3.2.2.1 Mechanical testing of soldered electrical connections shall be implemented during soldering procedure qualification and technician certification.

3.2.2.2 Mechanical testing shall include:

A. Sectioning the soldered electrical connection to ensure the solder is wicking up the wire strand, solder is wetted to the wire strand and electrical pin, and no voids exist.

B. Tensile testing to ensure the strength of solder connection. The soldered electrical connection shall withstand the minimum mechanical load as specified in Table 1. Tensile testing to destruction is not required. Tensile testing machine shall be an Instron or equal.

TABLE 1. MINIMUM MECHANICAL STRENGTH REQUIREMENTS (VALUES IN ACCORDANCE WITH MIL-T-13513B(AT)

CABLE SIZE (AWG)	MINIMUM STRENGTH (POUNDS)	CABLE SIZE (AWG)	MINIMUM STRENGTH (POUNDS)
20	19	6	270
18	28	4	350
16	37	2	555
14	45	1	650
12	95	0	760
10	150	00	860
8	195	0000	1000

3.3 **FIELD QUALITY CONTROL**

(Not Used)

3.4 **ADJUSTMENTS**

(Not Used)

3.5 **CLEANING**

(Not Used)

3.6 **PROTECTION**

(Not Used)

3.7 **DEMONSTRATION**

(Not Used)

3.8 **SCHEDULES**

(Not Used)

END OF SECTION

9513336.0925

U.S. DEPARTMENT OF ENERGY
Hanford Waste Vitrification Plant
Richland, Washington
DOE Contract DE-AC06-86RL10838

FLUOR DANIEL, INC.
Advanced Technology Division
Fluor Contract 8457

SECTION 16151
MOTORS - INDUCTION FOR RADIOACTIVE SERVICE
B-595-P-P06B-16151

APPROVED FOR CONSTRUCTION

REVISION 0
ISSUE DATE 4-6-93

WAPA YES ___ NO X
QUALITY LEVEL I ___ II X
SAFETY CLASS 1__ 2__ 3X 4__

ORIGINATOR:

3/30/93
J. J. Ichkhan, Mechanical Engineer Date

CHECKER:

3-30-93
D. A. Buzzelli, Lead Mech. Checker Date

APPROVED BY:

C. J. Divona Lead Discipline Engineer

3/30/93
Date

3/30/93 2:36pm
106\VOL5...\SPECS\P06B\16151-0.

U.S. DEPARTMENT OF ENERGY
Hanford Waste Vitrification Plant
Richland, Washington
DOE Contract DE-AC06-86RL10838

FLUOR DANIEL, INC.
Advanced Technology Division
Fluor Contract 8457

Rev. 0

SECTION 16151
MOTORS - INDUCTION FOR RADIOACTIVE SERVICE
B-595-P-P06B-16151

TABLE OF CONTENTS

PART		PAGE
PART 1	**GENERAL**	1
1.1	SUMMARY	1
1.2	REFERENCES	1
1.3	RELATED REQUIREMENTS	2
1.4	DEFINITIONS	2
1.5	SYSTEM DESCRIPTION	2
1.6	SUBMITTALS	2
1.7	CLASSIFICATION OF SYSTEMS AND COMPONENTS	3
1.8	PROJECT OR SITE ENVIRONMENTAL CONDITIONS	3
PART 2	**PRODUCTS**	3
2.1	MATERIALS AND EQUIPMENT	3
2.2	FABRICATION AND MANUFACTURE	4
2.3	COATINGS	6
2.4	LABELING	6
2.5	TESTING	7
2.6	PACKAGING	7
2.7	DELIVERY, STORAGE AND HANDLING	8
PART 3	**EXECUTION**	8

ATTACHMENTS

ATTACHMENT	TITLE
A	ELECTRIC MOTOR DATA SHEET
B	INSULATION RESISTANCE READINGS FOR ROTATING EQUIPMENT

SECTION 16151
MOTORS - INDUCTION FOR RADIOACTIVE SERVICE

PART 1 GENERAL

1.1 SUMMARY

This specification section covers the technical requirements for polyphase induction motors ranging in size from 1/2 horsepower to 300 horsepower, for mechanical drive applications in a radioactive environment.

1.2 REFERENCES

The publications listed below form a part of this specification section to the extent referenced. The publications are referred to in the text by the basic designation only.

AMERICAN SOCIETY FOR TESTING AND MATERIALS (ASTM)

ASTM D4082	1989 Standard Test Method for Effects of Gamma Radiation on Coatings for Use in Light Water Nuclear Power Plants

ANTI-FRICTION BEARING MANUFACTURERS ASSOCIATION (AFBMA)

AFBMA 9	1990 Load Ratings and Fatigue Life for Ball Bearings
AFBMA 11	1990 Load Ratings and Fatigue Life for Roller Bearings

INSTITUTE OF ELECTRICAL AND ELECTRONIC ENGINEERS (IEEE)

IEEE 43	1974 (Rev. 91) Recommended Practice for Testing Insulation Resistance of Rotating Machinery
IEEE 112	1984 Standard Test Procedure for Polyphase Induction Motors and Generators

NATIONAL ELECTRICAL MANUFACTURERS ASSOCIATION (NEMA)

NEMA MG1	1987 (Rev. 89) Motors and Generators
NEMA MG2	1983 Safety Standard for Construction and Guide for Selection, Installation and Use of Electric Motors

NEMA MG13	1984 (Rev. 90) Frame Assignments for Alternating Current, Integral-Horsepower Induction Motors

STEEL STRUCTURES PAINTING COUNCIL (SSPC)

SSPC SP-6	1989 Surface Preparation Specification Number 6, Commercial Blast Cleaning

1.3 **RELATED REQUIREMENTS**

Specification Section 01730	Operation and Maintenance Data
Specification Section 15196	Identification and Tagging Methods for Mechanical Equipment

1.4 **DEFINITIONS**

MEV - Million Electron Volts
RAD - Roentgen Absorbed Dose
TENV - Totally Enclosed Non-Ventilated
TID - Total Integrated Dose

1.5 **SYSTEM DESCRIPTION**

(Not Used)

1.6 **SUBMITTALS**

Submit the following in accordance with the Vendor Drawing and Data Requirements section of the Order/Subcontract.

1.6.1 Speed/torque and speed/current curves shall be submitted.

1.6.2 Seller shall complete Data Sheet DS-1 (Attachment A) for furnished equipment. Seller shall complete insulation resistance readings (Attachment B) for furnished electric motors. Both of these shall be submitted.

1.6.3 Motor outline drawings, shaft dimensions and weight shall be submitted.

1.6.4 Detail drawings of main and/or auxiliary junction boxes.

1.6.5 Operation and maintenance manuals shall be provided in accordance with Specification Section 01730. Complete installation manuals shall also be provided.

1.6.6 Motor test data in accordance with Paragraph 2.5.1.1 shall be submitted.

1.7 **CLASSIFICATION OF SYSTEMS AND COMPONENTS**

(Not Used)

1.8 **PROJECT OR SITE ENVIRONMENTAL CONDITIONS**

1.8.1 Climatic and Geographic Site Conditions

A.	Site Elevation	714 feet above sea level
B.	Barometric Pressure	14.3 psia
C.	Outside Design Temperature	
	1) Maximum Design Temperature	110°F
	2) Minimum Design Temperature	-20°F
	3) Wet Bulb Design Temperature	68°F
D.	Operating Environment	
	1) Normal Temperature	60° to 104°F
	2) Maximum Temperature	104°F
	3) Relative Humidity	Not controlled

1.8.2 Radiation Level — 3×10^8 rads (TID) over 10 years

Intermittent radiation absorbed dose rate levels up to a maximum of 1100 rads/hr are encountered from sources emitting gamma radiation at an average energy level of 0.7 MEV.

PART 2 PRODUCTS

2.1 **MATERIALS AND EQUIPMENT**

The following requirements apply to all electric motors in radioactive service furnished in accordance with this specification section.

GENERAL REQUIREMENTS

Electric motors and motor accessories furnished in accordance with this specification section shall be in full compliance with NEMA MG1, NEMA MG2 and NEMA MG13 standards.

A. Motor Rating

Seller shall be fully responsible for specifying electric motor horsepower, speed and torque characteristics for each motor furnished as part of Seller's driven equipment package. The motor shall be for severe duty application.

B. Electrical Power Supply

Motors 1/2 HP and larger furnished in accordance with this specification section shall be designed for 480V/3 Phase/60 Hz power supply. Where motors are constant speed they shall be designed for full voltage across the line starting and rated for continuous duty. In applications where the driven equipment calls for variable speed the electric motor shall be a variable-speed squirrel cage induction motor controlled by a variable-frequency drive. Power junction box shall be rotatable by 90° in each direction. Variable frequency starters for variable speed motors shall be provided by others.

C. Grounding

Each electric motor shall include provisions for motor frame grounding. The ground shall utilize a hex-head bolt tapped into the motor frame from within the main junction box.

D. Space Heaters

Electric motor space heaters shall not be provided unless otherwise specified by the driven equipment specifications and/or Contract Drawings.

E. Elastomers

For electric motor applications in radioactive service, elastomers shall be compounded from materials used in severe duty application. Motor life expectancy shall be not less than ten (10) years. The use of fluoroelastomers, ethylene-propylene (EPDM) and/or polyvinyl elastomers shall not be permitted.

2.2 FABRICATION AND MANUFACTURE

2.2.1 Electric motors furnished in accordance with this specification section shall be in accordance with NEMA MG1.

A. Service Factor

Electric motors shall be designed and selected with a service factor of 1.15 for polyphase motors and 1.25 for single-phase

motors unless otherwise established by the driven equipment specifications and/or Contract Drawings.

B. High-efficiency motors shall be used for motors of 5 HP and larger.

C. Insulation

Insulation systems for motors in general service shall be Class F or better in accordance both with NEMA MG1 and NEMA MG2. Motor leads shall be copper with compression lugs, both sized for 125 percent load current at motor cooling air discharge temperature.

D. Temperature Rise

Temperature rise in accordance with NEMA MG2 shall not be greater than Class F, 165°C total temperature rise, with 40°C ambient temperature.

E. Enclosure

Enclosure shall be totally enclosed non-ventilated (TENV).

F. Seals

Motors shall be equipped with suitable shaft seals. These seals shall prevent moisture, dirt and corrosive agents from entering the motor enclosure and bearings along the shaft.

2.2.2 Bearings

A. For motor applications within a radiation environment as indicated by the driven equipment specifications and/or Contract Drawings, motor bearing housings shall be designed to be open bearings. The motor end bells shall be equipped with grease fittings and purge ports for expelled grease.

B. Antifriction bearings shall be in accordance both with AFBMA 9 and AFBMA 11. Each electric motor nameplate shall show the data required by NEMA MG1. Front and rear AFBMA bearing part numbers shall be included.

C. Both ball and roller bearings shall be designed and constructed for 100,000 continuous hours, L-10 minimum life specified service in accordance both with AFBMA 9 and AFBMA 11. Design shall be based on continuous service.

D. Extended bearing life periods, when required, shall be in accordance either with the driven equipment specifications and/or Contract Drawings.

E. Grease used for lubrication shall be of the radiation-resistant type (Chevron SRI NLG12 or approved equal).

2.2.3 Balancing and Vibration Criteria

A. Motors shall be dynamically balanced. Welding or soldering to effect balancing is unacceptable. Parent metal shall be removed to improve balance without affecting the structural strength of the rotating element.

B. Maximum vibration amplitude (peak-to-peak) as measured on the rotor shaft shall be in accordance with the following range to provide a smooth condition:

RPM	VELOCITY (IN/SEC)	INCHES (PEAK-TO-PEAK)
3600	0.0098 - 0.0196	0.000052 - 0.0001
1800	0.0098 - 0.0196	0.0001 - 0.0002
1200	0.0098 - 0.0196	0.00017 - 0.0003
900 and less	0.0098 - 0.0196	0.0002 - 0.0004

For vibration amplitude measurements, motors shall be operated at rated operating speed and frequency with a one-half key installed in the key seat. Motors shall be mounted on isolators during vibration amplitude measurements in accordance with NEMA MG1.

2.3 COATINGS

After completion of all fabrication procedures the external surfaces of each electric motor shall be thoroughly cleaned of all foreign material, including rust, in accordance with SSPC SP-6. Primer and finish paint or coatings shall be in accordance with ASTM D4082. Stainless steel, nickel, brass, copper, monel, aluminum, hastelloy, lead, galvanized steel, plastics, elastomers and glass surfaces shall not be painted unless specified otherwise.

2.4 LABELING

Labeling shall be in accordance with Specification Section 15196, Paragraph 2.2.2, Type 6. This shall be in addition to the manufacturer's identification plate.

2.5 **TESTING**

2.5.1 Source Testing

2.5.1.1 Motor Manufacturer Tests

Each electric motor furnished in accordance with this specification section shall be tested by the motor manufacturer prior to shipment. These tests shall include (but not be limited to):

A. High-Potential Tests in accordance with NEMA MG1, Part 3.

B. Routine tests in accordance with IEEE 112.

Seller shall submit copies of motor manufacturer's motor test results.

2.5.1.2 Resistance Tests

Seller shall subject all electric motors furnished in accordance with this specification section to insulation resistance tests in accordance with IEEE 43. Insulation resistance measured during these tests shall be not less than 5 megohms. Seller shall submit copies of insulation resistance readings (Attachment B) for each electric motor furnished. These tests shall be done prior to shipping.

2.5.1.3 Performance Test

All required electric motor performance tests shall be conducted in accordance with the applicable driven equipment specification and the performance testing referenced in Section 3 of IEEE 112 and NEMA MG1 Part 12.

2.6 **PACKAGING**

2.6.1 Preparation for shipment and packaging may be in accordance with manufacturer's standards. At minimum, the packaging shall provide protection against corrosion and damage from normal handling and storage. Minimum preparation shall include the requirements listed below.

2.6.1.1 Machined surfaces, threads, bearings and bearing housings shall be protected during shipment by application of grease or other suitable rust-inhibiting compound.

2.6.1.2 Threaded connections and tapped holes shall be capped or plugged to prevent damage. Compatible materials shall be used.

2.6.1.3 The motor shall be fully-protected against moisture penetration to the electrical compartments and winding.

2.6.1.4 Bracing, supports and rigging connections shall be provided to prevent damage during shipment, lifting and unloading.

2.6.1.5 Mechanical seals and other sealing devices shall be installed prior to shipment.

2.6.1.6 Separate or loose parts shall be completely boxed and attached to the main item to be shipped as a unit. All shipping boxes shall be identified by Seller's order number, equipment number and equipment description. The boxes shall be labeled with ink, paint or other indelible material.

2.7 DELIVERY, STORAGE AND HANDLING

2.7.1 All equipment shall be delivered in the manufacturer's original unopened protective packaging.

2.7.2 The equipment shall be stored and handled in such a manner as to keep it clean and free from damage and/or deterioration.

PART 3 EXECUTION

(Not Used)

END OF SECTION

ATTA. ENT A

FLUOR DANIEL

DATA SHEET
U.S. Department of Energy
Hanford Waste Vitrification Plant
Richland, Washington
DOE Contract DE-AC06-86RL10838

ELECTRIC MOTORS IN RADIOACTIVE SERVICE

NO.	BY / DATE	REVISION
△		
△		
△		
△		
△		
△		

SHEET NO. P06B-DS-1		REV. 0
DATE	CONTRACT	
TAG NO.		
SPECIFICATION SECTION NO. 16151		
FOR CLIENT USE		
ORIG	CHK'D	APPR'D

ALL ITEMS SHALL COMPLY WITH GENERAL SPECIFICATION SHEETS:									REV
Motor Tag Number(s)/L	/	/	/	/	/	/	/	/	△
Manufacture/Serial No.	/	/	/	/	/	/	/	/	△
Power Rating KW/HP									△
Service Factor	/	/	/	/	/	/	/	/	△
Speed Synch./Full Load, RPM									△
Bearing Type									△
BEARING LUBRICATION									△
Voltage, Phase, Frequency									△
Full Load Current AMP									△
Locked Rotor Current 100%V/80V	/	/	/	/	/	/	/	/	△
Acceleration Time (Incl Load) 100%V/80%V	/	/	/	/	/	/	/	/	△
Locked Rotor Stall Time (Cold), Seconds									△
Locked Rotor Stall Time (Hot) 100%V/80%V	/	/	/	/	/	/	/	/	△
Locked Rotor Torques (% FL)									△
Breakdown Torque (% FL)									△
Efficiency A. Full Load									△
B. 3/4 Load									△
C. 1/2 Load									△
Power Factor A. Full Load									△
B. 3/4 Load									△
C. 1/2 Load									△
D. Locked Rotor									△
Sound Pressure Level at 1/Meter In DBA									△
Space Heaters Volts/Phase/Watts	/ /	/ /	/ /	/ /	/ /	/ /	/ /	/ /	△
Rotation (Facing End Opposite Drive Shaft)									△
Insulation									△
Enclosure Type/Motor Mounting (H or V) TENV	/	/	/	/	/	/	/	/	△
Frame									△
Net weight Kg/LBSA	/	/	/	/	/	/	/	/	△

REVISION

REV	ORIG BY	CHK'D BY	
△1			
△2			
△3			
△4			

U.S. DEPARTMENT OF ENERGY
Hanford Waste Vitrification Plant
Richland, Washington
DOE Contract DE-AC06-86RL10838

FLUOR DANIEL, INC.
Advanced Technology Division
Fluor Contract 8457

Rev. 0

ATTACHMENT B
INSULATION RESISTANCE READINGS FOR ROTATING EQUIPMENT

Description _____ Area _____

Test Equipment _____ Ref. _____ Rev. No. _____

Calibration Date _____ Ref. Spec/Section _____

EQUIPMENT NO.	ENVIRONMENTAL CONDITIONS		INSUL. RESIST. Ø-GRADE. (MEGOHMS)	TEST VOLTAGE (Megohms)	VISUAL CHECK
	AMBIENT TEMP. (°C)	RELATIVE HUMIDITY			

SELLER'S REPRESENTATIVE _____ DATE _____

9513336.0957

U.S. DEPARTMENT OF ENERGY
Hanford Waste Vitrification Plant
Richland, Washington
DOE Contract DE-AC06-86RL10838

FLUOR DANIEL, INC.
Advanced Technology Division
Fluor Contract 8457

SECTION 16610
ELECTRICAL REQUIREMENTS FOR PACKAGED EQUIPMENT
B-595-P-P06B-16610

APPROVED FOR CONSTRUCTION

REVISION 0
ISSUE DATE 4-6-93

WAPA YES ___ NO X
QUALITY LEVEL I ___ II X
SAFETY CLASS 1__ 2__ 3X 4__

ORIGINATOR:

A. Larsen 3-23-93
A. Larsen, Electrical Engineer Date

CHECKER:

Abe Talebi 3-23-93
Abe Talebi, Electrical Engineer Date

APPROVED BY:

K. A. Owrey
K. A. Owrey Lead Discipline Engineer

3-23-93
Date

U.S. DEPARTMENT OF ENERGY
Hanford Waste Vitrification Plant
Richland, Washington
DOE Contract DE-AC06-86RL10838

FLUOR DANIEL, INC.
Advanced Technology Division
Fluor Contract 8457

Rev. 0

SECTION 16610
ELECTRICAL REQUIREMENTS FOR PACKAGED EQUIPMENT
B-595-P-P06B-16610

TABLE OF CONTENTS

PART PAGE

PART 1 GENERAL 1
1.1 SUMMARY 1
1.2 REFERENCES 1
1.3 RELATED REQUIREMENTS 2
1.4 DEFINITIONS 2
1.5 SYSTEM DESCRIPTIONS 2
1.6 SUBMITTALS 3
1.7 CLASSIFICATIONS OF SYSTEMS AND COMPONENTS 4
1.8 PROJECT OR SITE ENVIRONMENTAL CONDITIONS 4

PART 2 PRODUCTS 4
2.1 MATERIALS AND EQUIPMENT 4
2.2 FABRICATION AND MANUFACTURE 9

PART 3 EXECUTION 12

SECTION 16610
ELECTRICAL REQUIREMENTS FOR PACKAGED EQUIPMENT

PART 1 GENERAL

1.1 SUMMARY

This specification covers the general requirements for the fabrication, testing and inspection of the electrical materials and devices furnished as part of the pour and drain turntables.

1.2 REFERENCES

The publications listed below form a part of this specification section to the extent referenced. The publications are referred to in the text by the basic designation only.

AMERICAN SOCIETY FOR TESTING AND MATERIALS (ASTM)

ASTM A167	1991 Standard Specification for Stainless and Heat-Resisting Chromium-Nickel Steel Plate, Sheet, and Strip
ASTM A193/A193M	1991 Standard Specification for Alloy-Steel and Stainless Steel Bolting Materials for High-Temperature Service
ASTM A194/A194M	1991 Standard Specification for Carbon and Alloy Steel Nuts for Bolts for High-Pressure and High-Temperature Service
ASTM A269	1990 Standard Specification for Seamless and Welded Austenitic Stainless Steel Tubing for General Service
ASTM B355	1990 Standard Specification for Nickel-Coated Soft or Annealed Copper Wire
ASTM D1418	1990 Standard Practice for Rubber Lattices Nomenclature

MILITARY SPECIFICATION (MIL)

MIL-W-81381A	1976 Wire, Electric, Polyamide-Insulated Copper or Copper Alloy

NATIONAL ELECTRIC MANUFACTURERS ASSOCIATION (NEMA)

NEMA 250	1985 Enclosures for Electrical Equipment (1000 Volts Maximum) Revision 2 - 1988

NATIONAL FIRE PROTECTION ASSOCIATION (NFPA)

NFPA 70	1990 National Electrical Code (NEC)

UNDERWRITERS LABORATORIES, INC. (UL)

UL 50	1990 Cabinets and Boxes
UL 486A	1989 Wire Connectors and Soldering Lugs for Use with Copper Conductors

WESTINGHOUSE DRAWINGS

Drawing Number H-2-83399	Assembly Upper Electrical Equipment Connector
Drawing Number H-2-83400	Upper Electrical Connector Components (Floating Pins)
Drawing Number H-2-83401	Lower Electrical Connector Components (Floating Pins)
Drawing Number H-2-83402 (Sheets 1, 2 and 3)	Electrical Equipment Connector Parts

1.3 **RELATED REQUIREMENTS**

Specification Section 01730	Operation and Maintenance Data
Specification Section 14601	Pour Turntable
Specification Section 14602	Drain Turntable
Specification Section 16120	Soldering - Electrical
Specification Section 17857	Local Control Panels for Pour and Drain Turntables

1.4 **DEFINITIONS**

(Not Used)

1.5 **SYSTEM DESCRIPTIONS**

1.5.1 All electrical materials and devices as specified in this section, as shown on the Contract Drawings, and listed in pour and drain turntables Specification Sections 14601 and 14602 shall be supplied by the Seller.

1.5.2 Power Supply

1.5.2.1 Buyer will supply the variable frequency reversing controllers to be installed at Hanford Waste Vitrification Plant (HWVP) for the pour and drain turntables rotational drive motors and linear drive motors.

1.5.2.2 The variable frequency controllers shall utilize 4-20 ma speed control signal input from Control Panels LP-130-001 and LP-130-002. 4 ma corresponds to minimum speed and 20 ma corresponds to maximum speed.

1.5.2.3 Buyer will provide one N.O. and one N.C. auxiliary contact each for the controllers forward and reverse operation to be used for motor controls specified in Section 17857.

1.5.2.4 Buyer will provide control power transformer in each motor controller compartment providing 120 vac for motor control circuitry.

1.5.2.5 Buyer will provide one or more 120 volt single phase feeders, as required, to furnish power to electrical controls and instrumentation.

1.6 **SUBMITTALS**

Submit the following in accordance with the Vendor Drawing and Data Requirements section of the Order/Subcontract, unless otherwise noted, for Buyer's review and approval.

1.6.1 Dimensional outline drawing for Buyer's review showing the location of all major electrical equipment, including pull boxes, and junction boxes with all the applicable device ratings. Conduit routing and connections to the lower electrical connectors shall be shown.

1.6.2 Detailed bills of material for Buyer's review including name of the manufacturer and catalog number of all electrical components.

1.6.3 Certified factory test report for Buyer's review in accordance with the testing paragraph of this section.

1.6.4 Manufacturer's installation instructions for Buyer's review.

1.6.5 Test procedures for Buyer's approval for all tests specified in this specification section.

1.6.6 Manufacturer's procedures for field testing for Buyer's review.

1.6.7 Assembly procedures for Buyer's approval of the electrical connector assemblies. As a minimum, procedures shall be in accordance with Westinghouse Drawings H-2-83399, H-2-83400, H-2-83401 and H-2-83402 and shall include the following:

1.6.7.1 Wire preparation - stripping, cutting, and cleaning;

1.6.7.2 After solder cleaning;

1.6.7.3 Heat shrink tubing installation;

1.6.7.4 Pin, socket and connector assembly;

1.6.7.5 Continuity testing.

1.6.8 Electrical operation and maintenance data in accordance with Specification Section 01730, Operation and Maintenance Data.

1.7 **CLASSIFICATIONS OF SYSTEMS AND COMPONENTS**

(Not Used)

1.8 **PROJECT OR SITE ENVIRONMENTAL CONDITIONS**

1.8.1 Climatic and Geographic Site Conditions

A.	Site Elevation	714 feet above sea level
B.	Barometric Pressure	14.3 psia

1.8.2 Operating Environment

A.	Normal Temperature	60°F to 104°F
B.	Maximum Temperature	104°F
C.	Relative Humidity	Not Controlled
D.	Radiation Level	$3x10^8$ Rads Total Integrated Dose (TID), 10 years

PART 2 PRODUCTS

2.1 **MATERIALS AND EQUIPMENT**

2.1.1 General

2.1.1.1 When applicable, all electrical materials and equipment shall be listed by Underwriter's Laboratories and shall bear the UL label.

2.1.1.2 When two or more components of the same specifications are required, the components shall be identical having the same manufacturer and catalog number.

2.1.2 Conduit

2.1.2.1 Conduit shall be stainless steel tubing type 304L in accordance with ASTM A269.

2.1.3 Stainless Steel Flexible Conduit

2.1.3.1 Stainless steel flexible conduit shall be Titeflex Industrial Americas Type S81 stainless steel corrugated hose or equal.

2.1.4 Pull Boxes/Terminal Boxes

2.1.4.1 Pull boxes shall be NEMA 4X in accordance with NEMA 250 and sized in accordance with the National Electrical Code. Boxes and box covers shall be fabricated in accordance with UL 50 from stainless steel Type 304L in accordance with ASTM A167. Terminal boxes shall contain a back panel for terminal and ground bar mounting. Gaskets shall be fabricated from peroxide cured EPDM. EPDM shall be in accordance with ASTM D1418.

2.1.5 Fittings

2.1.5.1 Fittings shall be for use with stainless steel tubing. Stainless steel fittings shall be type 304L.

2.1.6 Miscellaneous Hardware

2.1.6.1 All conduit straps, conduit clamps, preformed channel shall be stainless steel Type 304 or 316. Screws and bolts shall be Class 1 Grade B8M in accordance with ASTM A193/A193M. Nuts shall be Grade 8M in accordance with ASTM A194/A194M.

2.1.7 Cable

2.1.7.1 General Requirements

2.1.7.1.1 Cable supplied shall be new, shall be the product of an established manufacturer normally engaged in the production of cable with a minimum of 5 years documented experience, and shall be that manufacturer's newest product.

2.1.7.1.2 Cable shall be continuous. Factory splices or factory repairs are not acceptable in individual conductors. Cable shall be free of abrasions.

2.1.7.2 Single Conductor 600 Volt Power Cable - Radiation Resistant

2.1.7.2.1 Cables herein specified shall be single conductor, 600 volts, 200°C in accordance with the Military Specification MIL-W-81381A and Specification Sheet MIL-W-81381/12C.

2.1.7.2.2 Conductor

Conductor shall be nickel coated, annealed copper in accordance with ASTM B355. Stranding shall be in accordance with Table II of Specification MIL-W-81381A.

2.1.7.2.3 Insulation

The insulation shall be 200°C Kapton Polyimide or equal and in accordance with MIL-W-81381/12C.

2.1.7.2.4 Cable Marking

The surface of the insulation shall have a durable marking, at intervals not exceeding 24 inches, which shall consist of: manufacturer's name, number and size of conductors, voltage rating, cable type(s), and temperature rating.

2.1.7.3 Multiconductor Cable Reel Power Cable - Radiation Resistant

2.1.7.3.1 General

Cable shall be 20 conductor #12 AWG. Each individual cable included in the multiconductor construction shall have conductor and insulation in accordance with the Single Conductor 600 Volt Power Cable-Radiation Resistant paragraph of this section.

2.1.7.3.2 Assembly

Conductors shall be twisted with a left-hand lay no greater than 15 times the core diameter by the planetary method.

2.1.7.3.3 Overall Jacket

Jacket shall consist of one layer of 3 to 5 mils teflon impregnated glass barrier tape wrapped with a minimum of 50% overlap, a second layer of 250FN029 Kapton tape or equal wrapped in the reverse direction of the first layer with a 20% overlap and a third layer of 150FN019 Kapton tape or equal wrapped in the reverse direction of the second layer with a 50% overlap.

2.1.7.3.4 Cable Marking

The cable jacket shall be identified. The marking shall consist of: manufacturer's name, number and size of conductors, voltage rating, cable type(s), and temperature rating.

2.1.7.4 Instrument Cable Type DL - Radiation Resistant (as shown on Contract Drawings)

A. Cable shall be 4 #16 AWG, individually twisted pair with overall shield and 18 AWG drain wire. Conductors and drain wire shall be nickel coated annealed copper in accordance with ASTM B355. Stranding shall be in accordance with Table II of specification MIL-W-81381A.

B. 600 V primary insulation shall be constructed of one layer of 250FN029 Kapton film or equal, with a minimum of 50% overlap and a second layer of 120FN616 Kapton film or equal with a minimum of 50% overlap.

C. Cable shield shall provide 100 percent coverage by a Kapton polyimide-aluminum or equal laminate tape shield, helically applied over the twisted pairs with the aluminum on the inside in continuous contact with the drain wire. Tape shall be 1 mil Kapton or equal and 1 mil aluminum and applied with a 30% minimum overlap.

D. Jacket shall consist of one layer of 3 to 5 mils teflon impregnated glass barrier tape wrapped with a minimum of 50% overlap, a second layer of 250FN029 Kapton tape or equal wrapped in the reverse direction of the first layer with a minimum of 20% overlap and a third layer of 150FN019 Kapton tape or equal wrapped in the reverse direction of the second layer with a 50% overlap.

E. Lay of twist shall be 2 inches maximum.

F. Each twisted pair shall contain one black and one white conductor.

2.1.7.5 600 Volt Power Cables - Standard

2.1.7.5.1 Power cables in associated panels shall be #12 AWG minimum, stranded copper, 600 volt, 90°C and UL listed.

2.1.7.6 600 Volt Control Cable - Standard

2.1.7.6.1 Control wiring in associated panels shall be #14 AWG minimum, stranded copper, 600 volt, 90°C and UL listed. Associated panels are specified in Section 17857.

2.1.8 Heat Shrink Products

2.1.8.1 Heat shrink tubing shall be rated for 1000 volts, radiation-resistant and flame retardant. Ray Chem WCSF-N or equal.

2.1.9 Adhesive Tape

2.1.9.1 Adhesive tape for insulation shall be rated for 1000 volts, radiation resistant, and flame retardant. Ray Chem S1119 or equal.

2.1.9.2 Color coding tape shall be 1/2 inch wide vinyl plastic type. Plymouth 3165 or equal.

2.1.10 Terminals

2.1.10.1 Terminals for radiation resistant 10 AWG cable or smaller shall be uninsulated ring, crimp type and in accordance with UL486A. Thomas and Betts B14 series or C10 series or equal.

2.1.10.2 Terminals for standard cable shall be ring tongue, nylon, self-insulated, compression type. Terminals shall be in accordance with UL 486A. Thomas and Betts series RB and RC or equal.

2.1.11 Identification

2.1.11.1 Wire and Cable

2.1.11.1.1 Identification of radiation resistant control and power circuit cable shall be by means of heat shrinkable, insulated tubing with circuit number identification by printed characters on white heat shrink sleeve; Ray Chem NTMS or equal.

2.1.11.1.2 Identification of standard control and power circuit cable shall be by means of heat shrinkable tubing with circuit number identification by heat impressed black characters on white sleeve. Thomas and Betts Catalog Number WHT-700 or equal.

2.1.12 Grounding Conductors

The electrical equipment ground conductors shall be continuous insulated copper cable, sized as indicated on the Contract Drawings. Cable shall be 600 volt power cable, standard or radiation resistant, as defined in this specification section.

2.1.13 Terminal Blocks - Radiation Resistant

Terminal blocks shall be channel mounting type rated 500 volts with locking screws and pressure plate. Insulation shall be radiation resistant, high temperature type. Phoenix Catalog No. SSK 0525 KER-EX-1E or equal.

2.1.14 Terminal Blocks - Standard

Terminal blocks shall be channel mounting type rated 600 volts, with screw type terminals on both sides. Buchanan catalog number P0721 or equal.

2.1.15 Cable Fittings

The cable reel cable connection to the upper electrical connector shall combine a cord connector and mesh grip both made of stainless steel. The fitting shall be UL listed, Kellems stainless steel deluxe cord, Hubbel Catalog Number CGXXXXXX or equal.

2.1.16 Ground Bus

Ground Bus shall have 7 terminals capable of accepting #8 AWG maximum. General Electric catalog number TGL3 or equal.

2.2 **FABRICATION AND MANUFACTURE**

2.2.1 Assembly

2.2.1.1 Electrical installation shall be in accordance with NFPA 70.

2.2.1.2 Conduit

2.2.1.2.1 Pull boxes and terminal boxes shall be supported independently of the conduit system.

2.2.1.2.2 All conduit connections shall be as shown on the contract drawings.

2.2.1.2.3 Before making up conduit runs, the interiors of all conduit, conduit bends, and fittings shall be free of all burrs and sharp edges, dirt, cuttings, and other foreign material.

2.2.1.2.4 Minimum conduit size shall be 3/4 inch.

2.2.1.2.5 Flexible conduit shall be used to avoid transmission of vibration from vibrating equipment to conduit system.

2.2.1.3 Cable

2.2.1.3.1 Wire and cable shall not be pulled until the raceway system is complete from pull point to pull point.

2.2.1.3.2 Care shall be exercised while installing wire in conduits so as not to damage the conductor insulation.

2.2.1.3.3 Cable as it is pulled, shall be visually inspected by the Seller. Cables with abrasions, abnormalities or lumps are not to be used.

2.2.1.3.4 Cables shall be pulled into conduits in such a manner as to avoid sharply bending or kinking conductor, damaging or stressing insulation. Minimum cable bending radius shall not be smaller than that specified by the manufacturer.

2.2.1.3.5 Wire sizes shall be as shown on the Contract Drawings.

2.2.1.3.6 Cable terminations shall be made in accordance with the Contract Drawings. Control panel cable terminations shall be made in accordance with Section 17857.

2.2.1.3.7 All wiring shall be continuous from terminal to terminal without splices.

2.2.1.3.8 Radiation resistant cable shall be used from the electrical connector assemblies to all equipment shown on the Contract Drawings. Standard cable shall be used for control panels specified in Section 17857.

2.2.1.3.9 Slack cable shall be left in cable reel connection to engage wire grip without tension on cable termination.

2.2.1.3.10 Cable fittings with grips shall be used at cable reel cable terminations. Slack cable shall be left between the cable grip and termination point to minimize strain on individual conductors.

2.2.1.4 Pull boxes shall be used instead of fittings. Pull box covers shall be attached with screws.

2.2.1.5 Identification

2.2.1.5.1 Conductors shall be identified at each end and in pull boxes with heat shrinkable tubing. Identification inscription shall be by individual and distinctive numbers for each conductor as indicated on the Contract Drawings. Control panel conductor numbers shall be in accordance with Section 17857.

2.2.1.5.2 Conduits

Conduits shall be identified on both ends with identification numbers as shown on the Contract Drawings. 1/2 inch numbers shall be permanently stencilled on conduit.

2.2.1.5.3 Pull Boxes/Terminal Boxes

Identification number, where indicated on the Contract Drawings, shall be permanently stencilled on the box cover and box side. Height of numbers shall be one inch.

2.2.1.6 Terminal Blocks

2.2.1.6.1 Radiation resistant terminal blocks shall be used in terminal boxes shown on the Contract Drawings. Standard terminal blocks shall be used for control panels specified in Section 17857. Provide a minimum of 20 percent spare terminal blocks.

2.2.1.6.2 Ring type terminal shall be used at device connection and standard type terminal blocks. Termination at radiation type terminal blocks in junction boxes shall be in accordance with manufacturer's recommendation.

2.2.1.7 Power Cable Color Coding

2.2.1.7.1 Conductors for 480 volt, three phase systems shall be color coded as follows: Phase A (brown), Phase B (orange), Phase C (yellow), grounding conductor (green). Color coding shall be either by pigmented insulation or by application of colored adhesive tape.

2.2.1.7.2 Conductors for 208/120 volt, three phase systems will be color coded as follows: Phase A (black), Phase B (red), Phase C (blue), grounded neutral (white) grounding conductor (green). Color coding shall be either by pigmented insulation or by application of colored adhesive tape.

2.2.1.7.3 Conductors for direct current systems shall be color coded as follows: positive (red), negative (black).

2.2.1.8 Soldering

Wire to pin connector soldering shall be in accordance with Specification Section 16120.

2.2.2 Testing

2.2.2.1 General

2.2.2.1.1 Furnish all materials, power supplies, motor controllers and test equipment required to perform tests, checks, inspections and the Factory Acceptance Tests in accordance with this specification section. Seller has the option of using equipment in his possession with valid National Institute of Standards and Technology (NIST) Certification of equipment or can use the service of a testing lab with valid National Bureau of Standards Certification of equipment.

2.2.2.1.2 The calibrating and testing equipment used for tests, checks, inspections and Factory Acceptance Test shall be calibrated within six months prior to testing. Seller shall provide proof of calibration.

2.2.2.1.3 Equipment failing the standards test shall not be used until repaired and re-standardized. All calibrating and testing equipment shall have valid certified label affixed to the equipment during usage. The label shall be affixed in a prominent location. The Buyer can, at his discretion, require the calibrating and testing equipment to be checked to the standards. Standards must not be used as calibration and testing devices in the field.

2.2.2.1.4 Seller shall be responsible for ensuring that the accuracy of the testing equipment is equal to (or better) than the accuracy of the equipment to be calibrated/tested.

2.2.2.1.5 Buyer shall be informed in advance of the date that all factory tests are to be conducted. Buyer reserves the right to attend and witness all factory tests.

2.2.2.2 Wire and Cable Continuity Tests

A. Test for continuity and correctness of wiring and verify correct identification on all conductors installed.

B. Test shall be made with an ohmmeter.

2.2.2.3 Insulation Resistance Test

A. All conductors shall be given an insulation resistance test using a megohmmeter.

B. Tests for each circuit shall be made between one conductor and ground with the other conductors grounded. Each conductor shall be tested in the same manner.

C. Test voltages and minimum acceptable insulation resistance shall be as follows:

Insulation Voltage	Test Voltage	Min. Insulation Resistance
600 volt ac	1000 Vdc	10 megohms

2.2.2.3.1 Test reports shall be submitted to Buyer.

PART 3 EXECUTION

(Not Used)

END OF SECTION

U.S. DEPARTMENT OF ENERGY
Hanford Waste Vitrification Plant
Richland, Washington
DOE Contract DE-AC06-86RL10838

FLUOR DANIEL, INC.
Advanced Technology Division
Fluor Contract 8457

SECTION 17857
LOCAL CONTROL PANELS FOR POUR AND DRAIN TURNTABLES
B-595-P-P06B-17857

APPROVED FOR CONSTRUCTION

REVISION 0
ISSUE DATE 4-6-93

WAPA YES ___ NO X
QUALITY LEVEL I ___ II X
SAFETY CLASS 1__ 2__ 3 X 4__

ORIGINATOR:

Robert L. Layne 3/29/93
R. L. Layne, Control Sys. Eng. Date

CHECKER:

B R Carlisle 3/29/93
B. R. Carlisle, Control Sys. Eng. Date

APPROVED BY:

J B Bunning
J. B. Bunning Lead Discipline Engineer

03/29/93
Date

SECTION 17857
LOCAL CONTROL PANELS FOR POUR AND DRAIN TURNTABLES
B-595-P-P06B-17857

TABLE OF CONTENTS

PART		PAGE
PART 1	**GENERAL**	1
1.1	SUMMARY	1
1.2	REFERENCES	1
1.3	RELATED REQUIREMENTS	3
1.4	DEFINITIONS	3
1.5	SYSTEM DESCRIPTION	3
1.6	SUBMITTALS	3
1.7	CLASSIFICATION OF SYSTEMS AND COMPONENTS	4
1.8	PROJECT OR SITE ENVIRONMENTAL CONDITIONS	5
1.9	UTILITIES	5
PART 2	**PRODUCTS**	5
2.1	MATERIALS AND EQUIPMENT	5
2.2	FABRICATION AND MANUFACTURE	7
2.3	FACTORY ACCEPTANCE TESTS (FAT)	11
2.4	PACKAGING AND SHIPPING	12
PART 3	**EXECUTION**	13

ATTACHMENTS

ATTACHMENT	TITLE
A	EXCERPT FROM PROCESS CONTROL DESCRIPTION SYSTEM 13
B	POUR TURNTABLE LOCAL PANEL (LP-130-001) I/O LIST
C	DRAIN TURNTABLE LOCAL PANEL (LP-130-002) I/O LIST

SECTION 17857
LOCAL CONTROL PANELS FOR POUR AND DRAIN TURNTABLES

PART 1 GENERAL

1.1 SUMMARY

This section defines the requirements for local panel LP-130-001 with corresponding pendant LP-130-006 and local panel LP-130-002 with corresponding pendant LP-130-007. The panels with corresponding pendant will monitor and control operation of the Pour Turntable (TU-130-001) specified in Specification Section 14601 or the Drain Turntable (TU-130-002) specified in Specification Section 14602.

1.2 REFERENCES

1.2.1 The publications listed below form a part of this specification to the extent referenced. The publications are referred to in the text by the basic designations only.

ELECTRIC POWER RESEARCH INSTITUTE (EPRI)

NP-3659	1984 Human Factors Guide for Nuclear Power Plant Control Rooms, Final Report

FACTORY MUTUAL (FM)

Directory	1991 Approval Guide

INTERNATIONAL ELECTRO-TECHNICAL COMMISSION (IEC)

IEC 964	1989 Design for Control Rooms of Nuclear Power Plants

INSTRUMENT SOCIETY OF AMERICA (ISA)

ISA RP60.6	1984 Nameplates, Labels and Tags for Control Centers
ISA S20	1981 Specification Forms for Process Measurement and Control Instruments, Primary Elements and Control Valves

MILITARY STANDARD (MIL-STD)

MIL-STD-1472D	1989 Human Engineering Design Criteria for Military Systems, Equipment, and Facilities, Change Notice 1; March 20, 1991

NATIONAL ELECTRICAL MANUFACTURERS ASSOCIATION (NEMA)

NEMA ICS3	1983 Industrial Systems, Revision 3 October 1987; Part ICS 3-304, Programmable Controllers
ANSI/NEMA 250	1985 Enclosures for Electrical Equipment (1000 Volts Maximum) Revision No. 1 - May 1986, Revision No. 2 - May 1988

NATIONAL FIRE PROTECTION ASSOCIATION (NFPA)

NFPA 70	1990 National Electrical Code (NEC)

U.S. NUCLEAR REGULATORY COMMISSION (NUREG)

NUREG CR2496	1982 Human Engineering Design Considerations for CRT Generated Displays
NUREG 0700	1981 Guidelines for Control Room Design Reviews

UNDERWRITERS LABORATORIES (UL)

Directory	1990 Electrical Appliance and Utilization Equipment Directory
Directory	1991 Recognized Component Directory
UL 83	1983 Thermoplastic-Insulated Wires and Cables Ninth Edition; February 22, 1989
UL 1059	1988 Terminal Blocks Second Edition; August 2, 1989

1.2.2 Reference Drawings

Drawing No. H-2-123150 Sheet 1, 2 of 22	P&ID System 13 Pour Turntable
Drawing No. H-2-123150 Sheet 3 of 22	P&ID System 13 Drain Turntable
Drawing No. H-2-123150 and Sheet 5 of 22	P&ID System 13 Melter Drain Valve Drain Bellows
Drawing No. H-2-123150 Sheet 6 of 22	P&ID System 13 Melter Pressure Level and Pour Control
Drawing No. H-2-123001 Sheet 1 through 5	P&ID Legend of Symbology for Process Flow and Piping and Instrument Diagram

1.3 RELATED REQUIREMENTS

Specification Section 01730	Operation and Maintenance Data
Specification Section 14601	Pour Turntable
Specification Section 14602	Drain Turntable
Specification Section 17908	Instruments Furnished with Mechanical Equipment, Pour and Drain Turntables
Specification Section 17886	Instruments Furnished with Mechanical Equipment, Load Cell Signal Conditioner Pour and Drain Turntables
Drawing No. H-2-121701 Sheet 1 of 1	LP-130-001, 006 Instrument Panel Layout
Drawing No. H-2-121702 Sheet 1 of 1	LP-130-002, 007 Instrument Panel Layout
Drawing No. H-2-121796 Sheets 1 through 7	Instrument Control Logic Diagram LP-130-001, 002, 006 and 007

1.4 DEFINITIONS

(Not Used)

1.5 SYSTEM DESCRIPTION

The Piping and Instrument Diagram (P&ID) H-2-123150; Specification Sections 17886 and 17908, Attachment A, excerpt from Process Control Description (PCD); and Logic Diagram H-2-121796 describe a generic system and its control requirements. The Seller shall design the control configurations, sequence logic, and interlock logic to implement the specific control system required for the safe, efficient operation of the mechanical equipment being furnished, including the interface with instruments and computer systems not included in this Order/Subcontract.

1.6 SUBMITTALS

Submit the following in accordance with the Vendor Drawing and Data Requirements section of the Order/Subcontract.

1.6.1 Catalog cuts describing each instrument and accessory.

1.6.2 Manufacturers' installation drawings and instructions.

1.6.3 Manufacturers' operation and maintenance manuals in accordance with Specification Section 01730.

1.6.4 P&IDs showing the Seller's system and its interface to the rest of the plant. The Buyer will furnish instrument tag numbers on the approval prints for Seller's instruments not shown on P&ID H-2-123150.

1.6.5 Process Control Description (PCD), similar to Attachment A, specific to Seller's system.

1.6.6 Instrument data sheets similar to ISA S20, completed in accordance with ISA S20 instructions.

1.6.7 General arrangement drawings, front and rear views.

1.6.8 Rear view showing internal layout of instruments and accessories.

1.6.9 Electrical elementary diagrams showing devices, power wiring, signal wiring, power requirements and logic to be implemented in the Programmable Logic Controller (PLC).

1.6.10 Listing of the PLC program and control station configuration in Paragraph 2.2.8.6.

1.6.11 Panel wiring diagram, shown as a not-to-scale expanded rear view with devices and terminal blocks shown in their correct relative positions, conduit or duct layout, wire routing, and terminations.

1.6.12 Graphic display screen layouts.

1.6.13 Narrative/help screen layouts.

1.6.14 Instrument list showing tag number, service, manufacturer, model number, range, and setpoint if applicable.

1.6.15 Factory Acceptance Test (FAT) procedure including requirements in Paragraph 2.3.

1.6.16 A report confirming the FAT procedure was executed and indicating the results of the FAT procedure.

1.7 CLASSIFICATION OF SYSTEMS AND COMPONENTS

(Not Used)

1.8 **PROJECT OR SITE ENVIRONMENTAL CONDITIONS**

1.8.1 Climatic and Geographic Site Conditions

A.	Site Elevation	714 feet above sea level
B.	Barometric Pressure	14.3 psia
C.	Outside Design Temperature	
	1) Maximum Design Temperature	110°F
	2) Minimum Design Temperature	-20°F
	3) Wet Bulb Design Temperature	68°F

1.8.2 Operating Environment

A.	Normal Operating Temperature	68°F to 78°F
B.	Maximum Operating Temperature	104°F
C.	Minimum Operating Temperature	60°F
D.	Relative Humidity	Not Controlled

1.9 **UTILITIES**

(Not Used)

PART 2 PRODUCTS

2.1 **MATERIALS AND EQUIPMENT**

2.1.1 General

2.1.1.1 The control panels, accessories, materials, and instrumentation shall operate under the conditions of Paragraph 1.8.

2.1.1.2 Provide accessories, materials, and methods of fabrication not included in this specification, but which are necessary to complete the fabrication of the control panel.

2.1.1.3 When two or more components with the same specifications are required the components shall be identical (same manufacturer and catalog number).

2.1.1.4 Electrical components or devices which operate at voltages higher than 30 volts or energy greater than 100 VA shall be UL Listed Devices, UL Recognized Components, or FM Approved Devices (refer to UL and FM directories).

2.1.2 Panel and Accessories

2.1.2.1 The basic panels shall be standard, Type 304 stainless steel, factory made, ANSI/NEMA 250, Type 4X enclosures, Hoffman A723624 (or equal).

2.1.3 Instruments

2.1.3.1 Provide a stainless steel tag, 18 ga. minimum, with the instrument tag number and Seller's service description stamped or engraved, affixed to each instrument with stainless steel wire (preferred), stainless steel screws, or rivets. If the instrument size or configuration prevents use of a separate tag, propose an alternate method of tagging such as engraving or stamping for Buyer's approval.

2.1.3.2 Instrument electrical enclosures shall be ANSI/NEMA 250, Type 4X.

2.1.3.3 Provide a Programmable Logic Controller (PLC) from the following list to perform control, sequence, alarm, and shutdown functions based on the control logic, and inputs from the field instruments and the Buyer's Distributed Control System (DCS).

Select a model current at the time of the order/subcontract from the following list:

Modicon
Allen-Bradley
General Electric

2.1.3.4 The PLCs shall incorporate the following criteria:

A. Input/output (I/O) hardware for pour and drain turntable (at each of the two panels) in accordance with Attachment B and C. Use the same I/O hardware for both pour and drain programs. Optically isolated solid-state I/O, unless relay interface is required.

B. Power input of 120 Vac, 60 Hz.

C. Operation voltage and dip recovery in accordance with NEMA ICS 3-304.40 and 3-304.41.

D. Application memory utilization that does not exceed 50 percent.

E. Maximum Central Processing Unit (CPU) utilization that does not exceed 50 percent at a maximum scan time cycle of 50 milliseconds.

F. Digital and analog outputs sized such that the maximum applied load does not exceed 75 percent of the rated capacity.

G. Field experience records or calculations to verify the overall Mean Time Between Failure (MTBF) of the PLC equals or exceeds 20,000 hours.

H. A keylock switch with removable key or password protection to prevent unauthorized access to software configuration of the logic control processor or the video display terminal.

I. Password protection to prevent unauthorized access to plant operator keyboard.

J. Prevent software configuration changes from being implemented from the operator keyboard.

K. Provide keylocks on I/O cabinets and electronic cabinet access doors.

2.1.3.5 Provide ANSI/NEMA 250, Type 4X control stations with Cathode Ray Tubes (CRTs) and membrane covered keypads from the same manufacturer.

2.1.3.6 Provide manual switches and indicating lights as shown on drawings H-2-121701 and H-2-121702.

2.1.3.7 Provide pendant enclosures as shown on drawings H-2-121701 and H-2-121702.

2.1.3.8 Provide receptacles, plugs and caps as shown on drawings H-2-121701 and H-2-121702.

2.2 FABRICATION AND MANUFACTURE

2.2.1 Panel Modifications

2.2.1.1 Modify the panels described in Paragraph 2.1.2.1 as necessary to support the instrumentation and accessories to be mounted in the panels. The panels shall retain their NEMA 4X rating after the modifications have been made.

2.2.2 Panel Interior Environment

2.2.2.1 Prevent operating temperature from exceeding instrument/equipment manufacturers' operating limits.

2.2.2.2 Prevent condensation during shipping, storage, and operation.

2.2.3 Painting

Panels are 304 SS and do not require painting.

2.2.4 Instrument Mounting

2.2.4.1 Mount and support instruments in accordance with manufacturers' installation documents and Contract Drawings.

2.2.4.2 Mount instruments and components to allow for adjustments or replacement without disturbing wiring or other equipment.

2.2.4.3 Layout front of panel instruments in accordance with MIL-STD-1472D and NUREG 0700. Drawings H-2-121701 and H-2-121702 comply with these specifications.

2.2.5 Nameplates

2.2.5.1 Make nameplates from 1/16 inch thick laminated plastic stock with white surface and black core, except as noted on drawings H-2-121701 and H-2-121702. Bevel the edges and remove burrs.

2.2.5.2 Engrave with Helvetica Bold Condensed capital letters. If abbreviations cannot be avoided, select them from ISA RP60.6. Other abbreviations are subject to Buyer's approval.

2.2.5.3 Fasten the nameplates to the panel with stainless steel Number 4-40 screws or 1/8 inch drive rivets.

2.2.5.4 Provide 1 inch maximum height nameplates with instrument tag numbers engraved in 1/8 inch high letters on the back of the panel to show the location of front and back of panel mounted instruments.

2.2.5.5 Make front of panel nameplates as shown on drawings H-2-121701 and H-2-121702.

2.2.6 Panel Piping

There is no piping required on these panels.

2.2.7 Panel Wiring

2.2.7.1 Wiring material and installation methods shall comply with NFPA-70, Article 725, Class 1 and Class 2.

2.2.7.2 Use No. 16 American Wire Gauge (AWG) stranded copper wire with Machine Tool Wire (MTW) insulation conforming to UL 83.

2.2.7.3 Terminate conductors on screw terminals with tin plated copper, compression ring-tongue, nylon insulated terminals in accordance with UL 486A. Use Thomas and Betts Catalog No. RB-14 (#18-14 AWG) and RC-10 (#12-10 AWG) or equal.

2.2.7.4 Identify wires at both ends with white tubular shrink-on sleeves with permanently imprinted black characters. Use the same number throughout the run of daisy chained wires.

2.2.7.5 Use the instrument tag number and a sequential number for the wire number. Use the same sequential number for the same terminal on similar instruments.

2.2.7.6 Support wiring in metal or plastic raceway or conduit.

2.2.7.7 Provide channel mounted terminal blocks with number 8 screws, rated 600 volts and in compliance with UL 1059. Select Allen Bradley Catalog Number 1492-CD3, or equal. Provide an even number of spare terminals greater than 25 percent of terminals used.

2.2.7.8 Provide a copper safety ground bus bolted to the panel frame, with screws to connect 8 or more 10-14 AWG ground wires. Provide a similar, but isolated, instrument signal ground bus.

2.2.7.9 Wire Input/Output directly to receptacles. Use terminal blocks for power supply.

2.2.7.10 Provide separate receptacles for high and low voltage signals.

2.2.7.11 Divide the main incoming 120 Vac power by system or function. Install a fused disconnect switch on the line (hot) side of each circuit. Color code the wires as:

Hot	-	Black
Neutral	-	White
Ground	-	Green

2.2.7.12 Control voltage for each motor operated from the panel will be supplied from the Buyer's Motor Controller (MC) for that motor. The Buyer will provide unpowered UC auxiliary contacts to switch signal voltage from the Seller's panel to indicate motor status. See also Attachment A, Panel I/O list.

2.2.7.13 If power from external systems (such as the control voltage from motor starters) comes into the panel provide a red nameplate with white letters that reads:

CAUTION:
120 VAC CIRCUITS FROM EXTERNAL
SOURCES MAY BE ENERGIZED WHEN
THE PANEL MAIN BREAKER IS OPEN.

Nameplate shall be mounted adjacent to the terminal blocks where these external circuits are landed.

2.2.7.14 Install incandescent light fixtures on a separate 120 Vac circuit with an on/off switch to illuminate the entire panel interior.

2.2.7.15 Install a duplex receptacle on a separate 120 Vac circuit to power test equipment.

2.2.7.16 Provide two spare fuses to each type used in the panel. Seal them in a clear plastic bag marked "Spare Fuses" and tie-wrap them to the panel interior.

2.2.8 Programming and Configuration

2.2.8.1 Provide the PLC manufacturer's software for programming the PLC logic and for configuring the control station using a general purpose personal computer, either the International Business Machine (IBM) model current at the time of the Order/Subcontract or a fully compatible computer by another manufacturer.

The personal computer is not in the Seller's scope of supply.

2.2.8.2 Provide programs for both the Pour Turntable, shown as on LP-130-001 and 006, and the Drain Turntable, shown as on LP-130-002 and 007, in both panels 001 and 002. LP-130-001 is intended for use with the Pour Turntable but may be used to operate the Drain Turntable, and vice-versa. Use the same I/O hardware for both programs, selected by the receptacle that is in use.

2.2.8.3 Design the control circuits to fail in a safe condition on loss of power.

2.2.8.4 Design discrete circuits to operate on 120 Vac, to have contacts closed (powered) during normal operation, and to have contacts open on abnormal conditions to cause alarms and shutdowns.

2.2.8.5 Design graphic displays, help screens, and instruction screens according to the principles described in EPRI NP-3659, IEC 964, MIL-STD 1472D, NUREG 0700, and NUREG CR 2496.

2.2.8.5.1 The graphic shall display symbols representative of the mechanical equipment. Operable devices on the equipment shall change color to indicate their status. The color change shall be augmented by alpha numeric alarm messages, color coded for alarm and advisory conditions.

2.2.8.5.2 Intermixed with the mechanical equipment based graphics shall be additional narrative display "help" screens to prompt the operator through the control sequence.

2.2.8.5.3 Typical instructions in this narrative display shall include manual functions by the operator, permissive interlocks that should appear, and annunciation of interlocks that fail.

2.2.8.6 Provide both a printed listing and a 3-1/2 inch diskette of the PLC control logic program and the operator station configuration program.

2.2.8.7 Design and implement software to allow the use of either panel for either the Pour or Drain turntable.

2.2.9 Interface to Other Instrument and Computer Systems

2.2.9.1 Supply a two-way communication interface for the PLC that is equivalent to Allen-Bradley's (AB) Data Highway Plus, Manufacturing Automation Protocol (MAP), or the Modicon Modbus protocol. The PLC shall respond to valid instructions from the Buyer's DCS. Examples of valid instructions are:

Request for data
Programmed process control instructions
Program and configuration modifications

2.2.9.2 Provide hardware and software to enable transfer of logic programs, control station configurations, and data to and from the Buyer's IBM or compatible computer by serial or parallel cable and 3-1/2 inch floppy disk.

2.3 **FACTORY ACCEPTANCE TESTS (FAT)**

2.3.1 Prepare a FAT procedure and submit it to the Buyer for approval. Include:

A. Inspection/tests to demonstrate that the fabrication and assembly of the materials and equipment meet the requirements of the Contract Drawings and specifications.

B. Physical inspection to confirm that instruments are new and not damaged.

C. Full functional test of instrument systems to determine operability.

D. For the PLC and the control station program/configuration:

Required tests and test sequence
Required ranges of input parameters
Identification of the stages at which testing is required
Criteria for establishing test cases
Requirements for testing logic branches
Requirements for hardware integration
Anticipated output values
Acceptance criteria
Reports, records, standard formatting, and conventions

2.3.2 Inspect and test the instrument installations according to the Buyer approved FAT Procedure.

2.3.3 Submit a report confirming that the FAT procedure has been completed and the results, include:

A. PLC program tested

B. PLC hardware used

C. Item tested

D. Date of test

E. Test equipment and calibrations

F. Tester or data recorder

G. Type of observation

H. Results and acceptability

I. Action taken in connection with any deviations noted

J. Person evaluating test results

2.4 **PACKAGING AND SHIPPING**

2.4.1 Reinstall shipping stops which were removed for calibration and testing.

2.4.2 Install temporary additional shipping supports for instruments and equipment to be shipped mounted in the panel. All such supports shall be noted for field removal.

2.4.3 Repack loose instruments and equipment, including those removed from the panel for shipment, in the manufacturer's original packing material. Accumulate these in a separate crate marked "INSTRUMENTS" with identification to relate it to the mechanical equipment it serves.

2.4.4 Protect all shipped materials from moisture, vibration, shock, and heat damage while in transit or interim storage.

PART 3 EXECUTION

(Not Used)

END OF SECTION

ATTACHMENT A
EXCERPT FROM PROCESS CONTROL DESCRIPTION SYSTEM 13
MELTER/TURNTABLE SYSTEM

1.0 GENERAL DESCRIPTION

The Turntable System is located in the Vitrification Building. It consists of a pour turntable and a drain turntable. It provides the following functions:

1) Filling of canisters with vitrified waste via the overflow of the Melter
2) Filling of canisters with vitrified waste via the bottom drain, at the end of the Melter's lifetime.

Normally, glass from the melter is poured into canisters on the pour turntable, which has a capacity of four canisters and is located under the melter pour spout. The pour turntable has four positions. Each position of the turntable can hold one canister. Forward rotation of the turntable moves a canister from the loading/unloading position to the standby position, then to the filling position, and finally to the cooling position.

As soon as one of the two glass level measuring systems indicates a filled canister, the glass flow is stopped by reducing the vacuum in the pour spout. The canister is vented for 30 minutes and then moved to the cooling position by rotating the turntable. This rotation moves an empty canister into the filling position and the filling cycle is repeated.

At the end of the melter lifetime, the bottom drain is used to empty as much glass as possible out of the melter. The molten glass is discharged from the melter by gravity flow through the bottom drain into a canister placed on the drain turntable. The drain turntable holds five canisters. The glass flow into the canister is controlled through a bottom drain valve. A backup drain plug valve is provided to stop the glass flow in case the bottom drain probe valve fails to stop the glass flow. The rest of the operation is similar to the canister filling via overflow.

Each portable control panel assembly is provided to operate the pour (designated LP-130-001) and drain (designated LP-130-002) turntable. Each control panel contains all the controls and indicators to operate the turntable drive motors, canister weighing system, canister positioning arm, melter drain valve system, pour spout bellows, monitor gamma level detection systems, and to interface with the distributed control system (DCS). Either control panel may be used to operate either turntable, should the need arise.

A pendant control station (LP-130-006, LP-130-007) is included with the pour and drain turntable control panels to enable the operator to precisely align a canister in its filling position with the positioning limit switches bypassed. Twenty feet of cable are provided, so that the turntable can be jogged in either direction and stopped while the operator visually observes the alignment through a window in the regulated corridor. The ROTATION CONTROL (software) switch on the control panel must be in the JOG position to enable the pendant controls.

2.0 OPERATING DESCRIPTION NARRATIVE

The Turntable system is operated from Local Control Panels (LP-130-001, 002) located outside the melter cell and from the Central Control Room (CCR) through the Distributed Control System (DCS). The local panels require supervisory permission from the DCS to operate. Many functions controlled from local panels or from the CCR require additional supervisory permission. For example, the bottom drain cart can not be moved without a permissive from a supervisor keyswitch at the local panel. The operations requiring visual confirmation (e.g., canister movement) are carried out from the local panels. Alarms are displayed at local panels or the CCR or both as appropriate.

Most of the in-cell instrumentation is backed up by redundant instruments. For example, all bellows position switches are dual switches.

2.1 ROUTINE OPERATIONS

2.1.1 Canister Filling Via Overflow

The Pour Turntable (TU-130-001), the Canister Positioning Arm (HD-130-001), and the pour spout bellows of the Melter (ME-130-001) are operated from Local Control Panel LP-130-001. The Melter Operations Control Program (YCP-MEL-016) oversees all activities related to canister filling via the overflow, and provides a status signal to the LP-130-001 control program.

A canister is filled via the overflow as described below. As a starting point of the sequence, it is assumed that the canister under the pour spout has just been filled and vented. Further details about the operation of the individual components, associated interlocks, and programs are provided below the description of the sequence.

Canister Filling Sequence

1) The CCR operator gives permission to change the canister using logic controller YIC-IAX-093B. This enables the local control panel LP-130-001 for changing the canister under the pour spout. The status of the permissive (YIC-IAX-093A) is indicated at the local panel.

2) The local operator retracts the pour spout bellows by placing the Pour Spout Bellows Handswitch (YIC-IAX-092) in the UP position. The bellows position is confirmed at ZIHL-IAX-099A.

3) The local operator opens the Canister Positioning Arm (HD-130-001) by placing Canister Positioning Arm Handswitch (YIC-PTT-046) in the OPEN position. The arm position is confirmed at ZIH-PTT-045A.

4) The local operator rotates the turntable (TU-130-001) 90° by operating Handswitch YIC-PTT-029. The Pour Turntable Rotation Control Program (YCP-PTT-028) moves the next empty canister under the pour spout and moves the filled canister to the cooling position on the turntable.

5) The local operator unloads a filled and cooled canister from the turntable and loads an empty canister into the turntable using a remotely operated crane.

Remark: The steps 4 and 5 are swapped if the position for loading and unloading is used for extended canister cooling.

6) The local operator closes the Canister Positioning Arm (HD-130-001) by placing the Canister Positioning Arm Handswitch (YIC-PTT-046) in the CLOSE position. The arm position is confirmed at ZIL-PTT-045A.

7) The local operator extends the pour spout bellows by placing the Pour Spout Bellows Handswitch (YIC-IAX-092) in the DOWN position. The bellows position is confirmed at ZIL-IAX-099A.

8) The local operator operates YIC-IAX-093A to return the control of the overflow operation from the local control panel to the CCR.

9) The CCR operator starts the Melter Overflow Control Program (YCP-PAC-623). It manipulates the differential pressure between melter airspace and canister airspace (PDIC-MEL-623) to start and stop the glass flow. The canister glass level (LI-PTT-001B through -015B) and weight (WI-PTT-024B) are monitored.

10) When the canister is full, program YCP-PTT-029 stops the glass flow and vents the canister for 30 minutes. This completes one cycle of the canister filling via overflow.

2.1.1.1 Transfer of Control between Local Control Panel and CCR

Control Transfer Logic Controller (YIC-IAX-093B) allows the CCR operator to transfer control to the local control panel if program YCP-PTT-029 indicates that the canister status is READY or FINISHED. The status of the CCR permissive is indicated at the local control panel (YIC-IAX-093A). Logic controller YIC-IAX-093A allows the local operator to transfer control to the CCR if the cart is stationary at the filling position (YIC-PTT-030 and YIC-PTT-031), the position arm is closed (YIC-PTT-046), and the bellows is extended (YIC-IAX-092).

2.1.1.2 Pour Spout Bellows Operation

The pour spout bellows is extended by applying air pressure and retracted by venting the air through 3-way valve YV-IAX-092. In the UP (retracted) position (ZIH-IAX-092), valve ports A and C are connected. In the DOWN (extended) position (ZIL-IAX-092), valve ports B and C are connected. Pour Spout Bellows Logic Controller (YIC-IAX-092) places valve YV-IAX-092 in the DOWN position only if

- The CCR operator permissive (YIC-IAX-093B) is granted.

- The pour turntable is in the filling position (YIC-PTT-030).

- The pour turntable cart is in the filling position (YIC-PTT-031).

- The canister positioning arm is closed (YIC-PTT-046).

- The pour spout bellows is down (YIC-IAX-092).

In case of low-low air supply pressure (PALL-IAX-084A), the logic controller YIC-IAX-092 places the valve YV-IAX-092 in the UP position and does not allow the local operator to place the valve YV-IAX-092 in DOWN position. When the valve YV-IAX-092 is in UP position, the canister filling is interrupted.

The position of the bellows is indicated by separate switches. ZSH-IAX-099A, B for retracted bellows, ZSL-IAX-099A, B for extended bellows. Logic controller YC-IAX-099 detects position switch failures and generates alarm ZA-IAX-099A at the local control panel and ZA-IAX-099B in the CCR.

2.1.1.3 Canister Positioning Arm

Canister Positioning Arm Logic Controller (YIC-PTT-046) allows the local operator to open or close the Canister Positioning Arm (HD-130-001) only if

- The CCR operator permissive is granted (YIC-IAX-093B).

- The Pour turntable is in the filling position (YIC-PTT-030).

- The Pour turntable cart is in the filling position (YIC-PTT-031).

- The Pour spout bellows is retracted (YC-IAX-099).

The position of the Canister Positioning Arm (HD-130-001) is indicated by separate switches. ZSH-PTT-045A,B for opened, ZSL-PTT-045A,B for closed positioning arms. Logic Controller YIC-PTT-045A detects position switch failures and generates alarm ZA-PTT-045A at the local panel and ZA-PTT-045B in the CCR.

2.1.1.4 Pour Turntable Operation

Cart Drive

The cart drive is only used to move the pour turntable under the melter and to remove it for maintenance and repair work or at the end of the melter lifetime to make room for the drain turntable. A supervisor key switch (HS-PTT-031) must be enabled before the cart may be moved. The local operator can select the direction (FORWARD or REVERSE), the speed (FAST or SLOW) and start or stop cart movement using softswitch YIC-PTT-031.

Pour Turntable Cart Logic Controller (YIC-PTT-031) allows cart movement only if

- The CCR operator permissive is granted (YIC-IAX-093B).

- The pour turntable is not rotating (YIC-PTT-030).

- The pour spout bellows is retracted (YC-IAX-099).

- The canister positioning arm is open (YIC-PTT-046).

Further, logic controller YIC-PTT-031 does not allow FAST speed selection in FORWARD direction if the cart is near the filling position (ZS-PTT-022). Logic controller YIC-PTT-031 stops the cart when it reaches the filling position (ZS-PTT-023).

Turntable Drive

The turntable drive can be rotated to move the canisters into four positions: (1) loading/unloading, (2) standby, (3) filling, and (4) cooling position. The local operator can select the AUTO or MANUAL mode of operation using Handswitch YIC-PTT-029.

In either the AUTO or MANUAL mode, Pour Turntable Logic Controller (YIC-PTT-030) allows the turntable drive to start only if

- The CCR operator permissive is granted (YIC-IAX-093B).

- The pour turntable cart is not moving (YIC-PTT-031).

- The pour spout bellows is retracted (YC-IAX-099).

- The canister positioning arm is open (YIC-PTT-046).

MANUAL mode: In the MANUAL mode, the local operator can select the turntable rotation direction as counterclockwise (FORWARD) or clockwise (REVERSE) using softswitch YIC-PTT-030. Normally, the turntable is rotated in the FORWARD direction. The speed of rotation (SLOW or FAST) is selected at softswitch YIC-PTT-030. The turntable rotation is started and stopped using softswitch YIC-PTT-030. The turntable position is indicated by the Canister in Filling Position Indicator (ZI-PTT-020A), the Canister Near Filling Position (FORWARD) Indicator (ZI-PTT-019), and the Canister Near Filling Position (REVERSE) Indicator (ZI-PTT-021).

AUTO mode: In the automatic mode, the local operator starts the Pour Turntable Rotation Control Program (YCP-PTT-028) to rotate the turntable 90° in the FORWARD direction using Handswitch YIC-PTT-029. Program YCP-PTT-028 executes following sequence:

1) Select the FORWARD direction and FAST speed (YIC-PTT-030).

2) Start turntable drive (YIC-PTT-030).

3) When the turntable reaches near filling position (ZS-PTT-019), select SLOW speed (YIC-PTT-030).

4) When the turntable reaches the filling position (ZS-PTT-020A), stop the turntable drive (YIC-PTT-030).

2.1.1.5 Glass Weight and Flow

During canister filling, the glass level in the canister is sensed with a set of gamma detectors (LE-PTT-001 through LE-PTT-015). When the glass level is detected at each of these detectors, the glass weight of the canister is calculated (LY-PTT-025) and indicated (WI-PTT-025). The result is compared with the glass weight indicated by the load cell (WI-PTT-024B); if the difference is greater than a preset value, an alarm (WDAH-PTT-026) is generated.

The rate of increase of the canister weight (WI-PTT-024B) is calculated by WY-PTT-024 and indicated as Glass Flow Rate (FI-PTT-024).

2.2 INFREQUENT NORMAL OPERATION

2.2.1 Canister Filling Via Bottom Drain

The Drain Turntable (TU-130-002), drain bellows, and drain valves are operated from Melter Drain Local Control Panel (LP-130-002). Heating is controlled through the DCS from the CCR.

Prior to the melter start-up, the Drain Turntable (TU-130-002) is loaded with five empty canisters and is moved to the filling position under the melter drain bellows. The blank connector in the bottom drain vent line is replaced by the vent line jumper to provide venting during canister filling.

The sequence for the bottom drain operation is as follows:

1) Position the canister in the drain filling position.

2) Check the drain valves and the drain bellows.

3) Adjust the melter operating conditions to draining.

4) Start the Bottom Drain Heaters Control Program (YCP-MEL-027).

5) Fill the canister.

6) Change the canister.

7) Steps 5 and 6 are repeated until the melter is empty.

2.2.1.1 Transfer of Control between the Local Control Panel and the CCR

The Drain Control Transfer Logic Controller (YIC-IAX-028B) allows the CCR supervisor to transfer control to the local control panel (LP-130-002) if the air supply pressures are above low setpoint (PAL-IAX-032 and 060) and

the air supply valves (YV-IAX-033 and 062) are open. The status of the CCR permissive is indicated at the local control panel (YIC-IAX-028A). If the local supervisor sets the DRAIN VALVE OPERATION keyswitch HS-IAX-028 to ENABLE, the drain cart is stationary at the filling position (YIC-DTT-003 and 004), and the drain bellows is extended (YIC-IAX-089A), logic controller YIC-IAX-028A permits operation of the individual drain valve logic controllers (YIC-IAX-034 and 063).

2.2.1.2 Drain Valves and Drain Bellows

The melter drain is equipped with two valve mechanisms to control the glass flow through the drain. Both mechanisms are operated through air bellows. The first mechanism in the flow path is a probe valve and the second one is a plug valve. The plug valve is used as a backup device to stop the glass flow in case the probe valve is unable to stop the glass flow. A drain bellows is provided to establish a seal between the drain and the canister.

Drain Bellows

The drain bellows is extended by applying air pressure and retracted by venting the air through the 3-way valve YV-IAX-086. In the UP (retracted) position (ZIH-IAX-086), valve ports A and C are connected. In the DOWN (extended) position (ZIL-IAX-086), valve ports B and C are connected. Drain Bellows Logic Controller (YIC-IAX-086) places valve YV-IAX-086 in DOWN position only if

- The CCR supervisor permissive (YIC-IAX-028B) is granted.
- The drain turntable is in filling position (YIC-DTT-003).
- The drain turntable cart is in filling position (YIC-DTT-004).

In case of low-low air supply pressure (PALL-IAX-084A), the logic controller YIC-IAX-086 places the valve YV-IAX-086 in UP position and does not allow the local operator to place the valve YV-IAX-086 in DOWN position.

The position of the drain bellows is indicated by separate switches. ZSH-IAX-089A, B for retracted bellows, ZSL-IAX-089A,B for extended bellows. Logic controller YIC-IAX-089A detects position switch failures and generates alarm ZA-IAX-089A at the local control panel and ZA-IAX-089B in the CCR.

Drain Probe Valve Bellows

The drain probe valve is opened by retracting the drain probe valve bellows. The drain probe valve bellows is extended and retracted by applying air pressure on one side of the bellows and venting the air from the other side of the bellows through the 4-way solenoid valve YV-IAX-063. In the CLOSE position (ZIL-IAX-063), solenoid valve ports A and D and valve ports B and C are connected. In the OPEN position (ZIH-IAX-063), solenoid valve ports A and B and valve ports C and D are connected. The Drain Probe Valve

Bellows Logic Controller (YIC-IAX-063) places valve YV-IAX-063 in the OPEN position only if:

- The CCR supervisor permissive is granted (YIC-IAX-028B).
- The local supervisor keyswitch is in ENABLE position (HS-IAX-028).
- The drain turntable is in the filling position (YIC-DTT-003).
- The drain turntable cart is in the filling position (YIC-DTT-004).
- The drain bellows is extended YIC-IAX-089A.

In case of low-low air pressure (PALL-IAX-084A), air supply valve YV-IAX-062 is closed by logic controller YIC-IAX-062.

The position of the drain probe valve bellows is indicated by separate switches. ZSH-IAX-066A, B for retracted bellows (glass flow possible), ZSL-IAX-066A,B for extended bellows (no glass flow). Logic controller YIC-IAX-066 detects position switch failures and generates alarm ZA-IAX-066A at the local control panel, and ZA-IAX-066B in the CCR.

2.2.1.3 Drain Backup Plug Valve

The drain backup plug valve is operated in the same way as the drain probe valve. Prior to operating the drain probe valve for the first time during the draining operation the local operator exercises the drain backup plug valve to ensure that it is functioning and then leaves it in open position.

2.2.1.4 Drain Turntable Operation

The Drain Turntable (TU-130-002) is operated from the local control panel (LP-130-002). The drain turntable can be observed through a shielding window. The drain turntable positions are indicated at the local panel and the CCR.

Drain Turntable Cart Drive

The cart drive is used to move the drain turntable under the melter and to remove it after one or more canisters are filled. A supervisor key switch (HS-DTT-004) must be enabled before the cart may be moved. The local operator can select direction (FORWARD or REVERSE).

Drain Turntable Cart Logic Controller (YIC-DTT-004) allows cart movement only if

- The drain turntable is not rotating (YIC-DTT-003).
- The drain bellows is retracted (YIC-IAX-089A).

- The drain probe valve is closed (YIC-IAX-066A) or the backup plug valve is closed (YIC-IAX-037A).

Further, logic controller YIC-DTT-004 does not allow the FAST speed in the FORWARD direction if the cart is near the filling position (ZS-DTT-009). Logic controller YIC-DTT-004 stops the cart when it reaches the filling position (ZS-DTT-010).

Drain Turntable Drive

The drain turntable drive can be rotated to move the empty canisters into the filling position. The local operator can select the AUTO or MANUAL mode of operation using softswitch YIC-DTT-002.

In either the AUTO or MANUAL mode, Drain Turntable Logic Controller (YIC-DTT-003) allows the turntable drive to start only if:

- The local supervisor keyswitch HS-IAX-028 is switched to the DISABLE position.

- The drain turntable cart is not moving (YIC-DTT-004).

- The drain bellows is retracted (YIC-IAX-089A).

- The drain probe valve is closed (YIC-IAX-066A) or the backup plug valve is closed (YIC-IAX-037A).

MANUAL mode: In the MANUAL mode, the local operator can select the turntable rotation direction as counterclockwise (FORWARD) or clockwise (REVERSE) using softswitch YIC-DTT-003. Normally, the turntable is rotated in the FORWARD direction. The speed of rotation (SLOW or FAST) is selected at softswitch YIC-DTT-003. The turntable rotation is started and stopped using softswitch YIC-DTT-003. The turntable position is indicated by the Canister In Filling Position Indicator (ZI-DTT-007A), Canister Near Filling Position (FORWARD) Indicator (ZI-DTT-006), and Canister Near Filling Position (REVERSE) Indicator (ZI-DTT-008).

AUTO mode: In the automatic mode, the local operator starts the Drain Turntable Rotation Control Program (YCP-DTT-001) to rotate the turntable 72° in the FORWARD direction using handswitch YIC-DTT-003. Program YCP-DTT-001 executes following sequence:

1) Select the FORWARD direction and FAST speed (YIC-DTT-003).

2) Start the turntable drive (YIC-DTT-003).

3) When the turntable reaches the near-filling position (ZS-DTT-006), select the SLOW speed (YIC-DTT-003).

4) When the turntable reaches the filling position (ZS-DTT-007), stop the turntable drive (YIC-DTT-003).

9513336.0975

U.S. DEPARTMENT OF ENERGY
Hanford Waste Vitrification Plant
Richland, Washington
DOE Contract DE-AC06-86RL10838

FLUOR DANIEL, INC.
Advanced Technology Division
Fluor Contract 8457

SECTION 17886
INSTRUMENTS FURNISHED WITH MECHANICAL EQUIPMENT
LOAD CELL SIGNAL CONDITIONER
POUR AND DRAIN TURNTABLES
B-595-P-P06B-17886

APPROVED FOR CONSTRUCTION

REVISION 0
ISSUE DATE 4-6-93

WAPA YES ___ NO X
QUALITY LEVEL I ___ II X
SAFETY CLASS 1__ 2__ 3 X 4__

ORIGINATOR:

R. L. Layne, Control Sys. Eng. 3/29/93 Date

CHECKER:

B. R. Carlisle, Control Sys. Eng. 3/29/93 Date

APPROVED BY:

J. B. Bunning Lead Discipline Engineer 03/29/93 Date

03/26/93 12:33pm
106\VOL5...\SPECS\P06B\17886-0.

ATTACHMENT C
DRAIN TURNTABLE LOCAL PANEL (LP-130-002) I/O LIST

REMOTE INSTRUMENT	REMOTE INSTR BY	SIGNAL	CONTACT RATING	POWER SOURCE	PANEL INSTR FUNCTION	INPUT/ OUTPUT	RANGE IN ENG UNITS	NOTES
LIT-DTT-011	BUYER	DISCRETE	120VAC, 0.5AMPS	SELLER	LI-DTT-011A	INPUT	3 INCH	
LIT-DTT-012	BUYER	DISCRETE	120VAC, 0.5AMPS	SELLER	LI-DTT-012A	INPUT	30 INCH	
LIT-DTT-013	BUYER	DISCRETE	120VAC, 0.5AMPS	SELLER	LI-DTT-013A	INPUT	60 INCH	
LIT-DTT-014	BUYER	DISCRETE	120VAC, 0.5AMPS	SELLER	LI-DTT-014A	INPUT	71 INCH	
LIT-DTT-015	BUYER	DISCRETE	120VAC, 0.5AMPS	SELLER	LI-DTT-015A	INPUT	81 INCH	
LIT-DTT-016	BUYER	DISCRETE	120VAC, 0.5AMPS	SELLER	LI-DTT-016A	INPUT	91 INCH	
LIT-DTT-017	BUYER	DISCRETE	120VAC, 0.5AMPS	SELLER	LI-DTT-017A	INPUT	93 INCH	
LIT-DTT-018	BUYER	DISCRETE	120VAC, 0.5AMPS	SELLER	LI-DTT-018A	INPUT	114 INCH	
LIT-DTT-019	BUYER	DISCRETE	120VAC, 0.5AMPS	SELLER	LI-DTT-019A	INPUT	124 INCH	
ZS-DTT-006	SELLER	DISCRETE	SELLER	SELLER	ZI-DTT-006	INPUT	-------	
ZS-DTT-007	SELLER	DISCRETE	SELLER	SELLER	ZI-DTT-007A, 007C	INPUT	-------	
ZS-DTT-008	SELLER	DISCRETE	SELLER	SELLER	ZI-DTT-008	INPUT	-------	
ZS-DTT-009	SELLER	DISCRETE	SELLER	SELLER	ZI-DTT-009	INPUT	-------	
ZS-DTT-010	SELLER	DISCRETE	SELLER	SELLER	ZI-DTT-010A	INPUT	-------	
HIS-DTT-005A	SELLER	DISCRETE	SELLER	SELLER	YIC-DTT-004	INPUT	-------	
HS-DTT-004	SELLER	DISCRETE	SELLER	SELLER	YIC-DTT-004	INPUT	-------	
HIS-DTT-005B	SELLER	DISCRETE	SELLER	SELLER	YIC-DTT-004	INPUT	-------	
HIS-DTT-006	SELLER	DISCRETE	SELLER	SELLER	YIC-DTT-004	INPUT	-------	
HIS-DTT-008	SELLER	DISCRETE	SELLER	SELLER	YIC-DTT-004	INPUT	-------	
WIT-DTT-020	SELLER	4 - 20 MADC	----------	SELLER	WI-DTT-020A	INPUT	0 - 6000 LBS	

REMOTE INSTRUMENT	REMOTE INSTR BY	SIGNAL	CONTACT RATING	POWER SOURCE	PANEL INSTR FUNCTION	INPUT/ OUTPUT	RANGE IN ENG UNITS	NOTES
WI-DTT-022B	BUYER	DCS SOFT	----------	SELLER	WI-DTT-022A	OUTPUT	0 - 6000 LBS	
WDAH-DTT-021B	BUYER	DCS SOFT	----------	SELLER	WDAH-DTT-021A	INPUT	-------	
FI-DTT-020B	BUYER	DCS SOFT	----------	SELLER	FI-DTT-020A	INPUT	-------	
PAL-IAX-057B	BUYER	DCS SOFT	----------	SELLER	PAL-IAX-057A	OUTPUT		
PAL-IAX-027B	BUYER	DCS SOFT	----------	SELLER	PAL-IAX-027A	OUTPUT		
YIC-IAX-028B	BUYER	DCS SOFT	----------	SELLER	YIC-IAX-028A	IN/OUT		
YIC-IAX-062	BUYER	DC SOFT	----------	SELLER	YIC-IAX-063	IN/OUT		
YIC-IAX-033	BUYER	DC SOFT	----------	SELLER	YIC-IAX-034	IN/OUT		
ZI-IAX-066B	BUYER	DC SOFT	----------	SELLER	YIC-IAX-066A	OUTPUT		
ZI-IAX-037B	BUYER	DC SOFT	----------	SELLER	YIC-IAX-037A	OUTPUT		
ZIL-IAX-089B	BUYER	DC SOFT	----------	SELLER	YIC-IAX-089A	OUTPUT		
YV-IAX-033	BUYER	DISCRETE	120VAC, 0.5AMPS	SELLER	YIC-IAX-034	OUTPUT		
YV-IAX-062	BUYER	DISCRETE	120VAC, 0.5AMPS	SELLER	YIC-IAX-063	OUTPUT		
PSL-IAX-057	BUYER	DISCRETE	120VAC, 5AMPS	SELLER	PAL-IAX-057A	INPUT		
PV-IAX-057	BUYER	DISCRETE	120VAC, 0.5AMPS	SELLER	PAL-IAX-057A	OUTPUT		
PSL-IAX-027	BUYER	DISCRETE	120VAC, 5AMPS	SELLER	PAL-IAX-027A	INPUT		
PV-IAX-027	BUYER	DISCRETE	120VAC, 0.5AMPS	SELLER	PAL-IAX-027A	OUTPUT		
ZSH-IAX-089A	SELLER	DISCRETE	SELLER	SELLER	YIC-IAX-089A	INPUT	----------	
ZSL-IAX-089A	SELLER	DISCRETE	SELLER	SELLER	YIC-IAX-089A	INPUT	----------	
ZSH-IAX-089B	SELLER	DISCRETE	SELLER	SELLER	YIC-IAX-089A	INPUT	----------	
ZSL-IAX-089B	SELLER	DISCRETE	SELLER	SELLER	YIC-IAX-089A	INPUT	----------	
ZSH-IAX-062	BUYER	DISCRETE	SELLER	SELLER	YIC-IAX-063	INPUT	----------	

REMOTE INSTRUMENT	REMOTE INSTR BY	SIGNAL	CONTACT RATING	POWER SOURCE	PANEL INSTR FUNCTION	INPUT/ OUTPUT	RANGE IN ENG UNITS	NOTES
ZSL-IAX-062	BUYER	DISCRETE	SELLER	SELLER	YIC-IAX-063	INPUT	----------	
ZSH-IAX-063	BUYER	DISCRETE	SELLER	SELLER	YIC-IAX-063	INPUT	----------	
ZSL-IAX-063	BUYER	DISCRETE	SELLER	SELLER	YIC-IAX-063	INPUT	----------	
ZSH-IAX-066A	SELLER	DISCRETE	SELLER	SELLER	YIC-IAX-066A	INPUT	----------	
ZSL-IAX-066A	SELLER	DISCRETE	SELLER	SELLER	YIC-IAX-066A	INPUT	----------	
ZSH-IAX-066B	SELLER	DISCRETE	SELLER	SELLER	YIC-IAX-066A	INPUT	----------	
ZSL-IAX-066B	SELLER	DISCRETE	SELLER	SELLER	YIC-IAX-066A	INPUT	----------	
ZSH-IAX-033	BUYER	DISCRETE	SELLER	SELLER	YIC-IAX-034	INPUT	----------	
ZSL-IAX-033	BUYER	DISCRETE	SELLER	SELLER	YIC-IAX-034	INPUT	----------	
YV-IAX-063	BUYER	DISCRETE	120VAC, 5AMPS	SELLER	YIC-IAX-063	OUTPUT	----------	
ZSH-IAX-037A	SELLER	DISCRETE	SELLER	SELLER	YIC-IAX-037A	INPUT	----------	
ZSL-IAX-037A	SELLER	DISCRETE	SELLER	SELLER	YIC-IAX-037A	INPUT	----------	
ZSH-IAX-037B	SELLER	DISCRETE	SELLER	SELLER	YIC-IAX-037A	INPUT	----------	
ZSL-IAX-037B	SELLER	DISCRETE	SELLER	SELLER	YIC-IAX-037A	INPUT	----------	
MC TURNTABLE S/S	BUYER	DISCRETE	120VAC, 10AMPS	BUYER	YIC-DTT-003	OUTPUT	----------	
MC TURNTABLE AUX	BUYER	DISCRETE	SELLER	SELLER	YIC-DTT-003	INPUT	----------	
MC CART S/S	BUYER	DISCRETE	120VAC, 10AMPS	BUYER	YIC-DTT-004	OUTPUT	----------	
MC CART AUX	BUYER	DISCRETE	SELLER	SELLER	YIC-DTT-004	INPUT	----------	
SIC-DTT-003	BUYER	4 - 20MADC	----------	SELLER	YIC-DTT-003	OUTPUT	----------	
SIC-DTT-004	BUYER	4 - 20MADC	----------	SELLER	YIC-DTT-004	OUTPUT	----------	
ZSH-IAX-086	BUYER	DISCRETE	SELLER	SELLER	YIC-IAX-086	INPUT	----------	
ZSL-IAX-086	BUYER	DISCRETE	SELLER	SELLER	YIC-IAX-086	INPUT	----------	

95336.078

REMOTE INSTRUMENT	REMOTE INSTR BY	SIGNAL	CONTACT RATING	POWER SOURCE	PANEL INSTR FUNCTION	INPUT/ OUTPUT	RANGE IN ENG UNITS	NOTES
YV-IAX-086	BUYER	DISCRETE	120VAC, 5AMPS	SELLER	YIC-IAX-086	OUTPUT	----------	
ZSH-IAX-092	BUYER	DISCRETE	SELLER	SELLER	YIC-IAX-092	INPUT	----------	
ZSL-IAX-092	BUYER	DISCRETE	SELLER	SELLER	YIC-IAX-092	INPUT	----------	
YV-IAX-092	BUYER	DISCRETE	120VAC, 5AMPS	SELLER	YIC-IAX-092	OUTPUT	----------	
YV-IAX-034	BUYER	DISCRETE	120VAC, 5AMPS	SELLER	YIC-IAX-034	OUTPUT	----------	
ZSH-IAX-034	BUYER	DISCRETE	SELLER	SELLER	YIC-IAX-034	INPUT	----------	
ZSL-IAX-034	BUYER	DISCRETE	SELLER	SELLER	YIC-IAX-034	INPUT	----------	

ATTACHMENT B
POUR TURNTABLE LOCAL PANEL (LP-130-001) I/O LIST

REMOTE INSTRUMENT	REMOTE INSTR BY	SIGNAL	CONTACT RATING	POWER SOURCE	PANEL INSTR FUNCTION	INPUT/ OUTPUT	RANGE IN ENG UNITS	NOTES
LIT-PTT-001	BUYER	DISCRETE	120VAC, 0.5AMPS	SELLER	LI-PTT-001A	INPUT	1 INCH	
LIT-PTT-002	BUYER	DISCRETE	120VAC, 0.5AMPS	SELLER	LI-PTT-002A	INPUT	10 INCH	
LIT-PTT-003	BUYER	DISCRETE	120VAC, 0.5AMPS	SELLER	LI-PTT-003A	INPUT	20 INCH	
LIT-PTT-004	BUYER	DISCRETE	120VAC, 0.5AMPS	SELLER	LI-PTT-004A	INPUT	40 INCH	
LIT-PTT-005	BUYER	DISCRETE	120VAC, 0.5AMPS	SELLER	LI-PTT-005A	INPUT	56 INCH	
LIT-PTT-006	BUYER	DISCRETE	120VAC, 0.5AMPS	SELLER	LI-PTT-006A	INPUT	70 INCH	
LIT-PTT-007	BUYER	DISCRETE	120VAC, 0.5AMPS	SELLER	LI-PTT-007A	INPUT	80 INCH	
LIT-PTT-008	BUYER	DISCRETE	120VAC, 0.5AMPS	SELLER	LI-PTT-008A	INPUT	90 INCH	
LIT-PTT-009	BUYER	DISCRETE	120VAC, 0.5AMPS	SELLER	LI-PTT-009A	INPUT	91 INCH	
LIT-PTT-010	BUYER	DISCRETE	120VAC, 0.5AMPS	SELLER	LI-PTT-010A	INPUT	95 INCH	
LIT-PTT-011	BUYER	DISCRETE	120VAC, 0.5AMPS	SELLER	LI-PTT-011A	INPUT	114 INCH	
LIT-PTT-012	BUYER	DISCRETE	120VAC, 0.5AMPS	SELLER	LI-PTT-012A	INPUT	124 INCH	
LIT-PTT-013	BUYER	DISCRETE	120VAC, 0.5AMPS	SELLER	LI-PTT-013A	INPUT	40 INCH	
LIT-PTT-014	BUYER	DISCRETE	120VAC, 0.5AMPS	SELLER	LI-PTT-014A	INPUT	70 INCH	
LIT-PTT-015	BUYER	DISCRETE	120VAC, 0.5AMPS	SELLER	LI-PTT-015A	INPUT	90 INCH	
XA-PTT-017B	BUYER	DCS SOFT	----------	SELLER	XA-PTT-017A	INPUT	-------	
WIT-PTT-024	SELLER	4 - 20MADC	----------	SELLER	WI-PTT-024A	INPUT	0 - 6000 LBS	
WI-PTT-024B	BUYER	DCS SOFT	----------	SELLER	WI-PTT-024A	OUTPUT	0 - 6000 LBS	
YI-PTT-027	SELLER	PLC SOFT	----------	SELLER	YIC-PTT-027	OUTPUT	-------	
ZI-PTT-020B	BUYER	DCS SOFT	----------	SELLER	ZI-PTT-020A	OUTPUT	-------	
ZI-PTT-023B	BUYER	DCS SOFT	----------	SELLER	ZI-PTT-023B	OUTPUT	-------	

REMOTE INSTRUMENT	REMOTE INSTR BY	SIGNAL	CONTACT RATING	POWER SOURCE	PANEL INSTR FUNCTION	INPUT/ OUTPUT	RANGE IN ENG UNITS	NOTES
ZS-PTT-019	SELLER	DISCRETE	SELLER	SELLER	ZI-PTT-019	INPUT	-------	
ZS-PTT-020	SELLER	DISCRETE	SELLER	SELLER	ZI-PTT-020A, 020C	INPUT	-------	
ZS-PTT-021	SELLER	DISCRETE	SELLER	SELLER	ZI-PTT-021	INPUT	-------	
ZS-PTT-022	SELLER	DISCRETE	SELLER	SELLER	ZI-PTT-022	INPUT	-------	
ZS-PTT-023	SELLER	DISCRETE	SELLER	SELLER	ZI-PTT-023A	INPUT	-------	
ZSH-PTT-045A	SELLER	DISCRETE	SELLER	SELLER	YIC-PTT-045A	INPUT	-------	
ZSL-PTT-045A	SELLER	DISCRETE	SELLER	SELLER	YIC-PTT-045A	INPUT	-------	
ZSH-PTT-045B	SELLER	DISCRETE	SELLER	SELLER	YIC-PTT-045A	INPUT	-------	
ZSL-PTT-045B	SELLER	DISCRETE	SELLER	SELLER	YIC-PTT-045A	INPUT	-------	
HIS-PTT-019	SELLER	DISCRETE	SELLER	SELLER	YIC-PTT-031	INPUT	-------	
HIS-PTT-021	SELLER	DISCRETE	SELLER	SELLER	YIC-PTT-031	INPUT	-------	
HS-PTT-031	SELLER	DISCRETE	SELLER	SELLER	YIC-PTT-031	INPUT	-------	
HIS-PTT-32B	SELLER	DISCRETE	SELLER	SELLER	YIC-PTT-031	INPUT	-------	
HIS-PTT-032A	SELLER	DISCRETE	SELLER	SELLER	YIC-PTT-031	INPUT		
ZSH-IAX-099A	SELLER	DISCRETE	SELLER	SELLER	ZIH-IAX-099A	INPUT	-------	
ZSL-IAX-099A	SELLER	DISCRETE	SELLER	SELLER	ZIL-IAX-099A	INPUT	-------	
ZSH-IA-099B	SELLER	DISCRETE	SELLER	SELLER	ZIH-IAX-099B	INPUT	-------	
ZSL-IA-099B	SELLER	DISCRETE	SELLER	SELLER	ZIL-IAX-099B	INPUT	-------	
MC TURNTABLE S/S	BUYER	DISCRETE	120VAC, 10AMPS	BUYER	YIC-PTT-030	OUTPUT	-------	
ZIH-PTT-045B	BUYER	DC SOFT	----------	SELLER	YIC-PTT-045A	OUTPUT	-------	
ZIL-PTT-045B	BUYER	DC SOFT	----------	SELLER	YIC-PTT-045A	OUTPUT		
MC TURNTABLE AUX	BUYER	DISCRETE	SELLER	SELLER	YIC-PTT-030	INPUT	-------	
MC CART S/S	BUYER	DISCRETE	120VAC, 10AMPS	BUYER	YIC-PTT-031	OUTPUT	-------	
MC CART AUX	BUYER	DISCRETE	SELLER	SELLER	YIC-PTT-031	INPUT	-------	

REMOTE INSTRUMENT	REMOTE INSTR BY	SIGNAL	CONTACT RATING	POWER SOURCE	PANEL INSTR FUNCTION	INPUT/ OUTPUT	RANGE IN ENG UNITS	NOTES
SIC-PTT-030	BUYER	4 - 20MADC	----------	SELLER	YIC-PTT-030	OUTPUT	-------	
SIC-PTT-031	BUYER	4 - 20MADC	----------	SELLER	YIC-PTT-031	OUTPUT	-------	
YIC-IAX-093B	BUYER	DC SOFT	----------	SELLER	YIC-IAX-093A	IN/OUT		
ZA-IAX-099B	BUYER	DC SOFT	----------	SELLER	ZA-IAX-099A	OUTPUT		
MC POSIT ARM S/S	BUYER	DISCRETE	120VAC, 10AMPS	BUYER	YIC-PTT-046	OUTPUT	-------	
MC POSIT ARM AUX	BUYER	DISCRETE	SELLER	SELLER	YIC-PTT-046	INPUT	-------	
YV-IAX-092	BUYER	DISCRETE	120VAC, 5AMPS	SELLER	YIC-IAX-092	OUTPUT	-------	
ZSH-IAX-092	BUYER	DISCRETE	SELLER	SELLER	YIC-IAX-092	INPUT	-------	
ZSL-IAX-092	BUYER	DISCRETE	SELLER	SELLER	YIC-IAX-092	INPUT	-------	
PIT-IAX-084	BUYER	4 - 20MADC	----------	BUYER (DCS)	YIC-IAX-086	INPUT	0 - 35 PSI	

SECTION 17886
INSTRUMENTS FURNISHED WITH MECHANICAL EQUIPMENT
LOAD CELL SIGNAL CONDITIONER
POUR AND DRAIN TURNTABLES
B-595-P-P06B-17886

TABLE OF CONTENTS

PART		PAGE
PART 1	**GENERAL**	1
1.1	SUMMARY	1
1.2	REFERENCES	1
1.3	RELATED REQUIREMENTS	2
1.4	DEFINITIONS	2
1.5	SYSTEM DESCRIPTION	2
1.6	SUBMITTALS	2
1.7	CLASSIFICATION OF SYSTEMS AND COMPONENTS	2
1.8	PROJECT OR SITE ENVIRONMENTAL CONDITIONS	3
1.9	UTILITIES	3
PART 2	**PRODUCTS**	3
2.1	MATERIALS AND EQUIPMENT	3
2.2	FABRICATION AND MANUFACTURE	5
2.3	FACTORY ACCEPTANCE TESTS (FAT)	5
2.4	PACKAGING AND SHIPPING	5
PART 3	**EXECUTION**	6

SECTION 17886
INSTRUMENTS FURNISHED WITH MECHANICAL EQUIPMENT
LOAD CELL SIGNAL CONDITIONER
POUR AND DRAIN TURNTABLES

PART 1 GENERAL

1.1 SUMMARY

This section defines the requirements for the supply, inspection, and testing of instruments furnished with the Pour Turntable TU-130-001, specified in Specification Section 14601 and in the Drain Turntable, TU-130-002, specified in Specification Section 14602. Installation of the instruments is not in this Order/Subcontract.

1.2 REFERENCES

The publications listed below form a part of this specification to the extent referenced. The publications are referred to in the text by the basic designations only.

AMERICAN SOCIETY OF MECHANICAL ENGINEERS (ASME)

ANSI/ASME B1.20.1	1983 Pipe Threads, General Purpose (Inch)

INSTRUMENT SOCIETY OF AMERICA (ISA)

ISA S20	1981 Specification Forms for Process Measurement and Control Instruments, Primary Elements and Control Valves

NATIONAL ELECTRICAL MANUFACTURERS ASSOCIATION (NEMA)

ANSI/NEMA 250	1985 Enclosures for Electrical Equipment (1000 Volts Maximum) Revision No. 1-May 1986 Revision No. 2-May 1988

UNDERWRITERS LABORATORIES (UL)

Directory	1990 Electrical Appliance and Utilization Equipment Directory
Directory	1990 Recognized Component Directory

1.2.1 Reference Drawings

Drawing No. H-2-123150 Sheet 3 of 22	P&ID System 13 Drain Turntable

1.3 **RELATED REQUIREMENTS**

Specification Section 01730	Operation and Maintenance Data
Specification Section 14602	Drain Turntable
Specification Section 17857	Local Control Panels for Pour and Drain Turntables
Specification Section 17908	Instruments Furnished with Mechanical Equipment Pour and Drain Turntables

1.4 **DEFINITIONS**

(Not Used)

1.5 **SYSTEM DESCRIPTION**

The system and the Seller's responsibilities for detailed system design are defined in Paragraph 1.5 of Specification Section 17857.

1.6 **SUBMITTALS**

Submit the following in accordance with the Vendor Drawing and Data Requirements section of the Order/Subcontract.

1.6.1 Catalog cuts describing each instrument and accessory.

1.6.2 Manufacturers' installation drawings and instructions.

1.6.3 Manufacturers' operation and maintenance manuals in accordance with Specification Section 01730.

1.6.4 Instrument data sheets similar to ISA S20, completed in accordance with ISA S20 instructions.

1.6.5 Instrument list showing tag number, service, manufacturer, model number, range and setpoint if applicable.

1.6.6 Factory Acceptance Test (FAT) procedure including the requirements in Paragraph 2.3.1.

1.6.7 Report confirming the FAT procedure was executed and the results.

1.7 **CLASSIFICATION OF SYSTEMS AND COMPONENTS**

(Not Used)

1.8 **PROJECT OR SITE ENVIRONMENTAL CONDITIONS**

1.8.1 Climatic and Geographic Site Conditions

A.	Site Elevation	714 feet above sea level
B.	Barometric Pressure	14.3 psia
C.	Outside Design Temperature	
	1) Maximum Design Temperature	110°F
	2) Minimum Design Temperature	-20°F
	3) Wet Bulb Design Temperature	68°F

1.8.2 Operating Environment

A.	Normal Operating Temperature	68°F to 78°F
B.	Maximum Operating Temperature	104°F
C.	Minimum Operating Temperature	60°F
D.	Relative Humidity	Not Controlled

1.9 **UTILITIES**

(Not Used)

PART 2 PRODUCTS

2.1 **MATERIALS AND EQUIPMENT**

2.1.1 General

2.1.1.1 Provide load cell signal conditioners appropriate for the applications listed below, including correct range, temperature rating, and materials of construction to operate under the conditions of Paragraph 1.8.

2.1.1.2 Load cell signal conditioner shall include the features listed below:

A. Identical manufacturer and catalog numbers for components with the same specifications.

B. 24 Vdc loop powered or 120 V, 60 Hz, power input.

C. Accuracy total weighing system shall be ±1 percent full scale.

D. Output signal 4-20 mA dc.

E. Input compatible with Load Cell specified in Specification Section 17908.

F. ANSI/ASME B1.20.1 threaded connections.

G. ANSI/NEMA 250, Type 4X electrical enclosures.

H. 1/2 inch National Pipe Thread (NPT) conduit connection.

I. Minimum 100 ft. transmission distance without signal deterioration from the load cell to the load cell signal conditioner.

J. Weighing system calibration is provided from the signal conditioner unit.

K. International Scientific Research (ISR) Transducer Div. Model SCI-5000 or equal.

INSTRUMENT TAG NUMBER	SERVICE DESCRIPTION
WIT-PTT-024	Pour Turntable Load Cell Signal Conditioner
WIT-DTT-020	Drain Turntable Load Cell Signal Conditioner

2.1.1.3 Provide a stainless steel tag, 18 ga. minimum, with the instrument tag number and Seller's service description stamped or engraved, affixed to each instrument with stainless steel wire (preferred), stainless steel screws or rivets. If the instrument size or configuration prevents the use of a separate tag, propose an alternate method of tagging, such as engraving or stamping for Buyer approval.

2.1.1.4 Electrical components or devices which operate at voltage higher than 30 volts or energy greater than 100 VA shall be UL Listed Devices, UL Recognized Components, of FM Approved Devices (refer to UL and FM directories).

2.1.1.5 Radio frequency interference from 20 to 1000 M Hz with a field strength of 30 volts per meter shall not affect the output of a transmitter, installed with grounded conduit by more than ± 0.1 percent of span.

2.2 **FABRICATION AND MANUFACTURE**

(Not Used)

2.3 **FACTORY ACCEPTANCE TESTS (FAT)**

2.3.1 Prepare a FAT procedure and submit it for approval. Include:

Load cell calibration shall be remotely from the signal conditioning device.

A. Tests to demonstrate compatibility of load cell (specified in Specification Section 17908) and transducer signal conditioner.

B. Inspection to confirm that instruments are new and not damaged.

C. Inspection to verify code compliance.

2.3.2 Inspect and test the instruments according to the Buyer approved FAT procedure.

2.3.3 Submit a report confirming the FAT procedure has been completed and the results include:

A. Item tested

B. Date of test

C. Tester or data record

D. Type of observation

E. Results and acceptability

F. Action taken in connection with any deviations noted

G. Person evaluating test results

2.4 **PACKAGING AND SHIPPING**

2.4.1 Repack loose instruments and equipment in the manufacturers' original packing material. Accumulate these in a separate crate marked "INSTRUMENTS" with identification to relate it to the equipment it serves.

2.4.2 Protect instruments from moisture, vibration, shock and heat damage while in transit or storage.

PART 3 EXECUTION

(Not Used)

END OF SECTION

U.S. DEPARTMENT OF ENERGY
Hanford Waste Vitrification Plant
Richland, Washington
DOE Contract DE-AC06-86RL10838

FLUOR DANIEL, INC.
Advanced Technology Division
Fluor Contract 8457

SECTION 17908
INSTRUMENTS FURNISHED WITH MECHANICAL EQUIPMENT
POUR AND DRAIN TURNTABLES
B-595-P-P06B-17908

APPROVED FOR CONSTRUCTION

REVISION 0
ISSUE DATE 4-6-93

WAPA YES ___ NO X
QUALITY LEVEL I ___ II X
SAFETY CLASS 1__ 2__ 3 X 4__

ORIGINATOR:

Robert R. Layne 3/29/93
R. L. Layne, Control Sys. Eng. Date

CHECKER:

B R Carlisle 3/29/93
B. R. Carlisle, Control Sys. Eng. Date

APPROVED BY:

J B Bunning
J. B. Bunning Lead Discipline Engineer

03/29/93
Date

SECTION 17908
INSTRUMENTS FURNISHED WITH MECHANICAL EQUIPMENT
POUR AND DRAIN TURNTABLES
B-595-P-P06B-17908

TABLE OF CONTENTS

PART		PAGE
PART 1	GENERAL	1
1.1	SUMMARY	1
1.2	REFERENCES	1
1.3	RELATED REQUIREMENTS	2
1.4	DEFINITIONS	2
1.5	SYSTEM DESCRIPTION	2
1.6	SUBMITTALS	2
1.7	CLASSIFICATION OF SYSTEMS AND COMPONENTS	3
1.8	PROJECT OR SITE ENVIRONMENTAL CONDITIONS	3
1.9	UTILITIES	4
PART 2	PRODUCTS	4
2.1	MATERIALS AND EQUIPMENT	4
2.2	FABRICATION AND MANUFACTURE	7
2.3	FACTORY ACCEPTANCE TESTS (FAT)	8
2.4	PACKAGING AND SHIPPING	8
PART 3	EXECUTION	9

SECTION 17908
INSTRUMENTS FURNISHED WITH MECHANICAL EQUIPMENT
POUR AND DRAIN TURNTABLES

PART 1 GENERAL

1.1 SUMMARY

This specification defines the requirements for the supply, installation, inspection and testing of instruments furnished with the Pour Turntable TU-130-001, specified in Specification Section 14601 and in the Drain Turntable, TU-130-002, specified in Specification Section 14602.

1.2 REFERENCES

1.2.1 The publications listed below form a part of this specification to the extent referenced. The publications are referred to in the text by the basic designation only.

AMERICAN SOCIETY OF MECHANICAL ENGINEERS (ASME)

ANSI/ASME B1.20.1	1983 Pipe Threads, General Purpose (Inch)

FACTORY MUTUAL (FM)

Directory	1991 Approval Guide

INSTRUMENT SOCIETY OF AMERICA (ISA)

ISA S5.1	1984 Instrument Symbols and Identification
ISA S20	1981 Specification Forms for Process Measurement and Control Instruments, Primary Elements and Control Valves

NATIONAL ELECTRICAL MANUFACTURERS ASSOCIATION (NEMA)

ANSI/NEMA 250	1985 Enclosures for Electrical Equipment (1000 Volts Maximum) Revision No. 1 - May 1986 Revision No. 2 - May 1988

UNDERWRITERS LABORATORIES INC. (UL)

Directory	1990 Electrical Appliance and Utilization Equipment Directory
Directory	1990 Recognized Component Directory

1.2.2 Reference Drawings

Drawing No. H-2-123150 Sheet 1, 2 of 22	P&ID System 13 Pour Turntable
Drawing No. H-2-123150 Sheet 3 of 22	P&ID System 13 Drain Turntable
Drawing No. H-2-123150 Sheet 5 of 22	P&ID System 13 Melter Drain Valve and Drain Bellows
Drawing No. H-2-123150 Sheet 6 of 22	P&ID System 13 Melter Pressure Level and Pour Control

1.3 **RELATED REQUIREMENTS**

Specification Section 01730	Operation and Maintenance Data
Specification Section 14601	Pour Turntable
Specification Section 14602	Drain Turntable
Specification Section 16610	Electrical Requirements for Packaged Equipment
Specification Section 17857	Local Control Panels for Pour and Drain Turntables
Specification Section 17886	Instruments Furnished with Mechanical Equipment Load Cell Signal Conditioner Pour and Drain Turntables

1.4 **DEFINITIONS**

(Not Used)

1.5 **SYSTEM DESCRIPTION**

The system and the Seller's responsibilities for detailed system design are defined in Paragraph 1.5 of Specification Section 17857.

1.6 **SUBMITTALS**

Submit the following in accordance with the Vendor Drawing and Data Requirements section of the Order/Subcontract.

1.6.1 Catalog cuts describing each instrument and accessory.

1.6.2 Manufacturers' certified installation drawings and instructions.

1.6.3 Manufacturers' operation and maintenance manuals in accordance with Specification Section 01730.

1.6.4 Instrument data sheets similar to ISA S20, completed in accordance with ISA S20 instructions.

1.6.5 Instrument list showing tag number, service, manufacturer, model number, range and setpoint if applicable.

1.6.6 Factory Acceptance Test (FAT) procedure including the requirements in Paragraph 2.3.1.

1.6.7 Report confirming the FAT procedure was executed and the results.

1.7 CLASSIFICATION OF SYSTEMS AND COMPONENTS

(Not Used)

1.8 PROJECT OR SITE ENVIRONMENTAL CONDITIONS

1.8.1 Climatic and Geographic Site Conditions

A.	Site Elevation	714 feet above sea level
B.	Barometric Pressure	14.3 psia
C.	Outside Design Temperature	
	1) Maximum Design Temperature	110°F
	2) Minimum Design Temperature	-20°F
	3) Wet Bulb Design Temperature	68°F

1.8.2 Operating Environment

A.	Normal Operating Temperature	60° to 104°F
B.	Maximum Operating Temperature	104°F
C.	Minimum Operating Temperature	60°F
D.	Relative Humidity	Not Controlled

1.8.3 Radiation Exposure

Instruments will be exposed to radiation during normal plant operations. The instrumentation provided shall be capable of withstanding a total integrated dose of 6.5×10^8 rads or have a normal service of 3 years before the effects of radiation exposure deteriorate its performance.

1.9 **UTILITIES**

(Not Used)

PART 2 PRODUCTS

2.1 **MATERIALS AND EQUIPMENT**

2.1.1 General

2.1.1.1 Provide instrumentation appropriate for the application, including correct range, temperature rating, and materials of construction to operate under the conditions of Paragraph 1.8.

2.1.1.2 Provide accessories, materials and methods of fabrication not included in this specification, but which are necessary to complete the installation of the instrumentation.

2.1.1.3 When two or more components with the same specification are required, the components shall be identical (same manufacturer and catalog number).

2.1.1.4 Electrical components or devices which operate at voltages higher than 30 volts or energy greater than 100 VA shall be UL Listed Devices, UL Recognized Components, or FM Approved Devices (refer to UL and FM directories).

2.1.1.5 Instrument electrical enclosures shall be ANSI/NEMA 250, Type 4X.

2.1.1.6 Discrete signals shall be 120 Vac.

2.1.1.7 Instrument conduit connections shall be in accordance with ANSI/ASME B1.20.1.

2.1.1.8 Provide a stainless steel tag, 18 ga. minimum, with the instrument tag number and Seller's service description stamped or engraved, affixed to each instrument with stainless steel wire (preferred), stainless steel screws or rivets. If the instrument size or configuration prevents the use of a separate tag, propose an alternate method of tagging, such as engraving or stamping for Buyer approval.

2.1.2 Instruments furnished by the Seller shall be appropriate for the applications listed below:

2.1.2.1 Limit Switches for bellows position:

A. Single pole, double throw contacts rated to handle the switched load.

B. No solid state components.

C. 3/4-inch National Pipe Thread (NPT) conduit connection.

D. High temperature switch up to +1,000°F.

E. Honeywell Microswitch Model 3HT1 or equal.

INSTRUMENT TAG NUMBER	SERVICE DESCRIPTION
ZSH-IAX-099A	Pour Spout Bellows, Bellows Retracted
ZSH-IAX-099B	Pour Spout Bellows, Bellows Retracted
ZSL-IAX-099A	Pour Spout Bellows, Bellows Extended
ZSL-IAX-099B	Pour Spout Bellows, Bellows Extended
ZSH-IAX-066A	Drain Valve Probe Bellows, Bellows Retracted
ZSH-IAX-066B	Drain Valve Probe Bellows, Bellows Retracted
ZSL-IAX-066A	Drain Valve Probe Bellows, Bellows Extended
ZSL-IAX-066B	Drain Valve Probe Bellows, Bellows Extended
ZSH-IAX-037A	Drain Valve Backup Plug Bellows, Bellows Retracted
ZSH-IAX-037B	Drain Valve Backup Plug Bellows, Bellows Retracted
ZSL-IAX-037A	Drain Valve Backup Plug Bellows, Bellows Extended
ZSL-IAX-037B	Drain Valve Backup Plug Bellows, Bellows Extended
ZSH-IAX-089A	Drain Bellows, Bellows Retracted
ZSH-IAX-089B	Drain Bellows, Bellows Retracted
ZSL-IAX-089A	Drain Bellows, Bellows Extended

INSTRUMENT TAG NUMBER	SERVICE DESCRIPTION
ZSL-IAX-089B	Drain Bellows, Bellows Extended
ZSH-PTT-045A	Canister Positioning Arm Open
ZSH-PTT-045B	Canister Positioning Arm Open
ZSL-PTT-045A	Canister Positioning Arm Close
ZSL-PTT-045B	Canister Positioning Arm Close

2.1.2.2 Limit Switches for turntable cart position:

A. Double pole, double throw contacts rated to handle the switched load.

B. No solid state components.

C. 3/4-inch NPT conduit connection.

D. Namco Model EA 170-XXXXX or equal.

INSTRUMENT TAG NUMBER	SERVICE DESCRIPTION
ZS-PTT-019	Pour Turntable Forward Low Speed
ZS-PTT-021	Pour Turntable Reversed Low Speed
ZS-PTT-022	Pour Turntable Cart Low Speed
ZS-PTT-023	Pour Turntable Cart in Position
ZS-DTT-006	Drain Turntable Forward Low Speed
ZS-DTT-008	Drain Turntable Reversed Low Speed
ZS-DTT-009	Drain Turntable Cart Low Speed
ZS-DTT-010	Drain Turntable Cart in Position

2.1.2.3 Limit Switches for canister position:

A. Double pole, double throw contacts rated to handle the switched load.

B. No solid state components.

C. 3/4-inch NPT conduit connection.

D. Namco Model EA 740-XXXXX or equal.

INSTRUMENT TAG NUMBER	SERVICE DESCRIPTION
ZS-PTT-020	Pour Turntable Canister in Position
ZS-DTT-007	Drain Turntable Canister in Position

2.1.2.4 Load Cells

A. Overload protection to 9,000 pound total weight.

B. No solid state electronics.

C. 0 to 6,000 lb capacity.

D. Output compatible with transducer specified in Specification Section 17886.

E. Vendor to confirm that the total weighting system accuracy is ±1 percent of full scale.

F. 3/4 inch NPT conduit connection.

G. International Scientific Research (ISR) Transducer Div. Model CLC-S95-006K or equal.

INSTRUMENT TAG NUMBER	SERVICE DESCRIPTION
WE-PTT-024	Pour Turntable Load Cell
WE-DTT-020	Drain Turntable Load Cell

2.2 **FABRICATION AND MANUFACTURE**

2.2.1 Instrument Mounting

2.2.1.1 Mount and support instruments in accordance with manufacturer's installation documents and Contract Drawings.

2.2.1.3 Mount instruments and components to allow for adjustments or replacement without disturbing wiring or other equipment.

2.2.2 Piping

2.2.2.1 This equipment does not require piping.

2.2.3 Wiring

2.2.3.1 Wiring material and installation methods shall comply with Specification Section 16610.

2.3 FACTORY ACCEPTANCE TESTS (FAT)

2.3.1 Prepare a FAT procedure and submit it to the Buyer for approval, Include:

A. Inspections/tests to demonstrate that the fabrication and assembly of the materials and equipment meet the requirements of the Contract Drawings and specifications.

B. Inspection to confirm that instruments are new and undamaged.

C. Inspection to confirm equipment installation, location, and mounting.

D. Inspection to verify code compliance.

2.3.2 Inspect and test the instrument installations according to the Buyer approved FAT procedure.

2.3.3 Submit a report confirming the FAT procedure has been completed and the results include:

A. Item tested

B. Date of test

C. Tester or data recorder

D. Type of observation

E. Results and acceptability

F. Action taken in connection with any deviations noted

G. Person evaluating test results

2.4 PACKAGING AND SHIPPING

2.4.1 Reinstall shipping stops which were removed for calibration and testing.

2.4.2 Install temporary additional shipping supports for instruments and equipment to be shipped mounted on mechanical equipment. Identify temporary shipping supports by contrasting color, tag or label to simplify location and removal prior to installation of equipment.

2.4.3 Repack loose instruments and equipment, including those removed from the mechanical equipment for shipment, in the manufacturer's original packing material. Accumulate these in a separate crate marked "INSTRUMENTS" with identification to relate it to the equipment it serves.

2.4.4 Protect instruments from moisture, vibration, shock, and heat damage while in transit or storage.

PART 3 EXECUTION

(Not Used)

END OF SECTION

APR - 8 1993

REV NO.	DATE	REVISION DESCRIPTION	APPROVAL INITIALS			
0	4-6-93	APPROVED FOR CONSTRUCTION	JCD	SS	JCD	[illegible]
			HLR	AKY	[illegible]	[illegible]

CADFILE	B116013A	CADCODE	2B:IBM:ACD2:10.C2:SS

ENGINEERING RELEASE

REV _____ DATE _____

ERO _____

SIGNATURE	DATE
PROJ DIR [illegible]	6 Apr 93
QA MGR [illegible]	4/6/93
INDEPENDENT SAFETY MGR [illegible]	4/6/93
PROJECT MGR HL Robertson	4/6/93
SYSTEMS MGR [illegible]	4/6/93
ENGINEERING MGR [illegible]	[illegible]
SUPERVISOR J T Oatte	3/30/93
DESIGN ENGINEER S. Sam	3/30/93
CHECKED J T Oatte	3/30/93
DRAWN S.SAM	10-21-92

U.S.DEPARTMENT OF ENERGY

Richland Field Office

DE - AC06-86RL10838

FLUOR DANIEL, INC.
ADVANCED TECHNOLOGY DIVISION

MELTER POUR & DRAIN TURNTABLE TITLE SHEET

PROJECT TITLE: HANFORD WASTE VITRIFICATION PLANT

PROJECT	FLUOR CONTRACT NO.	CWBS NO.
B-595	8457	P06B

SCALE	BLDG NO.	INDEX NO.
NONE	1	

CLASSIFICATION	BY	DRAWING NUMBER	SHEET	OF	REV
NONE	NOT REQD	H-2-116013	1	1	0

DISTRIBUTION CODE: 301 T1 ACAD

INITIALS: SS

DATE: 03-30-93

APR - 8 1993

REV NO.	DATE	REVISION DESCRIPTION	APPROVAL INITIALS			
0	4-6-93	APPROVED FOR CONSTRUCTION	JLD	SS	JLD	[illegible]
			HLR	AKY	[illegible]	[illegible]

CADFILE	B116014A	CADCODE	2B:IBM:ACD2:10.C2:SS

ENGINEERING RELEASE

REV _____ DATE _____

ERO _____

SIGNATURE	DATE
PROJ DIR [signature]	6 APR 93
QA MGR [signature]	4/6/93
INDEPENDENT SAFETY MGR [signature]	4/6/93
PROJECT MGR [signature] HL Robertson	4/6/93
SYSTEMS MGR [signature]	4/6/93
ENGINEERING MGR [signature]	4/6/93
SUPERVISOR J. P. Datte	3/30/93
DESIGN ENGINEER S. Sam	3/30/93
CHECKED J. P. Datte	3/30/93
DRAWN S.SAM	10-23-92

U.S.DEPARTMENT OF ENERGY

Richland Field Office

DE - AC06-86RL10838

FLUOR DANIEL, INC.
ADVANCED TECHNOLOGY DIVISION

MELTER POUR & DRAIN TURNTABLE DRAWING INDEX

PROJECT TITLE: HANFORD WASTE VITRIFICATION PLANT

PROJECT	FLUOR CONTRACT NO.	CWBS NO.
B-595	8457	P06B

SCALE	BLDG NO.	INDEX NO.
NONE	1	

CLASSIFICATION	BY	DRAWING NUMBER	SHEET	OF	REV
NONE	NOT REQD	H-2-116014	1	2	0

DISTRIBUTION CODE: 301 T2 ACAD

INITIALS: SS

DATE: 03-30-93

APR - 8 1993

REV NO.	DATE	REVISION DESCRIPTION	APPROVAL INITIALS			
0	4-6-93	APPROVED FOR CONSTRUCTION	JLD	SS	JLD	[illegible]
			HLR	AKY	[illegible]	RSP

CADFILE	B116014B	CADCODE	2B:IBM:ACD2:10.C2:SS

ENGINEERING RELEASE

REV _____ DATE _____

ERO _____

SIGNATURE	DATE
PROJ DIR [signature]	6 Apr 93
QA MGR [signature]	4/6/93
INDEPENDENT SAFETY MGR [signature]	4/6/93
PROJECT MGR [signature] HLRobertson	4/6/93
SYSTEMS MGR [signature]	4-6-93
ENGINEERING MGR [signature]	4/6/93
SUPERVISOR J T Oatte	3/30/93
DESIGN ENGINEER S. Sam	3/30/93
CHECKED J T Oatte	3/30/93
DRAWN S. SAM	10-23-92

U.S.DEPARTMENT OF ENERGY

Richland Field Office

DE - AC06-86RL10838

FLUOR DANIEL, INC.
ADVANCED TECHNOLOGY DIVISION

MELTER POUR & DRAIN TURNTABLE DRAWING INDEX

PROJECT TITLE: HANFORD WASTE VITRIFICATION PLANT

PROJECT	FLUOR CONTRACT NO.	CWBS NO.
B-595	8457	P06B

SCALE	BLDG NO.	INDEX NO.
NONE	1	

CLASSIFICATION	BY	DRAWING NUMBER	SHEET	OF	REV
NONE	NOT REQD	H-2-116014	2	2	0

B

A

2

1

F C 78 79 80

DISTRIBUTION CODE: 301

T3

ACAD

INITIALS: SS

DATE: 03-30-93

QUALITY LEVEL II

SAFETY CLASS 3

APR - 8 1993

REV NO.	DATE	REVISION DESCRIPTION	APPROVAL INITIALS			
0	04 02 93	APPROVED FOR CONSTRUCTION	EG	RC	CD	NA NA
			NA	NA	NA	NA

CADFILE	B120302A	CADCODE	2B:IBM:ACD2:12.C1:SS

ENGINEERING RELEASE

REV _____ DATE _____

ERO _____

SIGNATURE	DATE
PROJ DIR NA	
QA MGR NA	
INDEPENDENT SAFETY MGR NA	
PROJECT MGR NA	
SYSTEMS MGR NA	
ENGINEERING MGR NA	
SUPERVISOR C. DIVONA	11-3-92
DESIGN ENGINEER R. CHOATE	11-3-92
CHECKED E. GARCIA	~~1-25-93~~ 11-2-92
DRAWN P. NGUYEN	02/27/92

U.S.DEPARTMENT OF ENERGY

Richland Field Office

DE – AC06–86RL10838

FLUOR DANIEL, INC.
ADVANCED TECHNOLOGY DIVISION

TU–130–001 POUR TURNTABLE PARTS LIST & NOTES

PROJECT TITLE: HANFORD WASTE VITRIFICATION PLANT

PROJECT	FLUOR CONTRACT NO.	CWBS NO.
B–595	8457	P06B
SCALE: NONE	BLDG NO.: 1	INDEX NO.:

CLASSIFICATION	BY	DRAWING NUMBER	SHEET	OF	REV
NONE	NOT REQD	H–2–120302	1	18	0

NG INDEX

DISTRIBUTION CODE: 403 M1 ACAD

INITIALS: PN

DATE: 03–16–93

QUALITY LEVEL II

SAFETY CLASS 3

APR - 8 1993

REV NO.	DATE	REVISION DESCRIPTION	EG	RC	CD	
						B
0	04/06/93	APPROVED FOR CONSTRUCTION	EG	RC	CD	NA / NA
			NA	NA	NA	NA

CADFILE B120302B CADCODE 2B:IBM:ACD2:12.C1:SS

ENGINEERING RELEASE

REV _____ DATE _____

ERO _____

SIGNATURE	DATE
PROJ DIR NA	
QA MGR NA	
INDEPENDENT SAFETY MGR NA	
PROJECT MGR NA	
SYSTEMS MGR NA	
ENGINEERING MGR NA	
SUPERVISOR C. DIVONA	11-3-92
DESIGN ENGINEER R. CHOATE	11-3-92
CHECKED E. GARCIA	11-2-92
DRAWN P. NGUYEN	03/03/92

U.S. DEPARTMENT OF ENERGY

Richland Field Office

DE – AC06-86RL10838

FLUOR DANIEL, INC.
ADVANCED TECHNOLOGY DIVISION

TU-130-001 POUR TURNTABLE ASSEMBLY

A

PROJECT TITLE: HANFORD WASTE VITRIFICATION PLANT

PROJECT	FLUOR CONTRACT NO.	CWBS NO.
B-595	8457	P06B
SCALE 1/8	BLDG NO. 1	INDEX NO.

CLASSIFICATION	BY	DRAWING NUMBER	SHEET	OF	REV
NONE	NOT REQD	H-2-120302	2	18	0

G INDEX

2 1

F C 78 79 80

DISTRIBUTION CODE: 402 M2 ACAD

INITIALS: PN

DATE: 03-16-93

QUALITY LEVEL II

SAFETY CLASS 3

APR - 8 1993

REV NO.	DATE	REVISION DESCRIPTION				
0	04/01/93	APPROVED FOR CONSTRUCTION	EG	RC	CD	NA / NA
			NA	NA	NA	NA

APPROVAL INITIALS

CADFILE	B120302C	CADCODE	2B:IBM:ACD2:12.C1:SS

ENGINEERING RELEASE

REV _____ DATE _____

ERO _____

SIGNATURE	DATE
PROJ DIR NA	
QA MGR NA	
INDEPENDENT SAFETY MGR NA	
PROJECT MGR NA	
SYSTEMS MGR NA	
ENGINEERING MGR NA	
SUPERVISOR C. DIVONA	11-3-92
DESIGN ENGINEER R. CHOATE	11-3-92
CHECKED E. GARCIA	11-2-92
DRAWN P.NGUYEN	05/07/92

U.S.DEPARTMENT OF ENERGY

Richland Field Office

DE – AC06–86RL10838

FLUOR DANIEL, INC.
ADVANCED TECHNOLOGY DIVISION

TU–130–001 POUR TURNTABLE ASSEMBLY

PROJECT TITLE: HANFORD WASTE VITRIFICATION PLANT

PROJECT	FLUOR CONTRACT NO.	CWBS NO.
B–595	8457	P06B
SCALE 1/4	BLDG NO. 1	INDEX NO.

CLASSIFICATION	BY	DRAWING NUMBER	SHEET	OF	REV
NONE	NOT REQD	H–2–120302	3	18	0

INDEX

DISTRIBUTION CODE: 402

M3

ACAD

INITIALS: PN

DATE: 03–16–93

QUALITY LEVEL II

SAFETY CLASS 3

APR - 8 1993

REV NO.	DATE	REVISION DESCRIPTION	APPROVAL INITIALS			
0	04/06/93	APPROVED FOR CONSTRUCTION	EG	RC	CD	NA NA
			NA	NA	NA	NA

CADFILE	B120302D	CADCODE	2B:IBM:ACD2:12.C1:SS

ENGINEERING RELEASE

REV _____ DATE _____

ERO _____

SIGNATURE	DATE
PROJ DIR NA	
QA MGR NA	
INDEPENDENT SAFETY MGR NA	
PROJECT MGR NA	
SYSTEMS MGR NA	
ENGINEERING MGR NA	
SUPERVISOR C. DIVONA	11-3-92
DESIGN ENGINEER R. CHOATE	11-3-92
CHECKED E. GARCIA	11-2-92
DRAWN P. NGUYEN	03/03/92

U.S. DEPARTMENT OF ENERGY

Richland Field Office

DE - AC06-86RL10838

FLUOR DANIEL, INC.
ADVANCED TECHNOLOGY DIVISION

TU-130-001 POUR TURNTABLE ASSEMBLY

PROJECT TITLE: HANFORD WASTE VITRIFICATION PLANT

PROJECT	FLUOR CONTRACT NO.	CWBS NO.
B-595	8457	P06B
SCALE 1/4	BLDG NO. 1	INDEX NO.

CLASSIFICATION	BY	DRAWING NUMBER	SHEET	OF	REV
NONE	NOT REQD	H-2-120302	4	18	0

G INDEX

DISTRIBUTION CODE: 402 M4 ACAD

INITIALS: PN

DATE: 03-16-93

QUALITY LEVEL II

SAFETY CLASS 3

APR - 8 1993

REV NO.	DATE	REVISION DESCRIPTION	APPROVAL INITIALS			
0	04/06/93	APPROVED FOR CONSTRUCTION	EG	RC	CD	NA NA
			NA	NA	NA	NA

CADFILE	B120302E	CADCODE	2B:IBM:ACD2:12.C1:SS

ENGINEERING RELEASE

REV _____ DATE _____

ERO _____

SIGNATURE	DATE
PROJ DIR NA	
QA MGR NA	
INDEPENDENT SAFETY MGR NA	
PROJECT MGR NA	
SYSTEMS MGR NA	
ENGINEERING MGR NA	
SUPERVISOR C. DIVONA	11-3-92
DESIGN ENGINEER R. CHOATE	11-3-92
CHECKED E. GARCIA	11-2-92
DRAWN P.NGUYEN	05/21/92

U.S.DEPARTMENT OF ENERGY

Richland Field Office

DE – AC06-86RL10838

FLUOR DANIEL, INC.

ADVANCED TECHNOLOGY DIVISION

TU-130-001 POUR TURNTABLE ASSEMBLY

PROJECT TITLE: HANFORD WASTE VITRIFICATION PLANT

PROJECT	FLUOR CONTRACT NO.	CWBS NO.
B-595	8457	P06B
SCALE 1/8	BLDG NO. 1	INDEX NO.

CLASSIFICATION	BY	DRAWING NUMBER	SHEET	OF	REV
NONE	NOT REQD	H-2-120302	5	18	0

IG INDEX

DISTRIBUTION CODE: 402 M5 ACAD

INITIALS: PN

DATE: 03-16-93

QUALITY LEVEL II

SAFETY CLASS 3

APR - 8 1993

REV NO.	DATE	REVISION DESCRIPTION	APPROVAL INITIALS			
0	04/06/93	APPROVED FOR CONSTRUCTION	EG	RC	CD	NA NA
			NA	NA	NA	NA

CADFILE	B120302F	CADCODE	2B:IBM:ACD2:12.C1:SS

ENGINEERING RELEASE

REV _____ DATE _____

ERO _____

SIGNATURE	DATE
PROJ DIR NA	
QA MGR NA	
INDEPENDENT SAFETY MGR NA	
PROJECT MGR NA	
SYSTEMS MGR NA	
ENGINEERING MGR NA	
SUPERVISOR C. DIVONA	11-3-92
DESIGN ENGINEER R. CHOATE	11-3-92
CHECKED E. GARCIA	11-2-92
DRAWN P. NGUYEN	3//92

U.S.DEPARTMENT OF ENERGY

Richland Field Office

DE – AC06-86RL10838

FLUOR DANIEL, INC.

ADVANCED TECHNOLOGY DIVISION

TU-130-001 POUR TURNTABLE ASSEMBLY

PROJECT TITLE: HANFORD WASTE VITRIFICATION PLANT

PROJECT	FLUOR CONTRACT NO.	CWBS NO.
B-595	8457	P06B
SCALE: SHOWN	BLDG NO.: 1	INDEX NO.:

CLASSIFICATION	BY	DRAWING NUMBER	SHEET	OF	REV
NONE	NOT REQD	H-2-120302	6	18	0

G INDEX

DISTRIBUTION CODE: M6 ACAD

INITIALS: PN

DATE: 03-16-93

QUALITY LEVEL II

SAFETY CLASS 3

APR - 8 1993

REV NO.	DATE	REVISION DESCRIPTION	EG	RC	CD	
0	04/06/93	APPROVED FOR CONSTRUCTION	EG	RC	CD	NA/NA
			NA	NA	NA	NA

CADFILE B120302G CADCODE 2B:IBM:ACD2:12.C1:SS

ENGINEERING RELEASE

REV _____ DATE _____

ERO _____

SIGNATURE	DATE
PROJ DIR NA	
QA MGR NA	
INDEPENDENT SAFETY MGR NA	
PROJECT MGR NA	
SYSTEMS MGR NA	
ENGINEERING MGR NA	
SUPERVISOR C. DIVONA	11-3-92
DESIGN ENGINEER R. CHOATE	11-3-92
CHECKED E. GARCIA	3-24-93 11-2-92
DRAWN P.NGUYEN	05/13/92

U.S.DEPARTMENT OF ENERGY

Richland Field Office

DE – AC06–86RL10838

FLUOR DANIEL, INC.
ADVANCED TECHNOLOGY DIVISION

TU–130–001 POUR TURNTABLE ASSEMBLY

PROJECT TITLE: HANFORD WASTE VITRIFICATION PLANT

PROJECT	FLUOR CONTRACT NO.	CWBS NO.
B–595	8457	P06B
SCALE 1/8	BLDG NO. 1	INDEX NO.

CLASSIFICATION	BY	DRAWING NUMBER	SHEET	OF	REV
NONE	NOT REQD	H–2–120302	7	18	0

G INDEX

B

A

2 1

F C 78 79 80

DISTRIBUTION CODE: 402 M7 ACAD

INITIALS: PN

DATE: 03–16–93

APR - 8 1993

QUALITY LEVEL II

SAFETY CLASS 3

REV NO.	DATE	REVISION DESCRIPTION	EG	RC	CD	
0	04/06/93	APPROVED FOR CONSTRUCTION	NA	NA	NA	NA

CADFILE	B120302H
CADCODE	2B:IBM:ACD2:12.C1:SS

ENGINEERING RELEASE

REV _____ DATE _____

ERO _____

SIGNATURE	DATE
PROJ DIR NA	
QA MGR NA	
INDEPENDENT SAFETY MGR NA	
PROJECT MGR NA	
SYSTEMS MGR NA	
ENGINEERING MGR NA	
SUPERVISOR C. DIVONA	11-3-92
DESIGN ENGINEER R. CHOATE	11-3-92
CHECKED E. GARCIA	~~3-24-93~~ 11-2-92
DRAWN P.NGUYEN	05/14/92

U.S.DEPARTMENT OF ENERGY

Richland Field Office

DE - AC06-86RL10838

FLUOR DANIEL, INC.

ADVANCED TECHNOLOGY DIVISION

TU-130-001 POUR TURNTABLE ASSEMBLY

PROJECT TITLE: HANFORD WASTE VITRIFICATION PLANT

PROJECT	FLUOR CONTRACT NO.	CWBS NO.
B-595	8457	P06B
SCALE 1/12	BLDG NO. 1	INDEX NO.

CLASSIFICATION	BY	DRAWING NUMBER	SHEET	OF	REV
NONE	NOT REQD	H-2-120302	8	18	0

G INDEX

DISTRIBUTION CODE: 402

M8

ACAD

INITIALS: PN

DATE: 03-16-93

QUALITY LEVEL II

SAFETY CLASS 3

APR - 8 1993

REV NO.	DATE	REVISION DESCRIPTION	APPROVAL INITIALS			
0	04/06/93	APPROVED FOR CONSTRUCTION	EG	RC	CD	NA / NA
			NA	NA	NA	NA

CADFILE	B120302J	CADCODE	2B:IBM:ACD2:12.C1:SS

ENGINEERING RELEASE

REV _____ DATE _____

ERO _____

SIGNATURE	DATE
PROJ DIR NA	
QA MGR NA	
INDEPENDENT SAFETY MGR NA	
PROJECT MGR NA	
SYSTEMS MGR NA	
ENGINEERING MGR NA	
SUPERVISOR C. DIVONA	11-3-92
DESIGN ENGINEER R. CHOATE	11-3-92
CHECKED E. GARCIA	11-2-92
DRAWN P. NGUYEN	03/03/92

U.S. DEPARTMENT OF ENERGY

Richland Field Office

DE – AC06–86RL10838

FLUOR DANIEL, INC.
ADVANCED TECHNOLOGY DIVISION

TU–130–001 POUR TURNTABLE ASSEMBLY

PROJECT TITLE: HANFORD WASTE VITRIFICATION PLANT

PROJECT	FLUOR CONTRACT NO.	CWBS NO.
B–595	8457	P06B
SCALE 1/8	BLDG NO. 1	INDEX NO.

CLASSIFICATION	BY	DRAWING NUMBER	SHEET	OF	REV
NONE	NOT REQD	H–2–120302	9	18	0

INDEX

DISTRIBUTION CODE: 402 M9 ACAD

INITIALS: PN

DATE: 03–16–93

QUALITY LEVEL II

SAFETY CLASS 3

APR - 8 1993

REV NO.	DATE	REVISION DESCRIPTION	EG	RC	CD	
						B
0	04/ /93	APPROVED FOR CONSTRUCTION	EG	RC	CD	NA / NA
			NA	NA	NA	NA

CADFILE B120302K CADCODE 2B:IBM:ACD2:12.C1:SS

ENGINEERING RELEASE

REV _____ DATE _____

ERO _____

SIGNATURE	DATE
PROJ DIR NA	
QA MGR NA	
INDEPENDENT SAFETY MGR NA	
PROJECT MGR NA	
SYSTEMS MGR NA	
ENGINEERING MGR NA	
SUPERVISOR C. DIVONA	11-3-92
DESIGN ENGINEER R. CHOATE	11-3-92
CHECKED E. GARCIA	11-2-92
DRAWN P.NGUYEN	05/22/92

U.S.DEPARTMENT OF ENERGY

Richland Field Office

DE - AC06-86RL10838

FLUOR DANIEL, INC.
ADVANCED TECHNOLOGY DIVISION

TU-130-001 POUR TURNTABLE ASSEMBLY

A

PROJECT TITLE: HANFORD WASTE VITRIFICATION PLANT

PROJECT	FLUOR CONTRACT NO.	CWBS NO.
B-595	8457	P06B
SCALE 1/8	BLDG NO. 1	INDEX NO.

CLASSIFICATION	BY	DRAWING NUMBER	SHEET	OF	REV
NONE	NOT REQD	H-2-120302	10	18	0

INDEX

DISTRIBUTION CODE: 402 M10 ACAD

INITIALS: PN

DATE: 03-16-93

QUALITY LEVEL II

SAFETY CLASS 3

APR - 8 1993

REV NO.	DATE	REVISION DESCRIPTION				
0	04/02/93	APPROVED FOR CONSTRUCTION	EG	RC	CD	NA / NA
			NA	NA	NA	NA

CADFILE	B120302L	CADCODE	2B:IBM:ACD2:12.C1:SS

ENGINEERING RELEASE

REV _____ DATE _____

ERO _____

SIGNATURE	DATE
PROJ DIR NA	
QA MGR NA	
INDEPENDENT SAFETY MGR NA	
PROJECT MGR NA	
SYSTEMS MGR NA	
ENGINEERING MGR NA	
SUPERVISOR C. DIVONA	11-3-92
DESIGN ENGINEER R. CHOATE	11-3-92
CHECKED E. GARCIA	11-2-92
DRAWN R.MOREL	9-2-92

U.S.DEPARTMENT OF ENERGY

Richland Field Office

DE – AC06–86RL10838

FLUOR DANIEL, INC.
ADVANCED TECHNOLOGY DIVISION

TU–130–001 LIMIT SWITCH BRACKET WELDMENT

PROJECT TITLE: HANFORD WASTE VITRIFICATION PLANT

PROJECT	FLUOR CONTRACT NO.	CWBS NO.
B–595	8457	P06B
SCALE: SHOWN	BLDG NO.: 1	INDEX NO.:

CLASSIFICATION	BY	DRAWING NUMBER	SHEET	OF	REV
NONE	NOT REQD	H–2–120302	11	18	0

INDEX

DISTRIBUTION CODE: 402

M11

ACAD

INITIALS: PN

DATE: 03–16–93

QUALITY LEVEL II

SAFETY CLASS 3

APR - 8 1993

REV NO.	DATE	REVISION DESCRIPTION				
0	04/06/93	APPROVED FOR CONSTRUCTION	EG	RC	CD	NA / NA
			NA	NA	NA	NA

CADFILE	B120302M	CADCODE	2B:IBM:ACD2:12.C1:SS

ENGINEERING RELEASE

REV _____ DATE _____

ERO _____

SIGNATURE	DATE
PROJ DIR NA	
QA MGR NA	
INDEPENDENT SAFETY MGR NA	
PROJECT MGR NA	
SYSTEMS MGR NA	
ENGINEERING MGR NA	
SUPERVISOR C. DIVONA	11-3-92
DESIGN ENGINEER R. CHOATE	11-3-92
CHECKED E. GARCIA	~~3-24-93~~ 11-2-92
DRAWN P.NGUYEN	03/04/92

U.S.DEPARTMENT OF ENERGY

Richland Field Office

DE - AC06-86RL10838

FLUOR DANIEL, INC.
ADVANCED TECHNOLOGY DIVISION

TU-130-001 DRIVE ARM & PLUNGER ASSEMBLIES

PROJECT TITLE: HANFORD WASTE VITRIFICATION PLANT

PROJECT	FLUOR CONTRACT NO.	CWBS NO.
B-595	8457	P06B
SCALE: SHOWN	BLDG NO.: 1	INDEX NO.

CLASSIFICATION	BY	DRAWING NUMBER	SHEET	OF	REV
NONE	NOT REQD	H-2-120302	12	18	0

INDEX

DISTRIBUTION CODE: 402

M12

ACAD

INITIALS: PN

DATE: 03-16-93

QUALITY LEVEL II

SAFETY CLASS 3

APR - 8 1993

REV NO.	DATE	REVISION DESCRIPTION	EG	RC	CD	
						B
0	04/09/93	APPROVED FOR CONSTRUCTION	EG	RC	CD	NA / NA
			NA	NA	NA	NA

CADFILE B120302N CADCODE 2B:IBM:ACD2:12.C1:SS

ENGINEERING RELEASE

REV _____ DATE _____

ERO _____

SIGNATURE	DATE
PROJ DIR NA	
QA MGR NA	
INDEPENDENT SAFETY MGR NA	
PROJECT MGR NA	
SYSTEMS MGR NA	
ENGINEERING MGR NA	
SUPERVISOR C. DIVONA	11-3-92
DESIGN ENGINEER R. CHOATE	11-3-92
CHECKED E. GARCIA	11-2-92
DRAWN P. NGUYEN	03/04/92

U.S.DEPARTMENT OF ENERGY

Richland Field Office

DE - AC06-86RL10838

FLUOR DANIEL, INC.
ADVANCED TECHNOLOGY DIVISION

TU-130-001

BASE WELDMENT

A

PROJECT TITLE: HANFORD WASTE VITRIFICATION PLANT

PROJECT	FLUOR CONTRACT NO.	CWBS NO.
B-595	8457	P06B
SCALE 1/4	BLDG NO. 1	INDEX NO.

CLASSIFICATION	BY	DRAWING NUMBER	SHEET	OF	REV
NONE	NOT REQD	H-2-120302	13	18	0

G INDEX

2 1

DISTRIBUTION CODE: 402 M13 ACAD

INITIALS: PN

DATE: 03-16-93

QUALITY LEVEL II

SAFETY CLASS 3

APR - 8 1993

REV NO.	DATE	REVISION DESCRIPTION	EG	RC	CD	NA
0	04/06/93	APPROVED FOR CONSTRUCTION	EG	RC	CD	NA
			NA	NA	NA	NA

CADFILE B120302P CADCODE 2B:IBM:ACD2:12.C1:SS

ENGINEERING RELEASE

REV _____ DATE _____

ERO _____

SIGNATURE	DATE
PROJ DIR NA	
QA MGR NA	
INDEPENDENT SAFETY MGR NA	
PROJECT MGR NA	
SYSTEMS MGR NA	
ENGINEERING MGR NA	
SUPERVISOR C. DIVONA	11-3-92
DESIGN ENGINEER R. CHOATE	11-3-92
CHECKED E. GARCIA	11-2-92
DRAWN P.NGUYEN	03/04/92

U.S.DEPARTMENT OF ENERGY

Richland Field Office

DE – AC06-86RL10838

FLUOR DANIEL, INC.
ADVANCED TECHNOLOGY DIVISION

TU-130-001

WHEEL COVER DETAILS

PROJECT TITLE: HANFORD WASTE VITRIFICATION PLANT

PROJECT	FLUOR CONTRACT NO.	CWBS NO.
B-595	8457	P06B
SCALE 1/2	BLDG NO. 1	INDEX NO.

CLASSIFICATION	BY	DRAWING NUMBER	SHEET	OF	REV
NONE	NOT REQD	H-2-120302	14	18	0

INDEX

DISTRIBUTION CODE: 402 M14 ACAD

INITIALS: PN

DATE: 03-16-93

QUALITY LEVEL II

SAFETY CLASS 3

APR - 8 1993

REV NO.	DATE	REVISION DESCRIPTION	EG	RC	CD	
0	04/06/93	APPROVED FOR CONSTRUCTION	EG	RC	CD	NA / NA
			NA	NA	NA	NA

CADFILE	B120302R	CADCODE	2B:IBM:ACD2:12.C1:SS

ENGINEERING RELEASE

REV _____ DATE _____

ERO _____

SIGNATURE	DATE
PROJ DIR NA	
QA MGR NA	
INDEPENDENT SAFETY MGR NA	
PROJECT MGR NA	
SYSTEMS MGR NA	
ENGINEERING MGR NA	
SUPERVISOR C. DIVONA	11-3-92
DESIGN ENGINEER R. CHOATE	11-3-92
CHECKED E. GARCIA	11-2-92
DRAWN P. NGUYEN	03/04/92

U.S. DEPARTMENT OF ENERGY

Richland Field Office

DE – AC06-86RL10838

FLUOR DANIEL, INC.
ADVANCED TECHNOLOGY DIVISION

TU-130-001

WHEEL COVER ASSEMBLY

PROJECT TITLE: HANFORD WASTE VITRIFICATION PLANT

PROJECT	FLUOR CONTRACT NO.	CWBS NO.
B-595	8457	P06B
SCALE 1/2	BLDG NO. 1	INDEX NO.

CLASSIFICATION	BY	DRAWING NUMBER	SHEET	OF	REV
NONE	NOT REQD	H-2-120302	15	18	0

INDEX

DISTRIBUTION CODE: 402

M15

ACAD

INITIALS: PN

DATE: 03-16-93

QUALITY LEVEL II

SAFETY CLASS 3

APR - 8 1993

REV NO.	DATE	REVISION DESCRIPTION				
0	04/06/93	APPROVED FOR CONSTRUCTION	EG	RC	CD	NA / NA
			NA	NA	NA	NA

APPROVAL INITIALS

CADFILE B120302S CADCODE 2B:IBM:ACD2:12.C1:SS

ENGINEERING RELEASE

REV _____ DATE _____

ERO _____

SIGNATURE	DATE
PROJ DIR NA	
QA MGR NA	
INDEPENDENT SAFETY MGR NA	
PROJECT MGR NA	
SYSTEMS MGR NA	
ENGINEERING MGR NA	
SUPERVISOR C. DIVONA	11-3-92
DESIGN ENGINEER R. CHOATE	11-3-92
CHECKED E. GARCIA	11-2-92
DRAWN P. NGUYEN	03/05/92

U.S. DEPARTMENT OF ENERGY

Richland Field Office

DE – AC06–86RL10838

FLUOR DANIEL, INC.
ADVANCED TECHNOLOGY DIVISION

TU–130–001

BEVEL GEAR

PROJECT TITLE: HANFORD WASTE VITRIFICATION PLANT

PROJECT	FLUOR CONTRACT NO.	CWBS NO.
B–595	8457	P06B
SCALE 1/4	BLDG NO. 1	INDEX NO.

CLASSIFICATION	BY	DRAWING NUMBER	SHEET	OF	REV
NONE	NOT REQD	H–2–120302	16	18	0

G INDEX

DISTRIBUTION CODE: 402 M16 ACAD

INITIALS: PN

DATE: 03–16–93

QUALITY LEVEL II

SAFETY CLASS 3

APR - 8 1993

REV NO.	DATE	REVISION DESCRIPTION	EG	RC	CD	NA
0	04/06/93	APPROVED FOR CONSTRUCTION	EG	RC	CD	NA
			NA	NA	NA	NA

CADFILE B120302T CADCODE 2B:IBM:ACD2:12.C1:SS

ENGINEERING RELEASE

REV _____ DATE _____

ERO _____

SIGNATURE	DATE
PROJ DIR NA	
QA MGR NA	
INDEPENDENT SAFETY MGR NA	
PROJECT MGR NA	
SYSTEMS MGR NA	
ENGINEERING MGR NA	
SUPERVISOR C. DIVONA	11-3-92
DESIGN ENGINEER R. CHOATE	11-3-92
CHECKED E. GARCIA	11-2-92
DRAWN P.NGUYEN	05/14/92

U.S.DEPARTMENT OF ENERGY

Richland Field Office

DE - AC06-86RL10838

FLUOR DANIEL, INC.
ADVANCED TECHNOLOGY DIVISION

TU-130-001

ASSEMBLY & DETAILS

PROJECT TITLE: HANFORD WASTE VITRIFICATION PLANT

PROJECT	FLUOR CONTRACT NO.	CWBS NO.
B-595	8457	P06B
SCALE: SHOWN	BLDG NO.: 1	INDEX NO.

CLASSIFICATION	BY	DRAWING NUMBER	SHEET	OF	REV
NONE	NOT REQD	H-2-120302	17	18	0

INDEX

DISTRIBUTION CODE: 402 M17 ACAD

INITIALS: PN

DATE: 03-16-93

QUALITY LEVEL II

SAFETY CLASS 3

APR - 8 1993

REV NO.	DATE	REVISION DESCRIPTION	APPROVAL INITIALS			
0	04/06/93	APPROVED FOR CONSTRUCTION	EG	RC	CD	NA NA
			NA	NA	NA	NA

CADFILE	B120302U	CADCODE	2B:IBM:ACD2:12.C1:SS

ENGINEERING RELEASE

REV _____ DATE _____

ERO _____

SIGNATURE	DATE
PROJ DIR NA	
QA MGR NA	
INDEPENDENT SAFETY MGR NA	
PROJECT MGR NA	
SYSTEMS MGR NA	
ENGINEERING MGR NA	
SUPERVISOR C. DIVONA	11-3-92
DESIGN ENGINEER R. CHOATE	11-3-92
CHECKED E. GARCIA	~~3-24-93~~ 11-2-92
DRAWN D.RUFENACHT	06/12/92

U.S.DEPARTMENT OF ENERGY

Richland Field Office

DE – AC06-86RL10838

FLUOR DANIEL, INC.
ADVANCED TECHNOLOGY DIVISION

TU-130-001

DETAILS

PROJECT TITLE: HANFORD WASTE VITRIFICATION PLANT

PROJECT	FLUOR CONTRACT NO.	CWBS NO.
B-595	8457	P06B
SCALE 1/1	BLDG NO. 1	INDEX NO.

CLASSIFICATION	BY	DRAWING NUMBER	SHEET	OF	REV
NONE	NOT REQD	H-2-120302	18	18	0

INDEX

DISTRIBUTION CODE: 402

M18

ACAD

INITIALS: PN

DATE: 03-16-93

QUALITY LEVEL II

SAFETY CLASS 3

APR - 8 1993

REV NO.	DATE	REVISION DESCRIPTION	APPROVAL INITIALS			
0	04/06/93	APPROVED FOR CONSTRUCTION	RB	RC	CD	NA NA
			NA	NA	NA	NA

CADFILE	B120303A	CADCODE	2B:IBM:ACD2:12.C1:SS

ENGINEERING RELEASE

REV _____ DATE _____

ERO _____

SIGNATURE	DATE
PROJ DIR NA	
QA MGR NA	
INDEPENDENT SAFETY MGR NA	
PROJECT MGR NA	
SYSTEMS MGR NA	
ENGINEERING MGR NA	
SUPERVISOR C. DIVONA	11/3/92
DESIGN ENGINEER R. CHOATE	11/3/92
CHECKED R. BIANCHI	11/2/92
DRAWN E. GARCIA	01/22/92

U.S.DEPARTMENT OF ENERGY

Richland Field Office

DE – AC06–86RL10838

FLUOR DANIEL, INC.
ADVANCED TECHNOLOGY DIVISION

TU–130–001 CANISTER GUIDE WELDMENT

PROJECT TITLE: HANFORD WASTE VITRIFICATION PLANT

PROJECT	FLUOR CONTRACT NO.	CWBS NO.
B–595	8457	P06B
SCALE 1/8	BLDG NO. 1	INDEX NO.

CLASSIFICATION	BY	DRAWING NUMBER	SHEET	OF	REV
NONE	NOT REQD	H–2–120303	1	2	0

INDEX

DISTRIBUTION CODE: 403 M19 ACAD

INITIALS: PN

DATE: 03–16–93

QUALITY LEVEL II
SAFETY CLASS 3

APR - 8 1993

REV NO.	DATE	REVISION DESCRIPTION	RB	RC	CD	NA
0	04/06/93	APPROVED FOR CONSTRUCTION	RB	RC	CD	NA
			NA	NA	NA	NA

APPROVAL INITIALS

CADFILE B120303B CADCODE 2B:IBM:ACD2:12.C1:SS

ENGINEERING RELEASE
REV _____ DATE _____
ERO _____

SIGNATURE	DATE
PROJ DIR NA	
QA MGR NA	
INDEPENDENT SAFETY MGR NA	
PROJECT MGR NA	
SYSTEMS MGR NA	
ENGINEERING MGR NA	
SUPERVISOR C. DIVONA	11/3/92
DESIGN ENGINEER R. CHOATE	11/3/92
CHECKED R. BIANCHI	11/2/92
DRAWN E. YBARRA	10/20/92

U.S.DEPARTMENT OF ENERGY
Richland Field Office
DE - AC06-86RL10838

FLUOR DANIEL, INC.
ADVANCED TECHNOLOGY DIVISION

TU-130-001 CANISTER GUIDE DETAILS

PROJECT TITLE
HANFORD WASTE VITRIFICATION PLANT

PROJECT	FLUOR CONTRACT NO.	CWBS NO.
B-595	8457	P06B
SCALE 1/8	BLDG NO. 1	INDEX NO.

CLASSIFICATION	BY	DRAWING NUMBER	SHEET	OF	REV
NONE	NOT REQD	H-2-120303	2	2	0

G INDEX

DISTRIBUTION CODE: 403 M20 ACAD

INITIALS: PN
DATE: 03-16-93

QUALITY LEVEL II

SAFETY CLASS 3

APR - 8 1993

REV NO.	DATE	REVISION DESCRIPTION	APPROVAL INITIALS			
0	04/06/93	APPROVED FOR CONSTRUCTION	EG	RC	CD	NA
			NA	NA	NA	NA

CADFILE	B120304A
CADCODE	2B:IBM:ACD2:12.C1:SS

ENGINEERING RELEASE

REV _____ DATE _____

ERO _____

SIGNATURE	DATE
PROJ DIR NA	
QA MGR NA	
INDEPENDENT SAFETY MGR NA	
PROJECT MGR NA	
SYSTEMS MGR NA	
ENGINEERING MGR NA	
SUPERVISOR C. DIVONA	11-3-92
DESIGN ENGINEER R. CHOATE	11-3-92
CHECKED E. GARCIA	11-2-92
DRAWN R.MOREL	02/28/92

U.S.DEPARTMENT OF ENERGY

Richland Field Office

DE - AC06-86RL10838

FLUOR DANIEL, INC.
ADVANCED TECHNOLOGY DIVISION

TU-130-001 CART, SPIDER DRIVE SUPPORT ASSEMBLY

PROJECT TITLE: HANFORD WASTE VITRIFICATION PLANT

PROJECT	FLUOR CONTRACT NO.	CWBS NO.
B-595	8457	P06B
SCALE 1/4	BLDG NO. 1	INDEX NO.

CLASSIFICATION	BY	DRAWING NUMBER	SHEET	OF	REV
NONE	NOT REQD	H-2-120304	1	2	0

G INDEX

DISTRIBUTION CODE: 403 M21 ACAD

INITIALS: PN

DATE: 03-16-93

APR - 8 1993

QUALITY LEVEL II
SAFETY CLASS 3

REV NO.	DATE	REVISION DESCRIPTION	EG	RC	CD	NA
0	04/06/93	APPROVED FOR CONSTRUCTION	EG	RC	CD	NA NA
			NA	NA	NA	NA

APPROVAL INITIALS

CADFILE	B120304B
CADCODE	2B:IBM:ACD2:12.C1:SS

ENGINEERING RELEASE
REV _____ DATE _____
ERO _____

SIGNATURE	DATE
PROJ DIR NA	
QA MGR NA	
INDEPENDENT SAFETY MGR NA	
PROJECT MGR NA	
SYSTEMS MGR NA	
ENGINEERING MGR NA	
SUPERVISOR C. DIVONA	11-3-92
DESIGN ENGINEER R. CHOATE	11-3-92
CHECKED E. GARCIA	11-2-92
DRAWN R.MOREL	3-19-92

CLASSIFICATION	BY
NONE	NOT REQD

U.S.DEPARTMENT OF ENERGY

Richland Field Office
DE - AC06-86RL10838

FLUOR DANIEL, INC.
ADVANCED TECHNOLOGY DIVISION

TU-130-001
CART, SPIDER DRIVE SUPPORT DETAILS

PROJECT TITLE
HANFORD WASTE VITRIFICATION PLANT

PROJECT	FLUOR CONTRACT NO.	CWBS NO.
B-595	8457	P06B
SCALE	BLDG NO.	INDEX NO.
SHOWN	1	

DRAWING NUMBER	SHEET	OF	REV
H-2-120304	2	2	0

INDEX

DISTRIBUTION CODE: 403 M22 ACAD

INITIALS: PN
DATE: 03-16-93

APR - 8 1993

QUALITY LEVEL II

SAFETY CLASS 3

REV NO.	DATE	REVISION DESCRIPTION	APPROVAL INITIALS			
0	04/06/93	APPROVED FOR CONSTRUCTION	EG	RC	CD	NA NA
			NA	NA	NA	NA

CADFILE	B120305A	CADCODE	2B:IBM:ACD2:12.C1:SS

ENGINEERING RELEASE

REV _____ DATE _____

ERO _____

SIGNATURE	DATE
PROJ DIR NA	
QA MGR NA	
INDEPENDENT SAFETY MGR NA	
PROJECT MGR NA	
SYSTEMS MGR NA	
ENGINEERING MGR NA	
SUPERVISOR C. DIVONA	11-3-92
DESIGN ENGINEER R. CHOATE	11-3-92
CHECKED E. GARCIA	11-2-92
DRAWN R.MOREL	03/03/92

U.S.DEPARTMENT OF ENERGY

Richland Field Office

DE - AC06-86RL10838

FLUOR DANIEL, INC.
ADVANCED TECHNOLOGY DIVISION

TU-130-001 POUR TURNTABLE CART DRIVE PARTS LIST & NOTES

PROJECT TITLE: HANFORD WASTE VITRIFICATION PLANT

PROJECT	FLUOR CONTRACT NO.	CWBS NO.
B-595	8457	P06B
SCALE 1/4	BLDG NO. 1	INDEX NO.

CLASSIFICATION	BY	DRAWING NUMBER	SHEET	OF	REV
NONE	NOT REQD	H-2-120305	1	2	0

G INDEX

DISTRIBUTION CODE: 403

M23

ACAD

INITIALS: PN

DATE: 03-16-93

QUALITY LEVEL II
SAFETY CLASS 3

APR - 8 1993

REV NO.	DATE	REVISION DESCRIPTION	APPROVAL INITIALS			
0	04/06/93	APPROVED FOR CONSTRUCTION	EG	RC	CD	NA NA
			NA	NA	NA	NA

CADFILE B120305B CADCODE 2B:IBM:ACD2:12.C1:SS

ENGINEERING RELEASE
REV _____ DATE _____
ERO _____

SIGNATURE	DATE
PROJ DIR NA	
QA MGR NA	
INDEPENDENT SAFETY MGR NA	
PROJECT MGR NA	
SYSTEMS MGR NA	
ENGINEERING MGR NA	
SUPERVISOR C. DIVONA	11-3-92
DESIGN ENGINEER R. CHOATE	11-3-92
CHECKED E. GARCIA	11-2-92
DRAWN R.MOREL	3-27-92

U.S.DEPARTMENT OF ENERGY
Richland Field Office
DE - AC06-86RL10838

FLUOR DANIEL, INC.
ADVANCED TECHNOLOGY DIVISION

TU-130-001
CART DRIVE SUPPORT
DETAILS

PROJECT TITLE
HANFORD WASTE VITRIFICATION PLANT

PROJECT	FLUOR CONTRACT NO.	CWBS NO.
B-595	8457	P06B
SCALE SHOWN	BLDG NO. 1	INDEX NO.

CLASSIFICATION	BY	DRAWING NUMBER	SHEET	OF	REV
NONE	NOT REQD	H-2-120305	2	2	0

INDEX

DISTRIBUTION CODE: 403 M24 ACAD

INITIALS: PN
DATE: 03-16-93

QUALITY LEVEL II

SAFETY CLASS 3

APR - 8 1993

REV NO.	DATE	REVISION DESCRIPTION	APPROVAL INITIALS			
0	04/06/93	APPROVED FOR CONSTRUCTION	EG	RC	CD	NA/NA
			NA	NA	NA	NA

CADFILE B120306A CADCODE 2B:IBM:ACD2:12.C1:SS

ENGINEERING RELEASE

REV _____ DATE _____

ERO _____

SIGNATURE	DATE
PROJ DIR NA	
QA MGR NA	
INDEPENDENT SAFETY MGR NA	
PROJECT MGR NA	
SYSTEMS MGR NA	
ENGINEERING MGR NA	
SUPERVISOR C. DIVONA	11-3-92
DESIGN ENGINEER R. CHOATE	11-3-92
CHECKED E. GARCIA	~~3-24-93~~ 11-2-92
DRAWN S.HORVAT	5-6-92

U.S. DEPARTMENT OF ENERGY

Richland Field Office

DE - AC06-86RL10838

FLUOR DANIEL, INC.
ADVANCED TECHNOLOGY DIVISION

TU-130-001 SPIDER DRIVE MOTOR PARTS LIST & NOTES

PROJECT TITLE: HANFORD WASTE VITRIFICATION PLANT

PROJECT	FLUOR CONTRACT NO.	CWBS NO.
B-595	8457	P06B
SCALE: NONE	BLDG NO.: 1	INDEX NO.

CLASSIFICATION	BY	DRAWING NUMBER	SHEET	OF	REV
NONE	NOT REQD	H-2-120306	1	14	0

INDEX

DISTRIBUTION CODE: 403

M25

ACAD

INITIALS: PN

DATE: 03-16-93

QUALITY LEVEL II

SAFETY CLASS 3

REV NO.	DATE	REVISION DESCRIPTION	APPROVAL INITIALS			
0	04/06/93	APPROVED FOR CONSTRUCTION	EG	RC	CD	NA NA
			NA	NA	NA	NA

CADFILE	B120306B	CADCODE	2B:IBM:ACD2:12.C1:SS

ENGINEERING RELEASE

REV _____ DATE _____

ERO _____

SIGNATURE	DATE
PROJ DIR NA	
QA MGR NA	
INDEPENDENT SAFETY MGR NA	
PROJECT MGR NA	
SYSTEMS MGR NA	
ENGINEERING MGR NA	
SUPERVISOR C. DIVONA	11-3-92
DESIGN ENGINEER R. CHOATE	11-3-92
CHECKED E. GARCIA	11-2-92
DRAWN S.HORVAT	11-19-91

U.S.DEPARTMENT OF ENERGY

Richland Field Office

DE – AC06–86RL10838

FLUOR DANIEL, INC.
ADVANCED TECHNOLOGY DIVISION

TU–130–001 SPIDER DRIVE MOTOR ASSEMBLY

PROJECT TITLE: HANFORD WASTE VITRIFICATION PLANT

PROJECT	FLUOR CONTRACT NO.	CWBS NO.
B–595	8457	P06B
SCALE 1/4	BLDG NO. 1	INDEX NO.

CLASSIFICATION	BY	DRAWING NUMBER	SHEET	OF	REV
NONE	NOT REQD	H–2–120306	2	14	0

DISTRIBUTION CODE: 402 M26 ACAD

INITIALS: PN

DATE: 03–16–93

QUALITY LEVEL II

SAFETY CLASS 3

APR - 8 1993

REV NO.	DATE	REVISION DESCRIPTION	EG	RC	CD	
0	04/06/93	APPROVED FOR CONSTRUCTION	EG	RC	CD	NA/NA
			NA	NA	NA	NA

APPROVAL INITIALS

CADFILE B120306C CADCODE 2B:IBM:ACD2:12.C1:SS

ENGINEERING RELEASE

REV _____ DATE _____

ERD _____

SIGNATURE	DATE
PROJ DIR NA	
QA MGR NA	
INDEPENDENT SAFETY MGR NA	
PROJECT MGR NA	
SYSTEMS MGR NA	
ENGINEERING MGR NA	
SUPERVISOR C. DIVONA	11-3-92
DESIGN ENGINEER R. CHOATE	11-3-92
CHECKED E. GARCIA	~~3-24-93~~ 11-2-92
DRAWN S.HORVAT	11-18-92

U.S.DEPARTMENT OF ENERGY

Richland Field Office

DE - AC06-86RL10838

FLUOR DANIEL, INC.
ADVANCED TECHNOLOGY DIVISION

TU-130-001 SPIDER DRIVE MOTOR ASSEMBLY

PROJECT TITLE

HANFORD WASTE VITRIFICATION PLANT

PROJECT	FLUOR CONTRACT NO.	CWBS NO.
B-595	8457	P06B
SCALE 1/4	BLDG NO. 1	INDEX NO.

CLASSIFICATION	BY	DRAWING NUMBER	SHEET	OF	REV
NONE	NOT REQD	H-2-120306	3	14	0

DISTRIBUTION CODE: 403 **M27** ACAD

INITIALS: PN

DATE: 03-16-93

QUALITY LEVEL II

SAFETY CLASS 3

APR - 8 1993

REV NO.	DATE	REVISION DESCRIPTION	APPROVAL INITIALS			
0	04/06/93	APPROVED FOR CONSTRUCTION	EG	RC	CD	NA NA
			NA	NA	NA	NA

CADFILE	B120306D	CADCODE	2B:IBM:ACD2:12.C1:SS

ENGINEERING RELEASE

REV _____ DATE _____

ERO _____

SIGNATURE	DATE
PROJ DIR NA	
QA MGR NA	
INDEPENDENT SAFETY MGR NA	
PROJECT MGR NA	
SYSTEMS MGR NA	
ENGINEERING MGR NA	
SUPERVISOR C. DIVONA	11-3-92
DESIGN ENGINEER R. CHOATE	11-3-92
CHECKED E. GARCIA	11-2-92
DRAWN S.HORVAT	11/18/91

U.S.DEPARTMENT OF ENERGY

Richland Field Office

DE – AC06–86RL10838

FLUOR DANIEL, INC.
ADVANCED TECHNOLOGY DIVISION

TU–130–001 MOUNTING PLATE

PROJECT TITLE: HANFORD WASTE VITRIFICATION PLANT

PROJECT	FLUOR CONTRACT NO.	CWBS NO.
B–595	8457	P06B
SCALE: SHOWN	BLDG NO.: 1	INDEX NO.:

CLASSIFICATION	BY	DRAWING NUMBER	SHEET	OF	REV
NONE	NOT REQD	H–2–120306	4	14	0

INDEX

DISTRIBUTION CODE: 403

M28

ACAD

INITIALS: PN

DATE: 03–16–93

QUALITY LEVEL II

SAFETY CLASS 3

APR - 8 1993

REV NO.	DATE	REVISION DESCRIPTION	EG	RC	CD	
0	04/06/93	APPROVED FOR CONSTRUCTION	EG	RC	CD	NA / NA
			NA	NA	NA	NA

CADFILE	B120306E	CADCODE	2B:IBM:ACD2:12.C1:SS

ENGINEERING RELEASE

REV _____ DATE _____

ERO _____

SIGNATURE	DATE
PROJ DIR NA	
QA MGR NA	
INDEPENDENT SAFETY MGR NA	
PROJECT MGR NA	
SYSTEMS MGR NA	
ENGINEERING MGR NA	
SUPERVISOR C. DIVONA CD	11-3-92
DESIGN ENGINEER R. CHOATE RC	11-3-92
CHECKED E. GARCIA EG	11-2-92
DRAWN S.HORVAT	11/18/91

U.S.DEPARTMENT OF ENERGY

Richland Field Office

DE - AC06-86RL10838

FLUOR DANIEL, INC.
ADVANCED TECHNOLOGY DIVISION

TU-130-001 LIMIT SWITCH MOUNTING ASSEMBLY

PROJECT TITLE

HANFORD WASTE VITRIFICATION PLANT

PROJECT	FLUOR CONTRACT NO.	CWBS NO.
B-595	8457	P06B
SCALE	BLDG NO.	INDEX NO.
1/4	1	

CLASSIFICATION	BY	DRAWING NUMBER	SHEET	OF	REV
NONE	NOT REQD	H-2-120306	5	14	0

DISTRIBUTION CODE: 403

M29

ACAD

INITIALS: PN

DATE: 03-16-93

QUALITY LEVEL II

SAFETY CLASS 3

APR - 8 1993

REV NO.	DATE	REVISION DESCRIPTION	APPROVAL INITIALS			
0	04/06/93	APPROVED FOR CONSTRUCTION	EG	RC	CD	NA/NA
			NA	NA	NA	NA

CADFILE	B120306F	CADCODE	2B:IBM:ACD2:12.C1:SS

ENGINEERING RELEASE

REV _____ DATE _____

ERO _____

SIGNATURE	DATE
PROJ DIR NA	
QA MGR NA	
INDEPENDENT SAFETY MGR NA	
PROJECT MGR NA	
SYSTEMS MGR NA	
ENGINEERING MGR NA	
SUPERVISOR C. DIVONA	11-3-92
DESIGN ENGINEER R. CHOATE	11-3-92
CHECKED E. GARCIA	~~3-24-93~~ 11-2-92
DRAWN S.HORVAT	11/19/91

U.S.DEPARTMENT OF ENERGY

Richland Field Office

DE - AC06-86RL10838

FLUOR DANIEL, INC.

ADVANCED TECHNOLOGY DIVISION

TU-130-001

SPIDER DRIVE MOTOR

FRAME WELDMENT

PROJECT TITLE

HANFORD WASTE VITRIFICATION PLANT

PROJECT	FLUOR CONTRACT NO.	CWBS NO.
B-595	8457	P06B
SCALE	BLDG NO.	INDEX NO.
1/4	1	

CLASSIFICATION	BY	DRAWING NUMBER	SHEET	OF	REV
NONE	NOT REQD	H-2-120306	6	14	0

INDEX

B

A

2

1

C

179 80

DISTRIBUTION CODE: 403

M30

ACAD

INITIALS: PN

DATE: 03-16-93

QUALITY LEVEL II

SAFETY CLASS 3

APR - 8 1993

REV NO.	DATE	REVISION DESCRIPTION	APPROVAL INITIALS			
0	04/06/93	APPROVED FOR CONSTRUCTION	EG	RC	CD	NA NA
			NA	NA	NA	NA

CADFILE	B120306G	CADCODE	2B:IBM:ACD2:12.C1:SS

ENGINEERING RELEASE

REV _____ DATE _____

ERO _____

SIGNATURE	DATE
PROJ DIR NA	
QA MGR NA	
INDEPENDENT SAFETY MGR NA	
PROJECT MGR NA	
SYSTEMS MGR NA	
ENGINEERING MGR NA	
SUPERVISOR C. DIVONA	11-3-92
DESIGN ENGINEER R. CHOATE	11-3-92
CHECKED E. GARCIA	~~3-24-93~~ 11-2-92
DRAWN S.HORVAT	11/21/91

U.S.DEPARTMENT OF ENERGY

Richland Field Office

DE – AC06–86RL10838

FLUOR DANIEL, INC.
ADVANCED TECHNOLOGY DIVISION

TU–130–001 SPIDER DRIVE MOTOR FRAME WELDMENT

PROJECT TITLE: **HANFORD WASTE VITRIFICATION PLANT**

PROJECT	FLUOR CONTRACT NO.	CWBS NO.
B–595	8457	P06B
SCALE 1/4	BLDG NO. 1	INDEX NO.

CLASSIFICATION	BY	DRAWING NUMBER	SHEET	OF	REV
NONE	NOT REQD	H–2–120306	7	14	0

INDEX

DISTRIBUTION CODE: 403

M31

ACAD

INITIALS: PN

DATE: 03–16–93

APR - 8 1993

QUALITY LEVEL II

SAFETY CLASS 3

REV NO.	DATE	REVISION DESCRIPTION				
0	04/06/93	APPROVED FOR CONSTRUCTION	EG	RC	CD	NA / NA
			NA	NA	NA	NA

APPROVAL INITIALS

CADFILE	B120306H	CADCODE	2B:IBM:ACD2:12.C1:SS

ENGINEERING RELEASE

REV _____ DATE _____

ERO _____

SIGNATURE	DATE
PROJ DIR NA	
QA MGR NA	
INDEPENDENT SAFETY MGR NA	
PROJECT MGR NA	
SYSTEMS MGR NA	
ENGINEERING MGR NA	
SUPERVISOR C. DIVONA	11-3-92
DESIGN ENGINEER R. CHOATE	11-3-92
CHECKED E. GARCIA	~~2-24-93~~ 11-2-92
DRAWN S.HORVAT	11/25/91

U.S.DEPARTMENT OF ENERGY

Richland Field Office

DE – AC06–86RL10838

FLUOR DANIEL, INC.
ADVANCED TECHNOLOGY DIVISION

TU–130–001 SPIDER DRIVE MOTOR FRAME WELDMENT

PROJECT TITLE: HANFORD WASTE VITRIFICATION PLANT

PROJECT	FLUOR CONTRACT NO.	CWBS NO.
B–595	8457	P06B
SCALE 1/4	BLDG NO. 1	INDEX NO.

CLASSIFICATION	BY	DRAWING NUMBER	SHEET	OF	REV
NONE	NOT REQD	H–2–120306	8	14	0

INDEX

DISTRIBUTION CODE: 403

M32

ACAD

INITIALS: PN

DATE: 03–16–93

QUALITY LEVEL II

SAFETY CLASS 3

APR - 8 1993

REV NO.	DATE	REVISION DESCRIPTION	APPROVAL INITIALS			
0	04/06/93	APPROVED FOR CONSTRUCTION	EG	RC	CD	NA NA
			NA	NA	NA	NA

CADFILE	B120306J	CADCODE	2B:IBM:ACD2:12.C1:SS

ENGINEERING RELEASE

REV _____ DATE _____

ERO _____

SIGNATURE	DATE
PROJ DIR NA	
QA MGR NA	
INDEPENDENT SAFETY MGR NA	
PROJECT MGR NA	
SYSTEMS MGR NA	
ENGINEERING MGR NA	
SUPERVISOR C. DIVONA	11-3-92
DESIGN ENGINEER R. CHOATE	11-3-92
CHECKED E. GARCIA	~~3-24-93~~ 11-2-92
DRAWN S.HORVAT	10-6-91

U.S. DEPARTMENT OF ENERGY

Richland Field Office

DE – AC06–86RL10838

FLUOR DANIEL, INC.
ADVANCED TECHNOLOGY DIVISION

TU–130–001 SPIDER DRIVE MOTOR DETAILS

PROJECT TITLE: **HANFORD WASTE VITRIFICATION PLANT**

PROJECT	FLUOR CONTRACT NO.	CWBS NO.
B–595	8457	P06B
SCALE 1/4	BLDG NO. 1	INDEX NO.

CLASSIFICATION	BY	DRAWING NUMBER	SHEET	OF	REV
NONE	NOT REQD	H–2–120306	9	14	0

INDEX

DISTRIBUTION CODE: 403

M33

ACAD

INITIALS: PN

DATE: 03–16–93

.50

QUALITY LEVEL II

SAFETY CLASS 3

APR - 8 1993

REV NO.	DATE	REVISION DESCRIPTION				
0	04/06/93	APPROVED FOR CONSTRUCTION	EG	RC	CD	NA / NA
			NA	NA	NA	NA

CADFILE	B120306K	CADCODE	2B:IBM:ACD2:12.C1:SS

ENGINEERING RELEASE

REV _____ DATE _____

ERO _____

SIGNATURE	DATE
PROJ DIR NA	
QA MGR NA	
INDEPENDENT SAFETY MGR NA	
PROJECT MGR NA	
SYSTEMS MGR NA	
ENGINEERING MGR NA	
SUPERVISOR C. DIVONA	11-3-92
DESIGN ENGINEER R. CHOATE	11-3-92
CHECKED E. GARCIA	11-2-92
DRAWN S.HORVAT	10/10/91

U.S.DEPARTMENT OF ENERGY

Richland Field Office

DE – AC06-86RL10838

FLUOR DANIEL, INC.
ADVANCED TECHNOLOGY DIVISION

TU-130-001 SPIDER DRIVE MOTOR DETAILS

PROJECT TITLE

HANFORD WASTE VITRIFICATION PLANT

PROJECT	FLUOR CONTRACT NO.	CWBS NO.
B-595	8457	P06B
SCALE	BLDG NO.	INDEX NO.
SHOWN	1	

CLASSIFICATION	BY	DRAWING NUMBER	SHEET	OF	REV
NONE	NOT REQD	H-2-120306	10	14	0

DISTRIBUTION CODE: 403

M34

ACAD

INITIALS: PN

DATE: 03-16-93

QUALITY LEVEL II

SAFETY CLASS 3

APR - 8 1993

REV NO.	DATE	REVISION DESCRIPTION	EG	RC	CD	NA
0	04/06/93	APPROVED FOR CONSTRUCTION	EG	RC	CD	NA
			NA	NA	NA	NA

CADFILE B120306L CADCODE 2B:IBM:ACD2:12.C1:SS

ENGINEERING RELEASE

REV _____ DATE _____

ERO _____

SIGNATURE	DATE
PROJ DIR NA	
QA MGR NA	
INDEPENDENT SAFETY MGR NA	
PROJECT MGR NA	
SYSTEMS MGR NA	
ENGINEERING MGR NA	
SUPERVISOR C. DIVONA	11-3-92
DESIGN ENGINEER R. CHOATE	11-3-92
CHECKED E. GARCIA	~~3-24-93~~ 11-2-92
DRAWN S.HORVAT	10-15-91

U.S.DEPARTMENT OF ENERGY

Richland Field Office

DE – AC06–86RL10838

FLUOR DANIEL, INC.
ADVANCED TECHNOLOGY DIVISION

TU–130–001 SPIDER DRIVE MOTOR DETAILS

PROJECT TITLE: HANFORD WASTE VITRIFICATION PLANT

PROJECT	FLUOR CONTRACT NO.	CWBS NO.
B–595	8457	P06B
SCALE 1/2	BLDG NO. 1	INDEX NO.

CLASSIFICATION	BY	DRAWING NUMBER	SHEET	OF	REV
NONE	NOT REQD	H–2–120306	11	14	0

DISTRIBUTION CODE: 403 M35 ACAD

INITIALS: PN

DATE: 03–16–93

QUALITY LEVEL II

SAFETY CLASS 3

APR - 8 1993

REV NO.	DATE	REVISION DESCRIPTION	APPROVAL INITIALS			
0	04/06/93	APPROVED FOR CONSTRUCTION	EG	RC	CD	NA NA
			NA	NA	NA	NA

CADFILE	B120306M	CADCODE	2B:IBM:ACD2:12.C1:SS

ENGINEERING RELEASE

REV _____ DATE _____

ERO _____

SIGNATURE	DATE
PROJ DIR NA	
QA MGR NA	
INDEPENDENT SAFETY MGR NA	
PROJECT MGR NA	
SYSTEMS MGR NA	
ENGINEERING MGR NA	
SUPERVISOR C. DIVONA	11-3-92
DESIGN ENGINEER R. CHOATE	11-3-92
CHECKED E. GARCIA	~~7-24-93~~ 11-2-92
DRAWN S.HORVAT	10/25/91

U.S.DEPARTMENT OF ENERGY

Richland Field Office

DE – AC06-86RL10838

FLUOR DANIEL, INC.
ADVANCED TECHNOLOGY DIVISION

TU-130-001 SPIDER DRIVE MOTOR DETAILS

PROJECT TITLE: HANFORD WASTE VITRIFICATION PLANT

PROJECT	FLUOR CONTRACT NO.	CWBS NO.
B-595	8457	P06B
SCALE: SHOWN	BLDG NO.: 1	INDEX NO.

CLASSIFICATION	BY	DRAWING NUMBER	SHEET	OF	REV
NONE	NOT REQD	H-2-120306	12	14	0

DISTRIBUTION CODE: 403

M36

ACAD

INITIALS: PN

DATE: 03-16-93

QUALITY LEVEL II

SAFETY CLASS 3

APR - 8 1993

REV NO.	DATE	REVISION DESCRIPTION				
0	04/06/93	APPROVED FOR CONSTRUCTION	EG	RC	CD	NA / NA
			NA	NA	NA	NA

CADFILE	B120306N	CADCODE	2B:IBM:ACD2:12.C1:SS

ENGINEERING RELEASE

REV _____ DATE _____

ERO _____

SIGNATURE	DATE
PROJ DIR NA	
QA MGR NA	
INDEPENDENT SAFETY MGR NA	
PROJECT MGR NA	
SYSTEMS MGR NA	
ENGINEERING MGR NA	
SUPERVISOR C. DIVONA	11-3-92
DESIGN ENGINEER R. CHOATE	11-3-92
CHECKED E. GARCIA	11-2-92
DRAWN S.HORVAT	08/10/92

U.S.DEPARTMENT OF ENERGY

Richland Field Office

DE – AC06-86RL10838

FLUOR DANIEL, INC.
ADVANCED TECHNOLOGY DIVISION

TU-130-001 PILLOW BLOCK SUPPORT

PROJECT TITLE: HANFORD WASTE VITRIFICATION PLANT

PROJECT	FLUOR CONTRACT NO.	CWBS NO.
B-595	8457	P06B
SCALE 1/1	BLDG NO. 1	INDEX NO.

CLASSIFICATION	BY	DRAWING NUMBER	SHEET	OF	REV
NONE	NOT REQD	H-2-120306	13	14	0

INDEX

DISTRIBUTION CODE: 403

M37

ACAD

INITIALS: PN

DATE: 03-16-93

APR - 8 1993

QUALITY LEVEL II

SAFETY CLASS 3

REV NO.	DATE	REVISION DESCRIPTION	EG	RC	CD	
0	04/06/93	APPROVED FOR CONSTRUCTION	EG	RC	CD	NA NA
			NA	NA	NA	NA

CADFILE	B120306P	CADCODE	2B:IBM:ACD2:12.C1:SS

ENGINEERING RELEASE

REV _____ DATE _____

ERO _____

SIGNATURE	DATE
PROJ DIR NA	
QA MGR NA	
INDEPENDENT SAFETY MGR NA	
PROJECT MGR NA	
SYSTEMS MGR NA	
ENGINEERING MGR NA	
SUPERVISOR C. DIVONA	11-3-92
DESIGN ENGINEER R. CHOATE	11-3-92
CHECKED E. GARCIA	11-2-92
DRAWN S.HORVAT	10/30/91

U.S.DEPARTMENT OF ENERGY

Richland Field Office

DE – AC06–86RL10838

FLUOR DANIEL, INC.
ADVANCED TECHNOLOGY DIVISION

TU–130–001 SHAFT EXTENTION ASSEMBLY

PROJECT TITLE: HANFORD WASTE VITRIFICATION PLANT

PROJECT	FLUOR CONTRACT NO.	CWBS NO.
B–595	8457	P06B
SCALE: SHOWN	BLDG NO.: 1	INDEX NO.:

CLASSIFICATION	BY	DRAWING NUMBER	SHEET	OF	REV
NONE	NOT REQD	H–2–120306	14	14	0

INDEX

DISTRIBUTION CODE: 403

M38

ACAD

INITIALS: PN

DATE: 03–16–93

QUALITY LEVEL II

SAFETY CLASS 3

APR - 8 1993

REV NO.	DATE	REVISION DESCRIPTION	EG	RC	CD	
0	04/06/93	APPROVED FOR CONSTRUCTION	EG	RC	CD	NA / NA
			NA	NA	NA	NA

APPROVAL INITIALS

CADFILE	B120307A	CADCODE	2B:IBM:ACD2:12.C1:SS

ENGINEERING RELEASE

REV _____ DATE _____

ERO _____

SIGNATURE	DATE
PROJ DIR NA	
QA MGR NA	
INDEPENDENT SAFETY MGR NA	
PROJECT MGR NA	
SYSTEMS MGR NA	
ENGINEERING MGR NA	
SUPERVISOR C. DIVONA CD	11-3-92
DESIGN ENGINEER R. CHOATE RC	11-3-92
CHECKED E. GARCIA EG	~~7-24-93~~ 11-2-92
DRAWN BOB HUSTON	7-30-92

U.S. DEPARTMENT OF ENERGY

Richland Field Office

DE – AC06-86RL10838

FLUOR DANIEL, INC.
ADVANCED TECHNOLOGY DIVISION

TU-130-001 OUTER RAIL PARTS LIST AND NOTES

PROJECT TITLE: HANFORD WASTE VITRIFICATION PLANT

PROJECT	FLUOR CONTRACT NO.	CWBS NO.
B-595	8457	P06B
SCALE: SHOWN	BLDG NO.: 1	INDEX NO.:

CLASSIFICATION	BY	DRAWING NUMBER	SHEET	OF	REV
NONE	NOT REQD	H-2-120307	1	3	0

INDEX

DISTRIBUTION CODE: 403

M39

ACAD

INITIALS: PN

DATE: 03-16-93

F C 78 79 80

QUALITY LEVEL II

SAFETY CLASS 3

APR - 8 1993

REV NO.	DATE	REVISION DESCRIPTION	EG	RC	CD	NA
0	04/06/93	APPROVED FOR CONSTRUCTION	EG	RC	CD	NA / NA
			NA	NA	NA	NA

APPROVAL INITIALS

CADFILE	B120307C
CADCODE	2B:IBM:ACD2:12.C1:SS

ENGINEERING RELEASE

REV _____ DATE _____

ERO _____

SIGNATURE	DATE
PROJ DIR NA	
QA MGR NA	
INDEPENDENT SAFETY MGR NA	
PROJECT MGR NA	
SYSTEMS MGR NA	
ENGINEERING MGR NA	
SUPERVISOR C. DIVONA	11-3-92
DESIGN ENGINEER R. CHOATE	11-3-92
CHECKED E. GARCIA	11-2-92
DRAWN P. ASHLEY	12-06-91

U.S.DEPARTMENT OF ENERGY

Richland Field Office

DE – AC06-86RL10838

FLUOR DANIEL, INC.
ADVANCED TECHNOLOGY DIVISION

TU-130-001
INNER RAILS

PROJECT TITLE: HANFORD WASTE VITRIFICATION PLANT

PROJECT	FLUOR CONTRACT NO.	CWBS NO.
B-595	8457	P06B
SCALE: SHOWN	BLDG NO.: 1	INDEX NO.:

CLASSIFICATION	BY	DRAWING NUMBER	SHEET	OF	REV
NONE	NOT REQD	H-2-120307	3	3	0

G INDEX

DISTRIBUTION CODE: 403

M41

ACAD

INITIALS: PN

DATE: 03-16-93

QUALITY LEVEL II

SAFETY CLASS 3

APR - 8 1993

REV NO.	DATE	REVISION DESCRIPTION				
0	04/06/93	APPROVED FOR CONSTRUCTION	EG	RC	CD	NA NA
			NA	NA	NA	NA

CADFILE	B120307B	CADCODE	2B:IBM:ACD2:12.C1:SS

ENGINEERING RELEASE

REV _____ DATE _____

ERO _____

SIGNATURE	DATE
PROJ DIR NA	
QA MGR NA	
INDEPENDENT SAFETY MGR NA	
PROJECT MGR NA	
SYSTEMS MGR NA	
ENGINEERING MGR NA	
SUPERVISOR C. DIVONA	11-3-92
DESIGN ENGINEER R. CHOATE	11-3-92
CHECKED E. GARCIA	~~7-24-93~~ 11-2-92
DRAWN BOB HUSTON	7-31-91

U.S.DEPARTMENT OF ENERGY

Richland Field Office

DE – AC06–86RL10838

FLUOR DANIEL, INC.
ADVANCED TECHNOLOGY DIVISION

TU–130–001 OUTER RAILS

PROJECT TITLE: HANFORD WASTE VITRIFICATION PLANT

PROJECT	FLUOR CONTRACT NO.	CWBS NO.
B–595	8457	P06B
SCALE 1/4	BLDG NO. 1	INDEX NO.

CLASSIFICATION	BY	DRAWING NUMBER	SHEET	OF	REV
NONE	NOT REQD	H–2–120307	2	3	0

G INDEX

F C 78 79 80

DISTRIBUTION CODE: 403

M40

ACAD

INITIALS: PN

DATE: 03–16–93

5" 3" 1" 4" 2" 0 5" 15"

1/4 SCALE

QUALITY LEVEL II
SAFETY CLASS 3

APR - 8 1993

REV NO.	DATE	REVISION DESCRIPTION	EG	RC	CD	
0	04/06/93	APPROVED FOR CONSTRUCTION	EG	RC	CD	NA / NA
			NA	NA	NA	NA

CADFILE B120308A CADCODE 2B:IBM:ACD2:12.C1:SS

ENGINEERING RELEASE
REV _____ DATE _____
ERD _____

SIGNATURE	DATE
PROJ DIR NA	
QA MGR NA	
INDEPENDENT SAFETY MGR NA	
PROJECT MGR NA	
SYSTEMS MGR NA	
ENGINEERING MGR NA	
SUPERVISOR C. DIVONA	11-3-92
DESIGN ENGINEER R. CHOATE	11-3-92
CHECKED E. GARCIA	11-2-92
DRAWN S.L.REGACHO	09-23-91

U.S.DEPARTMENT OF ENERGY
Richland Field Office
DE – AC06–86RL10838

FLUOR DANIEL, INC.
ADVANCED TECHNOLOGY DIVISION

TU–130–001
CART DR MOT ASSY
PARTS LIST AND NOTES

PROJECT TITLE: HANFORD WASTE VITRIFICATION PLANT

PROJECT	FLUOR CONTRACT NO.	CWBS NO.
B–595	8457	P06B
SCALE 1/4	BLDG NO. 1	INDEX NO.

CLASSIFICATION	BY	DRAWING NUMBER	SHEET	OF	REV
NONE	NOT REQD	H–2–120308	1	4	0

G INDEX

DISTRIBUTION CODE: 403 M42 ACAD

INITIALS: PN
DATE: 03–16–93

F C 78 79 80

QUALITY LEVEL II

SAFETY CLASS 3

APR - 8 1993

REV NO.	DATE	REVISION DESCRIPTION	EG	RC	CD	
0	04/06/93	APPROVED FOR CONSTRUCTION	EG	RC	CD	NA / NA
			NA	NA	NA	NA

CADFILE	B120308B	CADCODE	2B:IBM:ACD2:12.C1:SS

ENGINEERING RELEASE

REV _____ DATE _____

ERD _____

SIGNATURE	DATE
PROJ DIR NA	
QA MGR NA	
INDEPENDENT SAFETY MGR NA	
PROJECT MGR NA	
SYSTEMS MGR NA	
ENGINEERING MGR NA	
SUPERVISOR C. DIVONA	11-3-92
DESIGN ENGINEER R. CHOATE	11-3-92
CHECKED E. GARCIA	~~7-24-93~~ 11-2-92
DRAWN S.L.REGACHO	09-23-91

U.S.DEPARTMENT OF ENERGY

Richland Field Office

DE - AC06-86RL10838

FLUOR DANIEL, INC.

ADVANCED TECHNOLOGY DIVISION

TU-130-001 CART DRIVE MOTOR WELDMENT

PROJECT TITLE: HANFORD WASTE VITRIFICATION PLANT

PROJECT	FLUOR CONTRACT NO.	CWBS NO.
B-595	8457	P06B
SCALE 1/4	BLDG NO. 1	INDEX NO.

CLASSIFICATION	BY	DRAWING NUMBER	SHEET	OF	REV
NONE	NOT REQD	H-2-120308	2	4	0

G INDEX

FC 78 79 80

DISTRIBUTION CODE: 403

M43

ACAD

INITIALS: PN

DATE: 03-16-93

QUALITY LEVEL II

SAFETY CLASS 3

APR - 8 1993

REV NO.	DATE	REVISION DESCRIPTION	EG	RC	CD	
0	04/06/93	APPROVED FOR CONSTRUCTION	EG	RC	CD	NA/NA
			NA	NA	NA	NA

APPROVAL INITIALS

CADFILE	B120308C	CADCODE	2B:IBM:ACD2:12.C1:SS

ENGINEERING RELEASE

REV _____ DATE _____

ERO _____

SIGNATURE	DATE
PROJ DIR NA	
QA MGR NA	
INDEPENDENT SAFETY MGR NA	
PROJECT MGR NA	
SYSTEMS MGR NA	
ENGINEERING MGR NA	
SUPERVISOR C. DIVONA	11-3-92
DESIGN ENGINEER R. CHOATE	11-3-92
CHECKED E. GARCIA	11-2-92
DRAWN S.L.REGACHO	04-10-92

U.S.DEPARTMENT OF ENERGY

Richland Field Office

DE - AC06-86RL10838

FLUOR DANIEL, INC.
ADVANCED TECHNOLOGY DIVISION

TU-130-001 CART DRIVE MOTOR SPLASH GUARD ASSY

PROJECT TITLE: HANFORD WASTE VITRIFICATION PLANT

PROJECT	FLUOR CONTRACT NO.	CWBS NO.
B-595	8457	P06B
SCALE 1/2	BLDG NO. 1	INDEX NO.

CLASSIFICATION	BY	DRAWING NUMBER	SHEET	OF	REV
NONE	NOT REQD	H-2-120308	3	4	0

INDEX

DISTRIBUTION CODE: 403

M44

ACAD

INITIALS: PN

DATE: 03-16-93

APR - 8 1993

QUALITY LEVEL II

SAFETY CLASS 3

REV NO.	DATE	REVISION DESCRIPTION	EG	RC	CD	
0	04/06/93	APPROVED FOR CONSTRUCTION	EG	RC	CD	NA / NA
			NA	NA	NA	NA

CADFILE	B120308D
CADCODE	2B:IBM:ACD2:12.C1:SS

ENGINEERING RELEASE

REV _____ DATE _____

ERO _____

SIGNATURE	DATE
PROJ DIR NA	
QA MGR NA	
INDEPENDENT SAFETY MGR NA	
PROJECT MGR NA	
SYSTEMS MGR NA	
ENGINEERING MGR NA	
SUPERVISOR C. DIVONA	11-3-92
DESIGN ENGINEER R. CHOATE	11-3-92
CHECKED E. GARCIA	~~3-24-93~~ 11-2-92
DRAWN S.L. REGACHO	09-23-91

U.S. DEPARTMENT OF ENERGY

Richland Field Office

DE - AC06-86RL10838

FLUOR DANIEL, INC.
ADVANCED TECHNOLOGY DIVISION

TU-130-001 CART DRIVE MOTOR DETAILS

PROJECT TITLE: HANFORD WASTE VITRIFICATION PLANT

PROJECT	FLUOR CONTRACT NO.	CWBS NO.
B-595	8457	P06B
SCALE 1/4	BLDG NO. 1	INDEX NO.

CLASSIFICATION	BY	DRAWING NUMBER	SHEET	OF	REV
NONE	NOT REQD	H-2-120308	4	4	0

G INDEX

DISTRIBUTION CODE: 403

M45

ACAD

INITIALS: PN

DATE: 03-16-93

QUALITY LEVEL II
SAFETY CLASS 3

APR - 8 1993

REV NO.	DATE	REVISION DESCRIPTION	EG	RC	CD	
0	04/06/93	APPROVED FOR CONSTRUCTION	EG	RC	CD	NA NA
			NA	NA	NA	NA

APPROVAL INITIALS

CADFILE B120309A CADCODE 2B:IBM:ACD2:12.C1:SS

ENGINEERING RELEASE
REV _____ DATE _____
ERO _____

SIGNATURE	DATE
PROJ DIR NA	
QA MGR NA	
INDEPENDENT SAFETY MGR NA	
PROJECT MGR NA	
SYSTEMS MGR NA	
ENGINEERING MGR NA	
SUPERVISOR C. DIVONA	11-3-92
DESIGN ENGINEER R. CHOATE	11-3-92
CHECKED E. GARCIA	11-2-92
DRAWN D. SMITH	02/26/92

U.S. DEPARTMENT OF ENERGY

Richland Field Office
DE – AC06-86RL10838

FLUOR DANIEL, INC.
ADVANCED TECHNOLOGY DIVISION

TU-130-001 CANISTER DOLLY ASSEMBLY PARTS LIST & NOTES

PROJECT TITLE
HANFORD WASTE VITRIFICATION PLANT

PROJECT	FLUOR CONTRACT NO.	CWBS NO.
B-595	8457	P06B
SCALE 1/1	BLDG NO. 1	INDEX NO.

CLASSIFICATION	BY	DRAWING NUMBER	SHEET	OF	REV
NONE	NOT REQD	H-2-120309	1	9	0

G INDEX

DISTRIBUTION CODE 403 M46 ACAD

INITIALS: PN
DATE: 03-16-93

QUALITY LEVEL II
SAFETY CLASS 3

APR - 8 1993

REV NO.	DATE	REVISION DESCRIPTION	EG	RC	CD	
0	04/06/93	APPROVED FOR CONSTRUCTION	EG	RC	CD	NA NA
			NA	NA	NA	NA

APPROVAL INITIALS

CADFILE B120309B CADCODE 2B:IBM:ACD2:12.C1:SS

ENGINEERING RELEASE
REV _____ DATE _____
ERO _____

SIGNATURE	DATE
PROJ DIR NA	
QA MGR NA	
INDEPENDENT SAFETY MGR NA	
PROJECT MGR NA	
SYSTEMS MGR NA	
ENGINEERING MGR NA	
SUPERVISOR C. DIVONA CJD	11-3-92
DESIGN ENGINEER R. CHOATE RBC	11-3-92
CHECKED E. GARCIA RBC	~~3-24-93~~ 11-2-92
DRAWN D. SMITH	02/26/92

U.S.DEPARTMENT OF ENERGY
Richland Field Office
DE – AC06–86RL10838

FLUOR DANIEL, INC.
ADVANCED TECHNOLOGY DIVISION

TU–130–001 CANISTER DOLLY ASSEMBLY

PROJECT TITLE
HANFORD WASTE VITRIFICATION PLANT

PROJECT	FLUOR CONTRACT NO.	CWBS NO.
B–595	8457	P06B
SCALE 1/4	BLDG NO. 1	INDEX NO.

CLASSIFICATION	BY	DRAWING NUMBER	SHEET	OF	REV
NONE	NOT REQD	H–2–120309	2	9	0

NG INDEX

AFC 77 78 79 80

DISTRIBUTION CODE: 403

M47

ACAD

INITIALS: PN
DATE: 03–16–93

QUALITY LEVEL II

SAFETY CLASS 3

APR - 8 1993

REV NO.	DATE	REVISION DESCRIPTION	EG	RC	CD	
0	04/06/93	APPROVED FOR CONSTRUCTION	EG	RC	CD	NA NA
			NA	NA	NA	NA

CADFILE B120309C CADCODE 2B:IBM:ACD2:12.C1:SS

ENGINEERING RELEASE

REV _____ DATE _____

ERO _____

SIGNATURE	DATE
PROJ DIR NA	
QA MGR NA	
INDEPENDENT SAFETY MGR NA	
PROJECT MGR NA	
SYSTEMS MGR NA	
ENGINEERING MGR NA	
SUPERVISOR C. DIVONA	11-3-92
DESIGN ENGINEER R. CHOATE	11-3-92
CHECKED E. GARCIA	~~3-24-93~~ 11-2-92
DRAWN D. SMITH	03/05/92

U.S.DEPARTMENT OF ENERGY

Richland Field Office

DE – AC06–86RL10838

FLUOR DANIEL, INC.
ADVANCED TECHNOLOGY DIVISION

TU–130–001 CANISTER DOLLY TRUNNION LIFTING WELDMENT & DETS

PROJECT TITLE: HANFORD WASTE VITRIFICATION PLANT

PROJECT	FLUOR CONTRACT NO.	CWBS NO.
B–595	8457	P06B
SCALE 1/2	BLDG NO. 1	INDEX NO.

CLASSIFICATION	BY	DRAWING NUMBER	SHEET	OF	REV
NONE	NOT REQD	H–2–120309	3	9	0

B

A

ING INDEX

2 1

AFC 77 78 79 80

DISTRIBUTION CODE: 403

M48

ACAD

INITIALS: PN

DATE: 03–16–93

QUALITY LEVEL II

SAFETY CLASS 3

APR - 8 1993

REV NO.	DATE	REVISION DESCRIPTION	EG	RC	CD	NA
0	04/06/93	APPROVED FOR CONSTRUCTION	EG	RC	CD	NA
			NA	NA	NA	NA

APPROVAL INITIALS

CADFILE B120309D CADCODE 2B:IBM:ACD2:12.C1:SS

ENGINEERING RELEASE

REV _____ DATE _____

ERO _____

SIGNATURE	DATE
PROJ DIR NA	
QA MGR NA	
INDEPENDENT SAFETY MGR NA	
PROJECT MGR NA	
SYSTEMS MGR NA	
ENGINEERING MGR NA	
SUPERVISOR C. DIVONA	11-3-92
DESIGN ENGINEER R. CHOATE	11-3-92
CHECKED E. GARCIA	11-2-92
DRAWN D. SMITH	02/26/92

U.S. DEPARTMENT OF ENERGY

Richland Field Office

DE – AC06-86RL10838

FLUOR DANIEL, INC.
ADVANCED TECHNOLOGY DIVISION

TU-130-001 CANISTER DOLLY WELDMENT

PROJECT TITLE: HANFORD WASTE VITRIFICATION PLANT

PROJECT	FLUOR CONTRACT NO.	CWBS NO.
B-595	8457	P06B
SCALE 1/2	BLDG NO. 1	INDEX NO.

CLASSIFICATION	BY	DRAWING NUMBER	SHEET	OF	REV
NONE	NOT REQD	H-2-120309	4	9	0

WING INDEX

AFC 77 78 79 80

DISTRIBUTION CODE: 403

M49

ACAD

INITIALS: PN

DATE: 03-16-93

QUALITY LEVEL II

SAFETY CLASS 3

APR - 8 1993

REV NO.	DATE	REVISION DESCRIPTION	APPROVAL INITIALS			
0	04/06/93	APPROVED FOR CONSTRUCTION	EG	RC	CD	NA / NA
			NA	NA	NA	NA

CADFILE	B120309E	CADCODE	2B:IBM:ACD2:12.C1:SS

ENGINEERING RELEASE

REV _____ DATE _____

ERO _____

SIGNATURE	DATE
PROJ DIR NA	
QA MGR NA	
INDEPENDENT SAFETY MGR NA	
PROJECT MGR NA	
SYSTEMS MGR NA	
ENGINEERING MGR NA	
SUPERVISOR C. DIVONA	11-3-92
DESIGN ENGINEER R. CHOATE	11-3-92
CHECKED E. GARCIA	~~7-24-93~~ 11-2-92
DRAWN D. SMITH	02/26/92

U.S.DEPARTMENT OF ENERGY

Richland Field Office

DE - AC06-86RL10838

FLUOR DANIEL, INC.
ADVANCED TECHNOLOGY DIVISION

TU-130-001 CANISTER DOLLY TOP PLATE DETAIL

PROJECT TITLE: HANFORD WASTE VITRIFICATION PLANT

PROJECT	FLUOR CONTRACT NO.	CWBS NO.
B-595	8457	P06B
SCALE 1/2	BLDG NO. 1	INDEX NO.

CLASSIFICATION	BY	DRAWING NUMBER	SHEET	OF	REV
NONE	NOT REQD	H-2-120309	5	9	0

NG INDEX

B

A

2 1

AFC 77 78 79 80

DISTRIBUTION CODE: 403

M50

ACAD

INITIALS: PN

DATE: 03-16-93

QUALITY LEVEL II
SAFETY CLASS 3

APR - 8 1993

REV NO.	DATE	REVISION DESCRIPTION				
0	04/06/93	APPROVED FOR CONSTRUCTION	EG	RC	CD	NA / NA
			NA	NA	NA	NA

CADFILE	B120309F	CADCODE	2B:IBM:ACD2:12.C1:SS

ENGINEERING RELEASE
REV _____ DATE _____
ERO _____

SIGNATURE	DATE
PROJ DIR NA	
QA MGR NA	
INDEPENDENT SAFETY MGR NA	
PROJECT MGR NA	
SYSTEMS MGR NA	
ENGINEERING MGR NA	
SUPERVISOR C. DIVONA	11-3-92
DESIGN ENGINEER R. CHOATE	11-3-92
CHECKED E. GARCIA	~~3-24-93~~ 11-2-92
DRAWN D. SMITH	03/11/92

U.S.DEPARTMENT OF ENERGY
Richland Field Office
DE – AC06–86RL10838

FLUOR DANIEL, INC.
ADVANCED TECHNOLOGY DIVISION

TU–130–001 CANISTER DOLLY BASE PLATE DETAIL

PROJECT TITLE
HANFORD WASTE VITRIFICATION PLANT

PROJECT	FLUOR CONTRACT NO.	CWBS NO.
B–595	8457	P06B
SCALE 1/2	BLDG NO. 1	INDEX NO.

CLASSIFICATION	BY	DRAWING NUMBER	SHEET	OF	REV
NONE	NOT REQD	H–2–120309	6	9	0

NG INDEX

DISTRIBUTION CODE: 403 M51 ACAD

INITIALS: PN
DATE: 03–16–93

QUALITY LEVEL II
SAFETY CLASS 3

APR - 8 1993

REV NO.	DATE	REVISION DESCRIPTION	EG	RC	CD	
0	04/06/93	APPROVED FOR CONSTRUCTION	EG	RC	CD	NA/NA
			NA	NA	NA	NA

CADFILE B120309G CADCODE 2B:IBM:ACD2:12.C1:SS

ENGINEERING RELEASE
REV _____ DATE _____
ERO _____

SIGNATURE	DATE
PROJ DIR NA	
QA MGR NA	
INDEPENDENT SAFETY MGR NA	
PROJECT MGR NA	
SYSTEMS MGR NA	
ENGINEERING MGR NA	
SUPERVISOR C. DIVONA	11-3-92
DESIGN ENGINEER R. CHOATE	11-3-92
CHECKED E. GARCIA	~~3-31-93~~ 11-2-92
DRAWN D. SMITH	05/18/92

U.S.DEPARTMENT OF ENERGY
Richland Field Office
DE – AC06-86RL10838

FLUOR DANIEL, INC.
ADVANCED TECHNOLOGY DIVISION

TU-130-001 CANISTER DOLLY BODY DETAILS

PROJECT TITLE: HANFORD WASTE VITRIFICATION PLANT

PROJECT	FLUOR CONTRACT NO.	CWBS NO.
B-595	8457	P06B
SCALE: SHOWN	BLDG NO.: 1	INDEX NO.

CLASSIFICATION	BY	DRAWING NUMBER	SHEET	OF	REV
NONE	NOT REQD	H-2-120309	7	9	0

ING INDEX

AFC 77 78 79 80

DISTRIBUTION CODE: 403 M52 ACAD

INITIALS: PN
DATE: 03-16-93

QUALITY LEVEL II
SAFETY CLASS 3

APR - 8 1993

REV NO.	DATE	REVISION DESCRIPTION	EG	RC	CD	
0	04/06/93	APPROVED FOR CONSTRUCTION	EG	RC	CD	NA NA
			NA	NA	NA	NA

CADFILE B120309H CADCODE 2B:IBM:ACD2:12.C1:SS

ENGINEERING RELEASE
REV _____ DATE _____
ERO _____

SIGNATURE	DATE
PROJ DIR NA	
QA MGR NA	
INDEPENDENT SAFETY MGR NA	
PROJECT MGR NA	
SYSTEMS MGR NA	
ENGINEERING MGR NA	
SUPERVISOR C. DIVONA	11-3-92
DESIGN ENGINEER R. CHOATE	11-3-92
CHECKED E. GARCIA	~~3-24-93~~ 11-2-92
DRAWN D. SMITH	02/27/92

U.S.DEPARTMENT OF ENERGY
Richland Field Office
DE – AC06–86RL10838

FLUOR DANIEL, INC.
ADVANCED TECHNOLOGY DIVISION

TU–130–001 CANISTER DOLLY WHEEL MOUNTING PLATE DETAIL

PROJECT TITLE: HANFORD WASTE VITRIFICATION PLANT

PROJECT	FLUOR CONTRACT NO.	CWBS NO.
B–595	8457	P06B
SCALE 1/2	BLDG NO. 1	INDEX NO.

CLASSIFICATION	BY	DRAWING NUMBER	SHEET	OF	REV
NONE	NOT REQD	H–2–120309	8	9	0

DISTRIBUTION CODE: 403 M53 ACAD

INITIALS: PN
DATE: 03–16–93

QUALITY LEVEL II

SAFETY CLASS 3

APR - 8 1993

REV NO.	DATE	REVISION DESCRIPTION	EG	RC	CD	
0	04/06/93	APPROVED FOR CONSTRUCTION	EG	RC	CD	NA / NA
			NA	NA	NA	NA

CADFILE	B120309J	CADCODE	2B:IBM:ACD2:12.C1:SS

ENGINEERING RELEASE

REV _____ DATE _____

ERO _____

SIGNATURE	DATE
PROJ DIR NA	
QA MGR NA	
INDEPENDENT SAFETY MGR NA	
PROJECT MGR NA	
SYSTEMS MGR NA	
ENGINEERING MGR NA	
SUPERVISOR C. DIVONA	11-3-92
DESIGN ENGINEER R. CHOATE	11-3-92
CHECKED E. GARCIA RBC ~~3-24-93~~	11-2-92
DRAWN D.SMITH	02/27/92

U.S.DEPARTMENT OF ENERGY

Richland Field Office

DE - AC06-86RL10838

FLUOR DANIEL, INC.
ADVANCED TECHNOLOGY DIVISION

TU-130-001 CANISTER DOLLY COVER DETAIL

PROJECT TITLE: HANFORD WASTE VITRIFICATION PLANT

PROJECT	FLUOR CONTRACT NO.	CWBS NO.
B-595	8457	P06B
SCALE 1/1	BLDG NO. 1	INDEX NO.

CLASSIFICATION	BY	DRAWING NUMBER	SHEET	OF	REV
NONE	NOT REQD	H-2-120309	9	9	0

NG INDEX

2 1

AFC 7 78 79 80

DISTRIBUTION CODE: 403 **M54** ACAD

INITIALS: PN

DATE: 03-16-93

QUALITY LEVEL II

SAFETY CLASS 3

APR - 8 1993

REV NO.	DATE	REVISION DESCRIPTION	EG	RC	CD	
						B
0	04/09/93	APPROVED FOR CONSTRUCTION	EG	RC	CD	NA NA
			NA	NA	NA	NA

CADFILE B120310A CADCODE 2B:IBM:ACD2:12.C1:SS

ENGINEERING RELEASE

REV _____ DATE _____

ERO _____

SIGNATURE	DATE
PROJ DIR NA	
QA MGR NA	
INDEPENDENT SAFETY MGR NA	
PROJECT MGR NA	
SYSTEMS MGR NA	
ENGINEERING MGR NA	
SUPERVISOR C. DIVONA	11-3-92
DESIGN ENGINEER R. CHOATE	11-3-92
CHECKED E. GARCIA	~~3-24-93~~ 11-2-92
DRAWN P.JUAREZ	1/17/92

U.S.DEPARTMENT OF ENERGY

Richland Field Office

DE - AC06-86RL10838

FLUOR DANIEL, INC.
ADVANCED TECHNOLOGY DIVISION

TU-130-001 LIFTING TRUNNION WELDMENT PARTS LIST & NOTES

A

PROJECT TITLE: HANFORD WASTE VITRIFICATION PLANT

PROJECT	FLUOR CONTRACT NO.	CWBS NO.
B-595	8457	P06B
SCALE 1/8	BLDG NO. 1	INDEX NO.

CLASSIFICATION	BY	DRAWING NUMBER	SHEET	OF	REV
NONE	NOT REQD	H-2-120310	1	2	0

'ING INDEX

AFC 77 78 79 80

DISTRIBUTION CODE: 403

M55

ACAD

INITIALS: PN

DATE: 03-16-93

QUALITY LEVEL II
SAFETY CLASS 3

APR - 8 1993

REV NO.	DATE	REVISION DESCRIPTION	EG	RC	CD	
0	04/06/93	APPROVED FOR CONSTRUCTION	EG	RC	CD	NA NA
			NA	NA	NA	NA

CADFILE B120310B CADCODE 2B:IBM:ACD2:12.C1:SS

ENGINEERING RELEASE
REV _____ DATE _____
ERO _____

SIGNATURE	DATE
PROJ DIR NA	
QA MGR NA	
INDEPENDENT SAFETY MGR NA	
PROJECT MGR NA	
SYSTEMS MGR NA	
ENGINEERING MGR NA	
SUPERVISOR C. DIVONA	11-3-92
DESIGN ENGINEER R. CHOATE	11-3-92
CHECKED E. GARCIA	~~3-24-93~~ 11-2-92
DRAWN P.JUAREZ	1/31/92

U.S.DEPARTMENT OF ENERGY

Richland Field Office
DE - AC06-86RL10838

FLUOR DANIEL, INC.
ADVANCED TECHNOLOGY DIVISION

TU-130-001 LIFTING TRUNNION WELDMENT DETAILS

PROJECT TITLE
HANFORD WASTE VITRIFICATION PLANT

PROJECT	FLUOR CONTRACT NO.	CWBS NO.
B-595	8457	P06B
SCALE	BLDG NO.	INDEX NO.
SHOWN	1	

CLASSIFICATION	BY	DRAWING NUMBER	SHEET	OF	REV
NONE	NOT REQD	H-2-120310	2	2	0

VING INDEX

AFC 77 78 79 80

DISTRIBUTION CODE: 403 M56 ACAD

INITIALS: PN
DATE: 03-16-93

QUALITY LEVEL II
SAFETY CLASS 3

APR - 8 1993

REV NO.	DATE	REVISION DESCRIPTION	EG	RC	CD	
				RBC	CD	
0	04/06/93	APPROVED FOR CONSTRUCTION	EG	RC	CD	NA NA
			NA	NA	NA	NA

CADFILE	B120311A	CADCODE	2B:IBM:ACD2:12.C1:SS

ENGINEERING RELEASE
REV _____ DATE _____
ERO _____

SIGNATURE	DATE
PROJ DIR NA	
QA MGR NA	
INDEPENDENT SAFETY MGR NA	
PROJECT MGR NA	
SYSTEMS MGR NA	
ENGINEERING MGR NA	
SUPERVISOR C. DIVONA CD	11-3-92
DESIGN ENGINEER R. CHOATE RBC	11-3-92
CHECKED E. GARCIA EG RBC	~~3-24-93~~ 11-2-92
DRAWN R.MOREL	3-27-92

U.S.DEPARTMENT OF ENERGY
Richland Field Office
DE - AC06-86RL10838

FLUOR DANIEL, INC.
ADVANCED TECHNOLOGY DIVISION

TU-130-001 CART SUPPORT ASSEMBLY PARTS LIST & NOTES

PROJECT TITLE: HANFORD WASTE VITRIFICATION PLANT

PROJECT	FLUOR CONTRACT NO.	CWBS NO.
B-595	8457	P06B
SCALE 1/4	BLDG NO. 1	INDEX NO.

CLASSIFICATION	BY	DRAWING NUMBER	SHEET	OF	REV
NONE	NOT REQD	H-2-120311	1	2	0

NG INDEX

AFC 77 78 79 80

DISTRIBUTION CODE: 403

M57

ACAD

INITIALS: PN
DATE: 03-16-93

QUALITY LEVEL II

SAFETY CLASS 3

APR - 8 1993

REV NO.	DATE	REVISION DESCRIPTION	EG	RC	CD	
0	04/06/93	APPROVED FOR CONSTRUCTION	EG	RC	CD	NA
			NA	NA	NA	NA

CADFILE B120311B CADCODE 2B:IBM:ACD2:12.C1:SS

ENGINEERING RELEASE

REV _____ DATE _____

ERO _____

SIGNATURE	DATE
PROJ DIR NA	
QA MGR NA	
INDEPENDENT SAFETY MGR NA	
PROJECT MGR NA	
SYSTEMS MGR NA	
ENGINEERING MGR NA	
SUPERVISOR C. DIVONA	11-3-92
DESIGN ENGINEER R. CHOATE	11-3-92
CHECKED E. GARCIA	~~3-24-93~~ 11-2-92
DRAWN R.MOREL	4-2-92

U.S.DEPARTMENT OF ENERGY

Richland Field Office

DE – AC06–86RL10838

FLUOR DANIEL, INC.

ADVANCED TECHNOLOGY DIVISION

TU–130–001 CART SUPPORT DETAILS

PROJECT TITLE: HANFORD WASTE VITRIFICATION PLANT

PROJECT	FLUOR CONTRACT NO.	CWBS NO.
B–595	8457	P06B
SCALE	BLDG NO.	INDEX NO.
SHOWN	1	

CLASSIFICATION	BY	DRAWING NUMBER	SHEET	OF	REV
NONE	NOT REQD	H–2–120311	2	2	0

AFC 77 78 79 80

DISTRIBUTION CODE: 403

M58

ACAD

INITIALS: PN

DATE: 03–16–93

QUALITY LEVEL II

SAFETY CLASS 3

APR - 8 1993

REV NO.	DATE	REVISION DESCRIPTION	EG	RC	CD	
0	04/06/93	APPROVED FOR CONSTRUCTION	EG	RC	CD	NA / NA
			NA	NA	NA	NA

CADFILE	B120312A	CADCODE	2B:IBM:ACD2:12.C1:SS

ENGINEERING RELEASE

REV _____ DATE _____

ERO _____

SIGNATURE	DATE
PROJ DIR NA	
QA MGR NA	
INDEPENDENT SAFETY MGR NA	
PROJECT MGR NA	
SYSTEMS MGR NA	
ENGINEERING MGR NA	
SUPERVISOR C. DIVONA	11-3-92
DESIGN ENGINEER R. CHOATE	11-3-92
CHECKED E. GARCIA	11-2-92
DRAWN D. RUFENACHT	05/04/92

U.S.DEPARTMENT OF ENERGY

Richland Field Office

DE - AC06-86RL10838

FLUOR DANIEL, INC.
ADVANCED TECHNOLOGY DIVISION

TU-130-001 CART DRIVE PARTS LIST & NOTES

PROJECT TITLE: HANFORD WASTE VITRIFICATION PLANT

PROJECT	FLUOR CONTRACT NO.	CWBS NO.
B-595	8457	P06B
SCALE: NONE	BLDG NO.: 1	INDEX NO.

CLASSIFICATION	BY	DRAWING NUMBER	SHEET	OF	REV
NONE	NOT REQD	H-2-120312	1	11	0

NG INDEX

DISTRIBUTION CODE: 403

M59

ACAD

INITIALS: PN

DATE: 03-16-93

QUALITY LEVEL II
SAFETY CLASS 3

APR - 8 1993

REV NO.	DATE	REVISION DESCRIPTION	EG	RC	CD	
						B
0	04/06/93	APPROVED FOR CONSTRUCTION	EG	RC	CD	NA / NA
			NA	NA	NA	NA

CADFILE B120312B CADCODE 2B:IBM:ACD2:12.C1:SS

ENGINEERING RELEASE
REV _____ DATE _____
ERO _____

SIGNATURE	DATE
PROJ DIR NA	
QA MGR NA	
INDEPENDENT SAFETY MGR NA	
PROJECT MGR NA	
SYSTEMS MGR NA	
ENGINEERING MGR NA	
SUPERVISOR C. DIVONA	11-3-92
DESIGN ENGINEER R. CHOATE	11-3-92
CHECKED E. GARCIA	~~3-21-93~~ 11-2-92
DRAWN D. RUFENACHT	05/04/92

U.S.DEPARTMENT OF ENERGY

Richland Field Office
DE – AC06-86RL10838

FLUOR DANIEL, INC.
ADVANCED TECHNOLOGY DIVISION

TU-130-001 CART DRIVE ASSEMBLY

A

PROJECT TITLE: HANFORD WASTE VITRIFICATION PLANT

PROJECT	FLUOR CONTRACT NO.	CWBS NO.
B-595	8457	P06B
SCALE 1/8	BLDG NO. 1	INDEX NO.

CLASSIFICATION	BY	DRAWING NUMBER	SHEET	OF	REV
NONE	NOT REQD	H-2-120312	2	11	0

NG INDEX

AFC 77 78 79 80

DISTRIBUTION CODE: 403 M60 ACAD

INITIALS: PN
DATE: 03-16-93

QUALITY LEVEL II
SAFETY CLASS 3

APR - 8 1993

REV NO.	DATE	REVISION DESCRIPTION	EG	RC	CD	
0	04/06/93	APPROVED FOR CONSTRUCTION	EG	RC	CD	NA NA
			NA	NA	NA	NA

CADFILE	B120312C	CADCODE	2B:IBM:ACD2:12.C1:SS

ENGINEERING RELEASE
REV _____ DATE _____
ERO _____

SIGNATURE	DATE
PROJ DIR NA	
QA MGR NA	
INDEPENDENT SAFETY MGR NA	
PROJECT MGR NA	
SYSTEMS MGR NA	
ENGINEERING MGR NA	
SUPERVISOR C. DIVONA	11-3-92
DESIGN ENGINEER R. CHOATE	11-3-92
CHECKED E. GARCIA	~~3-24-93~~ 11-2-92
DRAWN D. RUFENACHT	05/04/92

U.S.DEPARTMENT OF ENERGY
Richland Field Office
DE - AC06-86RL10838

FLUOR DANIEL, INC.
ADVANCED TECHNOLOGY DIVISION

TU-130-001 SPLASH GUARD WHEEL DRIVE LEFT SIDE ASSEMBLY

PROJECT TITLE
HANFORD WASTE VITRIFICATION PLANT

PROJECT	FLUOR CONTRACT NO.	CWBS NO.
B-595	8457	P06B
SCALE 1/2	BLDG NO. 1	INDEX NO.

CLASSIFICATION	BY	DRAWING NUMBER	SHEET	OF	REV
NONE	NOT REQD	H-2-120312	3	11	0

NG INDEX

AFC 77 78 79 80

DISTRIBUTION CODE: 403 M61 ACAD

INITIALS: PN
DATE: 03-16-93

QUALITY LEVEL II
SAFETY CLASS 3

APR - 8 1993

REV NO.	DATE	REVISION DESCRIPTION	EG	RC	CD	
						B
0	04/06/93	APPROVED FOR CONSTRUCTION	EG	RC	CD	NA / NA
			NA	NA	NA	NA

CADFILE B120312D CADCODE 2B:IBM:ACD2:12.C1:SS

ENGINEERING RELEASE
REV _____ DATE _____
ERO _____

SIGNATURE	DATE
PROJ DIR NA	
QA MGR NA	
INDEPENDENT SAFETY MGR NA	
PROJECT MGR NA	
SYSTEMS MGR NA	
ENGINEERING MGR NA	
SUPERVISOR C. DIVONA	11-3-92
DESIGN ENGINEER R. CHOATE	11-3-92
CHECKED E. GARCIA	~~7-21-93~~ 11-2-92
DRAWN D. RUFENACHT	05/04/92

U.S.DEPARTMENT OF ENERGY
Richland Field Office
DE - AC06-86RL10838

FLUOR DANIEL, INC.
ADVANCED TECHNOLOGY DIVISION

TU-130-001 SPLASH GUARD WHEEL DRIVE RIGHT SIDE ASSEMBLY

A

PROJECT TITLE
HANFORD WASTE VITRIFICATION PLANT

PROJECT	FLUOR CONTRACT NO.	CWBS NO.
B-595	8457	P06B
SCALE 1/2	BLDG NO. 1	INDEX NO.

CLASSIFICATION	BY	DRAWING NUMBER	SHEET	OF	REV
NONE	NOT REQD	H-2-120312	4	11	0

NG INDEX

AFC 77 78 79 80

DISTRIBUTION CODE: 403 M62 ACAD

INITIALS: PN
DATE: 03-16-93

ORT ASSEMBLY

QUALITY LEVEL II
SAFETY CLASS 3

APR - 8 1993

REV NO.	DATE	REVISION DESCRIPTION	EG	RC	CD	
0	04/06/93	APPROVED FOR CONSTRUCTION	EG	RC	CD	NA NA
			NA	NA	NA	NA

CADFILE	B120312E	CADCODE	2B:IBM:ACD2:12.C1:SS

ENGINEERING RELEASE
REV _____ DATE _____
ERO _____

SIGNATURE	DATE
PROJ DIR NA	
QA MGR NA	
INDEPENDENT SAFETY MGR NA	
PROJECT MGR NA	
SYSTEMS MGR NA	
ENGINEERING MGR NA	
SUPERVISOR C. DIVONA	11-3-92
DESIGN ENGINEER R. CHOATE	11-3-92
CHECKED E. GARCIA	~~3-25-93~~ 11-2-92
DRAWN D. RUFENACHT	05/04/92

U.S.DEPARTMENT OF ENERGY
Richland Field Office
DE - AC06-86RL10838

FLUOR DANIEL, INC.
ADVANCED TECHNOLOGY DIVISION

TU-130-001 CLUTCH COUPLING COVER & SUPPORT ASSEMBLY

PROJECT TITLE
HANFORD WASTE VITRIFICATION PLANT

PROJECT	FLUOR CONTRACT NO.	CWBS NO.
B-595	8457	P06B
SCALE 1/2	BLDG NO. 1	INDEX NO.

CLASSIFICATION	BY	DRAWING NUMBER	SHEET	OF	REV
NONE	NOT REQD	H-2-120312	5	11	0

NG INDEX

AFC 77 78 79 80

DISTRIBUTION CODE: 403

M63

ACAD

INITIALS: PN
DATE: 03-16-93

QUALITY LEVEL II

SAFETY CLASS 3

APR - 8 1993

REV NO.	DATE	REVISION DESCRIPTION	EG	RC	CD	
						B
0	04/06/93	APPROVED FOR CONSTRUCTION	EG	RC	CD	NA / NA
			NA	NA	NA	NA

CADFILE B120312F CADCODE 2B:IBM:ACD2:12.C1:SS

ENGINEERING RELEASE

REV _____ DATE _____

ERO _____

SIGNATURE	DATE
PROJ DIR NA	
QA MGR NA	
INDEPENDENT SAFETY MGR NA	
PROJECT MGR NA	
SYSTEMS MGR NA	
ENGINEERING MGR NA	
SUPERVISOR C. DIVONA	11-3-92
DESIGN ENGINEER R. CHOATE	11-3-92
CHECKED E. GARCIA	11-2-92
DRAWN D. RUFENACHT	05/04/92

U.S.DEPARTMENT OF ENERGY

Richland Field Office

DE – AC06–86RL10838

FLUOR DANIEL, INC.
ADVANCED TECHNOLOGY DIVISION

TU–130–001 SPLASH GUARD WHEEL DRIVE LEFT SIDE DETAILS

A

PROJECT TITLE: HANFORD WASTE VITRIFICATION PLANT

PROJECT	FLUOR CONTRACT NO.	CWBS NO.
B–595	8457	P06B
SCALE 1/2	BLDG NO. 1	INDEX NO.

CLASSIFICATION	BY	DRAWING NUMBER	SHEET	OF	REV
NONE	NOT REQD	H–2–120312	6	11	0

NG INDEX

AFC 77 78 79 80

DISTRIBUTION CODE: 403

M64

ACAD

INITIALS: PN

DATE: 03–16–93

QUALITY LEVEL II

SAFETY CLASS 3

APR - 8 1993

REV NO.	DATE	REVISION DESCRIPTION	APPROVAL INITIALS			
0	04/06/93	APPROVED FOR CONSTRUCTION	EG	RC	CD	NA / NA
			NA	NA	NA	NA

CADFILE B120312G CADCODE 2B:IBM:ACD2:12.C1:SS

ENGINEERING RELEASE

REV _____ DATE _____

ERO _____

SIGNATURE	DATE
PROJ DIR NA	
QA MGR NA	
INDEPENDENT SAFETY MGR NA	
PROJECT MGR NA	
SYSTEMS MGR NA	
ENGINEERING MGR NA	
SUPERVISOR C. DIVONA	11-3-92
DESIGN ENGINEER R. CHOATE	11-3-92
CHECKED E. GARCIA	~~3-24-93~~ 11-2-92
DRAWN D. RUFENACHT	05/04/92

U.S.DEPARTMENT OF ENERGY

Richland Field Office

DE – AC06-86RL10838

FLUOR DANIEL, INC.

ADVANCED TECHNOLOGY DIVISION

TU-130-001 SPLASH GUARD WHEEL DRIVE RIGHT SIDE DETAILS

PROJECT TITLE: HANFORD WASTE VITRIFICATION PLANT

PROJECT	FLUOR CONTRACT NO.	CWBS NO.
B-595	8457	P06B
SCALE 1/2	BLDG NO. 1	INDEX NO.

CLASSIFICATION	BY	DRAWING NUMBER	SHEET	OF	REV
NONE	NOT REQD	H-2-120312	7	11	0

NG INDEX

A F C

77 78 79 80

DISTRIBUTION CODE: 403

M65

ACAD

INITIALS: PN

DATE: 03-16-93

QUALITY LEVEL II

SAFETY CLASS 3

APR - 8 1993

REV NO.	DATE	REVISION DESCRIPTION	EG	RC	CD	
0	04/06/93	APPROVED FOR CONSTRUCTION	EG	RC	CD	NA / NA
			NA	NA	NA	NA

CADFILE B120312H CADCODE 2B:IBM:ACD2:12.C1:SS

ENGINEERING RELEASE

REV _____ DATE _____

ERO _____

SIGNATURE	DATE
PROJ DIR NA	
QA MGR NA	
INDEPENDENT SAFETY MGR NA	
PROJECT MGR NA	
SYSTEMS MGR NA	
ENGINEERING MGR NA	
SUPERVISOR C. DIVONA	11-3-92
DESIGN ENGINEER R. CHOATE	11-3-92
CHECKED E. GARCIA	~~7-24-93~~ 11-2-92
DRAWN D. RUFENACHT	05/06/92

U.S. DEPARTMENT OF ENERGY

Richland Field Office

DE - AC06-86RL10838

FLUOR DANIEL, INC.

ADVANCED TECHNOLOGY DIVISION

TU-130-001 CLUTCH COUPLING COVER DETAILS

PROJECT TITLE: HANFORD WASTE VITRIFICATION PLANT

PROJECT	FLUOR CONTRACT NO.	CWBS NO.
B-595	8457	P06B
SCALE 1/2	BLDG NO. 1	INDEX NO.

CLASSIFICATION	BY	DRAWING NUMBER	SHEET	OF	REV
NONE	NOT REQD	H-2-120312	8	11	0

ING INDEX

AFC 77 78 79 80

DISTRIBUTION CODE: 403 M66 ACAD

INITIALS: PN

DATE: 03-16-93

QUALITY LEVEL II
SAFETY CLASS 3

APR - 8 1993

REV NO.	DATE	REVISION DESCRIPTION	APPROVAL INITIALS			
0	04/06/93	APPROVED FOR CONSTRUCTION	EG	RC	CD	NA/NA
			NA	NA	NA	NA

CADFILE	B120312J	CADCODE	2B:IBM:ACD2:12.C1:SS

ENGINEERING RELEASE

REV _____ DATE _____

ERO _____

SIGNATURE	DATE
PROJ DIR NA	
QA MGR NA	
INDEPENDENT SAFETY MGR NA	
PROJECT MGR NA	
SYSTEMS MGR NA	
ENGINEERING MGR NA	
SUPERVISOR C. DIVONA CJW	11-3-92
DESIGN ENGINEER R. CHOATE RBC	11-3-92
CHECKED E. GARCIA RBC	~~3-24-93~~ 11-2-92
DRAWN D. RUFENACHT	05/04/92

U.S.DEPARTMENT OF ENERGY

Richland Field Office

DE - AC06-86RL10838

FLUOR DANIEL, INC.
ADVANCED TECHNOLOGY DIVISION

TU-130-001 CLUTCH COUPLING DETAILS

PROJECT TITLE: HANFORD WASTE VITRIFICATION PLANT

PROJECT	FLUOR CONTRACT NO.	CWBS NO.
B-595	8457	P06B
SCALE	BLDG NO.	INDEX NO.
SHOWN	1	

CLASSIFICATION	BY	DRAWING NUMBER	SHEET	OF	REV
NONE	NOT REQD	H-2-120312	9	11	0

NG INDEX

B

A

2 1

A F C
77 78 79 80

DISTRIBUTION CODE: 403

M67

ACAD

INITIALS: PN

DATE: 03-16-93

QUALITY LEVEL II
SAFETY CLASS 3

APR - 8 1993

REV NO.	DATE	REVISION DESCRIPTION	EG	RC	CD	
0	04/06/93	APPROVED FOR CONSTRUCTION	EG	RC	CD	NA NA
			NA	NA	NA	NA

CADFILE B120312K CADCODE 2B:IBM:ACD2:12.C1:SS

ENGINEERING RELEASE
REV _____ DATE _____
ERO _____

SIGNATURE	DATE
PROJ DIR NA	
QA MGR NA	
INDEPENDENT SAFETY MGR NA	
PROJECT MGR NA	
SYSTEMS MGR NA	
ENGINEERING MGR NA	
SUPERVISOR C. DIVONA	11-3-92
DESIGN ENGINEER R. CHOATE	11-3-92
CHECKED E. GARCIA	~~3-24-93~~ 11-2-92
DRAWN D. RUFENACHT	05/04/92

U.S.DEPARTMENT OF ENERGY
Richland Field Office
DE - AC06-86RL10838

FLUOR DANIEL, INC.
ADVANCED TECHNOLOGY DIVISION

TU-130-001 SHAFT AND SPACER DETAILS

PROJECT TITLE
HANFORD WASTE VITRIFICATION PLANT

PROJECT	FLUOR CONTRACT NO.	CWBS NO.
B-595	8457	P06B
SCALE	BLDG NO.	INDEX NO.
SHOWN	1	

CLASSIFICATION	BY	DRAWING NUMBER	SHEET	OF	REV
NONE	NOT REQD	H-2-120312	10	11	0

ING INDEX

AFC 77 78 79 80

DISTRIBUTION CODE: 403 M68 ACAD

INITIALS: PN
DATE: 03-16-93

QUALITY LEVEL II
SAFETY CLASS 3

APR - 8 1993

REV NO.	DATE	REVISION DESCRIPTION	EG	RC	CD	
0	04/06/93	APPROVED FOR CONSTRUCTION	EG	RC	CD	NA
			NA	NA	NA	NA

CADFILE	B120312L	CADCODE	2B:IBM:ACD2:12.C1:SS

ENGINEERING RELEASE
REV _____ DATE _____
ERO _____

SIGNATURE	DATE
PROJ DIR NA	
QA MGR NA	
INDEPENDENT SAFETY MGR NA	
PROJECT MGR NA	
SYSTEMS MGR NA	
ENGINEERING MGR NA	
SUPERVISOR C. DIVONA	11-3-92
DESIGN ENGINEER R. CHOATE	11-3-92
CHECKED E. GARCIA	~~3-25-93~~ 11-2-92
DRAWN D. RUFENACHT	05/04/92

U.S.DEPARTMENT OF ENERGY

Richland Field Office
DE - AC06-86RL10838

FLUOR DANIEL, INC.
ADVANCED TECHNOLOGY DIVISION

TU-130-001 MODIFIED GEARED WHEEL DETAIL

PROJECT TITLE
HANFORD WASTE VITRIFICATION PLANT

PROJECT	FLUOR CONTRACT NO.	CWBS NO.
B-595	8457	P06B
SCALE	BLDG NO.	INDEX NO.
1/2	1	

CLASSIFICATION	BY	DRAWING NUMBER	SHEET	OF	REV
NONE	NOT REQD	H-2-120312	11	11	0

NG INDEX

DISTRIBUTION CODE: 403 M69 ACAD

INITIALS: PN
DATE: 03-16-93

AFC 77 78 79 80

QUALITY LEVEL II

SAFETY CLASS 3

APR - 8 1993

REV NO.	DATE	REVISION DESCRIPTION	EG	RC	CD	
0	04/06/93	APPROVED FOR CONSTRUCTION	EG	RC	CD	NA / NA
			NA	NA	NA	NA

CADFILE	B120313A	CADCODE	2B:IBM:ACD2:12.C1:SS

ENGINEERING RELEASE

REV _____ DATE _____

ERO _____

SIGNATURE	DATE
PROJ DIR NA	
QA MGR NA	
INDEPENDENT SAFETY MGR NA	
PROJECT MGR NA	
SYSTEMS MGR NA	
ENGINEERING MGR NA	
SUPERVISOR C. DIVONA	11-3-92
DESIGN ENGINEER R. CHOATE	11-3-92
CHECKED E. GARCIA	11-2-92
DRAWN L.C.SANVICTORES	11/11/91

U.S.DEPARTMENT OF ENERGY

Richland Field Office

DE – AC06-86RL10838

FLUOR DANIEL, INC.

ADVANCED TECHNOLOGY DIVISION

TU-130-001 FIXED STOP ASSEMBLY PARTS LIST & NOTES

PROJECT TITLE: HANFORD WASTE VITRIFICATION PLANT

PROJECT	FLUOR CONTRACT NO.	CWBS NO.
B-595	8457	P06B
SCALE 1/2	BLDG NO. 1	INDEX NO.

CLASSIFICATION	BY	DRAWING NUMBER	SHEET	OF	REV
NONE	NOT REQD	H-2-120313	1	3	0

NG INDEX

DISTRIBUTION CODE: 403

M70

ACAD

INITIALS: PN

DATE: 03-16-93

QUALITY LEVEL II

SAFETY CLASS 3

APR - 8 1993

REV NO.	DATE	REVISION DESCRIPTION	APPROVAL INITIALS			
0	04/06/93	APPROVED FOR CONSTRUCTION	EG	RC	CD	NA / NA
			NA	NA	NA	NA

CADFILE	B120313B	CADCODE	2B:IBM:ACD2:12.C1:SS

ENGINEERING RELEASE

REV _____ DATE _____

ERO _____

SIGNATURE	DATE
PROJ DIR NA	
QA MGR NA	
INDEPENDENT SAFETY MGR NA	
PROJECT MGR NA	
SYSTEMS MGR NA	
ENGINEERING MGR NA	
SUPERVISOR C. DIVONA	11-3-92
DESIGN ENGINEER R. CHOATE	11-3-92
CHECKED E. GARCIA	~~3-24-93~~ 11-2-92
DRAWN L.C.SANVICTORES	11/11/91

CLASSIFICATION	BY
NONE	NOT REQD

U.S.DEPARTMENT OF ENERGY

Richland Field Office

DE – AC06–86RL10838

FLUOR DANIEL, INC.
ADVANCED TECHNOLOGY DIVISION

TU–130–001 FIXED STOP WELDMENT & PLUNGER

PROJECT TITLE: HANFORD WASTE VITRIFICATION PLANT

PROJECT	FLUOR CONTRACT NO.	CWBS NO.
B–595	8457	P06B
SCALE: SHOWN	BLDG NO.: 1	INDEX NO.

DRAWING NUMBER	SHEET	OF	REV
H–2–120313	2	3	0

NG INDEX

AFC 77 78 79 80

DISTRIBUTION CODE: 403

M71

ACAD

INITIALS: PN

DATE: 03–16–93

QUALITY LEVEL II
SAFETY CLASS 3

APR - 8 1993

REV NO.	DATE	REVISION DESCRIPTION	EG	RC	CD	
						B
0	04/06/93	APPROVED FOR CONSTRUCTION	EG	RC	CD	NA / NA
			NA	NA	NA	NA

CADFILE	B120313C	CADCODE	2B:IBM:ACD2:12.C1:SS

ENGINEERING RELEASE
REV _____ DATE _____
ERO _____

SIGNATURE	DATE
PROJ DIR NA	
QA MGR NA	
INDEPENDENT SAFETY MGR NA	
PROJECT MGR NA	
SYSTEMS MGR NA	
ENGINEERING MGR NA	
SUPERVISOR C. DIVONA	11-3-92
DESIGN ENGINEER R. CHOATE	11-3-92
CHECKED E. GARCIA	11-2-92
DRAWN L.C.SANVICTORES	11/11/91

U.S.DEPARTMENT OF ENERGY
Richland Field Office
DE – AC06-86RL10838

FLUOR DANIEL, INC.
ADVANCED TECHNOLOGY DIVISION

TU-130-001 FIXED STOP DETAILS

A

PROJECT TITLE		
HANFORD WASTE VITRIFICATION PLANT		
PROJECT B-595	FLUOR CONTRACT NO. 8457	CWBS NO. P06B
SCALE SHOWN	BLDG NO. 1	INDEX NO.

CLASSIFICATION	BY	DRAWING NUMBER	SHEET	OF	REV
NONE	NOT REQD	H-2-120313	3	3	0

NG INDEX

2 1

DISTRIBUTION CODE: 403 M72 ACAD

INITIALS: PN
DATE: 03-16-93

QUALITY LEVEL II

SAFETY CLASS 3

APR - 8 1993

REV NO.	DATE	REVISION DESCRIPTION	EG	RC	CD	
0	04/08/93	APPROVED FOR CONSTRUCTION	EG	RC	CD	NA / NA
			NA	NA	NA	NA

APPROVAL INITIALS

CADFILE	B120314A	CADCODE	2B:IBM:ACD2:12.C1:SS

ENGINEERING RELEASE

REV _____ DATE _____

ERO _____

SIGNATURE	DATE
PROJ DIR NA	
QA MGR NA	
INDEPENDENT SAFETY MGR NA	
PROJECT MGR NA	
SYSTEMS MGR NA	
ENGINEERING MGR NA	
SUPERVISOR C. DIVONA	11-3-92
DESIGN ENGINEER R. CHOATE	11-3-92
CHECKED E. GARCIA	~~3-24-93~~ 11-2-92
DRAWN S. HORVAT	12/26/91

U.S. DEPARTMENT OF ENERGY

Richland Field Office

DE - AC06-86RL10838

FLUOR DANIEL, INC.

ADVANCED TECHNOLOGY DIVISION

TU-130-001 SPIDER DRIVE ASSEMBLY PARTS LIST & NOTES

PROJECT TITLE: HANFORD WASTE VITRIFICATION PLANT

PROJECT	FLUOR CONTRACT NO.	CWBS NO.
B-595	8457	P06B
SCALE 1/4	BLDG NO. 1	INDEX NO.

CLASSIFICATION	BY	DRAWING NUMBER	SHEET	OF	REV
NONE	NOT REQD	H-2-120314	1	7	0

NG INDEX

DISTRIBUTION CODE: 403

M73

ACAD

INITIALS: PN

DATE: 03-16-93

A F C 77 78 79 80

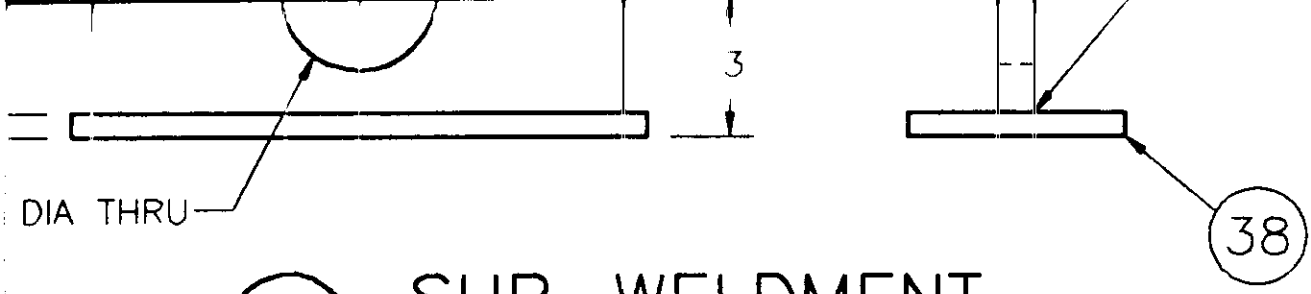

3 SUB-WELDMENT

SCALE : 1/4

QUALITY LEVEL II

SAFETY CLASS 3

APR - 8 1993

REV NO.	DATE	REVISION DESCRIPTION	APPROVAL INITIALS			
0	04/06/93	APPROVED FOR CONSTRUCTION	EG	RC	CD	NA NA
			NA	NA	NA	NA

CADFILE	B120314B	CADCODE	2B:IBM:ACD2:12.C1:SS

ENGINEERING RELEASE

REV _____ DATE _____

ERO _____

SIGNATURE	DATE
PROJ DIR NA	
QA MGR NA	
INDEPENDENT SAFETY MGR NA	
PROJECT MGR NA	
SYSTEMS MGR NA	
ENGINEERING MGR NA	
SUPERVISOR C. DIVONA	11-3-92
DESIGN ENGINEER R. CHOATE	11-3-92
CHECKED E. GARCIA	~~3-24-93~~ 11-2-92
DRAWN S. HORVAT	12/26/91

U.S.DEPARTMENT OF ENERGY

Richland Field Office

DE - AC06-86RL10838

FLUOR DANIEL, INC.
ADVANCED TECHNOLOGY DIVISION

TU-130-001 WELDMENT, DRIVE BASE & SUB-WELDMENT

PROJECT TITLE: **HANFORD WASTE VITRIFICATION PLANT**

PROJECT	FLUOR CONTRACT NO.	CWBS NO.
B-595	8457	P06B
SCALE: SHOWN	BLDG NO. 1	INDEX NO.

CLASSIFICATION	BY	DRAWING NUMBER	SHEET	OF	REV
NONE	NOT REQD	H-2-120314	2	7	0

NG INDEX

DISTRIBUTION CODE: 403

M74

ACAD

INITIALS: PN

DATE: 03-16-93

TYP

QUALITY LEVEL II

SAFETY CLASS 3

APR - 8 1993

REV NO.	DATE	REVISION DESCRIPTION	EG	RC	CD	
0	04/06/93	APPROVED FOR CONSTRUCTION	EG	RC	CD	NA
			NA	NA	NA	NA

CADFILE B120314C CADCODE 2B:IBM:ACD2:12.C1:SS

ENGINEERING RELEASE

REV _____ DATE _____

ERO _____

SIGNATURE	DATE
PROJ DIR NA	
QA MGR NA	
INDEPENDENT SAFETY MGR NA	
PROJECT MGR NA	
SYSTEMS MGR NA	
ENGINEERING MGR NA	
SUPERVISOR C. DIVONA	11-3-92
DESIGN ENGINEER R. CHOATE	11-3-92
CHECKED E. GARCIA	~~3-24-93~~ 11-2-92
DRAWN S.HORVAT	1/8/92

U.S.DEPARTMENT OF ENERGY

Richland Field Office

DE – AC06-86RL10838

FLUOR DANIEL, INC.

ADVANCED TECHNOLOGY DIVISION

TU-130-001 SPIDER DRIVE DETAILS

PROJECT TITLE: HANFORD WASTE VITRIFICATION PLANT

PROJECT	FLUOR CONTRACT NO.	CWBS NO.
B-595	8457	P06B
SCALE 1/2	BLDG NO. 1	INDEX NO.

CLASSIFICATION	BY	DRAWING NUMBER	SHEET	OF	REV
NONE	NOT REQD	H-2-120314	3	7	0

ING INDEX

AFC 77 78 79 80

DISTRIBUTION CODE: 403

M75

ACAD

INITIALS: PN

DATE: 03-16-93

QUALITY LEVEL II

SAFETY CLASS 3

APR - 8 1993

REV NO.	DATE	REVISION DESCRIPTION	EG	RC	CD	
0	04/06/93	APPROVED FOR CONSTRUCTION	EG	RC	CD	NA / NA
			NA	NA	NA	NA

APPROVAL INITIALS

CADFILE	B120314D	CADCODE	2B:IBM:ACD2:12.C1:SS

ENGINEERING RELEASE

REV _____ DATE _____

ERO _____

SIGNATURE	DATE
PROJ DIR NA	
QA MGR NA	
INDEPENDENT SAFETY MGR NA	
PROJECT MGR NA	
SYSTEMS MGR NA	
ENGINEERING MGR NA	
SUPERVISOR C. DIVONA	11-3-92
DESIGN ENGINEER R. CHOATE	11-3-92
CHECKED E. GARCIA	11-2-92
DRAWN P.ASHLEY	2/10/92

U.S.DEPARTMENT OF ENERGY

Richland Field Office

DE - AC06-86RL10838

FLUOR DANIEL, INC.

ADVANCED TECHNOLOGY DIVISION

TU-130-001 SPIDER DRIVE RAIL DETAILS

PROJECT TITLE: HANFORD WASTE VITRIFICATION PLANT

PROJECT	FLUOR CONTRACT NO.	CWBS NO.
B-595	8457	P06B
SCALE 1/2	BLDG NO. 1	INDEX NO.

CLASSIFICATION	BY	DRAWING NUMBER	SHEET	OF	REV
NONE	NOT REQD	H-2-120314	4	7	0

G INDEX

DISTRIBUTION CODE: 403

M76

ACAD

INITIALS: PN

DATE: 03-16-93

1/2 REF

2 3/8

QUALITY LEVEL II
SAFETY CLASS 3

APR - 8 1993

REV NO.	DATE	REVISION DESCRIPTION				
0	04/06/93	APPROVED FOR CONSTRUCTION	EG	RC	CD	NA / NA
			NA	NA	NA	NA

CADFILE	B120314E	CADCODE	2B:IBM:ACD2:12.C1:SS

ENGINEERING RELEASE
REV _____ DATE _____
ERO _____

SIGNATURE	DATE
PROJ DIR NA	
QA MGR NA	
INDEPENDENT SAFETY MGR NA	
PROJECT MGR NA	
SYSTEMS MGR NA	
ENGINEERING MGR NA	
SUPERVISOR C. DIVONA	11-3-92
DESIGN ENGINEER R. CHOATE	11-3-92
CHECKED E. GARCIA	11-2-92
DRAWN P. ASHLEY	2/10/92

U.S.DEPARTMENT OF ENERGY
Richland Field Office
DE - AC06-86RL10838

FLUOR DANIEL, INC.
ADVANCED TECHNOLOGY DIVISION

TU-130-001 SPIDER DRIVE DETAILS

PROJECT TITLE
HANFORD WASTE VITRIFICATION PLANT

PROJECT	FLUOR CONTRACT NO.	CWBS NO.
B-595	8457	P06B
SCALE 1/2	BLDG NO. 1	INDEX NO.

CLASSIFICATION	BY	DRAWING NUMBER	SHEET	OF	REV
NONE	NOT REQD	H-2-120314	5	7	0

NG INDEX

AFC 77 78 79 80

DISTRIBUTION CODE: 403

M77

ACAD

INITIALS: PN
DATE: 03-16-93

QUALITY LEVEL II

SAFETY CLASS 3

APR - 8 1993

REV NO.	DATE	REVISION DESCRIPTION	EG	RC	CD	
0	04/06/93	APPROVED FOR CONSTRUCTION	EG	RC	CD	NA / NA
			NA	NA	NA	NA

CADFILE	B120314F	CADCODE	2B:IBM:ACD2:12.C1:SS

ENGINEERING RELEASE

REV _____ DATE _____

ERO _____

SIGNATURE	DATE
PROJ DIR NA	
QA MGR NA	
INDEPENDENT SAFETY MGR NA	
PROJECT MGR NA	
SYSTEMS MGR NA	
ENGINEERING MGR NA	
SUPERVISOR C. DIVONA	11-3-92
DESIGN ENGINEER R. CHOATE	11-3-92
CHECKED E. GARCIA	11-2-92
DRAWN P. ASHLEY	2/10/92

U.S.DEPARTMENT OF ENERGY

Richland Field Office

DE – AC06-86RL10838

FLUOR DANIEL, INC.
ADVANCED TECHNOLOGY DIVISION

TU-130-001 SPIDER DRIVE WELDMENT DETAILS

PROJECT TITLE: **HANFORD WASTE VITRIFICATION PLANT**

PROJECT	FLUOR CONTRACT NO.	CWBS NO.
B-595	8457	P06B
SCALE 1/2	BLDG NO. 1	INDEX NO.

CLASSIFICATION	BY	DRAWING NUMBER	SHEET	OF	REV
NONE	NOT REQD	H-2-120314	6	7	0

NG INDEX

AFC 77 78 79 80

DISTRIBUTION CODE: 403

M78

ACAD

INITIALS: PN

DATE: 03-16-93

QUALITY LEVEL II
SAFETY CLASS 3

APR - 8 1993

REV NO.	DATE	REVISION DESCRIPTION	APPROVAL INITIALS			
0	04/06/93	APPROVED FOR CONSTRUCTION	EG	RC	CD	NA NA
			NA	NA	NA	NA

CADFILE	B120314G	CADCODE	2B:IBM:ACD2:12.C1:SS

ENGINEERING RELEASE
REV _____ DATE _____
ERO _____

SIGNATURE	DATE
PROJ DIR NA	
QA MGR NA	
INDEPENDENT SAFETY MGR NA	
PROJECT MGR NA	
SYSTEMS MGR NA	
ENGINEERING MGR NA	
SUPERVISOR C. DIVONA	11-3-92
DESIGN ENGINEER R. CHOATE	11-3-92
CHECKED E. GARCIA	~~3-24-93~~ 11-2-92
DRAWN P. ASHLEY	2/10/92

U.S.DEPARTMENT OF ENERGY

Richland Field Office
DE – AC06-86RL10838

FLUOR DANIEL, INC.
ADVANCED TECHNOLOGY DIVISION

TU-130-001 SPIDER DRIVE DETAILS

PROJECT TITLE
HANFORD WASTE VITRIFICATION PLANT

PROJECT	FLUOR CONTRACT NO.	CWBS NO.
B-595	8457	P06B
SCALE 1/1	BLDG NO. 1	INDEX NO.

CLASSIFICATION	BY	DRAWING NUMBER	SHEET	OF	REV
NONE	NOT REQD	H-2-120314	7	7	0

NG INDEX

AFC 7 78 79 80

DISTRIBUTION CODE: 403

M79

ACAD

INITIALS: PN
DATE: 03-16-93

QUALITY LEVEL II

SAFETY CLASS 3

APR - 8 1993

REV NO.	DATE	REVISION DESCRIPTION	EG	RC	CD	
0	04/06/93	APPROVED FOR CONSTRUCTION	EG	RC	CD	NA / NA
			NA	NA	NA	NA

APPROVAL INITIALS

CADFILE	B120315A	CADCODE	2B:IBM:ACD2:12.C1:SS

ENGINEERING RELEASE

REV _____ DATE _____

ERO _____

SIGNATURE	DATE
PROJ DIR NA	
QA MGR NA	
INDEPENDENT SAFETY MGR NA	
PROJECT MGR NA	
SYSTEMS MGR NA	
ENGINEERING MGR NA	
SUPERVISOR C. DIVONA	11-3-92
DESIGN ENGINEER R. CHOATE	11-3-92
CHECKED E. GARCIA	11-2-92
DRAWN R.MOREL	3-10-92

U.S.DEPARTMENT OF ENERGY

Richland Field Office

DE – AC06–86RL10838

FLUOR DANIEL, INC.
ADVANCED TECHNOLOGY DIVISION

TU–130–001 CART ASSEMBLY PARTS LIST & NOTES

PROJECT TITLE: **HANFORD WASTE VITRIFICATION PLANT**

PROJECT	FLUOR CONTRACT NO.	CWBS NO.
B–595	8457	P06B
SCALE 1/8	BLDG NO. 1	INDEX NO.

CLASSIFICATION	BY	DRAWING NUMBER	SHEET	OF	REV
NONE	NOT REQD	H–2–120315	1	3	0

ING INDEX

AFC 77 78 79 80

DISTRIBUTION CODE: 403

M80

ACAD

INITIALS: PN

DATE: 03–16–93

QUALITY LEVEL II

SAFETY CLASS 3

APR - 8 1993

REV NO.	DATE	REVISION DESCRIPTION	EG	RC	CD	
0	04/06/93	APPROVED FOR CONSTRUCTION	EG	RC	CD	NA / NA
			NA	NA	NA	NA

APPROVAL INITIALS

CADFILE	B120315B
CADCODE	2B:IBM:ACD2:12.C1:SS

ENGINEERING RELEASE

REV _____ DATE _____

ERO _____

SIGNATURE	DATE
PROJ DIR NA	
QA MGR NA	
INDEPENDENT SAFETY MGR NA	
PROJECT MGR NA	
SYSTEMS MGR NA	
ENGINEERING MGR NA	
SUPERVISOR C. DIVONA	11-3-92
DESIGN ENGINEER R. CHOATE	11-3-92
CHECKED E. GARCIA	11-2-92
DRAWN R.MOREL	3-13-92

U.S.DEPARTMENT OF ENERGY

Richland Field Office

DE - AC06-86RL10838

FLUOR DANIEL, INC.
ADVANCED TECHNOLOGY DIVISION

TU-130-001

CART ASSEMBLY

PROJECT TITLE: HANFORD WASTE VITRIFICATION PLANT

PROJECT	FLUOR CONTRACT NO.	CWBS NO.
B-595	8457	P06B
SCALE 1/8	BLDG NO. 1	INDEX NO.

CLASSIFICATION	BY	DRAWING NUMBER	SHEET	OF	REV
NONE	NOT REQD	H-2-120315	2	3	0

ING INDEX

AFC 77 78 79 80

DISTRIBUTION CODE: 403

M81

ACAD

INITIALS: PN

DATE: 03-16-93

QUALITY LEVEL II
SAFETY CLASS 3

APR - 8 1993

REV NO.	DATE	REVISION DESCRIPTION	EG	RC	CD	
0	04/06/93	APPROVED FOR CONSTRUCTION	EG	RC	CD	NA NA
			NA	NA	NA	NA

CADFILE B120315C CADCODE 2B:IBM:ACD2:12.C1:SS

ENGINEERING RELEASE
REV _____ DATE _____
ERO _____

SIGNATURE	DATE
PROJ DIR NA	
QA MGR NA	
INDEPENDENT SAFETY MGR NA	
PROJECT MGR NA	
SYSTEMS MGR NA	
ENGINEERING MGR NA	
SUPERVISOR C. DIVONA	11-3-92
DESIGN ENGINEER R. CHOATE	11-3-92
CHECKED E. GARCIA	11-2-92
DRAWN R.MOREL	3-12-92

U.S.DEPARTMENT OF ENERGY
Richland Field Office
DE - AC06-86RL10838

FLUOR DANIEL, INC.
ADVANCED TECHNOLOGY DIVISION

TU-130-001

CART ASSEMBLY

PROJECT TITLE
HANFORD WASTE VITRIFICATION PLANT

PROJECT	FLUOR CONTRACT NO.	CWBS NO.
B-595	8457	P06B
SCALE SHOWN	BLDG NO. 1	INDEX NO.

CLASSIFICATION	BY	DRAWING NUMBER	SHEET	OF	REV
NONE	NOT REQD	H-2-120315	3	3	0

ING INDEX

AFC 77 78 79 80

DISTRIBUTION CODE: 403 M82 ACAD

INITIALS: PN
DATE: 03-16-93

			43
			44
24-008	STRUCTURAL TUBING	11	45
24-008	STRUCTURAL TUBING	11	46

QUALITY LEVEL II
SAFETY CLASS 3

APR - 8 1993

REV NO.	DATE	REVISION DESCRIPTION	APPROVAL INITIALS			
0	04/06/93	APPROVED FOR CONSTRUCTION	EG	RC	CD	NA NA
			NA	NA	NA	NA

CADFILE	B120316A	CADCODE	2B:IBM:ACD2:12.C1:SS

ENGINEERING RELEASE
REV _____ DATE _____
ERO _____

SIGNATURE	DATE
PROJ DIR NA	
QA MGR NA	
INDEPENDENT SAFETY MGR NA	
PROJECT MGR NA	
SYSTEMS MGR NA	
ENGINEERING MGR NA	
SUPERVISOR C. DIVONA	11-3-92
DESIGN ENGINEER R. CHOATE	11-3-92
CHECKED E. GARCIA	11-2-92
DRAWN R.MOREL	04/07/92

U.S.DEPARTMENT OF ENERGY
Richland Field Office
DE - AC06-86RL10838

FLUOR DANIEL, INC.
ADVANCED TECHNOLOGY DIVISION

TU-130-001 UPPER FRAME ASSEMBLY PARTS LIST & NOTES

PROJECT TITLE: HANFORD WASTE VITRIFICATION PLANT

PROJECT	FLUOR CONTRACT NO.	CWBS NO.
B-595	8457	P06B
SCALE 1/8	BLDG NO. 1	INDEX NO.

CLASSIFICATION	BY	DRAWING NUMBER	SHEET	OF	REV
NONE	NOT REQD	H-2-120316	1	11	0

NG INDEX

AFC 77 78 79 80

DISTRIBUTION CODE: 403 M83 ACAD

INITIALS: PN
DATE: 03-16-93

49 1/2

QUALITY LEVEL II
SAFETY CLASS 3

APR - 8 1993

REV NO.	DATE	REVISION DESCRIPTION	EG	RC	CD	
0	04/06/93	APPROVED FOR CONSTRUCTION	EG	RC	CD	NA / NA
			NA	NA	NA	NA

CADFILE B120316B CADCODE 2B:IBM:ACD2:12.C1:SS

ENGINEERING RELEASE
REV _____ DATE _____
ERO _____

SIGNATURE	DATE
PROJ DIR NA	
QA MGR NA	
INDEPENDENT SAFETY MGR NA	
PROJECT MGR NA	
SYSTEMS MGR NA	
ENGINEERING MGR NA	
SUPERVISOR C. DIVONA	11-3-92
DESIGN ENGINEER R. CHOATE	11-3-92
CHECKED E. GARCIA	~~3-24-93~~ 11-2-92
DRAWN R.MOREL	04/09/92

U.S.DEPARTMENT OF ENERGY
Richland Field Office
DE – AC06–86RL10838

FLUOR DANIEL, INC.
ADVANCED TECHNOLOGY DIVISION

TU–130–001
UPPER FRAME ASSEMBLY

PROJECT TITLE: HANFORD WASTE VITRIFICATION PLANT

PROJECT	FLUOR CONTRACT NO.	CWBS NO.
B–595	8457	P06B
SCALE: SHOWN	BLDG NO.: 1	INDEX NO.

CLASSIFICATION	BY	DRAWING NUMBER	SHEET	OF	REV
NONE	NOT REQD	H–2–120316	2	11	0

NG INDEX

DISTRIBUTION CODE: 403 M84 ACAD

INITIALS: PN
DATE: 03–16–93

QUALITY LEVEL II

SAFETY CLASS 3

APR - 8 1993

REV NO.	DATE	REVISION DESCRIPTION	APPROVAL INITIALS			
0	04/06/93	APPROVED FOR CONSTRUCTION	EG	RC	CD	NA / NA
			NA	NA	NA	NA

CADFILE	B120316C	CADCODE	2B:IBM:ACD2:12.C1:SS

ENGINEERING RELEASE

REV _____ DATE _____

ERO _____

SIGNATURE	DATE
PROJ DIR NA	
QA MGR NA	
INDEPENDENT SAFETY MGR NA	
PROJECT MGR NA	
SYSTEMS MGR NA	
ENGINEERING MGR NA	
SUPERVISOR C. DIVONA	11-3-92
DESIGN ENGINEER R. CHOATE	11-3-92
CHECKED E. GARCIA	11-2-92
DRAWN R.MOREL	04/15/92

U.S.DEPARTMENT OF ENERGY

Richland Field Office

DE – AC06–86RL10838

FLUOR DANIEL, INC.
ADVANCED TECHNOLOGY DIVISION

TU–130–001
UPPER FRAME ASSEMBLY

PROJECT TITLE: HANFORD WASTE VITRIFICATION PLANT

PROJECT	FLUOR CONTRACT NO.	CWBS NO.
B–595	8457	P06B
SCALE 1/8	BLDG NO. 1	INDEX NO.

CLASSIFICATION	BY	DRAWING NUMBER	SHEET	OF	REV
NONE	NOT REQD	H–2–120316	3	11	0

ING INDEX

AFC 77 78 79 80

DISTRIBUTION CODE: 403

M85

ACAD

INITIALS: PN

DATE: 03–16–93

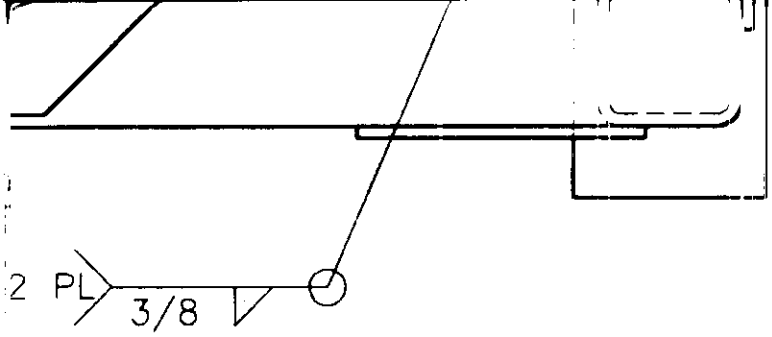

QUALITY LEVEL II
SAFETY CLASS 3

APR - 8 1993

REV NO.	DATE	REVISION DESCRIPTION	EG	RC	CD	
0	04/06/93	APPROVED FOR CONSTRUCTION	EG	RC	CD	NA NA
			NA	NA	NA	NA

CADFILE B120316D CADCODE 2B:IBM:ACD2:12.C1:SS

ENGINEERING RELEASE
REV _____ DATE _____
ERO _____

SIGNATURE	DATE
PROJ DIR NA	
QA MGR NA	
INDEPENDENT SAFETY MGR NA	
PROJECT MGR NA	
SYSTEMS MGR NA	
ENGINEERING MGR NA	
SUPERVISOR C. DIVONA	11-3-92
DESIGN ENGINEER R. CHOATE	11-3-92
CHECKED E. GARCIA	11-2-92
DRAWN R.MOREL	04/29/92

U.S.DEPARTMENT OF ENERGY
Richland Field Office
DE - AC06-86RL10838

FLUOR DANIEL, INC.
ADVANCED TECHNOLOGY DIVISION

TU-130-001
UPPER FRAME ASSEMBLY

PROJECT TITLE
HANFORD WASTE VITRIFICATION PLANT

PROJECT	FLUOR CONTRACT NO.	CWBS NO.
B-595	8457	P06B
SCALE 1/8	BLDG NO. 1	INDEX NO.

CLASSIFICATION	BY	DRAWING NUMBER	SHEET	OF	REV
NONE	NOT REQD	H-2-120316	4	11	0

NG INDEX

AFC 77 78 79 80

DISTRIBUTION CODE: 403

M86

ACAD

INITIALS: PN
DATE: 03-16-93

APR - 8 1993

QUALITY LEVEL II

SAFETY CLASS 3

REV NO.	DATE	REVISION DESCRIPTION	APPROVAL INITIALS			
0	04/06/93	APPROVED FOR CONSTRUCTION	EG	RC	CD	NA NA
			NA	NA	NA	NA

CADFILE	B120316E	CADCODE	2B:IBM:ACD2:12.C1:SS

ENGINEERING RELEASE

REV _____ DATE _____

ERO _____

SIGNATURE	DATE
PROJ DIR NA	
QA MGR NA	
INDEPENDENT SAFETY MGR NA	
PROJECT MGR NA	
SYSTEMS MGR NA	
ENGINEERING MGR NA	
SUPERVISOR C. DIVONA	11-3-92
DESIGN ENGINEER R. CHOATE	11-3-92
CHECKED E. GARCIA	11-2-92
DRAWN R.MOREL	05/01/92

U.S.DEPARTMENT OF ENERGY

Richland Field Office

DE – AC06-86RL10838

FLUOR DANIEL, INC.
ADVANCED TECHNOLOGY DIVISION

TU-130-001 SUPPORT RAIL A ASSEMBLY & DETAILS

PROJECT TITLE: HANFORD WASTE VITRIFICATION PLANT

PROJECT	FLUOR CONTRACT NO.	CWBS NO.
B-595	8457	P06B
SCALE 1/8	BLDG NO. 1	INDEX NO.

CLASSIFICATION	BY	DRAWING NUMBER	SHEET	OF	REV
NONE	NOT REQD	H-2-120316	5	11	0

NG INDEX

AFC 77 78 79 80

DISTRIBUTION CODE: 403

M87

ACAD

INITIALS: PN

DATE: 03-16-93

QUALITY LEVEL II

SAFETY CLASS 3

APR - 8 1993

REV NO.	DATE	REVISION DESCRIPTION	APPROVAL INITIALS			
0	04/06/93	APPROVED FOR CONSTRUCTION	EG	RC	CD	NA NA
			NA	NA	NA	NA

CADFILE B120316F CADCODE 2B:IBM:ACD2:12.C1:SS

ENGINEERING RELEASE

REV _____ DATE _____

ERO _____

SIGNATURE	DATE
PROJ DIR NA	
QA MGR NA	
INDEPENDENT SAFETY MGR NA	
PROJECT MGR NA	
SYSTEMS MGR NA	
ENGINEERING MGR NA	
SUPERVISOR C. DIVONA	11-3-92
DESIGN ENGINEER R. CHOATE	11-3-92
CHECKED E. GARCIA	11-2-92
DRAWN R.MOREL	05/04/92

U.S.DEPARTMENT OF ENERGY

Richland Field Office

DE – AC06–86RL10838

FLUOR DANIEL, INC.
ADVANCED TECHNOLOGY DIVISION

TU–130–001 SUPPORT RAIL B ASSEMBLY & DETAILS

PROJECT TITLE: HANFORD WASTE VITRIFICATION PLANT

PROJECT	FLUOR CONTRACT NO.	CWBS NO.
B–595	8457	P06B
SCALE	BLDG NO.	INDEX NO.
SHOWN	1	

CLASSIFICATION	BY	DRAWING NUMBER	SHEET	OF	REV
NONE	NOT REQD	H–2–120316	6	11	0

NG INDEX

DISTRIBUTION CODE: 403 M88 ACAD

INITIALS: PN

DATE: 03–16–93

QUALITY LEVEL II

SAFETY CLASS 3

APR - 8 1993

REV NO.	DATE	REVISION DESCRIPTION	EG	RC	CD	
0	04/06/93	APPROVED FOR CONSTRUCTION	EG	RC	CD	NA / NA
			NA	NA	NA	NA

CADFILE B120316G CADCODE 2B:IBM:ACD2:12.C1:SS

ENGINEERING RELEASE

REV _____ DATE _____

ERO _____

SIGNATURE	DATE
PROJ DIR NA	
QA MGR NA	
INDEPENDENT SAFETY MGR NA	
PROJECT MGR NA	
SYSTEMS MGR NA	
ENGINEERING MGR NA	
SUPERVISOR C. DIVONA	11-3-92
DESIGN ENGINEER R. CHOATE	11-3-92
CHECKED E. GARCIA	11-2-92
DRAWN R.MOREL	05/04/92

U.S.DEPARTMENT OF ENERGY

Richland Field Office

DE – AC06-86RL10838

FLUOR DANIEL, INC.
ADVANCED TECHNOLOGY DIVISION

TU-130-001 SUPPORT RAIL C ASSEMBLY & DETAILS

PROJECT TITLE: HANFORD WASTE VITRIFICATION PLANT

PROJECT	FLUOR CONTRACT NO.	CWBS NO.
B-595	8457	P06B
SCALE: SHOWN	BLDG NO. 1	INDEX NO.

CLASSIFICATION	BY	DRAWING NUMBER	SHEET	OF	REV
NONE	NOT REQD	H-2-120316	7	11	0

ING INDEX

AFC 77 78 79 80

DISTRIBUTION CODE: 403

M89

ACAD

INITIALS: PN

DATE: 03-16-93

QUALITY LEVEL II
SAFETY CLASS 3

APR - 8 1993

REV NO.	DATE	REVISION DESCRIPTION	EG	RC	CD	
0	04/06/93	APPROVED FOR CONSTRUCTION	EG	RC	CD	NA/NA
			NA	NA	NA	NA

APPROVAL INITIALS

CADFILE B120316H CADCODE 2B:IBM:ACD2:12.C1:SS

ENGINEERING RELEASE
REV _____ DATE _____
ERO _____

SIGNATURE	DATE
PROJ DIR NA	
QA MGR NA	
INDEPENDENT SAFETY MGR NA	
PROJECT MGR NA	
SYSTEMS MGR NA	
ENGINEERING MGR NA	
SUPERVISOR C. DIVONA	11-3-92
DESIGN ENGINEER R. CHOATE	11-3-92
CHECKED E. GARCIA	~~3-24-93~~ 11-2-92
DRAWN R.MOREL	05/04/92

U.S.DEPARTMENT OF ENERGY

Richland Field Office
DE – AC06–86RL10838

FLUOR DANIEL, INC.
ADVANCED TECHNOLOGY DIVISION

TU–130–001 SUPPORT RAIL D ASSEMBLY & DETAILS

PROJECT TITLE
HANFORD WASTE VITRIFICATION PLANT

PROJECT	FLUOR CONTRACT NO.	CWBS NO.
B–595	8457	P06B
SCALE SHOWN	BLDG NO. 1	INDEX NO.

CLASSIFICATION	BY	DRAWING NUMBER	SHEET	OF	REV
NONE	NOT REQD	H–2–120316	8	11	0

NG INDEX

AFC 77 78 79 80

DISTRIBUTION CODE: 403 M90 ACAD

INITIALS: PN
DATE: 03–16–93

QUALITY LEVEL II

SAFETY CLASS 3

APR - 8 1993

REV NO.	DATE	REVISION DESCRIPTION	EG	RC	CD	
0	04/06/93	APPROVED FOR CONSTRUCTION	EG	RC	CD	NA / NA
			NA	NA	NA	NA

CADFILE	B120316J	CADCODE	2B:IBM:ACD2:12.C1:SS

ENGINEERING RELEASE

REV _____ DATE _____

ERO _____

SIGNATURE	DATE
PROJ DIR NA	
DA MGR NA	
INDEPENDENT SAFETY MGR NA	
PROJECT MGR NA	
SYSTEMS MGR NA	
ENGINEERING MGR NA	
SUPERVISOR C. DIVONA	11-3-92
DESIGN ENGINEER R. CHOATE	11-3-92
CHECKED E. GARCIA	~~3-31-93~~ 11-2-92
DRAWN R.MOREL	05/04/92

U.S.DEPARTMENT OF ENERGY

Richland Field Office

DE – AC06–86RL10838

FLUOR DANIEL, INC.
ADVANCED TECHNOLOGY DIVISION

TU–130–001
UPPER FRAME DETAILS

PROJECT TITLE: HANFORD WASTE VITRIFICATION PLANT

PROJECT	FLUOR CONTRACT NO.	CWBS NO.
B–595	8457	P06B
SCALE 1/4	BLDG NO. 1	INDEX NO.

CLASSIFICATION	BY	DRAWING NUMBER	SHEET	OF	REV
NONE	NOT REQD	H–2–120316	9	11	0

NG INDEX

DISTRIBUTION CODE: 403

M91

ACAD

INITIALS: PN

DATE: 03–16–93

QUALITY LEVEL II
SAFETY CLASS 3

APR - 8 1993

REV NO.	DATE	REVISION DESCRIPTION	EG	RC	CD	
0	04/06/93	APPROVED FOR CONSTRUCTION	EG	RC	CD	NA/NA
			NA	NA	NA	NA

APPROVAL INITIALS

CADFILE	B120316K	CADCODE	2B:IBM:ACD2:12.C1:SS

ENGINEERING RELEASE
REV _____ DATE _____
ERO _____

SIGNATURE	DATE
PROJ DIR NA	
QA MGR NA	
INDEPENDENT SAFETY MGR NA	
PROJECT MGR NA	
SYSTEMS MGR NA	
ENGINEERING MGR NA	
SUPERVISOR C. DIVONA	11-3-92
DESIGN ENGINEER R. CHOATE	11-3-92
CHECKED E. GARCIA	~~3-24-93~~ 11-2-92
DRAWN R.MOREL	05/04/92

U.S.DEPARTMENT OF ENERGY

Richland Field Office
DE – AC06–86RL10838

FLUOR DANIEL, INC.
ADVANCED TECHNOLOGY DIVISION

TU–130–001
UPPER FRAME DETAILS

PROJECT TITLE
HANFORD WASTE VITRIFICATION PLANT

PROJECT	FLUOR CONTRACT NO.	CWBS NO.
B–595	8457	P06B
SCALE 1/4	BLDG NO. 1	INDEX NO.

CLASSIFICATION	BY	DRAWING NUMBER	SHEET	OF	REV
NONE	NOT REQD	H–2–120316	10	11	0

ING INDEX

AFC 77 78 79 80

DISTRIBUTION CODE: 403

M92

ACAD

INITIALS: PN
DATE: 03-16-93

APR - 8 1993

QUALITY LEVEL II
SAFETY CLASS 3

REV NO.	DATE	REVISION DESCRIPTION	EG	RC	CD	
0	04/06/93	APPROVED FOR CONSTRUCTION	EG	RC	CD	NA / NA
			NA	NA	NA	NA

APPROVAL INITIALS

CADFILE	B120316L
CADCODE	2B:IBM:ACD2:12.C1:SS

ENGINEERING RELEASE
REV _____ DATE _____
ERO _____

SIGNATURE	DATE
PROJ DIR NA	
QA MGR NA	
INDEPENDENT SAFETY MGR NA	
PROJECT MGR NA	
SYSTEMS MGR NA	
ENGINEERING MGR NA	
SUPERVISOR C. DIVONA	11-3-92
DESIGN ENGINEER R. CHOATE	11-3-92
CHECKED E. GARCIA	11-2-92
DRAWN R.MOREL	05/04/92

U.S.DEPARTMENT OF ENERGY
Richland Field Office
DE - AC06-86RL10838

FLUOR DANIEL, INC.
ADVANCED TECHNOLOGY DIVISION

TU-130-001
UPPER FRAME DETAILS

PROJECT TITLE
HANFORD WASTE VITRIFICATION PLANT

PROJECT	FLUOR CONTRACT NO.	CWBS NO.
B-595	8457	P06B
SCALE 1/4	BLDG NO. 1	INDEX NO.

CLASSIFICATION	BY	DRAWING NUMBER	SHEET	OF	REV
NONE	NOT REQD	H-2-120316	11	11	0

ING INDEX

AFC 77 78 79 80

DISTRIBUTION CODE: 403

M93

ACAD

INITIALS: PN
DATE: 03-16-93

APR - 8 1993

QUALITY LEVEL II

SAFETY CLASS 3

REV NO.	DATE	REVISION DESCRIPTION	APPROVAL INITIALS			
0	04/06/93	APPROVED FOR CONSTRUCTION	EG	RC	CD	NA NA
			NA	NA	NA	NA

CADFILE	B120317A	CADCODE	2B:IBM:ACD2:12.C1:SS

ENGINEERING RELEASE

REV _____ DATE _____

ERO _____

SIGNATURE	DATE
PROJ DIR NA	
QA MGR NA	
INDEPENDENT SAFETY MGR NA	
PROJECT MGR NA	
SYSTEMS MGR NA	
ENGINEERING MGR NA	
SUPERVISOR C. DIVONA	11-3-92
DESIGN ENGINEER R. CHOATE	11-3-92
CHECKED E. GARCIA	~~7-24-93~~ 11-2-92
DRAWN R.MOREL	05/06/92

U.S.DEPARTMENT OF ENERGY

Richland Field Office

DE - AC06-86RL10838

FLUOR DANIEL, INC.
ADVANCED TECHNOLOGY DIVISION

TU-130-001 LOWER FRAME ASSY PARTS LIST & NOTES

PROJECT TITLE		
HANFORD WASTE VITRIFICATION PLANT		
PROJECT B-595	FLUOR CONTRACT NO. 8457	CWBS NO. P06B
SCALE NONE	BLDG NO. 1	INDEX NO.

CLASSIFICATION	BY	DRAWING NUMBER	SHEET	OF	REV
NONE	NOT REQD	H-2-120317	1	8	0

WING INDEX

AFC 77 78 79 80

DISTRIBUTION CODE: 403

M94

ACAD

INITIALS: PN

DATE: 03-16-93

APR - 8 1993

QUALITY LEVEL II
SAFETY CLASS 3

REV NO.	DATE	REVISION DESCRIPTION	EG	RC	CD	
						B
0	04/06/93	APPROVED FOR CONSTRUCTION	EG	RC	CD	NA / NA
			NA	NA	NA	NA

CADFILE B120317B CADCODE 2B:IBM:ACD2:12.C1:SS

ENGINEERING RELEASE
REV _____ DATE _____
ERO _____

SIGNATURE	DATE
PROJ DIR NA	
QA MGR NA	
INDEPENDENT SAFETY MGR NA	
PROJECT MGR NA	
SYSTEMS MGR NA	
ENGINEERING MGR NA	
SUPERVISOR C. DIVONA	11-3-92
DESIGN ENGINEER R. CHOATE	11-3-92
CHECKED E. GARCIA	11-2-92
DRAWN R.MOREL	05/06/92

U.S.DEPARTMENT OF ENERGY
Richland Field Office
DE – AC06-86RL10838

FLUOR DANIEL, INC.
ADVANCED TECHNOLOGY DIVISION

TU-130-001
POUR TURNTABLE
LOWER FRAME ASSEMBLY

A

PROJECT TITLE
HANFORD WASTE VITRIFICATION PLANT

PROJECT	FLUOR CONTRACT NO.	CWBS NO.
B-595	8457	P06B
SCALE 1/8	BLDG NO. 1	INDEX NO.

CLASSIFICATION	BY	DRAWING NUMBER	SHEET	OF	REV
NONE	NOT REQD	H-2-120317	2	8	0

ING INDEX

AFC 77 78 79 80

DISTRIBUTION CODE: 403 M95 ACAD

INITIALS: PN
DATE: 03-16-93

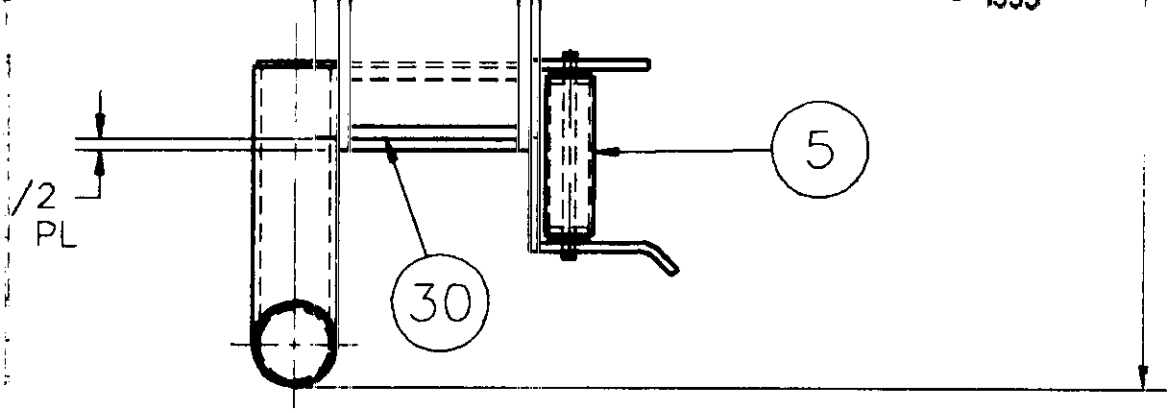

QUALITY LEVEL II
SAFETY CLASS 3

REV NO.	DATE	REVISION DESCRIPTION	APPROVAL INITIALS			
0	04/06/93	APPROVED FOR CONSTRUCTION	EG	RC	CD	NA / NA
			NA	NA	NA	NA

CADFILE	B120317C	CADCODE	2B:IBM:ACD2:12.C1:SS

ENGINEERING RELEASE
REV _____ DATE _____
ERO _____

SIGNATURE	DATE
PROJ DIR NA	
QA MGR NA	
INDEPENDENT SAFETY MGR NA	
PROJECT MGR NA	
SYSTEMS MGR NA	
ENGINEERING MGR NA	
SUPERVISOR C. DIVONA	11-3-92
DESIGN ENGINEER R. CHOATE	11-3-92
CHECKED E. GARCIA	11-2-92
DRAWN R.MOREL	05/26/92

U.S.DEPARTMENT OF ENERGY
Richland Field Office
DE – AC06–86RL10838

FLUOR DANIEL, INC.
ADVANCED TECHNOLOGY DIVISION

TU–130–001

LOWER FRAME ASSEMBLY

PROJECT TITLE: HANFORD WASTE VITRIFICATION PLANT

PROJECT	FLUOR CONTRACT NO.	CWBS NO.
B–595	8457	P06B
SCALE 1/8	BLDG NO. 1	INDEX NO.

CLASSIFICATION	BY	DRAWING NUMBER	SHEET	OF	REV
NONE	NOT REQD	H–2–120317	3	8	0

NG INDEX

AFC 77 78 79 80

DISTRIBUTION CODE: 403 **M96** ACAD

INITIALS: PN
DATE: 03–16–93

APR - 8 1993

SECTION H
SCALE : 1/2

QUALITY LEVEL II
SAFETY CLASS 3

REV NO.	DATE	REVISION DESCRIPTION	APPROVAL INITIALS			
0	04/06/93	APPROVED FOR CONSTRUCTION	EG	RC	CD	NA / NA
			NA	NA	NA	NA

CADFILE	B120317D	CADCODE	2B:IBM:ACD2:12.C1:SS

ENGINEERING RELEASE
REV _____ DATE _____
ERO _____

SIGNATURE	DATE
PROJ DIR NA	
QA MGR NA	
INDEPENDENT SAFETY MGR NA	
PROJECT MGR NA	
SYSTEMS MGR NA	
ENGINEERING MGR NA	
SUPERVISOR C. DIVONA	11-3-92
DESIGN ENGINEER R. CHOATE	11-3-92
CHECKED E. GARCIA	11-2-92
DRAWN R.MOREL	06/02/92

U.S.DEPARTMENT OF ENERGY
Richland Field Office
DE – AC06–86RL10838

FLUOR DANIEL, INC.
ADVANCED TECHNOLOGY DIVISION

TU–130–001 LOWER FRAME BEAMS SECTIONS

PROJECT TITLE		
HANFORD WASTE VITRIFICATION PLANT		
PROJECT B–595	FLUOR CONTRACT NO. 8457	CWBS NO. P06B
SCALE SHOWN	BLDG NO. 1	INDEX NO.

CLASSIFICATION	BY	DRAWING NUMBER	SHEET	OF	REV
NONE	NOT REQD	H–2–120317	4	8	0

ING INDEX

AFC 77 78 79 80

DISTRIBUTION CODE: 403 M97 ACAD

INITIALS: PN
DATE: 03–16–93

APR - 8 1993

QUALITY LEVEL II
SAFETY CLASS 3

REV NO.	DATE	REVISION DESCRIPTION	EG	RC	CD	NA
0	03/30/93	APPROVED FOR CONSTRUCTION	EG	RC	CD	NA
			NA	NA	NA	NA

2 3/4

CADFILE	B120317E
CADCODE	2B:IBM:ACD2:12.C1:SS

ENGINEERING RELEASE
REV _____ DATE _____
ERO _____

SIGNATURE	DATE
PROJ DIR NA	
QA MGR NA	
INDEPENDENT SAFETY MGR NA	
PROJECT MGR NA	
SYSTEMS MGR NA	
ENGINEERING MGR NA	
SUPERVISOR C. DIVONA	11-3-92
DESIGN ENGINEER R. CHOATE	11-3-92
CHECKED E. GARCIA	11-2-92
DRAWN R.MOREL	6-03-92

U.S.DEPARTMENT OF ENERGY
Richland Field Office
DE – AC06–86RL10838

FLUOR DANIEL, INC.
ADVANCED TECHNOLOGY DIVISION

TU–130–001 STOP FIXED HOLDER DETAILS

PROJECT TITLE
HANFORD WASTE VITRIFICATION PLANT

PROJECT	FLUOR CONTRACT NO.	CWBS NO.
B–595	8457	P06B
SCALE	BLDG NO.	INDEX NO.
SHOWN	1	

CLASSIFICATION	BY	DRAWING NUMBER	SHEET	OF	REV
NONE	NOT REQD	H–2–120317	5	8	0

NG INDEX

AFC 77 78 79 80

DISTRIBUTION CODE: 403

M98

ACAD

INITIALS: PN
DATE: 03–16–93

APR - 8 1993

QUALITY LEVEL II

SAFETY CLASS 3

REV NO.	DATE	REVISION DESCRIPTION	EG	RC	CD	
0	01/06/93	APPROVED FOR CONSTRUCTION	EG	RC	CD	NA / NA
			NA	NA	NA	NA

CADFILE	B120317F	CADCODE	2B:IBM:ACD2:12.C1:SS

ENGINEERING RELEASE

REV _____ DATE _____

ERO _____

SIGNATURE	DATE
PROJ DIR NA	
QA MGR NA	
INDEPENDENT SAFETY MGR NA	
PROJECT MGR NA	
SYSTEMS MGR NA	
ENGINEERING MGR NA	
SUPERVISOR C. DIVONA	11-3-92
DESIGN ENGINEER R. CHOATE	11-3-92
CHECKED E. GARCIA	11-2-92
DRAWN R.MOREL	6-4-92

U.S.DEPARTMENT OF ENERGY

Richland Field Office

DE - AC06-86RL10838

FLUOR DANIEL, INC.
ADVANCED TECHNOLOGY DIVISION

TU-130-001 ROLLER DRUM AND BRACKET ASSY DETAILS

PROJECT TITLE: HANFORD WASTE VITRIFICATION PLANT

PROJECT	FLUOR CONTRACT NO.	CWBS NO.
B-595	8457	P06B
SCALE 1/2	BLDG NO. 1	INDEX NO.

CLASSIFICATION	BY	DRAWING NUMBER	SHEET	OF	REV
NONE	NOT REQD	H-2-120317	6	8	0

NG INDEX

INITIALS: PN

APR - 8 1993

QUALITY LEVEL II
SAFETY CLASS 3

REV NO.	DATE	REVISION DESCRIPTION	APPROVAL INITIALS			
0	04/06/93	APPROVED FOR CONSTRUCTION	EG	RC	CD	NA/NA
			NA	NA	NA	NA

CADFILE	B120317G	CADCODE	2B:IBM:ACD2:12.C1:SS

ENGINEERING RELEASE
REV _____ DATE _____
ERO _____

SIGNATURE	DATE
PROJ DIR NA	
QA MGR NA	
INDEPENDENT SAFETY MGR NA	
PROJECT MGR NA	
SYSTEMS MGR NA	
ENGINEERING MGR NA	
SUPERVISOR C. DIVONA	11-3-92
DESIGN ENGINEER R. CHOATE	11-3-92
CHECKED E. GARCIA	11-2-92
DRAWN R.MOREL	06/04/92

U.S.DEPARTMENT OF ENERGY
Richland Field Office
DE - AC06-86RL10838

FLUOR DANIEL, INC.
ADVANCED TECHNOLOGY DIVISION

TU-130-001
LOWER FRAME ASSEMBLY
PARTS DETAILS

PROJECT TITLE: HANFORD WASTE VITRIFICATION PLANT

PROJECT	FLUOR CONTRACT NO.	CWBS NO.
B-595	8457	P06B
SCALE	BLDG NO.	INDEX NO.
1/4	1	

CLASSIFICATION	BY	DRAWING NUMBER	SHEET	OF	REV
NONE	NOT REQD	H-2-120317	7	8	0

NG INDEX

INITIALS: PN

DISTRIBUTION CODE: 403 M100 ACAD DATE: 03-16-93

APR - 8 1993

QUALITY LEVEL II

SAFETY CLASS 3

REV NO.	DATE	REVISION DESCRIPTION	APPROVAL INITIALS			
0	3/ /93	APPROVED FOR CONSTRUCTION	EG	RC	CD	NA NA
			NA	NA	NA	NA

CADFILE	B120317H	CADCODE	2B:IBM:ACD2:12.C1:SS

ENGINEERING RELEASE

REV _____ DATE _____

ERO _____

SIGNATURE	DATE
PROJ DIR NA	
QA MGR NA	
INDEPENDENT SAFETY MGR NA	
PROJECT MGR NA	
SYSTEMS MGR NA	
ENGINEERING MGR NA	
SUPERVISOR C. DIVONA	11-3-92
DESIGN ENGINEER R. CHOATE	11-3-92
CHECKED E. GARCIA	11-2-92
DRAWN R.MOREL	06/04/92

U.S.DEPARTMENT OF ENERGY

Richland Field Office

DE – AC06-86RL10838

FLUOR DANIEL, INC.
ADVANCED TECHNOLOGY DIVISION

TU-130-001 LOWER FRAME ASSEMBLY PARTS DETAILS

PROJECT TITLE: HANFORD WASTE VITRIFICATION PLANT

PROJECT	FLUOR CONTRACT NO.	CWBS NO.
B-595	8457	P06B
SCALE 1/4	BLDG NO. 1	INDEX NO.

CLASSIFICATION	BY	DRAWING NUMBER	SHEET	OF	REV
NONE	NOT REQD	H-2-120317	8	8	0

ING INDEX

AFC 77 78 79 80

DISTRIBUTION CODE: 403

M101 ACAD

INITIALS: PN

DATE: 03-16-93

APR - 8 1993

QUALITY LEVEL II

SAFETY CLASS 3

REV NO.	DATE	REVISION DESCRIPTION	EG	RC	CD	
						NA/NA
0	04/06/93	APPROVED FOR CONSTRUCTION	NA	NA	NA	NA

CADFILE	B120318A
CADCODE	2B:IBM:ACD2:12.C1:SS

ENGINEERING RELEASE

REV _____ DATE _____

ERD _____

SIGNATURE	DATE
PROJ DIR NA	
QA MGR NA	
INDEPENDENT SAFETY MGR NA	
PROJECT MGR NA	
SYSTEMS MGR NA	
ENGINEERING MGR NA	
SUPERVISOR C. DIVONA	11-3-92
DESIGN ENGINEER R. CHOATE	11-3-92
CHECKED E. GARCIA	~~3-24-93~~ 11-2-92
DRAWN P.ASHLEY	01/14/92

U.S.DEPARTMENT OF ENERGY

Richland Field Office

DE - AC06-86RL10838

FLUOR DANIEL, INC.
ADVANCED TECHNOLOGY DIVISION

TU-130-001
CAROUSEL
ASSEMBLY

PROJECT TITLE

HANFORD WASTE VITRIFICATION PLANT

PROJECT	FLUOR CONTRACT NO.	CWBS NO.
B-595	8457	P06B
SCALE 1/8	BLDG NO. 1	INDEX NO.

CLASSIFICATION	BY	DRAWING NUMBER	SHEET	OF	REV
NONE	NOT REQD	H-2-120318	1	4	0

ING INDEX

DISTRIBUTION CODE: 403

M102 ACAD

INITIALS: PN

DATE: 03-16-93

APR - 8 1993

QUALITY LEVEL II
SAFETY CLASS 3

REV NO.	DATE	REVISION DESCRIPTION	EG	RC	CD	
0	04/06/93	APPROVED FOR CONSTRUCTION	EG	RC	CD	NA / NA
			NA	NA	NA	NA

CADFILE	B120318B	CADCODE	2B:IBM:ACD2:12.C1:SS

ENGINEERING RELEASE

REV _____ DATE _____

ERO _____

SIGNATURE	DATE
PROJ DIR NA	
QA MGR NA	
INDEPENDENT SAFETY MGR NA	
PROJECT MGR NA	
SYSTEMS MGR NA	
ENGINEERING MGR NA	
SUPERVISOR C. DIVONA	11-3-92
DESIGN ENGINEER R. CHOATE	11-3-92
CHECKED E. GARCIA	11-2-92
DRAWN P.ASHLEY	01/14/92

U.S.DEPARTMENT OF ENERGY

Richland Field Office

DE – AC06-86RL10838

FLUOR DANIEL, INC.
ADVANCED TECHNOLOGY DIVISION

TU-130-001
CAROUSEL
ASSEMBLY

PROJECT TITLE: HANFORD WASTE VITRIFICATION PLANT

PROJECT	FLUOR CONTRACT NO.	CWBS NO.
B-595	8457	P06B
SCALE: SHOWN	BLDG NO.: 1	INDEX NO.

CLASSIFICATION	BY	DRAWING NUMBER	SHEET	OF	REV
NONE	NOT REQD	H-2-120318	2	4	0

ING INDEX

AFC 77 78 79 80

DISTRIBUTION CODE: 403

M103 ACAD

INITIALS: PN

DATE: 03-16-93

APR - 8 1993

QUALITY LEVEL II

SAFETY CLASS 3

REV NO.	DATE	REVISION DESCRIPTION	EG	RC	CD	
0	04/06/93	APPROVED FOR CONSTRUCTION	EG	RC	CD	NA / NA
			NA	NA	NA	NA

APPROVAL INITIALS

CADFILE	B120318C	CADCODE	2B:IBM:ACD2:12.C1:SS

ENGINEERING RELEASE

REV _____ DATE _____

ERO _____

SIGNATURE	DATE
PROJ DIR NA	
QA MGR NA	
INDEPENDENT SAFETY MGR NA	
PROJECT MGR NA	
SYSTEMS MGR NA	
ENGINEERING MGR NA	
SUPERVISOR C. DIVONA	11-3-92
DESIGN ENGINEER R. CHOATE	11-3-92
CHECKED E. GARCIA	~~3-31-93~~ 11-2-92
DRAWN P.ASHLEY	01/23/92

U.S.DEPARTMENT OF ENERGY

Richland Field Office

DE – AC06-86RL10838

FLUOR DANIEL, INC.
ADVANCED TECHNOLOGY DIVISION

TU-130-001 CAROUSEL DETAILS

PROJECT TITLE: HANFORD WASTE VITRIFICATION PLANT

PROJECT	FLUOR CONTRACT NO.	CWBS NO.
B-595	8457	P06B
SCALE: SHOWN	BLDG NO.: 1	INDEX NO.

CLASSIFICATION	BY	DRAWING NUMBER	SHEET	OF	REV
NONE	NOT REQD	H-2-120318	3	4	0

ING INDEX

A F C 77 78 79 80

DISTRIBUTION CODE: 403

M104 ACAD

INITIALS: PN

DATE: 03-16-93

QUALITY LEVEL II
SAFETY CLASS 3

APR - 8 1993

REV NO.	DATE	REVISION DESCRIPTION	APPROVAL INITIALS			
0	04/6/93	APPROVED FOR CONSTRUCTION	EG	RC	CD	NA NA
			NA	NA	NA	NA

CADFILE	B120318D	CADCODE	2B:IBM:ACD2:12.C1:SS

ENGINEERING RELEASE
REV _____ DATE _____
ERO _____

SIGNATURE	DATE
PROJ DIR NA	
QA MGR NA	
INDEPENDENT SAFETY MGR NA	
PROJECT MGR NA	
SYSTEMS MGR NA	
ENGINEERING MGR NA	
SUPERVISOR C. DIVONA	11-3-92
DESIGN ENGINEER R. CHOATE	11-3-92
CHECKED E. GARCIA	11-2-92
DRAWN P.ASHLEY	01/22/92

U.S.DEPARTMENT OF ENERGY
Richland Field Office
DE - AC06-86RL10838

FLUOR DANIEL, INC.
ADVANCED TECHNOLOGY DIVISION

TU-130-001 CAROUSEL SUB-WELDMENT

PROJECT TITLE
HANFORD WASTE VITRIFICATION PLANT

PROJECT	FLUOR CONTRACT NO.	CWBS NO.
B-595	8457	P06B
SCALE 1/4	BLDG NO. 1	INDEX NO.

CLASSIFICATION	BY	DRAWING NUMBER	SHEET	OF	REV
NONE	NOT REQD	H-2-120318	4	4	0

INDEX

DISTRIBUTION CODE: 403

M105 ACAD

INITIALS: PN
DATE: 03-16-93

APR - 8 1993

QUALITY LEVEL II

SAFETY CLASS 3

REV NO.	DATE	REVISION DESCRIPTION	APPROVAL INITIALS			
0	04/06/93	APPROVED FOR CONSTRUCTION	EG	RC	CD	NA NA
			NA	NA	NA	NA

CADFILE	B120319A	CADCODE	2B:IBM:ACD2:12.C1:SS

ENGINEERING RELEASE

REV _____ DATE _____

ERO _____

SIGNATURE	DATE
PROJ DIR NA	
QA MGR NA	
INDEPENDENT SAFETY MGR NA	
PROJECT MGR NA	
SYSTEMS MGR NA	
ENGINEERING MGR NA	
SUPERVISOR C. DIVONA	11-3-92
DESIGN ENGINEER R. CHOATE	11-3-92
CHECKED E. GARCIA	11-2-92
DRAWN EYBARRA	3/10/92

U.S. DEPARTMENT OF ENERGY

Richland Field Office

DE – AC06-86RL10838

FLUOR DANIEL, INC.
ADVANCED TECHNOLOGY DIVISION

TU-130-001 CONDUIT & CABLE ASSEMBLY

PROJECT TITLE: HANFORD WASTE VITRIFICATION PLANT

PROJECT	FLUOR CONTRACT NO.	CWBS NO.
B-595	8457	P06B
SCALE: NONE	BLDG NO.: 1	INDEX NO.

CLASSIFICATION	BY	DRAWING NUMBER	SHEET	OF	REV
NONE	NOT REQD	H-2-120319	1	7	0

NG INDEX

AFC 77 78 79 80

DISTRIBUTION CODE: 402

M106 ACAD

INITIALS: PN

DATE: 03-16-93

APR - 8 1993

PULL BOX #PB3

QUALITY LEVEL II
SAFETY CLASS 3

RE
0450-020)

REV NO.	DATE	REVISION DESCRIPTION	APPROVAL INITIALS			
0	04/06/93	APPROVED FOR CONSTRUCTION	EG	RC	CD	NA NA
			NA	NA	NA	NA

CADFILE	B120319B	CADCODE	2B:IBM:ACD2:12.C1:SS

ENGINEERING RELEASE
REV _____ DATE _____
ERO _____

SIGNATURE	DATE
PROJ DIR NA	
QA MGR NA	
INDEPENDENT SAFETY MGR NA	
PROJECT MGR NA	
SYSTEMS MGR NA	
ENGINEERING MGR NA	
SUPERVISOR C. DIVONA	11-3-92
DESIGN ENGINEER R. CHOATE	11-3-92
CHECKED E. GARCIA	~~3-24-93~~ 11-2-92
DRAWN EYBARRA	05/11/92

U.S. DEPARTMENT OF ENERGY

Richland Field Office
DE - AC06-86RL10838

FLUOR DANIEL, INC.
ADVANCED TECHNOLOGY DIVISION

TU-130-001 CONDUIT & CABLE ASSEMBLY

PROJECT TITLE
HANFORD WASTE VITRIFICATION PLANT

PROJECT	FLUOR CONTRACT NO.	CWBS NO.
B-595	8457	P06B
SCALE 1/8	BLDG NO. 1	INDEX NO.

CLASSIFICATION	BY	DRAWING NUMBER	SHEET	OF	REV
NONE	NOT REQD	H-2-120319	2	7	0

WING INDEX

AFC 77 78 79 80

DISTRIBUTION CODE: 402

M107 ACAD

INITIALS: PN
DATE: 03-16-93

APR - 8 1993

QUALITY LEVEL II

SAFETY CLASS 3

REV NO.	DATE	REVISION DESCRIPTION	EG	RC	CD	
0	04/06/93	APPROVED FOR CONSTRUCTION	EG	RC	CD	NA NA
			NA	NA	NA	NA

CADFILE B120319C CADCODE 2B:IBM:ACD2:12.C1:SS

ENGINEERING RELEASE

REV _____ DATE _____

ERO _____

SIGNATURE	DATE
PROJ DIR NA	
QA MGR NA	
INDEPENDENT SAFETY MGR NA	
PROJECT MGR NA	
SYSTEMS MGR NA	
ENGINEERING MGR NA	
SUPERVISOR C. DIVONA	11-3-92
DESIGN ENGINEER R. CHOATE	11-3-92
CHECKED E. GARCIA	3-24-93 11-2-92
DRAWN EYBARRA	03/10/92

U.S.DEPARTMENT OF ENERGY

Richland Field Office

DE – AC06–86RL10838

FLUOR DANIEL, INC.
ADVANCED TECHNOLOGY DIVISION

TU–130–001 CONDUIT & CABLE ASSEMBLY

PROJECT TITLE: HANFORD WASTE VITRIFICATION PLANT

PROJECT	FLUOR CONTRACT NO.	CWBS NO.
B–595	8457	P06B
SCALE 1/12	BLDG NO. 1	INDEX NO.

CLASSIFICATION	BY	DRAWING NUMBER	SHEET	OF	REV
NONE	NOT REQD	H–2–120319	3	7	0

ING INDEX

AFC 77 78 79 80

DISTRIBUTION CODE: 402

M108 ACAD

INITIALS: PN

DATE: 03–16–93

QUALITY LEVEL II

SAFETY CLASS 3

REV NO.	DATE	REVISION DESCRIPTION	APPROVAL INITIALS			
0	04/06/93	APPROVED FOR CONSTRUCTION	EG	RC	CD	NA / NA
			NA	NA	NA	NA

CADFILE	B120319D	CADCODE	2B:IBM:ACD2:12.C1:SS

ENGINEERING RELEASE

REV _____ DATE _____

ERO _____

SIGNATURE	DATE
PROJ DIR NA	
QA MGR NA	
INDEPENDENT SAFETY MGR NA	
PROJECT MGR NA	
SYSTEMS MGR NA	
ENGINEERING MGR NA	
SUPERVISOR C. DIVONA	11-3-92
DESIGN ENGINEER R. CHOATE	11-3-92
CHECKED E. GARCIA	11-2-92
DRAWN J.KAPPELER	06/26/92

U.S.DEPARTMENT OF ENERGY

Richland Field Office

DE – AC06–86RL10838

FLUOR DANIEL, INC.
ADVANCED TECHNOLOGY DIVISION

TU–130–001 CONDUIT & CABLE ASSEMBLY

PROJECT TITLE: **HANFORD WASTE VITRIFICATION PLANT**

PROJECT	FLUOR CONTRACT NO.	CWBS NO.
B–595	8457	P06B
SCALE 1/8	BLDG NO. 1	INDEX NO.

CLASSIFICATION	BY	DRAWING NUMBER	SHEET	OF	REV
NONE	NOT REQD	H–2–120319	4	7	0

VING INDEX

AFC 77 78 79 80

DISTRIBUTION CODE: 403

M109 ACAD

INITIALS: PN

DATE: 03–16–93

APR - 8 1993

QUALITY LEVEL II
SAFETY CLASS 3

REV NO.	DATE	REVISION DESCRIPTION	EG	RC	CD	
0	01/06/93	APPROVED FOR CONSTRUCTION	EG	RC	CD	NA / NA
			NA	NA	NA	NA

CADFILE B120319E CADCODE 2B:IBM:ACD2:12.C1:SS

ENGINEERING RELEASE
REV _____ DATE _____
ERO _____

SIGNATURE	DATE
PROJ DIR NA	
QA MGR NA	
INDEPENDENT SAFETY MGR NA	
PROJECT MGR NA	
SYSTEMS MGR NA	
ENGINEERING MGR NA	
SUPERVISOR C. DIVONA	11-3-92
DESIGN ENGINEER R. CHOATE	11-3-92
CHECKED E. GARCIA	11-2-92
DRAWN EYBARRA	3/10/92

U.S.DEPARTMENT OF ENERGY
Richland Field Office
DE - AC06-86RL10838

FLUOR DANIEL, INC.
ADVANCED TECHNOLOGY DIVISION

TU-130-001 CONDUIT & CABLE ASSY DETAILS

PROJECT TITLE: HANFORD WASTE VITRIFICATION PLANT

PROJECT	FLUOR CONTRACT NO.	CWBS NO.
B-595	8457	P06B
SCALE: NONE	BLDG NO.: 1	INDEX NO.

CLASSIFICATION	BY	DRAWING NUMBER	SHEET	OF	REV
NONE	NOT REQD	H-2-120319	5	7	0

WING INDEX

AFC 77 78 79 80

DISTRIBUTION CODE: 403

M110 ACAD

INITIALS: PN
DATE: 03-16-93

QUALITY LEVEL II

SAFETY CLASS 3

REV NO.	DATE	REVISION DESCRIPTION	EG	RC	CD	NA
0	04/06/93	APPROVED FOR CONSTRUCTION	EG	RC	CD	NA
			NA	NA	NA	NA

CADFILE B120319F CADCODE 2B:IBM:ACD2:12.C1:SS

ENGINEERING RELEASE

REV _____ DATE _____

ERO _____

SIGNATURE	DATE
PROJ DIR NA	
QA MGR NA	
INDEPENDENT SAFETY MGR NA	
PROJECT MGR NA	
SYSTEMS MGR NA	
ENGINEERING MGR NA	
SUPERVISOR C. DIVONA	11-3-92
DESIGN ENGINEER R. CHOATE	11-3-92
CHECKED E. GARCIA	~~3-24-93~~ 11-2-92
DRAWN EYBARRA	3/10/92

U.S.DEPARTMENT OF ENERGY

Richland Field Office

DE – AC06–86RL10838

FLUOR DANIEL, INC.
ADVANCED TECHNOLOGY DIVISION

TU–130–001 CONDUIT & CABLE ASSY DETAILS

PROJECT TITLE: HANFORD WASTE VITRIFICATION PLANT

PROJECT	FLUOR CONTRACT NO.	CWBS NO.
B–595	8457	P06B
SCALE 1/1	BLDG NO. 1	INDEX NO.

CLASSIFICATION	BY	DRAWING NUMBER	SHEET	OF	REV
NONE	NOT REQD	H–2–120319	6	7	0

ING INDEX

AFC 77 78 79 80

DISTRIBUTION CODE: 403

M111 ACAD

INITIALS: PN

DATE: 03–16–93

APR - 8 1993

QUALITY LEVEL II
SAFETY CLASS 3

REV NO.	DATE	REVISION DESCRIPTION	APPROVAL INITIALS			
0	04/06/93	APPROVED FOR CONSTRUCTION	EG	RC	CD	NA
			NA	NA	NA	NA

CADFILE	B120319G	CADCODE	2B:IBM:ACD2:12.C1:SS

ENGINEERING RELEASE
REV _____ DATE _____
ERO _____

SIGNATURE	DATE
PROJ DIR NA	
QA MGR NA	
INDEPENDENT SAFETY MGR NA	
PROJECT MGR NA	
SYSTEMS MGR NA	
ENGINEERING MGR NA	
SUPERVISOR C. DIVONA	11-3-92
DESIGN ENGINEER R. CHOATE	11-3-92
CHECKED E. GARCIA	11-2-92
DRAWN EYBARRA	3/10/92

U.S.DEPARTMENT OF ENERGY
Richland Field Office
DE – AC06-86RL10838

FLUOR DANIEL, INC.
ADVANCED TECHNOLOGY DIVISION

TU-130-001 CONDUIT & CABLE ASSY DETAILS

PROJECT TITLE: HANFORD WASTE VITRIFICATION PLANT

PROJECT	FLUOR CONTRACT NO.	CWBS NO.
B-595	8457	P06B
SCALE 1/1	BLDG NO. 1	INDEX NO.

CLASSIFICATION	BY	DRAWING NUMBER	SHEET	OF	REV
NONE	NOT REQD	H-2-120319	7	7	0

NG INDEX

AFC 77 78 79 80

DISTRIBUTION CODE: 403

M112 ACAD

INITIALS: PN
DATE: 03-16-93

APR - 8 1993

QUALITY LEVEL II
SAFETY CLASS 3

REV NO.	DATE	REVISION DESCRIPTION	EG	RC	CD	
0	04/06/93	APPROVED FOR CONSTRUCTION	EG	RC	CD	NA/NA
			NA	NA	NA	NA

CADFILE	B120320A	CADCODE	2B:IBM:ACD2:12.C1:SS

ENGINEERING RELEASE

REV _____ DATE _____

ERO _____

SIGNATURE	DATE
PROJ DIR NA	
QA MGR NA	
INDEPENDENT SAFETY MGR NA	
PROJECT MGR NA	
SYSTEMS MGR NA	
ENGINEERING MGR NA	
SUPERVISOR C. DIVONA	11-3-92
DESIGN ENGINEER R. CHOATE	11-3-92
CHECKED E. GARCIA	~~3-24-93~~ 11-2-92
DRAWN R.MOREL	4-3-92

U.S.DEPARTMENT OF ENERGY

Richland Field Office

DE – AC06–86RL10838

FLUOR DANIEL, INC.
ADVANCED TECHNOLOGY DIVISION

TU–130–001
CART HEAT SHIELD SUPPORT

PROJECT TITLE
HANFORD WASTE VITRIFICATION PLANT

PROJECT	FLUOR CONTRACT NO.	CWBS NO.
B–595	8457	P06B
SCALE	BLDG NO.	INDEX NO.
SHOWN	1	

CLASSIFICATION	BY	DRAWING NUMBER	SHEET	OF	REV
NONE	NOT REQD	H–2–120320	1	1	0

NG INDEX

AFC 77 78 79 80

DISTRIBUTION CODE: 403

M113 ACAD

INITIALS: PN

DATE: 03-16-93

APR - 8 1993

QUALITY LEVEL II

SAFETY CLASS 3

REV NO.	DATE	REVISION DESCRIPTION	APPROVAL INITIALS			
0	04/06/93	APPROVED FOR CONSTRUCTION	EG	RC	CD	NA / NA
			NA	NA	NA	NA

CADFILE	B120368A	CADCODE	2B:IBM:ACD2:12.C1:SS

ENGINEERING RELEASE

REV _____ DATE _____

ERO _____

SIGNATURE	DATE
PROJ DIR NA	
QA MGR NA	
INDEPENDENT SAFETY MGR NA	
PROJECT MGR NA	
SYSTEMS MGR NA	
ENGINEERING MGR NA	
SUPERVISOR C. DIVONA	11-3-92
DESIGN ENGINEER R. CHOATE	11-3-92
CHECKED E. GARCIA	11-2-92
DRAWN B.SINES	06/17/92

U.S.DEPARTMENT OF ENERGY

Richland Field Office

DE – AC06–86RL10838

FLUOR DANIEL, INC.
ADVANCED TECHNOLOGY DIVISION

TU–130–002 DRAIN TURNTABLE PARTS LIST & NOTES

PROJECT TITLE: HANFORD WASTE VITRIFICATION PLANT

PROJECT	FLUOR CONTRACT NO.	CWBS NO.
B–595	8457	P06B
SCALE: NONE	BLDG NO.: 1	INDEX NO.:

CLASSIFICATION	BY	DRAWING NUMBER	SHEET	OF	REV
NONE	NOT REQD	H–2–120368	1	20	0

NG INDEX

DISTRIBUTION CODE: 402

M114 ACAD

INITIALS: PN

DATE: 03–16–93

AFC 77 78 79 80

QUALITY LEVEL II

SAFETY CLASS 3

REV NO.	DATE	REVISION DESCRIPTION	EG	RC	CD	
0	04/06/93	APPROVED FOR CONSTRUCTION	EG	RC	CD	NA NA
			NA	NA	NA	NA

CADFILE B120368B CADCODE 2B:IBM:ACD2:12.C1:SS

ENGINEERING RELEASE

REV _____ DATE _____

ERO _____

SIGNATURE	DATE
PROJ DIR NA	
QA MGR NA	
INDEPENDENT SAFETY MGR NA	
PROJECT MGR NA	
SYSTEMS MGR NA	
ENGINEERING MGR NA	
SUPERVISOR C. DIVONA	11-3-92
DESIGN ENGINEER R. CHOATE	11-3-92
CHECKED E. GARCIA	11-2-92
DRAWN R.MOREL	06/17/92

U.S.DEPARTMENT OF ENERGY

Richland Field Office

DE – AC06-86RL10838

FLUOR DANIEL, INC.
ADVANCED TECHNOLOGY DIVISION

TU-130-002 DRAIN TURNTABLE ASSEMBLY

PROJECT TITLE: HANFORD WASTE VITRIFICATION PLANT

PROJECT	FLUOR CONTRACT NO.	CWBS NO.
B-595	8457	P06B
SCALE 1/8	BLDG NO. 1	INDEX NO.

CLASSIFICATION	BY	DRAWING NUMBER	SHEET	OF	REV
NONE	NOT REQD	H-2-120368	2	20	0

NG INDEX

AFC 77 78 79 80

DISTRIBUTION CODE: 402

M115 ACAD

INITIALS: PN

DATE: 03-16-93

APR - 8 1993

QUALITY LEVEL II

SAFETY CLASS 3

REV NO.	DATE	REVISION DESCRIPTION	EG	RC	CD	
				RBC	CD	
0	04/06/93	APPROVED FOR CONSTRUCTION	EG	RC	CD	NA NA
			NA	NA	NA	NA

CADFILE B120368C CADCODE 2B:IBM:ACD2:12.C1:SS

ENGINEERING RELEASE

REV _____ DATE _____

ERO _____

SIGNATURE	DATE
PROJ DIR NA	
QA MGR NA	
INDEPENDENT SAFETY MGR NA	
PROJECT MGR NA	
SYSTEMS MGR NA	
ENGINEERING MGR NA	
SUPERVISOR C. DIVONA CD	11-3-92
DESIGN ENGINEER R. CHOATE RBC	11-3-92
CHECKED E. GARCIA EG	11-2-92
DRAWN B.SINES	06/10/92

U.S.DEPARTMENT OF ENERGY

Richland Field Office

DE – AC06–86RL10838

FLUOR DANIEL, INC.
ADVANCED TECHNOLOGY DIVISION

TU–130–002 DRAIN TURNTABLE ASSEMBLY

PROJECT TITLE: HANFORD WASTE VITRIFICATION PLANT

PROJECT	FLUOR CONTRACT NO.	CWBS NO.
B–595	8457	P06B
SCALE 1/8	BLDG NO. 1	INDEX NO.

CLASSIFICATION	BY	DRAWING NUMBER	SHEET	OF	REV
NONE	NOT REQD	H–2–120368	3	20	0

NG INDEX

DISTRIBUTION CODE: 402

M116 ACAD

INITIALS: PN

DATE: 03–16–93

QUALITY LEVEL II

SAFETY CLASS 3

REV NO.	DATE	REVISION DESCRIPTION	EG	RC	CD	
0	04/06/93	APPROVED FOR CONSTRUCTION	NA	NA	NA	NA

CADFILE B120368D CADCODE 2B:IBM:ACD2:12.C1:SS

ENGINEERING RELEASE

REV _____ DATE _____

ERO _____

SIGNATURE	DATE
PROJ DIR NA	
QA MGR NA	
INDEPENDENT SAFETY MGR NA	
PROJECT MGR NA	
SYSTEMS MGR NA	
ENGINEERING MGR NA	
SUPERVISOR C. DIVONA	11-3-92
DESIGN ENGINEER R. CHOATE	11-3-92
CHECKED E. GARCIA	11-2-92
DRAWN P.NGUYEN	04/09/92

U.S.DEPARTMENT OF ENERGY

Richland Field Office

DE – AC06–86RL10838

FLUOR DANIEL, INC.
ADVANCED TECHNOLOGY DIVISION

TU–130–002 DRAIN TURNTABLE ASSEMBLY

PROJECT TITLE: HANFORD WASTE VITRIFICATION PLANT

PROJECT	FLUOR CONTRACT NO.	CWBS NO.
B–595	8457	P06B
SCALE 1/8	BLDG NO. 1	INDEX NO.

CLASSIFICATION	BY	DRAWING NUMBER	SHEET	OF	REV
NONE	NOT REQD	H–2–120368	4	20	0

ING INDEX

DISTRIBUTION CODE: 402

M117 ACAD

INITIALS: PN

DATE: 03–16–93

APR - 8 1993

QUALITY LEVEL II

SAFETY CLASS 3

REV NO.	DATE	REVISION DESCRIPTION	EG	RC	CD	
0	04/06/93	APPROVED FOR CONSTRUCTION	EG	RC	CD	NA / NA
			NA	NA	NA	NA

CADFILE B120368E CADCODE 2B:IBM:ACD2:12.C1:SS

ENGINEERING RELEASE

REV _____ DATE _____

ERO _____

SIGNATURE	DATE
PROJ DIR NA	
QA MGR NA	
INDEPENDENT SAFETY MGR NA	
PROJECT MGR NA	
SYSTEMS MGR NA	
ENGINEERING MGR NA	
SUPERVISOR C. DIVONA	11-3-92
DESIGN ENGINEER R. CHOATE	11-3-92
CHECKED E. GARCIA	3-24-93 / 11-2-92
DRAWN P.NGUYEN	04/14/92

U.S.DEPARTMENT OF ENERGY

Richland Field Office

DE – AC06-86RL10838

FLUOR DANIEL, INC.
ADVANCED TECHNOLOGY DIVISION

TU-130-002 DRAIN TURNTABLE ASSEMBLY

PROJECT TITLE: HANFORD WASTE VITRIFICATION PLANT

PROJECT	FLUOR CONTRACT NO.	CWBS NO.
B-595	8457	P06B
SCALE 1/8	BLDG NO. 1	INDEX NO.

CLASSIFICATION	BY	DRAWING NUMBER	SHEET	OF	REV
NONE	NOT REQD	H-2-120368	5	20	0

NG INDEX

AFC 7 78 79 80

DISTRIBUTION CODE: 402

M118 ACAD

INITIALS: PN

DATE: 03-16-93

QUALITY LEVEL II

SAFETY CLASS 3

REV NO.	DATE	REVISION DESCRIPTION	EG	RC	CD	NA
0	04/06/93	APPROVED FOR CONSTRUCTION	EG	RC	CD	NA
			NA	NA	NA	NA

APPROVAL INITIALS

CADFILE	B120368F	CADCODE	2B:IBM:ACD2:12.C1:SS

ENGINEERING RELEASE

REV _____ DATE _____

ERO _____

SIGNATURE	DATE
PROJ DIR NA	
QA MGR NA	
INDEPENDENT SAFETY MGR NA	
PROJECT MGR NA	
SYSTEMS MGR NA	
ENGINEERING MGR NA	
SUPERVISOR C. DIVONA	11-3-92
DESIGN ENGINEER R. CHOATE	11-3-92
CHECKED E. GARCIA	~~3-21-93~~ 11-2-92
DRAWN P.NGUYEN	04/17/92

U.S.DEPARTMENT OF ENERGY

Richland Field Office

DE – AC06-86RL10838

FLUOR DANIEL, INC.

ADVANCED TECHNOLOGY DIVISION

TU-130-002 DRAIN TURNTABLE ASSEMBLY

PROJECT TITLE: HANFORD WASTE VITRIFICATION PLANT

PROJECT	FLUOR CONTRACT NO.	CWBS NO.
B-595	8457	P06B
SCALE 1/8	BLDG NO. 1	INDEX NO.

CLASSIFICATION	BY	DRAWING NUMBER	SHEET	OF	REV
NONE	NOT REQD	H-2-120368	6	20	0

ING INDEX

A F C 77 78 79 80

DISTRIBUTION CODE: 402

M119 ACAD

INITIALS: PN

DATE: 03-16-93

APR - 8 1993

QUALITY LEVEL II
SAFETY CLASS 3

REV NO.	DATE	REVISION DESCRIPTION				
0	04/06/93	APPROVED FOR CONSTRUCTION	EG	RC	CD	NA / NA
			NA	NA	NA	NA

APPROVAL INITIALS

CADFILE	B120368G	CADCODE	2B:IBM:ACD2:12.C1:SS

ENGINEERING RELEASE

REV _____ DATE _____

ERO _____

SIGNATURE	DATE
PROJ DIR NA	
QA MGR NA	
INDEPENDENT SAFETY MGR NA	
PROJECT MGR NA	
SYSTEMS MGR NA	
ENGINEERING MGR NA	
SUPERVISOR C. DIVONA	11-3-92
DESIGN ENGINEER R. CHOATE	11-3-92
CHECKED E. GARCIA	11-2-92
DRAWN P.NGUYEN	04/17/92

U.S.DEPARTMENT OF ENERGY

Richland Field Office

DE – AC06–86RL10838

FLUOR DANIEL, INC.
ADVANCED TECHNOLOGY DIVISION

TU–130–002
DRAIN TURNTABLE
ASSEMBLY

PROJECT TITLE: HANFORD WASTE VITRIFICATION PLANT

PROJECT	FLUOR CONTRACT NO.	CWBS NO.
B–595	8457	P06B
SCALE 1/8	BLDG NO. 1	INDEX NO.

CLASSIFICATION	BY	DRAWING NUMBER	SHEET	OF	REV
NONE	NOT REQD	H–2–120368	7	20	0

NG INDEX

AFC 77 78 79 80

DISTRIBUTION CODE: 402

M120 ACAD

INITIALS: PN

DATE: 03–16–93

APR - 8 1993

QUALITY LEVEL II

SAFETY CLASS 3

REV NO.	DATE	REVISION DESCRIPTION				
0	04/06/93	APPROVED FOR CONSTRUCTION	EG	RC	CD	NA / NA
			NA	NA	NA	NA

CADFILE	B120368H	CADCODE	2B:IBM:ACD2:12.C1:SS

ENGINEERING RELEASE

REV _____ DATE _____

ERO _____

SIGNATURE	DATE
PROJ DIR NA	
QA MGR NA	
INDEPENDENT SAFETY MGR NA	
PROJECT MGR NA	
SYSTEMS MGR NA	
ENGINEERING MGR NA	
SUPERVISOR C. DIVONA	11-3-92
DESIGN ENGINEER R. CHOATE	11-3-92
CHECKED E. GARCIA	11-2-92
DRAWN P.NGUYEN	04/22/92

U.S.DEPARTMENT OF ENERGY

Richland Field Office

DE – AC06–86RL10838

FLUOR DANIEL, INC.
ADVANCED TECHNOLOGY DIVISION

TU–130–002 DRAIN TURNTABLE ASSEMBLY

PROJECT TITLE: HANFORD WASTE VITRIFICATION PLANT

PROJECT	FLUOR CONTRACT NO.	CWBS NO.
B–595	8457	P06B
SCALE 1/8	BLDG NO. 1	INDEX NO.

CLASSIFICATION	BY	DRAWING NUMBER	SHEET	OF	REV
NONE	NOT REQD	H–2–120368	8	20	0

G INDEX

DISTRIBUTION CODE: 402

M121 ACAD

INITIALS: PN

DATE: 03–16–93

APR - 8 1993

QUALITY LEVEL II

SAFETY CLASS 3

REV NO.	DATE	REVISION DESCRIPTION	EG	RC	CD	
0	04/06/93	APPROVED FOR CONSTRUCTION	NA	NA	NA	NA

B

CADFILE B120368J CADCODE 2B:IBM:ACD2:12.C1:SS

ENGINEERING RELEASE

REV _____ DATE _____

ERO _____

SIGNATURE	DATE
PROJ DIR NA	
QA MGR NA	
INDEPENDENT SAFETY MGR NA	
PROJECT MGR NA	
SYSTEMS MGR NA	
ENGINEERING MGR NA	
SUPERVISOR C. DIVONA	11-3-92
DESIGN ENGINEER R. CHOATE	11-3-92
CHECKED E. GARCIA	11-2-92
DRAWN P.NGUYEN	04/22/92

U.S.DEPARTMENT OF ENERGY

Richland Field Office

DE – AC06-86RL10838

FLUOR DANIEL, INC.
ADVANCED TECHNOLOGY DIVISION

TU-130-002 DRAIN TURNTABLE ASSEMBLY

A

PROJECT TITLE: HANFORD WASTE VITRIFICATION PLANT

PROJECT	FLUOR CONTRACT NO.	CWBS NO.
B-595	8457	P06B
SCALE 1/2	BLDG NO. 1	INDEX NO.

CLASSIFICATION	BY	DRAWING NUMBER	SHEET	OF	REV
NONE	NOT REQD	H-2-120368	9	20	0

ING INDEX

2 1

AFC 77 78 79 80

DISTRIBUTION CODE: 402

M122 ACAD

INITIALS: PN

DATE: 03-16-93

APR - 8 1993

QUALITY LEVEL II

SAFETY CLASS 3

REV NO.	DATE	REVISION DESCRIPTION	APPROVAL INITIALS			
0	04/06/93	APPROVED FOR CONSTRUCTION	EG	RC	CD	NA / NA
			NA	NA	NA	NA

CADFILE B120368K CADCODE 2B:IBM:ACD2:12.C1:SS

ENGINEERING RELEASE

REV _____ DATE _____

ERO _____

SIGNATURE	DATE
PROJ DIR NA	
QA MGR NA	
INDEPENDENT SAFETY MGR NA	
PROJECT MGR NA	
SYSTEMS MGR NA	
ENGINEERING MGR NA	
SUPERVISOR C. DIVONA	11-3-92
DESIGN ENGINEER R. CHOATE	11-3-92
CHECKED E. GARCIA	11-2-92
DRAWN P.NGUYEN	04/30/92

U.S.DEPARTMENT OF ENERGY

Richland Field Office

DE - AC06-86RL10838

FLUOR DANIEL, INC.
ADVANCED TECHNOLOGY DIVISION

TU-130-002 DRIVE ARM ASSEMBLY & DETAILS

PROJECT TITLE: HANFORD WASTE VITRIFICATION PLANT

PROJECT	FLUOR CONTRACT NO.	CWBS NO.
B-595	8457	P06B
SCALE 1/8	BLDG NO. 1	INDEX NO.

CLASSIFICATION	BY	DRAWING NUMBER	SHEET	OF	REV
NONE	NOT REQD	H-2-120368	10	20	0

NG INDEX

DISTRIBUTION CODE: 402

M123 ACAD

INITIALS: PN

DATE: 03-16-93

QUALITY LEVEL II

SAFETY CLASS 3

REV NO.	DATE	REVISION DESCRIPTION	EG	RC	CD	
0	04/06/93	APPROVED FOR CONSTRUCTION	EG	RC	CD	NA / NA
			NA	NA	NA	NA

APPROVAL INITIALS

CADFILE	B120368L	CADCODE	2B:IBM:ACD2:12.C1:SS

ENGINEERING RELEASE

REV _____ DATE _____

ERO _____

SIGNATURE	DATE
PROJ DIR NA	
QA MGR NA	
INDEPENDENT SAFETY MGR NA	
PROJECT MGR NA	
SYSTEMS MGR NA	
ENGINEERING MGR NA	
SUPERVISOR C. DIVONA	11-3-92
DESIGN ENGINEER R. CHOATE	11-3-92
CHECKED E. GARCIA	11-2-92
DRAWN P.NGUYEN	05/01/92

U.S.DEPARTMENT OF ENERGY

Richland Field Office

DE – AC06-86RL10838

FLUOR DANIEL, INC.
ADVANCED TECHNOLOGY DIVISION

TU-130-002 WHEEL COVER ASSEMBLY & DETAILS

PROJECT TITLE: HANFORD WASTE VITRIFICATION PLANT

PROJECT	FLUOR CONTRACT NO.	CWBS NO.
B-595	8457	P06B
SCALE 1/4	BLDG NO. 1	INDEX NO.

CLASSIFICATION	BY	DRAWING NUMBER	SHEET	OF	REV
NONE	NOT REQD	H-2-120368	11	20	0

NG INDEX

DISTRIBUTION CODE: 402

M124 ACAD

INITIALS: PN

DATE: 03-16-93

APR - 8 1993

QUALITY LEVEL II

SAFETY CLASS 3

REV NO.	DATE	REVISION DESCRIPTION	EG	RC	CD	
0	04/06/93	APPROVED FOR CONSTRUCTION	EG	RC	CD	NA / NA
			NA	NA	NA	NA

B

CADFILE B120368M	CADCODE 2B:IBM:ACD2:12.C1:SS

ENGINEERING RELEASE

REV _____ DATE _____

ERO _____

SIGNATURE	DATE
PROJ DIR NA	
QA MGR NA	
INDEPENDENT SAFETY MGR NA	
PROJECT MGR NA	
SYSTEMS MGR NA	
ENGINEERING MGR NA	
SUPERVISOR C. DIVONA	11-3-92
DESIGN ENGINEER R. CHOATE	11-3-92
CHECKED E. GARCIA	11-2-92
DRAWN P.NGUYEN	05/01/92

U.S.DEPARTMENT OF ENERGY

Richland Field Office

DE - AC06-86RL10838

FLUOR DANIEL, INC.
ADVANCED TECHNOLOGY DIVISION

TU-130-002 WHEEL COVER ASSEMBLY & DETAILS

A

PROJECT TITLE: HANFORD WASTE VITRIFICATION PLANT

PROJECT	FLUOR CONTRACT NO.	CWBS NO.
B-595	8457	P06B
SCALE 1/4	BLDG NO. 1	INDEX NO.

CLASSIFICATION	BY	DRAWING NUMBER	SHEET	OF	REV
NONE	NOT REQD	H-2-120368	12	20	0

ING INDEX

2 1

A F C 77 78 79 80

DISTRIBUTION CODE: 402

M125 ACAD

INITIALS: PN

DATE: 03-16-93

APR - 8 1993

QUALITY LEVEL II
SAFETY CLASS 3

REV NO.	DATE	REVISION DESCRIPTION	APPROVAL INITIALS			
0	04/06/93	APPROVED FOR CONSTRUCTION	EG	RC	CD	NA / NA
			NA	NA	NA	NA

CADFILE	B120368N	CADCODE	2B:IBM:ACD2:12.C1:SS

ENGINEERING RELEASE

REV _____ DATE _____

ERO _____

SIGNATURE	DATE
PROJ DIR NA	
QA MGR NA	
INDEPENDENT SAFETY MGR NA	
PROJECT MGR NA	
SYSTEMS MGR NA	
ENGINEERING MGR NA	
SUPERVISOR C. DIVONA	11-3-92
DESIGN ENGINEER R. CHOATE	11-3-92
CHECKED E. GARCIA	~~3-24-93~~ 11-2-92
DRAWN P.NGUYEN	05/01/92

U.S.DEPARTMENT OF ENERGY

Richland Field Office

DE – AC06–86RL10838

FLUOR DANIEL, INC.
ADVANCED TECHNOLOGY DIVISION

TU–130–002
BASE WELDMENT

PROJECT TITLE: HANFORD WASTE VITRIFICATION PLANT

PROJECT	FLUOR CONTRACT NO.	CWBS NO.
B–595	8457	P06B
SCALE 1/2	BLDG NO. 1	INDEX NO.

CLASSIFICATION	BY	DRAWING NUMBER	SHEET	OF	REV
NONE	NOT REQD	H–2–120368	13	20	0

ING INDEX

A F C 77 78 79 80

DISTRIBUTION CODE: 402

M126 ACAD

INITIALS: PN

DATE: 03–16–93

APR - 8 1993

QUALITY LEVEL II

SAFETY CLASS 3

REV NO.	DATE	REVISION DESCRIPTION	EG	RC	CD	
0	04/06/93	APPROVED FOR CONSTRUCTION	EG	RC	CD	NA / NA
			NA	NA	NA	NA

CADFILE B120368P CADCODE 2B:IBM:ACD2:12.C1:SS

ENGINEERING RELEASE

REV _____ DATE _____

ERO _____

SIGNATURE	DATE
PROJ DIR NA	
QA MGR NA	
INDEPENDENT SAFETY MGR NA	
PROJECT MGR NA	
SYSTEMS MGR NA	
ENGINEERING MGR NA	
SUPERVISOR C. DIVONA	11-3-92
DESIGN ENGINEER R. CHOATE	11-3-92
CHECKED E. GARCIA	11-2-92
DRAWN P.NGUYEN	05/20/92

U.S.DEPARTMENT OF ENERGY

Richland Field Office

DE – AC06–86RL10838

FLUOR DANIEL, INC.
ADVANCED TECHNOLOGY DIVISION

TU–130–002 DRAIN TURNTABLE DETAILS

PROJECT TITLE: HANFORD WASTE VITRIFICATION PLANT

PROJECT	FLUOR CONTRACT NO.	CWBS NO.
B–595	8457	P06B
SCALE: SHOWN	BLDG NO.: 1	INDEX NO.

CLASSIFICATION	BY	DRAWING NUMBER	SHEET	OF	REV
NONE	NOT REQD	H–2–120368	14	20	0

NG INDEX

AFC 77 78 79 80

DISTRIBUTION CODE: 402

M127 ACAD

INITIALS: PN

DATE: 03–16–93

APR - 8 1993

QUALITY LEVEL II
SAFETY CLASS 3

REV NO.	DATE	REVISION DESCRIPTION	EG	RC	CD	
						B
0	04/06/93	APPROVED FOR CONSTRUCTION	EG	RC	CD	NA / NA
			NA	NA	NA	NA

CADFILE B120368R CADCODE 2B:IBM:ACD2:12.C1:SS

ENGINEERING RELEASE
REV _____ DATE _____
ERO _____

SIGNATURE	DATE
PROJ DIR NA	
QA MGR NA	
INDEPENDENT SAFETY MGR NA	
PROJECT MGR NA	
SYSTEMS MGR NA	
ENGINEERING MGR NA	
SUPERVISOR C. DIVONA	11-3-92
DESIGN ENGINEER R. CHOATE	11-3-92
CHECKED E. GARCIA	11-2-92
DRAWN P.NGUYEN	05/14/92

U.S.DEPARTMENT OF ENERGY
Richland Field Office
DE - AC06-86RL10838

FLUOR DANIEL, INC.
ADVANCED TECHNOLOGY DIVISION

TU-130-002 ENCLOSURE MTG BRACKET ASSEMBLY & DETAILS

A

PROJECT TITLE: HANFORD WASTE VITRIFICATION PLANT

PROJECT	FLUOR CONTRACT NO.	CWBS NO.
B-595	8457	P06B
SCALE: SHOWN	BLDG NO.: 1	INDEX NO.

CLASSIFICATION	BY	DRAWING NUMBER	SHEET	OF	REV
NONE	NOT REQD	H-2-120368	15	20	0

NG INDEX

2 1

DISTRIBUTION CODE: 402 **M128** ACAD

INITIALS: PN
DATE: 03-16-93

APR - 8 1993

QUALITY LEVEL II

SAFETY CLASS 3

REV NO.	DATE	REVISION DESCRIPTION	EG	RC	CD	
0	04/26/93	APPROVED FOR CONSTRUCTION	EG	RC	CD	NA / NA
			NA	NA	NA	NA

CADFILE B120368S CADCODE 2B:IBM:ACD2:12.C1:SS

ENGINEERING RELEASE

REV _____ DATE _____

ERO _____

SIGNATURE	DATE
PROJ DIR NA	
QA MGR NA	
INDEPENDENT SAFETY MGR NA	
PROJECT MGR NA	
SYSTEMS MGR NA	
ENGINEERING MGR NA	
SUPERVISOR C. DIVONA	11-3-92
DESIGN ENGINEER R. CHOATE	11-3-92
CHECKED E. GARCIA	11-2-92
DRAWN P.NGUYEN	05/15/92

U.S.DEPARTMENT OF ENERGY

Richland Field Office

DE – AC06-86RL10838

FLUOR DANIEL, INC.

ADVANCED TECHNOLOGY DIVISION

TU-130-002 DRAIN TURNTABLE DETAILS

PROJECT TITLE: HANFORD WASTE VITRIFICATION PLANT

PROJECT	FLUOR CONTRACT NO.	CWBS NO.
B-595	8457	P06B
SCALE 1/1	BLDG NO. 1	INDEX NO.

CLASSIFICATION	BY	DRAWING NUMBER	SHEET	OF	REV
NONE	NOT REQD	H-2-120368	16	20	0

ING INDEX

DISTRIBUTION CODE: 402

M129 ACAD

INITIALS: PN

DATE: 03-16-93

APR - 8 1993

QUALITY LEVEL II
SAFETY CLASS 3

REV NO.	DATE	REVISION DESCRIPTION	EG	RC	CD	
0	04/06/93	APPROVED FOR CONSTRUCTION	EG	RC	CD	NA/NA
			NA	NA	NA	NA

CADFILE B120368T CADCODE 2B:IBM:ACD2:12.C1:SS

ENGINEERING RELEASE
REV _____ DATE _____
ERO _____

SIGNATURE	DATE
PROJ DIR NA	
QA MGR NA	
INDEPENDENT SAFETY MGR NA	
PROJECT MGR NA	
SYSTEMS MGR NA	
ENGINEERING MGR NA	
SUPERVISOR C. DIVONA	11-3-92
DESIGN ENGINEER R. CHOATE	11-3-92
CHECKED E. GARCIA	11-2-92
DRAWN P.NGUYEN	05/15/92

U.S.DEPARTMENT OF ENERGY
Richland Field Office
DE - AC06-86RL10838

FLUOR DANIEL, INC.
ADVANCED TECHNOLOGY DIVISION

TU-130-002
DRAIN TURNTABLE
DETAILS

PROJECT TITLE
HANFORD WASTE VITRIFICATION PLANT

PROJECT	FLUOR CONTRACT NO.	CWBS NO.
B-595	8457	P06B
SCALE SHOWN	BLDG NO. 1	INDEX NO.

CLASSIFICATION	BY	DRAWING NUMBER	SHEET	OF	REV
NONE	NOT REQD	H-2-120368	17	20	0

NG INDEX

AFC 77 78 79 80

DISTRIBUTION CODE: 402

M130 ACAD

INITIALS: PN
DATE: 03-16-93

APR - 8 1993

QUALITY LEVEL II
SAFETY CLASS 3

REV NO.	DATE	REVISION DESCRIPTION	EG	RC	CD	
0	04/06/93	APPROVED FOR CONSTRUCTION	EG	RC	CD	NA / NA
			NA	NA	NA	NA

CADFILE B120368U CADCODE 2B:IBM:ACD2:12.C1:SS

ENGINEERING RELEASE
REV _____ DATE _____
ERO _____

SIGNATURE	DATE
PROJ DIR NA	
QA MGR NA	
INDEPENDENT SAFETY MGR NA	
PROJECT MGR NA	
SYSTEMS MGR NA	
ENGINEERING MGR NA	
SUPERVISOR C. DIVONA	11-3-92
DESIGN ENGINEER R. CHOATE	11-3-92
CHECKED E. GARCIA	11-2-92
DRAWN P.NGUYEN	05/19/92

U.S.DEPARTMENT OF ENERGY
Richland Field Office
DE – AC06-86RL10838

FLUOR DANIEL, INC.
ADVANCED TECHNOLOGY DIVISION

TU-130-002 DRAIN TURNTABLE DETAILS

PROJECT TITLE: HANFORD WASTE VITRIFICATION PLANT

PROJECT	FLUOR CONTRACT NO.	CWBS NO.
B-595	8457	P06B
SCALE 1/4	BLDG NO. 1	INDEX NO.

CLASSIFICATION	BY	DRAWING NUMBER	SHEET	OF	REV
NONE	NOT REQD	H-2-120368	18	20	0

ING INDEX

AFC 77 78 79 80

DISTRIBUTION CODE: 402 **M131** ACAD

INITIALS: PN
DATE: 03-16-93

APR - 8 1993

QUALITY LEVEL II
SAFETY CLASS 3

REV NO.	DATE	REVISION DESCRIPTION	EG	RC	CD	
0	07/06/93	APPROVED FOR CONSTRUCTION	EG	RC	CD	NA / NA
			NA	NA	NA	NA

CADFILE	B120368V	CADCODE	2B:IBM:ACD2:12.C1:SS

ENGINEERING RELEASE

REV _____ DATE _____

ERO _____

SIGNATURE	DATE
PROJ DIR NA	
QA MGR NA	
INDEPENDENT SAFETY MGR NA	
PROJECT MGR NA	
SYSTEMS MGR NA	
ENGINEERING MGR NA	
SUPERVISOR C. DIVONA	11-3-92
DESIGN ENGINEER R. CHOATE	11-3-92
CHECKED E. GARCIA	11-2-92
DRAWN D.RUFENAC	09/09/92

U.S.DEPARTMENT OF ENERGY

Richland Field Office

DE - AC06-86RL10838

FLUOR DANIEL, INC.
ADVANCED TECHNOLOGY DIVISION

TU-130-002
LIMIT SWITCH WELDMENT

PROJECT TITLE: **HANFORD WASTE VITRIFICATION PLANT**

PROJECT	FLUOR CONTRACT NO.	CWBS NO.
B-595	8457	P06B
SCALE: SHOWN	BLDG NO.: 1	INDEX NO.

CLASSIFICATION	BY	DRAWING NUMBER	SHEET	OF	REV
NONE	NOT REQD	H-2-120368	19	20	0

ING INDEX

A F C
77 78 79 80

DISTRIBUTION CODE: 403

M132 ACAD

INITIALS: PN
DATE: 03-16-93

APR - 8 1993

QUALITY LEVEL II

SAFETY CLASS 3

REV NO.	DATE	REVISION DESCRIPTION	EG	RC	CD	
0	03/30/93	APPROVED FOR CONSTRUCTION	EG	RC	CD	NA / NA
			NA	NA	NA	NA

CADFILE	B120368W	CADCODE	2B:IBM:ACD2:12.C1:SS

ENGINEERING RELEASE

REV _____ DATE _____

ERO _____

SIGNATURE	DATE
PROJ DIR NA	
QA MGR NA	
INDEPENDENT SAFETY MGR NA	
PROJECT MGR NA	
SYSTEMS MGR NA	
ENGINEERING MGR NA	
SUPERVISOR C. DIVONA	11-3-92
DESIGN ENGINEER R. CHOATE	11-3-92
CHECKED E. GARCIA	~~3-24-93~~ 11-2-92
DRAWN D.RUFENAC	09/09/92

U.S.DEPARTMENT OF ENERGY

Richland Field Office

DE – AC06–86RL10838

FLUOR DANIEL, INC.
ADVANCED TECHNOLOGY DIVISION

TU–130–002 DRAIN TURNTABLE SECTIONS & VIEWS

PROJECT TITLE: HANFORD WASTE VITRIFICATION PLANT

PROJECT	FLUOR CONTRACT NO.	CWBS NO.
B–595	8457	P06B
SCALE 1/8	BLDG NO. 1	INDEX NO.

CLASSIFICATION	BY	DRAWING NUMBER	SHEET	OF	REV
NONE	NOT REQD	H–2–120368	20	20	0

NG INDEX

AFC 77 78 79 80

DISTRIBUTION CODE: 403

M133 ACAD

INITIALS: PN

DATE: 03–16–93

APR - 8 1993

QUALITY LEVEL II

SAFETY CLASS 3

REV NO.	DATE	REVISION DESCRIPTION	APPROVAL INITIALS			
0	04/06/93	APPROVED FOR CONSTRUCTION	EG	RC	CD	NA / NA
			NA	NA	NA	NA

CADFILE B120369A CADCODE 2B:IBM:ACD2:12.C1:SS

ENGINEERING RELEASE

REV _____ DATE _____

ERO _____

SIGNATURE	DATE
PROJ DIR NA	
QA MGR NA	
INDEPENDENT SAFETY MGR NA	
PROJECT MGR NA	
SYSTEMS MGR NA	
ENGINEERING MGR NA	
SUPERVISOR C. DIVONA	11-3-92
DESIGN ENGINEER R. CHOATE	11-3-92
CHECKED E. GARCIA	~~3-24-93~~ 11-2-92
DRAWN J.KAPPELER	01/20/92

U.S.DEPARTMENT OF ENERGY

Richland Field Office

DE - AC06-86RL10838

FLUOR DANIEL, INC.

ADVANCED TECHNOLOGY DIVISION

TU-130-002 CANISTER GUIDE WELDMENT PARTS LIST & NOTES

PROJECT TITLE: HANFORD WASTE VITRIFICATION PLANT

PROJECT	FLUOR CONTRACT NO.	CWBS NO.
B-595	8457	P06B
SCALE: SHOWN	BLDG NO. 1	INDEX NO.

CLASSIFICATION	BY	DRAWING NUMBER	SHEET	OF	REV
NONE	NOT REQD	H-2-120369	1	2	0

ING INDEX

AFC 77 78 79 80

DISTRIBUTION CODE: 403

M134 ACAD

INITIALS: PN

DATE: 03-16-93

APR - 8 1993

QUALITY LEVEL II

SAFETY CLASS 3

REV NO.	DATE	REVISION DESCRIPTION	EG	RC	CD	
0	04/06/93	APPROVED FOR CONSTRUCTION	EG	RC	CD	NA / NA
			NA	NA	NA	NA

CADFILE B120369B CADCODE 2B:IBM:ACD2:12.C1:SS

ENGINEERING RELEASE

REV _____ DATE _____

ERO _____

SIGNATURE	DATE
PROJ DIR NA	
QA MGR NA	
INDEPENDENT SAFETY MGR NA	
PROJECT MGR NA	
SYSTEMS MGR NA	
ENGINEERING MGR NA	
SUPERVISOR C. DIVONA	11-3-92
DESIGN ENGINEER R. CHOATE	11-3-92
CHECKED E. GARCIA	~~3-24-93~~ 11-2-92
DRAWN M.PICCIOTTA	12-17-91

U.S.DEPARTMENT OF ENERGY

Richland Field Office

DE - AC06-86RL10838

FLUOR DANIEL, INC.

ADVANCED TECHNOLOGY DIVISION

TU-130-002 DRAIN TURN TABLE CANISTER GUIDE DETAILS

PROJECT TITLE: HANFORD WASTE VITRIFICATION PLANT

PROJECT	FLUOR CONTRACT NO.	CWBS NO.
B-595	8457	P06B
SCALE: SHOWN	BLDG NO.: 1	INDEX NO.

CLASSIFICATION	BY	DRAWING NUMBER	SHEET	OF	REV
NONE	NOT REQD	H-2-120369	2	2	0

NG INDEX

A F C

77 78 79 80

DISTRIBUTION CODE: 403

M135 ACAD

INITIALS: PN

DATE: 03-16-93

APR - 8 1993

QUALITY LEVEL II

SAFETY CLASS 3

REV NO.	DATE	REVISION DESCRIPTION	EG	RC	CD	
0	04/06/93	APPROVED FOR CONSTRUCTION	EG	RC	CD	NA/NA
			NA	NA	NA	NA

CADFILE	B120370A	CADCODE	2B:IBM:ACD2:12.C1:SS

ENGINEERING RELEASE

REV _____ DATE _____

ERO _____

SIGNATURE	DATE
PROJ DIR NA	
QA MGR NA	
INDEPENDENT SAFETY MGR NA	
PROJECT MGR NA	
SYSTEMS MGR NA	
ENGINEERING MGR NA	
SUPERVISOR C. DIVONA	11-3-92
DESIGN ENGINEER R. CHOATE	11-3-92
CHECKED E. GARCIA	~~2-24-93~~ 11-2-92
DRAWN D. SMITH	02/26/92

U.S.DEPARTMENT OF ENERGY

Richland Field Office

DE – AC06–86RL10838

FLUOR DANIEL, INC.
ADVANCED TECHNOLOGY DIVISION

TU–130–002 CANISTER DOLLY ASSEMBLY PARTS LIST & NOTES

PROJECT TITLE: HANFORD WASTE VITRIFICATION PLANT

PROJECT	FLUOR CONTRACT NO.	CWBS NO.
B–595	8457	P06B
SCALE	BLDG NO.	INDEX NO.
1/4	1	

CLASSIFICATION	BY	DRAWING NUMBER	SHEET	OF	REV
NONE	NOT REQD	H–2–120370	1	8	0

VING INDEX

A F C 77 78 79 80

DISTRIBUTION CODE: 403

M136 ACAD

INITIALS: PN

DATE: 03–16–93

APR - 8 1993

QUALITY LEVEL II

SAFETY CLASS 3

REV NO.	DATE	REVISION DESCRIPTION	EG	RC	CD	NA / NA
0	04/06/93	APPROVED FOR CONSTRUCTION	NA	NA	NA	NA

B

CADFILE	B120370B
CADCODE	2B:IBM:ACD2:12.C1:SS

ENGINEERING RELEASE

REV _____ DATE _____

ERO _____

SIGNATURE	DATE
PROJ DIR NA	
QA MGR NA	
INDEPENDENT SAFETY MGR NA	
PROJECT MGR NA	
SYSTEMS MGR NA	
ENGINEERING MGR NA	
SUPERVISOR C. DIVONA	11-3-92
DESIGN ENGINEER R. CHOATE	11-3-92
CHECKED E. GARCIA	~~3-24-93~~ 11-2-92
DRAWN L. SANVICTORES	11/25/91

U.S.DEPARTMENT OF ENERGY

Richland Field Office

DE - AC06-86RL10838

FLUOR DANIEL, INC.
ADVANCED TECHNOLOGY DIVISION

TU-130-002 CANISTER DOLLY WELDMENT

A

PROJECT TITLE: HANFORD WASTE VITRIFICATION PLANT

PROJECT	FLUOR CONTRACT NO.	CWBS NO.
B-595	8457	P06B
SCALE	BLDG NO.	INDEX NO.
1/2	1	

CLASSIFICATION	BY	DRAWING NUMBER	SHEET	OF	REV
NONE	NOT REQD	H-2-120370	2	8	0

NG INDEX

AFC 77 78 79 80

DISTRIBUTION CODE: 403

M137 ACAD

INITIALS: PN

DATE: 03-16-93

APR - 8 1993

QUALITY LEVEL II
SAFETY CLASS 3

REV NO.	DATE	REVISION DESCRIPTION	EG	RC	CD	
						B
0	04/06/93	APPROVED FOR CONSTRUCTION	EG	RC	CD	NA NA
			NA	NA	NA	NA

CADFILE	B120370C	CADCODE	2B:IBM:ACD2:12.C1:SS

ENGINEERING RELEASE

REV _____ DATE _____

ERO _____

SIGNATURE	DATE
PROJ DIR NA	
QA MGR NA	
INDEPENDENT SAFETY MGR NA	
PROJECT MGR NA	
SYSTEMS MGR NA	
ENGINEERING MGR NA	
SUPERVISOR C. DIVONA	11-3-92
DESIGN ENGINEER R. CHOATE	11-3-92
CHECKED E. GARCIA	11-2-92
DRAWN D. SMITH	

U.S. DEPARTMENT OF ENERGY

Richland Field Office

DE - AC06-86RL10838

FLUOR DANIEL, INC.
ADVANCED TECHNOLOGY DIVISION

TU-130-002

LIFTING TRUNNION WELDMENT

PROJECT TITLE: **HANFORD WASTE VITRIFICATION PLANT**

PROJECT	FLUOR CONTRACT NO.	CWBS NO.
B-595	8457	P06B
SCALE 1/1	BLDG NO. 1	INDEX NO.

CLASSIFICATION	BY	DRAWING NUMBER	SHEET	OF	REV
NONE	NOT REQD	H-2-120370	3	8	0

ING INDEX

A F C 77 78 79 80

DISTRIBUTION CODE: 403

M138 ACAD

INITIALS: PN

DATE: 03-16-93

QUALITY LEVEL II

SAFETY CLASS 3

REV NO.	DATE	REVISION DESCRIPTION	APPROVAL INITIALS			
0	04/30/93	APPROVED FOR CONSTRUCTION	EG	RC	CD	NA / NA
			NA	NA	NA	NA

CADFILE B120370D CADCODE 2B:IBM:ACD2:12.C1:SS

ENGINEERING RELEASE

REV _____ DATE _____

ERO _____

SIGNATURE	DATE
PROJ DIR NA	
QA MGR NA	
INDEPENDENT SAFETY MGR NA	
PROJECT MGR NA	
SYSTEMS MGR NA	
ENGINEERING MGR NA	
SUPERVISOR C. DIVONA	11-3-92
DESIGN ENGINEER R. CHOATE	11-3-92
CHECKED E. GARCIA	11-2-92
DRAWN L. SANVICTORES	2/28/92

U.S.DEPARTMENT OF ENERGY

Richland Field Office

DE – AC06–86RL10838

FLUOR DANIEL, INC.
ADVANCED TECHNOLOGY DIVISION

TU–130–002 CANISTER DOLLY TOP PLATE DETAIL

PROJECT TITLE: HANFORD WASTE VITRIFICATION PLANT

PROJECT	FLUOR CONTRACT NO.	CWBS NO.
B–595	8457	P06B
SCALE 1/2	BLDG NO. 1	INDEX NO.

CLASSIFICATION	BY	DRAWING NUMBER	SHEET	OF	REV
NONE	NOT REQD	H–2–120370	4	8	0

WING INDEX

AFC 77 78 79 80

DISTRIBUTION CODE: 403

M139 ACAD

INITIALS: PN

DATE: 03–16–93

APR - 8 1993

QUALITY LEVEL II

SAFETY CLASS 3

REV NO.	DATE	REVISION DESCRIPTION	EG	RC	CD	
0	04/06/93	APPROVED FOR CONSTRUCTION	EG	RBC	CD	NA / NA
			NA	NA	NA	NA

CADFILE	B120370E	CADCODE	2B:IBM:ACD2:12.C1:SS

ENGINEERING RELEASE

REV _____ DATE _____

ERO _____

SIGNATURE	DATE
PROJ DIR NA	
QA MGR NA	
INDEPENDENT SAFETY MGR NA	
PROJECT MGR NA	
SYSTEMS MGR NA	
ENGINEERING MGR NA	
SUPERVISOR C. DIVONA	11-3-92
DESIGN ENGINEER R. CHOATE RBC	11-3-92
CHECKED E. GARCIA	~~3-24-93~~ 11-2-92
DRAWN L. SANVICTORES	02/27/92

U.S.DEPARTMENT OF ENERGY

Richland Field Office

DE - AC06-86RL10838

FLUOR DANIEL, INC.
ADVANCED TECHNOLOGY DIVISION

TU-130-002 CANISTER DOLLY WHEEL MOUNTING DETAIL

PROJECT TITLE: HANFORD WASTE VITRIFICATION PLANT

PROJECT	FLUOR CONTRACT NO.	CWBS NO.
B-595	8457	P06B
SCALE 1/2	BLDG NO. 1	INDEX NO.

CLASSIFICATION	BY	DRAWING NUMBER	SHEET	OF	REV
NONE	NOT REQD	H-2-120370	5	8	0

ING INDEX

AFC 77 78 79 80

DISTRIBUTION CODE: 403

M140 ACAD

INITIALS: PN

DATE: 03-16-93

APR - 8 1993

QUALITY LEVEL II
SAFETY CLASS 3

REV NO.	DATE	REVISION DESCRIPTION	APPROVAL INITIALS			
0	04/06/93	APPROVED FOR CONSTRUCTION	EG	RC	CD	NA NA
			NA	NA	NA	NA

CADFILE B120370F CADCODE 2B:IBM:ACD2:12.C1:SS

ENGINEERING RELEASE
REV _____ DATE _____
ERO _____

SIGNATURE	DATE
PROJ DIR NA	
QA MGR NA	
INDEPENDENT SAFETY MGR NA	
PROJECT MGR NA	
SYSTEMS MGR NA	
ENGINEERING MGR NA	
SUPERVISOR C. DIVONA	11-3-92
DESIGN ENGINEER R. CHOATE	11-3-92
CHECKED E. GARCIA	11-2-92
DRAWN L. SANVICTORES	02/28/92

U.S.DEPARTMENT OF ENERGY
Richland Field Office
DE - AC06-86RL10838

FLUOR DANIEL, INC.
ADVANCED TECHNOLOGY DIVISION

TU-130-002
CANISTER DOLLY
COVER DETAIL

PROJECT TITLE
HANFORD WASTE VITRIFICATION PLANT

PROJECT	FLUOR CONTRACT NO.	CWBS NO.
B-595	8457	P06B
SCALE 1/1	BLDG NO. 1	INDEX NO.

CLASSIFICATION	BY	DRAWING NUMBER	SHEET	OF	REV
NONE	NOT REQD	H-2-120370	6	8	0

NG INDEX

2 1

A F C
77 78 79 80

DISTRIBUTION CODE: 403

M141 ACAD

INITIALS: PN
DATE: 03-16-93

APR - 8 1993

QUALITY LEVEL II
SAFETY CLASS 3

REV NO.	DATE	REVISION DESCRIPTION	EG	RC	CD	
						B
0	01/06/93	APPROVED FOR CONSTRUCTION	EG	RC	CD	NA / NA
			NA	NA	NA	NA

APPROVAL INITIALS

CADFILE: B120370G CADCODE: 2B:IBM:ACD2:12.C1:SS

ENGINEERING RELEASE
REV _____ DATE _____
ERO _____

SIGNATURE	DATE
PROJ DIR NA	
QA MGR NA	
INDEPENDENT SAFETY MGR NA	
PROJECT MGR NA	
SYSTEMS MGR NA	
ENGINEERING MGR NA	
SUPERVISOR C. DIVONA	11-3-92
DESIGN ENGINEER R. CHOATE	11-3-92
CHECKED E. GARCIA	11-2-92
DRAWN C. PEASE	04/29/92

U.S.DEPARTMENT OF ENERGY
Richland Field Office
DE – AC06-86RL10838

FLUOR DANIEL, INC.
ADVANCED TECHNOLOGY DIVISION

TU-130-002

LIFTING TRUNNION DETAILS

A

PROJECT TITLE: HANFORD WASTE VITRIFICATION PLANT

PROJECT	FLUOR CONTRACT NO.	CWBS NO.
B-595	8457	P06B
SCALE 1/1	BLDG NO. 1	INDEX NO.

CLASSIFICATION	BY	DRAWING NUMBER	SHEET	OF	REV
NONE	NOT REQD	H-2-120370	7	8	0

ING INDEX

AFC 77 78 79 80

DISTRIBUTION CODE: 403

M142 ACAD

INITIALS: PN
DATE: 03-16-93

APR - 8 1993

QUALITY LEVEL II
SAFETY CLASS 3

REV NO.	DATE	REVISION DESCRIPTION	APPROVAL INITIALS			
0	01/06/93	APPROVED FOR CONSTRUCTION	EG	RC	CD	NA/NA
			NA	NA	NA	NA

CADFILE	B120370H	CADCODE	2B:IBM:ACD2:12.C1:SS

ENGINEERING RELEASE
REV _____ DATE _____
ERO _____

SIGNATURE	DATE
PROJ DIR NA	
QA MGR NA	
INDEPENDENT SAFETY MGR NA	
PROJECT MGR NA	
SYSTEMS MGR NA	
ENGINEERING MGR NA	
SUPERVISOR C. DIVONA	11-3-92
DESIGN ENGINEER R. CHOATE	11-3-92
CHECKED E. GARCIA	11-2-92
DRAWN D. SMITH	02/28/92

U.S.DEPARTMENT OF ENERGY
Richland Field Office
DE – AC06-86RL10838

FLUOR DANIEL, INC.
ADVANCED TECHNOLOGY DIVISION

TU-130-002 CANISTER DOLLY DETAILS

PROJECT TITLE: HANFORD WASTE VITRIFICATION PLANT

PROJECT	FLUOR CONTRACT NO.	CWBS NO.
B-595	8457	P06B
SCALE	BLDG NO.	INDEX NO.
SHOWN	1	

CLASSIFICATION	BY	DRAWING NUMBER	SHEET	OF	REV
NONE	NOT REQD	H-2-120370	8	8	0

NG INDEX

A F C
77 78 79 80

DISTRIBUTION CODE: 403

M143 ACAD

INITIALS: PN
DATE: 03-16-93

APR - 8 1993

QUALITY LEVEL II
SAFETY CLASS 3

REV NO.	DATE	REVISION DESCRIPTION	EG	RC	CD	NA/NA
0	01/06/93	APPROVED FOR CONSTRUCTION	EG	RC	CD	NA/NA
			NA	NA	NA	NA

CADFILE	B120371A	CADCODE	2B:IBM:ACD2:12.C1:SS

ENGINEERING RELEASE

REV _____ DATE _____

ERO _____

SIGNATURE	DATE
PROJ DIR NA	
QA MGR NA	
INDEPENDENT SAFETY MGR NA	
PROJECT MGR NA	
SYSTEMS MGR NA	
ENGINEERING MGR NA	
SUPERVISOR C. DIVONA	11-3-92
DESIGN ENGINEER R. CHOATE	11-3-92
CHECKED E. GARCIA	11-2-92
DRAWN P. ASHLEY	12/26/91

U.S.DEPARTMENT OF ENERGY

Richland Field Office

DE – AC06-86RL10838

FLUOR DANIEL, INC.
ADVANCED TECHNOLOGY DIVISION

TU-130-002
DOLLY RAILS
OUTER RAIL

PROJECT TITLE: HANFORD WASTE VITRIFICATION PLANT

PROJECT	FLUOR CONTRACT NO.	CWBS NO.
B-595	8457	P06B
SCALE: SHOWN	BLDG NO.: 1	INDEX NO.:

CLASSIFICATION	BY	DRAWING NUMBER	SHEET	OF	REV
NONE	NOT REQD	H-2-120371	1	4	0

NG INDEX

DISTRIBUTION CODE: 403

M144 ACAD

INITIALS: PN

DATE: 03-16-93

APR - 8 1993

QUALITY LEVEL II
SAFETY CLASS 3

REV NO.	DATE	REVISION DESCRIPTION	EG	RC	CD	
						B
0	03/06/93	APPROVED FOR CONSTRUCTION	EG	RC	CD	NA / NA
			NA	NA	NA	NA

CADFILE B120371B CADCODE 2B:IBM:ACD2:12.C1:SS

ENGINEERING RELEASE
REV _____ DATE _____
ERO _____

SIGNATURE	DATE
PROJ DIR NA	
QA MGR NA	
INDEPENDENT SAFETY MGR NA	
PROJECT MGR NA	
SYSTEMS MGR NA	
ENGINEERING MGR NA	
SUPERVISOR C. DIVONA	11-3-92
DESIGN ENGINEER R. CHOATE	11-3-92
CHECKED E. GARCIA	11-2-92
DRAWN P. ASHLEY	12-26-91

U.S.DEPARTMENT OF ENERGY
Richland Field Office
DE – AC06-86RL10838

FLUOR DANIEL, INC.
ADVANCED TECHNOLOGY DIVISION

TU-130-002
DOLLY RAILS
INNER RAIL

A

PROJECT TITLE
HANFORD WASTE VITRIFICATION PLANT

PROJECT	FLUOR CONTRACT NO.	CWBS NO.
B-595	8457	P06B
SCALE SHOWN	BLDG NO. 1	INDEX NO.

CLASSIFICATION	BY	DRAWING NUMBER	SHEET	OF	REV
NONE	NOT REQD	H-2-120371	2	4	0

NG INDEX

2 1

A F C
77 78 79 80

DISTRIBUTION CODE: 403

M145 ACAD

INITIALS: PN
DATE: 03-16-93

APR - 8 1993

QUALITY LEVEL II
SAFETY CLASS 3

REV NO.	DATE	REVISION DESCRIPTION	EG	RC	CD	
0	C 3/26/93	APPROVED FOR CONSTRUCTION	NA	NA	NA	NA

CADFILE	B120371C	CADCODE	2B:IBM:ACD2:12.C1:SS

ENGINEERING RELEASE
REV _____ DATE _____
ERO _____

SIGNATURE	DATE
PROJ DIR NA	
QA MGR NA	
INDEPENDENT SAFETY MGR NA	
PROJECT MGR NA	
SYSTEMS MGR NA	
ENGINEERING MGR NA	
SUPERVISOR C. DIVONA	11-3-92
DESIGN ENGINEER R. CHOATE	11-3-92
CHECKED E. GARCIA	11-2-92
DRAWN BOB HUSTON	7-31-91

U.S.DEPARTMENT OF ENERGY
Richland Field Office
DE – AC06-86RL10838

FLUOR DANIEL, INC.
ADVANCED TECHNOLOGY DIVISION

TU-130-002
DOLLY RAILS
OUTER RAILS

PROJECT TITLE
HANFORD WASTE VITRIFICATION PLANT

PROJECT	FLUOR CONTRACT NO.	CWBS NO.
B-595	8457	P06B
SCALE 1/4	BLDG NO. 1	INDEX NO.

CLASSIFICATION	BY	DRAWING NUMBER	SHEET	OF	REV
NONE	NOT REQD	H-2-120371	3	4	0

ING INDEX

A F C
77 78 79 80

DISTRIBUTION CODE: 403

M146 ACAD

INITIALS: PN
DATE: 03-16-93

APR - 8 1993

QUALITY LEVEL II
SAFETY CLASS 3

REV NO.	DATE	REVISION DESCRIPTION	EG	RC	CD	
0	03/06/93	APPROVED FOR CONSTRUCTION	EG	RC	CD	NA / NA
			NA	NA	NA	NA

CADFILE	B120371D	CADCODE	2B:IBM:ACD2:12.C1:SS

ENGINEERING RELEASE

REV _____ DATE _____

ERO _____

SIGNATURE	DATE
PROJ DIR NA	
QA MGR NA	
INDEPENDENT SAFETY MGR NA	
PROJECT MGR NA	
SYSTEMS MGR NA	
ENGINEERING MGR NA	
SUPERVISOR C. DIVONA	11-3-92
DESIGN ENGINEER R. CHOATE	11-3-92
CHECKED E. GARCIA	11-2-92
DRAWN P. ASHLEY	12-26-91

U.S.DEPARTMENT OF ENERGY

Richland Field Office

DE – AC06–86RL10838

FLUOR DANIEL, INC.
ADVANCED TECHNOLOGY DIVISION

TU–130–002
DOLLY RAILS
OUTER RAIL

PROJECT TITLE: HANFORD WASTE VITRIFICATION PLANT

PROJECT	FLUOR CONTRACT NO.	CWBS NO.
B–595	8457	P06B
SCALE 1/4	BLDG NO. 1	INDEX NO.

CLASSIFICATION	BY	DRAWING NUMBER	SHEET	OF	REV
NONE	NOT REQD	H–2–120371	4	4	0

ING INDEX

AFC 77 78 79 80

DISTRIBUTION CODE: 403

M147 ACAD

INITIALS: PN

DATE: 03–16–93

APR - 8 1993

QUALITY LEVEL II

SAFETY CLASS 3

REV NO.	DATE	REVISION DESCRIPTION				
0	04/06/93	APPROVED FOR CONSTRUCTION	EG	RC	CD	NA
			NA	NA	NA	NA

CADFILE	B120372A	CADCODE	2B:IBM:ACD2:12.C1:SS

ENGINEERING RELEASE

REV _____ DATE _____

ERO _____

SIGNATURE	DATE
PROJ DIR NA	
QA MGR NA	
INDEPENDENT SAFETY MGR NA	
PROJECT MGR NA	
SYSTEMS MGR NA	
ENGINEERING MGR NA	
SUPERVISOR C. DIVONA	11-3-92
DESIGN ENGINEER R. CHOATE	11-3-92
CHECKED E. GARCIA	11-2-92
DRAWN P. ASHLEY	04/06/92

U.S.DEPARTMENT OF ENERGY

Richland Field Office

DE – AC06-86RL10838

FLUOR DANIEL, INC.
ADVANCED TECHNOLOGY DIVISION

TU-130-002 DIMENSIONAL RECORD DRAWING

PROJECT TITLE: HANFORD WASTE VITRIFICATION PLANT

PROJECT	FLUOR CONTRACT NO.	CWBS NO.
B-595	8457	P06B
SCALE	BLDG NO.	INDEX NO.
NONE	1	

CLASSIFICATION	BY	DRAWING NUMBER	SHEET	OF	REV
NONE	NOT REQD	H-2-120372	1	3	0

DISTRIBUTION CODE: 403

M148 ACAD

INITIALS: PN

DATE: 03-16-93

AFC 77 78 79 80

QUALITY LEVEL II

SAFETY CLASS 3

APR - 8 1993

REV NO.	DATE	REVISION DESCRIPTION	EG	RC	CD	
0	04/06/93	APPROVED FOR CONSTRUCTION	EG	RC	CD	NA / NA
			NA	NA	NA	NA

CADFILE B120372B CADCODE 2B:IBM:ACD2:12.C1:SS

ENGINEERING RELEASE

REV _____ DATE _____

ERO _____

SIGNATURE	DATE
PROJ DIR NA	
QA MGR NA	
INDEPENDENT SAFETY MGR NA	
PROJECT MGR NA	
SYSTEMS MGR NA	
ENGINEERING MGR NA	
SUPERVISOR C. DIVONA	11-3-92
DESIGN ENGINEER R. CHOATE	11-3-92
CHECKED E. GARCIA	11-2-92
DRAWN P.ASHLEY	04/06/92

U.S.DEPARTMENT OF ENERGY

Richland Field Office

DE – AC06–86RL10838

FLUOR DANIEL, INC.
ADVANCED TECHNOLOGY DIVISION

TU–130–002 DIMENSIONAL RECORD DRAWING

PROJECT TITLE: HANFORD WASTE VITRIFICATION PLANT

PROJECT	FLUOR CONTRACT NO.	CWBS NO.
B–595	8457	P06B
SCALE: NONE	BLDG NO.: 1	INDEX NO.:

CLASSIFICATION	BY	DRAWING NUMBER	SHEET	OF	REV
NONE	NOT REQD	H–2–120372	2	3	0

ING INDEX

AFC 77 78 79 80

DISTRIBUTION CODE: 403

M149 ACAD

INITIALS: PN

DATE: 03–16–93

APR - 8 1993

QUALITY LEVEL II
SAFETY CLASS 3

REV NO.	DATE	REVISION DESCRIPTION	EG	RC	CD	
						B
0	04/05/93	APPROVED FOR CONSTRUCTION	EG	RC	CD	NA / NA
			NA	NA	NA	NA

CADFILE	B120372C	CADCODE	2B:IBM:ACD2:12.C1:SS

ENGINEERING RELEASE

REV _____ DATE _____

ERO _____

SIGNATURE	DATE
PROJ DIR NA	
QA MGR NA	
INDEPENDENT SAFETY MGR NA	
PROJECT MGR NA	
SYSTEMS MGR NA	
ENGINEERING MGR NA	
SUPERVISOR C. DIVONA	11-3-92
DESIGN ENGINEER R. CHOATE	11-3-92
CHECKED E. GARCIA	11-2-92
DRAWN P. ASHLEY	04/07/92

U.S. DEPARTMENT OF ENERGY

Richland Field Office

DE – AC06-86RL10838

FLUOR DANIEL, INC.
ADVANCED TECHNOLOGY DIVISION

TU-130-002 DIMENSIONAL RECORD DRAWING

A

PROJECT TITLE: **HANFORD WASTE VITRIFICATION PLANT**

PROJECT	FLUOR CONTRACT NO.	CWBS NO.
B-595	8457	P06B
SCALE	**BLDG NO.**	**INDEX NO.**
NONE	1	

CLASSIFICATION	BY	DRAWING NUMBER	SHEET	OF	REV
NONE	NOT REQD	H-2-120372	3	3	0

ING INDEX

AFC 77 78 79 80

DISTRIBUTION CODE: 403

M150 ACAD

INITIALS: PN

DATE: 03-16-93

APR - 8 1993

QUALITY LEVEL II
SAFETY CLASS 3

REV NO.	DATE	REVISION DESCRIPTION	EG	RC	CD	
0	4/6/93	APPROVED FOR CONSTRUCTION	EG	RC	CD	NA / NA
			NA	NA	NA	NA

CADFILE	B120374A	CADCODE	2B:IBM:ACD2:12.C1:SS

ENGINEERING RELEASE

REV _____ DATE _____

ERO _____

SIGNATURE	DATE
PROJ DIR NA	
QA MGR NA	
INDEPENDENT SAFETY MGR NA	
PROJECT MGR NA	
SYSTEMS MGR NA	
ENGINEERING MGR NA	
SUPERVISOR C. DIVONA	11-3-92
DESIGN ENGINEER R. CHOATE	11-3-92
CHECKED E. GARCIA	11-2-92
DRAWN P. ASHKEY	01-30-92

U.S.DEPARTMENT OF ENERGY

Richland Field Office

DE – AC06-86RL10838

FLUOR DANIEL, INC.
ADVANCED TECHNOLOGY DIVISION

TU-130-002
CAROUSEL
ASSEMBLY

PROJECT TITLE: HANFORD WASTE VITRIFICATION PLANT

PROJECT	FLUOR CONTRACT NO.	CWBS NO.
B-595	8457	P06B
SCALE 1/8	BLDG NO. 1	INDEX NO.

CLASSIFICATION	BY	DRAWING NUMBER	SHEET	OF	REV
NONE	NOT REQD	H-2-120374	1	4	0

IG INDEX

DISTRIBUTION CODE: 403

M151 ACAD

INITIALS: PN

DATE: 03-16-93

APR - 8 1993

QUALITY LEVEL II
SAFETY CLASS 3

REV NO.	DATE	REVISION DESCRIPTION	EG	RC	CD	
0	04/06/93	APPROVED FOR CONSTRUCTION	EG	RC	CD	NA / NA
			NA	NA	NA	NA

CADFILE	B120374B	CADCODE	2B:IBM:ACD2:12.C1:SS

ENGINEERING RELEASE
REV _____ DATE _____
ERO _____

SIGNATURE	DATE
PROJ DIR NA	
QA MGR NA	
INDEPENDENT SAFETY MGR NA	
PROJECT MGR NA	
SYSTEMS MGR NA	
ENGINEERING MGR NA	
SUPERVISOR C. DIVONA	11-3-92
DESIGN ENGINEER R. CHOATE	11-3-92
CHECKED E. GARCIA	~~3-24-93~~ 11-2-92
DRAWN P. ASHLEY	01-30-92

U.S.DEPARTMENT OF ENERGY
Richland Field Office
DE - AC06-86RL10838

FLUOR DANIEL, INC.
ADVANCED TECHNOLOGY DIVISION

TU-130-002
CAROUSEL
ASSEMBLY

PROJECT TITLE
HANFORD WASTE VITRIFICATION PLANT

PROJECT	FLUOR CONTRACT NO.	CWBS NO.
B-595	8457	P06B
SCALE 1/8	BLDG NO. 1	INDEX NO.

CLASSIFICATION	BY	DRAWING NUMBER	SHEET	OF	REV
NONE	NOT REQD	H-2-120374	2	4	0

NG INDEX

A F C
77 78 79 80

DISTRIBUTION CODE: 403

M152 ACAD

INITIALS: PN
DATE: 03-16-93

APR - 8 1993

QUALITY LEVEL II
SAFETY CLASS 3

REV NO.	DATE	REVISION DESCRIPTION	EG	RC	CD	
0	04/06/93	APPROVED FOR CONSTRUCTION	EG	RC	CD	NA / NA
			NA	NA	NA	NA

CADFILE	B120374C	CADCODE	2B:IBM:ACD2:12.C1:SS

ENGINEERING RELEASE

REV _____ DATE _____

ERO _____

SIGNATURE	DATE
PROJ DIR NA	
QA MGR NA	
INDEPENDENT SAFETY MGR NA	
PROJECT MGR NA	
SYSTEMS MGR NA	
ENGINEERING MGR NA	
SUPERVISOR C. DIVONA	11-3-92
DESIGN ENGINEER R. CHOATE	11-3-92
CHECKED E. GARCIA	11-2-92
DRAWN P. ASHLEY	01-30-92

U.S.DEPARTMENT OF ENERGY

Richland Field Office

DE – AC06-86RL10838

FLUOR DANIEL, INC.
ADVANCED TECHNOLOGY DIVISION

TU-130-002 CAROUSEL DETAILS

PROJECT TITLE: HANFORD WASTE VITRIFICATION PLANT

PROJECT	FLUOR CONTRACT NO.	CWBS NO.
B-595	8457	P06B
SCALE 1/4	BLDG NO. 1	INDEX NO.

CLASSIFICATION	BY	DRAWING NUMBER	SHEET	OF	REV
NONE	NOT REQD	H-2-120374	3	4	0

ING INDEX

AFC

DISTRIBUTION CODE: 403

M153 ACAD

INITIALS: PN

DATE: 03-16-93

APR - 8 1993

QUALITY LEVEL II

SAFETY CLASS 3

REV NO.	DATE	REVISION DESCRIPTION	EG	RC	CD	
0	04/06/93	APPROVED FOR CONSTRUCTION	EG	RC	CD	NA / NA
			NA	NA	NA	NA

APPROVAL INITIALS

CADFILE	B120374D
CADCODE	2B:IBM:ACD2:12.C1:SS

ENGINEERING RELEASE

REV _____ DATE _____

ERO _____

SIGNATURE	DATE
PROJ DIR NA	
QA MGR NA	
INDEPENDENT SAFETY MGR NA	
PROJECT MGR NA	
SYSTEMS MGR NA	
ENGINEERING MGR NA	
SUPERVISOR C. DIVONA	11-3-92
DESIGN ENGINEER R. CHOATE	11-3-92
CHECKED E. GARCIA	11-2-92
DRAWN P. ASHLEY	01-30-92

U.S.DEPARTMENT OF ENERGY

Richland Field Office

DE - AC06-86RL10838

FLUOR DANIEL, INC.

ADVANCED TECHNOLOGY DIVISION

TU-130-002 CAROUSEL SUB-WELDMENT

PROJECT TITLE: HANFORD WASTE VITRIFICATION PLANT

PROJECT	FLUOR CONTRACT NO.	CWBS NO.
B-595	8457	P06B
SCALE 1/4	BLDG NO. 1	INDEX NO.

CLASSIFICATION	BY	DRAWING NUMBER	SHEET	OF	REV
NONE	NOT REQD	H-2-120374	4	4	0

NG INDEX

AFC 77 78 79 80

DISTRIBUTION CODE: 403

M154 ACAD

INITIALS: PN

DATE: 03-16-93

APR - 8 1993

QUALITY LEVEL II
SAFETY CLASS 3

REV NO.	DATE	REVISION DESCRIPTION	EG	RC	CD	
0	CH 06/93	APPROVED FOR CONSTRUCTION	EG	RBC	CPW	NA NA
			NA	NA	NA	NA

CADFILE B120375A CADCODE 2B:IBM:ACD2:12.C1:SS

ENGINEERING RELEASE
REV _____ DATE _____
ERO _____

SIGNATURE	DATE
PROJ DIR NA	
QA MGR NA	
INDEPENDENT SAFETY MGR NA	
PROJECT MGR NA	
SYSTEMS MGR NA	
ENGINEERING MGR NA	
SUPERVISOR C. DIVONA CPW	11-3-92
DESIGN ENGINEER R. CHOATE RBC	11-3-92
CHECKED E. GARCIA RBC	~~3-24-93~~ 11-2-92
DRAWN P. ASHLEY	12-05-91

U.S.DEPARTMENT OF ENERGY
Richland Field Office
DE - AC06-86RL10838

FLUOR DANIEL, INC.
ADVANCED TECHNOLOGY DIVISION

TU-130-002 CANISTER LID CLOSURE SPRT ASSY PARTS LIST & NOTES

PROJECT TITLE: HANFORD WASTE VITRIFICATION PLANT

PROJECT	FLUOR CONTRACT NO.	CWBS NO.
B-595	8457	P06B
SCALE 1/4	BLDG NO. 1	INDEX NO.

CLASSIFICATION	BY	DRAWING NUMBER	SHEET	OF	REV
NONE	NOT REQD	H-2-120375	1	2	0

ING INDEX

A F C
77 78 79 80

DISTRIBUTION CODE: 403

M155 ACAD

INITIALS: PN
DATE: 03-16-93

APR - 8 1993

QUALITY LEVEL II
SAFETY CLASS 3

REV NO.	DATE	REVISION DESCRIPTION	EG	RC	CD	
0	04/06/93	APPROVED FOR CONSTRUCTION	EG	RC	CD	NA NA
			NA	NA	NA	NA

CADFILE	B120375B	CADCODE	2B:IBM:ACD2:12.C1:SS

ENGINEERING RELEASE
REV _____ DATE _____
ERO _____

SIGNATURE	DATE
PROJ DIR NA	
QA MGR NA	
INDEPENDENT SAFETY MGR NA	
PROJECT MGR NA	
SYSTEMS MGR NA	
ENGINEERING MGR NA	
SUPERVISOR C. DIVONA	11-3-92
DESIGN ENGINEER R. CHOATE	11-3-92
CHECKED E. GARCIA	11-2-92
DRAWN P. ASHLEY	12-05-91

U.S.DEPARTMENT OF ENERGY
Richland Field Office
DE – AC06–86RL10838

FLUOR DANIEL, INC.
ADVANCED TECHNOLOGY DIVISION

TU–130–002
CANISTER LID CLOSURE
SUPPORT DET

PROJECT TITLE
HANFORD WASTE VITRIFICATION PLANT

PROJECT	FLUOR CONTRACT NO.	CWBS NO.
B–595	8457	P06B
SCALE 1/4	BLDG NO. 1	INDEX NO.

CLASSIFICATION	BY	DRAWING NUMBER	SHEET	OF	REV
NONE	NOT REQD	H–2–120375	2	2	0

NG INDEX

DISTRIBUTION CODE: 403

M156 ACAD

INITIALS: PN
DATE: 03–16–93

AFC 77 78 79 80

APR - 8 1993

QUALITY LEVEL II
SAFETY CLASS 3

REV NO.	DATE	REVISION DESCRIPTION				
0	04/06/93	APPROVED FOR CONSTRUCTION	EG	RC	CD	NA NA
			NA	NA	NA	NA

CADFILE	B120376A	CADCODE	2B:IBM:ACD2:12.C1:SS

ENGINEERING RELEASE
REV _____ DATE _____
ERO _____

SIGNATURE	DATE
PROJ DIR NA	
QA MGR NA	
INDEPENDENT SAFETY MGR NA	
PROJECT MGR NA	
SYSTEMS MGR NA	
ENGINEERING MGR NA	
SUPERVISOR C. DIVONA	11-3-92
DESIGN ENGINEER R. CHOATE	11-3-92
CHECKED E. GARCIA	~~3-31-93~~ 11-2-92
DRAWN P.ASHLEY	11-07-91

U.S.DEPARTMENT OF ENERGY
Richland Field Office
DE – AC06-86RL10838

FLUOR DANIEL, INC.
ADVANCED TECHNOLOGY DIVISION

TU-130-002 LIFTING TRUNNION WELDMENT PARTS LIST & NOTES

PROJECT TITLE: HANFORD WASTE VITRIFICATION PLANT

PROJECT	FLUOR CONTRACT NO.	CWBS NO.
B-595	8457	P06B
SCALE 1/8	BLDG NO. 1	INDEX NO.

CLASSIFICATION	BY	DRAWING NUMBER	SHEET	OF	REV
NONE	NOT REQD	H-2-120376	1	2	0

NG INDEX

DISTRIBUTION CODE: 403 **M157** ACAD

INITIALS: PN
DATE: 03-16-93

SHOWN 5 SCALE : 1/4

OPPOSITE 7

APR - 8 1993

QUALITY LEVEL II

SAFETY CLASS 3

REV NO.	DATE	REVISION DESCRIPTION	EG	RC	CD	
0	04/06/93	APPROVED FOR CONSTRUCTION	EG	RC	CD	NA / NA
			NA	NA	NA	NA

CADFILE	B120376B	CADCODE	2B:IBM:ACD2:12.C1:SS

ENGINEERING RELEASE

REV _____ DATE _____

ERO _____

SIGNATURE	DATE
PROJ DIR NA	
QA MGR NA	
INDEPENDENT SAFETY MGR NA	
PROJECT MGR NA	
SYSTEMS MGR NA	
ENGINEERING MGR NA	
SUPERVISOR C. DIVONA	11-3-92
DESIGN ENGINEER R. CHOATE	11-3-92
CHECKED E. GARCIA	11-2-92
DRAWN P. ASHLEY	11-19-91

U.S.DEPARTMENT OF ENERGY

Richland Field Office

DE – AC06-86RL10838

FLUOR DANIEL, INC.

ADVANCED TECHNOLOGY DIVISION

TU-130-002 LIFTING TRUNNION DETAILS

PROJECT TITLE: HANFORD WASTE VITRIFICATION PLANT

PROJECT	FLUOR CONTRACT NO.	CWBS NO.
B-595	8457	P06B
SCALE: SHOWN	BLDG NO.: 1	INDEX NO.

CLASSIFICATION	BY	DRAWING NUMBER	SHEET	OF	REV
NONE	NOT REQD	H-2-120376	2	2	0

ING INDEX

AFC 77 78 79 80

DISTRIBUTION CODE: 403

M158 ACAD

INITIALS: PN

DATE: 03-16-93

APR - 8 1993

QUALITY LEVEL II

SAFETY CLASS 3

REV NO.	DATE	REVISION DESCRIPTION	EG	RC	CD	
0	04/06/93	APPROVED FOR CONSTRUCTION	EG	RC	CD	NA / NA
			NA	NA	NA	NA

CADFILE	B120377A	CADCODE	2B:IBM:ACD2:12.C1:SS

ENGINEERING RELEASE

REV _____ DATE _____

ERO _____

SIGNATURE	DATE
PROJ DIR NA	
QA MGR NA	
INDEPENDENT SAFETY MGR NA	
PROJECT MGR NA	
SYSTEMS MGR NA	
ENGINEERING MGR NA	
SUPERVISOR C. DIVONA	11-3-92
DESIGN ENGINEER R. CHOATE	11-3-92
CHECKED E. GARCIA	11-2-92
DRAWN S. REGACHO	01-13-92

U.S.DEPARTMENT OF ENERGY

Richland Field Office

DE - AC06-86RL10838

FLUOR DANIEL, INC.
ADVANCED TECHNOLOGY DIVISION

TU-130-002
CART DR MOT ASSY
PARTS LIST & NOTES

PROJECT TITLE: HANFORD WASTE VITRIFICATION PLANT

PROJECT	FLUOR CONTRACT NO.	CWBS NO.
B-595	8457	P06B
SCALE 1/4	BLDG NO. 1	INDEX NO.

CLASSIFICATION	BY	DRAWING NUMBER	SHEET	OF	REV
NONE	NOT REQD	H-2-120377	1	5	0

ING INDEX

AFC 77 78 79 80

DISTRIBUTION CODE: 403

M159 ACAD

INITIALS: PN

DATE: 03-16-93

APR - 8 1993

QUALITY LEVEL II
SAFETY CLASS 3

REV NO.	DATE	REVISION DESCRIPTION	EG	RC	CD	
0	04/06/93	APPROVED FOR CONSTRUCTION	EG	RC	CD	NA / NA
			NA	NA	NA	NA

APPROVAL INITIALS

CADFILE	B120377B	CADCODE	2B:IBM:ACD2:12.C1:SS

ENGINEERING RELEASE

REV _____ DATE _____

ERO _____

SIGNATURE	DATE
PROJ DIR NA	
QA MGR NA	
INDEPENDENT SAFETY MGR NA	
PROJECT MGR NA	
SYSTEMS MGR NA	
ENGINEERING MGR NA	
SUPERVISOR C. DIVONA	11-3-92
DESIGN ENGINEER R. CHOATE	11-3-92
CHECKED E. GARCIA	11-2-92
DRAWN S. REGACHO	01-09-92

U.S.DEPARTMENT OF ENERGY

Richland Field Office

DE – AC06-86RL10838

FLUOR DANIEL, INC.
ADVANCED TECHNOLOGY DIVISION

TU-130-002 CART DRIVE MOTOR WELDMENT

PROJECT TITLE: HANFORD WASTE VITRIFICATION PLANT

PROJECT	FLUOR CONTRACT NO.	CWBS NO.
B-595	8457	P06B
SCALE 1/4	BLDG NO. 1	INDEX NO.

CLASSIFICATION	BY	DRAWING NUMBER	SHEET	OF	REV
NONE	NOT REQD	H-2-120377	2	5	0

NG INDEX

AFC 77 78 79 80

DISTRIBUTION CODE: 403

M160 ACAD

INITIALS: PN

DATE: 03-16-93

APR - 8 1993

QUALITY LEVEL II

SAFETY CLASS 3

REV NO.	DATE	REVISION DESCRIPTION	EG	RC	CD	
0	04/06/93	APPROVED FOR CONSTRUCTION	EG	RC	CD	NA / NA
			NA	NA	NA	NA

CADFILE	B120377C	CADCODE	2B:IBM:ACD2:12.C1:SS

ENGINEERING RELEASE

REV _____ DATE _____

ERO _____

SIGNATURE	DATE
PROJ DIR NA	
QA MGR NA	
INDEPENDENT SAFETY MGR NA	
PROJECT MGR NA	
SYSTEMS MGR NA	
ENGINEERING MGR NA	
SUPERVISOR C. DIVONA	11-3-92
DESIGN ENGINEER R. CHOATE	11-3-92
CHECKED E. GARCIA	~~3-24-93~~ 11-2-92
DRAWN S. REGACHO	12-31-91

U.S. DEPARTMENT OF ENERGY

Richland Field Office

DE – AC06–86RL10838

FLUOR DANIEL, INC.
ADVANCED TECHNOLOGY DIVISION

TU–130–002 CART DRIVE MOTOR WELDMENT DETAILS

PROJECT TITLE: HANFORD WASTE VITRIFICATION PLANT

PROJECT	FLUOR CONTRACT NO.	CWBS NO.
B–595	8457	P06B
SCALE 1/4	BLDG NO. 1	INDEX NO.

CLASSIFICATION	BY	DRAWING NUMBER	SHEET	OF	REV
NONE	NOT REQD	H–2–120377	3	5	0

NG INDEX

B

A

2 1

AFC 77 78 79 80

DISTRIBUTION CODE: 403

M161 ACAD

INITIALS: PN

DATE: 03–16–93

APR - 8 1993

QUALITY LEVEL II
SAFETY CLASS 3

REV NO.	DATE	REVISION DESCRIPTION	EG	RC	CD	
0	04/06/93	APPROVED FOR CONSTRUCTION	EG	RC	CD	NA / NA
			NA	NA	NA	NA

CADFILE	B120377D	CADCODE	2B:IBM:ACD2:12.C1:SS

ENGINEERING RELEASE

REV _____ DATE _____

ERO _____

SIGNATURE	DATE
PROJ DIR NA	
QA MGR NA	
INDEPENDENT SAFETY MGR NA	
PROJECT MGR NA	
SYSTEMS MGR NA	
ENGINEERING MGR NA	
SUPERVISOR C. DIVONA	11-3-92
DESIGN ENGINEER R. CHOATE	11-3-92
CHECKED E. GARCIA	11-2-92
DRAWN S. REGACHO	01-08-92

U.S. DEPARTMENT OF ENERGY

Richland Field Office

DE – AC06-86RL10838

FLUOR DANIEL, INC.
ADVANCED TECHNOLOGY DIVISION

TU-130-002
CART DRIVE MOTOR
SPLASH GUARD ASSY

PROJECT TITLE		
HANFORD WASTE VITRIFICATION PLANT		
PROJECT B-595	FLUOR CONTRACT NO. 8457	CWBS NO. P06B
SCALE 1/2	BLDG NO. 1	INDEX NO.

CLASSIFICATION	BY	DRAWING NUMBER	SHEET	OF	REV
NONE	NOT REQD	H-2-120377	4	5	0

ING INDEX

A F C 77 78 79 80

DISTRIBUTION CODE: 403

M162 ACAD

INITIALS: PN

DATE: 03-16-93

APR - 8 1993

QUALITY LEVEL II
SAFETY CLASS 3

REV NO.	DATE	REVISION DESCRIPTION	APPROVAL INITIALS			
0	04/06/93	APPROVED FOR CONSTRUCTION	EG	RC	CD	NA / NA
			NA	NA	NA	NA

CADFILE	B120377E	CADCODE	2B:IBM:ACD2:12.C1:SS

ENGINEERING RELEASE

REV _____ DATE _____

ERO _____

SIGNATURE	DATE
PROJ DIR NA	
QA MGR NA	
INDEPENDENT SAFETY MGR NA	
PROJECT MGR NA	
SYSTEMS MGR NA	
ENGINEERING MGR NA	
SUPERVISOR C. DIVONA	11-3-92
DESIGN ENGINEER R. CHOATE	11-3-92
CHECKED E. GARCIA	11-2-92
DRAWN S. REGACHO	12-31-91

U.S.DEPARTMENT OF ENERGY

Richland Field Office

DE – AC06–86RL10838

FLUOR DANIEL, INC.
ADVANCED TECHNOLOGY DIVISION

TU–130–002
CART DRIVE MOTOR
SPLASH GUARD DET

PROJECT TITLE: HANFORD WASTE VITRIFICATION PLANT

PROJECT	FLUOR CONTRACT NO.	CWBS NO.
B–595	8457	P06B
SCALE 1/2	BLDG NO. 1	INDEX NO.

CLASSIFICATION	BY	DRAWING NUMBER	SHEET	OF	REV
NONE	NOT REQD	H–2–120377	5	5	0

NG INDEX

DISTRIBUTION CODE: 403

M163 ACAD

INITIALS: PN

DATE: 03–16–93

APR - 8 1993

QUALITY LEVEL II

SAFETY CLASS 3

REV NO.	DATE	REVISION DESCRIPTION	EG	RC	CD	
0	01/06/93	APPROVED FOR CONSTRUCTION	EG	RC	CD	NA / NA
			NA	NA	NA	NA

CADFILE	B120378A	CADCODE	2B:IBM:ACD2:12.C1:SS

ENGINEERING RELEASE

REV _____ DATE _____

ERO _____

SIGNATURE	DATE
PROJ DIR NA	
QA MGR NA	
INDEPENDENT SAFETY MGR NA	
PROJECT MGR NA	
SYSTEMS MGR NA	
ENGINEERING MGR NA	
SUPERVISOR C. DIVONA	11-3-92
DESIGN ENGINEER R. CHOATE	11-3-92
CHECKED E. GARCIA	~~3-24-93~~ 11-2-92
DRAWN P. ASHLEY	1-6-92

U.S.DEPARTMENT OF ENERGY

Richland Field Office

DE – AC06–86RL10838

FLUOR DANIEL, INC.
ADVANCED TECHNOLOGY DIVISION

TU–130–002 SPIDER DRIVE ASSEMBLY PARTS LIST & NOTES

PROJECT TITLE: HANFORD WASTE VITRIFICATION PLANT

PROJECT	FLUOR CONTRACT NO.	CWBS NO.
B–595	8457	P06B
SCALE 1/4	BLDG NO. 1	INDEX NO.

CLASSIFICATION	BY	DRAWING NUMBER	SHEET	OF	REV
NONE	NOT REQD	H–2–120378	1	7	0

NG INDEX

DISTRIBUTION CODE: 403

M164 ACAD

INITIALS: PN

DATE: 03–16–93

AFC 77 78 79 80

APR - 8 1993

QUALITY LEVEL II
SAFETY CLASS 3

REV NO.	DATE	REVISION DESCRIPTION	EG	RC	CD	
0	4/06/93	APPROVED FOR CONSTRUCTION	EG	RC	CD	NA NA
			NA	NA	NA	NA

APPROVAL INITIALS

CADFILE B120378B CADCODE 2B:IBM:ACD2:12.C1:SS

ENGINEERING RELEASE
REV _____ DATE _____
ERO _____

SIGNATURE	DATE
PROJ DIR NA	
QA MGR NA	
INDEPENDENT SAFETY MGR NA	
PROJECT MGR NA	
SYSTEMS MGR NA	
ENGINEERING MGR NA	
SUPERVISOR C. DIVONA	11-3-92
DESIGN ENGINEER R. CHOATE	11-3-92
CHECKED E. GARCIA	11-2-92
DRAWN P. ASHLEY	1-6-92

U.S.DEPARTMENT OF ENERGY
Richland Field Office
DE – AC06-86RL10838

FLUOR DANIEL, INC.
ADVANCED TECHNOLOGY DIVISION

TU-130-002 WELDMENT DRIVE BASE & SUB-WELDMENT

PROJECT TITLE
HANFORD WASTE VITRIFICATION PLANT

PROJECT	FLUOR CONTRACT NO.	CWBS NO.
B-595	8457	P06B
SCALE	BLDG NO.	INDEX NO.
SHOWN	1	

CLASSIFICATION	BY	DRAWING NUMBER	SHEET	OF	REV
NONE	NOT REQD	H-2-120378	2	7	0

NG INDEX

AFC 77 78 79 80

DISTRIBUTION CODE: 403

M165 ACAD

INITIALS: PN
DATE: 03-16-93

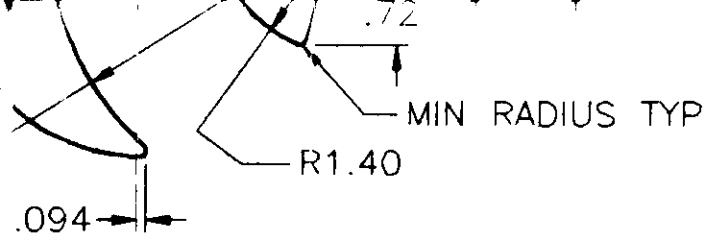

(5) SHIM

APR - 8 1993

QUALITY LEVEL II
SAFETY CLASS 3

REV NO.	DATE	REVISION DESCRIPTION	APPROVAL INITIALS			
0	04/06/93	APPROVED FOR CONSTRUCTION	EG	RC	CD	NA / NA
			NA	NA	NA	NA

CADFILE	B120378C	CADCODE	2B:IBM:ACD2:12.C1:SS

ENGINEERING RELEASE
REV _____ DATE _____
ERO _____

SIGNATURE	DATE
PROJ DIR NA	
QA MGR NA	
INDEPENDENT SAFETY MGR NA	
PROJECT MGR NA	
SYSTEMS MGR NA	
ENGINEERING MGR NA	
SUPERVISOR C. DIVONA	11-3-92
DESIGN ENGINEER R. CHOATE	11-3-92
CHECKED E. GARCIA	~~3-24-93~~ 11-2-92
DRAWN P. ASHLEY	1-6-92

U.S.DEPARTMENT OF ENERGY
Richland Field Office
DE – AC06-86RL10838

FLUOR DANIEL, INC.
ADVANCED TECHNOLOGY DIVISION

TU-130-002
SPIDER DRIVE
DETAILS

PROJECT TITLE		
HANFORD WASTE VITRIFICATION PLANT		
PROJECT B-595	FLUOR CONTRACT NO. 8457	CWBS NO. P06B
SCALE 1/2	BLDG NO. 1	INDEX NO.

CLASSIFICATION	BY	DRAWING NUMBER	SHEET	OF	REV
NONE	NOT REQD	H-2-120378	3	7	0

ING INDEX

AFC 77 78 79 80

DISTRIBUTION CODE: 403

M166 ACAD

INITIALS: PN
DATE: 03-16-93

APR - 8 1993

QUALITY LEVEL II
SAFETY CLASS 3

REV NO.	DATE	REVISION DESCRIPTION	APPROVAL INITIALS			
0	04/06/93	APPROVED FOR CONSTRUCTION	EG	RC	CD	NA / NA
			NA	NA	NA	NA

CADFILE	B120378D
CADCODE	2B:IBM:ACD2:12.C1:SS

ENGINEERING RELEASE

REV _____ DATE _____

ERO _____

SIGNATURE	DATE
PROJ DIR NA	
QA MGR NA	
INDEPENDENT SAFETY MGR NA	
PROJECT MGR NA	
SYSTEMS MGR NA	
ENGINEERING MGR NA	
SUPERVISOR C. DIVONA	11-3-92
DESIGN ENGINEER R. CHOATE	11-3-92
CHECKED E. GARCIA	11-2-92
DRAWN P. ASHLEY	1-6-92

U.S. DEPARTMENT OF ENERGY

Richland Field Office

DE – AC06-86RL10838

FLUOR DANIEL, INC.
ADVANCED TECHNOLOGY DIVISION

TU-130-002
SPIDER DRIVE
RAILS

PROJECT TITLE: HANFORD WASTE VITRIFICATION PLANT

PROJECT	FLUOR CONTRACT NO.	CWBS NO.
B-595	8457	P06B
SCALE 1/2	BLDG NO. 1	INDEX NO.

CLASSIFICATION	BY	DRAWING NUMBER	SHEET	OF	REV
NONE	NOT REQD	H-2-120378	4	7	0

NG INDEX

AFC 77 78 79 80

DISTRIBUTION CODE: 403

M167 ACAD

INITIALS: PN

DATE: 03-16-93

2 3/8

APR - 8 1993

QUALITY LEVEL II
SAFETY CLASS 3

REV NO.	DATE	REVISION DESCRIPTION	EG	RC	CD	NA
0	03/06/93	APPROVED FOR CONSTRUCTION	EG	RC	CD	NA
			NA	NA	NA	NA

CADFILE B120378E CADCODE 2B:IBM:ACD2:12.C1:SS

ENGINEERING RELEASE
REV _____ DATE _____
ERO _____

SIGNATURE	DATE
PROJ DIR NA	
QA MGR NA	
INDEPENDENT SAFETY MGR NA	
PROJECT MGR NA	
SYSTEMS MGR NA	
ENGINEERING MGR NA	
SUPERVISOR C. DIVONA	11-3-92
DESIGN ENGINEER R. CHOATE	11-3-92
CHECKED E. GARCIA	~~3-24-93~~ 11-2-92
DRAWN P. ASHLEY	1-6-92

U.S.DEPARTMENT OF ENERGY
Richland Field Office
DE - AC06-86RL10838

FLUOR DANIEL, INC.
ADVANCED TECHNOLOGY DIVISION

TU-130-002 SPIDER DRIVE DETAILS

PROJECT TITLE: HANFORD WASTE VITRIFICATION PLANT

PROJECT	FLUOR CONTRACT NO.	CWBS NO.
B-595	8457	P06B
SCALE 1/2	BLDG NO. 1	INDEX NO.

CLASSIFICATION	BY	DRAWING NUMBER	SHEET	OF	REV
NONE	NOT REQD	H-2-120378	5	7	0

ING INDEX

AFC 77 78 79 80

DISTRIBUTION CODE: 403 M168 ACAD

INITIALS: PN
DATE: 03-16-93

APR - 8 1993

QUALITY LEVEL II

SAFETY CLASS 3

REV NO.	DATE	REVISION DESCRIPTION	EG	RC	CD	NA/NA
0	04/06/93	APPROVED FOR CONSTRUCTION	NA	NA	NA	NA

APPROVAL INITIALS

CADFILE	B120378F	CADCODE	2B:IBM:ACD2:12.C1:SS

ENGINEERING RELEASE

REV _____ DATE _____

ERD _____

SIGNATURE	DATE
PROJ DIR NA	
QA MGR NA	
INDEPENDENT SAFETY MGR NA	
PROJECT MGR NA	
SYSTEMS MGR NA	
ENGINEERING MGR NA	
SUPERVISOR C. DIVONA	11-3-92
DESIGN ENGINEER R. CHOATE	11-3-92
CHECKED E. GARCIA	11-2-92
DRAWN P. ASHLEY	1-6-92

U.S. DEPARTMENT OF ENERGY

Richland Field Office

DE - AC06-86RL10838

FLUOR DANIEL, INC.
ADVANCED TECHNOLOGY DIVISION

TU-130-001 SPIDER DRIVE DETAILS

PROJECT TITLE: HANFORD WASTE VITRIFICATION PLANT

PROJECT	FLUOR CONTRACT NO.	CWBS NO.
B-595	8457	P06B
SCALE 1/2	BLDG NO. 1	INDEX NO.

CLASSIFICATION	BY	DRAWING NUMBER	SHEET	OF	REV
NONE	NOT REQD	H-2-120378	6	7	0

NG INDEX

DISTRIBUTION CODE: 403

M169 ACAD

INITIALS: PN

DATE: 03-16-93

AFC 77 78 79 80

APR - 8 1993

QUALITY LEVEL II

SAFETY CLASS 3

REV NO.	DATE	REVISION DESCRIPTION	EG	RC	CD	
0	04/06/93	APPROVED FOR CONSTRUCTION	EG	RC	CD	NA / NA
			NA	NA	NA	NA

CADFILE B120378G CADCODE 2B:IBM:ACD2:12.C1:SS

ENGINEERING RELEASE

REV _____ DATE _____

ERO _____

SIGNATURE	DATE
PROJ DIR NA	
QA MGR NA	
INDEPENDENT SAFETY MGR NA	
PROJECT MGR NA	
SYSTEMS MGR NA	
ENGINEERING MGR NA	
SUPERVISOR C. DIVONA	11-3-92
DESIGN ENGINEER R. CHOATE	11-3-92
CHECKED E. GARCIA	11-2-92
DRAWN P. ASHLEY	1-6-92

U.S. DEPARTMENT OF ENERGY

Richland Field Office

DE – AC06-86RL10838

FLUOR DANIEL, INC.
ADVANCED TECHNOLOGY DIVISION

TU-130-002 SPIDER DRIVE DETAILS

PROJECT TITLE: HANFORD WASTE VITRIFICATION PLANT

PROJECT	FLUOR CONTRACT NO.	CWBS NO.
B-595	8457	P06B
SCALE 1/1	BLDG NO. 1	INDEX NO.

CLASSIFICATION	BY	DRAWING NUMBER	SHEET	OF	REV
NONE	NOT REQD	H-2-120378	7	7	0

NG INDEX

DISTRIBUTION CODE: 403

M170 ACAD

INITIALS: PN

DATE: 03-16-93

APR - 8 1993

QUALITY LEVEL II

SAFETY CLASS 3

REV NO.	DATE	REVISION DESCRIPTION	EG	RC	CD	
0	04/01/93	APPROVED FOR CONSTRUCTION	EG	RC	CD	NA/NA
			NA	NA	NA	NA

APPROVAL INITIALS

CADFILE B120379A CADCODE 2B:IBM:ACD2:12.C1:SS

ENGINEERING RELEASE

REV _____ DATE _____

ERO _____

SIGNATURE	DATE
PROJ DIR NA	
QA MGR NA	
INDEPENDENT SAFETY MGR NA	
PROJECT MGR NA	
SYSTEMS MGR NA	
ENGINEERING MGR NA	
SUPERVISOR C. DIVONA	11-3-92
DESIGN ENGINEER R. CHOATE	11-3-92
CHECKED E. GARCIA	~~3-24-93~~ 11-2-92
DRAWN D.SMITH	03/24/92

U.S.DEPARTMENT OF ENERGY

Richland Field Office

DE – AC06–86RL10838

FLUOR DANIEL, INC.
ADVANCED TECHNOLOGY DIVISION

TU–130–002 DRAIN TURNTABLE CART ASSY, PARTS LIST AND NOTES

PROJECT TITLE: HANFORD WASTE VITRIFICATION PLANT

PROJECT	FLUOR CONTRACT NO.	CWBS NO.
B–595	8457	P06B
SCALE 1/8	BLDG NO. 1	INDEX NO.

CLASSIFICATION	BY	DRAWING NUMBER	SHEET	OF	REV
NONE	NOT REQD	H–2–120379	1	3	0

NG INDEX

AFC 77 78 79 80

DISTRIBUTION CODE: 403

M171 ACAD

INITIALS: PN

DATE: 03–16–93

APR - 8 1993

QUALITY LEVEL II
SAFETY CLASS 3

REV NO.	DATE	REVISION DESCRIPTION	EG	RC	CD	
0	04/06/93	APPROVED FOR CONSTRUCTION	EG	RC	CD	NA / NA
			NA	NA	NA	NA

CADFILE	B120379B
CADCODE	2B:IBM:ACD2:12.C1:SS

ENGINEERING RELEASE

REV _____ DATE _____

ERO _____

SIGNATURE	DATE
PROJ DIR NA	
QA MGR NA	
INDEPENDENT SAFETY MGR NA	
PROJECT MGR NA	
SYSTEMS MGR NA	
ENGINEERING MGR NA	
SUPERVISOR C. DIVONA	11-3-92
DESIGN ENGINEER R. CHOATE	11-3-92
CHECKED E. GARCIA	11-2-92
DRAWN D. SMITH	03/24/92

U.S.DEPARTMENT OF ENERGY

Richland Field Office

DE - AC06-86RL10838

FLUOR DANIEL, INC.
ADVANCED TECHNOLOGY DIVISION

TU-130-002
DRAIN TURNTABLE CART
TOP VIEW

PROJECT TITLE
HANFORD WASTE VITRIFICATION PLANT

PROJECT	FLUOR CONTRACT NO.	CWBS NO.
B-595	8457	P06B
SCALE	BLDG NO.	INDEX NO.
SHOWN	1	

CLASSIFICATION	BY	DRAWING NUMBER	SHEET	OF	REV
NONE	NOT REQD	H-2-120379	2	3	0

NG INDEX

AFC 77 78 79 80

DISTRIBUTION CODE: 403

M172 ACAD

INITIALS: PN
DATE: 03-16-93

APR - 8 1993

QUALITY LEVEL II

SAFETY CLASS 3

REV NO.	DATE	REVISION DESCRIPTION	EG	RC	CD	NA/NA
0	04/06/93	APPROVED FOR CONSTRUCTION	NA	NA	NA	NA

CADFILE B120379C CADCODE 2B:IBM:ACD2:12.C1:SS

ENGINEERING RELEASE

REV _____ DATE _____

ERO _____

SIGNATURE	DATE
PROJ DIR NA	
QA MGR NA	
INDEPENDENT SAFETY MGR NA	
PROJECT MGR NA	
SYSTEMS MGR NA	
ENGINEERING MGR NA	
SUPERVISOR C. DIVONA	11-3-92
DESIGN ENGINEER R. CHOATE	11-3-92
CHECKED E. GARCIA	~~3-24-93~~ 11-2-92
DRAWN D. SMITH	03/30/92

U.S.DEPARTMENT OF ENERGY

Richland Field Office

DE - AC06-86RL10838

FLUOR DANIEL, INC.
ADVANCED TECHNOLOGY DIVISION

TU-130-002 DRAIN TURNTABLE CART SIDE VIEW

PROJECT TITLE: HANFORD WASTE VITRIFICATION PLANT

PROJECT	FLUOR CONTRACT NO.	CWBS NO.
B-595	8457	P06B
SCALE: SHOWN	BLDG NO.: 1	INDEX NO.

CLASSIFICATION	BY	DRAWING NUMBER	SHEET	OF	REV
NONE	NOT REQD	H-2-120379	3	3	0

VING INDEX

AFC 77 78 79 80

DISTRIBUTION CODE: 403

M173 ACAD

INITIALS: PN

DATE: 03-16-93

APR - 8 1993

QUALITY LEVEL II

SAFETY CLASS 3

REV NO.	DATE	REVISION DESCRIPTION	APPROVAL INITIALS			
0	04/06/93	APPROVED FOR CONSTRUCTION	EG	RC	CD	NA
			NA	NA	NA	NA

CADFILE	B120380A	CADCODE	2B:IBM:ACD2:12.C1:SS

ENGINEERING RELEASE

REV _____ DATE _____

ERO _____

SIGNATURE	DATE
PROJ DIR NA	
QA MGR NA	
INDEPENDENT SAFETY MGR NA	
PROJECT MGR NA	
SYSTEMS MGR NA	
ENGINEERING MGR NA	
SUPERVISOR C. DIVONA	11-3-92
DESIGN ENGINEER R. CHOATE	11-3-92
CHECKED E. GARCIA RBC ~~3-24-93~~	11-2-92
DRAWN D. SMITH	03/24/92

U.S.DEPARTMENT OF ENERGY

Richland Field Office

DE - AC06-86RL10838

FLUOR DANIEL, INC.

ADVANCED TECHNOLOGY DIVISION

TU-130-002 CART SPIDER DRIVE SPRT ASSEMBLY

PROJECT TITLE: HANFORD WASTE VITRIFICATION PLANT

PROJECT	FLUOR CONTRACT NO.	CWBS NO.
B-595	8457	P06B
SCALE: NONE	BLDG NO.: 1	INDEX NO.

CLASSIFICATION	BY	DRAWING NUMBER	SHEET	OF	REV
NONE	NOT REQD	H-2-120380	1	2	0

ING INDEX

DISTRIBUTION CODE: 403

M174 ACAD

INITIALS: PN

DATE: 03-16-93

APR - 8 1993

QUALITY LEVEL II

SAFETY CLASS 3

REV NO.	DATE	REVISION DESCRIPTION	APPROVAL INITIALS			
0	04/06/93	APPROVED FOR CONSTRUCTION	EG	RC	CD	NA / NA
			NA	NA	NA	NA

CADFILE	B120380B	CADCODE	2B:IBM:ACD2:12.C1:SS

ENGINEERING RELEASE

REV _____ DATE _____

ERO _____

SIGNATURE	DATE
PROJ DIR NA	
QA MGR NA	
INDEPENDENT SAFETY MGR NA	
PROJECT MGR NA	
SYSTEMS MGR NA	
ENGINEERING MGR NA	
SUPERVISOR C. DIVONA	11-3-92
DESIGN ENGINEER R. CHOATE	11-3-92
CHECKED E. GARCIA	11-2-92
DRAWN C. PEASE	04/08/92

U.S. DEPARTMENT OF ENERGY

Richland Field Office

DE – AC06-86RL10838

FLUOR DANIEL, INC.
ADVANCED TECHNOLOGY DIVISION

TU-130-002 CART SPIDER DRIVE SUPPORT DETAILS

PROJECT TITLE: HANFORD WASTE VITRIFICATION PLANT

PROJECT	FLUOR CONTRACT NO.	CWBS NO.
B-595	8457	P06B
SCALE 1/4	BLDG NO. 1	INDEX NO.

CLASSIFICATION	BY	DRAWING NUMBER	SHEET	OF	REV
NONE	NOT REQD	H-2-120380	2	2	0

NG INDEX

AFC 77 78 79 80

DISTRIBUTION CODE: 403

M175 ACAD

INITIALS: PN

DATE: 03-16-93

APR - 8 1993

QUALITY LEVEL II
SAFETY CLASS 3

REV NO.	DATE	REVISION DESCRIPTION	EG	RC	CD	
0	04/06/93	APPROVED FOR CONSTRUCTION	EG	RC	CD	NA / NA
			NA	NA	NA	NA

CADFILE	B120381A	CADCODE	2B:IBM:ACD2:12.C1:SS

ENGINEERING RELEASE
REV _____ DATE _____
ERO _____

SIGNATURE	DATE
PROJ DIR NA	
QA MGR NA	
INDEPENDENT SAFETY MGR NA	
PROJECT MGR NA	
SYSTEMS MGR NA	
ENGINEERING MGR NA	
SUPERVISOR C. DIVONA	11-3-92
DESIGN ENGINEER R. CHOATE	11-3-92
CHECKED E. GARCIA	11-2-92
DRAWN D. RUFENACHT	03/17/92

U.S.DEPARTMENT OF ENERGY
Richland Field Office
DE – AC06-86RL10838

FLUOR DANIEL, INC.
ADVANCED TECHNOLOGY DIVISION

TU-130-002
CART BASE
PARTS LIST & NOTES

PROJECT TITLE: HANFORD WASTE VITRIFICATION PLANT

PROJECT	FLUOR CONTRACT NO.	CWBS NO.
B-595	8457	P06B
SCALE 1/8	BLDG NO. 1	INDEX NO.

CLASSIFICATION	BY	DRAWING NUMBER	SHEET	OF	REV
NONE	NOT REQD	H-2-120381	1	23	0

NG INDEX

AFC 77 78 79 80

DISTRIBUTION CODE: 403

M176 ACAD

INITIALS: PN
DATE: 03-16-93

APR - 8 1993

115

QUALITY LEVEL II
SAFETY CLASS 3

31

REV NO.	DATE	REVISION DESCRIPTION	EG	RC	CD	
0	04/06/93	APPROVED FOR CONSTRUCTION	EG	RC	CD	NA / NA
			NA	NA	NA	NA

B

CADFILE	B120381B	CADCODE	2B:IBM:ACD2:12.C1:SS

ENGINEERING RELEASE

REV _____ DATE _____

ERO _____

SIGNATURE	DATE
PROJ DIR NA	
QA MGR NA	
INDEPENDENT SAFETY MGR NA	
PROJECT MGR NA	
SYSTEMS MGR NA	
ENGINEERING MGR NA	
SUPERVISOR C. DIVONA	11-3-92
DESIGN ENGINEER R. CHOATE	11-3-92
CHECKED E. GARCIA	3-24-93 11-2-92
DRAWN D. RUFENACHT	03/16/92

U.S.DEPARTMENT OF ENERGY

Richland Field Office

DE – AC06–86RL10838

FLUOR DANIEL, INC.
ADVANCED TECHNOLOGY DIVISION

TU–130–002
CART BASE
ASSEMBLY

A

PROJECT TITLE: HANFORD WASTE VITRIFICATION PLANT

PROJECT	FLUOR CONTRACT NO.	CWBS NO.
B–595	8457	P06B
SCALE 1/8	BLDG NO. 1	INDEX NO.

CLASSIFICATION	BY	DRAWING NUMBER	SHEET	OF	REV
NONE	NOT REQD	H–2–120381	2	23	0

ING INDEX

2 1

A F C 77 78 79 80

DISTRIBUTION CODE: 403

M177 ACAD

INITIALS: PN
DATE: 03–16–93

APR - 8 1993

QUALITY LEVEL II
SAFETY CLASS 3

REV NO.	DATE	REVISION DESCRIPTION	EG	RC	CD	
0	04/06/93	APPROVED FOR CONSTRUCTION	EG	RC	CD	NA / NA
			NA	NA	NA	NA

CADFILE	B120381C	CADCODE	2B:IBM:ACD2:12.C1:SS

ENGINEERING RELEASE

REV _____ DATE _____

ERO _____

SIGNATURE	DATE
PROJ DIR NA	
QA MGR NA	
INDEPENDENT SAFETY MGR NA	
PROJECT MGR NA	
SYSTEMS MGR NA	
ENGINEERING MGR NA	
SUPERVISOR C. DIVONA	11-3-92
DESIGN ENGINEER R. CHOATE	11-3-92
CHECKED E. GARCIA	11-2-92
DRAWN D. RUFENACHT	03/17/92

U.S.DEPARTMENT OF ENERGY

Richland Field Office

DE – AC06-86RL10838

FLUOR DANIEL, INC.
ADVANCED TECHNOLOGY DIVISION

TU-130-002 CART BASE ASSEMBLY

PROJECT TITLE: **HANFORD WASTE VITRIFICATION PLANT**

PROJECT	FLUOR CONTRACT NO.	CWBS NO.
B-595	8457	P06B
SCALE	**BLDG NO.**	**INDEX NO.**
1/8	1	

CLASSIFICATION	BY	DRAWING NUMBER	SHEET	OF	REV
NONE	NOT REQD	H-2-120381	3	23	0

NG INDEX

DISTRIBUTION CODE: 403

M178 ACAD

INITIALS: PN

DATE: 03-16-93

APR - 8 1993

QUALITY LEVEL II

SAFETY CLASS 3

REV NO.	DATE	REVISION DESCRIPTION	EG	RC	CD	
0	04/09/93	APPROVED FOR CONSTRUCTION	EG	RC	CD	NA / NA
			NA	NA	NA	NA

CADFILE	B120381D	CADCODE	2B:IBM:ACD2:12.C1:SS

ENGINEERING RELEASE

REV _____ DATE _____

ERO _____

SIGNATURE	DATE
PROJ DIR NA	
QA MGR NA	
INDEPENDENT SAFETY MGR NA	
PROJECT MGR NA	
SYSTEMS MGR NA	
ENGINEERING MGR NA	
SUPERVISOR C. DIVONA	11-3-92
DESIGN ENGINEER R. CHOATE	11-3-92
CHECKED E. GARCIA	~~3-24-93~~ 11-2-92
DRAWN D. RUFENACHT	03/17/92

U.S. DEPARTMENT OF ENERGY

Richland Field Office

DE – AC06-86RL10838

FLUOR DANIEL, INC.
ADVANCED TECHNOLOGY DIVISION

TU-130-002 CART BASE ASSEMBLY

PROJECT TITLE: HANFORD WASTE VITRIFICATION PLANT

PROJECT	FLUOR CONTRACT NO.	CWBS NO.
B-595	8457	P06B
SCALE 1/8	BLDG NO. 1	INDEX NO.

CLASSIFICATION	BY	DRAWING NUMBER	SHEET	OF	REV
NONE	NOT REQD	H-2-120381	4	23	0

NG INDEX

AFC 77 78 79 80

DISTRIBUTION CODE: 403

M179 ACAD

INITIALS: PN

DATE: 03-16-93

APR - 8 1993

QUALITY LEVEL II

SAFETY CLASS 3

REV NO.	DATE	REVISION DESCRIPTION	EG	RC	CD	
0	04/00/93	APPROVED FOR CONSTRUCTION	EG	RC	CD	NA/NA
			NA	NA	NA	NA

APPROVAL INITIALS

CADFILE	B120381E	CADCODE	2B:IBM:ACD2:12.C1:SS

ENGINEERING RELEASE

REV _____ DATE _____

ERO _____

SIGNATURE	DATE
PROJ DIR NA	
QA MGR NA	
INDEPENDENT SAFETY MGR NA	
PROJECT MGR NA	
SYSTEMS MGR NA	
ENGINEERING MGR NA	
SUPERVISOR C. DIVONA	11-3-92
DESIGN ENGINEER R. CHOATE	11-3-92
CHECKED E. GARCIA	~~3-24-93~~ 11-2-92
DRAWN D. RUFENACHT	03/17/92

U.S. DEPARTMENT OF ENERGY

Richland Field Office

DE – AC06-86RL10838

FLUOR DANIEL, INC.
ADVANCED TECHNOLOGY DIVISION

TU-130-002 CART BASE WELDMENT

PROJECT TITLE: HANFORD WASTE VITRIFICATION PLANT

PROJECT	FLUOR CONTRACT NO.	CWBS NO.
B-595	8457	P06B
SCALE 1/8	BLDG NO. 1	INDEX NO.

CLASSIFICATION	BY	DRAWING NUMBER	SHEET	OF	REV
NONE	NOT REQD	H-2-120381	5	23	0

ING INDEX

AFC 77 78 79 80

DISTRIBUTION CODE: 403

M180 ACAD

INITIALS: PN

DATE: 03-16-93

APR - 8 1993

QUALITY LEVEL II
SAFETY CLASS 3

REV NO.	DATE	REVISION DESCRIPTION	EG	RC	CD	
0	04/20/93	APPROVED FOR CONSTRUCTION	EG	RC	CD	NA / NA
			NA	NA	NA	NA

CADFILE	B120381F	CADCODE	2B:IBM:ACD2:12.C1:SS

ENGINEERING RELEASE

REV _____ DATE _____

ERO _____

SIGNATURE	DATE
PROJ DIR NA	
QA MGR NA	
INDEPENDENT SAFETY MGR NA	
PROJECT MGR NA	
SYSTEMS MGR NA	
ENGINEERING MGR NA	
SUPERVISOR C. DIVONA	11-3-92
DESIGN ENGINEER R. CHOATE	11-3-92
CHECKED E. GARCIA	11-2-92
DRAWN D. RUFENACHT	03/17/92

U.S.DEPARTMENT OF ENERGY

Richland Field Office

DE – AC06–86RL10838

FLUOR DANIEL, INC.
ADVANCED TECHNOLOGY DIVISION

TU–130–002 CART BASE WELDMENT

PROJECT TITLE: **HANFORD WASTE VITRIFICATION PLANT**

PROJECT	FLUOR CONTRACT NO.	CWBS NO.
B–595	8457	P06B
SCALE	**BLDG NO.**	**INDEX NO.**
1/8	1	

CLASSIFICATION	BY	DRAWING NUMBER	SHEET	OF	REV
NONE	NOT REQD	H–2–120381	6	23	0

ING INDEX

B

A

2 1

AFC 77 78 79 80

DISTRIBUTION CODE: 403

M181 ACAD

INITIALS: PN

DATE: 03–16–93

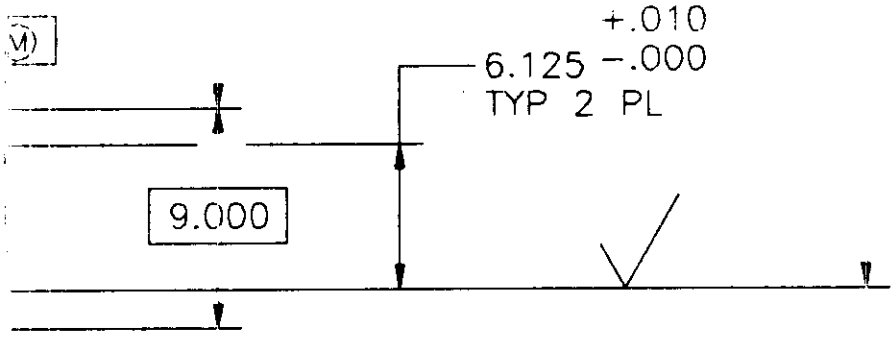

APR - 8 1993

QUALITY LEVEL II

SAFETY CLASS 3

REV NO.	DATE	REVISION DESCRIPTION	APPROVAL INITIALS			
0	04/16/93	APPROVED FOR CONSTRUCTION	EG	RC	CD	NA NA
			NA	NA	NA	NA

CADFILE	B120381G	CADCODE	2B:IBM:ACD2:12.C1:SS

ENGINEERING RELEASE

REV _____ DATE _____

ERO _____

SIGNATURE	DATE
PROJ DIR NA	
QA MGR NA	
INDEPENDENT SAFETY MGR NA	
PROJECT MGR NA	
SYSTEMS MGR NA	
ENGINEERING MGR NA	
SUPERVISOR C. DIVONA	11-3-92
DESIGN ENGINEER R. CHOATE	11-3-92
CHECKED E. GARCIA	~~3-24-93~~ 11-2-92
DRAWN D. RUFENACHT	03/17/92

U.S.DEPARTMENT OF ENERGY

Richland Field Office

DE – AC06-86RL10838

FLUOR DANIEL, INC.
ADVANCED TECHNOLOGY DIVISION

TU-130-002 CART BASE MACHINING

PROJECT TITLE: HANFORD WASTE VITRIFICATION PLANT

PROJECT	FLUOR CONTRACT NO.	CWBS NO.
B-595	8457	P06B
SCALE 1/8	BLDG NO. 1	INDEX NO.

CLASSIFICATION	BY	DRAWING NUMBER	SHEET	OF	REV
NONE	NOT REQD	H-2-120381	7	23	0

NG INDEX

AFC 77 78 79 80

DISTRIBUTION CODE: 403

M182 ACAD

INITIALS: PN

DATE: 03-16-93

APR - 8 1993

QUALITY LEVEL II

SAFETY CLASS 3

REV NO.	DATE	REVISION DESCRIPTION	EG	RC	CD	
0	04/04/93	APPROVED FOR CONSTRUCTION	EG	RC	CD	NA / NA
			NA	NA	NA	NA

CADFILE	B120381H	CADCODE	2B:IBM:ACD2:12.C1:SS

ENGINEERING RELEASE

REV _____ DATE _____

ERO _____

SIGNATURE	DATE
PROJ DIR NA	
QA MGR NA	
INDEPENDENT SAFETY MGR NA	
PROJECT MGR NA	
SYSTEMS MGR NA	
ENGINEERING MGR NA	
SUPERVISOR C. DIVONA	11-3-92
DESIGN ENGINEER R. CHOATE	11-3-92
CHECKED E. GARCIA	~~3-24-93~~ 11-2-92
DRAWN D. RUFENACHT	03/17/92

U.S.DEPARTMENT OF ENERGY

Richland Field Office

DE – AC06–86RL10838

FLUOR DANIEL, INC.
ADVANCED TECHNOLOGY DIVISION

TU–130–002 CART BASE BEAM WELDMENT

PROJECT TITLE: HANFORD WASTE VITRIFICATION PLANT

PROJECT	FLUOR CONTRACT NO.	CWBS NO.
B–595	8457	P06B
SCALE: SHOWN	BLDG NO.: 1	INDEX NO.

CLASSIFICATION	BY	DRAWING NUMBER	SHEET	OF	REV
NONE	NOT REQD	H–2–120381	8	23	0

NG INDEX

AFC 77 78 79 80

DISTRIBUTION CODE: 403

M183 ACAD

INITIALS: PN

DATE: 03–16–93

4 PL

QUALITY LEVEL II

SAFETY CLASS 3

APR - 8 1993

REV NO.	DATE	REVISION DESCRIPTION	EG	RC	CD	
0	04/06/93	APPROVED FOR CONSTRUCTION	NA	NA	NA	NA

B

CADFILE	B120381J	CADCODE	2B:IBM:ACD2:12.C1:SS

ENGINEERING RELEASE

REV _____ DATE _____

ERO _____

SIGNATURE	DATE
PROJ DIR NA	
QA MGR NA	
INDEPENDENT SAFETY MGR NA	
PROJECT MGR NA	
SYSTEMS MGR NA	
ENGINEERING MGR NA	
SUPERVISOR C. DIVONA	11-3-92
DESIGN ENGINEER R. CHOATE	11-3-92
CHECKED E. GARCIA	11-2-92
DRAWN D RUFENACHT	04/15/92

U.S.DEPARTMENT OF ENERGY

Richland Field Office

DE – AC06–86RL10838

FLUOR DANIEL, INC.
ADVANCED TECHNOLOGY DIVISION

TU–130–002 CART BASE BEAM WELDMENT

A

PROJECT TITLE: HANFORD WASTE VITRIFICATION PLANT

PROJECT	FLUOR CONTRACT NO.	CWBS NO.
B–595	8457	P06B
SCALE: SHOWN	BLDG NO.: 1	INDEX NO.

CLASSIFICATION	BY	DRAWING NUMBER	SHEET	OF	REV
NONE	NOT REQD	H–2–120381	9	23	0

NG INDEX

2 1

A F C 77 78 79 80

DISTRIBUTION CODE: 403

M184 ACAD

INITIALS: PN

DATE: 03–16–93

APR - 8 1993

QUALITY LEVEL II

SAFETY CLASS 3

REV NO.	DATE	REVISION DESCRIPTION	EG	RC	CD	
0	04/06/93	APPROVED FOR CONSTRUCTION	EG	RC	CD	NA / NA
			NA	NA	NA	NA

CADFILE	B120381K	CADCODE	2B:IBM:ACD2:12.C1:SS

ENGINEERING RELEASE

REV _____ DATE _____

ERO _____

SIGNATURE	DATE
PROJ DIR NA	
QA MGR NA	
INDEPENDENT SAFETY MGR NA	
PROJECT MGR NA	
SYSTEMS MGR NA	
ENGINEERING MGR NA	
SUPERVISOR C. DIVONA	11-3-92
DESIGN ENGINEER R. CHOATE	11-3-92
CHECKED E. GARCIA	11-2-92
DRAWN D. RUFENACHT	04/03/92

U.S. DEPARTMENT OF ENERGY

Richland Field Office

DE – AC06–86RL10838

FLUOR DANIEL, INC.
ADVANCED TECHNOLOGY DIVISION

TU–130–002 CART BASE WELDMENT

PROJECT TITLE: **HANFORD WASTE VITRIFICATION PLANT**

PROJECT	FLUOR CONTRACT NO.	CWBS NO.
B–595	8457	P06B
SCALE 1/1	BLDG NO. 1	INDEX NO.

CLASSIFICATION	BY	DRAWING NUMBER	SHEET	OF	REV
NONE	NOT REQD	H–2–120381	10	23	0

VING INDEX

AFC 77 78 79 80

DISTRIBUTION CODE: 403

M185 ACAD

INITIALS: PN

DATE: 03–16–93

APR - 8 1993

QUALITY LEVEL II

SAFETY CLASS 3

REV NO.	DATE	REVISION DESCRIPTION	EG	RC	CD	
0	04/100/93	APPROVED FOR CONSTRUCTION	EG	RC	CD	NA/NA
			NA	NA	NA	NA

CADFILE	B120381L	CADCODE	2B:IBM:ACD2:12.C1:SS

ENGINEERING RELEASE

REV _____ DATE _____

ERO _____

SIGNATURE	DATE
PROJ DIR NA	
QA MGR NA	
INDEPENDENT SAFETY MGR NA	
PROJECT MGR NA	
SYSTEMS MGR NA	
ENGINEERING MGR NA	
SUPERVISOR C. DIVONA	11-3-92
DESIGN ENGINEER R. CHOATE	11-3-92
CHECKED E. GARCIA	11-2-92
DRAWN D. RUFENACHT	04/03/92

U.S.DEPARTMENT OF ENERGY

Richland Field Office

DE – AC06–86RL10838

FLUOR DANIEL, INC.
ADVANCED TECHNOLOGY DIVISION

TU–130–002 CART BASE DETAILS

PROJECT TITLE: HANFORD WASTE VITRIFICATION PLANT

PROJECT	FLUOR CONTRACT NO.	CWBS NO.
B–595	8457	P06B
SCALE 1/1	BLDG NO. 1	INDEX NO.

CLASSIFICATION	BY	DRAWING NUMBER	SHEET	OF	REV
NONE	NOT REQD	H–2–120381	11	23	0

VING INDEX

A F C 77 78 79 80

DISTRIBUTION CODE: 403

M186 ACAD

INITIALS: PN

DATE: 03–16–93

APR - 8 1993

QUALITY LEVEL II

SAFETY CLASS 3

REV NO.	DATE	REVISION DESCRIPTION	EG	RC	CD	
0	04/06/93	APPROVED FOR CONSTRUCTION	EG	RC	CD	NA / NA
			NA	NA	NA	NA

CADFILE B120381M CADCODE 2B:IBM:ACD2:12.C1:SS

ENGINEERING RELEASE

REV _____ DATE _____

ERO _____

SIGNATURE	DATE
PROJ DIR NA	
QA MGR NA	
INDEPENDENT SAFETY MGR NA	
PROJECT MGR NA	
SYSTEMS MGR NA	
ENGINEERING MGR NA	
SUPERVISOR C. DIVONA	11-3-92
DESIGN ENGINEER R. CHOATE	11-3-92
CHECKED E. GARCIA	~~3-24-93~~ 11-2-92
DRAWN D. RUFENACHT	04/09/92

U.S.DEPARTMENT OF ENERGY

Richland Field Office

DE – AC06-86RL10838

FLUOR DANIEL, INC.
ADVANCED TECHNOLOGY DIVISION

TU-130-002 CART BASE SUPPORT RAILS

PROJECT TITLE

HANFORD WASTE VITRIFICATION PLANT

PROJECT	FLUOR CONTRACT NO.	CWBS NO.
B-595	8457	P06B
SCALE	BLDG NO.	INDEX NO.
SHOWN	1	

CLASSIFICATION	BY	DRAWING NUMBER	SHEET	OF	REV
NONE	NOT REQD	H-2-120381	12	23	0

ING INDEX

A F C 77 78 79 80

DISTRIBUTION CODE: 403

M187 ACAD

INITIALS: PN

DATE: 03-16-93

APR - 8 1993

QUALITY LEVEL II
SAFETY CLASS 3

REV NO.	DATE	REVISION DESCRIPTION	EG	RC	CD	
0	04/06/93	APPROVED FOR CONSTRUCTION	EG	RC	CD	NA / NA
			NA	NA	NA	NA

CADFILE	B120381N	CADCODE	2B:IBM:ACD2:12.C1:SS

ENGINEERING RELEASE

REV _____ DATE _____

ERO _____

SIGNATURE	DATE
PROJ DIR NA	
QA MGR NA	
INDEPENDENT SAFETY MGR NA	
PROJECT MGR NA	
SYSTEMS MGR NA	
ENGINEERING MGR NA	
SUPERVISOR C. DIVONA	11-3-92
DESIGN ENGINEER R. CHOATE	11-3-92
CHECKED E. GARCIA	11-2-92
DRAWN D. RUFENACHT	04/09/92

U.S.DEPARTMENT OF ENERGY

Richland Field Office

DE – AC06–86RL10838

FLUOR DANIEL, INC.
ADVANCED TECHNOLOGY DIVISION

TU–130–002
CART BASE
SUPPORT RAILS

PROJECT TITLE: HANFORD WASTE VITRIFICATION PLANT

PROJECT	FLUOR CONTRACT NO.	CWBS NO.
B–595	8457	P06B
SCALE: SHOWN	BLDG NO.: 1	INDEX NO.

CLASSIFICATION	BY	DRAWING NUMBER	SHEET	OF	REV
NONE	NOT REQD	H–2–120381	13	23	0

ING INDEX

AFC 77 78 79 80

DISTRIBUTION CODE: 403

M188 ACAD

INITIALS: PN

DATE: 03–16–93

QUALITY LEVEL II

SAFETY CLASS 3

APR - 8 1993

REV NO.	DATE	REVISION DESCRIPTION	EG	RC	CD	
0	04/06/93	APPROVED FOR CONSTRUCTION	EG	RC	CD	NA / NA
			NA	NA	NA	NA

CADFILE B120381P CADCODE 2B:IBM:ACD2:12.C1:SS

ENGINEERING RELEASE

REV _____ DATE _____

ERO _____

SIGNATURE	DATE
PROJ DIR NA	
QA MGR NA	
INDEPENDENT SAFETY MGR NA	
PROJECT MGR NA	
SYSTEMS MGR NA	
ENGINEERING MGR NA	
SUPERVISOR C. DIVONA	11-3-92
DESIGN ENGINEER R. CHOATE	11-3-92
CHECKED E. GARCIA	11-2-92
DRAWN D. RUFENACHT	04/03/92

U.S. DEPARTMENT OF ENERGY

Richland Field Office

DE – AC06-86RL10838

FLUOR DANIEL, INC.
ADVANCED TECHNOLOGY DIVISION

TU-130-002 CART BASE SUPPORT RAIL DETAIL

PROJECT TITLE: HANFORD WASTE VITRIFICATION PLANT

PROJECT	FLUOR CONTRACT NO.	CWBS NO.
B-595	8457	P06B
SCALE 1/4	BLDG NO. 1	INDEX NO.

CLASSIFICATION	BY	DRAWING NUMBER	SHEET	OF	REV
NONE	NOT REQD	H-2-120381	14	23	0

AWING INDEX

A F C 77 78 79 80

DISTRIBUTION CODE: 403

M189 ACAD

INITIALS: PN

DATE: 03-16-93

APR - 8 1993

QUALITY LEVEL II
SAFETY CLASS 3

REV NO.	DATE	REVISION DESCRIPTION	EG	RC	CD	
0	04/06/93	APPROVED FOR CONSTRUCTION	EG	RC	CD	NA / NA
			NA	NA	NA	NA

CADFILE B120381R CADCODE 2B:IBM:ACD2:12.C1:SS

ENGINEERING RELEASE
REV _____ DATE _____
ERO _____

SIGNATURE	DATE
PROJ DIR NA	
DA MGR NA	
INDEPENDENT SAFETY MGR NA	
PROJECT MGR NA	
SYSTEMS MGR NA	
ENGINEERING MGR NA	
SUPERVISOR C. DIVONA	11-3-92
DESIGN ENGINEER R. CHOATE	11-3-92
CHECKED E. GARCIA	~~3-24-93~~ 11-2-92
DRAWN D.RUFENACHT	03/26/92

U.S.DEPARTMENT OF ENERGY
Richland Field Office
DE - AC06-86RL10838

FLUOR DANIEL, INC.
ADVANCED TECHNOLOGY DIVISION

TU-130-002
CART BASE
DETAILS

PROJECT TITLE
HANFORD WASTE VITRIFICATION PLANT

PROJECT	FLUOR CONTRACT NO.	CWBS NO.
B-595	8457	P06B
SCALE	BLDG NO.	INDEX NO.
SHOWN	1	

CLASSIFICATION	BY	DRAWING NUMBER	SHEET	OF	REV
NONE	NOT REQD	H-2-120381	15	23	0

VING INDEX

AFC 77 78 79 80

DISTRIBUTION CODE: 403 **M190** ACAD

INITIALS: PN
DATE: 03-16-93

3/8 REF

QUALITY LEVEL II

SAFETY CLASS 3

APR - 8 1993

REV NO.	DATE	REVISION DESCRIPTION	EG	RC	CD	
0	04/06/93	APPROVED FOR CONSTRUCTION	EG	RC	CD	NA / NA
			NA	NA	NA	NA

CADFILE B120381S CADCODE 2B:IBM:ACD2:12.C1:SS

ENGINEERING RELEASE

REV _____ DATE _____

ERO _____

SIGNATURE	DATE
PROJ DIR NA	
QA MGR NA	
INDEPENDENT SAFETY MGR NA	
PROJECT MGR NA	
SYSTEMS MGR NA	
ENGINEERING MGR NA	
SUPERVISOR C. DIVONA	11-3-92
DESIGN ENGINEER R. CHOATE	11-3-92
CHECKED E. GARCIA	11-2-92
DRAWN D. RUFENACHT	03/26/92

U.S.DEPARTMENT OF ENERGY

Richland Field Office

DE - AC06-86RL10838

FLUOR DANIEL, INC.
ADVANCED TECHNOLOGY DIVISION

TU-130-002 CART BASE DETAILS

PROJECT TITLE: HANFORD WASTE VITRIFICATION PLANT

PROJECT	FLUOR CONTRACT NO.	CWBS NO.
B-595	8457	P06B
SCALE 1/4	BLDG NO. 1	INDEX NO.

CLASSIFICATION	BY	DRAWING NUMBER	SHEET	OF	REV
NONE	NOT REQD	H-2-120381	16	23	0

WING INDEX

AFC 77 78 79 80

DISTRIBUTION CODE: 403

M191 ACAD

INITIALS: PN

DATE: 03-16-93

APR - 8 1993

QUALITY LEVEL II

SAFETY CLASS 3

REV NO.	DATE	REVISION DESCRIPTION	EG	RC	CD	
0	04/06/93	APPROVED FOR CONSTRUCTION	EG	RC	CD	NA/NA
			NA	NA	NA	NA

CADFILE B120381T CADCODE 2B:IBM:ACD2:12.C1:SS

ENGINEERING RELEASE

REV _____ DATE _____

ERO _____

SIGNATURE	DATE
PROJ DIR NA	
QA MGR NA	
INDEPENDENT SAFETY MGR NA	
PROJECT MGR NA	
SYSTEMS MGR NA	
ENGINEERING MGR NA	
SUPERVISOR C. DIVONA	11-3-92
DESIGN ENGINEER R. CHOATE	11-3-92
CHECKED E. GARCIA	11-2-92
DRAWN D. RUFENACHT	03/27/92

U.S. DEPARTMENT OF ENERGY

Richland Field Office

DE – AC06-86RL10838

FLUOR DANIEL, INC.
ADVANCED TECHNOLOGY DIVISION

TU-130-002 CART BASE DETAILS

PROJECT TITLE: HANFORD WASTE VITRIFICATION PLANT

PROJECT	FLUOR CONTRACT NO.	CWBS NO.
B-595	8457	P06B
SCALE 1/4	BLDG NO. 1	INDEX NO.

CLASSIFICATION	BY	DRAWING NUMBER	SHEET	OF	REV
NONE	NOT REQD	H-2-120381	17	23	0

NG INDEX

DISTRIBUTION CODE: 403

M192 ACAD

INITIALS: PN

DATE: 03-16-93

APR - 8 1993

QUALITY LEVEL II
SAFETY CLASS 3

REV NO.	DATE	REVISION DESCRIPTION	EG	RC	CD	
0	04/06/93	APPROVED FOR CONSTRUCTION	EG	RC	CD	NA/NA
			NA	NA	NA	NA

APPROVAL INITIALS

CADFILE	B120381U	CADCODE	2B:IBM:ACD2:12.C1:SS

ENGINEERING RELEASE

REV _____ DATE _____

ERO _____

SIGNATURE	DATE
PROJ DIR NA	
QA MGR NA	
INDEPENDENT SAFETY MGR NA	
PROJECT MGR NA	
SYSTEMS MGR NA	
ENGINEERING MGR NA	
SUPERVISOR C. DIVONA	11-3-92
DESIGN ENGINEER R. CHOATE	11-3-92
CHECKED E. GARCIA	11-2-92
DRAWN D. RUFENACHT	03/30/92

CLASSIFICATION	BY
NONE	NOT REQD

U.S.DEPARTMENT OF ENERGY

Richland Field Office

DE – AC06-86RL10838

FLUOR DANIEL, INC.
ADVANCED TECHNOLOGY DIVISION

TU-130-002 CART BASE DETAILS

PROJECT TITLE: HANFORD WASTE VITRIFICATION PLANT

PROJECT	FLUOR CONTRACT NO.	CWBS NO.
B-595	8457	P06B
SCALE: SHOWN	BLDG NO.: 1	INDEX NO.

DRAWING NUMBER	SHEET	OF	REV
H-2-120381	18	23	0

ING INDEX

AFC 77 78 79 80

DISTRIBUTION CODE: 403

M193 ACAD

INITIALS: PN

DATE: 03-16-93

APR - 8 1993

QUALITY LEVEL II
SAFETY CLASS 3

REV NO.	DATE	REVISION DESCRIPTION	EG	RC	CD	
						B
0	04/06/93	APPROVED FOR CONSTRUCTION	EG	RC	CD	NA/NA
			NA	NA	NA	NA

CADFILE	B120381V	CADCODE	2B:IBM:ACD2:12.C1:SS

ENGINEERING RELEASE

REV _____ DATE _____

ERO _____

SIGNATURE	DATE
PROJ DIR NA	
QA MGR NA	
INDEPENDENT SAFETY MGR NA	
PROJECT MGR NA	
SYSTEMS MGR NA	
ENGINEERING MGR NA	
SUPERVISOR C. DIVONA	11-3-92
DESIGN ENGINEER R. CHOATE	11-3-92
CHECKED E. GARCIA	11-2-92
DRAWN D. RUFENACHT	03/31/92

U.S.DEPARTMENT OF ENERGY

Richland Field Office

DE - AC06-86RL10838

FLUOR DANIEL, INC.
ADVANCED TECHNOLOGY DIVISION

TU-130-002 CART BASE DETAILS

A

PROJECT TITLE: **HANFORD WASTE VITRIFICATION PLANT**

PROJECT	FLUOR CONTRACT NO.	CWBS NO.
B-595	8457	P06B
SCALE 1/4	BLDG NO. 1	INDEX NO.

CLASSIFICATION	BY	DRAWING NUMBER	SHEET	OF	REV
NONE	NOT REQD	H-2-120381	19	23	0

ING INDEX

2 1

AFC 77 78 79 80

DISTRIBUTION CODE: 403

M194 ACAD

INITIALS: PN

DATE: 03-16-93

APR - 8 1993

QUALITY LEVEL II

SAFETY CLASS 3

REV NO.	DATE	REVISION DESCRIPTION	EG	RC	CD	
0	09/06/93	APPROVED FOR CONSTRUCTION	EG	RC	CD	NA / NA
			NA	NA	NA	NA

CADFILE	B120381W	CADCODE	2B:IBM:ACD2:12.C1:SS

ENGINEERING RELEASE

REV _____ DATE _____

ERO _____

SIGNATURE	DATE
PROJ DIR NA	
QA MGR NA	
INDEPENDENT SAFETY MGR NA	
PROJECT MGR NA	
SYSTEMS MGR NA	
ENGINEERING MGR NA	
SUPERVISOR C. DIVONA	11-3-92
DESIGN ENGINEER R. CHOATE	11-3-92
CHECKED E. GARCIA	11-2-92
DRAWN D. RUFENACHT	03/31/92

U.S. DEPARTMENT OF ENERGY

Richland Field Office

DE – AC06-86RL10838

FLUOR DANIEL, INC.
ADVANCED TECHNOLOGY DIVISION

TU-130-002 CART BASE DETAILS

PROJECT TITLE: HANFORD WASTE VITRIFICATION PLANT

PROJECT	FLUOR CONTRACT NO.	CWBS NO.
B-595	8457	P06B
SCALE: SHOWN	BLDG NO.: 1	INDEX NO.

CLASSIFICATION	BY	DRAWING NUMBER	SHEET	OF	REV
NONE	NOT REQD	H-2-120381	20	23	0

ING INDEX

B

A

2 1

AFC 77 78 79 80

DISTRIBUTION CODE: 403

M195 ACAD

INITIALS: PN

DATE: 03-16-93

QUALITY LEVEL II

SAFETY CLASS 3

APR - 8 1993

REV NO.	DATE	REVISION DESCRIPTION	APPROVAL INITIALS			
0	04/06/93	APPROVED FOR CONSTRUCTION	EG	RC	CD	NA / NA
			NA	NA	NA	NA

CADFILE	B120381X	CADCODE	2B:IBM:ACD2:12.C1:SS

ENGINEERING RELEASE

REV _____ DATE _____

ERO _____

SIGNATURE	DATE
PROJ DIR NA	
QA MGR NA	
INDEPENDENT SAFETY MGR NA	
PROJECT MGR NA	
SYSTEMS MGR NA	
ENGINEERING MGR NA	
SUPERVISOR C. DIVONA	11-3-92
DESIGN ENGINEER R. CHOATE	11-3-92
CHECKED E. GARCIA	~~3-24-93~~ 11-2-92
DRAWN D. RUFENACHT	04/01/92

U.S.DEPARTMENT OF ENERGY

Richland Field Office

DE – AC06–86RL10838

FLUOR DANIEL, INC.
ADVANCED TECHNOLOGY DIVISION

TU–130–002 CART BASE DETAILS

PROJECT TITLE: HANFORD WASTE VITRIFICATION PLANT

PROJECT	FLUOR CONTRACT NO.	CWBS NO.
B–595	8457	P06B
SCALE: SHOWN	BLDG NO.: 1	INDEX NO.

CLASSIFICATION	BY	DRAWING NUMBER	SHEET	OF	REV
NONE	NOT REQD	H–2–120381	21	23	0

VING INDEX

A F C 77 78 79 80

DISTRIBUTION CODE: 403

M196 ACAD

INITIALS: PN

DATE: 03–16–93

APR - 8 1993

QUALITY LEVEL II
SAFETY CLASS 3

REV NO.	DATE	REVISION DESCRIPTION	EG	RC	CD	
0	04/06/93	APPROVED FOR CONSTRUCTION	EG	RC	CD	NA / NA
			NA	NA	NA	NA

CADFILE	B120381Y	CADCODE	2B:IBM:ACD2:12.C1:SS

ENGINEERING RELEASE
REV _____ DATE _____
ERO _____

SIGNATURE	DATE
PROJ DIR NA	
QA MGR NA	
INDEPENDENT SAFETY MGR NA	
PROJECT MGR NA	
SYSTEMS MGR NA	
ENGINEERING MGR NA	
SUPERVISOR C. DIVONA	11-3-92
DESIGN ENGINEER R. CHOATE	11-3-92
CHECKED E. GARCIA	11-2-92
DRAWN D. RUFENACHT	04/01/92

U.S.DEPARTMENT OF ENERGY
Richland Field Office
DE – AC06-86RL10838

FLUOR DANIEL, INC.
ADVANCED TECHNOLOGY DIVISION

TU-130-002
CART BASE
DETAILS

PROJECT TITLE
HANFORD WASTE VITRIFICATION PLANT

PROJECT	FLUOR CONTRACT NO.	CWBS NO.
B-595	8457	P06B
SCALE	BLDG NO.	INDEX NO.
SHOWN	1	

CLASSIFICATION	BY	DRAWING NUMBER	SHEET	OF	REV
NONE	NOT REQD	H-2-120381	22	23	0

NG INDEX

DISTRIBUTION CODE: 403 M197 ACAD

INITIALS: PN
DATE: 03-16-93

E

QUALITY LEVEL II

SAFETY CLASS 3

APR - 8 1993

REV NO.	DATE	REVISION DESCRIPTION	EG	RC	CD	
0	07/06/93	APPROVED FOR CONSTRUCTION	EG	RC	CD	NA/NA
			NA	NA	NA	NA

CADFILE B120381Z CADCODE 2B:IBM:ACD2:12.C1:SS

ENGINEERING RELEASE

REV _____ DATE _____

ERO _____

SIGNATURE	DATE
PROJ DIR NA	
QA MGR NA	
INDEPENDENT SAFETY MGR NA	
PROJECT MGR NA	
SYSTEMS MGR NA	
ENGINEERING MGR NA	
SUPERVISOR C. DIVONA	11-3-92
DESIGN ENGINEER R. CHOATE	11-3-92
CHECKED E. GARCIA	11-2-92
DRAWN D.RUFENACHT	3-17-92

U.S.DEPARTMENT OF ENERGY

Richland Field Office

DE – AC06–86RL10838

FLUOR DANIEL, INC.
ADVANCED TECHNOLOGY DIVISION

TU–130–002 CART BASE WELDMENT & DETAILS

PROJECT TITLE: HANFORD WASTE VITRIFICATION PLANT

PROJECT	FLUOR CONTRACT NO.	CWBS NO.
B–595	8457	P06B
SCALE 1/4	BLDG NO. 1	INDEX NO.

CLASSIFICATION	BY	DRAWING NUMBER	SHEET	OF	REV
NONE	NOT REQD	H–2–120381	23	23	0

ING INDEX

2 1

AFC 77 78 79 80

DISTRIBUTION CODE: 403

M198 ACAD

INITIALS: PN

DATE: 03–16–93

QUALITY LEVEL II

SAFETY CLASS 3

APR - 8 1993

REV NO.	DATE	REVISION DESCRIPTION	EG	RC	CD	
0	04/06/93	APPROVED FOR CONSTRUCTION	EG	RC	CD	NA / NA
			NA	NA	NA	NA

CADFILE B120382A CADCODE 2B:IBM:ACD2:12.C1:SS

ENGINEERING RELEASE

REV _____ DATE _____

ERO _____

SIGNATURE	DATE
PROJ DIR NA	
QA MGR NA	
INDEPENDENT SAFETY MGR NA	
PROJECT MGR NA	
SYSTEMS MGR NA	
ENGINEERING MGR NA	
SUPERVISOR C. DIVONA	11-3-92
DESIGN ENGINEER R. CHOATE	11-3-92
CHECKED E. GARCIA	11-2-92
DRAWN D. SMITH	03/24/92

U.S. DEPARTMENT OF ENERGY

Richland Field Office

DE – AC06-86RL10838

FLUOR DANIEL, INC.
ADVANCED TECHNOLOGY DIVISION

TU-130-002 CART DRIVE SUPPORT ASSEMBLY PARTS LIST & NOTES

PROJECT TITLE: HANFORD WASTE VITRIFICATION PLANT

PROJECT	FLUOR CONTRACT NO.	CWBS NO.
B-595	8457	P06B
SCALE: SHOWN	BLDG NO.: 1	INDEX NO.:

CLASSIFICATION	BY	DRAWING NUMBER	SHEET	OF	REV
NONE	NOT REQD	H-2-120382	1	3	0

VING INDEX

A F C 77 78 79 80

DISTRIBUTION CODE: 403

M199 ACAD

INITIALS: PN

DATE: 03-16-93

1) RIB, ANGLE

SCALE : 1/4

APR - 8 1993

QUALITY LEVEL II

SAFETY CLASS 3

REV NO.	DATE	REVISION DESCRIPTION	APPROVAL INITIALS			
0	07/06/93	APPROVED FOR CONSTRUCTION	EG	RC	CD	NA / NA
			NA	NA	NA	NA

CADFILE	B120382B
CADCODE	2B:IBM:ACD2:12.C1:SS

ENGINEERING RELEASE

REV _____ DATE _____

ERO _____

SIGNATURE	DATE
PROJ DIR NA	
QA MGR NA	
INDEPENDENT SAFETY MGR NA	
PROJECT MGR NA	
SYSTEMS MGR NA	
ENGINEERING MGR NA	
SUPERVISOR C. DIVONA	11-3-92
DESIGN ENGINEER R. CHOATE	11-3-92
CHECKED E. GARCIA	~~3-2-93~~ 11-2-92
DRAWN C. PEASE	04/20/92

U.S.DEPARTMENT OF ENERGY

Richland Field Office

DE – AC06–86RL10838

FLUOR DANIEL, INC.

ADVANCED TECHNOLOGY DIVISION

TU–130–002

CART DRIVE SUPPORT DETAILS

PROJECT TITLE: HANFORD WASTE VITRIFICATION PLANT

PROJECT	FLUOR CONTRACT NO.	CWBS NO.
B–595	8457	P06B
SCALE: SHOWN	BLDG NO.: 1	INDEX NO.

CLASSIFICATION	BY	DRAWING NUMBER	SHEET	OF	REV
NONE	NOT REQD	H–2–120382	2	3	0

/ING INDEX

DISTRIBUTION CODE: 403

M200 ACAD

INITIALS: PN

DATE: 03–16–93

A F C 77 78 79 80

2 ← 2 → ← 2 →

(16) RIB, ANGLE

SCALE : 1/2

APR - 8 1993

QUALITY LEVEL II

SAFETY CLASS 3

REV NO.	DATE	REVISION DESCRIPTION	APPROVAL INITIALS			
0	04/06/93	APPROVED FOR CONSTRUCTION	EG	RC	CD	NA / NA
			NA	NA	NA	NA

CADFILE	B120382C	CADCODE	2B:IBM:ACD2:12.C1:SS

ENGINEERING RELEASE

REV _____ DATE _____

ERO _____

SIGNATURE	DATE
PROJ DIR NA	
QA MGR NA	
INDEPENDENT SAFETY MGR NA	
PROJECT MGR NA	
SYSTEMS MGR NA	
ENGINEERING MGR NA	
SUPERVISOR C. DIVONA	11-3-92
DESIGN ENGINEER R. CHOATE	11-3-92
CHECKED E. GARCIA	~~3-24-93~~ 11-2-92
DRAWN C. PEASE	04/07/92

U.S.DEPARTMENT OF ENERGY

Richland Field Office

DE – AC06-86RL10838

FLUOR DANIEL, INC.
ADVANCED TECHNOLOGY DIVISION

TU-130-002
CART DRIVE SUPPORT
DETAILS

PROJECT TITLE: HANFORD WASTE VITRIFICATION PLANT

PROJECT	FLUOR CONTRACT NO.	CWBS NO.
B-595	8457	P06B
SCALE	BLDG NO.	INDEX NO.
SHOWN	1	

CLASSIFICATION	BY	DRAWING NUMBER	SHEET	OF	REV
NONE	NOT REQD	H-2-120382	3	3	0

ING INDEX

A F C 77 78 79 80

DISTRIBUTION CODE: 403

M201 ACAD

INITIALS: PN

DATE: 03-16-93

APR - 8 1993

QUALITY LEVEL II

SAFETY CLASS 3

REV NO.	DATE	REVISION DESCRIPTION	EG	RC	CD	
0	04/06/93	APPROVED FOR CONSTRUCTION	EG	RC	CD	NA / NA
			NA	NA	NA	NA

CADFILE	B120383A	CADCODE	2B:IBM:ACD2:12.C1:SS

ENGINEERING RELEASE

REV _____ DATE _____

ERO _____

SIGNATURE	DATE
PROJ DIR NA	
QA MGR NA	
INDEPENDENT SAFETY MGR NA	
PROJECT MGR NA	
SYSTEMS MGR NA	
ENGINEERING MGR NA	
SUPERVISOR C. DIVONA	11-3-92
DESIGN ENGINEER R. CHOATE	11-3-92
CHECKED E. GARCIA	~~3-24-93~~ 11-2-92
DRAWN L.C.SANVICTORES	11/31/91

U.S.DEPARTMENT OF ENERGY

Richland Field Office

DE – AC06-86RL10838

FLUOR DANIEL, INC.

ADVANCED TECHNOLOGY DIVISION

TU-130-002 FIXED STOP ASSEMBLY PARTS LIST & NOTES

PROJECT TITLE: HANFORD WASTE VITRIFICATION PLANT

PROJECT	FLUOR CONTRACT NO.	CWBS NO.
B-595	8457	P06B
SCALE	BLDG NO.	INDEX NO.
1/2	1	

CLASSIFICATION	BY	DRAWING NUMBER	SHEET	OF	REV
NONE	NOT REQD	H-2-120383	1	3	0

ING INDEX

DISTRIBUTION CODE: 403

M202 ACAD

INITIALS: PN

DATE: 03-16-93

A F C 77 78 79 80

APR - 8 1993

QUALITY LEVEL II

SAFETY CLASS 3

REV NO.	DATE	REVISION DESCRIPTION	EG	RC	CD	
0	04/06/93	APPROVED FOR CONSTRUCTION	EG	RC	CD	NA/NA
			NA	NA	NA	NA

CADFILE	B120383B	CADCODE	2B:IBM:ACD2:12.C1:SS

ENGINEERING RELEASE

REV _____ DATE _____

ERO _____

SIGNATURE	DATE
PROJ DIR NA	
QA MGR NA	
INDEPENDENT SAFETY MGR NA	
PROJECT MGR NA	
SYSTEMS MGR NA	
ENGINEERING MGR NA	
SUPERVISOR C. DIVONA	11-3-92
DESIGN ENGINEER R. CHOATE	11-3-92
CHECKED E. GARCIA	~~3-24-93~~ 11-2-92
DRAWN L.C.SANVICTORES	11-13-91
CLASSIFICATION NONE	BY NOT REQD

U.S.DEPARTMENT OF ENERGY

Richland Field Office

DE – AC06-86RL10838

FLUOR DANIEL, INC.
ADVANCED TECHNOLOGY DIVISION

TU-130-002 FIXED STOP WELDMENT & PLUNGER ASSEMBLY

PROJECT TITLE: HANFORD WASTE VITRIFICATION PLANT

PROJECT	FLUOR CONTRACT NO.	CWBS NO.
B-595	8457	P06B
SCALE: SHOWN	BLDG NO.: 1	INDEX NO.

DRAWING NUMBER	SHEET	OF	REV
H-2-120383	2	3	0

NG INDEX

AFC 77 78 79 80

DISTRIBUTION CODE: 403

M203 ACAD

INITIALS: PN

DATE: 03-16-93

APR - 8 1993

QUALITY LEVEL II
SAFETY CLASS 3

REV NO.	DATE	REVISION DESCRIPTION	EG	RC	CD	NA/NA
0	01/06/93	APPROVED FOR CONSTRUCTION	EG	RC	CD	NA/NA
			NA	NA	NA	NA

CADFILE B120383C CADCODE 2B:IBM:ACD2:12.C1:SS

ENGINEERING RELEASE
REV _____ DATE _____
ERO _____

SIGNATURE	DATE
PROJ DIR NA	
QA MGR NA	
INDEPENDENT SAFETY MGR NA	
PROJECT MGR NA	
SYSTEMS MGR NA	
ENGINEERING MGR NA	
SUPERVISOR C. DIVONA	11-3-92
DESIGN ENGINEER R. CHOATE	11-3-92
CHECKED E. GARCIA	11-2-92
DRAWN L.C.SANVICTORES	11/13/91

U.S.DEPARTMENT OF ENERGY
Richland Field Office
DE – AC06-86RL10838

FLUOR DANIEL, INC.
ADVANCED TECHNOLOGY DIVISION

TU-130-002
FIXED STOP
DETAILS

PROJECT TITLE
HANFORD WASTE VITRIFICATION PLANT

PROJECT	FLUOR CONTRACT NO.	CWBS NO.
B-595	8457	P06B
SCALE	BLDG NO.	INDEX NO.
SHOWN	1	

CLASSIFICATION	BY	DRAWING NUMBER	SHEET	OF	REV
NONE	NOT REQD	H-2-120383	3	3	0

ING INDEX

AFC 77 78 79 80

DISTRIBUTION CODE: 403

M204 ACAD

INITIALS: PN
DATE: 03-16-93

APR - 8 1993

QUALITY LEVEL II

SAFETY CLASS 3

REV NO.	DATE	REVISION DESCRIPTION	EG	RC	CD	
0	04/06/93	APPROVED FOR CONSTRUCTION	EG	RC	CD	NA / NA
			NA	NA	NA	NA

CADFILE	B120384A	CADCODE	2B:IBM:ACD2:12.C1:SS

ENGINEERING RELEASE

REV _____ DATE _____

ERO _____

SIGNATURE	DATE
PROJ DIR NA	
QA MGR NA	
INDEPENDENT SAFETY MGR NA	
PROJECT MGR NA	
SYSTEMS MGR NA	
ENGINEERING MGR NA	
SUPERVISOR C. DIVONA	11-3-92
DESIGN ENGINEER R. CHOATE	11-3-92
CHECKED E. GARCIA	~~3-24-93~~ 11-2-92
DRAWN R.MOREL	8-13-92

U.S.DEPARTMENT OF ENERGY

Richland Field Office

DE – AC06–86RL10838

FLUOR DANIEL, INC.
ADVANCED TECHNOLOGY DIVISION

TU–130–002 LIMIT SWITCH ASSEMBLY PARTS LIST & NOTES

PROJECT TITLE		
HANFORD WASTE VITRIFICATION PLANT		
PROJECT B–595	FLUOR CONTRACT NO. 8457	CWBS NO. P06B
SCALE 1/4	BLDG NO. 1	INDEX NO.

CLASSIFICATION	BY	DRAWING NUMBER	SHEET	OF	REV
NONE	NOT REQD	H–2–120384	1	3	0

AFC 77 78 79 80

DISTRIBUTION CODE: 403

M205 ACAD

INITIALS: PN

DATE: 03–16–93

APR - 8 1993

QUALITY LEVEL II
SAFETY CLASS 3

REV NO.	DATE	REVISION DESCRIPTION	EG	RC	CD	
0	01/06/93	APPROVED FOR CONSTRUCTION	EG	RC	CD	NA / NA
			NA	NA	NA	NA

CADFILE	B120384B	CADCODE	2B:IBM:ACD2:12.C1:SS

ENGINEERING RELEASE

REV _____ DATE _____

ERO _____

SIGNATURE	DATE
PROJ DIR NA	
QA MGR NA	
INDEPENDENT SAFETY MGR NA	
PROJECT MGR NA	
SYSTEMS MGR NA	
ENGINEERING MGR NA	
SUPERVISOR C. DIVONA	11-3-92
DESIGN ENGINEER R. CHOATE	11-3-92
CHECKED E. GARCIA	11-2-92
DRAWN R.MOREL	8-18-92

U.S.DEPARTMENT OF ENERGY

Richland Field Office

DE – AC06–86RL10838

FLUOR DANIEL, INC.
ADVANCED TECHNOLOGY DIVISION

TU–130–002 LIMIT SWITCH ASSEMBLY PART DETAILS

PROJECT TITLE: HANFORD WASTE VITRIFICATION PLANT

PROJECT	FLUOR CONTRACT NO.	CWBS NO.
B–595	8457	P06B
SCALE: SHOWN	BLDG NO.: 1	INDEX NO.:

CLASSIFICATION	BY	DRAWING NUMBER	SHEET	OF	REV
NONE	NOT REQD	H–2–120384	2	3	0

AFC 77 78 79 80

DISTRIBUTION CODE: 403

M206 ACAD

INITIALS: PN

DATE: 03–16–93

APR - 8 1993

QUALITY LEVEL II

SAFETY CLASS 3

REV NO.	DATE	REVISION DESCRIPTION	APPROVAL INITIALS			
0	04/06/93	APPROVED FOR CONSTRUCTION	EG	RC	CD	NA
			NA	NA	NA	NA

CADFILE B120384C CADCODE 2B:IBM:ACD2:12.C1:SS

ENGINEERING RELEASE

REV _____ DATE _____

ERO _____

SIGNATURE	DATE
PROJ DIR NA	
QA MGR NA	
INDEPENDENT SAFETY MGR NA	
PROJECT MGR NA	
SYSTEMS MGR NA	
ENGINEERING MGR NA	
SUPERVISOR C. DIVONA	11-3-92
DESIGN ENGINEER R. CHOATE	11-3-92
CHECKED E. GARCIA	~~9-24-93~~ 11-2-92
DRAWN R.MOREL	8-24-92

U.S.DEPARTMENT OF ENERGY

Richland Field Office

DE – AC06-86RL10838

FLUOR DANIEL, INC.
ADVANCED TECHNOLOGY DIVISION

TU-130-002 LIMIT SWITCH ASSEMBLY PARTS DETAILS

PROJECT TITLE: HANFORD WASTE VITRIFICATION PLANT

PROJECT	FLUOR CONTRACT NO.	CWBS NO.
B-595	8457	P06B
SCALE: SHOWN	BLDG NO.: 1	INDEX NO.

CLASSIFICATION	BY	DRAWING NUMBER	SHEET	OF	REV
NONE	NOT REQD	H-2-120384	3	3	0

AFC 77 78 79 80

DISTRIBUTION CODE: 403

M207 ACAD

INITIALS: PN

DATE: 03-16-93

			43
			44
			45

QUALITY LEVEL II

SAFETY CLASS 3

APR - 8 1993

REV NO.	DATE	REVISION DESCRIPTION	EG	RC	CD	
0	04/05/93	APPROVED FOR CONSTRUCTION	EG	RC	CD	NA / NA
			NA	NA	NA	NA

CADFILE	B120385A	CADCODE	2B:IBM:ACD2:12.C1:SS

ENGINEERING RELEASE

REV _____ DATE _____

ERO _____

SIGNATURE	DATE
PROJ DIR NA	
QA MGR NA	
INDEPENDENT SAFETY MGR NA	
PROJECT MGR NA	
SYSTEMS MGR NA	
ENGINEERING MGR NA	
SUPERVISOR C. DIVONA	11-3-92
DESIGN ENGINEER R. CHOATE	11-3-92
CHECKED E. GARCIA	11-2-92
DRAWN M. PICCIOTTA	2-4-92

U.S. DEPARTMENT OF ENERGY

Richland Field Office

DE - AC06-86RL10838

FLUOR DANIEL, INC.
ADVANCED TECHNOLOGY DIVISION

TU-130-002 CART DRIVE PARTS LIST & NOTES

PROJECT TITLE: HANFORD WASTE VITRIFICATION PLANT

PROJECT	FLUOR CONTRACT NO.	CWBS NO.
B-595	8457	P06B
SCALE: NONE	BLDG NO.: 1	INDEX NO.:

CLASSIFICATION	BY	DRAWING NUMBER	SHEET	OF	REV
NONE	NOT REQD	H-2-120385	1	12	0

NG INDEX

A F C

77 78 79 80

DISTRIBUTION CODE: 403

M208 ACAD

INITIALS: PN

DATE: 03-16-93

APR - 8 1993

QUALITY LEVEL II

SAFETY CLASS 3

REV NO.	DATE	REVISION DESCRIPTION	EG	RC	CD	
0	04/06/93	APPROVED FOR CONSTRUCTION	EG	RC	CD	NA / NA
			NA	NA	NA	NA

CADFILE	B120385B	CADCODE	2B:IBM:ACD2:12.C1:SS

ENGINEERING RELEASE

REV _____ DATE _____

ERO _____

SIGNATURE	DATE
PROJ DIR NA	
QA MGR NA	
INDEPENDENT SAFETY MGR NA	
PROJECT MGR NA	
SYSTEMS MGR NA	
ENGINEERING MGR NA	
SUPERVISOR C. DIVONA	11-3-92
DESIGN ENGINEER R. CHOATE	11-3-92
CHECKED E. GARCIA	11-2-92
DRAWN S. REGACHO	12-09-91

U.S.DEPARTMENT OF ENERGY

Richland Field Office

DE – AC06-86RL10838

FLUOR DANIEL, INC.

ADVANCED TECHNOLOGY DIVISION

TU-130-002 CART DRIVE ASSEMBLY

PROJECT TITLE: HANFORD WASTE VITRIFICATION PLANT

PROJECT	FLUOR CONTRACT NO.	CWBS NO.
B-595	8457	P06B
SCALE 1/8	BLDG NO. 1	INDEX NO.

CLASSIFICATION	BY	DRAWING NUMBER	SHEET	OF	REV
NONE	NOT REQD	H-2-120385	2	12	0

AFC 77 78 79 80

DISTRIBUTION CODE: 403

M209 ACAD

INITIALS: PN

DATE: 03-16-93

APR - 8 1993

QUALITY LEVEL II
SAFETY CLASS 3

REV NO.	DATE	REVISION DESCRIPTION				
0	04/06/93	APPROVED FOR CONSTRUCTION	EG	RC	CD	NA / NA
			NA	NA	NA	NA

CADFILE	B120385C	CADCODE	2B:IBM:ACD2:12.C1:SS

ENGINEERING RELEASE
REV _____ DATE _____
ERO _____

SIGNATURE	DATE
PROJ DIR NA	
QA MGR NA	
INDEPENDENT SAFETY MGR NA	
PROJECT MGR NA	
SYSTEMS MGR NA	
ENGINEERING MGR NA	
SUPERVISOR C. DIVONA	11-3-92
DESIGN ENGINEER R. CHOATE	11-3-92
CHECKED E. GARCIA	~~3-24-93~~ 11-2-92
DRAWN C. PEASE	04/29/92

U.S. DEPARTMENT OF ENERGY
Richland Field Office
DE – AC06–86RL10838

FLUOR DANIEL, INC.
ADVANCED TECHNOLOGY DIVISION

TU–130–002
CART DR
SPLASH GUARD WHEEL DR
RIGHT SIDE ASSY

PROJECT TITLE
HANFORD WASTE VITRIFICATION PLANT

PROJECT	FLUOR CONTRACT NO.	CWBS NO.
B–595	8457	P06B
SCALE 1/2	BLDG NO. 1	INDEX NO.

CLASSIFICATION	BY	DRAWING NUMBER	SHEET	OF	REV
NONE	NOT REQD	H–2–120385	3	12	0

NG INDEX

AFC 77 78 79 80

DISTRIBUTION CODE: 403

M210 ACAD

INITIALS: PN
DATE: 03–16–93

APR - 8 1993

QUALITY LEVEL II

SAFETY CLASS 3

REV NO.	DATE	REVISION DESCRIPTION	APPROVAL INITIALS			
0	04/06/93	APPROVED FOR CONSTRUCTION	EG	RC	CD	NA / NA
			NA	NA	NA	NA

CADFILE	B120385D	CADCODE	2B:IBM:ACD2:12.C1:SS

ENGINEERING RELEASE

REV _____ DATE _____

ERO _____

SIGNATURE	DATE
PROJ DIR NA	
QA MGR NA	
INDEPENDENT SAFETY MGR NA	
PROJECT MGR NA	
SYSTEMS MGR NA	
ENGINEERING MGR NA	
SUPERVISOR C. DIVONA	11-3-92
DESIGN ENGINEER R. CHOATE	11-3-92
CHECKED E. GARCIA	~~7-24-93~~ 11-2-92
DRAWN C. PEASE	04/29/92

U.S.DEPARTMENT OF ENERGY

Richland Field Office

DE – AC06-86RL10838

FLUOR DANIEL, INC.
ADVANCED TECHNOLOGY DIVISION

TU-130-002
CART DR
SPLASH GUARD WHEEL DR
RIGHT SIDE DETS

PROJECT TITLE: HANFORD WASTE VITRIFICATION PLANT

PROJECT	FLUOR CONTRACT NO.	CWBS NO.
B-595	8457	P06B
SCALE 1/2	BLDG NO. 1	INDEX NO.

CLASSIFICATION	BY	DRAWING NUMBER	SHEET	OF	REV
NONE	NOT REQD	H-2-120385	4	12	0

'ING INDEX

AFC 77 78 79 80

DISTRIBUTION CODE: 403

M211 ACAD

INITIALS: PN

DATE: 03-16-93

APR - 8 1993

QUALITY LEVEL II

SAFETY CLASS 3

REV NO.	DATE	REVISION DESCRIPTION	EG	RC	CD	
0	04/06/93	APPROVED FOR CONSTRUCTION	EG	RC	CD	NA NA
			NA	NA	NA	NA

CADFILE B120385E CADCODE 2B:IBM:ACD2:12.C1:SS

ENGINEERING RELEASE

REV _____ DATE _____

ERO _____

SIGNATURE	DATE
PROJ DIR NA	
QA MGR NA	
INDEPENDENT SAFETY MGR NA	
PROJECT MGR NA	
SYSTEMS MGR NA	
ENGINEERING MGR NA	
SUPERVISOR C. DIVONA	11-3-92
DESIGN ENGINEER R. CHOATE	11-3-92
CHECKED E. GARCIA	~~3-24-93~~ 11-2-92
DRAWN C. PEASE	04/29/92

U.S.DEPARTMENT OF ENERGY

Richland Field Office

DE - AC06-86RL10838

FLUOR DANIEL, INC.
ADVANCED TECHNOLOGY DIVISION

TU-130-002
CART DR
SPLASH GUARD WHEEL DR
RIGHT SIDE DETS

PROJECT TITLE: HANFORD WASTE VITRIFICATION PLANT

PROJECT	FLUOR CONTRACT NO.	CWBS NO.
B-595	8457	P06B
SCALE 1/2	BLDG NO. 1	INDEX NO.

CLASSIFICATION	BY	DRAWING NUMBER	SHEET	OF	REV
NONE	NOT REQD	H-2-120385	5	12	0

ING INDEX

AFC 77 78 79 80

DISTRIBUTION CODE: 403

M212 ACAD

INITIALS: PN

DATE: 03-16-93

QUALITY LEVEL II

SAFETY CLASS 3

APR - 8 1993

REV NO.	DATE	REVISION DESCRIPTION	EG	RC	CD	
0	04/06/93	APPROVED FOR CONSTRUCTION	EG	RC	CD	NA / NA
			NA	NA	NA	NA

CADFILE B120385F CADCODE 2B:IBM:ACD2:12.C1:SS

ENGINEERING RELEASE

REV _____ DATE _____

ERO _____

SIGNATURE	DATE
PROJ DIR NA	
QA MGR NA	
INDEPENDENT SAFETY MGR NA	
PROJECT MGR NA	
SYSTEMS MGR NA	
ENGINEERING MGR NA	
SUPERVISOR C. DIVONA	11-3-92
DESIGN ENGINEER R. CHOATE	11-3-92
CHECKED E. GARCIA	11-2-92
DRAWN C. PEASE	04/29/92

U.S.DEPARTMENT OF ENERGY

Richland Field Office

DE - AC06-86RL10838

FLUOR DANIEL, INC.

ADVANCED TECHNOLOGY DIVISION

TU-130-002 CART DR SPLASH GUARD WHEEL DR LEFT SIDE ASSY

PROJECT TITLE: HANFORD WASTE VITRIFICATION PLANT

PROJECT	FLUOR CONTRACT NO.	CWBS NO.
B-595	8457	P06B
SCALE 1/2	BLDG NO. 1	INDEX NO.

CLASSIFICATION	BY	DRAWING NUMBER	SHEET	OF	REV
NONE	NOT REQD	H-2-120385	6	12	0

ING INDEX

AFC 77 78 79 80

DISTRIBUTION CODE: 403

M213 ACAD

INITIALS: PN

DATE: 03-16-93

QUALITY LEVEL II

SAFETY CLASS 3

APR - 8 1993

REV NO.	DATE	REVISION DESCRIPTION	EG	RC	CD	
0	04/06/93	APPROVED FOR CONSTRUCTION	EG	RC	CD	NA / NA
			NA	NA	NA	NA

APPROVAL INITIALS

CADFILE B120385G CADCODE 2B:IBM:ACD2:12.C1:SS

ENGINEERING RELEASE

REV _____ DATE _____

ERO _____

SIGNATURE	DATE
PROJ DIR NA	
QA MGR NA	
INDEPENDENT SAFETY MGR NA	
PROJECT MGR NA	
SYSTEMS MGR NA	
ENGINEERING MGR NA	
SUPERVISOR C. DIVONA	11-3-92
DESIGN ENGINEER R. CHOATE	11-3-92
CHECKED E. GARCIA	~~3-24-93~~ 11-2-92
DRAWN C. PEASE	04/29/92

U.S. DEPARTMENT OF ENERGY

Richland Field Office

DE – AC06-86RL10838

FLUOR DANIEL, INC.
ADVANCED TECHNOLOGY DIVISION

TU-130-002
CART DR
SPLASH GUARD WHEEL DR
LEFT SIDE DETS

PROJECT TITLE: HANFORD WASTE VITRIFICATION PLANT

PROJECT	FLUOR CONTRACT NO.	CWBS NO.
B-595	8457	P06B
SCALE 1/2	BLDG NO. 1	INDEX NO.

CLASSIFICATION	BY	DRAWING NUMBER	SHEET	OF	REV
NONE	NOT REQD	H-2-120385	7	12	0

ING INDEX

AFC 77 78 79 80

DISTRIBUTION CODE: 403

M214 ACAD

INITIALS: PN

DATE: 03-16-93

APR - 8 1993

QUALITY LEVEL II

SAFETY CLASS 3

REV NO.	DATE	REVISION DESCRIPTION	EG	RC	CD	NA
0	04/06/93	APPROVED FOR CONSTRUCTION	EG	RC	CD	NA
			NA	NA	NA	NA

CADFILE	B120385H	CADCODE	2B:IBM:ACD2:12.C1:SS

ENGINEERING RELEASE

REV _____ DATE _____

ERO _____

SIGNATURE	DATE
PROJ DIR NA	
QA MGR NA	
INDEPENDENT SAFETY MGR NA	
PROJECT MGR NA	
SYSTEMS MGR NA	
ENGINEERING MGR NA	
SUPERVISOR C. DIVONA	11-3-92
DESIGN ENGINEER R. CHOATE	11-3-92
CHECKED E. GARCIA	11-2-92
DRAWN S.REGACHO	11-25-91

U.S.DEPARTMENT OF ENERGY

Richland Field Office

DE - AC06-86RL10838

FLUOR DANIEL, INC.
ADVANCED TECHNOLOGY DIVISION

TU-130-002 CART DRIVE CLUTCH COUPLING COVER AND SUPPORT ASSY

PROJECT TITLE: HANFORD WASTE VITRIFICATION PLANT

PROJECT	FLUOR CONTRACT NO.	CWBS NO.
B-595	8457	P06B
SCALE 1/2	BLDG NO. 1	INDEX NO.

CLASSIFICATION	BY	DRAWING NUMBER	SHEET	OF	REV
NONE	NOT REQD	H-2-120385	8	12	0

ING INDEX

DISTRIBUTION CODE: 403

M215 ACAD

INITIALS: PN

DATE: 03-16-93

AFC 77 78 79 80

QUALITY LEVEL II

SAFETY CLASS 3

APR - 8 1993

REV NO.	DATE	REVISION DESCRIPTION	EG	RC	CD	NA
0	04/06/93	APPROVED FOR CONSTRUCTION	EG	RC	CD	NA
			NA	NA	NA	NA

APPROVAL INITIALS

CADFILE B120385J CADCODE 2B:IBM:ACD2:12.C1:SS

ENGINEERING RELEASE

REV _____ DATE _____

ERO _____

SIGNATURE	DATE
PROJ DIR NA	
QA MGR NA	
INDEPENDENT SAFETY MGR NA	
PROJECT MGR NA	
SYSTEMS MGR NA	
ENGINEERING MGR NA	
SUPERVISOR C. DIVONA	11-3-92
DESIGN ENGINEER R. CHOATE	11-3-92
CHECKED E. GARCIA	~~3-24-93~~ 11-2-92
DRAWN S.REGACHO	11-13-91

U.S.DEPARTMENT OF ENERGY

Richland Field Office

DE - AC06-86RL10838

FLUOR DANIEL, INC.
ADVANCED TECHNOLOGY DIVISION

TU-130-002 CART DRIVE CLUTCH COUPLING COVER DETAILS

PROJECT TITLE: HANFORD WASTE VITRIFICATION PLANT

PROJECT	FLUOR CONTRACT NO.	CWBS NO.
B-595	8457	P06B
SCALE 1/2	BLDG NO. 1	INDEX NO.

CLASSIFICATION	BY	DRAWING NUMBER	SHEET	OF	REV
NONE	NOT REQD	H-2-120385	9	12	0

WING INDEX

A F C 77 78 79 80

DISTRIBUTION CODE: 403

M216 ACAD

INITIALS: PN

DATE: 03-16-93

APR - 8 1993

QUALITY LEVEL II

SAFETY CLASS 3

REV NO.	DATE	REVISION DESCRIPTION	EG	RC	CD	
0	04/06/93	APPROVED FOR CONSTRUCTION	EG	RC	CD	NA / NA
			NA	NA	NA	NA

CADFILE	B120385K	CADCODE	2B:IBM:ACD2:12.C1:SS

ENGINEERING RELEASE

REV _____ DATE _____

ERO _____

SIGNATURE	DATE
PROJ DIR NA	
QA MGR NA	
INDEPENDENT SAFETY MGR NA	
PROJECT MGR NA	
SYSTEMS MGR NA	
ENGINEERING MGR NA	
SUPERVISOR C. DIVONA	11-3-92
DESIGN ENGINEER R. CHOATE	11-3-92
CHECKED E. GARCIA	11-2-92
DRAWN S. REGACHO	11-18-91

U.S.DEPARTMENT OF ENERGY

Richland Field Office

DE – AC06–86RL10838

FLUOR DANIEL, INC.
ADVANCED TECHNOLOGY DIVISION

TU–130–002 CART DRIVE CLUTCH COUPLING SUPPORT DETAILS

PROJECT TITLE: HANFORD WASTE VITRIFICATION PLANT

PROJECT	FLUOR CONTRACT NO.	CWBS NO.
B–595	8457	P06B
SCALE: SHOWN	BLDG NO.: 1	INDEX NO.:

CLASSIFICATION	BY	DRAWING NUMBER	SHEET	OF	REV
NONE	NOT REQD	H–2–120385	10	12	0

ING INDEX

AFC 77 78 79 80

DISTRIBUTION CODE: 403

M217 ACAD

INITIALS: PN

DATE: 03–16–93

QUALITY LEVEL II

SAFETY CLASS 3

APR - 8 1993

REV NO.	DATE	REVISION DESCRIPTION	EG	RC	CD	
0	04/06/93	APPROVED FOR CONSTRUCTION	EG	RC	CD	NA/NA
			NA	NA	NA	NA

CADFILE	B120385L	CADCODE	2B:IBM:ACD2:12.C1:SS

ENGINEERING RELEASE

REV _____ DATE _____

ERO _____

SIGNATURE	DATE
PROJ DIR NA	
QA MGR NA	
INDEPENDENT SAFETY MGR NA	
PROJECT MGR NA	
SYSTEMS MGR NA	
ENGINEERING MGR NA	
SUPERVISOR C. DIVONA	11-3-92
DESIGN ENGINEER R. CHOATE	11-3-92
CHECKED E. GARCIA	11-2-92
DRAWN S. REGACHO	12-18-91

U.S.DEPARTMENT OF ENERGY

Richland Field Office

DE – AC06–86RL10838

FLUOR DANIEL, INC.
ADVANCED TECHNOLOGY DIVISION

TU–130–002 CART DRIVE CLUTCH COUPLING SHAFT AND SPACER DETS

PROJECT TITLE: HANFORD WASTE VITRIFICATION PLANT

PROJECT	FLUOR CONTRACT NO.	CWBS NO.
B–595	8457	P06B
SCALE: SHOWN	BLDG NO.: 1	INDEX NO.:

CLASSIFICATION	BY	DRAWING NUMBER	SHEET	OF	REV
NONE	NOT REQD	H–2–120385	11	12	0

NG INDEX

AFC 77 78 79 80

DISTRIBUTION CODE: 403

M218 ACAD

INITIALS: PN

DATE: 03–16–93

APR - 8 1993

QUALITY LEVEL II

SAFETY CLASS 3

REV NO.	DATE	REVISION DESCRIPTION	EG	RC	CD	
0	04/06/93	APPROVED FOR CONSTRUCTION	EG	RC	CD	NA / NA
			NA	NA	NA	NA

CADFILE B120385M CADCODE 2B:IBM:ACD2:12.C1:SS

ENGINEERING RELEASE

REV _____ DATE _____

ERO _____

SIGNATURE	DATE
PROJ DIR NA	
QA MGR NA	
INDEPENDENT SAFETY MGR NA	
PROJECT MGR NA	
SYSTEMS MGR NA	
ENGINEERING MGR NA	
SUPERVISOR C. DIVONA	11-3-92
DESIGN ENGINEER R. CHOATE	11-3-92
CHECKED E. GARCIA	~~3-24-93~~ 11-2-92
DRAWN S. REGACHO	12-18-91

U.S.DEPARTMENT OF ENERGY

Richland Field Office

DE – AC06-86RL10838

FLUOR DANIEL, INC.
ADVANCED TECHNOLOGY DIVISION

TU-130-002 CART DRIVE MODIFIED GEAR WHEEL DETAIL

PROJECT TITLE: HANFORD WASTE VITRIFICATION PLANT

PROJECT	FLUOR CONTRACT NO.	CWBS NO.
B-595	8457	P06B
SCALE	BLDG NO.	INDEX NO.
1/2	1	

CLASSIFICATION	BY	DRAWING NUMBER	SHEET	OF	REV
NONE	NOT REQD	H-2-120385	12	12	0

NG INDEX

AFC 77 78 79 80

DISTRIBUTION CODE: 403

M219 ACAD

INITIALS: PN

DATE: 03-16-93

APR - 8 1993

QUALITY LEVEL II

SAFETY CLASS 3

REV NO.	DATE	REVISION DESCRIPTION	EG	RC	CD	
0	04/06/93	APPROVED FOR CONSTRUCTION	EG	RC	CD	NA / NA
			NA	NA	NA	NA

CADFILE B120386A CADCODE 2B:IBM:ACD2:12.C1:SS

ENGINEERING RELEASE

REV _____ DATE _____

ERO _____

SIGNATURE	DATE
PROJ DIR NA	
QA MGR NA	
INDEPENDENT SAFETY MGR NA	
PROJECT MGR NA	
SYSTEMS MGR NA	
ENGINEERING MGR NA	
SUPERVISOR C. DIVONA	11-3-92
DESIGN ENGINEER R. CHOATE	11-3-92
CHECKED E. GARCIA	~~3-24-93~~ 11-2-92
DRAWN P. ASHLEY	12-27-91

U.S.DEPARTMENT OF ENERGY

Richland Field Office

DE – AC06-86RL10838

FLUOR DANIEL, INC.
ADVANCED TECHNOLOGY DIVISION

TU-130-002 SPIDER DR MOT ASSY PARTS LIST & NOTES

PROJECT TITLE: HANFORD WASTE VITRIFICATION PLANT

PROJECT	FLUOR CONTRACT NO.	CWBS NO.
B-595	8457	P06B
SCALE 1/4	BLDG NO. 1	INDEX NO.

CLASSIFICATION	BY	DRAWING NUMBER	SHEET	OF	REV
NONE	NOT REQD	H-2-120386	1	6	0

NG INDEX

AFC 77 78 79 80

DISTRIBUTION CODE: 403

M220 ACAD

INITIALS: PN

DATE: 03-16-93

QUALITY LEVEL II

SAFETY CLASS 3

APR - 8 1993

REV NO.	DATE	REVISION DESCRIPTION	APPROVAL INITIALS			
0	04/06/93	APPROVED FOR CONSTRUCTION	EG	RC	CD	NA / NA
			NA	NA	NA	NA

CADFILE	B120386B	CADCODE	2B:IBM:ACD2:12.C1:SS

ENGINEERING RELEASE

REV _____ DATE _____

ERO _____

SIGNATURE	DATE
PROJ DIR NA	
QA MGR NA	
INDEPENDENT SAFETY MGR NA	
PROJECT MGR NA	
SYSTEMS MGR NA	
ENGINEERING MGR NA	
SUPERVISOR C. DIVONA	11-3-92
DESIGN ENGINEER R. CHOATE	11-3-92
CHECKED E. GARCIA	11-2-92
DRAWN P. ASHLEY	12-27-91

U.S.DEPARTMENT OF ENERGY

Richland Field Office

DE – AC06-86RL10838

FLUOR DANIEL, INC.
ADVANCED TECHNOLOGY DIVISION

TU-130-002 SPIDER DRIVE MOTOR WELDMENT

PROJECT TITLE: **HANFORD WASTE VITRIFICATION PLANT**

PROJECT	FLUOR CONTRACT NO.	CWBS NO.
B-595	8457	P06B
SCALE	**BLDG NO.**	**INDEX NO.**
SHOWN	1	

CLASSIFICATION	BY	DRAWING NUMBER	SHEET	OF	REV
NONE	NOT REQD	H-2-120386	2	6	0

VING INDEX

AFC 77 78 79 80

DISTRIBUTION CODE: 403

M221 ACAD

INITIALS: PN

DATE: 03-16-93

QUALITY LEVEL II

SAFETY CLASS 3

APR - 8 1993

REV NO.	DATE	REVISION DESCRIPTION				
0	03/16/93	APPROVED FOR CONSTRUCTION	EG	RC	CD	NA / NA
			NA	NA	NA	NA

APPROVAL INITIALS

CADFILE	B120386C	CADCODE	2B:IBM:ACD2:12.C1:SS

ENGINEERING RELEASE

REV _____ DATE _____

ERO _____

SIGNATURE	DATE
PROJ DIR NA	
QA MGR NA	
INDEPENDENT SAFETY MGR NA	
PROJECT MGR NA	
SYSTEMS MGR NA	
ENGINEERING MGR NA	
SUPERVISOR C. DIVONA	11-3-92
DESIGN ENGINEER R. CHOATE	11-3-92
CHECKED E. GARCIA	~~3-24-93~~ 11-2-92
DRAWN P. ASHLEY	12-27-91

U.S. DEPARTMENT OF ENERGY

Richland Field Office

DE – AC06-86RL10838

FLUOR DANIEL, INC.
ADVANCED TECHNOLOGY DIVISION

TU-130-002 SPIDER DRIVE MOTOR DETAILS

PROJECT TITLE: HANFORD WASTE VITRIFICATION PLANT

PROJECT	FLUOR CONTRACT NO.	CWBS NO.
B-595	8457	P06B
SCALE 1/4	BLDG NO. 1	INDEX NO.

CLASSIFICATION	BY	DRAWING NUMBER	SHEET	OF	REV
NONE	NOT REQD	H-2-120386	3	6	0

VING INDEX

AFC 77 78 79 80

DISTRIBUTION CODE: 403

M222 ACAD

INITIALS: PN

DATE: 03-16-93

QUALITY LEVEL II

SAFETY CLASS 3

APR - 8 1993

REV NO.	DATE	REVISION DESCRIPTION	EG	RC	CD	NA
0	04/06/93	APPROVED FOR CONSTRUCTION	EG	RC	CD	NA
			NA	NA	NA	NA

APPROVAL INITIALS

CADFILE B120386D CADCODE 2B:IBM:ACD2:12.C1:SS

ENGINEERING RELEASE

REV _____ DATE _____

ERO _____

SIGNATURE	DATE
PROJ DIR NA	
QA MGR NA	
INDEPENDENT SAFETY MGR NA	
PROJECT MGR NA	
SYSTEMS MGR NA	
ENGINEERING MGR NA	
SUPERVISOR C. DIVONA	11-3-92
DESIGN ENGINEER R. CHOATE	11-3-92
CHECKED E. GARCIA	11-2-92
DRAWN P. ASHLEY	12-27-91

U.S. DEPARTMENT OF ENERGY

Richland Field Office

DE - AC06-86RL10838

FLUOR DANIEL, INC.

ADVANCED TECHNOLOGY DIVISION

TU-130-002 SPIDER DRIVE MOTOR HEAT SHIELD ASSY

PROJECT TITLE

HANFORD WASTE VITRIFICATION PLANT

PROJECT	FLUOR CONTRACT NO.	CWBS NO.
B-595	8457	P06B
SCALE	BLDG NO.	INDEX NO.
SHOWN	1	

CLASSIFICATION	BY	DRAWING NUMBER	SHEET	OF	REV
NONE	NOT REQD	H-2-120386	4	6	0

ING INDEX

B

A

QUALITY LEVEL II

SAFETY CLASS 3

APR - 8 1993

REV NO.	DATE	REVISION DESCRIPTION	EG	RC	CD	
0	04/06/93	APPROVED FOR CONSTRUCTION	EG	RC	CD	NA / NA
			NA	NA	NA	NA

CADFILE B120386E CADCODE 2B:IBM:ACD2:12.C1:SS

ENGINEERING RELEASE

REV _____ DATE _____

ERO _____

SIGNATURE	DATE
PROJ DIR NA	
QA MGR NA	
INDEPENDENT SAFETY MGR NA	
PROJECT MGR NA	
SYSTEMS MGR NA	
ENGINEERING MGR NA	
SUPERVISOR C. DIVONA	11-3-92
DESIGN ENGINEER R. CHOATE	11-3-92
CHECKED E. GARCIA	11-2-92
DRAWN P. ASHLEY	12-30-91

U.S.DEPARTMENT OF ENERGY

Richland Field Office

DE – AC06–86RL10838

FLUOR DANIEL, INC.
ADVANCED TECHNOLOGY DIVISION

TU–130–002 SPIDER DRIVE MOTOR HEAT SHIELD DETAILS

PROJECT TITLE: HANFORD WASTE VITRIFICATION PLANT

PROJECT	FLUOR CONTRACT NO.	CWBS NO.
B–595	8457	P06B
SCALE 1/4	BLDG NO. 1	INDEX NO.

CLASSIFICATION	BY	DRAWING NUMBER	SHEET	OF	REV
NONE	NOT REQD	H–2–120386	5	6	0

ING INDEX

AFC 77 78 79 80

DISTRIBUTION CODE: 403

M224 ACAD

INITIALS: PN

DATE: 03–16–93

QUALITY LEVEL II

SAFETY CLASS 3

APR - 8 1993

REV NO.	DATE	REVISION DESCRIPTION	EG	RC	CD	NA
0	04/06/93	APPROVED FOR CONSTRUCTION	EG	RC	CD	NA
			NA	NA	NA	NA

CADFILE B120386F CADCODE 2B:IBM:ACD2:12.C1:SS

ENGINEERING RELEASE

REV _____ DATE _____

ERO _____

SIGNATURE	DATE
PROJ DIR NA	
QA MGR NA	
INDEPENDENT SAFETY MGR NA	
PROJECT MGR NA	
SYSTEMS MGR NA	
ENGINEERING MGR NA	
SUPERVISOR C. DIVONA	11-3-92
DESIGN ENGINEER R. CHOATE	11-3-92
CHECKED E. GARCIA	11-2-92
DRAWN P. ASHLEY	12-30-91

U.S.DEPARTMENT OF ENERGY

Richland Field Office

DE - AC06-86RL10838

FLUOR DANIEL, INC.
ADVANCED TECHNOLOGY DIVISION

TU-130-002 SPIDER DRIVE MOTOR HEAT SHIELD DETAILS

PROJECT TITLE: HANFORD WASTE VITRIFICATION PLANT

PROJECT	FLUOR CONTRACT NO.	CWBS NO.
B-595	8457	P06B
SCALE 1/4	BLDG NO. 1	INDEX NO.

CLASSIFICATION	BY	DRAWING NUMBER	SHEET	OF	REV
NONE	NOT REQD	H-2-120386	6	6	0

ING INDEX

A F C 77 78 79 80

DISTRIBUTION CODE: 403

M225 ACAD

INITIALS: PN

DATE: 03-16-93

QUALITY LEVEL II

SAFETY CLASS 3

APR - 8 1993

REV NO.	DATE	REVISION DESCRIPTION	EG	RC	CD	NA
0	03/06/93	APPROVED FOR CONSTRUCTION				NA
			NA	NA	NA	NA

APPROVAL INITIALS

CADFILE	B120388A	CADCODE	2B:IBM:ACD2:12.C1:SS

ENGINEERING RELEASE

REV _____ DATE _____

ERO _____

SIGNATURE	DATE
PROJ DIR NA	
QA MGR NA	
INDEPENDENT SAFETY MGR NA	
PROJECT MGR NA	
SYSTEMS MGR NA	
ENGINEERING MGR NA	
SUPERVISOR C. DIVONA	11-3-92
DESIGN ENGINEER R. CHOATE	11-3-92
CHECKED E. GARCIA	11-2-92
DRAWN EYBARRA	3/2/92

U.S.DEPARTMENT OF ENERGY

Richland Field Office

DE – AC06–86RL10838

FLUOR DANIEL, INC.
ADVANCED TECHNOLOGY DIVISION

TU–130–002 CONDUIT & CABLE ASSEMBLY PARTS LIST & NOTES

PROJECT TITLE: HANFORD WASTE VITRIFICATION PLANT

PROJECT	FLUOR CONTRACT NO.	CWBS NO.
B–595	8457	P06B
SCALE: NONE	BLDG NO.: 1	INDEX NO.:

CLASSIFICATION	BY	DRAWING NUMBER	SHEET	OF	REV
NONE	NOT REQD	H–2–120388	1	7	0

NG INDEX

AFC 77 78 79 80

DISTRIBUTION CODE: 402

M226 ACAD

INITIALS: PN

DATE: 03–16–93

QUALITY LEVEL II

SAFETY CLASS 3

APR - 8 1993

REV NO.	DATE	REVISION DESCRIPTION	APPROVAL INITIALS			
0	01/06/93	APPROVED FOR CONSTRUCTION	EG	RC	CD	NA / NA
			NA	NA	NA	NA

CADFILE	B120388B	CADCODE	2B:IBM:ACD2:12.C1:SS

ENGINEERING RELEASE

REV _____ DATE _____

ERO _____

SIGNATURE	DATE
PROJ DIR NA	
QA MGR NA	
INDEPENDENT SAFETY MGR NA	
PROJECT MGR NA	
SYSTEMS MGR NA	
ENGINEERING MGR NA	
SUPERVISOR C. DIVONA	11-3-92
DESIGN ENGINEER R. CHOATE	11-3-92
CHECKED E. GARCIA	11-2-92
DRAWN EYBARRA	3/2/92

U.S. DEPARTMENT OF ENERGY

Richland Field Office

DE – AC06-86RL10838

FLUOR DANIEL, INC.
ADVANCED TECHNOLOGY DIVISION

TU-130-002 CONDUIT & CABLE ASSEMBLY

PROJECT TITLE: HANFORD WASTE VITRIFICATION PLANT

PROJECT	FLUOR CONTRACT NO.	CWBS NO.
B-595	8457	P06B
SCALE: NONE	BLDG NO.: 1	INDEX NO.:

CLASSIFICATION	BY	DRAWING NUMBER	SHEET	OF	REV
NONE	NOT REQD	H-2-120388	2	7	0

ING INDEX

AFC 77 78 79 80

DISTRIBUTION CODE: 402

M227 ACAD

INITIALS: PN

DATE: 03-16-93

APR - 8 1993

QUALITY LEVEL II
SAFETY CLASS 3

REV NO.	DATE	REVISION DESCRIPTION	APPROVAL INITIALS			
0	03/16/93	APPROVED FOR CONSTRUCTION	EG	RC	CD	NA / NA
			NA	NA	NA	NA

CADFILE	B120388C	CADCODE	2B:IBM:ACD2:12.C1:SS

ENGINEERING RELEASE
REV _____ DATE _____
ERO _____

SIGNATURE	DATE
PROJ DIR NA	
QA MGR NA	
INDEPENDENT SAFETY MGR NA	
PROJECT MGR NA	
SYSTEMS MGR NA	
ENGINEERING MGR NA	
SUPERVISOR C. DIVONA	11-3-92
DESIGN ENGINEER R. CHOATE	11-3-92
CHECKED E. GARCIA	11-2-92
DRAWN EYBARRA	3/2/92

U.S.DEPARTMENT OF ENERGY
Richland Field Office
DE – AC06-86RL10838

FLUOR DANIEL, INC.
ADVANCED TECHNOLOGY DIVISION

TU-130-002 CONDUIT & CABLE ASSEMBLY

PROJECT TITLE
HANFORD WASTE VITRIFICATION PLANT

PROJECT	FLUOR CONTRACT NO.	CWBS NO.
B-595	8457	P06B
SCALE	BLDG NO.	INDEX NO.
NONE	1	

CLASSIFICATION	BY	DRAWING NUMBER	SHEET	OF	REV
NONE	NOT REQD	H-2-120388	3	7	0

ING INDEX

AFC 77 78 79 80

DISTRIBUTION CODE: 402

M228 ACAD

INITIALS: PN
DATE: 03-16-93

QUALITY LEVEL II APR - 6 1993

SAFETY CLASS 3

REV NO.	DATE	REVISION DESCRIPTION	APPROVAL INITIALS			
0	04/06/93	APPROVED FOR CONSTRUCTION	EG	RC	CD	NA
			NA	NA	NA	NA

CADFILE	B120388D	CADCODE	2B:IBM:ACD2:12.C1:SS

ENGINEERING RELEASE

REV _____ DATE _____

ERO _____

SIGNATURE	DATE
PROJ DIR NA	
QA MGR NA	
INDEPENDENT SAFETY MGR NA	
PROJECT MGR NA	
SYSTEMS MGR NA	
ENGINEERING MGR NA	
SUPERVISOR C. DIVONA	11-3-92
DESIGN ENGINEER R. CHOATE	11-3-92
CHECKED E. GARCIA	~~3-25-93~~ 11-2-92
DRAWN EYBARRA	3/2/92

U.S. DEPARTMENT OF ENERGY

Richland Field Office

DE – AC06-86RL10838

FLUOR DANIEL, INC.
ADVANCED TECHNOLOGY DIVISION

TU-130-002 CONDUIT & CABLE ASSEMBLY DETAILS

PROJECT TITLE: HANFORD WASTE VITRIFICATION PLANT

PROJECT	FLUOR CONTRACT NO.	CWBS NO.
B-595	8457	P06B
SCALE: NONE	BLDG NO.: 1	INDEX NO.

CLASSIFICATION	BY	DRAWING NUMBER	SHEET	OF	REV
NONE	NOT REQD	H-2-120388	4	7	0

ING INDEX

A F C 77 78 79 80

DISTRIBUTION CODE: 402

M229 ACAD

INITIALS: PN

DATE: 03-16-93

2 INCHES

APR - 8 1993

QUALITY LEVEL II

SAFETY CLASS 3

REV NO.	DATE	REVISION DESCRIPTION	EG	RC	CD	NA
0	01/06/93	APPROVED FOR CONSTRUCTION	EG	RC	CD	NA
			NA	NA	NA	NA

CADFILE B120388E CADCODE 2B:IBM:ACD2:12.C1:SS

ENGINEERING RELEASE

REV _____ DATE _____

ERO _____

SIGNATURE	DATE
PROJ DIR NA	
QA MGR NA	
INDEPENDENT SAFETY MGR NA	
PROJECT MGR NA	
SYSTEMS MGR NA	
ENGINEERING MGR NA	
SUPERVISOR C. DIVONA	11-3-92
DESIGN ENGINEER R. CHOATE	11-3-92
CHECKED E. GARCIA	11-2-92
DRAWN EYBARRA	3/2/92

U.S.DEPARTMENT OF ENERGY

Richland Field Office

DE – AC06-86RL10838

FLUOR DANIEL, INC.
ADVANCED TECHNOLOGY DIVISION

TU-130-002 CONDUIT & CABLE ASSEMBLY DETAILS

PROJECT TITLE: HANFORD WASTE VITRIFICATION PLANT

PROJECT	FLUOR CONTRACT NO.	CWBS NO.
B-595	8457	P06B
SCALE: NONE	BLDG NO.: 1	INDEX NO.

CLASSIFICATION	BY	DRAWING NUMBER	SHEET	OF	REV
NONE	NOT REQD	H-2-120388	5	7	0

ING INDEX

AFC 77 78 79 80

DISTRIBUTION CODE: 402

M230 ACAD

INITIALS: PN

DATE: 03-16-93

QUALITY LEVEL II

SAFETY CLASS 3

APR - 8 1993

REV NO.	DATE	REVISION DESCRIPTION	EG	RC	CD	
0	01/04/93	APPROVED FOR CONSTRUCTION	EG	RC	CD	NA / NA
			NA	NA	NA	NA

CADFILE	B120388F	CADCODE	2B:IBM:ACD2:12.C1:SS

ENGINEERING RELEASE

REV _____ DATE _____

ERO _____

SIGNATURE	DATE
PROJ DIR NA	
QA MGR NA	
INDEPENDENT SAFETY MGR NA	
PROJECT MGR NA	
SYSTEMS MGR NA	
ENGINEERING MGR NA	
SUPERVISOR C. DIVONA	11-3-92
DESIGN ENGINEER R. CHOATE	11-3-92
CHECKED E. GARCIA	~~3-25-93~~ 11-2-92
DRAWN EYBARRA	3/2/92

U.S. DEPARTMENT OF ENERGY

Richland Field Office

DE – AC06-86RL10838

FLUOR DANIEL, INC.
ADVANCED TECHNOLOGY DIVISION

TU-130-002 CONDUIT & CABLE ASSEMBLY DETAILS

PROJECT TITLE: HANFORD WASTE VITRIFICATION PLANT

PROJECT	FLUOR CONTRACT NO.	CWBS NO.
B-595	8457	P06B
SCALE 1/1	BLDG NO. 1	INDEX NO.

CLASSIFICATION	BY	DRAWING NUMBER	SHEET	OF	REV
NONE	NOT REQD	H-2-120388	6	7	0

WING INDEX

DISTRIBUTION CODE: 402

M231 ACAD

INITIALS: PN

DATE: 03-16-93

A F C 77 78 79 80

APR - 8 1993

QUALITY LEVEL II

SAFETY CLASS 3

REV NO.	DATE	REVISION DESCRIPTION	APPROVAL INITIALS			
0	04/06/93	APPROVED FOR CONSTRUCTION	EG	RC	CD	NA NA
			NA	NA	NA	NA

CADFILE	B120388G	CADCODE	2B:IBM:ACD2:12.C1:SS

ENGINEERING RELEASE

REV _____ DATE _____

ERO _____

SIGNATURE	DATE
PROJ DIR NA	
QA MGR NA	
INDEPENDENT SAFETY MGR NA	
PROJECT MGR NA	
SYSTEMS MGR NA	
ENGINEERING MGR NA	
SUPERVISOR C. DIVONA	11-3-92
DESIGN ENGINEER R. CHOATE	11-3-92
CHECKED E. GARCIA	~~3-25-93~~ 11-2-92
DRAWN EYBARRA	3/2/92

U.S. DEPARTMENT OF ENERGY

Richland Field Office

DE – AC06-86RL10838

FLUOR DANIEL, INC.
ADVANCED TECHNOLOGY DIVISION

TU-130-002 CONDUIT & CABLE ASSEMBLY DETAILS

PROJECT TITLE: HANFORD WASTE VITRIFICATION PLANT

PROJECT	FLUOR CONTRACT NO.	CWBS NO.
B-595	8457	P06B
SCALE 1/1	BLDG NO. 1	INDEX NO.

CLASSIFICATION	BY	DRAWING NUMBER	SHEET	OF	REV
NONE	NOT REQD	H-2-120388	7	7	0

VING INDEX

AFC 77 78 79 80

DISTRIBUTION CODE: 402

M232 ACAD

INITIALS: PN

DATE: 03-16-93

QUALITY LEVEL II

SAFETY CLASS 3

APR - 8 1993

REV NO.	DATE	REVISION DESCRIPTION				
0	01/06/93	APPROVED FOR CONSTRUCTION	EG	RC	CD	NA / NA
			NA	NA	NA	NA

CADFILE	B120390A	CADCODE	2B:IBM:ACD2:12.C1:SS

ENGINEERING RELEASE

REV _____ DATE _____

ERO _____

SIGNATURE	DATE
PROJ DIR NA	
QA MGR NA	
INDEPENDENT SAFETY MGR NA	
PROJECT MGR NA	
SYSTEMS MGR NA	
ENGINEERING MGR NA	
SUPERVISOR C. DIVONA	11-3-92
DESIGN ENGINEER R. CHOATE	11-3-92
CHECKED E. GARCIA	~~7-25-93~~ 11-2-92
DRAWN R.MOREL	08-12-92

U.S.DEPARTMENT OF ENERGY

Richland Field Office

DE – AC06–86RL10838

FLUOR DANIEL, INC.
ADVANCED TECHNOLOGY DIVISION

TU–130–002 SUPPORT BRACKET WELDMENT PARTS LIST & NOTES

PROJECT TITLE: HANFORD WASTE VITRIFICATION PLANT

PROJECT	FLUOR CONTRACT NO.	CWBS NO.
B–595	8457	P06B
SCALE 1/4	BLDG NO. 1	INDEX NO.

CLASSIFICATION	BY	DRAWING NUMBER	SHEET	OF	REV
NONE	NOT REQD	H–2–120390	1	2	0

DISTRIBUTION CODE: 403

M233 ACAD

INITIALS: PN

DATE: 03–16–93

F C 78 79 80

QUALITY LEVEL II

SAFETY CLASS 3

APR - 8 1993

REV NO.	DATE	REVISION DESCRIPTION				
0	01/06/93	APPROVED FOR CONSTRUCTION	EG	RC	CD	NA / NA
			NA	NA	NA	NA

CADFILE	B120390B	CADCODE	2B:IBM:ACD2:12.C1:SS

ENGINEERING RELEASE

REV _____ DATE _____

ERO _____

SIGNATURE	DATE
PROJ DIR NA	
QA MGR NA	
INDEPENDENT SAFETY MGR NA	
PROJECT MGR NA	
SYSTEMS MGR NA	
ENGINEERING MGR NA	
SUPERVISOR C. DIVONA	11-3-92
DESIGN ENGINEER R. CHOATE	11-3-92
CHECKED E. GARCIA	11-2-92
DRAWN R.MOREL	8-13-92

U.S.DEPARTMENT OF ENERGY

Richland Field Office

DE – AC06-86RL10838

FLUOR DANIEL, INC.
ADVANCED TECHNOLOGY DIVISION

TU-130-002 LIMIT SWITCH SUPPORT DETAILS

PROJECT TITLE: **HANFORD WASTE VITRIFICATION PLANT**

PROJECT	FLUOR CONTRACT NO.	CWBS NO.
B-595	8457	P06B
SCALE	**BLDG NO.**	**INDEX NO.**
SHOWN	1	

CLASSIFICATION	BY	DRAWING NUMBER	SHEET	OF	REV
NONE	NOT REQD	H-2-120390	2	2	0

DISTRIBUTION CODE: 403

M234 ACAD

INITIALS: PN

DATE: 03-16-93

WELDING, THEN FILL HOLE WITH WELD AFTER
RUCTURE HAS COOLED

QUALITY LEVEL II

SAFETY CLASS 3

APR - 8 1993

REV NO.	DATE	REVISION DESCRIPTION	EG	RC	CD	
						NA / NA
0	04/06/93	APPROVED FOR CONSTRUCTION	EG	RC	CD	NA
			NA	NA	NA	NA

CADFILE B120392A CADCODE 2B:IBM:ACD2:12.C1:SS

ENGINEERING RELEASE

REV _____ DATE _____

ERO _____

SIGNATURE	DATE
PROJ DIR NA	
QA MGR NA	
INDEPENDENT SAFETY MGR NA	
PROJECT MGR NA	
SYSTEMS MGR NA	
ENGINEERING MGR NA	
SUPERVISOR C. DIVONA	11-3-92
DESIGN ENGINEER R. CHOATE	11-3-92
CHECKED E. GARCIA	11-2-92
DRAWN EYBARRA	1/20/92

U.S. DEPARTMENT OF ENERGY

Richland Field Office

DE - AC06-86RL10838

FLUOR DANIEL, INC.
ADVANCED TECHNOLOGY DIVISION

TU-130-002 EMERGENCY PULL BAR ASSEMBLY

PROJECT TITLE: HANFORD WASTE VITRIFICATION PLANT

PROJECT	FLUOR CONTRACT NO.	CWBS NO.
B-595	8457	P06B
SCALE 1/1	BLDG NO. 1	INDEX NO.

CLASSIFICATION	BY	DRAWING NUMBER	SHEET	OF	REV
NONE	NOT REQD	H-2-120392	1	4	0

G INDEX

DISTRIBUTION CODE: 403

M235 ACAD

INITIALS: PN

DATE: 03-16-93

QUALITY LEVEL II

SAFETY CLASS 3

APR - 6 1993

REV NO.	DATE	REVISION DESCRIPTION				
						B
0	04/06/93	APPROVED FOR CONSTRUCTION	EG	RC	CD	NA / NA
			NA	NA	NA	NA

CADFILE	B120392B	CADCODE	2B:IBM:ACD2:12.C1:SS

ENGINEERING RELEASE

REV _____ DATE _____

ERO _____

SIGNATURE	DATE
PROJ DIR NA	
QA MGR NA	
INDEPENDENT SAFETY MGR NA	
PROJECT MGR NA	
SYSTEMS MGR NA	
ENGINEERING MGR NA	
SUPERVISOR C. DIVONA	11-3-92
DESIGN ENGINEER R. CHOATE	11-3-92
CHECKED E. GARCIA	11-2-92
DRAWN EYBARRA	1/20/92

U.S. DEPARTMENT OF ENERGY

Richland Field Office

DE – AC06-86RL10838

FLUOR DANIEL, INC.
ADVANCED TECHNOLOGY DIVISION

TU-130-002 EMERGENCY PULL BAR WELDMENT

A

PROJECT TITLE: HANFORD WASTE VITRIFICATION PLANT

PROJECT	FLUOR CONTRACT NO.	CWBS NO.
B-595	8457	P06B
SCALE 1/4	BLDG NO. 1	INDEX NO.

CLASSIFICATION	BY	DRAWING NUMBER	SHEET	OF	REV
NONE	NOT REQD	H-2-120392	2	4	0

G INDEX

2 1

F C 78 79 80

DISTRIBUTION CODE: 403

M236 ACAD

INITIALS: PN

DATE: 03-16-93

13 TAB
SCALE: 1/2

APR - 8 1993

QUALITY LEVEL II
SAFETY CLASS 3

REV NO.	DATE	REVISION DESCRIPTION				
0	04/06/93	APPROVED FOR CONSTRUCTION	EG	RC	CD	NA / NA
			NA	NA	NA	NA

APPROVAL INITIALS

CADFILE	B120392C	CADCODE	2B:IBM:ACD2:12.C1:SS

ENGINEERING RELEASE
REV _____ DATE _____
ERO _____

SIGNATURE	DATE
PROJ DIR NA	
DA MGR NA	
INDEPENDENT SAFETY MGR NA	
PROJECT MGR NA	
SYSTEMS MGR NA	
ENGINEERING MGR NA	
SUPERVISOR C. DIVONA	11-3-92
DESIGN ENGINEER R. CHOATE	11-3-92
CHECKED E. GARCIA	11-2-92
DRAWN EYBARRA	1/20/92

U.S.DEPARTMENT OF ENERGY
Richland Field Office
DE – AC06-86RL10838

FLUOR DANIEL, INC.
ADVANCED TECHNOLOGY DIVISION

TU-130-002 EMERGENCY PULL BAR DETAILS

PROJECT TITLE
HANFORD WASTE VITRIFICATION PLANT

PROJECT	FLUOR CONTRACT NO.	CWBS NO.
B-595	8457	P06B
SCALE: SHOWN	BLDG NO.: 1	INDEX NO.:

CLASSIFICATION	BY	DRAWING NUMBER	SHEET	OF	REV
NONE	NOT REQD	H-2-120392	3	4	0

INDEX

DISTRIBUTION CODE: 403

M237 ACAD

INITIALS: PN
DATE: 03-16-93

8 79 80

1/2

1 1/2

2 REF

QUALITY LEVEL II

SAFETY CLASS 3

APR - 8 1993

REV NO.	DATE	REVISION DESCRIPTION	EG	RC	CD	
0	04/06/93	APPROVED FOR CONSTRUCTION	NA	NA	NA	NA

CADFILE	B120392D	CADCODE	2B:IBM:ACD2:12.C1:SS

ENGINEERING RELEASE

REV _____ DATE _____

ERO _____

SIGNATURE	DATE
PROJ DIR NA	
QA MGR NA	
INDEPENDENT SAFETY MGR NA	
PROJECT MGR NA	
SYSTEMS MGR NA	
ENGINEERING MGR NA	
SUPERVISOR C. DIVONA	11-3-92
DESIGN ENGINEER R. CHOATE	11-3-92
CHECKED E. GARCIA	11-2-92
DRAWN EYBARRA	1/20/92

U.S.DEPARTMENT OF ENERGY

Richland Field Office

DE - AC06-86RL10838

FLUOR DANIEL, INC.
ADVANCED TECHNOLOGY DIVISION

TU-130-002 EMERGENCY PULL BAR LIFTING LOOP

PROJECT TITLE: HANFORD WASTE VITRIFICATION PLANT

PROJECT	FLUOR CONTRACT NO.	CWBS NO.
B-595	8457	P06B
SCALE 1/2	BLDG NO. 1	INDEX NO.

CLASSIFICATION	BY	DRAWING NUMBER	SHEET	OF	REV
NONE	NOT REQD	H-2-120392	4	4	0

NG INDEX

DISTRIBUTION CODE: 403

M238 ACAD

INITIALS: PN

DATE: 03-16-93

A F C

7 78 79 80

QUALITY LEVEL II

SAFETY CLASS 3

APR - 8 1993

REV NO.	DATE	REVISION DESCRIPTION	EG	RC	CD	
						B
0	04/06/93	APPROVED FOR CONSTRUCTION	EG	RC	CD	NA / NA
			NA	NA	NA	NA

CADFILE B120421A CADCODE 2B:IBM:ACD2:12.C1:SS

ENGINEERING RELEASE

REV _____ DATE _____

ERO _____

SIGNATURE	DATE
PROJ DIR NA	
QA MGR NA	
INDEPENDENT SAFETY MGR NA	
PROJECT MGR NA	
SYSTEMS MGR NA	
ENGINEERING MGR NA	
SUPERVISOR C. DIVONA	11-3-92
DESIGN ENGINEER R. CHOATE	11-3-92
CHECKED E. GARCIA	~~1-25-93~~ 11-2-92
DRAWN S.L. REGACHO	9-23-91

U.S.DEPARTMENT OF ENERGY

Richland Field Office

DE – AC06-86RL10838

FLUOR DANIEL, INC.
ADVANCED TECHNOLOGY DIVISION

TU-130-001/002 CART DRIVE COUPLING ASSEMBLY PARTS LIST & NOTES

A

PROJECT TITLE: HANFORD WASTE VITRIFICATION PLANT

PROJECT	FLUOR CONTRACT NO.	CWBS NO.
B-595	8457	P06B
SCALE 2/1	BLDG NO. 1	INDEX NO.

CLASSIFICATION	BY	DRAWING NUMBER	SHEET	OF	REV
NONE	NOT REQD	H-2-120421	1	3	0

G INDEX

2 1

F C 78 79 80

DISTRIBUTION CODE: 403

M239 ACAD

INITIALS: PN

DATE: 03-16-93

QUALITY LEVEL II

SAFETY CLASS 3

APR - 8 1993

REV NO.	DATE	REVISION DESCRIPTION				
0	04/06/93	APPROVED FOR CONSTRUCTION	EG	RC	CD	NA / NA
			NA	NA	NA	NA

CADFILE	B120421B	CADCODE	2B:IBM:ACD2:12.C1:SS

ENGINEERING RELEASE

REV _____ DATE _____

ERO _____

SIGNATURE	DATE
PROJ DIR NA	
QA MGR NA	
INDEPENDENT SAFETY MGR NA	
PROJECT MGR NA	
SYSTEMS MGR NA	
ENGINEERING MGR NA	
SUPERVISOR C. DIVONA	11-3-92
DESIGN ENGINEER R. CHOATE	11-3-92
CHECKED E. GARCIA	11-2-92
DRAWN S.L. REGACHO	9-23-92

U.S.DEPARTMENT OF ENERGY

Richland Field Office

DE – AC06-86RL10838

FLUOR DANIEL, INC.
ADVANCED TECHNOLOGY DIVISION

TU-130-001
TU-130-002
COUPLING ASSEMBLY & DETAILS

PROJECT TITLE: HANFORD WASTE VITRIFICATION PLANT

PROJECT	FLUOR CONTRACT NO.	CWBS NO.
B-595	8457	P06B
SCALE: SHOWN	BLDG NO.: 1	INDEX NO.:

CLASSIFICATION	BY	DRAWING NUMBER	SHEET	OF	REV
NONE	NOT REQD	H-2-120421	2	3	0

INDEX

DISTRIBUTION CODE: 403

M240 ACAD

INITIALS: PN

DATE: 03-16-93

QUALITY LEVEL II

SAFETY CLASS 3

APR 8 - 1993

REV NO.	DATE	REVISION DESCRIPTION	EG	RC	CD	
0	04/06/93	APPROVED FOR CONSTRUCTION	EG	RC	CD	NA / NA
			NA	NA	NA	NA

B

CADFILE	B120421C	CADCODE	2B:IBM:ACD2:12.C1:SS

ENGINEERING RELEASE

REV _____ DATE _____

ERO _____

SIGNATURE	DATE
PROJ DIR NA	
QA MGR NA	
INDEPENDENT SAFETY MGR NA	
PROJECT MGR NA	
SYSTEMS MGR NA	
ENGINEERING MGR NA	
SUPERVISOR C. DIVONA	11-3-92
DESIGN ENGINEER R. CHOATE	11-3-92
CHECKED E. GARCIA	~~3-25-93~~ 11-2-92
DRAWN S.L. REGACHO	9-23-91

U.S.DEPARTMENT OF ENERGY

Richland Field Office

DE - AC06-86RL10838

FLUOR DANIEL, INC.
ADVANCED TECHNOLOGY DIVISION

TU-130-001
TU-130-002
CART DRIVE COUPLING DETAILS

A

PROJECT TITLE: HANFORD WASTE VITRIFICATION PLANT

PROJECT	FLUOR CONTRACT NO.	CWBS NO.
B-595	8457	P06B
SCALE 2/1	BLDG NO. 1	INDEX NO.

CLASSIFICATION	BY	DRAWING NUMBER	SHEET	OF	REV
NONE	NOT REQD	H-2-120421	3	3	0

INDEX

2 1

DISTRIBUTION CODE: 403

M241 ACAD

INITIALS: PN

DATE: 03-16-93

QUALITY LEVEL II

SAFETY CLASS 3

APR 8 - 1993

REV NO.	DATE	REVISION DESCRIPTION	EG	RC	CD	NA
0	04/06/93	APPROVED FOR CONSTRUCTION	EG	RC	CD	NA
			NA	NA	NA	NA

CADFILE	B120422A	CADCODE	2B:IBM:ACD2:12.C1:SS

ENGINEERING RELEASE

REV _____ DATE _____

ERO _____

SIGNATURE	DATE
PROJ DIR NA	
QA MGR NA	
INDEPENDENT SAFETY MGR NA	
PROJECT MGR NA	
SYSTEMS MGR NA	
ENGINEERING MGR NA	
SUPERVISOR C. DIVONA	11-3-92
DESIGN ENGINEER R. CHOATE	11-3-92
CHECKED E. GARCIA	11-2-92
DRAWN EYBARRA	1/14/92

U.S. DEPARTMENT OF ENERGY

Richland Field Office

DE - AC06-86RL10838

FLUOR DANIEL, INC.

ADVANCED TECHNOLOGY DIVISION

TU-130-001/002 EMERGENCY PULL ROPE ASSY PARTS LIST & NOTES

PROJECT TITLE: HANFORD WASTE VITRIFICATION PLANT

PROJECT	FLUOR CONTRACT NO.	CWBS NO.
B-595	8457	P06B
SCALE: NONE	BLDG NO.: 1	INDEX NO.:

CLASSIFICATION	BY	DRAWING NUMBER	SHEET	OF	REV
NONE	NOT REQD	H-2-120422	1	3	0

DISTRIBUTION CODE: 403

M242 ACAD

INITIALS: PN

DATE: 03-16-93

QUALITY LEVEL II

SAFETY CLASS 3

APR 8 - 1993

REV NO.	DATE	REVISION DESCRIPTION	EG	RC	CD	
0	C1 6/6/93	APPROVED FOR CONSTRUCTION	EG	RC	CD	NA NA
			NA	NA	NA	NA

CADFILE B120422B CADCODE 2B:IBM:ACD2:12.C1:SS

ENGINEERING RELEASE

REV _____ DATE _____

ERO _____

SIGNATURE	DATE
PROJ DIR NA	
QA MGR NA	
INDEPENDENT SAFETY MGR NA	
PROJECT MGR NA	
SYSTEMS MGR NA	
ENGINEERING MGR NA	
SUPERVISOR C. DIVONA	11-3-92
DESIGN ENGINEER R. CHOATE	11-3-92
CHECKED E. GARCIA	11-2-92
DRAWN EYBARRA	1/14/92

U.S.DEPARTMENT OF ENERGY

Richland Field Office

DE – AC06-86RL10838

FLUOR DANIEL, INC.
ADVANCED TECHNOLOGY DIVISION

TU-130-001
TU-130-002
EMERGENCY PULL ROPE DETAIL

PROJECT TITLE: HANFORD WASTE VITRIFICATION PLANT

PROJECT	FLUOR CONTRACT NO.	CWBS NO.
B-595	8457	P06B
SCALE: NONE	BLDG NO.: 1	INDEX NO.

CLASSIFICATION	BY	DRAWING NUMBER	SHEET	OF	REV
NONE	NOT REQD	H-2-120422	2	3	0

G INDEX

DISTRIBUTION CODE: 403

M243 ACAD

INITIALS: PN

DATE: 03-16-93

QUALITY LEVEL II

SAFETY CLASS 3

APR 8 - 1993

REV NO.	DATE	REVISION DESCRIPTION	EG	RC	CD	
0	04/06/93	APPROVED FOR CONSTRUCTION	EG	RC	CD	NA / NA
			NA	NA	NA	NA

CADFILE B120422C CADCODE 2B:IBM:ACD2:12.C1:SS

ENGINEERING RELEASE

REV _____ DATE _____

ERO _____

SIGNATURE	DATE
PROJ DIR NA	
QA MGR NA	
INDEPENDENT SAFETY MGR NA	
PROJECT MGR NA	
SYSTEMS MGR NA	
ENGINEERING MGR NA	
SUPERVISOR C. DIVONA	11-3-92
DESIGN ENGINEER R. CHOATE	11-3-92
CHECKED E. GARCIA	~~3-23-93~~ 11-2-92
DRAWN EYBARRA	1/14/92

U.S. DEPARTMENT OF ENERGY

Richland Field Office

DE – AC06–86RL10838

FLUOR DANIEL, INC.

ADVANCED TECHNOLOGY DIVISION

TU–130–001
TU–130–002
EMERGENCY PULL ROPE DETAILS

PROJECT TITLE: HANFORD WASTE VITRIFICATION PLANT

PROJECT	FLUOR CONTRACT NO.	CWBS NO.
B–595	8457	P06B
SCALE 1/4	BLDG NO. 1	INDEX NO.

CLASSIFICATION	BY	DRAWING NUMBER	SHEET	OF	REV
NONE	NOT REQD	H–2–120422	3	3	0

IG INDEX

DISTRIBUTION CODE: 403

M244 ACAD

INITIALS: PN

DATE: 03–16–93

QUALITY LEVEL II

SAFETY CLASS 3

APR 8 - 1993

REV NO.	DATE	REVISION DESCRIPTION	EG	RC	CD	
						B
0	04/06/93	APPROVED FOR CONSTRUCTION	EG	RC	CD	NA / NA
			NA	NA	NA	NA

CADFILE	B120423A	CADCODE	2B:IBM:ACD2:12.C1:SS

ENGINEERING RELEASE

REV _____ DATE _____

ERO _____

SIGNATURE	DATE
PROJ DIR NA	
QA MGR NA	
INDEPENDENT SAFETY MGR NA	
PROJECT MGR NA	
SYSTEMS MGR NA	
ENGINEERING MGR NA	
SUPERVISOR C. DIVONA	11-3-92
DESIGN ENGINEER R. CHOATE	11-3-92
CHECKED E. GARCIA	~~7-25-93~~ 11-2-92
DRAWN L.C.SANVICTORES	11/14/91

U.S.DEPARTMENT OF ENERGY

Richland Field Office

DE – AC06–86RL10838

FLUOR DANIEL, INC.

ADVANCED TECHNOLOGY DIVISION

TU–130–001/002 DOLLY PSNG GUIDE ASSEMBLY PARTS LIST & NOTES

A

PROJECT TITLE: HANFORD WASTE VITRIFICATION PLANT

PROJECT	FLUOR CONTRACT NO.	CWBS NO.
B–595	8457	P06B
SCALE 1/1	BLDG NO. 1	INDEX NO.

CLASSIFICATION	BY	DRAWING NUMBER	SHEET	OF	REV
NONE	NOT REQD	H–2–120423	1	1	0

INDEX

DISTRIBUTION CODE: 403

M245 ACAD

INITIALS: PN

DATE: 03–16–93

QUALITY LEVEL II

SAFETY CLASS 3

APR 8 - 1993

REV NO.	DATE	REVISION DESCRIPTION	EG	RC	CD	
						B
0	04/06/93	APPROVED FOR CONSTRUCTION	EG	RC	CD	NA/NA
			NA	NA	NA	NA

CADFILE B120424A CADCODE 2B:IBM:ACD2:12.C1:SS

ENGINEERING RELEASE

REV _____ DATE _____

ERO _____

SIGNATURE	DATE
PROJ DIR NA	
QA MGR NA	
INDEPENDENT SAFETY MGR NA	
PROJECT MGR NA	
SYSTEMS MGR NA	
ENGINEERING MGR NA	
SUPERVISOR C. DIVONA	11-3-92
DESIGN ENGINEER R. CHOATE	11-3-92
CHECKED E. GARCIA	~~3-25-93~~ 11-2-92
DRAWN EYBARRA	1/6/92

U.S. DEPARTMENT OF ENERGY

Richland Field Office

DE – AC06–86RL10838

FLUOR DANIEL, INC.
ADVANCED TECHNOLOGY DIVISION

TU–130–001/002 STRUCTURAL TBG WELDMENT PARTS LIST AND NOTES

A

PROJECT TITLE: HANFORD WASTE VITRIFICATION PLANT

PROJECT	FLUOR CONTRACT NO.	CWBS NO.
B–595	8457	P06B
SCALE: NONE	BLDG NO.: 1	INDEX NO.:

CLASSIFICATION	BY	DRAWING NUMBER	SHEET	OF	REV
NONE	NOT REQD	H–2–120424	1	1	0

G INDEX

2 1

F C 78 79 80

DISTRIBUTION CODE: 403

M246 ACAD

INITIALS: PN

DATE: 03–16–93

QUALITY LEVEL II

SAFETY CLASS 3

APR 8 - 1993

REV NO.	DATE	REVISION DESCRIPTION	APPROVAL INITIALS			
0	04/06/93	APPROVED FOR CONSTRUCTION	EG	RC	CD	NA / NA
			NA	NA	NA	NA

CADFILE	B120425A	CADCODE	2B:IBM:ACD2:12.C1:SS

ENGINEERING RELEASE

REV _____ DATE _____

ERO _____

SIGNATURE	DATE
PROJ DIR NA	
QA MGR NA	
INDEPENDENT SAFETY MGR NA	
PROJECT MGR NA	
SYSTEMS MGR NA	
ENGINEERING MGR NA	
SUPERVISOR C. DIVONA	11-3-92
DESIGN ENGINEER R. CHOATE	11-3-92
CHECKED E. GARCIA	~~3-25-93~~ 11-2-92
DRAWN P. ASHLEY	02-18-92

U.S.DEPARTMENT OF ENERGY

Richland Field Office

DE – AC06–86RL10838

FLUOR DANIEL, INC.

ADVANCED TECHNOLOGY DIVISION

TU–130–001/002 SPIDER DRIVE COUPLING ASSY PARTS LIST & NOTES

PROJECT TITLE: HANFORD WASTE VITRIFICATION PLANT

PROJECT	FLUOR CONTRACT NO.	CWBS NO.
B–595	8457	P06B
SCALE 1/1	BLDG NO. 1	INDEX NO.

CLASSIFICATION	BY	DRAWING NUMBER	SHEET	OF	REV
NONE	NOT REQD	H–2–120425	1	3	0

G INDEX

DISTRIBUTION CODE: 403

M247 ACAD

INITIALS: PN

DATE: 03–16–93

APR 8 - 1993

QUALITY LEVEL II

SAFETY CLASS 3

REV NO.	DATE	REVISION DESCRIPTION	EG	RC	CD	
0	04/06/93	APPROVED FOR CONSTRUCTION	EG	RBC	CD	NA / NA
			NA	NA	NA	NA

CADFILE B120425B CADCODE 2B:IBM:ACD2:12.C1:SS

ENGINEERING RELEASE

REV _____ DATE _____

ERO _____

SIGNATURE	DATE
PROJ DIR NA	
QA MGR NA	
INDEPENDENT SAFETY MGR NA	
PROJECT MGR NA	
SYSTEMS MGR NA	
ENGINEERING MGR NA	
SUPERVISOR C. DIVONA	11-3-92
DESIGN ENGINEER R. CHOATE	11-3-92
CHECKED E. GARCIA	11-2-92
DRAWN P. ASHLEY	02-18-92

U.S.DEPARTMENT OF ENERGY

Richland Field Office

DE - AC06-86RL10838

FLUOR DANIEL, INC.

ADVANCED TECHNOLOGY DIVISION

TU-130-001
TU-130-002
SPIDER DRIVE COUPLING DETAILS

PROJECT TITLE: HANFORD WASTE VITRIFICATION PLANT

PROJECT	FLUOR CONTRACT NO.	CWBS NO.
B-595	8457	P06B
SCALE 1/1	BLDG NO. 1	INDEX NO.

CLASSIFICATION	BY	DRAWING NUMBER	SHEET	OF	REV
NONE	NOT REQD	H-2-120425	2	3	0

G INDEX

DISTRIBUTION CODE: 403

M248 ACAD

INITIALS: PN

DATE: 03-16-93

APR 8 - 1993

QUALITY LEVEL II
SAFETY CLASS 3

REV NO.	DATE	REVISION DESCRIPTION	EG	RC	CD	
0	04/06/93	APPROVED FOR CONSTRUCTION	EG	RC	CD	NA / NA
			NA	NA	NA	NA

CADFILE	B120425C	CADCODE	2B:IBM:ACD2:12.C1:SS

ENGINEERING RELEASE

REV _____ DATE _____

ERO _____

SIGNATURE	DATE
PROJ DIR NA	
QA MGR NA	
INDEPENDENT SAFETY MGR NA	
PROJECT MGR NA	
SYSTEMS MGR NA	
ENGINEERING MGR NA	
SUPERVISOR C. DIVONA	11-3-92
DESIGN ENGINEER R. CHOATE	11-3-92
CHECKED E. GARCIA	11-2-92
DRAWN P. ASHLEY	02-18-92

U.S.DEPARTMENT OF ENERGY

Richland Field Office

DE – AC06-86RL10838

FLUOR DANIEL, INC.
ADVANCED TECHNOLOGY DIVISION

TU-130-001
TU-130-002
SPIDER DRIVE COUPLING DETAILS

PROJECT TITLE: **HANFORD WASTE VITRIFICATION PLANT**

PROJECT	FLUOR CONTRACT NO.	CWBS NO.
B-595	8457	P06B
SCALE 1/1	BLDG NO. 1	INDEX NO.

CLASSIFICATION	BY	DRAWING NUMBER	SHEET	OF	REV
NONE	NOT REQD	H-2-120425	3	3	0

DISTRIBUTION CODE: 403

M249 ACAD

INITIALS: PN

DATE: 03-16-93

QUALITY LEVEL II

SAFETY CLASS 3

APR 8 - 1993

REV NO.	DATE	REVISION DESCRIPTION	RB	RC	CD	
0	04/06/93	APPROVED FOR CONSTRUCTION	NA	NA	NA	NA

CADFILE B120426A CADCODE 2B:IBM:ACD2:12.C1:SS

ENGINEERING RELEASE

REV _____ DATE _____

ERO _____

SIGNATURE	DATE
PROJ DIR NA	
QA MGR NA	
INDEPENDENT SAFETY MGR NA	
PROJECT MGR NA	
SYSTEMS MGR NA	
ENGINEERING MGR NA	
SUPERVISOR C. DIVONA	11/3/92
DESIGN ENGINEER R. CHOATE	11/3/92
CHECKED R. BIANCHI	11/2/92
DRAWN E. GARCIA	03/23/92

U.S.DEPARTMENT OF ENERGY

Richland Field Office

DE - AC06-86RL10838

FLUOR DANIEL, INC.
ADVANCED TECHNOLOGY DIVISION

TU-130-001/002 DOLLY WHEEL ASSEMBLIES PARTS LIST & NOTES

PROJECT TITLE: HANFORD WASTE VITRIFICATION PLANT

PROJECT	FLUOR CONTRACT NO.	CWBS NO.
B-595	8457	P06B
SCALE 1/2	BLDG NO. 1	INDEX NO.

CLASSIFICATION	BY	DRAWING NUMBER	SHEET	OF	REV
NONE	NOT REQD	H-2-120426	1	3	0

G INDEX

DISTRIBUTION CODE: 403

M250 ACAD

INITIALS: PN

DATE: 03-16-93

QUALITY LEVEL II

SAFETY CLASS 3

APR 8 - 1993

REV NO.	DATE	REVISION DESCRIPTION	APPROVAL INITIALS			
0	C4 1/06/93	APPROVED FOR CONSTRUCTION	RB	RC	CD	NA / NA
			NA	NA	NA	NA

CADFILE	B120426B	CADCODE	2B:IBM:ACD2:12.C1:SS

ENGINEERING RELEASE

REV _____ DATE _____

ERO _____

SIGNATURE	DATE
PROJ DIR NA	
QA MGR NA	
INDEPENDENT SAFETY MGR NA	
PROJECT MGR NA	
SYSTEMS MGR NA	
ENGINEERING MGR NA	
SUPERVISOR C. DIVONA CD	11/3/92
DESIGN ENGINEER R. CHOATE RBC	11/3/92
CHECKED R. BIANCHI RBC	~~2-25-93~~ 11/2/92
DRAWN E. GARCIA	1-16-92

U.S.DEPARTMENT OF ENERGY

Richland Field Office

DE - AC06-86RL10838

FLUOR DANIEL, INC.
ADVANCED TECHNOLOGY DIVISION

TU-130-001
TU-130-002
DOLLY WHEEL DETAILS

PROJECT TITLE: HANFORD WASTE VITRIFICATION PLANT

PROJECT	FLUOR CONTRACT NO.	CWBS NO.
B-595	8457	P06B
SCALE 1/2	BLDG NO. 1	INDEX NO.

CLASSIFICATION	BY	DRAWING NUMBER	SHEET	OF	REV
NONE	NOT REQD	H-2-120426	2	3	0

G INDEX

DISTRIBUTION CODE: 403

M251 ACAD

INITIALS: PN

DATE: 03-16-93

QUALITY LEVEL II

SAFETY CLASS 3

APR 8 - 1993

REV NO.	DATE	REVISION DESCRIPTION	RB	RC	CD	NA
0	04/06/93	APPROVED FOR CONSTRUCTION	NA	NA	NA	NA

CADFILE B120426C CADCODE 2B:IBM:ACD2:12.C1:SS

ENGINEERING RELEASE

REV _____ DATE _____

ERO _____

SIGNATURE	DATE
PROJ DIR NA	
QA MGR NA	
INDEPENDENT SAFETY MGR NA	
PROJECT MGR NA	
SYSTEMS MGR NA	
ENGINEERING MGR NA	
SUPERVISOR C. DIVONA	11/3/92
DESIGN ENGINEER R. CHOATE	11/3/92
CHECKED R. BIANCHI	11/2/92
DRAWN E.GARCIA	01-16-92

U.S.DEPARTMENT OF ENERGY

Richland Field Office

DE - AC06-86RL10838

FLUOR DANIEL, INC.

ADVANCED TECHNOLOGY DIVISION

TU-130-001
TU-130-002
DOLLY WHEEL DETAILS

PROJECT TITLE: HANFORD WASTE VITRIFICATION PLANT

PROJECT	FLUOR CONTRACT NO.	CWBS NO.
B-595	8457	P06B
SCALE 1/1	BLDG NO. 1	INDEX NO.

CLASSIFICATION	BY	DRAWING NUMBER	SHEET	OF	REV
NONE	NOT REQD	H-2-120426	3	3	0

INDEX

DISTRIBUTION CODE: 403

M252 ACAD

INITIALS: PN

DATE: 03-16-93

APR 8 - 1993

QUALITY LEVEL II
SAFETY CLASS 3

REV NO.	DATE	REVISION DESCRIPTION	EG	RC	CD	NA
0	04/06/93	APPROVED FOR CONSTRUCTION	EG	RC	CD	NA
			NA	NA	NA	NA

APPROVAL INITIALS

CADFILE	B120427A
CADCODE	2B:IBM:ACD2:12.C1:SS

ENGINEERING RELEASE

REV _____ DATE _____

ERO _____

SIGNATURE	DATE
PROJ DIR NA	
QA MGR NA	
INDEPENDENT SAFETY MGR NA	
PROJECT MGR NA	
SYSTEMS MGR NA	
ENGINEERING MGR NA	
SUPERVISOR C. DIVONA	11-3-92
DESIGN ENGINEER R. CHOATE	11-3-92
CHECKED E. GARCIA	~~7-25-93~~ 11-2-92
DRAWN L.C.SANVICTORES	05/07/92

U.S.DEPARTMENT OF ENERGY

Richland Field Office

DE – AC06–86RL10838

FLUOR DANIEL, INC.
ADVANCED TECHNOLOGY DIVISION

TU–130–001
TU–130–002
CANISTER CENTERING GUIDE ASSEMBLY

PROJECT TITLE: **HANFORD WASTE VITRIFICATION PLANT**

PROJECT	FLUOR CONTRACT NO.	CWBS NO.
B–595	8457	P06B
SCALE	**BLDG NO.**	**INDEX NO.**
1/1	1	

CLASSIFICATION	BY	DRAWING NUMBER	SHEET	OF	REV
NONE	NOT REQD	H–2–120427	1	4	0

G INDEX

DISTRIBUTION CODE: 403

M253 ACAD

INITIALS: PN

DATE: 03–16–93

APR 8 - 1993

QUALITY LEVEL II

SAFETY CLASS 3

REV NO.	DATE	REVISION DESCRIPTION	APPROVAL INITIALS			
0	04/06/93	APPROVED FOR CONSTRUCTION	EG	RC	CD	NA / NA
			NA	NA	NA	NA

CADFILE B120427B CADCODE 2B:IBM:ACD2:12.C1:SS

ENGINEERING RELEASE

REV _____ DATE _____

ERO _____

SIGNATURE	DATE
PROJ DIR NA	
QA MGR NA	
INDEPENDENT SAFETY MGR NA	
PROJECT MGR NA	
SYSTEMS MGR NA	
ENGINEERING MGR NA	
SUPERVISOR C. DIVONA	11-3-92
DESIGN ENGINEER R. CHOATE	11-3-92
CHECKED E. GARCIA	11-2-92
DRAWN L.C.SANVICTORES	05/07/92

U.S.DEPARTMENT OF ENERGY

Richland Field Office

DE – AC06–86RL10838

FLUOR DANIEL, INC.

ADVANCED TECHNOLOGY DIVISION

TU–130–001
TU–130–002
CANISTER CENTERING GUIDE ASSEMBLY

PROJECT TITLE: HANFORD WASTE VITRIFICATION PLANT

PROJECT	FLUOR CONTRACT NO.	CWBS NO.
B–595	8457	P06B
SCALE 1/1	BLDG NO. 1	INDEX NO.

CLASSIFICATION	BY	DRAWING NUMBER	SHEET	OF	REV
NONE	NOT REQD	H–2–120427	2	4	0

INDEX

DISTRIBUTION CODE: 403

M254 ACAD

INITIALS: PN

DATE: 03–16–93

APR 8 - 1993

QUALITY LEVEL II

SAFETY CLASS 3

REV NO.	DATE	REVISION DESCRIPTION	EG	RC	CD	
0	04/06/93	APPROVED FOR CONSTRUCTION	EG	RC	CD	NA / NA
			NA	NA	NA	NA

B

CADFILE	B120427C
CADCODE	2B:IBM:ACD2:12.C1:SS

ENGINEERING RELEASE

REV _____ DATE _____

ERO _____

SIGNATURE	DATE
PROJ DIR NA	
QA MGR NA	
INDEPENDENT SAFETY MGR NA	
PROJECT MGR NA	
SYSTEMS MGR NA	
ENGINEERING MGR NA	
SUPERVISOR C. DIVONA	11-3-92
DESIGN ENGINEER R. CHOATE	11-3-92
CHECKED E. GARCIA	11-2-92
DRAWN L.C. SANVICTORES	05/07/92

U.S.DEPARTMENT OF ENERGY

Richland Field Office

DE – AC06-86RL10838

FLUOR DANIEL, INC.
ADVANCED TECHNOLOGY DIVISION

TU-130-001
TU-130-002
CANISTER CENTERING GUIDE DETAILS

A

PROJECT TITLE: HANFORD WASTE VITRIFICATION PLANT

PROJECT	FLUOR CONTRACT NO.	CWBS NO.
B-595	8457	P06B
SCALE: SHOWN	BLDG NO.: 1	INDEX NO.

CLASSIFICATION	BY	DRAWING NUMBER	SHEET	OF	REV
NONE	NOT REQD	H-2-120427	3	4	0

IG INDEX

2 1

DISTRIBUTION CODE: 403

M255 ACAD

INITIALS: PN

DATE: 03-16-93

APR 8 - 1993

QUALITY LEVEL II

SAFETY CLASS 3

REV NO.	DATE	REVISION DESCRIPTION	EG	RC	CD	
0	04/06/93	APPROVED FOR CONSTRUCTION	EG	RC	CD	NA / NA
			NA	NA	NA	NA

CADFILE B120427D CADCODE 2B:IBM:ACD2:12.C1:SS

ENGINEERING RELEASE

REV _____ DATE _____

ERO _____

SIGNATURE	DATE
PROJ DIR NA	
QA MGR NA	
INDEPENDENT SAFETY MGR NA	
PROJECT MGR NA	
SYSTEMS MGR NA	
ENGINEERING MGR NA	
SUPERVISOR C. DIVONA	11-3-92
DESIGN ENGINEER R. CHOATE	11-3-92
CHECKED E. GARCIA	11-2-92
DRAWN L.C. SANVICTORES	05/07/92

U.S.DEPARTMENT OF ENERGY

Richland Field Office

DE – AC06–86RL10838

FLUOR DANIEL, INC.
ADVANCED TECHNOLOGY DIVISION

TU–130–001
TU–130–002
CANISTER CENTERING GUIDE DETAILS

PROJECT TITLE: HANFORD WASTE VITRIFICATION PLANT

PROJECT	FLUOR CONTRACT NO.	CWBS NO.
B–595	8457	P06B
SCALE	BLDG NO.	INDEX NO.
1/1	1	

CLASSIFICATION	BY	DRAWING NUMBER	SHEET	OF	REV
NONE	NOT REQD	H–2–120427	4	4	0

NG INDEX

DISTRIBUTION CODE: 403

M256 ACAD

INITIALS: PN

DATE: 03–16–93

ATIONS B-595-P-P06B-14601 AND B-595-P-P06B-14602.

QUALITY LEVEL II
SAFETY CLASS 3

APR 8 - 1993

REV NO.	DATE	REVISION DESCRIPTION	EG	RC	CD	
0	04/06/93	APPROVED FOR CONSTRUCTION	EG	RC	CD	NA NA
			NA	NA	NA	NA

CADFILE	B120428A	CADCODE	2B:IBM:ACD2:12.C1:SS

ENGINEERING RELEASE
REV _____ DATE _____
ERO _____

SIGNATURE	DATE
PROJ DIR NA	
QA MGR NA	
INDEPENDENT SAFETY MGR NA	
PROJECT MGR NA	
SYSTEMS MGR NA	
ENGINEERING MGR NA	
SUPERVISOR C. DIVONA	11-3-92
DESIGN ENGINEER R. CHOATE	11-3-92
CHECKED E. GARCIA	11-2-92
DRAWN BOB HUSTON	7/23/91

U.S.DEPARTMENT OF ENERGY
Richland Field Office
DE - AC06-86RL10838

FLUOR DANIEL, INC.
ADVANCED TECHNOLOGY DIVISION

TU-130-001
TU-130-002
SCALE PLATFORM ASSEMBLY

PROJECT TITLE
HANFORD WASTE VITRIFICATION PLANT

PROJECT	FLUOR CONTRACT NO.	CWBS NO.
B-595	8457	P06B
SCALE 1/4	BLDG NO. 1	INDEX NO.

CLASSIFICATION	BY	DRAWING NUMBER	SHEET	OF	REV
NONE	NOT REQD	H-2-120428	1	4	0

NG INDEX

A F C
77 78 79 80

DISTRIBUTION CODE: 403

M257 ACAD

INITIALS: PN
DATE: 03-16-93

QUALITY LEVEL II

SAFETY CLASS 3

APR 8 - 1993

REV NO.	DATE	REVISION DESCRIPTION	APPROVAL INITIALS			
0	04/06/93	APPROVED FOR CONSTRUCTION	EG	RC	CD	NA / NA
			NA	NA	NA	NA

CADFILE	B120428B	CADCODE	2B:IBM:ACD2:12.C1:SS

ENGINEERING RELEASE

REV _____ DATE _____

ERO _____

SIGNATURE	DATE
PROJ DIR NA	
QA MGR NA	
INDEPENDENT SAFETY MGR NA	
PROJECT MGR NA	
SYSTEMS MGR NA	
ENGINEERING MGR NA	
SUPERVISOR C. DIVONA	11-3-92
DESIGN ENGINEER R. CHOATE	11-3-92
CHECKED E. GARCIA	11-2-92
DRAWN BOB HUSTON	7/16/91

U.S. DEPARTMENT OF ENERGY

Richland Field Office

DE – AC06-86RL10838

FLUOR DANIEL, INC.
ADVANCED TECHNOLOGY DIVISION

TU-130-001
TU-130-002
SCALE PLATFORM WELDMENT

PROJECT TITLE: HANFORD WASTE VITRIFICATION PLANT

PROJECT	FLUOR CONTRACT NO.	CWBS NO.
B-595	8457	P06B
SCALE 1/4	BLDG NO. 1	INDEX NO.

CLASSIFICATION	BY	DRAWING NUMBER	SHEET	OF	REV
NONE	NOT REQD	H-2-120428	2	4	0

G INDEX

DISTRIBUTION CODE: 403

M258 ACAD

INITIALS: PN

DATE: 03-16-93

APR 8 - 1993

QUALITY LEVEL II
SAFETY CLASS 3

REV NO.	DATE	REVISION DESCRIPTION	EG	RC	CD	
0	04/06/93	APPROVED FOR CONSTRUCTION	EG	RC	CD	NA NA
			NA	NA	NA	NA

CADFILE	B120428C	CADCODE	2B:IBM:ACD2:12.C1:SS

ENGINEERING RELEASE
REV _____ DATE _____
ERO _____

SIGNATURE	DATE
PROJ DIR NA	
QA MGR NA	
INDEPENDENT SAFETY MGR NA	
PROJECT MGR NA	
SYSTEMS MGR NA	
ENGINEERING MGR NA	
SUPERVISOR C. DIVONA CJD	11-3-92
DESIGN ENGINEER R. CHOATE RBC	11-3-92
CHECKED E. GARCIA EG RBC 3-25-93	11-2-92
DRAWN BOB HUSTON	7/16/91

U.S. DEPARTMENT OF ENERGY
Richland Field Office
DE – AC06-86RL10838

FLUOR DANIEL, INC.
ADVANCED TECHNOLOGY DIVISION

TU-130-001
TU-130-002
SCALE PLATFORM RAILS

PROJECT TITLE
HANFORD WASTE VITRIFICATION PLANT

PROJECT	FLUOR CONTRACT NO.	CWBS NO.
B-595	8457	P06B
SCALE	BLDG NO.	INDEX NO.
SHOWN	1	

CLASSIFICATION	BY	DRAWING NUMBER	SHEET	OF	REV
NONE	NOT REQD	H-2-120428	3	4	0

INDEX

DISTRIBUTION CODE: 403

M259 ACAD

INITIALS: PN
DATE: 03-16-93

QUALITY LEVEL II

SAFETY CLASS 3

APR 8 - 1993

REV NO.	DATE	REVISION DESCRIPTION	APPROVAL INITIALS			
0	04/06/93	APPROVED FOR CONSTRUCTION	EG	RC	CD	NA / NA
			NA	NA	NA	NA

CADFILE	B120428D	CADCODE	2B:IBM:ACD2:12.C1:SS

ENGINEERING RELEASE

REV _____ DATE _____

ERO _____

SIGNATURE	DATE
PROJ DIR NA	
QA MGR NA	
INDEPENDENT SAFETY MGR NA	
PROJECT MGR NA	
SYSTEMS MGR NA	
ENGINEERING MGR NA	
SUPERVISOR C. DIVONA	11-3-92
DESIGN ENGINEER R. CHOATE	11-3-92
CHECKED E. GARCIA	11-2-92
DRAWN JOHN HUSTON	7/16/91

U.S.DEPARTMENT OF ENERGY

Richland Field Office

DE – AC06–86RL10838

FLUOR DANIEL, INC.

ADVANCED TECHNOLOGY DIVISION

TU–130–001
TU–130–002
SCALE PLATFORM DETAILS

PROJECT TITLE: HANFORD WASTE VITRIFICATION PLANT

PROJECT	FLUOR CONTRACT NO.	CWBS NO.
B–595	8457	P06B
SCALE: SHOWN	BLDG NO.: 1	INDEX NO.:

CLASSIFICATION	BY	DRAWING NUMBER	SHEET	OF	REV
NONE	NOT REQD	H–2–120428	4	4	0

G INDEX

DISTRIBUTION CODE: 403

M260 ACAD

INITIALS: PN

DATE: 03–16–93

APR 8 - 1993

QUALITY LEVEL II
SAFETY CLASS 3

REV NO.	DATE	REVISION DESCRIPTION	EG	RC	CD	
0	04/06/93	APPROVED FOR CONSTRUCTION	EG	RC	CD	NA NA
			NA	NA	NA	NA

CADFILE	B120429A
CADCODE	2B:IBM:ACD2:12.C1:SS

ENGINEERING RELEASE

REV _____ DATE _____

ERO _____

SIGNATURE	DATE
PROJ DIR NA	
QA MGR NA	
INDEPENDENT SAFETY MGR NA	
PROJECT MGR NA	
SYSTEMS MGR NA	
ENGINEERING MGR NA	
SUPERVISOR C. DIVONA	11-3-92
DESIGN ENGINEER R. CHOATE	11-3-92
CHECKED E. GARCIA	11-2-92
DRAWN J.SACHS	7/30/91

U.S.DEPARTMENT OF ENERGY

Richland Field Office

DE – AC06–86RL10838

FLUOR DANIEL, INC.
ADVANCED TECHNOLOGY DIVISION

TU–130–001
TU–130–002
SCALE ASSEMBLY

PROJECT TITLE: **HANFORD WASTE VITRIFICATION PLANT**

PROJECT	FLUOR CONTRACT NO.	CWBS NO.
B–595	8457	P06B
SCALE	**BLDG NO.**	**INDEX NO.**
NONE	1	

CLASSIFICATION	BY	DRAWING NUMBER	SHEET	OF	REV
NONE	NOT REQD	H–2–120429	1	11	0

G INDEX

DISTRIBUTION CODE: 403

M261 ACAD

INITIALS: PN

DATE: 03–16–93

QUALITY LEVEL II

SAFETY CLASS 3

APR 8 - 1993

REV NO.	DATE	REVISION DESCRIPTION	APPROVAL INITIALS			
0	04/06/93	APPROVED FOR CONSTRUCTION	EG	RC	CD	NA / NA
			NA	NA	NA	NA

CADFILE	B120429B	CADCODE	2B:IBM:ACD2:12.C1:SS

ENGINEERING RELEASE

REV _____ DATE _____

ERO _____

SIGNATURE	DATE
PROJ DIR NA	
QA MGR NA	
INDEPENDENT SAFETY MGR NA	
PROJECT MGR NA	
SYSTEMS MGR NA	
ENGINEERING MGR NA	
SUPERVISOR C. DIVONA	11-3-92
DESIGN ENGINEER R. CHOATE	11-3-92
CHECKED E. GARCIA	11-2-92
DRAWN J.SACHS	8/6/91

U.S.DEPARTMENT OF ENERGY

Richland Field Office

DE - AC06-86RL10838

FLUOR DANIEL, INC.

ADVANCED TECHNOLOGY DIVISION

TU-130-001
TU-130-002
SCALE ASSEMBLY

PROJECT TITLE: HANFORD WASTE VITRIFICATION PLANT

PROJECT	FLUOR CONTRACT NO.	CWBS NO.
B-595	8457	P06B
SCALE 1/4	BLDG NO. 1	INDEX NO.

CLASSIFICATION	BY	DRAWING NUMBER	SHEET	OF	REV
NONE	NOT REQD	H-2-120429	2	11	0

INDEX

DISTRIBUTION CODE: 403

M262 ACAD

INITIALS: PN

DATE: 03-16-93

QUALITY LEVEL II

SAFETY CLASS 3

APR 8 - 1993

REV NO.	DATE	REVISION DESCRIPTION	APPROVAL INITIALS			
0	04/06/93	APPROVED FOR CONSTRUCTION	EG	RC	CD	NA NA
			NA	NA	NA	NA

CADFILE	B120429C	CADCODE	2B:IBM:ACD2:12.C1:SS

ENGINEERING RELEASE

REV _____ DATE _____

ERO _____

SIGNATURE	DATE
PROJ DIR NA	
QA MGR NA	
INDEPENDENT SAFETY MGR NA	
PROJECT MGR NA	
SYSTEMS MGR NA	
ENGINEERING MGR NA	
SUPERVISOR C. DIVONA	11-3-92
DESIGN ENGINEER R. CHOATE	11-3-92
CHECKED E. GARCIA	11-2-92
DRAWN J.SACHS	7/22/91

U.S.DEPARTMENT OF ENERGY

Richland Field Office

DE - AC06-86RL10838

FLUOR DANIEL, INC.
ADVANCED TECHNOLOGY DIVISION

TU-130-001
TU-130-002
SCALE ASSEMBLY
BASE WELDMENT

PROJECT TITLE: HANFORD WASTE VITRIFICATION PLANT

PROJECT	FLUOR CONTRACT NO.	CWBS NO.
B-595	8457	P06B
SCALE: SHOWN	BLDG NO.: 1	INDEX NO.

CLASSIFICATION	BY	DRAWING NUMBER	SHEET	OF	REV
NONE	NOT REQD	H-2-120429	3	11	0

INDEX

B

A

2 1

DISTRIBUTION CODE: 403

M263 ACAD

INITIALS: PN

DATE: 03-16-93

QUALITY LEVEL II

SAFETY CLASS 3

APR 8 - 1993

REV NO.	DATE	REVISION DESCRIPTION	APPROVAL INITIALS			
0	04/06/93	APPROVED FOR CONSTRUCTION	EG	RC	CD	NA / NA
			NA	NA	NA	NA

CADFILE B120429D CADCODE 2B:IBM:ACD2:12.C1:SS

ENGINEERING RELEASE

REV _____ DATE _____

ERO _____

SIGNATURE	DATE
PROJ DIR NA	
QA MGR NA	
INDEPENDENT SAFETY MGR NA	
PROJECT MGR NA	
SYSTEMS MGR NA	
ENGINEERING MGR NA	
SUPERVISOR C. DIVONA	11-3-92
DESIGN ENGINEER R. CHOATE	11-3-92
CHECKED E. GARCIA	11-2-92
DRAWN J.SACHS	7/23/91

U.S.DEPARTMENT OF ENERGY

Richland Field Office

DE – AC06-86RL10838

FLUOR DANIEL, INC.

ADVANCED TECHNOLOGY DIVISION

TU-130-001

TU-130-002

SCALE ASSEMBLY

BASE WELDMENT

PROJECT TITLE

HANFORD WASTE VITRIFICATION PLANT

PROJECT	FLUOR CONTRACT NO.	CWBS NO.
B-595	8457	P06B
SCALE 1/4	BLDG NO. 1	INDEX NO.

CLASSIFICATION	BY	DRAWING NUMBER	SHEET	OF	REV
NONE	NOT REQD	H-2-120429	4	11	0

IG INDEX

DISTRIBUTION CODE: 403

M264 ACAD

INITIALS: PN

DATE: 03-16-93

QUALITY LEVEL II

SAFETY CLASS 3

APR 8 - 1993

REV NO.	DATE	REVISION DESCRIPTION	APPROVAL INITIALS			
0	04/06/93	APPROVED FOR CONSTRUCTION	EG	RC	CD	NA / NA
			NA	NA	NA	NA

CADFILE	B120429E	CADCODE	2B:IBM:ACD2:12.C1:SS

ENGINEERING RELEASE

REV _____ DATE _____

ERO _____

SIGNATURE	DATE
PROJ DIR NA	
QA MGR NA	
INDEPENDENT SAFETY MGR NA	
PROJECT MGR NA	
SYSTEMS MGR NA	
ENGINEERING MGR NA	
SUPERVISOR C. DIVONA	11-3-92
DESIGN ENGINEER R. CHOATE	11-3-92
CHECKED E. GARCIA	~~3-31-93~~ 11-2-92
DRAWN J.SACHS	6/25/91

U.S.DEPARTMENT OF ENERGY

Richland Field Office

DE – AC06–86RL10838

FLUOR DANIEL, INC.

ADVANCED TECHNOLOGY DIVISION

TU–130–001
TU–130–002
SCALE ASSEMBLY
BASE WELDMENT

PROJECT TITLE: HANFORD WASTE VITRIFICATION PLANT

PROJECT	FLUOR CONTRACT NO.	CWBS NO.
B–595	8457	P06B
SCALE 1/2	BLDG NO. 1	INDEX NO.

CLASSIFICATION	BY	DRAWING NUMBER	SHEET	OF	REV
NONE	NOT REQD	H–2–120429	5	11	0

INDEX

DISTRIBUTION CODE: 403

M265 ACAD

INITIALS: PN

DATE: 03–16–93

APR 8 - 1993

QUALITY LEVEL II
SAFETY CLASS 3

REV NO.	DATE	REVISION DESCRIPTION	APPROVAL INITIALS			
0	04/06/93	APPROVED FOR CONSTRUCTION	EG	RC	CD	NA / NA
			NA	NA	NA	NA

CADFILE	B120429F	CADCODE	2B:IBM:ACD2:12.C1:SS

ENGINEERING RELEASE
REV _____ DATE _____
ERO _____

SIGNATURE	DATE
PROJ DIR NA	
QA MGR NA	
INDEPENDENT SAFETY MGR NA	
PROJECT MGR NA	
SYSTEMS MGR NA	
ENGINEERING MGR NA	
SUPERVISOR C. DIVONA	11-3-92
DESIGN ENGINEER R. CHOATE	11-3-92
CHECKED E. GARCIA	11-2-92
DRAWN J.SACHS	7/3/91

U.S.DEPARTMENT OF ENERGY
Richland Field Office
DE - AC06-86RL10838

FLUOR DANIEL, INC.
ADVANCED TECHNOLOGY DIVISION

TU-130-001
TU-130-002
SCALE ASSEMBLY
BASE WELDMENT

PROJECT TITLE
HANFORD WASTE VITRIFICATION PLANT

PROJECT	FLUOR CONTRACT NO.	CWBS NO.
B-595	8457	P06B
SCALE 1/2	BLDG NO. 1	INDEX NO.

CLASSIFICATION	BY	DRAWING NUMBER	SHEET	OF	REV
NONE	NOT REQD	H-2-120429	6	11	0

INDEX

DISTRIBUTION CODE: 403

M266 ACAD

INITIALS: PN
DATE: 03-16-93

QUALITY LEVEL II

SAFETY CLASS 3

APR 8 - 1993

REV NO.	DATE	REVISION DESCRIPTION	EG	RC	CD	
0	04/06/93	APPROVED FOR CONSTRUCTION	EG	RC	CD	NA NA
			NA	NA	NA	NA

CADFILE B120429G CADCODE 2B:IBM:ACD2:12.C1:SS

ENGINEERING RELEASE

REV _____ DATE _____

ERO _____

SIGNATURE	DATE
PROJ DIR NA	
QA MGR NA	
INDEPENDENT SAFETY MGR NA	
PROJECT MGR NA	
SYSTEMS MGR NA	
ENGINEERING MGR NA	
SUPERVISOR C. DIVONA	11-3-92
DESIGN ENGINEER R. CHOATE	11-3-92
CHECKED E. GARCIA	11-2-92
DRAWN J. SACHS	7/10/91

U.S.DEPARTMENT OF ENERGY

Richland Field Office

DE – AC06-86RL10838

FLUOR DANIEL, INC.
ADVANCED TECHNOLOGY DIVISION

TU-130-001
TU-130-002
SCALE ASSEMBLY
BASE WELDMENT

PROJECT TITLE: HANFORD WASTE VITRIFICATION PLANT

PROJECT	FLUOR CONTRACT NO.	CWBS NO.
B-595	8457	P06B
SCALE 1/4	BLDG NO. 1	INDEX NO.

CLASSIFICATION	BY	DRAWING NUMBER	SHEET	OF	REV
NONE	NOT REQD	H-2-120429	7	11	0

INDEX

DISTRIBUTION CODE: 403

M267 ACAD

INITIALS: PN

DATE: 03-16-93

QUALITY LEVEL II
SAFETY CLASS 3

APR 8 - 1993

REV NO.	DATE	REVISION DESCRIPTION	EG	RC	CD	
0	04/06/93	APPROVED FOR CONSTRUCTION	EG	RC	CD	NA / NA
			NA	NA	NA	NA

APPROVAL INITIALS

CADFILE B120429H CADCODE 2B:IBM:ACD2:12.C1:SS

ENGINEERING RELEASE
REV _____ DATE _____
ERO _____

SIGNATURE	DATE
PROJ DIR NA	
QA MGR NA	
INDEPENDENT SAFETY MGR NA	
PROJECT MGR NA	
SYSTEMS MGR NA	
ENGINEERING MGR NA	
SUPERVISOR C. DIVONA	11-3-92
DESIGN ENGINEER R. CHOATE	11-3-92
CHECKED E. GARCIA	11-2-92
DRAWN J. SACHS	7/2/91

U.S. DEPARTMENT OF ENERGY

Richland Field Office
DE - AC06-86RL10838

FLUOR DANIEL, INC.
ADVANCED TECHNOLOGY DIVISION

TU-130-001
TU-130-002
SCALE ASSEMBLY DETAILS

PROJECT TITLE: HANFORD WASTE VITRIFICATION PLANT

PROJECT	FLUOR CONTRACT NO.	CWBS NO.
B-595	8457	P06B
SCALE: SHOWN	BLDG NO.: 1	INDEX NO.:

CLASSIFICATION	BY	DRAWING NUMBER	SHEET	OF	REV
NONE	NOT REQD	H-2-120429	8	11	0

G INDEX

DISTRIBUTION CODE: 403

M268 ACAD

INITIALS: PN
DATE: 03-16-93

QUALITY LEVEL II

SAFETY CLASS 3

APR 8 - 1993

REV NO.	DATE	REVISION DESCRIPTION	EG	RC	CD	
0	04/06/93	APPROVED FOR CONSTRUCTION	EG	RC	CD	NA NA
			NA	NA	NA	NA

CADFILE B120429J CADCODE 2B:IBM:ACD2:12.C1:SS

ENGINEERING RELEASE

REV _____ DATE _____

ERO _____

SIGNATURE	DATE
PROJ DIR NA	
QA MGR NA	
INDEPENDENT SAFETY MGR NA	
PROJECT MGR NA	
SYSTEMS MGR NA	
ENGINEERING MGR NA	
SUPERVISOR C. DIVONA	11-3-92
DESIGN ENGINEER R. CHOATE	11-3-92
CHECKED E. GARCIA	11-2-92
DRAWN J.SACHS	7/8/91

U.S.DEPARTMENT OF ENERGY

Richland Field Office

DE - AC06-86RL10838

FLUOR DANIEL, INC.
ADVANCED TECHNOLOGY DIVISION

TU-130-001
TU-130-002
SCALE ASSEMBLY DETAILS

PROJECT TITLE: HANFORD WASTE VITRIFICATION PLANT

PROJECT	FLUOR CONTRACT NO.	CWBS NO.
B-595	8457	P06B
SCALE: SHOWN	BLDG NO.: 1	INDEX NO.

CLASSIFICATION	BY	DRAWING NUMBER	SHEET	OF	REV
NONE	NOT REQD	H-2-120429	9	11	0

INDEX

DISTRIBUTION CODE: 403

M269 ACAD

INITIALS: PN

DATE: 03-16-93

QUALITY LEVEL II

SAFETY CLASS 3

APR 8 - 1993

REV NO.	DATE	REVISION DESCRIPTION	EG	RC	CD	
0	04/06/93	APPROVED FOR CONSTRUCTION	EG	RC	CD	NA / NA
			NA	NA	NA	NA

CADFILE	B120429K	CADCODE	2B:IBM:ACD2:12.C1:SS

ENGINEERING RELEASE

REV _____ DATE _____

ERO _____

SIGNATURE	DATE
PROJ DIR NA	
QA MGR NA	
INDEPENDENT SAFETY MGR NA	
PROJECT MGR NA	
SYSTEMS MGR NA	
ENGINEERING MGR NA	
SUPERVISOR C. DIVONA CJD	11-3-92
DESIGN ENGINEER R. CHOATE RBC	11-3-92
CHECKED E. GARCIA EG RBC 3-25-93	11-2-92
DRAWN J. SACHS	7/18/91

U.S. DEPARTMENT OF ENERGY

Richland Field Office

DE – AC06-86RL10838

FLUOR DANIEL, INC.
ADVANCED TECHNOLOGY DIVISION

TU-130-001
TU-130-002
SCALE ASSEMBLY DETAILS

PROJECT TITLE: **HANFORD WASTE VITRIFICATION PLANT**

PROJECT	FLUOR CONTRACT NO.	CWBS NO.
B-595	8457	P06B
SCALE 1/2	BLDG NO. 1	INDEX NO.

CLASSIFICATION	BY	DRAWING NUMBER	SHEET	OF	REV
NONE	NOT REQD	H-2-120429	10	11	0

IG INDEX

DISTRIBUTION CODE: 403

M270 ACAD

INITIALS: PN

DATE: 03-16-93

QUALITY LEVEL II
SAFETY CLASS 3

APR 8 - 1993

REV NO.	DATE	REVISION DESCRIPTION				
0	04/06/93	APPROVED FOR CONSTRUCTION	EG	RC	CD	NA / NA
			NA	NA	NA	NA

APPROVAL INITIALS

CADFILE B120429L CADCODE 2B:IBM:ACD2:12.C1:SS

ENGINEERING RELEASE
REV _____ DATE _____
ERO _____

SIGNATURE	DATE
PROJ DIR NA	
QA MGR NA	
INDEPENDENT SAFETY MGR NA	
PROJECT MGR NA	
SYSTEMS MGR NA	
ENGINEERING MGR NA	
SUPERVISOR C. DIVONA	11-3-92
DESIGN ENGINEER R. CHOATE	11-3-92
CHECKED E. GARCIA	~~3-25-93~~ 11-2-92
DRAWN J.SACHS	7-15-91

U.S.DEPARTMENT OF ENERGY

Richland Field Office
DE – AC06-86RL10838

FLUOR DANIEL, INC.
ADVANCED TECHNOLOGY DIVISION

TU-130-001
TU-130-002
SCALE ASSEMBLY DETAILS

PROJECT TITLE
HANFORD WASTE VITRIFICATION PLANT

PROJECT	FLUOR CONTRACT NO.	CWBS NO.
B-595	8457	P06B
SCALE 1/1	BLDG NO. 1	INDEX NO.

CLASSIFICATION	BY	DRAWING NUMBER	SHEET	OF	REV
NONE	NOT REQD	H-2-120429	11	11	0

INDEX

DISTRIBUTION CODE: 403 M271 ACAD

INITIALS: PN
DATE: 03-16-93

QUALITY LEVEL II

SAFETY CLASS 3

APR 8 - 1993

REV NO.	DATE	REVISION DESCRIPTION	EG	RC	CD	
0	04/06/93	APPROVED FOR CONSTRUCTION	EG	RC	CD	NA / NA
			NA	NA	NA	NA

CADFILE	B120430A	CADCODE	2B:IBM:ACD2:12.C1:SS

ENGINEERING RELEASE

REV _____ DATE _____

ERO _____

SIGNATURE	DATE
PROJ DIR NA	
QA MGR NA	
INDEPENDENT SAFETY MGR NA	
PROJECT MGR NA	
SYSTEMS MGR NA	
ENGINEERING MGR NA	
SUPERVISOR C. DIVONA	11-3-92
DESIGN ENGINEER R. CHOATE	11-3-92
CHECKED E. GARCIA	11-2-92
DRAWN JOHN H. SACHS	8-20-91

U.S.DEPARTMENT OF ENERGY

Richland Field Office

DE – AC06-86RL10838

FLUOR DANIEL, INC.
ADVANCED TECHNOLOGY DIVISION

TU-130-001
TU-130-002
LOAD CELL
PARTS LIST & NOTES

PROJECT TITLE: HANFORD WASTE VITRIFICATION PLANT

PROJECT	FLUOR CONTRACT NO.	CWBS NO.
B-595	8457	P06B
SCALE: SHOWN	BLDG NO.: 1	INDEX NO.

CLASSIFICATION	BY	DRAWING NUMBER	SHEET	OF	REV
NONE	NOT REQD	H-2-120430	1	3	0

INDEX

DISTRIBUTION CODE: 403

M272 ACAD

INITIALS: PN

DATE: 03-16-93

QUALITY LEVEL II

SAFETY CLASS 3

APR 8 - 1993

REV NO.	DATE	REVISION DESCRIPTION	EG	RC	CD	
0	04/06/93	APPROVED FOR CONSTRUCTION	EG	RC	CD	NA / NA
			NA	NA	NA	NA

CADFILE B120430B CADCODE 2B:IBM:ACD2:12.C1:SS

ENGINEERING RELEASE

REV _____ DATE _____

ERO _____

SIGNATURE	DATE
PROJ DIR NA	
QA MGR NA	
INDEPENDENT SAFETY MGR NA	
PROJECT MGR NA	
SYSTEMS MGR NA	
ENGINEERING MGR NA	
SUPERVISOR C. DIVONA	11-3-92
DESIGN ENGINEER R. CHOATE	11-3-92
CHECKED E. GARCIA	11-2-92
DRAWN JOHN H. SACHS	8-16-91

U.S.DEPARTMENT OF ENERGY

Richland Field Office

DE - AC06-86RL10838

FLUOR DANIEL, INC.

ADVANCED TECHNOLOGY DIVISION

TU-130-001
TU-130-002
LOAD CELL BASE WELDMENT

PROJECT TITLE: HANFORD WASTE VITRIFICATION PLANT

PROJECT	FLUOR CONTRACT NO.	CWBS NO.
B-595	8457	P06B
SCALE 1/2	BLDG NO. 1	INDEX NO.

CLASSIFICATION	BY	DRAWING NUMBER	SHEET	OF	REV
NONE	NOT REQD	H-2-120430	2	3	0

G INDEX

DISTRIBUTION CODE: 403

M273 ACAD

INITIALS: PN

DATE: 03-16-93

QUALITY LEVEL II
SAFETY CLASS 3

APR 8 - 1993

REV NO.	DATE	REVISION DESCRIPTION	EG	RC	CD	
0	04/06/93	APPROVED FOR CONSTRUCTION	EG	RC	CD	NA / NA
			NA	NA	NA	NA

APPROVAL INITIALS

CADFILE	B120430C	CADCODE	2B:IBM:ACD2:12.C1:SS

ENGINEERING RELEASE
REV _____ DATE _____
ERO _____

SIGNATURE	DATE
PROJ DIR NA	
QA MGR NA	
INDEPENDENT SAFETY MGR NA	
PROJECT MGR NA	
SYSTEMS MGR NA	
ENGINEERING MGR NA	
SUPERVISOR C. DIVONA	11-3-92
DESIGN ENGINEER R. CHOATE	11-3-92
CHECKED E. GARCIA	11-2-92
DRAWN JOHN H. SACHS	8-13-91

U.S.DEPARTMENT OF ENERGY
Richland Field Office
DE – AC06-86RL10838

FLUOR DANIEL, INC.
ADVANCED TECHNOLOGY DIVISION

TU-130-001
TU-130-002
LOAD CELL DETAILS

PROJECT TITLE: HANFORD WASTE VITRIFICATION PLANT

PROJECT	FLUOR CONTRACT NO.	CWBS NO.
B-595	8457	P06B
SCALE: SHOWN	BLDG NO.: 1	INDEX NO.

CLASSIFICATION	BY	DRAWING NUMBER	SHEET	OF	REV
NONE	NOT REQD	H-2-120430	3	3	0

DISTRIBUTION CODE: 403 M274 ACAD

INITIALS: PN
DATE: 03-16-93

QUALITY LEVEL II

SAFETY CLASS 3

APR 8 - 1993

REV NO.	DATE	REVISION DESCRIPTION	APPROVAL INITIALS			
0	04/06/93	APPROVED FOR CONSTRUCTION	EG	RC	CD	NA NA
			NA	NA	NA	NA

CADFILE	B120450A	CADCODE	2B:IBM:ACD2:12.C1:SS

ENGINEERING RELEASE

REV _____ DATE _____

ERO _____

SIGNATURE	DATE
PROJ DIR NA	
QA MGR NA	
INDEPENDENT SAFETY MGR NA	
PROJECT MGR NA	
SYSTEMS MGR NA	
ENGINEERING MGR NA	
SUPERVISOR C. DIVONA	11-3-92
DESIGN ENGINEER R. CHOATE	11-3-92
CHECKED E. GARCIA	~~3-25-93~~ 11-2-92
DRAWN EYBARRA	2/24/92

U.S.DEPARTMENT OF ENERGY

Richland Field Office

DE – AC06–86RL10838

FLUOR DANIEL, INC.
ADVANCED TECHNOLOGY DIVISION

TU–130–001/002 ENCLOSURE ASSEMBLIES PARTS LIST & NOTES

PROJECT TITLE: HANFORD WASTE VITRIFICATION PLANT

PROJECT	FLUOR CONTRACT NO.	CWBS NO.
B–595	8457	P06B
SCALE 1/4	BLDG NO. 1	INDEX NO.

CLASSIFICATION	BY	DRAWING NUMBER	SHEET	OF	REV
NONE	NOT REQD	H–2–120450	1	2	0

INDEX

DISTRIBUTION CODE: 403

M275 ACAD

INITIALS: PN

DATE: 03–16–93

QUALITY LEVEL II

SAFETY CLASS 3

APR 8 - 1993

REV NO.	DATE	REVISION DESCRIPTION	EG	RC	CD	
						B
0	04/06/93	APPROVED FOR CONSTRUCTION	EG	RC	CD	NA
			NA	NA	NA	NA

CADFILE B120450B CADCODE 2B:IBM:ACD2:12.C1:SS

ENGINEERING RELEASE

REV _____ DATE _____

ERO _____

SIGNATURE	DATE
PROJ DIR NA	
QA MGR NA	
INDEPENDENT SAFETY MGR NA	
PROJECT MGR NA	
SYSTEMS MGR NA	
ENGINEERING MGR NA	
SUPERVISOR C. DIVONA	11-3-92
DESIGN ENGINEER R. CHOATE	11-3-92
CHECKED E. GARCIA	11-2-92
DRAWN EYBARRA	2/24/92

U.S.DEPARTMENT OF ENERGY

Richland Field Office

DE – AC06-86RL10838

FLUOR DANIEL, INC.
ADVANCED TECHNOLOGY DIVISION

TU-130-001
TU-130-002
ENCLOSURE ASSEMBLIES

A

PROJECT TITLE: HANFORD WASTE VITRIFICATION PLANT

PROJECT	FLUOR CONTRACT NO.	CWBS NO.
B-595	8457	P06B
SCALE 1/4	BLDG NO. 1	INDEX NO.

CLASSIFICATION	BY	DRAWING NUMBER	SHEET	OF	REV
NONE	NOT REQD	H-2-120450	2	2	0

G INDEX

FC 78 79 80

DISTRIBUTION CODE: 403

M276 ACAD

INITIALS: PN

DATE: 03-16-93

QUALITY LEVEL II

SAFETY CLASS 3

APR 8 - 1993

REV NO.	DATE	REVISION DESCRIPTION	EG	RC	CD	
0	04/06/93	APPROVED FOR CONSTRUCTION	EG	RC	CD	NA / NA
			NA	NA	NA	NA

CADFILE	B120451A	CADCODE	2B:IBM:ACD2:12.C1:SS

ENGINEERING RELEASE

REV _____ DATE _____

ERO _____

SIGNATURE	DATE
PROJ DIR NA	
QA MGR NA	
INDEPENDENT SAFETY MGR NA	
PROJECT MGR NA	
SYSTEMS MGR NA	
ENGINEERING MGR NA	
SUPERVISOR C. DIVONA	11-3-92
DESIGN ENGINEER R. CHOATE	11-3-92
CHECKED E. GARCIA	11-2-92
DRAWN L. TOTH	03/12/92

U.S.DEPARTMENT OF ENERGY

Richland Field Office

DE – AC06–86RL10838

FLUOR DANIEL, INC.
ADVANCED TECHNOLOGY DIVISION

TU–130–001
TU–130–002
FLEXIBLE METAL HOSE ASSY PARTS LIST AND NOTES

PROJECT TITLE: HANFORD WASTE VITRIFICATION PLANT

PROJECT	FLUOR CONTRACT NO.	CWBS NO.
B–595	8457	P06B
SCALE: SHOWN	BLDG NO.: 1	INDEX NO.:

CLASSIFICATION	BY	DRAWING NUMBER	SHEET	OF	REV
NONE	NOT REQD	H–2–120451	1	1	0

INDEX

B

A

2 1

C 79 80

DISTRIBUTION CODE: 403

M277 ACAD

INITIALS: PN

DATE: 03–16–93

QUALITY LEVEL II

SAFETY CLASS 3

APR 8 - 1993

REV NO.	DATE	REVISION DESCRIPTION				
0	04/06/93	APPROVED FOR CONSTRUCTION	EG	RC	CD	NA / NA
			NA	NA	NA	NA

CADFILE	B120452A	CADCODE	2B:IBM:ACD2:12.C1:SS

ENGINEERING RELEASE

REV _____ DATE _____

ERO _____

SIGNATURE	DATE
PROJ DIR NA	
QA MGR NA	
INDEPENDENT SAFETY MGR NA	
PROJECT MGR NA	
SYSTEMS MGR NA	
ENGINEERING MGR NA	
SUPERVISOR C. DIVONA	11-3-92
DESIGN ENGINEER R. CHOATE	11-3-92
CHECKED E. GARCIA	11-2-92
DRAWN R. LaLONDE	05/08/92

U.S. DEPARTMENT OF ENERGY

Richland Field Office

DE – AC06-86RL10838

FLUOR DANIEL, INC.
ADVANCED TECHNOLOGY DIVISION

TU-130-001 SUPPORT STRUCTURE ASSEMBLY

PROJECT TITLE: HANFORD WASTE VITRIFICATION PLANT

PROJECT	FLUOR CONTRACT NO.	CWBS NO.
B-595	8457	P06B
SCALE: SHOWN	BLDG NO.: 1	INDEX NO.

CLASSIFICATION	BY	DRAWING NUMBER	SHEET	OF	REV
NONE	NOT REQD	H-2-120452	1	4	0

INDEX

DISTRIBUTION CODE: 403

M278 ACAD

INITIALS: PN

DATE: 03-16-93

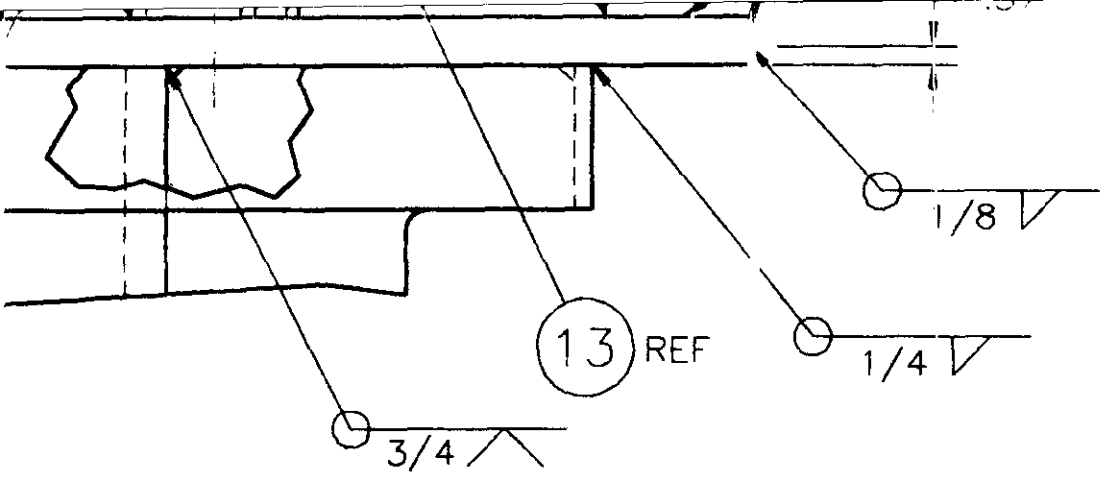

QUALITY LEVEL II

SAFETY CLASS 3

APR 8 - 1993

REV NO.	DATE	REVISION DESCRIPTION	APPROVAL INITIALS			
0	04/06/93	APPROVED FOR CONSTRUCTION	EG	RC	CD	NA / NA
			NA	NA	NA	NA

CADFILE B120452B CADCODE 2B:IBM:ACD2:12.C1:SS

ENGINEERING RELEASE

REV _____ DATE _____

ERO _____

SIGNATURE	DATE
PROJ DIR NA	
QA MGR NA	
INDEPENDENT SAFETY MGR NA	
PROJECT MGR NA	
SYSTEMS MGR NA	
ENGINEERING MGR NA	
SUPERVISOR C. DIVONA	11-3-92
DESIGN ENGINEER R. CHOATE	11-3-92
CHECKED E. GARCIA	11-2-92
DRAWN R. LaLONDE	05/08/92

U.S. DEPARTMENT OF ENERGY

Richland Field Office

DE - AC06-86RL10838

FLUOR DANIEL, INC.
ADVANCED TECHNOLOGY DIVISION

TU-130-001 SUPPORT STRUCTURE DETAILS

PROJECT TITLE: HANFORD WASTE VITRIFICATION PLANT

PROJECT	FLUOR CONTRACT NO.	CWBS NO.
B-595	8457	P06B
SCALE 1/8	BLDG NO. 1	INDEX NO.

CLASSIFICATION	BY	DRAWING NUMBER	SHEET	OF	REV
NONE	NOT REQD	H-2-120452	2	4	0

INDEX

DISTRIBUTION CODE: 403

M279 ACAD

INITIALS: PN

DATE: 03-16-93

QUALITY LEVEL II

SAFETY CLASS 3

APR 8 - 1993

REV NO.	DATE	REVISION DESCRIPTION				
0	07/06/93	APPROVED FOR CONSTRUCTION	EG	RC	CD	NA NA
			NA	NA	NA	NA

APPROVAL INITIALS

CADFILE B120452C CADCODE 2B:IBM:ACD2:12.C1:SS

ENGINEERING RELEASE

REV _____ DATE _____

ERO _____

SIGNATURE	DATE
PROJ DIR NA	
QA MGR NA	
INDEPENDENT SAFETY MGR NA	
PROJECT MGR NA	
SYSTEMS MGR NA	
ENGINEERING MGR NA	
SUPERVISOR C. DIVONA	11-3-92
DESIGN ENGINEER R. CHOATE	11-3-92
CHECKED E. GARCIA	~~3-25-93~~ 11-2-92
DRAWN R. LaLONDE	05/08/92

U.S.DEPARTMENT OF ENERGY

Richland Field Office

DE – AC06–86RL10838

FLUOR DANIEL, INC.
ADVANCED TECHNOLOGY DIVISION

TU–130–001 SUPPORT STRUCTURE DETAILS

PROJECT TITLE: HANFORD WASTE VITRIFICATION PLANT

PROJECT	FLUOR CONTRACT NO.	CWBS NO.
B–595	8457	P06B
SCALE: SHOWN	BLDG NO.: 1	INDEX NO.:

CLASSIFICATION	BY	DRAWING NUMBER	SHEET	OF	REV
NONE	NOT REQD	H–2–120452	3	4	0

G INDEX

DISTRIBUTION CODE: 403

M280 ACAD

INITIALS: PN

DATE: 03–16–93

QUALITY LEVEL II

SAFETY CLASS 3

APR 8 - 1993

REV NO.	DATE	REVISION DESCRIPTION	APPROVAL INITIALS			
0	04/06/93	APPROVED FOR CONSTRUCTION	EG	RC	CD	NA NA
			NA	NA	NA	NA

CADFILE B120452D CADCODE 2B:IBM:ACD2:12.C1:SS

ENGINEERING RELEASE

REV _____ DATE _____

ERO _____

SIGNATURE	DATE
PROJ DIR NA	
QA MGR NA	
INDEPENDENT SAFETY MGR NA	
PROJECT MGR NA	
SYSTEMS MGR NA	
ENGINEERING MGR NA	
SUPERVISOR C. DIVONA	11-3-92
DESIGN ENGINEER R. CHOATE	11-3-92
CHECKED E. GARCIA	11-2-92
DRAWN R. LaLONDE	05/09/92

U.S.DEPARTMENT OF ENERGY

Richland Field Office

DE – AC06-86RL10838

FLUOR DANIEL, INC.
ADVANCED TECHNOLOGY DIVISION

TU-130-001 SUPPORT STRUCTURE DETAILS

PROJECT TITLE: HANFORD WASTE VITRIFICATION PLANT

PROJECT	FLUOR CONTRACT NO.	CWBS NO.
B-595	8457	P060B
SCALE: SHOWN	BLDG NO. 1	INDEX NO.

CLASSIFICATION	BY	DRAWING NUMBER	SHEET	OF	REV
NONE	NOT REQD	H-2-120452	4	4	0

G INDEX

DISTRIBUTION CODE: 403

M281 ACAD

INITIALS: PN

DATE: 03-16-93

QUALITY LEVEL II

SAFETY CLASS 3

APR 8 - 1993

REV NO.	DATE	REVISION DESCRIPTION				
0	04/06/93	APPROVED FOR CONSTRUCTION	EG	RC	CD	NA / NA
			NA	NA	NA	NA

CADFILE	B120460A	CADCODE	2B:IBM:ACD2:12.C1:SS

ENGINEERING RELEASE

REV _____ DATE _____

ERO _____

SIGNATURE	DATE
PROJ DIR NA	
QA MGR NA	
INDEPENDENT SAFETY MGR NA	
PROJECT MGR NA	
SYSTEMS MGR NA	
ENGINEERING MGR NA	
SUPERVISOR C. DIVONA	11-3-92
DESIGN ENGINEER R. CHOATE	11-3-92
CHECKED E. GARCIA	~~7-25-93~~ 11-2-92
DRAWN P. ASHLEY	04/09/92

U.S. DEPARTMENT OF ENERGY

Richland Field Office

DE – AC06–86RL10838

FLUOR DANIEL, INC.
ADVANCED TECHNOLOGY DIVISION

TU–130–001 PTT DIMENSIONAL RECORD DRAWING

PROJECT TITLE: HANFORD WASTE VITRIFICATION PLANT

PROJECT	FLUOR CONTRACT NO.	CWBS NO.
B–595	8457	P06B
SCALE	**BLDG NO.**	**INDEX NO.**
NONE	1	

CLASSIFICATION	BY	DRAWING NUMBER	SHEET	OF	REV
NONE	NOT REQD	H–2–120460	1	3	0

INDEX

DISTRIBUTION CODE: 403

M282 ACAD

INITIALS: PN

DATE: 03–16–93

QUALITY LEVEL II

SAFETY CLASS 3

APR 8 - 1993

REV NO.	DATE	REVISION DESCRIPTION	APPROVAL INITIALS			
0	04/06/93	APPROVED FOR CONSTRUCTION	EG	RC	CD	NA / NA
			NA	NA	NA	NA

CADFILE	B120460B	CADCODE	2B:IBM:ACD2:12.C1:SS

ENGINEERING RELEASE

REV _____ DATE _____

ERO _____

SIGNATURE	DATE
PROJ DIR NA	
QA MGR NA	
INDEPENDENT SAFETY MGR NA	
PROJECT MGR NA	
SYSTEMS MGR NA	
ENGINEERING MGR NA	
SUPERVISOR C. DIVONA	11-3-92
DESIGN ENGINEER R. CHOATE	11-3-92
CHECKED E. GARCIA	11-2-92
DRAWN P. ASHLEY	04/13/92

U.S. DEPARTMENT OF ENERGY

Richland Field Office

DE – AC06-86RL10838

FLUOR DANIEL, INC.
ADVANCED TECHNOLOGY DIVISION

TU-130-001 PTT DIMENSIONAL RECORD DRAWING

PROJECT TITLE: HANFORD WASTE VITRIFICATION PLANT

PROJECT	FLUOR CONTRACT NO.	CWBS NO.
B-595	8457	P06B
SCALE: NONE	BLDG NO.: 1	INDEX NO.:

CLASSIFICATION	BY	DRAWING NUMBER	SHEET	OF	REV
NONE	NOT REQD	H-2-120460	2	3	0

G INDEX

DISTRIBUTION CODE: 403

M283 ACAD

INITIALS: PN

DATE: 03-16-93

QUALITY LEVEL II

SAFETY CLASS 3

APR 8 - 1993

REV NO.	DATE	REVISION DESCRIPTION	EG	RC	CD	
0	04/06/93	APPROVED FOR CONSTRUCTION	EG	RC	CD	NA / NA
			NA	NA	NA	NA

CADFILE	B120460C	CADCODE	2B:IBM:ACD2:12.C1:SS

ENGINEERING RELEASE

REV _____ DATE _____

ERO _____

SIGNATURE	DATE
PROJ DIR NA	
QA MGR NA	
INDEPENDENT SAFETY MGR NA	
PROJECT MGR NA	
SYSTEMS MGR NA	
ENGINEERING MGR NA	
SUPERVISOR C. DIVONA	11-3-92
DESIGN ENGINEER R. CHOATE	11-3-92
CHECKED E. GARCIA	~~3-25-93~~ 11-2-92
DRAWN P. ASHLEY	04/16/92

U.S.DEPARTMENT OF ENERGY

Richland Field Office

DE – AC06-86RL10838

FLUOR DANIEL, INC.
ADVANCED TECHNOLOGY DIVISION

TU-130-001 PTT DIMENSIONAL RECORD DRAWING

PROJECT TITLE: **HANFORD WASTE VITRIFICATION PLANT**

PROJECT	FLUOR CONTRACT NO.	CWBS NO.
B-595	8457	P06B
SCALE	**BLDG NO.**	**INDEX NO.**
NONE	1	

CLASSIFICATION	BY	DRAWING NUMBER	SHEET	OF	REV
NONE	NOT REQD	H-2-120460	3	3	0

INDEX

DISTRIBUTION CODE: 403

M284 ACAD

INITIALS: PN

DATE: 03-16-93

QUALITY LEVEL II

SAFETY CLASS 3

APR 8 - 1993

REV NO.	DATE	REVISION DESCRIPTION	EC	RC	CD	
0	04/06/93	APPROVED FOR CONSTRUCTION	EC	RC	CD	NA / NA
			NA	NA	NA	NA

CADFILE B120550A CADCODE 2B:IBM:ACD2:12.C1:SS

ENGINEERING RELEASE

REV _____ DATE _____

ERO _____

SIGNATURE	DATE
PROJ DIR NA	
QA MGR NA	
INDEPENDENT SAFETY MGR NA	
PROJECT MGR NA	
SYSTEMS MGR NA	
ENGINEERING MGR NA	
SUPERVISOR C. DIVONA	11-3-92
DESIGN ENGINEER R. CHOATE	11-3-92
CHECKED E. CARCIA	11-2-93
DRAWN C.PEASE	11-19-91

U.S.DEPARTMENT OF ENERGY

Richland Field Office

DE - AC06-86RL10838

FLUOR DANIEL, INC.
ADVANCED TECHNOLOGY DIVISION

RA-130-009/010 TRACK & CATCH PAN ASSEMBLY PARTS LIST & NOTES

PROJECT TITLE: HANFORD WASTE VITRIFICATION PLANT

PROJECT	FLUOR CONTRACT NO.	CWBS NO.
B-595	8457	P06B
SCALE: SHOWN	BLDG NO.: 1	INDEX NO.:

CLASSIFICATION	BY	DRAWING NUMBER	SHEET	OF	REV
NONE	NOT REQD	H-2-120550	1	6	0

INDEX

DISTRIBUTION CODE: 403

M285 ACAD

INITIALS: PN

DATE: 03-16-93

QUALITY LEVEL II

SAFETY CLASS 3

APR 8 - 1993

REV NO.	DATE	REVISION DESCRIPTION	EC	RC	CD	
0	04/06/93	APPROVED FOR CONSTRUCTION	EC	RC	CD	NA / NA
			NA	NA	NA	NA

CADFILE B120550B CADCODE 2B:IBM:ACD2:12.C1:SS

ENGINEERING RELEASE

REV _____ DATE _____

ERO _____

SIGNATURE	DATE
PROJ DIR NA	
QA MGR NA	
INDEPENDENT SAFETY MGR NA	
PROJECT MGR NA	
SYSTEMS MGR NA	
ENGINEERING MGR NA	
SUPERVISOR C. DIVONA	11-3-92
DESIGN ENGINEER R. CHOATE	11-3-92
CHECKED E. CARCIA	11-2-92
DRAWN C.PEASE	11-19-91

CLASSIFICATION: NONE

BY: NOT REQD

U.S.DEPARTMENT OF ENERGY

Richland Field Office

DE – AC06–86RL10838

FLUOR DANIEL, INC.
ADVANCED TECHNOLOGY DIVISION

RA–130–009/010 TRACK & CATCH PAN DETAILS

PROJECT TITLE: HANFORD WASTE VITRIFICATION PLANT

PROJECT	FLUOR CONTRACT NO.	CWBS NO.
B–595	8457	P06B
SCALE: SHOWN	BLDG NO.: 1	INDEX NO.

DRAWING NUMBER: H–2–120550

SHEET 2 OF 6 REV 0

DISTRIBUTION CODE: 403

M286 ACAD

INITIALS: PN

DATE: 03–16–93

QUALITY LEVEL II

SAFETY CLASS 3

APR 8 - 1993

REV NO.	DATE	REVISION DESCRIPTION				
0	04/06/93	APPROVED FOR CONSTRUCTION	EC	RC	CD	NA / NA
			NA	NA	NA	NA

CADFILE	B120550C	CADCODE	2B:IBM:ACD2:12.C1:SS

ENGINEERING RELEASE

REV _____ DATE _____

ERO _____

SIGNATURE	DATE
PROJ DIR NA	
QA MGR NA	
INDEPENDENT SAFETY MGR NA	
PROJECT MGR NA	
SYSTEMS MGR NA	
ENGINEERING MGR NA	
SUPERVISOR C. DIVONA	11-3-92
DESIGN ENGINEER R. CHOATE	11-3-92
CHECKED E. CARCIA	11-2-92
DRAWN C.PEASE	11-18-91

U.S.DEPARTMENT OF ENERGY

Richland Field Office

DE – AC06–86RL10838

FLUOR DANIEL, INC.
ADVANCED TECHNOLOGY DIVISION

RA–130–009/010 TRACK & CATCH PAN RAIL DETAILS

PROJECT TITLE

HANFORD WASTE VITRIFICATION PLANT

PROJECT	FLUOR CONTRACT NO.	CWBS NO.
B–595	8457	P06B
SCALE 1/2	BLDG NO. 1	INDEX NO.

CLASSIFICATION	BY	DRAWING NUMBER	SHEET	OF	REV
NONE	NOT REQD	H–2–120550	3	6	0

INDEX

DISTRIBUTION CODE: 403

M287 ACAD

INITIALS: PN

DATE: 03–16–93

QUALITY LEVEL II

SAFETY CLASS 3

APR 8 - 1993

REV NO.	DATE	REVISION DESCRIPTION	EC	RC	CD	
0	04/06/93	APPROVED FOR CONSTRUCTION	EC	RC	CD	NA / NA
			NA	NA	NA	NA

CADFILE	B120550D	CADCODE	2B:IBM:ACD2:12.C1:SS

ENGINEERING RELEASE

REV _____ DATE _____

ERO _____

SIGNATURE	DATE
PROJ DIR NA	
QA MGR NA	
INDEPENDENT SAFETY MGR NA	
PROJECT MGR NA	
SYSTEMS MGR NA	
ENGINEERING MGR NA	
SUPERVISOR C. DIVONA	11-3-92
DESIGN ENGINEER R. CHOATE	11-3-92
CHECKED E. CARCIA	11-2-92
DRAWN C.PEASE	11-18-91

U.S.DEPARTMENT OF ENERGY

Richland Field Office

DE - AC06-86RL10838

FLUOR DANIEL, INC.

ADVANCED TECHNOLOGY DIVISION

RA-130-009/010 TRACK & CATCH PAN RAIL DETAILS

PROJECT TITLE: HANFORD WASTE VITRIFICATION PLANT

PROJECT	FLUOR CONTRACT NO.	CWBS NO.
B-595	8457	P06B
SCALE 1/2	BLDG NO. 1	INDEX NO.

CLASSIFICATION	BY	DRAWING NUMBER	SHEET	OF	REV
NONE	NOT REQD	H-2-120550	4	6	0

INDEX

DISTRIBUTION CODE: 403

M288 ACAD

INITIALS: PN

DATE: 03-16-93

QUALITY LEVEL II
SAFETY CLASS 3

APR 8 - 1993

REV NO.	DATE	REVISION DESCRIPTION	EC	RC	CD	
0	04/06/93	APPROVED FOR CONSTRUCTION	EC	RC	CD	NA NA
			NA	NA	NA	NA

CADFILE	B120550E	CADCODE	2B:IBM:ACD2:12.C1:SS

ENGINEERING RELEASE
REV _____ DATE _____
ERO _____

SIGNATURE	DATE
PROJ DIR NA	
QA MGR NA	
INDEPENDENT SAFETY MGR NA	
PROJECT MGR NA	
SYSTEMS MGR NA	
ENGINEERING MGR NA	
SUPERVISOR C. DIVONA	11-3-92
DESIGN ENGINEER R. CHOATE	11-3-92
CHECKED E. CARCIA	~~3-25-93~~ 11-2-92
DRAWN C.PEASE	11-19-91

U.S.DEPARTMENT OF ENERGY

Richland Field Office
DE – AC06–86RL10838

FLUOR DANIEL, INC.
ADVANCED TECHNOLOGY DIVISION

RA–130–009/010 TRACK & CATCH PAN DETAILS

PROJECT TITLE
HANFORD WASTE VITRIFICATION PLANT

PROJECT	FLUOR CONTRACT NO.	CWBS NO.
B–595	8457	P06B
SCALE 1/2	BLDG NO. 1	INDEX NO.

CLASSIFICATION	BY	DRAWING NUMBER	SHEET	OF	REV
NONE	NOT REQD	H–2–120550	5	6	0

INDEX

DISTRIBUTION CODE: 403 M289 ACAD

INITIALS: PN
DATE: 03–16–93

QUALITY LEVEL II

SAFETY CLASS 3

APR 8 - 1993

REV NO.	DATE	REVISION DESCRIPTION	EC	RC	CD	
0	03/06/93	APPROVED FOR CONSTRUCTION	EC	RC	CD	NA / NA
			NA	NA	NA	NA

CADFILE B120550F CADCODE 2B:IBM:ACD2:12.C1:SS

ENGINEERING RELEASE

REV _____ DATE _____

ERO _____

SIGNATURE	DATE
PROJ DIR NA	
QA MGR NA	
INDEPENDENT SAFETY MGR NA	
PROJECT MGR NA	
SYSTEMS MGR NA	
ENGINEERING MGR NA	
SUPERVISOR C. DIVONA	11-3-92
DESIGN ENGINEER R. CHOATE	11-3-92
CHECKED E. CARCIA	11-2-92
DRAWN C.PEASE	11-18-91

U.S.DEPARTMENT OF ENERGY

Richland Field Office

DE - AC06-86RL10838

FLUOR DANIEL, INC.
ADVANCED TECHNOLOGY DIVISION

RA-130-009/010 TRACK & CATCH PAN DETAILS

PROJECT TITLE: HANFORD WASTE VITRIFICATION PLANT

PROJECT	FLUOR CONTRACT NO.	CWBS NO.
B-595	8457	P06B
SCALE 1/2	BLDG NO. 1	INDEX NO.

CLASSIFICATION	BY	DRAWING NUMBER	SHEET	OF	REV
NONE	NOT REQD	H-2-120550	6	6	0

INDEX

DISTRIBUTION CODE: 403

M290 ACAD

INITIALS: PN

DATE: 03-16-93

QUALITY LEVEL II

SAFETY CLASS 3

APR 8 - 1993

REV NO.	DATE	REVISION DESCRIPTION	EC	CC	CD	
0	04/06/93	APPROVED FOR CONSTRUCTION	EC	CC	CD	NA NA
			NA	NA	NA	NA

CADFILE B120552A CADCODE 2B:IBM:ACD2:12.C1:SS

ENGINEERING RELEASE

REV _____ DATE _____

ERO _____

SIGNATURE	DATE
PROJ DIR NA	
QA MGR NA	
INDEPENDENT SAFETY MGR NA	
PROJECT MGR NA	
SYSTEMS MGR NA	
ENGINEERING MGR NA	
SUPERVISOR C. DIVONA	11-3-92
DESIGN ENGINEER C. CHOATE	11-3-92
CHECKED E. CARCIA	11-2-92
DRAWN C.PEASE	11-19-91

U.S.DEPARTMENT OF ENERGY

Richland Field Office

DE – AC06-86RL10838

FLUOR DANIEL, INC.

ADVANCED TECHNOLOGY DIVISION

RA-130-009/010 TRUNNION CAP ASSEMBLY PARTS LIST & NOTES

PROJECT TITLE: HANFORD WASTE VITRIFICATION PLANT

PROJECT	FLUOR CONTRACT NO.	CWBS NO.
B-595	8457	P06B
SCALE: SHOWN	BLDG NO.: 1	INDEX NO.:

CLASSIFICATION	BY	DRAWING NUMBER	SHEET	OF	REV
NONE	NOT REQD	H-2-120552	1	2	0

INDEX

DISTRIBUTION CODE: 403

M291 ACAD

INITIALS: PN

DATE: 03-16-93

QUALITY LEVEL II

SAFETY CLASS 3

APR 8 - 1993

REV NO.	DATE	REVISION DESCRIPTION	EC	RC	CD	
0	01/06/93	APPROVED FOR CONSTRUCTION	EC	RC	CD	NA NA
			NA	NA	NA	NA

CADFILE	B120552B	CADCODE	2B:IBM:ACD2:12.C1:SS

ENGINEERING RELEASE

REV _____ DATE _____

ERO _____

SIGNATURE	DATE
PROJ DIR NA	
QA MGR NA	
INDEPENDENT SAFETY MGR NA	
PROJECT MGR NA	
SYSTEMS MGR NA	
ENGINEERING MGR NA	
SUPERVISOR C. DIVONA	11-3-92
DESIGN ENGINEER R. CHOATE	11-3-92
CHECKED E. CARCIA	11-2-92
DRAWN C.PEASE	11-19-91

U.S.DEPARTMENT OF ENERGY

Richland Field Office

DE - AC06-86RL10838

FLUOR DANIEL, INC.
ADVANCED TECHNOLOGY DIVISION

RA-130-009/010 TRUNNION CAP DETAILS

PROJECT TITLE: HANFORD WASTE VITRIFICATION PLANT

PROJECT	FLUOR CONTRACT NO.	CWBS NO.
B-595	8457	P06B
SCALE 1/4	BLDG NO. 1	INDEX NO.

CLASSIFICATION	BY	DRAWING NUMBER	SHEET	OF	REV
NONE	NOT REQD	H-2-120552	2	2	0

INDEX

DISTRIBUTION CODE: 403

M292 ACAD

INITIALS: PN

DATE: 03-16-93

QUALITY LEVEL II

SAFETY CLASS 3

APR 8 - 1993

REV NO.	DATE	REVISION DESCRIPTION	EC	RC	CD	
0	04/06/93	APPROVED FOR CONSTRUCTION	EC	RC	CD	NA
			NA	NA	NA	NA

CADFILE	B120553A	CADCODE	2B:IBM:ACD2:12.C1:SS

ENGINEERING RELEASE

REV _____ DATE _____

ERO _____

SIGNATURE	DATE
PROJ DIR NA	
QA MGR NA	
INDEPENDENT SAFETY MGR NA	
PROJECT MGR NA	
SYSTEMS MGR NA	
ENGINEERING MGR NA	
SUPERVISOR C. DIVONA	11-3-92
DESIGN ENGINEER R. CHOATE	11-3-92
CHECKED E. CARCIA	11-2-92
DRAWN C.PEASE	11-19-91

U.S.DEPARTMENT OF ENERGY

Richland Field Office

DE – AC06–86RL10838

FLUOR DANIEL, INC.
ADVANCED TECHNOLOGY DIVISION

RA–130–010 SOUTH TRACK & CATCH PAN ASSY PARTS LIST & NOTES

PROJECT TITLE: HANFORD WASTE VITRIFICATION PLANT

PROJECT	FLUOR CONTRACT NO.	CWBS NO.
B–595	8457	P06B
SCALE: NONE	BLDG NO.: 1	INDEX NO.:

CLASSIFICATION	BY	DRAWING NUMBER	SHEET	OF	REV
NONE	NOT REQD	H–2–120553	1	7	0

INDEX

DISTRIBUTION CODE: 403

M293 ACAD

INITIALS: PN

DATE: 03–16–93

QUALITY LEVEL II

SAFETY CLASS 3

APR 8 - 1993

REV NO.	DATE	REVISION DESCRIPTION	EC	RC	CD	
0	04/06/93	APPROVED FOR CONSTRUCTION	EC	RC	CD	NA / NA
			NA	NA	NA	NA

CADFILE B120553B CADCODE 2B:IBM:ACD2:12.C1:SS

ENGINEERING RELEASE

REV _____ DATE _____

ERO _____

SIGNATURE	DATE
PROJ DIR NA	
QA MGR NA	
INDEPENDENT SAFETY MGR NA	
PROJECT MGR NA	
SYSTEMS MGR NA	
ENGINEERING MGR NA	
SUPERVISOR C. DIVONA	11-3-92
DESIGN ENGINEER R. CHOATE	11-3-92
CHECKED E. CARCIA	11-2-92
DRAWN C. PEASE	11-19-92

U.S.DEPARTMENT OF ENERGY

Richland Field Office

DE - AC06-86RL10838

FLUOR DANIEL, INC.
ADVANCED TECHNOLOGY DIVISION

RA-130-010 SOUTH TRACK & CATCH PAN ASSEMBLY

PROJECT TITLE: HANFORD WASTE VITRIFICATION PLANT

PROJECT	FLUOR CONTRACT NO.	CWBS NO.
B-595	8457	P06B
SCALE 1/16	BLDG NO. 1	INDEX NO.

CLASSIFICATION	BY	DRAWING NUMBER	SHEET	OF	REV
NONE	NOT REQD	H-2-120553	2	7	0

INDEX

DISTRIBUTION CODE: 403

M294 ACAD

INITIALS: PN

DATE: 03-16-93

QUALITY LEVEL II
SAFETY CLASS 3

APR 8 - 1993

REV NO.	DATE	REVISION DESCRIPTION	EC	RC	CD	
0	04/06/93	APPROVED FOR CONSTRUCTION	EC	RC	CD	NA / NA
			NA	NA	NA	NA

CADFILE	B120553C	CADCODE	2B:IBM:ACD2:12.C1:SS

ENGINEERING RELEASE
REV _____ DATE _____
ERO _____

SIGNATURE	DATE
PROJ DIR NA	
QA MGR NA	
INDEPENDENT SAFETY MGR NA	
PROJECT MGR NA	
SYSTEMS MGR NA	
ENGINEERING MGR NA	
SUPERVISOR C. DIVONA	11-3-92
DESIGN ENGINEER R. CHOATE	11-3-92
CHECKED E. CARCIA	11-2-92
DRAWN C.PEASE	11-19-91

U.S.DEPARTMENT OF ENERGY

Richland Field Office
DE – AC06–86RL10838

FLUOR DANIEL, INC.
ADVANCED TECHNOLOGY DIVISION

RA–130–010 SOUTH TRACK & CATCH PAN ASSEMBLY

PROJECT TITLE
HANFORD WASTE VITRIFICATION PLANT

PROJECT	FLUOR CONTRACT NO.	CWBS NO.
B–595	8457	P06B
SCALE: SHOWN	BLDG NO.: 1	INDEX NO.:

CLASSIFICATION	BY	DRAWING NUMBER	SHEET	OF	REV
NONE	NOT REQD	H–2–120553	3	7	0

DISTRIBUTION CODE: 403

M295 ACAD

INITIALS: PN
- DATE: 03–16–93

QUALITY LEVEL II
SAFETY CLASS 3

APR 8 - 1993

REV NO.	DATE	REVISION DESCRIPTION	APPROVAL INITIALS			
0	04/06/93	APPROVED FOR CONSTRUCTION	EC NA	RC NA	CD NA	NA NA

CADFILE	B120553D	CADCODE	2B:IBM:ACD2:12.C1:SS

ENGINEERING RELEASE
REV _____ DATE _____
ERO _____

SIGNATURE	DATE
PROJ DIR NA	
QA MGR NA	
INDEPENDENT SAFETY MGR NA	
PROJECT MGR NA	
SYSTEMS MGR NA	
ENGINEERING MGR NA	
SUPERVISOR C. DIVONA	11-3-92
DESIGN ENGINEER R. CHOATE	11-3-92
CHECKED E. CARCIA	~~3-25-93~~ 11-2-92
DRAWN C.PEASE	11-19-91

U.S.DEPARTMENT OF ENERGY
Richland Field Office
DE - AC06-86RL10838

FLUOR DANIEL, INC.
ADVANCED TECHNOLOGY DIVISION

RA-130-010
SOUTH TRACK & CATCH PAN ASSEMBLY

PROJECT TITLE
HANFORD WASTE VITRIFICATION PLANT

PROJECT	FLUOR CONTRACT NO.	CWBS NO.
B-595	8457	P06B
SCALE	BLDG NO.	INDEX NO.
SHOWN	1	

CLASSIFICATION	BY	DRAWING NUMBER	SHEET	OF	REV
NONE	NOT REQD	H-2-120553	4	7	0

G INDEX

B

A

2

1

F C
78 79 80

DISTRIBUTION CODE: 403

M296 ACAD

INITIALS: PN
DATE: 03-16-93

QUALITY LEVEL II
SAFETY CLASS 3

APR 8 - 1993

REV NO.	DATE	REVISION DESCRIPTION	EC	RC	CD	
0	04/06/93	APPROVED FOR CONSTRUCTION	EC	RC	CD	NA / NA
			NA	NA	NA	NA

CADFILE B120553E CADCODE 2B:IBM:ACD2:12.C1:SS

ENGINEERING RELEASE
REV _____ DATE _____
ERO _____

SIGNATURE	DATE
PROJ DIR NA	
QA MGR NA	
INDEPENDENT SAFETY MGR NA	
PROJECT MGR NA	
SYSTEMS MGR NA	
ENGINEERING MGR NA	
SUPERVISOR C. DIVONA	11-3-92
DESIGN ENGINEER R. CHOATE	11-3-92
CHECKED E. CARCIA	11-2-92
DRAWN C.PEASE	11-19-92

U.S.DEPARTMENT OF ENERGY
Richland Field Office
DE - AC06-86RL10838

FLUOR DANIEL, INC.
ADVANCED TECHNOLOGY DIVISION

RA-130-010 SOUTH TRACK & CATCH PAN DETAILS

PROJECT TITLE: HANFORD WASTE VITRIFICATION PLANT

PROJECT	FLUOR CONTRACT NO.	CWBS NO.
B-595	8457	P06B
SCALE 1/2	BLDG NO. 1	INDEX NO.

CLASSIFICATION	BY	DRAWING NUMBER	SHEET	OF	REV
NONE	NOT REQD	H-2-120553	5	7	0

INDEX

DISTRIBUTION CODE: 403 M297 ACAD

INITIALS: PN
DATE: 03-16-93

QUALITY LEVEL II

SAFETY CLASS 3

APR 8 - 1993

REV NO.	DATE	REVISION DESCRIPTION	EC	RC	CD	
						B
0	04/06/93	APPROVED FOR CONSTRUCTION	EC	RC	CD	NA/NA
			NA	NA	NA	NA

CADFILE B120553F CADCODE 2B:IBM:ACD2:12.C1:SS

ENGINEERING RELEASE

REV _____ DATE _____

ERO _____

SIGNATURE	DATE
PROJ DIR NA	
QA MGR NA	
INDEPENDENT SAFETY MGR NA	
PROJECT MGR NA	
SYSTEMS MGR NA	
ENGINEERING MGR NA	
SUPERVISOR C. DIVONA	11-3-92
DESIGN ENGINEER R. CHOATE	11-3-92
CHECKED E. CARCIA	11-2-92
DRAWN C.PEASE	11-15-91

U.S.DEPARTMENT OF ENERGY

Richland Field Office

DE – AC06-86RL10838

FLUOR DANIEL, INC.
ADVANCED TECHNOLOGY DIVISION

RA-130-010 SOUTH TRACK & CATCH PAN DETAILS

A

PROJECT TITLE: HANFORD WASTE VITRIFICATION PLANT

PROJECT	FLUOR CONTRACT NO.	CWBS NO.
B-595	8457	P06B
SCALE: SHOWN	BLDG NO.: 1	INDEX NO.:

CLASSIFICATION	BY	DRAWING NUMBER	SHEET	OF	REV
NONE	NOT REQD	H-2-120553	6	7	0

G INDEX

2 1

F C 78 79 80

DISTRIBUTION CODE: 403 M298 ACAD

INITIALS: PN

DATE: 03-16-93

QUALITY LEVEL II

SAFETY CLASS 3

APR 8 - 1993

REV NO.	DATE	REVISION DESCRIPTION	EC	RC	CD	
0	04/06/93	APPROVED FOR CONSTRUCTION	EC	RC	CD	NA NA
			NA	NA	NA	NA

CADFILE B120553G CADCODE 2B:IBM:ACD2:12.C1:SS

ENGINEERING RELEASE

REV _____ DATE _____

ERO _____

SIGNATURE	DATE
PROJ DIR NA	
QA MGR NA	
INDEPENDENT SAFETY MGR NA	
PROJECT MGR NA	
SYSTEMS MGR NA	
ENGINEERING MGR NA	
SUPERVISOR C. DIVONA	11-3-92
DESIGN ENGINEER R. CHOATE	11-3-92
CHECKED E. CARCIA	11-2-93
DRAWN C.PEASE	11-19-91

U.S.DEPARTMENT OF ENERGY

Richland Field Office

DE – AC06–86RL10838

FLUOR DANIEL, INC.
ADVANCED TECHNOLOGY DIVISION

RA–130–010 SOUTH TRACK & CATCH PAN STRUCTURAL TUBING DETAILS

PROJECT TITLE: HANFORD WASTE VITRIFICATION PLANT

PROJECT	FLUOR CONTRACT NO.	CWBS NO.
B–595	8457	P06B
SCALE 1/2	BLDG NO. 1	INDEX NO.

CLASSIFICATION	BY	DRAWING NUMBER	SHEET	OF	REV
NONE	NOT REQD	H–2–120553	7	7	0

NG INDEX

A F C 77 78 79 80

DISTRIBUTION CODE: 403

M299 ACAD

INITIALS: PN

DATE: 03–16–93

QUALITY LEVEL II

SAFETY CLASS 3

APR 8 - 1993

REV NO.	DATE	REVISION DESCRIPTION	EC	RC	CD	NA
0	01/06/93	APPROVED FOR CONSTRUCTION				NA
			NA	NA	NA	NA

CADFILE	B120554A
CADCODE	2B:IBM:ACD2:12.C1:SS

ENGINEERING RELEASE

REV _____ DATE _____

ERO _____

SIGNATURE	DATE
PROJ DIR NA	
QA MGR NA	
INDEPENDENT SAFETY MGR NA	
PROJECT MGR NA	
SYSTEMS MGR NA	
ENGINEERING MGR NA	
SUPERVISOR C. DIVONA	11-3-92
DESIGN ENGINEER R. CHOATE	11-3-92
CHECKED E. CARCIA	11-2-92
DRAWN C.PEASE	11-15-91

CLASSIFICATION	BY
NONE	NOT REQD

U.S.DEPARTMENT OF ENERGY

Richland Field Office

DE - AC06-86RL10838

FLUOR DANIEL, INC.

ADVANCED TECHNOLOGY DIVISION

RA-130-009 NORTH TRACK & CATCH PAN PARTS LIST & NOTES

PROJECT TITLE: HANFORD WASTE VITRIFICATION PLANT

PROJECT	FLUOR CONTRACT NO.	CWBS NO.
B-595	8457	P06B
SCALE: NONE	BLDG NO.: 1	INDEX NO.

DRAWING NUMBER	SHEET	OF	REV
H-2-120554	1	7	0

G INDEX

DISTRIBUTION CODE: 403

M300 ACAD

INITIALS: PN

DATE: 03-16-93

FC 78 79 80

QUALITY LEVEL II

SAFETY CLASS 3

APR 8 - 1993

REV NO.	DATE	REVISION DESCRIPTION	EC	RC	CD	
						B
0	01/06/93	APPROVED FOR CONSTRUCTION	EC	RC	CD	NA / NA
			NA	NA	NA	NA

CADFILE B120554B CADCODE 2B:IBM:ACD2:12.C1:SS

ENGINEERING RELEASE

REV _____ DATE _____

ERO _____

SIGNATURE	DATE
PROJ DIR NA	
QA MGR NA	
INDEPENDENT SAFETY MGR NA	
PROJECT MGR NA	
SYSTEMS MGR NA	
ENGINEERING MGR NA	
SUPERVISOR C. DIVONA	11-3-92
DESIGN ENGINEER R. CHOATE	11-3-92
CHECKED E. CARCIA	11-2-92
DRAWN C.PEASE	11-15-91

U.S.DEPARTMENT OF ENERGY

Richland Field Office

DE - AC06-86RL10838

FLUOR DANIEL, INC.
ADVANCED TECHNOLOGY DIVISION

RA-130-009 NORTH TRACK & CATCH PAN ASSEMBLY

A

PROJECT TITLE

HANFORD WASTE VITRIFICATION PLANT

PROJECT	FLUOR CONTRACT NO.	CWBS NO.
B-595	8457	P06B
SCALE 1/16	BLDG NO. 1	INDEX NO.

CLASSIFICATION	BY	DRAWING NUMBER	SHEET	OF	REV
NONE	NOT REQD	H-2-120554	2	7	0

NG INDEX

AFC 7 78 79 80

DISTRIBUTION CODE: 403

M301 ACAD

INITIALS: PN

DATE: 03-16-93

3/8
3/8 2 PL

QUALITY LEVEL II
SAFETY CLASS 3

APR 8 - 1993

REV NO.	DATE	REVISION DESCRIPTION	EC	RC	CD	
0	04/06/93	APPROVED FOR CONSTRUCTION	EC	RC	CD	NA NA
			NA	NA	NA	NA

CADFILE B120554C CADCODE 2B:IBM:ACD2:12.C1:SS

ENGINEERING RELEASE
REV _____ DATE _____
ERO _____

SIGNATURE	DATE
PROJ DIR NA	
QA MGR NA	
INDEPENDENT SAFETY MGR NA	
PROJECT MGR NA	
SYSTEMS MGR NA	
ENGINEERING MGR NA	
SUPERVISOR C. DIVONA	11-3-92
DESIGN ENGINEER R. CHOATE	11-3-92
CHECKED E. CARCIA	11-2-92
DRAWN C.PEASE	06/12/92

U.S.DEPARTMENT OF ENERGY
Richland Field Office
DE - AC06-86RL10838

FLUOR DANIEL, INC.
ADVANCED TECHNOLOGY DIVISION

RA-130-009
NORTH TRACK & CATCH PAN
ASSEMBLY

PROJECT TITLE
HANFORD WASTE VITRIFICATION PLANT

PROJECT	FLUOR CONTRACT NO.	CWBS NO.
B-595	8457	P06B
SCALE SHOWN	BLDG NO. 1	INDEX NO.

CLASSIFICATION	BY	DRAWING NUMBER	SHEET	OF	REV
NONE	NOT REQD	H-2-120554	3	7	0

INDEX

DISTRIBUTION CODE: 403 M302 ACAD

INITIALS: PN
DATE: 03-16-93

QUALITY LEVEL II

SAFETY CLASS 3

APR 8 - 1993

REV NO.	DATE	REVISION DESCRIPTION	EC	RC	CD	
0	04/06/93	APPROVED FOR CONSTRUCTION	EC	RC	CD	NA/NA
			NA	NA	NA	NA

CADFILE	B120554D	CADCODE	2B:IBM:ACD2:12.C1:SS

ENGINEERING RELEASE

REV _____ DATE _____

ERO _____

SIGNATURE	DATE
PROJ DIR NA	
QA MGR NA	
INDEPENDENT SAFETY MGR NA	
PROJECT MGR NA	
SYSTEMS MGR NA	
ENGINEERING MGR NA	
SUPERVISOR C. DIVONA	11-3-92
DESIGN ENGINEER R. CHOATE	11-3-92
CHECKED E. CARCIA	~~3-25-93~~ 11-2-93
DRAWN C.PEASE	11/15/91

U.S.DEPARTMENT OF ENERGY

Richland Field Office

DE – AC06-86RL10838

FLUOR DANIEL, INC.
ADVANCED TECHNOLOGY DIVISION

RA-130-009 NORTH TRACK & CATCH PAN ASSEMBLY

PROJECT TITLE: HANFORD WASTE VITRIFICATION PLANT

PROJECT	FLUOR CONTRACT NO.	CWBS NO.
B-595	8457	P06B
SCALE: SHOWN	BLDG NO.: 1	INDEX NO.:

CLASSIFICATION	BY	DRAWING NUMBER	SHEET	OF	REV
NONE	NOT REQD	H-2-120554	4	7	0

INDEX

DISTRIBUTION CODE: 403

M303 ACAD

INITIALS: PN

DATE: 03-16-93

45°

QUALITY LEVEL II
SAFETY CLASS 3

APR 8 - 1993

REV NO.	DATE	REVISION DESCRIPTION	EC	RC	CD	
0	4/6/93	APPROVED FOR CONSTRUCTION	EC	RC	CD	NA / NA
			NA	NA	NA	NA

CADFILE B120554E CADCODE 2B:IBM:ACD2:12.C1:SS

ENGINEERING RELEASE
REV _____ DATE _____
ERO _____

SIGNATURE	DATE
PROJ DIR NA	
QA MGR NA	
INDEPENDENT SAFETY MGR NA	
PROJECT MGR NA	
SYSTEMS MGR NA	
ENGINEERING MGR NA	
SUPERVISOR C. DIVONA	11-3-92
DESIGN ENGINEER R. CHOATE	11-3-92
CHECKED E. CARCIA	11-2-92
DRAWN C.PEASE	11-15-91

U.S.DEPARTMENT OF ENERGY

Richland Field Office
DE – AC06-86RL10838

FLUOR DANIEL, INC.
ADVANCED TECHNOLOGY DIVISION

RA-130-009 NORTH TRACK & CATCH PAN DETAILS

PROJECT TITLE: **HANFORD WASTE VITRIFICATION PLANT**

PROJECT	FLUOR CONTRACT NO.	CWBS NO.
B-595	8457	P06B
SCALE 1/2	BLDG NO. 1	INDEX NO.

CLASSIFICATION	BY	DRAWING NUMBER	SHEET	OF	REV
NONE	NOT REQD	H-2-120554	5	7	0

INDEX

DISTRIBUTION CODE: 403 **M304** ACAD

INITIALS: PN
DATE: 03-16-93

QUALITY LEVEL II
SAFETY CLASS 3

APR 8 - 1993

REV NO.	DATE	REVISION DESCRIPTION	EC	RC	CD	
0	04/06/93	APPROVED FOR CONSTRUCTION	EC	RC	CD	NA / NA
			NA	NA	NA	NA

CADFILE	B120554F	CADCODE	2B:IBM:ACD2:12.C1:SS

ENGINEERING RELEASE
REV _____ DATE _____
ERO _____

SIGNATURE	DATE
PROJ DIR NA	
QA MGR NA	
INDEPENDENT SAFETY MGR NA	
PROJECT MGR NA	
SYSTEMS MGR NA	
ENGINEERING MGR NA	
SUPERVISOR C. DIVONA	11-3-92
DESIGN ENGINEER R. CHOATE	11-3-92
CHECKED E. CARCIA	~~3-25-93~~ 11-2-92
DRAWN C.PEASE	11-15-91

U.S.DEPARTMENT OF ENERGY

Richland Field Office
DE – AC06-86RL10838

FLUOR DANIEL, INC.
ADVANCED TECHNOLOGY DIVISION

RA-130-009 NORTH TRACK & CATCH PAN DETAILS

PROJECT TITLE
HANFORD WASTE VITRIFICATION PLANT

PROJECT	FLUOR CONTRACT NO.	CWBS NO.
B-595	8457	P06B
SCALE	BLDG NO.	INDEX NO.
SHOWN	1	

CLASSIFICATION	BY	DRAWING NUMBER	SHEET	OF	REV
NONE	NOT REQD	H-2-120554	6	7	0

DISTRIBUTION CODE: 403

M305 ACAD

INITIALS: PN
DATE: 03-16-93

APR 8 - 1993

QUALITY LEVEL II
SAFETY CLASS 3

REV NO.	DATE	REVISION DESCRIPTION	EC	RC	CD	
0	04/06/93	APPROVED FOR CONSTRUCTION	EC	RC	CD	NA NA
			NA	NA	NA	NA

CADFILE	B120554G	CADCODE	2B:IBM:ACD2:12.C1:SS

ENGINEERING RELEASE
REV _____ DATE _____
ERO _____

SIGNATURE	DATE
PROJ DIR NA	
QA MGR NA	
INDEPENDENT SAFETY MGR NA	
PROJECT MGR NA	
SYSTEMS MGR NA	
ENGINEERING MGR NA	
SUPERVISOR C. DIVONA	11-3-92
DESIGN ENGINEER R. CHOATE	11-3-92
CHECKED E. CARCIA	~~3-25-93~~ 11-2-92
DRAWN C.PEASE	11-15-91

U.S.DEPARTMENT OF ENERGY

Richland Field Office
DE – AC06–86RL10838

FLUOR DANIEL, INC.
ADVANCED TECHNOLOGY DIVISION

RA–130–009 NORTH TRACK & CATCH PAN DETAILS

PROJECT TITLE		
HANFORD WASTE VITRIFICATION PLANT		
PROJECT B–595	FLUOR CONTRACT NO. 8457	CWBS NO. P06B
SCALE 1/2	BLDG NO. 1	INDEX NO.

CLASSIFICATION	BY	DRAWING NUMBER	SHEET	OF	REV
NONE	NOT REQD	H–2–120554	7	7	0

INDEX

DISTRIBUTION CODE: 403 **M306** ACAD

INITIALS: PN
DATE: 03–16–93

QUALITY LEVEL II

SAFETY CLASS 3

APR 8 - 1993

REV NO.	DATE	REVISION DESCRIPTION	JH	RC	CD	NA
0	04/06/93	APPROVED FOR CONSTRUCTION	NA	NA	NA	NA

CADFILE	B120562A	CADCODE	2B:IBM:ACD2:12.C1:SS

ENGINEERING RELEASE

REV _____ DATE _____

ERO _____

SIGNATURE	DATE
PROJ DIR NA	
QA MGR NA	
INDEPENDENT SAFETY MGR NA	
PROJECT MGR NA	
SYSTEMS MGR NA	
ENGINEERING MGR NA	
SUPERVISOR C. DIVONA	11-3-92
DESIGN ENGINEER R. CHOATE	11-3-92
CHECKED J. HERBRAND	11-2-92
DRAWN D.SMITH	6/10/92

U.S.DEPARTMENT OF ENERGY

Richland Field Office

DE – AC06-86RL10838

FLUOR DANIEL, INC.
ADVANCED TECHNOLOGY DIVISION

RA-130-007 POWER CABLE REELS PARTS LIST & NOTES

PROJECT TITLE: HANFORD WASTE VITRIFICATION PLANT

PROJECT	FLUOR CONTRACT NO.	CWBS NO.
B-595	8457	P06B
SCALE: NONE	BLDG NO.: 1	INDEX NO.

CLASSIFICATION	BY	DRAWING NUMBER	SHEET	OF	REV
NONE	NOT REQD	H-2-120562	1	5	0

INDEX

B

A

2 1

C 79 80

DISTRIBUTION CODE: 403

M307 ACAD

INITIALS: PN

DATE: 03-16-93

QUALITY LEVEL II

SAFETY CLASS 3

APR 8 - 1993

REV NO.	DATE	REVISION DESCRIPTION	APPROVAL INITIALS			
0	04/06/93	APPROVED FOR CONSTRUCTION	JH	RC	CD	NA NA
			NA	NA	NA	NA

CADFILE	B120562B	CADCODE	2B:IBM:ACD2:12.C1:SS

ENGINEERING RELEASE

REV _____ DATE _____

ERD _____

SIGNATURE	DATE
PROJ DIR NA	
QA MGR NA	
INDEPENDENT SAFETY MGR NA	
PROJECT MGR NA	
SYSTEMS MGR NA	
ENGINEERING MGR NA	
SUPERVISOR C. DIVONA CD	11-3-92
DESIGN ENGINEER R. CHOATE RBC	11-3-92
CHECKED J. HERBRAND JH	11-2-92
DRAWN DARREN SMITH	06/16/92

U.S. DEPARTMENT OF ENERGY

Richland Field Office

DE – AC06-86RL10838

FLUOR DANIEL, INC.
ADVANCED TECHNOLOGY DIVISION

RA-130-007 POWER CABLE REEL ASSEMBLY

PROJECT TITLE: HANFORD WASTE VITRIFICATION PLANT

PROJECT	FLUOR CONTRACT NO.	CWBS NO.
B-595	8457	P06B
SCALE 1/4	BLDG NO. 1	INDEX NO.

CLASSIFICATION	BY	DRAWING NUMBER	SHEET	OF	REV
NONE	NOT REQD	H-2-120562	2	5	0

INDEX

DISTRIBUTION CODE: 403

M308 ACAD

INITIALS: PN

DATE: 03-16-93

QUALITY LEVEL II

SAFETY CLASS 3

APR 8 - 1993

REV NO.	DATE	REVISION DESCRIPTION				
0	04/06/93	APPROVED FOR CONSTRUCTION	JH	RC	CD	NA / NA
			NA	NA	NA	NA

CADFILE	B120562C	CADCODE	2B:IBM:ACD2:12.C1:SS

ENGINEERING RELEASE

REV _____ DATE _____

ERO _____

SIGNATURE	DATE
PROJ DIR NA	
QA MGR NA	
INDEPENDENT SAFETY MGR NA	
PROJECT MGR NA	
SYSTEMS MGR NA	
ENGINEERING MGR NA	
SUPERVISOR C. DIVONA	11-3-92
DESIGN ENGINEER R. CHOATE	11-3-92
CHECKED J. HERBRAND	11-2-92
DRAWN DARREN SMITH	05/27/92

U.S. DEPARTMENT OF ENERGY

Richland Field Office

DE – AC06–86RL10838

FLUOR DANIEL, INC.
ADVANCED TECHNOLOGY DIVISION

RA–130–007 POWER CABLE REEL FRAME ASSEMBLY

PROJECT TITLE: HANFORD WASTE VITRIFICATION PLANT

PROJECT	FLUOR CONTRACT NO.	CWBS NO.
B–595	8457	P06B
SCALE: SHOWN	BLDG NO.: 1	INDEX NO.:

CLASSIFICATION	BY	DRAWING NUMBER	SHEET	OF	REV
NONE	NOT REQD	H–2–120562	3	5	0

INDEX

DISTRIBUTION CODE: 403

M309 ACAD

INITIALS: PN

DATE: 03–16–93

QUALITY LEVEL II

SAFETY CLASS 3

APR 8 - 1993

REV NO.	DATE	REVISION DESCRIPTION	APPROVAL INITIALS			
0	04/06/93	APPROVED FOR CONSTRUCTION	JH	RC	CD	NA NA
			NA	NA	NA	NA

CADFILE	B120562D	CADCODE	2B:IBM:ACD2:12.C1:SS

ENGINEERING RELEASE

REV _____ DATE _____

ERO _____

SIGNATURE	DATE
PROJ DIR NA	
QA MGR NA	
INDEPENDENT SAFETY MGR NA	
PROJECT MGR NA	
SYSTEMS MGR NA	
ENGINEERING MGR NA	
SUPERVISOR C. DIVONA	11-3-92
DESIGN ENGINEER R. CHOATE	11-3-92
CHECKED J. HERBRAND	11-2-92
DRAWN DARREN SMITH	08/20/92

U.S.DEPARTMENT OF ENERGY

Richland Field Office

DE - AC06-86RL10838

FLUOR DANIEL, INC.
ADVANCED TECHNOLOGY DIVISION

RA-130-007 POWER CABLE REEL CONNECTOR FOLDING BAIL WELDMENT

PROJECT TITLE: HANFORD WASTE VITRIFICATION PLANT

PROJECT	FLUOR CONTRACT NO.	CWBS NO.
B-595	8457	P06B
SCALE 1/2	BLDG NO. 1	INDEX NO.

CLASSIFICATION	BY	DRAWING NUMBER	SHEET	OF	REV
NONE	NOT REQD	H-2-120562	4	5	0

INDEX

B

A

DISTRIBUTION CODE: 403

M310 ACAD

INITIALS: PN

DATE: 03-16-93

QUALITY LEVEL II

SAFETY CLASS 3

APR 8 - 1993

REV NO.	DATE	REVISION DESCRIPTION	JH	RC	CD	NA
0	04/06/93	APPROVED FOR CONSTRUCTION	JH	RC	CD	NA
			NA	NA	NA	NA

CADFILE B120562E CADCODE 2B:IBM:ACD2:12.C1:SS

ENGINEERING RELEASE

REV _____ DATE _____

ERO _____

SIGNATURE	DATE
PROJ DIR NA	
QA MGR NA	
INDEPENDENT SAFETY MGR NA	
PROJECT MGR NA	
SYSTEMS MGR NA	
ENGINEERING MGR NA	
SUPERVISOR C. DIVONA	11-3-92
DESIGN ENGINEER R. CHOATE	11-3-92
CHECKED J. HERBRAND	11-2-92
DRAWN DARREN SMITH	05/29/92

U.S.DEPARTMENT OF ENERGY

Richland Field Office

DE – AC06–86RL10838

FLUOR DANIEL, INC.

ADVANCED TECHNOLOGY DIVISION

RA–130–007 POWER CABLE REEL DETAILS REMOVABLE LEG ASSEMBLY

PROJECT TITLE: HANFORD WASTE VITRIFICATION PLANT

PROJECT	FLUOR CONTRACT NO.	CWBS NO.
B–595	8457	P06B
SCALE: SHOWN	BLDG NO.: 1	INDEX NO.

CLASSIFICATION	BY	DRAWING NUMBER	SHEET	OF	REV
NONE	NOT REQD	H–2–120562	5	5	0

NDEX

DISTRIBUTION CODE: 403

M311 ACAD

INITIALS: PN

DATE: 03–16–93

APR 8 - 1993

QUALITY LEVEL II
SAFETY CLASS 3

REV NO.	DATE	REVISION DESCRIPTION	APPROVAL INITIALS			
0	04/06/93	APPROVED FOR CONSTRUCTION	JH	RC	CD	NA / NA
			NA	NA	NA	NA

CADFILE	B120563A	CADCODE	2B:IBM:ACD2:12.C1:SS

ENGINEERING RELEASE
REV _____ DATE _____
ERO _____

SIGNATURE	DATE
PROJ DIR NA	
QA MGR NA	
INDEPENDENT SAFETY MGR NA	
PROJECT MGR NA	
SYSTEMS MGR NA	
ENGINEERING MGR NA	
SUPERVISOR C. DIVONA	11-3-92
DESIGN ENGINEER R. CHOATE	11-3-92
CHECKED J. HERBRAND	11-2-92
DRAWN DARREN SMITH	05/27/92

U.S.DEPARTMENT OF ENERGY
Richland Field Office
DE – AC06-86RL10838

FLUOR DANIEL, INC.
ADVANCED TECHNOLOGY DIVISION

RA-130-005
POWER CABLE REEL ASSY
PARTS LIST AND NOTES

PROJECT TITLE: HANFORD WASTE VITRIFICATION PLANT

PROJECT	FLUOR CONTRACT NO.	CWBS NO.
B-595	8457	P06B
SCALE: NONE	BLDG NO.: 1	INDEX NO.:

CLASSIFICATION	BY	DRAWING NUMBER	SHEET	OF	REV
NONE	NOT REQD	H-2-120563	1	5	0

INDEX

DISTRIBUTION CODE: 403 M312 ACAD

INITIALS: PN
DATE: 03-16-93

QUALITY LEVEL II

SAFETY CLASS 3

APR 8 - 1993

REV NO.	DATE	REVISION DESCRIPTION	APPROVAL INITIALS			
0	04/06/93	APPROVED FOR CONSTRUCTION	JH	RC	CD	NA NA
			NA	NA	NA	NA

CADFILE	B120563B	CADCODE	2B:IBM:ACD2:12.C1:SS

ENGINEERING RELEASE

REV _____ DATE _____

ERO _____

SIGNATURE	DATE
PROJ DIR NA	
QA MGR NA	
INDEPENDENT SAFETY MGR NA	
PROJECT MGR NA	
SYSTEMS MGR NA	
ENGINEERING MGR NA	
SUPERVISOR C. DIVONA	11-3-92
DESIGN ENGINEER R. CHOATE	11-3-92
CHECKED J. HERBRAND	11-2-92
DRAWN DARREN SMITH	08-29-92

U.S. DEPARTMENT OF ENERGY

Richland Field Office

DE – AC06-86RL10838

FLUOR DANIEL, INC.
ADVANCED TECHNOLOGY DIVISION

RA-130-005 POWER CABLE REEL ASSEMBLY

PROJECT TITLE: HANFORD WASTE VITRIFICATION PLANT

PROJECT	FLUOR CONTRACT NO.	CWBS NO.
B-595	8457	P06B
SCALE 1/4	BLDG NO. 1	INDEX NO.

CLASSIFICATION	BY	DRAWING NUMBER	SHEET	OF	REV
NONE	NOT REQD	H-2-120563	2	5	0

INDEX

DISTRIBUTION CODE: 403

M313 ACAD

INITIALS: PN

DATE: 03-16-93

QUALITY LEVEL II

SAFETY CLASS 3

APR 8 - 1993

REV NO.	DATE	REVISION DESCRIPTION	APPROVAL INITIALS			
0	04/06/93	APPROVED FOR CONSTRUCTION	JH	RC	CD	NA / NA
			NA	NA	NA	NA

CADFILE B120563C CADCODE 2B:IBM:ACD2:12.C1:SS

ENGINEERING RELEASE

REV _____ DATE _____

ERO _____

SIGNATURE	DATE
PROJ DIR NA	
QA MGR NA	
INDEPENDENT SAFETY MGR NA	
PROJECT MGR NA	
SYSTEMS MGR NA	
ENGINEERING MGR NA	
SUPERVISOR C. DIVONA	11-3-92
DESIGN ENGINEER R. CHOATE	11-3-92
CHECKED J. HERBRAND	11-2-92
DRAWN C. PEASE	11/20/91

U.S.DEPARTMENT OF ENERGY

Richland Field Office

DE – AC06-86RL10838

FLUOR DANIEL, INC.
ADVANCED TECHNOLOGY DIVISION

RA-130-005
POWER CABLE REEL
FRAME ASSEMBLY

PROJECT TITLE: HANFORD WASTE VITRIFICATION PLANT

PROJECT	FLUOR CONTRACT NO.	CWBS NO.
B-595	8457	P06B
SCALE: SHOWN	BLDG NO.: 1	INDEX NO.

CLASSIFICATION	BY	DRAWING NUMBER	SHEET	OF	REV
NONE	NOT REQD	H-2-120563	3	5	0

2 PL

INDEX

DISTRIBUTION CODE: 403

M314 ACAD

INITIALS: PN

DATE: 03-16-93

QUALITY LEVEL II

SAFETY CLASS 3

APR 8 - 1993

REV NO.	DATE	REVISION DESCRIPTION	APPROVAL INITIALS			
0	04/06/93	APPROVED FOR CONSTRUCTION	JH	RC	CD	NA / NA
			NA	NA	NA	NA

CADFILE	B120563D	CADCODE	2B:IBM:ACD2:12.C1:SS

ENGINEERING RELEASE

REV _____ DATE _____

ERO _____

SIGNATURE	DATE
PROJ DIR NA	
QA MGR NA	
INDEPENDENT SAFETY MGR NA	
PROJECT MGR NA	
SYSTEMS MGR NA	
ENGINEERING MGR NA	
SUPERVISOR C. DIVONA	11-3-92
DESIGN ENGINEER R. CHOATE	11-3-92
CHECKED J. HERBRAND	11-2-92
DRAWN DARREN SMITH	05/29/92

U.S.DEPARTMENT OF ENERGY

Richland Field Office

DE – AC06–86RL10838

FLUOR DANIEL, INC.
ADVANCED TECHNOLOGY DIVISION

RA–130–005 POWER CABLE REEL REMOVABLE LEG ASSEMBLY DETAILS

PROJECT TITLE: HANFORD WASTE VITRIFICATION PLANT

PROJECT	FLUOR CONTRACT NO.	CWBS NO.
B–595	8457	P06B
SCALE: SHOWN	BLDG NO.: 1	INDEX NO.:

CLASSIFICATION	BY	DRAWING NUMBER	SHEET	OF	REV
NONE	NOT REQD	H–2–120563	4	5	0

INDEX

DISTRIBUTION CODE: 403

M315 ACAD

INITIALS: PN

DATE: 03–16–93

APR 8 - 1993

QUALITY LEVEL II

SAFETY CLASS 3

REV NO.	DATE	REVISION DESCRIPTION	APPROVAL INITIALS			
0	04/06/93	APPROVED FOR CONSTRUCTION	JH	RC	CD	NA / NA
			NA	NA	NA	NA

CADFILE	B120563E	CADCODE	2B:IBM:ACD2:12.C1:SS

ENGINEERING RELEASE

REV _____ DATE _____

ERO _____

SIGNATURE	DATE
PROJ DIR NA	
QA MGR NA	
INDEPENDENT SAFETY MGR NA	
PROJECT MGR NA	
SYSTEMS MGR NA	
ENGINEERING MGR NA	
SUPERVISOR C. DIVONA	11-3-92
DESIGN ENGINEER R. CHOATE	11-3-92
CHECKED J. HERBRAND	3-25-92 / 11-2-92
DRAWN C.PEASE	11/20/91

U.S.DEPARTMENT OF ENERGY

Richland Field Office

DE – AC06–86RL10838

FLUOR DANIEL, INC.
ADVANCED TECHNOLOGY DIVISION

RA–130–005 POWER CABLE REEL DETAILS

PROJECT TITLE: HANFORD WASTE VITRIFICATION PLANT

PROJECT	FLUOR CONTRACT NO.	CWBS NO.
B–595	8457	P06B
SCALE: SHOWN	BLDG NO.: 1	INDEX NO.:

CLASSIFICATION	BY	DRAWING NUMBER	SHEET	OF	REV
NONE	NOT REQD	H–2–120563	5	5	0

INDEX

DISTRIBUTION CODE: 403

M316 ACAD

INITIALS: PN

DATE: 03–16–93

QUALITY LEVEL II

SAFETY CLASS 3

APR 8 - 1993

REV NO.	DATE	REVISION DESCRIPTION	APPROVAL INITIALS			
			JH	RC	CD	NA / NA
0	04/06/93	APPROVED FOR CONSTRUCTION	NA	NA	NA	NA

CADFILE B120564A CADCODE 2B:IBM:ACD2:12.C1:SS

ENGINEERING RELEASE

REV _____ DATE _____

ERO _____

SIGNATURE	DATE
PROJ DIR NA	
QA MGR NA	
INDEPENDENT SAFETY MGR NA	
PROJECT MGR NA	
SYSTEMS MGR NA	
ENGINEERING MGR NA	
SUPERVISOR C. DIVONA	11-3-92
DESIGN ENGINEER R. CHOATE	11-3-92
CHECKED J. HERBRAND	11-2-92
DRAWN M.PICCIOT	06/24/92

U.S.DEPARTMENT OF ENERGY

Richland Field Office

DE - AC06-86RL10838

FLUOR DANIEL, INC.
ADVANCED TECHNOLOGY DIVISION

RA-130-006 INSTRUMENTATION CABLE REEL ASSY PART LIST & NOTES

PROJECT TITLE: HANFORD WASTE VITRIFICATION PLANT

PROJECT	FLUOR CONTRACT NO.	CWBS NO.
B-595	8457	P06B
SCALE: NONE	BLDG NO.: 1	INDEX NO.

CLASSIFICATION	BY	DRAWING NUMBER	SHEET	OF	REV
NONE	NOT REQD	H-2-120564	1	6	0

ING INDEX

AFC 77 78 79 80

DISTRIBUTION CODE: 403

M317 ACAD

INITIALS: PN

DATE: 03-16-93

QUALITY LEVEL II

SAFETY CLASS 3

APR 8 - 1993

REV NO.	DATE	REVISION DESCRIPTION	APPROVAL INITIALS			
				RBC	CD	
0	04/06/93	APPROVED FOR CONSTRUCTION	JH	RC	CD	NA / NA
			NA	NA	NA	NA

CADFILE	B120564B	CADCODE	2B:IBM:ACD2:12.C1:SS

ENGINEERING RELEASE

REV _____ DATE _____

ERO _____

SIGNATURE	DATE
PROJ DIR NA	
QA MGR NA	
INDEPENDENT SAFETY MGR NA	
PROJECT MGR NA	
SYSTEMS MGR NA	
ENGINEERING MGR NA	
SUPERVISOR C. DIVONA	11-3-92
DESIGN ENGINEER R. CHOATE	11-3-92
CHECKED J. HERBRAND	11-2-92
DRAWN D. SMITH	7/2/92

U.S.DEPARTMENT OF ENERGY

Richland Field Office

DE – AC06–86RL10838

FLUOR DANIEL, INC.
ADVANCED TECHNOLOGY DIVISION

RA–130–006 INSTRUMENTATION CABLE REEL ASSEMBLY

PROJECT TITLE: HANFORD WASTE VITRIFICATION PLANT

PROJECT	FLUOR CONTRACT NO.	CWBS NO.
B–595	8457	P06B
SCALE 1/4	BLDG NO. 1	INDEX NO.

CLASSIFICATION	BY	DRAWING NUMBER	SHEET	OF	REV
NONE	NOT REQD	H–2–120564	2	6	0

WING INDEX

AFC 77 78 79 80

DISTRIBUTION CODE: 403

M318 ACAD

INITIALS: PN

DATE: 03–16–93

QUALITY LEVEL II

SAFETY CLASS 3

APR 8 - 1993

REV NO.	DATE	REVISION DESCRIPTION	APPROVAL INITIALS			
0	04/06/93	APPROVED FOR CONSTRUCTION	JH	RC	CD	NA / NA
			NA	NA	NA	NA

CADFILE	B120564C	CADCODE	2B:IBM:ACD2:12.C1:SS

ENGINEERING RELEASE

REV _____ DATE _____

ERO _____

SIGNATURE	DATE
PROJ DIR NA	
QA MGR NA	
INDEPENDENT SAFETY MGR NA	
PROJECT MGR NA	
SYSTEMS MGR NA	
ENGINEERING MGR NA	
SUPERVISOR C. DIVONA	11-3-92
DESIGN ENGINEER R. CHOATE	11-3-92
CHECKED J. HERBRAND	11-2-92
DRAWN C. SALVADOR	12-04-91

U.S.DEPARTMENT OF ENERGY

Richland Field Office

DE – AC06-86RL10838

FLUOR DANIEL, INC.

ADVANCED TECHNOLOGY DIVISION

RA-130-006 INSTRUMENTATION CABLE REEL FRAME ASSEMBLY

PROJECT TITLE: HANFORD WASTE VITRIFICATION PLANT

PROJECT	FLUOR CONTRACT NO.	CWBS NO.
B-595	8457	P06B
SCALE: NONE	BLDG NO.: 1	INDEX NO.

CLASSIFICATION	BY	DRAWING NUMBER	SHEET	OF	REV
NONE	NOT REQD	H-2-120564	3	6	0

WING INDEX

AFC

DISTRIBUTION CODE: 403

M319 ACAD

INITIALS: PN

DATE: 03-16-93

QUALITY LEVEL II

SAFETY CLASS 3

APR 8 - 1993

REV NO.	DATE	REVISION DESCRIPTION	JH	RC	CD	NA
0	04/06/93	APPROVED FOR CONSTRUCTION	JH	RC	CD	NA
			NA	NA	NA	NA

APPROVAL INITIALS

CADFILE B120564D CADCODE 2B:IBM:ACD2:12.C1:SS

ENGINEERING RELEASE

REV _____ DATE _____

ERO _____

SIGNATURE	DATE
PROJ DIR NA	
QA MGR NA	
INDEPENDENT SAFETY MGR NA	
PROJECT MGR NA	
SYSTEMS MGR NA	
ENGINEERING MGR NA	
SUPERVISOR C. DIVONA	11-3-92
DESIGN ENGINEER R. CHOATE	11-3-92
CHECKED J. HERBRAND	11-2-92
DRAWN D. SMITH	5/10/92

U.S. DEPARTMENT OF ENERGY

Richland Field Office

DE – AC06–86RL10838

FLUOR DANIEL, INC.
ADVANCED TECHNOLOGY DIVISION

RA–130–006 INSTRUMENTATION CABLE REEL FRAME WELDMENT

PROJECT TITLE: HANFORD WASTE VITRIFICATION PLANT

PROJECT	FLUOR CONTRACT NO.	CWBS NO.
B–595	8457	P06B
SCALE: NONE	BLDG NO.: 1	INDEX NO.

CLASSIFICATION	BY	DRAWING NUMBER	SHEET	OF	REV
NONE	NOT REQD	H–2–120564	4	6	0

WING INDEX

AFC 77 78 79 80

DISTRIBUTION CODE: 403

M320 ACAD

INITIALS: PN

DATE: 03–16–93

APR 8 - 1993

QUALITY LEVEL II

SAFETY CLASS 3

REV NO.	DATE	REVISION DESCRIPTION	APPROVAL INITIALS			
0	04/06/93	APPROVED FOR CONSTRUCTION	JH	RC	CD	NA / NA
			NA	NA	NA	NA

CADFILE	B120564E	CADCODE	2B:IBM:ACD2:12.C1:SS

ENGINEERING RELEASE

REV _____ DATE _____

ERO _____

SIGNATURE	DATE
PROJ DIR NA	
QA MGR NA	
INDEPENDENT SAFETY MGR NA	
PROJECT MGR NA	
SYSTEMS MGR NA	
ENGINEERING MGR NA	
SUPERVISOR C. DIVONA	11-3-92
DESIGN ENGINEER R. CHOATE	11-3-92
CHECKED J. HERBRAND	11-2-92
DRAWN C.SALVADOR	11/18/91

U.S.DEPARTMENT OF ENERGY

Richland Field Office

DE - AC06-86RL10838

FLUOR DANIEL, INC.

ADVANCED TECHNOLOGY DIVISION

RA-130-006 INSTRUMENTATION CABLE REEL CABLE GUIDE ASSEMBLY

PROJECT TITLE: HANFORD WASTE VITRIFICATION PLANT

PROJECT	FLUOR CONTRACT NO.	CWBS NO.
B-595	8457	P06B
SCALE 1/1	BLDG NO. 1	INDEX NO.

CLASSIFICATION	BY	DRAWING NUMBER	SHEET	OF	REV
NONE	NOT REQD	H-2-120564	5	6	0

VING INDEX

A F C 77 78 79 80

DISTRIBUTION CODE: 403

M321 ACAD

INITIALS: PN

DATE: 03-16-93

Ø 1 1/2

APR 8 - 1993

QUALITY LEVEL II
SAFETY CLASS 3

REV NO.	DATE	REVISION DESCRIPTION	APPROVAL INITIALS			
0	04/06/93	APPROVED FOR CONSTRUCTION	JH	RC	CD	NA NA
			NA	NA	NA	NA

CADFILE	B120564F	CADCODE	2B:IBM:ACD2:12.C1:SS

ENGINEERING RELEASE

REV _____ DATE _____

ERO _____

SIGNATURE	DATE
PROJ DIR NA	
QA MGR NA	
INDEPENDENT SAFETY MGR NA	
PROJECT MGR NA	
SYSTEMS MGR NA	
ENGINEERING MGR NA	
SUPERVISOR C. DIVONA	11-3-92
DESIGN ENGINEER R. CHOATE	11-3-92
CHECKED J. HERBRAND	11-2-92
DRAWN C.SALVADOR	12-04-91

U.S.DEPARTMENT OF ENERGY

Richland Field Office

DE – AC06–86RL10838

FLUOR DANIEL, INC.
ADVANCED TECHNOLOGY DIVISION

RA–130–006 INSTRUMENTATION CABLE REEL DETAILS

PROJECT TITLE: **HANFORD WASTE VITRIFICATION PLANT**

PROJECT	FLUOR CONTRACT NO.	CWBS NO.
B–595	8457	P06B
SCALE: SHOWN	BLDG NO.: 1	INDEX NO.:

CLASSIFICATION	BY	DRAWING NUMBER	SHEET	OF	REV
NONE	NOT REQD	H–2–120564	6	6	0

ING INDEX

AFC 77 78 79 80

DISTRIBUTION CODE: 403

M322 ACAD

INITIALS: PN

DATE: 03–16–93

QUALITY LEVEL II

SAFETY CLASS 3

APR 8 - 1993

REV NO.	DATE	REVISION DESCRIPTION	APPROVAL INITIALS			
0	04/06/93	APPROVED FOR CONSTRUCTION	JH	RC	CD	NA NA
			NA	NA	NA	NA

CADFILE	B120565A	CADCODE	2B:IBM:ACD2:12.C1:SS

ENGINEERING RELEASE

REV _____ DATE _____

ERO _____

SIGNATURE	DATE
PROJ DIR NA	
QA MGR NA	
INDEPENDENT SAFETY MGR NA	
PROJECT MGR NA	
SYSTEMS MGR NA	
ENGINEERING MGR NA	
SUPERVISOR C. DIVONA	11-3-92
DESIGN ENGINEER R. CHOATE	11-3-92
CHECKED J. HERBRAND	11-2-92
DRAWN R.MOREL	7-27-92

U.S.DEPARTMENT OF ENERGY

Richland Field Office

DE - AC06-86RL10838

FLUOR DANIEL, INC.
ADVANCED TECHNOLOGY DIVISION

RA-130-008 CABLE REELS SUPPORT FRAME PARTS LIST & NOTES

PROJECT TITLE: HANFORD WASTE VITRIFICATION PLANT

PROJECT	FLUOR CONTRACT NO.	CWBS NO.
B-595	8457	P06B
SCALE: NONE	BLDG NO.: 1	INDEX NO.

CLASSIFICATION	BY	DRAWING NUMBER	SHEET	OF	REV
NONE	NOT REQD	H-2-120565	1	8	0

VING INDEX

AFC 77 78 79 80

DISTRIBUTION CODE: 403

M323 ACAD

INITIALS: PN

DATE: 03-16-93

Ø1.22 $^{+.001}_{-.000}$ HOLE

Ø1.25 $^{+.000}_{-.001}$ REF SHAFT

34.830 $^{+.000}_{-.005}$

QUALITY LEVEL II

SAFETY CLASS 3

APR 8 - 1993

REV NO.	DATE	REVISION DESCRIPTION	APPROVAL INITIALS			
0	04/06/93	APPROVED FOR CONSTRUCTION	JH	RC	CD	NA NA
			NA	NA	NA	NA

CADFILE	B120565B	CADCODE	2B:IBM:ACD2:12.C1:SS

ENGINEERING RELEASE

REV _____ DATE _____

ERO _____

SIGNATURE	DATE
PROJ DIR NA	
QA MGR NA	
INDEPENDENT SAFETY MGR NA	
PROJECT MGR NA	
SYSTEMS MGR NA	
ENGINEERING MGR NA	
SUPERVISOR C. DIVONA	11-3-92
DESIGN ENGINEER R. CHOATE	11-3-92
CHECKED J. HERBRAND	11-2-92
DRAWN R.MOREL	7-14-92

U.S.DEPARTMENT OF ENERGY

Richland Field Office

DE – AC06–86RL10838

FLUOR DANIEL, INC.

ADVANCED TECHNOLOGY DIVISION

RA–130–008 CABLE REELS SUPPORT FRAME WELDMENT

PROJECT TITLE: HANFORD WASTE VITRIFICATION PLANT

PROJECT	FLUOR CONTRACT NO.	CWBS NO.
B–595	8457	P06B
SCALE: SHOWN	BLDG NO.: 1	INDEX NO.

CLASSIFICATION	BY	DRAWING NUMBER	SHEET	OF	REV
NONE	NOT REQD	H–2–120565	2	8	0

VING INDEX

A F C 77 78 79 80

DISTRIBUTION CODE: 403

M324 ACAD

INITIALS: PN

DATE: 03–16–93

QUALITY LEVEL II
SAFETY CLASS 3

APR 8 - 1993

REV NO.	DATE	REVISION DESCRIPTION				
0	04/06/93	APPROVED FOR CONSTRUCTION	JH	RC	CD	NA/NA
			NA	NA	NA	NA

APPROVAL INITIALS

CADFILE B120565C CADCODE 2B:IBM:ACD2:12.C1:SS

ENGINEERING RELEASE
REV _____ DATE _____
ERO _____

SIGNATURE	DATE
PROJ DIR NA	
QA MGR NA	
INDEPENDENT SAFETY MGR NA	
PROJECT MGR NA	
SYSTEMS MGR NA	
ENGINEERING MGR NA	
SUPERVISOR C. DIVONA	11-3-92
DESIGN ENGINEER R. CHOATE	11-3-92
CHECKED J. HERBRAND	~~3-23-93~~ 11-2-92
DRAWN R.MOREL	7-22-92

U.S.DEPARTMENT OF ENERGY
Richland Field Office
DE – AC06–86RL10838

FLUOR DANIEL, INC.
ADVANCED TECHNOLOGY DIVISION

RA–130–008
CABLE REELS
SUPPORT FRAME
LOWER FRAME WELDMENT

PROJECT TITLE
HANFORD WASTE VITRIFICATION PLANT

PROJECT	FLUOR CONTRACT NO.	CWBS NO.
B–595	8457	P06B
SCALE	BLDG NO.	INDEX NO.
SHOWN	1	

CLASSIFICATION	BY	DRAWING NUMBER	SHEET	OF	REV
NONE	NOT REQD	H–2–120565	3	8	0

VING INDEX

AFC 77 78 79 80

DISTRIBUTION CODE: 403

M325 ACAD

INITIALS: PN
DATE: 03–16–93

QUALITY LEVEL II

SAFETY CLASS 3

APR 8 - 1993

REV NO.	DATE	REVISION DESCRIPTION	APPROVAL INITIALS			
0	04/06/93	APPROVED FOR CONSTRUCTION	JH	RC	CD	NA NA
			NA	NA	NA	NA

CADFILE	B120565D	CADCODE	2B:IBM:ACD2:12.C1:SS

ENGINEERING RELEASE

REV _____ DATE _____

ERO _____

SIGNATURE	DATE
PROJ DIR NA	
QA MGR NA	
INDEPENDENT SAFETY MGR NA	
PROJECT MGR NA	
SYSTEMS MGR NA	
ENGINEERING MGR NA	
SUPERVISOR C. DIVONA	11-3-92
DESIGN ENGINEER R. CHOATE	11-3-92
CHECKED J. HERBRAND	11-2-92
DRAWN R.MOREL	7-28-92

U.S.DEPARTMENT OF ENERGY

Richland Field Office

DE – AC06-86RL10838

FLUOR DANIEL, INC.
ADVANCED TECHNOLOGY DIVISION

RA-130-008 CABLE REELS SUPPORT FRAME DETAILS & WELDMENTS

PROJECT TITLE: HANFORD WASTE VITRIFICATION PLANT

PROJECT	FLUOR CONTRACT NO.	CWBS NO.
B-595	8457	P06B
SCALE: SHOWN	BLDG NO.: 1	INDEX NO.

CLASSIFICATION	BY	DRAWING NUMBER	SHEET	OF	REV
NONE	NOT REQD	H-2-120565	4	8	0

ING INDEX

AFC 77 78 79 80

DISTRIBUTION CODE: 403

M326 ACAD

INITIALS: PN

DATE: 03-16-93

QUALITY LEVEL II
SAFETY CLASS 3

APR 8 - 1993

REV NO.	DATE	REVISION DESCRIPTION	APPROVAL INITIALS			
0	04/06/93	APPROVED FOR CONSTRUCTION	JH	RC	CD	NA NA
			NA	NA	NA	NA

CADFILE B120565E CADCODE 2B:IBM:ACD2:12.C1:SS

ENGINEERING RELEASE
REV _____ DATE _____
ERO _____

SIGNATURE	DATE
PROJ DIR NA	
QA MGR NA	
INDEPENDENT SAFETY MGR NA	
PROJECT MGR NA	
SYSTEMS MGR NA	
ENGINEERING MGR NA	
SUPERVISOR C. DIVONA	11-3-92
DESIGN ENGINEER R. CHOATE	11-3-92
CHECKED J. HERBRAND	~~7-8-93~~ 11-2-92
DRAWN R.MOREL	7-22-92

U.S.DEPARTMENT OF ENERGY
Richland Field Office
DE – AC06–86RL10838

FLUOR DANIEL, INC.
ADVANCED TECHNOLOGY DIVISION

RA–130–008 CABLE REELS SUPPORT FRAME LIFTING LUG WELDMENTS

PROJECT TITLE
HANFORD WASTE VITRIFICATION PLANT

PROJECT	FLUOR CONTRACT NO.	CWBS NO.
B–595	8457	P06B
SCALE 1/4	BLDG NO. 1	INDEX NO.

CLASSIFICATION	BY	DRAWING NUMBER	SHEET	OF	REV
NONE	NOT REQD	H–2–120565	5	8	0

VING INDEX

AFC 77 78 79 80

DISTRIBUTION CODE: 403

M327 ACAD

INITIALS: PN
DATE: 03–16–93

APR 8 - 1993

QUALITY LEVEL II

SAFETY CLASS 3

REV NO.	DATE	REVISION DESCRIPTION	APPROVAL INITIALS			
0	04/06/93	APPROVED FOR CONSTRUCTION	JH	RC	CD	NA / NA
			NA	NA	NA	NA

CADFILE	B120565F	CADCODE	2B:IBM:ACD2:12.C1:SS

ENGINEERING RELEASE

REV _____ DATE _____

ERO _____

SIGNATURE	DATE
PROJ DIR NA	
QA MGR NA	
INDEPENDENT SAFETY MGR NA	
PROJECT MGR NA	
SYSTEMS MGR NA	
ENGINEERING MGR NA	
SUPERVISOR C. DIVONA	11-3-92
DESIGN ENGINEER R. CHOATE	11-3-92
CHECKED J. HERBRAND	11-2-92
DRAWN R.MOREL	7-17-92

U.S.DEPARTMENT OF ENERGY

Richland Field Office

DE - AC06-86RL10838

FLUOR DANIEL, INC.
ADVANCED TECHNOLOGY DIVISION

RA-130-008
CABLE REELS
SUPPORT FRAME
LEFT LIFTING LUG DETS

PROJECT TITLE: HANFORD WASTE VITRIFICATION PLANT

PROJECT	FLUOR CONTRACT NO.	CWBS NO.
B-595	8457	P06B
SCALE 1/4	BLDG NO. 1	INDEX NO.

CLASSIFICATION	BY	DRAWING NUMBER	SHEET	OF	REV
NONE	NOT REQD	H-2-120565	6	8	0

WING INDEX

AFC 77 78 79 80

DISTRIBUTION CODE: 403

M328 ACAD

INITIALS: PN

DATE: 03-16-93

QUALITY LEVEL II

SAFETY CLASS 3

APR 8 - 1993

REV NO.	DATE	REVISION DESCRIPTION	JH	RC	CD	NA
0	04/06/93	APPROVED FOR CONSTRUCTION	JH	RC	CD	NA
			NA	NA	NA	NA

B

CADFILE	B120565G	CADCODE	2B:IBM:ACD2:12.C1:SS

ENGINEERING RELEASE

REV _____ DATE _____

ERO _____

SIGNATURE	DATE
PROJ DIR NA	
QA MGR NA	
INDEPENDENT SAFETY MGR NA	
PROJECT MGR NA	
SYSTEMS MGR NA	
ENGINEERING MGR NA	
SUPERVISOR C. DIVONA	11-3-92
DESIGN ENGINEER R. CHOATE	11-3-92
CHECKED J. HERBRAND	11-2-92
DRAWN R.MOREL	7-23-92

U.S.DEPARTMENT OF ENERGY

Richland Field Office

DE – AC06–86RL10838

FLUOR DANIEL, INC.

ADVANCED TECHNOLOGY DIVISION

RA–130–008 CABLE REELS SUPPORT FRAME RIGHT LIFTING LUG DETS

A

PROJECT TITLE: HANFORD WASTE VITRIFICATION PLANT

PROJECT	FLUOR CONTRACT NO.	CWBS NO.
B–595	8457	P06B
SCALE 1/4	BLDG NO. 1	INDEX NO.

CLASSIFICATION	BY	DRAWING NUMBER	SHEET	OF	REV
NONE	NOT REQD	H–2–120565	7	8	0

ING INDEX

2 1

AFC 77 78 79 80

DISTRIBUTION CODE: 403

M329 ACAD

INITIALS: PN

DATE: 03–16–93

QUALITY LEVEL II

SAFETY CLASS 3

APR 8 - 1993

REV NO.	DATE	REVISION DESCRIPTION	APPROVAL INITIALS			
0	04/06/93	APPROVED FOR CONSTRUCTION	JH	RC	CD	NA / NA
			NA	NA	NA	NA

CADFILE	B120565H	CADCODE	2B:IBM:ACD2:12.C1:SS

ENGINEERING RELEASE

REV _____ DATE _____

ERO _____

SIGNATURE	DATE
PROJ DIR NA	
QA MGR NA	
INDEPENDENT SAFETY MGR NA	
PROJECT MGR NA	
SYSTEMS MGR NA	
ENGINEERING MGR NA	
SUPERVISOR C. DIVONA	11-3-92
DESIGN ENGINEER R. CHOATE	11-3-92
CHECKED J. HERBRAND	11-2-92
DRAWN R.MOREL	07/27/92

U.S.DEPARTMENT OF ENERGY

Richland Field Office

DE – AC06-86RL10838

FLUOR DANIEL, INC.

ADVANCED TECHNOLOGY DIVISION

RA-130-008 CABLE REELS SUPPORT FRAME BRIDGE WELDMENT

PROJECT TITLE: HANFORD WASTE VITRIFICATION PLANT

PROJECT	FLUOR CONTRACT NO.	CWBS NO.
B-595	8457	P06B
SCALE: SHOWN	BLDG NO.: 1	INDEX NO.

CLASSIFICATION	BY	DRAWING NUMBER	SHEET	OF	REV
NONE	NOT REQD	H-2-120565	8	8	0

ING INDEX

AFC 77 78 79 80

DISTRIBUTION CODE: 403

M330 ACAD

INITIALS: PN

DATE: 03-16-93

QUALITY LEVEL II

SAFETY CLASS 3

APR 8 - 1993

REV NO.	DATE	REVISION DESCRIPTION	JH	RC	CD	NA
0	04/06/93	APPROVED FOR CONSTRUCTION	NA	NA	NA	NA

CADFILE B120568A CADCODE 2B:IBM:ACD2:12.C1:SS

ENGINEERING RELEASE

REV _____ DATE _____

ERO _____

SIGNATURE	DATE
PROJ DIR NA	
QA MGR NA	
INDEPENDENT SAFETY MGR NA	
PROJECT MGR NA	
SYSTEMS MGR NA	
ENGINEERING MGR NA	
SUPERVISOR C. DIVONA	11-3-92
DESIGN ENGINEER R. CHOATE	11-3-92
CHECKED J. HERBRAND	11-2-92
DRAWN D. SMITH	04/13/92

U.S. DEPARTMENT OF ENERGY

Richland Field Office

DE – AC06-86RL10838

FLUOR DANIEL, INC.
ADVANCED TECHNOLOGY DIVISION

MECHANICAL CONNECTOR HOUSING ASSEMBLY

PROJECT TITLE: HANFORD WASTE VITRIFICATION PLANT

PROJECT	FLUOR CONTRACT NO.	CWBS NO.
B-595	8457	P06B
SCALE 1/1	BLDG NO. 1	INDEX NO.

CLASSIFICATION	BY	DRAWING NUMBER	SHEET	OF	REV
NONE	NOT REQD	H-2-120568	1	1	0

WING INDEX

AFC 77 78 79 80

DISTRIBUTION CODE: 403

M331 ACAD

INITIALS: PN

DATE: 03-16-93

QUALITY LEVEL II
SAFETY CLASS 3

APR 8 - 1993

REV NO.	DATE	REVISION DESCRIPTION	RB	RC	CD	NA
0	04/09/93	APPROVED FOR CONSTRUCTION	RB	RC	CD	NA
			NA	NA	NA	NA

APPROVAL INITIALS

CADFILE	B120555A	CADCODE	2B:IBM:ACD2:12.C1:SS

ENGINEERING RELEASE
REV _____ DATE _____
ERO _____

SIGNATURE	DATE
PROJ DIR NA	
QA MGR NA	
INDEPENDENT SAFETY MGR NA	
PROJECT MGR NA	
SYSTEMS MGR NA	
ENGINEERING MGR NA	
SUPERVISOR C. DIVONA	11/3/92
DESIGN ENGINEER R. CHOATE	11/3/92
CHECKED R. BIANCHI	11/2/92
DRAWN R. MOREL	7-7-92

U.S. DEPARTMENT OF ENERGY

Richland Field Office
DE – AC06-86RL10838

FLUOR DANIEL, INC.
ADVANCED TECHNOLOGY DIVISION

RA-130-010 SOUTH TRACK & CATCH PAN DIMENSIONAL RECORD DWG

PROJECT TITLE: HANFORD WASTE VITRIFICATION PLANT

PROJECT	FLUOR CONTRACT NO.	CWBS NO.
B-595	8457	P06B
SCALE: NONE	BLDG NO.: 1	INDEX NO.

CLASSIFICATION	BY	DRAWING NUMBER	SHEET	OF	REV
NONE	NOT REQD	H-2-120555	1	2	0

WING INDEX

AFC 77 78 79 80

DISTRIBUTION CODE: 403

M332 ACAD

INITIALS: PN
DATE: 03-16-93

QUALITY LEVEL II

SAFETY CLASS 3

APR 8 - 1993

REV NO.	DATE	REVISION DESCRIPTION	RB	RC	CD	NA
0	04/06/93	APPROVED FOR CONSTRUCTION	RB	RBC	CD	NA
			NA	NA	NA	NA

APPROVAL INITIALS

CADFILE B120555B CADCODE 2B:IBM:ACD2:12.C1:SS

ENGINEERING RELEASE

REV _____ DATE _____

ERO _____

SIGNATURE	DATE
PROJ DIR NA	
QA MGR NA	
INDEPENDENT SAFETY MGR NA	
PROJECT MGR NA	
SYSTEMS MGR NA	
ENGINEERING MGR NA	
SUPERVISOR C. DIVONA	11/3/92
DESIGN ENGINEER R. CHOATE	11/3/92
CHECKED R. BIANCHI	11/2/92
DRAWN R. MOREL	7-7-92

U.S.DEPARTMENT OF ENERGY

Richland Field Office

DE – AC06–86RL10838

FLUOR DANIEL, INC.
ADVANCED TECHNOLOGY DIVISION

RA–130–009 NORTH TRACK & CATCH PAN DIMENSIONAL RECORD DWG

PROJECT TITLE: HANFORD WASTE VITRIFICATION PLANT

PROJECT	FLUOR CONTRACT NO.	CWBS NO.
B–595	8457	P06B
SCALE: NONE	BLDG NO.: 1	INDEX NO.

CLASSIFICATION	BY	DRAWING NUMBER	SHEET	OF	REV
NONE	NOT REQD	H–2–120555	2	2	0

WING INDEX

AFC 77 78 79 80

DISTRIBUTION CODE: 403

M333 ACAD

INITIALS: PN

DATE: 03–16–93

BRAID SHIELD, 24 AWG TINNED COPPER DRAIN WIRE CHROME PVC JACKET, BELDEN CATALOG #9841 OR EQUAL, FOR COMMUNICATION SIGNALS. PROVIDE A PLUG (OR RECEPTACLE) ON ONE END OF EACH CABLE TO MATE WITH RECEPTACLE (OR PLUG) ON THE PANEL. ASSEMBLE THE CABLES WITH AN OUTER STAINLESS STEEL WIRE MESH CORD GRIP KELLEMS STAINLESS STEEL DELUXE CORD, HUBBELL CATALOG #CGXXXXXX OR EQUAL. PROVIDE CAPS FOR ALL RECEPTACLES AND PLUGS.

QUALITY LEVEL II
SAFETY CLASS 3

APR 8 - 1993

REV NO.	DATE	REVISION DESCRIPTION	APPROVAL INITIALS			
0	03/06/93	APPROVED FOR CONSTRUCTION				NA/NA
			NA	NA	NA	NA

CADFILE B121701A CADCODE 2B:IBM:ACD2:12.C1:SS

ENGINEERING RELEASE
REV _____ DATE _____
ERO _____

SIGNATURE	DATE
PROJ DIR NA	
QA MGR NA	
INDEPENDENT SAFETY MGR NA	
PROJECT MGR NA	
SYSTEMS MGR NA	
ENGINEERING MGR NA	
SUPERVISOR	2/26/93
DESIGN ENGINEER	2/26/93
CHECKED	2/26/93
DRAWN R.ROBERT RR	11/16/91

U.S.DEPARTMENT OF ENERGY
Richland Field Office
DE – AC06-86RL10838

FLUOR DANIEL, INC.
ADVANCED TECHNOLOGY DIVISION

LP-130-001, 006 INSTRUMENT PANEL LAYOUT

PROJECT TITLE
HANFORD WASTE VITRIFICATION PLANT

PROJECT	FLUOR CONTRACT NO.	CWBS NO.
B-595	8457	P06B
SCALE	BLDG NO.	INDEX NO.
NONE	1	

CLASSIFICATION	BY	DRAWING NUMBER	SHEET	OF	REV
NONE	NOT REQD	H-2-121701	1	1	0

WING INDEX

AFC 77 78 79 80

DISTRIBUTION CODE: 703 CS1 ACAD

INITIALS
DATE: 26 MAR 93

INSULATED TWISTED PAIR WITH OVERALL BELDFOIL/COPPER BRAID SHIELD, 24 AWG TINNED COPPER DRAIN WIRE CHROME PVC JACKET, BELDEN CATALOG #9841 OR EQUAL, FOR COMMUNICATION SIGNALS. PROVIDE A PLUG (OR RECEPTACLE) ON ONE END OF EACH CABLE TO MATE WITH RECEPTACLE (OR PLUG) ON THE PANEL. ASSEMBLE THE CABLES WITH AN OUTER STAINLESS STEEL WIRE MESH CORD GRIP KELLEMS STAINLESS STEEL DELUXE CORD, HUBBELL CATALOG #CGXXXXXX OR EQUAL. PROVIDE CAPS FOR ALL RECEPTACLES AND PLUGS.

APR 8 - 1993

QUALITY LEVEL II
SAFETY CLASS 3

REV NO.	DATE	REVISION DESCRIPTION	APPROVAL INITIALS			
0	04/06/93	APPROVED FOR CONSTRUCTION	BRB	RLL	JBB	NA/NA
			NA	NA	NA	NA

CADFILE	B121702A	CADCODE	2B:IBM:ACD2:12.C1:SS

ENGINEERING RELEASE
REV _____ DATE _____
ERO _____

SIGNATURE	DATE
PROJ DIR NA	
QA MGR NA	
INDEPENDENT SAFETY MGR NA	
PROJECT MGR NA	
SYSTEMS MGR NA	
ENGINEERING MGR NA	
SUPERVISOR JB Bunning	2/26/93
DESIGN ENGINEER Robert L. Layne	2/26/93
CHECKED BRBarlick	2/26/93
DRAWN R.ROBERT RR	11/18/91

U.S.DEPARTMENT OF ENERGY
Richland Field Office
DE - AC06-86RL10838

FLUOR DANIEL, INC.
ADVANCED TECHNOLOGY DIVISION

LP-130-002, 007
INSTRUMENT
PANEL LAYOUT

PROJECT TITLE: HANFORD WASTE VITRIFICATION PLANT

PROJECT	FLUOR CONTRACT NO.	CWBS NO.
B-595	8457	P06B
SCALE	BLDG NO.	INDEX NO.
NONE	1	

CLASSIFICATION	BY	DRAWING NUMBER	SHEET	OF	REV
NONE	NOT REQD	H-2-121702	1	1	0

NG INDEX

B

A

2 1

INITIALS: RR
DATE: 26 MAR 93

DISTRIBUTION CODE: 703 CS2 ACAD

CF1
ZIL
IAX
099A

APR 8 - 1993

CFI
ZA
IAX
099A

REV NO.	DATE	REVISION DESCRIPTION	APPROVAL INITIALS			
0	04/06/93	APPROVED FOR CONSTRUCTION	[signature] NA	[signature] NA	[signature] NA	NA/NA NA

CADFILE	B121796A	CADCODE	2B:IBM:ACD2:12.C1:SS

ENGINEERING RELEASE
REV. _____ DATE _____
ERO. _____

SIGNATURE	DATE
PROJ. DIR. NA	
Q.A. MGR. NA	
INDEPENDENT SAFETY MGR. NA	
PROJECT MGR. NA	
SYSTEMS MGR. NA	
ENGINEERING MGR. NA	
SUPERVISOR [signature]	2/26/93
DESIGN ENGINEER [signature]	2/26/93
CHECKED [signature]	2/26/93
DRAWN E.ROBLES [signature]	12/03/91

CFI
ZIH
IAX
099A

U.S.DEPARTMENT OF ENERGY

Richland Field Office
DE - AC06-86RL10838

FLUOR DANIEL, INC.
ADVANCED TECHNOLOGY DIVISION

INSTRUMENT CONTROL LOGIC DIAGRAM LP-130-001,002,006 & 007

PROJECT TITLE: HANFORD WASTE VITRIFICATION PLANT

PROJECT	FLUOR CONTRACT NO.	CWBS NO.
B-595	8457	P06B

SCALE	BLDG. NO.	INDEX NO.
NONE	1	

CLASSIFICATION	BY	DRAWING NUMBER	SHEET	OF	REV.
NONE	NOT REQ'D	H-2-121796	1	7	0

INDEX
3
YOUT

B
A

2
1

INITIALS: ELH

A F C

DISTRIBUTION CODE: 703 CS3 ACAD

APR 8 - 1993

REV NO.	DATE	REVISION DESCRIPTION	APPROVAL INITIALS			
0	04/06/93	APPROVED FOR CONSTRUCTION	BRB NA	RLL NA	JGB NA	NA NA

CADFILE	B121796B	CADCODE	2B:IBM:ACD2:12.C1:SS

ENGINEERING RELEASE

REV. _____ DATE _____

ERO. _____

SIGNATURE	DATE
PROJ. DIR. NA	
Q.A. MGR. NA	
INDEPENDENT SAFETY MGR. NA	
PROJECT MGR. NA	
SYSTEMS MGR. NA	
ENGINEERING MGR. NA	
SUPERVISOR J B Bunnong	2/26/93
DESIGN ENGINEER Robert L. Layne	2/26/93
CHECKED B.K. Carlisle	2/26/93
DRAWN F.L.HOLLSTEIN FLH	11/27/91

U.S.DEPARTMENT OF ENERGY

Richland Field Office

DE – AC06-86RL10838

FLUOR DANIEL, INC.
ADVANCED TECHNOLOGY DIVISION

INSTRUMENT CONTROL LOGIC DIAGRAM LP-130-001,002,006 & 007

PROJECT TITLE: HANFORD WASTE VITRIFICATION PLANT

PROJECT	FLUOR CONTRACT NO.	CWBS NO.
B-595	8457	P06B

SCALE	BLDG. NO.	INDEX NO.
NONE	1	

CLASSIFICATION	BY	DRAWING NUMBER	SHEET	OF	REV.
NONE	NOT REQ'D	H-2-121796	2	7	0

IG INDEX

13

UT

A F C

DISTRIBUTION CODE: 703

CS4

ACAD

INITIALS: FLH

DATE: 18 MAR 93

LP1 ZI PTT 020A

CF1 ZI PTT 020B

LP6 ZI PTT 020C

APR 8 - 1993

LP1 YIC PTT 030 STOPPED

REV NO.	DATE	REVISION DESCRIPTION	APPROVAL INITIALS			
0	04/06/93	APPROVED FOR CONSTRUCTION	BAB NA	RLL NA	JBB NA	NA NA

CADFILE B121796C CADCODE 2B:IBM:ACD2:12.C1:SS

ENGINEERING RELEASE

REV. _____ DATE _____

ERO. _____

SIGNATURE	DATE
PROJ. DIR. NA	
Q.A. MGR. NA	
INDEPENDENT SAFETY MGR. NA	
PROJECT MGR. NA	
SYSTEMS MGR. NA	
ENGINEERING MGR. NA	
SUPERVISOR JB Bunning	2/26/93
DESIGN ENGINEER Robert L. Layne	2/26/93
CHECKED Br Carlisle	2/26/93
DRAWN F.L.HOLLSTEIN	11/27/91

U.S.DEPARTMENT OF ENERGY

Richland Field Office

DE - AC06-86RL10838

FLUOR DANIEL, INC.
ADVANCED TECHNOLOGY DIVISION

INSTRUMENT CONTROL LOGIC DIAGRAM LP-130-001,002,006 & 007

PROJECT TITLE: HANFORD WASTE VITRIFICATION PLANT

PROJECT	FLUOR CONTRACT NO.	CWBS NO.
B-595	8457	P06B

SCALE	BLDG. NO.	INDEX NO.
NONE	1	

CLASSIFICATION	BY	DRAWING NUMBER	SHEET	OF	REV.
NONE	NOT REQ'D	H-2-121796	3	7	0

INDEX

UT

B

A

2

1

AFC

DISTRIBUTION CODE: 703

CS5

ACAD

INITIALS: FLH

DATE: [illegible] MAR 93

APR 8 - 1993

CF1
YI
PTT
021

REV NO.	DATE	REVISION DESCRIPTION	APPROVAL INITIALS			
0	04/06/93	APPROVED FOR CONSTRUCTION	BRB	RLL	JBB	NA/NA
			NA	NA	NA	NA

CADFILE	B121796D	CADCODE	2B:IBM:ACD2:12.C1:SS

ENGINEERING RELEASE
REV. _____ DATE _____
ERO. _____

SIGNATURE	DATE
PROJ. DIR. NA	
Q.A. MGR. NA	
INDEPENDENT SAFETY MGR. NA	
PROJECT MGR. NA	
SYSTEMS MGR. NA	
ENGINEERING MGR. NA	
SUPERVISOR J B Bunning	2/26/93
DESIGN ENGINEER Robert L. Layne	2/26/93
CHECKED B.L. Barnett	2/26/93
DRAWN E.ROBLES ER	12/06/91

U.S.DEPARTMENT OF ENERGY
Richland Field Office
DE – AC06-86RL10838

FLUOR DANIEL, INC.
ADVANCED TECHNOLOGY DIVISION

INSTRUMENT CONTROL LOGIC DIAGRAM LP-130-001,002,006 & 007

PROJECT TITLE: HANFORD WASTE VITRIFICATION PLANT

PROJECT	FLUOR CONTRACT NO.	CWBS NO.
B-595	8457	P06B
SCALE	BLDG. NO.	INDEX NO.
NONE	1	

CLASSIFICATION	BY	DRAWING NUMBER	SHEET	OF	REV.
NONE	NOT REQ'D	H-2-121796	4	7	0

INDEX

DISTRIBUTION CODE: 703 CS6 ACAD

INITIALS: FLH
DATE 18 MAR 93

ZIH

CF1
ZIH
IAX
066B

APR 8 - 1993

ZIL

REV NO.	DATE	REVISION DESCRIPTION	APPROVAL INITIALS			
0	04/06/93	APPROVED FOR CONSTRUCTION	[illegible] NA	[illegible] NA	[illegible] NA	NA/NA NA

CADFILE	B121796E	CADCODE	2B:IBM:ACD2:12.C1:SS

ENGINEERING RELEASE
REV. _____ DATE _____
ERO. _____

SIGNATURE	DATE
PROJ. DIR. NA	
Q.A. MGR. NA	
INDEPENDENT SAFETY MGR. NA	
PROJECT MGR. NA	
SYSTEMS MGR. NA	
ENGINEERING MGR. NA	
SUPERVISOR J B Bunning	2/26/93
DESIGN ENGINEER Robert L Layne	2/26/93
CHECKED B R Carlisle	2/26/93
DRAWN E.ROBLES ER	12/06/91

U.S.DEPARTMENT OF ENERGY
Richland Field Office
DE - AC06-86RL10838

FLUOR DANIEL, INC.
ADVANCED TECHNOLOGY DIVISION

INSTRUMENT CONTROL LOGIC DIAGRAM LP-130-001,002,006 & 007

PROJECT TITLE: HANFORD WASTE VITRIFICATION PLANT

PROJECT	FLUOR CONTRACT NO.	CWBS NO.
B-595	8457	P06B
SCALE	BLDG. NO.	INDEX NO.
NONE	1	

CLASSIFICATION	BY	DRAWING NUMBER	SHEET	OF	REV.
NONE	NOT REQ'D	H-2-121796	5	7	0

INDEX
3
OUT

2 1

A F C
7 78 79 80

DISTRIBUTION CODE: 703 CS7 ACAD

INITIALS: FLH
DATE: 18 MAR 93

APR 8 - 1993

REV NO.	DATE	REVISION DESCRIPTION	APPROVAL INITIALS			
0	04/06/93	APPROVED FOR CONSTRUCTION	[illegible]	RLL	[illegible]	NA/NA
			NA	NA	NA	NA

CADFILE	B121796F	CADCODE	2B:IBM:ACD2:12.C1:SS

ENGINEERING RELEASE

REV. _____ DATE _____

ERO. _____

SIGNATURE	DATE
PROJ. DIR. NA	
Q.A. MGR. NA	
INDEPENDENT SAFETY MGR. NA	
PROJECT MGR. NA	
SYSTEMS MGR. NA	
ENGINEERING MGR. NA	
SUPERVISOR J B Bunnemann	2/26/93
DESIGN ENGINEER Robert Z. Lagrue	2/26/93
CHECKED B R Carlisle	2/26/93
DRAWN F.L.HOLLSTEIN [illegible]	12/11/91

U.S.DEPARTMENT OF ENERGY

Richland Field Office

DE - AC06-86RL10838

FLUOR DANIEL, INC.
ADVANCED TECHNOLOGY DIVISION

INSTRUMENT CONTROL LOGIC DIAGRAM LP-130-001,002,006 & 007

PROJECT TITLE: HANFORD WASTE VITRIFICATION PLANT

PROJECT	FLUOR CONTRACT NO.	CWBS NO.
B-595	8457	P06B
SCALE	BLDG. NO.	INDEX NO.
NONE	1	

CLASSIFICATION	BY	DRAWING NUMBER	SHEET	OF	REV.
NONE	NOT REQ'D	H-2-121796	6	7	0

INDEX

OUT

DISTRIBUTION CODE: 703

CS8

ACAD

INITIALS: FLH

DATE: 18 MAR 93

APR 8 - 1993

REV NO.	DATE	REVISION DESCRIPTION				
0	04/06/93	APPROVED FOR CONSTRUCTION	BAB	RLL	GBC	NA/NA
			NA	NA	NA	NA

CADFILE	B121796G	CADCODE	2B:IBM:ACD2:12.C1:SS

ENGINEERING RELEASE

REV. _____ DATE _____

ERO. _____

SIGNATURE	DATE
PROJ. DIR. NA	
Q.A. MGR. NA	
INDEPENDENT SAFETY MGR. NA	
PROJECT MGR. NA	
SYSTEMS MGR. NA	
ENGINEERING MGR. NA	
SUPERVISOR J.E. Bunning	2/26/93
DESIGN ENGINEER Robert L. Lagne	2/26/93
CHECKED B.A. Barbier	2/26/93
DRAWN F.L.HOLLSTEIN	12/2/91

U.S.DEPARTMENT OF ENERGY

Richland Field Office

DE - AC06-86RL10838

FLUOR DANIEL, INC.
ADVANCED TECHNOLOGY DIVISION

INSTRUMENT CONTROL LOGIC DIAGRAM LP-130-001,002,006 & 007

PROJECT TITLE: **HANFORD WASTE VITRIFICATION PLANT**

PROJECT	FLUOR CONTRACT NO.	CWBS NO.
B-595	8457	P06B
SCALE: NONE	BLDG. NO.: 1	INDEX NO.:

CLASSIFICATION	BY	DRAWING NUMBER	SHEET	OF	REV.
NONE	NOT REQ'D	H-2-121796	7	7	0

DISTRIBUTION CODE: 703 CS9 ACAD INITIALS [redacted] DATE [redacted] 93

APR 8 - 1993

REV NO.	DATE	REVISION DESCRIPTION	APPROVAL INITIALS			
0	04/06/93	APPROVED FOR CONSTRUCTION	KK	[illegible]	AT ΔPM	NA NA
			NA	NA	NA	NA

CADFILE	B122425A	CADCODE	2B:IBM:ACD2:10.C2:SS

ENGINEERING RELEASE

REV _____ DATE _____

ERO _____

SIGNATURE	DATE
PROJ DIR NA	
QA MGR NA	
INDEPENDENT SAFETY MGR NA	
PROJECT MGR NA	
SYSTEMS MGR NA	
ENGINEERING MGR NA	
SUPERVISOR AT ΔPM A.TALEBI/A.McWHORTER	10-29-92
DESIGN ENGINEER A.LARSEN [illegible]	10-29-92
CHECKED K.KOVELL KK	10-29-92
DRAWN S.DREYER [illegible]	9-30-92

U.S.DEPARTMENT OF ENERGY

Richland Field Office

DE - AC06-86RL10838

FLUOR DANIEL, INC.
ADVANCED TECHNOLOGY DIVISION

ELECTRICAL GENERAL NOTES AND SYMBOLS

PROJECT TITLE: HANFORD WASTE VITRIFICATION PLANT

PROJECT	FLUOR CONTRACT NO.	CWBS NO.
B-595	8457	P06B

SCALE	BLDG NO.	INDEX NO.
NONE	1	

CLASSIFICATION	BY	DRAWING NUMBER	SHEET	OF	REV
NONE	NOT REQD	H-2-122425	1	1	0

IG INDEX

A F C

77 78 79 80

DISTRIBUTION CODE: 617

E1

ACAD

INITIALS: LD

DATE: 3-16-93

QUALITY LEVEL II
SAFETY CLASS 3

APR 8 - 1993

REV NO.	DATE	REVISION DESCRIPTION	APPROVAL INITIALS			
0	04/06/93	APPROVED FOR CONSTRUCTION	KK	AL	AT AM	NA NA
			NA	NA	NA	NA

CADFILE	B122426A	CADCODE	2B:IBM:ACD2:10.C2:SS

ENGINEERING RELEASE
REV _____ DATE _____
ERO _____

SIGNATURE	DATE
PROJ DIR NA	
QA MGR NA	
INDEPENDENT SAFETY MGR NA	
PROJECT MGR NA	
SYSTEMS MGR NA	
ENGINEERING MGR NA	
SUPERVISOR A.TALEBI/A.McWHORTER	10-29-92
DESIGN ENGINEER A.LARSEN	10-29-92
CHECKED K.KOVELL KK	10-29-92
DRAWN S.DREYER	9-30-92

U.S.DEPARTMENT OF ENERGY
Richland Field Office
DE – AC06-86RL10838

FLUOR DANIEL, INC.
ADVANCED TECHNOLOGY DIVISION

ELECTRICAL POUR & DRAIN TURNTABLES BLOCK DIAGRAM

PROJECT TITLE: HANFORD WASTE VITRIFICATION PLANT

PROJECT	FLUOR CONTRACT NO.	CWBS NO.
B-595	8457	P06B
SCALE: NONE	BLDG NO.: 1	INDEX NO.:

CLASSIFICATION	BY	DRAWING NUMBER	SHEET	OF	REV
NONE	NOT REQD	H-2-122426	1	1	0

G INDEX

A F C
7 78 79 80

DISTRIBUTION CODE: 617

E2

ACAD

INITIALS: LD
DATE: 3-16-93

QUALITY LEVEL II
SAFETY CLASS 3

APR 8 - 1993

REV NO.	DATE	REVISION DESCRIPTION				
0	04/06/93	APPROVED FOR CONSTRUCTION	KK	AL	AT ARM	NA NA
			NA	NA	NA	NA

CADFILE B122427A CADCODE 2B:IBM:ACD2:10.C2:SS

ENGINEERING RELEASE
REV _____ DATE _____
ERO _____

SIGNATURE	DATE
PROJ DIR NA	
QA MGR NA	
INDEPENDENT SAFETY MGR NA	
PROJECT MGR NA	
SYSTEMS MGR NA	
ENGINEERING MGR NA	
SUPERVISOR A.TALEBI AT / A.McWHORTER ARM	10-29-92
DESIGN ENGINEER A.LARSEN	10-29-92
CHECKED K.KOVELL KK	10-29-92
DRAWN S.DREYER	9-30-92

U.S.DEPARTMENT OF ENERGY
Richland Field Office
DE – AC06-86RL10838

FLUOR DANIEL, INC.
ADVANCED TECHNOLOGY DIVISION

ELECTRICAL CONNECTION DIAGRAM TU-130-002

PROJECT TITLE
HANFORD WASTE VITRIFICATION PLANT

PROJECT	FLUOR CONTRACT NO.	CWBS NO.
B-595	8457	P06B
SCALE	BLDG NO.	INDEX NO.
NONE	1	

CLASSIFICATION	BY	DRAWING NUMBER	SHEET	OF	REV
NONE	NOT REQD	H-2-122427	1	4	0

IG INDEX

DISTRIBUTION CODE: 617 E3 ACAD

INITIALS: LD
DATE: 3-16-93

QUALITY LEVEL II
SAFETY CLASS 3

APR 8 - 1993

REV NO.	DATE	REVISION DESCRIPTION	APPROVAL INITIALS			
0	04/06/93	APPROVED FOR CONSTRUCTION	KK	AL	AT APM	NA NA
			NA	NA	NA	NA

CADFILE B122427B CADCODE 2B:IBM:ACD2:10.C2:SS

ENGINEERING RELEASE
REV _____ DATE _____
ERO _____

SIGNATURE	DATE
PROJ DIR NA	
QA MGR NA	
INDEPENDENT SAFETY MGR NA	
PROJECT MGR NA	
SYSTEMS MGR NA	
ENGINEERING MGR NA	
SUPERVISOR AT APM A.TALEBI/A.McWHORTER	10-29-92
DESIGN ENGINEER A.LARSEN AL	10-29-92
CHECKED K.KOVELL KK	10-29-92
DRAWN S.DREYER	9-30-92

U.S.DEPARTMENT OF ENERGY
Richland Field Office
DE – AC06-86RL10838

FLUOR DANIEL, INC.
ADVANCED TECHNOLOGY DIVISION

ELECTRICAL CONNECTION DIAGRAM TU-130-002

PROJECT TITLE
HANFORD WASTE VITRIFICATION PLANT

PROJECT	FLUOR CONTRACT NO.	CWBS NO.
B-595	8457	P06B
SCALE	BLDG NO.	INDEX NO.
NONE	1	

CLASSIFICATION	BY	DRAWING NUMBER	SHEET	OF	REV
NONE	NOT REQD	H-2-122427	2	4	0

DISTRIBUTION CODE: 617 E4 ACAD

INITIALS: LD
DATE: 3-16-93

NOTES:

1. CONNECTOR NUMBERS ARE PREFIXED BY TU-130-001. (EX: TU-130-001-EA)
2. CONNECTOR NUMBERS ARE PREFIXED BY RA-130-007. (EX: RA-130-007-EA)
3. FOR STANDARD DRAFTING SYMBOLS, ABBREVIATIONS AND GENERAL NOTES SEE DWG H-2-122425 SH 1.
4. EQUIPMENT GROUND KIT, GENERAL ELECTRIC CATALOG NUMBER TGL3, (OR EQUAL).

QUALITY LEVEL II
SAFETY CLASS 3

APR 8 - 1993

REV NO.	DATE	REVISION DESCRIPTION	APPROVAL INITIALS			
0	04/06/93	APPROVED FOR CONSTRUCTION	KK NA	AC NA	AT APM NA	NA NA

CADFILE	B122427C	CADCODE	2B:IBM:ACD2:10.C2:SS

ENGINEERING RELEASE
REV _____ DATE _____
ERO _____

SIGNATURE	DATE
PROJ DIR NA	
QA MGR NA	
INDEPENDENT SAFETY MGR NA	
PROJECT MGR NA	
SYSTEMS MGR NA	
ENGINEERING MGR NA	
SUPERVISOR A.TALEBI AT / A.McWHORTER APM	10-29-92
DESIGN ENGINEER A.LARSEN AL	10-29-92
CHECKED K.KOVELL KK	10-29-92
DRAWN S.DREYER	9-30-92

U.S.DEPARTMENT OF ENERGY
Richland Field Office
DE - AC06-86RL10838

FLUOR DANIEL, INC.
ADVANCED TECHNOLOGY DIVISION

ELECTRICAL CONNECTION DIAGRAM TU-130-001

PROJECT TITLE: HANFORD WASTE VITRIFICATION PLANT

PROJECT	FLUOR CONTRACT NO.	CWBS NO.
B-595	8457	P06B

SCALE	BLDG NO.	INDEX NO.
NONE	1	

CLASSIFICATION	BY	DRAWING NUMBER	SHEET	OF	REV
NONE	NOT REQD	H-2-122427	3	4	0

NG INDEX

A F C
77 78 79 80

DISTRIBUTION CODE: 617

E5

ACAD

INITIALS: LD
DATE: 3-16-93

QUALITY LEVEL II
SAFETY CLASS 3

APR 8 - 1993

REV NO.	DATE	REVISION DESCRIPTION	APPROVAL INITIALS			
0	04/06/93	APPROVED FOR CONSTRUCTION	KK NA	AL NA	AT APM NA	NA NA

CADFILE	B122427D	CADCODE	2B:IBM:ACD2:10.C2:SS

ENGINEERING RELEASE
REV _____ DATE _____
ERO _____

SIGNATURE	DATE
PROJ DIR NA	
QA MGR NA	
INDEPENDENT SAFETY MGR NA	
PROJECT MGR NA	
SYSTEMS MGR NA	
ENGINEERING MGR NA	
SUPERVISOR A.TALEBI/A.McWHORTER AT APM	10-29-92
DESIGN ENGINEER A.LARSEN AL	10-29-92
CHECKED K.KOVELL KK	10-29-92
DRAWN S.DREYER	9-30-92

U.S.DEPARTMENT OF ENERGY
Richland Field Office
DE – AC06-86RL10838

FLUOR DANIEL, INC.
ADVANCED TECHNOLOGY DIVISION

ELECTRICAL CONNECTION DIAGRAM TU-130-001

PROJECT TITLE: HANFORD WASTE VITRIFICATION PLANT

PROJECT	FLUOR CONTRACT NO.	CWBS NO.
B-595	8457	P06B

SCALE	BLDG NO.	INDEX NO.
NONE	1	

CLASSIFICATION	BY	DRAWING NUMBER	SHEET	OF	REV
NONE	NOT REQD	H-2-122427	4	4	0

NG INDEX

B

A

2

1

A F C
77 78 79 80

DISTRIBUTION CODE: 617

E6

ACAD

INITIALS: LD
DATE: 3-16-93