AR TARGET SHEET

The following document was too large to scan as one unit, therefore it has been broken down into sections.

DOCUMENT # DOE/RL 88-41

EDMC # 0039766

SECTION 2 OF 2

THIS PAGE INTENTIONALLY
LEFT BLANK

9513319.1936

QUALITY ASSURANCE PROJECT PLAN FOR NEAR SURFACE SOIL SAMPLING AND SURFACE WATER SAMPLING AT THE 2101-M POND AND RAINWATER RUNOFF DITCH

Revision 0

Westinghouse Hanford Company
Environmental Engineering, Technology & Permitting Function
Richland, Washington

930602.0918

This page intentionally left blank.

9513319.1937

CONTENTS

GLOSSARY . . . . . APP D2-vii

1.0 PROJECT DESCRIPTION . . . . . APP D2-1
1.1 PROJECT OBJECTIVE . . . . . APP D2-1
1.2 BACKGROUND INFORMATION . . . . . APP D2-1
1.3 QUALITY ASSURANCE PROJECT PLAN APPLICABILITY AND RELATIONSHIP TO THE WESTINGHOUSE HANFORD COMPANY QUALITY ASSURANCE PROGRAM . . . . . APP D2-1
1.4 SAMPLING AND TESTING ACTIVITIES . . . . . APP D2-1

2.0 PROJECT ORGANIZATION AND RESPONSIBILITIES . . . . . APP D2-2
2.1 PROJECT MANAGEMENT RESPONSIBILITIES . . . . . APP D2-2
2.2 ANALYTICAL LABORATORIES . . . . . APP D2-4
2.3 OTHER SUPPORT CONTRACTORS . . . . . APP D2-4

3.0 OBJECTIVES FOR MEASUREMENTS . . . . . APP D2-4

4.0 SAMPLING PROCEDURES . . . . . APP D2-7
4.1 PROCEDURE APPROVALS AND CONTROL . . . . . APP D2-7
4.1.1 Westinghouse Hanford Procedures . . . . . APP D2-7
4.1.2 Participant Contractor/Subcontractor Procedures . . . . . APP D2-8
4.2 SAMPLING AND INVESTIGATIVE PROCEDURES . . . . . APP D2-8
4.3 PROCEDURE ADDITIONS AND CHANGES . . . . . APP D2-8

5.0 SAMPLE CUSTODY . . . . . APP D2-10

6.0 CALIBRATION PROCEDURES . . . . . APP D2-10

7.0 ANALYTICAL PROCEDURES . . . . . APP D2-10

8.0 DATA REDUCTION, VALIDATION, AND REPORTING . . . . . APP D2-11
8.1 DATA REDUCTION AND DATA PACKAGE PREPARATION . . . . . APP D2-11
8.2 VALIDATION . . . . . APP D2-12
8.3 FINAL REVIEW AND RECORDS MANAGEMENT CONSIDERATIONS . . . APP D2-12

9.0 INTERNAL QUALITY CONTROL . . . . . APP D2-13

10.0 PERFORMANCE AND SYSTEM AUDITS . . . . . APP D2-14

11.0 PREVENTIVE MAINTENANCE . . . . . APP D2-14

12.0 DATA ASSESSMENT PROCEDURES . . . . . APP D2-15

13.0 CORRECTIVE ACTION . . . . . APP D2-15

14.0 QUALITY ASSURANCE REPORTS . . . . . APP D2-15

15.0 REFERENCES . . . . . APP D2-16

930602.0918

LIST OF FIGURES

D2-1. Project Organization, Sampling at 2101-M Pond . . . . . APP D2-3

LIST OF TABLES

D2-1. Analytes of Interest and Analytical Methods for 2101-M Pond . . . . . APP D2-5

D2-2. Investigative Procedures for 2101-M Pond Water and Near Surface Soil Sampling . . . . . APP D2-9

GLOSSARY

ABBREVIATIONS AND ACRONYMS

ASTM	American Society for Testing and Materials
CERCLA	Comprehensive Environmental Response, Compensation and Liability Act
DOE-RL	U.S. Department of Energy, Richland Field Office
EII	Environmental Investigations Instruction
HASM	Hanford Analytical Services Management
HEIS	Hanford Environmental Information System
M&TE	measuring and test equipment
QA	quality assurance
QAPI	quality assurance project index
QAPP	quality assurance project plan
QC	quality control
QI	quality instruction
QR	quality requirement
RCRA	Resource Conservation and Recovery Act
RI/FS	remedial investigation/feasibility study

DEFINITIONS OF TERMS

Accuracy. For the purposes of closure activities, accuracy may be interpreted as the measure of the bias in a system. Sampling accuracy normally is assessed through the evaluation of matrix spiked samples and reference samples.

Audit. For the purposes of closure activities, audits are considered to be systematic checks to verify the quality of operation of one or more elements of the total measurement system. In this sense, audits may be of two types: (1) performance audits, in which quantitative data are independently obtained for comparison with data routinely obtained in a measurement system or (2) system audits, involving a qualitative onsite evaluation of laboratories or other organizational elements of the measurement system for compliance with established quality assurance program and procedure requirements. For environmental investigations at the Hanford Site, performance audit requirements are fulfilled by periodic submittal of blind samples to the primary laboratory or the analysis of split samples by an independent laboratory. System audit requirements are implemented through the use of standard surveillance procedures.

Comparability. For the purposes of closure activities, comparability is an expression of the relative confidence with which one data set may be compared with another.

Completeness. For the purposes of closure activities, completeness may be interpreted as a qualitative parameter expressing the percentage of measurements judged to be valid.

Deviation. For the purpose of closure activities, deviation refers to a planned departure from established criteria that may be required as a result of unforeseen field situations or that may be required to correct ambiguities in procedures that may arise in practical applications.

Field/Equipment Blanks. A water blank consists of pure deionized, distilled water drawn through decontaminated soil gas sampling equipment and taken as a sample. Blanks are used to verify the adequacy of sampling equipment decontamination procedures and are used to check for possible contamination originating with the sampling environment. Blanks will be run before the initiation of sampling each day or if blank contamination is suspected or detected.

Duplicate Sample. Field duplicate samples are samples retrieved from the same sampling location using the same equipment and sampling technique and analyzed independently. Laboratory duplicate samples are samples taken successively from the same sample bulb. Duplicate samples generally are used to verify the repeatability or reproducibility of analytical data and normally are analyzed with each analytical batch or every 20 samples, whichever is greater.

Matrix Spiked Samples. Matrix spiked samples are a type of laboratory quality control sample; the samples are prepared by splitting a sample received from the field into two homogeneous aliquots (i.e., replicate samples), and adding a known quantity of a representative analyte of interest to one aliquot in order to calculate percentage of recovery.

Nonconformance. A nonconformance is a deficiency in characteristic, documentation, or procedure that renders the quality of material, equipment, services, or activities unacceptable or indeterminate. When the deficiency is of a minor nature; does not effect a permanent or significant change in quality if it is not corrected; can be brought into conformance with immediate corrective action; it shall not be categorized as a nonconformance. However, if the nature of the condition is such that it cannot be immediately and satisfactorily corrected, it shall be documented in compliance with approved procedures and brought to the attention of management for disposition and appropriate corrective action.

Precision. Precision is a measure of the repeatability or reproducibility of specific measurements under a given set of conditions. Specifically, it is a quantitative measure of the variability of a group of measurements compared to their average value. Precision normally is expressed in terms of standard deviation, but also may be expressed as the coefficient of variation (i.e., relative standard deviation) and range (i.e., maximum value minus minimum value). Precision is assessed by means of duplicate/replicate sample analysis.

Quality Assurance (QA). For the purposes of closure activities, QA refers to the total integrated quality planning, quality control, quality assessment, and corrective action activities that collectively ensure that the data from monitoring and analysis meets all end user requirements and/or the intended end use of the data.

Quality Assurance Project Plan (QAPP). The QAPP is an orderly assembly of management policies, project objectives, methods, and procedures that defines how data of known quality will be produced for a particular project or investigation.

Quality Control (QC). For the purposes of closure activities, QC refers to the routine application of procedures and defined methods to the performance of sampling, measurement, and analytical processes.

Reference Samples. Reference samples are a type of laboratory quality control sample prepared from an independent, traceable standard at a concentration other than that used for analytical equipment calibration, but within the calibration range. Such reference samples are required for every analytical batch or every 20 samples, whichever is greater.

Replicate Sample. Replicate samples are two aliquots removed from the same sample container in the laboratory and analyzed independently.

Representativeness. For the purposes of closure activities, representativeness may be interpreted as the degree to which data accurately and precisely represent a characteristic of a population parameter, variations at a sampling point, or an environmental condition. Representativeness is a qualitative parameter which is most concerned with the proper design of a sampling program.

Split Sample. A split sample is produced through homogenizing a field sample and separating the sample material into two equal aliquots. Field split samples usually are routed to separate laboratories for independent analysis, generally for the purposes of auditing the performance of the primary laboratory relative to a particular sample matrix and analytical method (see the glossary entry for audit). In the laboratory, samples generally are split to create matrix spiked samples (see the glossary entry matrix spiked samples).

Validation. For the purposes of closure activities, validation refers to a systematic process of reviewing a body of data against a set of criteria to provide assurance that the data are acceptable for their intended use. Validation methods may include review of verification activities, editing, screening, cross-checking, or technical review.

Verification. For the purposes of closure activities, verification refers to the process of determining whether procedures, processes, data, or documentation conform to specified requirements. Verification activities may include inspections, audits, surveillances, or technical review.

This page intentionally left blank.

1.0 PROJECT DESCRIPTION

1.1 PROJECT OBJECTIVE

The primary objective of the Phase II sampling of the 2101-M Pond environment is to determine the presence (or lack thereof) of constituents in the top 2 feet of the soil column of the 2101-M facility.

1.2 BACKGROUND INFORMATION

The location of 2101-M and general background information are provided in the closure plan developed for the facility (see sections A & B).

1.3 QUALITY ASSURANCE PROJECT PLAN APPLICABILITY AND RELATIONSHIP TO THE WESTINGHOUSE HANFORD COMPANY QUALITY ASSURANCE PROGRAM

This quality assurance project plan (QAPP) applies specifically to the field activities and laboratory analyses performed as part of sampling and testing investigations supporting the closure of 2101-M Pond at the Hanford Site. The plan is designed to be implemented in conjunction with the specific requirements of the 2101-M Pond Closure Plan. The QAPP is prepared in compliance with the Environmental Engineering, Technology and Permitting Function Quality Assurance Program Plan (WHC 1990). This plan describes the means selected to implement the overall QA program requirements defined by the *Quality Assurance Manual* (WHC 1989b), as applicable to environmental investigations, while accommodating the specific requirements for project plan format and content agreed upon in the *Hanford Federal Facility Agreement and Consent Order* (Ecology et al. 1992). The program plan contains a matrix of procedural resources [from WHC-CM-4-2 and from the *Environmental Investigations and Site Characterization Manual* (WHC 1989a)] that have been drawn upon to support this QAPP. This QAPP is subject to mandatory review and revision before use on subsequent phases of the investigation. Distribution and revision control of this plan will be in compliance with procedures QR 6.0, "Document Control," from WHC-CM-4-2 (WHC 1989b). All plans and procedures referenced in the QAPP are available for regulatory review on request by the direction of the Technical Lead.

1.4 SAMPLING AND TESTING ACTIVITIES

Field sampling activities will include surface water sampling and near surface soil sampling. A complete description of all activities is provided in Appendix D-1 of the 2101-M Pond Closure Plan.

2.0 PROJECT ORGANIZATION AND RESPONSIBILITIES

The following sections describe the organizations and their responsibilities in conducting investigations at 2101-M Pond.

2.1 PROJECT MANAGEMENT RESPONSIBILITIES

The Operations Contractor has primary responsibility for conducting this investigation. An organizational chart is included as Figure D2-1. The following describe responsibilities of key test personnel and organizations.

- **Closure Plan Lead**--Closure Plan Lead is responsible for overall project organization and interface with the regulatory agencies and the DOE.

- **Technical Lead**--The Technical Lead is responsible for overall direction of sampling and testing activities; responsibilities include the planning and authorization of all work and management of any subcontracted activities, as well as overall technical schedule and budgetary performance.

- **Quality Assurance Officer**--The Quality Assurance Officer is responsible for coordination and/or oversight of performance to the QAPP requirements by means of internal auditing and surveillance techniques. The Quality Assurance Officer retains the necessary organizational independence and authority to identify conditions adverse to quality and to inform the Technical Lead of needed corrective action.

- **Health and Safety Officer**--The Health and Safety Officer is responsible for determining potential health and safety hazards from volatile, and/or toxic compounds during sample handling and sampling decontamination activities and has the responsibility and authority to halt field activities due to unacceptable health and safety concerns.

- **Field Team Leader**--The field team leader is responsible for onsite direction of sampling technicians in compliance with the requirements of the closure plan, this QAPP, and implementing all Environmental Investigations Instructions (EIIs).

- **Hanford Analytical Services Management (HASM)**--The HASM is responsible for coordinating sample shipments between the field team and the analytical laboratory, resolution of any chain-of-custody issues, and for validation of all analytical data as discussed in Section 8.0.

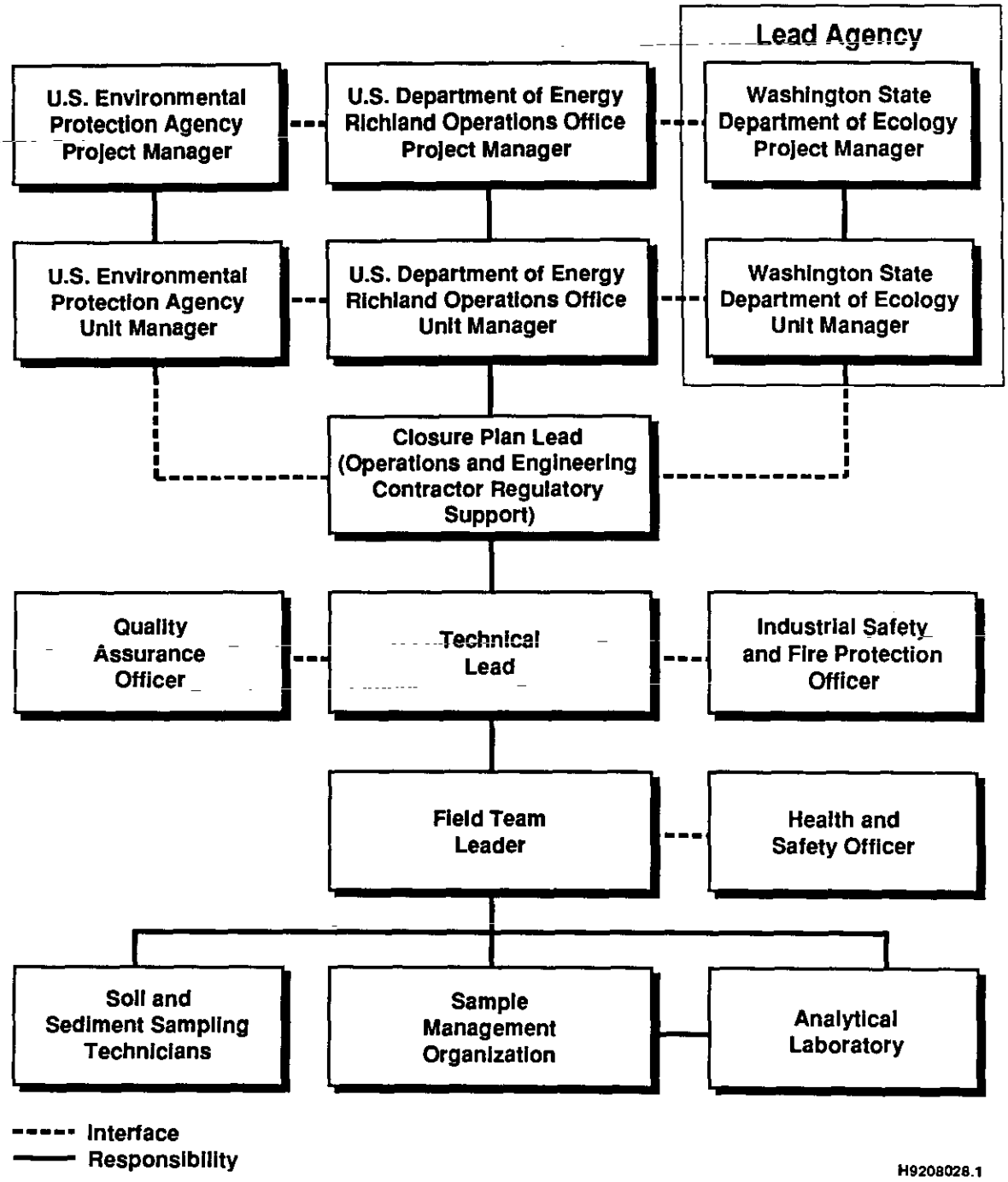

1 Figure D2-1. Project Organization, Sampling at 2101-M Pond.

2.2 ANALYTICAL LABORATORIES

Samples shall be routed to an approved participant contractor, or subcontractor laboratory, who shall be responsible for performing the analyses identified in this plan in compliance with work orders or contractual requirements and operations contractor-approved procedures (Section 4.1.2). At the direction of the Technical Lead, services of alternate qualified laboratories may be procured for the performance of split sample analyses for performance audit purposes. If such an option is selected, the QA plan and applicable analytical procedures from the alternate laboratory also shall be approved by the operations contractor before their use in compliance with Section 4.1.2 requirements.

2.3 OTHER SUPPORT CONTRACTORS

Support contractors may be assigned project responsibilities at the direction of the Technical Lead. Such services shall be in compliance with standard operations contractor procurement procedure requirements as discussed in Section 4.1.2. All work shall be performed in compliance with operations contractor approved QA plans and/or procedures, subject to controls of QI 7.3, "Source Surveillance and Inspection" (WHC 1989b).

3.0 OBJECTIVES FOR MEASUREMENTS

The purpose of this investigation is to assess the existence, nature, and extent of any contamination in the near surface soils of the 2101-M Pond and rainwater runoff ditch, and the chemical composition of the pond water as it relates to the surrounding environment. As noted in Section 4.6 of *Data Quality Objectives for Remedial Response Activities: Volume I, Development Process* (EPA 1987), universal goals for precision, accuracy, representativeness, completeness, and comparability cannot be practically established at the outset of an investigation. However, data are available from previously negotiated analytical contracts for Hanford Site investigations, the data quality objectives guidance document cited previously (EPA 1987), and from typical capabilities currently expected for laboratories involved in environmental analyses that may be used as minimum guidelines for the selection of analytical methods appropriate for this investigation. Table D2-1 provides preliminary target values for detection limits, precision, and accuracy that are intended for use in initial procurement negotiations with the analytical laboratory. The summary report for the Phase II sampling of the 2101-M Pond will provide information discussing actual detection limits, precision, accuracy, and completeness.

Goals for data representativeness are addressed qualitatively by the specification of sampling locations and intervals within Appendix D-1 of the closure plan. Objectives for completeness for this investigation shall require that contractually or procedurally established requirements for precision and accuracy be met for at least 90 percent of the total number of

Table D2-1. Analytes of Interest and Analytical Methods for 2101-M Pond. (sheet 1 of 2)

Analytical category	Analyte of interest	Standard reference method[a]	Minimum detection limit[c]	Precision[c]	Accuracy[c]	Comments
Volatile Organics	Acetone	8240	50 mg/Kg	±25% RPD	±25%	d
	Methylene chloride (Dichloromethane)	8240	25 mg/Kg	±25% RPD	±25%	d
Purgeable Aromatics	Toluene	8020	25 mg/Kg	±25% RPD	±25%	d
Semi-Volatile Organics	Butanoic Acid	8270	e	e	e	d
Total Organic Carbon (TOC)		9060	1.0 mg/kg	±25% RPD	±25%	d
Total Organic Halides (TOX)[p]		9030	h	±25% RPD	±25%	d
Inorganics	Aluminum	6010	45.0 mg/Kg	±25% RPD	±25%	d
	Barium	6010	2.0 mg/Kg	±25% RPD	±25%	d
	Chromium	6010	7.0 mg/Kg	±25% RPD	±25%	d
	Calcium	6010	10.0 mg/Kg	±25% RPD	±25%	d
	Copper	6010	6.0 mg/Kg	±25% RPD	±25%	d
	Iron	6010	7.0 mg/Kg	±25% RPD	±25%	d
	Magnesium	6010	30.0 mg/Kg	±25% RPD	±25%	d
	Manganese	6010	2.0 mg/Kg	±25% RPD	±25%	d
	Lead	7421	1.0 mg/Kg	±25% RPD	±25%	d
	Nickel	6010	15.0 mg/Kg	±25% RPD	±25%	d
	Potassium	6010	f	±25% RPD	±25%	d
	Silver	6010	7.0 mg/Kg	±25% RPD	±25%	d
	Sodium	6010	29.0 mg/Kg	±25% RPD	±25%	d
	Strontium	6010	2.0 mg/Kg	±25% RPD	±25%	d
	Vanadium	6010	8.0 mg/Kg	±25% RPD	±25%	d
	Zinc	6010	2.0 mg/Kg	±25% RPD	±25%	d
	Arsenic[p]	7060	2.0 mg/Kg	±25% RPD	±25%	d
	Cyanide[p]	9010	250 mg/Kg	±25% RPD	±25%	d

9513319.1912

Table D2-1. Analytes of Interest and Analytical Methods for 2101-M Pond. (sheet 2 of 2)

Analytical category	Analyte of interest	Standard reference method[a]	Minimum detection limit[c]	Precision[c]	Accuracy[c]	Comments
Inorganics (cont.)	Mercury[p]	7470	0.04 mg/Kg	±25% RPD	±25%	d
	Selenium[p]	7740	1.0 mg/Kg	±25% RPD	±25%	d
	Thallium[p]	7841	2.0 mg/Kg	±25% RPD	±25%	d
	Sulfide[p]	9030	500 mg/Kg	±25% RPD	±25%	d
	Fluoride	300[g]	1.0 mg/g	±25% RPD	±25%	d
	Ammonium	ASTM D1426	0.5 mg/Kg	±25% RPD	±25%	d
	pH	9045				d
	Gross Alpha & Beta[p]	9310	variable	variable	variable	d

[a]Unless otherwise specified, methods are from Test Methods for Evaluating Solid Waste (SW-846) (EPA 1986).

[b]Analytical methods shall be in compliance with approved Westinghouse Hanford or Westinghouse Hanford-approved participant contractor or subcontractor procedures. All procedures shall be reviewed and approved in compliance with requirements specified in the Westinghouse Hanford QA program plan for CERCLA RI/FS activities.

[c]Minimum requirements for method detection levels, precision, and accuracy will be method-specific, and shall be negotiated and established in the procedure review and approval process. Target values are indicated where appropriate; precision is expressed in terms of relative percent different (RPD) and accuracy as percentage recovery.

[d]Analyses shall be performed by an approved participant contractor or subcontractor laboratory.

[e]Not a normally analyzed for constituent, therefore there are no established values.

[f]Highly dependant on operating conditions and plasma position.

[g]From Methods for Chemical Analysis of Water and Waste, EPA 600/4-79-020 (EPA 1983a).

[h]Species dependant.

[p]Pond water target analyte only.

requested determinations. Failure to meet this criterion shall be documented in data summary reports as described in Section 8.1, and shall be considered in the validation process discussed in Section 8.2. Corrective action measures shall be initiated by the Technical Lead as appropriate, as noted in Section 13.0. Approved analytical procedures shall require the use of the reporting techniques and units consistent with the Environmental Protection Agency (EPA) reference methods listed in Table D2-1 to facilitate the comparability of data sets in terms of precision and accuracy.

4.0 SAMPLING PROCEDURES

The following sections provide information on procedure approvals and controls, investigative procedures, and additions and changes to procedures.

4.1 PROCEDURE APPROVALS AND CONTROL

Procedure approvals and controls are discussed in the following sections.

4.1.1 Westinghouse Hanford Procedures

The Westinghouse Hanford procedures that will be used to support the closure plan have been selected from the quality assurance program index (QAPI) included in the WHC (1990). Selected procedures include Environmental Investigation and Instructions (EIIs) from the WHC (1989a), and quality requirements (QRs) and quality instructions (QIs) from WHC (1989b). Procedure approval, revision, and distribution control requirements applicable to EIIs are addressed in EII 1.2, "Preparation and Revision of Environmental Investigation Instructions" (WHC 1989a); requirements applicable to QIs and QRs are addressed in QR 5.0, "Instructions, Procedures, and Drawings"; QI 5.1, "Preparation of Quality Assurance Documents"; and QR 6.0, "Document Control"; (WHC 1989b). Other procedures applicable to the preparation, review, and revision of HASM and other Hanford analytical laboratory procedures shall be defined in the various procedures and manuals identified in the WHC (1990) under criteria 5.00 and 6.00. All procedures are available for regulatory review on request at the direction of the Technical Lead.

4.1.2 Participant Contractor/Subcontractor Procedures

As noted in Section 2.1, participant contractor and/or subcontractor services may be procured at the direction of the Technical Lead. All such procurements shall be subject to the applicable requirements of QR 4.0, "Procurement Document Control"; QI 4.1, "Procurement Document Control"; QI 4.2, "External Services Control"; QR 7.0, "Control of Purchased Items and Services"; QI 7.1, "Preprocurement Planning and Proposal Evaluation"; and/or QI 7.2, "Supplier Evaluation" (WHC 1989b). Whenever such services require procedural controls, requirements for use of operations

contractor procedures or for submittal of contractor procedures for operations contractor review and approval before use, shall be included in the procurement document or work order, as applicable. In addition to the submittal of analytical procedures, analytical laboratories shall be required to submit the current version of their internal QA program plans. Before use, all analytical laboratory plans and procedures shall be reviewed and approved by qualified personnel from the HASM, operations contractor analytical laboratories organizations, or other qualified personnel, as directed by the Technical Lead. All reviewers shall be qualified under the requirements of MRP 4.22 of WHC-CM-1-3 or EII 1.7 "Indoctrination, Training, and Qualification" (WHC 1989a), as applicable. All participant contractor or subcontractor procedures, plans, and/or manuals shall be retained as project quality records in compliance with WHC-CM-3-5 Section 5. All such documents shall be available for regulatory review on request, at the direction of the Technical Lead.

4.2 SAMPLING AND INVESTIGATIVE PROCEDURES

All soil sampling activities shall be performed in compliance with EII 5.2, "Soil and Sediment Sampling" (WHC 1989a). Additional EIIs that have been selected to support this activity are identified in Table D2-2. Sample identification requirements and container type, preparation, and preservation requirements shall be as specified in EII 5.11. Procedures to support data interpretation shall be developed as modifications to EII 11.2, as contractor procedures, or may be incorporated as addenda to this QAPP as necessary to support the detailed requirements of the 2101-M Pond Closure Plan.

4.3 PROCEDURE ADDITIONS AND CHANGES

Additional EIIs or EII updates that may be required as a consequence of closure plan requirements shall be developed in compliance with EII 1.2, "Preparation and Revision of Environmental Investigations Instructions" (WHC 1989a). Should deviations from established EIIs be required to accommodate unforseen field situations, the field team leader can authorize any such deviation in accordance with the requirements of EII 1.4, "Deviation from Environmental Investigations Instructions" (WHC 1989a). Documentation, review, and disposition of instruction change authorization forms are defined within EII 1.4. Other types of document change requests shall be completed as required by the operations contractor procedures governing their preparation and revision.

Table D2-2. Investigative Procedures for 2101-M Pond Water and Near Surface Soil Sampling.

Procedure	Title[a]	Task 1: Surface water sampling	Task 2: Soil sampling
EII 1.2	Preparation & Revision of Environmental Investigation Instructions	X	X
EII 1.4	Deviation from Environmental Investigation Instructions	X	X
EII 1.5	Field Logbooks	X	X
EII 1.6	Records Management	X	X
EII 1.7	Indoctrination, Training & Qualification	X	X
EII 2.1	Preparation of Health & Safety Plans	X	X
EII 3.1	User Calibration of Health and Safety Measuring and Test Equipment (M&TE)	X	X
EII 5.0	Sample Identification and Entry into the (HEIS) Database	X	X
EII 5.1	Chain of Custody	X	X
EII 5.2	Soil and Sediment Sampling		X
EII 5.5	Decontamination of Equipment for RCRA/CERCLA Sampling	X	X
EII 5.11	Sample Packaging and Shipping	X	X

[a]Procedures are EIIs selected from the latest approved version of WHC-CM-7-7 (WHC 1989a).

5.0 SAMPLE CUSTODY

All samples obtained during the course of this investigation shall be controlled as required by EII 5.1, "Chain of Custody" (WHC 1989a) from the point of origin to the analytical laboratory. Laboratory chain-of-custody procedures shall be reviewed and approved as required by operations contractor procurement control procedures as noted in Section 4.1, and shall ensure the maintenance of sample integrity and identification throughout the analytical process. At the direction of the Technical Lead, requirements for return of residual sample materials after completion of analysis shall be defined in accordance with those procedures defined in the procurement documentation to subcontractor or participant contractor laboratories. Chain-of-custody forms shall be initiated for returned residual samples as required by the approved procedures applicable within the participating laboratory. Results of analyses shall be traceable to original samples through the unique code or identifier specified in Section 4.0. All results of analyses shall be controlled as permanent project quality records as required by QR 17.0, "Quality Assurance Records" (WHC 1989b) and EII 1.6, "Records Management" (WHC 1989a).

6.0 CALIBRATION PROCEDURES

Calibration of all operations contractor measuring and test equipment, whether in existing inventory or purchased for this investigation, shall be controlled as required by QR 12.0, "Control of Measuring and Test Equipment"; QI 12.1, "Selection of Measuring and Test Equipment"; QI 12.2, "Measuring and Test Equipment Calibration by User" (WHC 1989b); and/or EII 3.1, "User Calibration of Health and Safety Measuring and Test Equipment" (WHC 1989a). Routine operational checks for field equipment shall be as defined within applicable EIIs or procedures; similar information shall be provided in operations contractor-approved participant contractor or subcontractor procedures.

Calibration of operations contractor, participant contractor, or subcontractor laboratory analytical equipment shall be as defined by applicable standard analytical methods, subject to operations contractor review and approval.

7.0 ANALYTICAL PROCEDURES

Analytical methods or procedures based on the reference methods identified in Table D2-1 and Section 3.0 shall be selected or developed and approved before use in compliance with appropriate operations contractor procedure and/or procurement control requirements as noted in Section 4.1.

8.0 DATA REDUCTION, VALIDATION, AND REPORTING

The following sections contain information concerning data reporting, data validation, and data review and management.

8.1 DATA REDUCTION AND DATA PACKAGE PREPARATION

All analytical laboratories shall be responsible for preparing a report summarizing the results of analysis and for preparing a detailed data package that includes all information necessary to perform data validation to the extent indicated by the minimum requirements of Section 8.2. Data summary report format and data package content shall be defined in procurement documentation subject to operations contractor review and approval as noted in Section 4.1. At a minimum, laboratory data packages shall include the following:

- Sample receipt and tracking documentation (including identification of the organization and individuals performing the analysis, the names and signatures of the responsible analysts, sample holding time requirements, references to applicable chain-of-custody procedures, and the dates of sample receipt, extraction, and analysis)

- Instrument calibration documentation, including equipment type and model, with continuing calibration data for the time period in which the analysis was performed

- Quality control data, as appropriate for the methods used, including matrix spike/matrix spike duplicate data, recovery percentages, precision data, laboratory blank data, and identification of any nonconformances that may have affected the laboratory's measurement system during the time period in which the analysis was performed

- The analytical results or data deliverables, including reduced data, reduction formulas or algorithms, and identification of data outliers or deficiencies.

Other supporting information, such as initial calibration data, reconstructed ion chromatographs, spectrograms, traffic reports, and raw data, need not be included in the submittal of individual data packages unless specifically requested by the Technical Lead or the HASM. All sample data, however, shall be retained by the analytical laboratory and made available for systems or program audit purposes upon request by operations contractor, U.S. Department of Energy, Richland Field Office (DOE-RL), or regulatory agency representatives (Section 10.0). Such data shall be retained by the analytical laboratory through the duration of contractual statement of work, at which point the data shall be turned over to operations contractor for archiving.

The completed data package shall be reviewed and approved by the analytical laboratory's QA Manager before submittal to the HASM for validation as discussed in Section 8.2. The requirements of this section shall be included in procurement documentation or work orders, as appropriate, in compliance with the standard operations contractor procurement control procedures referenced in Section 4.1.

8.2 VALIDATION

Validation of the completed data package shall be performed by operations contractor HASM personnel, or contracted to an appropriate subcontractor as deemed necessary. Validation requirements shall be defined within approved HASM data validation procedures at a minimum of level B as outlined in *Sample Management and Administration*, (WHC 1990b), these include:

- Sample holding times
- Accuracy (i.e., spikes, control standards, etc.)
- Precision (i.e., duplicates, splits, etc.)
- Blanks.

All validation report requirements for routine and special analyses not using EPA reference methods (EPA 1986) shall be established within individual method requirements, subject to Westinghouse Hanford review and approval as discussed in Section 4.1. Validation report requirements shall be in general compliance with the guidelines provided in Section 8.2, modified as necessary to accommodate the allowances of the applicable reference methods listed for each analyte of interest in Table D2-1.

8.3 FINAL REVIEW AND RECORDS MANAGEMENT CONSIDERATIONS

All validation reports and supporting analytical data packages shall be subjected to a final technical review by a qualified reviewer at the direction of the Technical Lead before submittal to regulatory agencies or inclusion in reports or technical memoranda. All validation reports, data packages, and review comments shall be retained as permanent project quality records in compliance with EII 1.6, "Records Management" (WHC 1989a) and QR 17.0, "Quality Assurance Records" (WHC 1989b).

9.0 INTERNAL QUALITY CONTROL

All analytical samples shall be subject to in-process quality control measures in both the field and laboratory. Unless superseded by specific directions provided in Appendix D-1 of the closure plan, the following minimum field quality control requirements apply. These requirements are adapted from *Test Methods for Evaluating Solid Waste (SW-846)* (EPA 1986), as modified by the proposed rule changes included in the *Federal Register*, Volume 54, No. 13 (EPA 1989).

- Duplicate samples--For each shift of sampling activity under an individual sampling subtask, a minimum of 5 percent of the total collected samples shall be duplicated. Field duplicate samples are samples retrieved from the same sampling location using the same equipment and sampling technique, but analyzed independently. Laboratory duplicate samples are samples taken successively from the same bulb. Duplicate samples are generally used to verify the repeatability or reproducibility of the analytical data.

- Split samples--At the Technical Lead's direction, field or field duplicate samples may be split in the field and sent to an alternative laboratory as a performance audit of the primary laboratory. Frequency shall meet the minimum schedule requirements of Section 10.0.

- Field/Equipment Blanks--A water blank consists of pure deionized, distilled water whose chemical composition is known, drawn through decontaminated sampling equipment and taken as a sample. Blanks are used to verify the adequacy of sampling equipment decontamination procedures and are used to check for possible contamination originating with the sampling environment. Blanks will be run before the initiation of sampling each day or if blank contamination is suspected or detected.

The internal quality control checks performed by analytical laboratories' laboratory analyses shall meet the following minimum requirements:

- Matrix spiked and matrix spiked duplicate samples--Matrix spiked and matrix spiked duplicate samples require the addition of a known quantity of a representative analyte of interest to the sample as a measure of recovery percentage. The spike shall be made in a replicate of a field sample. Spike compound selection, quantities, and concentrations shall be described in the laboratories analytical procedures. One sample shall be spiked per analytical batch, or once every 20 samples, whichever is greater.

- Quality control reference samples--A quality control reference sample shall be prepared from an independent standard at a concentration other than that used for calibration, but within the calibration range. Reference samples are required as an independent check on analytical technique and methodology, and shall be run with every analytical batch, or every 20 samples, whichever is greater.

Other requirements specific to laboratory analytical equipment calibration are included in Section 6.0. The minimum requirements of this section shall be invoked in procurement documents or work orders in compliance with standard operations contractor procedures as noted in Section 4.1.

10.0 PERFORMANCE AND SYSTEM AUDITS

Performance, system, and program audits are scheduled to begin early in the execution of this closure plan and to continue through to completion. Collectively, the audits address quality affecting activities that include, but are not limited to measurement accuracy, intramural and extramural analytical laboratory services, field activities, and data collection, processing, validation, and management.

Performance audits of the accuracy of laboratory analyses are implemented in accordance with Standard Operating Procedure EII 1.12 "Laboratory Analysis Performance Audits." System audit requirements are implemented in accordance with Standard Operating Procedure QI 10.4, "Surveillance" (WHC 1989b). Surveillances will be performed regularly throughout the course of the closure plan activities. Additional performance and system "surveillances" may be scheduled as a consequence of corrective action requirements, or may be performed upon request. All quality affecting activities are subject to surveillance.

Sampling plan activities may be evaluated as part of environmental restoration program wide QA audits under the procedural requirements of WHC (1989b). Program audits shall be conducted in accordance with QR 18.0, "Audits"; and QAI 18.1, "Planning, Performing, Reporting, and Follow-up of Quality Audits"; and QI 18.1, "Audit Programming and Scheduling"; by auditors qualified in compliance with QI 2.5, "Qualification of Quality Assurance Program Audit Personnel" (WHC 1989b).

11.0 PREVENTIVE MAINTENANCE

All measurement and testing equipment used in the field and laboratory that directly affects the quality of the analytical data shall be subject to preventive maintenance measures that ensure minimization of measurement system downtime. Field equipment maintenance instructions shall be as defined by the approved procedures governing their use. Laboratories shall be responsible

for performing or managing the maintenance of their analytical equipment; maintenance requirements, spare parts lists, and instructions shall be included in individual methods or in laboratory QA plans, subject to operations contractor review and approval. When samples are analyzed using EPA reference methods, the preventive maintenance requirements for laboratory analytical equipment are as defined in the procured laboratory's QA plan(s).

12.0 DATA ASSESSMENT PROCEDURES

Test data from this investigation will be assessed as required by Appendix D-1 of the closure plan. Analytical data shall first be compiled and summarized by the laboratory and validated in compliance with approved HASM procedures meeting all minimum requirements of Section 8.0.

13.0 CORRECTIVE ACTION

Corrective action requests required as a result of surveillance reports, nonconformance reports, or audit activity shall be documented and dispositioned as required by QR 16,0, "Corrective Action"; QI 16.1, "Trending/Trend Analysis"; and QI 16.2, Corrective Action Reporting," (WHC 1989b). Primary responsibilities for corrective action resolution are assigned to the Technical Lead and the QA Coordinator. Other measurement systems, procedures, or plan corrections that may be required as a result of routine review processes shall be resolved as required by governing procedures or shall be referred to the Technical Lead for resolution. Copies of all surveillance, nonconformance, audit, and corrective action documentation shall be routed to the project QA records upon completion or closure.

14.0 QUALITY ASSURANCE REPORTS

As previously stated in Sections 10.0 and 13.0, project activities shall be assessed regularly by auditing and surveillance processes. Surveillance, nonconformance, audit, and corrective action documentation shall be routed to the project quality records upon completion or closure of the activity. A report summarizing all audit, surveillance, and instruction change authorization activity (see Section 4.4), as well as any associated corrective actions, shall be prepared by the QA Coordinator at the completion of the activity or annually beginning one year after approval of the closure plan, whichever is sooner. The report(s) shall be submitted to the Technical Lead for incorporation into the final report prepared at the end of the investigation. The final report shall include an assessment of the overall adequacy of the total measurement system with regard to the data quality objectives of the investigation.

15.0 REFERENCES

Ecology, et al., 1989, *Hanford Federal Facility Agreement and Consent Order*, Washington State Department of Ecology, U.S. Environmental Protection Agency, and U.S. Department of Energy, Richland, Washington.

EPA, 1983, *Interim Guidelines and Specifications for Preparation of Quality Assurance Project Plans*, QAMS-005/80, U.S. Environmental Protection Agency/Office of Exploratory Research, Washington, D.C.

EPA, 1983a, Methods for Chemical Analysis of Waste of Water, EPA-600/4-79-020, U.S. Environmental Protection Agency/Office of Research and Development, Cincinnati, Ohio.

EPA, 1986, *Test Methods for Evaluating Solid Wastes*, SW-846, Third edition U.S. Environmental Protection Agency/Office of Solid Waste and Emergency Response, Washington, D.C.

EPA, 1987, *Data Quality Objectives for Remedial Response Activities: Volume I, Development Process*, EPA/540/6-87/003, Office of Emergency and Remedial Response and Office of Waste Programs Enforcement, U.S. Environmental Protection Agency, Washington, D.C.

EPA, 1988a, *Laboratory Data Validation Functional Guidelines for Evaluating Inorganics Analyses*, Hazardous Site Evaluation Division, U.S. Environmental Protection Agency, Washington, D.C.

EPA, 1988b, *Laboratory Data Validation Functional Guidelines for Evaluating Organics Analyses*, Hazardous Site Evaluation Division, U.S. Environmental Protection Agency, Washington, D.C.

EPA, 1989, "Hazardous Waste Management System; Testing and Monitoring Activities" (Proposed Rule), *Federal Register*, Vol. 54, No. 13, pp. 3212-3228.

Resource Conservation and Recovery Act of 1976, as amended, Public Law 94-580, 90 Stat. 2795, 42 USC 6901 et seq.

WHC, 1989a, *Environmental Investigations and Site Characterization Manual*, WHC-CM-7-7, Westinghouse Hanford Company, Richland, Washington.

WHC, 1989b, *Westinghouse Hanford Company Quality Assurance Manual*, WHC-CM-4-2, Westinghouse Hanford Company, Richland, Washington.

WHC, 1989c, *Quality Assurance Instructions*, WHC-CM-4-8, Westinghouse Hanford Company, Richland, Washington.

WHC, 1990a, *Environmental Engineering, Technology, and Permitting Function Quality Assurance Program Plan*, WHC-EP-0383, Westinghouse Hanford Company, Richland, Washington.

WHC, 1990b, *Sample Management and Administration*, WHC-CM-5-3, Westinghouse Hanford Company, Richland, Washington.

This page intentionally left blank.

9513319.1949

APPENDIX D-3.

PHASE II DATA PACKAGE FOR ANALYSIS OF 2101-M POND SOIL SAMPLES AND BACKGROUND SAMPLES

This page intentionally left blank.

APPENDIX D-3.

PHASE II DATA PACKAGE FOR ANALYSIS OF 2101-M POND SOIL SAMPLES AND BACKGROUND SAMPLES

Analytical results underwent data validation by the Hanford Analytical Services Management (HASM) organization. Data validation activities were performed in accordance with the RCRA procedure (Level B) contained within the *Sample Management and Administration Manual*, WHC-CM-5-3 (WHC 1990). The data validation process included a review of the following Quality Control (QC) elements performed by the laboratories and reported in the associated data deliverables:

- Holding Times
- Blank Analyses
- Surrogates
- Matrix Spikes
- Duplicates.

The validation procedure establishes the following qualifiers and definitions to describe the associated data:

U The material was analyzed for, but was not detected. The associated value is the detection/quantitation limit.

UJ The material was analyzed for, but was not detected. The associated detection/quantitation limit is an estimated value.

J The associated value is estimated.

R The data are unusable.

Sample results with appropriate data qualifiers are displayed in this appendix. Westinghouse Hanford validation procedures were developed based on existing EPA guidance.

4.1 DATACHEM

Thirty-one soil samples were submitted by Westinghouse Hanford to DataChem for analysis. Three delivery groups underwent validation for samples analyzed by DataChem. After completion of the validation process, all sample results for data received from DataChem were determined to be acceptable with the exception of antimony (Sb). Results for Sb were qualified as unusable for all samples analyzed by DataChem due to very low matrix spike recoveries.

Holding time criteria were met for all samples analyzed by DataChem.

DataChem prepared and analyzed laboratory blanks as an indication of potential laboratory contamination. Analyses of the blanks identified some potential lab contamination for the following compounds:

Volatile organics	• acetone
Semivolatile organics	• benzoic acid

When evidence of blank contamination was present, validation criteria were applied to determine appropriate qualification for associated sample results. Laboratory blanks were not prepared or analyzed by DataChem for mercury (Hg) analysis. As a result, all samples in which Hg was detected have been qualified as estimated (J).

DataChem prepared, analyzed, and reported the results (as percent recovery) for matrix spike samples as an indication of accuracy. Spiked sample results were generally within control limits for percent recovery. Matrix spike recoveries for ammonia and phosphorous pesticides were outside control limits in one or more of the DataChem delivery groups. Results which fell outside of the applicable control limits were qualified according to the validation procedure. Matrix spike samples were not prepared or analyzed for ICP metals associated with delivery group B00GP2, and for AA metals associated with delivery group B00GP9. Applicable results from these delivery groups have been qualified as estimated (J, UJ). DataChem also analyzed surrogate compounds for volatile and semivolatile organics analyses and reported results in terms of percent recovery as another indication of accuracy. All reported surrogate recoveries were within control limits. No indication of significant matrix effects were observed in the sample results.

Duplicate samples were prepared, analyzed, and reported as Relative Percent Difference (RPD) by DataChem as an indication of precision. For organics analyses, RPD calculations were made between matrix spike/matrix spike duplicate samples. All reported RPDs for organics analyses were within control limits. For inorganics analyses, RPD calculations were made between initial and duplicate sample results. Reported duplicate RPDs were high for ammonia, ICP metals (copper), and AA metals (lead) in one or more of the DataChem delivery groups. Results which fell outside of the applicable control limits were qualified according to the validation procedure.

DataChem utilized SW-846 methods to perform sample analyses. It is concluded that the data is acceptable with the qualifiers listed. These qualifiers were taken into account in further evaluations of the data set performed by project personnel.

4.2 S-CUBED

One soil sample was submitted by WHC to S-Cubed for analysis. After completion of the validation process, all sample results for data received from S-Cubed were determined to be acceptable with the attached qualifiers.

Holding time criteria were met for all analyses with the exception of mercury (Hg) and semivolatile organics. Associated data for the S-Cubed sample was qualified based on the criteria established for aqueous samples. This is expected to have minimal impact on the reported results.

S-Cubed prepared and analyzed laboratory blanks as an indication of potential laboratory contamination. Analysis of the laboratory blank for volatile organics identified methylene chloride as a potential lab contaminant. Blank validation criteria were applied to determine appropriate qualification for associated sample results.

S-Cubed prepared, analyzed, and reported the results (as percent recovery) for spiked control samples as an indication of accuracy. Spiked sample results were generally within control limits for percent recovery. Recoveries for semivolatile organics were biased low and the associated data was qualified according to the previously referenced procedure. All other recoveries were within applicable limits. S-Cubed also analyzed surrogate compounds for organics analyses and reported results in terms of percent recovery as another indication of accuracy. All reported surrogate recoveries for volatile and semivolatile organics were within control limits. No indication of significant matrix effects were observed in the sample results.

Duplicate analyses were not performed or reported for the sample submitted to S-Cubed. The sample submitted to S-Cubed was a split sample, and other 2101-M samples have not shown evidence of matrix effects. As a result the impact to sample results is expected to be minimum.

S-Cubed utilized SW-846 methods to perform sample analyses.

This page intentionally left blank.

9513319.1952

Westinghouse
Hanford Company

OSM RCRA LEVEL B DATA ASSESSMENT

DATE 11/15/92

REVIEWED BY JA Lerch

LABORATORY Data Chem

CASE # —

SDG # B00GP9

SAMPLES/MATRIX B00GP9 B00GQ8 B00GR0 B00ZH7
B00GQ1 B00GQ7 B00GR4 B00ZH8
B00GQ2 B00GQ9 B00GR5 - all soils
B00GQ3 B00GR1 B00GR6
B00GQ4 B00GR2 B00GR7
B00GQ6 B00GR3 B00GR8

DATA ASSESSMENT SUMMARY

QUALITY CONTROL CHECK	ANALYSIS	CN	Fluoride	Ammonia
1. Holding Time		O	O	O
2. Matrix Spike		O	O	X
3. Duplicates		O	O	X
4. Surrogates		N/A	N/A	N/A
5. Blanks		O	O	O
6. Other QC		See	attachment	
7.				
8.				
9.				
10.				

O = data had no problems
X = data qualified due to minor problems
M = data qualified due to major problems/some data may be unusable

OVERALL ASSESSSMENT: Antimony results unusable due to low spike recovery; all other results acceptable w/attached qualification

NOTES: none

o Refer to the corresponding attachments for explanation of any problems.

Westinghouse
Hanford Company

OSM RCRA LEVEL B DATA ASSESSMENT (pg 2)

DATE 11/15/92 SAMPLES/MATRIX See cover

REVIEWED BY J.A. Lerch

LABORATORY DataChem

CASE # —

SDG # B00GP9

DATA ASSESSMENT SUMMARY

QUALITY CONTROL CHECK	ANALYSIS	ICP metals	AA metals	Hg
1. Holding Time		O	O	O
2. Matrix Spike		M	M	O
3. Duplicate		O	X	O
4. Surrogates		N/A	N/A	N/A
5. Blanks		O	O	X
6. Other		see attach.		
7.				
8.				
9.				
10.				

O = data had no problems
X = data qualified due to minor problems
M = data qualified due to major problems/some data may be unusable

OVERALL ASSESSSMENT: See cover

NOTES: AA metals include As, Pb, Se, Tl

o Refer to the corresponding attachments for explanation of any problems.

9513319.1953

Westinghouse
Hanford Company

OSM RCRA LEVEL B DATA ASSESSMENT (pg 3)

DATE 11/15/92

REVIEWED BY J.A. Lerch

LABORATORY DataChem

CASE # —

SDG # B00GP9

SAMPLES/MATRIX See Cover

DATA ASSESSMENT SUMMARY

QUALITY CONTROL CHECK	ANALYSIS	Herbicides	Pest/PCBs	Phos. Pest.
1. Holding Time		O	O	O
2. Matrix Spike		O	X	X
3. Duplicates		O	O	O
4. Surrogates		N/A	N/A	N/A
5. Blanks		X	O	O
6. Other		see	attachment	
7.				
8.				
9.				
10.				

O = data had no problems
X = data qualified due to minor problems
M = data qualified due to major problems/some data may be unusable

OVERALL ASSESSSMENT: See cover

NOTES: —

o Refer to the corresponding attachments for explanation of any problems.

Westinghouse
Hanford Company

OSM RCRA LEVEL B DATA ASSESSMENT (pg 4)

DATE 11/15/92 SAMPLES/MATRIX See cover

REVIEWED BY J.A. Lerch

LABORATORY DataChem

CASE # —

SDG # B00GP9

DATA ASSESSMENT SUMMARY

QUALITY CONTROL CHECK	ANALYSIS	SemiVOA	VOA	
1. Holding Time		O	O	
2. Matrix Spike		O	O	
3. Duplicates		O	O	
4. Surrogates		O	O	
5. Blanks		O	X	
6. Other QC				
7.				
8.				
9.				
10.				

O = data had no problems
X = data qualified due to minor problems
M = data qualified due to major problems/some data may be unusable

OVERALL ASSESSSMENT: See cover

NOTES: —

o Refer to the corresponding attachments for explanation of any problems.

SA 9600 046

RCRA LEVEL B QC

Name JA Lerch Date 11/15/92

QC Check: Holding Time

COMMENTS: CN- 14 day holding time req met for all samples
Ammonia, Fluoride - 28 day holding time met for all samples
ICP + AA metals - 6 mo holding time met for all samples
Hg - 28 day holding time met for all samples

ACTION: none

sample #	constituent	value/qual	sample #	constituent	value/qual

RCRA LEVEL B QC

Name J. A. Lerch Date 11/15/92

QC Check: Holding time (cont)

COMMENTS: ~~Herbicides~~

Pest/PCBs – applicable holding times met for all samples

Phos. Pesticides – applicable holding time reqs met

SemiVOA – applicable extraction & analysis reqs. met

ACTION: none

sample #	constituent	value/qual	sample #	constituent	value/qual

9513319.1955

RCRA LEVEL B QC

Name JA Lerch Date 11/15/92

QC Check: Holding times (cont)

COMMENTS: VOA - applicable holding time met for all samples
Herbicides - incorrect analysis date entered on summary form; correct date of analysis 6/15/91 - holding time met for all samples

ACTION: none

sample #	constituent	value/qual	sample #	constituent	value/qual

RCRA LEVEL B QC

Name JA Lerch Date 11/15/92

QC Check: Matrix Spike

COMMENTS: Ammonia – B00GP9S recovery low (~50%); B00GQ1S recovery ok (78%) – possible matrix interference

CN – B00GQ9S recovery within acceptable limits (~88%)

Herbicides – B00GRIMS+MSD recoveries ok (range 78% to 108%)

ACTION: qualify associated results as per OSM guidelines

sample #	constituent	value/qual	sample #	constituent	value/qual
all	~~Fluoride~~ Ammonia	J, UJ			

RCRA LEVEL B QC

Name J.A. Lerch Date 11/15/92

QC Check: Matrix Spike (cont)

COMMENTS: Pest/PCBs – BOOGRIMS+MSD; DDT recoveries low (~20%), all other recoveries range 50 to 86%

Phos. Pest – BOOGRIMS+MSD; recoveries generally low (30-60% range)

SemiVOA – BOOGRIMS+MSD recoveries within acceptable limits (range ~70 to 136%)

ACTION: qualify associated results as per OSM guidelines

sample #	constituent	value/qual	sample #	constituent	value/qual
all	all phos. pest	UJ			

RCRA LEVEL C QC

Name JA Lerch Date 11/21/92

QC Check: Matrix Spike (cont)

COMMENTS: ICP metals - QC performed on other 2101-M sample (see other QC) B00ZJ2MS; Sb recovery very low (0%) all other recoveries range 78-101%
VOA - B00GP9MS+MSD recoveries within acceptable range (~80-107%)

ACTION: qualify associated results as per OSM guidelines

sample #	constituent	value/qual	sample #	constituent	value/qual
all	Sb	R			

RCRA LEVEL B QC

Name JA Lerch Date 11/15/92

QC Check: Matrix Spike

COMMENTS: Fluoride - B00GP9 and B00GQ1 ms recoveries within acceptable limits (99 + 103%)
Hg - B00GQ9 MS results ok (recovery ~113%)
AA metals - no matrix spike performed, accuracy undetermined

ACTION: qualify associated results as per validation guidelines

sample #	constituent	value/qual	sample #	constituent	value/qual
all	GFAA metals (As, Pb, Se, Tl)	J, UJ			

RCRA LEVEL B QC

Name JA Lerch Date 11/15/92

QC Check: Duplicates

COMMENTS: Ammonia - B00GP9 duplicate RPD high; B00GQ1 duplicate RPD within acceptable limit

CN - B00GQ9D initial + dup results > detection limit

Herbicides - B00GQ1MS + MSD RPD's acceptable

ACTION: qualify associated results as per OSM guidelines

sample #	constituent	value/qual	sample #	constituent	value/qual
all	Ammonia	J, UJ			

RCRA LEVEL B QC

Name J.A. Lerch Date 11/15/92

QC Check: Duplicates (cont)

COMMENTS: Pest/PCB's - B00GRIMS + MSD dup RPD's acceptable
Phos. Pest - B00GRIMS + MSD dup RPD's acceptable
SemiVOA - B00GRIMS + MSD dup RPD's acceptable
ICP metals - QC peformed on 2101M sample outside delivery group
B00ZJZ dup. results acceptable

ACTION:
None

sample #	constituent	value/qual	sample #	constituent	value/qual

RCRA QC

Name JA Lerch Date 11/21/92

QC Check: Duplicates (cont)

COMMENTS: VOA - B00GP9MS & MSD dup results acceptable
Fluoride - B00GP9 and B00GQ1 duplicate results ok
Hg - B00GR1 duplicate results ok (RPD 9.8)
GFAA metals - B00GQ9 dup RPDs high for Pb; all other GFAA RPD's ok

ACTION: qualify associated results as per validation guidelines

sample #	constituent	value/qual	sample #	constituent	value/qual
all	Pb	J, UJ			

RCRA LEVEL B QC

Name J.A. Lerch Date 11/15/92

QC Check: Surrogates

COMMENTS: SemiVOA - surrogate recoveries within acceptable ranges for all samples

VOA - surrogate recoveries within acceptable range for all samples

ACTION: none

sample #	constituent	value/qual	sample #	constituent	value/qual

RCRA LEVEL B QC

Name J.A. Lerch Date 11/15/92

QC Check: Blanks

COMMENTS: Ammonia - no evidence of any blank contamination
CN - no evidence of blank contamination for Prep blank, ICB, CCB
Fluoride - no evidence of blank contamination present
ICP metals - no evidence of blank contamination present

ACTION: none

sample #	constituent	value/qual	sample #	constituent	value/qual

RCRA LEVEL B QC

Name JA Lerch Date 11/15/92

QC Check: Blanks (cont)

COMMENTS: SemiVOA - method blank free of contamination
VOA - acetone detected in VOA blank (apply 10x criteria)
Hg - no prep blank was prepared or analyzed - qualify all detects as estimated

ACTION: qualify associated results as per OSM guidelines

	sample #	constituent	value/qual
VOA	B00GQ1	acetone	24 U
	B00GQ3		44 U
	B00GQ4		20 U
	B00GQ7		83 U
	B00GQ8		29 U
	B00GQ9		98 U
	B00GR1		46 U
	B00GR2		160 U
	B00GR0		100 U
	B00GR4		67. U
	B00GR5		7.1 U
	B00GR6		29 U
	B00GR7		50 U
	B00GR8		28 U
	B00ZH7		130 U
	B00ZH8		250 UJ

sample #	constituent	value/qual
B00GQ9	Hg	J
B00GR1		

Note: sample B00ZH8 exceeded the 10X criteria, but is still likely a result of blank contamination - quantitation level is estimated

13 of 16

RCRA QC

Name J. A. Lerch Date 01/22/93

QC Check: Blanks (cont)

COMMENTS: GFAA - laboratory blank free of contamination
Phos. Pest. - blanks free of contamination
Pest/PCBs - blanks free of contamination
Herbicides - interference peak found in blank but compounds were undetected in all samples

ACTION: none

sample #	constituent	value/qual	sample #	constituent	value/qual

RCRA LEVEL B QC

Name J.A. Lerch Date 11/21/92

QC Check: other QC (cont)

COMMENTS: ICP metals - samples from this delivery group B00ZH9; batched with samples from 2101-M SDG ~~B00GP9~~; QC for ICP metals performed on sample B00ZJ2

ACTION: none

sample #	constituent	value/qual	sample #	constituent	value/qual

RCRA LEVEL B QC

Name JA Lerch Date 11/14/92

QC Check: Other QC

COMMENTS: -surrogates were run but not quantitated for methods 8080 and 8150; surrogates were not run for 8140: surrogates are suggested but not required by SW-846 organics methods

ACTION: —

sample #	constituent	value/qual	sample #	constituent	value/qual

9513319.1962

DATA CHEM LABORATORIES

June 28, 1991

REPORT INTRODUCTION
ANALYTICAL COMMENTARY

SUBMITTED TO: Ron Mitchell

SUBMITTED BY: Joseph A. Gress

REFERENCE DATA:

Analysis of: 20 soil samples, matrix spike, and matrix spike duplicate

Method of Analysis: EPA 8240 with modifications

Identification No.: S91-0406FG

DataChem Laboratory No.: EK 2062 through EK 2083

The above-numbered samples were analyzed for volatile organics using EPA Method 8240 with modifications (SW-846; third edition; September 1986; U.S. Environmental Protection Agency, Office of Solid Waste and Emergency Response).

For soil samples EK 2062 through EK 2068 five grams of sample were heated and directly purged onto a Tekmar 2-phase trap, then desorbed at 180 degrees centigrade under reverse helium flow onto the GC column. The desorbed organics were separated by a 2m x 2mm I.D. glass column packed with 1% SP-1000 on 60/80 mesh Carbopack B. The column oven was programmed form 45 degrees centigrade (held isothermal for 3 minutes) to 220 degrees centigrade at 8 degrees centigrade per minute. The resulting ions were scanned on a Finnigan 5100 GC/MS/DS from 35 amu to 260 amu every three seconds.

The remaining soil samples were purged as above except for EK 2073 (B00GR3). For sample EK 2073 (B00GR3) two grams of sample was used due to high concentrations of 2-butanone. The desorbed organics were separated by a 105 meter Restek 502.2, 0.53 mm ID, fused silica capillary column. The column oven was programmed from 35 degrees centigrade (held isothermal for 10 minutes) to 220 degrees centigrade at 10 degrees centigrade per minute. The resulting ions were scanned on a Finnigan 5100 GC/MS/DS from 35 amu to 260 amu each second.

CINCINNATI OFFICE
4388 GLENDALE MILFORD ROAD
CINCINNATI, OHIO 45242-3706
513 733-5336, FAX 513 733-5347

SALT LAKE OFFICE
960 WEST LeVOY DRIVE
SALT LAKE CITY, UTAH 84123-2547
801 266-7700, FAX 801 268-9992
A SORENSON COMPANY

DENVER OFFICE
5299 DTC BOULEVARD, #500
ENGLEWOOD, COLORADO 80111-3326
303 771-1355, FAX 303 770-0578

An internal standard method of quantitation was used. Internal standards were added to each sample and standard prior to analysis. Five standards were analyzed as prescribed by the method at 20, 50, 100, 150 and 200 ug/Kg. System Performance Check Compounds were checked for a minimum response factor of 0.300, these compounds are chloromethane, bromoform (can be 0.250), 1,1-dichloroethane, chlorobenzene and 1,1,2,2-tetrachloroethane. Response factors from the initial calibration curve are used to calculate percent relative standard deviation (%RSD) for Calibration Check Compounds. These are toluene, 1,1-dichloroethene, chloroform, 1,2-dichloropropane, ethylbenzene, and vinyl chloride, the %RSD must be less than 30%. These Q.C. criteria were met for the initial calibration curve.

Quantitation of each target compound is based on response factors from a 50 ug/Kg continuing calibration standard. Before sample analysis can begin, standardization requirements must be met. The response factors of System Performance Check Compounds must meet the minimum criteria of 0.300, except bromoform at 0.250, and the Calibration Check Compounds must be less than 25% difference with the average response from the initial calibration curve.

Tuning and calibration checks were made prior to sample analysis. A reagent blank was also analyzed prior to sample analysis to certify cleanliness of reagents. Before analysis, blanks were analyzed in each sparging unit to verify the cleanliness of the instrument sampling apparatus.

In addition, the following quality assurance procedures were routine; monitoring of internal standard absolute areas and retention times and measurement of surrogate standard recoveries.

DataChem Laboratories will maintain a complete record of your data on magnetic tape including the ion chromatograms, mass spectra, and verification of compliance with EPA tuning (BFB).

The results for EPA Method 8240 are reported twice for each sample in the body of the report, first on the Summary Report and again on the Analytical Report (results by sample). The Analytical Report consists of two pages for each sample. Analytical standards have been analyzed for each compound on page one and the quantitative results are presented. The soil sample results were based on dry weight as per EPA method 8240. The unknown compounds have been tentatively identified and are found on page two of the Analytical Report. The amount of each unknown present is estimated by comparison to an internal standard assuming the response factor to be one. Additionally, the footnotes on page two of the Analytical Report have been used to qualify the data reported.

A matrix spike and matrix spike duplicate were analyzed using soil sample EK 2062 (B00GP9). The analytes 1,1-dichloroethene, trichloroethene, benzene, toluene, and chlorobenzene were spiked into the sample at 50 ug/Kg. The recoveries are tabulated and reported on the last page of the analytical report. The qualifiers "S" and "SP" were used throughout the analytical report to indicate spiked analytes.

Joseph A. Gress

ANALYTICAL REPORT FOR SAMPLE No. EK2062

EPA METHOD 8240

TARGET ANALYTE RESULTS

Field Sample ID BOOG P9 Sponsor WESTINGHOUSE HANFORD
File ID KL24EK062 Date of Analysis 06/20/91 Date Received 06/18/91
DataChem SET ID S91-0406FG

Cas. No	COMPOUND	RESULTS (ug/KG)	DETECTION LIMITS (ug/KG)
74-87-3	chloromethane	U	1.6*
74-83-9	bromomethane	U	1.5*
75-01-4	vinyl chloride	U	1.7*
75-00-3	chloroethane	U	1.4*
75-09-2	methylene chloride	U	1.6*
67-64-1	acetone	U	4.3*
75-15-0	carbon disulfide	U	1.6*
75-69-4	trichlorofluoromethane	U	1.5*
75-35-4	1,1-dichloroethene	U	1.2*
75-34-3	1,1-dichloroethane	U	2.1*
540-59-0	total 1,2-dichloroethene	U	1.2*
76-66-3	chloroform	U	1.8*
107-06-2	1,2-dichloroethane	U	2.4*
74-88-4	iodomethane	U	1.5*
107-02-8	acrolein	U	58.*
107-13-1	acrylonitrile	U	42.*
78-93-3	2-butanone	U	3.8*
71-55-6	1,1,1-trichloroethane	U	1.6*
56-23-5	carbon tetrachloride	U	1.5*
108-05-4	vinyl acetate	U	3.5*
75-27-4	bromodichloromethane	U	1.8*
78-87-5	1,2-dichloropropane	U	2.0*
10061-02-5	cis-1,3-dichloropropene	U	3.1*
79-01-6	trichloroethene	U	1.3*
71-43-2	benzene	U	1.6*
124-48-1	dibromochloromethane	U	1.4*
79-00-5	1,1,2-trichloroethane	U	1.1*
10061-02-6	trans-1,3-dichloropropene	U	2.9*
110-75-8	2-chloroethylvinyl ether	U	3.3*
75-25-2	bromoform	U	1.2*
74-95-3	dibromomethane	U	2.5*
764-41-0	trans-1,4-dichloro-2-butene	U	1.7*
108-10-1	4-methyl-2-pentanone	U	3.5*
96-18-4	1,2,3-trichloropropane	U	2.3*
591-78-6	2-hexanone	U	4.1*
79-34-5	1,1,2,2-tetrachloroethane	U	2.0*
127-18-4	tetrachloroethene	U	1.5*
97-63-2	ethyl methacrylate	U	1.9*
108-88-3	toluene	U	1.5*
108-90-7	chlorobenzene	U	1.3*
100-41-4	ethylbenzene	U	1.4*
100-42-5	styrene	U	1.2*
1330-20-7	total xylene	U	1.0*

* current DataChem detection limit

ANALYTICAL REPORT FOR SAMPLE No. EK2062

NON-TARGET ANALYTE RESULTS
Additional Volatiles

Field Sample ID BOOG P9

Cas. No	COMPOUND	Scan Number	Results ug/Kg	Footnotes
	NO UNKNOWNS			

FOOTNOTES

B The analyte was found in the method blank. The reported results have been adjusted for the quantity found in the blank.
E The reported concentration is an estimate only. The response factor was assumed to be 1.000 relative to an internal standard.
J Indicates an estimated concentration below the Method Detection Limit.
K The isomer is unknown.
N Analytical standards were not analyzed for this compound.
U Not detected.
W The identification is tentative or closely related to the compound.

ANALYTICAL REPORT FOR SAMPLE No. EK2063

EPA METHOD 8240

TARGET ANALYTE RESULTS

Field Sample ID BOOG 01 **Sponsor** WESTINGHOUSE HANFORD
File ID KL25EK063 **Date of Analysis** 06/20/91 **Date Received** 06/18/91
DataChem SET ID S91-0406FG

Cas. No	COMPOUND	RESULTS (ug/KG)	DETECTION LIMITS (ug/KG)
74-87-3	chloromethane	U	1.6*
74-83-9	bromomethane	U	1.5*
75-01-4	vinyl chloride	U	1.7*
75-00-3	chloroethane	U	1.4*
75-09-2	methylene chloride	U	1.6*
67-64-1	acetone	24. U	4.3*
75-15-0	carbon disulfide	U	1.6*
75-69-4	trichlorofluoromethane	U	1.5*
75-35-4	1,1-dichloroethene	U	1.2*
75-34-3	1,1-dichloroethane	U	2.1*
540-59-0	total 1,2-dichloroethene	U	1.2*
76-66-3	chloroform	U	1.8*
107-06-2	1,2-dichloroethane	U	2.4*
74-88-4	iodomethane	U	1.5*
107-02-8	acrolein	U	58.*
107-13-1	acrylonitrile	U	42.*
78-93-3	2-butanone	U	3.8*
71-55-6	1,1,1-trichloroethane	U	1.6*
56-23-5	carbon tetrachloride	U	1.5*
108-05-4	vinyl acetate	U	3.5*
75-27-4	bromodichloromethane	U	1.8*
78-87-5	1,2-dichloropropane	U	2.0*
10061-02-5	cis-1,3-dichloropropene	U	3.1*
79-01-6	trichloroethene	U	1.3*
71-43-2	benzene	U	1.6*
124-48-1	dibromochloromethane	U	1.4*
79-00-5	1,1,2-trichloroethane	U	1.1*
10061-02-6	trans-1,3-dichloropropene	U	2.9*
110-75-8	2-chloroethylvinyl ether	U	3.3*
75-25-2	bromoform	U	1.2*
74-95-3	dibromomethane	U	2.5*
764-41-0	trans-1,4-dichloro-2-butene	U	1.7*
108-10-1	4-methyl-2-pentanone	U	3.5*
96-18-4	1,2,3-trichloropropane	U	2.3*
591-78-6	2-hexanone	U	4.1*
79-34-5	1,1,2,2-tetrachloroethane	U	2.0*
127-18-4	tetrachloroethene	U	1.5*
97-63-2	ethyl methacrylate	U	1.9*
108-88-3	toluene	U	1.5*
108-90-7	chlorobenzene	U	1.3*
100-41-4	ethylbenzene	U	1.4*
100-42-5	styrene	U	1.2*
1330-20-7	total xylene	U	1.0*

11/21/92

* current DataChem detection limit

ANALYTICAL REPORT FOR SAMPLE No. EK2063

NON-TARGET ANALYTE RESULTS
Additional Volatiles

Field Sample ID BOOG 01

Cas. No	COMPOUND	Scan Number	Results ug/Kg	Footnotes
	NO UNKNOWNS			

FOOTNOTES

B The analyte was found in the method blank. The reported results have been adjusted for the quantity found in the blank.
E The reported concentration is an estimate only. The response factor was assumed to be 1.000 relative to an internal standard.
J Indicates an estimated concentration below the Method Detection Limit.
K The isomer is unknown.
N Analytical standards were not analyzed for this compound.
U Not detected.
W The identification is tentative or closely related to the compound.

ANALYTICAL REPORT FOR SAMPLE No. EK2064

EPA METHOD 8240

TARGET ANALYTE RESULTS

Field Sample ID BOOG 02 Sponsor WESTINGHOUSE HANFORD
File ID KL26EK064 Date of Analysis 06/20/91 Date Received 06/18/91
DataChem SET ID S91-0406FG

Cas. No	COMPOUND	RESULTS (ug/KG)	DETECTION LIMITS (ug/KG)
74-87-3	chloromethane	U	1.6*
74-83-9	bromomethane	U	1.5*
75-01-4	vinyl chloride	U	1.7*
75-00-3	chloroethane	U	1.4*
75-09-2	methylene chloride	U	1.6*
67-64-1	acetone	U	4.3*
75-15-0	carbon disulfide	U	1.6*
75-69-4	trichlorofluoromethane	U	1.5*
75-35-4	1,1-dichloroethene	U	1.2*
75-34-3	1,1-dichloroethane	U	2.1*
540-59-0	total 1,2-dichloroethene	U	1.2*
76-66-3	chloroform	U	1.8*
107-06-2	1,2-dichloroethane	U	2.4*
74-88-4	iodomethane	U	1.5*
107-02-8	acrolein	U	58.*
107-13-1	acrylonitrile	U	42.*
78-93-3	2-butanone	U	3.8*
71-55-6	1,1,1-trichloroethane	U	1.6*
56-23-5	carbon tetrachloride	U	1.5*
108-05-4	vinyl acetate	U	3.5*
75-27-4	bromodichloromethane	U	1.8*
78-87-5	1,2-dichloropropane	U	2.0*
10061-02-5	cis-1,3-dichloropropene	U	3.1*
79-01-6	trichloroethene	U	1.3*
71-43-2	benzene	U	1.6*
124-48-1	dibromochloromethane	U	1.4*
79-00-5	1,1,2-trichloroethane	U	1.1*
10061-02-6	trans-1,3-dichloropropene	U	2.9*
110-75-8	2-chloroethylvinyl ether	U	3.3*
75-25-2	bromoform	U	1.2*
74-95-3	dibromomethane	U	2.5*
764-41-0	trans-1,4-dichloro-2-butene	U	1.7*
108-10-1	4-methyl-2-pentanone	U	3.5*
96-18-4	1,2,3-trichloropropane	U	2.3*
591-78-6	2-hexanone	U	4.1*
79-34-5	1,1,2,2-tetrachloroethane	U	2.0*
127-18-4	tetrachloroethene	U	1.5*
97-63-2	ethyl methacrylate	U	1.9*
108-88-3	toluene	U	1.5*
108-90-7	chlorobenzene	U	1.3*
100-41-4	ethylbenzene	U	1.4*
100-42-5	styrene	U	1.2*
1330-20-7	total xylene	U	1.0*

* current DataChem detection limit

ANALYTICAL REPORT FOR SAMPLE No. EK2064

NON-TARGET ANALYTE RESULTS
Additional Volatiles

Field Sample ID B00G 02

Cas. No	COMPOUND	Scan Number	Results ug/Kg	Footnotes
	NO UNKNOWNS			

FOOTNOTES

- B The analyte was found in the method blank. The reported results have been adjusted for the quantity found in the blank.
- E The reported concentration is an estimate only. The response factor was assumed to be 1.000 relative to an internal standard.
- J Indicates an estimated concentration below the Method Detection Limit.
- K The isomer is unknown.
- N Analytical standards were not analyzed for this compound.
- U Not detected.
- W The identification is tentative or closely related to the compound.

ANALYTICAL REPORT FOR SAMPLE No. EK2065

EPA METHOD 8240

TARGET ANALYTE RESULTS

Field Sample ID BOOG 03 Sponsor WESTINGHOUSE HANFORD
File ID KL27EK065 Date of Analysis 06/20/91 Date Received 06/18/91
DataChem SET ID S91-0406FG

Cas. No	COMPOUND	RESULTS (ug/KG)	DETECTION LIMITS (ug/KG)
74-87-3	chloromethane	U	1.6*
74-83-9	bromomethane	U	1.5*
75-01-4	vinyl chloride	U	1.7*
75-00-3	chloroethane	U	1.4*
75-09-2	methylene chloride	U	1.6*
67-64-1	acetone	44. U	4.3*
75-15-0	carbon disulfide	U	1.6*
75-69-4	trichlorofluoromethane	U	1.5*
75-35-4	1,1-dichloroethene	U	1.2*
75-34-3	1,1-dichloroethane	U	2.1*
540-59-0	total 1,2-dichloroethene	U	1.2*
76-66-3	chloroform	U	1.8*
107-06-2	1,2-dichloroethane	U	2.4*
74-88-4	iodomethane	U	1.5*
107-02-8	acrolein	U	58.*
107-13-1	acrylonitrile	U	42.*
78-93-3	2-butanone	U	3.8*
71-55-6	1,1,1-trichloroethane	U	1.6*
56-23-5	carbon tetrachloride	U	1.5*
108-05-4	vinyl acetate	U	3.5*
75-27-4	bromodichloromethane	U	1.8*
78-87-5	1,2-dichloropropane	U	2.0*
10061-02-5	cis-1,3-dichloropropene	U	3.1*
79-01-6	trichloroethene	U	1.3*
71-43-2	benzene	U	1.6*
124-48-1	dibromochloromethane	U	1.4*
79-00-5	1,1,2-trichloroethane	U	1.1*
10061-02-6	trans-1,3-dichloropropene	U	2.9*
110-75-8	2-chloroethylvinyl ether	U	3.3*
75-25-2	bromoform	U	1.2*
74-95-3	dibromomethane	U	2.5*
764-41-0	trans-1,4-dichloro-2-butene	U	1.7*
108-10-1	4-methyl-2-pentanone	U	3.5*
96-18-4	1,2,3-trichloropropane	U	2.3*
591-78-6	2-hexanone	U	4.1*
79-34-5	1,1,2,2-tetrachloroethane	U	2.0*
127-18-4	tetrachloroethene	U	1.5*
97-63-2	ethyl methacrylate	U	1.9*
108-88-3	toluene	U	1.5*
108-90-7	chlorobenzene	U	1.3*
100-41-4	ethylbenzene	U	1.4*
100-42-5	styrene	U	1.2*
1330-20-7	total xylene	U	1.0*

11/21/92

* current DataChem detection limit

ANALYTICAL REPORT FOR SAMPLE No. EK2065

NON-TARGET ANALYTE RESULTS
Additional Volatiles

Field Sample ID BOOG 03

Cas. No	COMPOUND	Scan Number	Results ug/Kg	Footnotes
	NO UNKNOWNS			

FOOTNOTES

B The analyte was found in the method blank. The reported results have been adjusted for the quantity found in the blank.

E The reported concentration is an estimate only. The response factor was assumed to be 1.000 relative to an internal standard.

J Indicates an estimated concentration below the Method Detection Limit.

K The isomer is unknown.

N Analytical standards were not analyzed for this compound.

U Not detected.

W The identification is tentative or closely related to the compound.

ANALYTICAL REPORT FOR SAMPLE No. EK2066

EPA METHOD 8240

TARGET ANALYTE RESULTS

Field Sample ID BOOG 04 Sponsor WESTINGHOUSE HANFORD
File ID KL28EK066 Date of Analysis 06/20/91 Date Received 06/18/91
DataChem SET ID S91-0406FG

Cas. No	COMPOUND	RESULTS (ug/KG)	DETECTION LIMITS (ug/KG)
74-87-3	chloromethane	U	1.6*
74-83-9	bromomethane	U	1.5*
75-01-4	vinyl chloride	U	1.7*
75-00-3	chloroethane	U	1.4*
75-09-2	methylene chloride	U	1.6*
67-64-1	acetone	20. U	4.3*
75-15-0	carbon disulfide	U	1.6*
75-69-4	trichlorofluoromethane	U	1.5*
75-35-4	1,1-dichloroethene	U	1.2*
75-34-3	1,1-dichloroethane	U	2.1*
540-59-0	total 1,2-dichloroethene	U	1.2*
76-66-3	chloroform	U	1.8*
107-06-2	1,2-dichloroethane	U	2.4*
74-88-4	iodomethane	U	1.5*
107-02-8	acrolein	U	58.*
107-13-1	acrylonitrile	U	42.*
78-93-3	2-butanone	U	3.8*
71-55-6	1,1,1-trichloroethane	U	1.6*
56-23-5	carbon tetrachloride	U	1.5*
108-05-4	vinyl acetate	U	3.5*
75-27-4	bromodichloromethane	U	1.8*
78-87-5	1,2-dichloropropane	U	2.0*
10061-02-5	cis-1,3-dichloropropene	U	3.1*
79-01-6	trichloroethene	U	1.3*
71-43-2	benzene	U	1.6*
124-48-1	dibromochloromethane	U	1.4*
79-00-5	1,1,2-trichloroethane	U	1.1*
10061-02-6	trans-1,3-dichloropropene	U	2.9*
110-75-8	2-chloroethylvinyl ether	U	3.3*
75-25-2	bromoform	U	1.2*
74-95-3	dibromomethane	U	2.5*
764-41-0	trans-1,4-dichloro-2-butene	U	1.7*
108-10-1	4-methyl-2-pentanone	U	3.5*
96-18-4	1,2,3-trichloropropane	U	2.3*
591-78-6	2-hexanone	U	4.1*
79-34-5	1,1,2,2-tetrachloroethane	U	2.0*
127-18-4	tetrachloroethene	U	1.5*
97-63-2	ethyl methacrylate	U	1.9*
108-88-3	toluene	U	1.5*
108-90-7	chlorobenzene	U	1.3*
100-41-4	ethylbenzene	U	1.4*
100-42-5	styrene	U	1.2*
1330-20-7	total xylene	U	1.0*

11/21/92

* current DataChem detection limit

ANALYTICAL REPORT FOR SAMPLE No. EK2066

NON-TARGET ANALYTE RESULTS
Additional Volatiles

Field Sample ID BOOG 04

Cas. No	COMPOUND	Scan Number	Results ug/Kg	Footnotes
	NO UNKNOWNS			

FOOTNOTES

B The analyte was found in the method blank. The reported results have been adjusted for the quantity found in the blank.

E The reported concentration is an estimate only. The response factor was assumed to be 1.000 relative to an internal standard.

J Indicates an estimated concentration below the Method Detection Limit.

K The isomer is unknown.

N Analytical standards were not analyzed for this compound.

U Not detected.

W The identification is tentative or closely related to the compound.

ANALYTICAL REPORT FOR SAMPLE No. EK2067

EPA METHOD 8240

TARGET ANALYTE RESULTS

Field Sample ID BOOG 06 Sponsor WESTINGHOUSE HANFORD
File ID KL29EK067 Date of Analysis 06/20/91 Date Received 06/18/91
DataChem SET ID S91-0406FG

Cas. No	COMPOUND	RESULTS (ug/KG)	DETECTION LIMITS (ug/KG)
74-87-3	chloromethane	U	1.6*
74-83-9	bromomethane	U	1.5*
75-01-4	vinyl chloride	U	1.7*
75-00-3	chloroethane	U	1.4*
75-09-2	methylene chloride	U	1.6*
67-64-1	acetone	U	4.3*
75-15-0	carbon disulfide	U	1.6*
75-69-4	trichlorofluoromethane	U	1.5*
75-35-4	1,1-dichloroethene	U	1.2*
75-34-3	1,1-dichloroethane	U	2.1*
540-59-0	total 1,2-dichloroethene	U	1.2*
76-66-3	chloroform	U	1.8*
107-06-2	1,2-dichloroethane	U	2.4*
74-88-4	iodomethane	U	1.5*
107-02-8	acrolein	U	58.*
107-13-1	acrylonitrile	U	42.*
78-93-3	2-butanone	U	3.8*
71-55-6	1,1,1-trichloroethane	U	1.6*
56-23-5	carbon tetrachloride	U	1.5*
108-05-4	vinyl acetate	U	3.5*
75-27-4	bromodichloromethane	U	1.8*
78-87-5	1,2-dichloropropane	U	2.0*
10061-02-5	cis-1,3-dichloropropene	U	3.1*
79-01-6	trichloroethene	U	1.3*
71-43-2	benzene	U	1.6*
124-48-1	dibromochloromethane	U	1.4*
79-00-5	1,1,2-trichloroethane	U	1.1*
10061-02-6	trans-1,3-dichloropropene	U	2.9*
110-75-8	2-chloroethylvinyl ether	U	3.3*
75-25-2	bromoform	U	1.2*
74-95-3	dibromomethane	U	2.5*
764-41-0	trans-1,4-dichloro-2-butene	U	1.7*
108-10-1	4-methyl-2-pentanone	U	3.5*
96-18-4	1,2,3-trichloropropane	U	2.3*
591-78-6	2-hexanone	U	4.1*
79-34-5	1,1,2,2-tetrachloroethane	U	2.0*
127-18-4	tetrachloroethene	U	1.5*
97-63-2	ethyl methacrylate	U	1.9*
108-88-3	toluene	U	1.5*
108-90-7	chlorobenzene	U	1.3*
100-41-4	ethylbenzene	U	1.4*
100-42-5	styrene	U	1.2*
1330-20-7	total xylene	U	1.0*

* current DataChem detection limit

ANALYTICAL REPORT FOR SAMPLE No. EK2067

NON-TARGET ANALYTE RESULTS
Additional Volatiles

Field Sample ID BOOG 06

Cas. No	COMPOUND	Scan Number	Results ug/Kg	Footnotes
	NO UNKNOWNS			

FOOTNOTES

B The analyte was found in the method blank. The reported results have been adjusted for the quantity found in the blank.

E The reported concentration is an estimate only. The response factor was assumed to be 1.000 relative to an internal standard.

J Indicates an estimated concentration below the Method Detection Limit.

K The isomer is unknown.

N Analytical standards were not analyzed for this compound.

U Not detected.

W The identification is tentative or closely related to the compound.

ANALYTICAL REPORT FOR SAMPLE No. EK2068

EPA METHOD 8240

TARGET ANALYTE RESULTS

Field Sample ID BOOG 07 Sponsor WESTINGHOUSE HANFORD
File ID KL30EK068 **Date of Analysis** 06/20/91 **Date Received** 06/18/91
DataChem SET ID S91-0406FG

Cas. No	COMPOUND	RESULTS (ug/KG)	DETECTION LIMITS (ug/KG)
74-87-3	chloromethane	U	1.6*
74-83-9	bromomethane	U	1.5*
75-01-4	vinyl chloride	U	1.7*
75-00-3	chloroethane	U	1.4*
75-09-2	methylene chloride	U	1.6*
67-64-1	acetone	83. U	4.3*
75-15-0	carbon disulfide	U	1.6*
75-69-4	trichlorofluoromethane	U	1.5*
75-35-4	1,1-dichloroethene	U	1.2*
75-34-3	1,1-dichloroethane	U	2.1*
540-59-0	total 1,2-dichloroethene	U	1.2*
76-66-3	chloroform	U	1.8*
107-06-2	1,2-dichloroethane	U	2.4*
74-88-4	iodomethane	U	1.5*
107-02-8	acrolein	U	58.*
107-13-1	acrylonitrile	U	42.*
78-93-3	2-butanone	U	3.8*
71-55-6	1,1,1-trichloroethane	U	1.6*
56-23-5	carbon tetrachloride	U	1.5*
108-05-4	vinyl acetate	U	3.5*
75-27-4	bromodichloromethane	U	1.8*
78-87-5	1,2-dichloropropane	U	2.0*
10061-02-5	cis-1,3-dichloropropene	U	3.1*
79-01-6	trichloroethene	U	1.3*
71-43-2	benzene	U	1.6*
124-48-1	dibromochloromethane	U	1.4*
79-00-5	1,1,2-trichloroethane	U	1.1*
10061-02-6	trans-1,3-dichloropropene	U	2.9*
110-75-8	2-chloroethylvinyl ether	U	3.3*
75-25-2	bromoform	U	1.2*
74-95-3	dibromomethane	U	2.5*
764-41-0	trans-1,4-dichloro-2-butene	U	1.7*
108-10-1	4-methyl-2-pentanone	U	3.5*
96-18-4	1,2,3-trichloropropane	U	2.3*
591-78-6	2-hexanone	U	4.1*
79-34-5	1,1,2,2-tetrachloroethane	U	2.0*
127-18-4	tetrachloroethene	U	1.5*
97-63-2	ethyl methacrylate	U	1.9*
108-88-3	toluene	U	1.5*
108-90-7	chlorobenzene	U	1.3*
100-41-4	ethylbenzene	U	1.4*
100-42-5	styrene	U	1.2*
1330-20-7	total xylene	U	1.0*

JF 11/21/92

* current DataChem detection limit

ANALYTICAL REPORT FOR SAMPLE No. EK2068

NON-TARGET ANALYTE RESULTS
Additional Volatiles

Field Sample ID BOOG 07

Cas. No	COMPOUND	Scan Number	Results ug/Kg	Footnotes
	NO UNKNOWNS			

FOOTNOTES

- B The analyte was found in the method blank. The reported results have been adjusted for the quantity found in the blank.
- E The reported concentration is an estimate only. The response factor was assumed to be 1.000 relative to an internal standard.
- J Indicates an estimated concentration below the Method Detection Limit.
- K The isomer is unknown.
- N Analytical standards were not analyzed for this compound.
- U Not detected.
- W The identification is tentative or closely related to the compound.

ANALYTICAL REPORT FOR SAMPLE No. EK2069

EPA METHOD 8240

TARGET ANALYTE RESULTS

Field Sample ID BOOG 08 Sponsor WESTINGHOUSE HANFORD
File ID CT23EK069 Date of Analysis 06/21/91 Date Received 06/18/91
DataChem SET ID S91-0406FG

Cas. No	COMPOUND	RESULTS (ug/KG)	DETECTION LIMITS (ug/KG)
74-87-3	chloromethane	U	1.6*
74-83-9	bromomethane	U	1.5*
75-01-4	vinyl chloride	U	1.7*
75-00-3	chloroethane	U	1.4*
75-09-2	methylene chloride	U	1.6*
67-64-1	acetone	29. K	4.3*
75-15-0	carbon disulfide	U	1.6*
75-69-4	trichlorofluoromethane	U	1.5*
75-35-4	1,1-dichloroethene	U	1.2*
75-34-3	1,1-dichloroethane	U	2.1*
540-59-0	total 1,2-dichloroethene	U	1.2*
76-66-3	chloroform	U	1.8*
107-06-2	1,2-dichloroethane	U	2.4*
74-88-4	iodomethane	U	1.5*
107-02-8	acrolein	U	58.*
107-13-1	acrylonitrile	U	42.*
78-93-3	2-butanone	U	3.8*
71-55-6	1,1,1-trichloroethane	U	1.6*
56-23-5	carbon tetrachloride	U	1.5*
108-05-4	vinyl acetate	U	3.5*
75-27-4	bromodichloromethane	U	1.8*
78-87-5	1,2-dichloropropane	U	2.0*
10061-02-5	cis-1,3-dichloropropene	U	3.1*
79-01-6	trichloroethene	U	1.3*
71-43-2	benzene	U	1.6*
124-48-1	dibromochloromethane	U	1.4*
79-00-5	1,1,2-trichloroethane	U	1.1*
10061-02-6	trans-1,3-dichloropropene	U	2.9*
110-75-8	2-chloroethylvinyl ether	U	3.3*
75-25-2	bromoform	U	1.2*
74-95-3	dibromomethane	U	2.5*
764-41-0	trans-1,4-dichloro-2-butene	U	1.7*
108-10-1	4-methyl-2-pentanone	U	3.5*
96-18-4	1,2,3-trichloropropane	U	2.3*
591-78-6	2-hexanone	U	4.1*
79-34-5	1,1,2,2-tetrachloroethane	U	2.0*
127-18-4	tetrachloroethene	U	1.5*
97-63-2	ethyl methacrylate	U	1.9*
108-88-3	toluene	U	1.5*
108-90-7	chlorobenzene	U	1.3*
100-41-4	ethylbenzene	U	1.4*
100-42-5	styrene	U	1.2*
1330-20-7	total xylene	U	1.0*

11/21/92

* current DataChem detection limit

ANALYTICAL REPORT FOR SAMPLE No. EK2069

NON-TARGET ANALYTE RESULTS
Additional Volatiles

Field Sample ID BOOG 08

Cas. No	COMPOUND	Scan Number	Results ug/Kg	Footnotes
	NO UNKNOWNS			

FOOTNOTES

B The analyte was found in the method blank. The reported results have been adjusted for the quantity found in the blank.

E The reported concentration is an estimate only. The response factor was assumed to be 1.000 relative to an internal standard.

J Indicates an estimated concentration below the Method Detection Limit.

K The isomer is unknown.

N Analytical standards were not analyzed for this compound.

U Not detected.

W The identification is tentative or closely related to the compound.

ANALYTICAL REPORT FOR SAMPLE No. EK2070

EPA METHOD 8240

TARGET ANALYTE RESULTS

Field Sample ID BOOG 09 Sponsor WESTINGHOUSE HANFORD
File ID CT11EK070 Date of Analysis 06/20/91 Date Received 06/18/91
DataChem SET ID S91-0406FG

Cas. No	COMPOUND	RESULTS (ug/KG)	DETECTION LIMITS (ug/KG)
74-87-3	chloromethane	U	1.6*
74-83-9	bromomethane	U	1.5*
75-01-4	vinyl chloride	U	1.7*
75-00-3	chloroethane	U	1.4*
75-09-2	methylene chloride	U	1.6*
67-64-1	acetone	98. U	4.3*
75-15-0	carbon disulfide	U	1.6*
75-69-4	trichlorofluoromethane	U	1.5*
75-35-4	1,1-dichloroethene	U	1.2*
75-34-3	1,1-dichloroethane	U	2.1*
540-59-0	total 1,2-dichloroethene	U	1.2*
76-66-3	chloroform	U	1.8*
107-06-2	1,2-dichloroethane	U	2.4*
74-88-4	iodomethane	U	1.5*
107-02-8	acrolein	U	58.*
107-13-1	acrylonitrile	U	42.*
78-93-3	2-butanone	U	3.8*
71-55-6	1,1,1-trichloroethane	U	1.6*
56-23-5	carbon tetrachloride	U	1.5*
108-05-4	vinyl acetate	U	3.5*
75-27-4	bromodichloromethane	U	1.8*
78-87-5	1,2-dichloropropane	U	2.0*
10061-02-5	cis-1,3-dichloropropene	U	3.1*
79-01-6	trichloroethene	U	1.3*
71-43-2	benzene	U	1.6*
124-48-1	dibromochloromethane	U	1.4*
79-00-5	1,1,2-trichloroethane	U	1.1*
10061-02-6	trans-1,3-dichloropropene	U	2.9*
110-75-8	2-chloroethylvinyl ether	U	3.3*
75-25-2	bromoform	U	1.2*
74-95-3	dibromomethane	U	2.5*
764-41-0	trans-1,4-dichloro-2-butene	U	1.7*
108-10-1	4-methyl-2-pentanone	U	3.5*
96-18-4	1,2,3-trichloropropane	U	2.3*
591-78-6	2-hexanone	U	4.1*
79-34-5	1,1,2,2-tetrachloroethane	U	2.0*
127-18-4	tetrachloroethene	U	1.5*
97-63-2	ethyl methacrylate	U	1.9*
108-88-3	toluene	U	1.5*
108-90-7	chlorobenzene	U	1.3*
100-41-4	ethylbenzene	U	1.4*
100-42-5	styrene	U	1.2*
1330-20-7	total xylene	U	1.0*

11/21/92

* current DataChem detection limit

ANALYTICAL REPORT FOR SAMPLE No. EK2070

NON-TARGET ANALYTE RESULTS
Additional Volatiles

Field Sample ID BOOG 09

Cas. No	COMPOUND	Scan Number	Results ug/Kg	Footnotes
	C10 hydrocarbon	1249	16.	EWN

FOOTNOTES

B The analyte was found in the method blank. The reported results have been adjusted for the quantity found in the blank.
E The reported concentration is an estimate only. The response factor was assumed to be 1.000 relative to an internal standard.
J Indicates an estimated concentration below the Method Detection Limit.
K The isomer is unknown.
N Analytical standards were not analyzed for this compound.
U Not detected.
W The identification is tentative or closely related to the compound.

ANALYTICAL REPORT FOR SAMPLE No. EK2071

EPA METHOD 8240

TARGET ANALYTE RESULTS

Field Sample ID BOOG R1 Sponsor WESTINGHOUSE HANFORD
File ID CT12EK071 Date of Analysis 06/20/91 Date Received 06/18/91
DataChem SET ID S91-0406FG

Cas. No	COMPOUND	RESULTS (ug/KG)	DETECTION LIMITS (ug/KG)
74-87-3	chloromethane	U	1.6*
74-83-9	bromomethane	U	1.5*
75-01-4	vinyl chloride	U	1.7*
75-00-3	chloroethane	U	1.4*
75-09-2	methylene chloride	U	1.6*
67-64-1	acetone	46. U	4.3*
75-15-0	carbon disulfide	U	1.6*
75-69-4	trichlorofluoromethane	U	1.5*
75-35-4	1,1-dichloroethene	U	1.2*
75-34-3	1,1-dichloroethane	U	2.1*
540-59-0	total 1,2-dichloroethene	U	1.2*
76-66-3	chloroform	U	1.8*
107-06-2	1,2-dichloroethane	U	2.4*
74-88-4	iodomethane	U	1.5*
107-02-8	acrolein	U	58.*
107-13-1	acrylonitrile	U	42.*
78-93-3	2-butanone	U	3.8*
71-55-6	1,1,1-trichloroethane	U	1.6*
56-23-5	carbon tetrachloride	U	1.5*
108-05-4	vinyl acetate	U	3.5*
75-27-4	bromodichloromethane	U	1.8*
78-87-5	1,2-dichloropropane	U	2.0*
10061-02-5	cis-1,3-dichloropropene	U	3.1*
79-01-6	trichloroethene	U	1.3*
71-43-2	benzene	U	1.6*
124-48-1	dibromochloromethane	U	1.4*
79-00-5	1,1,2-trichloroethane	U	1.1*
10061-02-6	trans-1,3-dichloropropene	U	2.9*
110-75-8	2-chloroethylvinyl ether	U	3.3*
75-25-2	bromoform	U	1.2*
74-95-3	dibromomethane	U	2.5*
764-41-0	trans-1,4-dichloro-2-butene	U	1.7*
108-10-1	4-methyl-2-pentanone	U	3.5*
96-18-4	1,2,3-trichloropropane	U	2.3*
591-78-6	2-hexanone	U	4.1*
79-34-5	1,1,2,2-tetrachloroethane	U	2.0*
127-18-4	tetrachloroethene	U	1.5*
97-63-2	ethyl methacrylate	U	1.9*
108-88-3	toluene	U	1.5*
108-90-7	chlorobenzene	U	1.3*
100-41-4	ethylbenzene	U	1.4*
100-42-5	styrene	U	1.2*
1330-20-7	total xylene	U	1.0*

11/21/92

* current DataChem detection limit

ANALYTICAL REPORT FOR SAMPLE No. EK2071

NON-TARGET ANALYTE RESULTS
Additional Volatiles

Field Sample ID BOOG R1

Cas. No	COMPOUND	Scan Number	Results ug/Kg	Footnotes
	NO UNKNOWNS			

FOOTNOTES

B The analyte was found in the method blank. The reported results have been adjusted for the quantity found in the blank.

E The reported concentration is an estimate only. The response factor was assumed to be 1.000 relative to an internal standard.

J Indicates an estimated concentration below the Method Detection Limit.

K The isomer is unknown.

N Analytical standards were not analyzed for this compound.

U Not detected.

W The identification is tentative or closely related to the compound.

ANALYTICAL REPORT FOR SAMPLE No. EK2072

EPA METHOD 8240

TARGET ANALYTE RESULTS

Field Sample ID BOOG R2 Sponsor WESTINGHOUSE HANFORD
File ID CT13EK072 Date of Analysis 06/20/91 Date Received 06/18/91
DataChem SET ID S91-0406FG

Cas. No	COMPOUND	RESULTS (ug/KG)	DETECTION LIMITS (ug/KG)
74-87-3	chloromethane	U	1.6*
74-83-9	bromomethane	U	1.5*
75-01-4	vinyl chloride	U	1.7*
75-00-3	chloroethane	U	1.4*
75-09-2	methylene chloride	U	1.6*
67-64-1	acetone	160. (A	4.3*
75-15-0	carbon disulfide	U	1.6*
75-69-4	trichlorofluoromethane	U	1.5*
75-35-4	1,1-dichloroethene	U	1.2*
75-34-3	1,1-dichloroethane	U	2.1*
540-59-0	total 1,2-dichloroethene	U	1.2*
76-66-3	chloroform	U	1.8*
107-06-2	1,2-dichloroethane	U	2.4*
74-88-4	iodomethane	U	1.5*
107-02-8	acrolein	U	58.*
107-13-1	acrylonitrile	U	42.*
78-93-3	2-butanone	170.	3.8*
71-55-6	1,1,1-trichloroethane	U	1.6*
56-23-5	carbon tetrachloride	U	1.5*
108-05-4	vinyl acetate	U	3.5*
75-27-4	bromodichloromethane	U	1.8*
78-87-5	1,2-dichloropropane	U	2.0*
10061-02-5	cis-1,3-dichloropropene	U	3.1*
79-01-6	trichloroethene	U	1.3*
71-43-2	benzene	U	1.6*
124-48-1	dibromochloromethane	U	1.4*
79-00-5	1,1,2-trichloroethane	U	1.1*
10061-02-6	trans-1,3-dichloropropene	U	2.9*
110-75-8	2-chloroethylvinyl ether	U	3.3*
75-25-2	bromoform	U	1.2*
74-95-3	dibromomethane	U	2.5*
764-41-0	trans-1,4-dichloro-2-butene	U	1.7*
108-10-1	4-methyl-2-pentanone	U	3.5*
96-18-4	1,2,3-trichloropropane	U	2.3*
591-78-6	2-hexanone	U	4.1*
79-34-5	1,1,2,2-tetrachloroethane	U	2.0*
127-18-4	tetrachloroethene	U	1.5*
97-63-2	ethyl methacrylate	U	1.9*
108-88-3	toluene	U	1.5*
108-90-7	chlorobenzene	U	1.3*
100-41-4	ethylbenzene	U	1.4*
100-42-5	styrene	U	1.2*
1330-20-7	total xylene	U	1.0*

11/21/92

* current DataChem detection limit

ANALYTICAL REPORT FOR SAMPLE No. EK2072

NON-TARGET ANALYTE RESULTS
Additional Volatiles

Field Sample ID BOOG R2

Cas. No	COMPOUND	Scan Number	Results ug/Kg	Footnotes
	NO UNKNOWNS			

FOOTNOTES

B The analyte was found in the method blank. The reported results have been adjusted for the quantity found in the blank.
E The reported concentration is an estimate only. The response factor was assumed to be 1.000 relative to an internal standard.
J Indicates an estimated concentration below the Method Detection Limit.
K The isomer is unknown.
N Analytical standards were not analyzed for this compound.
U Not detected.
W The identification is tentative or closely related to the compound.

ANALYTICAL REPORT FOR SAMPLE No. EK2073

EPA METHOD 8240

TARGET ANALYTE RESULTS

Field Sample ID BOOG R3 Sponsor WESTINGHOUSE HANFORD
File ID CT75EK073 Date of Analysis 06/25/91 Date Received 06/18/91
DataChem SET ID S91-0406FG

Cas. No	COMPOUND	RESULTS (ug/KG)	DETECTION LIMITS (ug/KG)
74-87-3	chloromethane	U	4.0*
74-83-9	bromomethane	U	3.8*
75-01-4	vinyl chloride	U	4.3*
75-00-3	chloroethane	U	3.5*
75-09-2	methylene chloride	U	4.0*
67-64-1	acetone	140. U	11.*
75-15-0	carbon disulfide	U	4.0*
75-69-4	trichlorofluoromethane	U	3.8*
75-35-4	1,1-dichloroethene	U	3.0*
75-34-3	1,1-dichloroethane	U	5.3*
540-59-0	total 1,2-dichloroethene	U	3.0*
76-66-3	chloroform	U	4.5*
107-06-2	1,2-dichloroethane	U	6.0*
74-88-4	iodomethane	U	3.8*
107-02-8	acrolein	U	150.*
107-13-1	acrylonitrile	U	110.*
78-93-3	2-butanone	430.	9.5*
71-55-6	1,1,1-trichloroethane	U	4.0*
56-23-5	carbon tetrachloride	U	3.8*
108-05-4	vinyl acetate	U	8.8*
75-27-4	bromodichloromethane	U	4.5*
78-87-5	1,2-dichloropropane	U	5.0*
10061-02-5	cis-1,3-dichloropropene	U	7.8*
79-01-6	trichloroethene	U	3.3*
71-43-2	benzene	U	4.0*
124-48-1	dibromochloromethane	U	3.5*
79-00-5	1,1,2-trichloroethane	U	2.8*
10061-02-6	trans-1,3-dichloropropene	U	7.3*
110-75-8	2-chloroethylvinyl ether	U	8.3*
75-25-2	bromoform	U	3.0*
74-95-3	dibromomethane	U	6.3*
764-41-0	trans-1,4-dichloro-2-butene	U	4.3*
108-10-1	4-methyl-2-pentanone	U	8.8*
96-18-4	1,2,3-trichloropropane	U	5.8*
591-78-6	2-hexanone	U	10.*
79-34-5	1,1,2,2-tetrachloroethane	U	5.0*
127-18-4	tetrachloroethene	U	3.8*
97-63-2	ethyl methacrylate	U	4.8*
108-88-3	toluene	U	3.8*
108-90-7	chlorobenzene	U	3.3*
100-41-4	ethylbenzene	U	3.5*
100-42-5	styrene	U	3.0*
1330-20-7	total xylene	U	2.5*

11/21/92

* current DataChem detection limit

ANALYTICAL REPORT FOR SAMPLE No. EK2073

NON-TARGET ANALYTE RESULTS
Additional Volatiles

Field Sample ID BOOG R3

Cas. No	COMPOUND	Scan Number	Results ug/Kg	Footnotes
	NO UNKNOWNS			

FOOTNOTES

B The analyte was found in the method blank. The reported results have been adjusted for the quantity found in the blank.

E The reported concentration is an estimate only. The response factor was assumed to be 1.000 relative to an internal standard.

J Indicates an estimated concentration below the Method Detection Limit.

K The isomer is unknown.

N Analytical standards were not analyzed for this compound.

U Not detected.

W The identification is tentative or closely related to the compound.

ANALYTICAL REPORT FOR SAMPLE No. EK2074

EPA METHOD 8240

TARGET ANALYTE RESULTS

Field Sample ID BOOG R0 Sponsor WESTINGHOUSE HANFORD
File ID CT15EK074 Date of Analysis 06/20/91 Date Received 06/18/91
DataChem SET ID S91-0406FG

Cas. No	COMPOUND	RESULTS (ug/KG)	DETECTION LIMITS (ug/KG)
74-87-3	chloromethane	U	1.6*
74-83-9	bromomethane	U	1.5*
75-01-4	vinyl chloride	U	1.7*
75-00-3	chloroethane	U	1.4*
75-09-2	methylene chloride	U	1.6*
67-64-1	acetone	100. LA	4.3*
75-15-0	carbon disulfide	U	1.6*
75-69-4	trichlorofluoromethane	U	1.5*
75-35-4	1,1-dichloroethene	U	1.2*
75-34-3	1,1-dichloroethane	U	2.1*
540-59-0	total 1,2-dichloroethene	U	1.2*
76-66-3	chloroform	U	1.8*
107-06-2	1,2-dichloroethane	U	2.4*
74-88-4	iodomethane	U	1.5*
107-02-8	acrolein	U	58.*
107-13-1	acrylonitrile	U	42.*
78-93-3	2-butanone	U	3.8*
71-55-6	1,1,1-trichloroethane	U	1.6*
56-23-5	carbon tetrachloride	U	1.5*
108-05-4	vinyl acetate	U	3.5*
75-27-4	bromodichloromethane	U	1.8*
78-87-5	1,2-dichloropropane	U	2.0*
10061-02-5	cis-1,3-dichloropropene	U	3.1*
79-01-6	trichloroethene	U	1.3*
71-43-2	benzene	U	1.6*
124-48-1	dibromochloromethane	U	1.4*
79-00-5	1,1,2-trichloroethane	U	1.1*
10061-02-6	trans-1,3-dichloropropene	U	2.9*
110-75-8	2-chloroethylvinyl ether	U	3.3*
75-25-2	bromoform	U	1.2*
74-95-3	dibromomethane	U	2.5*
764-41-0	trans-1,4-dichloro-2-butene	U	1.7*
108-10-1	4-methyl-2-pentanone	U	3.5*
96-18-4	1,2,3-trichloropropane	U	2.3*
591-78-6	2-hexanone	U	4.1*
79-34-5	1,1,2,2-tetrachloroethane	U	2.0*
127-18-4	tetrachloroethene	U	1.5*
97-63-2	ethyl methacrylate	U	1.9*
108-88-3	toluene	2.3	1.5*
108-90-7	chlorobenzene	U	1.3*
100-41-4	ethylbenzene	U	1.4*
100-42-5	styrene	U	1.2*
1330-20-7	total xylene	U	1.0*

J 11/21/92

* current DataChem detection limit

ANALYTICAL REPORT FOR SAMPLE No. EK2074

NON-TARGET ANALYTE RESULTS
Additional Volatiles

Field Sample ID BOOG R0

Cas. No	COMPOUND	Scan Number	Results ug/Kg	Footnotes
	NO UNKNOWNS			

FOOTNOTES

B The analyte was found in the method blank. The reported results have been adjusted for the quantity found in the blank.

E The reported concentration is an estimate only. The response factor was assumed to be 1.000 relative to an internal standard.

J Indicates an estimated concentration below the Method Detection Limit.

K The isomer is unknown.

N Analytical standards were not analyzed for this compound.

U Not detected.

W The identification is tentative or closely related to the compound.

ANALYTICAL REPORT FOR SAMPLE No. EK2075

EPA METHOD 8240

TARGET ANALYTE RESULTS

Field Sample ID BOOG R4 Sponsor WESTINGHOUSE HANFORD
File ID CT21EK075 Date of Analysis 06/20/91 Date Received 06/18/91
DataChem SET ID S91-0406FG

Cas. No	COMPOUND	RESULTS (ug/KG)	DETECTION LIMITS (ug/KG)
74-87-3	chloromethane	U	1.6*
74-83-9	bromomethane	U	1.5*
75-01-4	vinyl chloride	U	1.7*
75-00-3	chloroethane	U	1.4*
75-09-2	methylene chloride	U	1.6*
67-64-1	acetone	67. U	4.3*
75-15-0	carbon disulfide	U	1.6*
75-69-4	trichlorofluoromethane	U	1.5*
75-35-4	1,1-dichloroethene	U	1.2*
75-34-3	1,1-dichloroethane	U	2.1*
540-59-0	total 1,2-dichloroethene	U	1.2*
76-66-3	chloroform	U	1.8*
107-06-2	1,2-dichloroethane	U	2.4*
74-88-4	iodomethane	U	1.5*
107-02-8	acrolein	U	58.*
107-13-1	acrylonitrile	U	42.*
78-93-3	2-butanone	U	3.8*
71-55-6	1,1,1-trichloroethane	U	1.6*
56-23-5	carbon tetrachloride	U	1.5*
108-05-4	vinyl acetate	U	3.5*
75-27-4	bromodichloromethane	U	1.8*
78-87-5	1,2-dichloropropane	U	2.0*
10061-02-5	cis-1,3-dichloropropene	U	3.1*
79-01-6	trichloroethene	U	1.3*
71-43-2	benzene	U	1.6*
124-48-1	dibromochloromethane	U	1.4*
79-00-5	1,1,2-trichloroethane	U	1.1*
10061-02-6	trans-1,3-dichloropropene	U	2.9*
110-75-8	2-chloroethylvinyl ether	U	3.3*
75-25-2	bromoform	U	1.2*
74-95-3	dibromomethane	U	2.5*
764-41-0	trans-1,4-dichloro-2-butene	U	1.7*
108-10-1	4-methyl-2-pentanone	U	3.5*
96-18-4	1,2,3-trichloropropane	U	2.3*
591-78-6	2-hexanone	U	4.1*
79-34-5	1,1,2,2-tetrachloroethane	U	2.0*
127-18-4	tetrachloroethene	U	1.5*
97-63-2	ethyl methacrylate	U	1.9*
108-88-3	toluene	U	1.5*
108-90-7	chlorobenzene	U	1.3*
100-41-4	ethylbenzene	U	1.4*
100-42-5	styrene	U	1.2*
1330-20-7	total xylene	U	1.0*

JF 11/21/92

* current DataChem detection limit

ANALYTICAL REPORT FOR SAMPLE No. EK2075

NON-TARGET ANALYTE RESULTS
Additional Volatiles

Field Sample ID BOOG R4

Cas. No	COMPOUND	Scan Number	Results ug/Kg	Footnotes
	NO UNKNOWNS			

FOOTNOTES

B The analyte was found in the method blank. The reported results have been adjusted for the quantity found in the blank.

E The reported concentration is an estimate only. The response factor was assumed to be 1.000 relative to an internal standard.

J Indicates an estimated concentration below the Method Detection Limit.

K The isomer is unknown.

N Analytical standards were not analyzed for this compound.

U Not detected.

W The identification is tentative or closely related to the compound.

ANALYTICAL REPORT FOR SAMPLE No. EK2076

EPA METHOD 8240

TARGET ANALYTE RESULTS

Field Sample ID BOOG R5 Sponsor WESTINGHOUSE HANFORD
File ID CT22EK076 Date of Analysis 06/20/91 Date Received 06/18/91
DataChem SET ID S91-0406FG

Cas. No	COMPOUND	RESULTS (ug/KG)	DETECTION LIMITS (ug/KG)
74-87-3	chloromethane	U	1.6*
74-83-9	bromomethane	U	1.5*
75-01-4	vinyl chloride	U	1.7*
75-00-3	chloroethane	U	1.4*
75-09-2	methylene chloride	U	1.6*
67-64-1	acetone	7.1 U	4.3*
75-15-0	carbon disulfide	U	1.6*
75-69-4	trichlorofluoromethane	U	1.5*
75-35-4	1,1-dichloroethene	U	1.2*
75-34-3	1,1-dichloroethane	U	2.1*
540-59-0	total 1,2-dichloroethene	U	1.2*
76-66-3	chloroform	U	1.8*
107-06-2	1,2-dichloroethane	U	2.4*
74-88-4	iodomethane	U	1.5*
107-02-8	acrolein	U	58.*
107-13-1	acrylonitrile	U	42.*
78-93-3	2-butanone	U	3.8*
71-55-6	1,1,1-trichloroethane	U	1.6*
56-23-5	carbon tetrachloride	U	1.5*
108-05-4	vinyl acetate	U	3.5*
75-27-4	bromodichloromethane	U	1.8*
78-87-5	1,2-dichloropropane	U	2.0*
10061-02-5	cis-1,3-dichloropropene	U	3.1*
79-01-6	trichloroethene	U	1.3*
71-43-2	benzene	U	1.6*
124-48-1	dibromochloromethane	U	1.4*
79-00-5	1,1,2-trichloroethane	U	1.1*
10061-02-6	trans-1,3-dichloropropene	U	2.9*
110-75-8	2-chloroethylvinyl ether	U	3.3*
75-25-2	bromoform	U	1.2*
74-95-3	dibromomethane	U	2.5*
764-41-0	trans-1,4-dichloro-2-butene	U	1.7*
108-10-1	4-methyl-2-pentanone	U	3.5*
96-18-4	1,2,3-trichloropropane	U	2.3*
591-78-6	2-hexanone	U	4.1*
79-34-5	1,1,2,2-tetrachloroethane	U	2.0*
127-18-4	tetrachloroethene	U	1.5*
97-63-2	ethyl methacrylate	U	1.9*
108-88-3	toluene	U	1.5*
108-90-7	chlorobenzene	U	1.3*
100-41-4	ethylbenzene	U	1.4*
100-42-5	styrene	U	1.2*
1330-20-7	total xylene	U	1.0*

JS 11/21/92

* current DataChem detection limit

ANALYTICAL REPORT FOR SAMPLE No. EK2076

NON-TARGET ANALYTE RESULTS
Additional Volatiles

Field Sample ID BOOG R5

Cas. No	COMPOUND	Scan Number	Results ug/Kg	Footnotes
	NO UNKNOWNS			

FOOTNOTES

B The analyte was found in the method blank. The reported results have been adjusted for the quantity found in the blank.
E The reported concentration is an estimate only. The response factor was assumed to be 1.000 relative to an internal standard.
J Indicates an estimated concentration below the Method Detection Limit.
K The isomer is unknown.
N Analytical standards were not analyzed for this compound.
U Not detected.
W The identification is tentative or closely related to the compound.

ANALYTICAL REPORT FOR SAMPLE No. EK2077

EPA METHOD 8240

TARGET ANALYTE RESULTS

Field Sample ID BOOG R6 Sponsor WESTINGHOUSE HANFORD
File ID CT16EK077 Date of Analysis 06/20/91 Date Received 06/18/91
DataChem SET ID S91-0406FG

Cas. No	COMPOUND	RESULTS (ug/KG)	DETECTION LIMITS (ug/KG)
74-87-3	chloromethane	U	1.6*
74-83-9	bromomethane	U	1.5*
75-01-4	vinyl chloride	U	1.7*
75-00-3	chloroethane	U	1.4*
75-09-2	methylene chloride	U	1.6*
67-64-1	acetone	29. U	4.3*
75-15-0	carbon disulfide	U	1.6*
75-69-4	trichlorofluoromethane	U	1.5*
75-35-4	1,1-dichloroethene	U	1.2*
75-34-3	1,1-dichloroethane	U	2.1*
540-59-0	total 1,2-dichloroethene	U	1.2*
76-66-3	chloroform	U	1.8*
107-06-2	1,2-dichloroethane	U	2.4*
74-88-4	iodomethane	U	1.5*
107-02-8	acrolein	U	58.*
107-13-1	acrylonitrile	U	42.*
78-93-3	2-butanone	U	3.8*
71-55-6	1,1,1-trichloroethane	U	1.6*
56-23-5	carbon tetrachloride	U	1.5*
108-05-4	vinyl acetate	U	3.5*
75-27-4	bromodichloromethane	U	1.8*
78-87-5	1,2-dichloropropane	U	2.0*
10061-02-5	cis-1,3-dichloropropene	U	3.1*
79-01-6	trichloroethene	U	1.3*
71-43-2	benzene	U	1.6*
124-48-1	dibromochloromethane	U	1.4*
79-00-5	1,1,2-trichloroethane	U	1.1*
10061-02-6	trans-1,3-dichloropropene	U	2.9*
110-75-8	2-chloroethylvinyl ether	U	3.3*
75-25-2	bromoform	U	1.2*
74-95-3	dibromomethane	U	2.5*
764-41-0	trans-1,4-dichloro-2-butene	U	1.7*
108-10-1	4-methyl-2-pentanone	U	3.5*
96-18-4	1,2,3-trichloropropane	U	2.3*
591-78-6	2-hexanone	U	4.1*
79-34-5	1,1,2,2-tetrachloroethane	U	2.0*
127-18-4	tetrachloroethene	U	1.5*
97-63-2	ethyl methacrylate	U	1.9*
108-88-3	toluene	U	1.5*
108-90-7	chlorobenzene	U	1.3*
100-41-4	ethylbenzene	U	1.4*
100-42-5	styrene	U	1.2*
1330-20-7	total xylene	U	1.0*

11/21/92

* current DataChem detection limit

ANALYTICAL REPORT FOR SAMPLE No. EK2077

NON-TARGET ANALYTE RESULTS
Additional Volatiles

Field Sample ID BOOG R6

Cas. No	COMPOUND	Scan Number	Results ug/Kg	Footnotes
	NO UNKNOWNS			

FOOTNOTES

B The analyte was found in the method blank. The reported results have been adjusted for the quantity found in the blank.

E The reported concentration is an estimate only. The response factor was assumed to be 1.000 relative to an internal standard.

J Indicates an estimated concentration below the Method Detection Limit.

K The isomer is unknown.

N Analytical standards were not analyzed for this compound.

U Not detected.

W The identification is tentative or closely related to the compound.

ANALYTICAL REPORT FOR SAMPLE No. EK2078

EPA METHOD 8240

TARGET ANALYTE RESULTS

Field Sample ID BOOG R7 Sponsor WESTINGHOUSE HANFORD
File ID CT17EK078 Date of Analysis 06/20/91 Date Received 06/18/91
DataChem SET ID S91-0406FG

Cas. No	COMPOUND	RESULTS (ug/KG)	DETECTION LIMITS (ug/KG)
74-87-3	chloromethane	U	1.6*
74-83-9	bromomethane	U	1.5*
75-01-4	vinyl chloride	U	1.7*
75-00-3	chloroethane	U	1.4*
75-09-2	methylene chloride	U	1.6*
67-64-1	acetone	50. U	4.3*
75-15-0	carbon disulfide	U	1.6*
75-69-4	trichlorofluoromethane	U	1.5*
75-35-4	1,1-dichloroethene	U	1.2*
75-34-3	1,1-dichloroethane	U	2.1*
540-59-0	total 1,2-dichloroethene	U	1.2*
76-66-3	chloroform	U	1.8*
107-06-2	1,2-dichloroethane	U	2.4*
74-88-4	iodomethane	U	1.5*
107-02-8	acrolein	U	58.*
107-13-1	acrylonitrile	U	42.*
78-93-3	2-butanone	U	3.8*
71-55-6	1,1,1-trichloroethane	U	1.6*
56-23-5	carbon tetrachloride	U	1.5*
108-05-4	vinyl acetate	U	3.5*
75-27-4	bromodichloromethane	U	1.8*
78-87-5	1,2-dichloropropane	U	2.0*
10061-02-5	cis-1,3-dichloropropene	U	3.1*
79-01-6	trichloroethene	U	1.3*
71-43-2	benzene	U	1.6*
124-48-1	dibromochloromethane	U	1.4*
79-00-5	1,1,2-trichloroethane	U	1.1*
10061-02-6	trans-1,3-dichloropropene	U	2.9*
110-75-8	2-chloroethylvinyl ether	U	3.3*
75-25-2	bromoform	U	1.2*
74-95-3	dibromomethane	U	2.5*
764-41-0	trans-1,4-dichloro-2-butene	U	1.7*
108-10-1	4-methyl-2-pentanone	U	3.5*
96-18-4	1,2,3-trichloropropane	U	2.3*
591-78-6	2-hexanone	U	4.1*
79-34-5	1,1,2,2-tetrachloroethane	U	2.0*
127-18-4	tetrachloroethene	U	1.5*
97-63-2	ethyl methacrylate	U	1.9*
108-88-3	toluene	U	1.5*
108-90-7	chlorobenzene	U	1.3*
100-41-4	ethylbenzene	U	1.4*
100-42-5	styrene	U	1.2*
1330-20-7	total xylene	U	1.0*

11/21/92

* current DataChem detection limit

ANALYTICAL REPORT FOR SAMPLE No. EK2078

NON-TARGET ANALYTE RESULTS
Additional Volatiles

Field Sample ID BOOG R7

Cas. No	COMPOUND	Scan Number	Results ug/Kg	Footnotes
	NO UNKNOWNS			

FOOTNOTES

B The analyte was found in the method blank. The reported results have been adjusted for the quantity found in the blank.

E The reported concentration is an estimate only. The response factor was assumed to be 1.000 relative to an internal standard.

J Indicates an estimated concentration below the Method Detection Limit.

K The isomer is unknown.

N Analytical standards were not analyzed for this compound.

U Not detected.

W The identification is tentative or closely related to the compound.

ANALYTICAL REPORT FOR SAMPLE No. EK2079

EPA METHOD 8240

TARGET ANALYTE RESULTS

Field Sample ID BOOG R8 Sponsor WESTINGHOUSE HANFORD
File ID CT18EK079 Date of Analysis 06/20/91 Date Received 06/18/91
DataChem SET ID S91-0406FG

Cas. No	COMPOUND	RESULTS (ug/KG)	DETECTION LIMITS (ug/KG)
74-87-3	chloromethane	U	1.6*
74-83-9	bromomethane	U	1.5*
75-01-4	vinyl chloride	U	1.7*
75-00-3	chloroethane	U	1.4*
75-09-2	methylene chloride	U	1.6*
67-64-1	acetone	28. U	4.3*
75-15-0	carbon disulfide	U	1.6*
75-69-4	trichlorofluoromethane	U	1.5*
75-35-4	1,1-dichloroethene	U	1.2*
75-34-3	1,1-dichloroethane	U	2.1*
540-59-0	total 1,2-dichloroethene	U	1.2*
76-66-3	chloroform	U	1.8*
107-06-2	1,2-dichloroethane	U	2.4*
74-88-4	iodomethane	U	1.5*
107-02-8	acrolein	U	58.*
107-13-1	acrylonitrile	U	42.*
78-93-3	2-butanone	U	3.8*
71-55-6	1,1,1-trichloroethane	U	1.6*
56-23-5	carbon tetrachloride	U	1.5*
108-05-4	vinyl acetate	U	3.5*
75-27-4	bromodichloromethane	U	1.8*
78-87-5	1,2-dichloropropane	U	2.0*
10061-02-5	cis-1,3-dichloropropene	U	3.1*
79-01-6	trichloroethene	U	1.3*
71-43-2	benzene	U	1.6*
124-48-1	dibromochloromethane	U	1.4*
79-00-5	1,1,2-trichloroethane	U	1.1*
10061-02-6	trans-1,3-dichloropropene	U	2.9*
110-75-8	2-chloroethylvinyl ether	U	3.3*
75-25-2	bromoform	U	1.2*
74-95-3	dibromomethane	U	2.5*
764-41-0	trans-1,4-dichloro-2-butene	U	1.7*
108-10-1	4-methyl-2-pentanone	U	3.5*
96-18-4	1,2,3-trichloropropane	U	2.3*
591-78-6	2-hexanone	U	4.1*
79-34-5	1,1,2,2-tetrachloroethane	U	2.0*
127-18-4	tetrachloroethene	U	1.5*
97-63-2	ethyl methacrylate	U	1.9*
108-88-3	toluene	U	1.5*
108-90-7	chlorobenzene	U	1.3*
100-41-4	ethylbenzene	U	1.4*
100-42-5	styrene	U	1.2*
1330-20-7	total xylene	U	1.0*

11/21/92

D3-58

* current DataChem detection limit

ANALYTICAL REPORT FOR SAMPLE No. EK2079

NON-TARGET ANALYTE RESULTS
Additional Volatiles

Field Sample ID BOOG R8

Cas. No	COMPOUND	Scan Number	Results ug/Kg	Footnotes
	NO UNKNOWNS			

FOOTNOTES

- B The analyte was found in the method blank. The reported results have been adjusted for the quantity found in the blank.
- E The reported concentration is an estimate only. The response factor was assumed to be 1.000 relative to an internal standard.
- J Indicates an estimated concentration below the Method Detection Limit.
- K The isomer is unknown.
- N Analytical standards were not analyzed for this compound.
- U Not detected.
- W The identification is tentative or closely related to the compound.

ANALYTICAL REPORT FOR SAMPLE No. EK2080

EPA METHOD 8240

TARGET ANALYTE RESULTS

Field Sample ID BOOZ H7 Sponsor WESTINGHOUSE HANFORD
File ID CT19EK080 Date of Analysis 06/20/91 Date Received 06/18/91
DataChem SET ID S91-0406FG

Cas. No	COMPOUND	RESULTS (ug/KG)	DETECTION LIMITS (ug/KG)
74-87-3	chloromethane	U	1.6*
74-83-9	bromomethane	U	1.5*
75-01-4	vinyl chloride	U	1.7*
75-00-3	chloroethane	U	1.4*
75-09-2	methylene chloride	U	1.6*
67-64-1	acetone	130. U	4.3*
75-15-0	carbon disulfide	U	1.6*
75-69-4	trichlorofluoromethane	U	1.5*
75-35-4	1,1-dichloroethene	U	1.2*
75-34-3	1,1-dichloroethane	U	2.1*
540-59-0	total 1,2-dichloroethene	U	1.2*
76-66-3	chloroform	U	1.8*
107-06-2	1,2-dichloroethane	U	2.4*
74-88-4	iodomethane	U	1.5*
107-02-8	acrolein	U	58.*
107-13-1	acrylonitrile	U	42.*
78-93-3	2-butanone	21.	3.8*
71-55-6	1,1,1-trichloroethane	U	1.6*
56-23-5	carbon tetrachloride	U	1.5*
108-05-4	vinyl acetate	U	3.5*
75-27-4	bromodichloromethane	U	1.8*
78-87-5	1,2-dichloropropane	U	2.0*
10061-02-5	cis-1,3-dichloropropene	U	3.1*
79-01-6	trichloroethene	U	1.3*
71-43-2	benzene	U	1.6*
124-48-1	dibromochloromethane	U	1.4*
79-00-5	1,1,2-trichloroethane	U	1.1*
10061-02-6	trans-1,3-dichloropropene	U	2.9*
110-75-8	2-chloroethylvinyl ether	U	3.3*
75-25-2	bromoform	U	1.2*
74-95-3	dibromomethane	U	2.5*
764-41-0	trans-1,4-dichloro-2-butene	U	1.7*
108-10-1	4-methyl-2-pentanone	U	3.5*
96-18-4	1,2,3-trichloropropane	U	2.3*
591-78-6	2-hexanone	U	4.1*
79-34-5	1,1,2,2-tetrachloroethane	U	2.0*
127-18-4	tetrachloroethene	U	1.5*
97-63-2	ethyl methacrylate	U	1.9*
108-88-3	toluene	U	1.5*
108-90-7	chlorobenzene	U	1.3*
100-41-4	ethylbenzene	U	1.4*
100-42-5	styrene	U	1.2*
1330-20-7	total xylene	U	1.0*

JH 4/21/92

* current DataChem detection limit

ANALYTICAL REPORT FOR SAMPLE No. EK2080

NON-TARGET ANALYTE RESULTS
Additional Volatiles

Field Sample ID BOOZ H7

Cas. No	COMPOUND	Scan Number	Results ug/Kg	Footnotes
	NO UNKNOWNS			

FOOTNOTES

- B The analyte was found in the method blank. The reported results have been adjusted for the quantity found in the blank.
- E The reported concentration is an estimate only. The response factor was assumed to be 1.000 relative to an internal standard.
- J Indicates an estimated concentration below the Method Detection Limit.
- K The isomer is unknown.
- N Analytical standards were not analyzed for this compound.
- U Not detected.
- W The identification is tentative or closely related to the compound.

ANALYTICAL REPORT FOR SAMPLE No. EK2081

EPA METHOD 8240

TARGET ANALYTE RESULTS

Field Sample ID BOOZ H8 Sponsor WESTINGHOUSE HANFORD
File ID CT20EK081 Date of Analysis 06/20/91 Date Received 06/18/91
DataChem SET ID S91-0406FG

Cas. No	COMPOUND	RESULTS (ug/KG)	DETECTION LIMITS (ug/KG)
74-87-3	chloromethane	U	1.6*
74-83-9	bromomethane	U	1.5*
75-01-4	vinyl chloride	U	1.7*
75-00-3	chloroethane	U	1.4*
75-09-2	methylene chloride	U	1.6*
67-64-1	acetone	250. UJ	4.3*
75-15-0	carbon disulfide	U	1.6*
75-69-4	trichlorofluoromethane	U	1.5*
75-35-4	1,1-dichloroethene	U	1.2*
75-34-3	1,1-dichloroethane	U	2.1*
540-59-0	total 1,2-dichloroethene	U	1.2*
76-66-3	chloroform	U	1.8*
107-06-2	1,2-dichloroethane	U	2.4*
74-88-4	iodomethane	U	1.5*
107-02-8	acrolein	U	58.*
107-13-1	acrylonitrile	U	42.*
78-93-3	2-butanone	U	3.8*
71-55-6	1,1,1-trichloroethane	U	1.6*
56-23-5	carbon tetrachloride	U	1.5*
108-05-4	vinyl acetate	U	3.5*
75-27-4	bromodichloromethane	U	1.8*
78-87-5	1,2-dichloropropane	U	2.0*
10061-02-5	cis-1,3-dichloropropene	U	3.1*
79-01-6	trichloroethene	U	1.3*
71-43-2	benzene	U	1.6*
124-48-1	dibromochloromethane	U	1.4*
79-00-5	1,1,2-trichloroethane	U	1.1*
10061-02-6	trans-1,3-dichloropropene	U	2.9*
110-75-8	2-chloroethylvinyl ether	U	3.3*
75-25-2	bromoform	U	1.2*
74-95-3	dibromomethane	U	2.5*
764-41-0	trans-1,4-dichloro-2-butene	U	1.7*
108-10-1	4-methyl-2-pentanone	U	3.5*
96-18-4	1,2,3-trichloropropane	U	2.3*
591-78-6	2-hexanone	U	4.1*
79-34-5	1,1,2,2-tetrachloroethane	U	2.0*
127-18-4	tetrachloroethene	U	1.5*
97-63-2	ethyl methacrylate	U	1.9*
108-88-3	toluene	U	1.5*
108-90-7	chlorobenzene	U	1.3*
100-41-4	ethylbenzene	U	1.4*
100-42-5	styrene	U	1.2*
1330-20-7	total xylene	U	1.0*

JJ 11/21/92

* current DataChem detection limit

ANALYTICAL REPORT FOR SAMPLE No. EK2081

NON-TARGET ANALYTE RESULTS
Additional Volatiles

Field Sample ID BOOZ H8

Cas. No	COMPOUND	Scan Number	Results ug/Kg	Footnotes
	NO UNKNOWNS			

FOOTNOTES

B The analyte was found in the method blank. The reported results have been adjusted for the quantity found in the blank.

E The reported concentration is an estimate only. The response factor was assumed to be 1.000 relative to an internal standard.

J Indicates an estimated concentration below the Method Detection Limit.

K The isomer is unknown.

N Analytical standards were not analyzed for this compound.

U Not detected.

W The identification is tentative or closely related to the compound.

SOIL
Surrogate Percent Recovery Summary

DataChem ID S91-0406FG

Sample No.	TOL	BFB	DCE
MB-1	107	110	99
MB-2	99	98	102
MB-3	101	91	109
EK2062	107	106	98
EK2063	107	107	99
EK2064	109	107	99
EK2065	110	108	99
EK2066	111	112	102
EK2067	113	109	103
EK2068	114	109	99
EK2069	99	88	102
EK2070	108	83	106
EK2071	99	92	107
EK2072	101	85	110
EK2073	97	90	114
EK2074	99	90	104
EK2075	97	91	107
EK2076	98	86	104
EK2077	98	95	110
EK2078	99	87	106
EK2079	97	90	113
EK2080	100	89	110
EK2081	97	88	104
EK2062MS	98	86	105
EK2062MD	97	87	102

			QC LIMITS
(TOL)	=	TOLUENE-D8	(81-117)
(BFB)	=	BROMOFLUOROBENZENE	(74-121)
(DCE)	=	1,2-DICHLOROETHANE-D4	(70-121)

MB is the abbreviation for method blank.
If more than one method blank was analyzed they will be designated MB-1, MB-2, ect.

EPA METHOD 8240

MATRIX SPIKE RECOVERY REPORT

Date of Analysis 06/25/91 Date Received 06/17/91
DataChem ID for Matrix Spike Analysis EK2062
DataChem SET ID S91-0406FG

COMPOUND	PERCENT RECOVERY MATRIX SPIKE	PERCENT RECOVERY MATRIX SPIKE DUPLICATE
1,1-dichloroethene	91	85
trichloroethene	80	81
benzene	102	98
toluene	94	90
chlorobenzene	107	107

Matrix Spiking Concentration is 50 ug/KG.

DATA CHEM LABORATORIES

July 12, 1991

AUG 1991 RECEIVED DATA RECEIPT

REPORT INTRODUCTION
ANALYTICAL COMMENTARY

SUBMITTED TO: Ron Mitchell

SUBMITTED BY: Reed A. Hendricks

REFERENCE DATA:

Analysis of: 22 soil samples

Method of Analysis: EPA 8270 with modifications

Identification No: S91-0406-GG

DataChem Laboratory No: EK 2062 through EK 2081, EK 2081MS and EK 2081MSD

The above numbered samples were analyzed for base-neutral and acid compounds by gas chromatography/mass spectrometry. EPA Test Method 8270 was followed with modificatons. (United States Environmental Protection Agency; Office of Solid Waste and Emergency Response, SW-846 November 1986).

EPA Method 3550 was used for preparation of the samples prior to analysis. Thirty grams of soil sample were extracted with methylene chloride using sonication. Surrogate standards were added prior to the extraction as prescribed. The total volume of the sample after extraction and concentration was one milliliter. Internal standards were added to each sample and standard mixture prior to analysis.

Separation of the compounds of interest was obtained with a 30 m, 0.32 mm internal diameter, DB-5 fused silica capillary column. Oven temperature was programmed from 40 degrees centigrade (held isothermally for 4 minutes) to 300 degrees centigrade at 10 degrees centigrade per minute. A 40 second splitless injection interval was used. Analysis was performed using a Finnigan 5100 GC/MS/DS system, scanning a mass range of 35 to 500 amu each second.

CINCINNATI OFFICE
4388 GLENDALE-MILFORD ROAD
CINCINNATI, OHIO 45242-3706
513 733-5336 FAX 513 733 5347

SALT LAKE OFFICE
960 WEST LeVOY DRIVE
SALT LAKE CITY, UTAH 84123-2547
801 266-7700, FAX 801 268-9992

DENVER OFFICE
5299 DTC BOULEVARD, #500
ENGLEWOOD, COLORADO 80111-3326
303 771-1155 FAX 303 770-0578

The initial calibration of the instrument was performed at concentrations of 160, 120, 80, 50 and 20 ug/mL. Calibration check compounds (CCC's) specified by the method are acenaphthene, 1,4-dichlorobenzene, hexachlorobutadiene, N-nitroso-di-n-phenylamine, di-n-octylphthalate, fluoranthene, benzo(a)pyrene, 4-chloro-3-methylphenol, 2,4-dichlorophenol, 2-nitrophenol, phenol, pentachlorophenol, and 2,4,6-trichlorophenol. The relative standard deviation of the response factor (RF) for each CCC in the initial standards was less than the 30% criteria required by the method. System performance check compounds (SPCC's) specified in the method are N-nitroso-di-n-propylamine, hexachlorocyclopentadiene, 2,4-dinitrophenol, and 4-nitrophenol. The minimum response factors for the SPCC's were greater than the 0.050 required in the method.

The continuing calibration of the instrument was performed at a concentration of 50 ug/mL for all compounds. The response factors for all CCC's were within the maximum percent difference of 25% compared to the initial curve; SPCC's response factors were greater than the minimum RF of 0.050. DFTPP performance criteria was met for all sample and standard analyses.

DataChem Laboratories will maintain a complete record of this data on magnetic tape along with hard copies of the ion chromatograms, mass spectra, surrogate recovery summary, and verification of compliance with EPA tuning (DFTPP) and chromatography criteria.

Surrogate standard recoveries were monitored and are reported on the Surrogate Recovery Summary form at the end of the report. All recoveries were within QC limits.

Sample number EK 2070 required a secondary dilution of 1:10 for accurate quantitation of bis(2-ethylhexyl)phthalate.

The results for each sample are reported twice in the report; first on the Target Analyte Summary Report and again on the Analytical Report (results by sample). The report follows.

Reed A. Hendricks

ANALYTICAL REPORT FOR SAMPLE No. EK 2062

EPA METHOD 8270, 3rd ED.
TARGET ANALYTE RESULTS

Field Sample ID B00GP9 Sponsor WESTINGHOUSE HANFORD COMPANY

File ID LD19EK2062 Date Extracted 06/18/91 Date of Analysis 07/06/91

DataChem ID S91-0406GG

Cas. No	COMPOUND	RESULTS (ug/g)	DETECTION LIMITS (ug/g)
62-75-9	N-nitrosodimethylamine	U	1
108-95-2	phenol	U	1
111-44-4	bis(2-chloroethyl)ether	U	1
95-57-8	2-chlorophenol	U	1
541-73-1	1,3-dichlorobenzene	U	1
106-46-7	1,4-dichlorobenzene	U	1
95-50-1	1,2-dichlorobenzene	U	1
39638-329	bis(2-chloroisopropyl)ether	U	1
621-64-7	N-nitrosodi-n-propylamine	U	1
67-72-1	hexachloroethane	U	1
98-95-3	nitrobenzene	U	1
78-59-1	isophorone	U	1
88-75-5	2-nitrophenol	U	1
105-67-9	2,4-dimethylphenol	U	1
11-91-1	bis(2-chloroethoxy)methane	U	1
120-83-2	2,4-dichlorophenol	U	1
120-82-1	1,2,4-trichlorobenzene	U	1
91-20-3	naphthalene	U	1
87-68-3	hexachlorobutadiene	U	1
59-50-7	4-chloro-3-methylphenol	U	1
77-47-4	hexachlorocyclopentadiene	U	1
88-06-2	2,4,6-trichlorophenol	U	1
91-58-7	2-chloronaphthalene	U	1
131-11-3	dimethyl phthalate	U	1
606-20-2	2,6-dinitrotoluene	U	1
208-96-8	acenaphthylene	U	1
83-32-9	acenaphthene	U	1
51-28-5	2,4-dinitrophenol	U	1
100-02-7	4-nitrophenol	U	1
121-14-2	2,4-dinitrotoluene	U	1
84-66-2	diethyl phthalate	0.09 J	1
7005-73-3	4-chlorophenyl-phenylether	U	1
86-73-7	fluorene	U	1
534-52-1	2-methyl-4,6-dinitrophenol	U	1
86-30-6	N-nitrosodiphenylamine	U	1
101-55-3	4-bromophenyl-phenylether	U	1
118-74-1	hexachlorobenzene	U	1
319-85-7	beta-BHC	U	5
87-86-5	pentachlorophenol	U	1
85-01-8	phenanthrene	U	1
120-12-7	anthracene	U	1

ANALYTICAL REPORT FOR SAMPLE No. EK 2062

EPA METHOD 8270, 3rd ED.
TARGET ANALYTE RESULTS

Field Sample ID B00GP9 Sponsor WESTINGHOUSE HANFORD COMPANY

Cas. No.	COMPOUND	RESULTS (ug/g)	DETECTION LIMITS (ug/g)
319-86-8	delta-BHC	U	5
76-44-8	heptachlor	U	5
84-74-2	di-n-butyl phthalate	U	1
309-00-2	aldrin	U	5
1024-57-3	heptachlor epoxide	U	5
206-44-0	fluoranthene	U	1
129-00-0	pyrene	U	1
959-98-8	endosulfan I	U	5
75-55-9	4,4'DDE	U	5
92-87-5	benzidine	U	1
60-57-1	dieldrin	U	5
72-20-8	endrin	U	5
72-54-8	4,4'DDD	U	5
33213-65-9	endosulfan II	U	5
7421-93-4	endrin aldehyde	U	5
85-68-7	benzyl-butylphthalate	0.25 J	1
50-29-3	4,4'DDT	U	5
1031-07-8	endosulfan sulfate	U	5
117-81-7	bis(2-ethylhexyl)phthalate	0.10 J	1
56-55-3	benzo(a)anthracene	U	1
218-01-9	chrysene	U	1
91-94-1	3,3-dichlorobenzidine	U	1
117-84-0	di-n-octylphthalate	U	1
205-99-2	benzo(b)fluoranthene	U	1
207-08-9	benzo(k)fluoranthene	U	1
50-32-8	benzo(a)pyrene	U	1
193-39-5	indeno(1,2,3-cd)pyrene	U	1
53-70-3	dibenzo(a,h)anthracene	U	1
191-24-2	benzo(ghi)perylene	U	1
57-74-9	chlordane	U	10
8001-35-2	toxaphene	U	10
12674-11-2	PCB-1016	U	10
11104-28-2	PCB-1221	U	10
11141-16-5	PCB-1232	U	10
53469-21-9	PCB-1242	U	10
12672-29-6	PCB-1248	U	10
11097-69-1	PCB-1254	U	10
11096-82-5	PCB-1260	U	10

See footnotes on Page 4.

ANALYTICAL REPORT FOR SAMPLE No. EK 2062

EPA METHOD 8270, 3rd ED.
TARGET ANALYTE RESULTS

Field Sample ID B00GP9 Sponsor WESTINGHOUSE HANFORD COMPANY

Cas. No.	COMPOUND	RESULTS (ug/g)	DETECTION LIMITS (ug/g)
98-86-2	acetophenone	U	1
62-53-3	aniline	U	1
92-67-1	4-aminobiphenyl	U	1
65-85-0	benzoic acid	U	1
100-51-6	benzyl alcohol	U	1
319-84-6	.alpha.-BHC	U	1
58-89-9	.gamma.-BHC	U	1
106-47-8	4-chloroaniline	U	5
90-13-1	1-chloronaphthalene	U	1
224-42-0	dibenz(a,j)acridine	U	1
132-64-9	dibenzofuran	U	1
87-65-0	2,6-dichlorophenol	U	1
60-11-7	p-dimethylaminoazobenzene	U	1
57-97-6	7,12-dimethbenz(a)anthracene	U	1
122-09-8	a,a-dimethyphenethylamine	U	1
17082-12-1	1,2-diphenylhydrazine	U	1
53494-70-5	endrin ketone	U	1
62-50-0	ethyl methanesulfonate	U	1
72-43-5	methoxychlor	U	1
56-49-5	3-methylcholanthrene	U	1
66-27-3	ethyl methanesulfonate	U	1
91-57-6	2-methylnaphthalene	U	1
95-48-7	2-methylphenol	U	1
106-44-5	4-methylphenol	U	1
134-32-7	1-naphthylamine	U	1
131-07-2	2-naphthylamine	U	1
88-74-4	2-nitroaniline	U	5
99-09-2	3-nitroaniline	U	5
100-10-6	4-nitroaniline	U	5
924-16-3	n-nitroso-di-n-butylamine	U	1
100-75-4	n-nitrosopiperidine	U	1
608-93-5	pentachlorobenzene	U	1
589-82-4	pentachloronitrobenzene	U	1
62-44-2	phenacetin	U	1
109-06-8	2-picoline	U	1
23950-58-5	pronamide	U	1
95-94-3	1,2,4,5-tetrachlorobenzene	U	1
58-90-2	2,3,4,6-tetrachlorophenol	U	1
95-95-4	2,4,5-trichlorophenol	U	1

See footnotes on Page 4.

ANALYTICAL REPORT FOR SAMPLE No. EK 2062

NON-TARGET ANALYTE RESULTS
Additional Semi-Volatiles

Field Sample ID B00GP9

Cas. No	COMPOUND	Scan Number	Results ug/g	Footnotes
----------	UNKNOWN ACID, @C16	1497	0.30	NE
629-94-7	HENEICOSANE	1586	0.56	NE
112-96-9	1-ISOCYANATOOCTADECANE	1644	0.45	NE
----------	UNKNOWN UNSATURATED HYDROCARBON	1812	0.39	NE
----------	UNKNOWN	1820	0.28	NE
593-49-7	HEPTACOSANE	1934	0.37	NE
----------	STEROIDAL-TYPE COMPOUND	2086	0.33	NE
----------	UNKNOWN	2105	0.84	NE
----------	STEROIDAL-TYPE COMPOUND	2304	0.37	NE
----------	UNKNOWN POLYCYCLIC HYDROCARBON	2535	0.23	NE

FOOTNOTES

- B The analyte was found in the method blank. The reported results have been adjusted for the quantity found in the blank.
- E The reported concentration is an estimate only. The response factor was assumed to be 1.000 relative to an internal standard.
- J Indicates an estimated concentration below the Method Detection Limit.
- K The isomer is unknown.
- N Analytical standards were not analyzed for this compound.
- U Not detected.
- W The identification is tentative or closely related to the compound.

ANALYTICAL REPORT FOR SAMPLE No. EK 2063

EPA METHOD 8270, 3rd ED.
TARGET ANALYTE RESULTS

Field Sample ID B00G01 Sponsor WESTINGHOUSE HANFORD COMPANY

File ID KZ5EK2063 Date Extracted 06/18/91 Date of Analysis 07/02/91

DataChem ID S91-0406GG

Cas. No	COMPOUND	RESULTS (ug/g)	DETECTION LIMITS (ug/g)
62-75-9	N-nitrosodimethylamine	U	1
108-95-2	phenol	U	1
111-44-4	bis(2-chloroethyl)ether	U	1
95-57-8	2-chlorophenol	U	1
541-73-1	1,3-dichlorobenzene	U	1
106-46-7	1,4-dichlorobenzene	U	1
95-50-1	1,2-dichlorobenzene	U	1
39638-329	bis(2-chloroisopropyl)ether	U	1
621-64-7	N-nitrosodi-n-propylamine	U	1
67-72-1	hexachloroethane	U	1
98-95-3	nitrobenzene	U	1
78-59-1	isophorone	U	1
88-75-5	2-nitrophenol	U	1
105-67-9	2,4-dimethylphenol	U	1
11-91-1	bis(2-chloroethoxy)methane	U	1
120-83-2	2,4-dichlorophenol	U	1
120-82-1	1,2,4-trichlorobenzene	U	1
91-20-3	naphthalene	U	1
87-68-3	hexachlorobutadiene	U	1
59-50-7	4-chloro-3-methylphenol	U	1
77-47-4	hexachlorocyclopentadiene	U	1
88-06-2	2,4,6-trichlorophenol	U	1
91-58-7	2-chloronaphthalene	U	1
131-11-3	dimethyl phthalate	U	1
606-20-2	2,6-dinitrotoluene	U	1
208-96-8	acenaphthylene	U	1
83-32-9	acenaphthene	U	1
51-28-5	2,4-dinitrophenol	U	1
100-02-7	4-nitrophenol	U	1
121-14-2	2,4-dinitrotoluene	U	1
84-66-2	diethyl phthalate	U	1
7005-73-3	4-chlorophenyl-phenylether	U	1
86-73-7	fluorene	U	1
534-52-1	2-methyl-4,6-dinitrophenol	U	1
86-30-6	N-nitrosodiphenylamine	U	1
101-55-3	4-bromophenyl-phenylether	U	1
118-74-1	hexachlorobenzene	U	1
319-85-7	beta-BHC	U	5
87-86-5	pentachlorophenol	U	1
85-01-8	phenanthrene	U	1
120-12-7	anthracene	U	1

ANALYTICAL REPORT FOR SAMPLE No. EK 2063

EPA METHOD 8270, 3rd ED.
TARGET ANALYTE RESULTS

Field Sample ID B00G01 Sponsor WESTINGHOUSE HANFORD COMPANY

Cas. No.	COMPOUND	RESULTS (ug/g)	DETECTION LIMITS (ug/g)
319-86-8	delta-BHC	U	5
76-44-8	heptachlor	U	5
84-74-2	di-n-butyl phthalate	U	1
309-00-2	aldrin	U	5
1024-57-3	heptachlor epoxide	U	5
206-44-0	fluoranthene	U	1
129-00-0	pyrene	U	1
959-98-8	endosulfan I	U	5
75-55-9	4,4'DDE	U	5
92-87-5	benzidine	U	1
60-57-1	dieldrin	U	5
72-20-8	endrin	U	5
72-54-8	4,4'DDD	U	5
33213-65-9	endosulfan II	U	5
7421-93-4	endrin aldehyde	U	5
85-68-7	benzyl-butylphthalate	U	1
50-29-3	4,4'DDT	U	5
1031-07-8	endosulfan sulfate	U	5
117-81-7	bis(2-ethylhexyl)phthalate	U	1
56-55-3	benzo(a)anthracene	U	1
218-01-9	chrysene	U	1
91-94-1	3,3-dichlorobenzidine	U	1
117-84-0	di-n-octylphthalate	U	1
205-99-2	benzo(b)fluoranthene	U	1
207-08-9	benzo(k)fluoranthene	U	1
50-32-8	benzo(a)pyrene	U	1
193-39-5	indeno(1,2,3-cd)pyrene	U	1
53-70-3	dibenzo(a,h)anthracene	U	1
191-24-2	benzo(ghi)perylene	U	1
57-74-9	chlordane	U	10
8001-35-2	toxaphene	U	10
12674-11-2	PCB-1016	U	10
11104-28-2	PCB-1221	U	10
11141-16-5	PCB-1232	U	10
53469-21-9	PCB-1242	U	10
12672-29-6	PCB-1248	U	10
11097-69-1	PCB-1254	U	10
11096-82-5	PCB-1260	U	10

See footnotes on Page 4.

ANALYTICAL REPORT FOR SAMPLE No. EK 2063

EPA METHOD 8270, 3rd ED.
TARGET ANALYTE RESULTS

Field Sample ID B00G01 Sponsor WESTINGHOUSE HANFORD COMPANY

Cas. No.	COMPOUND	RESULTS (ug/g)	DETECTION LIMITS (ug/g)
98-86-2	acetophenone	U	1
62-53-3	aniline	U	1
92-67-1	4-aminobiphenyl	U	1
65-85-0	benzoic acid	U	1
100-51-6	benzyl alcohol	U	1
319-84-6	.alpha.-BHC	U	1
58-89-9	.gamma.-BHC	U	1
106-47-8	4-chloroaniline	U	5
90-13-1	1-chloronaphthalene	U	1
224-42-0	dibenz(a,j)acridine	U	1
132-64-9	dibenzofuran	U	1
87-65-0	2,6-dichlorophenol	U	1
60-11-7	p-dimethylaminoazobenzene	U	1
57-97-6	7,12-dimethbenz(a)anthracene	U	1
122-09-8	a,a-dimethyphenethylamine	U	1
17082-12-1	1,2-diphenylhydrazine	U	1
53494-70-5	endrin ketone	U	1
62-50-0	ethyl methanesulfonate	U	1
72-43-5	methoxychlor	U	1
56-49-5	3-methylcholanthrene	U	1
66-27-3	ethyl methanesulfonate	U	1
91-57-6	2-methylnaphthalene	U	1
95-48-7	2-methylphenol	U	1
106-44-5	4-methylphenol	U	1
134-32-7	1-naphthylamine	U	1
131-07-2	2-naphthylamine	U	1
88-74-4	2-nitroaniline	U	5
99-09-2	3-nitroaniline	U	5
100-10-6	4-nitroaniline	U	5
924-16-3	n-nitroso-di-n-butylamine	U	1
100-75-4	n-nitrosopiperidine	U	1
608-93-5	pentachlorobenzene	U	1
589-82-4	pentachloronitrobenzene	U	1
62-44-2	phenacetin	U	1
109-06-8	2-picoline	U	1
23950-58-5	pronamide	U	1
95-94-3	1,2,4,5-tetrachlorobenzene	U	1
58-90-2	2,3,4,6-tetrachlorophenol	U	1
95-95-4	2,4,5-trichlorophenol	U	1

See footnotes on Page 4.

ANALYTICAL REPORT FOR SAMPLE No. EK 2063

NON-TARGET ANALYTE RESULTS
Additional Semi-Volatiles

Field Sample ID B00G01

Cas. No	COMPOUND	Scan Number	Results ug/g	Footnotes
----------	UNKNOWN OXYHYDROCARBON	730	0.18	NE

FOOTNOTES

B The analyte was found in the method blank. The reported results have been adjusted for the quantity found in the blank.
E The reported concentration is an estimate only. The response factor was assumed to be 1.000 relative to an internal standard.
J Indicates an estimated concentration below the Method Detection Limit.
K The isomer is unknown.
N Analytical standards were not analyzed for this compound.
U Not detected.
W The identification is tentative or closely related to the compound.

ANALYTICAL REPORT FOR SAMPLE No. EK 2064

EPA METHOD 8270, 3rd ED.
TARGET ANALYTE RESULTS

Field Sample ID B00G02 Sponsor WESTINGHOUSE HANFORD COMPANY

File ID LD20EK2064 Date Extracted 06/18/91 Date of Analysis 07/07/91

DataChem ID S91-0406GG

Cas. No	COMPOUND	RESULTS (ug/g)	DETECTION LIMITS (ug/g)
62-75-9	N-nitrosodimethylamine	U	1
108-95-2	phenol	U	1
111-44-4	bis(2-chloroethyl)ether	U	1
95-57-8	2-chlorophenol	U	1
541-73-1	1,3-dichlorobenzene	U	1
106-46-7	1,4-dichlorobenzene	U	1
95-50-1	1,2-dichlorobenzene	U	1
39638-329	bis(2-chloroisopropyl)ether	U	1
621-64-7	N-nitrosodi-n-propylamine	U	1
67-72-1	hexachloroethane	U	1
98-95-3	nitrobenzene	U	1
78-59-1	isophorone	U	1
88-75-5	2-nitrophenol	U	1
105-67-9	2,4-dimethylphenol	U	1
11-91-1	bis(2-chloroethoxy)methane	U	1
120-83-2	2,4-dichlorophenol	U	1
120-82-1	1,2,4-trichlorobenzene	U	1
91-20-3	naphthalene	U	1
87-68-3	hexachlorobutadiene	U	1
59-50-7	4-chloro-3-methylphenol	U	1
77-47-4	hexachlorocyclopentadiene	U	1
88-06-2	2,4,6-trichlorophenol	U	1
91-58-7	2-chloronaphthalene	U	1
131-11-3	dimethyl phthalate	U	1
606-20-2	2,6-dinitrotoluene	U	1
208-96-8	acenaphthylene	U	1
83-32-9	acenaphthene	U	1
51-28-5	2,4-dinitrophenol	U	1
100-02-7	4-nitrophenol	U	1
121-14-2	2,4-dinitrotoluene	U	1
84-66-2	diethyl phthalate	U	1
7005-73-3	4-chlorophenyl-phenylether	U	1
86-73-7	fluorene	U	1
534-52-1	2-methyl-4,6-dinitrophenol	U	1
86-30-6	N-nitrosodiphenylamine	U	1
101-55-3	4-bromophenyl-phenylether	U	1
118-74-1	hexachlorobenzene	U	1
319-85-7	beta-BHC	U	5
87-86-5	pentachlorophenol	U	1
85-01-8	phenanthrene	U	1
120-12-7	anthracene	U	1

ANALYTICAL REPORT FOR SAMPLE No. EK 2064

EPA METHOD 8270, 3rd ED.
TARGET ANALYTE RESULTS

Field Sample ID B00G02 Sponsor WESTINGHOUSE HANFORD COMPANY

Cas. No.	COMPOUND	RESULTS (ug/g)	DETECTION LIMITS (ug/g)
319-86-8	delta-BHC	U	5
76-44-8	heptachlor	U	5
84-74-2	di-n-butyl phthalate	U	1
309-00-2	aldrin	U	5
1024-57-3	heptachlor epoxide	U	5
206-44-0	fluoranthene	U	1
129-00-0	pyrene	U	1
959-98-8	endosulfan I	U	5
75-55-9	4,4'DDE	U	5
92-87-5	benzidine	U	1
60-57-1	dieldrin	U	5
72-20-8	endrin	U	5
72-54-8	4,4'DDD	U	5
33213-65-9	endosulfan II	U	5
7421-93-4	endrin aldehyde	U	5
85-68-7	benzyl-butylphthalate	U	1
50-29-3	4,4'DDT	U	5
1031-07-8	endosulfan sulfate	U	5
117-81-7	bis(2-ethylhexyl)phthalate	0.07 J	1
56-55-3	benzo(a)anthracene	U	1
218-01-9	chrysene	U	1
91-94-1	3,3-dichlorobenzidine	U	1
117-84-0	di-n-octylphthalate	U	1
205-99-2	benzo(b)fluoranthene	U	1
207-08-9	benzo(k)fluoranthene	U	1
50-32-8	benzo(a)pyrene	U	1
193-39-5	indeno(1,2,3-cd)pyrene	U	1
53-70-3	dibenzo(a,h)anthracene	U	1
191-24-2	benzo(ghi)perylene	U	1
57-74-9	chlordane	U	10
8001-35-2	toxaphene	U	10
12674-11-2	PCB-1016	U	10
11104-28-2	PCB-1221	U	10
11141-16-5	PCB-1232	U	10
53469-21-9	PCB-1242	U	10
12672-29-6	PCB-1248	U	10
11097-69-1	PCB-1254	U	10
11096-82-5	PCB-1260	U	10

See footnotes on Page 4.

ANALYTICAL REPORT FOR SAMPLE No. EK 2064

EPA METHOD 8270, 3rd ED.
TARGET ANALYTE RESULTS

Field Sample ID B00G02 Sponsor WESTINGHOUSE HANFORD COMPANY

Cas. No.	COMPOUND	RESULTS (ug/g)	DETECTION LIMITS (ug/g)
98-86-2	acetophenone	U	1
62-53-3	aniline	U	1
92-67-1	4-aminobiphenyl	U	1
65-85-0	benzoic acid	0.74 J	1
100-51-6	benzyl alcohol	U	1
319-84-6	.alpha.-BHC	U	1
58-89-9	.gamma.-BHC	U	1
106-47-8	4-chloroaniline	U	5
90-13-1	1-chloronaphthalene	U	1
224-42-0	dibenz(a,j)acridine	U	1
132-64-9	dibenzofuran	U	1
87-65-0	2,6-dichlorophenol	U	1
60-11-7	p-dimethylaminoazobenzene	U	1
57-97-6	7,12-dimethbenz(a)anthracene	U	1
122-09-8	a,a-dimethyphenethylamine	U	1
17082-12-1	1,2-diphenylhydrazine	U	1
53494-70-5	endrin ketone	U	1
62-50-0	ethyl methanesulfonate	U	1
72-43-5	methoxychlor	U	1
56-49-5	3-methylcholanthrene	U	1
66-27-3	ethyl methanesulfonate	U	1
91-57-6	2-methylnaphthalene	U	1
95-48-7	2-methylphenol	U	1
106-44-5	4-methylphenol	U	1
134-32-7	1-naphthylamine	U	1
131-07-2	2-naphthylamine	U	1
88-74-4	2-nitroaniline	U	5
99-09-2	3-nitroaniline	U	5
100-10-6	4-nitroaniline	U	5
924-16-3	n-nitroso-di-n-butylamine	U	1
100-75-4	n-nitrosopiperidine	U	1
608-93-5	pentachlorobenzene	U	1
589-82-4	pentachloronitrobenzene	U	1
62-44-2	phenacetin	U	1
109-06-8	2-picoline	U	1
23950-58-5	pronamide	U	1
95-94-3	1,2,4,5-tetrachlorobenzene	U	1
58-90-2	2,3,4,6-tetrachlorophenol	U	1
95-95-4	2,4,5-trichlorophenol	U	1

See footnotes on Page 4.

ANALYTICAL REPORT FOR SAMPLE No. EK 2064

NON-TARGET ANALYTE RESULTS
Additional Semi-Volatiles

Field Sample ID B00G02

Cas. No	COMPOUND	Scan Number	Results ug/g	Footnotes
112-96-9	1-ISOCYANATOOCTADECANE	1644	0.64	NE
----------	UNKNOWN	1811	0.65	NE
----------	STEROIDAL-TYPE COMPOUND	2019	1.0	NE
----------	STEROIDAL-TYPE COMPOUND	2052	0.75	NE
----------	STEROIDAL-TYPE COMPOUND	2087	0.74	NE
----------	ALKANE, @C29	2106	0.96	NE
----------	STEROIDAL-TYPE COMPOUND	2128	1.2	NE
----------	UNKNOWN	2202	0.30	NE
----------	UNKNOWN	2208	0.43	NE
----------	STEROIDAL-TYPE COMPOUND	2305	0.90	NE

FOOTNOTES

- B The analyte was found in the method blank. The reported results have been adjusted for the quantity found in the blank.
- E The reported concentration is an estimate only. The response factor was assumed to be 1.000 relative to an internal standard.
- J Indicates an estimated concentration below the Method Detection Limit.
- K The isomer is unknown.
- N Analytical standards were not analyzed for this compound.
- U Not detected.
- W The identification is tentative or closely related to the compound.

ANALYTICAL REPORT FOR SAMPLE No. EK 2065

EPA METHOD 8270, 3rd ED.
TARGET ANALYTE RESULTS

Field Sample ID B00G03 Sponsor WESTINGHOUSE HANFORD COMPANY

File ID LA8EK2065 Date Extracted 06/18/91 Date of Analysis 07/03/91

DataChem ID S91-0406DD

Cas. No	COMPOUND	RESULTS (ug/g)	DETECTION LIMITS (ug/g)
62-75-9	N-nitrosodimethylamine	U	1
108-95-2	phenol	U	1
111-44-4	bis(2-chloroethyl)ether	U	1
95-57-8	2-chlorophenol	U	1
541-73-1	1,3-dichlorobenzene	U	1
106-46-7	1,4-dichlorobenzene	U	1
95-50-1	1,2-dichlorobenzene	U	1
39638-329	bis(2-chloroisopropyl)ether	U	1
621-64-7	N-nitrosodi-n-propylamine	U	1
67-72-1	hexachloroethane	U	1
98-95-3	nitrobenzene	U	1
78-59-1	isophorone	U	1
88-75-5	2-nitrophenol	U	1
105-67-9	2,4-dimethylphenol	U	1
11-91-1	bis(2-chloroethoxy)methane	U	1
120-83-2	2,4-dichlorophenol	U	1
120-82-1	1,2,4-trichlorobenzene	U	1
91-20-3	naphthalene	U	1
87-68-3	hexachlorobutadiene	U	1
59-50-7	4-chloro-3-methylphenol	U	1
77-47-4	hexachlorocyclopentadiene	U	1
88-06-2	2,4,6-trichlorophenol	U	1
91-58-7	2-chloronaphthalene	U	1
131-11-3	dimethyl phthalate	U	1
606-20-2	2,6-dinitrotoluene	U	1
208-96-8	acenaphthylene	U	1
83-32-9	acenaphthene	U	1
51-28-5	2,4-dinitrophenol	U	1
100-02-7	4-nitrophenol	U	1
121-14-2	2,4-dinitrotoluene	U	1
84-66-2	diethyl phthalate	U	1
7005-73-3	4-chlorophenyl-phenylether	U	1
86-73-7	fluorene	U	1
534-52-1	2-methyl-4,6-dinitrophenol	U	1
86-30-6	N-nitrosodiphenylamine	U	1
101-55-3	4-bromophenyl-phenylether	U	1
118-74-1	hexachlorobenzene	U	1
319-85-7	beta-BHC	U	5
87-86-5	pentachlorophenol	U	1
85-01-8	phenanthrene	U	1
120-12-7	anthracene	U	1

ANALYTICAL REPORT FOR SAMPLE No. EK 2065

EPA METHOD 8270, 3rd ED.
TARGET ANALYTE RESULTS

Field Sample ID B00G03 Sponsor WESTINGHOUSE HANFORD COMPANY

Cas. No.	COMPOUND	RESULTS (ug/g)	DETECTION LIMITS (ug/g)
319-86-8	delta-BHC	U	5
76-44-8	heptachlor	U	5
84-74-2	di-n-butyl phthalate	U	1
309-00-2	aldrin	U	5
1024-57-3	heptachlor epoxide	U	5
206-44-0	fluoranthene	U	1
129-00-0	pyrene	U	1
959-98-8	endosulfan I	U	5
75-55-9	4,4'DDE	U	5
92-87-5	benzidine	U	1
60-57-1	dieldrin	U	5
72-20-8	endrin	U	5
72-54-8	4,4'DDD	U	5
33213-65-9	endosulfan II	U	5
7421-93-4	endrin aldehyde	U	5
85-68-7	benzyl-butylphthalate	U	1
50-29-3	4,4'DDT	U	5
1031-07-8	endosulfan sulfate	U	5
117-81-7	bis(2-ethylhexyl)phthalate	0.38 J	1
56-55-3	benzo(a)anthracene	U	1
218-01-9	chrysene	U	1
91-94-1	3,3-dichlorobenzidine	U	1
117-84-0	di-n-octylphthalate	U	1
205-99-2	benzo(b)fluoranthene	U	1
207-08-9	benzo(k)fluoranthene	U	1
50-32-8	benzo(a)pyrene	U	1
193-39-5	indeno(1,2,3-cd)pyrene	U	1
53-70-3	dibenzo(a,h)anthracene	U	1
191-24-2	benzo(ghi)perylene	U	1
57-74-9	chlordane	U	10
8001-35-2	toxaphene	U	10
12674-11-2	PCB-1016	U	10
11104-28-2	PCB-1221	U	10
11141-16-5	PCB-1232	U	10
53469-21-9	PCB-1242	U	10
12672-29-6	PCB-1248	U	10
11097-69-1	PCB-1254	U	10
11096-82-5	PCB-1260	U	10

See footnotes on Page 4.

ANALYTICAL REPORT FOR SAMPLE No. EK 2065

EPA METHOD 8270, 3rd ED.
TARGET ANALYTE RESULTS

Field Sample ID B00G03 Sponsor WESTINGHOUSE HANFORD COMPANY

Cas. No.	COMPOUND	RESULTS (ug/g)	DETECTION LIMITS (ug/g)
98-86-2	acetophenone	U	1
62-53-3	aniline	U	1
92-67-1	4-aminobiphenyl	U	1
65-85-0	benzoic acid	U	1
100-51-6	benzyl alcohol	U	1
319-84-6	.alpha.-BHC	U	1
58-89-9	.gamma.-BHC	U	1
106-47-8	4-chloroaniline	U	5
90-13-1	1-chloronaphthalene	U	1
224-42-0	dibenz(a,j)acridine	U	1
132-64-9	dibenzofuran	U	1
87-65-0	2,6-dichlorophenol	U	1
60-11-7	p-dimethylaminoazobenzene	U	1
57-97-6	7,12-dimethbenz(a)anthracene	U	1
122-09-8	a,a-dimethyphenethylamine	U	1
17082-12-1	1,2-diphenylhydrazine	U	1
53494-70-5	endrin ketone	U	1
62-50-0	ethyl methanesulfonate	U	1
72-43-5	methoxychlor	U	1
56-49-5	3-methylcholanthrene	U	1
66-27-3	ethyl methanesulfonate	U	1
91-57-6	2-methylnaphthalene	U	1
95-48-7	2-methylphenol	U	1
106-44-5	4-methylphenol	U	1
134-32-7	1-naphthylamine	U	1
131-07-2	2-naphthylamine	U	1
88-74-4	2-nitroaniline	U	5
99-09-2	3-nitroaniline	U	5
100-10-6	4-nitroaniline	U	5
924-16-3	n-nitroso-di-n-butylamine	U	1
100-75-4	n-nitrosopiperidine	U	1
608-93-5	pentachlorobenzene	U	1
589-82-4	pentachloronitrobenzene	U	1
62-44-2	phenacetin	U	1
109-06-8	2-picoline	U	1
23950-58-5	pronamide	U	1
95-94-3	1,2,4,5-tetrachlorobenzene	U	1
58-90-2	2,3,4,6-tetrachlorophenol	U	1
95-95-4	2,4,5-trichlorophenol	U	1

See footnotes on Page 4.

ANALYTICAL REPORT FOR SAMPLE No. EK 2065

NON-TARGET ANALYTE RESULTS
Additional Semi-Volatiles

Field Sample ID B00G03

Cas. No	COMPOUND	Scan Number	Results ug/g	Footnotes
----------	UNKNOWN OXYHYDROCARBON	734	0.48	NE

FOOTNOTES

B The analyte was found in the method blank. The reported results have been adjusted for the quantity found in the blank.
E The reported concentration is an estimate only. The response factor was assumed to be 1.000 relative to an internal standard.
J Indicates an estimated concentration below the Method Detection Limit.
K The isomer is unknown.
N Analytical standards were not analyzed for this compound.
U Not detected.
W The identification is tentative or closely related to the compound.

ANALYTICAL REPORT FOR SAMPLE No. EK 2066

EPA METHOD 8270, 3rd ED.
TARGET ANALYTE RESULTS

Field Sample ID B00G04 Sponsor WESTINGHOUSE HANFORD COMPANY

File ID KZ4EK2066 Date Extracted 06/18/91 Date of Analysis 07/02/91

DataChem ID S91-0406GG

Cas. No	COMPOUND	RESULTS (ug/g)	DETECTION LIMITS (ug/g)
62-75-9	N-nitrosodimethylamine	U	1
108-95-2	phenol	U	1
111-44-4	bis(2-chloroethyl)ether	U	1
95-57-8	2-chlorophenol	U	1
541-73-1	1,3-dichlorobenzene	U	1
106-46-7	1,4-dichlorobenzene	U	1
95-50-1	1,2-dichlorobenzene	U	1
39638-329	bis(2-chloroisopropyl)ether	U	1
621-64-7	N-nitrosodi-n-propylamine	U	1
67-72-1	hexachloroethane	U	1
98-95-3	nitrobenzene	U	1
78-59-1	isophorone	U	1
88-75-5	2-nitrophenol	U	1
105-67-9	2,4-dimethylphenol	U	1
11-91-1	bis(2-chloroethoxy)methane	U	1
120-83-2	2,4-dichlorophenol	U	1
120-82-1	1,2,4-trichlorobenzene	U	1
91-20-3	naphthalene	U	1
87-68-3	hexachlorobutadiene	U	1
59-50-7	4-chloro-3-methylphenol	U	1
77-47-4	hexachlorocyclopentadiene	U	1
88-06-2	2,4,6-trichlorophenol	U	1
91-58-7	2-chloronaphthalene	U	1
131-11-3	dimethyl phthalate	U	1
606-20-2	2,6-dinitrotoluene	U	1
208-96-8	acenaphthylene	U	1
83-32-9	acenaphthene	U	1
51-28-5	2,4-dinitrophenol	U	1
100-02-7	4-nitrophenol	U	1
121-14-2	2,4-dinitrotoluene	U	1
84-66-2	diethyl phthalate	U	1
7005-73-3	4-chlorophenyl-phenylether	U	1
86-73-7	fluorene	U	1
534-52-1	2-methyl-4,6-dinitrophenol	U	1
86-30-6	N-nitrosodiphenylamine	U	1
101-55-3	4-bromophenyl-phenylether	U	1
118-74-1	hexachlorobenzene	U	1
319-85-7	beta-BHC	U	5
87-86-5	pentachlorophenol	U	1
85-01-8	phenanthrene	U	1
120-12-7	anthracene	U	1

ANALYTICAL REPORT FOR SAMPLE No. EK 2066

EPA METHOD 8270, 3rd ED.
TARGET ANALYTE RESULTS

Field Sample ID B00G04 Sponsor WESTINGHOUSE HANFORD COMPANY

Cas. No.	COMPOUND	RESULTS (ug/g)	DETECTION LIMITS (ug/g)
319-86-8	delta-BHC	U	5
76-44-8	heptachlor	U	5
84-74-2	di-n-butyl phthalate	U	1
309-00-2	aldrin	U	5
1024-57-3	heptachlor epoxide	U	5
206-44-0	fluoranthene	U	1
129-00-0	pyrene	U	1
959-98-8	endosulfan I	U	5
75-55-9	4,4'DDE	U	5
92-87-5	benzidine	U	1
60-57-1	dieldrin	U	5
72-20-8	endrin	U	5
72-54-8	4,4'DDD	U	5
33213-65-9	endosulfan II	U	5
7421-93-4	endrin aldehyde	U	5
85-68-7	benzyl-butylphthalate	U	1
50-29-3	4,4'DDT	U	5
1031-07-8	endosulfan sulfate	U	5
117-81-7	bis(2-ethylhexyl)phthalate	U	1
56-55-3	benzo(a)anthracene	U	1
218-01-9	chrysene	U	1
91-94-1	3,3-dichlorobenzidine	U	1
117-84-0	di-n-octylphthalate	U	1
205-99-2	benzo(b)fluoranthene	U	1
207-08-9	benzo(k)fluoranthene	U	1
50-32-8	benzo(a)pyrene	U	1
193-39-5	indeno(1,2,3-cd)pyrene	U	1
53-70-3	dibenzo(a,h)anthracene	U	1
191-24-2	benzo(ghi)perylene	U	1
57-74-9	chlordane	U	10
8001-35-2	toxaphene	U	10
12674-11-2	PCB-1016	U	10
11104-28-2	PCB-1221	U	10
11141-16-5	PCB-1232	U	10
53469-21-9	PCB-1242	U	10
12672-29-6	PCB-1248	U	10
11097-69-1	PCB-1254	U	10
11096-82-5	PCB-1260	U	10

See footnotes on Page 4.

ANALYTICAL REPORT FOR SAMPLE No. EK 2066

EPA METHOD 8270, 3rd ED.
TARGET ANALYTE RESULTS

Field Sample ID B00G04 Sponsor WESTINGHOUSE HANFORD COMPANY

Cas. No.	COMPOUND	RESULTS (ug/g)	DETECTION LIMITS (ug/g)
98-86-2	acetophenone	U	1
62-53-3	aniline	U	1
92-67-1	4-aminobiphenyl	U	1
65-85-0	benzoic acid	U	1
100-51-6	benzyl alcohol	U	1
319-84-6	.alpha.-BHC	U	1
58-89-9	.gamma.-BHC	U	1
106-47-8	4-chloroaniline	U	5
90-13-1	1-chloronaphthalene	U	1
224-42-0	dibenz(a,j)acridine	U	1
132-64-9	dibenzofuran	U	1
87-65-0	2,6-dichlorophenol	U	1
60-11-7	p-dimethylaminoazobenzene	U	1
57-97-6	7,12-dimethbenz(a)anthracene	U	1
122-09-8	a,a-dimethyphenethylamine	U	1
17082-12-1	1,2-diphenylhydrazine	U	1
53494-70-5	endrin ketone	U	1
62-50-0	ethyl methanesulfonate	U	1
72-43-5	methoxychlor	U	1
56-49-5	3-methylcholanthrene	U	1
66-27-3	ethyl methanesulfonate	U	1
91-57-6	2-methylnaphthalene	U	1
95-48-7	2-methylphenol	U	1
106-44-5	4-methylphenol	U	1
134-32-7	1-naphthylamine	U	1
131-07-2	2-naphthylamine	U	1
88-74-4	2-nitroaniline	U	5
99-09-2	3-nitroaniline	U	5
100-10-6	4-nitroaniline	U	5
924-16-3	n-nitroso-di-n-butylamine	U	1
100-75-4	n-nitrosopiperidine	U	1
608-93-5	pentachlorobenzene	U	1
589-82-4	pentachloronitrobenzene	U	1
62-44-2	phenacetin	U	1
109-06-8	2-picoline	U	1
23950-58-5	pronamide	U	1
95-94-3	1,2,4,5-tetrachlorobenzene	U	1
58-90-2	2,3,4,6-tetrachlorophenol	U	1
95-95-4	2,4,5-trichlorophenol	U	1

See footnotes on Page 4.

ANALYTICAL REPORT FOR SAMPLE No. EK 2066

NON-TARGET ANALYTE RESULTS
Additional Semi-Volatiles

Field Sample ID B00G04

Cas. No	COMPOUND	Scan Number	Results ug/g	Footnotes
----------	UNKNOWN OXYHYDROCARBON	736	0.20	NE
----------	POLYCYCLIC HYDROCARBON	1117	0.63	NE
----------	UNKNOWN	1280	0.28	NE

FOOTNOTES

- B The analyte was found in the method blank. The reported results have been adjusted for the quantity found in the blank.
- E The reported concentration is an estimate only. The response factor was assumed to be 1.000 relative to an internal standard.
- J Indicates an estimated concentration below the Method Detection Limit.
- K The isomer is unknown.
- N Analytical standards were not analyzed for this compound.
- U Not detected.
- W The identification is tentative or closely related to the compound.

ANALYTICAL REPORT FOR SAMPLE No. EK 2067

EPA METHOD 8270, 3rd ED.
TARGET ANALYTE RESULTS

Field Sample ID B00G06 Sponsor WESTINGHOUSE HANFORD COMPANY

File ID LE10EK2067 Date Extracted 06/18/91 Date of Analysis 07/08/91

DataChem ID S91-0406GG

Cas. No	COMPOUND	RESULTS (ug/g)	DETECTION LIMITS (ug/g)
62-75-9	N-nitrosodimethylamine	U	1
108-95-2	phenol	U	1
111-44-4	bis(2-chloroethyl)ether	U	1
95-57-8	2-chlorophenol	U	1
541-73-1	1,3-dichlorobenzene	U	1
106-46-7	1,4-dichlorobenzene	U	1
95-50-1	1,2-dichlorobenzene	U	1
39638-329	bis(2-chloroisopropyl)ether	U	1
621-64-7	N-nitrosodi-n-propylamine	U	1
67-72-1	hexachloroethane	U	1
98-95-3	nitrobenzene	U	1
78-59-1	isophorone	U	1
88-75-5	2-nitrophenol	U	1
105-67-9	2,4-dimethylphenol	U	1
11-91-1	bis(2-chloroethoxy)methane	U	1
120-83-2	2,4-dichlorophenol	U	1
120-82-1	1,2,4-trichlorobenzene	U	1
91-20-3	naphthalene	U	1
87-68-3	hexachlorobutadiene	U	1
59-50-7	4-chloro-3-methylphenol	U	1
77-47-4	hexachlorocyclopentadiene	U	1
88-06-2	2,4,6-trichlorophenol	U	1
91-58-7	2-chloronaphthalene	U	1
131-11-3	dimethyl phthalate	U	1
606-20-2	2,6-dinitrotoluene	U	1
208-96-8	acenaphthylene	U	1
83-32-9	acenaphthene	U	1
51-28-5	2,4-dinitrophenol	U	1
100-02-7	4-nitrophenol	U	1
121-14-2	2,4-dinitrotoluene	U	1
84-66-2	diethyl phthalate	U	1
7005-73-3	4-chlorophenyl-phenylether	U	1
86-73-7	fluorene	U	1
534-52-1	2-methyl-4,6-dinitrophenol	U	1
86-30-6	N-nitrosodiphenylamine	U	1
101-55-3	4-bromophenyl-phenylether	U	1
118-74-1	hexachlorobenzene	U	1
319-85-7	beta-BHC	U	5
87-86-5	pentachlorophenol	U	1
85-01-8	phenanthrene	U	1
120-12-7	anthracene	U	1

ANALYTICAL REPORT FOR SAMPLE No. EK 2067

EPA METHOD 8270, 3rd ED.
TARGET ANALYTE RESULTS

Field Sample ID B00G06 Sponsor WESTINGHOUSE HANFORD COMPANY

Cas. No.	COMPOUND	RESULTS (ug/g)	DETECTION LIMITS (ug/g)
319-86-8	delta-BHC	U	5
76-44-8	heptachlor	U	5
84-74-2	di-n-butyl phthalate	0.07 J	1
309-00-2	aldrin	U	5
1024-57-3	heptachlor epoxide	U	5
206-44-0	fluoranthene	U	1
129-00-0	pyrene	U	1
959-98-8	endosulfan I	U	5
75-55-9	4,4'DDE	U	5
92-87-5	benzidine	U	1
60-57-1	dieldrin	U	5
72-20-8	endrin	U	5
72-54-8	4,4'DDD	U	5
33213-65-9	endosulfan II	U	5
7421-93-4	endrin aldehyde	U	5
85-68-7	benzyl-butylphthalate	U	1
50-29-3	4,4'DDT	U	5
1031-07-8	endosulfan sulfate	U	5
117-81-7	bis(2-ethylhexyl)phthalate	0.14 J	1
56-55-3	benzo(a)anthracene	U	1
218-01-9	chrysene	U	1
91-94-1	3,3-dichlorobenzidine	U	1
117-84-0	di-n-octylphthalate	U	1
205-99-2	benzo(b)fluoranthene	U	1
207-08-9	benzo(k)fluoranthene	U	1
50-32-8	benzo(a)pyrene	U	1
193-39-5	indeno(1,2,3-cd)pyrene	U	1
53-70-3	dibenzo(a,h)anthracene	U	1
191-24-2	benzo(ghi)perylene	U	1
57-74-9	chlordane	U	10
8001-35-2	toxaphene	U	10
12674-11-2	PCB-1016	U	10
11104-28-2	PCB-1221	U	10
11141-16-5	PCB-1232	U	10
53469-21-9	PCB-1242	U	10
12672-29-6	PCB-1248	U	10
11097-69-1	PCB-1254	U	10
11096-82-5	PCB-1260	U	10

See footnotes on Page 4.

ANALYTICAL REPORT FOR SAMPLE No. EK 2067

EPA METHOD 8270, 3rd ED.
TARGET ANALYTE RESULTS

Field Sample ID B00G06 Sponsor WESTINGHOUSE HANFORD COMPANY

Cas. No.	COMPOUND	RESULTS (ug/g)	DETECTION LIMITS (ug/g)
98-86-2	acetophenone	U	1
62-53-3	aniline	U	1
92-67-1	4-aminobiphenyl	U	1
65-85-0	benzoic acid	0.39 J	1
100-51-6	benzyl alcohol	U	1
319-84-6	.alpha.-BHC	U	1
58-89-9	.gamma.-BHC	U	1
106-47-8	4-chloroaniline	U	5
90-13-1	1-chloronaphthalene	U	1
224-42-0	dibenz(a,j)acridine	U	1
132-64-9	dibenzofuran	U	1
87-65-0	2,6-dichlorophenol	U	1
60-11-7	p-dimethylaminoazobenzene	U	1
57-97-6	7,12-dimethbenz(a)anthracene	U	1
122-09-8	a,a-dimethyphenethylamine	U	1
17082-12-1	1,2-diphenylhydrazine	U	1
53494-70-5	endrin ketone	U	1
62-50-0	ethyl methanesulfonate	U	1
72-43-5	methoxychlor	U	1
56-49-5	3-methylcholanthrene	U	1
66-27-3	ethyl methanesulfonate	U	1
91-57-6	2-methylnaphthalene	U	1
95-48-7	2-methylphenol	U	1
106-44-5	4-methylphenol	U	1
134-32-7	1-naphthylamine	U	1
131-07-2	2-naphthylamine	U	1
88-74-4	2-nitroaniline	U	5
99-09-2	3-nitroaniline	U	5
100-10-6	4-nitroaniline	U	5
924-16-3	n-nitroso-di-n-butylamine	U	1
100-75-4	n-nitrosopiperidine	U	1
608-93-5	pentachlorobenzene	U	1
589-82-4	pentachloronitrobenzene	U	1
62-44-2	phenacetin	U	1
109-06-8	2-picoline	U	1
23950-58-5	pronamide	U	1
95-94-3	1,2,4,5-tetrachlorobenzene	U	1
58-90-2	2,3,4,6-tetrachlorophenol	U	1
95-95-4	2,4,5-trichlorophenol	U	1

See footnotes on Page 4.

ANALYTICAL REPORT FOR SAMPLE No. EK 2067

NON-TARGET ANALYTE RESULTS
Additional Semi-Volatiles

Field Sample ID B00G06

Cas. No	COMPOUND	Scan Number	Results ug/g	Footnotes
----------	ALKANE, @C23	1756	0.92	NE
----------	ALKANE, @C25	1810	0.63	NE
----------	UNSATURATED LONG-CHAIN HYDROCARBON	1831	0.38	NE
593-49-7	HEPTACOSANE	1931	0.54	NE
----------	POLYCYCLIC HYDROCARBON	1953	0.63	NE
----------	POLYCYCLIC HYDROCARBON	1980	0.57	NE
----------	ALKANE, @C30	2101	0.35	NE
----------	POLYCYCLIC HYDROCARBON	2124	0.36	NE
----------	POLYCYCLIC HYDROCARBON	2300	0.25	NE
----------	ALKANE, @C31	2361	0.49	NE

FOOTNOTES

B The analyte was found in the method blank. The reported results have been adjusted for the quantity found in the blank.

E The reported concentration is an estimate only. The response factor was assumed to be 1.000 relative to an internal standard.

J Indicates an estimated concentration below the Method Detection Limit.

K The isomer is unknown.

N Analytical standards were not analyzed for this compound.

U Not detected.

W The identification is tentative or closely related to the compound.

ANALYTICAL REPORT FOR SAMPLE No. EK 2068

EPA METHOD 8270, 3rd ED.
TARGET ANALYTE RESULTS

Field Sample ID B00G07 Sponsor WESTINGHOUSE HANFORD COMPANY

File ID LD17EK2068 Date Extracted 06/18/91 Date of Analysis 07/06/91

DataChem ID S91-0406GG

Cas. No	COMPOUND	RESULTS (ug/g)	DETECTION LIMITS (ug/g)
62-75-9	N-nitrosodimethylamine	U	1
108-95-2	phenol	U	1
111-44-4	bis(2-chloroethyl)ether	U	1
95-57-8	2-chlorophenol	U	1
541-73-1	1,3-dichlorobenzene	U	1
106-46-7	1,4-dichlorobenzene	U	1
95-50-1	1,2-dichlorobenzene	U	1
39638-329	bis(2-chloroisopropyl)ether	U	1
621-64-7	N-nitrosodi-n-propylamine	U	1
67-72-1	hexachloroethane	U	1
98-95-3	nitrobenzene	U	1
78-59-1	isophorone	U	1
88-75-5	2-nitrophenol	U	1
105-67-9	2,4-dimethylphenol	U	1
11-91-1	bis(2-chloroethoxy)methane	U	1
120-83-2	2,4-dichlorophenol	U	1
120-82-1	1,2,4-trichlorobenzene	U	1
91-20-3	naphthalene	U	1
87-68-3	hexachlorobutadiene	U	1
59-50-7	4-chloro-3-methylphenol	U	1
77-47-4	hexachlorocyclopentadiene	U	1
88-06-2	2,4,6-trichlorophenol	U	1
91-58-7	2-chloronaphthalene	U	1
131-11-3	dimethyl phthalate	U	1
606-20-2	2,6-dinitrotoluene	U	1
208-96-8	acenaphthylene	U	1
83-32-9	acenaphthene	U	1
51-28-5	2,4-dinitrophenol	U	1
100-02-7	4-nitrophenol	U	1
121-14-2	2,4-dinitrotoluene	U	1
84-66-2	diethyl phthalate	U	1
7005-73-3	4-chlorophenyl-phenylether	U	1
86-73-7	fluorene	U	1
534-52-1	2-methyl-4,6-dinitrophenol	U	1
86-30-6	N-nitrosodiphenylamine	U	1
101-55-3	4-bromophenyl-phenylether	U	1
118-74-1	hexachlorobenzene	U	1
319-85-7	beta-BHC	U	5
87-86-5	pentachlorophenol	U	1
85-01-8	phenanthrene	U	1
120-12-7	anthracene	U	1

ANALYTICAL REPORT FOR SAMPLE No. EK 2068

EPA METHOD 8270, 3rd ED.
TARGET ANALYTE RESULTS

Field Sample ID B00G07 Sponsor WESTINGHOUSE HANFORD COMPANY

Cas. No.	COMPOUND	RESULTS (ug/g)	DETECTION LIMITS (ug/g)
319-86-8	delta-BHC	U	5
76-44-8	heptachlor	U	5
84-74-2	di-n-butyl phthalate	0.03 J	1
309-00-2	aldrin	U	5
1024-57-3	heptachlor epoxide	U	5
206-44-0	fluoranthene	0.08 J	1
129-00-0	pyrene	0.10 J	1
959-98-8	endosulfan I	U	5
75-55-9	4,4'DDE	U	5
92-87-5	benzidine	U	1
60-57-1	dieldrin	U	5
72-20-8	endrin	U	5
72-54-8	4,4'DDD	U	5
33213-65-9	endosulfan II	U	5
7421-93-4	endrin aldehyde	U	5
85-68-7	benzyl-butylphthalate	U	1
50-29-3	4,4'DDT	U	5
1031-07-8	endosulfan sulfate	U	5
117-81-7	bis(2-ethylhexyl)phthalate	4.8	1
56-55-3	benzo(a)anthracene	0.21 J	1
218-01-9	chrysene	U	1
91-94-1	3,3-dichlorobenzidine	U	1
117-84-0	di-n-octylphthalate	U	1
205-99-2	benzo(b)fluoranthene	U	1
207-08-9	benzo(k)fluoranthene	U	1
50-32-8	benzo(a)pyrene	0.08 J	1
193-39-5	indeno(1,2,3-cd)pyrene	0.38 J	1
53-70-3	dibenzo(a,h)anthracene	0.14 J	1
191-24-2	benzo(ghi)perylene	0.37 J	1
57-74-9	chlordane	U	10
8001-35-2	toxaphene	U	10
12674-11-2	PCB-1016	U	10
11104-28-2	PCB-1221	U	10
11141-16-5	PCB-1232	U	10
53469-21-9	PCB-1242	U	10
12672-29-6	PCB-1248	U	10
11097-69-1	PCB-1254	U	10
11096-82-5	PCB-1260	U	10

See footnotes on Page 4.

ANALYTICAL REPORT FOR SAMPLE No. EK 2068

EPA METHOD 8270, 3rd ED.
TARGET ANALYTE RESULTS

Field Sample ID B00G07 Sponsor WESTINGHOUSE HANFORD COMPANY

Cas. No.	COMPOUND	RESULTS (ug/g)	DETECTION LIMITS (ug/g)
98-86-2	acetophenone	U	1
62-53-3	aniline	U	1
92-67-1	4-aminobiphenyl	U	1
65-85-0	benzoic acid	0.79 J	1
100-51-6	benzyl alcohol	U	1
319-84-6	.alpha.-BHC	U	1
58-89-9	.gamma.-BHC	U	1
106-47-8	4-chloroaniline	U	5
90-13-1	1-chloronaphthalene	U	1
224-42-0	dibenz(a,j)acridine	U	1
132-64-9	dibenzofuran	U	1
87-65-0	2,6-dichlorophenol	U	1
60-11-7	p-dimethylaminoazobenzene	U	1
57-97-6	7,12-dimethbenz(a)anthracene	U	1
122-09-8	a,a-dimethyphenethylamine	U	1
17082-12-1	1,2-diphenylhydrazine	U	1
53494-70-5	endrin ketone	U	1
62-50-0	ethyl methanesulfonate	U	1
72-43-5	methoxychlor	U	1
56-49-5	3-methylcholanthrene	U	1
66-27-3	ethyl methanesulfonate	U	1
91-57-6	2-methylnaphthalene	U	1
95-48-7	2-methylphenol	U	1
106-44-5	4-methylphenol	U	1
134-32-7	1-naphthylamine	U	1
131-07-2	2-naphthylamine	U	1
88-74-4	2-nitroaniline	U	5
99-09-2	3-nitroaniline	U	5
100-10-6	4-nitroaniline	U	5
924-16-3	n-nitroso-di-n-butylamine	U	1
100-75-4	n-nitrosopiperidine	U	1
608-93-5	pentachlorobenzene	U	1
589-82-4	pentachloronitrobenzene	U	1
62-44-2	phenacetin	U	1
109-06-8	2-picoline	U	1
23950-58-5	pronamide	U	1
95-94-3	1,2,4,5-tetrachlorobenzene	U	1
58-90-2	2,3,4,6-tetrachlorophenol	U	1
95-95-4	2,4,5-trichlorophenol	U	1

See footnotes on Page 4.

ANALYTICAL REPORT FOR SAMPLE No. EK 2068

NON-TARGET ANALYTE RESULTS
Additional Semi-Volatiles

Field Sample ID B00G07

Cas. No	COMPOUND	Scan Number	Results ug/g	Footnotes
----------	POLYCYLCIC HYDROCARBON	1702	1.8	NE
----------	UNKNOWN UNSATURATED HYDROCARBON	1812	2.0	NE
----------	POLYCYCLIC HYDROCARBON	1950	1.7	NE
----------	POLYCYCLIC NITROGEN-CONTAINING CMPD	1986	9.8	NE
----------	STEROIDAL-TYPE COMPOUND	2021	2.8	NE
----------	STEROIDAL-TYPE COMPOUND	2054	2.4	NE
----------	UNKNOWN NITROGEN-CONTAINING COMPOUN	2082	2.7	NE
----------	UNKNOWN NITROGEN-CONTAING COMPOUND	2093	4.5	NE
----------	STEROIDAL-TYPE COMPOUND	2130	2.7	NE
----------	STEROIDAL-TYPE COMPOUND	2306	1.8	NE

FOOTNOTES

- B The analyte was found in the method blank. The reported results have been adjusted for the quantity found in the blank.
- E The reported concentration is an estimate only. The response factor was assumed to be 1.000 relative to an internal standard.
- J Indicates an estimated concentration below the Method Detection Limit.
- K The isomer is unknown.
- N Analytical standards were not analyzed for this compound.
- U Not detected.
- W The identification is tentative or closely related to the compound.

ANALYTICAL REPORT FOR SAMPLE No. EK 2069

EPA METHOD 8270, 3rd ED.
TARGET ANALYTE RESULTS

Field Sample ID B00G08 Sponsor WESTINGHOUSE HANFORD COMPANY

File ID LA13EK2069 Date Extracted 06/18/91 Date of Analysis 07/03/91

DataChem ID S91-0406GG

Cas. No	COMPOUND	RESULTS (ug/g)	DETECTION LIMITS (ug/g)
62-75-9	N-nitrosodimethylamine	U	1
108-95-2	phenol	U	1
111-44-4	bis(2-chloroethyl)ether	U	1
95-57-8	2-chlorophenol	U	1
541-73-1	1,3-dichlorobenzene	U	1
106-46-7	1,4-dichlorobenzene	U	1
95-50-1	1,2-dichlorobenzene	U	1
39638-329	bis(2-chloroisopropyl)ether	U	1
621-64-7	N-nitrosodi-n-propylamine	U	1
67-72-1	hexachloroethane	U	1
98-95-3	nitrobenzene	U	1
78-59-1	isophorone	U	1
88-75-5	2-nitrophenol	U	1
105-67-9	2,4-dimethylphenol	U	1
11-91-1	bis(2-chloroethoxy)methane	U	1
120-83-2	2,4-dichlorophenol	U	1
120-82-1	1,2,4-trichlorobenzene	U	1
91-20-3	naphthalene	U	1
87-68-3	hexachlorobutadiene	U	1
59-50-7	4-chloro-3-methylphenol	U	1
77-47-4	hexachlorocyclopentadiene	U	1
88-06-2	2,4,6-trichlorophenol	U	1
91-58-7	2-chloronaphthalene	U	1
131-11-3	dimethyl phthalate	U	1
606-20-2	2,6-dinitrotoluene	U	1
208-96-8	acenaphthylene	U	1
83-32-9	acenaphthene	U	1
51-28-5	2,4-dinitrophenol	U	1
100-02-7	4-nitrophenol	U	1
121-14-2	2,4-dinitrotoluene	U	1
84-66-2	diethyl phthalate	U	1
7005-73-3	4-chlorophenyl-phenylether	U	1
86-73-7	fluorene	U	1
534-52-1	2-methyl-4,6-dinitrophenol	U	1
86-30-6	N-nitrosodiphenylamine	U	1
101-55-3	4-bromophenyl-phenylether	U	1
118-74-1	hexachlorobenzene	U	1
319-85-7	beta-BHC	U	5
87-86-5	pentachlorophenol	U	1
85-01-8	phenanthrene	U	1
120-12-7	anthracene	U	1

ANALYTICAL REPORT FOR SAMPLE No. EK 2069

EPA METHOD 8270, 3rd ED.
TARGET ANALYTE RESULTS

Field Sample ID B00G08 Sponsor WESTINGHOUSE HANFORD COMPANY

Cas. No.	COMPOUND	RESULTS (ug/g)	DETECTION LIMITS (ug/g)
319-86-8	delta-BHC	U	5
76-44-8	heptachlor	U	5
84-74-2	di-n-butyl phthalate	U	1
309-00-2	aldrin	U	5
1024-57-3	heptachlor epoxide	U	5
206-44-0	fluoranthene	U	1
129-00-0	pyrene	U	1
959-98-8	endosulfan I	U	5
75-55-9	4,4'DDE	U	5
92-87-5	benzidine	U	1
60-57-1	dieldrin	U	5
72-20-8	endrin	U	5
72-54-8	4,4'DDD	U	5
33213-65-9	endosulfan II	U	5
7421-93-4	endrin aldehyde	U	5
85-68-7	benzyl-butylphthalate	U	1
50-29-3	4,4'DDT	U	5
1031-07-8	endosulfan sulfate	U	5
117-81-7	bis(2-ethylhexyl)phthalate	0.41 J	1
56-55-3	benzo(a)anthracene	U	1
218-01-9	chrysene	U	1
91-94-1	3,3-dichlorobenzidine	U	1
117-84-0	di-n-octylphthalate	U	1
205-99-2	benzo(b)fluoranthene	U	1
207-08-9	benzo(k)fluoranthene	U	1
50-32-8	benzo(a)pyrene	U	1
193-39-5	indeno(1,2,3-cd)pyrene	U	1
53-70-3	dibenzo(a,h)anthracene	U	1
191-24-2	benzo(ghi)perylene	U	1
57-74-9	chlordane	U	10
8001-35-2	toxaphene	U	10
12674-11-2	PCB-1016	U	10
11104-28-2	PCB-1221	U	10
11141-16-5	PCB-1232	U	10
53469-21-9	PCB-1242	U	10
12672-29-6	PCB-1248	U	10
11097-69-1	PCB-1254	U	10
11096-82-5	PCB-1260	U	10

See footnotes on Page 4.

ANALYTICAL REPORT FOR SAMPLE No. EK 2069

EPA METHOD 8270, 3rd ED.
TARGET ANALYTE RESULTS

Field Sample ID B00G08 Sponsor WESTINGHOUSE HANFORD COMPANY

Cas. No.	COMPOUND	RESULTS (ug/g)	DETECTION LIMITS (ug/g)
98-86-2	acetophenone	U	1
62-53-3	aniline	U	1
92-67-1	4-aminobiphenyl	U	1
65-85-0	benzoic acid	U	1
100-51-6	benzyl alcohol	U	1
319-84-6	.alpha.-BHC	U	1
58-89-9	.gamma.-BHC	U	1
106-47-8	4-chloroaniline	U	5
90-13-1	1-chloronaphthalene	U	1
224-42-0	dibenz(a,j)acridine	U	1
132-64-9	dibenzofuran	U	1
87-65-0	2,6-dichlorophenol	U	1
60-11-7	p-dimethylaminoazobenzene	U	1
57-97-6	7,12-dimethbenz(a)anthracene	U	1
122-09-8	a,a-dimethyphenethylamine	U	1
17082-12-1	1,2-diphenylhydrazine	U	1
53494-70-5	endrin ketone	U	1
62-50-0	ethyl methanesulfonate	U	1
72-43-5	methoxychlor	U	1
56-49-5	3-methylcholanthrene	U	1
66-27-3	ethyl methanesulfonate	U	1
91-57-6	2-methylnaphthalene	U	1
95-48-7	2-methylphenol	U	1
106-44-5	4-methylphenol	U	1
134-32-7	1-naphthylamine	U	1
131-07-2	2-naphthylamine	U	1
88-74-4	2-nitroaniline	U	5
99-09-2	3-nitroaniline	U	5
100-10-6	4-nitroaniline	U	5
924-16-3	n-nitroso-di-n-butylamine	U	1
100-75-4	n-nitrosopiperidine	U	1
608-93-5	pentachlorobenzene	U	1
589-82-4	pentachloronitrobenzene	U	1
62-44-2	phenacetin	U	1
109-06-8	2-picoline	U	1
23950-58-5	pronamide	U	1
95-94-3	1,2,4,5-tetrachlorobenzene	U	1
58-90-2	2,3,4,6-tetrachlorophenol	U	1
95-95-4	2,4,5-trichlorophenol	U	1

See footnotes on Page 4.

ANALYTICAL REPORT FOR SAMPLE No. EK 2069

NON-TARGET ANALYTE RESULTS
Additional Semi-Volatiles

Field Sample ID B00G08

Cas. No	COMPOUND	Scan Number	Results ug/g	Footnotes
----------	UNKNOWN OXYHYDROCARBON	717	0.36	NE
----------	UNKNOWN OXYHYDROCARBON	732	0.79	NE
----------	ALKANE, @C17	1320	0.25	NE
629-78-7	HEPTADECANE	1325	0.31	NE
593-45-3	OCTADECANE	1400	0.29	NE
----------	ALKANE, @C19	1460	0.33	NE
----------	STEROIDAL-TYPE COMPOUND	1961	0.75	NE
----------	POLYCYCLIC HYDROCARBON	2016	0.88	NE
----------	POLYCYCLIC HYDROCARBON	2036	1.1	NE
----------	UNKNOWN	2112	0.98	NE

FOOTNOTES

B The analyte was found in the method blank. The reported results have been adjusted for the quantity found in the blank.

E The reported concentration is an estimate only. The response factor was assumed to be 1.000 relative to an internal standard.

J Indicates an estimated concentration below the Method Detection Limit.

K The isomer is unknown.

N Analytical standards were not analyzed for this compound.

U Not detected.

W The identification is tentative or closely related to the compound.

ANALYTICAL REPORT FOR SAMPLE No. EK 2070

EPA METHOD 8270, 3rd ED.
TARGET ANALYTE RESULTS

Field Sample ID B00G09 Sponsor WESTINGHOUSE HANFORD COMPANY

File ID LC19EK2070 Date Extracted 06/18/91 Date of Analysis 07/06/91

DataChem ID S91-0406GG

Cas. No	COMPOUND	RESULTS (ug/g)	DETECTION LIMITS (ug/g)
62-75-9	N-nitrosodimethylamine	U	1
108-95-2	phenol	U	1
111-44-4	bis(2-chloroethyl)ether	U	1
95-57-8	2-chlorophenol	U	1
541-73-1	1,3-dichlorobenzene	U	1
106-46-7	1,4-dichlorobenzene	U	1
95-50-1	1,2-dichlorobenzene	U	1
39638-329	bis(2-chloroisopropyl)ether	U	1
621-64-7	N-nitrosodi-n-propylamine	U	1
67-72-1	hexachloroethane	U	1
98-95-3	nitrobenzene	U	1
78-59-1	isophorone	U	1
88-75-5	2-nitrophenol	U	1
105-67-9	2,4-dimethylphenol	U	1
11-91-1	bis(2-chloroethoxy)methane	U	1
120-83-2	2,4-dichlorophenol	U	1
120-82-1	1,2,4-trichlorobenzene	U	1
91-20-3	naphthalene	U	1
87-68-3	hexachlorobutadiene	U	1
59-50-7	4-chloro-3-methylphenol	U	1
77-47-4	hexachlorocyclopentadiene	U	1
88-06-2	2,4,6-trichlorophenol	U	1
91-58-7	2-chloronaphthalene	U	1
131-11-3	dimethyl phthalate	U	1
606-20-2	2,6-dinitrotoluene	U	1
208-96-8	acenaphthylene	0.23 J	1
83-32-9	acenaphthene	U	1
51-28-5	2,4-dinitrophenol	U	1
100-02-7	4-nitrophenol	U	1
121-14-2	2,4-dinitrotoluene	U	1
84-66-2	diethyl phthalate	U	1
7005-73-3	4-chlorophenyl-phenylether	U	1
86-73-7	fluorene	U	1
534-52-1	2-methyl-4,6-dinitrophenol	U	1
86-30-6	N-nitrosodiphenylamine	U	1
101-55-3	4-bromophenyl-phenylether	U	1
118-74-1	hexachlorobenzene	U	1
319-85-7	beta-BHC	U	5
87-86-5	pentachlorophenol	U	1
85-01-8	phenanthrene	0.26 J	1
120-12-7	anthracene	U	1

ANALYTICAL REPORT FOR SAMPLE No. EK 2070

EPA METHOD 8270, 3rd ED.
TARGET ANALYTE RESULTS

Field Sample ID B00G09 Sponsor WESTINGHOUSE HANFORD COMPANY

Cas. No.	COMPOUND	RESULTS (ug/g)	DETECTION LIMITS (ug/g)
319-86-8	delta-BHC	U	5
76-44-8	heptachlor	U	5
84-74-2	di-n-butyl phthalate	U	1
309-00-2	aldrin	U	5
1024-57-3	heptachlor epoxide	U	5
206-44-0	fluoranthene	1.1	1
129-00-0	pyrene	1.7	1
959-98-8	endosulfan I	U	5
75-55-9	4,4'DDE	U	5
92-87-5	benzidine	U	1
60-57-1	dieldrin	U	5
72-20-8	endrin	U	5
72-54-8	4,4'DDD	U	5
33213-65-9	endosulfan II	U	5
7421-93-4	endrin aldehyde	U	5
85-68-7	benzyl-butylphthalate	U	1
50-29-3	4,4'DDT	U	5
1031-07-8	endosulfan sulfate	U	5
117-81-7	bis(2-ethylhexyl)phthalate	16. D	1
56-55-3	benzo(a)anthracene	1.8	1
218-01-9	chrysene	2.1	1
91-94-1	3,3-dichlorobenzidine	U	1
117-84-0	di-n-octylphthalate	U	1
205-99-2	benzo(b)fluoranthene	U	1
207-08-9	benzo(k)fluoranthene	U	1
50-32-8	benzo(a)pyrene	1.9	1
193-39-5	indeno(1,2,3-cd)pyrene	2.4	1
53-70-3	dibenzo(a,h)anthracene	U	1
191-24-2	benzo(ghi)perylene	2.1	1
57-74-9	chlordane	U	10
8001-35-2	toxaphene	U	10
12674-11-2	PCB-1016	U	10
11104-28-2	PCB-1221	U	10
11141-16-5	PCB-1232	U	10
53469-21-9	PCB-1242	U	10
12672-29-6	PCB-1248	U	10
11097-69-1	PCB-1254	U	10
11096-82-5	PCB-1260	U	10

See footnotes on Page 4.

ANALYTICAL REPORT FOR SAMPLE No. EK 2070

EPA METHOD 8270, 3rd ED.
TARGET ANALYTE RESULTS

Field Sample ID B00G09 Sponsor WESTINGHOUSE HANFORD COMPANY

Cas. No.	COMPOUND	RESULTS (ug/g)	DETECTION LIMITS (ug/g)
98-86-2	acetophenone	U	1
62-53-3	aniline	U	1
92-67-1	4-aminobiphenyl	U	1
65-85-0	benzoic acid	0.31 J	1
100-51-6	benzyl alcohol	U	1
319-84-6	.alpha.-BHC	U	1
58-89-9	.gamma.-BHC	U	1
106-47-8	4-chloroaniline	U	5
90-13-1	1-chloronaphthalene	U	1
224-42-0	dibenz(a,j)acridine	U	1
132-64-9	dibenzofuran	U	1
87-65-0	2,6-dichlorophenol	U	1
60-11-7	p-dimethylaminoazobenzene	U	1
57-97-6	7,12-dimethbenz(a)anthracene	U	1
122-09-8	a,a-dimethyphenethylamine	U	1
17082-12-1	1,2-diphenylhydrazine	U	1
53494-70-5	endrin ketone	U	1
62-50-0	ethyl methanesulfonate	U	1
72-43-5	methoxychlor	U	1
56-49-5	3-methylcholanthrene	U	1
66-27-3	ethyl methanesulfonate	U	1
91-57-6	2-methylnaphthalene	U	1
95-48-7	2-methylphenol	U	1
106-44-5	4-methylphenol	U	1
134-32-7	1-naphthylamine	U	1
131-07-2	2-naphthylamine	U	1
88-74-4	2-nitroaniline	U	5
99-09-2	3-nitroaniline	U	5
100-10-6	4-nitroaniline	U	5
924-16-3	n-nitroso-di-n-butylamine	U	1
100-75-4	n-nitrosopiperidine	U	1
608-93-5	pentachlorobenzene	U	1
589-82-4	pentachloronitrobenzene	U	1
62-44-2	phenacetin	U	1
109-06-8	2-picoline	U	1
23950-58-5	pronamide	U	1
95-94-3	1,2,4,5-tetrachlorobenzene	0.10 J	1
58-90-2	2,3,4,6-tetrachlorophenol	U	1
95-95-4	2,4,5-trichlorophenol	U	1

See footnotes on Page 4.

9513319.2003

ANALYTICAL REPORT FOR SAMPLE No. EK 2070

NON-TARGET ANALYTE RESULTS
Additional Semi-Volatiles

Field Sample ID B00G09

Cas. No	COMPOUND	Scan Number	Results ug/g	Footnotes
629-94-7	HENEICOSANE	1590	17.	NE
----------	STEROIDAL-TYPE COMPOUND	1960	18.	NE
----------	UNKNOWN	2003	57.	NE
----------	STEROIDAL-TYPE COMPOUND	2036	42.	NE
----------	STEROIDAL-TYPE COMPOUND	2070	22.	NE
----------	UNKNOWN NITROGEN-CONTAINING CMPD.	2111	59.	NE
----------	STEROIDAL-TYPE COMPOUND	2149	41.	NE
----------	STEROIDAL-TYPE COMPOUND	2331	31.	NE
----------	POLYCYCLIC HYDROCARBON	2431	18.	NE
----------	POLYCYCLIC HYDROCARBON	2571	26.	NE

FOOTNOTES

B The analyte was found in the method blank. The reported results have been adjusted for the quantity found in the blank.

E The reported concentration is an estimate only. The response factor was assumed to be 1.000 relative to an internal standard.

J Indicates an estimated concentration below the Method Detection Limit.

K The isomer is unknown.

N Analytical standards were not analyzed for this compound.

U Not detected.

W The identification is tentative or closely related to the compound.

D This analyte was quantitated from a second analysis at a 1:10 dilution.

ANALYTICAL REPORT FOR SAMPLE No. EK 2071

EPA METHOD 8270, 3rd ED.
TARGET ANALYTE RESULTS

Field Sample ID B00GR1 Sponsor WESTINGHOUSE HANFORD COMPANY

File ID LC18EK2071 Date Extracted 06/18/91 Date of Analysis 07/06/91

DataChem ID S91-0406GG

Cas. No	COMPOUND	RESULTS (ug/g)	DETECTION LIMITS (ug/g)
62-75-9	N-nitrosodimethylamine	U	1
108-95-2	phenol	U	1
111-44-4	bis(2-chloroethyl)ether	U	1
95-57-8	2-chlorophenol	U	1
541-73-1	1,3-dichlorobenzene	U	1
106-46-7	1,4-dichlorobenzene	U	1
95-50-1	1,2-dichlorobenzene	U	1
39638-329	bis(2-chloroisopropyl)ether	U	1
621-64-7	N-nitrosodi-n-propylamine	U	1
67-72-1	hexachloroethane	U	1
98-95-3	nitrobenzene	U	1
78-59-1	isophorone	U	1
88-75-5	2-nitrophenol	U	1
105-67-9	2,4-dimethylphenol	U	1
11-91-1	bis(2-chloroethoxy)methane	U	1
120-83-2	2,4-dichlorophenol	U	1
120-82-1	1,2,4-trichlorobenzene	U	1
91-20-3	naphthalene	U	1
87-68-3	hexachlorobutadiene	U	1
59-50-7	4-chloro-3-methylphenol	U	1
77-47-4	hexachlorocyclopentadiene	U	1
88-06-2	2,4,6-trichlorophenol	U	1
91-58-7	2-chloronaphthalene	U	1
131-11-3	dimethyl phthalate	U	1
606-20-2	2,6-dinitrotoluene	U	1
208-96-8	acenaphthylene	U	1
83-32-9	acenaphthene	U	1
51-28-5	2,4-dinitrophenol	U	1
100-02-7	4-nitrophenol	U	1
121-14-2	2,4-dinitrotoluene	U	1
84-66-2	diethyl phthalate	U	1
7005-73-3	4-chlorophenyl-phenylether	U	1
86-73-7	fluorene	U	1
534-52-1	2-methyl-4,6-dinitrophenol	U	1
86-30-6	N-nitrosodiphenylamine	U	1
101-55-3	4-bromophenyl-phenylether	U	1
118-74-1	hexachlorobenzene	U	1
319-85-7	beta-BHC	U	5
87-86-5	pentachlorophenol	U	1
85-01-8	phenanthrene	U	1
120-12-7	anthracene	U	1

ANALYTICAL REPORT FOR SAMPLE No. EK 2071

EPA METHOD 8270, 3rd ED.
TARGET ANALYTE RESULTS

Field Sample ID B00GR1 Sponsor WESTINGHOUSE HANFORD COMPANY

Cas. No.	COMPOUND	RESULTS (ug/g)	DETECTION LIMITS (ug/g)
319-86-8	delta-BHC	U	5
76-44-8	heptachlor	U	5
84-74-2	di-n-butyl phthalate	U	1
309-00-2	aldrin	U	5
1024-57-3	heptachlor epoxide	U	5
206-44-0	fluoranthene	0.10 J	1
129-00-0	pyrene	0.14 J	1
959-98-8	endosulfan I	U	5
75-55-9	4,4'DDE	U	5
92-87-5	benzidine	U	1
60-57-1	dieldrin	U	5
72-20-8	endrin	U	5
72-54-8	4,4'DDD	U	5
33213-65-9	endosulfan II	U	5
7421-93-4	endrin aldehyde	U	5
85-68-7	benzyl-butylphthalate	U	1
50-29-3	4,4'DDT	U	5
1031-07-8	endosulfan sulfate	U	5
117-81-7	bis(2-ethylhexyl)phthalate	1.7	1
56-55-3	benzo(a)anthracene	U	1
218-01-9	chrysene	U	1
91-94-1	3,3-dichlorobenzidine	U	1
117-84-0	di-n-octylphthalate	U	1
205-99-2	benzo(b)fluoranthene	U	1
207-08-9	benzo(k)fluoranthene	U	1
50-32-8	benzo(a)pyrene	U	1
193-39-5	indeno(1,2,3-cd)pyrene	U	1
53-70-3	dibenzo(a,h)anthracene	U	1
191-24-2	benzo(ghi)perylene	U	1
57-74-9	chlordane	U	10
8001-35-2	toxaphene	U	10
12674-11-2	PCB-1016	U	10
11104-28-2	PCB-1221	U	10
11141-16-5	PCB-1232	U	10
53469-21-9	PCB-1242	U	10
12672-29-6	PCB-1248	U	10
11097-69-1	PCB-1254	U	10
11096-82-5	PCB-1260	U	10

See footnotes on Page 4.

ANALYTICAL REPORT FOR SAMPLE No. EK 2071

EPA METHOD 8270, 3rd ED.
TARGET ANALYTE RESULTS

Field Sample ID B00GR1 **Sponsor** WESTINGHOUSE HANFORD COMPANY

Cas. No.	COMPOUND	RESULTS (ug/g)	DETECTION LIMITS (ug/g)
98-86-2	acetophenone	U	1
62-53-3	aniline	U	1
92-67-1	4-aminobiphenyl	U	1
65-85-0	benzoic acid	0.40 J	1
100-51-6	benzyl alcohol	U	1
319-84-6	.alpha.-BHC	U	1
58-89-9	.gamma.-BHC	U	1
106-47-8	4-chloroaniline	U	5
90-13-1	1-chloronaphthalene	U	1
224-42-0	dibenz(a,j)acridine	U	1
132-64-9	dibenzofuran	U	1
87-65-0	2,6-dichlorophenol	U	1
60-11-7	p-dimethylaminoazobenzene	U	1
57-97-6	7,12-dimethbenz(a)anthracene	U	1
122-09-8	a,a-dimethyphenethylamine	U	1
17082-12-1	1,2-diphenylhydrazine	U	1
53494-70-5	endrin ketone	U	1
62-50-0	ethyl methanesulfonate	U	1
72-43-5	methoxychlor	U	1
56-49-5	3-methylcholanthrene	U	1
66-27-3	ethyl methanesulfonate	U	1
91-57-6	2-methylnaphthalene	U	1
95-48-7	2-methylphenol	U	1
106-44-5	4-methylphenol	U	1
134-32-7	1-naphthylamine	U	1
131-07-2	2-naphthylamine	U	1
88-74-4	2-nitroaniline	U	5
99-09-2	3-nitroaniline	U	5
100-10-6	4-nitroaniline	U	5
924-16-3	n-nitroso-di-n-butylamine	U	1
100-75-4	n-nitrosopiperidine	U	1
608-93-5	pentachlorobenzene	U	1
589-82-4	pentachloronitrobenzene	U	1
62-44-2	phenacetin	U	1
109-06-8	2-picoline	U	1
23950-58-5	pronamide	U	1
95-94-3	1,2,4,5-tetrachlorobenzene	U	1
58-90-2	2,3,4,6-tetrachlorophenol	U	1
95-95-4	2,4,5-trichlorophenol	U	1

See footnotes on Page 4.

ANALYTICAL REPORT FOR SAMPLE No. EK 2071

NON-TARGET ANALYTE RESULTS
Additional Semi-Volatiles

Field Sample ID B00GR1

Cas. No	COMPOUND	Scan Number	Results ug/g	Footnotes
----------	UNKNOWN	1811	1.3	NE
----------	UNKNOWN	1820	1.3	NE
----------	POLYCYCLIC NITROGEN-CONTAINING CMPD	1985	2.0	NE
----------	STEROIDAL-TYPE COMPOUND	2020	2.2	NE
----------	STEROIDAL-TYPE COMPOUND	2055	1.4	NE
----------	UNKNOWN	2091	2.0	NE
----------	STEROIDAL-TYPE COMPOUND	2130	1.8	NE
----------	STEROIDAL-TYPE COMPOUND	2307	1.5	NE
----------	POLYCYCLIC HYDROCARBON	2402	1.1	NE
----------	POLYCYCLIC HYDROCARBON	2537	1.4	NE

FOOTNOTES

B The analyte was found in the method blank. The reported results have been adjusted for the quantity found in the blank.

E The reported concentration is an estimate only. The response factor was assumed to be 1.000 relative to an internal standard.

J Indicates an estimated concentration below the Method Detection Limit.

K The isomer is unknown.

N Analytical standards were not analyzed for this compound.

U Not detected.

W The identification is tentative or closely related to the compound.

ANALYTICAL REPORT FOR SAMPLE No. EK 2072

EPA METHOD 8270, 3rd ED.
TARGET ANALYTE RESULTS

Field Sample ID B00GR2 Sponsor WESTINGHOUSE HANFORD COMPANY

File ID LC20EK2072 Date Extracted 06/18/91 Date of Analysis 07/06/91

DataChem ID S91-0406GG

Cas. No	COMPOUND	RESULTS (ug/g)	DETECTION LIMITS (ug/g)
62-75-9	N-nitrosodimethylamine	U	1
108-95-2	phenol	U	1
111-44-4	bis(2-chloroethyl)ether	U	1
95-57-8	2-chlorophenol	U	1
541-73-1	1,3-dichlorobenzene	U	1
106-46-7	1,4-dichlorobenzene	U	1
95-50-1	1,2-dichlorobenzene	U	1
39638-329	bis(2-chloroisopropyl)ether	U	1
621-64-7	N-nitrosodi-n-propylamine	U	1
67-72-1	hexachloroethane	U	1
98-95-3	nitrobenzene	U	1
78-59-1	isophorone	U	1
88-75-5	2-nitrophenol	U	1
105-67-9	2,4-dimethylphenol	U	1
11-91-1	bis(2-chloroethoxy)methane	U	1
120-83-2	2,4-dichlorophenol	U	1
120-82-1	1,2,4-trichlorobenzene	U	1
91-20-3	naphthalene	U	1
87-68-3	hexachlorobutadiene	U	1
59-50-7	4-chloro-3-methylphenol	U	1
77-47-4	hexachlorocyclopentadiene	U	1
88-06-2	2,4,6-trichlorophenol	U	1
91-58-7	2-chloronaphthalene	U	1
131-11-3	dimethyl phthalate	U	1
606-20-2	2,6-dinitrotoluene	U	1
208-96-8	acenaphthylene	U	1
83-32-9	acenaphthene	U	1
51-28-5	2,4-dinitrophenol	U	1
100-02-7	4-nitrophenol	U	1
121-14-2	2,4-dinitrotoluene	U	1
84-66-2	diethyl phthalate	U	1
7005-73-3	4-chlorophenyl-phenylether	U	1
86-73-7	fluorene	U	1
534-52-1	2-methyl-4,6-dinitrophenol	U	1
86-30-6	N-nitrosodiphenylamine	U	1
101-55-3	4-bromophenyl-phenylether	U	1
118-74-1	hexachlorobenzene	U	1
319-85-7	beta-BHC	U	5
87-86-5	pentachlorophenol	U	1
85-01-8	phenanthrene	U	1
120-12-7	anthracene	U	1

ANALYTICAL REPORT FOR SAMPLE No. EK 2072

EPA METHOD 8270, 3rd ED.
TARGET ANALYTE RESULTS

Field Sample ID B00GR2 Sponsor WESTINGHOUSE HANFORD COMPANY

Cas. No.	COMPOUND	RESULTS (ug/g)	DETECTION LIMITS (ug/g)
319-86-8	delta-BHC	U	5
76-44-8	heptachlor	U	5
84-74-2	di-n-butyl phthalate	U	1
309-00-2	aldrin	U	5
1024-57-3	heptachlor epoxide	U	5
206-44-0	fluoranthene	U	1
129-00-0	pyrene	U	1
959-98-8	endosulfan I	U	5
75-55-9	4,4'DDE	U	5
92-87-5	benzidine	U	1
60-57-1	dieldrin	U	5
72-20-8	endrin	U	5
72-54-8	4,4'DDD	U	5
33213-65-9	endosulfan II	U	5
7421-93-4	endrin aldehyde	U	5
85-68-7	benzyl-butylphthalate	U	1
50-29-3	4,4'DDT	U	5
1031-07-8	endosulfan sulfate	U	5
117-81-7	bis(2-ethylhexyl)phthalate	0.86 J	1
56-55-3	benzo(a)anthracene	U	1
218-01-9	chrysene	U	1
91-94-1	3,3-dichlorobenzidine	U	1
117-84-0	di-n-octylphthalate	U	1
205-99-2	benzo(b)fluoranthene	U	1
207-08-9	benzo(k)fluoranthene	U	1
50-32-8	benzo(a)pyrene	U	1
193-39-5	indeno(1,2,3-cd)pyrene	U	1
53-70-3	dibenzo(a,h)anthracene	U	1
191-24-2	benzo(ghi)perylene	U	1
57-74-9	chlordane	U	10
8001-35-2	toxaphene	U	10
12674-11-2	PCB-1016	U	10
11104-28-2	PCB-1221	U	10
11141-16-5	PCB-1232	U	10
53469-21-9	PCB-1242	U	10
12672-29-6	PCB-1248	U	10
11097-69-1	PCB-1254	U	10
11096-82-5	PCB-1260	U	10

See footnotes on Page 4.

ANALYTICAL REPORT FOR SAMPLE No. EK 2072

EPA METHOD 8270, 3rd ED.
TARGET ANALYTE RESULTS

Field Sample ID B00GR2 Sponsor WESTINGHOUSE HANFORD COMPANY

Cas. No.	COMPOUND	RESULTS (ug/g)	DETECTION LIMITS (ug/g)
98-86-2	acetophenone	U	1
62-53-3	aniline	U	1
92-67-1	4-aminobiphenyl	U	1
65-85-0	benzoic acid	U	1
100-51-6	benzyl alcohol	U	1
319-84-6	.alpha.-BHC	U	1
58-89-9	.gamma.-BHC	U	1
106-47-8	4-chloroaniline	U	5
90-13-1	1-chloronaphthalene	U	1
224-42-0	dibenz(a,j)acridine	U	1
132-64-9	dibenzofuran	U	1
87-65-0	2,6-dichlorophenol	U	1
60-11-7	p-dimethylaminoazobenzene	U	1
57-97-6	7,12-dimethbenz(a)anthracene	U	1
122-09-8	a,a-dimethyphenethylamine	U	1
17082-12-1	1,2-diphenylhydrazine	U	1
53494-70-5	endrin ketone	U	1
62-50-0	ethyl methanesulfonate	U	1
72-43-5	methoxychlor	U	1
56-49-5	3-methylcholanthrene	U	1
66-27-3	ethyl methanesulfonate	U	1
91-57-6	2-methylnaphthalene	U	1
95-48-7	2-methylphenol	U	1
106-44-5	4-methylphenol	U	1
134-32-7	1-naphthylamine	U	1
131-07-2	2-naphthylamine	U	1
88-74-4	2-nitroaniline	U	5
99-09-2	3-nitroaniline	U	5
100-10-6	4-nitroaniline	U	5
924-16-3	n-nitroso-di-n-butylamine	U	1
100-75-4	n-nitrosopiperidine	U	1
608-93-5	pentachlorobenzene	U	1
589-82-4	pentachloronitrobenzene	U	1
62-44-2	phenacetin	U	1
109-06-8	2-picoline	U	1
23950-58-5	pronamide	U	1
95-94-3	1,2,4,5-tetrachlorobenzene	U	1
58-90-2	2,3,4,6-tetrachlorophenol	U	1
95-95-4	2,4,5-trichlorophenol	U	1

See footnotes on Page 4.

ANALYTICAL REPORT FOR SAMPLE No. EK 2072

NON-TARGET ANALYTE RESULTS
Additional Semi-Volatiles

Field Sample ID B00GR2

Cas. No	COMPOUND	Scan Number	Results ug/g	Footnotes
----------	UNKNOWN ACID @C16	1498	0.63	NE
----------	STEROIDAL-TYPE COMPOUND	1952	1.0	NE
----------	STEROIDAL-TYPE COMPOUND	2022	2.9	NE
----------	STEROIDAL-TYPE COMPOUND	2057	1.7	NE
----------	STEROIDAL-TYPE COMPOUND	2091	1.5	NE
----------	STEROIDAL-TYPE COMPOUND	2133	2.5	NE
----------	STEROIDAL-TYPE COMPOUND	2208	1.1	NE
----------	STEROIDAL-TYPE COMPOUND	2313	1.8	NE
----------	POLYCYCLIC HYDROCARBON	2409	1.2	NE
----------	POLYCYCLIC HYDROCARBON	2544	1.5	NE

FOOTNOTES

B The analyte was found in the method blank. The reported results have been adjusted for the quantity found in the blank.

E The reported concentration is an estimate only. The response factor was assumed to be 1.000 relative to an internal standard.

J Indicates an estimated concentration below the Method Detection Limit.

K The isomer is unknown.

N Analytical standards were not analyzed for this compound.

U Not detected.

W The identification is tentative or closely related to the compound.

ANALYTICAL REPORT FOR SAMPLE No. EK 2073

EPA METHOD 8270, 3rd ED.
TARGET ANALYTE RESULTS

Field Sample ID B00GR3 Sponsor WESTINGHOUSE HANFORD COMPANY

File ID LA10EK2073 Date Extracted 06/18/91 Date of Analysis 07/03/91

DataChem ID S91-0406GG

Cas. No	COMPOUND	RESULTS (ug/g)	DETECTION LIMITS (ug/g)
62-75-9	N-nitrosodimethylamine	U	1
108-95-2	phenol	U	1
111-44-4	bis(2-chloroethyl)ether	U	1
95-57-8	2-chlorophenol	U	1
541-73-1	1,3-dichlorobenzene	U	1
106-46-7	1,4-dichlorobenzene	U	1
95-50-1	1,2-dichlorobenzene	U	1
39638-329	bis(2-chloroisopropyl)ether	U	1
621-64-7	N-nitrosodi-n-propylamine	U	1
67-72-1	hexachloroethane	U	1
98-95-3	nitrobenzene	U	1
78-59-1	isophorone	U	1
88-75-5	2-nitrophenol	U	1
105-67-9	2,4-dimethylphenol	U	1
11-91-1	bis(2-chloroethoxy)methane	U	1
120-83-2	2,4-dichlorophenol	U	1
120-82-1	1,2,4-trichlorobenzene	U	1
91-20-3	naphthalene	U	1
87-68-3	hexachlorobutadiene	U	1
59-50-7	4-chloro-3-methylphenol	U	1
77-47-4	hexachlorocyclopentadiene	U	1
88-06-2	2,4,6-trichlorophenol	U	1
91-58-7	2-chloronaphthalene	U	1
131-11-3	dimethyl phthalate	U	1
606-20-2	2,6-dinitrotoluene	U	1
208-96-8	acenaphthylene	U	1
83-32-9	acenaphthene	U	1
51-28-5	2,4-dinitrophenol	U	1
100-02-7	4-nitrophenol	U	1
121-14-2	2,4-dinitrotoluene	U	1
84-66-2	diethyl phthalate	U	1
7005-73-3	4-chlorophenyl-phenylether	U	1
86-73-7	fluorene	U	1
534-52-1	2-methyl-4,6-dinitrophenol	U	1
86-30-6	N-nitrosodiphenylamine	U	1
101-55-3	4-bromophenyl-phenylether	U	1
118-74-1	hexachlorobenzene	U	1
319-85-7	beta-BHC	U	5
87-86-5	pentachlorophenol	U	1
85-01-8	phenanthrene	U	1
120-12-7	anthracene	U	1

ANALYTICAL REPORT FOR SAMPLE No. EK 2073

EPA METHOD 8270, 3rd ED.
TARGET ANALYTE RESULTS

Field Sample ID B00GR3 Sponsor WESTINGHOUSE HANFORD COMPANY

Cas. No.	COMPOUND	RESULTS (ug/g)	DETECTION LIMITS (ug/g)
319-86-8	delta-BHC	U	5
76-44-8	heptachlor	U	5
84-74-2	di-n-butyl phthalate	U	1
309-00-2	aldrin	U	5
1024-57-3	heptachlor epoxide	U	5
206-44-0	fluoranthene	U	1
129-00-0	pyrene	U	1
959-98-8	endosulfan I	U	5
75-55-9	4,4'DDE	U	5
92-87-5	benzidine	U	1
60-57-1	dieldrin	U	5
72-20-8	endrin	U	5
72-54-8	4,4'DDD	U	5
33213-65-9	endosulfan II	U	5
7421-93-4	endrin aldehyde	U	5
85-68-7	benzyl-butylphthalate	U	1
50-29-3	4,4'DDT	U	5
1031-07-8	endosulfan sulfate	U	5
117-81-7	bis(2-ethylhexyl)phthalate	0.19 J	1
56-55-3	benzo(a)anthracene	U	1
218-01-9	chrysene	U	1
91-94-1	3,3-dichlorobenzidine	U	1
117-84-0	di-n-octylphthalate	U	1
205-99-2	benzo(b)fluoranthene	U	1
207-08-9	benzo(k)fluoranthene	U	1
50-32-8	benzo(a)pyrene	U	1
193-39-5	indeno(1,2,3-cd)pyrene	U	1
53-70-3	dibenzo(a,h)anthracene	U	1
191-24-2	benzo(ghi)perylene	U	1
57-74-9	chlordane	U	10
8001-35-2	toxaphene	U	10
12674-11-2	PCB-1016	U	10
11104-28-2	PCB-1221	U	10
11141-16-5	PCB-1232	U	10
53469-21-9	PCB-1242	U	10
12672-29-6	PCB-1248	U	10
11097-69-1	PCB-1254	U	10
11096-82-5	PCB-1260	U	10

See footnotes on Page 4.

ANALYTICAL REPORT FOR SAMPLE No. EK 2073

EPA METHOD 8270, 3rd ED.
TARGET ANALYTE RESULTS

Field Sample ID B00GR3 Sponsor WESTINGHOUSE HANFORD COMPANY

Cas. No.	COMPOUND	RESULTS (ug/g)	DETECTION LIMITS (ug/g)
98-86-2	acetophenone	U	1
62-53-3	aniline	U	1
92-67-1	4-aminobiphenyl	U	1
65-85-0	benzoic acid	U	1
100-51-6	benzyl alcohol	U	1
319-84-6	.alpha.-BHC	U	1
58-89-9	.gamma.-BHC	U	1
106-47-8	4-chloroaniline	U	5
90-13-1	1-chloronaphthalene	U	1
224-42-0	dibenz(a,j)acridine	U	1
132-64-9	dibenzofuran	U	1
87-65-0	2,6-dichlorophenol	U	1
60-11-7	p-dimethylaminoazobenzene	U	1
57-97-6	7,12-dimethbenz(a)anthracene	U	1
122-09-8	a,a-dimethyphenethylamine	U	1
17082-12-1	1,2-diphenylhydrazine	U	1
53494-70-5	endrin ketone	U	1
62-50-0	ethyl methanesulfonate	U	1
72-43-5	methoxychlor	U	1
56-49-5	3-methylcholanthrene	U	1
66-27-3	ethyl methanesulfonate	U	1
91-57-6	2-methylnaphthalene	U	1
95-48-7	2-methylphenol	U	1
106-44-5	4-methylphenol	U	1
134-32-7	1-naphthylamine	U	1
131-07-2	2-naphthylamine	U	1
88-74-4	2-nitroaniline	U	5
99-09-2	3-nitroaniline	U	5
100-10-6	4-nitroaniline	U	5
924-16-3	n-nitroso-di-n-butylamine	U	1
100-75-4	n-nitrosopiperidine	U	1
608-93-5	pentachlorobenzene	U	1
589-82-4	pentachloronitrobenzene	U	1
62-44-2	phenacetin	U	1
109-06-8	2-picoline	U	1
23950-58-5	pronamide	U	1
95-94-3	1,2,4,5-tetrachlorobenzene	U	1
58-90-2	2,3,4,6-tetrachlorophenol	U	1
95-95-4	2,4,5-trichlorophenol	U	1

See footnotes on Page 4.

ANALYTICAL REPORT FOR SAMPLE No. EK 2073

NON-TARGET ANALYTE RESULTS
Additional Semi-Volatiles

Field Sample ID B00GR3

Cas. No	COMPOUND	Scan Number	Results ug/g	Footnotes
----------	UNKNOWN OXYHYDROCARBON	735	0.30	NE
----------	STEROIDAL-TYPE COMPOUND	1960	0.59	NE
----------	UNKNOWN	1988	0.28	NE
----------	UNKNOWN	2005	0.25	NE
----------	POLYCYCLIC HYDROCARBON	2035	1.0	NE
----------	POLYCYCLIC HYDROCARBON	2070	0.65	NE
----------	POLYCYCLIC HYDROCARBON	2109	0.66	NE
----------	UNKNOWN	2152	0.89	NE

FOOTNOTES

B The analyte was found in the method blank. The reported results have been adjusted for the quantity found in the blank.

E The reported concentration is an estimate only. The response factor was assumed to be 1.000 relative to an internal standard.

J Indicates an estimated concentration below the Method Detection Limit.

K The isomer is unknown.

N Analytical standards were not analyzed for this compound.

U Not detected.

W The identification is tentative or closely related to the compound.

ANALYTICAL REPORT FOR SAMPLE No. EK 2074

EPA METHOD 8270, 3rd ED.
TARGET ANALYTE RESULTS

Field Sample ID B00GR0 Sponsor WESTINGHOUSE HANFORD COMPANY

File ID LA9EK2074 Date Extracted 06/18/91 Date of Analysis 07/03/91

DataChem ID S91-0406GG

Cas. No	COMPOUND	RESULTS (ug/g)	DETECTION LIMITS (ug/g)
62-75-9	N-nitrosodimethylamine	U	1
108-95-2	phenol	U	1
111-44-4	bis(2-chloroethyl)ether	U	1
95-57-8	2-chlorophenol	U	1
541-73-1	1,3-dichlorobenzene	U	1
106-46-7	1,4-dichlorobenzene	U	1
95-50-1	1,2-dichlorobenzene	U	1
39638-329	bis(2-chloroisopropyl)ether	U	1
621-64-7	N-nitrosodi-n-propylamine	U	1
67-72-1	hexachloroethane	U	1
98-95-3	nitrobenzene	U	1
78-59-1	isophorone	U	1
88-75-5	2-nitrophenol	U	1
105-67-9	2,4-dimethylphenol	U	1
11-91-1	bis(2-chloroethoxy)methane	U	1
120-83-2	2,4-dichlorophenol	U	1
120-82-1	1,2,4-trichlorobenzene	U	1
91-20-3	naphthalene	U	1
87-68-3	hexachlorobutadiene	U	1
59-50-7	4-chloro-3-methylphenol	U	1
77-47-4	hexachlorocyclopentadiene	U	1
88-06-2	2,4,6-trichlorophenol	U	1
91-58-7	2-chloronaphthalene	U	1
131-11-3	dimethyl phthalate	U	1
606-20-2	2,6-dinitrotoluene	U	1
208-96-8	acenaphthylene	U	1
83-32-9	acenaphthene	U	1
51-28-5	2,4-dinitrophenol	U	1
100-02-7	4-nitrophenol	U	1
121-14-2	2,4-dinitrotoluene	U	1
84-66-2	diethyl phthalate	U	1
7005-73-3	4-chlorophenyl-phenylether	U	1
86-73-7	fluorene	U	1
534-52-1	2-methyl-4,6-dinitrophenol	U	1
86-30-6	N-nitrosodiphenylamine	U	1
101-55-3	4-bromophenyl-phenylether	U	1
118-74-1	hexachlorobenzene	U	1
319-85-7	beta-BHC	U	5
87-86-5	pentachlorophenol	U	1
85-01-8	phenanthrene	U	1
120-12-7	anthracene	U	1

ANALYTICAL REPORT FOR SAMPLE No. EK 2074

EPA METHOD 8270, 3rd ED.
TARGET ANALYTE RESULTS

Field Sample ID B00GR0 Sponsor WESTINGHOUSE HANFORD COMPANY

Cas. No.	COMPOUND	RESULTS (ug/g)	DETECTION LIMITS (ug/g)
319-86-8	delta-BHC	U	5
76-44-8	heptachlor	U	5
84-74-2	di-n-butyl phthalate	U	1
309-00-2	aldrin	U	5
1024-57-3	heptachlor epoxide	U	5
206-44-0	fluoranthene	U	1
129-00-0	pyrene	U	1
959-98-8	endosulfan I	U	5
75-55-9	4,4'DDE	U	5
92-87-5	benzidine	U	1
60-57-1	dieldrin	U	5
72-20-8	endrin	U	5
72-54-8	4,4'DDD	U	5
33213-65-9	endosulfan II	U	5
7421-93-4	endrin aldehyde	U	5
85-68-7	benzyl-butylphthalate	U	1
50-29-3	4,4'DDT	U	5
1031-07-8	endosulfan sulfate	U	5
117-81-7	bis(2-ethylhexyl)phthalate	0.08 J	1
56-55-3	benzo(a)anthracene	U	1
218-01-9	chrysene	U	1
91-94-1	3,3-dichlorobenzidine	U	1
117-84-0	di-n-octylphthalate	U	1
205-99-2	benzo(b)fluoranthene	U	1
207-08-9	benzo(k)fluoranthene	U	1
50-32-8	benzo(a)pyrene	U	1
193-39-5	indeno(1,2,3-cd)pyrene	U	1
53-70-3	dibenzo(a,h)anthracene	U	1
191-24-2	benzo(ghi)perylene	U	1
57-74-9	chlordane	U	10
8001-35-2	toxaphene	U	10
12674-11-2	PCB-1016	U	10
11104-28-2	PCB-1221	U	10
11141-16-5	PCB-1232	U	10
53469-21-9	PCB-1242	U	10
12672-29-6	PCB-1248	U	10
11097-69-1	PCB-1254	U	10
11096-82-5	PCB-1260	U	10

See footnotes on Page 4.

ANALYTICAL REPORT FOR SAMPLE No. EK 2074

EPA METHOD 8270, 3rd ED.
TARGET ANALYTE RESULTS

Field Sample ID B00GR0 Sponsor WESTINGHOUSE HANFORD COMPANY

Cas. No.	COMPOUND	RESULTS (ug/g)	DETECTION LIMITS (ug/g)
98-86-2	acetophenone	U	1
62-53-3	aniline	U	1
92-67-1	4-aminobiphenyl	U	1
65-85-0	benzoic acid	U	1
100-51-6	benzyl alcohol	U	1
319-84-6	.alpha.-BHC	U	1
58-89-9	.gamma.-BHC	U	1
106-47-8	4-chloroaniline	U	5
90-13-1	1-chloronaphthalene	U	1
224-42-0	dibenz(a,j)acridine	U	1
132-64-9	dibenzofuran	U	1
87-65-0	2,6-dichlorophenol	U	1
60-11-7	p-dimethylaminoazobenzene	U	1
57-97-6	7,12-dimethbenz(a)anthracene	U	1
122-09-8	a,a-dimethyphenethylamine	U	1
17082-12-1	1,2-diphenylhydrazine	U	1
53494-70-5	endrin ketone	U	1
62-50-0	ethyl methanesulfonate	U	1
72-43-5	methoxychlor	U	1
56-49-5	3-methylcholanthrene	U	1
66-27-3	ethyl methanesulfonate	U	1
91-57-6	2-methylnaphthalene	U	1
95-48-7	2-methylphenol	U	1
106-44-5	4-methylphenol	U	1
134-32-7	1-naphthylamine	U	1
131-07-2	2-naphthylamine	U	1
88-74-4	2-nitroaniline	U	5
99-09-2	3-nitroaniline	U	5
100-10-6	4-nitroaniline	U	5
924-16-3	n-nitroso-di-n-butylamine	U	1
100-75-4	n-nitrosopiperidine	U	1
608-93-5	pentachlorobenzene	U	1
589-82-4	pentachloronitrobenzene	U	1
62-44-2	phenacetin	U	1
109-06-8	2-picoline	U	1
23950-58-5	pronamide	U	1
95-94-3	1,2,4,5-tetrachlorobenzene	U	1
58-90-2	2,3,4,6-tetrachlorophenol	U	1
95-95-4	2,4,5-trichlorophenol	U	1

See footnotes on Page 4.

ANALYTICAL REPORT FOR SAMPLE No. EK 2074

NON-TARGET ANALYTE RESULTS
Additional Semi-Volatiles

Field Sample ID B00GR0

Cas. No	COMPOUND	Scan Number	Results ug/g	Footnotes
----------	UNKNOWN OXYHYDROCARBON	720	0.66	NE
----------	UNKNOWN OXYHYDROCARBON	733	1.0	NE
----------	UNKNOWN ALDEHYDE	1785	0.50	NE

FOOTNOTES

- B The analyte was found in the method blank. The reported results have been adjusted for the quantity found in the blank.
- E The reported concentration is an estimate only. The response factor was assumed to be 1.000 relative to an internal standard.
- J Indicates an estimated concentration below the Method Detection Limit.
- K The isomer is unknown.
- N Analytical standards were not analyzed for this compound.
- U Not detected.
- W The identification is tentative or closely related to the compound.

ANALYTICAL REPORT FOR SAMPLE No. EK 2075

EPA METHOD 8270, 3rd ED.
TARGET ANALYTE RESULTS

Field Sample ID B00GR4 Sponsor WESTINGHOUSE HANFORD COMPANY

File ID LA3EK2075 Date Extracted 06/18/91 Date of Analysis 07/03/91

DataChem ID S91-0406GG

Cas. No	COMPOUND	RESULTS (ug/g)	DETECTION LIMITS (ug/g)
62-75-9	N-nitrosodimethylamine	U	1
108-95-2	phenol	U	1
111-44-4	bis(2-chloroethyl)ether	U	1
95-57-8	2-chlorophenol	U	1
541-73-1	1,3-dichlorobenzene	U	1
106-46-7	1,4-dichlorobenzene	U	1
95-50-1	1,2-dichlorobenzene	U	1
39638-329	bis(2-chloroisopropyl)ether	U	1
621-64-7	N-nitrosodi-n-propylamine	U	1
67-72-1	hexachloroethane	U	1
98-95-3	nitrobenzene	U	1
78-59-1	isophorone	U	1
88-75-5	2-nitrophenol	U	1
105-67-9	2,4-dimethylphenol	U	1
11-91-1	bis(2-chloroethoxy)methane	U	1
120-83-2	2,4-dichlorophenol	U	1
120-82-1	1,2,4-trichlorobenzene	U	1
91-20-3	naphthalene	U	1
87-68-3	hexachlorobutadiene	U	1
59-50-7	4-chloro-3-methylphenol	U	1
77-47-4	hexachlorocyclopentadiene	U	1
88-06-2	2,4,6-trichlorophenol	U	1
91-58-7	2-chloronaphthalene	U	1
131-11-3	dimethyl phthalate	U	1
606-20-2	2,6-dinitrotoluene	U	1
208-96-8	acenaphthylene	U	1
83-32-9	acenaphthene	U	1
51-28-5	2,4-dinitrophenol	U	1
100-02-7	4-nitrophenol	U	1
121-14-2	2,4-dinitrotoluene	U	1
84-66-2	diethyl phthalate	U	1
7005-73-3	4-chlorophenyl-phenylether	U	1
86-73-7	fluorene	U	1
534-52-1	2-methyl-4,6-dinitrophenol	U	1
86-30-6	N-nitrosodiphenylamine	U	1
101-55-3	4-bromophenyl-phenylether	U	1
118-74-1	hexachlorobenzene	U	1
319-85-7	beta-BHC	U	5
87-86-5	pentachlorophenol	U	1
85-01-8	phenanthrene	U	1
120-12-7	anthracene	U	1

ANALYTICAL REPORT FOR SAMPLE No. EK 2075

EPA METHOD 8270, 3rd ED.
TARGET ANALYTE RESULTS

Field Sample ID B00GR4 Sponsor WESTINGHOUSE HANFORD COMPANY

Cas. No.	COMPOUND	RESULTS (ug/g)	DETECTION LIMITS (ug/g)
319-86-8	delta-BHC	U	5
76-44-8	heptachlor	U	5
84-74-2	di-n-butyl phthalate	U	1
309-00-2	aldrin	U	5
1024-57-3	heptachlor epoxide	U	5
206-44-0	fluoranthene	U	1
129-00-0	pyrene	U	1
959-98-8	endosulfan I	U	5
75-55-9	4,4'DDE	U	5
92-87-5	benzidine	U	1
60-57-1	dieldrin	U	5
72-20-8	endrin	U	5
72-54-8	4,4'DDD	U	5
33213-65-9	endosulfan II	U	5
7421-93-4	endrin aldehyde	U	5
85-68-7	benzyl-butylphthalate	U	1
50-29-3	4,4'DDT	U	5
1031-07-8	endosulfan sulfate	U	5
117-81-7	bis(2-ethylhexyl)phthalate	U	1
56-55-3	benzo(a)anthracene	U	1
218-01-9	chrysene	U	1
91-94-1	3,3-dichlorobenzidine	U	1
117-84-0	di-n-octylphthalate	U	1
205-99-2	benzo(b)fluoranthene	U	1
207-08-9	benzo(k)fluoranthene	U	1
50-32-8	benzo(a)pyrene	U	1
193-39-5	indeno(1,2,3-cd)pyrene	U	1
53-70-3	dibenzo(a,h)anthracene	U	1
191-24-2	benzo(ghi)perylene	U	1
57-74-9	chlordane	U	10
8001-35-2	toxaphene	U	10
12674-11-2	PCB-1016	U	10
11104-28-2	PCB-1221	U	10
11141-16-5	PCB-1232	U	10
53469-21-9	PCB-1242	U	10
12672-29-6	PCB-1248	U	10
11097-69-1	PCB-1254	U	10
11096-82-5	PCB-1260	U	10

See footnotes on Page 4.

ANALYTICAL REPORT FOR SAMPLE No. EK 2075

EPA METHOD 8270, 3rd ED.
TARGET ANALYTE RESULTS

Field Sample ID B00GR4 Sponsor WESTINGHOUSE HANFORD COMPANY

Cas. No.	COMPOUND	RESULTS (ug/g)	DETECTION LIMITS (ug/g)
98-86-2	acetophenone	U	1
62-53-3	aniline	U	1
92-67-1	4-aminobiphenyl	U	1
65-85-0	benzoic acid	U	1
100-51-6	benzyl alcohol	U	1
319-84-6	.alpha.-BHC	U	1
58-89-9	.gamma.-BHC	U	1
106-47-8	4-chloroaniline	U	5
90-13-1	1-chloronaphthalene	U	1
224-42-0	dibenz(a,j)acridine	U	1
132-64-9	dibenzofuran	U	1
87-65-0	2,6-dichlorophenol	U	1
60-11-7	p-dimethylaminoazobenzene	U	1
57-97-6	7,12-dimethbenz(a)anthracene	U	1
122-09-8	a,a-dimethyphenethylamine	U	1
17082-12-1	1,2-diphenylhydrazine	U	1
53494-70-5	endrin ketone	U	1
62-50-0	ethyl methanesulfonate	U	1
72-43-5	methoxychlor	U	1
56-49-5	3-methylcholanthrene	U	1
66-27-3	ethyl methanesulfonate	U	1
91-57-6	2-methylnaphthalene	U	1
95-48-7	2-methylphenol	U	1
106-44-5	4-methylphenol	U	1
134-32-7	1-naphthylamine	U	1
131-07-2	2-naphthylamine	U	1
88-74-4	2-nitroaniline	U	5
99-09-2	3-nitroaniline	U	5
100-10-6	4-nitroaniline	U	5
924-16-3	n-nitroso-di-n-butylamine	U	1
100-75-4	n-nitrosopiperidine	U	1
608-93-5	pentachlorobenzene	U	1
589-82-4	pentachloronitrobenzene	U	1
62-44-2	phenacetin	U	1
109-06-8	2-picoline	U	1
23950-58-5	pronamide	U	1
95-94-3	1,2,4,5-tetrachlorobenzene	U	1
58-90-2	2,3,4,6-tetrachlorophenol	U	1
95-95-4	2,4,5-trichlorophenol	U	1

See footnotes on Page 4.

ANALYTICAL REPORT FOR SAMPLE No. EK 2075

NON-TARGET ANALYTE RESULTS
Additional Semi-Volatiles

Field Sample ID B00GR4

Cas. No	COMPOUND	Scan Number	Results ug/g	Footnotes
----------	UNKNOWN OXYHYDROCARBON	730	0.41	NE
----------	POLYCYCLIC HYDROCARBON	1710	0.21	NE
----------	UNKNOWN ALDEHYDE	1792	0.20	NE

FOOTNOTES

B The analyte was found in the method blank. The reported results have been adjusted for the quantity found in the blank.

E The reported concentration is an estimate only. The response factor was assumed to be 1.000 relative to an internal standard.

J Indicates an estimated concentration below the Method Detection Limit.

K The isomer is unknown.

N Analytical standards were not analyzed for this compound.

U Not detected.

W The identification is tentative or closely related to the compound.

ANALYTICAL REPORT FOR SAMPLE No. EK 2076

EPA METHOD 8270, 3rd ED.
TARGET ANALYTE RESULTS

Field Sample ID B00GR5 Sponsor WESTINGHOUSE HANFORD COMPANY

File ID LA7EK2076 Date Extracted 06/18/91 Date of Analysis 07/03/91

DataChem ID S91-0406GG

Cas. No	COMPOUND	RESULTS (ug/g)	DETECTION LIMITS (ug/g)
62-75-9	N-nitrosodimethylamine	U	1
108-95-2	phenol	U	1
111-44-4	bis(2-chloroethyl)ether	U	1
95-57-8	2-chlorophenol	U	1
541-73-1	1,3-dichlorobenzene	U	1
106-46-7	1,4-dichlorobenzene	U	1
95-50-1	1,2-dichlorobenzene	U	1
39638-329	bis(2-chloroisopropyl)ether	U	1
621-64-7	N-nitrosodi-n-propylamine	U	1
67-72-1	hexachloroethane	U	1
98-95-3	nitrobenzene	U	1
78-59-1	isophorone	U	1
88-75-5	2-nitrophenol	U	1
105-67-9	2,4-dimethylphenol	U	1
11-91-1	bis(2-chloroethoxy)methane	U	1
120-83-2	2,4-dichlorophenol	U	1
120-82-1	1,2,4-trichlorobenzene	U	1
91-20-3	naphthalene	U	1
87-68-3	hexachlorobutadiene	U	1
59-50-7	4-chloro-3-methylphenol	U	1
77-47-4	hexachlorocyclopentadiene	U	1
88-06-2	2,4,6-trichlorophenol	U	1
91-58-7	2-chloronaphthalene	U	1
131-11-3	dimethyl phthalate	U	1
606-20-2	2,6-dinitrotoluene	U	1
208-96-8	acenaphthylene	U	1
83-32-9	acenaphthene	U	1
51-28-5	2,4-dinitrophenol	U	1
100-02-7	4-nitrophenol	U	1
121-14-2	2,4-dinitrotoluene	U	1
84-66-2	diethyl phthalate	U	1
7005-73-3	4-chlorophenyl-phenylether	U	1
86-73-7	fluorene	U	1
534-52-1	2-methyl-4,6-dinitrophenol	U	1
86-30-6	N-nitrosodiphenylamine	U	1
101-55-3	4-bromophenyl-phenylether	U	1
118-74-1	hexachlorobenzene	U	1
319-85-7	beta-BHC	U	5
87-86-5	pentachlorophenol	U	1
85-01-8	phenanthrene	U	1
120-12-7	anthracene	U	1

ANALYTICAL REPORT FOR SAMPLE No. EK 2076

EPA METHOD 8270, 3rd ED.
TARGET ANALYTE RESULTS

Field Sample ID B00GR5 Sponsor WESTINGHOUSE HANFORD COMPANY

Cas. No.	COMPOUND	RESULTS (ug/g)	DETECTION LIMITS (ug/g)
319-86-8	delta-BHC	U	5
76-44-8	heptachlor	U	5
84-74-2	di-n-butyl phthalate	U	1
309-00-2	aldrin	U	5
1024-57-3	heptachlor epoxide	U	5
206-44-0	fluoranthene	U	1
129-00-0	pyrene	U	1
959-98-8	endosulfan I	U	5
75-55-9	4,4'DDE	U	5
92-87-5	benzidine	U	1
60-57-1	dieldrin	U	5
72-20-8	endrin	U	5
72-54-8	4,4'DDD	U	5
33213-65-9	endosulfan II	U	5
7421-93-4	endrin aldehyde	U	5
85-68-7	benzyl-butylphthalate	U	1
50-29-3	4,4'DDT	U	5
1031-07-8	endosulfan sulfate	U	5
117-81-7	bis(2-ethylhexyl)phthalate	U	1
56-55-3	benzo(a)anthracene	U	1
218-01-9	chrysene	U	1
91-94-1	3,3-dichlorobenzidine	U	1
117-84-0	di-n-octylphthalate	U	1
205-99-2	benzo(b)fluoranthene	U	1
207-08-9	benzo(k)fluoranthene	U	1
50-32-8	benzo(a)pyrene	U	1
193-39-5	indeno(1,2,3-cd)pyrene	U	1
53-70-3	dibenzo(a,h)anthracene	U	1
191-24-2	benzo(ghi)perylene	U	1
57-74-9	chlordane	U	10
8001-35-2	toxaphene	U	10
12674-11-2	PCB-1016	U	10
11104-28-2	PCB-1221	U	10
11141-16-5	PCB-1232	U	10
53469-21-9	PCB-1242	U	10
12672-29-6	PCB-1248	U	10
11097-69-1	PCB-1254	U	10
11096-82-5	PCB-1260	U	10

See footnotes on Page 4.

ANALYTICAL REPORT FOR SAMPLE No. EK 2076

EPA METHOD 8270, 3rd ED.
TARGET ANALYTE RESULTS

Field Sample ID B00GR5 Sponsor WESTINGHOUSE HANFORD COMPANY

Cas. No.	COMPOUND	RESULTS (ug/g)	DETECTION LIMITS (ug/g)
98-86-2	acetophenone	U	1
62-53-3	aniline	U	1
92-67-1	4-aminobiphenyl	U	1
65-85-0	benzoic acid	U	1
100-51-6	benzyl alcohol	U	1
319-84-6	.alpha.-BHC	U	1
58-89-9	.gamma.-BHC	U	1
106-47-8	4-chloroaniline	U	5
90-13-1	1-chloronaphthalene	U	1
224-42-0	dibenz(a,j)acridine	U	1
132-64-9	dibenzofuran	U	1
87-65-0	2,6-dichlorophenol	U	1
60-11-7	p-dimethylaminoazobenzene	U	1
57-97-6	7,12-dimethbenz(a)anthracene	U	1
122-09-8	a,a-dimethyphenethylamine	U	1
17082-12-1	1,2-diphenylhydrazine	U	1
53494-70-5	endrin ketone	U	1
62-50-0	ethyl methanesulfonate	U	1
72-43-5	methoxychlor	U	1
56-49-5	3-methylcholanthrene	U	1
66-27-3	ethyl methanesulfonate	U	1
91-57-6	2-methylnaphthalene	U	1
95-48-7	2-methylphenol	U	1
106-44-5	4-methylphenol	U	1
134-32-7	1-naphthylamine	U	1
131-07-2	2-naphthylamine	U	1
88-74-4	2-nitroaniline	U	5
99-09-2	3-nitroaniline	U	5
100-10-6	4-nitroaniline	U	5
924-16-3	n-nitroso-di-n-butylamine	U	1
100-75-4	n-nitrosopiperidine	U	1
608-93-5	pentachlorobenzene	U	1
589-82-4	pentachloronitrobenzene	U	1
62-44-2	phenacetin	U	1
109-06-8	2-picoline	U	1
23950-58-5	pronamide	U	1
95-94-3	1,2,4,5-tetrachlorobenzene	U	1
58-90-2	2,3,4,6-tetrachlorophenol	U	1
95-95-4	2,4,5-trichlorophenol	U	1

See footnotes on Page 4.

ANALYTICAL REPORT FOR SAMPLE No. EK 2076

NON-TARGET ANALYTE RESULTS
Additional Semi-Volatiles

Field Sample ID B00GR5

Cas. No	COMPOUND	Scan Number	Results ug/g	Footnotes
----------	UNKNOWN OXYHYDROCARBON	719	0.72	NE
----------	UNKNOWN OXYHYDROCARBON	731	0.43	NE
----------	UNKNOWN OXYHYDROCARBON	768	0.18	NE

FOOTNOTES

B The analyte was found in the method blank. The reported results have been adjusted for the quantity found in the blank.
E The reported concentration is an estimate only. The response factor was assumed to be 1.000 relative to an internal standard.
J Indicates an estimated concentration below the Method Detection Limit.
K The isomer is unknown.
N Analytical standards were not analyzed for this compound.
U Not detected.
W The identification is tentative or closely related to the compound.

ANALYTICAL REPORT FOR SAMPLE No. EK 2077

EPA METHOD 8270, 3rd ED.
TARGET ANALYTE RESULTS

Field Sample ID B00GR6 Sponsor WESTINGHOUSE HANFORD COMPANY

File ID LA12EK2077 Date Extracted 06/18/91 Date of Analysis 07/03/91

DataChem ID S91-0406GG

Cas. No	COMPOUND	RESULTS (ug/g)	DETECTION LIMITS (ug/g)
62-75-9	N-nitrosodimethylamine	U	1
108-95-2	phenol	U	1
111-44-4	bis(2-chloroethyl)ether	U	1
95-57-8	2-chlorophenol	U	1
541-73-1	1,3-dichlorobenzene	U	1
106-46-7	1,4-dichlorobenzene	U	1
95-50-1	1,2-dichlorobenzene	U	1
39638-329	bis(2-chloroisopropyl)ether	U	1
621-64-7	N-nitrosodi-n-propylamine	U	1
67-72-1	hexachloroethane	U	1
98-95-3	nitrobenzene	U	1
78-59-1	isophorone	U	1
88-75-5	2-nitrophenol	U	1
105-67-9	2,4-dimethylphenol	U	1
11-91-1	bis(2-chloroethoxy)methane	U	1
120-83-2	2,4-dichlorophenol	U	1
120-82-1	1,2,4-trichlorobenzene	U	1
91-20-3	naphthalene	U	1
87-68-3	hexachlorobutadiene	U	1
59-50-7	4-chloro-3-methylphenol	U	1
77-47-4	hexachlorocyclopentadiene	U	1
88-06-2	2,4,6-trichlorophenol	U	1
91-58-7	2-chloronaphthalene	U	1
131-11-3	dimethyl phthalate	U	1
606-20-2	2,6-dinitrotoluene	U	1
208-96-8	acenaphthylene	U	1
83-32-9	acenaphthene	U	1
51-28-5	2,4-dinitrophenol	U	1
100-02-7	4-nitrophenol	U	1
121-14-2	2,4-dinitrotoluene	U	1
84-66-2	diethyl phthalate	0.05 J	1
7005-73-3	4-chlorophenyl-phenylether	U	1
86-73-7	fluorene	U	1
534-52-1	2-methyl-4,6-dinitrophenol	U	1
86-30-6	N-nitrosodiphenylamine	U	1
101-55-3	4-bromophenyl-phenylether	U	1
118-74-1	hexachlorobenzene	U	1
319-85-7	beta-BHC	U	5
87-86-5	pentachlorophenol	U	1
85-01-8	phenanthrene	U	1
120-12-7	anthracene	U	1

ANALYTICAL REPORT FOR SAMPLE No. EK 2077

EPA METHOD 8270, 3rd ED.
TARGET ANALYTE RESULTS

Field Sample ID B00GR6 Sponsor WESTINGHOUSE HANFORD COMPANY

Cas. No.	COMPOUND	RESULTS (ug/g)	DETECTION LIMITS (ug/g)
319-86-8	delta-BHC	U	5
76-44-8	heptachlor	U	5
84-74-2	di-n-butyl phthalate	U	1
309-00-2	aldrin	U	5
1024-57-3	heptachlor epoxide	U	5
206-44-0	fluoranthene	U	1
129-00-0	pyrene	U	1
959-98-8	endosulfan I	U	5
75-55-9	4,4'DDE	U	5
92-87-5	benzidine	U	1
60-57-1	dieldrin	U	5
72-20-8	endrin	U	5
72-54-8	4,4'DDD	U	5
33213-65-9	endosulfan II	U	5
7421-93-4	endrin aldehyde	U	5
85-68-7	benzyl-butylphthalate	U	1
50-29-3	4,4'DDT	U	5
1031-07-8	endosulfan sulfate	U	5
117-81-7	bis(2-ethylhexyl)phthalate	U	1
56-55-3	benzo(a)anthracene	U	1
218-01-9	chrysene	U	1
91-94-1	3,3-dichlorobenzidine	U	1
117-84-0	di-n-octylphthalate	U	1
205-99-2	benzo(b)fluoranthene	U	1
207-08-9	benzo(k)fluoranthene	U	1
50-32-8	benzo(a)pyrene	U	1
193-39-5	indeno(1,2,3-cd)pyrene	U	1
53-70-3	dibenzo(a,h)anthracene	U	1
191-24-2	benzo(ghi)perylene	U	1
57-74-9	chlordane	U	10
8001-35-2	toxaphene	U	10
12674-11-2	PCB-1016	U	10
11104-28-2	PCB-1221	U	10
11141-16-5	PCB-1232	U	10
53469-21-9	PCB-1242	U	10
12672-29-6	PCB-1248	U	10
11097-69-1	PCB-1254	U	10
11096-82-5	PCB-1260	U	10

See footnotes on Page 4.

ANALYTICAL REPORT FOR SAMPLE No. EK 2077

EPA METHOD 8270, 3rd ED.
TARGET ANALYTE RESULTS

Field Sample ID B00GR6 Sponsor WESTINGHOUSE HANFORD COMPANY

Cas. No.	COMPOUND	RESULTS (ug/g)	DETECTION LIMITS (ug/g)
98-86-2	acetophenone	U	1
62-53-3	aniline	U	1
92-67-1	4-aminobiphenyl	U	1
65-85-0	benzoic acid	U	1
100-51-6	benzyl alcohol	U	1
319-84-6	.alpha.-BHC	U	1
58-89-9	.gamma.-BHC	U	1
106-47-8	4-chloroaniline	U	5
90-13-1	1-chloronaphthalene	U	1
224-42-0	dibenz(a,j)acridine	U	1
132-64-9	dibenzofuran	U	1
87-65-0	2,6-dichlorophenol	U	1
60-11-7	p-dimethylaminoazobenzene	U	1
57-97-6	7,12-dimethbenz(a)anthracene	U	1
122-09-8	a,a-dimethyphenethylamine	U	1
17082-12-1	1,2-diphenylhydrazine	U	1
53494-70-5	endrin ketone	U	1
62-50-0	ethyl methanesulfonate	U	1
72-43-5	methoxychlor	U	1
56-49-5	3-methylcholanthrene	U	1
66-27-3	ethyl methanesulfonate	U	1
91-57-6	2-methylnaphthalene	U	1
95-48-7	2-methylphenol	U	1
106-44-5	4-methylphenol	U	1
134-32-7	1-naphthylamine	U	1
131-07-2	2-naphthylamine	U	1
88-74-4	2-nitroaniline	U	5
99-09-2	3-nitroaniline	U	5
100-10-6	4-nitroaniline	U	5
924-16-3	n-nitroso-di-n-butylamine	U	1
100-75-4	n-nitrosopiperidine	U	1
608-93-5	pentachlorobenzene	U	1
589-82-4	pentachloronitrobenzene	U	1
62-44-2	phenacetin	U	1
109-06-8	2-picoline	U	1
23950-58-5	pronamide	U	1
95-94-3	1,2,4,5-tetrachlorobenzene	U	1
58-90-2	2,3,4,6-tetrachlorophenol	U	1
95-95-4	2,4,5-trichlorophenol	U	1

See footnotes on Page 4.

ANALYTICAL REPORT FOR SAMPLE No. EK 2077

NON-TARGET ANALYTE RESULTS
Additional Semi-Volatiles

Field Sample ID B00GR6

Cas. No	COMPOUND	Scan Number	Results ug/g	Footnotes
----------	BROMOHEXANE	589	0.90	NEK
----------	UNKNOWN OXYHYDROCARBON	691	0.20	NE
123-20-6	BUTANOIC ACID, ETHENYL ESTER	724	02.2	NE
----------	UNKNOWN OXYHYDROCARBON	772	0.51	NE
----------	UNKNOWN ALDEHYDE	1786	0.28	NE
----------	UNKNOWN OXYHYDROCARBON	1823	0.39	NE
----------	UNKNOWN	1961	0.33	NE

FOOTNOTES

- B The analyte was found in the method blank. The reported results have been adjusted for the quantity found in the blank.
- E The reported concentration is an estimate only. The response factor was assumed to be 1.000 relative to an internal standard.
- J Indicates an estimated concentration below the Method Detection Limit.
- K The isomer is unknown.
- N Analytical standards were not analyzed for this compound.
- U Not detected.
- W The identification is tentative or closely related to the compound.

ANALYTICAL REPORT FOR SAMPLE No. EK 2078

EPA METHOD 8270, 3rd ED.
TARGET ANALYTE RESULTS

Field Sample ID B00GR7 Sponsor WESTINGHOUSE HANFORD COMPANY

File ID LA11EK2078 Date Extracted 06/18/91 Date of Analysis 07/03/91

DataChem ID S91-0406GG

Cas. No	COMPOUND	RESULTS (ug/g)	DETECTION LIMITS (ug/g)
62-75-9	N-nitrosodimethylamine	U	1
108-95-2	phenol	U	1
111-44-4	bis(2-chloroethyl)ether	U	1
95-57-8	2-chlorophenol	U	1
541-73-1	1,3-dichlorobenzene	U	1
106-46-7	1,4-dichlorobenzene	U	1
95-50-1	1,2-dichlorobenzene	U	1
39638-329	bis(2-chloroisopropyl)ether	U	1
621-64-7	N-nitrosodi-n-propylamine	U	1
67-72-1	hexachloroethane	U	1
98-95-3	nitrobenzene	U	1
78-59-1	isophorone	U	1
88-75-5	2-nitrophenol	U	1
105-67-9	2,4-dimethylphenol	U	1
11-91-1	bis(2-chloroethoxy)methane	U	1
120-83-2	2,4-dichlorophenol	U	1
120-82-1	1,2,4-trichlorobenzene	U	1
91-20-3	naphthalene	U	1
87-68-3	hexachlorobutadiene	U	1
59-50-7	4-chloro-3-methylphenol	U	1
77-47-4	hexachlorocyclopentadiene	U	1
88-06-2	2,4,6-trichlorophenol	U	1
91-58-7	2-chloronaphthalene	U	1
131-11-3	dimethyl phthalate	U	1
606-20-2	2,6-dinitrotoluene	U	1
208-96-8	acenaphthylene	U	1
83-32-9	acenaphthene	U	1
51-28-5	2,4-dinitrophenol	U	1
100-02-7	4-nitrophenol	U	1
121-14-2	2,4-dinitrotoluene	U	1
84-66-2	diethyl phthalate	U	1
7005-73-3	4-chlorophenyl-phenylether	U	1
86-73-7	fluorene	U	1
534-52-1	2-methyl-4,6-dinitrophenol	U	1
86-30-6	N-nitrosodiphenylamine	U	1
101-55-3	4-bromophenyl-phenylether	U	1
118-74-1	hexachlorobenzene	U	1
319-85-7	beta-BHC	U	5
87-86-5	pentachlorophenol	U	1
85-01-8	phenanthrene	U	1
120-12-7	anthracene	U	1

ANALYTICAL REPORT FOR SAMPLE No. EK 2078

EPA METHOD 8270, 3rd ED.
TARGET ANALYTE RESULTS

Field Sample ID B00GR7 Sponsor WESTINGHOUSE HANFORD COMPANY

Cas. No.	COMPOUND	RESULTS (ug/g)	DETECTION LIMITS (ug/g)
319-86-8	delta-BHC	U	5
76-44-8	heptachlor	U	5
84-74-2	di-n-butyl phthalate	U	1
309-00-2	aldrin	U	5
1024-57-3	heptachlor epoxide	U	5
206-44-0	fluoranthene	U	1
129-00-0	pyrene	U	1
959-98-8	endosulfan I	U	5
75-55-9	4,4'DDE	U	5
92-87-5	benzidine	U	1
60-57-1	dieldrin	U	5
72-20-8	endrin	U	5
72-54-8	4,4'DDD	U	5
33213-65-9	endosulfan II	U	5
7421-93-4	endrin aldehyde	U	5
85-68-7	benzyl-butylphthalate	U	1
50-29-3	4,4'DDT	U	5
1031-07-8	endosulfan sulfate	U	5
117-81-7	bis(2-ethylhexyl)phthalate	0.22 J	1
56-55-3	benzo(a)anthracene	U	1
218-01-9	chrysene	U	1
91-94-1	3,3-dichlorobenzidine	U	1
117-84-0	di-n-octylphthalate	U	1
205-99-2	benzo(b)fluoranthene	U	1
207-08-9	benzo(k)fluoranthene	U	1
50-32-8	benzo(a)pyrene	U	1
193-39-5	indeno(1,2,3-cd)pyrene	U	1
53-70-3	dibenzo(a,h)anthracene	U	1
191-24-2	benzo(ghi)perylene	U	1
57-74-9	chlordane	U	10
8001-35-2	toxaphene	U	10
12674-11-2	PCB-1016	U	10
11104-28-2	PCB-1221	U	10
11141-16-5	PCB-1232	U	10
53469-21-9	PCB-1242	U	10
12672-29-6	PCB-1248	U	10
11097-69-1	PCB-1254	U	10
11096-82-5	PCB-1260	U	10

See footnotes on Page 4.

ANALYTICAL REPORT FOR SAMPLE No. EK 2078

EPA METHOD 8270, 3rd ED.
TARGET ANALYTE RESULTS

Field Sample ID B00GR7 Sponsor WESTINGHOUSE HANFORD COMPANY

Cas. No.	COMPOUND	RESULTS (ug/g)	DETECTION LIMITS (ug/g)
98-86-2	acetophenone	U	1
62-53-3	aniline	U	1
92-67-1	4-aminobiphenyl	U	1
65-85-0	benzoic acid	U	1
100-51-6	benzyl alcohol	U	1
319-84-6	.alpha.-BHC	U	1
58-89-9	.gamma.-BHC	U	1
106-47-8	4-chloroaniline	U	5
90-13-1	1-chloronaphthalene	U	1
224-42-0	dibenz(a,j)acridine	U	1
132-64-9	dibenzofuran	U	1
87-65-0	2,6-dichlorophenol	U	1
60-11-7	p-dimethylaminoazobenzene	U	1
57-97-6	7,12-dimethbenz(a)anthracene	U	1
122-09-8	a,a-dimethyphenethylamine	U	1
17082-12-1	1,2-diphenylhydrazine	U	1
53494-70-5	endrin ketone	U	1
62-50-0	ethyl methanesulfonate	U	1
72-43-5	methoxychlor	U	1
56-49-5	3-methylcholanthrene	U	1
66-27-3	ethyl methanesulfonate	U	1
91-57-6	2-methylnaphthalene	U	1
95-48-7	2-methylphenol	U	1
106-44-5	4-methylphenol	U	1
134-32-7	1-naphthylamine	U	1
131-07-2	2-naphthylamine	U	1
88-74-4	2-nitroaniline	U	5
99-09-2	3-nitroaniline	U	5
100-10-6	4-nitroaniline	U	5
924-16-3	n-nitroso-di-n-butylamine	U	1
100-75-4	n-nitrosopiperidine	U	1
608-93-5	pentachlorobenzene	U	1
589-82-4	pentachloronitrobenzene	U	1
62-44-2	phenacetin	U	1
109-06-8	2-picoline	U	1
23950-58-5	pronamide	U	1
95-94-3	1,2,4,5-tetrachlorobenzene	U	1
58-90-2	2,3,4,6-tetrachlorophenol	U	1
95-95-4	2,4,5-trichlorophenol	U	1

See footnotes on Page 4.

ANALYTICAL REPORT FOR SAMPLE No. EK 2078

NON-TARGET ANALYTE RESULTS
Additional Semi-Volatiles

Field Sample ID B00GR7

Cas. No	COMPOUND	Scan Number	Results ug/g	Footnotes
123-20-6	BUTANOIC ACID, ETHENYL ESTER	724	1.1	NE
----------	UNKNOWN OXYHYDROCARBON	737	1.5	NE

FOOTNOTES

- B The analyte was found in the method blank. The reported results have been adjusted for the quantity found in the blank.
- E The reported concentration is an estimate only. The response factor was assumed to be 1.000 relative to an internal standard.
- J Indicates an estimated concentration below the Method Detection Limit.
- K The isomer is unknown.
- N Analytical standards were not analyzed for this compound.
- U Not detected.
- W The identification is tentative or closely related to the compound.

ANALYTICAL REPORT FOR SAMPLE No. EK 2079

EPA METHOD 8270, 3rd ED.
TARGET ANALYTE RESULTS

Field Sample ID B00GR8 Sponsor WESTINGHOUSE HANFORD COMPANY

File ID LA4EK2079 Date Extracted 06/18/91 Date of Analysis 07/03/91

DataChem ID S91-0406GG

Cas. No	COMPOUND	RESULTS (ug/g)	DETECTION LIMITS (ug/g)
62-75-9	N-nitrosodimethylamine	U	1
108-95-2	phenol	U	1
111-44-4	bis(2-chloroethyl)ether	U	1
95-57-8	2-chlorophenol	U	1
541-73-1	1,3-dichlorobenzene	U	1
106-46-7	1,4-dichlorobenzene	U	1
95-50-1	1,2-dichlorobenzene	U	1
39638-329	bis(2-chloroisopropyl)ether	U	1
621-64-7	N-nitrosodi-n-propylamine	U	1
67-72-1	hexachloroethane	U	1
98-95-3	nitrobenzene	U	1
78-59-1	isophorone	U	1
88-75-5	2-nitrophenol	U	1
105-67-9	2,4-dimethylphenol	U	1
11-91-1	bis(2-chloroethoxy)methane	U	1
120-83-2	2,4-dichlorophenol	U	1
120-82-1	1,2,4-trichlorobenzene	U	1
91-20-3	naphthalene	U	1
87-68-3	hexachlorobutadiene	U	1
59-50-7	4-chloro-3-methylphenol	U	1
77-47-4	hexachlorocyclopentadiene	U	1
88-06-2	2,4,6-trichlorophenol	U	1
91-58-7	2-chloronaphthalene	U	1
131-11-3	dimethyl phthalate	U	1
606-20-2	2,6-dinitrotoluene	U	1
208-96-8	acenaphthylene	U	1
83-32-9	acenaphthene	U	1
51-28-5	2,4-dinitrophenol	U	1
100-02-7	4-nitrophenol	U	1
121-14-2	2,4-dinitrotoluene	U	1
84-66-2	diethyl phthalate	U	1
7005-73-3	4-chlorophenyl-phenylether	U	1
86-73-7	fluorene	U	1
534-52-1	2-methyl-4,6-dinitrophenol	U	1
86-30-6	N-nitrosodiphenylamine	U	1
101-55-3	4-bromophenyl-phenylether	U	1
118-74-1	hexachlorobenzene	U	1
319-85-7	beta-BHC	U	5
87-86-5	pentachlorophenol	U	1
85-01-8	phenanthrene	U	1
120-12-7	anthracene	U	1

ANALYTICAL REPORT FOR SAMPLE No. EK 2079

EPA METHOD 8270, 3rd ED.
TARGET ANALYTE RESULTS

Field Sample ID B00GR8 Sponsor WESTINGHOUSE HANFORD COMPANY

Cas. No.	COMPOUND	RESULTS (ug/g)	DETECTION LIMITS (ug/g)
319-86-8	delta-BHC	U	5
76-44-8	heptachlor	U	5
84-74-2	di-n-butyl phthalate	U	1
309-00-2	aldrin	U	5
1024-57-3	heptachlor epoxide	U	5
206-44-0	fluoranthene	U	1
129-00-0	pyrene	U	1
959-98-8	endosulfan I	U	5
75-55-9	4,4'DDE	U	5
92-87-5	benzidine	U	1
60-57-1	dieldrin	U	5
72-20-8	endrin	U	5
72-54-8	4,4'DDD	U	5
33213-65-9	endosulfan II	U	5
7421-93-4	endrin aldehyde	U	5
85-68-7	benzyl-butylphthalate	U	1
50-29-3	4,4'DDT	U	5
1031-07-8	endosulfan sulfate	U	5
117-81-7	bis(2-ethylhexyl)phthalate	U	1
56-55-3	benzo(a)anthracene	U	1
218-01-9	chrysene	U	1
91-94-1	3,3-dichlorobenzidine	U	1
117-84-0	di-n-octylphthalate	U	1
205-99-2	benzo(b)fluoranthene	U	1
207-08-9	benzo(k)fluoranthene	U	1
50-32-8	benzo(a)pyrene	U	1
193-39-5	indeno(1,2,3-cd)pyrene	U	1
53-70-3	dibenzo(a,h)anthracene	U	1
191-24-2	benzo(ghi)perylene	U	1
57-74-9	chlordane	U	10
8001-35-2	toxaphene	U	10
12674-11-2	PCB-1016	U	10
11104-28-2	PCB-1221	U	10
11141-16-5	PCB-1232	U	10
53469-21-9	PCB-1242	U	10
12672-29-6	PCB-1248	U	10
11097-69-1	PCB-1254	U	10
11096-82-5	PCB-1260	U	10

See footnotes on Page 4.

ANALYTICAL REPORT FOR SAMPLE No. EK 2079

EPA METHOD 8270, 3rd ED.
TARGET ANALYTE RESULTS

Field Sample ID B00GR8 Sponsor WESTINGHOUSE HANFORD COMPANY

Cas. No.	COMPOUND	RESULTS (ug/g)	DETECTION LIMITS (ug/g)
98-86-2	acetophenone	U	1
62-53-3	aniline	U	1
92-67-1	4-aminobiphenyl	U	1
65-85-0	benzoic acid	U	1
100-51-6	benzyl alcohol	U	1
319-84-6	.alpha.-BHC	U	1
58-89-9	.gamma.-BHC	U	1
106-47-8	4-chloroaniline	U	5
90-13-1	1-chloronaphthalene	U	1
224-42-0	dibenz(a,j)acridine	U	1
132-64-9	dibenzofuran	U	1
87-65-0	2,6-dichlorophenol	U	1
60-11-7	p-dimethylaminoazobenzene	U	1
57-97-6	7,12-dimethbenz(a)anthracene	U	1
122-09-8	a,a-dimethyphenethylamine	U	1
17082-12-1	1,2-diphenylhydrazine	U	1
53494-70-5	endrin ketone	U	1
62-50-0	ethyl methanesulfonate	U	1
72-43-5	methoxychlor	U	1
56-49-5	3-methylcholanthrene	U	1
66-27-3	ethyl methanesulfonate	U	1
91-57-6	2-methylnaphthalene	U	1
95-48-7	2-methylphenol	U	1
106-44-5	4-methylphenol	U	1
134-32-7	1-naphthylamine	U	1
131-07-2	2-naphthylamine	U	1
88-74-4	2-nitroaniline	U	5
99-09-2	3-nitroaniline	U	5
100-10-6	4-nitroaniline	U	5
924-16-3	n-nitroso-di-n-butylamine	U	1
100-75-4	n-nitrosopiperidine	U	1
608-93-5	pentachlorobenzene	U	1
589-82-4	pentachloronitrobenzene	U	1
62-44-2	phenacetin	U	1
109-06-8	2-picoline	U	1
23950-58-5	pronamide	U	1
95-94-3	1,2,4,5-tetrachlorobenzene	U	1
58-90-2	2,3,4,6-tetrachlorophenol	U	1
95-95-4	2,4,5-trichlorophenol	U	1

See footnotes on Page 4.

ANALYTICAL REPORT FOR SAMPLE No. EK 2079

NON-TARGET ANALYTE RESULTS
Additional Semi-Volatiles

Field Sample ID B00GR8

Cas. No	COMPOUND	Scan Number	Results ug/g	Footnotes
----------	UNKNOWN OXYHYDROCARBON	726	0.20	NE
----------	UNKNOWN OXYHYDROCARBON	738	0.40	NE

FOOTNOTES

B The analyte was found in the method blank. The reported results have been adjusted for the quantity found in the blank.
E The reported concentration is an estimate only. The response factor was assumed to be 1.000 relative to an internal standard.
J Indicates an estimated concentration below the Method Detection Limit.
K The isomer is unknown.
N Analytical standards were not analyzed for this compound.
U Not detected.
W The identification is tentative or closely related to the compound.

ANALYTICAL REPORT FOR SAMPLE No. EK 2080

EPA METHOD 8270, 3rd ED.
TARGET ANALYTE RESULTS

Field Sample ID B00GH7 Sponsor WESTINGHOUSE HANFORD COMPANY

File ID KZ11EK2080 Date Extracted 06/18/91 Date of Analysis 07/03/91

DataChem ID S91-0406GG

Cas. No	COMPOUND	RESULTS (ug/g)	DETECTION LIMITS (ug/g)
62-75-9	N-nitrosodimethylamine	U	1
108-95-2	phenol	U	1
111-44-4	bis(2-chloroethyl)ether	U	1
95-57-8	2-chlorophenol	U	1
541-73-1	1,3-dichlorobenzene	U	1
106-46-7	1,4-dichlorobenzene	U	1
95-50-1	1,2-dichlorobenzene	U	1
39638-329	bis(2-chloroisopropyl)ether	U	1
621-64-7	N-nitrosodi-n-propylamine	U	1
67-72-1	hexachloroethane	U	1
98-95-3	nitrobenzene	U	1
78-59-1	isophorone	U	1
88-75-5	2-nitrophenol	U	1
105-67-9	2,4-dimethylphenol	U	1
11-91-1	bis(2-chloroethoxy)methane	U	1
120-83-2	2,4-dichlorophenol	U	1
120-82-1	1,2,4-trichlorobenzene	U	1
91-20-3	naphthalene	U	1
87-68-3	hexachlorobutadiene	U	1
59-50-7	4-chloro-3-methylphenol	U	1
77-47-4	hexachlorocyclopentadiene	U	1
88-06-2	2,4,6-trichlorophenol	U	1
91-58-7	2-chloronaphthalene	U	1
131-11-3	dimethyl phthalate	U	1
606-20-2	2,6-dinitrotoluene	U	1
208-96-8	acenaphthylene	U	1
83-32-9	acenaphthene	U	1
51-28-5	2,4-dinitrophenol	U	1
100-02-7	4-nitrophenol	U	1
121-14-2	2,4-dinitrotoluene	U	1
84-66-2	diethyl phthalate	U	1
7005-73-3	4-chlorophenyl-phenylether	U	1
86-73-7	fluorene	U	1
534-52-1	2-methyl-4,6-dinitrophenol	U	1
86-30-6	N-nitrosodiphenylamine	U	1
101-55-3	4-bromophenyl-phenylether	U	1
118-74-1	hexachlorobenzene	U	1
319-85-7	beta-BHC	U	5
87-86-5	pentachlorophenol	U	1
85-01-8	phenanthrene	U	1
120-12-7	anthracene	U	1

ANALYTICAL REPORT FOR SAMPLE No. EK 2080

EPA METHOD 8270, 3rd ED.
TARGET ANALYTE RESULTS

Field Sample ID B00GH7 Sponsor WESTINGHOUSE HANFORD COMPANY

Cas. No.	COMPOUND	RESULTS (ug/g)	DETECTION LIMITS (ug/g)
319-86-8	delta-BHC	U	5
76-44-8	heptachlor	U	5
84-74-2	di-n-butyl phthalate	U	1
309-00-2	aldrin	U	5
1024-57-3	heptachlor epoxide	U	5
206-44-0	fluoranthene	U	1
129-00-0	pyrene	U	1
959-98-8	endosulfan I	U	5
75-55-9	4,4'DDE	U	5
92-87-5	benzidine	U	1
60-57-1	dieldrin	U	5
72-20-8	endrin	U	5
72-54-8	4,4'DDD	U	5
33213-65-9	endosulfan II	U	5
7421-93-4	endrin aldehyde	U	5
85-68-7	benzyl-butylphthalate	U	1
50-29-3	4,4'DDT	U	5
1031-07-8	endosulfan sulfate	U	5
117-81-7	bis(2-ethylhexyl)phthalate	U	1
56-55-3	benzo(a)anthracene	U	1
218-01-9	chrysene	U	1
91-94-1	3,3-dichlorobenzidine	U	1
117-84-0	di-n-octylphthalate	U	1
205-99-2	benzo(b)fluoranthene	U	1
207-08-9	benzo(k)fluoranthene	U	1
50-32-8	benzo(a)pyrene	U	1
193-39-5	indeno(1,2,3-cd)pyrene	U	1
53-70-3	dibenzo(a,h)anthracene	U	1
191-24-2	benzo(ghi)perylene	U	1
57-74-9	chlordane	U	10
8001-35-2	toxaphene	U	10
12674-11-2	PCB-1016	U	10
11104-28-2	PCB-1221	U	10
11141-16-5	PCB-1232	U	10
53469-21-9	PCB-1242	U	10
12672-29-6	PCB-1248	U	10
11097-69-1	PCB-1254	U	10
11096-82-5	PCB-1260	U	10

See footnotes on Page 4.

ANALYTICAL REPORT FOR SAMPLE No. EK 2080

EPA METHOD 8270, 3rd ED.
TARGET ANALYTE RESULTS

Field Sample ID B00GH7 Sponsor WESTINGHOUSE HANFORD COMPANY

Cas. No.	COMPOUND	RESULTS (ug/g)	DETECTION LIMITS (ug/g)
98-86-2	acetophenone	U	1
62-53-3	aniline	U	1
92-67-1	4-aminobiphenyl	U	1
65-85-0	benzoic acid	U	1
100-51-6	benzyl alcohol	U	1
319-84-6	.alpha.-BHC	U	1
58-89-9	.gamma.-BHC	U	1
106-47-8	4-chloroaniline	U	5
90-13-1	1-chloronaphthalene	U	1
224-42-0	dibenz(a,j)acridine	U	1
132-64-9	dibenzofuran	U	1
87-65-0	2,6-dichlorophenol	U	1
60-11-7	p-dimethylaminoazobenzene	U	1
57-97-6	7,12-dimethbenz(a)anthracene	U	1
122-09-8	a,a-dimethyphenethylamine	U	1
17082-12-1	1,2-diphenylhydrazine	U	1
53494-70-5	endrin ketone	U	1
62-50-0	ethyl methanesulfonate	U	1
72-43-5	methoxychlor	U	1
56-49-5	3-methylcholanthrene	U	1
66-27-3	ethyl methanesulfonate	U	1
91-57-6	2-methylnaphthalene	U	1
95-48-7	2-methylphenol	U	1
106-44-5	4-methylphenol	U	1
134-32-7	1-naphthylamine	U	1
131-07-2	2-naphthylamine	U	1
88-74-4	2-nitroaniline	U	5
99-09-2	3-nitroaniline	U	5
100-10-6	4-nitroaniline	U	5
924-16-3	n-nitroso-di-n-butylamine	U	1
100-75-4	n-nitrosopiperidine	U	1
608-93-5	pentachlorobenzene	U	1
589-82-4	pentachloronitrobenzene	U	1
62-44-2	phenacetin	U	1
109-06-8	2-picoline	U	1
23950-58-5	pronamide	U	1
95-94-3	1,2,4,5-tetrachlorobenzene	U	1
58-90-2	2,3,4,6-tetrachlorophenol	U	1
95-95-4	2,4,5-trichlorophenol	U	1

See footnotes on Page 4.

ANALYTICAL REPORT FOR SAMPLE No. EK 2080

NON-TARGET ANALYTE RESULTS
Additional Semi-Volatiles

Field Sample ID B00GH7

Cas. No	COMPOUND	Scan Number	Results ug/g	Footnotes
----------	UNKNOWN OXYHYDROCARBON	737	0.64	NE

FOOTNOTES

B The analyte was found in the method blank. The reported results have been adjusted for the quantity found in the blank.
E The reported concentration is an estimate only. The response factor was assumed to be 1.000 relative to an internal standard.
J Indicates an estimated concentration below the Method Detection Limit.
K The isomer is unknown.
N Analytical standards were not analyzed for this compound.
U Not detected.
W The identification is tentative or closely related to the compound.

ANALYTICAL REPORT FOR SAMPLE No. EK 2081

EPA METHOD 8270, 3rd ED.
TARGET ANALYTE RESULTS

Field Sample ID B00GH8 Sponsor WESTINGHOUSE HANFORD COMPANY

File ID LD21EK2081 Date Extracted 06/18/91 Date of Analysis 07/07/91

DataChem ID S91-0406GG

Cas. No	COMPOUND	RESULTS (ug/g)	DETECTION LIMITS (ug/g)
62-75-9	N-nitrosodimethylamine	U	1
108-95-2	phenol	U	1
111-44-4	bis(2-chloroethyl)ether	U	1
95-57-8	2-chlorophenol	U	1
541-73-1	1,3-dichlorobenzene	U	1
106-46-7	1,4-dichlorobenzene	U	1
95-50-1	1,2-dichlorobenzene	U	1
39638-329	bis(2-chloroisopropyl)ether	U	1
621-64-7	N-nitrosodi-n-propylamine	U	1
67-72-1	hexachloroethane	U	1
98-95-3	nitrobenzene	U	1
78-59-1	isophorone	U	1
88-75-5	2-nitrophenol	U	1
105-67-9	2,4-dimethylphenol	U	1
11-91-1	bis(2-chloroethoxy)methane	U	1
120-83-2	2,4-dichlorophenol	U	1
120-82-1	1,2,4-trichlorobenzene	U	1
91-20-3	naphthalene	U	1
87-68-3	hexachlorobutadiene	U	1
59-50-7	4-chloro-3-methylphenol	U	1
77-47-4	hexachlorocyclopentadiene	U	1
88-06-2	2,4,6-trichlorophenol	U	1
91-58-7	2-chloronaphthalene	U	1
131-11-3	dimethyl phthalate	U	1
606-20-2	2,6-dinitrotoluene	U	1
208-96-8	acenaphthylene	U	1
83-32-9	acenaphthene	U	1
51-28-5	2,4-dinitrophenol	U	1
100-02-7	4-nitrophenol	U	1
121-14-2	2,4-dinitrotoluene	U	1
84-66-2	diethyl phthalate	U	1
7005-73-3	4-chlorophenyl-phenylether	U	1
86-73-7	fluorene	U	1
534-52-1	2-methyl-4,6-dinitrophenol	U	1
86-30-6	N-nitrosodiphenylamine	U	1
101-55-3	4-bromophenyl-phenylether	U	1
118-74-1	hexachlorobenzene	U	1
319-85-7	beta-BHC	U	5
87-86-5	pentachlorophenol	U	1
85-01-8	phenanthrene	U	1
120-12-7	anthracene	U	1

ANALYTICAL REPORT FOR SAMPLE No. EK 2081

EPA METHOD 8270, 3rd ED.
TARGET ANALYTE RESULTS

Field Sample ID B00GH8 Sponsor WESTINGHOUSE HANFORD COMPANY

Cas. No.	COMPOUND	RESULTS (ug/g)	DETECTION LIMITS (ug/g)
319-86-8	delta-BHC	U	5
76-44-8	heptachlor	U	5
84-74-2	di-n-butyl phthalate	U	1
309-00-2	aldrin	U	5
1024-57-3	heptachlor epoxide	U	5
206-44-0	fluoranthene	U	1
129-00-0	pyrene	U	1
959-98-8	endosulfan I	U	5
75-55-9	4,4'DDE	U	5
92-87-5	benzidine	U	1
60-57-1	dieldrin	U	5
72-20-8	endrin	U	5
72-54-8	4,4'DDD	U	5
33213-65-9	endosulfan II	U	5
7421-93-4	endrin aldehyde	U	5
85-68-7	benzyl-butylphthalate	U	1
50-29-3	4,4'DDT	U	5
1031-07-8	endosulfan sulfate	U	5
117-81-7	bis(2-ethylhexyl)phthalate	U	1
56-55-3	benzo(a)anthracene	U	1
218-01-9	chrysene	U	1
91-94-1	3,3-dichlorobenzidine	U	1
117-84-0	di-n-octylphthalate	U	1
205-99-2	benzo(b)fluoranthene	U	1
207-08-9	benzo(k)fluoranthene	U	1
50-32-8	benzo(a)pyrene	U	1
193-39-5	indeno(1,2,3-cd)pyrene	U	1
53-70-3	dibenzo(a,h)anthracene	U	1
191-24-2	benzo(ghi)perylene	U	1
57-74-9	chlordane	U	10
8001-35-2	toxaphene	U	10
12674-11-2	PCB-1016	U	10
11104-28-2	PCB-1221	U	10
11141-16-5	PCB-1232	U	10
53469-21-9	PCB-1242	U	10
12672-29-6	PCB-1248	U	10
11097-69-1	PCB-1254	U	10
11096-82-5	PCB-1260	U	10

See footnotes on Page 4.

ANALYTICAL REPORT FOR SAMPLE No. EK 2081

EPA METHOD 8270, 3rd ED.
TARGET ANALYTE RESULTS

Field Sample ID B00GH8 Sponsor WESTINGHOUSE HANFORD COMPANY

Cas. No.	COMPOUND	RESULTS (ug/g)	DETECTION LIMITS (ug/g)
98-86-2	acetophenone	U	1
62-53-3	aniline	U	1
92-67-1	4-aminobiphenyl	U	1
65-85-0	benzoic acid	U	1
100-51-6	benzyl alcohol	0.19 J	1
319-84-6	.alpha.-BHC	U	1
58-89-9	.gamma.-BHC	U	1
106-47-8	4-chloroaniline	U	5
90-13-1	1-chloronaphthalene	U	1
224-42-0	dibenz(a,j)acridine	U	1
132-64-9	dibenzofuran	U	1
87-65-0	2,6-dichlorophenol	U	1
60-11-7	p-dimethylaminoazobenzene	U	1
57-97-6	7,12-dimethbenz(a)anthracene	U	1
122-09-8	a,a-dimethyphenethylamine	U	1
17082-12-1	1,2-diphenylhydrazine	U	1
53494-70-5	endrin ketone	U	1
62-50-0	ethyl methanesulfonate	U	1
72-43-5	methoxychlor	U	1
56-49-5	3-methylcholanthrene	U	1
66-27-3	ethyl methanesulfonate	U	1
91-57-6	2-methylnaphthalene	U	1
95-48-7	2-methylphenol	U	1
106-44-5	4-methylphenol	U	1
134-32-7	1-naphthylamine	U	1
131-07-2	2-naphthylamine	U	1
88-74-4	2-nitroaniline	U	5
99-09-2	3-nitroaniline	U	5
100-10-6	4-nitroaniline	U	5
924-16-3	n-nitroso-di-n-butylamine	U	1
100-75-4	n-nitrosopiperidine	U	1
608-93-5	pentachlorobenzene	U	1
589-82-4	pentachloronitrobenzene	U	1
62-44-2	phenacetin	U	1
109-06-8	2-picoline	U	1
23950-58-5	pronamide	U	1
95-94-3	1,2,4,5-tetrachlorobenzene	U	1
58-90-2	2,3,4,6-tetrachlorophenol	U	1
95-95-4	2,4,5-trichlorophenol	U	1

See footnotes on Page 4.

ANALYTICAL REPORT FOR SAMPLE No. EK 2081

NON-TARGET ANALYTE RESULTS
Additional Semi-Volatiles

Field Sample ID B00GH8

Cas. No	COMPOUND	Scan Number	Results ug/g	Footnotes
----------	UNKNOWN ACID, @C16	1498	1.4	NE
----------	AROMATIC KETONE, MW=270	1793	6.3	NE
----------	ALKANE, @C25	1813	3.4	NE
----------	AROMATIC KETONE, MW=256	1837	2.0	NE
----------	UNKNOWN ALKYL BENZENE	1914	1.6	NE
593-49-7	HEPTACOSANE	1936	7.1	NE
----------	POLYCYCLIC OXYHYDROCARBON	2047	4.4	NE
----------	ALKANE, @C29	2108	6.7	NE
----------	UNKNOWN LONG-CHAIN HYDROCARBON	2365	1.1	NE
----------	POLYCYCLIC HYDROCARBON	2871	1.9	NE

FOOTNOTES

B The analyte was found in the method blank. The reported results have been adjusted for the quantity found in the blank.

E The reported concentration is an estimate only. The response factor was assumed to be 1.000 relative to an internal standard.

J Indicates an estimated concentration below the Method Detection Limit.

K The isomer is unknown.

N Analytical standards were not analyzed for this compound.

U Not detected.

W The identification is tentative or closely related to the compound.

SURROGATE PERCENT RECOVERY SUMMARY

DataChem ID S91-0406GG

Sample No.	NB	FBP	TP	PH	FP	TBP
MB	94	83	133	82	59	44
EK 2062	80	81	118	68	59	61
EK 2063	88	87	212	65	37	21
EK 2064	61	67	160	56	41	41
EK 2065	63	68	193	59	38	37
EK 2066	90	84	191	85	67	52
EK 2067	74	82	176	76	68	93
EK 2068	61	83	160	73	61	85
EK 2069	78	73	155	74	61	85
EK 2070	97	84	187	106	83	81
EK 2071	71	79	178	80	59	87
EK 2072	81	70	197	73	61	77
EK 2073	66	68	125	63	55	88
EK 2074	88	82	194	94	84	84

Abbreviations

NB	d5-nitrobenzene
FBP	2-fluorobiphenyl
TP	d14-terphenyl
PH	d5-phenol
FP	2-fluorophenol
TBP	2,4,6-tribromophenol

MB is the abbreviation for method blank. If more than one method blank was analyzed they will be designated MB-1, MB-2, etc.

SURROGATE PERCENT RECOVERY SUMMARY

DataChem ID S91-0406GG

Sample No.	NB	FBP	TP	PH	FP	TBP
EK 2075	105	104	161	105	95	104
EK 2076	93	89	137	89	84	84
EK 2077	110	87	221	98	86	84
EK 2078	84	76	189	81	65	93
EK 2079	54	58	239	52	37	49
EK 2080	109	79	115	105	93	64
EK 2081	88	90	141	89	83	84
EK 81MS	90	90	147	85	81	83
EK 81MD	90	90	150	87	81	78

Abbreviations

NB d5-nitrobenzene
FBP 2-fluorobiphenyl
TP d14-terphenyl
PH d5-phenol
FP 2-fluorophenol
TBP 2,4,6-tribromophenol

MB is the abbreviation for method blank. If more than one method blank was analyzed they will be designated MB-1, MB-2, etc.

MATRIX SPIKE AND DUPLICATE RECOVERY REPORT

Sponsor WESTINGHOUSE HANFORD COMPANY

Date of Analysis 07/07/91 Date Received 06/17/91

DataChem ID for Matrix Spike Analysis EK 2081

DataChem SET ID S91-0406GG

COMPOUND	PERCENT RECOVERY MATRIX SPIKE	PERCENT RECOVERY MATRIX SPIKE DUPLICATE
phenol	72	75
2-chlorophenol	72	73
1,4-dichlorobenzene	71	72
n-nitroso-di-n-propylamine	79	79
1,2,4-trichlorobenzene	82	81
4-chloro-3-methylphenol	80	79
acenaphthene	91	90
4-nitrophenol	105	108
2,4-dinitrotoluene	94	91
pentachlorophenol	79	82
pyrene	127	136

9513319.2027

ANALYTICAL REPORT

DATA CHEM LABORATORIES

Form ARF-AL
Page 1 of 4
Part 1 of 3

Date 7/23/91
Agency Identification Number S91-0406-CG
Account No. 3534C

Westinghouse Hanford Company
2355 Stevens Drive
MSIN T6-08
Richland,, WA 99352
Attention: Jeanette Duncan

AUG 1991 RECEIVED OSM DMO

FAX (509) 373-3992
Telephone (509) 373-3225

Sampling Collection and Shipment

Sampling Site 2101-M Date of Collection June 11, 1991

Date Samples Received at DataChem June 17, 1991

Analysis

Method of Analysis EPA 8140

Date(s) of Analysis July 15, 1991

Analytical Results

Field Sample Number	Detached Lab Number	Sample Type	Azinphos Methyl UG/mL GC/FPD	Bolstar UG/mL GC/FPD	Chlorpyrifos UG/mL GC/FPD	Coumaphos UG/mL GC/FPD	Demeton-O UG/mL GC/FPD	Demeton-S UG/mL GC/FPD	Diazinon UG/mL GC/FPD	Dichlorvos UG/mL GC/FPD
BOOG Q9	EK 2070	SOIL	ND* UJ	ND* UJ	ND* UJ	ND* UJ	ND* UJ	ND* UJ	ND* UJ	ND* UJ
BOOG R1	EK 2071	SOIL	ND* UJ	ND* UJ	ND* UJ	ND* UJ	ND* UJ	ND* UJ	ND* UJ	ND* UJ
M.S.	EK 2082	SOIL	3.4	ND*	ND*	ND*	ND*	ND*	ND*	ND*
M.S.D.	EK 2083	SOIL	3.6	ND*	ND*	ND*	ND*	ND*	ND*	ND*
Limit of Detection			0.2	0.2	0.2	0.4	0.2	0.2	0.2	0.2

JL 11/21/92

† See comment on last page.
ND Parameter not detected.
NR Parameter not requested.

** See comment on last page.
( ) Parameter between LOD and LOQ.

Thomas L. Tucker II
Analyst: Thomas L. Tucker II

Terry P. Vayo
Reviewer:

Terry P. Vayo for JMR
Laboratory Supervisor: John M. Reynolds

960 West LeVoy Drive / Salt Lake City, Utah 84123-2547 / (801) 266-7700
A Sorenson Company

DATA CHEM LABORATORIES

ANALYTICAL REPORT

Date 7/23/91
Agency Identification Number S91-0406-CG
Account No. 3534C

Westinghouse Hanford Company
2355 Stevens Drive
MSIN T6-08
Richland,, WA 99352
Attention: Jeanette Duncan

FAX (509) 373-3992
Telephone (509) 373-3225

Sampling Collection and Shipment

Sampling Site 2101-M Date of Collection June 11, 1991

Date Samples Received at DataChem June 17, 1991

Analysis

Method of Analysis EPA 8140

Date(s) of Analysis July 15, 1991

Analytical Results

			Disulfoton UG/ML GC/FPD	Ethoprop UG/ML GC/FPD	Fensulfothion UG/ML GC/FPD	Fenthion UG/ML GC/FPD	Merphos UG/ML GC/FPD	Mevinphos UG/ML GC/FPD	Naled UG/ML GC/FPD	Parathion Methyl UG/ML GC/FPD	
BOOG Q9	EK 2070	SOIL	ND* UJ	ND* UJ	ND* UJ	ND* UJ	ND* UJ	ND* UJ	ND* UJ	ND* UJ	
BOOG R1	EK 2071	SOIL	ND* UJ	ND* UJ	ND* UJ	ND* UJ	ND* UJ	ND* UJ	ND* UJ	ND* UJ	
M.S.	EK 2082	SOIL	ND*	ND*	3.4	3.9	ND*	ND*	ND*	ND*	
M.S.D.	EK 2083	SOIL	ND*	ND*	3.7	4.0	ND*	ND*	ND*	ND*	

JJ 11/21/91

* See comment on last page.
ND Parameter not detected.
NR Parameter not requested.
** See comment on last page.
( ) Parameter between LOD and LOQ.

9513319.2028

DATA CHEM LABORATORIES

ANALYTICAL REPORT

Form ARF-AL
Page 3 of 4
Part 3 of 3

Date 7/23/91
Agency Identification Number S91-0406-CG
Account No. 3534C

Westinghouse Hanford Company
2355 Stevens Drive
MSIN T6-08
Richland,, WA 99352
Attention: Jeanette Duncan

FAX (509) 373-3992
Telephone (509) 373-3225

Sampling Collection and Shipment

Sampling Site 2101-M Date of Collection June 11, 1991

Date Samples Received at DataChem June 17, 1991

Analysis

Method of Analysis EPA 8140

Date(s) of Analysis July 15, 1991

Analytical Results

[illegible]	[illegible]	[illegible]	Phorate UG/ML GC/FPD	Monnel UG/ML GC/FPD	Stirophos UG/ML GC/FPD	Tokuthion UG/ML GC/FPD	Trichloronate UG/ML GC/FPD				
B00G Q9	EK 2070	SOIL	ND* UJ	ND* UJ	ND* UJ	ND* UJ	ND* UJ				
B00G R1	EK 2071	SOIL	ND* UJ	ND* UJ	ND* UJ	ND* UJ	ND* UJ				
M.S.	EK 2082	SOIL	5.8	ND*	ND*	ND*	ND*				
M.S.D.	EK 2083	SOIL	6.0	ND*	ND*	ND*	ND*				
[illegible]											

11/21/92

* See comment on last page.
ND Parameter not detected.
NR Parameter not requested.

** See comment on last page.
( ) Parameter between LOD and Loq.

DATA CHEM LABORATORIES

ANALYTICAL REPORT

Date 7/23/91
Agency Identification Number S91-0406-CG

General Set Comments

As there were no positive hits in the samples and the target for the matrix spikes was done in ug/mL, the samples have been reported in ug/mL instead of ug/G. Matrix spike recoveries for 10ug/mL spikes for dichlorvos, fenthion, fensulfothion, guthion, and phorate were as follows: dichlorvos; not recovered, may not have been added to spiking solution; fenthion, 39% for MS and 40% for MSD; fensulfothion, 34% for MS and 37% for MSD; guthion, 34% for MS and 36% for MSD; phorate, 58% for MS and 60% for MSD. The LOD correction factor for ug/G from ug/mL was .33333 giving LODs of .07ug/G, .13ug/G, and .33ug/G respectively

960 West LeVoy Drive / Salt Lake City, Utah 84123-2547 / (801) 266-7700
A Sorenson Company

9513319.2029

DATA CHEM LABORATORIES

ANALYTICAL REPORT

Form ARF-AL
Page 1 of 3
Part 1 of 2

Date 7/23/91
Agency Identification Number S91-0406-DG
Account No. 3534C

Westinghouse Hanford Company
2355 Stevens Drive
MSIN T6-08
Richland,, WA 99352
Attention: Jeanette Duncan

FAX (509) 373-3992
Telephone (509) 373-3225

AUG 1991 RECEIVED OSM DMO

Sampling Collection and Shipment

Sampling Site 2101-M Date of Collection June 11, 1991

Date Samples Received at DataChem June 17, 1991

Analysis

Method of Analysis 8150

Date(s) of Analysis June 01, 1991

Analytical Results

[redacted]	[redacted]	[redacted]	2,4-D UG/GRAM	2,4-DB UG/GRAM	2,4,5-T UG/GRAM	2,4,5-TP (Silvex) UG/GRAM	Dalapon UG/GRAM	Dicamba UG/GRAM	Dichloroprop UG/GRAM	Dinoseb UG/GRAM	
BOOG Q9	EK 2070	SOIL	ND*	ND*	ND*	ND*	ND*	ND*	ND*	ND*	
BOOG R1	EK 2071	SOIL	ND*	ND*	ND*	ND*	ND*	ND*	ND*	ND*	
BOOG R1 MS	EK 2071 MS	SOIL	.89	ND*	.38	.36	ND*	ND*	ND*	ND*	
BOOG R1 MSD	EK 2071 MSD	SOIL	1.1	ND*	.48	.44	ND*	ND*	ND*	ND*	
[redacted]			[redacted]	[redacted]	[redacted]	[redacted]	[redacted]	[redacted]	[redacted]	[redacted]	

* See comment on last page.
ND Parameter not detected.
NR Parameter not requested.

** See comment on last page.
( ) Parameter between LOD and LOQ.

Analyst: Harold Glade

Reviewer: Kristine M. Kolenz

Laboratory Supervisor: John M. Reynolds

960 West LeVoy Drive / Salt Lake City, Utah 84123-2547 / (801) 266-7700
A Sorenson Company

DATA CHEM LABORATORIES

ANALYTICAL REPORT

Form ARF-AL
Page 2 of 3
Part 2 of 2

Date 7/23/91
Agency Identification Number S91-0406-DG
Account No. 3534C

Westinghouse Hanford Company
2355 Stevens Drive
MSIN T6-08
Richland,, WA 99352
Attention: Jeanette Duncan

FAX (509) 373-3992
Telephone (509) 373-3225

Sampling Collection and Shipment

Sampling Site 2101-M Date of Collection June 11, 1991

Date Samples Received at DataChem June 17, 1991

Analysis

Method of Analysis 8150

Date(s) of Analysis June 01, 1991

Analytical Results

			MCPA UG/GRAM	MCPP UG/GRAM						
B00G Q9	EK 2070	SOIL	ND*	ND*						
B00G R1	EK 2071	SOIL	ND*	ND*						
B00G R1 MS	EK 2071 MS	SOIL	ND*	ND*						
B00G R1 MSD	EK 2071 MSD	SOIL	ND*	ND*						

* See comment on last page.
ND Parameter not detected.
NR Parameter not requested.
** See comment on last page.
( ) Parameter between LOD and LOQ.

D3-156

DATA CHEM LABORATORIES

ANALYTICAL REPORT

Date 7/23/91
Agency Identification Number S91-0406-DG

General Set Comments

MATRIX SPIKE AND MATRIX SPIKE DUPLICATE RECOVERIES WERE AS FOLLOWS:

EK 2071MS- 2,4-D 89%; 2,4,5-TP 72%; 2,4,5-T 76%.

EK 2072MSD- 2,4-D 108%; 2,4,5-TP 88%; 2,4,5-T 96%.

DATA CHEM LABORATORIES

ANALYTICAL REPORT

Form ARF-AL
Page 1 of 5
Part 1 of 4

Date 7/16/91
Agency Identification Number S91-0406-EG
Account No. 3534C

Westinghouse Hanford Corporation
P.O. Box 1970
M/S T607
Richland, WA 99352
Attention: Ron Mitchell

FAX (509) 376-6476
Telephone (509) 376-5122

AUG 1991 RECEIVED DATA RECEIPT

Sampling Collection and Shipment

Sampling Site 2101-M Date of Collection June 11, 1991

Date Samples Received at DataChem June 17, 1991

Analysis

Method of Analysis 8080

Date(s) of Analysis June 26, 1991

Analytical Results

[redacted]	[redacted]	[redacted]	Aldrin ug/g	alpha-BHC ug/g	Beta-BHC ug/g	Delta-BHC ug/g	Lindane ug/g	Chlordane ug/g	4,4'-DDD ug/g	4,4'-DDE ug/g
BOOG Q9	EK 2070	SOIL	ND*	ND*	ND*	ND*	ND*	ND*	ND*	ND*
BOOG R1	EK 2071	SOIL	ND*	ND*	ND*	ND*	ND*	ND*	ND*	ND*
M.S.	EK 2082	SOIL	0.019	ND*	ND*	ND*	0.021	ND*	ND*	ND*
M.S.D.	EK 2083	SOIL	0.020	ND*	ND*	ND*	0.022	ND*	ND*	ND*
[redacted]										

* See comment on last page.
ND Parameter not detected.
NR Parameter not requested.

** See comment on last page.
( ) Parameter between LOD and LOQ.

Analyst: Karin James

Reviewer: Kristine M. Kelenz

Laboratory Supervisor: John M. Reynolds For

960 West LeVoy Drive / Salt Lake City, Utah 84123-2547 / (801) 266-7700
A Sorenson Company

DATA CHEM LABORATORIES

9513319.2034

ANALYTICAL REPORT

Date 7/16/91
Agency Identification Number S91-0406-EG
Account No. 3534C

Westinghouse Hanford Corporation
P.O. Box 1970
M/S T607
Richland, WA 99352
Attention: Ron Mitchell

FAX (509) 376-6476
Telephone (509) 376-5122

Sampling Collection and Shipment

Sampling Site 2101-M Date of Collection June 11, 1991

Date Samples Received at DataChem June 17, 1991

Analysis

Method of Analysis 8080

Date(s) of Analysis June 26, 1991

Analytical Results

[illegible]	[illegible]	[illegible]	4,4'-DDT ug/g	Dieldrin ug/g	Endosulfan I ug/g	Endosulfan II ug/g	Endosulfan Sulfate ug/g	Endrin ug/g	Endrin aldehyde ug/g	Heptachlor ug/g
BOOG Q9	EK 2070	SOIL	ND*	ND*	ND*	ND*	ND*	ND*	ND*	ND*
BOOG R1	EK 2071	SOIL	ND*	ND*	ND*	ND*	ND*	ND*	ND*	ND*
M.S.	EK 2082	SOIL	0.015	0.050	ND*	ND*	ND*	0.056	ND*	0.013
M.S.D.	EK 2083	SOIL	0.014	0.053	ND*	ND*	ND*	0.057	ND*	0.014
[illegible]	[illegible]	[illegible]	[illegible]	[illegible]	[illegible]	[illegible]	[illegible]	[illegible]	[illegible]	[illegible]

* See comment on last page.
ND Parameter not detected.
NR Parameter not requested.

** See comment on last page.
( ) Parameter between LOD and LOQ.

DATA CHEM LABORATORIES

ANALYTICAL REPORT

Date 7/16/91
Agency Identification Number S91-0406-PG
Account No. 3534C

Westinghouse Hanford Corporation
P.O. Box 1970
M/S T607
Richland, WA 99352
Attention: Ron Mitchell

FAX (509) 376-6476
Telephone (509) 376-5122

Sampling Collection and Shipment

Sampling Site 2101-M Date of Collection June 11, 1991

Date Samples Received at DataChem June 17, 1991

Analysis

Method of Analysis 8080

Date(s) of Analysis June 26, 1991

Analytical Results

[illegible]	[illegible]	[illegible]	Heptachlor epoxide ug/g	Toxaphene ug/g	Aroclor 1016 ug/g	Aroclor 1221 ug/g	Aroclor 1232 ug/g	Aroclor 1242 ug/g	Aroclor 1248 ug/g	Aroclor 1254 ug/g	
BOOG Q9	EK 2070	SOIL	ND*	ND*	ND*	ND*	ND*	ND*	ND*	1.1	
BOOG R1	EK 2071	SOIL	ND*	ND*	ND*	ND*	ND*	ND*	ND*	ND*	
M.S.	EK 2082	SOIL	ND*	ND*	ND*	ND*	ND*	ND*	ND*	ND*	
M.S.D.	EK 2083	SOIL	ND*	ND*	ND*	ND*	ND*	ND*	ND*	ND*	
[illegible]			[illegible]	[illegible]	[illegible]	[illegible]	[illegible]	[illegible]	[illegible]	[illegible]	

* See comment on last page.
ND Parameter not detected.
NR Parameter not requested.
** See comment on last page.
( ) Parameter between LOD and LOQ.

DATA CHEM LABORATORIES

9513319.2032

ANALYTICAL REPORT

Form ARF-AL
Page 4 of 5
Part 4 of 4

Date 7/16/91
Agency Identification Number S91-0406-EG
Account No. 3534C

Westinghouse Hanford Corporation
P.O. Box 1970
M/S T607
Richland, WA 99352
Attention: Ron Mitchell

FAX (509) 376-6476
Telephone (509) 376-5122

Sampling Collection and Shipment

Sampling Site 2101-M Date of Collection June 11, 1991

Date Samples Received at DataChem June 17, 1991

Analysis

Method of Analysis 8080

Date(s) of Analysis June 26, 1991

Analytical Results

[illegible]	[illegible]	[illegible]	Aroclor 1260 ug/g	Methoxychlor ug/g						
BOOG Q9	EK 2070	SOIL	ND*	ND*						
BOOG R1	EK 2071	SOIL	ND*	ND*						
M.S.	EK 2082	SOIL	ND*	ND*						
M.S.D.	EK 2083	SOIL	ND*	ND*						
[illegible]			[illegible]	[illegible]						

† See comment on last page.
ND Parameter not detected.
NR Parameter not requested.
** See comment on last page.
( ) Parameter between LOD and LOQ.

960 West LeVoy Drive / Salt Lake City, Utah 84123-2547 / (801) 266-7700
A Sorenson Company
D3-161

DATA CHEM LABORATORIES

ANALYTICAL REPORT

Date 7/16/91
Agency Identification Number S91-0406-EG

General Set Comments

As the samples were very dirty, it was necessary to perform a 1:10 dilution prior to analysis. The LODs reflect this dilution.

Spike Recoveries:	Method Check	M.S. (EK 2082)	M.S.D. (EK 2083)
Lindane	110%	79%	83%
Heptachlor	92%	50%	51%
Aldrin	103%	70%	74%
Dieldrin	88%	76%	79%
Endrin	96%	85%	86%
4,4'-DDT	78%	22%*	20%*

*Due to matrix interference.

9513319.2033

DATA CHEM LABORATORIES

ENVIRONMENTAL SOIL REPORT

Date 7/5/91
Agency Identification Number S91-0406-AG
Account No. 3534C

AUG 1991 RECEIVED DATA RECEIPT

Westinghouse Hanford Corporation
P.O. Box 1970
M/S T607
Richland, WA 99352
Attention: Ron Mitchell

Telephone (509) 376-5122

Sampling Collection and Shipment

Sampling Site 2101-M Date of Collection June 11, 1991

Date Samples Received at DataChem June 17, 1991

Analytical Results

[redacted]	BOOG P9 EK 2062	BOOG Q1 EK 2063	BOOG Q2 EK 2064	BOOG Q3 EK 2065	BOOG Q4 EK 2066	BOOG Q6 EK 2067	BOOG Q7 EK 2068	BOOG Q8 EK 2069
Aluminum (Al) 06/27/1991 6010 [1] 3050 [1] µg/g	8400	5600	8600	7000	8600	8300	9100	7700
Antimony (Sb) 06/27/1991 6010 [1] 3050 [1] µg/g	ND* R	ND* R	ND* R	ND* R	ND* R	ND* R	ND* R	ND* R
Arsenic (As) 06/24/1991 7060 [1] 3050 [1] µg/g	NR	NR	NR	NR	NR	NR	NR	NR
Barium (Ba) 06/27/1991 6010 [1] 3050 [1] µg/g	52.	82.	47.	54.	110	80.	81.	88.
Beryllium (Be) 06/27/1991 6010 [1] 3050 [1] µg/g	0.5	0.5	0.5	0.5	0.5	0.4	0.5	0.5
Cadmium (Cd) 06/27/1991 6010 [1] 3050 [1] µg/g	0.5	0.7	0.5	0.7	ND*	ND*	1.6	0.7
Calcium (Ca) 06/27/1991 6010 [1] 3050 [1] µg/g	3300	4300	3000	3800	3800	3800	3900	4100
Chromium (Cr) 06/27/1991 6010 [1] 3050 [1] µg/g	9.8	5.0	11.	8.2	8.8	9.9	16.	9.9

11/21/9

† See comment on last page.
ND Parameter not detected.
NR Parameter not requested.
[1] Analyses completed on or before this date.

** Parameter not analyzed (See comment page).
( ) Parameter between LOD and LOQ.
R] Method Reference (See comments page.)

Analyst: Sean R. Schmidt

Reviewer: Brent L. Stephens

Laboratory Supervisor: Michael P. Beesley

960 West LeVoy Drive / Salt Lake City, Utah 84123-2547 / (801) 266-7700
A Sorenson Company

DATA CHEM LABORATORIES

ENVIRONMENTAL SOIL REPORT

Date 7/5/91
Agency Identification Number S91-0406-AG
Account No. 3534C

Analytical Results

[redacted]	BOOG P9 EK 2062	BOOG Q1 EK 2063	BOOG Q2 EK 2064	BOOG Q3 EK 2065	BOOG Q4 EK 2066	BOOG Q6 EK 2067	BOOG Q7 EK 2068	BOOG Q8 EK 2069
Cobalt (Co) 06/27/1991 6010 [1] 3050 [1] µg/g	10.	14.	9.	12.	14.	11.	9.	9.
Copper (Cu) 06/27/1991 6010 [1] 3050 [1] µg/g	1900	54.	1600	600	18.	12.	1800	570
Iron (Fe) 06/27/1991 6010 [1] 3050 [1] µg/g	23000	26000	21000	29000	27000	21000	20000	19000
Lead (Pb) 06/24/1991 7421 [1] 3050 [1] µg/g	NR	NR	NR	NR	NR	NR	NR	NR
Lithium (Li) 06/27/1991 6010 [1] 3050 [1] µg/g	ND*	ND*	ND*	ND*	ND*	ND*	ND*	ND*
Magnesium (Mg) 06/27/1991 6010 [1] 3050 [1] µg/g	4100	4000	4300	3600	4600	4400	4000	3800
Manganese (Mn) 06/27/1991 6010 [1] 3050 [1] µg/g	200	380	170	200	470	350	170	170
Molybdenum (Mo) 06/27/1991 6010 [1] 3050 [1] µg/g	ND*	ND*	ND*	ND*	ND*	ND*	ND*	ND*
Nickel (Ni) 06/27/1991 6010 [1] 3050 [1] µg/g	11.	7.	13.	9.	12.	11.	15.	10.
Phosphorus (P) 06/27/1991 6010 [1] 3050 [1] µg/g	830	940	740	970	770	690	670	640
Potassium 06/27/1991 6010 [1] 3050 [1] µg/g	1200	700	1200	700	1000	1500	1300	1100
Selenium (Se) 06/24/1991 7740 [1] 3050 [1] µg/g	NR	NR	NR	NR	NR	NR	NR	NR
Silver (Ag) 06/27/1991 6010 [1] 3050 [1] µg/g	5.1	0.7	6.3	5.3	ND*	ND*	32.	9.1
Sodium (Na) 06/27/1991 6010 [1] 3050 [1] µg/g	ND*	400	ND*	ND*	ND*	400	ND*	ND*
Strontium (Sr) 06/27/1991 6010 [1] 3050 [1] µg/g	17.	14.	16.	16.	18.	21.	20.	18.

† See comment on last page.
ND Parameter not detected.
NR Parameter not requested.
* Analyses completed on or before this date.
** Parameter not analyzed (See comments page).
( ) Parameter between LOD and LOQ.
[ ] Method Reference (See comments page).

960 West LeVoy Drive / Salt Lake City, Utah 84123-2547 / (801) 266-7700
A Sorenson Company

9513319.2034

DATA CHEM LABORATORIES

ENVIRONMENTAL SOIL REPORT

Date 7/5/91
Agency Identification Number S91-0406-AG
Account No. 3534C

Analytical Results

[redacted]	BOOG P9 EK 2062	BOOG Q1 EK 2063	BOOG Q2 EK 2064	BOOG Q3 EK 2065	BOOG Q4 EK 2066	BOOG Q6 EK 2067	BOOG Q7 EK 2068	BOOG Q8 EK 2069
Thallium (Tl) 06/24/1991 7841 [1] 3050 [1] µg/g	NR	NR	NR	NR	NR	NR	NR	NR
Vanadium (V) 06/24/1991 6010 [1] 3050 [1] µg/g	53.	74.	51.	74.	67.	53.	42.	43.
Zinc (Zn) 06/24/1991 6010 [1] 3050 [1] µg/g	260	170	300	260	120	67.	360	160
Mercury (Hg) 06/25/1991 7471 [1] µg/g	NR	NR	NR	NR	NR	NR	NR	NR

† See comment on last page.
ND Parameter not detected.
NR Parameter not requested.
‡ Analyses completed on or before this date.

** Parameter not analyzed (See comments page).
( ) Parameter between LOD and LOQ.
[ ] Method Reference (See comments page).

960 West LeVoy Drive / Salt Lake City, Utah 84123-2547 / (801) 266-7700
A Sorenson Company

DATA CHEM LABORATORIES

ENVIRONMENTAL SOIL REPORT

Date 7/5/91
Agency Identification Number S91-0406-AG
Account No. 3534C

Westinghouse Hanford Corporation
P.O. Box 1970
M/S T607
Richland, WA 99352
Attention: Ron Mitchell

Telephone (509) 376-5122

Sampling Collection and Shipment

Sampling Site 2101-M Date of Collection June 11, 1991

Date Samples Received at DataChem June 17, 1991

Analytical Results

[illegible]	[illegible]	BOOG Q9 EK 2070	BOOG R1 EK 2071	BOOG R2 EK 2072	BOOG R3 EK 2073	BOOG R0 EK 2074	BOOG R4 EK 2075	BOOG R5 EK 2076	BOOG R6 EK 2077
Aluminum (Al) 06/27/1991 6010 [1] 3050 [1]	µg/g	12000	9100	5200	6200	6800	5500	5700	6400
Antimony (Sb) 06/27/1991 6010 [1] 3050 [1]	µg/g	~~ND*~~ R	~~ND*~~ R	~~ND*~~ R	~~ND*~~ R	~~ND*~~ R	~~ND*~~ R	~~ND*~~ R	~~ND*~~ R
Arsenic (As) 06/24/1991 7060 [1] 3050 [1]	µg/g	4. J	3. J	**	**	**	**	**	**
Barium (Ba) 06/27/1991 6010 [1] 3050 [1]	µg/g	110	130	41.	92.	61.	53.	81.	83.
Beryllium (Be) 06/27/1991 6010 [1] 3050 [1]	µg/g	0.6	0.5	0.3	0.5	0.4	ND*	0.4	0.5
Cadmium (Cd) 06/27/1991 6010 [1] 3050 [1]	µg/g	2.7	0.5	0.8	ND*	0.3	ND*	ND*	ND*
Calcium (Ca) 06/27/1991 6010 [1] 3050 [1]	µg/g	3500	3800	1900	4700	2700	2300	3600	4200
Chromium (Cr) 06/27/1991 6010 [1] 3050 [1]	µg/g	17.	11.	9.8	7.0	8.7	6.9	6.0	7.3

JF 11/21/9

† See comment on last page.
ND Parameter not detected.
NR Parameter not requested.
1 Analyses completed on or before this date.

** Parameter not analyzed (See comment page).
( ) Parameter between LOD and LOQ.
[ ] Method Reference (See comments page.)

D3-166

DATA CHEM LABORATORIES

ENVIRONMENTAL SOIL REPORT

Date 7/5/91
Agency Identification Number S91-0406-AG
Account No. 3534C

Analytical Results

[redacted]	BOOG Q9 EK 2070	BOOG R1 EK 2071	BOOG R2 EK 2072	BOOG R3 EK 2073	BOOG R0 EK 2074	BOOG R4 EK 2075	BOOG R5 EK 2076	BOOG R6 EK 2077
Cobalt (Co) 06/27/1991 6010 [1] 3050 [1] µg/g	10.	11.	4.	11.	8.	7.	11.	12.
Copper (Cu) 06/27/1991 6010 [1] 3050 [1] µg/g	2500	460	1000	120	200	94.	37.	28.
Iron (Fe) 06/27/1991 6010 [1] 3050 [1] µg/g	27000	22000	9800	21000	15000	14000	23000	24000
Lead (Pb) 06/24/1991 7421 [1] 3050 [1] µg/g	160 J	30. J	NR	NR	NR	NR	NR	NR
Lithium (Li) 06/27/1991 6010 [1] 3050 [1] µg/g	ND*	ND*	ND*	ND*	ND*	ND*	ND*	ND*
Magnesium (Mg) 06/27/1991 6010 [1] 3050 [1] µg/g	5000	4300	2000	3600	3300	2900	3400	3900
Manganese (Mn) 06/27/1991 6010 [1] 3050 [1] µg/g	200	200	72.	220	110	110	400	360
Molybdenum (Mo) 06/27/1991 6010 [1] 3050 [1] µg/g	ND*	ND*	ND*	ND*	ND*	ND*	ND*	ND*
Nickel (Ni) 06/27/1991 6010 [1] 3050 [1] µg/g	17.	11.	8.	7.	9.	6.	8.	8.
Phosphorus (P) 06/27/1991 6010 [1] 3050 [1] µg/g	700	600	370	680	500	430	750	770
Potassium 06/27/1991 6010 [1] 3050 [1] µg/g	1500	1200	800	900	1100	800	800	900
Selenium (Se) 06/24/1991 7740 [1] 3050 [1] µg/g	ND* UJ	ND* UJ	NR	NR	NR	NR	NR	NR
Silver (Ag) 06/27/1991 6010 [1] 3050 [1] µg/g	31.	5.0	8.5	ND*	ND*	ND*	ND*	ND*
Sodium (Na) 06/27/1991 6010 [1] 3050 [1] µg/g	ND*	ND*	ND*	ND*	ND*	ND*	ND*	ND*
Strontium (Sr) 06/27/1991 6010 [1] 3050 [1] µg/g	22.	19.	12.	16.	15.	12.	15.	18.

† See comment on last page.
ND Parameter not detected.
NR Parameter not requested.
[1] Analyses completed on or before this date.
* Parameter not analyzed (See comments page).
( ) Parameter between LOD and LOQ.
[ ] Method Reference (See comments page).

960 West LeVoy Drive / Salt Lake City, Utah 84123-2547 / (801) 266-7700
A Sorenson Company

DATA CHEM LABORATORIES

ENVIRONMENTAL SOIL REPORT

Date 7/5/91
Agency Identification Number S91-0406-AG
Account No. 3534C

Analytical Results

[redacted]	BOOG Q9 EK 2070	BOOG R1 EK 2071	BOOG R2 EK 2072	BOOG R3 EK 2073	BOOG R0 EK 2074	BOOG R4 EK 2075	BOOG R5 EK 2076	BOOG R6 EK 2077
Thallium (Tl) 06/24/1991 7841 [1] 3050 [1] µg/g	ND* UJ	ND* UJ	NR	NR	NR	NR	NR	NR
Vanadium (V) 06/24/1991 6010 [1] 3050 [1] µg/g	42.	48.	21.	56.	38.	36.	64.	68.
Zinc (Zn) 06/24/1991 6010 [1] 3050 [1] µg/g	340	110	240	54.	83.	52.	46.	47.
Mercury (Hg) 06/25/1991 7471 [1] µg/g	0.85 J	0.21 J	NR	NR	NR	NR	NR	NR

12/13/92

† See comment on last page.
ND Parameter not detected.
NR Parameter not requested.
* Analyses completed on or before this date.

** Parameter not analyzed (See comments page).
( ) Parameter between LOD and LOQ.
[ ] Method Reference (See comments page).

960 West LeVoy Drive / Salt Lake City, Utah 84123-2547 / (801) 266-7700
A Sorenson Company

9513319.2036

DATA CHEM LABORATORIES

ENVIRONMENTAL SOIL REPORT

Date 7/5/91
Agency Identification Number S91-0406-AG
Account No. 3534C

Westinghouse Hanford Corporation
P.O. Box 1970
M/S T607
Richland, WA 99352
Attention: Ron Mitchell

Telephone (509) 376-5122

Sampling Collection and Shipment

Sampling Site 2101-M Date of Collection June 11, 1991

Date Samples Received at DataChem June 17, 1991

Analytical Results

[illegible]	[illegible]	BOOG R7 EK 2078	BOOG R8 EK 2079	BOOZ H7 EK 2080	BOOZ H8 EK 2081				[illegible]
Aluminum (Al) 06/27/1991 6010 [1] 3050 [1]	µg/g	6500	6200	5000	5700				500
Antimony (Sb) 06/27/1991 6010 [1] 3050 [1]	µg/g	ND* R	ND* R	ND* R	ND* R				[illegible]
Arsenic (As) 06/24/1991 7060 [1] 3050 [1]	µg/g	NR	NR	NR	NR				[illegible]
Barium (Ba) 06/27/1991 6010 [1] 3050 [1]	µg/g	93.	72.	40.	42.				[illegible]
Beryllium (Be) 06/27/1991 6010 [1] 3050 [1]	µg/g	0.4	0.4	ND*	ND*				[illegible]
Cadmium (Cd) 06/27/1991 6010 [1] 3050 [1]	µg/g	ND*	ND*	ND*	ND*				[illegible]
Calcium (Ca) 06/27/1991 6010 [1] 3050 [1]	µg/g	3200	2600	2200	2400				500
Chromium (Cr) 06/27/1991 6010 [1] 3050 [1]	µg/g	7.2	7.1	33.	11.				[illegible]

11/21/92

† See comment on last page.
ND Parameter not detected.
NR Parameter not requested.
* Analyses completed on or before this date.
** Parameter not analyzed (See comment page).
( ) Parameter between LOD and LOQ.
[ ] Method Reference (See comments page.)

960 West LeVoy Drive / Salt Lake City, Utah 84123-2547 / (801) 266-7700
A Sorenson Company

DATA CHEM LABORATORIES

ENVIRONMENTAL SOIL REPORT

Date 7/5/91
Agency Identification Number S91-0406-AG
Account No. 3534C

Analytical Results

[redacted]		BOOG R7 EK 2078	BOOG R8 EK 2079	BOOS H7 EK 2080	BOOS H8 EK 2081				[redacted]
Cobalt (Co) 06/27/1991 6010 [1] 3050 [1]	µg/g	15.	9.	5.	6.				[redacted]
Copper (Cu) 06/27/1991 6010 [1] 3050 [1]	µg/g	67.	51.	290	300				[redacted]
Iron (Fe) 06/27/1991 6010 [1] 3050 [1]	µg/g	21000	16000	10000	12000				[redacted]
Lead (Pb) 06/24/1991 7421 [1] 3050 [1]	µg/g	NR	NR	NR	NR				[redacted]
Lithium (Li) 06/27/1991 6010 [1] 3050 [1]	µg/g	ND*	ND*	ND*	ND*				[redacted]
Magnesium (Mg) 06/27/1991 6010 [1] 3050 [1]	µg/g	3400	3100	2200	2600				[redacted]
Manganese (Mn) 06/27/1991 6010 [1] 3050 [1]	µg/g	430	340	79.	92.				[redacted]
Molybdenum (Mo) 06/27/1991 6010 [1] 3050 [1]	µg/g	ND*	ND*	ND*	ND*				[redacted]
Nickel (Ni) 06/27/1991 6010 [1] 3050 [1]	µg/g	8.	7.	5.	8.				[redacted]
Phosphorus (P) 06/27/1991 6010 [1] 3050 [1]	µg/g	580	410	420	450				[redacted]
Potassium 06/27/1991 6010 [1] 3050 [1]	µg/g	800	800	800	900				[redacted]
Selenium (Se) 06/24/1991 7740 [1] 3050 [1]	µg/g	NR	NR	NR	NR				[redacted]
Silver (Ag) 06/27/1991 6010 [1] 3050 [1]	µg/g	ND*	ND*	ND*	ND*				[redacted]
Sodium (Na) 06/27/1991 6010 [1] 3050 [1]	µg/g	ND*	ND*	ND*	ND*				[redacted]
Strontium (Sr) 06/27/1991 6010 [1] 3050 [1]	µg/g	15.	14.	13.	14.				[redacted]

† See comment on last page.
ND Parameter not detected.
NR Parameter not requested.
[1] Analyses completed on or before this date.
** Parameter not analyzed (See comments page).
( ) Parameter between LOD and LOQ.
[ ] Method Reference (See comments page).

960 West LeVoy Drive / Salt Lake City, Utah 84123-2547 / (801) 266-7700
A Sorenson Company

9513319.2037

DATA CHEM LABORATORIES

ENVIRONMENTAL SOIL REPORT

Date 7/5/91
Agency Identification Number S91-0406-AG
Account No. 3534C

Analytical Results

[redacted]		BOOG N7 EK 2078	BOOG N8 EK 2079	BOOZ N7 EK 2080	BOOZ N8 EK 2081				[redacted]
Thallium (Tl) 06/24/1991 7841 [1] 3050 [1]	µg/g	NR	NR	NR	NR				[redacted]
Vanadium (V) 06/24/1991 6010 [1] 3050 [1]	µg/g	51.	40.	34.	31.				[redacted]
Zinc (Zn) 06/24/1991 6010 [1] 3050 [1]	µg/g	48.	38.	52.	73.				[redacted]
Mercury (Hg) 06/25/1991 7471 [1]	µg/g	NR	NR	NR	NR				[redacted]

† See comment on last page.
ND Parameter not detected.
NR Parameter not requested.
‡ Analyses completed on or before this date.

** Parameter not analyzed (See comments page).
( ) Parameter between LOD and LOQ.
[ ] Method Reference (See comments page).

960 West LeVoy Drive / Salt Lake City, Utah 84123-2547 / (801) 266-7700
A Sorenson Company

DATA CHEM LABORATORIES

ENVIRONMENTAL SOIL REPORT

Date 7/5/91
Agency Identification Number S91-0406-AG

Method Index -- **Method Reference** --

[1] SW-846 "Test Methods for Evaluating Solid Waste", September 1986.

960 West LeVoy Drive / Salt Lake City, Utah 84123-2547 / (801) 266-7700
A Sorenson Company

9513319.2038

DATA CHEM LABORATORIES

ENVIRONMENTAL SOIL REPORT

Form EPRS-A
Page 1 of 4
Part 1 of 3

SUMMARY DATA REPORT

Date 8/8/91
Agency Identification Number [illegible]
Account No. 3534C

Westinghouse Hanford Corporation
P.O. Box 1970
M/S T607
Richland, WA 99352
Attention: Ron Mitchell

AUG 1991 RECEIVED OSM DMO

Telephone (509) 376-5122

Sampling Collection and Shipment

Sampling Site 2101-M Date of Collection June 11, 1991

Date Samples Received at DataChem June 17, 1991

Analytical Results

Parameter Name / Analysis Date / Units / Method / Prep Method	Field Number / Lab Number	BOOG P9 EK 2062	BOOG Q1 EK 2063	BOOG Q2 EK 2064	BOOG Q3 EK 2065	BOOG Q4 EK 2066	BOOG Q6 EK 2067	BOOG Q7 EK 2068	BOOG Q8 EK 2069
Cyanide (CN) 06/25/1991 9012 [1]	µg/g	NR	NR	NR	NR	NR	NR	NR	NR
Fluoride (F) 07/09/1991 300.0 [2]	mg/g	ND*	ND*	ND*	ND*	ND*	ND*	0.002	ND*
Ammonia (NH_3 - N) 07/03/1991 350.1 [2]	µg/g	4.5 J	1.1 J	2.6 J	2.4 J	1.1 J	3.0 J	18. J	9.1 J
pH 06/21/1991 9045 [1]	pH units	8.0	8.1	7.8	7.3	6.8	8.5	6.9	7.7

JL 11/21/91

† See comment on last page.
ND Parameter not detected.
NR Parameter not requested.
¹ Analyses completed on or before this date.

** Parameter not analyzed (See comment page).
( ) Parameter between LOD and LOQ.
[ ] Method Reference (See comments page.)

Shelly K. Myers
Analyst: Shelly Myers

Suzanne W. Bowe for WWS
Reviewer: Wade Sloan

Norman K. Christensen
Laboratory Supervisor: Norman K. Christensen

960 West LeVoy Drive / Salt Lake City, Utah 84123-2547 / (801) 266-7700
A Sorenson Company
D3-173

DATA CHEM LABORATORIES

ENVIRONMENTAL SOIL REPORT

Date 8/8/91
Agency Identification Number S91-0406-BG
Account No. 3534C

Westinghouse Hanford Corporation
P.O. Box 1970
M/S T607
Richland, WA 99352
Attention: Ron Mitchell

Telephone (509) 376-5122

Sampling Collection and Shipment

Sampling Site 2101-M Date of Collection June 11, 1991

Date Samples Received at DataChem June 17, 1991

Analytical Results

[illegible]	[illegible]	BOOG Q9 EK 2070	BOOG R1 EK 2071	BOOG R2 EK 2072	BOOG R3 EK 2073	BOOG R0 EK 2074	BOOG R4 EK 2075	BOOG R5 EK 2076	BOOG R6 EK 2077
Cyanide (CN) 06/25/1991 9012 [1]	µg/g	ND*	ND*	NR	NR	NR	NR	NR	NR
Fluoride (F) 07/09/1991 300.0 [2]	mg/g	ND*	ND*	ND*	ND*	0.002	ND*	0.003	ND*
Ammonia (NH_3 - N) 07/03/1991 350.1 [2]	µg/g	18. J	14. J	6.6 J	7.2 J	7.3 J	4.2 J	1.7 J	1.3 J
pH 06/21/1991 9045 [1]	pH units	6.9	6.9	6.7	6.9	7.1	7.0	6.8	6.8

JJ 11/21/92

† See comment on last page.
ND Parameter not detected.
NR Parameter not requested.
[1] Analyses completed on or before this date.
** Parameter not analyzed (See comment page).
( ) Parameter between LOD and LOQ.
[ ] Method Reference (See comments page.)

9513319.2039

DATA CHEM LABORATORIES

ENVIRONMENTAL SOIL REPORT

Date 8/8/91
Agency Identification Number S91-0406-BG
Account No. 3534C

Westinghouse Hanford Corporation
P.O. Box 1970
M/S T607
Richland, WA 99352
Attention: Ron Mitchell

Telephone (509) 376-5122

Sampling Collection and Shipment

Sampling Site 2101-M Date of Collection June 11, 1991

Date Samples Received at DataChem June 17, 1991

Analytical Results

Parameter / Date / Method	Units	BOOG R7 EK 2078	BOOG R8 EK 2079	BOOZ H7 EK 2080	BOOZ H8 EK 2081				
Cyanide (CN) 06/25/1991 9012 [1]	µg/g	NR	NR	NR	NR				
Fluoride (F) 07/09/1991 300.0 [2]	mg/g	ND*	ND*	ND*	ND*				
Ammonia (NH_3 - N) 07/03/1991 350.1 [2]	µg/g	2.7 J	2.4 J	26. J	NR				
pH 06/21/1991 9045 [1]	pH units	6.6	7.1	6.8	6.9				

† See comment on last page.
ND Parameter not detected.
NR Parameter not requested.
* Analyses completed on or before this date.
** Parameter not analyzed (See comment page).
( ) Parameter between LOD and LOQ.
[ ] Method Reference (See comments page.)

JJ 11/21/92

960 West LeVoy Drive / Salt Lake City, Utah 84123-2547 / (801) 266-7700
A Sorenson Company
D3-175

DATA CHEM LABORATORIES

ENVIRONMENTAL SOIL REPORT

Date 8/8/91

Agency Identification Number S91-0406-BG

Method Index — **Method Reference** —

[1] SW-846 "Test Methods for Evaluating Solid Waste", September 1986.

[2] EPA-600/4-79-020 "Methods for Chemical Analysis of Water and Wastes", March 1983 (Modified for use with soils.)

960 West LeVoy Drive / Salt Lake City, Utah 84123-2547 / (801) 266-7700
A Sorenson Company

9513319.2040

Westinghouse
Hanford Company

OSM RCRA LEVEL B DATA ASSESSMENT

DATE 11/14/92

REVIEWED BY J.A. Lerch

LABORATORY DataChem

CASE # —

SDG # B00GP2

SAMPLES/MATRIX B00GP2 B00GP7
B00GP3 B00GP8
B00GP4 all soils
B00GP5
B00GP6

DATA ASSESSMENT SUMMARY

QUALITY CONTROL CHECK	ANALYSIS	ICP metals	Herbicides	CN
1. Holding Time		O	O	O
2. Matrix Spike		X	O	O
3. Duplicates		X	O	O
4. Surrogates		N/A	N/A	N/A
5. Blanks		O	~~X~~ O	O
6. Other		N/A	See attach ~~N/A~~	N/A
7.				
8.				
9.				
10.				

O = data had no problems
X = data qualified due to minor problems
M = data qualified due to major problems/some data may be unusable

OVERALL ASSESSSMENT: Sb results unusable due to low spike recoveries from other 2101-M data sets; all other results acceptable w/attached qualifiers

NOTES: none

o Refer to the corresponding attachments for explanation of any problems.

Westinghouse
Hanford Company

OSM RCRA LEVEL B DATA ASSESSMENT (pg 2)

DATE 11/14/92 SAMPLES/MATRIX see Cover

REVIEWED BY J.A. Lerch

LABORATORY DataChem

CASE # —

SDG # B00GP2

DATA ASSESSMENT SUMMARY

QUALITY CONTROL CHECK	ANALYSIS	Fluoride	Ammonia	VOA
1. Holding Time		O	O	O
2. Matrix Spike		X	O	O
3. Duplicates		X	X	O
4. Surrogates		N/A	N/A	O
5. Blanks		O	O	X
6. Other		N/A	N/A	N/A
7.				
8.				
9.				
10.				

O = data had no problems
X = data qualified due to minor problems
M = data qualified due to major problems/some data may be unusable

OVERALL ASSESSSMENT: See Cover

NOTES: none

o Refer to the corresponding attachments for explanation of any problems.

Westinghouse Hanford Company

9513319.2041

OSM RCRA LEVEL B DATA ASSESSMENT (pg 3)

DATE 11/14/92 SAMPLES/MATRIX see Cover

REVIEWED BY JA Lerch

LABORATORY DataChem

CASE # —

SDG # B00GP2

DATA ASSESSMENT SUMMARY

QUALITY CONTROL CHECK	ANALYSIS	SemiVOA	Pest/PCB	Phos. Pesticides
1. Holding Time		O	O	O
2. Matrix Spike		O	O	X
3. Duplicates		O	O	O
4. Surrogates		O	N/A	N/A
5. Blanks		X	O	O
6. Other		N/A	see Attachment	
7.				
8.				
9.				
10.				

O = data had no problems
X = data qualified due to minor problems
M = data qualified due to major problems/some data may be unusable

OVERALL ASSESSSMENT: see cover

NOTES: none

o Refer to the corresponding attachments for explanation of any problems.

54 7600 046

Westinghouse
Hanford Company

OSM RCRA LEVEL B DATA ASSESSMENT (pg 4)

DATE 11/14/92 SAMPLES/MATRIX see cover

REVIEWED BY JA Lerch

LABORATORY Datachem

CASE # —

SDG # B00GP2

DATA ASSESSMENT SUMMARY

QUALITY CONTROL CHECK	ANALYSIS	Hg		
1. Holding Time		O		
2. Matrix Spike		O		
3. Duplicates		O		
4. Surrogates		N/A		
5. Blanks		X		
6. Other		N/A		
7.				
8.				
9.				
10.				

O = data had no problems
X = data qualified due to minor problems
M = data qualified due to major problems/some data may be unusable

OVERALL ASSESSSMENT: see cover

NOTES: none

o Refer to the corresponding attachments for explanation of any problems.

RCRA LEVEL B QC

Name JA Lerch Date 11/14/92

QC Check: Holding Time

COMMENTS: ICP metals - 6 mo. holding time met for all samples
Herbicides - all samples analyzed within applicable holding times
CN - all samples analyzed within 14 day holding time
Ammonia, Fluoride - all samples analyzed within 28 day holding time

ACTION: none

sample #	constituent	value/qual	sample #	constituent	value/qual

RCRA LEVEL B QC

Name JA Lerch Date 11/14/92

QC Check: Holding Time (cont)

COMMENTS: VOA - all samples analyzed within 14 day holding time
SemiVOA - all samples extracted + analyzed within applicable holding times

Phos. Pesticides + Pest/PCB - all samples analyzed within applicable holding times

ACTION: none

sample #	constituent	value/qual	sample #	constituent	value/qual

RCRA LEVEL B QC

Name JA Lerch Date 11/14/92

QC Check: Holding Time

COMMENTS: Hg - all samples analyzed within 28 d HT

ACTION: none

sample #	constituent	value/qual	sample #	constituent	value/qual

RCRA LEVEL 8 QC

Name JALerch Date 11/14/92

QC Check: Matrix Spike

COMMENTS: Herbicides — B00GP3MS+MSD recoveries within acceptable range (60% to 82%)

VOA - B00GP7MS+MSD recoveries within acceptable range (76% to 103%)

SemiVOA - B00GP7MS+MSD recoveries within acceptable range (68% to 118%)

ACTION: none

sample #	constituent	value/qual	sample #	constituent	value/qual

RCRA LEVEL B QC

Name JA Lerch Date 11/14/92

QC Check: Matrix Spike (cont)

COMMENTS: Ammonia – B00GP8S recovery acceptable (90.5%)
CN – B00GP7S recovery acceptable (89.3%)
Pest/PCBs – B00GP7MS+MSD recoveries acceptable (range ~70-120%)
Phos Pest – B00GP7MS+MSD recoveries generally low (range ~30-56%)

ACTION: qualify associated results as per OSM guidelines

sample #	constituent	value/qual	sample #	constituent	value/qual
all	all phos. pest.	UJ			

RCRA LEVEL B QC

Name JA Lerch Date 11/14/92

QC Check: Matrix Spike (cont)

COMMENTS: Hg- 300GP7MS+MSD recoveries ok (~97%)
ICP metals - no matrix spike performed; other project samples have shown no problems with the exception of very low recoveries for Sb
Fluoride - no spike data provided, other samples have shown no matrix effect

ACTION: qualify associated results as per OSM guidelines

sample #	constituent	value/qual
all	Sb	R
-based on MS results from other 2101+M samples		
all	ICP metals	J, UJ

sample #	constituent	value/qual

RCRA LEVEL 6 QC

Name JA Lerch Date 11/14/92

QC Check: Duplicates

COMMENTS: Herbicides - calculated RPD's for B00GP3MS+MSD within acceptable range

VOA - calculated RPD's for B00GP7MS+MSD within acceptable range

SemiVOA - RPD's for B00GP7MS+MSD within acceptable range

ACTION: none

sample #	constituent	value/qual	sample #	constituent	value/qual

RCRA LEVEL B QC

Name JA Lerch Date 11/14/92

QC Check: Duplicates (cont)

COMMENTS: Ammonia - B00GP7D calculated RPD high
CN - B00GP7D initial + dup. result not detected
Pest/PCBs - B00GP7MS+MSD dup results acceptable
Phos. Pest - B00GP7MS+MSD dup results acceptable

ACTION: qualify associated results as per BSM guidelines

sample #	constituent	value/qual	sample #	constituent	value/qual
all	ammonia	J, UJ			

RCRA QC

Name JA Lerch Date 11/14/92

QC Check: Duplicates (cont)

COMMENTS: ICP metals – B00GP5 duplicate RPD's high for Cu, all other dup RPD's acceptable
Hg – B00GP4 duplicate and initial results not detected, B00GP7MS + MSD duplicate results ok
Fluoride – no dup results provided; other 2101-series samples have shown no matrix effects.

ACTION: qualify associated results as per OSM guidelines

sample #	constituent	value/qual	sample #	constituent	value/qual
all	Cu	J, UJ			

RCRA LEVEL B QC

Name JA Lerch Date 11/14/92

QC Check: Surrogates

COMMENTS: VOA - all sample + blank surrogate recoveries within limits

SemiVOA - all SemiVOA blank + sample surrogate recoveries within acceptable limits

ACTION: none

sample #	constituent	value/qual	sample #	constituent	value/qual

RCRA LEVEL ~~B~~ QC

Name JA Lerch Date 11/14/92

QC Check: Blanks

COMMENTS: VOA - acetone detected in VOA method blank
SemiVOA - benzoic acid detected in SemiVOA method blank.
Ammonia - no contamination present in ammonia blanks
CN - no contamination present in ICB, CCB, an prep blanks

ACTION: qualify results as per OSM guidelines

	sample #	constituent	value/qual
A	B00GP2	acetone	14. U
	B00GP5		20. U
	B00GP6		28. U
	B00GP7		11. U
	B00GP8		19. U

SemiVOA

B00GP2	benzoic acid	~~0.18~~ 1 U
B00GP4		1 U
B00GP6		1 U

- quantitation levels were raised to the LOD
- blank criteria also applied to several "unknown" TICS

sample #	constituent	value/qual

RCRA QC

Name JA Lerch Date 11/14/92

QC Check: Blanks (cont)

COMMENTS: ICP metals - method blank free of contamination
Hg - no preperation blank was performed with this data set (qualify all detects - J)
Herbicides, Phos. Pest, Pest/PCBs - no indication of blank contamination evident
Fluoride - no indication of blank contamination

ACTION: qualify associated results as per OSM guidelines

sample #	constituent	value/qual	sample #	constituent	value/qual
B00GP2	Hg	J			
B00GP4					
B00GP6					

RCRA LEVEL B QC

Name JA Lerch Date 11/14/92

QC Check: Other QC

COMMENTS: -surrogates were run but not quantitated for methods 8080 and 8150; surrogates were not run for 8140: surrogates are suggested but not required by SW-846 organics methods

ACTION: —

sample #	constituent	value/qual	sample #	constituent	value/qual

DATA CHEM LABORATORIES

June 27, 1991

REPORT INTRODUCTION
ANALYTICAL COMMENTARY

SUBMITTED TO: Ron Mitchell

SUBMITTED BY: Joseph A. Gress

REFERENCE DATA:

Analysis of: 7 soil samples, matrix spike, and matrix spike duplicate

Method of Analysis: EPA 8240 with modifications

Identification No.: S91-0392FG

DataChem Laboratory No.: EK 1980 through EK 1988

The above-numbered samples were analyzed for volatile organics using EPA Method 8240 with modifications (Sw-846; third edition; September 1986; U.S. Environmental Protection Agency, Office of Solid Waste and Emergency Response).

For soil samples, five grams of sample were heated and directly purged onto a Tekmar 2-phase trap, then desorbed at 180 degrees centigrade under reverse helium flow onto the GC column. The desorbed organics were separated by a 105 meter Restek 502.2, 0.53 mm ID, fused silica capillary column. The column oven was programmed from 35 degrees centigrade (held isothermal for 10 minutes) to 220 degrees centigrade at 10 degrees centigrade per minute. The resulting ions were scanned on a Finnigan 5100 GC/MS/DS from 35 amu to 260 amu each second.

An internal standard method of quantitation was used. Internal standards were added to each sample and standard prior to analysis. Five standards were analyzed as prescribed by the method at 20, 50, 100, 150 and 200 ug/Kg. System Performance Check Compounds were checked for a minimum response factor of 0.300, these compounds are chloromethane, bromoform (can be 0.250), 1,1-dichloroethane, chlorobenzene and 1,1,2,2-tetrachloroethane. Response factors from the initial calibration curve are used to calculate percent relative standard deviation (%RSD) for Calibration Check Compounds. These are toluene, 1,1-dichloroethene, chloroform, 1,2-dichloropropane, ethylbenzene, and

CINCINNATI OFFICE
4388 GLENDALE-MILFORD ROAD
CINCINNATI, OHIO 45242-3706
513 733-5336, FAX 513 733-5347

SALT LAKE OFFICE
560 WEST LEVOY DRIVE
SALT LAKE CITY, UTAH 84123-2347
801 266-7700, FAX 801 268-9992

DENVER OFFICE

vinyl chloride, the %RSD must be less than 30%. These Q.C. criteria were met for the initial calibration curve.

Quantitation of each target compound is based on response factors from a 50 ug/Kg continuing calibration standard. Before sample analysis can begin, standardization requirements must be met. The response factors of System Performance Check Compounds must meet the minimum criteria of 0.300, except bromoform at 0.250, and the Calibration Check Compounds must be less than 25% difference with the average response from the initial calibration curve.

Tuning and calibration checks were made prior to sample analysis. A reagent blank was also analyzed prior to sample analysis to certify cleanliness of reagents. Before analysis, blanks were analyzed in each sparging unit to verify the cleanliness of the instrument sampling apparatus.

In addition, the following quality assurance procedures were routine; monitoring of internal standard absolute areas and retention times and measurement of surrogate standard recoveries.

DataChem Laboratories will maintain a complete record of your data on magnetic tape including the ion chromatograms, mass spectra, and verification of compliance with EPA tuning (BFB).

The results for EPA Method 8240 are reported twice for each sample in the body of the report, first on the Summary Report and again on the Analytical Report (results by sample). The Analytical Report consists of two pages for each sample. Analytical standards have been analyzed for each compound on page one and the quantitative results are presented. The soil sample results were based on dry weight as per EPA method 8240. The unknown compounds have been tentatively identified and are found on page two of the Analytical Report. The amount of each unknown present is estimated by comparison to an internal standard assuming the response factor to be one. Additionally, the footnotes on page two of the Analytical Report have been used to qualify the data reported.

A matrix spike and matrix spike duplicate were analyzed using soil sample EK 1985 (B00GP7). The analytes 1,1-dichloroethene, trichloroethene, benzene, toluene, and chlorobenzene were spiked into the sample at 50 ug/Kg. The recoveries are tabulated and reported on the last page of the analytical report. The qualifiers "S" and "SP" were used throughout the analytical report to indicate spiked analytes.

Joseph A. Gress

Joseph A. Gress

ANALYTICAL REPORT FOR SAMPLE No. EK1980

EPA METHOD 8240

TARGET ANALYTE RESULTS

Field Sample ID B00GP2 Sponsor WESTINGHOUSE HANFORD
File ID CS39EK980 Date of Analysis 06/12/91 Date Received 06/11/91
DataChem SET ID S91-0392FG

Cas. No	COMPOUND	RESULTS (ug/KG)	DETECTION LIMITS (ug/KG)
74-87-3	chloromethane	U	1.6*
74-83-9	bromomethane	U	1.5*
75-01-4	vinyl chloride	U	1.7*
75-00-3	chloroethane	U	1.4*
75-09-2	methylene chloride	U	1.6*
67-64-1	acetone	14.	4.3*
75-15-0	carbon disulfide	U	1.6*
75-69-4	trichlorofluoromethane	U	1.5*
75-35-4	1,1-dichloroethene	U	1.2*
75-34-3	1,1-dichloroethane	U	2.1*
540-59-0	total 1,2-dichloroethene	U	1.2*
76-66-3	chloroform	U	1.8*
107-06-2	1,2-dichloroethane	U	2.4*
74-88-4	iodomethane	U	1.5*
107-02-8	acrolein	U	58.*
107-13-1	acrylonitrile	U	42.*
78-93-3	2-butanone	U	3.8*
71-55-6	1,1,1-trichloroethane	U	1.6*
56-23-5	carbon tetrachloride	U	1.5*
108-05-4	vinyl acetate	U	3.5*
75-27-4	bromodichloromethane	U	1.8*
78-87-5	1,2-dichloropropane	U	2.0*
10061-02-5	cis-1,3-dichloropropene	U	3.1*
79-01-6	trichloroethene	U	1.3*
71-43-2	benzene	U	1.6*
124-48-1	dibromochloromethane	U	1.4*
79-00-5	1,1,2-trichloroethane	U	1.1*
10061-02-6	trans-1,3-dichloropropene	U	2.9*
110-75-8	2-chloroethylvinyl ether	U	3.3*
75-25-2	bromoform	U	1.2*
74-95-3	dibromomethane	U	2.5*
764-41-0	trans-1,4-dichloro-2-butene	U	1.7*
108-10-1	4-methyl-2-pentanone	U	3.5*
96-18-4	1,2,3-trichloropropane	U	2.3*
591-78-6	2-hexanone	U	4.1*
79-34-5	1,1,2,2-tetrachloroethane	U	2.0*
127-18-4	tetrachloroethene	U	1.5*
97-63-2	ethyl methacrylate	U	1.9*
108-88-3	toluene	U	1.5*
108-90-7	chlorobenzene	U	1.3*
100-41-4	ethylbenzene	U	1.4*
100-42-5	styrene	U	1.2*
1330-20-7	total xylene	U	1.0*

* current DataChem detection limit

ANALYTICAL REPORT FOR SAMPLE No. EK1980

NON-TARGET ANALYTE RESULTS
Additional Volatiles

Field Sample ID B00GP2

Cas. No	COMPOUND	Scan Number	Results ug/KG	Footnotes
----------	----NO UNKNOWNS FOUND----------	----	-----	----

FOOTNOTES

B The analyte was found in the method blank. The reported results have been adjusted for the quantity found in the blank.
E The reported concentration is an estimate only. The response factor was assumed to be 1.000 relative to an internal standard.
J Indicates an estimated concentration below the Method Detection Limit.
K The isomer is unknown.
N Analytical standards were not analyzed for this compound.
U Not detected.
W The identification is tentative or closely related to the compound.

ANALYTICAL REPORT FOR SAMPLE No. EK1981

EPA METHOD 8240

TARGET ANALYTE RESULTS

Field Sample ID B00GP3 Sponsor WESTINGHOUSE HANFORD
File ID CS40EK981 Date of Analysis 06/12/91 Date Received 06/11/91
DataChem SET ID S91-0392FG

Cas. No	COMPOUND	RESULTS (ug/KG)	DETECTION LIMITS (ug/KG)
74-87-3	chloromethane	U	1.6*
74-83-9	bromomethane	U	1.5*
75-01-4	vinyl chloride	U	1.7*
75-00-3	chloroethane	U	1.4*
75-09-2	methylene chloride	U	1.6*
67-64-1	acetone	U	4.3*
75-15-0	carbon disulfide	U	1.6*
75-69-4	trichlorofluoromethane	U	1.5*
75-35-4	1,1-dichloroethene	U	1.2*
75-34-3	1,1-dichloroethane	U	2.1*
540-59-0	total 1,2-dichloroethene	U	1.2*
76-66-3	chloroform	U	1.8*
107-06-2	1,2-dichloroethane	U	2.4*
74-88-4	iodomethane	U	1.5*
107-02-8	acrolein	U	58.*
107-13-1	acrylonitrile	U	42.*
78-93-3	2-butanone	U	3.8*
71-55-6	1,1,1-trichloroethane	U	1.6*
56-23-5	carbon tetrachloride	U	1.5*
108-05-4	vinyl acetate	U	3.5*
75-27-4	bromodichloromethane	U	1.8*
78-87-5	1,2-dichloropropane	U	2.0*
10061-02-5	cis-1,3-dichloropropene	U	3.1*
79-01-6	trichloroethene	U	1.3*
71-43-2	benzene	U	1.6*
124-48-1	dibromochloromethane	U	1.4*
79-00-5	1,1,2-trichloroethane	U	1.1*
10061-02-6	trans-1,3-dichloropropene	U	2.9*
110-75-8	2-chloroethylvinyl ether	U	3.3*
75-25-2	bromoform	U	1.2*
74-95-3	dibromomethane	U	2.5*
764-41-0	trans-1,4-dichloro-2-butene	U	1.7*
108-10-1	4-methyl-2-pentanone	U	3.5*
96-18-4	1,2,3-trichloropropane	U	2.3*
591-78-6	2-hexanone	U	4.1*
79-34-5	1,1,2,2-tetrachloroethane	U	2.0*
127-18-4	tetrachloroethene	U	1.5*
97-63-2	ethyl methacrylate	U	1.9*
108-88-3	toluene	U	1.5*
108-90-7	chlorobenzene	U	1.3*
100-41-4	ethylbenzene	U	1.4*
100-42-5	styrene	U	1.2*
1330-20-7	total xylene	U	1.0*

* current DataChem detection limit

ANALYTICAL REPORT FOR SAMPLE No. EK1981

NON-TARGET ANALYTE RESULTS
Additional Volatiles

Field Sample ID B00GP3

Cas. No	COMPOUND	Scan Number	Results ug/KG	Footnotes
----------	----NO UNKNOWNS FOUND----------	----	-----	----

FOOTNOTES

B The analyte was found in the method blank. The reported results have been adjusted for the quantity found in the blank.
E The reported concentration is an estimate only. The response factor was assumed to be 1.000 relative to an internal standard.
J Indicates an estimated concentration below the Method Detection Limit.
K The isomer is unknown.
N Analytical standards were not analyzed for this compound.
U Not detected.
W The identification is tentative or closely related to the compound.

ANALYTICAL REPORT FOR SAMPLE No. EK1982

EPA METHOD 8240

TARGET ANALYTE RESULTS

Field Sample ID B00GP4 Sponsor WESTINGHOUSE HANFORD
File ID CS41EK982 Date of Analysis 06/12/91 Date Received 06/11/91
DataChem SET ID S91-0392FG

Cas. No	COMPOUND	RESULTS (ug/KG)	DETECTION LIMITS (ug/KG)
74-87-3	chloromethane	U	1.6*
74-83-9	bromomethane	U	1.5*
75-01-4	vinyl chloride	U	1.7*
75-00-3	chloroethane	U	1.4*
75-09-2	methylene chloride	U	1.6*
67-64-1	acetone	U	4.3*
75-15-0	carbon disulfide	U	1.6*
75-69-4	trichlorofluoromethane	U	1.5*
75-35-4	1,1-dichloroethene	U	1.2*
75-34-3	1,1-dichloroethane	U	2.1*
540-59-0	total 1,2-dichloroethene	U	1.2*
76-66-3	chloroform	U	1.8*
107-06-2	1,2-dichloroethane	U	2.4*
74-88-4	iodomethane	U	1.5*
107-02-8	acrolein	U	58.*
107-13-1	acrylonitrile	U	42.*
78-93-3	2-butanone	U	3.8*
71-55-6	1,1,1-trichloroethane	U	1.6*
56-23-5	carbon tetrachloride	U	1.5*
108-05-4	vinyl acetate	U	3.5*
75-27-4	bromodichloromethane	U	1.8*
78-87-5	1,2-dichloropropane	U	2.0*
10061-02-5	cis-1,3-dichloropropene	U	3.1*
79-01-6	trichloroethene	U	1.3*
71-43-2	benzene	U	1.6*
124-48-1	dibromochloromethane	U	1.4*
79-00-5	1,1,2-trichloroethane	U	1.1*
10061-02-6	trans-1,3-dichloropropene	U	2.9*
110-75-8	2-chloroethylvinyl ether	U	3.3*
75-25-2	bromoform	U	1.2*
74-95-3	dibromomethane	U	2.5*
764-41-0	trans-1,4-dichloro-2-butene	U	1.7*
108-10-1	4-methyl-2-pentanone	U	3.5*
96-18-4	1,2,3-trichloropropane	U	2.3*
591-78-6	2-hexanone	U	4.1*
79-34-5	1,1,2,2-tetrachloroethane	U	2.0*
127-18-4	tetrachloroethene	U	1.5*
97-63-2	ethyl methacrylate	U	1.9*
108-88-3	toluene	U	1.5*
108-90-7	chlorobenzene	U	1.3*
100-41-4	ethylbenzene	U	1.4*
100-42-5	styrene	U	1.2*
1330-20-7	total xylene	U	1.0*

D3-200

* current DataChem detection limit

ANALYTICAL REPORT FOR SAMPLE No. EK1982

NON-TARGET ANALYTE RESULTS
Additional Volatiles

Field Sample ID B00GP4

Cas. No	COMPOUND	Scan Number	Results ug/KG	Footnotes
----------	----NO UNKNOWNS FOUND----------	----	-----	----

FOOTNOTES

B The analyte was found in the method blank. The reported results have been adjusted for the quantity found in the blank.
E The reported concentration is an estimate only. The response factor was assumed to be 1.000 relative to an internal standard.
J Indicates an estimated concentration below the Method Detection Limit.
K The isomer is unknown.
N Analytical standards were not analyzed for this compound.
U Not detected.
W The identification is tentative or closely related to the compound.

ANALYTICAL REPORT FOR SAMPLE No. EK1983

EPA METHOD 8240

TARGET ANALYTE RESULTS

Field Sample ID B00GP5 Sponsor WESTINGHOUSE HANFORD
File ID CS42EK983 Date of Analysis 06/12/91 Date Received 06/11/91
DataChem SET ID S91-0392FG

Cas. No	COMPOUND	RESULTS (ug/KG)	DETECTION LIMITS (ug/KG)
74-87-3	chloromethane	U	1.6*
74-83-9	bromomethane	U	1.5*
75-01-4	vinyl chloride	U	1.7*
75-00-3	chloroethane	U	1.4*
75-09-2	methylene chloride	U	1.6*
67-64-1	acetone	20. U	4.3*
75-15-0	carbon disulfide	U	1.6*
75-69-4	trichlorofluoromethane	U	1.5*
75-35-4	1,1-dichloroethene	U	1.2*
75-34-3	1,1-dichloroethane	U	2.1*
540-59-0	total 1,2-dichloroethene	U	1.2*
76-66-3	chloroform	U	1.8*
107-06-2	1,2-dichloroethane	U	2.4*
74-88-4	iodomethane	U	1.5*
107-02-8	acrolein	U	58.*
107-13-1	acrylonitrile	U	42.*
78-93-3	2-butanone	U	3.8*
71-55-6	1,1,1-trichloroethane	U	1.6*
56-23-5	carbon tetrachloride	U	1.5*
108-05-4	vinyl acetate	U	3.5*
75-27-4	bromodichloromethane	U	1.8*
78-87-5	1,2-dichloropropane	U	2.0*
10061-02-5	cis-1,3-dichloropropene	U	3.1*
79-01-6	trichloroethene	U	1.3*
71-43-2	benzene	U	1.6*
124-48-1	dibromochloromethane	U	1.4*
79-00-5	1,1,2-trichloroethane	U	1.1*
10061-02-6	trans-1,3-dichloropropene	U	2.9*
110-75-8	2-chloroethylvinyl ether	U	3.3*
75-25-2	bromoform	U	1.2*
74-95-3	dibromomethane	U	2.5*
764-41-0	trans-1,4-dichloro-2-butene	U	1.7*
108-10-1	4-methyl-2-pentanone	U	3.5*
96-18-4	1,2,3-trichloropropane	U	2.3*
591-78-6	2-hexanone	U	4.1*
79-34-5	1,1,2,2-tetrachloroethane	U	2.0*
127-18-4	tetrachloroethene	U	1.5*
97-63-2	ethyl methacrylate	U	1.9*
108-88-3	toluene	U	1.5*
108-90-7	chlorobenzene	U	1.3*
100-41-4	ethylbenzene	U	1.4*
100-42-5	styrene	U	1.2*
1330-20-7	total xylene	U	1.0*

11/14/92

D3-202

* current DataChem detection limit

ANALYTICAL REPORT FOR SAMPLE No. EK1983

NON-TARGET ANALYTE RESULTS
Additional Volatiles

Field Sample ID B00GP5

Cas. No	COMPOUND	Scan Number	Results ug/KG	Footnotes
	----NO UNKNOWNS FOUND----------			

FOOTNOTES

B The analyte was found in the method blank. The reported results have been adjusted for the quantity found in the blank.

E The reported concentration is an estimate only. The response factor was assumed to be 1.000 relative to an internal standard.

J Indicates an estimated concentration below the Method Detection Limit.

K The isomer is unknown.

N Analytical standards were not analyzed for this compound.

U Not detected.

W The identification is tentative or closely related to the compound.

ANALYTICAL REPORT FOR SAMPLE No. EK1984

EPA METHOD 8240

TARGET ANALYTE RESULTS

Field Sample ID B00GP6 Sponsor WESTINGHOUSE HANFORD
File ID CS43EK984 Date of Analysis 06/12/91 Date Received 06/11/91
DataChem SET ID S91-0392FG

Cas. No	COMPOUND	RESULTS (ug/KG)	DETECTION LIMITS (ug/KG)
74-87-3	chloromethane	U	1.6*
74-83-9	bromomethane	U	1.5*
75-01-4	vinyl chloride	U	1.7*
75-00-3	chloroethane	U	1.4*
75-09-2	methylene chloride	U	1.6*
67-64-1	acetone	28. U	4.3*
75-15-0	carbon disulfide	U	1.6*
75-69-4	trichlorofluoromethane	U	1.5*
75-35-4	1,1-dichloroethene	U	1.2*
75-34-3	1,1-dichloroethane	U	2.1*
540-59-0	total 1,2-dichloroethene	U	1.2*
76-66-3	chloroform	U	1.8*
107-06-2	1,2-dichloroethane	U	2.4*
74-88-4	iodomethane	U	1.5*
107-02-8	acrolein	U	58.*
107-13-1	acrylonitrile	U	42.*
78-93-3	2-butanone	U	3.8*
71-55-6	1,1,1-trichloroethane	U	1.6*
56-23-5	carbon tetrachloride	U	1.5*
108-05-4	vinyl acetate	U	3.5*
75-27-4	bromodichloromethane	U	1.8*
78-87-5	1,2-dichloropropane	U	2.0*
10061-02-5	cis-1,3-dichloropropene	U	3.1*
79-01-6	trichloroethene	U	1.3*
71-43-2	benzene	U	1.6*
124-48-1	dibromochloromethane	U	1.4*
79-00-5	1,1,2-trichloroethane	U	1.1*
10061-02-6	trans-1,3-dichloropropene	U	2.9*
110-75-8	2-chloroethylvinyl ether	U	3.3*
75-25-2	bromoform	U	1.2*
74-95-3	dibromomethane	U	2.5*
764-41-0	trans-1,4-dichloro-2-butene	U	1.7*
108-10-1	4-methyl-2-pentanone	U	3.5*
96-18-4	1,2,3-trichloropropane	U	2.3*
591-78-6	2-hexanone	U	4.1*
79-34-5	1,1,2,2-tetrachloroethane	U	2.0*
127-18-4	tetrachloroethene	U	1.5*
97-63-2	ethyl methacrylate	U	1.9*
108-88-3	toluene	U	1.5*
108-90-7	chlorobenzene	U	1.3*
100-41-4	ethylbenzene	U	1.4*
100-42-5	styrene	U	1.2*
1330-20-7	total xylene	U	1.0*

11/14/92

* current DataChem detection limit

ANALYTICAL REPORT FOR SAMPLE No. EK1984

NON-TARGET ANALYTE RESULTS
Additional Volatiles

Field Sample ID B00GP6

Cas. No	COMPOUND	Scan Number	Results ug/KG	Footnotes
----------	----NO UNKNOWNS FOUND----------	----	-----	----

FOOTNOTES

B The analyte was found in the method blank. The reported results have been adjusted for the quantity found in the blank.
E The reported concentration is an estimate only. The response factor was assumed to be 1.000 relative to an internal standard.
J Indicates an estimated concentration below the Method Detection Limit.
K The isomer is unknown.
N Analytical standards were not analyzed for this compound.
U Not detected.
W The identification is tentative or closely related to the compound.

ANALYTICAL REPORT FOR SAMPLE No. EK1985

EPA METHOD 8240

TARGET ANALYTE RESULTS

Field Sample ID B00GP7 Sponsor WESTINGHOUSE HANFORD
File ID CS44EK985 Date of Analysis 06/12/91 Date Received 06/11/91
DataChem SET ID S91-0392FG

Cas. No	COMPOUND	RESULTS (ug/KG)	DETECTION LIMITS (ug/KG)
74-87-3	chloromethane	U	1.6*
74-83-9	bromomethane	U	1.5*
75-01-4	vinyl chloride	U	1.7*
75-00-3	chloroethane	U	1.4*
75-09-2	methylene chloride	U	1.6*
67-64-1	acetone	11. U	4.3*
75-15-0	carbon disulfide	U	1.6*
75-69-4	trichlorofluoromethane	U	1.5*
75-35-4	1,1-dichloroethene	U	1.2*
75-34-3	1,1-dichloroethane	U	2.1*
540-59-0	total 1,2-dichloroethene	U	1.2*
76-66-3	chloroform	U	1.8*
107-06-2	1,2-dichloroethane	U	2.4*
74-88-4	iodomethane	U	1.5*
107-02-8	acrolein	U	58.*
107-13-1	acrylonitrile	U	42.*
78-93-3	2-butanone	U	3.8*
71-55-6	1,1,1-trichloroethane	U	1.6*
56-23-5	carbon tetrachloride	U	1.5*
108-05-4	vinyl acetate	U	3.5*
75-27-4	bromodichloromethane	U	1.8*
78-87-5	1,2-dichloropropane	U	2.0*
10061-02-5	cis-1,3-dichloropropene	U	3.1*
79-01-6	trichloroethene	U	1.3*
71-43-2	benzene	U	1.6*
124-48-1	dibromochloromethane	U	1.4*
79-00-5	1,1,2-trichloroethane	U	1.1*
10061-02-6	trans-1,3-dichloropropene	U	2.9*
110-75-8	2-chloroethylvinyl ether	U	3.3*
75-25-2	bromoform	U	1.2*
74-95-3	dibromomethane	U	2.5*
764-41-0	trans-1,4-dichloro-2-butene	U	1.7*
108-10-1	4-methyl-2-pentanone	U	3.5*
96-18-4	1,2,3-trichloropropane	U	2.3*
591-78-6	2-hexanone	U	4.1*
79-34-5	1,1,2,2-tetrachloroethane	U	2.0*
127-18-4	tetrachloroethene	U	1.5*
97-63-2	ethyl methacrylate	U	1.9*
108-88-3	toluene	U	1.5*
108-90-7	chlorobenzene	U	1.3*
100-41-4	ethylbenzene	U	1.4*
100-42-5	styrene	U	1.2*
1330-20-7	total xylene	U	1.0*

JJ 11/14/92

D3-206

* current DataChem detection limit

ANALYTICAL REPORT FOR SAMPLE No. EK1985

NON-TARGET ANALYTE RESULTS
Additional Volatiles

Field Sample ID B00GP7

Cas. No	COMPOUND	Scan Number	Results ug/KG	Footnotes
----------	----NO UNKNOWNS FOUND----------	----	-----	----

FOOTNOTES

B The analyte was found in the method blank. The reported results have been adjusted for the quantity found in the blank.
E The reported concentration is an estimate only. The response factor was assumed to be 1.000 relative to an internal standard.
J Indicates an estimated concentration below the Method Detection Limit.
K The isomer is unknown.
N Analytical standards were not analyzed for this compound.
U Not detected.
W The identification is tentative or closely related to the compound.

ANALYTICAL REPORT FOR SAMPLE No. EK1986

EPA METHOD 8240

TARGET ANALYTE RESULTS

Field Sample ID B00GP8 (EQUIP. Sponsor WESTINGHOUSE HANFORD
File ID CS48EK986 Date of Analysis 06/13/91 Date Received 06/11/91
DataChem SET ID S91-0392FG

Cas. No	COMPOUND	RESULTS (ug/KG)	DETECTION LIMITS (ug/KG)
74-87-3	chloromethane	U	1.6*
74-83-9	bromomethane	U	1.5*
75-01-4	vinyl chloride	U	1.7*
75-00-3	chloroethane	U	1.4*
75-09-2	methylene chloride	0.53 J	1.6*
67-64-1	acetone	19. U	4.3*
75-15-0	carbon disulfide	U	1.6*
75-69-4	trichlorofluoromethane	U	1.5*
75-35-4	1,1-dichloroethene	U	1.2*
75-34-3	1,1-dichloroethane	U	2.1*
540-59-0	total 1,2-dichloroethene	U	1.2*
76-66-3	chloroform	U	1.8*
107-06-2	1,2-dichloroethane	U	2.4*
74-88-4	iodomethane	U	1.5*
107-02-8	acrolein	U	58.*
107-13-1	acrylonitrile	U	42.*
78-93-3	2-butanone	U	3.8*
71-55-6	1,1,1-trichloroethane	U	1.6*
56-23-5	carbon tetrachloride	U	1.5*
108-05-4	vinyl acetate	U	3.5*
75-27-4	bromodichloromethane	U	1.8*
78-87-5	1,2-dichloropropane	U	2.0*
10061-02-5	cis-1,3-dichloropropene	U	3.1*
79-01-6	trichloroethene	U	1.3*
71-43-2	benzene	U	1.6*
124-48-1	dibromochloromethane	U	1.4*
79-00-5	1,1,2-trichloroethane	U	1.1*
10061-02-6	trans-1,3-dichloropropene	U	2.9*
110-75-8	2-chloroethylvinyl ether	U	3.3*
75-25-2	bromoform	U	1.2*
74-95-3	dibromomethane	U	2.5*
764-41-0	trans-1,4-dichloro-2-butene	U	1.7*
108-10-1	4-methyl-2-pentanone	U	3.5*
96-18-4	1,2,3-trichloropropane	U	2.3*
591-78-6	2-hexanone	U	4.1*
79-34-5	1,1,2,2-tetrachloroethane	U	2.0*
127-18-4	tetrachloroethene	U	1.5*
97-63-2	ethyl methacrylate	U	1.9*
108-88-3	toluene	U	1.5*
108-90-7	chlorobenzene	U	1.3*
100-41-4	ethylbenzene	U	1.4*
100-42-5	styrene	U	1.2*
1330-20-7	total xylene	U	1.0*

11/14/92

D3-208

* current DataChem detection limit

ANALYTICAL REPORT FOR SAMPLE No. EK1986

NON-TARGET ANALYTE RESULTS
Additional Volatiles

Field Sample ID B00GP8 (EQUIP BLANK)

Cas. No	COMPOUND	Scan Number	Results ug/KG	Footnotes
----------	----NO UNKNOWNS FOUND----------	----	-----	----

FOOTNOTES

B The analyte was found in the method blank. The reported results have been adjusted for the quantity found in the blank.
E The reported concentration is an estimate only. The response factor was assumed to be 1.000 relative to an internal standard.
J Indicates an estimated concentration below the Method Detection Limit.
K The isomer is unknown.
N Analytical standards were not analyzed for this compound.
U Not detected.
W The identification is tentative or closely related to the compound.

SOIL
Surrogate Percent
Recovery Summary

DataChem ID S91-0392FG

Sample No.	TOL	BFB	DCE
MB-1	101	95	106
EK1980	99	90	101
EK1981	99	94	100
EK1982	101	90	96
EK1983	96	91	99
EK1984	101	86	105
EK1985	99	90	98
EK1986	95	91	105
EK1987	96	86	95
EK1988	98	89	92

			QC LIMITS
(TOL)	=	TOLUENE-D8	(81-117)
(BFB)	=	BROMOFLUOROBENZENE	(74-121)
(DCE)	=	1,2-DICHLOROETHANE-D4	(70-121)

MB is the abbreviation for method blank.
If more than one method blank was analyzed they will be designated MB-1, MB-2, ect.

EPA METHOD 8240

MATRIX SPIKE RECOVERY REPORT

Date of Analysis 06/12/91 Date Received 06/11/91
DataChem ID for Matrix Spike Analysis EK1987,8
DataChem SET ID S91-0392FG

COMPOUND	PERCENT RECOVERY MATRIX SPIKE	PERCENT RECOVERY MATRIX SPIKE DUPLICATE
1,1-dichloroethene	84	89
trichloroethene	100	100
benzene	80	79
toluene	76	80
chlorobenzene	98	103

Matrix Spiking Concentration is 50 ug/KG.

DATA CHEM
LABORATORIES

July 5, 1991

REPORT INTRODUCTION
ANALYTICAL COMMENTARY

SUBMITTED TO: Ron Mitchell

SUBMITTED BY: Martin A. Salotto

REFERENCE DATA:

Analysis of: 7 soil samples, matrix spike, and matrix spike duplicate

Method of Analysis: EPA 8270 with modifications

Identification No: S91-0392-GG

DataChem Laboratory No: EK 1980 through EK 1986, EK 1987MS, EK 1988MSD

The above numbered samples were analyzed for base-neutral and acid compounds by gas chromatography/mass spectrometry. EPA Test Method 8270 was followed with modifications. (United States Environmental Protection Agency; Office of Solid Waste and Emergency Response, SW-846 November 1986).

EPA Method 3550 was used for preparation of the sample prior to analysis. Thirty grams of the soil samples were extracted with methylene chloride using sonication. Surrogate standards were added prior to the extraction as prescribed. The total volume of the sample after extraction and concentration was one milliliter. Internal standards were added to the sample and standard mixture prior to analysis.

Separation of the compounds of interest was obtained with a 30 m, 0.32 mm internal diameter, DB-5 fused silica capillary column. Oven temperature was programmed from 40 degrees centigrade (held isothermally for 4 minutes) to 300 degrees centigrade at 10 degrees centigrade per minute. A 40 second splitless injection interval was used. Analysis was performed using a Finnigan 5100 GC/MS/DS system, scanning a mass range of 35 to 500 amu each second.

CINCINNATI OFFICE
4388 GLENDALE-MILFORD ROAD
CINCINNATI, OHIO 45242-3706
513 733-5336, FAX 513 733-5347

SALT LAKE OFFICE
960 WEST LEVOY DRIVE
SALT LAKE CITY, UTAH 84123-2547
801 266-7700, FAX 801 268-9992

DENVER OFFICE
[illegible]

The initial calibration of the instrument was performed at concentrations of 160, 120, 80, 50 and 20 ug/mL. Calibration check compounds (CCC's) specified by the method are acenaphthene, 1,4-dichlorobenzene, hexachlorobutadiene, N-nitroso-di-n-phenylamine, di-n-octylphthalate, fluoranthene, benzo(a)pyrene, 4-chloro-3-methylphenol, 2,4-dichlorophenol, 2-nitrophenol, phenol, pentachlorophenol, and 2,4,6-trichlorophenol. The relative standard deviation of the response factors (RF) for each CCC in the initial standards was less than the 30% criteria required by the method. System performance check compounds (SPCC's) specified in the method are N-nitroso-di-n-propylamine, hexachlorocyclopentadiene, 2,4-dinitrophenol, and 4-nitrophenol. The minimum response factors (RF) for the SPCC's were greater than the 0.050 required in the method.

The continuing calibration of the instrument was performed at a concentration of 50 ug/mL for all compounds. The response factors for all CCC's were less than the maximum percent difference of 25% compared to the initial curve; SPCC's response factors were greater than the minimum RF of 0.050. DFTPP performance criteria was met for all sample and standard analyses.

DataChem Laboratories will maintain a complete record of this data on magnetic tape along with hard copies of the ion chromatograms, mass spectra, surrogate recovery summary, and verification of compliance with EPA tuning (DFTPP) and chromatography criteria.

A matrix spike analysis was performed on sample EK 1985 and was reported as EK 1987MS and EK 1988MSD. Matrix spike recoveries are reported on the Matrix Spike and Duplicate Recovery Report. Recoveries for all matrix spike analytes were acceptable; reproducibility was also good.

Surrogate standard recoveries were monitored and are reported on the Surrogate Summary form at the end of the report. Surrogate recoveries were within QC limits except for terphenyl-D14 which was high in the matrix spike samples EK 1987MS.

A low-level amount of benzoic acid was detected in the method blank. The reported amounts in the samples were adjusted for the amount in the blank. When the amount in the method blank exceeded the amount in the sample a "U" was reported for the sample. Results for the samples are reported twice in the report; first on the Target Analyte Summary Report and again on the Analytical Report (results by sample). The report follows.

Martin A. Salotto

Martin A. Salotto

ANALYTICAL REPORT FOR SAMPLE No. EK 1980

EPA METHOD 8270, 3rd ED.
TARGET ANALYTE RESULTS

Field Sample ID B00GP2 Sponsor WESTINGHOUSE HANFORD CO.

File ID KP14EK1980 Date Extracted 06/12/91 Date of Analysis 06/27/91

DataChem ID S91-0392GG

Cas. No	COMPOUND	RESULTS (ug/g)	DETECTION LIMITS (ug/g)
62-75-9	N-nitrosodimethylamine	U	1
108-95-2	phenol	U	1
111-44-4	bis(2-chloroethyl)ether	U	1
95-57-8	2-chlorophenol	U	1
541-73-1	1,3-dichlorobenzene	U	1
106-46-7	1,4-dichlorobenzene	U	1
95-50-1	1,2-dichlorobenzene	U	1
39638-329	bis(2-chloroisopropyl)ether	U	1
621-64-7	N-nitrosodi-n-propylamine	U	1
67-72-1	hexachloroethane	U	1
98-95-3	nitrobenzene	U	1
78-59-1	isophorone	U	1
88-75-5	2-nitrophenol	U	1
105-67-9	2,4-dimethylphenol	U	1
11-91-1	bis(2-chloroethoxy)methane	U	1
120-83-2	2,4-dichlorophenol	U	1
120-82-1	1,2,4-trichlorobenzene	U	1
91-20-3	naphthalene	U	1
87-68-3	hexachlorobutadiene	U	1
59-50-7	4-chloro-3-methylphenol	U	1
77-47-4	hexachlorocyclopentadiene	U	1
88-06-2	2,4,6-trichlorophenol	U	1
91-58-7	2-chloronaphthalene	U	1
131-11-3	dimethyl phthalate	U	1
606-20-2	2,6-dinitrotoluene	U	1
208-96-8	acenaphthylene	U	1
83-32-9	acenaphthene	U	1
51-28-5	2,4-dinitrophenol	U	1
100-02-7	4-nitrophenol	U	1
121-14-2	2,4-dinitrotoluene	U	1
84-66-2	diethyl phthalate	U	1
7005-73-3	4-chlorophenyl-phenylether	U	1
86-73-7	fluorene	U	1
534-52-1	2-methyl-4,6-dinitrophenol	U	1
86-30-6	N-nitrosodiphenylamine	U	1
101-55-3	4-bromophenyl-phenylether	U	1
118-74-1	hexachlorobenzene	U	1
319-85-7	beta-BHC	U	5
87-86-5	pentachlorophenol	U	1
85-01-8	phenanthrene	U	1
120-12-7	anthracene	U	1

ANALYTICAL REPORT FOR SAMPLE No. EK 1980

EPA METHOD 8270, 3rd ED.
TARGET ANALYTE RESULTS

Field Sample ID BOOGP2 Sponsor WESTINGHOUSE HANFORD CO.

Cas. No.	COMPOUND	RESULTS (ug/g)	DETECTION LIMITS (ug/g)
319-86-8	delta-BHC	U	5
76-44-8	heptachlor	U	5
84-74-2	di-n-butyl phthalate	U	1
309-00-2	aldrin	U	5
1024-57-3	heptachlor epoxide	U	5
206-44-0	fluoranthene	U	1
129-00-0	pyrene	U	1
959-98-8	endosulfan I	U	5
75-55-9	4,4'DDE	U	5
92-87-5	benzidine	U	1
60-57-1	dieldrin	U	5
72-20-8	endrin	U	5
72-54-8	4,4'DDD	U	5
33213-65-9	endosulfan II	U	5
7421-93-4	endrin aldehyde	U	5
85-68-7	benzyl-butylphthalate	U	1
50-29-3	4,4'DDT	U	5
1031-07-8	endosulfan sulfate	U	5
117-81-7	bis(2-ethylhexyl)phthalate	U	1
56-55-3	benzo(a)anthracene	U	1
218-01-9	chrysene	U	1
91-94-1	3,3-dichlorobenzidine	U	1
117-84-0	di-n-octylphthalate	U	1
205-99-2	benzo(b)fluoranthene	U	1
207-08-9	benzo(k)fluoranthene	U	1
50-32-8	benzo(a)pyrene	U	1
193-39-5	indeno(1,2,3-cd)pyrene	U	1
53-70-3	dibenzo(a,h)anthracene	U	1
191-24-2	benzo(ghi)perylene	U	1
57-74-9	chlordane	U	10
8001-35-2	toxaphene	U	10
12674-11-2	PCB-1016	U	10
11104-28-2	PCB-1221	U	10
11141-16-5	PCB-1232	U	10
53469-21-9	PCB-1242	U	10
12672-29-6	PCB-1248	U	10
11097-69-1	PCB-1254	U	10
11096-82-5	PCB-1260	U	10

See footnotes on Page 4.

ANALYTICAL REPORT FOR SAMPLE No. EK 1980

EPA METHOD 8270, 3rd ED.
TARGET ANALYTE RESULTS

Field Sample ID BOOGP2 Sponsor WESTINGHOUSE HANFORD CO.

Cas. No.	COMPOUND	RESULTS (ug/g)	DETECTION LIMITS (ug/g)
98-86-2	acetophenone	U	1
62-53-3	aniline	U	1
92-67-1	4-aminobiphenyl	U	1
65-85-0	benzoic acid	I. U ~~0.18 B~~	1
100-51-6	benzyl alcohol	U	1
319-84-6	.alpha.-BHC	U	1
58-89-9	.gamma.-BHC	U	1
106-47-8	4-chloroaniline	U	5
90-13-1	1-chloronaphthalene	U	1
224-42-0	dibenz(a,j)acridine	U	1
132-64-9	dibenzofuran	U	1
87-65-0	2,6-dichlorophenol	U	1
60-11-7	p-dimethylaminoazobenzene	U	1
57-97-6	7,12-dimethbenz(a)anthracene	U	1
122-09-8	a,a-dimethyphenethylamine	U	1
17082-12-1	1,2-diphenylhydrazine	U	1
53494-70-5	endrin ketone	U	1
62-50-0	ethyl methanesulfonate	U	1
72-43-5	methoxychlor	U	1
56-49-5	3-methylcholanthrene	U	1
66-27-3	ethyl methanesulfonate	U	1
91-57-6	2-methylnaphthalene	U	1
95-48-7	2-methylphenol	U	1
106-44-5	4-methylphenol	U	1
134-32-7	1-naphthylamine	U	1
131-07-2	2-naphthylamine	U	1
88-74-4	2-nitroaniline	U	5
99-09-2	3-nitroaniline	U	5
100-10-6	4-nitroaniline	U	5
924-16-3	n-nitroso-di-n-butylamine	U	1
100-75-4	n-nitrosopiperidine	U	1
608-93-5	pentachlorobenzene	U	1
589-82-4	pentachloronitrobenzene	U	1
62-44-2	phenacetin	U	1
109-06-8	2-picoline	U	1
23950-58-5	pronamide	U	1
95-94-3	1,2,4,5-tetrachlorobenzene	U	1
58-90-2	2,3,4,6-tetrachlorophenol	U	1
95-95-4	2,4,5-trichlorophenol	U	1

JF 11/14/92

See footnotes on Page 4.

ANALYTICAL REPORT FOR SAMPLE No. EK 1980

NON-TARGET ANALYTE RESULTS
Additional Semi-Volatiles

Field Sample ID BOOGP2

Cas. No	COMPOUND	Scan Number	Results ug/g	Footnotes
----------	ALDOL CONDENSATION PRODUCT	~~597~~	~~3.6~~	~~ENWB~~
----------	ALDOL CONDENSATION PRODUCT	611	0.6	ENW
----------	ALDOL CONDENSATION PRODUCT	656	1.2	ENW
----------	LONG CHAIN UNSATURATED HYDROCARBON	1813	0.6	ENW
----------	ALKANE @~C27	1934	1.6	ENW
----------	POLYCYCLIC HYDROCARBON	1949	0.8	ENW
----------	POLYCYCLIC HYDROCARBON	2023	0.8	ENW
----------	ALKANE @~C29	2103	4.3	ENW
----------	UNKNOWN	2130	0.6	EN
----------	ALKANE @~C31	2352	0.7	ENW

11/14/92

FOOTNOTES

B The analyte was found in the method blank. The reported results have been adjusted for the quantity found in the blank.
E The reported concentration is an estimate only. The response factor was assumed to be 1.000 relative to an internal standard.
J Indicates an estimated concentration below the Method Detection Limit.
K The isomer is unknown.
N Analytical standards were not analyzed for this compound.
U Not detected.
W The identification is tentative or closely related to the compound.

ANALYTICAL REPORT FOR SAMPLE No. EK 1981

EPA METHOD 8270, 3rd ED.
TARGET ANALYTE RESULTS

Field Sample ID BOOGP3 Sponsor WESTINGHOUSE HANFORD CO.

File ID WK12EK1981 Date Extracted 06/12/91 Date of Analysis 06/14/91

DataChem ID S91-0392GG

Cas. No	COMPOUND	RESULTS (ug/g)	DETECTION LIMITS (ug/g)
62-75-9	N-nitrosodimethylamine	U	1
108-95-2	phenol	U	1
111-44-4	bis(2-chloroethyl)ether	U	1
95-57-8	2-chlorophenol	U	1
541-73-1	1,3-dichlorobenzene	U	1
106-46-7	1,4-dichlorobenzene	U	1
95-50-1	1,2-dichlorobenzene	U	1
39638-329	bis(2-chloroisopropyl)ether	U	1
621-64-7	N-nitrosodi-n-propylamine	U	1
67-72-1	hexachloroethane	U	1
98-95-3	nitrobenzene	U	1
78-59-1	isophorone	U	1
88-75-5	2-nitrophenol	U	1
105-67-9	2,4-dimethylphenol	U	1
11-91-1	bis(2-chloroethoxy)methane	U	1
120-83-2	2,4-dichlorophenol	U	1
120-82-1	1,2,4-trichlorobenzene	U	1
91-20-3	naphthalene	U	1
87-68-3	hexachlorobutadiene	U	1
59-50-7	4-chloro-3-methylphenol	U	1
77-47-4	hexachlorocyclopentadiene	U	1
88-06-2	2,4,6-trichlorophenol	U	1
91-58-7	2-chloronaphthalene	U	1
131-11-3	dimethyl phthalate	U	1
606-20-2	2,6-dinitrotoluene	U	1
208-96-8	acenaphthylene	U	1
83-32-9	acenaphthene	U	1
51-28-5	2,4-dinitrophenol	U	1
100-02-7	4-nitrophenol	U	1
121-14-2	2,4-dinitrotoluene	U	1
84-66-2	diethyl phthalate	U	1
7005-73-3	4-chlorophenyl-phenylether	U	1
86-73-7	fluorene	U	1
534-52-1	2-methyl-4,6-dinitrophenol	U	1
86-30-6	N-nitrosodiphenylamine	U	1
101-55-3	4-bromophenyl-phenylether	U	1
118-74-1	hexachlorobenzene	U	1
319-85-7	beta-BHC	U	5
87-86-5	pentachlorophenol	U	1
85-01-8	phenanthrene	U	1
120-12-7	anthracene	U	1

ANALYTICAL REPORT FOR SAMPLE No. EK 1981

EPA METHOD 8270, 3rd ED.
TARGET ANALYTE RESULTS

Field Sample ID BOOGP3 Sponsor WESTINGHOUSE HANFORD CO.

Cas. No.	COMPOUND	RESULTS (ug/g)	DETECTION LIMITS (ug/g)
319-86-8	delta-BHC	U	5
76-44-8	heptachlor	U	5
84-74-2	di-n-butyl phthalate	U	1
309-00-2	aldrin	U	5
1024-57-3	heptachlor epoxide	U	5
206-44-0	fluoranthene	U	1
129-00-0	pyrene	U	1
959-98-8	endosulfan I	U	5
75-55-9	4,4'DDE	U	5
92-87-5	benzidine	U	1
60-57-1	dieldrin	U	5
72-20-8	endrin	U	5
72-54-8	4,4'DDD	U	5
33213-65-9	endosulfan II	U	5
7421-93-4	endrin aldehyde	U	5
85-68-7	benzyl-butylphthalate	U	1
50-29-3	4,4'DDT	U	5
1031-07-8	endosulfan sulfate	U	5
117-81-7	bis(2-ethylhexyl)phthalate	U	1
56-55-3	benzo(a)anthracene	U	1
218-01-9	chrysene	U	1
91-94-1	3,3-dichlorobenzidine	U	1
117-84-0	di-n-octylphthalate	U	1
205-99-2	benzo(b)fluoranthene	U	1
207-08-9	benzo(k)fluoranthene	U	1
50-32-8	benzo(a)pyrene	U	1
193-39-5	indeno(1,2,3-cd)pyrene	U	1
53-70-3	dibenzo(a,h)anthracene	U	1
191-24-2	benzo(ghi)perylene	U	1
57-74-9	chlordane	U	10
8001-35-2	toxaphene	U	10
12674-11-2	PCB-1016	U	10
11104-28-2	PCB-1221	U	10
11141-16-5	PCB-1232	U	10
53469-21-9	PCB-1242	U	10
12672-29-6	PCB-1248	U	10
11097-69-1	PCB-1254	U	10
11096-82-5	PCB-1260	U	10

See footnotes on Page 4.

ANALYTICAL REPORT FOR SAMPLE No. EK 1981

EPA METHOD 8270, 3rd ED.
TARGET ANALYTE RESULTS

Field Sample ID BOOGP3 Sponsor WESTINGHOUSE HANFORD CO.

Cas. No.	COMPOUND	RESULTS (ug/g)	DETECTION LIMITS (ug/g)
98-86-2	acetophenone	U	1
62-53-3	aniline	U	1
92-67-1	4-aminobiphenyl	U	1
65-85-0	benzoic acid	U	1
100-51-6	benzyl alcohol	U	1
319-84-6	.alpha.-BHC	U	1
58-89-9	.gamma.-BHC	U	1
106-47-8	4-chloroaniline	U	5
90-13-1	1-chloronaphthalene	U	1
224-42-0	dibenz(a,j)acridine	U	1
132-64-9	dibenzofuran	U	1
87-65-0	2,6-dichlorophenol	U	1
60-11-7	p-dimethylaminoazobenzene	U	1
57-97-6	7,12-dimethbenz(a)anthracene	U	1
122-09-8	a,a-dimethyphenethylamine	U	1
17082-12-1	1,2-diphenylhydrazine	U	1
53494-70-5	endrin ketone	U	1
62-50-0	ethyl methanesulfonate	U	1
72-43-5	methoxychlor	U	1
56-49-5	3-methylcholanthrene	U	1
66-27-3	ethyl methanesulfonate	U	1
91-57-6	2-methylnaphthalene	U	1
95-48-7	2-methylphenol	U	1
106-44-5	4-methylphenol	U	1
134-32-7	1-naphthylamine	U	1
131-07-2	2-naphthylamine	U	1
88-74-4	2-nitroaniline	U	5
99-09-2	3-nitroaniline	U	5
100-10-6	4-nitroaniline	U	5
924-16-3	n-nitroso-di-n-butylamine	U	1
100-75-4	n-nitrosopiperidine	U	1
608-93-5	pentachlorobenzene	U	1
589-82-4	pentachloronitrobenzene	U	1
62-44-2	phenacetin	U	1
109-06-8	2-picoline	U	1
23950-58-5	pronamide	U	1
95-94-3	1,2,4,5-tetrachlorobenzene	U	1
58-90-2	2,3,4,6-tetrachlorophenol	U	1
95-95-4	2,4,5-trichlorophenol		1

See footnotes on Page 4.

ANALYTICAL REPORT FOR SAMPLE No. EK 1981

NON-TARGET ANALYTE RESULTS
Additional Semi-Volatiles

Field Sample ID B00GP3

Cas. No	COMPOUND	Scan Number	Results ug/g	Footnotes
----------	ALDOL CONDENSATION PRODUCT	635	0.3	ENW
----------	ALDOL CONDENSATION PRODUCT	673	1.7	ENW
----------	ALDOL CONDENSATION PRODUCT	693	0.5	ENW

FOOTNOTES

- B The analyte was found in the method blank. The reported results have been adjusted for the quantity found in the blank.
- E The reported concentration is an estimate only. The response factor was assumed to be 1.000 relative to an internal standard.
- J Indicates an estimated concentration below the Method Detection Limit.
- K The isomer is unknown.
- N Analytical standards were not analyzed for this compound.
- U Not detected.
- W The identification is tentative or closely related to the compound.

ANALYTICAL REPORT FOR SAMPLE No. EK 1982

EPA METHOD 8270, 3rd ED.
TARGET ANALYTE RESULTS

Field Sample ID B00GP4 Sponsor WESTINGHOUSE HANFORD CO.

File ID KP15EK1982 Date Extracted 06/12/91 Date of Analysis 06/27/91

DataChem ID S91-0392GG

Cas. No	COMPOUND	RESULTS (ug/g)	DETECTION LIMITS (ug/g)
62-75-9	N-nitrosodimethylamine	U	1
108-95-2	phenol	U	1
111-44-4	bis(2-chloroethyl)ether	U	1
95-57-8	2-chlorophenol	U	1
541-73-1	1,3-dichlorobenzene	U	1
106-46-7	1,4-dichlorobenzene	U	1
95-50-1	1,2-dichlorobenzene	U	1
39638-329	bis(2-chloroisopropyl)ether	U	1
621-64-7	N-nitrosodi-n-propylamine	U	1
67-72-1	hexachloroethane	U	1
98-95-3	nitrobenzene	U	1
78-59-1	isophorone	U	1
88-75-5	2-nitrophenol	U	1
105-67-9	2,4-dimethylphenol	U	1
11-91-1	bis(2-chloroethoxy)methane	U	1
120-83-2	2,4-dichlorophenol	U	1
120-82-1	1,2,4-trichlorobenzene	U	1
91-20-3	naphthalene	U	1
87-68-3	hexachlorobutadiene	U	1
59-50-7	4-chloro-3-methylphenol	U	1
77-47-4	hexachlorocyclopentadiene	U	1
88-06-2	2,4,6-trichlorophenol	U	1
91-58-7	2-chloronaphthalene	U	1
131-11-3	dimethyl phthalate	U	1
606-20-2	2,6-dinitrotoluene	U	1
208-96-8	acenaphthylene	U	1
83-32-9	acenaphthene	U	1
51-28-5	2,4-dinitrophenol	U	1
100-02-7	4-nitrophenol	U	1
121-14-2	2,4-dinitrotoluene	U	1
84-66-2	diethyl phthalate	U	1
7005-73-3	4-chlorophenyl-phenylether	U	1
86-73-7	fluorene	U	1
534-52-1	2-methyl-4,6-dinitrophenol	U	1
86-30-6	N-nitrosodiphenylamine	U	1
101-55-3	4-bromophenyl-phenylether	U	1
118-74-1	hexachlorobenzene	U	1
319-85-7	beta-BHC	U	5
87-86-5	pentachlorophenol	U	1
85-01-8	phenanthrene	U	1
120-12-7	anthracene	U	1

ANALYTICAL REPORT FOR SAMPLE No. EK 1982

EPA METHOD 8270, 3rd ED.
TARGET ANALYTE RESULTS

Field Sample ID BOOGP4 Sponsor WESTINGHOUSE HANFORD CO.

Cas. No.	COMPOUND	RESULTS (ug/g)	DETECTION LIMITS (ug/g)
319-86-8	delta-BHC	U	5
76-44-8	heptachlor	U	5
84-74-2	di-n-butyl phthalate	U	1
309-00-2	aldrin	U	5
1024-57-3	heptachlor epoxide	U	5
206-44-0	fluoranthene	U	1
129-00-0	pyrene	U	1
959-98-8	endosulfan I	U	5
75-55-9	4,4'DDE	U	5
92-87-5	benzidine	U	1
60-57-1	dieldrin	U	5
72-20-8	endrin	U	5
72-54-8	4,4'DDD	U	5
33213-65-9	endosulfan II	U	5
7421-93-4	endrin aldehyde	U	5
85-68-7	benzyl-butylphthalate	U	1
50-29-3	4,4'DDT	U	5
1031-07-8	endosulfan sulfate	U	5
117-81-7	bis(2-ethylhexyl)phthalate	U	1
56-55-3	benzo(a)anthracene	U	1
218-01-9	chrysene	U	1
91-94-1	3,3-dichlorobenzidine	U	1
117-84-0	di-n-octylphthalate	U	1
205-99-2	benzo(b)fluoranthene	U	1
207-08-9	benzo(k)fluoranthene	U	1
50-32-8	benzo(a)pyrene	U	1
193-39-5	indeno(1,2,3-cd)pyrene	U	1
53-70-3	dibenzo(a,h)anthracene	U	1
191-24-2	benzo(ghi)perylene	U	1
57-74-9	chlordane	U	10
8001-35-2	toxaphene	U	10
12674-11-2	PCB-1016	U	10
11104-28-2	PCB-1221	U	10
11141-16-5	PCB-1232	U	10
53469-21-9	PCB-1242	U	10
12672-29-6	PCB-1248	U	10
11097-69-1	PCB-1254	U	10
11096-82-5	PCB-1260	U	10

See footnotes on Page 4.

ANALYTICAL REPORT FOR SAMPLE No. EK 1982

EPA METHOD 8270, 3rd ED.
TARGET ANALYTE RESULTS

Field Sample ID BOOGP4 Sponsor WESTINGHOUSE HANFORD CO.

Cas. No.	COMPOUND	RESULTS (ug/g)	DETECTION LIMITS (ug/g)
98-86-2	acetophenone	U	1
62-53-3	aniline	U	1
92-67-1	4-aminobiphenyl	U	1
65-85-0	benzoic acid	1 U ~~0.04~~ B	1
100-51-6	benzyl alcohol	U	1
319-84-6	.alpha.-BHC	U	1
58-89-9	.gamma.-BHC	U	1
106-47-8	4-chloroaniline	U	5
90-13-1	1-chloronaphthalene	U	1
224-42-0	dibenz(a,j)acridine	U	1
132-64-9	dibenzofuran	U	1
87-65-0	2,6-dichlorophenol	U	1
60-11-7	p-dimethylaminoazobenzene	U	1
57-97-6	7,12-dimethbenz(a)anthracene	U	1
122-09-8	a,a-dimethyphenethylamine	U	1
17082-12-1	1,2-diphenylhydrazine	U	1
53494-70-5	endrin ketone	U	1
62-50-0	ethyl methanesulfonate	U	1
72-43-5	methoxychlor	U	1
56-49-5	3-methylcholanthrene	U	1
66-27-3	ethyl methanesulfonate	U	1
91-57-6	2-methylnaphthalene	U	1
95-48-7	2-methylphenol	U	1
106-44-5	4-methylphenol	U	1
134-32-7	1-naphthylamine	U	1
131-07-2	2-naphthylamine	U	1
88-74-4	2-nitroaniline	U	5
99-09-2	3-nitroaniline	U	5
100-10-6	4-nitroaniline	U	5
924-16-3	n-nitroso-di-n-butylamine	U	1
100-75-4	n-nitrosopiperidine	U	1
608-93-5	pentachlorobenzene	U	1
589-82-4	pentachloronitrobenzene	U	1
62-44-2	phenacetin	U	1
109-06-8	2-picoline	U	1
23950-58-5	pronamide	U	1
95-94-3	1,2,4,5-tetrachlorobenzene	U	1
58-90-2	2,3,4,6-tetrachlorophenol	U	1
95-95-4	2,4,5-trichlorophenol	U	1

11/14/92

See footnotes on Page 4.

ANALYTICAL REPORT FOR SAMPLE No. EK 1982

NON-TARGET ANALYTE RESULTS
Additional Semi-Volatiles

Field Sample ID BOOGP4

Cas. No	COMPOUND	Scan Number	Results ug/g	Footnotes
----------	ALDOL CONDENSATION PRODUCT	~~605~~	~~4.7~~	~~ENWB~~
----------	ALDOL CONDENSATION PRODUCT	663	1.7	ENW
----------	ALKANE @~C27	1939	0.8	ENW
----------	ALKANE @~C29	2109	1.5	ENW
----------	ALKANE @~C31	2355	0.3	ENW
----------	UNKNOWN	2865	0.5	EN

FOOTNOTES

- B The analyte was found in the method blank. The reported results have been adjusted for the quantity found in the blank.
- E The reported concentration is an estimate only. The response factor was assumed to be 1.000 relative to an internal standard.
- J Indicates an estimated concentration below the Method Detection Limit.
- K The isomer is unknown.
- N Analytical standards were not analyzed for this compound.
- U Not detected.
- W The identification is tentative or closely related to the compound.

ANALYTICAL REPORT FOR SAMPLE No. EK 1983

EPA METHOD 8270, 3rd ED.
TARGET ANALYTE RESULTS

Field Sample ID B00GP5 Sponsor WESTINGHOUSE HANFORD CO.

File ID KP9EK1983 Date Extracted 06/12/91 Date of Analysis 06/26/91

DataChem ID S91-0392GG

Cas. No	COMPOUND	RESULTS (ug/g)	DETECTION LIMITS (ug/g)
62-75-9	N-nitrosodimethylamine	U	1
108-95-2	phenol	U	1
111-44-4	bis(2-chloroethyl)ether	U	1
95-57-8	2-chlorophenol	U	1
541-73-1	1,3-dichlorobenzene	U	1
106-46-7	1,4-dichlorobenzene	U	1
95-50-1	1,2-dichlorobenzene	U	1
39638-329	bis(2-chloroisopropyl)ether	U	1
621-64-7	N-nitrosodi-n-propylamine	U	1
67-72-1	hexachloroethane	U	1
98-95-3	nitrobenzene	U	1
78-59-1	isophorone	U	1
88-75-5	2-nitrophenol	U	1
105-67-9	2,4-dimethylphenol	U	1
11-91-1	bis(2-chloroethoxy)methane	U	1
120-83-2	2,4-dichlorophenol	U	1
120-82-1	1,2,4-trichlorobenzene	U	1
91-20-3	naphthalene	U	1
87-68-3	hexachlorobutadiene	U	1
59-50-7	4-chloro-3-methylphenol	U	1
77-47-4	hexachlorocyclopentadiene	U	1
88-06-2	2,4,6-trichlorophenol	U	1
91-58-7	2-chloronaphthalene	U	1
131-11-3	dimethyl phthalate	U	1
606-20-2	2,6-dinitrotoluene	U	1
208-96-8	acenaphthylene	U	1
83-32-9	acenaphthene	U	1
51-28-5	2,4-dinitrophenol	U	1
100-02-7	4-nitrophenol	U	1
121-14-2	2,4-dinitrotoluene	U	1
84-66-2	diethyl phthalate	U	1
7005-73-3	4-chlorophenyl-phenylether	U	1
86-73-7	fluorene	U	1
534-52-1	2-methyl-4,6-dinitrophenol	U	1
86-30-6	N-nitrosodiphenylamine	U	1
101-55-3	4-bromophenyl-phenylether	U	1
118-74-1	hexachlorobenzene	U	1
319-85-7	beta-BHC	U	5
87-86-5	pentachlorophenol	U	1
85-01-8	phenanthrene	U	1
120-12-7	anthracene	U	1

ANALYTICAL REPORT FOR SAMPLE No. EK 1983

EPA METHOD 8270, 3rd ED.
TARGET ANALYTE RESULTS

Field Sample ID BOOGP5 Sponsor WESTINGHOUSE HANFORD CO.

Cas. No.	COMPOUND	RESULTS (ug/g)	DETECTION LIMITS (ug/g)
319-86-8	delta-BHC	U	5
76-44-8	heptachlor	U	5
84-74-2	di-n-butyl phthalate	U	1
309-00-2	aldrin	U	5
1024-57-3	heptachlor epoxide	U	5
206-44-0	fluoranthene	U	1
129-00-0	pyrene	U	1
959-98-8	endosulfan I	U	5
75-55-9	4,4'DDE	U	5
92-87-5	benzidine	U	1
60-57-1	dieldrin	U	5
72-20-8	endrin	U	5
72-54-8	4,4'DDD	U	5
33213-65-9	endosulfan II	U	5
7421-93-4	endrin aldehyde	U	5
85-68-7	benzyl-butylphthalate	U	1
50-29-3	4,4'DDT	U	5
1031-07-8	endosulfan sulfate	U	5
117-81-7	bis(2-ethylhexyl)phthalate	U	1
56-55-3	benzo(a)anthracene	U	1
218-01-9	chrysene	U	1
91-94-1	3,3-dichlorobenzidine	U	1
117-84-0	di-n-octylphthalate	U	1
205-99-2	benzo(b)fluoranthene	U	1
207-08-9	benzo(k)fluoranthene	U	1
50-32-8	benzo(a)pyrene	U	1
193-39-5	indeno(1,2,3-cd)pyrene	U	1
53-70-3	dibenzo(a,h)anthracene	U	1
191-24-2	benzo(ghi)perylene	U	1
57-74-9	chlordane	U	10
8001-35-2	toxaphene	U	10
12674-11-2	PCB-1016	U	10
11104-28-2	PCB-1221	U	10
11141-16-5	PCB-1232	U	10
53469-21-9	PCB-1242	U	10
12672-29-6	PCB-1248	U	10
11097-69-1	PCB-1254	U	10
11096-82-5	PCB-1260	U	10

See footnotes on Page 4.

ANALYTICAL REPORT FOR SAMPLE No. EK 1983

EPA METHOD 8270, 3rd ED.
TARGET ANALYTE RESULTS

Field Sample ID BOOGP5 Sponsor WESTINGHOUSE HANFORD CO.

Cas. No.	COMPOUND	RESULTS (ug/g)	DETECTION LIMITS (ug/g)
98-86-2	acetophenone	U	1
62-53-3	aniline	U	1
92-67-1	4-aminobiphenyl	U	1
65-85-0	benzoic acid	U	1
100-51-6	benzyl alcohol	U	1
319-84-6	.alpha.-BHC	U	1
58-89-9	.gamma.-BHC	U	1
106-47-8	4-chloroaniline	U	5
90-13-1	1-chloronaphthalene	U	1
224-42-0	dibenz(a,j)acridine	U	1
132-64-9	dibenzofuran	U	1
87-65-0	2,6-dichlorophenol	U	1
60-11-7	p-dimethylaminoazobenzene	U	1
57-97-6	7,12-dimethbenz(a)anthracene	U	1
122-09-8	a,a-dimethyphenethylamine	U	1
17082-12-1	1,2-diphenylhydrazine	U	1
53494-70-5	endrin ketone	U	1
62-50-0	ethyl methanesulfonate	U	1
72-43-5	methoxychlor	U	1
56-49-5	3-methylcholanthrene	U	1
66-27-3	ethyl methanesulfonate	U	1
91-57-6	2-methylnaphthalene	U	1
95-48-7	2-methylphenol	U	1
106-44-5	4-methylphenol	U	1
134-32-7	1-naphthylamine	U	1
131-07-2	2-naphthylamine	U	1
88-74-4	2-nitroaniline	U	5
99-09-2	3-nitroaniline	U	5
100-10-6	4-nitroaniline	U	5
924-16-3	n-nitroso-di-n-butylamine	U	1
100-75-4	n-nitrosopiperidine	U	1
608-93-5	pentachlorobenzene	U	1
589-82-4	pentachloronitrobenzene	U	1
62-44-2	phenacetin	U	1
109-06-8	2-picoline	U	1
23950-58-5	pronamide	U	1
95-94-3	1,2,4,5-tetrachlorobenzene	U	1
58-90-2	2,3,4,6-tetrachlorophenol	U	1
95-95-4	2,4,5-trichlorophenol	U	1

See footnotes on Page 4.

ANALYTICAL REPORT FOR SAMPLE No. EK 1983

NON-TARGET ANALYTE RESULTS
Additional Semi-Volatiles

Field Sample ID BOOGP5

Cas. No	COMPOUND	Scan Number	Results ug/g	Footnotes
----------	ALDOL CONDENSATION PRODUCT	~~614~~	~~0.09~~	~~ENWB~~
----------	ALDOL CONDENSATION PRODUCT	669	1.4	ENW
----------	ALDOL CONDENSATION PRODUCT	688	0.2	ENW

FOOTNOTES

B The analyte was found in the method blank. The reported results have been adjusted for the quantity found in the blank.
E The reported concentration is an estimate only. The response factor was assumed to be 1.000 relative to an internal standard.
J Indicates an estimated concentration below the Method Detection Limit.
K The isomer is unknown.
N Analytical standards were not analyzed for this compound.
U Not detected.
W The identification is tentative or closely related to the compound.

ANALYTICAL REPORT FOR SAMPLE No. EK 1984

EPA METHOD 8270, 3rd ED.
TARGET ANALYTE RESULTS

Field Sample ID BOOGP6 Sponsor WESTINGHOUSE HANFORD CO.

File ID KP13EK1984 Date Extracted 06/12/91 Date of Analysis 06/27/91

DataChem ID S91-0392GG

Cas. No	COMPOUND	RESULTS (ug/g)	DETECTION LIMITS (ug/g)
62-75-9	N-nitrosodimethylamine	U	1
108-95-2	phenol	U	1
111-44-4	bis(2-chloroethyl)ether	U	1
95-57-8	2-chlorophenol	U	1
541-73-1	1,3-dichlorobenzene	U	1
106-46-7	1,4-dichlorobenzene	U	1
95-50-1	1,2-dichlorobenzene	U	1
39638-329	bis(2-chloroisopropyl)ether	U	1
621-64-7	N-nitrosodi-n-propylamine	U	1
67-72-1	hexachloroethane	U	1
98-95-3	nitrobenzene	U	1
78-59-1	isophorone	U	1
88-75-5	2-nitrophenol	U	1
105-67-9	2,4-dimethylphenol	U	1
11-91-1	bis(2-chloroethoxy)methane	U	1
120-83-2	2,4-dichlorophenol	U	1
120-82-1	1,2,4-trichlorobenzene	U	1
91-20-3	naphthalene	U	1
87-68-3	hexachlorobutadiene	U	1
59-50-7	4-chloro-3-methylphenol	U	1
77-47-4	hexachlorocyclopentadiene	U	1
88-06-2	2,4,6-trichlorophenol	U	1
91-58-7	2-chloronaphthalene	U	1
131-11-3	dimethyl phthalate	U	1
606-20-2	2,6-dinitrotoluene	U	1
208-96-8	acenaphthylene	U	1
83-32-9	acenaphthene	U	1
51-28-5	2,4-dinitrophenol	U	1
100-02-7	4-nitrophenol	U	1
121-14-2	2,4-dinitrotoluene	U	1
84-66-2	diethyl phthalate	U	1
7005-73-3	4-chlorophenyl-phenylether	U	1
86-73-7	fluorene	U	1
534-52-1	2-methyl-4,6-dinitrophenol	U	1
86-30-6	N-nitrosodiphenylamine	U	1
101-55-3	4-bromophenyl-phenylether	U	1
118-74-1	hexachlorobenzene	U	1
319-85-7	beta-BHC	U	5
87-86-5	pentachlorophenol	U	1
85-01-8	phenanthrene	U	1
120-12-7	anthracene	U	1

ANALYTICAL REPORT FOR SAMPLE No. EK 1984

EPA METHOD 8270, 3rd ED.
TARGET ANALYTE RESULTS

Field Sample ID B00GP6 Sponsor WESTINGHOUSE HANFORD CO.

Cas. No.	COMPOUND	RESULTS (ug/g)	DETECTION LIMITS (ug/g)
319-86-8	delta-BHC	U	5
76-44-8	heptachlor	U	5
84-74-2	di-n-butyl phthalate	U	1
309-00-2	aldrin	U	5
1024-57-3	heptachlor epoxide	U	5
206-44-0	fluoranthene	U	1
129-00-0	pyrene	U	1
959-98-8	endosulfan I	U	5
75-55-9	4,4'DDE	U	5
92-87-5	benzidine	U	1
60-57-1	dieldrin	U	5
72-20-8	endrin	U	5
72-54-8	4,4'DDD	U	5
33213-65-9	endosulfan II	U	5
7421-93-4	endrin aldehyde	U	5
85-68-7	benzyl-butylphthalate	U	1
50-29-3	4,4'DDT	U	5
1031-07-8	endosulfan sulfate	U	5
117-81-7	bis(2-ethylhexyl)phthalate	U	1
56-55-3	benzo(a)anthracene	U	1
218-01-9	chrysene	U	1
91-94-1	3,3-dichlorobenzidine	U	1
117-84-0	di-n-octylphthalate	U	1
205-99-2	benzo(b)fluoranthene	U	1
207-08-9	benzo(k)fluoranthene	U	1
50-32-8	benzo(a)pyrene	U	1
193-39-5	indeno(1,2,3-cd)pyrene	U	1
53-70-3	dibenzo(a,h)anthracene	U	1
191-24-2	benzo(ghi)perylene	U	1
57-74-9	chlordane	U	10
8001-35-2	toxaphene	U	10
12674-11-2	PCB-1016	U	10
11104-28-2	PCB-1221	U	10
11141-16-5	PCB-1232	U	10
53469-21-9	PCB-1242	U	10
12672-29-6	PCB-1248	U	10
11097-69-1	PCB-1254	U	10
11096-82-5	PCB-1260	U	10

See footnotes on Page 4.

ANALYTICAL REPORT FOR SAMPLE No. EK 1984

EPA METHOD 8270, 3rd ED.
TARGET ANALYTE RESULTS

Field Sample ID B00GP6 Sponsor WESTINGHOUSE HANFORD CO.

Cas. No.	COMPOUND	RESULTS (ug/g)	DETECTION LIMITS (ug/g)
98-86-2	acetophenone	U	1
62-53-3	aniline	U	1
92-67-1	4-aminobiphenyl	U	1
65-85-0	benzoic acid	1U ~~0.01~~ B	1
100-51-6	benzyl alcohol	U	1
319-84-6	.alpha.-BHC	U	1
58-89-9	.gamma.-BHC	U	1
106-47-8	4-chloroaniline	U	5
90-13-1	1-chloronaphthalene	U	1
224-42-0	dibenz(a,j)acridine	U	1
132-64-9	dibenzofuran	U	1
87-65-0	2,6-dichlorophenol	U	1
60-11-7	p-dimethylaminoazobenzene	U	1
57-97-6	7,12-dimethbenz(a)anthracene	U	1
122-09-8	a,a-dimethyphenethylamine	U	1
17082-12-1	1,2-diphenylhydrazine	U	1
53494-70-5	endrin ketone	U	1
62-50-0	ethyl methanesulfonate	U	1
72-43-5	methoxychlor	U	1
56-49-5	3-methylcholanthrene	U	1
66-27-3	ethyl methanesulfonate	U	1
91-57-6	2-methylnaphthalene	U	1
95-48-7	2-methylphenol	U	1
106-44-5	4-methylphenol	U	1
134-32-7	1-naphthylamine	U	1
131-07-2	2-naphthylamine	U	1
88-74-4	2-nitroaniline	U	5
99-09-2	3-nitroaniline	U	5
100-10-6	4-nitroaniline	U	5
924-16-3	n-nitroso-di-n-butylamine	U	1
100-75-4	n-nitrosopiperidine	U	1
608-93-5	pentachlorobenzene	U	1
589-82-4	pentachloronitrobenzene	U	1
62-44-2	phenacetin	U	1
109-06-8	2-picoline	U	1
23950-58-5	pronamide	U	1
95-94-3	1,2,4,5-tetrachlorobenzene	U	1
58-90-2	2,3,4,6-tetrachlorophenol	U	1
95-95-4	2,4,5-trichlorophenol	U	1

11/14/92

See footnotes on Page 4.

ANALYTICAL REPORT FOR SAMPLE No. EK 1984

NON-TARGET ANALYTE RESULTS
Additional Semi-Volatiles

Field Sample ID BOOGP6

Cas. No	COMPOUND	Scan Number	Results ug/g	Footnotes
----------	ALDOL CONDENSATION PRODUCT	~~602~~	~~3.0~~	~~ENWB~~
----------	POLYCYCLIC HYDROCARBON	1956	0.5	ENW
----------	POLYCYCLIC HYDROCARBON	1965	0.5	ENW
----------	POLYCYCLIC HYDROCARBON	2061	1.0	ENW
----------	POLYCYCLIC HYDROCARBON	2085	0.4	ENW
----------	POLYCYCLIC HYDROCARBON	2095	1.1	ENW
----------	LONG CHAIN UNSATURATED HYDROCARBON	2109	1.0	ENW
----------	POLYCYCLIC HYDROCARBON	2136	1.4	ENW
----------	POLYCYCLIC HYDROCARBON	2313	0.7	ENW
----------	POLYCYCLIC HYDROCARBON	2412	0.4	ENW

11/19/9

FOOTNOTES

B The analyte was found in the method blank. The reported results have been adjusted for the quantity found in the blank.

E The reported concentration is an estimate only. The response factor was assumed to be 1.000 relative to an internal standard.

J Indicates an estimated concentration below the Method Detection Limit.

K The isomer is unknown.

N Analytical standards were not analyzed for this compound.

U Not detected.

W The identification is tentative or closely related to the compound.

ANALYTICAL REPORT FOR SAMPLE No. EK 1985

EPA METHOD 8270, 3rd ED.
TARGET ANALYTE RESULTS

Field Sample ID BOOGP7 Sponsor WESTINGHOUSE HANFORD CO.

File ID KP10EK1985 Date Extracted 06/12/91 Date of Analysis 06/26/91

DataChem ID S91-0392GG

Cas. No	COMPOUND	RESULTS (ug/g)	DETECTION LIMITS (ug/g)
62-75-9	N-nitrosodimethylamine	U	1
108-95-2	phenol	U	1
111-44-4	bis(2-chloroethyl)ether	U	1
95-57-8	2-chlorophenol	U	1
541-73-1	1,3-dichlorobenzene	U	1
106-46-7	1,4-dichlorobenzene	U	1
95-50-1	1,2-dichlorobenzene	U	1
39638-329	bis(2-chloroisopropyl)ether	U	1
621-64-7	N-nitrosodi-n-propylamine	U	1
67-72-1	hexachloroethane	U	1
98-95-3	nitrobenzene	U	1
78-59-1	isophorone	U	1
88-75-5	2-nitrophenol	U	1
105-67-9	2,4-dimethylphenol	U	1
11-91-1	bis(2-chloroethoxy)methane	U	1
120-83-2	2,4-dichlorophenol	U	1
120-82-1	1,2,4-trichlorobenzene	U	1
91-20-3	naphthalene	U	1
87-68-3	hexachlorobutadiene	U	1
59-50-7	4-chloro-3-methylphenol	U	1
77-47-4	hexachlorocyclopentadiene	U	1
88-06-2	2,4,6-trichlorophenol	U	1
91-58-7	2-chloronaphthalene	U	1
131-11-3	dimethyl phthalate	U	1
606-20-2	2,6-dinitrotoluene	U	1
208-96-8	acenaphthylene	U	1
83-32-9	acenaphthene	U	1
51-28-5	2,4-dinitrophenol	U	1
100-02-7	4-nitrophenol	U	1
121-14-2	2,4-dinitrotoluene	U	1
84-66-2	diethyl phthalate	U	1
7005-73-3	4-chlorophenyl-phenylether	U	1
86-73-7	fluorene	U	1
534-52-1	2-methyl-4,6-dinitrophenol	U	1
86-30-6	N-nitrosodiphenylamine	U	1
101-55-3	4-bromophenyl-phenylether	U	1
118-74-1	hexachlorobenzene	U	1
319-85-7	beta-BHC	U	5
87-86-5	pentachlorophenol	U	1
85-01-8	phenanthrene	U	1
120-12-7	anthracene	U	1

test

ANALYTICAL REPORT FOR SAMPLE No. EK 1985

EPA METHOD 8270, 3rd ED.
TARGET ANALYTE RESULTS

Field Sample ID BOOGP7 Sponsor WESTINGHOUSE HANFORD CO.

Cas. No.	COMPOUND	RESULTS (ug/g)	DETECTION LIMITS (ug/g)
319-86-8	delta-BHC	U	5
76-44-8	heptachlor	U	5
84-74-2	di-n-butyl phthalate	U	1
309-00-2	aldrin	U	5
1024-57-3	heptachlor epoxide	U	5
206-44-0	fluoranthene	U	1
129-00-0	pyrene	U	1
959-98-8	endosulfan I	U	5
75-55-9	4,4'DDE	U	5
92-87-5	benzidine	U	1
60-57-1	dieldrin	U	5
72-20-8	endrin	U	5
72-54-8	4,4'DDD	U	5
33213-65-9	endosulfan II	U	5
7421-93-4	endrin aldehyde	U	5
85-68-7	benzyl-butylphthalate	U	1
50-29-3	4,4'DDT	U	5
1031-07-8	endosulfan sulfate	U	5
117-81-7	bis(2-ethylhexyl)phthalate	U	1
56-55-3	benzo(a)anthracene	U	1
218-01-9	chrysene	U	1
91-94-1	3,3-dichlorobenzidine	U	1
117-84-0	di-n-octylphthalate	U	1
205-99-2	benzo(b)fluoranthene	U	1
207-08-9	benzo(k)fluoranthene	U	1
50-32-8	benzo(a)pyrene	U	1
193-39-5	indeno(1,2,3-cd)pyrene	U	1
53-70-3	dibenzo(a,h)anthracene	U	1
191-24-2	benzo(ghi)perylene	U	1
57-74-9	chlordane	U	10
8001-35-2	toxaphene	U	10
12674-11-2	PCB-1016	U	10
11104-28-2	PCB-1221	U	10
11141-16-5	PCB-1232	U	10
53469-21-9	PCB-1242	U	10
12672-29-6	PCB-1248	U	10
11097-69-1	PCB-1254	U	10
11096-82-5	PCB-1260	U	10

See footnotes on Page 4.

ANALYTICAL REPORT FOR SAMPLE No. EK 1985

EPA METHOD 8270, 3rd ED.
TARGET ANALYTE RESULTS

Field Sample ID BOOGP7 Sponsor WESTINGHOUSE HANFORD CO.

Cas. No.	COMPOUND	RESULTS (ug/g)	DETECTION LIMITS (ug/g)
98-86-2	acetophenone	U	1
62-53-3	aniline	U	1
92-67-1	4-aminobiphenyl	U	1
65-85-0	benzoic acid	U	1
100-51-6	benzyl alcohol	U	1
319-84-6	.alpha.-BHC	U	1
58-89-9	.gamma.-BHC	U	1
106-47-8	4-chloroaniline	U	5
90-13-1	1-chloronaphthalene	U	1
224-42-0	dibenz(a,j)acridine	U	1
132-64-9	dibenzofuran	U	1
87-65-0	2,6-dichlorophenol	U	1
60-11-7	p-dimethylaminoazobenzene	U	1
57-97-6	7,12-dimethbenz(a)anthracene	U	1
122-09-8	a,a-dimethyphenethylamine	U	1
17082-12-1	1,2-diphenylhydrazine	U	1
53494-70-5	endrin ketone	U	1
62-50-0	ethyl methanesulfonate	U	1
72-43-5	methoxychlor	U	1
56-49-5	3-methylcholanthrene	U	1
66-27-3	ethyl methanesulfonate	U	1
91-57-6	2-methylnaphthalene	U	1
95-48-7	2-methylphenol	U	1
106-44-5	4-methylphenol	U	1
134-32-7	1-naphthylamine	U	1
131-07-2	2-naphthylamine	U	1
88-74-4	2-nitroaniline	U	5
99-09-2	3-nitroaniline	U	5
100-10-6	4-nitroaniline	U	5
924-16-3	n-nitroso-di-n-butylamine	U	1
100-75-4	n-nitrosopiperidine	U	1
608-93-5	pentachlorobenzene	U	1
589-82-4	pentachloronitrobenzene	U	1
62-44-2	phenacetin	U	1
109-06-8	2-picoline	U	1
23950-58-5	pronamide	U	1
95-94-3	1,2,4,5-tetrachlorobenzene	U	1
58-90-2	2,3,4,6-tetrachlorophenol	U	1
95-95-4	2,4,5-trichlorophenol	U	1

See footnotes on Page 4.

ANALYTICAL REPORT FOR SAMPLE No. EK 1985

NON-TARGET ANALYTE RESULTS
Additional Semi-Volatiles

Field Sample ID BOOGP7

Cas. No	COMPOUND	Scan Number	Results ug/g	Footnotes
----------	ALDOL CONDENSATION PRODUCT	659	1.9	ENW

FOOTNOTES

B The analyte was found in the method blank. The reported results have been adjusted for the quantity found in the blank.

E The reported concentration is an estimate only. The response factor was assumed to be 1.000 relative to an internal standard.

J Indicates an estimated concentration below the Method Detection Limit.

K The isomer is unknown.

N Analytical standards were not analyzed for this compound.

U Not detected.

W The identification is tentative or closely related to the compound.

ANALYTICAL REPORT FOR SAMPLE No. EK 1986

EPA METHOD 8270, 3rd ED.
TARGET ANALYTE RESULTS

Field Sample ID BOOGP8 EQUIP BK Sponsor WESTINGHOUSE HANFORD CO.

File ID WK11EK1986 Date Extracted 06/12/91 Date of Analysis 06/14/91

DataChem ID S91-0392GG

Cas. No	COMPOUND	RESULTS (ug/g)	DETECTION LIMITS (ug/g)
62-75-9	N-nitrosodimethylamine	U	1
108-95-2	phenol	U	1
111-44-4	bis(2-chloroethyl)ether	U	1
95-57-8	2-chlorophenol	U	1
541-73-1	1,3-dichlorobenzene	U	1
106-46-7	1,4-dichlorobenzene	U	1
95-50-1	1,2-dichlorobenzene	U	1
39638-329	bis(2-chloroisopropyl)ether	U	1
621-64-7	N-nitrosodi-n-propylamine	U	1
67-72-1	hexachloroethane	U	1
98-95-3	nitrobenzene	U	1
78-59-1	isophorone	U	1
88-75-5	2-nitrophenol	U	1
105-67-9	2,4-dimethylphenol	U	1
11-91-1	bis(2-chloroethoxy)methane	U	1
120-83-2	2,4-dichlorophenol	U	1
120-82-1	1,2,4-trichlorobenzene	U	1
91-20-3	naphthalene	U	1
87-68-3	hexachlorobutadiene	U	1
59-50-7	4-chloro-3-methylphenol	U	1
77-47-4	hexachlorocyclopentadiene	U	1
88-06-2	2,4,6-trichlorophenol	U	1
91-58-7	2-chloronaphthalene	U	1
131-11-3	dimethyl phthalate	U	1
606-20-2	2,6-dinitrotoluene	U	1
208-96-8	acenaphthylene	U	1
83-32-9	acenaphthene	U	1
51-28-5	2,4-dinitrophenol	U	1
100-02-7	4-nitrophenol	U	1
121-14-2	2,4-dinitrotoluene	U	1
84-66-2	diethyl phthalate	U	1
7005-73-3	4-chlorophenyl-phenylether	U	1
86-73-7	fluorene	U	1
534-52-1	2-methyl-4,6-dinitrophenol	U	1
86-30-6	N-nitrosodiphenylamine	U	1
101-55-3	4-bromophenyl-phenylether	U	1
118-74-1	hexachlorobenzene	U	1
319-85-7	beta-BHC	U	5
87-86-5	pentachlorophenol	U	1
85-01-8	phenanthrene	U	1
120-12-7	anthracene	U	1

ANALYTICAL REPORT FOR SAMPLE No. EK 1986

EPA METHOD 8270, 3rd ED.
TARGET ANALYTE RESULTS

Field Sample ID BOOGP8 EQUIP BK Sponsor WESTINGHOUSE HANFORD CO.

Cas. No.	COMPOUND	RESULTS (ug/g)	DETECTION LIMITS (ug/g)
319-86-8	delta-BHC	U	5
76-44-8	heptachlor	U	5
84-74-2	di-n-butyl phthalate	U	1
309-00-2	aldrin	U	5
1024-57-3	heptachlor epoxide	U	5
206-44-0	fluoranthene	U	1
129-00-0	pyrene	U	1
959-98-8	endosulfan I	U	5
75-55-9	4,4'DDE	U	5
92-87-5	benzidine	U	1
60-57-1	dieldrin	U	5
72-20-8	endrin	U	5
72-54-8	4,4'DDD	U	5
33213-65-9	endosulfan II	U	5
7421-93-4	endrin aldehyde	U	5
85-68-7	benzyl-butylphthalate	U	1
50-29-3	4,4'DDT	U	5
1031-07-8	endosulfan sulfate	U	5
117-81-7	bis(2-ethylhexyl)phthalate	U	1
56-55-3	benzo(a)anthracene	U	1
218-01-9	chrysene	U	1
91-94-1	3,3-dichlorobenzidine	U	1
117-84-0	di-n-octylphthalate	U	1
205-99-2	benzo(b)fluoranthene	U	1
207-08-9	benzo(k)fluoranthene	U	1
50-32-8	benzo(a)pyrene	U	1
193-39-5	indeno(1,2,3-cd)pyrene	U	1
53-70-3	dibenzo(a,h)anthracene	U	1
191-24-2	benzo(ghi)perylene	U	1
57-74-9	chlordane	U	10
8001-35-2	toxaphene	U	10
12674-11-2	PCB-1016	U	10
11104-28-2	PCB-1221	U	10
11141-16-5	PCB-1232	U	10
53469-21-9	PCB-1242	U	10
12672-29-6	PCB-1248	U	10
11097-69-1	PCB-1254	U	10
11096-82-5	PCB-1260	U	10

See footnotes on Page 4.

ANALYTICAL REPORT FOR SAMPLE No. EK 1986

EPA METHOD 8270, 3rd ED.
TARGET ANALYTE RESULTS

Field Sample ID BOOGP8 EQUIP BK Sponsor WESTINGHOUSE HANFORD CO.

Cas. No.	COMPOUND	RESULTS (ug/g)	DETECTION LIMITS (ug/g)
98-86-2	acetophenone	U	1
62-53-3	aniline	U	1
92-67-1	4-aminobiphenyl	U	1
65-85-0	benzoic acid	U	1
100-51-6	benzyl alcohol	U	1
319-84-6	.alpha.-BHC	U	1
58-89-9	.gamma.-BHC	U	1
106-47-8	4-chloroaniline	U	5
90-13-1	1-chloronaphthalene	U	1
224-42-0	dibenz(a,j)acridine	U	1
132-64-9	dibenzofuran	U	1
87-65-0	2,6-dichlorophenol	U	1
60-11-7	p-dimethylaminoazobenzene	U	1
57-97-6	7,12-dimethbenz(a)anthracene	U	1
122-09-8	a,a-dimethyphenethylamine	U	1
17082-12-1	1,2-diphenylhydrazine	U	1
53494-70-5	endrin ketone	U	1
62-50-0	ethyl methanesulfonate	U	1
72-43-5	methoxychlor	U	1
56-49-5	3-methylcholanthrene	U	1
66-27-3	ethyl methanesulfonate	U	1
91-57-6	2-methylnaphthalene	U	1
95-48-7	2-methylphenol	U	1
106-44-5	4-methylphenol	U	1
134-32-7	1-naphthylamine	U	1
131-07-2	2-naphthylamine	U	1
88-74-4	2-nitroaniline	U	5
99-09-2	3-nitroaniline	U	5
100-10-6	4-nitroaniline	U	5
924-16-3	n-nitroso-di-n-butylamine	U	1
100-75-4	n-nitrosopiperidine	U	1
608-93-5	pentachlorobenzene	U	1
589-82-4	pentachloronitrobenzene	U	1
62-44-2	phenacetin	U	1
109-06-8	2-picoline	U	1
23950-58-5	pronamide	U	1
95-94-3	1,2,4,5-tetrachlorobenzene	U	1
58-90-2	2,3,4,6-tetrachlorophenol	U	1
95-95-4	2,4,5-trichlorophenol	U	1

See footnotes on Page 4.

ANALYTICAL REPORT FOR SAMPLE No. EK 1986

NON-TARGET ANALYTE RESULTS
Additional Semi-Volatiles

Field Sample ID B00GP8 EQUIP BLANK

Cas. No	COMPOUND	Scan Number	Results ug/g	Footnotes
----------	ALDOL CONDENSATION PRODUCT	630	0.5	ENW
----------	ALDOL CONDENSATION PRODUCT	671	0.2	ENW

FOOTNOTES

- B The analyte was found in the method blank. The reported results have been adjusted for the quantity found in the blank.
- E The reported concentration is an estimate only. The response factor was assumed to be 1.000 relative to an internal standard.
- J Indicates an estimated concentration below the Method Detection Limit.
- K The isomer is unknown.
- N Analytical standards were not analyzed for this compound.
- U Not detected.
- W The identification is tentative or closely related to the compound.

MATRIX SPIKE AND DUPLICATE RECOVERY REPORT

Sponsor WESTINGHOUSE HANFORD CO.

Date of Analysis 06/26/91 Date Received 06/11/91

DataChem ID for Matrix Spike Analysis EK 1985

DataChem SET ID S91-0392GG

COMPOUND	PERCENT RECOVERY MATRIX SPIKE	PERCENT RECOVERY MATRIX SPIKE DUPLICATE
phenol	72.	68.
2-chlorophenol	74.	74.
1,4-dichlorobenzene	82.	80.
n-nitroso-di-n-propylamine	85.	74.
1,2,4-trichlorobenzene	86.	88.
4-chloro-3-methylphenol	71.	71.
acenaphthene	87.	89.
4-nitrophenol	117.	95.
2,4-dinitrotoluene	109.	94.
pentachlorophenol	81.	84.
pyrene	118.	109.

SURROGATE PERCENT RECOVERY SUMMARY

DataChem ID S91-0392GG

Sample No.	NB	FBP	TP	PH	FP	TBP
MB	95.	91.	132.	81.	54.	46.
EK1980	95.	87.	123.	99.	77.	75.
EK1981	99.	94.	127.	76.	65.	63.
EK1982	84.	85.	132.	85.	67.	67.
EK1983	93.	94.	132.	82.	59.	40.
EK1984	88.	82.	123.	88.	75.	74.
EK1985	89.	90.	123.	69.	50.	32.
EK1986	103.	100.	137.	81.	59.	60.
EK1987S	103.	93.	147.	89.	70.	46.
EK1988D	95.	90.	134.	81.	66.	51.

Abbreviations

NB d5-nitrobenzene
FBP 2-fluorobiphenyl
TP d14-terphenyl
PH d5-phenol
FP 2-fluorophenol
TBP 2,4,6-tribromophenol

MB is the abbreviation for method blank. If more than one method blank was analyzed they will be designated MB-1, MB-2, etc.

DATA CHEM LABORATORIES

ANALYTICAL REPORT

Form ARF-AL
Page 1 of 3
Part 1 of 2

Date 7/23/91
Agency Identification Number S91-0392-DG
Account No. 3534C

Westinghouse Hanford Company
2355 Stevens Drive
MSIN T6-08
Richland,, WA 99352
Attention: Jeanette Duncan

FAX (509) 373-3992
Telephone (509) 373-3225

RECEIVED AUG 1991

Sampling Collection and Shipment

Sampling Site 2101-M Date of Collection June 07, 1991

Date Samples Received at DataChem June 11, 1991

Analysis

Method of Analysis 8150

Date(s) of Analysis July 01, 1991

Analytical Results

Field Sample Number	DataChem Lab Number	Sample Type	2,4-D UG/GRAM	2,4-DB UG/GRAM	2,4,5-T UG/GRAM	2,4,5-TP (Silvex) UG/GRAM	Dalapon UG/GRAM	Dicamba UG/GRAM	Dichloroprop UG/GRAM	Dinoseb UG/GRAM
BOOGP2	EK 1980	SOIL	ND*	ND*	ND*	ND*	ND*	ND*	ND*	ND*
BOOGP3	EK 1981	SOIL	.013	ND*	ND*	ND*	ND*	ND*	ND*	ND*
BOOGP4	EK 1982	SOIL	ND*	ND*	.003	ND*	ND*	ND*	ND*	ND*
BOOGP5	EK 1983	SOIL	.015	ND*	ND*	ND*	ND*	ND*	ND*	ND*
BOOGP6	EK 1984	SOIL	ND*	ND*	ND*	.003	ND*	ND*	ND*	ND*
BOOGP7	EK 1985	SOIL	.010	ND*	ND*	ND*	ND*	ND*	ND*	ND*
BOOGP8	EK 1986	SOIL	ND*	ND*	ND*	ND*	ND*	ND*	ND*	ND*
BOOGP3 MS	EK 1987	SOIL	.073	ND*	.040	.035	ND*	ND*	ND*	ND*
BOOGP3 MSD	EK 1988	SOIL	.076	ND*	.041	.035	ND*	ND*	ND*	ND*
* Limit of Detection			.002	.010	.001	.001	.001	.001	.002	.001

† See comment on last page.
ND Parameter not detected.
NR Parameter not requested.

** See comment on last page.
( ) Parameter between LOD and LOQ.

Analyst: Harold Glade

Reviewer: Kristine M. Kolenz

Laboratory Supervisor: John M. Reynolds FOR

960 West LeVoy Drive / Salt Lake City, Utah 84123-2547 / (801) 266-7700
A Sorenson Company

DATA CHEM LABORATORIES

9513319.2074

ANALYTICAL REPORT

Date 7/23/91
Agency Identification Number S91-0392-DG
Account No. 3534C

Westinghouse Hanford Company
2355 Stevens Drive
MSIN T6-08
Richland,, WA 99352
Attention: Jeanette Duncan

FAX (509) 373-3992
Telephone (509) 373-3225

Sampling Collection and Shipment

Sampling Site 2101-M Date of Collection June 07, 1991

Date Samples Received at DataChem June 11, 1991

Analysis

Method of Analysis 8150

Date(s) of Analysis July 01, 1991

Analytical Results

Client Sample Number	Laboratory Sample Number	Sample Type	MCPA UG/GRAM	MCPP UG/GRAM						
BOOGP2	EK 1980	SOIL	ND*	ND*						
BOOGP3	EK 1981	SOIL	ND*	ND*						
BOOGP4	EK 1982	SOIL	ND*	ND*						
BOOGP5	EK 1983	SOIL	ND*	ND*						
BOOGP6	EK 1984	SOIL	ND*	ND*						
BOOGP7	EK 1985	SOIL	ND*	ND*						
BOOGP8	EK 1986	SOIL	ND*	ND*						
BOOGP3 MS	EK 1987	SOIL	ND*	ND*						
BOOGP3 MSD	EK 1988	SOIL	ND*	ND*						
* Limit of Detection			1.0	2.0						

† See comment on last page.
ND Parameter not detected.
NR Parameter not requested.

** See comment on last page.
( ) Parameter between LOD and LOQ.

DATA CHEM LABORATORIES

ANALYTICAL REPORT

Date 7/23/91
Agency Identification Number S91-0392-DG

General Set Comments

MATRIX SPIKE AND MATRIX SPIKE DUPLICATE RECOVERIES WERE AS FOLLOWS:

EK 1987MS- 2,4-D 60%; 2,4,5-TP 70%; 2,4,5-T 80%.

EK 1988MSD- 2,4-D 63%; 2,4,5-TP 70%; 2,4,5-T 82%.

DATA CHEM LABORATORIES

9513319.2879

ANALYTICAL REPORT

Form ARF-AL
Page 1 of 4
Part 1 of 3

SUMMARY DATA REPORT

Date 7/23/91

Agency Identification Number S91-0392-CG

Account No. 3534C

AUG 1991 RECEIVED DATA RECEIPT

Westinghouse Hanford Company
2355 Stevens Drive
MSIN T6-08
Richland,, WA 99352
Attention: Jeanette Duncan

FAX (509) 373-3992
Telephone (509) 373-3225

Sampling Collection and Shipment

Sampling Site 2101-M Date of Collection June 07, 1991

Date Samples Received at DataChem June 11, 1991

Analysis

Method of Analysis EPA 8140

Date(s) of Analysis July 15, 1991

Analytical Results

Field Sample Number	DataChem Lab Number	Sample Type	Azinphos Methyl UG/mL GC/FPD	Bolstar UG/mL GC/FPD	Chlorpyrifos UG/mL GC/FPD	Coumaphos UG/mL GC/FPD	Demeton-O UG/mL GC/FPD	Demeton-S UG/mL GC/FPD	Diazinon UG/mL GC/FPD	Dichlorvos UG/mL GC/FPD
BOOGP2	EK 1980	SOIL	ND* UJ	ND* UJ	ND* UJ	ND* UJ	ND* UJ	ND* UJ	ND* UJ	ND* UJ
BOOGP3	EK 1981	SOIL	ND*	ND*	ND*	ND*	ND*	ND*	ND*	ND*
BOOGP4	EK 1982	SOIL	ND*	ND*	ND*	ND*	ND*	ND*	ND*	ND*
BOOGP5	EK 1983	SOIL	ND*	ND*	ND*	ND*	ND*	ND*	ND*	ND*
BOOGP6	EK 1984	SOIL	ND*	ND*	ND*	ND*	ND*	ND*	ND*	ND*
BOOGP7	EK 1985	SOIL	ND*	ND*	ND*	ND*	ND*	ND*	ND*	ND*
BOOGP8	EK 1986	SOIL	ND* UJ	ND* UJ	ND* UJ	ND* UJ	ND* UJ	ND* UJ	ND* UJ	ND* UJ
M.S.	EK 1987	SOIL	3.1	ND*	ND*	ND*	ND*	ND*	ND*	ND*
M.S.D.	EK 1988	SOIL	3.6	ND*	ND*	ND*	ND*	ND*	ND*	ND*
* Limit of Detection			0.2	0.2	0.2	0.4	0.2	0.2	0.2	0.2

† See comment on last page.
ND Parameter not detected.
NR Parameter not requested.

** See comment on last page.
( ) Parameter between LOD and LOQ.

Thomas L. Tucker II
Analyst: Thomas L. Tucker II

Terry B. Vayo
Reviewer:

Terry B. Vayo for JMR
Laboratory Supervisor: John M. Reynolds

JJ 11/19/92

960 West LeVoy Drive / Salt Lake City, Utah 84123-2547 / (801) 266-7700
A Sorenson Company
D3-247

DATA CHEM LABORATORIES

ANALYTICAL REPORT

Date 7/23/91
Agency Identification Number S91-0392-CG
Account No. 3534C

Westinghouse Hanford Company
2355 Stevens Drive
MSIN T6-08
Richland,, WA 99352
Attention: Jeanette Duncan

FAX (509) 373-3992
Telephone (509) 373-3225

Sampling Collection and Shipment

Sampling Site 2101-M Date of Collection June 07, 1991

Date Samples Received at DataChem June 11, 1991

Analysis

Method of Analysis EPA 8140

Date(s) of Analysis July 15, 1991

Analytical Results

Field Sample Number	DataChem Lab Number	Sample Type	Disulfoton UG/mL GC/FPD	Ethoprop UG/mL GC/FPD	Fensulfothion UG/mL GC/FPD	Fenthion UG/mL GC/FPD	Merphos UG/mL GC/FPD	Mevinphos UG/mL GC/FPD	Naled UG/mL GC/FPD	Parathion Methyl UG/mL GC/FPD
BOOGP2	EK 1980	SOIL	ND* UJ	ND* UJ	ND* UJ	ND* UJ	ND* UJ	ND* UJ	ND* UJ	ND* UJ
BOOGP3	EK 1981	SOIL	ND*	ND*	ND*	ND*	ND*	ND*	ND*	ND*
BOOGP4	EK 1982	SOIL	ND*	ND*	ND*	ND*	ND*	ND*	ND*	ND*
BOOGP5	EK 1983	SOIL	ND*	ND*	ND*	ND*	ND*	ND*	ND*	ND*
BOOGP6	EK 1984	SOIL	ND*	ND*	ND*	ND*	ND*	ND*	ND*	ND*
BOOGP7	EK 1985	SOIL	ND*	ND*	ND*	ND*	ND*	ND*	ND*	ND*
BOOGP8	EK 1986	SOIL	ND* UJ	ND* UJ	ND* UJ	ND* UJ	ND* UJ	ND* UJ	ND* UJ	ND* UJ
M.S.	EK 1987	SOIL	ND*	ND*	3.3	4.4	ND*	ND*	ND*	ND*
M.S.D.	EK 1988	SOIL	ND*	ND*	3.8	4.6	ND*	ND*	ND*	ND*
* Limit of Detection			0.2	0.2	0.2	0.2	0.2	0.2	1.0	0.2

† See comment on last page.
ND Parameter not detected.
NR Parameter not requested.
** See comment on last page.
( ) Parameter between LOD and LOQ.

JJ 11/14/92

DATA CHEM LABORATORIES

9513319.2076

ANALYTICAL REPORT

Form ARF-AL
Page 3 of 4
Part 3 of 3

Date 7/23/91
Agency Identification Number S91-0392-CG
Account No. 3534C

Westinghouse Hanford Company
2355 Stevens Drive
MSIN T6-08
Richland,, WA 99352
Attention: Jeanette Duncan

FAX (509) 373-3992
Telephone (509) 373-3225

Sampling Collection and Shipment

Sampling Site 2101-M Date of Collection June 07, 1991

Date Samples Received at DataChem June 11, 1991

Analysis

Method of Analysis EPA 8140

Date(s) of Analysis July 15, 1991

Analytical Results

Field Sample Number	DataChem Lab Number	Sample Type*	Phorate UG/mL GC/FPD	Ronnel UG/mL GC/FPD	Stirophos UG/mL GC/FPD	Tokuthion UG/mL GC/FPD	Trichloronate UG/mL GC/FPD			
BOOGP2	EK 1980	SOIL	ND* UJ	ND* UJ	ND* UJ	ND* UJ	ND* UJ			
BOOGP3	EK 1981	SOIL	ND*	ND*	ND*	ND*	ND*			
BOOGP4	EK 1982	SOIL	ND*	ND*	ND*	ND*	ND*			
BOOGP5	EK 1983	SOIL	ND*	ND*	ND*	ND*	ND*			
BOOGP6	EK 1984	SOIL	ND*	ND*	ND*	ND*	ND*			
BOOGP7	EK 1985	SOIL	ND*	ND*	ND*	ND*	ND*			
BOOGP8	EK 1986	SOIL	ND* UJ	ND* UJ	ND* UJ	ND* UJ	ND* UJ			
M.S.	EK 1987	SOIL	5.1	ND*	ND*	ND*	ND*			
M.S.D.	EK 1988	SOIL	5.6	ND*	ND*	ND*	ND*			
Limit of Detection			0.2	0.2	0.2	0.2	0.2			

* See comment on last page.
ND Parameter not detected.
NR Parameter not requested.

** See comment on last page.
( ) Parameter between LOD and LOQ.

11/14/92

DATA CHEM LABORATORIES

ANALYTICAL REPORT

Date 7/23/91

Agency Identification Number S91-0392-CG

General Set Comments

Matrix spike target in ug/mL, therefore, samples reported in ug/mL since the only positive hit in the samples was malathion in EK1986 at .17ug/G. Matrix spike recoveries for dichlorvos, fenthion, fensulfothion, guthion,and phorate spiked at 10ug/mL were as follows: dichlorvos; not recovered may not have been spiked into solution; fenthion, 44% for MS and 46% for MSD; fensulfothion 33% for MS and 38% for MSD; guthion, 31% for MS and 36% for MSD; phorate, 51% for MS and 56% for MSD. The LOD correction factor is .33333 giving LODs in ug/G of .07ug/G, .13ug/G, and .33ug/G respectively.

9513319.2077

DATA CHEM LABORATORIES

ANALYTICAL REPORT

Form ARF-AL
Page 1 of 5
Part 1 of 4

Date 7/16/91
Agency Identification Number S91-0392-EG
Account No. 3534C

Westinghouse Hanford Corporation
P.O. Box 1970
M/S T607
Richland, WA 99352
Attention: Ron Mitchell

FAX (509) 376-6476
Telephone (509) 376-5122

AUG 1991 RECEIVED DATA RECEIPT

Sampling Collection and Shipment

Sampling Site 2101-M Date of Collection June 07, 1991

Date Samples Received at DataChem June 11, 1991

Analysis

Method of Analysis 8080

Date(s) of Analysis June 26, 1991

Analytical Results

Field Sample Number	DataChem Lab Number	Sample Type	Aldrin ug/g	alpha-BHC ug/g	Beta-BHC ug/g	Delta-BHC ug/g	Lindane ug/g	Chlordane ug/g	4,4'-DDD ug/g	4,4'-DDE ug/g
BOOGP2	EK 1980	SOIL	ND*	ND*	ND*	ND*	ND*	ND*	ND*	ND*
BOOGP3	EK 1981	SOIL	ND*	ND*	ND*	ND*	ND*	ND*	ND*	ND*
BOOGP4	EK 1982	SOIL	ND*	ND*	ND*	ND*	ND*	ND*	ND*	ND*
BOOGP5	EK 1983	SOIL	ND*	ND*	ND*	ND*	ND*	ND*	ND*	ND*
BOOGP6	EK 1984	SOIL	ND*	ND*	ND*	ND*	ND*	ND*	ND*	0.0007
BOOGP7	EK 1985	SOIL	ND*	ND*	ND*	ND*	ND*	ND*	ND*	ND*
BOOGP8	EK 1986	SOIL	ND*	ND*	ND*	ND*	ND*	ND*	ND*	ND*
M.S.	EK 1987	SOIL	0.0022	ND*	ND*	ND*	0.0027	ND*	ND*	ND*
M.S.D.	EK 1988	SOIL	0.0020	ND*	ND*	ND*	0.0030	ND*	ND*	ND*
* Limit of Detection			0.0003	0.0003	0.0003	0.0003	0.0003	0.006	0.0003	0.0003

* See comment on last page.
ND Parameter not detected.
NR Parameter not requested.

** See comment on last page.
( ) Parameter between LOD and LOQ.

Analyst: Karin James

Reviewer: Kristine M. Kolenz

Laboratory Supervisor: John M. Reynolds FOR

D3-251

960 West LeVoy Drive / Salt Lake City, Utah 84123-2547 / (801) 266-7700
A Sorenson Company

DATA CHEM LABORATORIES

ANALYTICAL REPORT

Date 7/16/91
Agency Identification Number S91-0392-EG
Account No. 3534C

Westinghouse Hanford Corporation
P.O. Box 1970
M/S T607
Richland, WA 99352
Attention: Ron Mitchell

FAX (509) 376-6476
Telephone (509) 376-5122

Sampling Collection and Shipment

Sampling Site 2101-M Date of Collection June 07, 1991

Date Samples Received at DataChem June 11, 1991

Analysis

Method of Analysis 8080

Date(s) of Analysis June 26, 1991

Analytical Results

Field Sample Number	DataChem Lab Number	Sample Type	4,4'-DDT ug/g	Dieldrin ug/g	Endosulfan I ug/g	Endosulfan II ug/g	Endosulfan Sulfate ug/g	Endrin ug/g	Endrin aldehyde ug/g	Heptachlor ug/g
BOOGP2	EK 1980	SOIL	ND*	ND*	ND*	ND*	ND*	ND*	ND*	ND*
BOOGP3	EK 1981	SOIL	ND*	ND*	ND*	ND*	ND*	ND*	ND*	ND*
BOOGP4	EK 1982	SOIL	ND*	ND*	ND*	ND*	ND*	ND*	ND*	ND*
BOOGP5	EK 1983	SOIL	ND*	ND*	ND*	ND*	ND*	ND*	ND*	ND*
BOOGP6	EK 1984	SOIL	ND*	ND*	ND*	ND*	ND*	ND*	ND*	ND*
BOOGP7	EK 1985	SOIL	ND*	ND*	ND*	ND*	ND*	ND*	ND*	ND*
BOOGP8	EK 1986	SOIL	ND*	ND*	ND*	ND*	ND*	ND*	ND*	ND*
M.S.	EK 1987	SOIL	0.0047	0.0061	ND*	ND*	ND*	0.0078	ND*	0.0020
M.S.D.	EK 1988	SOIL	0.0045	0.0060	ND*	ND*	ND*	0.0080	ND*	0.0019
* Limit of Detection			0.0003	0.0003	0.0003	0.0003	0.002	0.0003	0.003	0.0003

† See comment on last page.
ND Parameter not detected.
NR Parameter not requested.

** See comment on last page.
( ) Parameter between LOD and LOQ.

960 West LeVoy Drive / Salt Lake City, Utah 84123-2547 / (801) 266-7700
A Sorenson Company

9513319.2078

DATA CHEM LABORATORIES

ANALYTICAL REPORT

Date 7/16/91
Agency Identification Number S91-0392-EG
Account No. 3534C

Westinghouse Hanford Corporation
P.O. Box 1970
M/S T607
Richland, WA 99352
Attention: Ron Mitchell

FAX (509) 376-6476
Telephone (509) 376-5122

Sampling Collection and Shipment

Sampling Site 2101-M Date of Collection June 07, 1991

Date Samples Received at DataChem June 11, 1991

Analysis

Method of Analysis 8080

Date(s) of Analysis June 26, 1991

Analytical Results

Field Sample Number	DataChem Lab Number	Sample Type	Heptachlor epoxide ug/g	Toxaphene ug/g	Aroclor 1016 ug/g	Aroclor 1221 ug/g	Aroclor 1232 ug/g	Aroclor 1242 ug/g	Aroclor 1248 ug/g	Aroclor 1254 ug/g
B00GP2	EK 1980	SOIL	ND*	ND*	ND*	ND*	ND*	0.42	ND*	ND*
B00GP3	EK 1981	SOIL	ND*	ND*	ND*	ND*	ND*	ND*	ND*	ND*
B00GP4	EK 1982	SOIL	ND*	ND*	ND*	ND*	ND*	ND*	ND*	ND*
B00GP5	EK 1983	SOIL	ND*	ND*	ND*	ND*	ND*	ND*	ND*	ND*
B00GP6	EK 1984	SOIL	ND*	ND*	ND*	ND*	ND*	ND*	ND*	0.08
B00GP7	EK 1985	SOIL	ND*	ND*	ND*	ND*	ND*	ND*	ND*	ND*
B00GP8	EK 1986	SOIL	ND*	ND*	ND*	ND*	ND*	ND*	ND*	ND*
M.S.	EK 1987	SOIL	ND*	ND*	ND*	ND*	ND*	ND*	ND*	ND*
M.S.D.	EK 1988	SOIL	ND*	ND*	ND*	ND*	ND*	ND*	ND*	ND*
* Limit of Detection			0.0003	0.03	0.02	0.02	0.02	0.02	0.02	0.02

† See comment on last page.
ND Parameter not detected.
NR Parameter not requested.

** See comment on last page.
( ) Parameter between LOD and LOQ.

D3-253

960 West LeVoy Drive / Salt Lake City, Utah 84123-2547 / (801) 266-7700
A Sorenson Company

DATA CHEM LABORATORIES

ANALYTICAL REPORT

Form ARF-AL
Page 4 of 5
Part 4 of 4

Date 7/16/91
Agency Identification Number S91-0392-EG
Account No. 3534C

Westinghouse Hanford Corporation
P.O. Box 1970
M/S T607
Richland, WA 99352
Attention: Ron Mitchell

FAX (509) 376-6476
Telephone (509) 376-5122

Sampling Collection and Shipment

Sampling Site 2101-M Date of Collection June 07, 1991

Date Samples Received at DataChem June 11, 1991

Analysis

Method of Analysis 8080

Date(s) of Analysis June 26, 1991

Analytical Results

Field Sample Number	DataChem Lab Number	Sample Type	Aroclor 1260 ug/g	Methoxychlor ug/g						
BOOGP2	EK 1980	SOIL	ND*	ND*						
BOOGP3	EK 1981	SOIL	ND*	ND*						
BOOGP4	EK 1982	SOIL	ND*	ND*						
BOOGP5	EK 1983	SOIL	ND*	ND*						
BOOGP6	EK 1984	SOIL	ND*	ND*						
BOOGP7	EK 1985	SOIL	ND*	ND*						
BOOGP8	EK 1986	SOIL	ND*	ND*						
M.S.	EK 1987	SOIL	ND*	ND*						
M.S.D.	EK 1988	SOIL	ND*	ND*						
* Limit of Detection			0.02	0.002						

† See comment on last page.
ND Parameter not detected.
NR Parameter not requested.

** See comment on last page.
( ) Parameter between LOD and LOQ.

D3-254

DATA CHEM LABORATORIES

ANALYTICAL REPORT

Date 7/16/91

Agency Identification Number S91-0392-EG

General Set Comments

Spike Recoveries:	Method Check	M.S. (EK 1987)	M.S.D. (EK 1988)
Lindane	91%	100%	111%
Heptachlor	86%	76%	72%
Aldrin	86%	81%	74%
Dieldrin	89%	92%	90%
Endrin	104%	118%	120%
4,4'-DDT	91%	70%	68%

960 West LeVoy Drive / Salt Lake City, Utah 84123-2547 / (801) 266-7700
A Sorenson Company

DATA CHEM LABORATORIES

ENVIRONMENTAL SOIL REPORT

Date 6/24/91
Agency Identification Number S91-0392-AG
Account No. 3534C

Westinghouse Hanford Corporation
P.O. Box 1970
M/S T607
Richland, WA 99352
Attention: Ron Mitchell

Telephone (509) 376-5122

AUG 1991 RECEIVED DATA RECEIPT

Sampling Collection and Shipment
Sampling Site 2101-M Date of Collection June 07, 1991
Date Samples Received at DataChem June 11, 1991

Analytical Results

Parameter Name / Analysis Date / Method / Prep Method	Units	Field Number / Lab Number	BOOGP2 EK 1980	BOOGP3 EK 1981	BOOGP4 EK 1982	BOOGP5 EK 1983	BOOGP6 EK 1984	BOOGP7 EK 1985	BOOGP8 EK 1986	Limit of Detection
Aluminum (Al) 06/16/1991 6010 [1] 3050 [1]	µg/g		8700 J	7600 J	8400 J	6700 J	8600 J	6100 J	610 J	10
Antimony (Sb) 06/16/1991 6010 [1] 3050 [1]	µg/g		ND* R UJ	ND* R UJ	ND* R UJ	ND* R UJ	ND* R UJ	ND* R UJ	ND* R UJ	20
Arsenic (As) 06/16/1991 6010 [1] 3050 [1]	µg/g		ND* UJ	ND* UJ	ND* UJ	ND* UJ	ND* UJ	ND* UJ	ND* UJ	10
Barium (Ba) 06/16/1991 6010 [1] 3050 [1]	µg/g		60 J	70 J	60 J	100 J	50 J	80 J	ND* UJ	10
Beryllium (Be) 06/16/1991 6010 [1] 3050* [1]	µg/g		ND* UJ	ND* UJ	ND* UJ	ND* UJ	ND* UJ	ND* UJ	ND* UJ	1.
Cadmium (Cd) 06/16/1991 6010 [1] 3050 [1]	µg/g		ND* UJ	ND* UJ	ND* UJ	ND* UJ	ND* UJ	ND* UJ	ND* UJ	2.
Calcium (Ca) 06/16/1991 6010 [1] 3050 [1]	µg/g		3100 UJ	3200 UJ	3400 UJ	3400 UJ	3100 UJ	3400 UJ	ND* UJ	100
Chromium (Cr) 06/16/1991 6010 [1] 3050 [1]	µg/g		12. J	11. J	13. J	11. J	11. J	8. J	ND* UJ	2.

* See comment on last page.
ND Parameter not detected.
NR Parameter not requested.
[1] Analyses completed on or before this date.

** Parameter not analyzed (See comment page).
( ) Parameter between LOD and LOQ.
[ ] Method Reference (See comments page.)

Robert R. Bowe
Analyst: Robert R. Bowe

John T. Kerschnik
Reviewer: John T. Kerschnik

for
Laboratory Supervisor: Michael P. Beesley

J 1/22/93

960 West LeVoy Drive / Salt Lake City, Utah 84123-2547 / (801) 266-7700
A Sorenson Company

9513319.2080

DATA CHEM LABORATORIES

ENVIRONMENTAL SOIL REPORT

Date 6/24/91
Agency Identification Number S91-0392-AG
Account No. 3534C

Analytical Results

Parameter Name / Analysis Date / Method / Prep Method	Units	Field Number / Lab Number	BOOGP2 EK 1980	BOOGP3 EK 1981	BOOGP4 EK 1982	BOOGP5 EK 1983	BOOGP6 EK 1984	BOOGP7 EK 1985	BOOGP8 EK 1986	Limit of Detection
Cobalt (Co) 06/16/1991 6010 [1] 3050 [1]	µg/g		8. J	8. J	9. J	13. J	10. J	11. J	ND* UJ	2.
Copper (Cu) 06/16/1991 6010 [1] 3050 [1]	µg/g		800 J	21. J	1100 J	68. J	1700 J	49. J	ND* UJ	2.
Iron (Fe) 06/16/1991 6010 [1] 3050 [1]	µg/g		19000 J	17000 J	19000 J	23000 J	22000 J	22000 J	1200 J	2.
Lead (Pb) 06/16/1991 6010 [1] 3050 [1]	µg/g		10. J	4. J	8. J	4. J	13. J	4. J	ND* UJ	2.
Lithium (Li) 06/16/1991 6010 [1] 3050 [1]	µg/g		ND* UJ	ND* UJ	ND* UJ	ND* UJ	ND* UJ	ND* UJ	ND* UJ	10
Magnesium (Mg) 06/16/1991 6010 [1] 3050 [1]	µg/g		3900 J	3800 J	3500 J	3600 J	4200 J	3200 J	ND* UJ	100
Manganese (Mn) 06/16/1991 6010 [1] 3050 [1]	µg/g		160 J	600 J	180 J	510 J	230 J	280 J	50 J	10
Molybdenum (Mo) 06/16/1991 6010 [1] 3050 [1]	µg/g		ND* UJ	ND* UJ	ND* UJ	ND* UJ	ND* UJ	ND* UJ	ND* UJ	10
Nickel (Ni) 06/16/1991 6010 [1] 3050 [1]	µg/g		12. J	9. J	12. J	10. J	13. J	8. J	ND* UJ	5.
Phosphorus (P) 06/16/1991 6010 [1] 3050 [1]	µg/g		700 J	400 J	700 J	700 J	800 J	700 J	ND* UJ	100
Potassium 06/16/1991 6010 [1] 3050 [1]	µg/g		1400 J	1200 J	1400 J	800 J	1300 J	700 J	100 J	100
Selenium (Se) 06/16/1991 6010 [1] 3050 [1]	µg/g		ND* UJ	ND* UJ	ND* UJ	ND* UJ	ND* UJ	ND* UJ	ND* UJ	10
Silver (Ag) 06/16/1991 6010 [1] 3050 [1]	µg/g		ND* UJ	ND* UJ	2. J	ND* UJ	ND* UJ	ND* UJ	ND* UJ	2.
Sodium (Na) 06/16/1991 6010 [1] 3050 [1]	µg/g		250 J	150 J	270 J	230 J	230 J	230 J	ND* UJ	50
Strontium (Sr) 06/16/1991 6010 [1] 3050 [1]	µg/g		21. J	26. J	21. J	16. J	18. J	19. J	ND* UJ	2.

* See comment on last page.
ND Parameter not detected.
NR Parameter not requested.
[1] Analyses completed on or before this date.

** Parameter not analyzed (See comments page).
( ) Parameter between LOD and LOQ.
[ ] Method Reference (See comments page).

12/7/92

960 West LeVoy Drive / Salt Lake City, Utah 84123-2547 / (801) 266-7700
A Sorenson Company

DATA CHEM LABORATORIES

ENVIRONMENTAL SOIL REPORT

Date 6/24/91
Agency Identification Number S91-0392-AG
Account No. 3534C

Analytical Results

Parameter Name / Analysis Date / Units / Method / Prep Method	Field Number / Lab Number	BOOGP2 EK 1980	BOOGP3 EK 1981	BOOGP4 EK 1982	BOOGP5 EK 1983	BOOGP6 EK 1984	BOOGP7 EK 1985	BOOGP8 EK 1986	Limit of Detection
Thallium (Tl) 06/16/1991 6010 [1] 3050 [1]	µg/g	50 J	ND* UJ	ND* UJ	ND* UJ	ND* UJ	ND* UJ	ND* UJ	50.
Vanadium (V) 06/16/1991 6010 [1] 3050 [1]	µg/g	43. J	37. J	48. J	62. J	49. J	60. J	ND* UJ	[illegible]
Zinc (Zn) 06/16/1991 6010 [1] 3050 [1]	µg/g	140 J	45. J	200 J	63. J	230 J	99. J	3. J	[illegible]
Mercury (Hg) 06/17/1991 7471 [1]	µg/g	0.06 J	ND* UJ	0.06 J	ND* UJ	0.08 J	ND* UJ	ND* UJ	0.04

JJ 12/7/92

* See comment on last page.
ND Parameter not detected.
NR Parameter not requested.
[1] Analyses completed on or before this date.
** Parameter not analyzed (See comments page).
( ) Parameter between LOD and LOQ.
[ ] Method Reference (See comments page).

960 West LeVoy Drive / Salt Lake City, Utah 84123-2547 / (801) 266-7700
A Sorenson Company

DATA CHEM LABORATORIES

ENVIRONMENTAL SOIL REPORT

Date 6/24/91
Agency Identification Number S91-0392-AG

Method Index — **Method Reference** —

[1] SW-846 "Test Methods for Evaluating Solid Waste", September 1986.

DATA CHEM LABORATORIES

ENVIRONMENTAL SOIL REPORT

Date 7/25/91
Agency Identification Number S91-0392-BG
Account No. 3534C

Westinghouse Hanford Corporation
P.O. Box 1970
M/S T607
Richland, WA 99352
Attention: Ron Mitchell

Telephone (509) 376-5122

Sampling Collection and Shipment

Sampling Site 2101-M Date of Collection June 07, 1991

Date Samples Received at DataChem June 11, 1991

Analytical Results

Parameter Name / Collection Date / Method / Date Analyzed	Units	Field Number / Lab Number	B00GP2 EK 1980	B00GP3 EK 1981	B00GP4 EK 1982	B00GP5 EK 1983	B00GP6 EK 1984	B00GP7 EK 1985	B00GP8 EK 1986	* Limit of Detection
Cyanide (CN) 06/14/1991 9012 [1]	µg/g		ND*	ND*	ND*	ND*	ND*	ND*	ND*	[illegible]
Fluoride (F) 07/03/1991 300.0 [2]	µg/g		ND*	ND*	ND*	ND*	ND*	ND*	ND*	[illegible]
Ammonia (NH_3 - N) 07/03/1991 350.1 [2]	µg/g		1.7 J	0.9 J	2.3 J	1.3 J	3.2 J	0.7 J	1.5 J	0.4
pH 06/21/1991 9045 [1]	pH units		6.8	6.9	6.6	7.1	7.6	7.4	8.0	±0.1

11/21/92

† See comment on last page.
ND Parameter not detected.
NR Parameter not requested.
‡ Analyses completed on or before this date.

** Parameter not analyzed (See comment page).
( ) Parameter between LOD and LOQ.
[ ] Method Reference (See comments page.)

Suzanne M. Bowe for SKM
Analyst: Shelly Myers

Wade Sloan
Reviewer: Wade Sloan

Norman K. Christensen
Laboratory Supervisor: Norman K. Christensen

960 West LeVoy Drive / Salt Lake City, Utah 84123-2547 / (801) 266-7700
A Sorenson Company

Date 7/25/91
Agency Identification Number S91-0392-BG

General Set Comments

Extraction procedures:
Cyanide: Two grams of sample were distilled in 500 mL deionized distilled water to which 25 mL H2SO4 was added. The cyanide was collected in a sodium hydroxide solution, which was then diluted to 250 mL with deionized distilled water.
Fluoride: One gram of sample was extracted with 10 mL of anion eluent and sonicated for 15 minutes.
Ammonia: Five grams of sample were diluted to 100 mL with 0.1 N H2SO4 and shaken. Samples were neutralized to a pH of approximately 5.5 for analysis.
pH: Samples were tested with a drop of 6 N HCl to determine whether they were calcareous. Only sample EK 1982 was; 10 g was mixed with 20 mL 0.01 M CaCl2, shaken several times during the next half hour, then allowed to settle for one hour. All other samples were treated as follows: 20 g was mixed with 20 mL deionized distilled water, shaken several times during the next half hour, and allowed to stand for one hour.

Method Index — **Method Reference** —

[1] SW-846 "Test Methods for Evaluating Solid Waste", September 1986.

[2] EPA-600/4-79-020 "Methods for Chemical Analysis of Water and Wastes", March 1983 (Modified for use with soils.)

OSM RCRA DATA ASSESSMENT

DATE August 14, 1992

REVIEWED BY L.L. Ames LLA

LABORATORY S-CUBED

CASE # 2101-M

SDG # B00G05

SAMPLES/MATRIX B00G05 (Soil)

DATA ASSESSMENT SUMMARY

QUALITY CONTROL CHECK	ANALYSIS: VOA by EPA Method 8240	Semi-VOA by EPA Method 8270	ICP Metals by EPA Method 6010 (lead included)
1. Holding Times	O	X	O
2. Blanks	X	X	O
3. Calibrations	O	O	O
4. Surrogate Recovery	O	O	NA
5. Laboratory Control Sample	O	X	O
6. GC/MS Tune	O	O	NA
7. Other	O	O	O
8.			
9.			
10.			

O = data had no problems NA = not applicable.
X = minor problems, data may be qualified
M = data qualified due to major problems/some data may be unusable

OVERALL ASSESSSMENT: There were no major problems; the results are acceptable with the attached qualifiers.

NOTES: WHC sample # was incorrectly reported as B00G05 on the report forms — correct # is B00G05

o Refer to the corresponding attachments for explanation of any problems.

OSM RCRA DATA ASSESSMENT

DATE August 14, 1992

REVIEWED BY L.L. Ames LLA

LABORATORY S-CUBED

CASE # 2101-M

SDG # B00GQ5

SAMPLES/MATRIX B00GQ5 (soil)

DATA ASSESSMENT SUMMARY

QUALITY CONTROL CHECK	ANALYSIS Fluoride by EPA Method 300.0	Ammonia by EPA Method 350.2	pH by EPA Method 9045
1. Holding Times	O	O	X
2. Blanks	O	O	O
3. Calibrations	O	O	O
4. Surrogate Recovery	NA	NA	NA
5. Laboratory Control Sample	O	O	NA
6. GC/MS Tune	NA	NA	NA
7. Other	O	O	O
8.			
9.			
10.			

O = data had no problems NA = not applicable
X = minor problems, data may be qualified
M = data qualified due to major problems/some data may be unusable

OVERALL ASSESSSMENT: There were no major problems; the results are acceptable with the attached qualifiers.

NOTES:

o Refer to the corresponding attachments for explanation of any problems.

OSM RCRA DATA ASSESSMENT

DATE August 14, 1992

REVIEWED BY L.L. Ames

LABORATORY S-CUBED

CASE # 2101-M

SDG # B00GQ5

SAMPLES/MATRIX B00GQ5 (Soil)

DATA ASSESSMENT SUMMARY

QUALITY CONTROL CHECK	ANALYSIS	Mercury by EPA Method 7471	Arsenic by EPA Method 7060	Selenium by EPA Method 7740
1.	Holding Times	X	O	O
2.	Blanks	O	O	O
3.	Calibrations	O	O	O
4.	Surrogate Recovery	NA	NA	NA
5.	Laboratory Control Sample	O	O	O
6.	GC/MS Tune	NA	NA	NA
7.	Other	O	O	O
8.				
9.				
10.				

O = data had no problems NA = not applicable.
X = minor problems, data may be qualified
M = data qualified due to major problems/some data may be unusable

OVERALL ASSESSSMENT: There were no major problems; the results are acceptable with the attached qualifiers.

NOTES:

o Refer to the corresponding attachments for explanation of any problems.

OSM RCRA DATA ASSESSMENT

DATE August 14, 1992 SAMPLES/MATRIX B00G05 (Soil)

REVIEWED BY L.L. Ames

LABORATORY S-CUBED

CASE # 2101-M

SDG # B00G05

DATA ASSESSMENT SUMMARY

QUALITY CONTROL CHECK	ANALYSIS Thallium by EPA Method 7841
1. Holding Times	O
2. Blanks	O
3. Calibrations	O
4. Surrogate Recovery	NA
5. Laboratory Control Sample	O
6. GC/MS Tune	NA
7. Other	O
8.	
9.	
10.	

O = data had no problems NA = not applicable.
X = minor problems, data may be qualified
M = data qualified due to major problems/some data may be unusable

OVERALL ASSESSSMENT: There were no major problems; the results are acceptable with the attached qualifiers.

NOTES:

o Refer to the corresponding attachments for explanation of any problems.

RCRA QC

Name L.L. Ames LLA Date 8/14/92

QC Check: Holding Times

COMMENTS: Recommended holding times from sample collection to analysis were met for VOA samples, fluoride, ammonia and ICP and AA metals with the exception of mercury. The pH determination also was not within recommended holding time. Semi-VOA samples were out of holding time from collection to extraction.

ACTION: Qualify pH results as estimated. Qualify mercury results as estimated. Qualify semi-VOA results as estimated.

sample #	constituent	value/qual
B00GQ5 Semi-VOA Results		
All	all	UJ
B00GQ5 Mercury Results		
All	all	UJ
B00GQ5 pH Results		
All	all	J

sample #	constituent	value/qual

RCRA QC

Name L.L. Ames Date 8/14/92

QC Check: Blanks

COMMENTS: VOA blank contamination included methylene chloride and acetone. No contamination was found in the semi-VOA, ICP and AA metals, mercury, fluoride, ammonia or pH blanks.

ACTION: Qualify B00GQ5 VOA results for methylene chloride as undetected and raise the result to the CRQL. No other action is required.

sample #	constituent	value/qual	sample #	constituent	value/qual
B00GQ5 VOA Results					
B00GQ5	methylene chloride	5U			
- blank evaluation criteria were also applied to SemiVOA TIC results					

RCRA QC

Name L.L. Ames LLA Date 8/14/92

QC Check: Calibrations

COMMENTS: VOA and semi-VOA initial and continuing calibrations were both within control limits. ICP and AA metals and mercury also were within control limits. Fluoride, ammonia and pH calibrations were within control limits as well.

ACTION: No action is required.

sample #	constituent	value/qual	sample #	constituent	value/qual

9513319.2086

RCRA QC

Name L.L. Ames LLA Date 8/14/92

QC Check: Surrogate Recovery

COMMENTS: Semi-VOA and VOA surrogate recoveries were all within QC limits. Surrogate recoveries were not applicable to the other analyses.

ACTION: No action is required.

sample #	constituent	value/qual	sample #	constituent	value/qual

RCRA QC

Name L.L. Ames LLA Date 8/14/92

QC Check: Laboratory Control Sample

COMMENTS: ICP and AA metals including mercury were within QC recovery limits. The fluoride and ammonia LCS recoveries also were within QC limits. Semi-VOA LCS recoveries varied from 55 to 68%, with no QC limits listed. Using the 80 to 120% R limits in the absence of other QC limits, all recoveries were too low. The LCS concept does not apply to the pH determination.

ACTION:

Qualify sample B00GQ5 semi-VOA results as estimated.

sample #	constituent	value/qual	sample #	constituent	value/qual
Semi-VOA					
All	all	UJ			

~~Delete TIC at RT = 7.15 min.~~ JT 8/21/92

RCRA QC

Name L.L. Ames LLA Date 8/14/92

QC Check: GC/MS Tune

COMMENTS: Ion abundance criteria and minimum frequency requirements were met for the VOA and semi-VOA analyses. The concept was not applicable to the remaining analyses.

ACTION: No action is required.

sample #	constituent	value/qual	sample #	constituent	value/qual

RCRA QC

Name L.L. Ames LLA Date 8/14/92

QC Check: Other

COMMENTS: The semi-VOA % recovery of the LCS analytes were subjected to an overcheck. The original values were the same as the overcheck values with slight differences due to rounding of numbers. No matrix spike recoveries were given for any of the analyses.

ACTION: No action is required.

sample #	constituent	value/qual	sample #	constituent	value/qual

9513319.2088

S-CUBED

A Division of Maxwell Laboratories, Inc.

July 26, 1991

R. Owens
MSIN: T6-08
Office of Sample Management
Westinghouse Hanford Company
2355 Stevens Drive
Richland, WA 99352

Reference No. 32359
P.O. No. MBH-SVV-230656

Dear Ms. Owens:

Enclosed are the results from the analysis of the soil sample received by S-Cubed on June 15, 1991. The samples were analyzed for VOA, SVOA, Metals, Fluoride, Ammonia, and pH.

The enclosed report contains a sample summary, narrative, copies of the chain-of-custody, and a full data package for each analysis. If you have any questions about the data, please give me a call.

Sincerely,

Jane E Goodrich for

John DeWald
Manager, Commercial Analysis Section

/alb

encl: a/s

JUL 1991
RECEIVED
DATA ENTRY

D3-273

P.O. Box 1620, La Jolla, California 92038-1620 *3398 Carmel Mountain Road, San Diego, California 92121-1095*
Tel: (619) 453-0060 TWX: 910-337-1253 FAX: (619) 755-0474

MAXWELL
S-CUBED Division

SAMPLE SUMMARY
S-Cubed Reference No. 32359-01, SDG No. 2383

S-Cubed No.	Sample ID	Date Received	Sample Type	Analysis					
				A	B	C	D	E	F
2383-1	BOOGQ5	06/15/91	Soil	X	X	X	X	X	X

Analysis Key:

A = VOA
B = SVOA
C = ICP/AA Metals
D = Fluoride
E = Ammonia
F = pH

MAXWELL S-CUBED Division

NARRATIVE

DATE: July 26, 1991

REFERENCE NO.: 32359-01, 2101-M Pond Project

Volatiles

The sample was analyzed according to SW-846, 3rd Edition, Method 8240. There were no difficulties with the analysis. Low levels (below detection limit) of trichloroethene and the xylenes were detected in the sample.

The quality control results were acceptable.

Semivolatiles

The sample was analyzed according to SW-846, 3rd Edition, Method 8270. There were no difficulties with the analysis. Low levels of bis(2-ethylhexyl)phthalate were detected in the sample.

The quality control results were acceptable.

Metals

The sample was analyzed according to SW-846, 3rd Edition, Method 6010 and the 7000 series methods. There were no difficulties with the analysis. Significant levels of most of the metals were detected in the sample. The Pb result was taken from the ICP (Method 6010) data.

The quality control results were acceptable.

Fluoride

The sample was analyzed according to Method 300.0. There were no difficulties with the analysis. The sample was stirred in deionized water, and the deionized water was then injected into the ion chromatograph. Thus, only water-soluble fluoride was determined in this sample. Low levels of fluoride were detected in the sample.

The quality control results were acceptable.

Ammonia

The sample was analyzed according to Method 350.2. There were no difficulties with the analysis. There was no ammonia detected in the sample.

The quality control results were acceptable.

pH

The pH was determined according to SW-846, 3rd Edition, Method 9045. There were no difficulties with the determination. The pH was approximately neutral.

The quality control results were acceptable.

Jane E Hoodin, for

John DeWald
Manager, Commercial Analysis Section

9513319.2090

1A
VOLATILE ORGANICS ANALYSIS DATA SHEET

EPA SAMPLE NO.

~~B00G05~~ B00GQ5

Lab Name: S-CUBED Contract: 68-D9-0027

Lab Code: S3 Case No.: HANFORD SAS No.: SDG No.: 2383

Matrix: (soil/water) SOIL Lab Sample ID: 2383-1

Sample wt/vol: 5.000 (g/mL) G Lab File ID: HW831

Level: (low/med) LOW Date Received: 06/15/91

% Moisture: not dec. 12 Date Analyzed: 06/26/91

Column: (pack/cap) PACK Dilution Factor: 1.000

LLL 8/14/92

CAS NO.	COMPOUND	CONCENTRATION UNITS: (ug/L or ug/Kg) UG/KG	Q
74-87-3	Chloromethane	11	U
74-83-9	Bromomethane	11	U
75-01-4	Vinyl Chloride	11	U
75-00-3	Chloroethane	11	U
75-09-2	Methylene Chloride	5~~8~~	~~B~~ U
67-64-1	Acetone	11	U
75-15-0	Carbon Disulfide	6	U
75-35-4	1,1-Dichloroethene	6	U
75-34-3	1,1-Dichloroethane	6	U
540-59-0	1,2-Dichloroethene (Total)	6	U
67-66-3	Chloroform	6	U
107-06-2	1,2-Dichloroethane	6	U
78-93-3	2-Butanone	11	U
71-55-6	1,1,1-Trichloroethane	6	U
56-23-5	Carbon Tetrachloride	6	U
108-05-4	Vinyl Acetate	11	U
75-27-4	Bromodichloromethane	6	U
78-87-5	1,2-Dichloropropane	6	U
10061-02-6	trans-1,3-Dichloropropene	6	U
79-01-6	Trichloroethene	2	J
124-48-1	Dibromochloromethane	6	U
79-00-5	1,1,2-Trichloroethane	6	U
71-43-2	Benzene	6	U
10061-01-5	cis-1,3-Dichloropropene	6	U
75-25-2	Bromoform	6	U
108-10-1	2-Hexanone	11	U
591-78-6	4-Methyl-2-Pentanone	11	U
127-18-4	Tetrachloroethene	6	U
79-34-5	1,1,2,2-Tetrachloroethane	6	U
108-88-3	Toluene	6	U
108-90-7	Chlorobenzene	6	U
100-41-4	Ethylbenzene	6	U
100-42-5	Styrene	6	U
1330-20-7	Xylene (total)	3	J

1E
VOLATILE ORGANICS ANALYSIS DATA SHEET
TENTATIVELY IDENTIFIED COMPOUNDS

EPA SAMPLE NO.

~~B00G05~~ B00GQ5

Lab Name: S-CUBED Contract: 68-D9-0027

Lab Code: S3 Case No.: HANFORD SAS No.: SDG No.: 2383

Matrix: (soil/water) SOIL Lab Sample ID: 2383-1

Sample wt/vol: 5.000 (g/mL) G Lab File ID: HW831

Level: (low/med) LOW Date Received: 06/15/91

% Moisture: not dec. 12 Date Analyzed: 06/26/91

Column: (pack/cap) PACK Dilution Factor: 1.000

LJD 8/14/92

Number TICs found: 0

CONCENTRATION UNITS:
(ug/L or ug/Kg) UG/KG

CAS NUMBER	COMPOUND NAME	RT	EST. CONC.	Q
1.				
2.				
3.				
4.				
5.				
6.				
7.				
8.				
9.				
10.				
11.				
12.				
13.				
14.				
15.				
16.				
17.				
18.				
19.				
20.				
21.				
22.				
23.				
24.				
25.				
26.				
27.				
28.				
29.				
30.				

FORM I VOA-TIC 1/87 Rev.

9513319.2091

```
* ************************************************** *
* S-CUBED  SEMIVOLATILE  ORGANIC  ANALYSIS  DATA  SHEET *
* ************************************************** *
```

Sample Number : ~~B00GQ0S~~ B00GQ5

(2383-1)

CLIENT : WESTINGHOUSE
PROJECT : HANFORD
SDG No : 2383

Date Sample Received: 06-15-91
Data Release Authorized By: [illegible]
S-CUBED Reference Number: 92359-01

Lab File ID No: H8301
Sample Matrix: SOIL
INT.VOL/WGT(mL or G): 30 G
FV(mL): 2.00 DILT: 1
Percent Moisture: 11.6 pH: 8.32 Percent Moisture (Decanted): N.R
Concentration: Low Medium (Circle One)
Date Extracted/Prepared: 06-24-91
Date Analyzed: 07-02-91

[illegible] 8/14/92

CAS Number		ug/l or ug/kg (Circle one)	
108-95-2	PHENOL	750 U	J
111-44-4	BIS(2-CHLOROETHYL)ETHER	750 U	
95-57-8	2-CHLOROPHENOL	750 U	
541-73-1	1-3,DICHLOROBENZENE	750 U	
106-46-7	1,4-DICHLOROBENZENE	750 U	
100-51-6	BENZYL ALCOHOL	750 U	
95-50-1	1,2-DICHLOROBENZENE	750 U	
95-48-7	2-METHYLPHENOL	750 U	
108-60-1	BIS(2-CHLOROISOPROPYL)ETHER	750 U	
106-44-5	4-METHYLPHENOL	750 U	
621-64-7	N-NITROSO-DI-N-PROPYLAMINE	750 U	
67-72-1	HEXACHLOROETHANE	750 U	
98-95-3	NITROBENZENE	750 U	
78-59-1	ISOPHORONE	750 U	
88-75-5	2-NITROPHENOL	750 U	
105-67-9	2,4-DIMETHYLPHENOL	750 U	
65-85-0	BENZOIC ACID	3600 U	
111-91-1	BIS(2-CHLOROETHOXY)METHANE	750 U	
120-83-2	2,4-DICHLOROPHENOL	750 U	
120-82-1	1,2,4-TRICHLOROBENZENE	750 U	
91-20-3	NAPHTHALENE	750 U	
106-47-8	4-CHLOROANILINE	750 U	
87-68-3	HEXACHLOROBUTADIENE	750 U	
59-50-7	4-CHLORO-3-METHYLPHENOL	750 U	
91-57-6	2-METHYLNAPHTHALENE	750 U	
77-47-4	HEXACHLOROCYCLOPENTADIENE	750 U	
88-06-2	2,4,6-TRICHLOROPHENOL	750 U	
95-95-4	2,4,5-TRICHLOROPHENOL	3600 U	
91-58-7	2-CHLORONAPHTHALENE	750 U	
88-74-4	2-NITROANILINE	3600 U	
131-11-3	DIMETHYL PHTHALATE	750 U	
208-96-8	ACENAPHTHYLENE	750 U	
99-09-2	3-NITROANILINE	3600 U	

CAS Number		ug/l or ug/kg (circle one)	
83-32-9	ACENAPHTHENE	750 U	J
51-28-5	2,4-DINITROPHENOL	3600 U	
100-02-7	4-NITROPHENOL	3600 U	
132-64-9	DIBENZOFURAN	750 U	
121-14-2	2,4-DINITROTOLUENE	750 U	
606-20-2	2,6-DINITROTOLUENE	750 U	
84-66-2	DIETHYLPHTHALATE	750 U	
7005-72-3	4-CHLOROPHENYL-PHENYLETHER	750 U	
86-73-7	FLUORENE	750 U	
100-01-6	4-NITROANILINE	3600 U	
534-52-1	4,6-DINITRO-2-METHYLPHENOL	3600 U	
86-30-6	N-NITROSODIPHENYLAMINE (1)	750 U	
101-55-3	4-BROMOPHENYL-PHENYLETHER	750 U	
118-74-1	HEXACHLOROBENZENE	750 U	
87-86-5	PENTACHLOROPHENOL	3600 U	
85-01-8	PHENANTHRENE	750 U	
120-12-7	ANTHRACENE	750 U	
84-74-2	DI-N-BUTYLPHTHALATE	750 U	
206-44-0	FLUORANTHENE	750 U	
129-00-0	PYRENE	750 U	
85-68-7	BUTYLBENZYLPHTHALATE	750 U	
91-94-1	3,3'-DICHLOROBENZIDINE	1500 U	
56-55-3	BENZO(a)ANTHRACENE	750 U	
117-81-7	BIS(2-ETHYLHEXYL)PHTHALATE	180 J	
218-01-9	CHRYSENE	750 U	
117-84-0	DI-N-OCTYL PHTHALATE	750 U	
205-99-2	BENZO(b)FLUORANTHENE	750 U	
207-08-9	BENZO(k)FLUORANTHENE	750 U	
50-32-8	BENZO(a)PYRENE	750 U	
193-39-5	INDENO(1,2,3-CD)PYRENE	750 U	
53-70-3	DIBENZ(a,h)ANTHRACENE	750 U	
191-24-2	BENZO(g,h,i)PERYLENE	750 U	

(1)-Cannot be seperated from diphenylamine.

Environmental Protection Agency. CLP Sample Management Office.
P. O. Box 818. Alexandria, Virginia 22313 703/557-2490

Sample Number
~~B00GQX5~~
(2383-1)
B00GQ5

Organics Analysis Data Sheet
(Page 4)

Tentatively Identified Compounds

CAS Number	Compound Name	Fraction	RT or Scan Number	Estimated Concentration (ug/l or ug/kg)
1.	~~UNKNOWN~~	~~BNA~~	~~7.15~~	~~150 JB~~
2.	UNKNOWN HYDROCARBON	"	37.79	340 J
3.	UNKNOWN	"	43.28	710 J
4.	UNKNOWN	"	47.68	910 J
5.	UNKNOWN	"	47.62	860 J
6.				
7.				
8.				
9.				
10.				
11.				
12.				
13.				
14.				
15.				
16.				
17.				
18.				
19.				
20.				
21.				
22.				
23.				
24.				
25.				
26.				
27.				
28.				
29.				
30.				

8/14/92

9513319.2092

U.S. EPA - CLP

COVER PAGE - INORGANIC ANALYSES DATA PACKAGE

Lab Name: S_CUBED_____ Contract: 32359-01__

Lab Code: S3____ Case No.: 2101- SAS No.: _____ SDG No.: 2383__

SOW No.: 7/88_

EPA Sample No.	Lab Sample ID
_2383-1_____	__2383-1_____

Were ICP interelement corrections applied ? Yes/No/N/A

Were ICP background corrections applied ? Yes/No/N/A
If yes - were raw data generated before application of background corrections ? Yes/No/N/A

Comments:
__WESTINGHOUSE_HANFORD_____

I certify that this data package is in compliance with the terms and conditions of the contract, both technically and for completeness, for other than the conditions detailed above. Release of the data contained in this hardcopy data package and in the computer-readable data submitted on floppy diskette has been authorized by the Laboratory Manager or his/her designee, as verified by the following signature.

Signature: _____ Name: _____

Date: _____ Title: _____

COVER PAGE - IN

U.S. EPA - CLP

INORGANIC ANALYSES DATA SHEET

EPA SAMPLE NO.
B00GQ5
2383-1

Lab Name: S_CUBED Contract: 32359-01

Lab Code: S3 Case No.: 2101- SAS No.: SDG No.: 2383

Matrix (soil/water): SOIL Lab Sample ID: 2383-1

Level (low/med): LOW Date Received: 06/15/91

% Solids: 91.7

Concentration Units (ug/L or mg/kg dry weight): MG/KG

CAS No.	Analyte	Concentration	C	Q	M
7429-90-5	Aluminum	7700			P
7440-36-0	Antimony	6.0	U		P
7440-38-2	Arsenic	2.5			F
7440-39-3	Barium	59.1			P
7440-41-7	Beryllium	1.5			P
7440-43-9	Cadmium	1.1			P
7440-70-2	Calcium	4650			P
7440-47-3	Chromium	9.3			P
7440-48-4	Cobalt	13.1			P
7440-50-8	Copper	1110			P
7439-89-6	Iron	35600			P
7439-92-1	Lead	11.3			P
7439-95-4	Magnesium	3590			P
7439-96-5	Manganese	241			P
7439-97-6	Mercury	0.11	~~U~~	UJ	CV
7440-02-0	Nickel	11.1			P
7440-09-7	Potassium	770			P
7782-49-2	Selenium	0.44	U	W	F
7440-22-4	Silver	3.5			P
7440-23-5	Sodium	221	B		P
7440-28-0	Thallium	0.33	U	W	F
7440-62-2	Vanadium	96.4			P
7440-66-6	Zinc	241			P
	Cyanide				NR

LLD 8/14/92

Color Before: Clarity Before: Texture:

Color After: Clarity After: Artifacts:

Comments:
000609

FORM I - IN

Form I-A1

Page ____ of ____

S-CUBED

Trace Inorganics Report

Client: Westinghouse

Project: Hanford

Sample Receipt Date: 06-15-91

Analyst: MT

Review: [illegible]

Matrix: Soil 88.42 % solids

Units: ~~ug/L or ug/kg~~ mg/kg

S-CUBED Sample No.	Sample ID	Analyte			
		F	NH_3		
2383-1		3.5	<56		
B00GQ5	[illegible] 8/14/92				
Method Detection Limit		0.5	50		
Preparation Method		300.0	350.2		
Analytical Method		300.0	350.2		
Preparation Date		07-10-91	07-09-91		
Analysis Date		07-10-91	07-09-91		

Comments

$F = \frac{\text{mg anion/L} \times \text{FV (L)}}{\text{wt (kg)} \times \text{\% solids decimal}}$

$NH_3 = \frac{\text{mg } NH_3\text{/L} \times \text{FV (L) distilled}}{\text{wt (kg) distilled} \times \text{\% sol decimal}}$

Form I-A1

Page ____ of ____

S-CUBED

Trace Inorganics Report

Client: Westinghouse

Project: Hanford

Sample Receipt Date: 06-15-91

Analyst: MT

Review: SST

Matrix: Soil

Units: ug/L or mg/kg

S-CUBED Sample No.	Sample ID	Analyte			
		PH			
2383-1		7.2 J			
B00GQ5	LKD 8/14/92				
Method Detection Limit					
Preparation Method		9045			
Analytical Method		9045			
Preparation Date		07-05-91			
Analysis Date		07-05-91			

Comments

9513319.2094

Westinghouse
Hanford Company

OSM RCRA LEVEL B DATA ASSESSMENT

DATE 11/21/92

REVIEWED BY J.A. Lerch

LABORATORY DataChem

CASE # —

SDG # B00ZH9

SAMPLES/MATRIX B00ZH9

B00ZJ0

B00ZJ1

B00ZJ2

all soil

DATA ASSESSMENT SUMMARY

QUALITY CONTROL CHECK	ANALYSIS	ICP metals	Fluoride	Ammonia
1. Holding Time		O	O	O
2. Matrix Spike		M	O	O
3. Duplicates		O	O	X
4. Surrogates		N/A	N/A	N/A
5. Blanks		O	O	O
6.				
7.				
8.				
9.				
10.				

O = data had no problems
X = data qualified due to minor problems
M = data qualified due to major problems/some data may be unusable

OVERALL ASSESSSMENT: Antimony results unusable (R) due to very low spike recovery; all other results acceptable w/attached qualification

NOTES: Fluoride samples from this delivery group were analyzed in the same batch with SDG B00GP9

o Refer to the corresponding attachments for explanation of any problems.

Westinghouse
Hanford Company

OSM RCRA LEVEL B DATA ASSESSMENT (pg 2)

DATE 11/21/92 SAMPLES/MATRIX see cover

REVIEWED BY J.A. Lerch

LABORATORY DataChem

CASE # —

SDG # B00ZH9

DATA ASSESSMENT SUMMARY

QUALITY CONTROL CHECK	ANALYSIS	VOA	SemiVOA	
1. Holding times		O	O	
2. Matrix Spike		O	O	
3. Duplicates		O	O	
4. Surrogates		O	O	
5. Blanks		X	O	
6.				
7.				
8.				
9.				
10.				

O = data had no problems
X = data qualified due to minor problems
M = data qualified due to major problems/some data may be unusable

OVERALL ASSESSSMENT: see cover

NOTES: —

o Refer to the corresponding attachments for explanation of any problems.

9513319.2095

RCRA LEVEL B QC

Name JA Lerch Date 11/21/92

QC Check: Holding Times

COMMENTS: ICP metals - 6 mo. holding time met for all samples
Ammonia, Fluoride - 28 day holding time req met for all samples
VOA - applicable VOA holding time met for all samples
SemiVOA - applicable extraction + analysis time met for all samples

ACTION: none

sample #	constituent	value/qual	sample #	constituent	value/qual

RCRA LEVEL B QC

Name JA Lerch Date 11/21/92

QC Check: Matrix Spike

COMMENTS: ICP metals – B00ZJ2MS; Sb recovery very low (0), all other ICP recoveries range ~78-101 %
Ammonia – B00ZJ2 recovery acceptable (~75 %)
VOA – B00ZJ0MS+MSD recoveries acceptable (range ~82 to 109 %)

ACTION: qualify associated results as per OSM guidelines

	sample #	constituent	value/qual	sample #	constituent	value/qual
ICP	all	Sb	R			

RCRA LEVEL B QC

Name JA Lerch Date 11/21/92

QC Check: Matrix Spike (cont)

COMMENTS: SemiVOA - B00ZJ2MS+MSD recoveries ok (range ~60 to 110%)
Fluoride - QC performed on 2101-M samples from another delivery group (SDG B00GP9): B00GP9 + B00GQ1 spike results ok (99 + 103%)

ACTION:

sample #	constituent	value/qual	sample #	constituent	value/qual

RCRA LEVEL B QC

Name JA Lerch Date 11/21/92

QC Check: Duplicates

COMMENTS: ICP metals - B00EJ2D; duplicate RPD's acceptable
Ammonia - B00EJ2 duplicate RPD high
VOA - B00EJ0MS + MSD duplicate RPD's acceptable
SemiVOA - B00EJ2MS + MSD duplicate results ok

ACTION: qualify associated results as per OSM guidelines

sample #	constituent	value/qual	sample #	constituent	value/qual
all	Ammonia	J, UJ			

RCRA LEVEL C QC

Name JA Lerch Date 11/21/92

QC Check: Duplicates (cont)

COMMENTS: Fluoride - QC performed on 2101-M samples from another delivery group (SDG B00GP9): B00GP9 + B00GQ1 dup results ok

ACTION: none

sample #	constituent	value/qual	sample #	constituent	value/qual

RCRA LEVEL B QC

Name JA Lerch Date 11/21/92

QC Check: Surrogates

COMMENTS: VOA - all surrogates recoveries within acceptable range
SemiVOA - all surrogate recoveries within acceptable range

ACTION: none

sample #	constituent	value/qual	sample #	constituent	value/qual

RCRA LEVEL B QC

Name J.A. Lerch Date 11/21/92

QC Check: Blanks

COMMENTS: ICP metals - no evidence of contamination in ICP blanks
Fluoride - no evidence of blank contamination present
Ammonia - no evidence of blank contamination present
VOA - acetone detected in VOA method blank

ACTION: qualify associated results as per OSM guidelines

	sample #	constituent	value/qual
VOA	B00ZH9	acetone	130 U
	B00ZJ0		100 U
	B00ZJ1		33 U
	B00ZJ2		74 U

sample #	constituent	value/qual

SemiVOA • blank qual. criteria applied to several semiVOA unknowns "TICs".

RCRA LEVEL B QC

Name J.A. Lerch Date 11/21/92

QC Check: Blanks (cont)

COMMENTS: SemiVOA- method blanks free of contamination

ACTION: none

sample #	constituent	value/qual	sample #	constituent	value/qual

9513319.2099

DATA CHEM LABORATORIES

June 28, 1991

REPORT INTRODUCTION
ANALYTICAL COMMENTARY

SUBMITTED TO: Ron Mitchell

SUBMITTED BY: Joseph A. Gress

REFERENCE DATA:

Analysis of: 4 soil samples, matrix spike, and matrix spike duplicate

Method of Analysis: EPA 8240 with modifications

Identification No.: S91-0418CD

DataChem Laboratory No.: EK 2126 through EK 2131

The above-numbered samples were analyzed for volatile organics using EPA Method 8240 with modifications (SW-846; third edition; September 1986; U.S. Environmental Protection Agency, Office of Solid Waste and Emergency Response).

For soil samples, five grams of sample were heated and directly purged onto a Tekmar 2-phase trap, then desorbed at 180 degrees centigrade under reverse helium flow onto the GC column. The desorbed organics were separated by a 105 meter Restek 502.2, 0.53 mm ID, fused silica capillary column. The column oven was programmed from 35 degrees centigrade (held isothermal for 10 minutes) to 220 degrees centigrade at 10 degrees centigrade per minute. The resulting ions were scanned on a Finnigan 5100 GC/MS/DS from 35 amu to 260 amu each second.

An internal standard method of quantitation was used. Internal standards were added to each sample and standard prior to analysis. Five standards were analyzed as prescribed by the method at 20, 50, 100, 150 and 200 ug/Kg. System Performance Check Compounds were checked for a minimum response factor of 0.300, these compounds are chloromethane, bromoform (can be 0.250), 1,1-dichloroethane, chlorobenzene and 1,1,2,2-tetrachloroethane. Response factors from the initial calibration curve are used to calculate percent relative standard deviation (%RSD) for Calibration Check Compounds. These are toluene, 1,1-dichloroethene, chloroform, 1,2-dichloropropane, ethylbenzene, and

CINCINNATI OFFICE
4388 GLENDALE-MILFORD ROAD
CINCINNATI, OHIO 45242-3706
513 733-5336, FAX 513 733-5347

SALT LAKE OFFICE
960 WEST LeVOY DRIVE
SALT LAKE CITY, UTAH 84123-2547
801 266 7700, FAX 801 268 9942
A SORENSON COMPANY

DENVER OFFICE
5299 DTC BOULEVARD, #500
ENGLEWOOD, COLORADO 80111-3326
303 771-1355, FAX 303 770-0578

vinyl chloride, the %RSD must be less than 30%. These Q.C. criteria were met for the initial calibration curve.

Quantitation of each target compound is based on response factors from a 50 ug/Kg continuing calibration standard. Before sample analysis can begin, standardization requirements must be met. The response factors of System Performance Check Compounds must meet the minimum criteria of 0.300, except bromoform at 0.250, and the Calibration Check Compounds must be less than 25% difference with the average response from the initial calibration curve.

Tuning and calibration checks were made prior to sample analysis. A reagent blank was also analyzed prior to sample analysis to certify cleanliness of reagents. Before analysis, blanks were analyzed in each sparging unit to verify the cleanliness of the instrument sampling apparatus.

In addition, the following quality assurance procedures were routine; monitoring of internal standard absolute areas and retention times and measurement of surrogate standard recoveries.

DataChem Laboratories will maintain a complete record of your data on magnetic tape including the ion chromatograms, mass spectra, and verification of compliance with EPA tuning (BFB).

The results for EPA Method 8240 are reported twice for each sample in the body of the report, first on the Summary Report and again on the Analytical Report (results by sample). The Analytical Report consists of two pages for each sample. Analytical standards have been analyzed for each compound on page one and the quantitative results are presented. The soil sample results were based on dry weight as per EPA method 8240. The unknown compounds have been tentatively identified and are found on page two of the Analytical Report. The amount of each unknown present is estimated by comparison to an internal standard assuming the response factor to be one. Additionally, the footnotes on page two of the Analytical Report have been used to qualify the data reported.

A matrix spike and matrix spike duplicate were analyzed using soil sample EK 2127 (B00ZJ0). The surrogate 1,2-dichoroethane was not within acceptance criteria for this sample; and the matrix spike and duplicate serve as reanalysis of this sample. The analytes 1,1-dichloroethene, trichloroethene, benzene, toluene, and chlorobenzene were spiked into the sample at 50 ug/Kg. The recoveries are tabulated and reported on the last page of the analytical report. The qualifiers "S" and "SP" were used throughout the analytical report to indicate spiked analytes.

Joseph A. Gress

9513319.2100

ANALYTICAL REPORT FOR SAMPLE No. EK2126

EPA METHOD 8240

TARGET ANALYTE RESULTS

Field Sample ID B00Z H9 Sponsor WESTINGHOUSE HANFORD
File ID CT66EK126 Date of Analysis 06/24/91 Date Received 06/20/91
DataChem SET ID S91-0418CD

Cas. No	COMPOUND	RESULTS (ug/KG)	DETECTION LIMITS (ug/KG)
74-87-3	chloromethane	U	1.6*
74-83-9	bromomethane	U	1.5*
75-01-4	vinyl chloride	U	1.7*
75-00-3	chloroethane	U	1.4*
75-09-2	methylene chloride	U	1.6*
67-64-1	acetone	130. UL	4.3*
75-15-0	carbon disulfide	U	1.6*
75-69-4	trichlorofluoromethane	U	1.5*
75-35-4	1,1-dichloroethene	U	1.2*
75-34-3	1,1-dichloroethane	U	2.1*
540-59-0	total 1,2-dichloroethene	U	1.2*
76-66-3	chloroform	U	1.8*
107-06-2	1,2-dichloroethane	U	2.4*
74-88-4	iodomethane	U	1.5*
107-02-8	acrolein	U	58.*
107-13-1	acrylonitrile	U	42.*
78-93-3	2-butanone	U	3.8*
71-55-6	1,1,1-trichloroethane	U	1.6*
56-23-5	carbon tetrachloride	U	1.5*
108-05-4	vinyl acetate	U	3.5*
75-27-4	bromodichloromethane	U	1.8*
78-87-5	1,2-dichloropropane	U	2.0*
10061-02-5	cis-1,3-dichloropropene	U	3.1*
79-01-6	trichloroethene	U	1.3*
71-43-2	benzene	U	1.6*
124-48-1	dibromochloromethane	U	1.4*
79-00-5	1,1,2-trichloroethane	U	1.1*
10061-02-6	trans-1,3-dichloropropene	U	2.9*
110-75-8	2-chloroethylvinyl ether	U	3.3*
75-25-2	bromoform	U	1.2*
74-95-3	dibromomethane	U	2.5*
764-41-0	trans-1,4-dichloro-2-butene	U	1.7*
108-10-1	4-methyl-2-pentanone	U	3.5*
96-18-4	1,2,3-trichloropropane	U	2.3*
591-78-6	2-hexanone	U	4.1*
79-34-5	1,1,2,2-tetrachloroethane	U	2.0*
127-18-4	tetrachloroethene	U	1.5*
97-63-2	ethyl methacrylate	U	1.9*
108-88-3	toluene	2.0	1.5*
108-90-7	chlorobenzene	U	1.3*
100-41-4	ethylbenzene	U	1.4*
100-42-5	styrene	U	1.2*
1330-20-7	total xylene	U	1.0*

JF 11/21/92

D3-297

* current DataChem detection limit

ANALYTICAL REPORT FOR SAMPLE No. EK2126

NON-TARGET ANALYTE RESULTS
Additional Volatiles

Field Sample ID BOOZ H9

Cas. No	COMPOUND	Scan Number	Results ug/Kg	Footnotes
	NO UNKNOWNS			

FOOTNOTES

- B The analyte was found in the method blank. The reported results have been adjusted for the quantity found in the blank.
- E The reported concentration is an estimate only. The response factor was assumed to be 1.000 relative to an internal standard.
- J Indicates an estimated concentration below the Method Detection Limit.
- K The isomer is unknown.
- N Analytical standards were not analyzed for this compound.
- U Not detected.
- W The identification is tentative or closely related to the compound.

9513319.2101

ANALYTICAL REPORT FOR SAMPLE No. EK2127

EPA METHOD 8240

TARGET ANALYTE RESULTS

Field Sample ID BOOZ J0 Sponsor WESTINGHOUSE HANFORD
File ID CT67EK127 Date of Analysis 06/24/91 Date Received 06/20/91
DataChem SET ID S91-0418CD

Cas. No	COMPOUND	RESULTS (ug/KG)	DETECTION LIMITS (ug/KG)
74-87-3	chloromethane	U	1.6*
74-83-9	bromomethane	U	1.5*
75-01-4	vinyl chloride	U	1.7*
75-00-3	chloroethane	U	1.4*
75-09-2	methylene chloride	U	1.6*
67-64-1	acetone	100. U	4.3*
75-15-0	carbon disulfide	U	1.6*
75-69-4	trichlorofluoromethane	U	1.5*
75-35-4	1,1-dichloroethene	U	1.2*
75-34-3	1,1-dichloroethane	U	2.1*
540-59-0	total 1,2-dichloroethene	U	1.2*
76-66-3	chloroform	U	1.8*
107-06-2	1,2-dichloroethane	U	2.4*
74-88-4	iodomethane	U	1.5*
107-02-8	acrolein	U	58.*
107-13-1	acrylonitrile	U	42.*
78-93-3	2-butanone	U	3.8*
71-55-6	1,1,1-trichloroethane	U	1.6*
56-23-5	carbon tetrachloride	U	1.5*
108-05-4	vinyl acetate	U	3.5*
75-27-4	bromodichloromethane	U	1.8*
78-87-5	1,2-dichloropropane	U	2.0*
10061-02-5	cis-1,3-dichloropropene	U	3.1*
79-01-6	trichloroethene	U	1.3*
71-43-2	benzene	U	1.6*
124-48-1	dibromochloromethane	U	1.4*
79-00-5	1,1,2-trichloroethane	U	1.1*
10061-02-6	trans-1,3-dichloropropene	U	2.9*
110-75-8	2-chloroethylvinyl ether	U	3.3*
75-25-2	bromoform	U	1.2*
74-95-3	dibromomethane	U	2.5*
764-41-0	trans-1,4-dichloro-2-butene	U	1.7*
108-10-1	4-methyl-2-pentanone	U	3.5*
96-18-4	1,2,3-trichloropropane	U	2.3*
591-78-6	2-hexanone	U	4.1*
79-34-5	1,1,2,2-tetrachloroethane	U	2.0*
127-18-4	tetrachloroethene	U	1.5*
97-63-2	ethyl methacrylate	U	1.9*
108-88-3	toluene	U	1.5*
108-90-7	chlorobenzene	U	1.3*
100-41-4	ethylbenzene	U	1.4*
100-42-5	styrene	U	1.2*
1330-20-7	total xylene	U	1.0*

JJ 11/21/92

D3-299

* current DataChem detection limit

ANALYTICAL REPORT FOR SAMPLE No. EK2127

NON-TARGET ANALYTE RESULTS
Additional Volatiles

Field Sample ID BOOZ J0

Cas. No	COMPOUND	Scan Number	Results ug/Kg	Footnotes
	NO UNKNOWNS			

FOOTNOTES

B The analyte was found in the method blank. The reported results have been adjusted for the quantity found in the blank.

E The reported concentration is an estimate only. The response factor was assumed to be 1.000 relative to an internal standard.

J Indicates an estimated concentration below the Method Detection Limit.

K The isomer is unknown.

N Analytical standards were not analyzed for this compound.

U Not detected.

W The identification is tentative or closely related to the compound.

9513319.2102

ANALYTICAL REPORT FOR SAMPLE No. EK2128

EPA METHOD 8240

TARGET ANALYTE RESULTS

Field Sample ID BOOZ J1 Sponsor WESTINGHOUSE HANFORD
File ID CT68EK128 Date of Analysis 06/24/91 Date Received 06/20/91
DataChem SET ID S91-0418CD

Cas. No	COMPOUND	RESULTS (ug/KG)	DETECTION LIMITS (ug/KG)
74-87-3	chloromethane	U	1.6*
74-83-9	bromomethane	U	1.5*
75-01-4	vinyl chloride	U	1.7*
75-00-3	chloroethane	U	1.4*
75-09-2	methylene chloride	U	1.6*
67-64-1	acetone	33. U	4.3*
75-15-0	carbon disulfide	U	1.6*
75-69-4	trichlorofluoromethane	U	1.5*
75-35-4	1,1-dichloroethene	U	1.2*
75-34-3	1,1-dichloroethane	U	2.1*
540-59-0	total 1,2-dichloroethene	U	1.2*
76-66-3	chloroform	U	1.8*
107-06-2	1,2-dichloroethane	U	2.4*
74-88-4	iodomethane	U	1.5*
107-02-8	acrolein	U	58.*
107-13-1	acrylonitrile	U	42.*
78-93-3	2-butanone	U	3.8*
71-55-6	1,1,1-trichloroethane	U	1.6*
56-23-5	carbon tetrachloride	U	1.5*
108-05-4	vinyl acetate	U	3.5*
75-27-4	bromodichloromethane	U	1.8*
78-87-5	1,2-dichloropropane	U	2.0*
10061-02-5	cis-1,3-dichloropropene	U	3.1*
79-01-6	trichloroethene	U	1.3*
71-43-2	benzene	U	1.6*
124-48-1	dibromochloromethane	U	1.4*
79-00-5	1,1,2-trichloroethane	U	1.1*
10061-02-6	trans-1,3-dichloropropene	U	2.9*
110-75-8	2-chloroethylvinyl ether	U	3.3*
75-25-2	bromoform	U	1.2*
74-95-3	dibromomethane	U	2.5*
764-41-0	trans-1,4-dichloro-2-butene	U	1.7*
108-10-1	4-methyl-2-pentanone	U	3.5*
96-18-4	1,2,3-trichloropropane	U	2.3*
591-78-6	2-hexanone	U	4.1*
79-34-5	1,1,2,2-tetrachloroethane	U	2.0*
127-18-4	tetrachloroethene	U	1.5*
97-63-2	ethyl methacrylate	U	1.9*
108-88-3	toluene	U	1.5*
108-90-7	chlorobenzene	U	1.3*
100-41-4	ethylbenzene	U	1.4*
100-42-5	styrene	U	1.2*
1330-20-7	total xylene	U	1.0*

D3-301

* current DataChem detection limit

JH 11/21/92

ANALYTICAL REPORT FOR SAMPLE No. EK2128

NON-TARGET ANALYTE RESULTS
Additional Volatiles

Field Sample ID BOOZ J1

Cas. No	COMPOUND	Scan Number	Results ug/Kg	Footnotes
	NO UNKNOWNS			

FOOTNOTES

B The analyte was found in the method blank. The reported results have been adjusted for the quantity found in the blank.

E The reported concentration is an estimate only. The response factor was assumed to be 1.000 relative to an internal standard.

J Indicates an estimated concentration below the Method Detection Limit.

K The isomer is unknown.

N Analytical standards were not analyzed for this compound.

U Not detected.

W The identification is tentative or closely related to the compound.

9513319.2105

ANALYTICAL REPORT FOR SAMPLE No. EK2129

EPA METHOD 8240

TARGET ANALYTE RESULTS

Field Sample ID BOOZ J2 Sponsor WESTINGHOUSE HANFORD
File ID CT69EK129 Date of Analysis 06/24/91 Date Received 06/20/91
DataChem SET ID S91-0418CD

Cas. No	COMPOUND	RESULTS (ug/KG)	DETECTION LIMITS (ug/KG)
74-87-3	chloromethane	U	1.6*
74-83-9	bromomethane	U	1.5*
75-01-4	vinyl chloride	U	1.7*
75-00-3	chloroethane	U	1.4*
75-09-2	methylene chloride	U	1.6*
67-64-1	acetone	74. U	4.3*
75-15-0	carbon disulfide	U	1.6*
75-69-4	trichlorofluoromethane	U	1.5*
75-35-4	1,1-dichloroethene	U	1.2*
75-34-3	1,1-dichloroethane	U	2.1*
540-59-0	total 1,2-dichloroethene	U	1.2*
76-66-3	chloroform	U	1.8*
107-06-2	1,2-dichloroethane	U	2.4*
74-88-4	iodomethane	U	1.5*
107-02-8	acrolein	U	58.*
107-13-1	acrylonitrile	U	42.*
78-93-3	2-butanone	U	3.8*
71-55-6	1,1,1-trichloroethane	U	1.6*
56-23-5	carbon tetrachloride	U	1.5*
108-05-4	vinyl acetate	U	3.5*
75-27-4	bromodichloromethane	U	1.8*
78-87-5	1,2-dichloropropane	U	2.0*
10061-02-5	cis-1,3-dichloropropene	U	3.1*
79-01-6	trichloroethene	U	1.3*
71-43-2	benzene	U	1.6*
124-48-1	dibromochloromethane	U	1.4*
79-00-5	1,1,2-trichloroethane	U	1.1*
10061-02-6	trans-1,3-dichloropropene	U	2.9*
110-75-8	2-chloroethylvinyl ether	U	3.3*
75-25-2	bromoform	U	1.2*
74-95-3	dibromomethane	U	2.5*
764-41-0	trans-1,4-dichloro-2-butene	U	1.7*
108-10-1	4-methyl-2-pentanone	U	3.5*
96-18-4	1,2,3-trichloropropane	U	2.3*
591-78-6	2-hexanone	U	4.1*
79-34-5	1,1,2,2-tetrachloroethane	U	2.0*
127-18-4	tetrachloroethene	U	1.5*
97-63-2	ethyl methacrylate	U	1.9*
108-88-3	toluene	U	1.5*
108-90-7	chlorobenzene	U	1.3*
100-41-4	ethylbenzene	U	1.4*
100-42-5	styrene	U	1.2*
1330-20-7	total xylene	U	1.0*

JJ 11/21/92

D3-303

* current DataChem detection limit

ANALYTICAL REPORT FOR SAMPLE No. EK2129

NON-TARGET ANALYTE RESULTS
Additional Volatiles

Field Sample ID BOOZ J2

Cas. No	COMPOUND	Scan Number	Results ug/Kg	Footnotes
	NO UNKNOWNS			

FOOTNOTES

B The analyte was found in the method blank. The reported results have been adjusted for the quantity found in the blank.

E The reported concentration is an estimate only. The response factor was assumed to be 1.000 relative to an internal standard.

J Indicates an estimated concentration below the Method Detection Limit.

K The isomer is unknown.

N Analytical standards were not analyzed for this compound.

U Not detected.

W The identification is tentative or closely related to the compound.

SOIL
Surrogate Percent Recovery Summary

DataChem ID S91-0418CD

Sample No.	TOL	BFB	DCE
MB	101	91	109
EK2126	104	93	121
EK2127	116	105	124
EK2128	106	99	105
EK2129	107	98	108
EK2130	97	89	106
EK2131	97	83	109

			QC LIMITS
(TOL)	=	TOLUENE-D8	(81-117)
(BFB)	=	BROMOFLUOROBENZENE	(74-121)
(DCE)	=	1,2-DICHLOROETHANE-D4	(70-121)

MB is the abbreviation for method blank.
If more than one method blank was analyzed they will be designated MB-1, MB-2, ect.

EPA METHOD 8240

MATRIX SPIKE RECOVERY REPORT

Date of Analysis 06/25/91 Date Received 06/20/91
DataChem ID for Matrix Spike Analysis EK2127
DataChem SET ID S91-0418CD

COMPOUND	PERCENT RECOVERY MATRIX SPIKE	PERCENT RECOVERY MATRIX SPIKE DUPLICATE
1,1-dichloroethene	89	88
trichloroethene	82	82
benzene	99	99
toluene	90	95
chlorobenzene	108	109

Matrix Spiking Concentration is 50 ug/KG.

DATA CHEM LABORATORIES

9513319.2105

ENVIRONMENTAL SOIL REPORT

Date 8/8/91

Agency Identification Number S91-0418-BD

Method Index — Method Reference —

[1] EPA-600/4-79-020 "Methods for Chemical Analysis of Water and Wastes", March 1983 (Modified for use with soils.)

[2] SW-846 "Test Methods for Evaluating Solid Waste", September 1986.

960 West LeVoy Drive / Salt Lake City, Utah 84123-2547 / (801) 266-7700
A Sorenson Company

DATA CHEM LABORATORIES

July 10, 1991

REPORT INTRODUCTION
ANALYTICAL COMMENTARY

SUBMITTED TO: Ron Mitchell

SUBMITTED BY: Martin A. Salotto

REFERENCE DATA:

Analysis of: 4 soil samples, matrix spike, and matrix spike duplicate

Method of Analysis: EPA 8270 with modifications

Identification No: S91-0418-DD

DataChem Laboratory No: EK 2126 through EK 2129, EK 2130MS, EK 2131MSD

The above numbered samples were analyzed for base-neutral and acid compounds by gas chromatography/mass spectrometry. EPA Test Method 8270 was followed with modifications. (United States Environmental Protection Agency; Office of Solid Waste and Emergency Response, SW-846 November 1986).

EPA Method 3550 was used for preparation of the sample prior to analysis. Thirty grams of the soil samples were extracted with methylene chloride using sonication. Surrogate standards were added prior to the extraction as prescribed. The total volume of the sample after extraction and concentration was one milliliter. Internal standards were added to the sample and standard mixture prior to analysis.

Separation of the compounds of interest was obtained with a 30 m, 0.32 mm internal diameter, DB-5 fused silica capillary column. Oven temperature was programmed from 40 degrees centigrade (held isothermally for 4 minutes) to 300 degrees centigrade at 10 degrees centigrade per minute. A 40 second splitless injection interval was used. Analysis was performed using a Finnigan 5100 GC/MS/DS system, scanning a mass range of 35 to 500 amu each second.

CINCINNATI OFFICE
4388 GLENDALE-MILFORD ROAD
CINCINNATI, OHIO 45242-3706
513 733-5336, FAX 513 733-5347

SALT LAKE OFFICE
960 WEST LeVOY DRIVE
SALT LAKE CITY, UTAH 84123-2547
801 266-7700, FAX 801 268-9992
A SUMMIT COMPANY

DENVER OFFICE
5595 DTC BOULEVARD, #500
ENGLEWOOD, COLORADO 80111-3326
303 771-1255, FAX 303 770-0578

The initial calibration of the instrument was performed at concentrations of 160, 120, 80, 50 and 20 ug/mL. Calibration check compounds (CCC's) specified by the method are acenaphthene, 1,4-dichlorobenzene, hexachlorobutadiene, N-nitroso-di-n-phenylamine, di-n-octylphthalate, fluoranthene, benzo(a)pyrene, 4-chloro-3-methylphenol, 2,4-dichlorophenol, 2-nitrophenol, phenol, pentachlorophenol, and 2,4,6-trichlorophenol. The relative standard deviation of the response factors (RF) for each CCC in the initial standards was less than the 30% criteria required by the method. System performance check compounds (SPCC's) specified in the method are N-nitroso-di-n-propylamine, hexachlorocyclopentadiene, 2,4-dinitrophenol, and 4-nitrophenol. The minimum response factors (RF) for the SPCC's were greater than the 0.050 required in the method.

The continuing calibration of the instrument was performed at a concentration of 50 ug/mL for all compounds. The response factors for all CCC's were less than the maximum percent difference of 25% compared to the initial curve; SPCC's response factors were greater than the minimum RF of 0.050. DFTPP performance criteria was met for all sample and standard analyses.

DataChem Laboratories will maintain a complete record of this data on magnetic tape along with hard copies of the ion chromatograms, mass spectra, surrogate recovery summary, and verification of compliance with EPA tuning (DFTPP) and chromatography criteria.

A matrix spike analysis was performed on sample EK 2129 and was reported as EK 2130MS and EK 2131MSD. Matrix spike recoveries are reported on the Matrix Spike and Duplicate Recovery Report. Recoveries for all matrix spike analytes were acceptable; reproducibility was also good.

Surrogate standard recoveries were monitored and are reported on the Surrogate Summary form at the end of the report. Surrogate recoveries were within QC limits.

Results for the samples are reported twice in the report; first on the Target Analyte Summary Report and again on the Analytical Report (results by sample). The report follows.

Martin A. Salotto

Martin A. Salotto

ANALYTICAL REPORT FOR SAMPLE No. EK 2126

EPA METHOD 8270, 3rd ED.
TARGET ANALYTE RESULTS

Field Sample ID B00 ZH9 Sponsor WESTINGHOUSE HANFORD CO.

File ID K07EK2126 Date Extracted 06/21/91 Date of Analysis 06/27/91

DataChem ID S91-0418DD

Cas. No	COMPOUND	RESULTS (ug/g)	DETECTION LIMITS (ug/g)
62-75-9	N-nitrosodimethylamine	U	1
108-95-2	phenol	U	1
111-44-4	bis(2-chloroethyl)ether	U	1
95-57-8	2-chlorophenol	U	1
541-73-1	1,3-dichlorobenzene	U	1
106-46-7	1,4-dichlorobenzene	U	1
95-50-1	1,2-dichlorobenzene	U	1
39638-329	bis(2-chloroisopropyl)ether	U	1
621-64-7	N-nitrosodi-n-propylamine	U	1
67-72-1	hexachloroethane	U	1
98-95-3	nitrobenzene	U	1
78-59-1	isophorone	U	1
88-75-5	2-nitrophenol	U	1
105-67-9	2,4-dimethylphenol	U	1
11-91-1	bis(2-chloroethoxy)methane	U	1
120-83-2	2,4-dichlorophenol	U	1
120-82-1	1,2,4-trichlorobenzene	U	1
91-20-3	naphthalene	U	1
87-68-3	hexachlorobutadiene	U	1
59-50-7	4-chloro-3-methylphenol	U	1
77-47-4	hexachlorocyclopentadiene	U	1
88-06-2	2,4,6-trichlorophenol	U	1
91-58-7	2-chloronaphthalene	U	1
131-11-3	dimethyl phthalate	U	1
606-20-2	2,6-dinitrotoluene	U	1
208-96-8	acenaphthylene	U	1
83-32-9	acenaphthene	U	1
51-28-5	2,4-dinitrophenol	U	1
100-02-7	4-nitrophenol	U	1
121-14-2	2,4-dinitrotoluene	U	1
84-66-2	diethyl phthalate	U	1
7005-73-3	4-chlorophenyl-phenylether	U	1
86-73-7	fluorene	U	1
534-52-1	2-methyl-4,6-dinitrophenol	U	1
86-30-6	N-nitrosodiphenylamine	U	1
101-55-3	4-bromophenyl-phenylether	U	1
118-74-1	hexachlorobenzene	U	1
319-85-7	beta-BHC	U	5
87-86-5	pentachlorophenol	U	1
85-01-8	phenanthrene	U	1
120-12-7	anthracene	U	1

ANALYTICAL REPORT FOR SAMPLE No. EK 2126

EPA METHOD 8270, 3rd ED.
TARGET ANALYTE RESULTS

Field Sample ID BOO ZH9 Sponsor WESTINGHOUSE HANFORD CO.

Cas. No.	COMPOUND	RESULTS (ug/g)	DETECTION LIMITS (ug/g)
319-86-8	delta-BHC	U	5
76-44-8	heptachlor	U	5
84-74-2	di-n-butyl phthalate	U	1
309-00-2	aldrin	U	5
1024-57-3	heptachlor epoxide	U	5
206-44-0	fluoranthene	U	1
129-00-0	pyrene	U	1
959-98-8	endosulfan I	U	5
75-55-9	4,4'DDE	U	5
92-87-5	benzidine	U	1
60-57-1	dieldrin	U	5
72-20-8	endrin	U	5
72-54-8	4,4'DDD	U	5
33213-65-9	endosulfan II	U	5
7421-93-4	endrin aldehyde	U	5
85-68-7	benzyl-butylphthalate	U	1
50-29-3	4,4'DDT	U	5
1031-07-8	endosulfan sulfate	U	5
117-81-7	bis(2-ethylhexyl)phthalate	U	1
56-55-3	benzo(a)anthracene	U	1
218-01-9	chrysene	U	1
91-94-1	3,3-dichlorobenzidine	U	1
117-84-0	di-n-octylphthalate	U	1
205-99-2	benzo(b)fluoranthene	U	1
207-08-9	benzo(k)fluoranthene	U	1
50-32-8	benzo(a)pyrene	U	1
193-39-5	indeno(1,2,3-cd)pyrene	U	1
53-70-3	dibenzo(a,h)anthracene	U	1
191-24-2	benzo(ghi)perylene	U	1
57-74-9	chlordane	U	10
8001-35-2	toxaphene	U	10
12674-11-2	PCB-1016	U	10
11104-28-2	PCB-1221	U	10
11141-16-5	PCB-1232	U	10
53469-21-9	PCB-1242	U	10
12672-29-6	PCB-1248	U	10
11097-69-1	PCB-1254	U	10
11096-82-5	PCB-1260	U	10

See footnotes on Page 4.

ANALYTICAL REPORT FOR SAMPLE No. EK 2126

EPA METHOD 8270, 3rd ED.
TARGET ANALYTE RESULTS

Field Sample ID BOO ZH9 Sponsor WESTINGHOUSE HANFORD CO.

Cas. No.	COMPOUND	RESULTS (ug/g)	DETECTION LIMITS (ug/g)
98-86-2	acetophenone	U	1
62-53-3	aniline	U	1
92-67-1	4-aminobiphenyl	U	1
65-85-0	benzoic acid	U	1
100-51-6	benzyl alcohol	U	1
319-84-6	.alpha.-BHC	U	1
58-89-9	.gamma.-BHC	U	1
106-47-8	4-chloroaniline	U	5
90-13-1	1-chloronaphthalene	U	1
224-42-0	dibenz(a,j)acridine	U	1
132-64-9	dibenzofuran	U	1
87-65-0	2,6-dichlorophenol	U	1
60-11-7	p-dimethylaminoazobenzene	U	1
57-97-6	7,12-dimethbenz(a)anthracene	U	1
122-09-8	a,a-dimethyphenethylamine	U	1
17082-12-1	1,2-diphenylhydrazine	U	1
53494-70-5	endrin ketone	U	1
62-50-0	ethyl methanesulfonate	U	1
72-43-5	methoxychlor	U	1
56-49-5	3-methylcholanthrene	U	1
66-27-3	ethyl methanesulfonate	U	1
91-57-6	2-methylnaphthalene	U	1
95-48-7	2-methylphenol	U	1
106-44-5	4-methylphenol	U	1
134-32-7	1-naphthylamine	U	1
131-07-2	2-naphthylamine	U	1
88-74-4	2-nitroaniline	U	5
99-09-2	3-nitroaniline	U	5
100-10-6	4-nitroaniline	U	5
924-16-3	n-nitroso-di-n-butylamine	U	1
100-75-4	n-nitrosopiperidine	U	1
608-93-5	pentachlorobenzene	U	1
589-82-4	pentachloronitrobenzene	U	1
62-44-2	phenacetin	U	1
109-06-8	2-picoline	U	1
23950-58-5	pronamide	U	1
95-94-3	1,2,4,5-tetrachlorobenzene	U	1
58-90-2	2,3,4,6-tetrachlorophenol	U	1
95-95-4	2,4,5-trichlorophenol	U	1

See footnotes on Page 4.

9513319.2108

ANALYTICAL REPORT FOR SAMPLE No. EK 2126

NON-TARGET ANALYTE RESULTS
Additional Semi-Volatiles

Field Sample ID BOO ZH9

Cas. No	COMPOUND	Scan Number	Results ug/g	Footnotes
----------	ALDOL CONDENSATION PRODUCT	~~604~~	~~0.6~~	~~ENWB~~
----------	ALDOL CONDENSATION PRODUCT	663	0.4	ENW
----------	ALDOL CONDENSATION PRODUCT	723	0.2	ENW
----------	ALDOL CONDENSATION PRODUCT	736	0.2	ENW

11/21/92

FOOTNOTES

B The analyte was found in the method blank. The reported results have been adjusted for the quantity found in the blank.

E The reported concentration is an estimate only. The response factor was assumed to be 1.000 relative to an internal standard.

J Indicates an estimated concentration below the Method Detection Limit.

K The isomer is unknown.

N Analytical standards were not analyzed for this compound.

U Not detected.

W The identification is tentative or closely related to the compound.

ANALYTICAL REPORT FOR SAMPLE No. EK 2127

EPA METHOD 8270, 3rd ED.
TARGET ANALYTE RESULTS

Field Sample ID BOO ZJ0 Sponsor WESTINGHOUSE HANFORD CO.

File ID K08EK2127 Date Extracted 06/21/91 Date of Analysis 06/28/91

DataChem ID S91-0418DD

Cas. No	COMPOUND	RESULTS (ug/g)	DETECTION LIMITS (ug/g)
62-75-9	N-nitrosodimethylamine	U	1
108-95-2	phenol	U	1
111-44-4	bis(2-chloroethyl)ether	U	1
95-57-8	2-chlorophenol	U	1
541-73-1	1,3-dichlorobenzene	U	1
106-46-7	1,4-dichlorobenzene	U	1
95-50-1	1,2-dichlorobenzene	U	1
39638-329	bis(2-chloroisopropyl)ether	U	1
621-64-7	N-nitrosodi-n-propylamine	U	1
67-72-1	hexachloroethane	U	1
98-95-3	nitrobenzene	U	1
78-59-1	isophorone	U	1
88-75-5	2-nitrophenol	U	1
105-67-9	2,4-dimethylphenol	U	1
11-91-1	bis(2-chloroethoxy)methane	U	1
120-83-2	2,4-dichlorophenol	U	1
120-82-1	1,2,4-trichlorobenzene	U	1
91-20-3	naphthalene	U	1
87-68-3	hexachlorobutadiene	U	1
59-50-7	4-chloro-3-methylphenol	U	1
77-47-4	hexachlorocyclopentadiene	U	1
88-06-2	2,4,6-trichlorophenol	U	1
91-58-7	2-chloronaphthalene	U	1
131-11-3	dimethyl phthalate	U	1
606-20-2	2,6-dinitrotoluene	U	1
208-96-8	acenaphthylene	U	1
83-32-9	acenaphthene	U	1
51-28-5	2,4-dinitrophenol	U	1
100-02-7	4-nitrophenol	U	1
121-14-2	2,4-dinitrotoluene	U	1
84-66-2	diethyl phthalate	U	1
7005-73-3	4-chlorophenyl-phenylether	U	1
86-73-7	fluorene	U	1
534-52-1	2-methyl-4,6-dinitrophenol	U	1
86-30-6	N-nitrosodiphenylamine	U	1
101-55-3	4-bromophenyl-phenylether	U	1
118-74-1	hexachlorobenzene	U	1
319-85-7	beta-BHC	U	5
87-86-5	pentachlorophenol	U	1
85-01-8	phenanthrene	U	1
120-12-7	anthracene	U	1

ANALYTICAL REPORT FOR SAMPLE No. EK 2127

EPA METHOD 8270, 3rd ED.
TARGET ANALYTE RESULTS

Field Sample ID B00 ZJ0 Sponsor WESTINGHOUSE HANFORD CO.

Cas. No.	COMPOUND	RESULTS (ug/g)	DETECTION LIMITS (ug/g)
319-86-8	delta-BHC	U	5
76-44-8	heptachlor	U	5
84-74-2	di-n-butyl phthalate	U	1
309-00-2	aldrin	U	5
1024-57-3	heptachlor epoxide	U	5
206-44-0	fluoranthene	U	1
129-00-0	pyrene	U	1
959-98-8	endosulfan I	U	5
75-55-9	4,4'DDE	U	5
92-87-5	benzidine	U	1
60-57-1	dieldrin	U	5
72-20-8	endrin	U	5
72-54-8	4,4'DDD	U	5
33213-65-9	endosulfan II	U	5
7421-93-4	endrin aldehyde	U	5
85-68-7	benzyl-butylphthalate	U	1
50-29-3	4,4'DDT	U	5
1031-07-8	endosulfan sulfate	U	5
117-81-7	bis(2-ethylhexyl)phthalate	U	1
56-55-3	benzo(a)anthracene	U	1
218-01-9	chrysene	U	1
91-94-1	3,3-dichlorobenzidine	U	1
117-84-0	di-n-octylphthalate	U	1
205-99-2	benzo(b)fluoranthene	U	1
207-08-9	benzo(k)fluoranthene	U	1
50-32-8	benzo(a)pyrene	U	1
193-39-5	indeno(1,2,3-cd)pyrene	U	1
53-70-3	dibenzo(a,h)anthracene	U	1
191-24-2	benzo(ghi)perylene	U	1
57-74-9	chlordane	U	10
8001-35-2	toxaphene	U	10
12674-11-2	PCB-1016	U	10
11104-28-2	PCB-1221	U	10
11141-16-5	PCB-1232	U	10
53469-21-9	PCB-1242	U	10
12672-29-6	PCB-1248	U	10
11097-69-1	PCB-1254	U	10
11096-82-5	PCB-1260	U	10

See footnotes on Page 4.

ANALYTICAL REPORT FOR SAMPLE No. EK 2127

EPA METHOD 8270, 3rd ED.
TARGET ANALYTE RESULTS

Field Sample ID BOO ZJ0 Sponsor WESTINGHOUSE HANFORD CO.

Cas. No.	COMPOUND	RESULTS (ug/g)	DETECTION LIMITS (ug/g)
98-86-2	acetophenone	U	1
62-53-3	aniline	U	1
92-67-1	4-aminobiphenyl	U	1
65-85-0	benzoic acid	U	1
100-51-6	benzyl alcohol	U	1
319-84-6	.alpha.-BHC	U	1
58-89-9	.gamma.-BHC	U	1
106-47-8	4-chloroaniline	U	5
90-13-1	1-chloronaphthalene	U	1
224-42-0	dibenz(a,j)acridine	U	1
132-64-9	dibenzofuran	U	1
87-65-0	2,6-dichlorophenol	U	1
60-11-7	p-dimethylaminoazobenzene	U	1
57-97-6	7,12-dimethbenz(a)anthracene	U	1
122-09-8	a,a-dimethyphenethylamine	U	1
17082-12-1	1,2-diphenylhydrazine	U	1
53494-70-5	endrin ketone	U	1
62-50-0	ethyl methanesulfonate	U	1
72-43-5	methoxychlor	U	1
56-49-5	3-methylcholanthrene	U	1
66-27-3	ethyl methanesulfonate	U	1
91-57-6	2-methylnaphthalene	U	1
95-48-7	2-methylphenol	U	1
106-44-5	4-methylphenol	U	1
134-32-7	1-naphthylamine	U	1
131-07-2	2-naphthylamine	U	1
88-74-4	2-nitroaniline	U	5
99-09-2	3-nitroaniline	U	5
100-10-6	4-nitroaniline	U	5
924-16-3	n-nitroso-di-n-butylamine	U	1
100-75-4	n-nitrosopiperidine	U	1
608-93-5	pentachlorobenzene	U	1
589-82-4	pentachloronitrobenzene	U	1
62-44-2	phenacetin	U	1
109-06-8	2-picoline	U	1
23950-58-5	pronamide	U	1
95-94-3	1,2,4,5-tetrachlorobenzene	U	1
58-90-2	2,3,4,6-tetrachlorophenol	U	1
95-95-4	2,4,5-trichlorophenol	U	1

See footnotes on Page 4.

ANALYTICAL REPORT FOR SAMPLE No. EK 2127

NON-TARGET ANALYTE RESULTS
Additional Semi-Volatiles

Field Sample ID BOO ZJ0

Cas. No	COMPOUND	Scan Number	Results ug/g	Footnotes
----------	ALDOL CONDENSATION PRODUCT	~~600~~	~~0.7~~	~~ENWB~~
----------	ALDOL CONDENSATION PRODUCT	658	0.6	ENW
----------	BROMO DIFLUORO HYDROCARBON	839	0.3	ENW

11/21/92

FOOTNOTES

B The analyte was found in the method blank. The reported results have been adjusted for the quantity found in the blank.
E The reported concentration is an estimate only. The response factor was assumed to be 1.000 relative to an internal standard.
J Indicates an estimated concentration below the Method Detection Limit.
K The isomer is unknown.
N Analytical standards were not analyzed for this compound.
U Not detected.
W The identification is tentative or closely related to the compound.

ANALYTICAL REPORT FOR SAMPLE No. EK 2128

EPA METHOD 8270, 3rd ED.
TARGET ANALYTE RESULTS

Field Sample ID BOO ZJ1 Sponsor WESTINGHOUSE HANFORD CO.

File ID K09EK2128 Date Extracted 06/21/91 Date of Analysis 06/28/91

DataChem ID S91-0418DD

Cas. No	COMPOUND	RESULTS (ug/g)	DETECTION LIMITS (ug/g)
62=75-9	N-nitrosodimethylamine	U	1
108-95-2	phenol	U	1
111-44-4	bis(2-chloroethyl)ether	U	1
95-57-8	2-chlorophenol	U	1
541-73-1	1,3-dichlorobenzene	U	1
106=46=7	1,4-dichlorobenzene	U	1
95-50-1	1,2-dichlorobenzene	U	1
39638-329	bis(2-chloroisopropyl)ether	U	1
621-64-7	N-nitrosodi-n-propylamine	U	1
67-72-1	hexachloroethane	U	1
98-95-3	nitrobenzene	U	1
78-59-1	isophorone	U	1
88-75-5	2-nitrophenol	U	1
105-67-9	2,4-dimethylphenol	U	1
11-91-1	bis(2-chloroethoxy)methane	U	1
120-83-2	2,4-dichlorophenol	U	1
120-82-1	1,2,4-trichlorobenzene	U	1
91-20-3	naphthalene	U	1
87-68-3	hexachlorobutadiene	U	1
59-50-7	4-chloro-3-methylphenol	U	1
77-47-4	hexachlorocyclopentadiene	U	1
88-06-2	2,4,6-trichlorophenol	U	1
91-58-7	2-chloronaphthalene	U	1
131-11-3	dimethyl phthalate	U	1
606-20-2	2,6-dinitrotoluene	U	1
208-96-8	acenaphthylene	U	1
83-32-9	acenaphthene	U	1
51-28-5	2,4-dinitrophenol	U	1
100-02-7	4-nitrophenol	U	1
121-14-2	2,4-dinitrotoluene	U	1
84-66-2	diethyl phthalate	U	1
7005-73-3	4-chlorophenyl-phenylether	U	1
86-73-7	fluorene	U	1
534-52-1	2-methyl-4,6-dinitrophenol	U	1
86-30-6	N-nitrosodiphenylamine	U	1
101-55-3	4-bromophenyl-phenylether	U	1
118-74-1	hexachlorobenzene	U	1
319-85-7	beta-BHC	U	5
87-86-5	pentachlorophenol	U	1
85-01-8	phenanthrene	U	1
120-12-7	anthracene	U	1

ANALYTICAL REPORT FOR SAMPLE No. EK 2128

EPA METHOD 8270, 3rd ED.
TARGET ANALYTE RESULTS

Field Sample ID B00 ZJ1 Sponsor WESTINGHOUSE HANFORD CO.

Cas. No.	COMPOUND	RESULTS (ug/g)	DETECTION LIMITS (ug/g)
319-86-8	delta-BHC	U	5
76-44-8	heptachlor	U	5
84-74-2	di-n-butyl phthalate	U	1
309-00-2	aldrin	U	5
1024-57-3	heptachlor epoxide	U	5
206-44-0	fluoranthene	U	1
129-00-0	pyrene	U	1
959-98-8	endosulfan I	U	5
75-55-9	4,4'DDE	U	5
92-87-5	benzidine	U	1
60-57-1	dieldrin	U	5
72-20-8	endrin	U	5
72-54-8	4,4'DDD	U	5
33213-65-9	endosulfan II	U	5
7421-93-4	endrin aldehyde	U	5
85-68-7	benzyl-butylphthalate	U	1
50-29-3	4,4'DDT	U	5
1031-07-8	endosulfan sulfate	U	5
117-81-7	bis(2-ethylhexyl)phthalate	U	1
56-55-3	benzo(a)anthracene	U	1
218-01-9	chrysene	U	1
91-94-1	3,3-dichlorobenzidine	U	1
117-84-0	di-n-octylphthalate	U	1
205-99-2	benzo(b)fluoranthene	U	1
207-08-9	benzo(k)fluoranthene	U	1
50-32-8	benzo(a)pyrene	U	1
193-39-5	indeno(1,2,3-cd)pyrene	U	1
53-70-3	dibenzo(a,h)anthracene	U	1
191-24-2	benzo(ghi)perylene	U	1
57-74-9	chlordane	U	10
8001-35-2	toxaphene	U	10
12674-11-2	PCB-1016	U	10
11104-28-2	PCB-1221	U	10
11141-16-5	PCB-1232	U	10
53469-21-9	PCB-1242	U	10
12672-29-6	PCB-1248	U	10
11097-69-1	PCB-1254	U	10
11096-82-5	PCB-1260	U	10

See footnotes on Page 4.

ANALYTICAL REPORT FOR SAMPLE No. EK 2128

EPA METHOD 8270, 3rd ED.
TARGET ANALYTE RESULTS

Field Sample ID BOO ZJ1 Sponsor WESTINGHOUSE HANFORD CO.

Cas. No.	COMPOUND	RESULTS (ug/g)	DETECTION LIMITS (ug/g)
98-86-2	acetophenone	U	1
62-53-3	aniline	U	1
92-67-1	4-aminobiphenyl	U	1
65-85-0	benzoic acid	U	1
100-51-6	benzyl alcohol	U	1
319-84-6	.alpha.-BHC	U	1
58-89-9	.gamma.-BHC	U	1
106-47-8	4-chloroaniline	U	5
90-13-1	1-chloronaphthalene	U	1
224-42-0	dibenz(a,j)acridine	U	1
132-64-9	dibenzofuran	U	1
87-65-0	2,6-dichlorophenol	U	1
60-11-7	p-dimethylaminoazobenzene	U	1
57-97-6	7,12-dimethbenz(a)anthracene	U	1
122-09-8	a,a-dimethyphenethylamine	U	1
17082-12-1	1,2-diphenylhydrazine	U	1
53494-70-5	endrin ketone	U	1
62-50-0	ethyl methanesulfonate	U	1
72-43-5	methoxychlor	U	1
56-49-5	3-methylcholanthrene	U	1
66-27-3	ethyl methanesulfonate	U	1
91-57-6	2-methylnaphthalene	U	1
95-48-7	2-methylphenol	U	1
106-44-5	4-methylphenol	U	1
134-32-7	1-naphthylamine	U	1
131-07-2	2-naphthylamine	U	1
88-74-4	2-nitroaniline	U	5
99-09-2	3-nitroaniline	U	5
100-10-6	4-nitroaniline	U	5
924-16-3	n-nitroso-di-n-butylamine	U	1
100-75-4	n-nitrosopiperidine	U	1
608-93-5	pentachlorobenzene	U	1
589-82-4	pentachloronitrobenzene	U	1
62-44-2	phenacetin	U	1
109-06-8	2-picoline	U	1
23950-58-5	pronamide	U	1
95-94-3	1,2,4,5-tetrachlorobenzene	U	1
58-90-2	2,3,4,6-tetrachlorophenol	U	1
95-95-4	2,4,5-trichlorophenol	U	1

See footnotes on Page 4.

ANALYTICAL REPORT FOR SAMPLE No. EK 2128

NON-TARGET ANALYTE RESULTS
Additional Semi-Volatiles

Field Sample ID BOO ZJ1

Cas. No	COMPOUND	Scan Number	Results ug/g	Footnotes
----------	ALDOL CONDENSATION PRODUCT	~~603~~	~~0.01~~	~~ENWB~~
----------	UNKNOWN	1870	0.6	EN

FOOTNOTES

B The analyte was found in the method blank. The reported results have been adjusted for the quantity found in the blank.

E The reported concentration is an estimate only. The response factor was assumed to be 1.000 relative to an internal standard.

J Indicates an estimated concentration below the Method Detection Limit.

K The isomer is unknown.

N Analytical standards were not analyzed for this compound.

U Not detected.

W The identification is tentative or closely related to the compound.

ANALYTICAL REPORT FOR SAMPLE No. EK 2129

EPA METHOD 8270, 3rd ED.
TARGET ANALYTE RESULTS

Field Sample ID BOO ZJ2 Sponsor WESTINGHOUSE HANFORD CO.

File ID K010EK2129 Date Extracted 06/21/91 Date of Analysis 06/28/91

DataChem ID S91-0418DD

Cas. No	COMPOUND	RESULTS (ug/g)	DETECTION LIMITS (ug/g)
62-75-9	N-nitrosodimethylamine	U	1
108-95-2	phenol	U	1
111-44-4	bis(2-chloroethyl)ether	U	1
95-57-8	2-chlorophenol	U	1
541-73-1	1,3-dichlorobenzene	U	1
106-46-7	1,4-dichlorobenzene	U	1
95-50-1	1,2-dichlorobenzene	U	1
39638-329	bis(2-chloroisopropyl)ether	U	1
621-64-7	N-nitrosodi-n-propylamine	U	1
67-72-1	hexachloroethane	U	1
98-95-3	nitrobenzene	U	1
78-59-1	isophorone	U	1
88-75-5	2-nitrophenol	U	1
105-67-9	2,4-dimethylphenol	U	1
11-91-1	bis(2-chloroethoxy)methane	U	1
120-83-2	2,4-dichlorophenol	U	1
120-82-1	1,2,4-trichlorobenzene	U	1
91-20-3	naphthalene	U	1
87-68-3	hexachlorobutadiene	U	1
59-50-7	4-chloro-3-methylphenol	U	1
77-47-4	hexachlorocyclopentadiene	U	1
88-06-2	2,4,6-trichlorophenol	U	1
91-58-7	2-chloronaphthalene	U	1
131-11-3	dimethyl phthalate	U	1
606-20-2	2,6-dinitrotoluene	U	1
208-96-8	acenaphthylene	U	1
83-32-9	acenaphthene	U	1
51-28-5	2,4-dinitrophenol	U	1
100-02-7	4-nitrophenol	U	1
121-14-2	2,4-dinitrotoluene	U	1
84-66-2	diethyl phthalate	U	1
7005-73-3	4-chlorophenyl-phenylether	U	1
86-73-7	fluorene	U	1
534-52-1	2-methyl-4,6-dinitrophenol	U	1
86-30-6	N-nitrosodiphenylamine	U	1
101-55-3	4-bromophenyl-phenylether	U	1
118-74-1	hexachlorobenzene	U	1
319-85-7	beta-BHC	U	5
87-86-5	pentachlorophenol	U	1
85-01-8	phenanthrene	U	1
120-12-7	anthracene	U	1

ANALYTICAL REPORT FOR SAMPLE No. EK 2129

EPA METHOD 8270, 3rd ED.
TARGET ANALYTE RESULTS

Field Sample ID BOO ZJ2 Sponsor WESTINGHOUSE HANFORD CO.

Cas. No.	COMPOUND	RESULTS (ug/g)	DETECTION LIMITS (ug/g)
319-86-8	delta-BHC	U	5
76-44-8	heptachlor	U	5
84-74-2	di-n-butyl phthalate	U	1
309-00-2	aldrin	U	5
1024-57-3	heptachlor epoxide	U	5
206-44-0	fluoranthene	U	1
129-00-0	pyrene	U	1
959-98-8	endosulfan I	U	5
75-55-9	4,4'DDE	U	5
92-87-5	benzidine	U	1
60-57-1	dieldrin	U	5
72-20-8	endrin	U	5
72-54-8	4,4'DDD	U	5
33213-65-9	endosulfan II	U	5
7421-93-4	endrin aldehyde	U	5
85-68-7	benzyl-butylphthalate	U	1
50-29-3	4,4'DDT	U	5
1031-07-8	endosulfan sulfate	U	5
117-81-7	bis(2-ethylhexyl)phthalate	U	1
56-55-3	benzo(a)anthracene	U	1
218-01-9	chrysene	U	1
91-94-1	3,3-dichlorobenzidine	U	1
117-84-0	di-n-octylphthalate	U	1
205-99-2	benzo(b)fluoranthene	U	1
207-08-9	benzo(k)fluoranthene	U	1
50-32-8	benzo(a)pyrene	U	1
193-39-5	indeno(1,2,3-cd)pyrene	U	1
53-70-3	dibenzo(a,h)anthracene	U	1
191-24-2	benzo(ghi)perylene	U	1
57-74-9	chlordane	U	10
8001-35-2	toxaphene	U	10
12674-11-2	PCB-1016	U	10
11104-28-2	PCB-1221	U	10
11141-16-5	PCB-1232	U	10
53469-21-9	PCB-1242	U	10
12672-29-6	PCB-1248	U	10
11097-69-1	PCB-1254	U	10
11096-82-5	PCB-1260	U	10

See footnotes on Page 4.

ANALYTICAL REPORT FOR SAMPLE No. EK 2129

EPA METHOD 8270, 3rd ED.
TARGET ANALYTE RESULTS

Field Sample ID BOO ZJ2 Sponsor WESTINGHOUSE HANFORD CO.

Cas. No.	COMPOUND	RESULTS (ug/g)	DETECTION LIMITS (ug/g)
98-86-2	acetophenone	U	1
62-53-3	aniline	U	1
92-67-1	4-aminobiphenyl	U	1
65-85-0	benzoic acid	U	1
100-51-6	benzyl alcohol	U	1
319-84-6	.alpha.-BHC	U	1
58-89-9	.gamma.-BHC	U	1
106-47-8	4-chloroaniline	U	5
90-13-1	1-chloronaphthalene	U	1
224-42-0	dibenz(a,j)acridine	U	1
132-64-9	dibenzofuran	U	1
87-65-0	2,6-dichlorophenol	U	1
60-11-7	p-dimethylaminoazobenzene	U	1
57-97-6	7,12-dimethbenz(a)anthracene	U	1
122-09-8	a,a-dimethyphenethylamine	U	1
17082-12-1	1,2-diphenylhydrazine	U	1
53494-70-5	endrin ketone	U	1
62-50-0	ethyl methanesulfonate	U	1
72-43-5	methoxychlor	U	1
56-49-5	3-methylcholanthrene	U	1
66-27-3	ethyl methanesulfonate	U	1
91-57-6	2-methylnaphthalene	U	1
95-48-7	2-methylphenol	U	1
106-44-5	4-methylphenol	U	1
134-32-7	1-naphthylamine	U	1
131-07-2	2-naphthylamine	U	1
88-74-4	2-nitroaniline	U	5
99-09-2	3-nitroaniline	U	5
100-10-6	4-nitroaniline	U	5
924-16-3	n-nitroso-di-n-butylamine	U	1
100-75-4	n-nitrosopiperidine	U	1
608-93-5	pentachlorobenzene	U	1
589-82-4	pentachloronitrobenzene	U	1
62-44-2	phenacetin	U	1
109-06-8	2-picoline	U	1
23950-58-5	pronamide	U	1
95-94-3	1,2,4,5-tetrachlorobenzene	U	1
58-90-2	2,3,4,6-tetrachlorophenol	U	1
95-95-4	2,4,5-trichlorophenol	U	1

See footnotes on Page 4.

ANALYTICAL REPORT FOR SAMPLE No. EK 2129

NON-TARGET ANALYTE RESULTS
Additional Semi-Volatiles

Field Sample ID BOO ZJ2

Cas. No	COMPOUND	Scan Number	Results ug/g	Footnotes
	NO UNKNOWNS FOUND			

FOOTNOTES

- B The analyte was found in the method blank. The reported results have been adjusted for the quantity found in the blank.
- E The reported concentration is an estimate only. The response factor was assumed to be 1.000 relative to an internal standard.
- J Indicates an estimated concentration below the Method Detection Limit.
- K The isomer is unknown.
- N Analytical standards were not analyzed for this compound.
- U Not detected.
- W The identification is tentative or closely related to the compound.

SURROGATE PERCENT RECOVERY SUMMARY

DataChem ID S91-0418DD

Sample No.	NB	FBP	TP	PH	FP	TBP
MB	65.	66.	95.	62.	61.	65.
EK2126	89.	84.	104.	83.	78.	79.
EK2127	79.	76.	95.	69.	51.	35.
EK2128	85.	85.	103.	85.	79.	74.
EK2129	79.	84.	101.	87.	82.	90.
EK2130S	68.	71.	90.	72.	66.	77.
EK2131D	67.	71.	88.	67.	62.	81.

Abbreviations

NB	d5-nitrobenzene
FBP	2-fluorobiphenyl
TP	d14-terphenyl
PH	d5-phenol
FP	2-fluorophenol
TBP	2,4,6-tribromophenol

MB is the abbreviation for method blank. If more than one method blank was analyzed they will be designated MB-1, MB-2, etc.

MATRIX SPIKE AND DUPLICATE RECOVERY REPORT

Sponsor WESTINGHOUSE HANFORD CO.

Date of Analysis 06/28/91 Date Received 06/20/91

DataChem ID for Matrix Spike Analysis B00 ZJ2

DataChem SET ID S91-0418DD

COMPOUND	PERCENT RECOVERY MATRIX SPIKE	PERCENT RECOVERY MATRIX SPIKE DUPLICATE
phenol	69.	61.
2-chlorophenol	74.	68.
1,4-dichlorobenzene	75.	73.
n-nitroso-di-n-propylamine	67.	60.
1,2,4-trichlorobenzene	81.	81.
4-chloro-3-methylphenol	76.	71.
acenaphthene	84.	81.
4-nitrophenol	92.	83.
2,4-dinitrotoluene	98.	94.
pentachlorophenol	68.	67.
pyrene	112.	110.

DATA CHEM LABORATORIES

ENVIRONMENTAL SOIL REPORT

Form EPRS-A
Page 1 of 4
Part 1 of 1

1/23/92 JJ

Date COPY ORIGINAL SENT · 10 JULY 1991

Agency Identification Number S91-0418-AD

Account No. 3534C

JAN 1992 RECEIVED OSM DMO

Westinghouse Hanford Company
2355 Stevens Drive
MSIN T6-08
Richland,, WA 99352
Attention: Jeanette Duncan

Telephone (509) 373-3225

Sampling Collection and Shipment

Sampling Site 2101-M Date of Collection June 18, 1991

Date Samples Received at DataChem June 20, 1991

Analytical Results

[illegible]	[illegible]	BOOZ H9 EK 2126	BOOZ J0 EK 2127	BOOZ J1 EK 2128	BOOZ J2 EK 2129	BOOZ J2MS EK 2130	BOOZ J2D EK 2131		[illegible]
Aluminum (Al) 06/27/1991 6010 [1] 3050 [1]	µg/g	7100	7800	8100	8100	8200	7800		[illegible]
Antimony (Sb) 06/27/1991 6010 [1] 3050 [1]	µg/g	~~ND*~~ R	~~ND*~~ R	~~ND*~~ R	~~ND*~~ R	~~ND*~~ R	~~ND*~~ R		[illegible]
Arsenic (As) 06/27/1991 6010 [1] 3050 [1]	µg/g	ND*	ND*	ND*	ND*	90	ND*		[illegible]
Barium (Ba) 06/27/1991 6010 [1] 3050 [1]	µg/g	80.	88.	96.	89.	180	89.		[illegible]
Beryllium (Be) 06/27/1991 6010 [1] 3050 [1]	µg/g	ND*	ND*	ND*	ND*	3.	ND*		[illegible]
Cadmium (Cd) 06/27/1991 6010 [1] 3050 [1]	µg/g	ND*	ND*	ND*	ND*	2.	ND*		[illegible]
Calcium (Ca) 06/27/1991 6010 [1] 3050 [1]	µg/g	3600	3600	4900	5100	4900	4900		[illegible]
Chromium (Cr) 06/27/1991 6010 [1] 3050 [1]	µg/g	8.	9.	9.	8.	17.	8.		[illegible]

JJ 11/21/9.

† See comment on last page.
ND Parameter not detected.
NR Parameter not requested.
* Analyses completed on or before this date.

** Parameter not analyzed (See comment page).
( ) Parameter between LOD and LOQ.
[ ] Method Reference (See comments page.)

Laran Jensen 01/23/92
Analyst: Laran T. Jensen

Brian W. Motes 01/23/92
Reviewer: Brian W. Motes

1/23/92
Laboratory Supervisor: Michael P. Reesley

03-328

960 West LeVoy Drive / Salt Lake City, Utah 84123-2547 / (801) 266-7700
A Sorenson Company

9513319.2116

DATA CHEM LABORATORIES

ENVIRONMENTAL SOIL REPORT

Date _____
Agency Identification Number S91-0418-AD
Account No. 3534C

Analytical Results

[illegible]	[illegible]	BOOZ H9 EK 2126	BOOZ J0 EK 2127	BOOZ J1 EK 2128	BOOZ J2 EK 2129	BOOZ J2MS EK 2130	BOOZ J2D EK 2131		[illegible]
Cobalt (Co) 06/27/1991 6010 [1] 3050 [1]	µg/g	12.	11.	13.	13.	34.	13.		[illegible]
Copper (Cu) 06/27/1991 6010 [1] 3050 [1]	µg/g	9.	11.	14.	13.	24.	13.		[illegible]
Iron (Fe) 06/27/1991 6010 [1] 3050 [1]	µg/g	23000	22000	24000	24000	24000	24000		[illegible]
Lead (Pb) 06/27/1991 6010 [1] 3050 [1]	µg/g	6.	7.	6.	6.	28.	7.		[illegible]
Lithium (Li) 06/27/1991 6010 [1] 3050 [1]	µg/g	ND*	ND*	ND*	ND*	ND*	ND*		[illegible]
Magnesium (Mg) 06/27/1991 6010 [1] 3050 [1]	µg/g	3900	4000	4600	4800	4700	4600		[illegible]
Manganese (Mn) 06/27/1991 6010 [1] 3050 [1]	µg/g	340	360	410	360	390	360		[illegible]
Molybdenum (Mo) 06/27/1991 6010 [1] 3050 [1]	µg/g	ND*	ND*	ND*	ND*	ND*	ND*		[illegible]
Nickel (Ni) 06/27/1991 6010 [1] 3050 [1]	µg/g	8.	9.	11.	10.	31.	9.		[illegible]
Phosphorus (P) 06/27/1991 6010 [1] 3050 [1]	µg/g	890	740	770	770	760	810		[illegible]
Potassium 06/27/1991 6010 [1] 3050 [1]	µg/g	1500	1600	1400	1300	1300	1300		[illegible]
Selenium (Se) 06/27/1991 6010 [1] 3050 [1]	µg/g	ND*	ND*	ND*	ND*	80	ND*		[illegible]
Silver (Ag) 06/27/1991 6010 [1] 3050 [1]	µg/g	ND*	ND*	ND*	ND*	2.	ND*		[illegible]
Sodium (Na) 06/27/1991 6010 [1] 3050 [1]	µg/g	150	160	170	180	180	170		[illegible]
Strontium (Sr) 06/27/1991 6010 [1] 3050 [1]	µg/g	20.	21.	22.	23.	24.	21.		[illegible]

† See comment on last page.
ND Parameter not detected.
NR Parameter not requested.
* Analyses completed on or before this date.
** Parameter not analyzed (See comments page).
( ) Parameter between LOD and LOQ.
[ ] Method Reference (See comments page).

960 West LeVoy Drive / Salt Lake City, Utah 84123-2547 / (801) 266-7700
A Sorenson Company

DATA CHEM LABORATORIES

ENVIRONMENTAL SOIL REPORT

Date _____
Agency Identification Number S91-0418-AD
Account No. 3534C

Analytical Results

[illegible]	[illegible]	BOOZ H9 EK 2126	BOOZ J0 EK 2127	BOOZ J1 EK 2128	BOOZ J2 EK 2129	BOOZ J2MS EK 2130	BOOZ J2D EK 2131		[illegible]
Thallium (Tl) 06/27/1991 6010 [1] 3050 [1]	µg/g	ND*	ND*	20	ND*	ND*	ND*		[illegible]
Vanadium (V) 06/27/1991 6010 [1] 3050 [1]	µg/g	64.	59.	63.	63.	83.	63.		[illegible]
Zinc (Zn) 06/27/1991 6010 [1] 3050 [1]	µg/g	43.	44.	42.	42.	64.	43.		[illegible]

† See comment on last page.
ND Parameter not detected.
NR Parameter not requested.
* Analyses completed on or before this date.

** Parameter not analyzed (See comments page).
( ) Parameter between LOD and LOQ.
[ ] Method Reference (See comments page).

960 West LeVoy Drive / Salt Lake City, Utah 84123-2547 / (801) 266-7700
A Sorenson Company

ATA CHEM LABORATORIES

ENVIRONMENTAL SOIL REPORT

Date _____

Agency Identification Number S91-0418-AD

ıeral Set Comments

mple EK 2131 is a duplicate of sample EK 2129 and sample EK 2130 is a spike of mple EK 2129 and was spiked with the following analytes at the listed levels.

Ag = 2.5 µg/g	Sb = 25 µg/g
Cd = 2.5 µg/g	Co = 25 µg/g
Be = 2.5 µg/g	Mn = 25 µg/g
Fe = 50 µg/g	Ni = 25 µg/g
Al = 100 µg/g	V = 25 µg/g
Ba = 100 µg/g	Zn = 25 µg/g
Cr = 10 µg/g	Pb = 25 µg/g
Cu = 12.5 µg/g	As = 100 µg/g
	Se = 100 µg/g

Method Index -- Method Reference --

[1] SW-846 "Test Methods for Evaluating Solid Waste", 3rd Edition, November 1986.

960 West LeVoy Drive / Salt Lake City, Utah 84123-2547 / (801) 266-7700
A Sorenson Company

DATA CHEM LABORATORIES

ENVIRONMENTAL SOIL REPORT

Form EPRS-A
Page 1 of 2
Part 1 of 1

AUG 1991 RECEIVED DATA RECEIPT

Date 8/8/91
Agency Identification Number S91-0418-BD
Account No. 3534C

Westinghouse Hanford Corporation
P.O. Box 1970
M/S T607
Richland, WA 99352
Attention: Ron Mitchell

Telephone (509) 376-5122

Sampling Collection and Shipment

Sampling Site 2101-M Date of Collection June 18, 1991

Date Samples Received at DataChem June 20, 1991

Analytical Results

Parameter Name / Analysis Date / Method / Prep Method	Field Number / Lab Number	BOOZ H9 EK 2126	BOOZ J0 EK 2127	BOOZ J1 EK 2128	BOOZ J2 EK 2129				Result of Detection
Fluoride (F) 07/09/1991 300.0 [1]	mg/g	ND*	ND*	ND*	ND*				[illegible]
Ammonia (NH_3 - N) 07/03/1991 350.1 [1]	µg/g	3.9 J	2.2 J	1.3 J	ND* UJ				[illegible]
pH 06/21/1991 9045 [2]	pH units	8.1	8.2	8.3	7.2				[illegible]

SDG BOOZH9 Wet Chem 2101-M

BOOZH9, BOOZJ0, BOOZJ1, BOOZJ2

↑ See c... ee comment page).
ND Param... LOQ.
NR Param... ments page.)
* Analys...

Norman K. Christensen
Laboratory Supervisor: Norman K. Christensen

960 West LeVoy Drive / Salt Lake City, Utah 84123-2547 / (801) 266-7700
A Sorenson Company

D3-332

APPENDIX D-4.

PHASE II SAMPLING REPORT FOR 2101-M POND AND RAINWATER RUN-OFF DITCH

This page intentionally left blank.

INTRODUCTION

This document summarizes the methods, materials, procedures, and results of the Phase II soil and sediment sampling conducted at the 2101-M Pond during June 1991 in accordance with the Phase II Sampling Plan (Appendix D-1). These efforts were made to supplement the initial characterization efforts conducted at the site in the Spring of 1988 as delineated in the Site Characterization Plan for the 2101-M Pond (Mitchell 1987).

The purpose of the original sampling was to determine whether the known release of barium to the pond, while conducting laboratory testing procedures in 1982 to 1984, constituted a problem. And additionally, the purpose was to determine if any other chemical constituents were present in the pond soils attributable to past practices at the 2101-M facility. The primary emphasis on characterization at that time was the soil column underlying the pond to a depth of 12 feet.

As anticipated, the initial sampling results indicated that the soils at the pond site demonstrated the proven ability (Routson et al. 1979) of Hanford Site soils to actively sorb metals and radionuclides. The majority of potentially hazardous constituents were contained in the uppermost 2 feet of soil and sediments.

A result that was not anticipated from this characterization effort was the determination that barium was present at levels below or near background and presented no problem relative to being identified as a hazardous waste component. However, values from other laboratory constituents such as zinc, strontium, lead, vanadium, and particularly, copper, were found to be present at levels exceeding background values.

It was, therefore, determined to conduct a second sampling effort (Phase II) at the 2101-M Pond to more thoroughly characterize the shallow pond sediments (0-2 feet) and provide a detailed evaluation of the constituents reported to occur above background threshold values and their spatial distribution within those sediments. The sampling plan for this work is included in Appendix D-1. The implementation of that sampling plan and evaluation of the results are presented in the remainder of this report.

AREA DESCRIPTION

The 2101-M Pond is located in the southwest section of the 200 East Area. Figure 1 indicates the pond's general location in the 200 East Area. The pond is located approximately 250 yards southeast of the 2101-M Building (Figure 2). Figure 3 provides the site-specific Hanford Site map coordinates for the 2101-M Pond location. The site is bordered by a large, open storage area on the east and open lands in the southern, western, and northern boundaries. The 200 East security area is enclosed by an 8-foot, barbwire-topped security fence. Because of the 2101-M Pond's remote location, bordered

Figure 1. Location of the 2101-M Pond in Relation to Other Facilities.

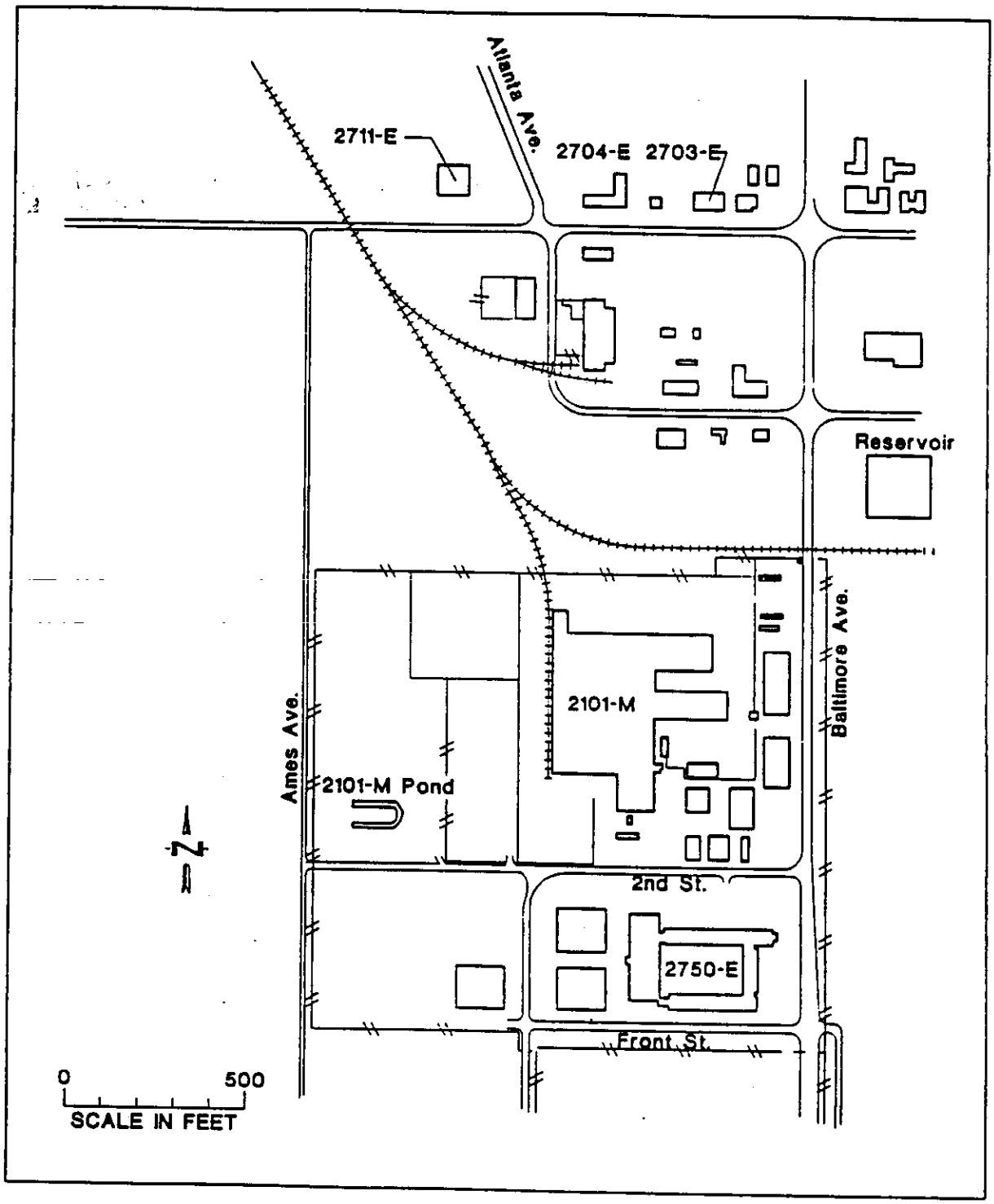

940818.1054

Figure 2. Location of the 2101-M Pond in Relation to Other Facilities.

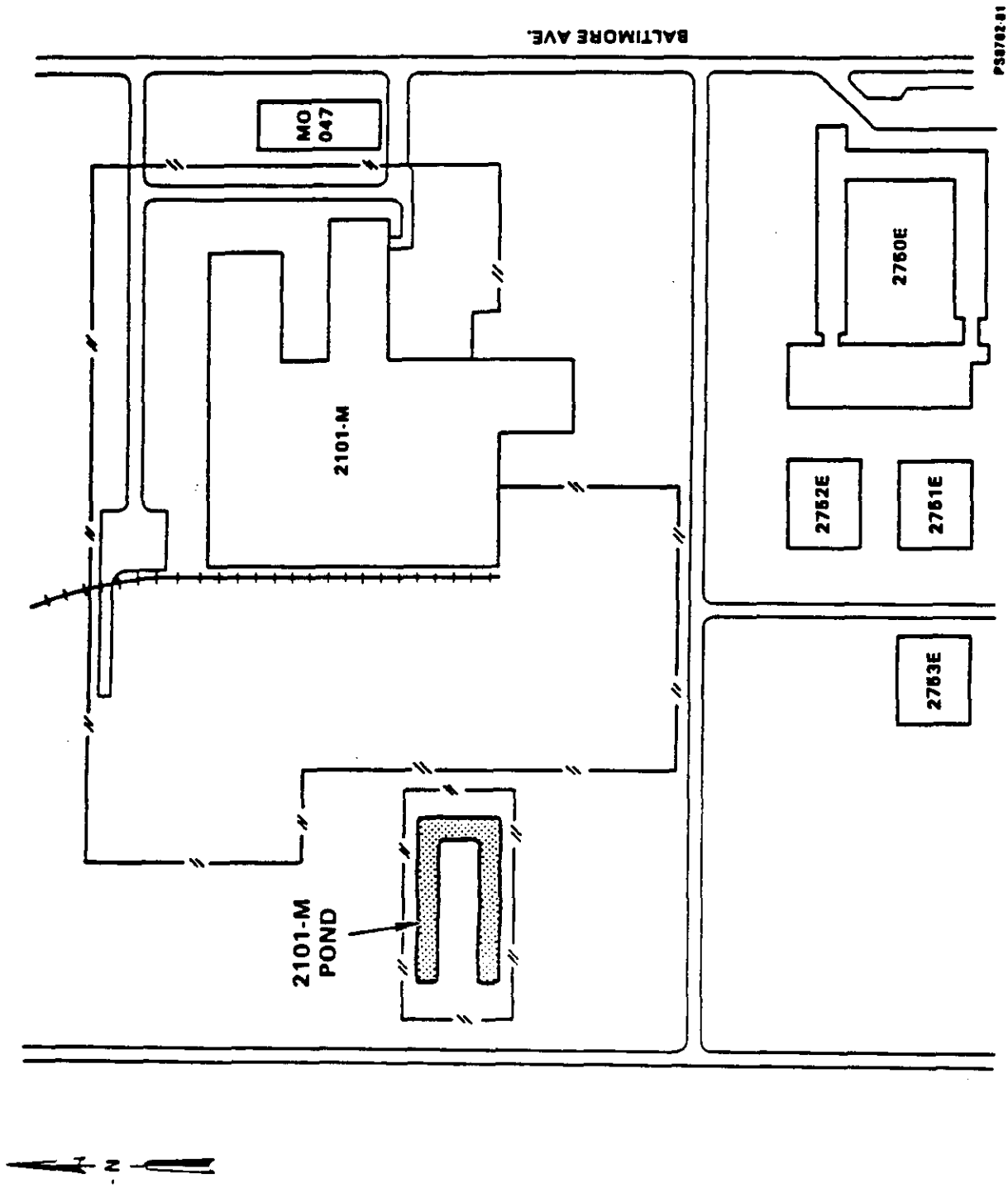

Figure 3. Location of 2101-M Pond Relative to Hanford Map Coordinates.

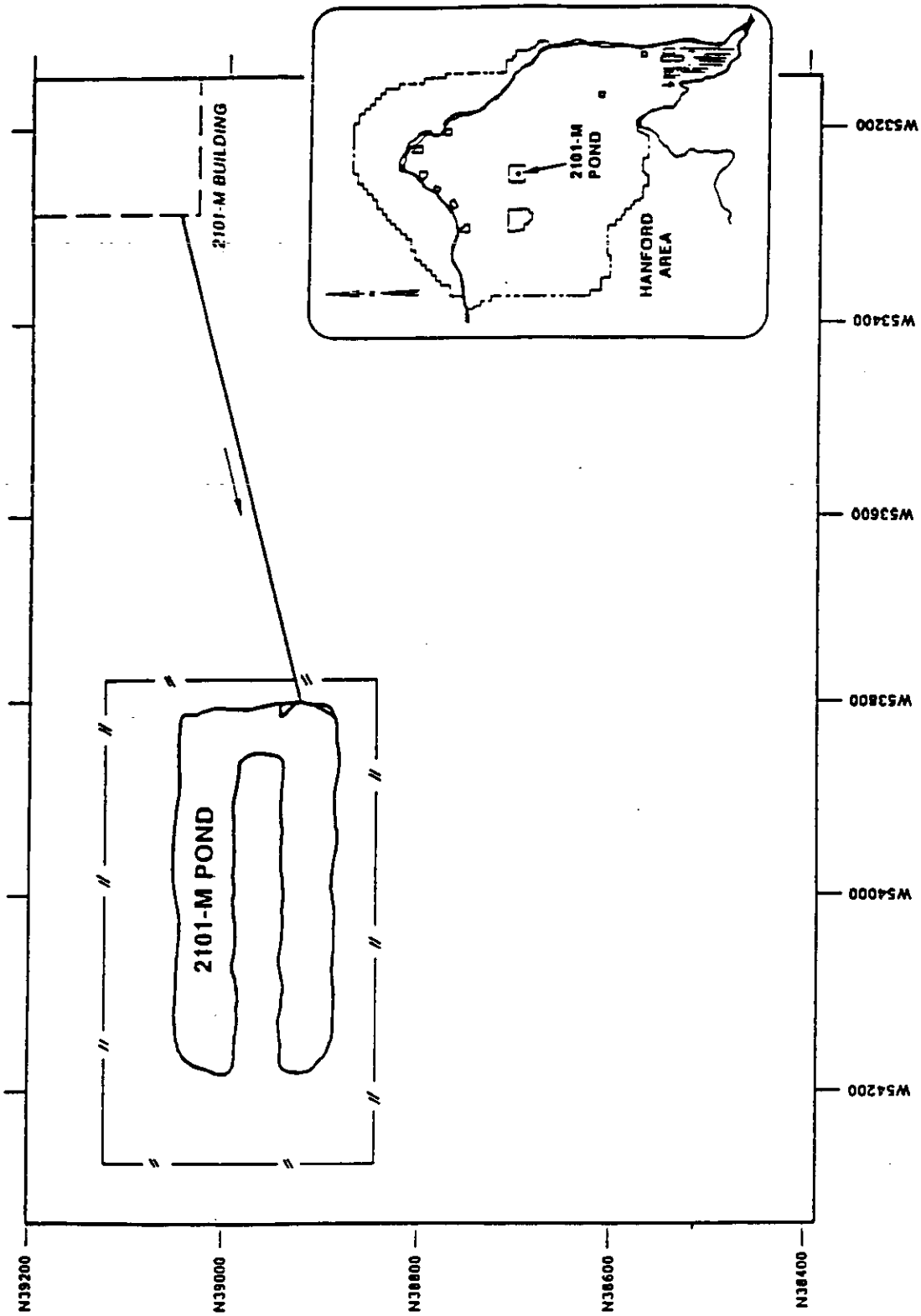

930428.1108

by security fences on three sides and lack of paved through roads, there is very little human activity in the immediate vicinity of the pond.

FACILITY DESCRIPTION

The 2101-M Pond is a man-made, earthen, unlined, and uncovered impoundment. The pond is U-shaped and 80 feet long on the east boundary and 210 feet long on the north and south arms (Figure 4). The total area occupied by the pond is less than 1 acre. The pond bottom varies from 10 feet wide and 5 feet deep in the south arm to 3 feet wide and 9 feet deep in the north arm. The effluent discharge is located on the southeast corner of the pond and consists of a 4-inch, cast-iron, low-pressure drain line from the 2101-M Building. All discharge to the site is nonradioactive and occurs within the 200 East Area. The effluent line carries waste water from a number of swamp coolers, steam traps in the 2101-M Building, and sink drains in what was the Earth Science and Basalt Waste Isolation Project Laboratory, to the pond.

A dry drainage ditch for rainwater runoff from surrounding streets, storage areas, and parking lots, is near, but not connected to, the 2101-M Pond (Figure 4). It is fed by a 24-inch corrugated drain pipe located at the southern boundary and runs along the access road for 205 feet ending at an earthen dam near the 2101-M Pond.

SITE CONDITIONS

Physical

Although designated a pond, the 2101-M facility could more accurately be described as a U-shaped ditch (Figure 2). Water enters at the outfall and slowly migrates to the three arms of the pond. The water tends to accumulate in the south arm first, as it is farther below grade and wider than the east arm. The water in the south arm generally averages only 6-8 inches deep over the entire wetted portion, with the exception of the outfall area. The east arm is narrow and the water in this arm is shallow (generally averaging 1-2 inches deep). The water must rise to a certain level in the south arm and outfall area before it will flow into the east arm and subsequently into the north arm. Seasonal variations influence the amount of water entering the pond, and for part of the year, the north arm is dry. Typically, when the north arm is wetted, water occupies an area approximately 2-3 feet wide and approximately 1-3 inches deep.

Ecological

The riparian habitat surrounding the 2101-M Pond is typical of the wetland communities created by humankind in the arid conditions of the shrub-steppe desert. The area is surrounded by expanses of sagebrush, rabbit-brush, Russian thistle, cheatgrass, and Sandburg's bluegrass. The water in the pond is very shallow, averaging only 2-3 inches over the entire wetted portion

1

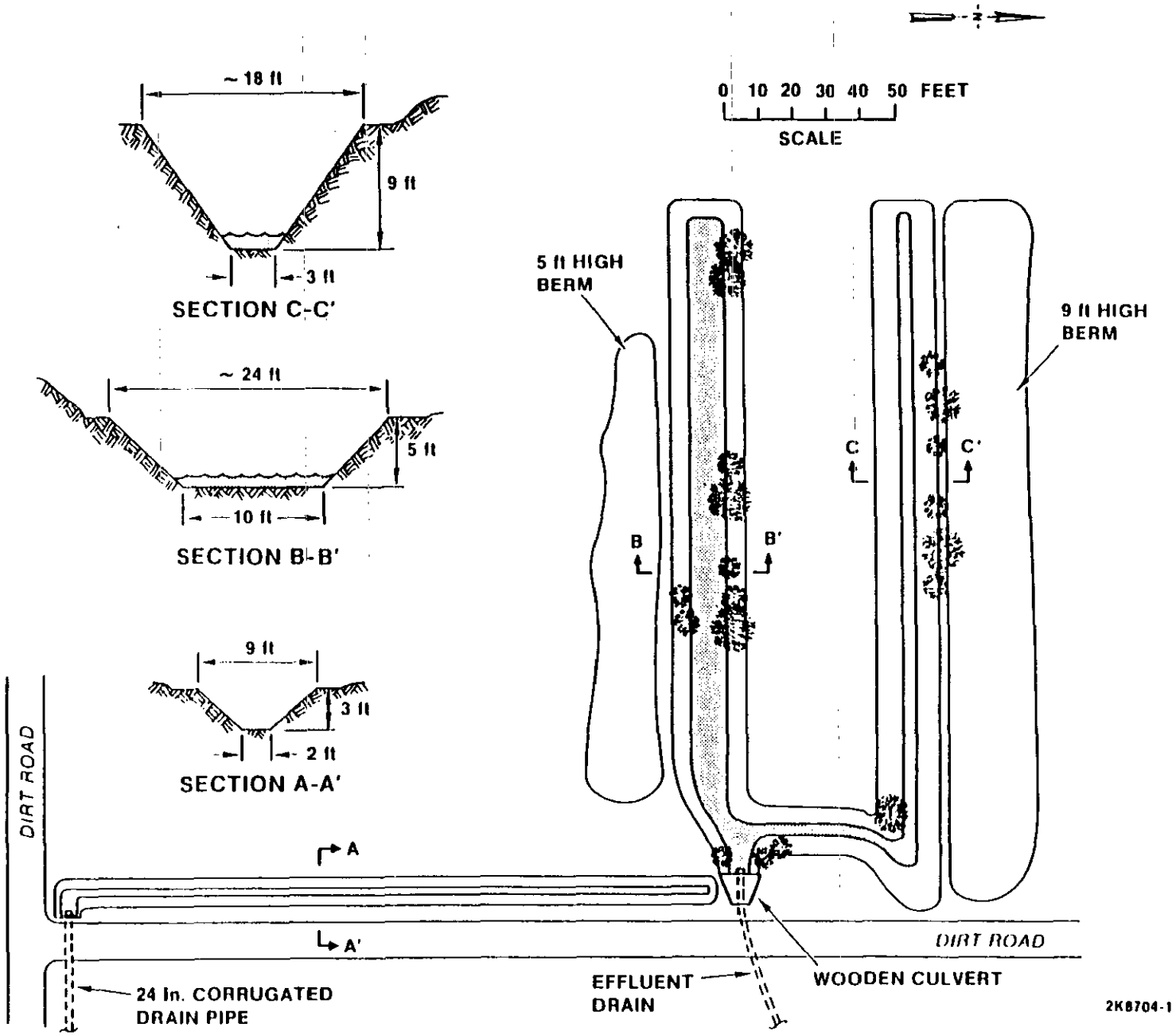

Figure 4. Scale Map of the 2101-M Pond.

and 8 inches at the outfall from the effluent pipe (Figure 4). The areas of open water are extremely limited and comprise less than 10 square feet. The remainder of the wetted portion of the pond is overgrown with horsetail, cattails, and sedges. Small trees (4-12 feet), primarily black cottonwood, peach leaf, and sandbar willow, along with scattered individual Russian olive and rocky mountain juniper dominate the ditch banks.

The vegetation attracts a variety of perching birds such as white-crowned sparrows, dark-eyed juncos, house finches, and various species of warblers, and vireos. Other species observed at the site include swallows, crows, ravens, killdeer, western meadowlarks, brown-headed cowbirds, red-winged blackbirds, and mourning doves. Magpies nest at the site, and raptors such as the American kestrel, Swainson's hawk, and the great horned owl use the site for hunting and roosting. Due to its shallowness and the lack of open water, no wading birds or waterfowl have been observed at the site.

Other animals that are attracted to this aquatic site are deer mice, house mice, cottontail rabbits, and coyotes.

The rainwater runoff ditch pictured in Figure 4 is shown in cross-section A-A'. As indicated, it does not contain any standing water or wetted sediments. The appearance of the ditch bottom at the outfall shows no organic materials, and combined with the conditions of low rainfall and quick percolation into the sandy soil, infiltration of run-off in the ditch never appears to have exceeded the first 50 feet of its length. No aquatic or riparian vegetation grows in this ditch or along its banks. There is no evidence to indicate that effluent has ever filled the entire length of the ditch and subsequently emptied into the 2101-M Pond, or that effluent from the pond has infiltrated into the ditch.

METHODS AND MATERIALS

SAMPLE DESIGN

The sampling design and strategy for this task were based on the characterization data developed during the Phase I sampling efforts. This information led to the development of a complemental sample design that concentrated on the spatial distribution of the potential contaminants at an increased number of sample locations within the top 2 feet of the pond sediments. A combination of authoritative and systematic sampling methods were selected based on technical guidance furnished in Barth and Mason (1984), DeVera et al. (1980), Ford et al. (1989), and Ford and Torina (1985). This approach was based on the data obtained from the Phase I sampling, which indicated that the areas with the highest numbers of exceedances of existing background values in descending order were: the effluent discharge, north arm, east arm, and finally, the south arm. Detailed information for the sample design is provided in Appendix D-1.

SAMPLING LOCATIONS

The authoritative aspect of the sample design was administered by locating three sample points within the effluent outfall area (Figure 5). Sample point G was at the center of the outfall area, while points F and H were located at the outer periphery. Sample points E and I were systematically located at a distance of 10 feet beyond the perimeter points F and H. The remaining sample points A to D and J to L were located at 50-foot intervals from F and H (see Figure 5). Therefore, the areas of the pond with their corresponding sample points can be summarized as:

Location	Sample Point
Effluent Outfall	F G H
North Arm	A B C
East Arm	E D
South Arm	I J K L

The rainwater runoff ditch was resampled to provide verification of sample results for a number of analytes that had exceeded recommended holding times during the initial laboratory analyses. In order to maintain the comparability of these data, the ditch was sampled in the same manner as conducted during Phase I. A subsample was collected from each of the four locations indicated in Figure 5 and then homogenized to provide a representative composite sample for the ditch.

SAMPLE DEPTH

The evaluation of the Phase I analytical data verified the known ability of Hanford Site soils to sorb metals and other associated compounds (Adriano 1986, Routson et al. 1979). Of the 17 sample points demonstrating exceedances above background values for various constituents, 10 of these (58%) occurred in the top 0-2 feet. Therefore, the sampling conducted in Phase II concentrated on this interval with every effort being made to separate the samples into two discrete depths; representative of the top 0-6 inches and a second sample representing a depth of 18-24 inches. The separation of these two sample depths proved to be difficult given the semi-solid nature of sediments and due to shallow water from recent rainfall. However, as indicated by the values reported in the Results Section of the appendix, the field sampling effort proved very successful in demonstrating a reduction in constituent values with depth over the 2-foot interval.

BACKGROUND SAMPLES

Background samples were collected to establish baseline values for concentrations of hazardous waste constituents of concern. The samples were collected from a locale near the 2101-M Pond (Figure 6), but sufficiently distant (approximately 1,000 feet) to be unaffected by past operations.

Figure 5. Map Showing Location of Sample Collection Points.

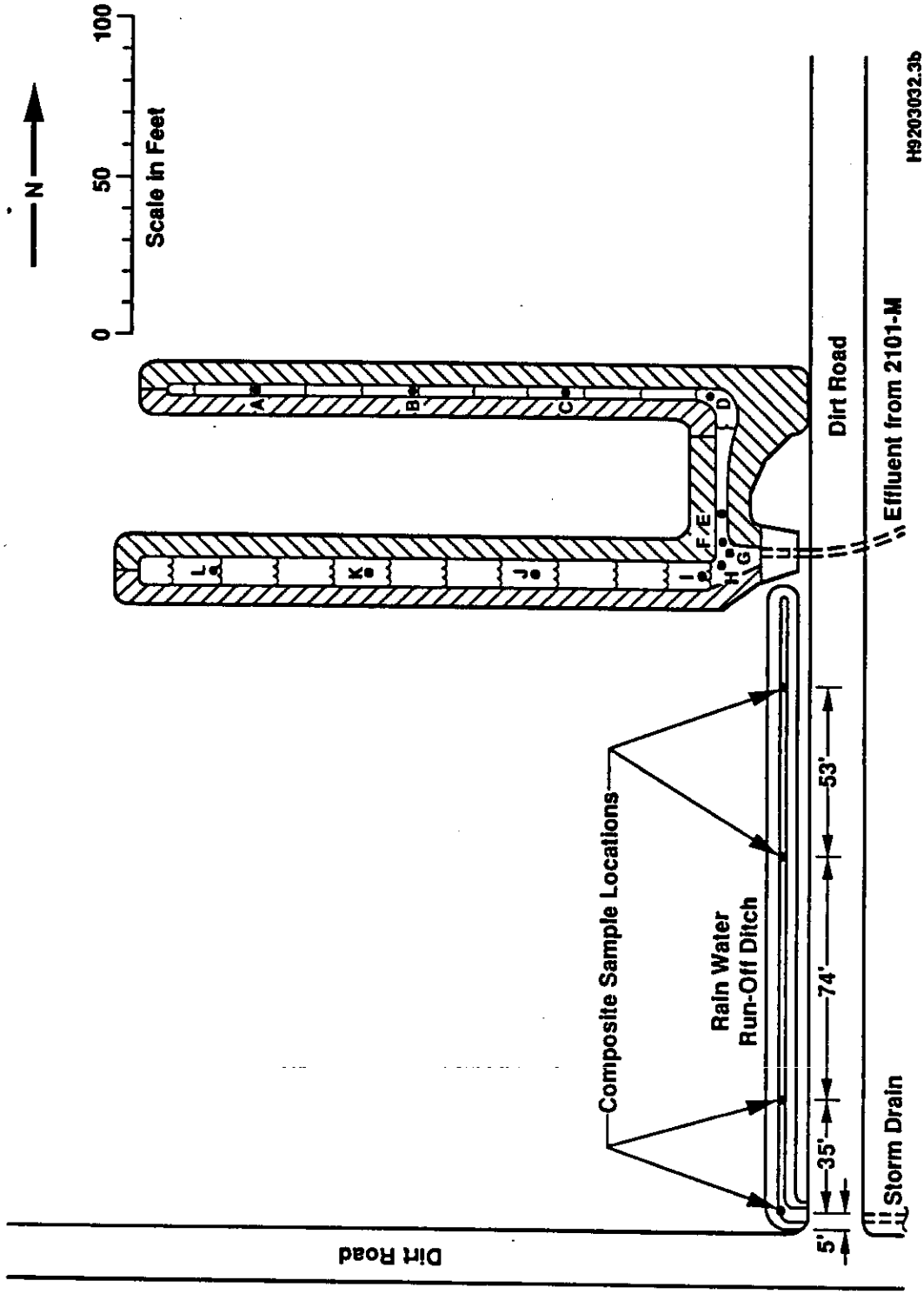

Figure 6. Location of the Background Sample Site.

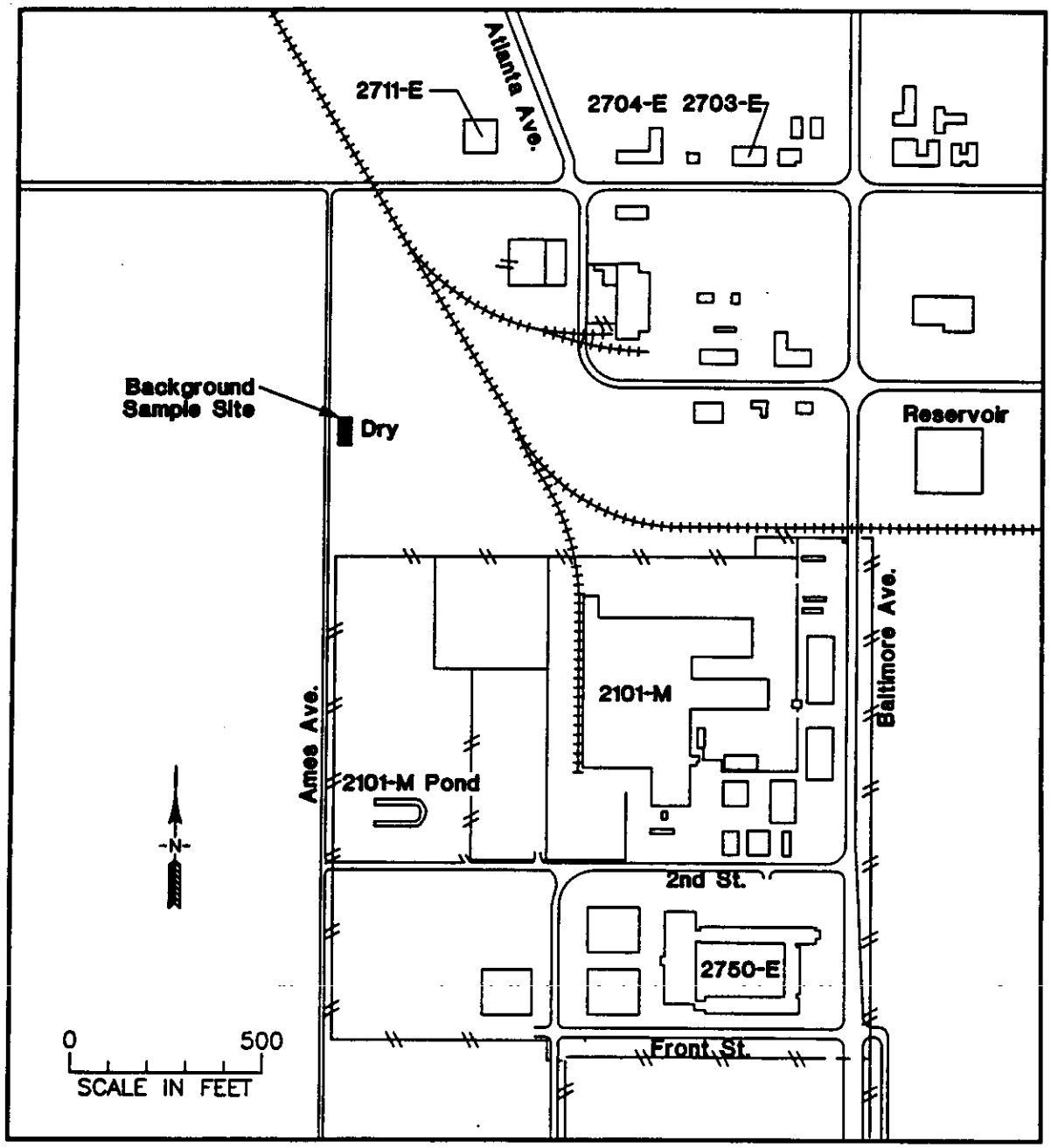

RMM\011993-B

In order to provide further corroboration for the Phase I sampling at the background location, it was determined that the background samples would be collected at the same sample intervals as the Phase II investigation. This work was conducted at the "dry" background site for two different sample points.

ANALYTICAL PARAMETERS

Selection of the analytical parameters to be included in the chemical analysis of Phase II samples were based in large part on an evaluation of the sample results from the Phase I effort. Constituents selected for analysis in Phase II sampling met one or more of the following criteria:

- Constituent was known to have been discharged to the pond
- Constituent was determined to have exceeded the threshold value for background samples from Phase I data
- Metals included due to their preferential sorbing characteristics.

In addition, selected samples from 2101-M Pond soils were tested for constituents listed in Appendix IX of 40 CFR 264. The purpose was to provide corroboration for data from the Phase I sampling effort. Table 1 provides a summary of the analytes, holding times, and sample volumes for the Phase II work.

SAMPLE COLLECTION

The Phase II sampling effort was conducted from June 7 to 18, 1991, and the samples were collected in accordance with ASTM Method 1452-80, Standard Practice for Soil Investigations and Sampling by Auger Borings (ASTM 1990). At each sample point, a stainless steel auger barrel measuring approximately 12 inches long and with a 3-inch outside diameter, and equipped with extension handles, was used to collect the upper level (0-6 inch) sample. The top-most portion of this sample was always collected first to a depth of at least 6 inches. Occasionally, due to sample compression, water or vegetation in the sample, etc., additional samples from the auger had to be used to provide the amounts of material required to fill the sample bottles. This potential problem had been identified prior to initiation of work and use of additional sample volume pre-approved by the site regulator. Following the removal of the upper foot for sampling, a second auger was used to collect the next interval of material. The bottom-most portion of this sample was always collected first to represent the 18-24-inch depth, with additional material included when necessary to completely fill the sample bottles. For the reasons stated, and to maintain consistency, references to sample intervals will be 0-1 and 1-2 feet.

Table 1. List of Analytes for 2101-M Pond Soils.

Analysis	Method	Holding times	Container/volume
VOA	8240	14 days	aG 2 x 60 ml
Semi-VOA	8270	7 days[1]	aG 250 ml
Metals (ICP, AA, w/Hg)	6010/7000 series	6 months	G 250 ml
Sulfide	9030	7 days[1]	aG 250 ml
Fluoride	EPA 300.0	N/A for soils	
Ammonia	350.3	28 days	
Cyanide	9010	14 days	
pH	9045	ASAP upon lab arrival	
Phosphorous	8140	7 days[1]	
Herbicides	8150	7 days[1]	
Pesticides/PCBs	8080	7 days[1]	

[1]7 days until extraction, 40 days after extraction.

The augers and all equipment used in the sample collection process had been previously cleaned in accordance with EII 5.5, Laboratory Decontamination of RCRA/CERCLA Sampling Equipment (WHC 1988).

The 60-milliliter bottles were filled first to minimize the loss of potential volatile organic constituents in the pond soils. All sample bottles had been previously cleaned to EPA specifications and quality control requirements. The sample bottles were then labeled, sealed with security tape, individually packaged, and immediately placed on ice (cooled to 4 °C.) The appropriate chain-of-custody and analysis request forms were filled out and accompanied the shipment of the samples.

At sample points A through F (Figure 5) the sample was collected as previously described. However, at sites G through L, water from recent rainfall events overlayed the sediments to be sampled. At these sites, a 4-inch stainless steel pipe cut in 3-foot lengths and cleaned to EII 5.5 standards was used to aid in preventing the free-standing liquid from cross-contaminating the upper and lower samples. The pipe was driven into the sediments to a depth of 2 feet and the auger introduced into the center of the pipe for soil collection. This method proved successful in keeping the two samples discrete by preventing unimpeded water flow into the sample excavation.

Additionally, at sample point K, the actual sample site had to be moved 10 feet west of the proposed position in order to prevent sampling of backfill material used to create a drilling pad for Phase I sampling. Also, sample point L was moved 8 feet to the west to avoid interference with a dead tree and matted vegetation, which prevented collection of a representative sample.

Collection of the background samples for sites #1 and #2 was conducted in an identical manner as the dry sections of the pond. Field quality assurance/quality control was conducted as outlined in the sampling plan. An equipment blank was collected along with a "split" sample sent to an alternative laboratory to serve as a inter-laboratory check, and a duplicate sample from the same sample point sent to the primary laboratory to serve as a check on internal laboratory quality.

RESULTS

The map in Figure 7 shows the location of each of the sampling locations correlated with the sample identification numbers and a graphic representation of the corresponding depth for each sample. A total of 26 samples were collected from the 2101-M Pond site; 2 of which were quality assurance samples (B00GQ2 and B00GQ5). Four additional samples were collected at the background site (Figure 6) and their identification numbers and associated depths are provided in Figure 7. A composite sample was also collected from the rainwater runoff ditch (B00GQ6) as shown in Figure 7.

Table 2 provides a summary of sample values for all the analytes requested for soils collected from the 2101-M Pond and includes the range of values (maximum/minimum), as well as a calculated average for all sample values reported by the primary laboratory.

Table 3 provides a summary of the reported values for the samples collected from the background site and includes the range for each analyte and a calculated average.

The values reported for the rainwater runoff ditch (B00GQ6) and the interlaboratory "split" sample (B00GQ5) are provided in Table 4. These values are reported separately because the ditch has not been associated with effluents from the pond and, therefore, represents a separate sampling entity. The values reported for the ditch are comparable to those reported during the preliminary reconnaissance sampling noted in the closure plan and none of the analytes were noted to exceed levels of concern.

The "split" sample was the only sample not analyzed by the primary contract laboratory. The information presented for the "split" values in Table 4 is used for assessing quality assurance/quality control (QA/QC) parameters. A detailed review of the QA/QC data and validation results is provided in Appendix D-3.

Figure 7. Map Showing Locations, Identifications Numbers, and Corresponding Depths.

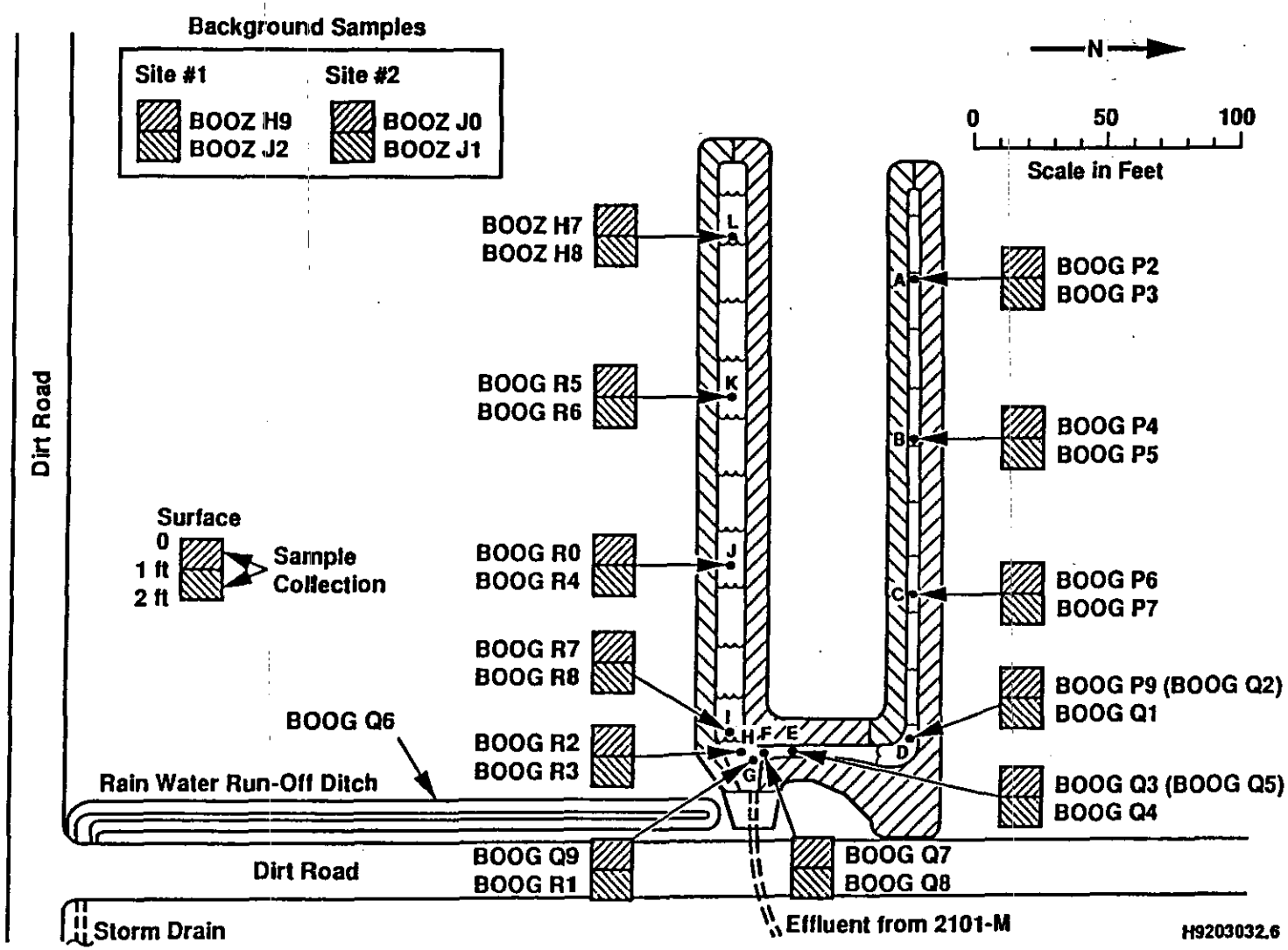

Table 2. Summary of 2101-M Pond Sampling Values. (sheet 1 of 4)

Analyte	Sample Identification Numbers													
	B00GP2	B00GP3	B00GP4	B00GP5	B00GP6	B00GP7	B00GP9	B00GQ1	B00GQ2	B00GQ3	B00GQ4	B00GQ7	B00GQ8	B00GQ9
Aluminum	8700.0	7600.0	8400.0	6700.0	8600.0	6100.0	8400.0	5600.0	8600.0	7000.0	8600.0	9100.0	7700.0	12000.0
Antimony	ND	ND	ND	ND	ND	ND	ND	ND	ND	ND	ND	ND	ND	ND
Arsenic	ND	ND	ND	ND	ND	ND	NR	NR	NR	NR	NR	NR	NR	4.0
Barium	60.0	70.0	60.0	100.0	50.0	80.0	52.0	82.0	47.0	54.0	110.0	81.0	88.0	110.0
Beryllium	ND	ND	ND	ND	ND	ND	0.5	0.5	0.5	0.5	0.5	0.5	0.5	0.6
Cadmium	ND	ND	ND	ND	ND	ND	0.5	0.7	0.5	0.7	ND	1.6	0.7	2.7
Calcium	3100.0	3200.0	3400.0	3400.0	3100.0	3400.0	3300.0	4300.0	3000.0	3800.0	3800.0	3900.0	4100.0	3500.0
Chromium	12.0	11.0	13.0	11.0	11.0	8.0	9.8	5.0	11.0	8.2	8.8	16.0	9.9	17.0
Cobalt	8.0	8.0	9.0	13.0	10.0	11.0	10.0	14.0	9.0	12.0	14.0	9.0	9.0	10.0
Copper	800.0	21.0	1100.0	68.0	1700.0	49.0	1900.0	54.0	1600.0	600.0	18.0	1800.0	570.0	2500.0
Iron	19000.0	17000.0	19000.0	23000.0	22000.0	22000.0	23000.0	26000.0	21000.0	29000.0	27000.0	20000.0	19000.0	27000.0
Lead	10.0	4.0	8.0	4.0	13.0	4.0	NR	NR	NR	NR	NR	NR	NR	160.0
Lithium	ND	ND	ND	ND	ND	ND	ND	ND	ND	ND	ND	ND	ND	ND
Magnesium	3900.0	3800.0	3500.0	3600.0	4200.0	3200.0	4100.0	4000.0	4300.0	3600.0	4600.0	4000.0	3800.0	5000.0
Manganese	160.0	600.0	180.0	510.0	230.0	280.0	200.0	380.0	170.0	200.0	470.0	170.0	170.0	200.0
Molybdenum	ND	ND	ND	ND	ND	ND	ND	ND	ND	ND	ND	ND	ND	ND
Nickel	12.0	9.0	12.0	10.0	13.0	8.0	11.0	7.0	13.0	9.0	12.0	15.0	10.0	17.0
Phosphorus	700.0	400.0	700.0	700.0	800.0	700.0	830.0	940.0	740.0	970.0	770.0	670.0	640.0	700.0
Potassium	1400.0	1200.0	1400.0	800.0	1300.0	700.0	1200.0	700.0	1200.0	700.0	1000.0	1300.0	1100.0	1500.0
Selenium	ND	ND	ND	ND	ND	ND	NR	NR	NR	NR	NR	NR	NR	ND
Silver	ND	ND	2.0	ND	ND	ND	5.1	0.7	6.3	5.3	ND	32.0	9.1	31.0
Sodium	250.0	150.0	270.0	230.0	230.0	230.0	ND	400.0	ND	ND	ND	ND	ND	ND
Strontium	21.0	26.0	21.0	16.0	18.0	19.0	17.0	14.0	16.0	16.0	18.0	20.0	18.0	22.0

All values are in ppm with the exception of pH.
ND = Not detected.
NR = Not requested.

Table 2. Summary of 2101-M Pond Sampling Values. (sheet 2 of 4)

Analyte	Sample Identification Numbers													
	B00GP2	B00GP3	B00GP4	B00GP5	B00GP6	B00GP7	B00GP9	B00GQ1	B00GQ2	B00GQ3	B00GQ4	B00GQ7	B00GQ8	B00GQ9
Thallium	50.0	ND	ND	ND	ND	ND	NR	NR	NR	NR	NR	NR	NR	ND
Vanadium	43.0	37.0	48.0	62.0	49.0	60.0	53.0	74.0	51.0	74.0	67.0	42.0	43.0	42.0
Zinc	140.0	45.0	200.0	63.0	230.0	99.0	260.0	170.0	300.0	260.0	120.0	360.0	160.0	340.0
Mercury	0.1	ND	0.1	ND	0.1	ND	NR	NR	NR	NR	NR	NR	NR	0.9
Cyanide	ND	ND	ND	ND	ND	ND	NR	NR	NR	NR	NR	NR	NR	ND
Flouride	ND	ND	ND	ND	ND	ND	ND	ND	ND	ND	ND	0.0	ND	ND
Ammonia	1.7	0.9	2.3	1.3	3.2	0.7	4.5	1.1	2.6	2.4	1.1	18.0	9.1	18.0
pH	6.8	6.9	6.6	7.1	7.6	7.4	8.0	8.1	7.8	7.3	6.8	6.9	7.7	6.9

All values are in ppm with the exception of pH.
ND = Not detected.
NR = Not requested.

Table 2. Summary of 2101-M Pond Sampling Values. (sheet 3 of 4)

Analyte	Sample Identification Numbers													
	B00GR1	B00GR2	B00GR3	B00GR0	B00GR4	B00GR5	B00GR6	B00GR7	B00GR8	B00ZH7	B00ZH8	MIN	MAX	AVG
Aluminum	9100.0	5200.0	6200.0	6800.0	5500.0	5700.0	6400.0	6500.0	6200.0	5000.0	5700.0	5000.0	12000.0	6512.2
Antimony	ND	ND	ND	ND	ND	ND	ND	ND	ND	ND	ND	0.0	0.0	0.0
Arsenic	3.0	NR	NR	NR	NR	NR	NR	NR	NR	NR	NR	0.0	4.0	0.4
Barium	130.0	41.0	92.0	61.0	53.0	81.0	83.0	93.0	72.0	40.0	42.0	40.0	130.0	68.3
Beryllium	0.5	0.3	0.5	0.4	ND	0.4	0.5	0.4	0.4	ND	ND	0.0	0.6	0.3
Cadmium	0.5	0.8	ND	0.3	ND	ND	ND	ND	ND	ND	ND	0.0	2.7	0.5
Calcium	3800.0	1900.0	4700.0	2700.0	2300.0	3600.0	4200.0	3200.0	2600.0	2200.0	2400.0	1900.0	4700.0	3000.8
Chromium	11.0	9.8	7.0	8.7	6.9	6.0	7.3	7.2	7.1	33.0	11.0	5.0	33.0	11.9
Cobalt	11.0	4.0	11.0	8.0	7.0	11.0	12.0	15.0	9.0	5.0	6.0	4.0	15.0	9.3
Copper	460.0	1000.0	120.0	200.0	94.0	37.0	28.0	67.0	51.0	290.0	300.0	18.0	2500.0	559.1
Iron	22000.0	9800.0	21000.0	15000.0	14000.0	23000.0	24000.0	21000.0	16000.0	10000.0	12000.0	9800.0	29000.0	18241.5
Lead	30.0	NR	NR	NR	NR	NR	NR	NR	NR	NR	NR	0.0	160.0	15.7
Lithium	ND	ND	ND	ND	ND	ND	ND	ND	ND	ND	ND	0.0	0.0	0.0
Magnesium	4300.0	2000.0	3600.0	3300.0	2900.0	3400.0	3900.0	3400.0	3100.0	2200.0	2600.0	2000.0	5000.0	3229.1
Manganese	200.0	72.0	220.0	110.0	110.0	400.0	360.0	430.0	340.0	79.0	92.0	72.0	600.0	250.3
Molybdenum	ND	ND	ND	ND	ND	ND	ND	ND	ND	ND	ND	0.0	0.0	0.0
Nickel	11.0	8.0	7.0	9.0	6.0	8.0	8.0	8.0	7.0	5.0	8.0	5.0	17.0	8.7
Phosphorus	600.0	370.0	680.0	500.0	430.0	750.0	770.0	580.0	410.0	420.0	450.0	370.0	970.0	585.2
Potassium	1200.0	800.0	900.0	1100.0	800.0	800.0	900.0	800.0	800.0	800.0	900.0	700.0	1500.0	872.0
Selenium	ND	NR	NR	NR	NR	NR	NR	NR	NR	NR	NR	0.0	0.0	0.0
Silver	5.0	8.5	ND	ND	ND	ND	ND	ND	ND	ND	ND	0.0	32.0	5.7
Sodium	ND	ND	ND	ND	ND	ND	ND	ND	ND	ND	ND	0.0	400.0	41.4
Strontium	19.0	12.0	16.0	15.0	12.0	15.0	18.0	15.0	14.0	13.0	14.0	12.0	26.0	14.9

All values are in ppm with the exception of pH.
ND = Not detected.
NR = Not requested.

Table 2. Summary of 2101-M Pond Sampling Values. (sheet 4 of 4)

Analyte	Sample Identification Numbers													
	B00GR1	B00GR2	B00GR3	B00GR0	B00GR4	B00GR5	B00GR6	B00GR7	B00GR8	B00ZH7	B00ZH8	MIN	MAX	AVG
Thallium	ND	NR	NR	NR	NR	NR	NR	NR	NR	NR	NR	0.0	50.0	2.5
Vanadium	48.0	21.0	56.0	38.0	36.0	64.0	68.0	51.0	40.0	34.0	31.0	21.0	74.0	45.7
Zinc	110.0	240.0	54.0	83.0	52.0	46.0	47.0	48.0	38.0	52.0	73.0	38.0	360.0	129.9
Mercury	0.2	NR	NR	NR	NR	NR	NR	NR	NR	NR	NR	0.0	0.9	0.1
Cyanide	ND	NR	NR	NR	NR	NR	NR	NR	NR	NR	NR	0.0	0.0	0.0
Flouride	ND	ND	ND	0.0	ND	0.0	ND	ND	ND	ND	ND	0.0	0.0	0.0
Ammonia	14.0	6.6	7.2	7.3	4.2	1.7	1.3	2.7	2.4	26.0	NR	0.0	26.0	7.1
pH	6.9	6.7	6.9	7.1	7.0	6.8	6.8	6.6	7.1	6.8	6.9	6.6	8.1	6.4

All values are in ppm with the exception of pH.
ND = Not detected.
NR = Not requested.

1 Table 3. Summary of Background Sampling Values.

Analyte	Sample Identification Numbers						
	B00ZH9	B00ZJ0	B00ZJ1	B00ZJ2	MIN	MAX	AVG
Aluminum	7100.0	7800.0	8100.0	8100.0	7100.0	8100.0	7775.0
Antimony	ND	ND	ND	ND	0.0	0.0	0.0
Arsenic	ND	ND	ND	ND	0.0	0.0	0.0
Barium	80.0	88.0	96.0	89.0	80.0	96.0	88.3
Beryllium	ND	ND	ND	ND	0.0	0.0	0.0
Cadmium	ND	ND	ND	ND	0.0	0.0	0.0
Calcium	3600.0	3600.0	4900.0	5100.0	3600.0	5100.0	4300.0
Chromium	8.0	9.0	9.0	8.0	8.0	9.0	8.5
Cobalt	12.0	11.0	13.0	13.0	0.0	13.0	9.3
Copper	9.0	11.0	14.0	13.0	9.0	14.0	11.8
Iron	23000.0	22000.0	24000.0	24000.0	22000.0	24000.0	23250.0
Lead	6.0	7.0	6.0	6.0	6.0	7.0	6.3
Lithium	ND	ND	ND	ND	0.0	0.0	0.0
Magnesium	3900.0	4000.0	4600.0	4800.0	3900.0	4800.0	4325.0
Manganese	340.0	360.0	410.0	360.0	340.0	410.0	367.5
Molybdenum	ND	ND	ND	ND	0.0	0.0	0.0
Nickel	8.0	9.0	11.0	10.0	8.0	11.0	9.5
Phosphorus	890.0	740.0	770.0	770.0	740.0	890.0	792.5
Potassium	1500.0	1600.0	1400.0	1300.0	1300.0	1600.0	1450.0
Selenium	ND	ND	ND	ND	0.0	0.0	0.0
Silver	ND	ND	ND	ND	0.0	0.0	0.0
Sodium	150.0	160.0	170.0	180.0	150.0	180.0	165.0
Strontium	20.0	21.0	22.0	23.0	20.0	23.0	21.5
Thallium	ND	ND	ND	ND	0.0	0.0	0.0
Vanadium	64.0	59.0	63.0	63.0	59.0	64.0	62.3
Zinc	43.0	44.0	42.0	42.0	42.0	44.0	42.8
Mercury	NR	NR	NR	NR	0.0	0.0	0.0
Cyanide	NR	NR	NR	NR	0.0	0.0	0.0
Flouride	ND	ND	ND	ND	0.0	0.0	0.0
Ammonia	3.9	2.2	1.3	ND	0.0	3.9	1.9
pH	8.1	8.2	8.3	7.2	7.2	8.3	8.0

1

Table 4. Rainwater Runoff Ditch and "Split" Sample Values.

Analyte	Sample Identification Numbers	
	B00GQ6	B00GQ5
Aluminum	8300.0	7700.0
Antimony	ND	6.0
Arsenic	NR	2.5
Barium	80.0	59.1
Beryllium	0.4	1.5
Cadmium	ND	1.1
Calcium	3800.0	4650.0
Chromium	9.9	9.3
Cobalt	11.0	13.1
Copper	12.0	1110.0
Iron	21000.0	35600.0
Lead	NR	11.3
Lithium	ND	NR
Magnesium	4400.0	3590.0
Manganese	350.0	241.0
Molybdenum	ND	NR
Nickel	11.0	11.1
Phosphorus	690.0	NR
Potassium	1500.0	770.0
Selenium	NR	0.4
Silver	ND	3.5
Sodium	400.0	221.0
Strontium	21.0	NR
Thallium	NR	0.3
Vanadium	53.0	96.4
Zinc	67.0	341.0
Mercury	NR	0.1
Cyanide	NR	NR
Flouride	ND	3.5
Ammonia	3.0	<56
pH	8.5	7.2

Table 5 contains a summary of ranges and averages of the 2101-M Pond samples compared to the values reported for the same analytes for the background samples.

Additionally, although ammonium analysis was requested in the sampling plan, the values received from the laboratory were for ammonia. These two compounds can be expected to be found at elevated levels in natural systems as break-down products from organic matter, so their presence in 2101-M Pond soils is not a matter of concern. Because ammonia and ammonium values are not directly comparable, the sample results will not be reviewed herein.

DISCUSSION

The information presented here is an evaluation of the results of the Phase II sampling and, where applicable, a comparison of that data with the Phase I sample results. The primary emphasis will be directed towards those metals and their associated levels that exceeded threshold values determined from background sample results. However, a brief review of other constituents is also included.

ORGANIC CONSTITUENTS

The values reported for the organic analyses including, volatile organic analysis (VOA) and extractable organics analyses (semi-VOA, pesticides, PCBs) reflected the Phase I results, in that almost all values reported were below detection limits. For VOAs, the constituents acetone and toluene were reported as laboratory contaminants in the validation process. For semi-VOAs, the compounds benzo(a)anthracene, benzo(a)pyrene, bis-(2-ethylhexyl)phthalate, chrysene, fluorathene, indeno(1,2,3-cd)pyrene, pyrene, and butanoic acid were occasionally reported at low levels and are known constituents of breakdown products in organic systems, especially in the humic conditions that exist in 2101-M Pond (Dragen 1988). With regard to pesticides, 4,4' DDE and 2,4,5 TP were reported at one site (C) at levels of 0.7 and 3.0 parts per billion, respectively. PCBs were also re-evaluated and at two sample sites (C, G) Arochlor 1254 was detected at .08 and 1.1 parts per million, respectively, in the top foot of sediment. Section B-5g of Revision 2 of the closure plan provides a detailed discussion of the organic constituent detected.

As reported in the Phase I evaluation, the paucity of organic constituents that have been detected in the 2101-M Pond soils at the levels reported cannot be considered of imminent concern for surrounding ecosystems or pose a threat to human health and safety.

INORGANIC CONSTITUENTS

The determination of which constituents will be examined here was made by reviewing the laboratory data and determining all those components that exceeded the maximum threshold values reported for the 2101-M background

28

Table 5. Summary Sampling Comparison.

Analyte	Pond Samples			Background Samples		
	MIN	MAX	AVG	MIN	MAX	AVG
Aluminum	5000.0	12000.0	6512.2	7100.0	8100.0	7775.0
Antimony	0.0	0.0	0.0	0.0	0.0	0.0
Arsenic	0.0	4.0	0.4	0.0	0.0	0.0
Barium	40.0	130.0	68.3	80.0	96.0	88.3
Beryllium	0.0	0.6	0.3	0.0	0.0	0.0
Cadmium	0.0	2.7	0.5	0.0	0.0	0.0
Calcium	1900.0	4700.0	3000.8	3600.0	5100.0	4300.0
Chromium	5.0	33.0	11.9	8.0	9.0	8.5
Cobalt	4.0	15.0	9.3	0.0	13.0	9.3
Copper	18.0	2500.0	559.1	9.0	14.0	11.8
Iron	9800.0	29000.0	18241.5	22000.0	24000.0	23250.0
Lead	0.0	160.0	15.7	6.0	7.0	6.3
Lithium	0.0	0.0	0.0	0.0	0.0	0.0
Magnesium	2000.0	5000.0	3229.1	3900.0	4800.0	4325.0
Manganese	72.0	600.0	250.3	340.0	410.0	367.5
Molybdenum	0.0	0.0	0.0	0.0	0.0	0.0
Nickel	5.0	17.0	8.7	8.0	11.0	9.5
Phosphorus	370.0	970.0	585.2	740.0	890.0	792.5
Potassium	700.0	1500.0	872.0	1300.0	1600.0	1450.0
Selenium	0.0	0.0	0.0	0.0	0.0	0.0
Silver	0.0	32.0	5.7	0.0	0.0	0.0
Sodium	0.0	400.0	41.4	150.0	180.0	165.0
Strontium	12.0	26.0	14.9	20.0	23.0	21.5
Thallium	0.0	50.0	2.5	0.0	0.0	0.0
Vanadium	21.0	74.0	45.7	59.0	64.0	62.3
Zinc	38.0	360.0	129.9	42.0	44.0	42.8
Mercury	0.0	0.9	0.1	0.0	0.0	0.0
Cyanide	0.0	0.0	0.0	0.0	0.0	0.0
Flouride	0.0	0.0	0.0	0.0	0.0	0.0
Ammonia	0.0	26.0	7.1	0.0	3.9	1.9
pH	6.6	8.1	6.4	7.2	8.3	8.0

sample values collected as a part of the Phase I effort and/or the Hanford Site-wide background study as reported to date (DOE-RL 1992). Table 6 provides a listing of those analytes that exceeded the reported threshold in Phase I or Phase II of sampling. For each analyte, the calculated threshold value is provided for the reported studies. To provide perspective on these levels, concentrations reported from other locations worldwide are also listed. With the exception of silver, the Hanford Site background values are considerably lower than for other reported sites.

Table 7 lists all the inorganic analytes for which exceedances of the maximum threshold levels have been reported. The number of exceedances for each phase of sampling is also provided. As would be expected, the exceedences reported for each phase reflect the change in emphasis from sampling at a depth of 12 feet to a 2-foot depth only. The exceedances reported for barium, strontium, vanadium, and fluoride in the Phase I sampling were not found during the Phase II effort. The number of exceedances reported for copper, lead, and zinc all increased from Phase I to Phase II. And finally, although no exceedances were reported for chromium and silver in Phase I, elevated levels were reported in the Phase II analyses.

As indicated previously, the increase in the number of exceedances in Phase II for copper, zinc, and silver is primarily attributable to the strong sorbing qualities of metals in Hanford Site soils and the increase in the number of samples collected at the 0-2-foot level from 4 samples in Phase I to 25 samples in Phase II.

Table 8 provides a summary of exceedances by location for the pond. The sample points in each location are identified on page APP D4-8. The data are also somewhat skewed because each location is represented by a different number of sample points. However, the differences can generally be considered minimal. The effluent discharge had the most exceedances (17), followed by the east arm (12). The south and north arms both had 8 exceedences. For the Phase I sampling, the effluent discharge and east arm accounted for 53% of the exceedences and for 64% in Phase II. Additionally, the effluent discharge samples contained four of the five constituents to exceed threshold values and the levels reported were consistently highest at these sample locations. This depositional pattern reinforces the concept that the majority of metals are being sorbed near the initial point of deposition.

Table 9 includes a summary of exceedances for each analyte by location and depth. The aspect of primary interest here is that twice the number of exceedances occurred at the 0-1-foot depth than the 1-2-foot depth. That information again reinforces the concept of strong sorbing of metals and also validates the field sampling methods used to prevent contamination of the subsurface samples by constituents in the uppermost sample.

Figure 8 shows the location of the sample points where threshold values were exceeded for chromium, lead, and silver. Due to the greater number of exceedances for copper and zinc, they will be presented separately. The following discussion focuses on each of the individual analytes for which values were reported that exceeded threshold background values for Phase II sampling (Table 7).

Table 6. Threshold Levels for Selected Constituents.

Analyte	Threshold value (ppm)		
	2101-M background[1]	Sitewide background[2]	Worldwide concentrations[5,6]
Barium	197.3[3]	169	430
Chromium	16.6	20.0	100
Copper	11.9	32.2[4]	70
Lead	12.7[3]	15.4[4]	20
Silver	3.4	--	0.5
Strontium	42.5	43.0	375
Vanadium	83.8	82.0	135
Zinc	112.0[3]	50.0	200
Fluoride	3.1	5.0	00

[1]2101-M Pond Closure Plan, Volume 1, Section B5-f.
[2]Westinghouse Hanford Company, 1991 (WHC-MR-0246).
[3]"Nugget Effects" p. APP B-3 (WHC-MR-0246).
[4]Hanford Site Soil Background, (DOE/RL-92-24).
[5]Merck Index, 10th edition (1983).
[6]CRC Handbook Chemistry and Physics, 68th edition (1987-1988).

Table 7. Threshold Levels Exceedances for 2101-M.

Analyte	Threshold value (ppm)	Exceedances	
		Phase I	Phase II
Barium	197.3	1*	0
Chromium	20.0	0	1
Copper	32.2	5	22
Lead	15.4	1	2
Silver	3.4	0	8
Strontium	42.5	1	0
Vanadium	83.8	1	0
Zinc	112.0	2	12
Fluoride	3.1	2	0

*Local Background Sample M133.

Table 8. Summary of Exceedance by Location.

Location	# Sample points	# Exceedences	Analyte
Effluent discharge	6	2	Lead
		6	Copper
		5	Silver
		4	Zinc
South arm	8	7	Copper
		1	Chromium
East Arm	5*	4	Copper
		3	Silver
		5	Zinc
North arm	6	5	Copper
		3	Zinc

*Extra sample here is duplicate taken at 1-foot depth from Site D.

Table 9. Summary of exceedances by Depth.

Location	Analyte	Depth	
		0-1 foot	1-2 feet
Effluent discharge	Lead	1	1
	Copper	3	3
	Silver	3	2
	Zinc	3	1
South arm	Copper	4	3
	Chromium	1	0
East arm	Copper	3	1
	Silver	3	0
	Zinc	3	2
North arm	Copper	3	2
		3	0
Totals		30	15

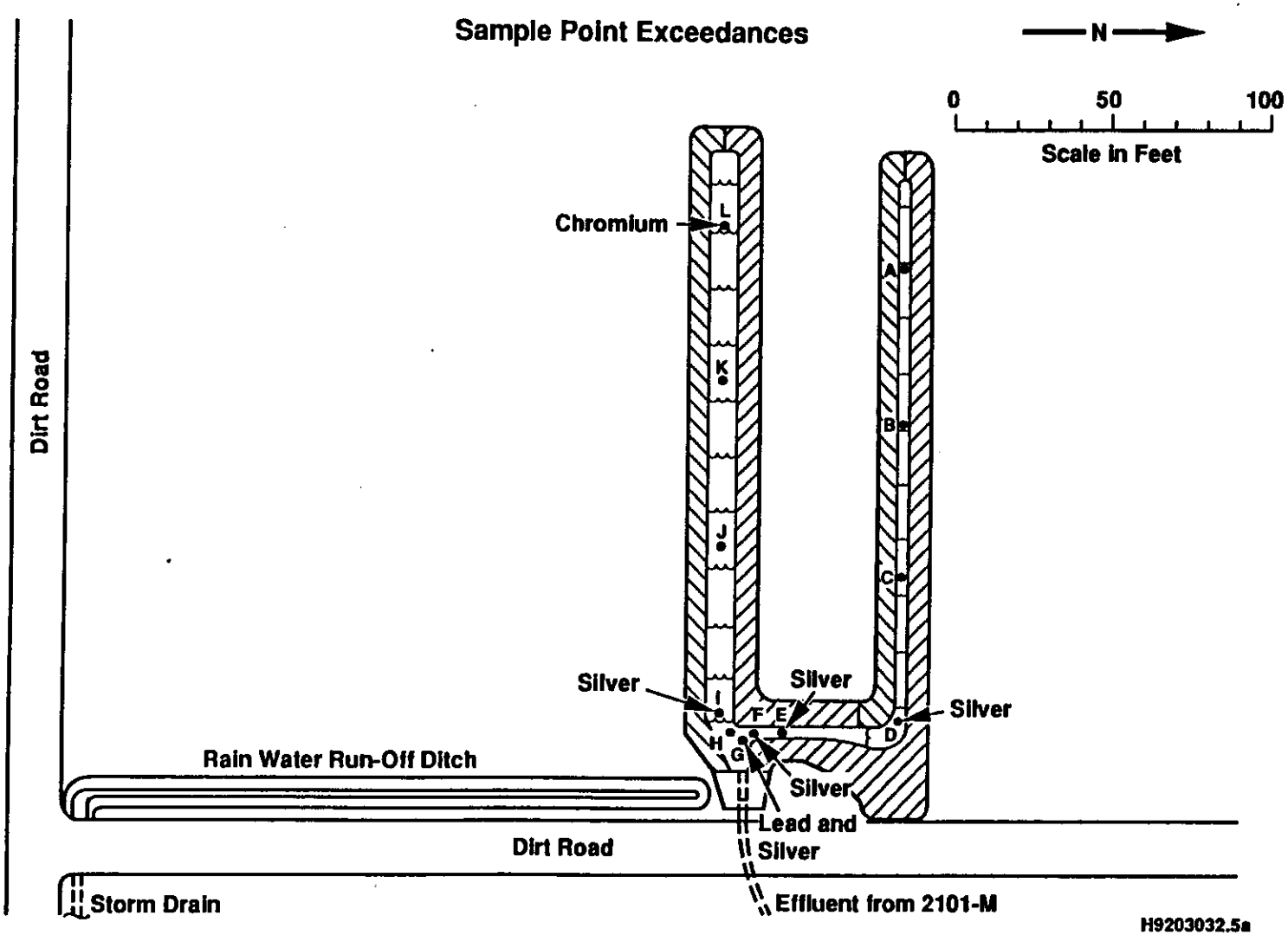

Figure 8. Sample Point Exceedances.

CHROMIUM

A single chromium value (33 ppm) from the top 0-1 foot at sample site L exceeded the threshold levels of 20 ppm (Table 7). As depicted in Figure 9, chromium at low levels was evenly distributed throughout the pond and, unlike other constituents, was fairly uniformly distributed at both the 0-1-foot and 1-2-foot depths. No chromium values exceeded threshold levels during Phase I sampling.

LEAD

Both samples (0-1 foot, 1-2 feet) at site G exceeded the threshold value of 15.4 ppm (Table 7). During Phase I sampling, the single exceedance for lead occurred at this same site within the effluent discharge area. The maximum value reported for Phase I was 35.2 parts per million for lead. The maximum value for lead reported during Phase II investigations was 160 parts per million. Figure 10 provides a graphic representation of sample values for lead reported for the pond during Phase II. Lead values for all other sample points in Phase I, and for the requested sample points in Phase II, were below the threshold value.

SILVER

The calculated threshold level of 3.4 parts per million for silver was exceeded for eight samples in the Phase II sampling (Table 7). No exceedences were reported for the sampling conducted during Phase I. The maximum reported value was 32 parts per million located within the effluent discharge area (F). There was a fairly consistent pattern of distribution of the exceedences for silver as can be discerned in Figure 11. Sample points D through H showed elevated silver values in the top 1 foot of sediments. All of these sample sites fall within the effluent discharge, or east arm, which has previously been documented in both the Phase I and Phase II studies as the area containing the majority of documented exceedences. Only at sites F and G did the samples at 2 feet also exceed the threshold value, indicating silver is highly sorbed in the upper sediments near its release point.

The reasons for the increase in the number of exceedences from 0 in Phase I to eight in Phase II are unknown at this time. However, probable causes can be attributed to improved laboratory analytical methods in Phase II, and potential dilution effects from sampling over a total 2-foot interval in the Phase I efforts, rather than the two separate intervals (0-1 and 1-2 feet) used in Phase II.

ZINC

The number of sites that exceeded the threshold value of 112 parts per million increased from 2 samples in Phase I to 12 samples in Phase II. Figure 12 provides a summary of zinc values reported for samples collected at 0-1 foot, and Figure 13 provides values for samples collected from 1-2 feet.

1 Figure 9. 2101-M Pond Chromium Values.

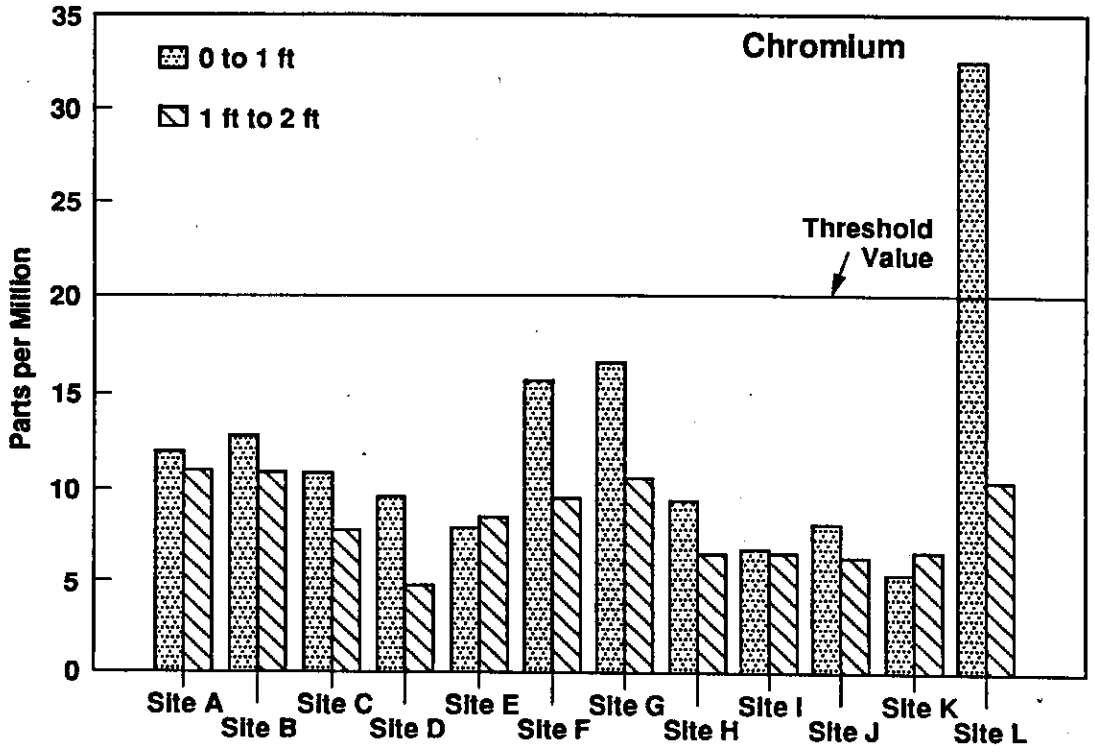

1 Figure 10. 2101-M Pond Lead Values.

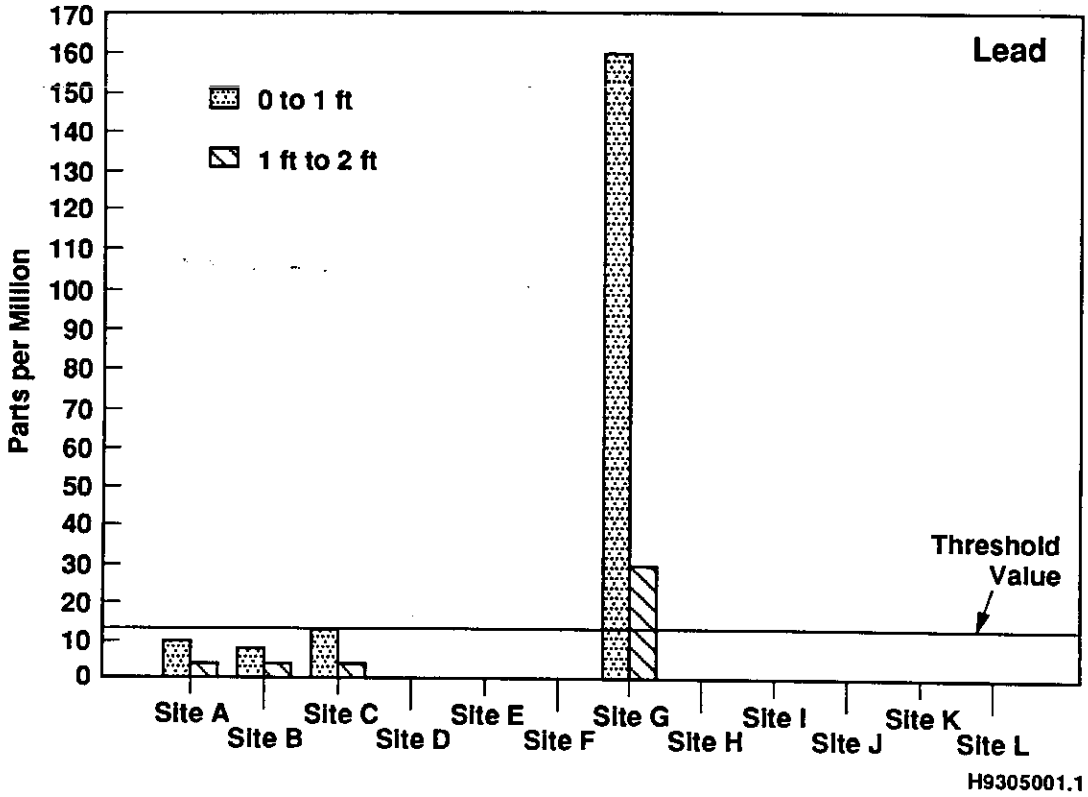

1 Figure 11. Silver Values in 2101-M Pond.

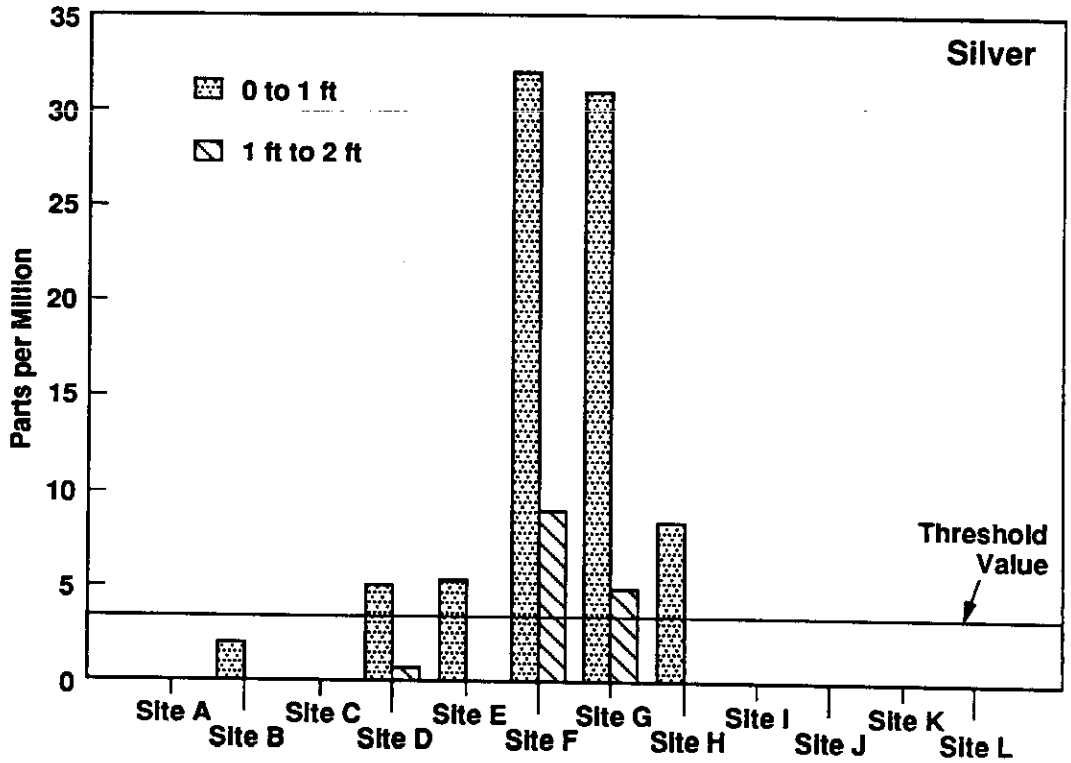

Figure 12. Zinc Values for Samples Collected at 0-1 Foot.

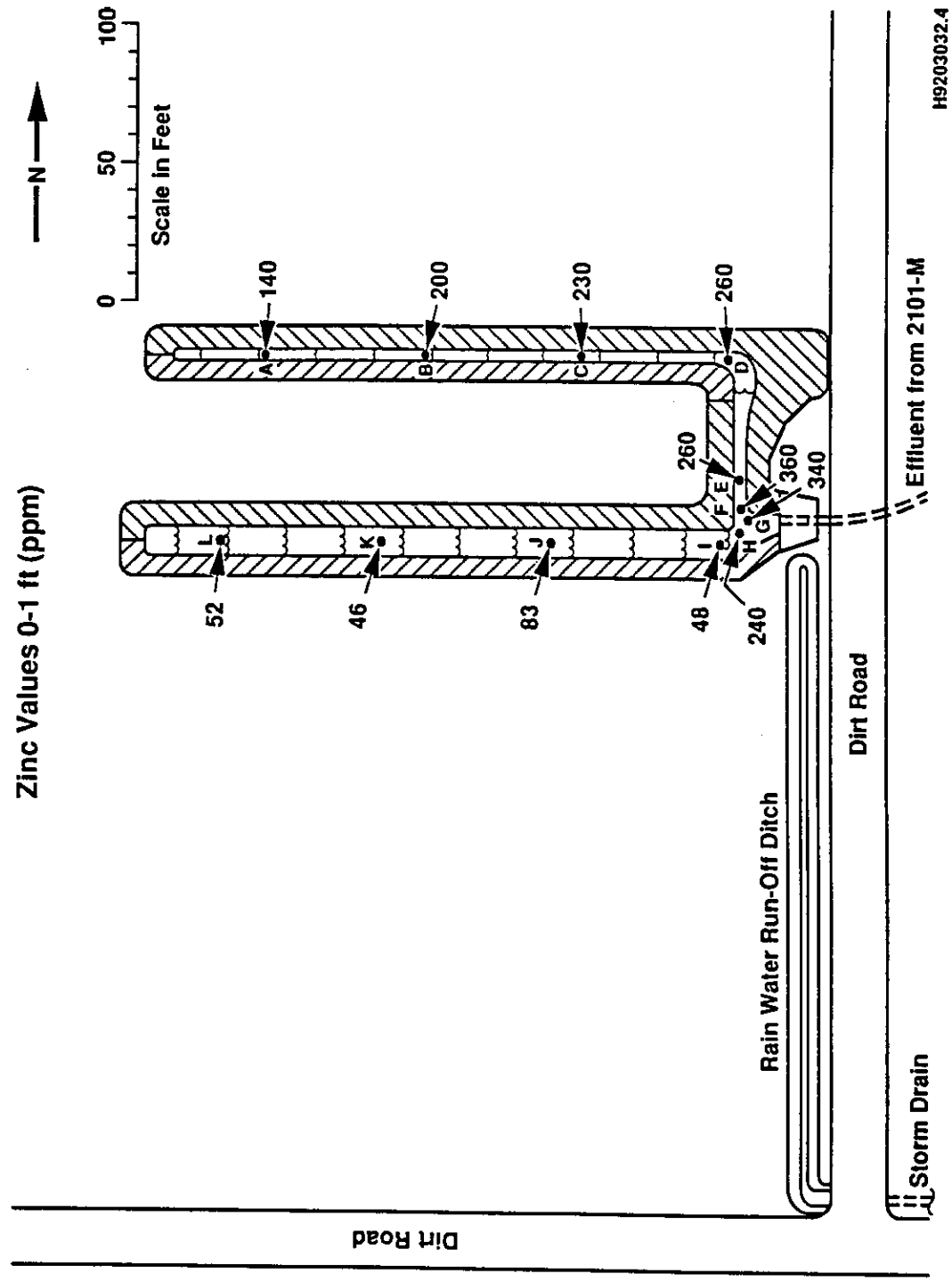

Figure 13. Zinc Values for Samples Collected at 1-2 Feet.

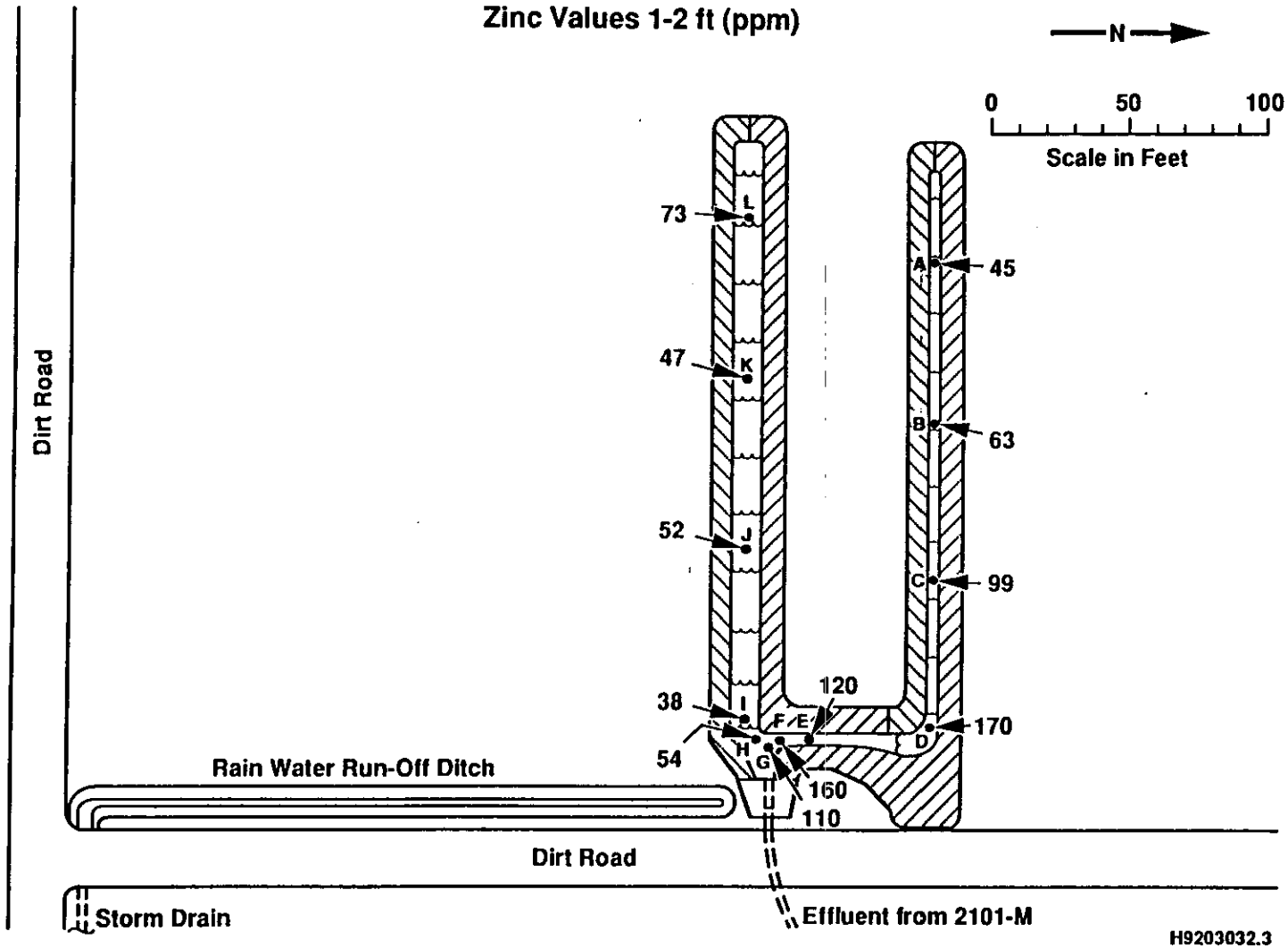

The highest value reported in the Phase I sampling was 220 parts per million though a value of 360 parts per million was recorded in Phase II. Both of these maximum values were collected from the effluent discharge area.

Figure 14 provides a graphic representation of the sample values and highlights a number of interesting trends. The concentration of zinc increases in the samples from sites A through F, from the north arm to the east arm, and finally to the effluent discharge area. Concentrations decrease from the effluent discharge areas (G & F) to the south arm (sites I to L). This arm receives the vast majority of effluent discharged to the pond, and the graph for these sites demonstrates the effects of zinc leaching in the south arm.

Additionally, values exceeded the threshold limit at only three locations at the 1-2 foot depth; at sites D, E, and F. This distribution reflects the trend reported for silver.

COPPER

Copper values reflected the trends found in the Phase I sampling by being again the most widespread analyte throughout the pond, exhibiting the highest average values (Table 2), and a maximum value of 2,500 parts per million at the effluent discharge. A maximum value of 1,340 parts per million was reported for the same location during Phase I. Figure 15 provides a summary for the copper values reported from samples collected at 0-1 foot in depth and Figure 16 for samples collected from 1-2 feet.

The threshold value for copper determined in the Site-wide Hanford background study (DOE-RL 1992) is 32.2 parts per million. The number of exceedences for copper increased from 5 in Phase I to 22 in Phase II. This can be attributed primarily to an increase in the number of samples collected at the 0-2-foot depth from 4 in Phase I to 25 in Phase II.

When these values for copper are represented graphically, (Figure 17) a significant trend is obvious. Sample values in the first foot of sediments are often an order of magnitude higher than values reported for the second foot of material, demonstrating the strong sorbing qualities of copper. There is a repeat of the trend seen for other analytes showing increasing concentrations from site A to site G, and a subsequent decrease in concentrations into the south arm, although it is not as conspicuous as that observed for zinc (Figure 14). Sample points at the effluent discharge (F, G, H) again show elevated concentrations. However, as observed in Phase I, the east and north arms also contain elevated concentrations of copper. The leaching effects that occur in the south arm are still apparent, although sample points I through L evidence a number of threshold exceedances for copper values.

1 Figure 14. Zinc Values in 2101-M Pond.

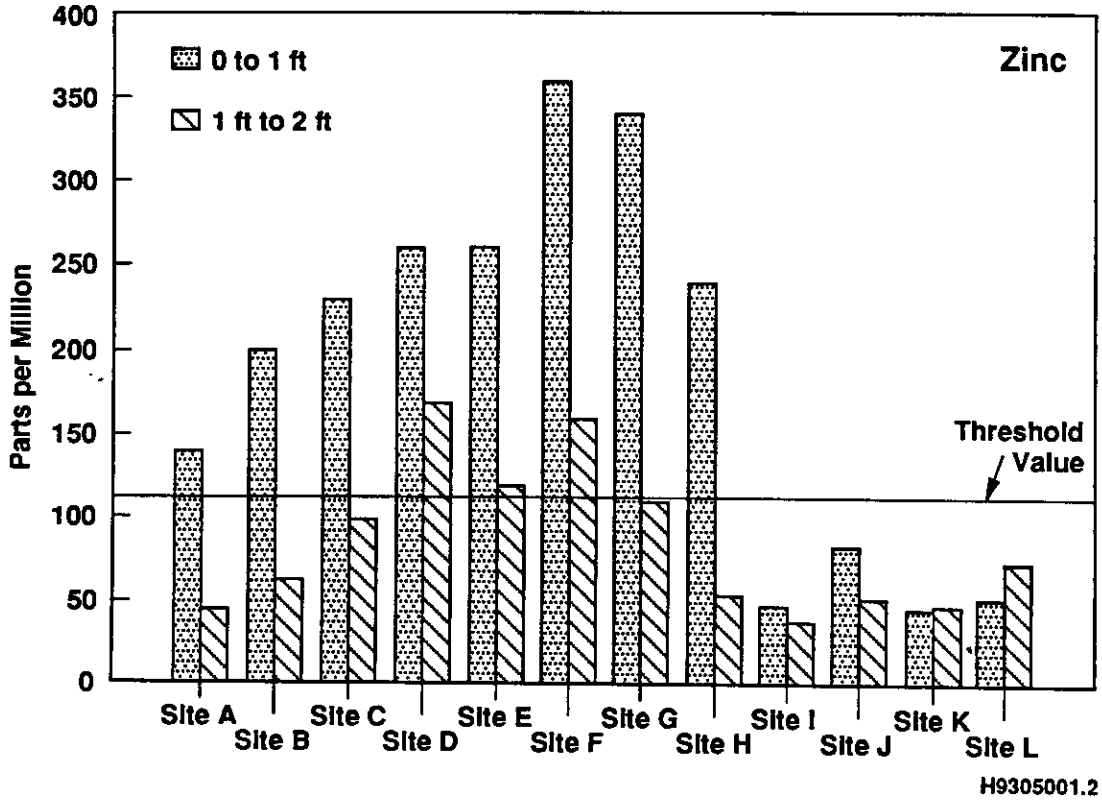

Figure 15. Copper Values for Samples Collected at 0-1 Foot.

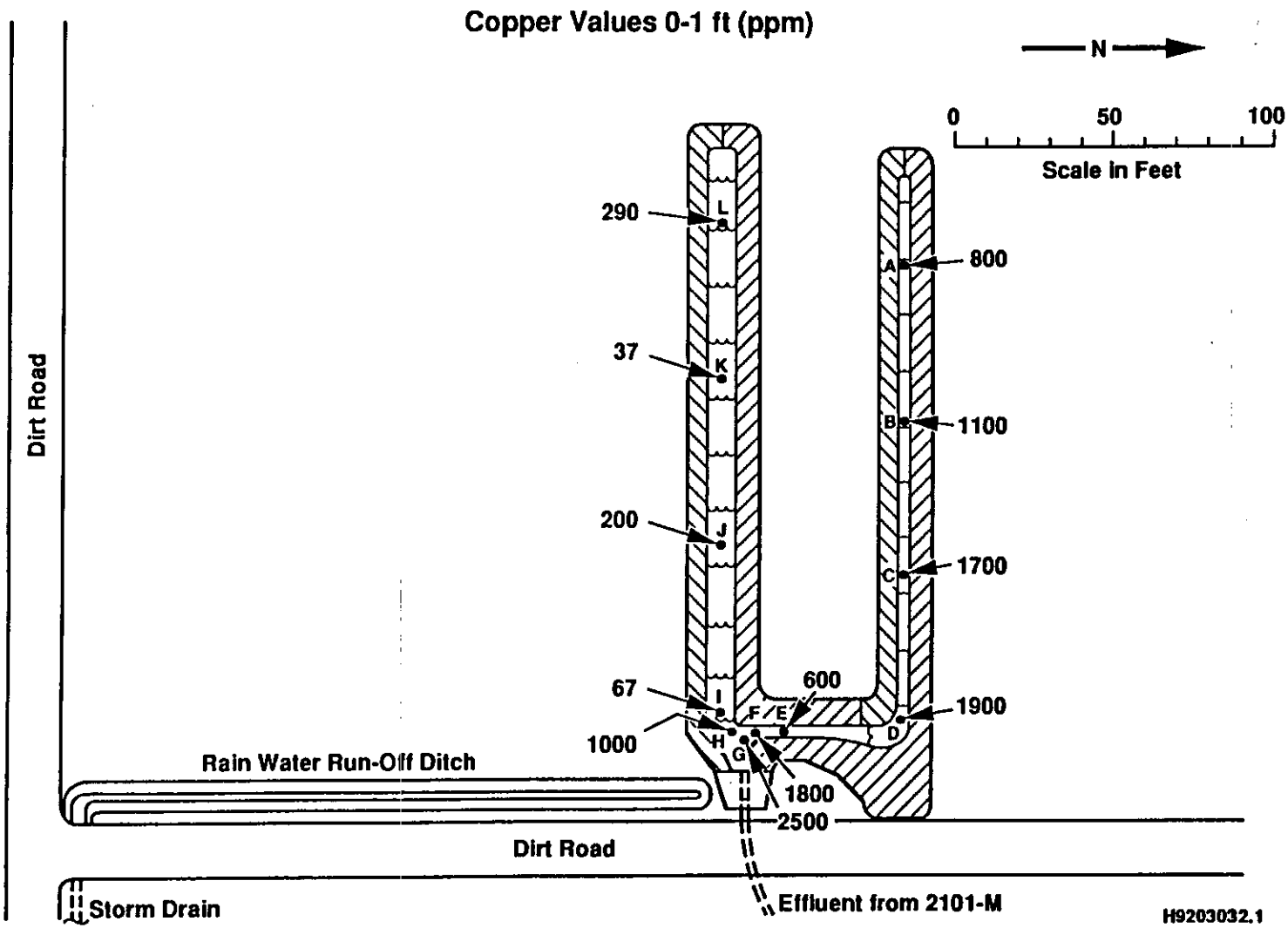

Figure 16. Copper Values for Samples Collected at 1-2 Feet.

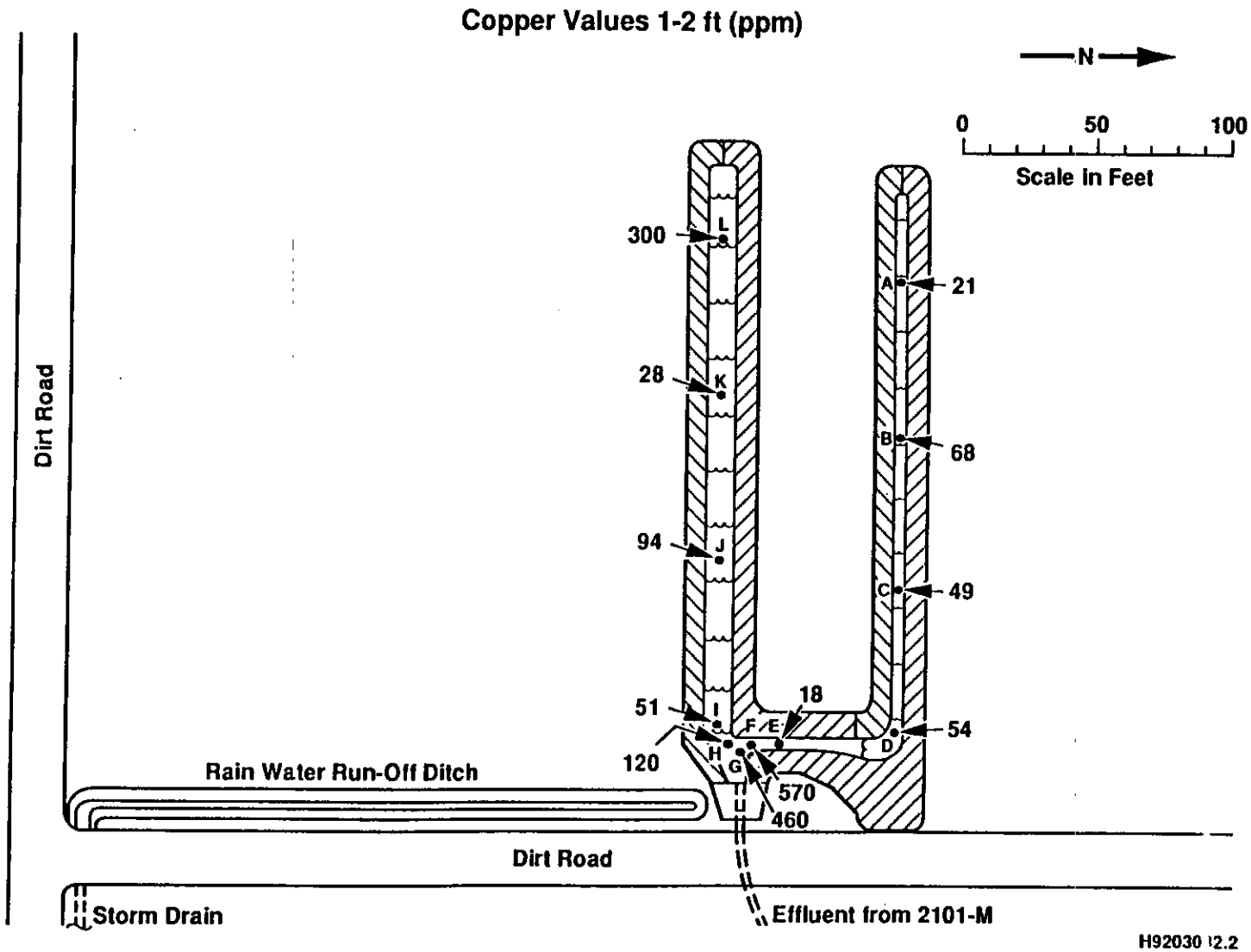

1 Figure 17. Copper Values in 2101-M Pond.

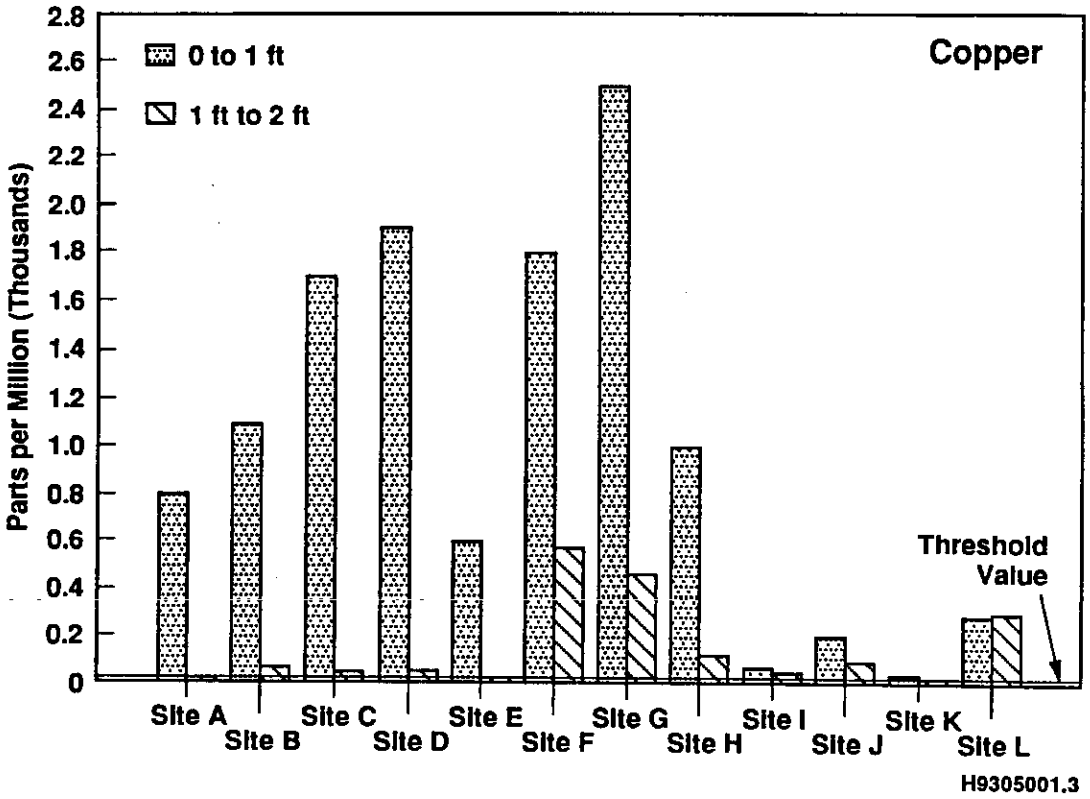

SUMMARY

The information developed during the Phase I efforts identified the need for additional sampling to be conducted in the upper 2 feet of 2101-M Pond soils and sediments. The sampling conducted during Phase II concentrated on the 0-1 foot and 1-2 foot levels. Threshold level exceedances noted in Phase I for barium, strontium, vanadium, and fluoride were not observed in Phase II. Threshold exceedances for copper, zinc, and lead increased in Phase II in proportion to the increase in sample numbers at the 0-2-foot depth. Exceedances for chromium and silver, which had not been identified in Phase I, were noted in Phase II results.

In the case of zinc and copper, the relative consistency of the elevated values as well as the distribution can be attributed most probably to the waste water associated with the HVAC system for the 2101-M Building. Over the 40 years of operation of this system, anywhere from 40 million to 100 million gallons of waste water would have been discharged to the 2101-M Pond. That amount of water running through zinc-coated and copper piping as well as the contribution of regular maintenance using film corrosion inhibitors could potentially account for the build up of these materials in the sediments over a 40-year operating history.

Any discussion of the consequences or perceived hazard presented by the levels of metals in 2101-M soils should take into account that threshold levels are only a statistical determination of upper-limit values for Hanford Site background levels of these naturally occurring substances. These metals are found in soils in natural systems worldwide at levels far greater than the Hanford Site threshold levels (Table 6).

Another consideration is that all of these analytes are required constituents for all living systems; plants, animals, and humans.

Numerous authors providing summaries of toxological effects of these metals (Adriano 1986, Friberg et al. 1979, Kabata and Pendias 1984) point out that deleterious effects are generally only seen in ecosystems that are subjected to massive, acute doses of these elements. Based on the robustness of the rather simple ecosystem that has developed around 2101-M Pond and the levels reported for Phase II, these metals cannot be considered to pose an immediate or future threat for any credible scenario relative to transport pathways to higher organisms, and certainly not to humans.

In fact, the credibility of that position is apparent when a comparison of Ecology's Model Toxic Control Act (MTCA) (Ecology 1991, 1992) limits are compared with the maximum soil values observed in 2101-M Pond as summarized in Table 10. For lead and silver, the MTCA limits are an order of magnitude higher than the maximum values observed in the pond. The MTCA limits for zinc are two orders of magnitude higher, and for chromium are three orders of magnitude higher than the values reported for pond sediments. Only the maximum copper value of 2,500 parts per million even closely approaches the MTCA standard of 2,960 parts per million, and even that is well below the value reported.

Table 10. Summary of 2101-M Pond Phase II Sample Values and Tentative Cleanup Standards.

Analyte	Maximum observed	Threshold value	Residential[1]	MTCA limits[2] (soil)
Chromium	33	20.0	400[3]	400[3]
Copper	2500	32.2	2960	2960
Lead	160	15.4	1120	1120
Silver	32	3.4	240	240
Zinc	360	112.0	16000	16000

All values in parts per million.
[1]Current limits calculated per Model Toxic Control Act (Ecology 1991).
[2]Soil cleanup limits per Model Toxic Control Act (Ecology 1991).
[3]Value is based on chromium VI.

While it is apparent that the applicability of these standards to Hanford Site cleanup will be reviewed and modified in the future by regulatory personnel, the very fact that they have been promulgated and published by Ecology provides a documented basis for examination and negotiation of closure actions.

In summary, the Phase II sampling efforts have resulted in the following conclusions.

- Phase II sampling verified the overall findings developed by analysis of Phase I sampling.
- The top 2 feet of soils and sediments are the location of the vast majority of identified constituents.
- Organic constituents detected are found in natural systems and are a consequence of the humic conditions that exist in the 2101-M Pond sediments.
- Metals are the constituents to be considered in closure actions.
- Inorganic constituents pose no problems at the pond.
- The metals found at 2101-M Pond are strongly sorbed in the top 2 feet of soil near the point of deposition (effluent discharge).
- There is a decreasing concentration gradient for metals as the effluent moves from the discharge point to the east arm and from there to the north arm.

- Because it receives the majority of effluents, the south arm exhibits increased leaching of the metals from the top 2 feet of sediments.

- The analytes reported to exceed background threshold values do not pose a threat to human health, or the environment.

- The maximum reported values for all analytes are below the state promulgated standard for soil cleanup levels.

- Based on the considerable amount of data collected and the lack of contaminates above cleanup standards, the clean closure option should be vigorously pursued.

REFERENCES

Adriano, D. C., 1986, *Trace Elements in the Terrestrial Environment*, Springer-Verlag, New York.

ASTM, 1990, *Standard Practice for Soil Investigations and Sampling by Auger Borings*,

Barth, D. S. and B. J. Mason, 1984, *Soil Sampling Quality Assurance User's Guide*, USEPA - 600/4-84-043, U.S. Environmental Protection Agency, Las Vegas, Nevada.

DeVera, E. R., R. P. Simmons, R. D. Stephens and D. L. Storm, 1980, *Samplers and Sampling Procedures for Hazardous Waste Streams*, USEPA - 600/2-80-18, U.S. Environmental Protection Agency, Cincinnati, Ohio.

DOE-RL, 1992, *Hanford Site Soil Background*, DOE/RL-92-24, Richland, Washington.

Dragon, J. 1988, *The Soil Chemistry of hazardous Materials*, Hazardous Materials Control Research Institute, Silver Springs, Maryland.

Ecology, 1991, *The Model Toxic Controls Act Cleanup Regulation*, (173-340 WAC), Washington Department of Ecology, Olympia Washington.

Ecology, 1992, *Nuclear and Mixed Waste Management Program-Interim Policy*, Washington Department of Ecology, Olympia, Washington.

EPA, 1982, *Test Methods for Evaluating Solid Waste - Physical/Chemical Methods*, 2nd. Edition SW-846, U.S. Environmental Protection Agency, Washington D.C.

Ford, P. J., P. J. Torina, and D. E. Seely, 1984, *Characterization of Hazardous Waste Sites - A Methods Manual, Volume II Available Sampling Methods*, 2nd Edition, USEPA 600/4-84-076, U.S. Environmental Protection Agency, Las Vegas, Nevada.

Ford, P. J. and P. J. Torina, 1985, *Characterization of Hazardous Waste Sites: A Methods Manual - Volume I Site Investigations*, USEPA/600/4-84/075. U.S. Environmental Protection Agency, Las Vegas, Nevada.

Mitchell, R. M., 1987, *Site Characterization Plan for the 2101-M Pond - Soils and Sediments*, (Unnumbered Document), U.S. Department of Energy, Richland Operations Office, Richland, Washington.

Routson, R. C., W. H. Price, D. J. Brown and K. R. Fecht, 1979, *High-Level Waste Leakage from the 241-ST-106 Tank at Hanford*, RHO-ST-14, Rockwell Hanford Operations, Richland, Washington.

WAC, 1986, *Dangerous Waste Regulations*, Washington Administrative Code, Chapter 173-303, (Amended), Olympia, Washington.

WHC, 1988, *Environmental Investigations and Site Characterization Manual*, WHC-CM-7-7, Westinghouse Hanford Company, Richland, Washington.

WHC, 1991, *Characterization and Use of Soil and Groundwater Background for the Hanford Site*, WHC-MR-0246, Westinghouse Hanford Company, Richland, Washington.

This page intentionally left blank.

APPENDIX E-1.

GROUNDWATER DATA

This page intentionally left blank.

APPENDIX E-1

GROUNDWATER DATA

This appendix contains all analytical data collected from the four wells monitoring the 2101-M Pond since August 1988. This data set includes samples collected by other projects.

The first three column headings are as follows:

Well Name	Well from which sample was collected.
Collection Date	Date sample was collected.
Sample Number	Unique number assigned to a well sample: an "F" following the sample number indicates that the sample was filtered in the field.

The next four (or fewer) columns contain analytical results and qualifiers for the constituent. The structure of the column header is as follows:

Constituent Short Name
Method Code/Reporting Units
CRQL/DWS (suffix)

Constituents are listed by their short name, but are sorted in the table by their long name. To help clarify the constituents, a list has been provided at the front of the table with the constituents short name and corresponding long name. On the third line, a period appears in place of the CRQL or DWS if a value does not exist. The one-letter suffix that may be added to the DWS identifies the regulation associated with the standard and is described below.

Abbreviations used in the table are as follows:

COL	coliform colonies per 100 milliliter
CRQL	contractually required quantitation limit
DWS	drinking water standard
NTU	nephelometric turbidity units
pCi/L	picocuries per liter
ppb	parts per billion
ppm	parts per million
umhos	micromhos per centimeter

DWS suffixes identify the regulatory origin of the standard of the DWS. The suffixes are defined as follows:

Suffix	Regulatory Basis
none	Maximum Contaminant Levels in 40 CFR Part 141 National Primary Drinking Water Regulations (40 CFR 141)
p	Proposed Maximum Contaminant Level Goals in FR 46936
r	National Interim Primary Drinking Water Regulations, Appendix IV, EPA-570/9-76/003

s Secondary Maximum Contaminant Levels in 40 CFR part 143, National Secondary Drinking Water Regulations

w Additional Secondary Maximum Contaminant Levels in WAC 248-54, Public Water Supplies

Data qualifiers and flags used in the table are assigned by the laboratory and Quality Control reviewers, respectively. Qualifiers reflect conditions occurring in the laboratory relating to the analytical procedure. Flags serve a wider function of alerting the data user to the limitations of the reported value. Qualifiers and flags can be appended to each other to form a string of letters when several factors apply to a result. The qualifiers and flags used are as follows:

Qualifiers

B Blank associated with analyte is contaminated

D Analyzed sample is diluted

E Concentration is out of instrument calibration range

H Laboratory holding time exceeded

J Concentration is estimated

U Analyte concentration is below CRQL; for radionuclides without CRQLs, this flag is assigned by QC personnel when the reported value is less than or equal to the total error value reported by the laboratory.

Flags

A Result associated with audit finding

Q Result associated with suspect QC data

R Suspect data currently under review

* CRQL is greater than DWS, so exceedance of DWS is undetermined.

9513319.2142

Method ID Names

Method ID	Method Name
16	SW-846 8240
17	SW-846 8080
18	Unknown UST
19	SW-846 8270
20	Unknown UST
21	Unknown UST
24	Unknown UST
28	Unknown UST
29	SW-846 8140
30	SW-846 8040
32	Unknown UST
33	Unknown UST
34	SW-846 6010
35	Unknown UST
36	ASTM D-1385
37	Unknown UST
38	Unknown UST
39	Unknown UST
40	SW-846 7421
41	SW-846 7470
42	SW-846 7841
43	SW-846 7060
45	Unknown UST
46	Unknown UST
48	SW-846 7740
49	SW-846 8150
50	Unknown UST
51	SW-846 8280
53	Unknown UST
54	ASTM D-1426-D
55	Unknown UST
56	SW-846 9010
63	SW-846 9030
65	Std Meth #209B
66	Unknown UST
67	SW-846 9020
69	Unknown UST
72	Unknown UST
73	ASTM D-1125-A
74	Unknown UST
75	Unknown UST
76	Unknown UST
77	Unknown UST
79	Unknown UST
82	PNL Anions
93	Probe, pH
94	Probe, Conductivity
122	SW-846 9060
124	ASTM D-4327-88
125	ASTM D-1293

Method ID Names

Method ID	Method Name
126	Std Meth #214A
127	ASTM D-2579-A
130	EPA Method 300.0
135	SW-846 9310, Alpha
136	SW-846 9310, Beta
137	SW-846 9315, Radium
139	ITAS I-129 Low Level
140	ITAS Gamma Scan
142	ITAS H-3
143	ITAS Tc-99
144	SW-846 9132
145	ITAS Gross U
146	ITAS Isotopic Pu
170	Probe, temperature

Correspondence Between Short and Full Constituent Names

Short Name	Full Constituent Name
1,1,1-T	1,1,1-Trichloroethane
1,1,2-T	1,1,2-Trichloroethane
1,1-DIC	1,1-Dichloroethane
1,1-DIM	1,1-Dimethylhydrazine
1,2-DIC	1,2-Dichloroethane
1,2-DIM	1,2-Dimethylhydrazine
1-napha	1-Naphthylamine
1112-tc	1,1,1,2-Tetrachloroethane
1122-tc	1,1,2,2-Tetrachloroethane
12-dben	1,2-Dichlorobenzene
123-trp	1,2,3-Trichloropropane
1234TE	1,2,3,4-tetrachlorobenzene
1235TE	1,2,3,5-tetrachlorobenzene
123TRI	1,2,3-trichlorobenzene
13-dben	1,3-Dichlorobenzene
135TRI	1,3,5-trichlorobenzene
14-dben	1,4-Dichlorobenzene
1BUTYN	1-Butanol
2,4,5-T	2,4,5-T
2,4,5TP	2,4,5-TP
2,4-D	2,4-D
2-napha	2-Naphthylamine
2378TCD	2,3,7,8-TCDD
24-dchp	2,4-Dichlorophenol
24-dint	2,4-Dinitrotoluene
245-trp	2,4,5-Trichlorophenol
246-trp	2,4,6-Trichlorophenol
26-dchp	2,6-Dichlorophenol
26-dint	2,6-Dinitrotoluene
2HEXANO	2-Hexanone
2MENAPH	2-Methylnaphthalene
2NITPH	2-Nitrophenol
3102012	3102-01-2
46DN2MP	4,6-Dinitro-2-methylphenol
4NITQUI	4-Nitroquinoline-1-oxide
ACEFENE	2-Acetylaminofluorene
ACENAPH	Acenaphthene
ACENATL	Acenaphthylene
ACETILE	Acetonitrile
ACETONE	Acetone
ACETOPH	Acetophenone
ACETREA	1-Acetyl-2-thiourea
ACROLIN	Acrolein
ACRYIDE	Acrylamide
ACRYILE	Acrylonitrile
ALDRIN	Aldrin
ALKALIN	Alkalinity
ALLYLAL	Allyl alcohol
ALLYLCL	allylchloride
ALPHA	Gross alpha
ALUMNUM	Aluminum
AM-241	Americium-241
AMIISOX	5-(Aminomethyl)-3-isoxazolol

Correspondence Between Short and Full Constituent Names

Short Name	Full Constituent Name
AMINOYL	4-Aminobiphenyl
AMITROL	Amitrole
AMMONIU	Ammonium ion
ANILINE	Aniline
ANTHRA	Anthracene
ANTIONY	Antimony
AR1016	Aroclor-1016
AR1221	Aroclor-1221
AR1232	Aroclor-1232
AR1242	Aroclor-1242
AR1248	Aroclor-1248
AR1254	Aroclor-1254
AR1260	Aroclor-1260
ARAMITE	Aramite
ARSENIC	Arsenic
AURAMIN	Auramine
BARIUM	Barium
BDCM	Bromodichloromethane
BE-7	Beryllium-7
BENDICM	Benzene, dichloromethyl-
BENDINE	Benzidine
BENTHOL	Benzenethiol
BENZAAN	Benzo(a)anthracene
BENZALC	Benzyl alcohol
BENZBFL	Benzo(b)fluoranthene
BENZCAC	Benz[c]acridine
BENZCHL	Benzyl chloride
BENZENE	Benzene
BENZJFL	Benzo[j]fluoranthene
BENZOPY	Benzo(a)pyrene
BERYLUM	Beryllium
BETA	Gross beta
BGHIPER	Benzo(ghi)perylene
BIS2CHE	Bis(2-chloroethyl) ether
BIS2CHM	Bis(2-Choroethoxy)methane
BIS2EPH	Bis(2-ethylhexyl) phthalate
BIS2ETH	Bis(2-chloroisopropyl) ether
BISTHER	Bis(chloromethyl) ether
BNZKFLU	Benzo(k)fluoranthene
BORON	Boron
BRCHLMET	Dibromochloromethane
BROMIDE	Bromide
BROMONE	Bromoacetone
BROMORM	Bromoform
BROPHEN	4-Bromophenylphenyl ether
BUTBENP	Butylbenzylphthalate
BUTDINP	2-sec-Butyl-4,6-dinitrophenol(DNBP)
CADMIUM	Cadmium
CALCIUM	Calcium
CARBIDE	Carbon disulfide
CEPR-144	Cerium/Praseodymium-144
CHLANIL	4-Chloroaniline
CHLCRES	4-Chloro-3-methylphenol

Correspondence Between Short and Full Constituent Names

Short Name	Full Constituent Name
CHLEPOX	1-Chloro-2,3-epoxypropane
CHLFORM	Chloroform
CHLLATE	Chlorobenzilate
CHLNAPH	2-Chloronaphthalene
CHLNAPZ	Chlornaphazine
CHLOANE	Chlordane
CHLOREA	1-(o-Chlorophenyl)thiourea
CHLORID	Chloride
CHLPHEN	2-Chlorophenol
CHLPROP	3-Chloropropionitrile
CHLROB	Chlorobenzene
CHLTHER	2-Chloroethyl vinyl ether
CHMTHER	Chloromethyl methyl ether
CHROMUM	Chromium
CHRYSEN	Chrysene
CITRUSR	Citrus red No. 2
CLETHAN	Chloroethane
CO-60	Cobalt-60
COBALT	Cobalt
COLIFORM	Coliforms
CONDUCT	Conductivity
COPPER	Copper
CRESOLS	Cresols (methylphenols)
CROTONA	Crotonaldehyde
CS-134	Cesium-134
CS-137	Cesium-137
CYANIDE	Cyanide
CYCHDIN	2-Cyclohexyl-4,6-dinitrophenol
DDD	4,4'-DDD
DDE	4,4'-DDE
DDT	4,4'-DDT
DIALLATE	Diallate
DIBAEPY	Dibenzo[a,e]pyrene
DIBAHAC	Dibenz[a,h]acridine
DIBAHAN	Dibenz[a,h]anthracene
DIBAHPY	Dibenzo[a,h]pyrene
DIBAIPY	Dibenzo[a,i]pyrene
DIBAJAC	Dibenz[a,j]acridine
DIBCGCA	7H-Dibenzo[c,g]carbazole
DIBENFR	Dibenzofuran
DIBPHTH	Di-n-butylphthalate
DIBRCHL	1,2-Dibromo-3-chloropropane
DIBRETH	1,2-Dibromoethane
DIBRMET	Dibromomethane
DICDIFM	Dichlorodifluoromethane
DICETHY	1,1-Dichloroethene
DICHBEN	3,3'-Dichlorobenzidine
DICPANE	1,2-Dichloropropane
DIELRIN	Dieldrin
DIEPHTH	Diethyl phthalate
DIETROL	Diethylstilbesterol
DIHYSAF	Dihydrosafrole
DIMBENZ	7,12-Dimethylbenz[a]anthracene

Correspondence Between Short and Full Constituent Names

Short Name	Full Constituent Name
DIMEAMB	p-Dimethylaminoazobenzene
DIMETHB	3,3'-Dimethoxybenzidine
DIMETHO	Dimethoate
DIMEYLB	3,3'-Dimethylbenzidine
DIMPHAM	Alpha,alpha-Dimethylphenethylamine
DIMPHEN	2,4-Dimethylphenol
DIMPHTH	Dimethyl phthalate
DINBENZ	m-dinitrobenzene
DINPHEN	2,4-Dinitrophenol
DIOPHTH	Di-n-octylphthalate
DIOXANE	1,4-Dioxane
DIPHAMI	Diphenylamine
DIPHHYD	1,2-Diphenylhydrazine
DIPHOS	O,O-diethylO-2-pyrazinylphosphor..
DIPRNIT	N-Nitroso-di-n-dipropylamine
DISULFO	Disulfoton
ENDO1	Endosulfan I
ENDO2	Endosulfan II
ENDRALD	Endrin Aldehyde
ENDRIN	Endrin
ENDSFAN	Endosulfan sulfate
ETHBENZ	Ethylbenzene
ETHCARB	Ethyl carbamate (Urethane)
ETHCYAN	Ethyl cyanide
ETHGLYC	Ethylene Glycol
ETHMETH	Ethyl methacrylate
ETHMETS	Ethyl methanesulfonate
ETHMINE	Ethyleneimine
ETHOXID	Ethylene oxide
ETHYREA	Ethylenethiourea
EU-154	Europium-154
EU-155	Europium-155
FANTIMO	Antimony, Filtered
FARSENI	Arsenic, Filtered
FBARIUM	Barium, Filtered
FBERYLL	Beryllium, Filtered
FBORON	Boron, Filtered
FCADMIU	Cadmium, Filtered
FCALCIU	Calcium, Filtered
FCHROMI	Chromium, Filtered
FCOBALT	Cobalt, filtered
FCOPPER	Copper, Filtered
FIRON	Iron, Filtered
FLEAD	Lead, filtered
FLRENE	Fluorene
FLUORAN	Fluoranthene
FLUORID	Fluoride
FMAGNES	Magnesium, Filtered
FMANGAN	Manganese, Filtered
FMERCUR	Mercury, filtered
FNICKEL	Nickel, Filtered
FORMALN	Formaldehyde
FPOTASS	Potassium, Filtered

Correspondence Between Short and Full Constituent Names

Short Name	Full Constituent Name
FSELENI	Selenium, Filtered
FSILVER	Silver, Filtered
FSODIUM	Sodium, Filtered
FSTRONUM	Strontium, filtered
FTHALIUM	Thallium, filtered
FVANADI	Vanadium, Filtered
FZINC	Zinc, Filtered
HEPTIDE	Heptachlor epoxide
HEPTLOR	Heptachlor
HEXACHL	Hexachlorophene
HEXAENE	Hexachloropropene
HEXCBEN	Hexachlorobenzene
HEXCBUT	Hexachlorobutadiene
HEXCCYC	Hexachlorocyclopentadiene
HEXCETH	Hexachloroethane
I-129LD	Iodine-129
INDENOP	Indeno(1,2,3-cd)pyrene
IODOMET	Methyl Iodide
IRON	Iron
ISOBUTY	Isobutyl alcohol
ISODRIN	Isodrin
ISOPHER	Isophorone
ISOSOLE	Isosafrole
K-40	Potassium-40
KEPONE	Kepone
KEROSEN	Kerosene
LEAD	Lead
LHYDRAZ	Hydrazine
LITHIUM	Lithium
LPHENOL	Phenol
MAGNES	Magnesium
MALHYDR	Maleic hydrazide
MALOILE	Malononitrile
MANGESE	Manganese
MERCURY	Mercury
METACRY	Methyl methacrylate
METACTO	2-Methyllactonitrile
METAZIR	2-Methylaziridine
METBISC	4,4'-Methylenebis(2-chloroaniline)
METCHAN	3-Methylcholanthrene
METHACR	Methacrylonitrile
METHAPY	Methapyrilene
METHBRO	Methyl bromide
METHCHL	Methyl chloride
METHIOU	Methylthiouracil
METHLOR	Methoxychlor
METHNYL	Metholonyl
METHONE	Methyl ethyl ketone
METHPAR	Methyl parathion
METHTHI	Methanethiol
METHYCH	Methylene chloride
METMSUL	Methyl methanesulfonate
MIBK	4-Methyl-2-pentanone

Correspondence Between Short and Full Constituent Names

Short Name	Full Constituent Name
MNITANI	3-Nitroaniline
MOLY	Molybdenum
NAPHQUI	1,4-Naphtoquinone
NAPHREA	1-Naphthyl-2-thiourea
NAPHTHA	Naphthalene
NICKEL	Nickel
NITBENZ	Nitrobenzene
NITPHEN	4-Nitrophenol
NITRANI	4-Nitroaniline
NITRATE	Nitrate
NITRITE	Nitrite
NITRPYR	Nitrosopyrrolidine
NITRTOL	5-Nitro-o-toluidine
NNDIEHY	N,N-Diethylhydrazine
NNDIPHA	N-Nitrosodiphenylamine
NNIBUTY	N-Nitrosodi-n-butylamine
NNIDIEA	N-Nitrosodiethanolamine
NNIDIEY	N-Nitrosodiethylamine
NNIDIME	N-Nitrosodimethylamine
NNIMETH	N-Nitrosomethylethylamine
NNIMORP	N-Nitrosomorpholine
NNINICO	N-Nitrosonornicotine
NNIPIPE	N-Nitrosopiperidine
NNIURET	N-Nitroso-N-methylurethane
NNIVINY	N-Nitrosomethylvinylamine
ONITANI	2-Nitroaniline
PARALDE	Paraldehyde
PARATHI	Parathion
PB212	Lead-212
PBENZQU	p-Benzoquinone
PCDDS	PCDDs
PCDFS	PCDFs
PENTACH	Pentachloroethane
PENTCHB	Pentachlorobenzene
PENTCHN	Pentachloronitrobenzene (PCNB)
PENTCHP	Pentachlorophenol
PERCENE	Tetrachloroethene
PERCHLO	Perchlorate
PH	pH
PH	pH, Filtered
PHENANT	Phenanthrene
PHENINE	Phenylenediamine
PHENREA	N-Phenylthiourea
PHENTIN	Phenacetin
PHORATE	Phorate
PHOSPHA	Phosphate
PICOLIN	2-Picoline
POTASUM	Potassium
PRONIDE	Pronamide
PROPYLA	N-Propylamine
PROPYNO	2-Propyn-1-ol
PU-238	Plutonium-238
PU39-40	Plutonium-239/40

Correspondence Between Short and Full Constituent Names

Short Name	Full Constituent Name
PYRENE	Pyrene
PYRIDIN	Pyridine
RADIUM	Radium
RESERPI	Reserpine
RESORCI	Resorcinol
RU-106	Ruthenium-106
SAFROL	Safrol
SB-125	Antimony-125
SELENUM	Selenium
SILICON	Silicon
SILVER	Silver
SODIUM	Sodium
SR90	Strontium-90
STRONUM	Strontium
STYRENE	Styrene
SULFATE	Sulfate
SULFIDE	Sulfide
SYMTRIN	sym-Trinitrobenzene
TAF	Tetrahydrofuran
TC	Total Carbon
TC-99	Technetium-99
TDIBUTEN	trans-1,4-dichloro-2-butene
TDICPENE	cis-1,3-Dichloropropene
TDS	Total Dissolved Solids
TETEPYR	Tetraethylpyrophosphate
TETPHNL	Tetrachlorophenols
TETRANE	Carbon tetrachloride
TETRCHB	1,2,4,5-Tetrachlorobenzene
TETRCHP	2,3,4,6-Tetrachlorophenol
THALLIUM	Thallium
THIONOX	Thiofanox
THIOURA	Thiourea
THIURAM	Thiuram
TIN	Tin
TIN	Tin, Filtered
TITAN	Titanium
TMP_C	Temperature, field
TOC	Total Organic Carbon
TOLDHYD	o-Toluidine hydrochloride
TOLUENE	Toluene
TOXAENE	Toxaphene
TOXLDL	Total Organic Halogen
TRANDCE	trans-1,2-Dichloroethylene
TRCMEOL	Trichloromethanethiol
TRCMFLM	Trichloromonofluoromethane
TRIBUTPH	Tributyl Phosphate
TRICENE	Trichloroethene
TRICHLB	1,2,4-Trichlorobenzene
TRIPHNL	Trichlorophenols
TRIPHOS	O,O,O-Triethyl phosphorothioate
TRISPHO	Tris(2,3-dibromopropyl) phosphate
TRITIUM	Tritium
TURBID	Turbidity

Correspondence Between Short and Full Constituent Names

Short Name	Full Constituent Name
URANIUM	Uranium
VANADUM	Vanadium
VINYIDE	Vinyl chloride
VINYLAC	Vinyl acetate
XYLENE	Xylenes (total)
XYLENEP	Xylene(p)
ZINC	Zinc
ZIRCON	Zirconium
ZN-65	Zinc-65
ZRNB-95	Zirconium/Niobium-95
a-BHC	Alpha-BHC
b-BHC	Beta-BHC
d-BHC	Delta-BHC
g-BHC	gamma-BHC (Lindane)

9513319.2147

Groundwater Data for 2101-M Pond

Well Name	Collection Date	Sample Number	1112-tc 16/ppb 5/.	1,1,1-T 16/ppb 5/200	1122-tc 16/ppb 5/.	1,1,2-T 16/ppb 5/.
299-E18-1	11/10/88	H0007ZV2	10.00 U	5.00 U	10.00 U	5.00 U
299-E18-1	11/10/88	H0007ZV3	10.00 U	5.00 U	10.00 U	5.00 U
299-E18-1	11/10/88	H0007ZV4	10.00 U	5.00 U	10.00 U	5.00 U
299-E18-1	11/10/88	H0007ZV5	10.00 U	5.00 U	10.00 U	5.00 U
299-E18-1	11/23/88	H0007ZV6	10.00 U	5.00 U	10.00 U	5.00 U
299-E18-1	2/15/89	H0007ZV8		5.00 U		5.00 U
299-E18-1	5/26/89	H0007ZW2		5.00 U		5.00 U
299-E18-1	8/08/89	H0007ZW6		5.00 U		5.00 U
299-E18-1	10/31/89	H0007ZX0	10.00 U	5.00 U	5.00 U	5.00 U
299-E18-1	6/03/92	B06PH8		5.00 U		5.00 U
299-E18-2	11/10/88	H0007ZY4	10.00 U	5.00 U	10.00 U	5.00 U
299-E18-2	11/10/88	H0007ZY7	10.00 U	5.00 U	10.00 U	5.00 U
299-E18-2	11/22/88	H0007ZY8		5.00 U		5.00 U
299-E18-2	11/23/88	H0007ZZ2	10.00 U	5.00 U	10.00 U	5.00 U
299-E18-2	11/27/89	H0008006	10.00 U	5.00 U	5.00 U	5.00 U
299-E18-2	3/13/90	H0008010	10.00 U	5.00 U	5.00 U	5.00 U
299-E18-2	7/10/92	B06PJ3		5.00 U		5.00 U
299-E18-3	11/10/88	H0008023	10.00 U	5.00 U	10.00 U	5.00 U
299-E18-3	11/10/88	H0008026	10.00 U	5.00 U	10.00 U	5.00 U
299-E18-3	11/28/88	H0008027	10.00 U	5.00 U	10.00 U	5.00 U
299-E18-3	11/27/89	H0008041	10.00 U	5.00 U	5.00 U	5.00 U
299-E18-3	11/27/89	H0008044	10.00 U	5.00 U	5.00 U	5.00 U
299-E18-3	3/13/90	H0008045	10.00 U	5.00 U	5.00 U	5.00 U
299-E18-3	6/03/92	B06PK0		5.00 U		5.00 U
299-E18-3	6/03/92	B06PK1		5.00 U		5.00 U
299-E18-4	11/09/88	H0008058	10.00 U	5.00 U	10.00 U	5.00 U
299-E18-4	11/09/88	H0008061	10.00 U	5.00 U	10.00 U	5.00 U
299-E18-4	11/23/88	H0008062	10.00 U	5.00 U	10.00 U	5.00 U
299-E18-4	11/21/89	H0008076	10.00 U	5.00 U	5.00 U	5.00 U
299-E18-4	6/03/92	B06PK6		5.00 U		5.00 U

Well Name	Collection Date	Sample Number	1,1-DIC 16/ppb 5/.	1,1-DIC 45/ppb ./.	DICETHY 16/ppb 5/7	1,1-DIM 38/ppb ./.
299-E18-1	11/10/88	H0007ZV2		10.00 U	10.00 U	
299-E18-1	11/10/88	H0007ZV3		10.00 U	10.00 U	
299-E18-1	11/10/88	H0007ZV4		10.00 U	10.00 U	
299-E18-1	11/10/88	H0007ZV5		10.00 U	10.00 U	
299-E18-1	11/23/88	H0007ZV6		10.00 U	10.00 U	
299-E18-1	2/15/89	H0007ZV8		5.00 U		
299-E18-1	5/26/89	H0007ZW2		5.00 U		
299-E18-1	8/08/89	H0007ZW6		5.00 U		

Groundwater Data for 2101-M Pond

Well Name	Collection Date	Sample Number	1,1-DIC 16/ppb 5/.	1,1-DIC 45/ppb ./.	DICETHY 16/ppb 5/7	1,1-DIM 38/ppb ./.
299-E18-1	10/31/89	H0007ZX0		5.00 U	10.00 U	10.00 U
299-E18-1	6/03/92	B06PH8	5.00 U			
299-E18-2	11/10/88	H0007ZY4		10.00 U	10.00 U	
299-E18-2	11/10/88	H0007ZY7		10.00 U	10.00 U	
299-E18-2	11/23/88	H0007ZZ2		10.00 U	10.00 U	
299-E18-2	11/27/89	H0008006		5.00 U	10.00 U	10.00 U
299-E18-2	3/13/90	H0008010		5.00 U	10.00 U	10.00 U
299-E18-2	7/10/92	B06PJ3	5.00 U			
299-E18-3	11/10/88	H0008023		10.00 U	10.00 U	
299-E18-3	11/10/88	H0008026		10.00 U	10.00 U	
299-E18-3	11/28/88	H0008027		10.00 U	10.00 U	
299-E18-3	11/27/89	H0008041		5.00 U	10.00 U	10.00 U
299-E18-3	11/27/89	H0008044		5.00 U	10.00 U	10.00 U
299-E18-3	3/13/90	H0008045		5.00 U	10.00 U	10.00 U
299-E18-3	6/03/92	B06PK0	5.00 U			
299-E18-3	6/03/92	B06PK1	5.00 U			
299-E18-4	11/09/88	H0008058		10.00 U	10.00 U	
299-E18-4	11/09/88	H0008061		10.00 U	10.00 U	
299-E18-4	11/23/88	H0008062		10.00 U	10.00 U	
299-E18-4	11/21/89	H0008076		5.00 U	10.00 U	10.00 U
299-E18-4	6/03/92	B06PK6	5.00 U			

Well Name	Collection Date	Sample Number	1235TE 19/ppb ./.	123-trp 16/ppb 5/.	123TRI 21/ppb ./.	TETRCHB 21/ppb ./.
299-E18-1	11/10/88	H0007ZV2	10.00 U	10.00 U	10.00 U	10.00 U
299-E18-1	11/10/88	H0007ZV3		10.00 U		
299-E18-1	11/10/88	H0007ZV4		10.00 U		
299-E18-1	11/10/88	H0007ZV5		10.00 U		
299-E18-1	11/23/88	H0007ZV6		10.00 U		
299-E18-1	10/31/89	H0007ZX0	10.00 U	10.00 U	10.00 U	10.00 U
299-E18-2	11/10/88	H0007ZY4	10.00 U	10.00 U	10.00 U	10.00 U
299-E18-2	11/10/88	H0007ZY7		10.00 U		
299-E18-2	11/23/88	H0007ZZ2		10.00 U		
299-E18-2	11/27/89	H0008006	10.00 U	10.00 U	10.00 U	10.00 U
299-E18-2	3/13/90	H0008010		10.00 U		
299-E18-3	11/10/88	H0008023	10.00 U	10.00 U	10.00 U	10.00 U
299-E18-3	11/10/88	H0008026		10.00 U		
299-E18-3	11/28/88	H0008027		10.00 U		
299-E18-3	11/27/89	H0008041	10.00 U	10.00 U	10.00 U	10.00 U
299-E18-3	11/27/89	H0008044	10.00 U	10.00 U	10.00 U	10.00 U
299-E18-3	3/13/90	H0008045		10.00 U		

Groundwater Data for 2101-M Pond

Well Name	Collection Date	Sample Number	1235TE 19/ppb ./.	123-trp 16/ppb 5/.	123TRI 21/ppb ./.	TETRCHB 21/ppb ./.
299-E18-4	11/09/88	H0008058	10.00 U	10.00 U	10.00 U	10.00 U
299-E18-4	11/09/88	H0008061		10.00 U		
299-E18-4	11/23/88	H0008062		10.00 U		
299-E18-4	11/21/89	H0008076	10.00 U	10.00 U	10.00 U	10.00 U

Well Name	Collection Date	Sample Number	TRICHLB 21/ppb ./.	DIBRCHL 16/ppb 5/.	DIBRETH 16/ppb 5/.	12-dben 21/ppb ./.
299-E18-1	11/10/88	H0007ZV2	10.00 U	10.00 U	10.00 U	10.00 U
299-E18-1	11/10/88	H0007ZV3		10.00 U	10.00 U	
299-E18-1	11/10/88	H0007ZV4		10.00 U	10.00 U	
299-E18-1	11/10/88	H0007ZV5		10.00 U	10.00 U	
299-E18-1	11/23/88	H0007ZV6		10.00 U	10.00 U	
299-E18-1	10/31/89	H0007ZX0	10.00 U	10.00 U	10.00 U	10.00 U
299-E18-2	11/10/88	H0007ZY4	10.00 U	10.00 U	10.00 U	10.00 U
299-E18-2	11/10/88	H0007ZY7		10.00 U	10.00 U	
299-E18-2	11/23/88	H0007ZZ2		10.00 U	10.00 U	
299-E18-2	11/27/89	H0008006	10.00 U	10.00 U	10.00 U	10.00 U
299-E18-2	3/13/90	H0008010		10.00 U	10.00 U	
299-E18-3	11/10/88	H0008023	10.00 U	10.00 U	10.00 U	10.00 U
299-E18-3	11/10/88	H0008026		10.00 U	10.00 U	
299-E18-3	11/28/88	H0008027		10.00 U	10.00 U	
299-E18-3	11/27/89	H0008041	10.00 U	10.00 U	10.00 U	10.00 U
299-E18-3	11/27/89	H0008044	10.00 U	10.00 U	10.00 U	10.00 U
299-E18-3	3/13/90	H0008045		10.00 U	10.00 U	
299-E18-4	11/09/88	H0008058	10.00 U	10.00 U	10.00 U	10.00 U
299-E18-4	11/09/88	H0008061		10.00 U	10.00 U	
299-E18-4	11/23/88	H0008062		10.00 U	10.00 U	
299-E18-4	11/21/89	H0008076	10.00 U	10.00 U	10.00 U	10.00 U

Well Name	Collection Date	Sample Number	1,2-DIC 16/ppb 5/5	DICPANE 16/ppb 5/.	1,2-DIM 16/ppb ./.	DIPHHYD 21/ppb ./.
299-E18-1	11/10/88	H0007ZV2	10.00 U	10.00 U		10.00 U
299-E18-1	11/10/88	H0007ZV3	10.00 U	10.00 U		
299-E18-1	11/10/88	H0007ZV4	10.00 U	10.00 U		
299-E18-1	11/10/88	H0007ZV5	10.00 U	10.00 U		
299-E18-1	11/23/88	H0007ZV6	10.00 U	10.00 U		
299-E18-1	2/15/89	H0007ZV8	5.00 U			

Groundwater Data for 2101-M Pond

Well Name	Collection Date	Sample Number	1,2-DIC 16/ppb 5/5	DICPANE 16/ppb 5/.	1,2-DIM 16/ppb ./.	DIPHHYD 21/ppb ./.
299-E18-1	5/26/89	H0007ZW2	5.00 U			
299-E18-1	8/08/89	H0007ZW6	5.00 U			
299-E18-1	10/31/89	H0007ZX0	5.00 U	5.00 U	10.00 U	10.00 U
299-E18-1	6/03/92	B06PH8	5.00 U			
299-E18-2	11/10/88	H0007ZY4	10.00 U	10.00 U		10.00 U
299-E18-2	11/10/88	H0007ZY7	10.00 U	10.00 U		
299-E18-2	11/23/88	H0007ZZ2	10.00 U	10.00 U		
299-E18-2	11/27/89	H0008006	5.00 U	5.00 U	10.00 U	10.00 U
299-E18-2	3/13/90	H0008010	5.00 U	5.00 U	10.00 U	
299-E18-2	7/10/92	B06PJ3	5.00 U			
299-E18-3	11/10/88	H0008023	10.00 U	10.00 U		10.00 U
299-E18-3	11/10/88	H0008026	10.00 U	10.00 U		
299-E18-3	11/28/88	H0008027	10.00 U	10.00 U		
299-E18-3	11/27/89	H0008041	5.00 U	5.00 U	10.00 U	10.00 U
299-E18-3	11/27/89	H0008044	5.00 U	5.00 U	10.00 U	10.00 U
299-E18-3	3/13/90	H0008045	5.00 U	5.00 U	10.00 U	
299-E18-3	6/03/92	B06PK0	5.00 U			
299-E18-3	6/03/92	B06PK1	5.00 U			
299-E18-4	11/09/88	H0008058	10.00 U	10.00 U		10.00 U
299-E18-4	11/09/88	H0008061	10.00 U	10.00 U		
299-E18-4	11/23/88	H0008062	10.00 U	10.00 U		
299-E18-4	11/21/89	H0008076	5.00 U	5.00 U	10.00 U	10.00 U
299-E18-4	6/03/92	B06PK6	5.00 U			

Well Name	Collection Date	Sample Number	135TRI 21/ppb ./.	13-dben 20/ppb ./.	14-dben 16/ppb 5/750	14-dben 21/ppb ./750
299-E18-1	11/10/88	H0007ZV2	10.00 U	10.00 U		10.00 U
299-E18-1	10/31/89	H0007ZX0	10.00 U	10.00 U		10.00 U
299-E18-1	6/03/92	B06PH8			5.00 U	
299-E18-2	11/10/88	H0007ZY4	10.00 U	10.00 U		10.00 U
299-E18-2	11/27/89	H0008006	10.00 U	10.00 U		10.00 U
299-E18-2	7/10/92	B06PJ3			5.00 U	
299-E18-3	11/10/88	H0008023	10.00 U	10.00 U		10.00 U
299-E18-3	11/27/89	H0008041	10.00 U	10.00 U		10.00 U
299-E18-3	11/27/89	H0008044	10.00 U	10.00 U		10.00 U
299-E18-3	6/03/92	B06PK0			5.00 U	
299-E18-3	6/03/92	B06PK1			5.00 U	
299-E18-4	11/09/88	H0008058	10.00 U	10.00 U		10.00 U
299-E18-4	11/21/89	H0008076	10.00 U	10.00 U		10.00 U
299-E18-4	6/03/92	B06PK6			5.00 U	

Groundwater Data for 2101-M Pond

Well Name	Collection Date	Sample Number	135TRI 21/ppb ./.	13-dben 20/ppb ./.	14-dben 16/ppb 5/750	14-dben 21/ppb ./750

Well Name	Collection Date	Sample Number	14-dben 24/ppb ./750	DIOXANE 16/ppb 200/.	NAPHQUI 21/ppb ./.	CHLOREA 18/ppb ./.
299-E18-1	11/10/88	H0007ZV2		500.00 U	10.00 U	200.00 U
299-E18-1	11/10/88	H0007ZV3		500.00 U		
299-E18-1	11/10/88	H0007ZV4		500.00 U		
299-E18-1	11/10/88	H0007ZV5		500.00 U		
299-E18-1	11/23/88	H0007ZV6		500.00 U		
299-E18-1	2/15/89	H0007ZV8	5.00 U			
299-E18-1	5/26/89	H0007ZW2	5.00 U			
299-E18-1	8/08/89	H0007ZW6	5.00 U			
299-E18-1	10/31/89	H0007ZX0	5.00 U	500.00 U	10.00 U	200.00 U
299-E18-2	11/10/88	H0007ZY4		500.00 U	10.00 U	200.00 U
299-E18-2	11/10/88	H0007ZY7		500.00 U		
299-E18-2	11/23/88	H0007ZZ2		500.00 U		
299-E18-2	11/27/89	H0008006	5.00 U	500.00 U	10.00 U	200.00 U
299-E18-2	3/13/90	H0008010	5.00 U	500.00 U		
299-E18-3	11/10/88	H0008023		500.00 U	10.00 U	200.00 U
299-E18-3	11/10/88	H0008026		500.00 U		
299-E18-3	11/28/88	H0008027		500.00 U		
299-E18-3	11/27/89	H0008041	5.00 U	500.00 U	10.00 U	200.00 U
299-E18-3	11/27/89	H0008044	5.00 U	500.00 U	10.00 U	200.00 U
299-E18-3	3/13/90	H0008045	5.00 U	500.00 U		
299-E18-4	11/09/88	H0008058		500.00 U	10.00 U	200.00 U
299-E18-4	11/09/88	H0008061		500.00 U		
299-E18-4	11/23/88	H0008062		500.00 U		
299-E18-4	11/21/89	H0008076	5.00 U	500.00 U	10.00 U	200.00 U

Well Name	Collection Date	Sample Number	ACETREA 18/ppb ./.	1BUTYN 16/ppm 1/.	1BUTYN 28/ppb ./.	1BUTYN 28/ppb ./.
299-E18-1	11/10/88	H0007ZV2	200.00 U		5000.00 U	
299-E18-1	10/31/89	H0007ZX0	200.00 U		10000.00 U	10000.00 U
299-E18-1	6/03/92	B06PH8		1.00 U		
299-E18-2	11/10/88	H0007ZY4	200.00 U		5000.00 U	
299-E18-2	11/27/89	H0008006	200.00 U		10000.00 U	10000.00 U
299-E18-2	7/10/92	B06PJ3		1.00 U		
299-E18-3	11/10/88	H0008023	200.00 U		5000.00 U	

Groundwater Data for 2101-M Pond

Well Name	Collection Date	Sample Number	ACETREA 18/ppb ./.	1BUTYN 16/ppm 1/.	1BUTYN 28/ppb ./.	1BUTYN 28/ppb ./.
299-E18-3	11/27/89	H0008041	200.00 U		10000.00 U	10000.00 U
299-E18-3	11/27/89	H0008044	200.00 U		10000.00 U	10000.00 U
299-E18-3	6/03/92	B06PK0		1.00 U		
299-E18-3	6/03/92	B06PK1		1.00 U		
299-E18-4	11/09/88	H0008058	200.00 U		5000.00 U	
299-E18-4	11/21/89	H0008076	200.00 U		10000.00 U	10000.00 U
299-E18-4	6/03/92	B06PK6		1.00 U		

Well Name	Collection Date	Sample Number	CHLEPOX 21/ppb ./.	NAPHREA 18/ppb ./.	1-napha 21/ppb ./.	1PROPAN 28/ppb ./.
299-E18-1	11/10/88	H0007ZV2	10.00 U	200.00 U	10.00 U	
299-E18-1	10/31/89	H0007ZX0	10.00 U	200.00 U	10.00 U	10000.00 U
299-E18-2	11/10/88	H0007ZY4	10.00 U	200.00 U	10.00 U	
299-E18-2	11/27/89	H0008006	10.00 U	200.00 U	10.00 U	10000.00 U
299-E18-3	11/10/88	H0008023	10.00 U	200.00 U	10.00 U	
299-E18-3	11/27/89	H0008041	10.00 U	200.00 U	10.00 U	10000.00 U
299-E18-3	11/27/89	H0008044	10.00 U	200.00 U	10.00 U	10000.00 U
299-E18-4	11/09/88	H0008058	10.00 U	200.00 U	10.00 U	
299-E18-4	11/21/89	H0008076	10.00 U	200.00 U	10.00 U	10000.00 U

Well Name	Collection Date	Sample Number	TETRCHP 21/ppb ./.	2378TCD 51/ppb .005/.	2,4,5-T 49/ppb 2/.	2,4,5TP 49/ppb 2/10
299-E18-1	8/16/88	H0007ZT7				2.00 U
299-E18-1	11/10/88	H0007ZV2	10.00 U		2.00 U	2.00 U
299-E18-1	2/15/89	H0007ZV8			2.00 U	2.00 U
299-E18-1	5/26/89	H0007ZW2			2.00 U	2.00 U
299-E18-1	8/08/89	H0007ZW6			2.00 U	2.00 U
299-E18-1	10/31/89	H0007ZX0	10.00 U	.01 U	2.00 U	2.00 U
299-E18-1	6/03/92	B06PH8			2.00 U	2.00 U
299-E18-1	12/16/92	B07SN0			2.00 U	2.00 U
299-E18-2	8/16/88	H0007ZX9				2.00 U
299-E18-2	11/10/88	H0007ZY4	10.00 U		2.00 U	2.00 U
299-E18-2	11/22/88	H0007ZY8				2.00 U
299-E18-2	2/16/89	H0007ZZ4			2.00 U	2.00 U
299-E18-2	6/01/89	H0007ZZ8			2.00 U	2.00 U
299-E18-2	8/11/89	H0008002			2.00 U	2.00 U
299-E18-2	11/27/89	H0008006	10.00 U	.01 U	2.00 U	2.00 U

Groundwater Data for 2101-M Pond

Well Name	Collection Date	Sample Number	TETRCHP 21/ppb ./.	2378TCD 51/ppb .005/.	2,4,5-T 49/ppb 2/.	2,4,5TP 49/ppb 2/10
299-E18-2	7/10/92	B06PJ3			2.00 U	2.00 U
299-E18-3	8/16/88	H0008018				2.00 U
299-E18-3	11/10/88	H0008023	10.00 U		2.00 U	2.00 U
299-E18-3	2/16/89	H0008029			2.00 U	2.00 U
299-E18-3	6/01/89	H0008033			2.00 U	2.00 U
299-E18-3	6/01/89	H0008036			2.00 U	2.00 U
299-E18-3	8/08/89	H0008037			2.00 U	2.00 U
299-E18-3	11/27/89	H0008041	10.00 U	.01 U	2.00 U	2.00 U
299-E18-3	11/27/89	H0008044	10.00 U	.01 U	2.00 U	2.00 U
299-E18-3	6/03/92	B06PK0			2.00 U	2.00 U
299-E18-3	6/03/92	B06PK1			2.00 U	2.00 U
299-E18-4	8/16/88	H0008053				2.00 U
299-E18-4	11/09/88	H0008058	10.00 U		2.00 U	2.00 U
299-E18-4	2/15/89	H0008064			2.00 U	2.00 U
299-E18-4	5/26/89	H0008068			2.00 U	2.00 U
299-E18-4	8/08/89	H0008072			2.00 U	2.00 U
299-E18-4	11/21/89	H0008076	10.00 U	.01 U	2.00 U	2.00 U
299-E18-4	6/03/92	B06PK6			2.00 U	2.00 U

Well Name	Collection Date	Sample Number	245-trp 21/ppb ./.	246-trp 21/ppb ./.	246-trp 30/ppb 5/.	2,4-D 49/ppb 10/100
299-E18-1	8/16/88	H0007ZT7				2.00 U
299-E18-1	11/10/88	H0007ZV2	50.00 U	10.00 U		2.00 U
299-E18-1	2/15/89	H0007ZV8				2.00 U
299-E18-1	5/26/89	H0007ZW2				2.00 U
299-E18-1	8/08/89	H0007ZW6				2.00 U
299-E18-1	10/31/89	H0007ZX0	10.00 U	10.00 U		2.00 U
299-E18-1	1/24/92	B01Q59			5.00 U	
299-E18-1	6/03/92	B06PH8			5.00 U	10.00 U
299-E18-1	12/16/92	B07SN0			5.00 U	10.00 U
299-E18-2	8/16/88	H0007ZX9				2.00 U
299-E18-2	11/10/88	H0007ZY4	50.00 U	10.00 U		2.00 U
299-E18-2	11/22/88	H0007ZY8				2.00 U
299-E18-2	2/16/89	H0007ZZ4				2.00 U
299-E18-2	6/01/89	H0007ZZ8				2.00 U
299-E18-2	8/11/89	H0008002				2.00 U
299-E18-2	11/27/89	H0008006	10.00 U	10.00 U		2.00 U
299-E18-2	7/10/92	B06PJ3			5.00 U	10.00 U
299-E18-3	8/16/88	H0008018				2.00 U
299-E18-3	11/10/88	H0008023	50.00 U	10.00 U		2.00 U
299-E18-3	2/16/89	H0008029				2.00 U

Groundwater Data for 2101-M Pond

Well Name	Collection Date	Sample Number	245-trp 21/ppb ./.	246-trp 21/ppb ./.	246-trp 30/ppb 5/.	2,4-D 49/ppb 10/100
299-E18-3	6/01/89	H0008033				2.00 U
299-E18-3	6/01/89	H0008036				2.00 U
299-E18-3	8/08/89	H0008037				2.00 U
299-E18-3	11/27/89	H0008041	10.00 U	10.00 U		2.00 U
299-E18-3	11/27/89	H0008044	10.00 U	10.00 U		2.00 U
299-E18-3	6/03/92	B06PK0			5.00 U	10.00 U
299-E18-3	6/03/92	B06PK1			5.00 U	10.00 U
299-E18-4	8/16/88	H0008053				2.00 U
299-E18-4	11/09/88	H0008058	50.00 U	10.00 U		2.00 U
299-E18-4	2/15/89	H0008064				2.00 U
299-E18-4	5/26/89	H0008068				2.00 U
299-E18-4	8/08/89	H0008072				2.00 U
299-E18-4	11/21/89	H0008076	10.00 U	10.00 U		2.00 U
299-E18-4	6/03/92	B06PK6			5.00 U	10.00 U

Well Name	Collection Date	Sample Number	24-dchp 21/ppb ./.	24-dchp 30/ppb 5/.	DIMPHEN 19/ppb 10/.	DIMPHEN 30/ppb 5/.
299-E18-1	11/10/88	H0007ZV2	10.00 U		10.00 U	
299-E18-1	10/31/89	H0007ZX0	10.00 U			
299-E18-1	1/24/92	B01Q59		5.00 U		5.00 U
299-E18-1	6/03/92	B06PH8		5.00 U		5.00 U
299-E18-1	12/16/92	B07SN0		5.00 U		5.00 U
299-E18-2	11/10/88	H0007ZY4	10.00 U		10.00 U	
299-E18-2	11/27/89	H0008006	10.00 U			
299-E18-2	7/10/92	B06PJ3		5.00 U		5.00 U
299-E18-3	11/10/88	H0008023	10.00 U		10.00 U	
299-E18-3	11/27/89	H0008041	10.00 U			
299-E18-3	11/27/89	H0008044	10.00 U			
299-E18-3	6/03/92	B06PK0		5.00 U		5.00 U
299-E18-3	6/03/92	B06PK1		5.00 U		5.00 U
299-E18-4	11/09/88	H0008058	10.00 U		10.00 U	
299-E18-4	11/21/89	H0008076	10.00 U			
299-E18-4	6/03/92	B06PK6		5.00 U		5.00 U

Well Name	Collection Date	Sample Number	DINPHEN 30/ppb 150/.	DINPHEN 72/ppb ./.	24-dint 21/ppb ./.	26-dchp 21/ppb ./.
299-E18-1	11/10/88	H0007ZV2		50.00 U	10.00 U	10.00 U

Groundwater Data for 2101-M Pond

Well Name	Collection Date	Sample Number	DINPHEN 30/ppb 150/.	DINPHEN 72/ppb ./.	24-dint 21/ppb ./.	26-dchp 21/ppb ./.
299-E18-1	10/31/89	H0007ZX0		10.00 U	10.00 U	10.00 U
299-E18-1	1/24/92	B01Q59	150.00 U			
299-E18-1	6/03/92	B06PH8	150.00 U			
299-E18-1	12/16/92	B07SN0	150.00 U			
299-E18-2	11/10/88	H0007ZY4		50.00 U	10.00 U	10.00 U
299-E18-2	11/27/89	H0008006		10.00 U	10.00 U	10.00 U
299-E18-2	7/10/92	B06PJ3	150.00 U			
299-E18-3	11/10/88	H0008023		50.00 U	10.00 U	10.00 U
299-E18-3	11/27/89	H0008041		10.00 U	10.00 U	10.00 U
299-E18-3	11/27/89	H0008044		10.00 U	10.00 U	10.00 U
299-E18-3	6/03/92	B06PK0	150.00 U			
299-E18-3	6/03/92	B06PK1	150.00 U			
299-E18-4	11/09/88	H0008058		50.00 U	10.00 U	10.00 U
299-E18-4	11/21/89	H0008076		10.00 U	10.00 U	10.00 U
299-E18-4	6/03/92	B06PK6	150.00 U			

Well Name	Collection Date	Sample Number	26-dchp 30/ppb 5/.	26-dint 21/ppb ./.	ACEFENE 21/ppb ./.	CHLTHER 16/ppb ./.
299-E18-1	11/10/88	H0007ZV2		10.00 U	10.00 U	10.00 U
299-E18-1	11/10/88	H0007ZV3				10.00 U
299-E18-1	11/10/88	H0007ZV4				10.00 U
299-E18-1	11/10/88	H0007ZV5				10.00 U
299-E18-1	11/23/88	H0007ZV6				10.00 U
299-E18-1	10/31/89	H0007ZX0		10.00 U	10.00 U	5.00 U
299-E18-1	1/24/92	B01Q59	5.00 U			
299-E18-1	6/03/92	B06PH8	5.00 U			
299-E18-1	12/16/92	B07SN0	5.00 U			
299-E18-2	11/10/88	H0007ZY4		10.00 U	10.00 U	10.00 U
299-E18-2	11/10/88	H0007ZY7				10.00 U
299-E18-2	11/23/88	H0007ZZ2				10.00 U
299-E18-2	11/27/89	H0008006		10.00 U	10.00 U	5.00 U
299-E18-2	3/13/90	H0008010				5.00 U
299-E18-2	7/10/92	B06PJ3	5.00 U			
299-E18-3	11/10/88	H0008023		10.00 U	10.00 U	10.00 U
299-E18-3	11/10/88	H0008026				10.00 U
299-E18-3	11/28/88	H0008027				10.00 U
299-E18-3	11/27/89	H0008041		10.00 U	10.00 U	5.00 U
299-E18-3	11/27/89	H0008044		10.00 U	10.00 U	5.00 U
299-E18-3	3/13/90	H0008045				5.00 U
299-E18-3	6/03/92	B06PK0	5.00 U			
299-E18-3	6/03/92	B06PK1	5.00 U			

Groundwater Data for 2101-M Pond

Well Name	Collection Date	Sample Number	26-dchp 30/ppb 5/.	26-dint 21/ppb ./.	ACEFENE 21/ppb ./.	CHLTHER 16/ppb ./.
299-E18-4	11/09/88	H0008058		10.00 U	10.00 U	10.00 U
299-E18-4	11/09/88	H0008061				10.00 U
299-E18-4	11/23/88	H0008062				10.00 U
299-E18-4	11/21/89	H0008076		10.00 U	10.00 U	5.00 U
299-E18-4	6/03/92	B06PK6	5.00 U			

Well Name	Collection Date	Sample Number	CHLNAPH 21/ppb ./.	CHLPHEN 21/ppb ./.	CHLPHEN 30/ppb 5/.	CYCHDIN 21/ppb ./.
299-E18-1	11/10/88	H0007ZV2	10.00 U	10.00 U		10.00 U
299-E18-1	10/31/89	H0007ZX0	10.00 U	10.00 U		10.00 U
299-E18-1	1/24/92	B01Q59			5.00 U	
299-E18-1	6/03/92	B06PH8			5.00 U	
299-E18-1	12/16/92	B07SN0			5.00 U	
299-E18-2	11/10/88	H0007ZY4	10.00 U	10.00 U		10.00 U
299-E18-2	11/27/89	H0008006	10.00 U	10.00 U		10.00 U
299-E18-2	7/10/92	B06PJ3			5.00 U	
299-E18-3	11/10/88	H0008023	10.00 U	10.00 U		10.00 U
299-E18-3	11/27/89	H0008041	10.00 U	10.00 U		10.00 U
299-E18-3	11/27/89	H0008044	10.00 U	10.00 U		10.00 U
299-E18-3	6/03/92	B06PK0			5.00 U	
299-E18-3	6/03/92	B06PK1			5.00 U	
299-E18-4	11/09/88	H0008058	10.00 U	10.00 U		10.00 U
299-E18-4	11/21/89	H0008076	10.00 U	10.00 U		10.00 U
299-E18-4	6/03/92	B06PK6			5.00 U	

Well Name	Collection Date	Sample Number	2HEXANO 16/ppb 50/.	METAZIR 21/ppb ./.	METACTO 21/ppb ./.	2MENAPH 21/ppb ./.
299-E18-1	11/10/88	H0007ZV2		10.00 U	10.00 U	
299-E18-1	10/31/89	H0007ZX0	50.00 U	10.00 U	10.00 U	10.00 U
299-E18-2	11/10/88	H0007ZY4		10.00 U	10.00 U	
299-E18-2	11/27/89	H0008006	50.00 U	10.00 U	10.00 U	10.00 U
299-E18-2	3/13/90	H0008010	50.00 U			
299-E18-3	11/10/88	H0008023		10.00 U	10.00 U	
299-E18-3	11/27/89	H0008041	50.00 U	10.00 U	10.00 U	10.00 U
299-E18-3	11/27/89	H0008044	50.00 U	10.00 U	10.00 U	10.00 U
299-E18-3	3/13/90	H0008045	50.00 U			
299-E18-4	11/09/88	H0008058		10.00 U	10.00 U	

Groundwater Data for 2101-M Pond

Well Name	Collection Date	Sample Number	2HEXANO 16/ppb 50/.	METAZIR 21/ppb ./.	METACTO 21/ppb ./.	2MENAPH 21/ppb ./.
299-E18-4	11/21/89	H0008076	50.00 U	10.00 U	10.00 U	10.00 U

Well Name	Collection Date	Sample Number	2-napha 21/ppb ./.	2NITPH 30/ppb 5/.	PICOLIN 21/ppb ./.	PROPYNO 28/ppb ./.
299-E18-1	11/10/88	H0007ZV2	10.00 U		10.00 U	8000.00 U
299-E18-1	10/31/89	H0007ZX0	10.00 U		10.00 U	10000.00 U
299-E18-1	1/24/92	B01Q59		5.00 UQ		
299-E18-1	6/03/92	B06PH8		5.00 U		
299-E18-1	12/16/92	B07SN0		5.00 U		
299-E18-2	11/10/88	H0007ZY4	10.00 U		10.00 U	8000.00 U
299-E18-2	11/27/89	H0008006	10.00 U		10.00 U	10000.00 U
299-E18-2	7/10/92	B06PJ3		5.00 U		
299-E18-3	11/10/88	H0008023	10.00 U		10.00 U	8000.00 U
299-E18-3	11/27/89	H0008041	10.00 U		10.00 U	10000.00 U
299-E18-3	11/27/89	H0008044	10.00 U		10.00 U	10000.00 U
299-E18-3	6/03/92	B06PK0		5.00 U		
299-E18-3	6/03/92	B06PK1		5.00 U		
299-E18-4	11/09/88	H0008058	10.00 U		10.00 U	8000.00 U
299-E18-4	11/21/89	H0008076	10.00 U		10.00 U	10000.00 U
299-E18-4	6/03/92	B06PK6		5.00 U		

Well Name	Collection Date	Sample Number	METPROP 76/ ./.	BUTDINP 21/ppb ./.	BUTDINP 30/ppb 5/.	BUTDINP 49/ppb 1/.
299-E18-1	11/10/88	H0007ZV2	10.00 U	10.00 U		
299-E18-1	10/31/89	H0007ZX0	10.00 U	10.00 U		
299-E18-1	1/24/92	B01Q59			5.00 U	
299-E18-1	6/03/92	B06PH8			5.00 U	1.00 U
299-E18-1	12/16/92	B07SN0			5.00 U	1.00 U
299-E18-2	11/10/88	H0007ZY4	10.00 U	10.00 U		
299-E18-2	11/27/89	H0008006	10.00 U	10.00 U		
299-E18-2	7/10/92	B06PJ3			5.00 U	1.00 U
299-E18-3	11/10/88	H0008023	10.00 U	10.00 U		
299-E18-3	11/27/89	H0008041	10.00 U	10.00 U		
299-E18-3	11/27/89	H0008044	10.00 U	10.00 U		
299-E18-3	6/03/92	B06PK0			5.00 U	1.00 U
299-E18-3	6/03/92	B06PK1			5.00 U	1.00 U
299-E18-4	11/09/88	H0008058	10.00 U	10.00 U		

Groundwater Data for 2101-M Pond

Well Name	Collection Date	Sample Number	METPROP 76/ ./.	BUTDINP 21/ppb ./.	BUTDINP 30/ppb 5/.	BUTDINP 49/ppb 1/.
299-E18-4	11/21/89	H0008076	10.00 U	10.00 U		
299-E18-4	6/03/92	B06PK6			5.00 U	1.00 U

Well Name	Collection Date	Sample Number	DICHBEN 21/ppb ./.	DIMETHB 21/ppb ./.	DIMEYLB 19/ppb 10/.	CHLPROP 28/ppb ./.
299-E18-1	11/10/88	H0007ZV2	20.00 U	10.00 U	10.00 U	4000.00 U
299-E18-1	10/31/89	H0007ZX0	10.00 U	10.00 U	10.00 U	10000.00 U
299-E18-2	11/10/88	H0007ZY4	20.00 U	10.00 U	10.00 U	4000.00 U
299-E18-2	11/27/89	H0008006	10.00 U	10.00 U	10.00 U	10000.00 U
299-E18-3	11/10/88	H0008023	20.00 U	10.00 U	10.00 U	4000.00 U
299-E18-3	11/27/89	H0008041	10.00 U	10.00 U	10.00 U	10000.00 U
299-E18-3	11/27/89	H0008044	10.00 U	10.00 U	10.00 U	10000.00 U
299-E18-4	11/09/88	H0008058	20.00 U	10.00 U	10.00 U	4000.00 U
299-E18-4	11/21/89	H0008076	10.00 U	10.00 U	10.00 U	10000.00 U

Well Name	Collection Date	Sample Number	METCHAN 21/ppb ./.	MNITANI 21/ppb ./.	DDD 17/ppb .1/.	DDE 17/ppb .05/.
299-E18-1	11/10/88	H0007ZV2	10.00 U		.10 U	.10 U
299-E18-1	10/31/89	H0007ZX0	10.00 U	10.00 U	.10 U	.10 U
299-E18-1	6/03/92	B06PH8			.10 U	.05 U
299-E18-1	12/16/92	B07SN0			.10 U	.05 U
299-E18-2	11/10/88	H0007ZY4	10.00 U		.10 U	.10 U
299-E18-2	11/27/89	H0008006	10.00 U	10.00 U	.10 U	.10 U
299-E18-2	7/10/92	B06PJ3			.10 U	.05 U
299-E18-3	11/10/88	H0008023	10.00 U		.10 U	.10 U
299-E18-3	11/27/89	H0008041	10.00 U	10.00 U	.10 U	.10 U
299-E18-3	11/27/89	H0008044	10.00 U	10.00 U	.10 U	.10 U
299-E18-3	6/03/92	B06PK0			.10 U	.05 U
299-E18-3	6/03/92	B06PK1			.10 U	.05 U
299-E18-4	11/09/88	H0008058	10.00 U		.10 U	.10 U
299-E18-4	11/21/89	H0008076	10.00 U	10.00 U	.10 U	.10 U
299-E18-4	6/03/92	B06PK6			.10 U	.05 U

Groundwater Data for 2101-M Pond

Well Name	Collection Date	Sample Number	DDT 17/ppb .1/.	METBISC 21/ppb ./.	46DN2MP 30/ppb 200/.	AMINOYL 21/ppb ./.
299-E18-1	11/10/88	H0007ZV2	.10 U	10.00 U		10.00 U
299-E18-1	10/31/89	H0007ZX0	.10 U	10.00 U		10.00 U
299-E18-1	1/24/92	B01Q59			200.00 U	
299-E18-1	6/03/92	B06PH8	.10 U		200.00 U	
299-E18-1	12/16/92	B07SN0	.10 U		200.00 U	
299-E18-2	11/10/88	H0007ZY4	.10 U	10.00 U		10.00 U
299-E18-2	11/27/89	H0008006	.10 U	10.00 U		10.00 U
299-E18-2	7/10/92	B06PJ3	.10 U		200.00 U	
299-E18-3	11/10/88	H0008023	.10 U	10.00 U		10.00 U
299-E18-3	11/27/89	H0008041	.10 U	10.00 U		10.00 U
299-E18-3	11/27/89	H0008044	.10 U	10.00 U		10.00 U
299-E18-3	6/03/92	B06PK0	.10 U		200.00 U	
299-E18-3	6/03/92	B06PK1	.10 U		200.00 U	
299-E18-4	11/09/88	H0008058	.10 U	10.00 U		10.00 U
299-E18-4	11/21/89	H0008076	.10 U	10.00 U		10.00 U
299-E18-4	6/03/92	B06PK6	.10 U		200.00 U	

Well Name	Collection Date	Sample Number	BROPHEN 21/ppb ./.	CHLCRES 21/ppb ./.	CHLCRES 30/ppb 5/.	CHLANIL 21/ppb ./.
299-E18-1	11/10/88	H0007ZV2	10.00 U	10.00 U		10.00 U
299-E18-1	10/31/89	H0007ZX0	10.00 U	10.00 U		10.00 U
299-E18-1	1/24/92	B01Q59			5.00 U	
299-E18-1	6/03/92	B06PH8			5.00 U	
299-E18-1	12/16/92	B07SN0			5.00 U	
299-E18-2	11/10/88	H0007ZY4	10.00 U	10.00 U		10.00 U
299-E18-2	11/27/89	H0008006	10.00 U	10.00 U		10.00 U
299-E18-2	7/10/92	B06PJ3			5.00 U	
299-E18-3	11/10/88	H0008023	10.00 U	10.00 U		10.00 U
299-E18-3	11/27/89	H0008041	10.00 U	10.00 U		10.00 U
299-E18-3	11/27/89	H0008044	10.00 U	10.00 U		10.00 U
299-E18-3	6/03/92	B06PK0			5.00 U	
299-E18-3	6/03/92	B06PK1			5.00 U	
299-E18-4	11/09/88	H0008058	10.00 U	10.00 U		10.00 U
299-E18-4	11/21/89	H0008076	10.00 U	10.00 U		10.00 U
299-E18-4	6/03/92	B06PK6			5.00 U	

Groundwater Data for 2101-M Pond

Well Name	Collection Date	Sample Number	MIBK 16/ppb 50/.	NITRANI 21/ppb ./.	NITPHEN 21/ppb ./.	NITPHEN 30/ppb 30/.
299-E18-1	11/10/88	H0007ZV2	10.00 U	50.00 U	50.00 U	
299-E18-1	11/10/88	H0007ZV3	10.00 U			
299-E18-1	11/10/88	H0007ZV4	10.00 U			
299-E18-1	11/10/88	H0007ZV5	10.00 U			
299-E18-1	11/23/88	H0007ZV6	10.00 U			
299-E18-1	2/15/89	H0007ZV8	10.00 U			
299-E18-1	5/26/89	H0007ZW2	10.00 U			
299-E18-1	8/08/89	H0007ZW6	10.00 U			
299-E18-1	10/31/89	H0007ZX0	10.00 U	10.00 U	10.00 U	
299-E18-1	1/24/92	B01Q59				30.00 U
299-E18-1	6/03/92	B06PH8	50.00 U			30.00 U
299-E18-1	12/16/92	B07SN0				30.00 U
299-E18-2	11/10/88	H0007ZY4	10.00 U	50.00 U	50.00 U	
299-E18-2	11/10/88	H0007ZY7	10.00 U			
299-E18-2	11/22/88	H0007ZY8	10.00 U			
299-E18-2	11/23/88	H0007ZZ2	10.00 U			
299-E18-2	11/27/89	H0008006	10.00 U	10.00 U	10.00 U	
299-E18-2	3/13/90	H0008010	10.00 U			
299-E18-2	7/10/92	B06PJ3	50.00 U			30.00 U
299-E18-3	11/10/88	H0008023	10.00 U	50.00 U	50.00 U	
299-E18-3	11/10/88	H0008026	10.00 U			
299-E18-3	11/28/88	H0008027	10.00 U			
299-E18-3	11/27/89	H0008041	10.00 U	10.00 U	10.00 U	
299-E18-3	11/27/89	H0008044	10.00 U	10.00 U	10.00 U	
299-E18-3	3/13/90	H0008045	10.00 U			
299-E18-3	6/03/92	B06PK0	50.00 U			30.00 U
299-E18-3	6/03/92	B06PK1	50.00 U			30.00 U
299-E18-4	11/09/88	H0008058	10.00 U	50.00 U	50.00 U	
299-E18-4	11/09/88	H0008061	10.00 U			
299-E18-4	11/23/88	H0008062	10.00 U			
299-E18-4	11/21/89	H0008076	10.00 U	10.00 U	10.00 U	
299-E18-4	6/03/92	B06PK6	50.00 U			30.00 U

Well Name	Collection Date	Sample Number	4NITQUI 21/ppb ./.	AMIISOX 21/ppb ./.	NITRTOL 21/ppb ./.	DIMBENZ 21/ppb ./.
299-E18-1	11/10/88	H0007ZV2		10.00 U	10.00 U	10.00 U
299-E18-1	10/31/89	H0007ZX0	10.00 U	10.00 U	10.00 U	10.00 U
299-E18-2	11/10/88	H0007ZY4		10.00 U	10.00 U	10.00 U
299-E18-2	11/27/89	H0008006	10.00 U	10.00 U	10.00 U	10.00 U
299-E18-3	11/10/88	H0008023		10.00 U	10.00 U	10.00 U
299-E18-3	11/27/89	H0008041	10.00 U	10.00 U	10.00 U	10.00 U

Groundwater Data for 2101-M Pond

Well Name	Collection Date	Sample Number	4NITQUI 21/ppb ./.	AMIISOX 21/ppb ./.	NITRTOL 21/ppb ./.	DIMBENZ 21/ppb ./.
299-E18-3	11/27/89	H0008044	10.00 U	10.00 U	10.00 U	10.00 U
299-E18-4	11/09/88	H0008058		10.00 U	10.00 U	10.00 U
299-E18-4	11/21/89	H0008076	10.00 U	10.00 U	10.00 U	10.00 U

Well Name	Collection Date	Sample Number	DIBCGCA 21/ppb ./.	CS-134 140/pCi/L ./.	ACENAPH 21/ppb ./.	ACENATL 21/ppb ./.
299-E18-1	11/10/88	H0007ZV2	10.00 U			
299-E18-1	10/31/89	H0007ZX0	10.00 U		10.00 U	10.00 U
299-E18-1	9/06/91	B00LB6		-5.41 U		
299-E18-2	11/10/88	H0007ZY4	10.00 U			
299-E18-2	11/27/89	H0008006	10.00 U		10.00 U	10.00 U
299-E18-2	9/06/91	B00LC0		.26 U		
299-E18-3	11/10/88	H0008023	10.00 U			
299-E18-3	11/27/89	H0008041	10.00 U		10.00 U	10.00 U
299-E18-3	11/27/89	H0008044	10.00 U		10.00 U	10.00 U
299-E18-3	9/06/91	B00LC4		.08 U		
299-E18-4	11/09/88	H0008058	10.00 U			
299-E18-4	11/21/89	H0008076	10.00 U		10.00 U	10.00 U
299-E18-4	9/06/91	B00LC8		-2.06 U		

Well Name	Collection Date	Sample Number	ACETONE 16/ppb 100/.	ACETONE 21/ppb ./.	ACETILE 16/ppb 200/.	ACETOPH 21/ppb ./.
299-E18-1	11/10/88	H0007ZV2	2.00 U		3000.00 U	10.00 U
299-E18-1	11/10/88	H0007ZV3	1.00 U		3000.00 U	
299-E18-1	11/10/88	H0007ZV4	3.00 U		3000.00 U	
299-E18-1	11/10/88	H0007ZV5	2.00 U		3000.00 U	
299-E18-1	11/23/88	H0007ZV6	10.00 U		3000.00 U	
299-E18-1	11/23/88	H0007ZV7	5.00 U			
299-E18-1	2/15/89	H0007ZV8	10.00 U			
299-E18-1	5/26/89	H0007ZW2	10.00 U			
299-E18-1	8/08/89	H0007ZW6	10.00 U			
299-E18-1	10/31/89	H0007ZX0	10.00 U	10.00 U	10.00 U	10.00 U
299-E18-1	6/03/92	B06PH8	100.00 U			
299-E18-2	11/10/88	H0007ZY4	2.00 U		3000.00 U	10.00 U
299-E18-2	11/10/88	H0007ZY7	2.00 U		3000.00 U	
299-E18-2	11/23/88	H0007ZZ2	11.00		3000.00 U	
299-E18-2	11/23/88	H0007ZZ3	5.00 U			

Groundwater Data for 2101-M Pond

Well Name	Collection Date	Sample Number	ACETONE 16/ppb 100/.	ACETONE 21/ppb ./.	ACETILE 16/ppb 200/.	ACETOPH 21/ppb ./.
299-E18-2	11/27/89	H0008006	10.00 U	10.00 U	10.00 U	10.00 U
299-E18-2	3/13/90	H0008010	10.00 U		10.00 U	
299-E18-2	7/10/92	B06PJ3	100.00 U			
299-E18-3	11/10/88	H0008023	4.00 U		3000.00 U	10.00 U
299-E18-3	11/10/88	H0008026	10.00 U		3000.00 U	
299-E18-3	11/28/88	H0008027	10.00 U		3000.00 U	
299-E18-3	11/28/88	H0008028	5.00 U			
299-E18-3	11/27/89	H0008041	10.00 U	10.00 U	10.00 U	10.00 U
299-E18-3	11/27/89	H0008044	10.00 U	10.00 U	10.00 U	10.00 U
299-E18-3	3/13/90	H0008045	10.00 U		10.00 U	
299-E18-3	6/03/92	B06PK0	100.00 U			
299-E18-3	6/03/92	B06PK1	100.00 U			
299-E18-4	11/09/88	H0008058	5.00 U		3000.00 U	10.00 U
299-E18-4	11/09/88	H0008061	3.00 U		3000.00 U	
299-E18-4	11/23/88	H0008062	10.00 U		3000.00 U	
299-E18-4	11/23/88	H0008063	5.00 U			
299-E18-4	11/21/89	H0008076	10.00 U	10.00 U	10.00 U	10.00 U
299-E18-4	6/03/92	B06PK6	100.00 U			

Well Name	Collection Date	Sample Number	ACROLIN 16/ppb 5/.	ACRYIDE 28/ppb ./.	ACRYILE 16/ppb 5/.	ALDRIN 17/ppb .05/.
299-E18-1	11/10/88	H0007ZV2	10.00 U	10000.00 U	10.00 U	.10 U
299-E18-1	11/10/88	H0007ZV3	10.00 U		10.00 U	
299-E18-1	11/10/88	H0007ZV4	10.00 U		10.00 U	
299-E18-1	11/10/88	H0007ZV5	10.00 U		10.00 U	
299-E18-1	11/23/88	H0007ZV6	10.00 U		10.00 U	
299-E18-1	10/31/89	H0007ZX0	10.00 U	10000.00 U	10.00 U	.10 U
299-E18-1	6/03/92	B06PH8				.05 U
299-E18-1	12/16/92	B07SN0				.05 U
299-E18-2	11/10/88	H0007ZY4	10.00 U	10000.00 U	10.00 U	.10 U
299-E18-2	11/10/88	H0007ZY7	10.00 U		10.00 U	
299-E18-2	11/23/88	H0007ZZ2	10.00 U		10.00 U	
299-E18-2	11/27/89	H0008006	10.00 U	10000.00 U	10.00 U	.10 U
299-E18-2	3/13/90	H0008010	10.00 U		10.00 U	
299-E18-2	7/10/92	B06PJ3				.05 U
299-E18-3	11/10/88	H0008023	10.00 U	10000.00 U	10.00 U	.10 U
299-E18-3	11/10/88	H0008026	10.00 U		10.00 U	
299-E18-3	11/28/88	H0008027	10.00 U		10.00 U	
299-E18-3	11/27/89	H0008041	10.00 U	10000.00 U	10.00 U	.10 U
299-E18-3	11/27/89	H0008044	10.00 U	10000.00 U	10.00 U	.10 U
299-E18-3	3/13/90	H0008045	10.00 U		10.00 U	

Groundwater Data for 2101-M Pond

Well Name	Collection Date	Sample Number	ACROLIN 16/ppb 5/.	ACRYIDE 28/ppb ./.	ACRYILE 16/ppb 5/.	ALDRIN 17/ppb .05/.
299-E18-3	6/03/92	B06PK0				.05 U
299-E18-3	6/03/92	B06PK1				.05 U
299-E18-4	11/09/88	H0008058	10.00 U	10000.00 U	10.00 U	.10 U
299-E18-4	11/09/88	H0008061	10.00 U		10.00 U	
299-E18-4	11/23/88	H0008062	10.00 U		10.00 U	
299-E18-4	11/21/89	H0008076	10.00 U	10000.00 U	10.00 U	.10 U
299-E18-4	6/03/92	B06PK6				.05 U

Well Name	Collection Date	Sample Number	ALKALIN 53/ppb ./.	ALLYLAL 28/ppb ./.	DIMPHAM 21/ppb ./.	a-BHC 17/ppb .05/4
299-E18-1	8/16/88	H0007ZT7				.10 U
299-E18-1	11/10/88	H0007ZV2		2500.00 U	10.00 U	.10 U
299-E18-1	2/15/89	H0007ZV8				.10 U
299-E18-1	5/26/89	H0007ZW2	102000.00			.10 U
299-E18-1	8/08/89	H0007ZW6	108000.00			.10 U
299-E18-1	10/31/89	H0007ZX0		10000.00 U	10.00 U	.10 U
299-E18-1	11/29/89	H0007ZX1	102000.00			
299-E18-1	6/03/92	B06PH8				.05 U
299-E18-1	12/16/92	B07SN0				.05 U
299-E18-2	8/16/88	H0007ZX9				.10 U
299-E18-2	11/10/88	H0007ZY4		2500.00 U	10.00 U	.10 U
299-E18-2	11/22/88	H0007ZY8				.10 U
299-E18-2	2/16/89	H0007ZZ4				.10 U
299-E18-2	6/01/89	H0007ZZ8	90500.00			.10 U
299-E18-2	8/11/89	H0008002	90000.00			.10 U
299-E18-2	11/27/89	H0008006	91000.00	10000.00 U	10.00 U	.10 U
299-E18-2	7/10/92	B06PJ3				.05 U
299-E18-3	8/16/88	H0008018				.10 U
299-E18-3	11/10/88	H0008023		2500.00 U	10.00 U	.10 U
299-E18-3	2/16/89	H0008029				.10 U
299-E18-3	6/01/89	H0008033	96600.00			.10 U
299-E18-3	6/01/89	H0008036				.10 U
299-E18-3	8/08/89	H0008037	98000.00			.10 U
299-E18-3	11/27/89	H0008041	104000.00	10000.00 U	10.00 U	.10 U
299-E18-3	11/27/89	H0008044	105000.00	10000.00 U	10.00 U	.10 U
299-E18-3	6/03/92	B06PK0				.05 U
299-E18-3	6/03/92	B06PK1				.05 U
299-E18-4	8/16/88	H0008053				.10 U
299-E18-4	11/09/88	H0008058		2500.00 U	10.00 U	.10 U
299-E18-4	2/15/89	H0008064				.10 U
299-E18-4	5/26/89	H0008068	105000.00			.10 U

Groundwater Data for 2101-M Pond

Well Name	Collection Date	Sample Number	ALKALIN 53/ppb ./.	ALLYLAL 28/ppb ./.	DIMPHAM 21/ppb ./.	a-BHC 17/ppb .05/4
299-E18-4	8/08/89	H0008072	105000.00			.10 U
299-E18-4	11/21/89	H0008076	98000.00	10000.00 U	10.00 U	.10 U
299-E18-4	6/03/92	B06PK6				.05 U

Well Name	Collection Date	Sample Number	ALUMNUM 35/ppb ./.	AMITROL 21/ppb ./.	AMMONIU 54/ppb 100/.	ANILINE 21/ppb ./.
299-E18-1	8/16/88	H0007ZT7	351.00			
299-E18-1	9/22/88	H0007ZV1	609.00			
299-E18-1	11/10/88	H0007ZV2	150.00 U	10.00 U	50.00 U	10.00 U
299-E18-1	11/10/88	H0007ZV5	150.00 U		50.00 U	
299-E18-1	2/15/89	H0007ZV8	150.00 U		50.00 U	
299-E18-1	5/26/89	H0007ZW2	150.00 U			
299-E18-1	8/08/89	H0007ZW6	150.00 U		50.00 U	
299-E18-1	10/31/89	H0007ZX0	244.00	10.00 U	50.00 U	10.00 U
299-E18-1	1/24/92	B01Q59			100.00 U	
299-E18-1	6/03/92	B06PH8			100.00 U	
299-E18-1	12/16/92	B07SN0			100.00 U	
299-E18-2	8/16/88	H0007ZX9	150.00 U			
299-E18-2	9/22/88	H0007ZY3	150.00 U			
299-E18-2	11/10/88	H0007ZY4	150.00 U	10.00 U	50.00 U	10.00 U
299-E18-2	11/22/88	H0007ZY8	150.00 U			
299-E18-2	2/16/89	H0007ZZ4	150.00 U			
299-E18-2	2/16/89	H0007ZZ7	150.00 U			
299-E18-2	6/01/89	H0007ZZ8	150.00 U			
299-E18-2	8/11/89	H0008002	150.00 U			
299-E18-2	11/27/89	H0008006	150.00 U	10.00 U	50.00 U	10.00 U
299-E18-2	7/10/92	B06PJ3			100.00 U	
299-E18-3	8/16/88	H0008018	150.00 U			
299-E18-3	9/22/88	H0008022	150.00 U			
299-E18-3	11/10/88	H0008023	150.00 U	10.00 U	50.00 U	10.00 U
299-E18-3	2/16/89	H0008029	150.00 U			
299-E18-3	6/01/89	H0008033	150.00 U			
299-E18-3	6/01/89	H0008036	150.00 U			
299-E18-3	8/08/89	H0008037	150.00 U			
299-E18-3	11/27/89	H0008041	150.00 U	10.00 U	50.00 U	10.00 U
299-E18-3	11/27/89	H0008044	150.00 U	10.00 U	50.00 U	10.00 U
299-E18-3	6/03/92	B06PK0			100.00 U	
299-E18-3	6/03/92	B06PK1			100.00 U	
299-E18-4	8/16/88	H0008053	150.00 U			
299-E18-4	9/22/88	H0008057	173.00			
299-E18-4	11/09/88	H0008058	150.00 U	10.00 U	50.00 U	10.00 U

Groundwater Data for 2101-M Pond

Well Name	Collection Date	Sample Number	ALUMNUM 35/ppb ./.	AMITROL 21/ppb ./.	AMMONIU 54/ppb 100/.	ANILINE 21/ppb ./.
299-E18-4	2/15/89	H0008064	150.00 U			
299-E18-4	5/26/89	H0008068	150.00 U			
299-E18-4	8/08/89	H0008072	150.00 U			
299-E18-4	8/08/89	H0008075	150.00 U			
299-E18-4	11/21/89	H0008076	150.00 U	10.00 U	50.00 U	10.00 U
299-E18-4	6/03/92	B06PK6			100.00 U	

Well Name	Collection Date	Sample Number	ANTHRA 21/ppb ./.	ANTIONY 34/ppb 200/.	ANTIONY 35/ppb ./.	FANTIMO 34/ppb 200/.
299-E18-1	8/16/88	H0007ZT7			100.00 U	
299-E18-1	8/16/88	H0007ZT7				100.00 U
299-E18-1	11/10/88	H0007ZV2			100.00 U	
299-E18-1	11/10/88	H0007ZV2				100.00 U
299-E18-1	11/10/88	H0007ZV5			100.00 U	
299-E18-1	11/10/88	H0007ZV5				100.00 U
299-E18-1	2/15/89	H0007ZV8			100.00 U	
299-E18-1	2/15/89	H0007ZV8				100.00 U
299-E18-1	5/26/89	H0007ZW2			100.00 U	
299-E18-1	5/26/89	H0007ZW2				100.00 U
299-E18-1	8/08/89	H0007ZW6			100.00 U	
299-E18-1	8/08/89	H0007ZW6				100.00 U
299-E18-1	10/31/89	H0007ZX0	10.00 U		100.00 U	
299-E18-1	10/31/89	H0007ZX0				100.00 U
299-E18-1	7/09/91	H00071X9		200.00 U		
299-E18-1	7/09/91	H00071X9F				200.00 U
299-E18-1	9/06/91	B00LB6		200.00 U		
299-E18-1	9/06/91	B00LB6F				200.00 U
299-E18-1	1/24/92	B01Q59		200.00 UD		
299-E18-1	1/24/92	B01Q60				200.00 UD
299-E18-1	6/03/92	B06PH8		200.00 U		
299-E18-1	6/03/92	B06PJ2				200.00 U
299-E18-1	12/16/92	B07S32		200.00 U		
299-E18-1	12/16/92	B07S36				200.00 U
299-E18-2	8/16/88	H0007ZX9			100.00 U	
299-E18-2	8/16/88	H0007ZX9				100.00 U
299-E18-2	11/10/88	H0007ZY4			100.00 U	
299-E18-2	11/10/88	H0007ZY4				100.00 U
299-E18-2	11/22/88	H0007ZY8			100.00 U	
299-E18-2	11/22/88	H0007ZY8				100.00 U
299-E18-2	2/16/89	H0007ZZ4			100.00 U	
299-E18-2	2/16/89	H0007ZZ4				100.00 U

Groundwater Data for 2101-M Pond

Well Name	Collection Date	Sample Number	ANTHRA 21/ppb ./.	ANTIONY 34/ppb 200/.	ANTIONY 35/ppb ./.	FANTIMO 34/ppb 200/.
299-E18-2	2/16/89	H0007ZZ7			100.00 U	
299-E18-2	2/16/89	H0007ZZ7				100.00 U
299-E18-2	6/01/89	H0007ZZ8			100.00 U	
299-E18-2	6/01/89	H0007ZZ8				100.00 U
299-E18-2	8/11/89	H0008002			100.00 U	
299-E18-2	8/11/89	H0008002				100.00 U
299-E18-2	11/27/89	H0008006	10.00 U		100.00 U	
299-E18-2	11/27/89	H0008006				100.00 U
299-E18-2	9/06/91	B00LC0		200.00 U		
299-E18-2	9/06/91	B00LC0F				200.00 U
299-E18-2	7/10/92	B06PJ3		200.00 U		
299-E18-2	7/10/92	B06PJ8				200.00 U
299-E18-2	12/16/92	B07S37		200.00 U		
299-E18-2	12/16/92	B07S41				200.00 U
299-E18-3	8/16/88	H0008018			100.00 U	
299-E18-3	8/16/88	H0008018				100.00 U
299-E18-3	11/10/88	H0008023			100.00 U	
299-E18-3	11/10/88	H0008023				100.00 U
299-E18-3	2/16/89	H0008029			100.00 U	
299-E18-3	2/16/89	H0008029				100.00 U
299-E18-3	6/01/89	H0008033			100.00 U	
299-E18-3	6/01/89	H0008033				100.00 U
299-E18-3	6/01/89	H0008036			100.00 U	
299-E18-3	6/01/89	H0008036				100.00 U
299-E18-3	8/08/89	H0008037			100.00 U	
299-E18-3	8/08/89	H0008037				100.00 U
299-E18-3	11/27/89	H0008041	10.00 U		100.00 U	
299-E18-3	11/27/89	H0008041				100.00 U
299-E18-3	11/27/89	H0008044	10.00 U		100.00 U	
299-E18-3	11/27/89	H0008044				100.00 U
299-E18-3	9/06/91	B00LC4		200.00 U		
299-E18-3	9/06/91	B00LC4F				200.00 U
299-E18-3	6/03/92	B06PK0		200.00 U		
299-E18-3	6/03/92	B06PK1		200.00 U		
299-E18-3	6/03/92	B06PK4				200.00 U
299-E18-3	6/03/92	B06PK5				200.00 U
299-E18-3	12/16/92	B07S44		200.00 U		
299-E18-3	12/16/92	B07S46		200.00 U		
299-E18-3	12/16/92	B07S55				200.00 U
299-E18-3	12/16/92	B07S56				200.00 U
299-E18-4	8/16/88	H0008053			100.00 U	
299-E18-4	8/16/88	H0008053				100.00 U
299-E18-4	11/09/88	H0008058			100.00 U	
299-E18-4	11/09/88	H0008058				100.00 U
299-E18-4	2/15/89	H0008064			100.00 U	

Groundwater Data for 2101-M Pond

Well Name	Collection Date	Sample Number	ANTHRA 21/ppb ./.	ANTIONY 34/ppb 200/.	ANTIONY 35/ppb ./.	FANTIMO 34/ppb 200/.
299-E18-4	2/15/89	H0008064				100.00 U
299-E18-4	5/26/89	H0008068			100.00 U	
299-E18-4	5/26/89	H0008068				100.00 U
299-E18-4	8/08/89	H0008072			100.00 U	
299-E18-4	8/08/89	H0008072				100.00 U
299-E18-4	8/08/89	H0008075			100.00 U	
299-E18-4	8/08/89	H0008075				100.00 U
299-E18-4	11/21/89	H0008076	10.00 U		100.00 U	
299-E18-4	11/21/89	H0008076				100.00 U
299-E18-4	9/06/91	B00LC8		200.00 U		
299-E18-4	9/06/91	B00LC8F				200.00 U
299-E18-4	6/03/92	B06PK6		200.00 U		
299-E18-4	6/03/92	B06PL2				200.00 U
299-E18-4	12/16/92	B07S57		200.00 U		
299-E18-4	12/16/92	B07S61				200.00 U

Well Name	Collection Date	Sample Number	SB-125 140/pCi/L ./.	ARAMITE 21/ppb ./.	AR1016 33/ppb ./.	AR1221 33/ppb ./.
299-E18-1	11/10/88	H0007ZV2		10.00 U	1.00 U	1.00 U
299-E18-1	10/31/89	H0007ZX0		10.00 U	1.00 U	1.00 U
299-E18-1	9/06/91	B00LB6	1.21 U			
299-E18-1	6/03/92	B06PH8	-11.90 U			
299-E18-2	11/10/88	H0007ZY4		10.00 U	1.00 U	1.00 U
299-E18-2	11/27/89	H0008006		10.00 U	1.00 U	1.00 U
299-E18-2	9/06/91	B00LC0	5.66 U			
299-E18-2	7/10/92	B06PJ3	-6.08 U			
299-E18-3	11/10/88	H0008023		10.00 U	1.00 U	1.00 U
299-E18-3	11/27/89	H0008041		10.00 U	1.00 U	1.00 U
299-E18-3	11/27/89	H0008044		10.00 U	1.00 U	1.00 U
299-E18-3	9/06/91	B00LC4	-.19 U			
299-E18-3	6/03/92	B06PK0	-10.30 UQ			
299-E18-3	6/03/92	B06PK1	16.80 Q			
299-E18-4	11/09/88	H0008058		10.00 U	1.00 U	1.00 U
299-E18-4	11/21/89	H0008076		10.00 U	1.00 U	1.00 U
299-E18-4	9/06/91	B00LC8	4.32 U			
299-E18-4	6/03/92	B06PK6	-.56 U			

Groundwater Data for 2101-M Pond

Well Name	Collection Date	Sample Number	AR1232 33/ppb ./.	AR1242 33/ppb ./.	AR1248 33/ppb ./.	AR1254 33/ppb ./.
299-E18-1	11/10/88	H0007ZV2	1.00 U	1.00 U	1.00 U	1.00 U
299-E18-1	10/31/89	H0007ZX0	1.00 U	1.00 U	1.00 U	1.00 U
299-E18-2	11/10/88	H0007ZY4	1.00 U	1.00 U	1.00 U	1.00 U
299-E18-2	11/27/89	H0008006	1.00 U	1.00 U	1.00 U	1.00 U
299-E18-3	11/10/88	H0008023	1.00 U	1.00 U	1.00 U	1.00 U
299-E18-3	11/27/89	H0008041	1.00 U	1.00 U	1.00 U	1.00 U
299-E18-3	11/27/89	H0008044	1.00 U	1.00 U	1.00 U	1.00 U
299-E18-4	11/09/88	H0008058	1.00 U	1.00 U	1.00 U	1.00 U
299-E18-4	11/21/89	H0008076	1.00 U	1.00 U	1.00 U	1.00 U

Well Name	Collection Date	Sample Number	AR1260 33/ppb ./.	ARSENIC 43/ppb 5/50	FARSENI 43/ppb 5/50	FARSENI 76/ ./.
299-E18-1	8/16/88	H0007ZT7		5.00 U		
299-E18-1	8/16/88	H0007ZT7				5.00 U
299-E18-1	9/22/88	H0007ZV1		5.00 U		
299-E18-1	9/22/88	H0007ZV1				5.00 U
299-E18-1	11/10/88	H0007ZV2	1.00 U	5.00 U		
299-E18-1	11/10/88	H0007ZV2				5.00 U
299-E18-1	11/10/88	H0007ZV5		5.00 U		
299-E18-1	11/10/88	H0007ZV5				5.00 U
299-E18-1	2/15/89	H0007ZV8		5.00 U		
299-E18-1	2/15/89	H0007ZV8				5.00 U
299-E18-1	5/26/89	H0007ZW2		5.00 U		
299-E18-1	5/26/89	H0007ZW2				5.00 U
299-E18-1	8/08/89	H0007ZW6		5.00 U		
299-E18-1	8/08/89	H0007ZW6				5.00 U
299-E18-1	10/31/89	H0007ZX0	1.00 U	5.00 U		
299-E18-1	10/31/89	H0007ZX0				5.00 U
299-E18-1	6/03/92	B06PH8		5.00 U		
299-E18-1	6/03/92	B06PJ2			5.00 U	
299-E18-1	12/16/92	B07S32		5.00 U		
299-E18-1	12/16/92	B07S36			5.00 U	
299-E18-2	8/16/88	H0007ZX9		5.00		
299-E18-2	8/16/88	H0007ZX9				5.00
299-E18-2	9/22/88	H0007ZY3		5.00		
299-E18-2	9/22/88	H0007ZY3				5.00
299-E18-2	11/10/88	H0007ZY4	1.00 U	6.00		
299-E18-2	11/10/88	H0007ZY4				5.00
299-E18-2	11/22/88	H0007ZY8		6.00		
299-E18-2	11/22/88	H0007ZY8				6.00
299-E18-2	2/16/89	H0007ZZ4		6.00		

Groundwater Data for 2101-M Pond

Well Name	Collection Date	Sample Number	AR1260 33/ppb ./.	ARSENIC 43/ppb 5/50	FARSENI 43/ppb 5/50	FARSENI 76/ ./.
299-E18-2	2/16/89	H0007ZZ4				6.00
299-E18-2	2/16/89	H0007ZZ7		6.00		
299-E18-2	2/16/89	H0007ZZ7				6.00
299-E18-2	6/01/89	H0007ZZ8		7.00		
299-E18-2	6/01/89	H0007ZZ8				5.00
299-E18-2	8/11/89	H0008002		6.00		
299-E18-2	8/11/89	H0008002				6.00
299-E18-2	11/27/89	H0008006	1.00 U	7.00		
299-E18-2	11/27/89	H0008006				5.00 U
299-E18-2	7/10/92	B06PJ3		5.80		
299-E18-2	7/10/92	B06PJ8			6.00	
299-E18-2	12/16/92	B07S37		6.10		
299-E18-2	12/16/92	B07S41			6.10	
299-E18-3	8/16/88	H0008018		51.00		
299-E18-3	8/16/88	H0008018				12.00
299-E18-3	9/22/88	H0008022		11.00		
299-E18-3	9/22/88	H0008022				12.00
299-E18-3	11/10/88	H0008023	1.00 U	11.00		
299-E18-3	11/10/88	H0008023				14.00
299-E18-3	2/16/89	H0008029		13.00		
299-E18-3	2/16/89	H0008029				12.00
299-E18-3	6/01/89	H0008033		14.00		
299-E18-3	6/01/89	H0008033				14.00
299-E18-3	6/01/89	H0008036		13.00		
299-E18-3	6/01/89	H0008036				13.00
299-E18-3	8/08/89	H0008037		11.00		
299-E18-3	8/08/89	H0008037				11.00
299-E18-3	11/27/89	H0008041	1.00 U	13.00		
299-E18-3	11/27/89	H0008041				11.00
299-E18-3	11/27/89	H0008044	1.00 U	14.00		
299-E18-3	11/27/89	H0008044				12.00
299-E18-3	6/03/92	B06PK0		14.00		
299-E18-3	6/03/92	B06PK1		14.00		
299-E18-3	6/03/92	B06PK4			12.00	
299-E18-3	6/03/92	B06PK5			14.00	
299-E18-3	12/16/92	B07S44		12.00		
299-E18-3	12/16/92	B07S46		12.00		
299-E18-3	12/16/92	B07S55			12.00	
299-E18-3	12/16/92	B07S56			11.00	
299-E18-4	8/16/88	H0008053		11.00		
299-E18-4	8/16/88	H0008053				9.00
299-E18-4	9/22/88	H0008057		9.00		
299-E18-4	9/22/88	H0008057				8.00
299-E18-4	11/09/88	H0008058	1.00 U	11.00		
299-E18-4	11/09/88	H0008058				9.00

Groundwater Data for 2101-M Pond

Well Name	Collection Date	Sample Number	AR1260 33/ppb ./.	ARSENIC 43/ppb 5/50	FARSENI 43/ppb 5/50	FARSENI 76/ ./.
299-E18-4	2/15/89	H0008064		11.00		
299-E18-4	2/15/89	H0008064				10.00
299-E18-4	5/26/89	H0008068		11.00		
299-E18-4	5/26/89	H0008068				12.00
299-E18-4	8/08/89	H0008072		10.00		
299-E18-4	8/08/89	H0008072				10.00
299-E18-4	8/08/89	H0008075		10.00		
299-E18-4	8/08/89	H0008075				9.00
299-E18-4	11/21/89	H0008076	1.00 U	10.00		
299-E18-4	11/21/89	H0008076				9.00
299-E18-4	6/03/92	B06PK6		16.00		
299-E18-4	6/03/92	B06PL2			15.00	
299-E18-4	12/16/92	B07S57		13.00		
299-E18-4	12/16/92	B07S61			13.00	

Well Name	Collection Date	Sample Number	AURAMIN 21/ppb ./.	BARIUM 34/ppb 20/1000	BARIUM 35/ppb ./1000	FBARIUM 34/ppb 20/1000
299-E18-1	8/16/88	H0007ZT7			41.00	
299-E18-1	8/16/88	H0007ZT7				41.00
299-E18-1	9/22/88	H0007ZV1			54.00	
299-E18-1	9/22/88	H0007ZV1				48.00
299-E18-1	11/10/88	H0007ZV2	10.00 U		42.00	
299-E18-1	11/10/88	H0007ZV2				43.00
299-E18-1	11/10/88	H0007ZV5			38.00	
299-E18-1	11/10/88	H0007ZV5				38.00
299-E18-1	2/15/89	H0007ZV8			29.00	
299-E18-1	2/15/89	H0007ZV8				31.00
299-E18-1	5/26/89	H0007ZW2			28.00	
299-E18-1	5/26/89	H0007ZW2				25.00
299-E18-1	8/08/89	H0007ZW6			25.00	
299-E18-1	8/08/89	H0007ZW6				34.00
299-E18-1	10/31/89	H0007ZX0	10.00 U		29.00	
299-E18-1	10/31/89	H0007ZX0				28.00
299-E18-1	7/09/91	H00071X9		30.00		
299-E18-1	7/09/91	H00071X9F				25.00
299-E18-1	9/06/91	B00LB6		26.00		
299-E18-1	9/06/91	B00LB6F				24.00
299-E18-1	1/24/92	B01Q59		24.00 D		
299-E18-1	1/24/92	B01Q60				23.00 D
299-E18-1	6/03/92	B06PH8		27.00		
299-E18-1	6/03/92	B06PJ2				27.00

Groundwater Data for 2101-M Pond

Well Name	Collection Date	Sample Number	AURAMIN 21/ppb ./.	BARIUM 34/ppb 20/1000	BARIUM 35/ppb ./1000	FBARIUM 34/ppb 20/1000
299-E18-1	12/16/92	B07S32		30.00		
299-E18-1	12/16/92	B07S36				30.00
299-E18-2	8/16/88	H0007ZX9			49.00	
299-E18-2	8/16/88	H0007ZX9				53.00
299-E18-2	9/22/88	H0007ZY3			54.00	
299-E18-2	9/22/88	H0007ZY3				52.00
299-E18-2	11/10/88	H0007ZY4	10.00 U		51.00	
299-E18-2	11/10/88	H0007ZY4				61.00
299-E18-2	11/22/88	H0007ZY8			52.00	
299-E18-2	11/22/88	H0007ZY8				53.00
299-E18-2	2/16/89	H0007ZZ4			60.00	
299-E18-2	2/16/89	H0007ZZ4				59.00
299-E18-2	2/16/89	H0007ZZ7			61.00	
299-E18-2	2/16/89	H0007ZZ7				62.00
299-E18-2	6/01/89	H0007ZZ8			61.00	
299-E18-2	6/01/89	H0007ZZ8				56.00
299-E18-2	8/11/89	H0008002			56.00	
299-E18-2	8/11/89	H0008002				73.00
299-E18-2	11/27/89	H0008006	10.00 U		57.00	
299-E18-2	11/27/89	H0008006				57.00
299-E18-2	9/06/91	B00LC0		51.00		
299-E18-2	9/06/91	B00LC0F				51.00
299-E18-2	7/10/92	B06PJ3		54.00		
299-E18-2	7/10/92	B06PJ8				52.00
299-E18-2	12/16/92	B07S37		50.00		
299-E18-2	12/16/92	B07S41				50.00
299-E18-3	8/16/88	H0008018			50.00	
299-E18-3	8/16/88	H0008018				52.00
299-E18-3	9/22/88	H0008022			61.00	
299-E18-3	9/22/88	H0008022				59.00
299-E18-3	11/10/88	H0008023	10.00 U		52.00	
299-E18-3	11/10/88	H0008023				56.00
299-E18-3	2/16/89	H0008029			62.00	
299-E18-3	2/16/89	H0008029				63.00
299-E18-3	6/01/89	H0008033			53.00	
299-E18-3	6/01/89	H0008033				55.00
299-E18-3	6/01/89	H0008036			53.00	
299-E18-3	6/01/89	H0008036				58.00
299-E18-3	8/08/89	H0008037			54.00	
299-E18-3	8/08/89	H0008037				61.00
299-E18-3	11/27/89	H0008041	10.00 U		57.00	
299-E18-3	11/27/89	H0008041				56.00
299-E18-3	11/27/89	H0008044	10.00 U		56.00	
299-E18-3	11/27/89	H0008044				57.00
299-E18-3	9/06/91	B00LC4		54.00		

Groundwater Data for 2101-M Pond

Well Name	Collection Date	Sample Number	AURAMIN 21/ppb ./.	BARIUM 34/ppb 20/1000	BARIUM 35/ppb ./1000	FBARIUM 34/ppb 20/1000
299-E18-3	9/06/91	B00LC4F				50.00
299-E18-3	6/03/92	B06PK0		55.00		
299-E18-3	6/03/92	B06PK1		57.00		
299-E18-3	6/03/92	B06PK4				54.00
299-E18-3	6/03/92	B06PK5				54.00
299-E18-3	12/16/92	B07S44		50.00		
299-E18-3	12/16/92	B07S46		50.00		
299-E18-3	12/16/92	B07S55				50.00
299-E18-3	12/16/92	B07S56				50.00
299-E18-4	8/16/88	H0008053			49.00	
299-E18-4	8/16/88	H0008053				52.00
299-E18-4	9/22/88	H0008057			58.00	
299-E18-4	9/22/88	H0008057				55.00
299-E18-4	11/09/88	H0008058	10.00 U		51.00	
299-E18-4	11/09/88	H0008058				52.00
299-E18-4	2/15/89	H0008064			51.00	
299-E18-4	2/15/89	H0008064				52.00
299-E18-4	5/26/89	H0008068			57.00	
299-E18-4	5/26/89	H0008068				57.00
299-E18-4	8/08/89	H0008072			59.00	
299-E18-4	8/08/89	H0008072				64.00
299-E18-4	8/08/89	H0008075			57.00	
299-E18-4	8/08/89	H0008075				65.00
299-E18-4	11/21/89	H0008076	10.00 U		57.00	
299-E18-4	11/21/89	H0008076				57.00
299-E18-4	9/06/91	B00LC8		55.00		
299-E18-4	9/06/91	B00LC8F				54.00
299-E18-4	6/03/92	B06PK6		55.00		
299-E18-4	6/03/92	B06PL2				54.00
299-E18-4	12/16/92	B07S57		50.00		
299-E18-4	12/16/92	B07S61				50.00

Well Name	Collection Date	Sample Number	BENZCAC 21/ppb ./.	BENZENE 16/ppb 5/5	BENDICM 21/ppb ./.	BENTHOL 21/ppb ./.
299-E18-1	11/10/88	H0007ZV2	10.00 U	5.00 U	10.00 U	10.00 U
299-E18-1	11/10/88	H0007ZV3		5.00 U		
299-E18-1	11/10/88	H0007ZV4		5.00 U		
299-E18-1	11/10/88	H0007ZV5		5.00 U		
299-E18-1	11/23/88	H0007ZV6		5.00 U		
299-E18-1	2/15/89	H0007ZV8		5.00 U		
299-E18-1	5/26/89	H0007ZW2		5.00 U		

Groundwater Data for 2101-M Pond

Well Name	Collection Date	Sample Number	BENZCAC 21/ppb ./.	BENZENE 16/ppb 5/5	BENDICM 21/ppb ./.	BENTHOL 21/ppb ./.
299-E18-1	8/08/89	H0007ZW6		5.00 U		
299-E18-1	10/31/89	H0007ZX0	10.00 U	5.00 U	10.00 U	10.00 U
299-E18-1	6/03/92	B06PH8		5.00 U		
299-E18-2	11/10/88	H0007ZY4	10.00 U	5.00 U	10.00 U	10.00 U
299-E18-2	11/10/88	H0007ZY7		5.00 U		
299-E18-2	11/23/88	H0007ZZ2		5.00 U		
299-E18-2	11/27/89	H0008006	10.00 U	5.00 U	10.00 U	10.00 U
299-E18-2	3/13/90	H0008010		5.00 U		
299-E18-2	7/10/92	B06PJ3		5.00 U		
299-E18-3	11/10/88	H0008023	10.00 U	5.00 U	10.00 U	10.00 U
299-E18-3	11/10/88	H0008026		5.00 U		
299-E18-3	11/28/88	H0008027		5.00 U		
299-E18-3	11/27/89	H0008041	10.00 U	5.00 U	10.00 U	10.00 U
299-E18-3	11/27/89	H0008044	10.00 U	5.00 U	10.00 U	10.00 U
299-E18-3	3/13/90	H0008045		5.00 U		
299-E18-3	6/03/92	B06PK0		5.00 U		
299-E18-3	6/03/92	B06PK1		5.00 U		
299-E18-4	11/09/88	H0008058	10.00 U	5.00 U	10.00 U	10.00 U
299-E18-4	11/09/88	H0008061		5.00 U		
299-E18-4	11/23/88	H0008062		5.00 U		
299-E18-4	11/21/89	H0008076	10.00 U	5.00 U	10.00 U	10.00 U
299-E18-4	6/03/92	B06PK6		5.00 U		

Well Name	Collection Date	Sample Number	BENDINE 21/ppb ./.	BENZAAN 21/ppb ./.	BENZOPY 21/ppb ./.	BENZBFL 21/ppb ./.
299-E18-1	11/10/88	H0007ZV2	10.00 U	10.00 U	10.00 U	10.00 U
299-E18-1	10/31/89	H0007ZX0	10.00 U	10.00 U	10.00 U	10.00 U
299-E18-2	11/10/88	H0007ZY4	10.00 U	10.00 U	10.00 U	10.00 U
299-E18-2	11/27/89	H0008006	10.00 U	10.00 U	10.00 U	10.00 U
299-E18-3	11/10/88	H0008023	10.00 U	10.00 U	10.00 U	10.00 U
299-E18-3	11/27/89	H0008041	10.00 U	10.00 U	10.00 U	10.00 U
299-E18-3	11/27/89	H0008044	10.00 U	10.00 U	10.00 U	10.00 U
299-E18-4	11/09/88	H0008058	10.00 U	10.00 U	10.00 U	10.00 U
299-E18-4	11/21/89	H0008076	10.00 U	10.00 U	10.00 U	10.00 U

Groundwater Data for 2101-M Pond

Well Name	Collection Date	Sample Number	BGHIPER 21/ppb ./.	BNZKFLU 21/ppb ./.	BENZJFL 21/ppb ./.	BENZALC 21/ppb ./.
299-E18-1	11/10/88	H0007ZV2			10.00 U	
299-E18-1	10/31/89	H0007ZX0	10.00 U	10.00 U	10.00 U	10.00 U
299-E18-2	11/10/88	H0007ZY4			10.00 U	
299-E18-2	11/27/89	H0008006	10.00 U	10.00 U	10.00 U	10.00 U
299-E18-3	11/10/88	H0008023			10.00 U	
299-E18-3	11/27/89	H0008041	10.00 U	10.00 U	10.00 U	10.00 U
299-E18-3	11/27/89	H0008044	10.00 U	10.00 U	10.00 U	10.00 U
299-E18-4	11/09/88	H0008058			10.00 U	
299-E18-4	11/21/89	H0008076	10.00 U	10.00 U	10.00 U	10.00 U

Well Name	Collection Date	Sample Number	BENZCHL 21/ppb ./.	BERYLUM 34/ppb 3/.	BERYLUM 35/ppb ./.	FBERYLL 34/ppb 3/.
299-E18-1	8/16/88	H0007ZT7			5.00 U	
299-E18-1	8/16/88	H0007ZT7				5.00 U
299-E18-1	11/10/88	H0007ZV2	10.00 U		5.00 U	
299-E18-1	11/10/88	H0007ZV2				5.00 U
299-E18-1	11/10/88	H0007ZV5			5.00 U	
299-E18-1	11/10/88	H0007ZV5				5.00 U
299-E18-1	2/15/89	H0007ZV8			5.00 U	
299-E18-1	2/15/89	H0007ZV8				5.00 U
299-E18-1	5/26/89	H0007ZW2			5.00 U	
299-E18-1	5/26/89	H0007ZW2				5.00 U
299-E18-1	8/08/89	H0007ZW6			5.00 U	
299-E18-1	8/08/89	H0007ZW6				5.00 U
299-E18-1	10/31/89	H0007ZX0	10.00 U		5.00 U	
299-E18-1	10/31/89	H0007ZX0				5.00 U
299-E18-1	7/09/91	H00071X9		3.80		
299-E18-1	7/09/91	H00071X9F				3.00 U
299-E18-1	9/06/91	B00LB6		3.00 U		
299-E18-1	9/06/91	B00LB6F				3.00 U
299-E18-1	1/24/92	B01Q59		3.00 UD		
299-E18-1	1/24/92	B01Q60				3.00 UD
299-E18-1	6/03/92	B06PH8		3.00 U		
299-E18-1	6/03/92	B06PJ2				3.00 U
299-E18-1	12/16/92	B07S32		3.00 U		
299-E18-1	12/16/92	B07S36				3.00 U
299-E18-2	8/16/88	H0007ZX9			5.00 U	
299-E18-2	8/16/88	H0007ZX9				5.00 U
299-E18-2	11/10/88	H0007ZY4	10.00 U		5.00 U	
299-E18-2	11/10/88	H0007ZY4				5.00 U
299-E18-2	11/22/88	H0007ZY8			5.00 U	

Groundwater Data for 2101-M Pond

Well Name	Collection Date	Sample Number	BENZCHL 21/ppb ./.	BERYLUM 34/ppb 3/.	BERYLUM 35/ppb ./.	FBERYLL 34/ppb 3/.
299-E18-2	11/22/88	H0007ZY8				5.00 U
299-E18-2	2/16/89	H0007ZZ4			5.00 U	
299-E18-2	2/16/89	H0007ZZ4				5.00 U
299-E18-2	2/16/89	H0007ZZ7			5.00 U	
299-E18-2	2/16/89	H0007ZZ7				5.00 U
299-E18-2	6/01/89	H0007ZZ8			5.00 U	
299-E18-2	6/01/89	H0007ZZ8				5.00 U
299-E18-2	8/11/89	H0008002			5.00 U	
299-E18-2	8/11/89	H0008002				5.00 U
299-E18-2	11/27/89	H0008006	10.00 U		5.00 U	
299-E18-2	11/27/89	H0008006				5.00 U
299-E18-2	9/06/91	B00LC0		3.00 U		
299-E18-2	9/06/91	B00LC0F				3.00 U
299-E18-2	7/10/92	B06PJ3		3.00 U		
299-E18-2	7/10/92	B06PJ8				3.00 U
299-E18-2	12/16/92	B07S37		3.00 U		
299-E18-2	12/16/92	B07S41				3.00 U
299-E18-3	8/16/88	H0008018			5.00 U	
299-E18-3	8/16/88	H0008018				5.00 U
299-E18-3	11/10/88	H0008023	10.00 U		5.00 U	
299-E18-3	11/10/88	H0008023				5.00 U
299-E18-3	2/16/89	H0008029			5.00 U	
299-E18-3	2/16/89	H0008029				5.00 U
299-E18-3	6/01/89	H0008033			5.00 U	
299-E18-3	6/01/89	H0008033				5.00 U
299-E18-3	6/01/89	H0008036			5.00 U	
299-E18-3	6/01/89	H0008036				5.00 U
299-E18-3	8/08/89	H0008037			5.00 U	
299-E18-3	8/08/89	H0008037				5.00 U
299-E18-3	11/27/89	H0008041	10.00 U		5.00 U	
299-E18-3	11/27/89	H0008041				5.00 U
299-E18-3	11/27/89	H0008044	10.00 U		5.00 U	
299-E18-3	11/27/89	H0008044				5.00 U
299-E18-3	9/06/91	B00LC4		3.00 U		
299-E18-3	9/06/91	B00LC4F				3.00 U
299-E18-3	6/03/92	B06PK0		3.00 U		
299-E18-3	6/03/92	B06PK1		3.00 U		
299-E18-3	6/03/92	B06PK4				3.00 U
299-E18-3	6/03/92	B06PK5				3.00 U
299-E18-3	12/16/92	B07S44		3.00 U		
299-E18-3	12/16/92	B07S46		3.00 U		
299-E18-3	12/16/92	B07S55				3.00 U
299-E18-3	12/16/92	B07S56				3.00 U
299-E18-4	8/16/88	H0008053			5.00 U	
299-E18-4	8/16/88	H0008053				5.00 U

Groundwater Data for 2101-M Pond

Well Name	Collection Date	Sample Number	BENZCHL 21/ppb ./.	BERYLUM 34/ppb 3/.	BERYLUM 35/ppb ./.	FBERYLL 34/ppb 3/.
299-E18-4	11/09/88	H0008058	10.00 U		5.00 U	
299-E18-4	11/09/88	H0008058				5.00 U
299-E18-4	2/15/89	H0008064			5.00 U	
299-E18-4	2/15/89	H0008064				5.00 U
299-E18-4	5/26/89	H0008068			5.00 U	
299-E18-4	5/26/89	H0008068				5.00 U
299-E18-4	8/08/89	H0008072			5.00 U	
299-E18-4	8/08/89	H0008072				5.00
299-E18-4	8/08/89	H0008075			5.00 U	
299-E18-4	8/08/89	H0008075				5.00 U
299-E18-4	11/21/89	H0008076	10.00 U		5.00 U	
299-E18-4	11/21/89	H0008076				5.00 U
299-E18-4	9/06/91	B00LC8		3.00 U		
299-E18-4	9/06/91	B00LC8F				3.00 U
299-E18-4	6/03/92	B06PK6		3.00 U		
299-E18-4	6/03/92	B06PL2				3.00 U
299-E18-4	12/16/92	B07S57		3.00 U		
299-E18-4	12/16/92	B07S61				3.00 U

Well Name	Collection Date	Sample Number	BE-7 140/pCi/L ./.	b-BHC 17/ppb .05/4	BIS2CHM 21/ppb ./.	B2CLMEE 21/ppb ./.
299-E18-1	8/16/88	H0007ZT7		.10 U		
299-E18-1	11/10/88	H0007ZV2		.10 U	10.00 U	
299-E18-1	2/15/89	H0007ZV8		.10 U		
299-E18-1	5/26/89	H0007ZW2		.10 U		
299-E18-1	8/08/89	H0007ZW6		.10 U		
299-E18-1	10/31/89	H0007ZX0		.10 U	10.00 U	10.00 U
299-E18-1	9/06/91	B00LB6	-9.10 U			
299-E18-1	6/03/92	B06PH8		.05 U		
299-E18-1	12/16/92	B07SN0		.05 U		
299-E18-2	8/16/88	H0007ZX9		.10 U		
299-E18-2	11/10/88	H0007ZY4		.10 U	10.00 U	
299-E18-2	11/22/88	H0007ZY8		.10 U		
299-E18-2	2/16/89	H0007ZZ4		.10 U		
299-E18-2	6/01/89	H0007ZZ8		.10 U		
299-E18-2	8/11/89	H0008002		.10 U		
299-E18-2	11/27/89	H0008006		.10 U	10.00 U	10.00 U
299-E18-2	9/06/91	B00LC0	9.22 U			
299-E18-2	7/10/92	B06PJ3		.05 U		
299-E18-3	8/16/88	H0008018		.10 U		
299-E18-3	11/10/88	H0008023		.10 U	10.00 U	

Groundwater Data for 2101-M Pond

Well Name	Collection Date	Sample Number	BE-7 140/pCi/L ./.	b-BHC 17/ppb .05/4	BIS2CHM 21/ppb ./.	B2CLMEE 21/ppb ./.
299-E18-3	2/16/89	H0008029		.10 U		
299-E18-3	6/01/89	H0008033		.10 U		
299-E18-3	6/01/89	H0008036		.10 U		
299-E18-3	8/08/89	H0008037		.10 U		
299-E18-3	11/27/89	H0008041		.10 U	10.00 U	10.00 U
299-E18-3	11/27/89	H0008044		.10 U	10.00 U	10.00 U
299-E18-3	9/06/91	B00LC4	46.90			
299-E18-3	6/03/92	B06PK0		.05 U		
299-E18-3	6/03/92	B06PK1		.05 U		
299-E18-4	8/16/88	H0008053		.10 U		
299-E18-4	11/09/88	H0008058		.10 U	10.00 U	
299-E18-4	2/15/89	H0008064		.10 U		
299-E18-4	5/26/89	H0008068		.10 U		
299-E18-4	8/08/89	H0008072		.10 U		
299-E18-4	11/21/89	H0008076		.10 U	10.00 U	10.00 U
299-E18-4	9/06/91	B00LC8	44.80			
299-E18-4	6/03/92	B06PK6		.05 U		

Well Name	Collection Date	Sample Number	BIS2CHE 21/ppb ./.	BIS2ETH 21/ppb ./.	BIS2EPH 21/ppb ./.	BISTHER 16/ppb ./.
299-E18-1	11/10/88	H0007ZV2	10.00 U	10.00 U	10.00 U	10.00 U
299-E18-1	11/10/88	H0007ZV3				10.00 U
299-E18-1	11/10/88	H0007ZV4				10.00 U
299-E18-1	11/10/88	H0007ZV5				10.00 U
299-E18-1	11/23/88	H0007ZV6				10.00 U
299-E18-1	10/31/89	H0007ZX0	10.00 U	10.00 U	10.00 U	5.00 U
299-E18-2	11/10/88	H0007ZY4	10.00 U	10.00 U	10.00 U	10.00 U
299-E18-2	11/10/88	H0007ZY7				10.00 U
299-E18-2	11/23/88	H0007ZZ2				10.00 U
299-E18-2	11/27/89	H0008006	10.00 U	10.00 U	10.00 U	5.00 U
299-E18-2	3/13/90	H0008010				5.00 U
299-E18-3	11/10/88	H0008023	10.00 U	10.00 U	10.00 U	10.00 U
299-E18-3	11/10/88	H0008026				10.00 U
299-E18-3	11/28/88	H0008027				10.00 U
299-E18-3	11/27/89	H0008041	10.00 U	10.00 U	10.00 U	5.00 U
299-E18-3	11/27/89	H0008044	10.00 U	10.00 U	10.00 U	5.00 U
299-E18-3	3/13/90	H0008045				5.00 U
299-E18-4	11/09/88	H0008058	10.00 U	10.00 U	10.00 U	10.00 U
299-E18-4	11/09/88	H0008061				10.00 U
299-E18-4	11/23/88	H0008062				10.00 U
299-E18-4	11/21/89	H0008076	10.00 U	10.00 U	10.00 U	5.00 U

Groundwater Data for 2101-M Pond

Well Name	Collection Date	Sample Number	BIS2CHE 21/ppb ./.	BIS2ETH 21/ppb ./.	BIS2EPH 21/ppb ./.	BISTHER 16/ppb ./.

Well Name	Collection Date	Sample Number	BORON 35/ppb ./.	BROMIDE 124/ppb 500/.	BROMIDE 46/ppb ./.	BROMONE 16/ppb ./.
299-E18-1	11/10/88	H0007ZV2			1000.00 U	10.00 U
299-E18-1	11/10/88	H0007ZV3				10.00 U
299-E18-1	11/10/88	H0007ZV4				10.00 U
299-E18-1	11/10/88	H0007ZV5			1000.00 U	10.00 U
299-E18-1	11/23/88	H0007ZV6				10.00 U
299-E18-1	2/15/89	H0007ZV8	33.00		1000.00 U	
299-E18-1	5/26/89	H0007ZW2	37.00		1000.00 U	
299-E18-1	8/08/89	H0007ZW6	38.00		1000.00 U	
299-E18-1	10/31/89	H0007ZX0	31.00		1000.00 U	5.00 U
299-E18-1	5/30/90	H0007ZX5			1000.00 U	
299-E18-1	7/09/91	H00071X9		U		
299-E18-1	1/24/92	B01Q59		500.00 U		
299-E18-1	6/03/92	B06PH8		500.00 U		
299-E18-1	12/16/92	B07S32		500.00 U		
299-E18-2	11/10/88	H0007ZY4			1000.00 U	10.00 U
299-E18-2	11/10/88	H0007ZY7				10.00 U
299-E18-2	11/22/88	H0007ZY8			1000.00 U	
299-E18-2	11/23/88	H0007ZZ2				10.00 U
299-E18-2	2/16/89	H0007ZZ4	24.00		1000.00 U	
299-E18-2	2/16/89	H0007ZZ7	13.00			
299-E18-2	6/01/89	H0007ZZ8	19.00		1000.00 U	
299-E18-2	8/11/89	H0008002	19.00		1000.00 U	
299-E18-2	11/27/89	H0008006	18.00			5.00 U
299-E18-2	3/13/90	H0008010			1000.00 U	5.00 U
299-E18-2	5/30/90	H0008014			1000.00 U	
299-E18-2	5/30/90	H0008017			1000.00 U	
299-E18-2	7/10/92	B06PJ3		500.00 U		
299-E18-2	12/16/92	B07S37		500.00 U		
299-E18-3	11/10/88	H0008023			1000.00 U	10.00 U
299-E18-3	11/10/88	H0008026				10.00 U
299-E18-3	11/28/88	H0008027				10.00 U
299-E18-3	2/16/89	H0008029	14.00		1000.00 U	
299-E18-3	6/01/89	H0008033	18.00		1000.00 U	
299-E18-3	6/01/89	H0008036	13.00		1000.00 U	
299-E18-3	8/08/89	H0008037	13.00		1000.00 U	
299-E18-3	11/27/89	H0008041	11.00		1000.00 U	5.00 U
299-E18-3	11/27/89	H0008044	14.00		1000.00 U	5.00 U
299-E18-3	3/13/90	H0008045				5.00 U

Groundwater Data for 2101-M Pond

Well Name	Collection Date	Sample Number	BORON 35/ppb ./.	BROMIDE 124/ppb 500/.	BROMIDE 46/ppb ./.	BROMONE 16/ppb ./.
299-E18-3	5/30/90	H0008049			1000.00 U	
299-E18-3	6/03/92	B06PK0		500.00 U		
299-E18-3	6/03/92	B06PK1		500.00 U		
299-E18-3	12/16/92	B07S44		500.00 U		
299-E18-3	12/16/92	B07S46		500.00 U		
299-E18-4	11/09/88	H0008058			1000.00 U	10.00 U
299-E18-4	11/09/88	H0008061				10.00 U
299-E18-4	11/23/88	H0008062				10.00 U
299-E18-4	2/15/89	H0008064	10.00 U		1000.00 U	
299-E18-4	5/26/89	H0008068	17.00		1000.00 U	
299-E18-4	8/08/89	H0008072	15.00		1000.00 U	
299-E18-4	8/08/89	H0008075	15.00		1000.00 U	
299-E18-4	11/21/89	H0008076	14.00		1000.00 U	5.00 U
299-E18-4	5/30/90	H0008080			1000.00 U	
299-E18-4	6/03/92	B06PK6		500.00 U		
299-E18-4	12/16/92	B07S57		500.00 U		

Well Name	Collection Date	Sample Number	BDCM 16/ppb 5/100	BROMORM 16/ppb 5/100	BUTBENP 21/ppb ./.	CADMIUM 34/ppb 10/10
299-E18-1	11/10/88	H0007ZV2		10.00 U	10.00 U	
299-E18-1	11/10/88	H0007ZV3		10.00 U		
299-E18-1	11/10/88	H0007ZV4		10.00 U		
299-E18-1	11/10/88	H0007ZV5		10.00 U		
299-E18-1	11/23/88	H0007ZV6		10.00 U		
299-E18-1	10/31/89	H0007ZX0	5.00 U	5.00 U	10.00 U	
299-E18-1	7/09/91	H00071X9				10.00 U
299-E18-1	9/06/91	B00LB6				10.00 U
299-E18-1	1/24/92	B01Q59				10.00 UD
299-E18-1	6/03/92	B06PH8				10.00 U
299-E18-1	12/16/92	B07S32				10.00 U
299-E18-2	11/10/88	H0007ZY4		10.00 U	10.00 U	
299-E18-2	11/10/88	H0007ZY7		10.00 U		
299-E18-2	11/23/88	H0007ZZ2		10.00 U		
299-E18-2	11/27/89	H0008006	5.00 U	5.00 U	10.00 U	
299-E18-2	3/13/90	H0008010	5.00 U	5.00 U		
299-E18-2	9/06/91	B00LC0				10.00 U
299-E18-2	7/10/92	B06PJ3				10.00 U
299-E18-2	12/16/92	B07S37				10.00 U
299-E18-3	11/10/88	H0008023		10.00 U	10.00 U	
299-E18-3	11/10/88	H0008026		10.00 U		
299-E18-3	11/28/88	H0008027		10.00 U		

Groundwater Data for 2101-M Pond

Well Name	Collection Date	Sample Number	BDCM 16/ppb 5/100	BROMORM 16/ppb 5/100	BUTBENP 21/ppb ./.	CADMIUM 34/ppb 10/10
299-E18-3	11/27/89	H0008041	5.00 U	5.00 U	10.00 U	
299-E18-3	11/27/89	H0008044	3.00 U	5.00 U	10.00 U	
299-E18-3	3/13/90	H0008045	5.00 U	5.00 U		
299-E18-3	9/06/91	B00LC4				10.00 U
299-E18-3	6/03/92	B06PK0				10.00 U
299-E18-3	6/03/92	B06PK1				10.00 U
299-E18-3	12/16/92	B07S44				10.00 U
299-E18-3	12/16/92	B07S46				10.00 U
299-E18-4	11/09/88	H0008058		10.00 U	10.00 U	
299-E18-4	11/09/88	H0008061		10.00 U		
299-E18-4	11/23/88	H0008062		10.00 U		
299-E18-4	11/21/89	H0008076	5.00 U	5.00 U	10.00 U	
299-E18-4	9/06/91	B00LC8				10.00 U
299-E18-4	6/03/92	B06PK6				10.00 U
299-E18-4	12/16/92	B07S57				10.00 U

Well Name	Collection Date	Sample Number	CADMIUM 35/ppb ./10	FCADMIU 34/ppb 10/10	CALCIUM 34/ppb 100/.	CALCIUM 35/ppb ./.
299-E18-1	8/16/88	H0007ZT7	2.00 U			57300.00
299-E18-1	8/16/88	H0007ZT7		2.00 U		
299-E18-1	9/22/88	H0007ZV1	2.00 U			72800.00
299-E18-1	9/22/88	H0007ZV1		2.00 U		
299-E18-1	11/10/88	H0007ZV2	2.00 U			67400.00
299-E18-1	11/10/88	H0007ZV2		2.00 U		
299-E18-1	11/10/88	H0007ZV5	2.00 U			57700.00
299-E18-1	11/10/88	H0007ZV5		2.00 U		
299-E18-1	2/15/89	H0007ZV8	2.00 U			55700.00
299-E18-1	2/15/89	H0007ZV8		2.00 U		
299-E18-1	5/26/89	H0007ZW2	2.00 U			58000.00
299-E18-1	5/26/89	H0007ZW2		2.00 U		
299-E18-1	8/08/89	H0007ZW6	2.00 U			57000.00
299-E18-1	8/08/89	H0007ZW6		2.00 U		
299-E18-1	10/31/89	H0007ZX0	2.00 U			56900.00
299-E18-1	10/31/89	H0007ZX0		2.00 U		
299-E18-1	7/09/91	H00071X9			60000.00	
299-E18-1	7/09/91	H00071X9F		10.00 U		
299-E18-1	9/06/91	B00LB6			58000.00	
299-E18-1	9/06/91	B00LB6F		10.00 U		
299-E18-1	1/24/92	B01Q59			56000.00 D	
299-E18-1	1/24/92	B01Q60		10.00 UD		
299-E18-1	6/03/92	B06PH8			61000.00	

Groundwater Data for 2101-M Pond

Well Name	Collection Date	Sample Number	CADMIUM 35/ppb ./10	FCADMIU 34/ppb 10/10	CALCIUM 34/ppb 100/.	CALCIUM 35/ppb ./.
299-E18-1	6/03/92	B06PJ2		10.00 U		
299-E18-1	12/16/92	B07S32			59000.00	
299-E18-1	12/16/92	B07S36		10.00 U		
299-E18-2	8/16/88	H0007ZX9	2.00 U			22900.00
299-E18-2	8/16/88	H0007ZX9		2.00 U		
299-E18-2	9/22/88	H0007ZY3	2.00 U			25400.00
299-E18-2	9/22/88	H0007ZY3		2.00 U		
299-E18-2	11/10/88	H0007ZY4	2.00 U			24300.00
299-E18-2	11/10/88	H0007ZY4		2.00 U		
299-E18-2	11/22/88	H0007ZY8	2.00 U			24300.00
299-E18-2	11/22/88	H0007ZY8		2.00 U		
299-E18-2	2/16/89	H0007ZZ4	2.00 U			25700.00
299-E18-2	2/16/89	H0007ZZ4		2.00 U		
299-E18-2	2/16/89	H0007ZZ7	2.00 U			25400.00
299-E18-2	2/16/89	H0007ZZ7		2.00 U		
299-E18-2	6/01/89	H0007ZZ8	2.00 U			27700.00
299-E18-2	6/01/89	H0007ZZ8		2.00 U		
299-E18-2	8/11/89	H0008002	2.00 U			27100.00
299-E18-2	8/11/89	H0008002		2.00 U		
299-E18-2	11/27/89	H0008006	2.00 U			27100.00
299-E18-2	11/27/89	H0008006		2.00 U		
299-E18-2	9/06/91	B00LC0			26000.00	
299-E18-2	9/06/91	B00LC0F		10.00 U		
299-E18-2	7/10/92	B06PJ3			27000.00	
299-E18-2	7/10/92	B06PJ8		10.00 U		
299-E18-2	12/16/92	B07S37			28000.00	
299-E18-2	12/16/92	B07S41		10.00 U		
299-E18-3	8/16/88	H0008018	2.00 U			24800.00
299-E18-3	8/16/88	H0008018		2.00 U		
299-E18-3	9/22/88	H0008022	2.00 U			29600.00
299-E18-3	9/22/88	H0008022		2.00 U		
299-E18-3	11/10/88	H0008023	2.00 U			27000.00
299-E18-3	11/10/88	H0008023		2.00 U		
299-E18-3	2/16/89	H0008029	2.00 U			29600.00
299-E18-3	2/16/89	H0008029		2.00		
299-E18-3	6/01/89	H0008033	2.00 U			27800.00
299-E18-3	6/01/89	H0008033		2.00 U		
299-E18-3	6/01/89	H0008036	2.00 U			27700.00
299-E18-3	6/01/89	H0008036		2.00 U		
299-E18-3	8/08/89	H0008037	2.00 U			27100.00
299-E18-3	8/08/89	H0008037		2.00 U		
299-E18-3	11/27/89	H0008041	2.00 U			29200.00
299-E18-3	11/27/89	H0008041		2.00 U		
299-E18-3	11/27/89	H0008044	2.00 U			28400.00
299-E18-3	11/27/89	H0008044		2.00 U		

Groundwater Data for 2101-M Pond

Well Name	Collection Date	Sample Number	CADMIUM 35/ppb ./10	FCADMIU 34/ppb 10/10	CALCIUM 34/ppb 100/.	CALCIUM 35/ppb ./.
299-E18-3	9/06/91	B00LC4			29000.00	
299-E18-3	9/06/91	B00LC4F		10.00 U		
299-E18-3	6/03/92	B06PK0			29000.00	
299-E18-3	6/03/92	B06PK1			30000.00	
299-E18-3	6/03/92	B06PK4		10.00 U		
299-E18-3	6/03/92	B06PK5		10.00 U		
299-E18-3	12/16/92	B07S44			27000.00	
299-E18-3	12/16/92	B07S46			28000.00	
299-E18-3	12/16/92	B07S55		10.00 U		
299-E18-3	12/16/92	B07S56		10.00 U		
299-E18-4	8/16/88	H0008053	2.00 U			27500.00
299-E18-4	8/16/88	H0008053		2.00 U		
299-E18-4	9/22/88	H0008057	2.00 U			31000.00
299-E18-4	9/22/88	H0008057		2.00 U		
299-E18-4	11/09/88	H0008058	2.00 U			29000.00
299-E18-4	11/09/88	H0008058		2.00 U		
299-E18-4	2/15/89	H0008064	2.00 U			27800.00
299-E18-4	2/15/89	H0008064		2.00 U		
299-E18-4	5/26/89	H0008068	2.00 U			31600.00
299-E18-4	5/26/89	H0008068		2.00 U		
299-E18-4	8/08/89	H0008072	2.00 U			32300.00
299-E18-4	8/08/89	H0008072		2.00 U		
299-E18-4	8/08/89	H0008075	2.00 U			32000.00
299-E18-4	8/08/89	H0008075		2.00 U		
299-E18-4	11/21/89	H0008076	2.00 U			30200.00
299-E18-4	11/21/89	H0008076		2.00 U		
299-E18-4	9/06/91	B00LC8			33000.00	
299-E18-4	9/06/91	B00LC8F		10.00 U		
299-E18-4	6/03/92	B06PK6			30000.00	
299-E18-4	6/03/92	B06PL2		10.00 U		
299-E18-4	12/16/92	B07S57			28000.00	
299-E18-4	12/16/92	B07S61		10.00 U		

Well Name	Collection Date	Sample Number	FCALCIU 34/ppb 100/.	CARBIDE 16/ppb 5/.	TETRANE 16/ppb 5/5	CARPHNT 29/ppb ./.
299-E18-1	8/16/88	H0007ZT7	70800.00			
299-E18-1	9/22/88	H0007ZV1	73700.00			
299-E18-1	11/10/88	H0007ZV2		10.00 U	5.00 U	2.00 U
299-E18-1	11/10/88	H0007ZV2	63200.00			
299-E18-1	11/10/88	H0007ZV3		10.00 U	5.00 U	
299-E18-1	11/10/88	H0007ZV4		10.00 U	5.00 U	

Groundwater Data for 2101-M Pond

Well Name	Collection Date	Sample Number	FCALCIU 34/ppb 100/.	CARBIDE 16/ppb 5/.	TETRANE 16/ppb 5/5	CARPHNT 29/ppb ./.
299-E18-1	11/10/88	H0007ZV5		10.00 U	5.00 U	
299-E18-1	11/10/88	H0007ZV5	58400.00			
299-E18-1	11/23/88	H0007ZV6		10.00 U	5.00 U	
299-E18-1	2/15/89	H0007ZV8			5.00 U	
299-E18-1	2/15/89	H0007ZV8	57600.00			
299-E18-1	5/26/89	H0007ZW2			5.00 U	
299-E18-1	5/26/89	H0007ZW2	60400.00			
299-E18-1	8/08/89	H0007ZW6			5.00 U	
299-E18-1	8/08/89	H0007ZW6	69500.00			
299-E18-1	10/31/89	H0007ZX0		10.00 U	5.00 U	2.00 U
299-E18-1	10/31/89	H0007ZX0	64400.00			
299-E18-1	7/09/91	H00071X9F	60000.00			
299-E18-1	9/06/91	B00LB6F	58000.00			
299-E18-1	1/24/92	B01Q60	57000.00 D			
299-E18-1	6/03/92	B06PH8			5.00 U	
299-E18-1	6/03/92	B06PJ2	60000.00			
299-E18-1	12/16/92	B07S36	58000.00			
299-E18-2	8/16/88	H0007ZX9	25700.00			
299-E18-2	9/22/88	H0007ZY3	25600.00			
299-E18-2	11/10/88	H0007ZY4		10.00 U	5.00 U	2.00 U
299-E18-2	11/10/88	H0007ZY4	25500.00			
299-E18-2	11/10/88	H0007ZY7		10.00 U	5.00 U	
299-E18-2	11/22/88	H0007ZY8			5.00 U	
299-E18-2	11/22/88	H0007ZY8	24600.00			
299-E18-2	11/23/88	H0007ZZ2		10.00 U	5.00 U	
299-E18-2	2/16/89	H0007ZZ4	25300.00			
299-E18-2	2/16/89	H0007ZZ7	26800.00			
299-E18-2	6/01/89	H0007ZZ8	26300.00			
299-E18-2	8/11/89	H0008002	32300.00			
299-E18-2	11/27/89	H0008006		10.00 U	5.00 U	2.00 U
299-E18-2	11/27/89	H0008006	27100.00			
299-E18-2	3/13/90	H0008010		10.00 U	5.00 U	
299-E18-2	9/06/91	B00LC0F	27000.00			
299-E18-2	7/10/92	B06PJ3			5.00 U	
299-E18-2	7/10/92	B06PJ8	26000.00			
299-E18-2	12/16/92	B07S41	27000.00			
299-E18-3	8/16/88	H0008018	26800.00			
299-E18-3	9/22/88	H0008022	31000.00			
299-E18-3	11/10/88	H0008023		10.00 U	5.00 U	2.00 U
299-E18-3	11/10/88	H0008023	28000.00			
299-E18-3	11/10/88	H0008026		10.00 U	5.00 U	
299-E18-3	11/28/88	H0008027		10.00 U	5.00 U	
299-E18-3	2/16/89	H0008029	29800.00			
299-E18-3	6/01/89	H0008033	28500.00			
299-E18-3	6/01/89	H0008036	27900.00			

Groundwater Data for 2101-M Pond

Well Name	Collection Date	Sample Number	FCALCIU 34/ppb 100/.	CARBIDE 16/ppb 5/.	TETRANE 16/ppb 5/5	CARPHNT 29/ppb ./.
299-E18-3	8/08/89	H0008037	29900.00			
299-E18-3	11/27/89	H0008041		10.00 U	5.00 U	2.00 U
299-E18-3	11/27/89	H0008041	29100.00			
299-E18-3	11/27/89	H0008044		10.00 U	5.00 U	2.00 U
299-E18-3	11/27/89	H0008044	29000.00			
299-E18-3	3/13/90	H0008045		10.00 U	5.00 U	
299-E18-3	9/06/91	B00LC4F	27000.00			
299-E18-3	6/03/92	B06PK0			5.00 U	
299-E18-3	6/03/92	B06PK1			5.00 U	
299-E18-3	6/03/92	B06PK4	29000.00			
299-E18-3	6/03/92	B06PK5	29000.00			
299-E18-3	12/16/92	B07S55	27000.00			
299-E18-3	12/16/92	B07S56	28000.00			
299-E18-4	8/16/88	H0008053	30700.00			
299-E18-4	9/22/88	H0008057	31300.00			
299-E18-4	11/09/88	H0008058		10.00 U	5.00 U	2.00 U
299-E18-4	11/09/88	H0008058	28700.00			
299-E18-4	11/09/88	H0008061		10.00 U	5.00 U	
299-E18-4	11/23/88	H0008062		10.00 U	5.00 U	
299-E18-4	2/15/89	H0008064	27400.00			
299-E18-4	5/26/89	H0008068	31700.00			
299-E18-4	8/08/89	H0008072	35000.00			
299-E18-4	8/08/89	H0008075	34900.00			
299-E18-4	11/21/89	H0008076		10.00 U	5.00 U	2.00 U
299-E18-4	11/21/89	H0008076	29100.00			
299-E18-4	9/06/91	B00LC8F	32000.00			
299-E18-4	6/03/92	B06PK6			5.00 U	
299-E18-4	6/03/92	B06PL2	30000.00			
299-E18-4	12/16/92	B07S61	27000.00			

Well Name	Collection Date	Sample Number	CEPR-144 140/pCi/L ./.	CS-137 140/pCi/L ./.	CHLOANE 17/ppb .1/.	CHLORID 124/ppb 200/250000s
299-E18-1	11/10/88	H0007ZV2			1.00 U	
299-E18-1	10/31/89	H0007ZX0			1.00 U	
299-E18-1	7/09/91	H00071X9				7600.00
299-E18-1	9/06/91	B00LB6	10.80 U	.62 U		
299-E18-1	1/24/92	B01Q59				7600.00
299-E18-1	6/03/92	B06PH8		1.73 U	.10 U	7800.00
299-E18-1	12/16/92	B07S32				7800.00
299-E18-1	12/16/92	B07SN0			.10 U	
299-E18-2	11/10/88	H0007ZY4			1.00 U	

Groundwater Data for 2101-M Pond

Well Name	Collection Date	Sample Number	CEPR-144 140/pCi/L ./.	CS-137 140/pCi/L ./.	CHLOANE 17/ppb .1/.	CHLORID 124/ppb 200/250000s
299-E18-2	11/27/89	H0008006			1.00 U	
299-E18-2	9/06/91	B00LC0	24.90	.74 U		
299-E18-2	7/10/92	B06PJ3		4.14 U	.10 U	6200.00
299-E18-2	12/16/92	B07S37				6000.00
299-E18-3	11/10/88	H0008023			1.00 U	
299-E18-3	11/27/89	H0008041			1.00 U	
299-E18-3	11/27/89	H0008044			1.00 U	
299-E18-3	9/06/91	B00LC4	12.90 U	-1.79 U		
299-E18-3	6/03/92	B06PK0		-1.78 U	.10 U	7800.00
299-E18-3	6/03/92	B06PK1		4.52 U	.10 U	7700.00
299-E18-3	12/16/92	B07S44				8900.00
299-E18-3	12/16/92	B07S46				8800.00
299-E18-4	11/09/88	H0008058			1.00 U	
299-E18-4	11/21/89	H0008076			1.00 U	
299-E18-4	9/06/91	B00LC8	12.10 U	-.13 U		
299-E18-4	6/03/92	B06PK6		2.84 U	.10 U	8700.00
299-E18-4	12/16/92	B07S57				9500.00

Well Name	Collection Date	Sample Number	CHLORID 46/ppb ./250000s	CHLORID 82/ppm ./250s	CHLNAPZ 21/ppb ./.	CHALETH 21/ppb ./.
299-E18-1	8/16/88	H0007ZT7	6550.00			
299-E18-1	11/10/88	H0007ZV2	6800.00		10.00 U	10.00 U
299-E18-1	11/10/88	H0007ZV5	6200.00			
299-E18-1	2/15/89	H0007ZV8	6900.00			
299-E18-1	5/26/89	H0007ZW2	7100.00			
299-E18-1	8/08/89	H0007ZW6	6000.00			
299-E18-1	10/31/89	H0007ZX0	8000.00		10.00 U	10.00 U
299-E18-1	5/30/90	H0007ZX5	6900.00			
299-E18-2	8/16/88	H0007ZX9	2060.00			
299-E18-2	11/10/88	H0007ZY4	2800.00		10.00 U	10.00 U
299-E18-2	11/22/88	H0007ZY8	2700.00			
299-E18-2	2/16/89	H0007ZZ4	4900.00			
299-E18-2	6/01/89	H0007ZZ8	8000.00			
299-E18-2	8/11/89	H0008002	7000.00			
299-E18-2	11/27/89	H0008006			10.00 U	10.00 U
299-E18-2	3/13/90	H0008010	5700.00			
299-E18-2	5/30/90	H0008014	5600.00			
299-E18-2	5/30/90	H0008017	5500.00			
299-E18-2	9/06/91	B00LL4		6.28		
299-E18-3	8/16/88	H0008018	4470.00			
299-E18-3	11/10/88	H0008023	4400.00		10.00 U	10.00 U

Groundwater Data for 2101-M Pond

Well Name	Collection Date	Sample Number	CHLORID 46/ppb ./250000s	CHLORID 82/ppm ./250s	CHLNAPZ 21/ppb ./.	CHALETH 21/ppb ./.
299-E18-3	2/16/89	H0008029	6500.00			
299-E18-3	6/01/89	H0008033	7000.00			
299-E18-3	6/01/89	H0008036	6900.00			
299-E18-3	8/08/89	H0008037	5800.00			
299-E18-3	11/27/89	H0008041	5400.00		10.00 U	10.00 U
299-E18-3	11/27/89	H0008044	5400.00		10.00 U	10.00 U
299-E18-3	5/30/90	H0008049	8700.00			
299-E18-3	9/06/91	B00LL5		6.79		
299-E18-4	8/16/88	H0008053	6260.00			
299-E18-4	11/09/88	H0008058	6400.00		10.00 U	10.00 U
299-E18-4	2/15/89	H0008064	9500.00			
299-E18-4	5/26/89	H0008068	14600.00			
299-E18-4	8/08/89	H0008072	7000.00			
299-E18-4	8/08/89	H0008075	7000.00			
299-E18-4	11/21/89	H0008076	9800.00		10.00 U	10.00 U
299-E18-4	5/30/90	H0008080	9700.00			
299-E18-4	9/06/91	B00LL6		8.35		

Well Name	Collection Date	Sample Number	CHLROB 16/ppb 5/.	CHLROB 21/ppb ./.	CHLLATE 17/ppb ./.	CLETHAN 16/ppb 10/.
299-E18-1	11/10/88	H0007ZV2	10.00 U		30.00 U	
299-E18-1	11/10/88	H0007ZV3	10.00 U			
299-E18-1	11/10/88	H0007ZV4	10.00 U			
299-E18-1	11/10/88	H0007ZV5	10.00 U			
299-E18-1	11/23/88	H0007ZV6	10.00 U			
299-E18-1	10/31/89	H0007ZX0	5.00 U	10.00 U	300.00 U	10.00 U
299-E18-2	11/10/88	H0007ZY4	10.00 U		30.00 U	
299-E18-2	11/10/88	H0007ZY7	10.00 U			
299-E18-2	11/23/88	H0007ZZ2	10.00 U			
299-E18-2	11/27/89	H0008006	5.00 U	10.00 U	300.00 U	10.00 U
299-E18-2	3/13/90	H0008010	5.00 U			10.00 U
299-E18-3	11/10/88	H0008023	10.00 U		30.00 U	
299-E18-3	11/10/88	H0008026	10.00 U			
299-E18-3	11/28/88	H0008027	10.00 U			
299-E18-3	11/27/89	H0008041	5.00 U	10.00 U	300.00 U	10.00 U
299-E18-3	11/27/89	H0008044	5.00 U	10.00 U	300.00 U	10.00 U
299-E18-3	3/13/90	H0008045	5.00 U			10.00 U
299-E18-4	11/09/88	H0008058	10.00 U		30.00 U	
299-E18-4	11/09/88	H0008061	10.00 U			
299-E18-4	11/23/88	H0008062	10.00 U			
299-E18-4	11/21/89	H0008076	5.00 U	10.00 U	300.00 U	10.00 U

9513319.2167

Groundwater Data for 2101-M Pond

Well Name	Collection Date	Sample Number	CHLROB 16/ppb 5/.	CHLROB 21/ppb ./.	CHLLATE 17/ppb ./.	CLETHAN 16/ppb 10/.

Well Name	Collection Date	Sample Number	CHLFORM 16/ppb 5/100	CHMTHER 16/ppb ./.	CHROMUM 34/ppb 20/50	CHROMUM 35/ppb ./50
299-E18-1	8/16/88	H0007ZT7				30.00
299-E18-1	9/22/88	H0007ZV1				104.00
299-E18-1	11/10/88	H0007ZV2	5.00 U	10.00 U		30.00
299-E18-1	11/10/88	H0007ZV3	5.00 U	10.00 U		
299-E18-1	11/10/88	H0007ZV4	5.00 U	10.00 U		
299-E18-1	11/10/88	H0007ZV5	5.00 U	10.00 U		20.00
299-E18-1	11/23/88	H0007ZV6	5.00 U	10.00 U		
299-E18-1	2/15/89	H0007ZV8	5.00 U			22.00
299-E18-1	5/26/89	H0007ZW2	5.00 U			20.00
299-E18-1	8/08/89	H0007ZW6	5.00 U			100.00
299-E18-1	10/31/89	H0007ZX0	5.00 U	10.00 U		39.00
299-E18-1	7/09/91	H00071X9			150.00	
299-E18-1	9/06/91	B00LB6			96.00	
299-E18-1	1/24/92	B01Q59			71.00 D	
299-E18-1	6/03/92	B06PH8	5.00 U		60.00	
299-E18-1	12/16/92	B07S32			140.00	
299-E18-2	8/16/88	H0007ZX9				30.00
299-E18-2	9/22/88	H0007ZY3				87.00
299-E18-2	11/10/88	H0007ZY4	5.00 U	10.00 U		20.00
299-E18-2	11/10/88	H0007ZY7	5.00 U	10.00 U		
299-E18-2	11/22/88	H0007ZY8	5.00 U			41.00
299-E18-2	11/23/88	H0007ZZ2	5.00 U	10.00 U		
299-E18-2	2/16/89	H0007ZZ4				50.00
299-E18-2	2/16/89	H0007ZZ7				79.00
299-E18-2	6/01/89	H0007ZZ8				28.00
299-E18-2	8/11/89	H0008002				18.00
299-E18-2	11/27/89	H0008006	5.00 U	10.00 U		16.00
299-E18-2	3/13/90	H0008010	5.00 U	10.00 U		
299-E18-2	9/06/91	B00LC0			20.00 U	
299-E18-2	7/10/92	B06PJ3	5.00 U		190.00 R	
299-E18-2	12/16/92	B07S37			110.00	
299-E18-3	8/16/88	H0008018				62.00
299-E18-3	9/22/88	H0008022				67.00
299-E18-3	11/10/88	H0008023	5.00 U	10.00 U		21.00
299-E18-3	11/10/88	H0008026	5.00 U	10.00 U		
299-E18-3	11/28/88	H0008027	5.00 U	10.00 U		
299-E18-3	2/16/89	H0008029				104.00
299-E18-3	6/01/89	H0008033				30.00

Groundwater Data for 2101-M Pond

Well Name	Collection Date	Sample Number	CHLFORM 16/ppb 5/100	CHMTHER 16/ppb ./.	CHROMUM 34/ppb 20/50	CHROMUM 35/ppb ./50
299-E18-3	6/01/89	H0008036				36.00
299-E18-3	8/08/89	H0008037				95.00
299-E18-3	11/27/89	H0008041	5.00 U	10.00 U		58.00
299-E18-3	11/27/89	H0008044	25.00	10.00 U		33.00
299-E18-3	3/13/90	H0008045	5.00 U	10.00 U		
299-E18-3	9/06/91	B00LC4			20.00 U	
299-E18-3	6/03/92	B06PK0	5.00 U		30.00 Q	
299-E18-3	6/03/92	B06PK1	5.00 U		42.00 Q	
299-E18-3	12/16/92	B07S44			70.00	
299-E18-3	12/16/92	B07S46			70.00	
299-E18-4	8/16/88	H0008053				54.00
299-E18-4	9/22/88	H0008057				159.00
299-E18-4	11/09/88	H0008058	5.00 U	10.00 U		21.00
299-E18-4	11/09/88	H0008061	5.00 U	10.00 U		
299-E18-4	11/23/88	H0008062	5.00 U	10.00 U		
299-E18-4	2/15/89	H0008064				42.00
299-E18-4	5/26/89	H0008068				24.00
299-E18-4	8/08/89	H0008072				65.00
299-E18-4	8/08/89	H0008075				80.00
299-E18-4	11/21/89	H0008076	5.00 U	10.00 U		64.00
299-E18-4	9/06/91	B00LC8			49.00	
299-E18-4	6/03/92	B06PK6	5.00 U		73.00	
299-E18-4	12/16/92	B07S57			50.00	

Well Name	Collection Date	Sample Number	FCHROMI 34/ppb 20/50	CHRYSEN 21/ppb ./.	CITRUSR 39/ ./.	COBALT 34/ppb 20/.
299-E18-1	8/16/88	H0007ZT7	10.00 U			
299-E18-1	9/22/88	H0007ZV1	10.00 U			
299-E18-1	11/10/88	H0007ZV2		10.00 U	1000.00 U	
299-E18-1	11/10/88	H0007ZV2	10.00 U			
299-E18-1	11/10/88	H0007ZV5	10.00 U			
299-E18-1	2/15/89	H0007ZV8	10.00 U			
299-E18-1	5/26/89	H0007ZW2	10.00 U			
299-E18-1	8/08/89	H0007ZW6	10.00 U			
299-E18-1	10/31/89	H0007ZX0		10.00 U	1000.00 U	
299-E18-1	10/31/89	H0007ZX0	10.00 U			
299-E18-1	7/09/91	H00071X9				20.00 U
299-E18-1	7/09/91	H00071X9F	20.00 U			
299-E18-1	9/06/91	B00LB6				20.00 U
299-E18-1	9/06/91	B00LB6F	20.00 U			
299-E18-1	1/24/92	B01Q59				20.00 UD

Groundwater Data for 2101-M Pond

Well Name	Collection Date	Sample Number	FCHROMI 34/ppb 20/50	CHRYSEN 21/ppb ./.	CITRUSR 39/ ./.	COBALT 34/ppb 20/.
299-E18-1	1/24/92	B01Q60	20.00 UD			
299-E18-1	6/03/92	B06PH8				20.00 U
299-E18-1	6/03/92	B06PJ2	20.00 U			
299-E18-1	12/16/92	B07S32				20.00 U
299-E18-1	12/16/92	B07S36	20.00 U			
299-E18-2	8/16/88	H0007ZX9	10.00 U			
299-E18-2	9/22/88	H0007ZY3	10.00 U			
299-E18-2	11/10/88	H0007ZY4		10.00 U	1000.00 U	
299-E18-2	11/10/88	H0007ZY4	10.00 U			
299-E18-2	11/22/88	H0007ZY8	11.00			
299-E18-2	2/16/89	H0007ZZ4	10.00 U			
299-E18-2	2/16/89	H0007ZZ7	10.00 U			
299-E18-2	6/01/89	H0007ZZ8	10.00 U			
299-E18-2	8/11/89	H0008002	10.00 U			
299-E18-2	11/27/89	H0008006		10.00 U	1000.00 U	
299-E18-2	11/27/89	H0008006	10.00 U			
299-E18-2	9/06/91	B00LC0				20.00 U
299-E18-2	9/06/91	B00LC0F	20.00 U			
299-E18-2	7/10/92	B06PJ3				20.00 U
299-E18-2	7/10/92	B06PJ8	20.00 U			
299-E18-2	12/16/92	B07S37				20.00 U
299-E18-2	12/16/92	B07S41	20.00 U			
299-E18-3	8/16/88	H0008018	10.00 U			
299-E18-3	9/22/88	H0008022	10.00 U			
299-E18-3	11/10/88	H0008023		10.00 U	1000.00 U	
299-E18-3	11/10/88	H0008023	10.00 U			
299-E18-3	2/16/89	H0008029	10.00 U			
299-E18-3	6/01/89	H0008033	10.00 U			
299-E18-3	6/01/89	H0008036	12.00			
299-E18-3	8/08/89	H0008037	10.00 U			
299-E18-3	11/27/89	H0008041		10.00 U	1000.00 U	
299-E18-3	11/27/89	H0008041	10.00 U			
299-E18-3	11/27/89	H0008044		10.00 U	1000.00 U	
299-E18-3	11/27/89	H0008044	10.00 U			
299-E18-3	9/06/91	B00LC4				20.00 U
299-E18-3	9/06/91	B00LC4F	20.00 U			
299-E18-3	6/03/92	B06PK0				20.00 U
299-E18-3	6/03/92	B06PK1				20.00 U
299-E18-3	6/03/92	B06PK4	20.00 U			
299-E18-3	6/03/92	B06PK5	20.00 U			
299-E18-3	12/16/92	B07S44				20.00 U
299-E18-3	12/16/92	B07S46				20.00 U
299-E18-3	12/16/92	B07S55	20.00 U			
299-E18-3	12/16/92	B07S56	70.00			
299-E18-4	8/16/88	H0008053	10.00 U			

Groundwater Data for 2101-M Pond

Well Name	Collection Date	Sample Number	FCHROMI 34/ppb 20/50	CHRYSEN 21/ppb ./.	CITRUSR 39/ ./.	COBALT 34/ppb 20/.
299-E18-4	9/22/88	H0008057	10.00 U			
299-E18-4	11/09/88	H0008058		10.00 U	1000.00 U	
299-E18-4	11/09/88	H0008058	10.00 U			
299-E18-4	2/15/89	H0008064	10.00 U			
299-E18-4	5/26/89	H0008068	10.00 U			
299-E18-4	8/08/89	H0008072	10.00 U			
299-E18-4	8/08/89	H0008075	10.00 U			
299-E18-4	11/21/89	H0008076		10.00 U	1000.00 U	
299-E18-4	11/21/89	H0008076	10.00 U			
299-E18-4	9/06/91	B00LC8				20.00 U
299-E18-4	9/06/91	B00LC8F	20.00 U			
299-E18-4	6/03/92	B06PK6				20.00 U
299-E18-4	6/03/92	B06PL2	40.00			
299-E18-4	12/16/92	B07S57				20.00 U
299-E18-4	12/16/92	B07S61	20.00 U			

Well Name	Collection Date	Sample Number	COBALT 35/ppb ./.	FCOBALT 34/ppb 20/.	CO-60 140/pCi/L ./.	COLIFORM 144/COL 1/1
299-E18-1	2/15/89	H0007ZV8	20.00 U			
299-E18-1	2/15/89	H0007ZV8		20.00 U		
299-E18-1	5/26/89	H0007ZW2	20.00 U			
299-E18-1	5/26/89	H0007ZW2		20.00 U		
299-E18-1	8/08/89	H0007ZW6	20.00 U			
299-E18-1	8/08/89	H0007ZW6		20.00 U		
299-E18-1	10/31/89	H0007ZX0	20.00 U			
299-E18-1	10/31/89	H0007ZX0		20.00 U		
299-E18-1	7/09/91	H00071X9F		20.00 U		
299-E18-1	9/06/91	B00LB6			-3.59 U	
299-E18-1	9/06/91	B00LB6F		20.00 U		
299-E18-1	1/24/92	B01Q60		20.00 UD		
299-E18-1	6/03/92	B06PH8			-3.79 U	1.00 U
299-E18-1	6/03/92	B06PJ2		20.00 U		
299-E18-1	12/16/92	B07S32				1.00 U
299-E18-1	12/16/92	B07S36		20.00 U		
299-E18-2	2/16/89	H0007ZZ4	20.00 U			
299-E18-2	2/16/89	H0007ZZ4		20.00 U		
299-E18-2	2/16/89	H0007ZZ7	20.00 U			
299-E18-2	2/16/89	H0007ZZ7		20.00 U		
299-E18-2	6/01/89	H0007ZZ8	20.00 U			
299-E18-2	6/01/89	H0007ZZ8		20.00 U		
299-E18-2	8/11/89	H0008002	20.00 U			

Groundwater Data for 2101-M Pond

Well Name	Collection Date	Sample Number	COBALT 35/ppb ./.	FCOBALT 34/ppb 20/.	CO-60 140/pCi/L ./.	COLIFORM 144/COL 1/1
299-E18-2	8/11/89	H0008002		20.00 U		
299-E18-2	11/27/89	H0008006	20.00 U			
299-E18-2	11/27/89	H0008006		20.00 U		
299-E18-2	9/06/91	B00LC0			2.44 U	
299-E18-2	9/06/91	B00LC0F		20.00 U		
299-E18-2	7/10/92	B06PJ3			3.05 U	1.00 U
299-E18-2	7/10/92	B06PJ8		20.00 U		
299-E18-2	12/16/92	B07S37				1.00 U
299-E18-2	12/16/92	B07S41		20.00 U		
299-E18-3	2/16/89	H0008029	20.00 U			
299-E18-3	2/16/89	H0008029		20.00 U		
299-E18-3	6/01/89	H0008033	20.00 U			
299-E18-3	6/01/89	H0008033		20.00 U		
299-E18-3	6/01/89	H0008036	20.00 U			
299-E18-3	6/01/89	H0008036		20.00 U		
299-E18-3	8/08/89	H0008037	20.00 U			
299-E18-3	8/08/89	H0008037		20.00 U		
299-E18-3	11/27/89	H0008041	20.00 U			
299-E18-3	11/27/89	H0008041		20.00 U		
299-E18-3	11/27/89	H0008044	20.00 U			
299-E18-3	11/27/89	H0008044		20.00 U		
299-E18-3	9/06/91	B00LC4			-2.12 U	
299-E18-3	9/06/91	B00LC4F		20.00 U		
299-E18-3	6/03/92	B06PK0			4.14 U	1.00 U
299-E18-3	6/03/92	B06PK1			-2.36 U	1.00 U
299-E18-3	6/03/92	B06PK4		20.00 U		
299-E18-3	6/03/92	B06PK5		20.00 U		
299-E18-3	12/16/92	B07S44				1.00 U
299-E18-3	12/16/92	B07S46				1.00 U
299-E18-3	12/16/92	B07S55		20.00 U		
299-E18-3	12/16/92	B07S56		20.00 U		
299-E18-4	2/15/89	H0008064	20.00 U			
299-E18-4	2/15/89	H0008064		20.00 U		
299-E18-4	5/26/89	H0008068	20.00 U			
299-E18-4	5/26/89	H0008068		20.00 U		
299-E18-4	8/08/89	H0008072	20.00 U			
299-E18-4	8/08/89	H0008072		20.00 U		
299-E18-4	8/08/89	H0008075	20.00 U			
299-E18-4	8/08/89	H0008075		20.00 U		
299-E18-4	11/21/89	H0008076	20.00 U			
299-E18-4	11/21/89	H0008076		20.00 U		
299-E18-4	9/06/91	B00LC8			3.33 U	
299-E18-4	9/06/91	B00LC8F		20.00 U		
299-E18-4	6/03/92	B06PK6			4.49 U	1.00 U
299-E18-4	6/03/92	B06PL2		20.00 U		

Groundwater Data for 2101-M Pond

Well Name	Collection Date	Sample Number	COBALT 35/ppb ./.	FCOBALT 34/ppb 20/.	CO-60 140/pCi/L ./.	COLIFORM 144/COL 1/1
299-E18-4	12/16/92	B07S57				2.00
299-E18-4	12/16/92	B07S61		20.00 U		

Well Name	Collection Date	Sample Number	COLIFORM 69/ ./.	COPPER 34/ppb 20/1000s	COPPER 35/ppb ./1000s	FCOPPER 34/PPB 20/1000s
299-E18-1	8/16/88	H0007ZT7	2.20 U		10.00 U	
299-E18-1	8/16/88	H0007ZT7				10.00 U
299-E18-1	9/22/88	H0007ZV1			10.00 U	
299-E18-1	9/22/88	H0007ZV1				10.00 U
299-E18-1	11/10/88	H0007ZV2	2.20 U		10.00 U	
299-E18-1	11/10/88	H0007ZV2				10.00 U
299-E18-1	11/10/88	H0007ZV5			12.00	
299-E18-1	11/10/88	H0007ZV5				10.00 U
299-E18-1	2/15/89	H0007ZV8	2.20 U		10.00 U	
299-E18-1	2/15/89	H0007ZV8				10.00 U
299-E18-1	5/26/89	H0007ZW2	2.20 U		10.00 U	
299-E18-1	5/26/89	H0007ZW2				10.00 U
299-E18-1	8/08/89	H0007ZW6	2.20 U		10.00 U	
299-E18-1	8/08/89	H0007ZW6				10.00 U
299-E18-1	10/31/89	H0007ZX0	2.20 U		10.00 U	
299-E18-1	10/31/89	H0007ZX0				10.00 U
299-E18-1	5/30/90	H0007ZX5	2.20 U			
299-E18-1	7/09/91	H00071X9		20.00 U		
299-E18-1	7/09/91	H00071X9F				20.00 U
299-E18-1	9/06/91	B00LB6		20.00 U		
299-E18-1	9/06/91	B00LB6F				20.00 U
299-E18-1	1/24/92	B01Q59		20.00 UD		
299-E18-1	1/24/92	B01Q60				20.00 UD
299-E18-1	6/03/92	B06PH8		20.00 U		
299-E18-1	6/03/92	B06PJ2				20.00 U
299-E18-1	12/16/92	B07S32		20.00 U		
299-E18-1	12/16/92	B07S36				20.00 U
299-E18-2	8/16/88	H0007ZX9	2.20 U		10.00 U	
299-E18-2	8/16/88	H0007ZX9				10.00 U
299-E18-2	9/22/88	H0007ZY3			10.00 U	
299-E18-2	9/22/88	H0007ZY3				10.00 U
299-E18-2	11/10/88	H0007ZY4	2.20 U		10.00 U	
299-E18-2	11/10/88	H0007ZY4				12.00
299-E18-2	11/22/88	H0007ZY8			10.00 U	
299-E18-2	11/22/88	H0007ZY8				10.00 U
299-E18-2	2/16/89	H0007ZZ4	2.20 U		12.00	

Groundwater Data for 2101-M Pond

Well Name	Collection Date	Sample Number	COLIFORM 69/ ./.	COPPER 34/ppb 20/1000s	COPPER 35/ppb ./1000s	FCOPPER 34/PPB 20/1000s
299-E18-2	2/16/89	H0007ZZ4				10.00 U
299-E18-2	2/16/89	H0007ZZ7			10.00 U	
299-E18-2	2/16/89	H0007ZZ7				10.00 U
299-E18-2	6/01/89	H0007ZZ8	2.20 U		15.00	
299-E18-2	6/01/89	H0007ZZ8				10.00 U
299-E18-2	8/11/89	H0008002			10.00 U	
299-E18-2	8/11/89	H0008002				10.00 U
299-E18-2	11/27/89	H0008006			10.00 U	
299-E18-2	11/27/89	H0008006				10.00 U
299-E18-2	9/06/91	B00LC0		20.00 UQ		
299-E18-2	9/06/91	B00LC0F				22.00 Q
299-E18-2	7/10/92	B06PJ3		20.00 U		
299-E18-2	7/10/92	B06PJ8				20.00 U
299-E18-2	12/16/92	B07S37		20.00 U		
299-E18-2	12/16/92	B07S41				20.00 U
299-E18-3	8/16/88	H0008018	2.20 U		10.00 U	
299-E18-3	8/16/88	H0008018				10.00 U
299-E18-3	9/22/88	H0008022			10.00 U	
299-E18-3	9/22/88	H0008022				10.00 U
299-E18-3	11/10/88	H0008023	2.20 U		10.00 U	
299-E18-3	11/10/88	H0008023				10.00 U
299-E18-3	2/16/89	H0008029	2.20 U		10.00 U	
299-E18-3	2/16/89	H0008029				10.00 U
299-E18-3	6/01/89	H0008033	2.20 U		10.00 U	
299-E18-3	6/01/89	H0008033				10.00 U
299-E18-3	6/01/89	H0008036			10.00 U	
299-E18-3	6/01/89	H0008036				10.00 U
299-E18-3	8/08/89	H0008037	2.20 U		10.00 U	
299-E18-3	8/08/89	H0008037				10.00 U
299-E18-3	11/27/89	H0008041			10.00 U	
299-E18-3	11/27/89	H0008041				10.00 U
299-E18-3	11/27/89	H0008044			10.00 U	
299-E18-3	11/27/89	H0008044				10.00 U
299-E18-3	9/06/91	B00LC4		20.00 UQ		
299-E18-3	9/06/91	B00LC4F				30.00 Q
299-E18-3	6/03/92	B06PK0		20.00 U		
299-E18-3	6/03/92	B06PK1		20.00 U		
299-E18-3	6/03/92	B06PK4				20.00 U
299-E18-3	6/03/92	B06PK5				20.00 U
299-E18-3	12/16/92	B07S44		20.00 U		
299-E18-3	12/16/92	B07S46		20.00 U		
299-E18-3	12/16/92	B07S55				20.00 U
299-E18-3	12/16/92	B07S56				20.00 U
299-E18-4	8/16/88	H0008053	2.20 U		10.00 U	
299-E18-4	8/16/88	H0008053				10.00 U

Groundwater Data for 2101-M Pond

Well Name	Collection Date	Sample Number	COLIFORM 69/ ./.	COPPER 34/ppb 20/1000s	COPPER 35/ppb ./1000s	FCOPPER 34/PPB 20/1000s
299-E18-4	9/22/88	H0008057			10.00 U	
299-E18-4	9/22/88	H0008057				10.00 U
299-E18-4	11/09/88	H0008058	2.20 U		10.00 U	
299-E18-4	11/09/88	H0008058				10.00 U
299-E18-4	2/15/89	H0008064	2.20 U		13.00	
299-E18-4	2/15/89	H0008064				11.00
299-E18-4	5/26/89	H0008068	2.20 U		18.00	
299-E18-4	5/26/89	H0008068				11.00
299-E18-4	8/08/89	H0008072	2.20 U		10.00 U	
299-E18-4	8/08/89	H0008072				11.00
299-E18-4	8/08/89	H0008075			10.00 U	
299-E18-4	8/08/89	H0008075				10.00 U
299-E18-4	11/21/89	H0008076			10.00 U	
299-E18-4	11/21/89	H0008076				10.00 U
299-E18-4	5/30/90	H0008080	2.20 U			
299-E18-4	9/06/91	B00LC8		20.00 U		
299-E18-4	9/06/91	B00LC8F				20.00 U
299-E18-4	6/03/92	B06PK6		20.00 U		
299-E18-4	6/03/92	B06PL2				20.00 U
299-E18-4	12/16/92	B07S57		20.00 U		
299-E18-4	12/16/92	B07S61				20.00 U

Well Name	Collection Date	Sample Number	CRESOLS 21/ppb ./.	CRESOLS 30/ppb 10/.	CROTONA 16/ppb ./.	CYANIDE 56/ppb 20/.
299-E18-1	11/10/88	H0007ZV2	10.00 U		10.00 U	10.00 U
299-E18-1	11/10/88	H0007ZV3			10.00 U	
299-E18-1	11/10/88	H0007ZV4			10.00 U	
299-E18-1	11/10/88	H0007ZV5			10.00 U	10.00 U
299-E18-1	11/23/88	H0007ZV6			10.00 U	
299-E18-1	10/31/89	H0007ZX0	10.00 U		10.00 U	10.00 U
299-E18-1	1/24/92	B01Q59		10.00 U		
299-E18-1	6/03/92	B06PH8		10.00 U		20.00 UD
299-E18-1	12/16/92	B07SN0		10.00 U		
299-E18-2	11/10/88	H0007ZY4	10.00 U		10.00 U	10.00 U
299-E18-2	11/10/88	H0007ZY7			10.00 U	
299-E18-2	11/23/88	H0007ZZ2			10.00 U	
299-E18-2	11/27/89	H0008006	10.00 U		10.00 U	10.00 U
299-E18-2	3/13/90	H0008010			10.00 U	
299-E18-2	7/10/92	B06PJ3		10.00 U		20.00 U
299-E18-3	11/10/88	H0008023	10.00 U		10.00 U	10.00 U
299-E18-3	11/10/88	H0008026			10.00 U	

Groundwater Data for 2101-M Pond

Well Name	Collection Date	Sample Number	CRESOLS 21/ppb ./.	CRESOLS 30/ppb 10/.	CROTONA 16/ppb ./.	CYANIDE 56/ppb 20/.
299-E18-3	11/28/88	H0008027			10.00 U	
299-E18-3	11/27/89	H0008041	10.00 U		10.00 U	10.00 U
299-E18-3	11/27/89	H0008044	10.00 U		10.00 U	10.00 U
299-E18-3	3/13/90	H0008045			10.00 U	
299-E18-3	6/03/92	B06PK0		10.00 U		20.00 UD
299-E18-3	6/03/92	B06PK1		10.00 U		20.00 UD
299-E18-4	11/09/88	H0008058	10.00 U		10.00 U	10.00 U
299-E18-4	11/09/88	H0008061			10.00 U	
299-E18-4	11/23/88	H0008062			10.00 U	
299-E18-4	11/21/89	H0008076	10.00 U		10.00 U	10.00 U
299-E18-4	6/03/92	B06PK6		10.00 U		20.00 UD

Well Name	Collection Date	Sample Number	d-BHC 17/ppb .1/4	DIBPHTH 21/ppb ./.	DIOPHTH 21/ppb ./.	DIALLATE 19/ppb 10/.
299-E18-1	8/16/88	H0007ZT7	.10 U			
299-E18-1	11/10/88	H0007ZV2	.10 U	10.00 U	10.00 U	
299-E18-1	2/15/89	H0007ZV8	.10 U			
299-E18-1	5/26/89	H0007ZW2	.10 U			
299-E18-1	8/08/89	H0007ZW6	.10 U			
299-E18-1	10/31/89	H0007ZX0	.10 U	10.00 U	10.00 U	10.00 U
299-E18-1	6/03/92	B06PH8	.10 U			
299-E18-1	12/16/92	B07SN0	.10 U			
299-E18-2	8/16/88	H0007ZX9	.10 U			
299-E18-2	11/10/88	H0007ZY4	.10 U	10.00 U	10.00 U	
299-E18-2	11/22/88	H0007ZY8	.10 U			
299-E18-2	2/16/89	H0007ZZ4	.10 U			
299-E18-2	6/01/89	H0007ZZ8	.10 U			
299-E18-2	8/11/89	H0008002	.10 U			
299-E18-2	11/27/89	H0008006	.10 U	10.00 U	10.00 U	10.00 U
299-E18-2	7/10/92	B06PJ3	.10 U			
299-E18-3	8/16/88	H0008018	.10 U			
299-E18-3	11/10/88	H0008023	.10 U	10.00 U	10.00 U	
299-E18-3	2/16/89	H0008029	.10 U			
299-E18-3	6/01/89	H0008033	.10 U			
299-E18-3	6/01/89	H0008036	.10 U			
299-E18-3	8/08/89	H0008037	.10 U			
299-E18-3	11/27/89	H0008041	.10 U	10.00 U	10.00 U	10.00 U
299-E18-3	11/27/89	H0008044	.10 U	10.00 U	10.00 U	10.00 U
299-E18-3	6/03/92	B06PK0	.10 U			
299-E18-3	6/03/92	B06PK1	.10 U			
299-E18-4	8/16/88	H0008053	.10 U			

Groundwater Data for 2101-M Pond

Well Name	Collection Date	Sample Number	d-BHC 17/ppb .1/4	DIBPHTH 21/ppb ./.	DIOPHTH 21/ppb ./.	DIALLATE 19/ppb 10/.
299-E18-4	11/09/88	H0008058	.10 U	10.00 U	10.00 U	
299-E18-4	2/15/89	H0008064	.10 U			
299-E18-4	5/26/89	H0008068	.10 U			
299-E18-4	8/08/89	H0008072	.10 U			
299-E18-4	11/21/89	H0008076	.10 U	10.00 U	10.00 U	10.00 U
299-E18-4	6/03/92	B06PK6	.10 U			

Well Name	Collection Date	Sample Number	DIBAHAC 21/ppb ./.	DIBAHAN 21/ppb ./.	DIBAJAC 21/ppb ./.	DIBAEPY 21/ppb ./.
299-E18-1	11/10/88	H0007ZV2	10.00 U	10.00 U	10.00 U	10.00 U
299-E18-1	10/31/89	H0007ZX0	10.00 U	10.00 U	10.00 U	10.00 U
299-E18-2	11/10/88	H0007ZY4	10.00 U	10.00 U	10.00 U	10.00 U
299-E18-2	11/27/89	H0008006	10.00 U	10.00 U	10.00 U	10.00 U
299-E18-3	11/10/88	H0008023	10.00 U	10.00 U	10.00 U	10.00 U
299-E18-3	11/27/89	H0008041	10.00 U	10.00 U	10.00 U	10.00 U
299-E18-3	11/27/89	H0008044	10.00 U	10.00 U	10.00 U	10.00 U
299-E18-4	11/09/88	H0008058	10.00 U	10.00 U	10.00 U	10.00 U
299-E18-4	11/21/89	H0008076	10.00 U	10.00 U	10.00 U	10.00 U

Well Name	Collection Date	Sample Number	DIBAHPY 21/ppb ./.	DIBAIPY 21/ppb ./.	DIBENFR 21/ppb ./.	BRCHLMET 16/ppb 5/100
299-E18-1	11/10/88	H0007ZV2	10.00 U	10.00 U		
299-E18-1	10/31/89	H0007ZX0	10.00 U	10.00 U	10.00 U	5.00 U
299-E18-2	11/10/88	H0007ZY4	10.00 U	10.00 U		
299-E18-2	11/27/89	H0008006	10.00 U	10.00 U	10.00 U	5.00 U
299-E18-2	3/13/90	H0008010				5.00 U
299-E18-3	11/10/88	H0008023	10.00 U	10.00 U		
299-E18-3	11/27/89	H0008041	10.00 U	10.00 U	10.00 U	5.00 U
299-E18-3	11/27/89	H0008044	10.00 U	10.00 U	10.00 U	5.00 U
299-E18-3	3/13/90	H0008045				5.00 U
299-E18-4	11/09/88	H0008058	10.00 U	10.00 U		
299-E18-4	11/21/89	H0008076	10.00 U	10.00 U	10.00 U	5.00 U

Groundwater Data for 2101-M Pond

Well Name	Collection Date	Sample Number	DIBRMET 16/ppb 5/.	DICDIFM 16/ppb 5/.	DIELRIN 17/ppb .05/.	DIEPHTH 21/ppb ./.
299-E18-1	11/10/88	H0007ZV2	10.00 U	10.00 U	.10 U	10.00 U
299-E18-1	11/10/88	H0007ZV3	10.00 U	10.00 U		
299-E18-1	11/10/88	H0007ZV4	10.00 U	10.00 U		
299-E18-1	11/10/88	H0007ZV5	10.00 U	10.00 U		
299-E18-1	11/23/88	H0007ZV6	10.00 U	10.00 U		
299-E18-1	10/31/89	H0007ZX0	10.00 U	10.00 U	.10 U	10.00 U
299-E18-1	6/03/92	B06PH8			.05 U	
299-E18-1	12/16/92	B07SN0			.05 U	
299-E18-2	11/10/88	H0007ZY4	10.00 U	10.00 U	.10 U	10.00 U
299-E18-2	11/10/88	H0007ZY7	10.00 U	10.00 U		
299-E18-2	11/23/88	H0007ZZ2	10.00 U	10.00 U		
299-E18-2	11/27/89	H0008006	10.00 U	10.00 U	.10 U	10.00 U
299-E18-2	3/13/90	H0008010	10.00 U	10.00 U		
299-E18-2	7/10/92	B06PJ3			.05 U	
299-E18-3	11/10/88	H0008023	10.00 U	10.00 U	.10 U	10.00 U
299-E18-3	11/10/88	H0008026	10.00 U	10.00 U		
299-E18-3	11/28/88	H0008027	10.00 U	10.00 U		
299-E18-3	11/27/89	H0008041	10.00 U	10.00 U	.10 U	10.00 U
299-E18-3	11/27/89	H0008044	10.00 U	10.00 U	.10 U	10.00 U
299-E18-3	3/13/90	H0008045	10.00 U	10.00 U		
299-E18-3	6/03/92	B06PK0			.05 U	
299-E18-3	6/03/92	B06PK1			.05 U	
299-E18-4	11/09/88	H0008058	10.00 U	10.00 U	.10 U	10.00 U
299-E18-4	11/09/88	H0008061	10.00 U	10.00 U		
299-E18-4	11/23/88	H0008062	10.00 U	10.00 U		
299-E18-4	11/21/89	H0008076	10.00 U	10.00 U	.10 U	10.00 U
299-E18-4	6/03/92	B06PK6			.05 U	

Well Name	Collection Date	Sample Number	DIETROL 18/ppb ./.	DIHYSAF 21/ppb ./.	DIMETHO 29/ppb ./.	DIMPHTH 21/ppb ./.
299-E18-1	11/10/88	H0007ZV2	200.00 U	10.00 U	2.00 U	10.00 U
299-E18-1	10/31/89	H0007ZX0	200.00 U	10.00 U	2.00 U	10.00 U
299-E18-2	11/10/88	H0007ZY4	200.00 U	10.00 U	2.00 U	10.00 U
299-E18-2	11/27/89	H0008006	200.00 U	10.00 U	2.00 U	10.00 U
299-E18-3	11/10/88	H0008023	200.00 U	10.00 U	2.00 U	10.00 U
299-E18-3	11/27/89	H0008041	200.00 U	10.00 U	2.00 U	10.00 U
299-E18-3	11/27/89	H0008044	200.00 U	10.00 U	2.00 U	10.00 U
299-E18-4	11/09/88	H0008058	200.00 U	10.00 U	2.00 U	10.00 U
299-E18-4	11/21/89	H0008076	200.00 U	10.00 U	2.00 U	10.00 U

Groundwater Data for 2101-M Pond

Well Name	Collection Date	Sample Number	DIETROL 18/ppb ./.	DIHYSAF 21/ppb ./.	DIMETHO 29/ppb ./.	DIMPHTH 21/ppb ./.

Well Name	Collection Date	Sample Number	DINOSEB 21/ppb ./.	DIPHAMI 21/ppb ./.	DISULFO 29/ppb 2/.	ENDO1 17/ppb .1/.
299-E18-1	11/10/88	H0007ZV2		10.00 U	2.00 U	.10 U
299-E18-1	10/31/89	H0007ZX0	10.00 U	10.00 U	2.00 U	.10 U
299-E18-1	6/03/92	B06PH8				.10 U
299-E18-1	12/16/92	B07SN0				.10 U
299-E18-2	11/10/88	H0007ZY4		10.00 U	2.00 U	.10 U
299-E18-2	11/27/89	H0008006	10.00 U	10.00 U	2.00 U	.10 U
299-E18-2	7/10/92	B06PJ3				.10 U
299-E18-3	11/10/88	H0008023		10.00 U	2.00 U	.10 U
299-E18-3	11/27/89	H0008041	10.00 U	10.00 U	2.00 U	.10 U
299-E18-3	11/27/89	H0008044	10.00 U	10.00 U	2.00 U	.10 U
299-E18-3	6/03/92	B06PK0				.10 U
299-E18-3	6/03/92	B06PK1				.10 U
299-E18-4	11/09/88	H0008058		10.00 U	2.00 U	.10 U
299-E18-4	11/21/89	H0008076	10.00 U	10.00 U	2.00 U	.10 U
299-E18-4	6/03/92	B06PK6				.10 U

Well Name	Collection Date	Sample Number	ENDO2 17/ppb .05/.	ENDSFAN 17/ppb .5/.	ENDRIN 17/ppb .1/.2	ENDRALD 17/ppb .2/.
299-E18-1	8/16/88	H0007ZT7			.10 U	
299-E18-1	11/10/88	H0007ZV2	.10 U		.10 U	
299-E18-1	2/15/89	H0007ZV8			.10 U	
299-E18-1	5/26/89	H0007ZW2			.10 U	
299-E18-1	8/08/89	H0007ZW6			.10 U	
299-E18-1	10/31/89	H0007ZX0	.10 U	.50 U	.10 U	
299-E18-1	6/03/92	B06PH8	.05 U	.50 U	.10 U	.20 U
299-E18-1	12/16/92	B07SN0	.05 U	.50 U	.10 U	.20 U
299-E18-2	8/16/88	H0007ZX9			.10 U	
299-E18-2	11/10/88	H0007ZY4	.10 U		.10 U	
299-E18-2	11/22/88	H0007ZY8			.10 U	
299-E18-2	2/16/89	H0007ZZ4			.10 U	
299-E18-2	6/01/89	H0007ZZ8			.10 U	
299-E18-2	8/11/89	H0008002			.10 U	
299-E18-2	11/27/89	H0008006	.10 U	.50 U	.10 U	
299-E18-2	7/10/92	B06PJ3	.05 U	.50 U	.10 U	.20 U

Groundwater Data for 2101-M Pond

Well Name	Collection Date	Sample Number	ENDO2 17/ppb .05/.	ENDSFAN 17/ppb .5/.	ENDRIN 17/ppb .1/.2	ENDRALD 17/ppb .2/.
299-E18-3	8/16/88	H0008018			.10 U	
299-E18-3	11/10/88	H0008023	.10 U		.10 U	
299-E18-3	2/16/89	H0008029			.10 U	
299-E18-3	6/01/89	H0008033			.10 U	
299-E18-3	6/01/89	H0008036			.10 U	
299-E18-3	8/08/89	H0008037			.10 U	
299-E18-3	11/27/89	H0008041	.10 U	.50 U	.10 U	
299-E18-3	11/27/89	H0008044	.10 U	.50 U	.10 U	
299-E18-3	6/03/92	B06PK0	.05 U	.50 U	.10 U	.20 U
299-E18-3	6/03/92	B06PK1	.05 U	.50 U	.10 U	.20 U
299-E18-4	8/16/88	H0008053			.10 U	
299-E18-4	11/09/88	H0008058	.10 U		.10 U	
299-E18-4	2/15/89	H0008064			.10 U	
299-E18-4	5/26/89	H0008068			.10 U	
299-E18-4	8/08/89	H0008072			.10 U	
299-E18-4	11/21/89	H0008076	.10 U	.50 U	.10 U	
299-E18-4	6/03/92	B06PK6	.05 U	.50 U	.10 U	.20 U

Well Name	Collection Date	Sample Number	ETHCARB 28/ppb ./.	ETHCYAN 28/ppb ./.	ETHMETH 50/ppb ./.	ETHMETS 21/ppb ./.
299-E18-1	11/10/88	H0007ZV2	5000.00 U	2000.00 U	10.00 U	10.00 U
299-E18-1	11/10/88	H0007ZV3			10.00 U	
299-E18-1	11/10/88	H0007ZV4			10.00 U	
299-E18-1	11/10/88	H0007ZV5			10.00 U	
299-E18-1	11/23/88	H0007ZV6			10.00 U	
299-E18-1	10/31/89	H0007ZX0	10000.00 U	10000.00 U	10.00 U	10.00 U
299-E18-2	11/10/88	H0007ZY4	5000.00 U	2000.00 U	10.00 U	10.00 U
299-E18-2	11/10/88	H0007ZY7			10.00 U	
299-E18-2	11/23/88	H0007ZZ2			10.00 U	
299-E18-2	11/27/89	H0008006	10000.00 U	10000.00 U	10.00 U	10.00 U
299-E18-2	3/13/90	H0008010			10.00 U	
299-E18-3	11/10/88	H0008023	5000.00 U	2000.00 U	10.00 U	10.00 U
299-E18-3	11/10/88	H0008026			10.00 U	
299-E18-3	11/28/88	H0008027			10.00 U	
299-E18-3	11/27/89	H0008041	10000.00 U	10000.00 U	10.00 U	10.00 U
299-E18-3	11/27/89	H0008044	10000.00 U	10000.00 U	10.00 U	10.00 U
299-E18-3	3/13/90	H0008045			10.00 U	
299-E18-4	11/09/88	H0008058	5000.00 U	2000.00 U	10.00 U	10.00 U
299-E18-4	11/09/88	H0008061			10.00 U	
299-E18-4	11/23/88	H0008062			10.00 U	
299-E18-4	11/21/89	H0008076	10000.00 U	10000.00 U	10.00 U	10.00 U

Groundwater Data for 2101-M Pond

Well Name	Collection Date	Sample Number	ETHCARB 28/ppb ./.	ETHCYAN 28/ppb ./.	ETHMETH 50/ppb ./.	ETHMETS 21/ppb ./.

Well Name	Collection Date	Sample Number	ETHBENZ 16/ppb 5/.	ETHGLYC 28/ppb ./.	ETHOXID 16/ppb ./.	ETHMINE 21/ppb ./.
299-E18-1	11/10/88	H0007ZV2			3000.00 U	10.00 U
299-E18-1	11/10/88	H0007ZV3			3000.00 U	
299-E18-1	11/10/88	H0007ZV4			3000.00 U	
299-E18-1	11/10/88	H0007ZV5			3000.00 U	
299-E18-1	11/23/88	H0007ZV6			3000.00 U	
299-E18-1	10/31/89	H0007ZX0	5.00 U	10000.00 U	10.00 U	10.00 U
299-E18-2	11/10/88	H0007ZY4			3000.00 U	10.00 U
299-E18-2	11/10/88	H0007ZY7			3000.00 U	
299-E18-2	11/23/88	H0007ZZ2			3000.00 U	
299-E18-2	11/27/89	H0008006	5.00 U	10000.00 U	10.00 U	10.00 U
299-E18-2	3/13/90	H0008010	5.00 U		10.00 U	
299-E18-3	11/10/88	H0008023			3000.00 U	10.00 U
299-E18-3	11/10/88	H0008026			3000.00 U	
299-E18-3	11/28/88	H0008027			3000.00 U	
299-E18-3	11/27/89	H0008041	5.00 U	10000.00 U	10.00 U	10.00 U
299-E18-3	11/27/89	H0008044	5.00 U	10000.00 U	10.00 U	10.00 U
299-E18-3	3/13/90	H0008045	5.00 U		10.00 U	
299-E18-4	11/09/88	H0008058			3000.00 U	10.00 U
299-E18-4	11/09/88	H0008061			3000.00 U	
299-E18-4	11/23/88	H0008062			3000.00 U	
299-E18-4	11/21/89	H0008076	5.00 U	10000.00 U	10.00 U	10.00 U

Well Name	Collection Date	Sample Number	ETHYREA 18/ppb ./.	FLUORAN 21/ppb ./.	FLRENE 21/ppb ./.	FLUORID 124/ppb 100/4000
299-E18-1	11/10/88	H0007ZV2	200.00 U	10.00 U		
299-E18-1	10/31/89	H0007ZX0	200.00 U	10.00 U	10.00 U	
299-E18-1	7/09/91	H00071X9				590.00
299-E18-1	1/24/92	B01Q59				500.00
299-E18-1	6/03/92	B06PH8				500.00
299-E18-1	12/16/92	B07S32				500.00
299-E18-2	11/10/88	H0007ZY4	200.00 U	10.00 U		
299-E18-2	11/27/89	H0008006	200.00 U	10.00 U	10.00 U	
299-E18-2	7/10/92	B06PJ3				600.00
299-E18-2	12/16/92	B07S37				600.00

Groundwater Data for 2101-M Pond

Well Name	Collection Date	Sample Number	ETHYREA 18/ppb ./.	FLUORAN 21/ppb ./.	FLRENE 21/ppb ./.	FLUORID 124/ppb 100/4000
299-E18-3	11/10/88	H0008023	200.00 U	10.00 U		
299-E18-3	11/27/89	H0008041	200.00 U	10.00 U	10.00 U	
299-E18-3	11/27/89	H0008044	200.00 U	10.00 U	10.00 U	
299-E18-3	6/03/92	B06PK0				200.00
299-E18-3	6/03/92	B06PK1				200.00
299-E18-3	12/16/92	B07S44				200.00
299-E18-3	12/16/92	B07S46				200.00
299-E18-4	11/09/88	H0008058	200.00 U	10.00 U		
299-E18-4	11/21/89	H0008076	200.00 U	10.00 U	10.00 U	
299-E18-4	6/03/92	B06PK6				300.00
299-E18-4	12/16/92	B07S57				300.00

Well Name	Collection Date	Sample Number	FLUORID 46/ppb ./4000	FLUORID 82/ppm ./4	FORMALN 16/ppb ./.	ALPHA 135/pCi/L ./15
299-E18-1	8/16/88	H0007ZT7	500.00 U			
299-E18-1	11/10/88	H0007ZV2	500.00 U		500.00 U	
299-E18-1	11/10/88	H0007ZV3			500.00 U	
299-E18-1	11/10/88	H0007ZV4			500.00 U	
299-E18-1	11/10/88	H0007ZV5	500.00 U		500.00 U	
299-E18-1	11/23/88	H0007ZV6			500.00 U	
299-E18-1	2/15/89	H0007ZV8	500.00 U			
299-E18-1	5/26/89	H0007ZW2	500.00			
299-E18-1	8/08/89	H0007ZW6	600.00			
299-E18-1	10/31/89	H0007ZX0	500.00		500.00 U	
299-E18-1	5/30/90	H0007ZX5	500.00			
299-E18-1	9/06/91	B00LB6				1.62
299-E18-1	6/03/92	B06PH8				1.68
299-E18-1	12/16/92	B07S32				4.71
299-E18-2	8/16/88	H0007ZX9	575.00			
299-E18-2	11/10/88	H0007ZY4	600.00		500.00 U	
299-E18-2	11/10/88	H0007ZY7			500.00 U	
299-E18-2	11/22/88	H0007ZY8	600.00			
299-E18-2	11/23/88	H0007ZZ2			500.00 U	
299-E18-2	2/16/89	H0007ZZ4	700.00			
299-E18-2	6/01/89	H0007ZZ8	700.00			
299-E18-2	8/11/89	H0008002	700.00			
299-E18-2	11/27/89	H0008006			500.00 U	
299-E18-2	3/13/90	H0008010	600.00		500.00 U	
299-E18-2	5/30/90	H0008014	600.00			
299-E18-2	5/30/90	H0008017	600.00			
299-E18-2	9/06/91	B00LC0				1.82

Groundwater Data for 2101-M Pond

Well Name	Collection Date	Sample Number	FLUORID 46/ppb ./4000	FLUORID 82/ppm ./4	FORMALN 16/ppb ./.	ALPHA 135/pCi/L ./15
299-E18-2	9/06/91	B00LL4		.80		
299-E18-2	7/10/92	B06PJ3				.88 U
299-E18-2	12/16/92	B07S37				3.52
299-E18-3	8/16/88	H0008018	500.00 U			
299-E18-3	11/10/88	H0008023	500.00 U		500.00 U	
299-E18-3	11/10/88	H0008026			500.00 U	
299-E18-3	11/28/88	H0008027			500.00 U	
299-E18-3	2/16/89	H0008029	500.00 U			
299-E18-3	6/01/89	H0008033	500.00 U			
299-E18-3	6/01/89	H0008036	500.00 U			
299-E18-3	8/08/89	H0008037	500.00 U			
299-E18-3	11/27/89	H0008041	500.00 U		500.00 U	
299-E18-3	11/27/89	H0008044	500.00 U		500.00 U	
299-E18-3	3/13/90	H0008045			500.00 U	
299-E18-3	5/30/90	H0008049	500.00 U			
299-E18-3	9/06/91	B00LC4				1.19
299-E18-3	9/06/91	B00LL5		.37		
299-E18-3	6/03/92	B06PK0				2.60
299-E18-3	6/03/92	B06PK1				1.47
299-E18-3	12/16/92	B07S44				1.94
299-E18-3	12/16/92	B07S46				.53 U
299-E18-4	8/16/88	H0008053	500.00 U			
299-E18-4	11/09/88	H0008058	500.00 U		500.00 U	
299-E18-4	11/09/88	H0008061			500.00 U	
299-E18-4	11/23/88	H0008062			500.00 U	
299-E18-4	2/15/89	H0008064	500.00 U			
299-E18-4	5/26/89	H0008068	500.00 U			
299-E18-4	8/08/89	H0008072	500.00 U			
299-E18-4	8/08/89	H0008075	500.00 U			
299-E18-4	11/21/89	H0008076	500.00 U		500.00 U	
299-E18-4	5/30/90	H0008080	500.00 U			
299-E18-4	9/06/91	B00LC8				2.08
299-E18-4	9/06/91	B00LL6		.45		
299-E18-4	6/03/92	B06PK6				2.67
299-E18-4	12/16/92	B07S57				2.10

Well Name	Collection Date	Sample Number	ALPHA 77/pCi/L ./15	BETA 136/pCi/L ./50	BETA 77/pCi/L ./50	HEPTLOR 17/ppb .05/.
299-E18-1	8/16/88	H0007ZT7	2.21		3.89	
299-E18-1	11/10/88	H0007ZV2	3.83		8.45	.10 U
299-E18-1	11/10/88	H0007ZV5	3.90		10.70	

Groundwater Data for 2101-M Pond

Well Name	Collection Date	Sample Number	ALPHA 77/pCi/L ./15	BETA 136/pCi/L ./50	BETA 77/pCi/L ./50	HEPTLOR 17/ppb .05/.
299-E18-1	2/15/89	H0007ZV8	4.87		6.85	
299-E18-1	5/26/89	H0007ZW2	5.53		6.58	
299-E18-1	8/08/89	H0007ZW6	5.53		7.46	
299-E18-1	10/31/89	H0007ZX0	4.52		8.50	.10 U
299-E18-1	9/06/91	B00LB6		6.29		
299-E18-1	6/03/92	B06PH8		7.49		.05 U
299-E18-1	12/16/92	B07S32		8.46		
299-E18-1	12/16/92	B07SN0				.05 U
299-E18-2	8/16/88	H0007ZX9	.42		1.13 U	
299-E18-2	11/10/88	H0007ZY4	1.59		6.22	.10 U
299-E18-2	11/22/88	H0007ZY8	1.81		4.97	
299-E18-2	2/16/89	H0007ZZ4	1.72		5.46	
299-E18-2	2/16/89	H0007ZZ7	1.20 U		1.78 U	
299-E18-2	6/01/89	H0007ZZ8	3.01		4.70	
299-E18-2	8/11/89	H0008002	2.20		9.44	
299-E18-2	11/27/89	H0008006	1.32		4.71	.10 U
299-E18-2	9/06/91	B00LC0		6.25		
299-E18-2	7/10/92	B06PJ3		7.62		.05 U
299-E18-2	12/16/92	B07S37		5.28		
299-E18-3	8/16/88	H0008018	.35 U		1.87	
299-E18-3	11/10/88	H0008023	.29 U		5.68	.10 U
299-E18-3	2/16/89	H0008029	2.42		5.12	
299-E18-3	6/01/89	H0008033	.93		6.81	
299-E18-3	6/01/89	H0008036	1.10		5.36	
299-E18-3	8/08/89	H0008037	.85 U		10.60	
299-E18-3	11/27/89	H0008041	2.81		4.71	.10 U
299-E18-3	11/27/89	H0008044	2.28		5.95	.10 U
299-E18-3	9/06/91	B00LC4		6.04		
299-E18-3	6/03/92	B06PK0		2.95		.05 U
299-E18-3	6/03/92	B06PK1		3.68		.05 U
299-E18-3	12/16/92	B07S44		7.47		
299-E18-3	12/16/92	B07S46		5.79		
299-E18-4	8/16/88	H0008053	.92		2.05	
299-E18-4	11/09/88	H0008058	1.90		7.60	.10 U
299-E18-4	2/15/89	H0008064	.88 U		5.85	
299-E18-4	5/26/89	H0008068	2.33		6.08	
299-E18-4	8/08/89	H0008072	1.88		3.37	
299-E18-4	8/08/89	H0008075	3.49		6.64	
299-E18-4	11/21/89	H0008076	3.77		4.92	.10 U
299-E18-4	9/06/91	B00LC8		4.65		
299-E18-4	6/03/92	B06PK6		4.49		.05 U
299-E18-4	12/16/92	B07S57		11.70		

Groundwater Data for 2101-M Pond

Well Name	Collection Date	Sample Number	HEPTIDE 17/ppb 1/.	HEXCBEN 21/ppb ./.	HEXCBUT 21/ppb ./.	HEXCCYC 21/ppb ./.
299-E18-1	11/10/88	H0007ZV2	.10 U	10.00 U	10.00 U	10.00 U
299-E18-1	10/31/89	H0007ZX0	.10 U	10.00 U	10.00 U	10.00 U
299-E18-1	6/03/92	B06PH8	1.00 U			
299-E18-1	12/16/92	B07SN0	1.00 U			
299-E18-2	11/10/88	H0007ZY4	.10 U	10.00 U	10.00 U	10.00 U
299-E18-2	11/27/89	H0008006	.10 U	10.00 U	10.00 U	10.00 U
299-E18-2	7/10/92	B06PJ3	1.00 U			
299-E18-3	11/10/88	H0008023	.10 U	10.00 U	10.00 U	10.00 U
299-E18-3	11/27/89	H0008041	.10 U	10.00 U	10.00 U	10.00 U
299-E18-3	11/27/89	H0008044	.10 U	10.00 U	10.00 U	10.00 U
299-E18-3	6/03/92	B06PK0	1.00 U			
299-E18-3	6/03/92	B06PK1	1.00 U			
299-E18-4	11/09/88	H0008058	.10 U	10.00 U	10.00 U	10.00 U
299-E18-4	11/21/89	H0008076	.10 U	10.00 U	10.00 U	10.00 U
299-E18-4	6/03/92	B06PK6	1.00 U			

Well Name	Collection Date	Sample Number	HEXCETH 21/ppb ./.	HEXACHL 21/ppb ./.	HEXAENE 21/ppb ./.	LHYDRAZ 36/ppb
299-E18-1	11/10/88	H0007ZV2	10.00 U	10.00 U	10.00 U	
299-E18-1	2/15/89	H0007ZV8				30.00 U
299-E18-1	8/08/89	H0007ZW6				30.00 U
299-E18-1	10/31/89	H0007ZX0	10.00 U	10.00 U	10.00 U	30.00 U
299-E18-1	1/24/92	B01Q59				30.00 U
299-E18-2	11/10/88	H0007ZY4	10.00 U	10.00 U	10.00 U	
299-E18-2	11/27/89	H0008006	10.00 U	10.00 U	10.00 U	30.00 U
299-E18-3	11/10/88	H0008023	10.00 U	10.00 U	10.00 U	
299-E18-3	11/27/89	H0008041	10.00 U	10.00 U	10.00 U	30.00 U
299-E18-3	11/27/89	H0008044	10.00 U	10.00 U	10.00 U	30.00 U
299-E18-4	11/09/88	H0008058	10.00 U	10.00 U	10.00 U	
299-E18-4	11/21/89	H0008076	10.00 U	10.00 U	10.00 U	30.00 U

Well Name	Collection Date	Sample Number	INDENOP 21/ppb ./.	I-129LD 139/pCi/L ./.	IRON 34/ppb 20/300s	IRON 35/ppb ./300s
299-E18-1	8/16/88	H0007ZT7				1250.00
299-E18-1	9/22/88	H0007ZV1				1810.00
299-E18-1	11/10/88	H0007ZV2	10.00 U			355.00
299-E18-1	11/10/88	H0007ZV5				265.00

Groundwater Data for 2101-M Pond

Well Name	Collection Date	Sample Number	INDENOP 21/ppb ./.	I-129LD 139/pCi/L ./.	IRON 34/ppb 20/300s	IRON 35/ppb ./300s
299-E18-1	2/15/89	H0007ZV8				162.00
299-E18-1	5/26/89	H0007ZW2				546.00
299-E18-1	8/08/89	H0007ZW6				531.00
299-E18-1	10/31/89	H0007ZX0	10.00 U			802.00
299-E18-1	7/09/91	H00071X9			1100.00	
299-E18-1	9/06/91	B00LB6			600.00	
299-E18-1	1/24/92	B01Q59			430.00 D	
299-E18-1	6/03/92	B06PC7		-.10 U		
299-E18-1	6/03/92	B06PH8			290.00	
299-E18-1	12/16/92	B07S32			910.00	
299-E18-2	8/16/88	H0007ZX9				250.00
299-E18-2	9/22/88	H0007ZY3				535.00
299-E18-2	11/10/88	H0007ZY4	10.00 U			142.00
299-E18-2	11/22/88	H0007ZY8				218.00
299-E18-2	2/16/89	H0007ZZ4				303.00
299-E18-2	2/16/89	H0007ZZ7				423.00
299-E18-2	6/01/89	H0007ZZ8				124.00
299-E18-2	8/11/89	H0008002				156.00
299-E18-2	11/27/89	H0008006	10.00 U			77.00
299-E18-2	9/06/91	B00LC0			130.00 Q	
299-E18-2	7/10/92	B06PC9		-.01 U		
299-E18-2	7/10/92	B06PJ3			790.00 R	
299-E18-2	12/16/92	B07S37			480.00	
299-E18-3	8/16/88	H0008018				983.00
299-E18-3	9/22/88	H0008022				1440.00
299-E18-3	11/10/88	H0008023	10.00 U			325.00
299-E18-3	2/16/89	H0008029				858.00
299-E18-3	6/01/89	H0008033				284.00
299-E18-3	6/01/89	H0008036				294.00
299-E18-3	8/08/89	H0008037				574.00
299-E18-3	11/27/89	H0008041	10.00 U			407.00
299-E18-3	11/27/89	H0008044	10.00 U			185.00
299-E18-3	9/06/91	B00LC4			45.00 Q	
299-E18-3	6/03/92	B06PD1		.22 U		
299-E18-3	6/03/92	B06PK0			230.00	
299-E18-3	6/03/92	B06PK1			250.00	
299-E18-3	12/16/92	B07S44			360.00	
299-E18-3	12/16/92	B07S46			330.00	
299-E18-4	8/16/88	H0008053				493.00
299-E18-4	9/22/88	H0008057				1580.00
299-E18-4	11/09/88	H0008058	10.00 U			261.00
299-E18-4	2/15/89	H0008064				325.00
299-E18-4	5/26/89	H0008068				121.00
299-E18-4	8/08/89	H0008072				412.00
299-E18-4	8/08/89	H0008075				465.00

Groundwater Data for 2101-M Pond

Well Name	Collection Date	Sample Number	INDENOP 21/ppb ./.	I-129LD 139/pCi/L ./.	IRON 34/ppb 20/300s	IRON 35/ppb ./300s
299-E18-4	11/21/89	H0008076	10.00 U			323.00
299-E18-4	9/06/91	B00LC8			300.00	
299-E18-4	6/03/92	B06PD3		.12 U		
299-E18-4	6/03/92	B06PK6			430.00	
299-E18-4	12/16/92	B07S57			410.00	

Well Name	Collection Date	Sample Number	FIRON 34/ppb 20/300s	ISOBUTY 28/ppb ./.	ISODRIN 19/ppb 10/.	ISOPHER 21/ppb ./.
299-E18-1	8/16/88	H0007ZT7	33.00			
299-E18-1	9/22/88	H0007ZV1	30.00 U			
299-E18-1	11/10/88	H0007ZV2		1000.00 U		
299-E18-1	11/10/88	H0007ZV2	30.00 U			
299-E18-1	11/10/88	H0007ZV5	30.00 U			
299-E18-1	2/15/89	H0007ZV8	30.00 U			
299-E18-1	5/26/89	H0007ZW2	30.00 U			
299-E18-1	8/08/89	H0007ZW6	30.00 U			
299-E18-1	10/31/89	H0007ZX0		10000.00 U	10.00 U	10.00 U
299-E18-1	10/31/89	H0007ZX0	35.00			
299-E18-1	7/09/91	H00071X9F	49.00			
299-E18-1	9/06/91	B00LB6F	31.00			
299-E18-1	1/24/92	B01Q60	40.00 D			
299-E18-1	6/03/92	B06PJ2	56.00			
299-E18-1	12/16/92	B07S36	30.00			
299-E18-2	8/16/88	H0007ZX9	39.00			
299-E18-2	9/22/88	H0007ZY3	30.00 U			
299-E18-2	11/10/88	H0007ZY4		1000.00 U		
299-E18-2	11/10/88	H0007ZY4	30.00 U			
299-E18-2	11/22/88	H0007ZY8	30.00 U			
299-E18-2	2/16/89	H0007ZZ4	39.00			
299-E18-2	2/16/89	H0007ZZ7	40.00			
299-E18-2	6/01/89	H0007ZZ8	30.00 U			
299-E18-2	8/11/89	H0008002	30.00 U			
299-E18-2	11/27/89	H0008006		10000.00 U	10.00 U	10.00 U
299-E18-2	11/27/89	H0008006	30.00 U			
299-E18-2	9/06/91	B00LC0F	38.00 Q			
299-E18-2	7/10/92	B06PJ8	34.00			
299-E18-2	12/16/92	B07S41	40.00			
299-E18-3	8/16/88	H0008018	40.00			
299-E18-3	9/22/88	H0008022	32.00			
299-E18-3	11/10/88	H0008023		1000.00 U		
299-E18-3	11/10/88	H0008023	53.00			

Groundwater Data for 2101-M Pond

Well Name	Collection Date	Sample Number	FIRON 34/ppb 20/300s	ISOBUTY 28/ppb ./.	ISODRIN 19/ppb 10/.	ISOPHER 21/ppb ./.
299-E18-3	2/16/89	H0008029	41.00			
299-E18-3	6/01/89	H0008033	39.00			
299-E18-3	6/01/89	H0008036	31.00			
299-E18-3	8/08/89	H0008037	30.00 U			
299-E18-3	11/27/89	H0008041		10000.00 U	10.00 U	10.00 U
299-E18-3	11/27/89	H0008041	30.00 U			
299-E18-3	11/27/89	H0008044		10000.00 U	10.00 U	10.00 U
299-E18-3	11/27/89	H0008044	30.00 U			
299-E18-3	9/06/91	B00LC4F	64.00 Q			
299-E18-3	6/03/92	B06PK4	50.00			
299-E18-3	6/03/92	B06PK5	120.00			
299-E18-3	12/16/92	B07S55	20.00			
299-E18-3	12/16/92	B07S56	340.00			
299-E18-4	8/16/88	H0008053	67.00			
299-E18-4	9/22/88	H0008057	68.00			
299-E18-4	11/09/88	H0008058		1000.00 U		
299-E18-4	11/09/88	H0008058	30.00 U			
299-E18-4	2/15/89	H0008064	30.00 U			
299-E18-4	5/26/89	H0008068	32.00			
299-E18-4	8/08/89	H0008072	31.00			
299-E18-4	8/08/89	H0008075	32.00			
299-E18-4	11/21/89	H0008076		10000.00 U	10.00 U	10.00 U
299-E18-4	11/21/89	H0008076	30.00 U			
299-E18-4	9/06/91	B00LC8F	49.00			
299-E18-4	6/03/92	B06PL2	260.00			
299-E18-4	12/16/92	B07S61	30.00			

Well Name	Collection Date	Sample Number	ISOSOLE 21/ppb ./.	KEPONE 17/ppb ./.	KEROSEN 21/ppb ./.	LEAD 40/ppb 5/50
299-E18-1	11/10/88	H0007ZV2	10.00 U		10000.00 U	
299-E18-1	10/31/89	H0007ZX0	10.00 U	1.00 U	10000.00 U	
299-E18-1	6/03/92	B06PH8				5.00 U
299-E18-1	12/16/92	B07SN0				5.00 U
299-E18-2	11/10/88	H0007ZY4	10.00 U		10000.00 U	
299-E18-2	11/27/89	H0008006	10.00 U	1.00 U	10000.00 U	
299-E18-2	7/10/92	B06PJ3				5.00 U
299-E18-3	11/10/88	H0008023	10.00 U		10000.00 U	
299-E18-3	11/27/89	H0008041	10.00 U	1.00 U	10000.00 U	
299-E18-3	11/27/89	H0008044	10.00 U	1.00 U	10000.00 U	
299-E18-3	6/03/92	B06PK0				5.00 U
299-E18-3	6/03/92	B06PK1				5.00 U

Groundwater Data for 2101-M Pond

Well Name	Collection Date	Sample Number	ISOSOLE 21/ppb ./.	KEPONE 17/ppb ./.	KEROSEN 21/ppb ./.	LEAD 40/ppb 5/50
299-E18-4	11/09/88	H0008058	10.00 U		10000.00 U	
299-E18-4	11/21/89	H0008076	10.00 U	1.00 U	10000.00 U	
299-E18-4	6/03/92	B06PK6				5.30

Well Name	Collection Date	Sample Number	LEAD 76/ ./.	FLEAD 40/ppb 5/50	PB212 140/pCi/L ./.	MAGNES 34/ppb 100/.
299-E18-1	8/16/88	H0007ZT7	5.00 U			
299-E18-1	8/16/88	H0007ZT7		5.00 U		
299-E18-1	11/10/88	H0007ZV2	5.00 U			
299-E18-1	11/10/88	H0007ZV2		5.00 U		
299-E18-1	11/10/88	H0007ZV5	5.00 U			
299-E18-1	11/10/88	H0007ZV5		5.00 U		
299-E18-1	2/15/89	H0007ZV8	5.00 U			
299-E18-1	2/15/89	H0007ZV8		5.00 U		
299-E18-1	5/26/89	H0007ZW2	5.00 U			
299-E18-1	5/26/89	H0007ZW2		5.00 U		
299-E18-1	8/08/89	H0007ZW6	5.00 U			
299-E18-1	8/08/89	H0007ZW6		5.00 U		
299-E18-1	10/31/89	H0007ZX0	5.00 U			
299-E18-1	10/31/89	H0007ZX0		5.00 U		
299-E18-1	7/09/91	H00071X9				14000.00
299-E18-1	9/06/91	B00LB6			10.30	14000.00
299-E18-1	1/24/92	B01Q59				13000.00 D
299-E18-1	6/03/92	B06PH8				14000.00
299-E18-1	6/03/92	B06PJ2		5.00 U		
299-E18-1	12/16/92	B07S32				14000.00
299-E18-1	12/16/92	B07SN1		5.00 U		
299-E18-2	8/16/88	H0007ZX9	5.00 U			
299-E18-2	8/16/88	H0007ZX9		5.00 U		
299-E18-2	11/10/88	H0007ZY4	5.00 U			
299-E18-2	11/10/88	H0007ZY4		5.00 U		
299-E18-2	11/22/88	H0007ZY8	5.00 U			
299-E18-2	11/22/88	H0007ZY8		5.00 U		
299-E18-2	2/16/89	H0007ZZ4	5.00 U			
299-E18-2	2/16/89	H0007ZZ4		5.00 U		
299-E18-2	2/16/89	H0007ZZ7	5.00 U			
299-E18-2	2/16/89	H0007ZZ7		5.00 U		
299-E18-2	6/01/89	H0007ZZ8	5.00 U			
299-E18-2	6/01/89	H0007ZZ8		5.00 U		
299-E18-2	8/11/89	H0008002	5.00 U			
299-E18-2	8/11/89	H0008002		5.00 U		

Groundwater Data for 2101-M Pond

Well Name	Collection Date	Sample Number	LEAD 76/ ./.	FLEAD 40/ppb 5/50	PB212 140/pCi/L ./.	MAGNES 34/ppb 100/.
299-E18-2	11/27/89	H0008006	5.00 U			
299-E18-2	11/27/89	H0008006		5.00 U		
299-E18-2	9/06/91	B00LC0				7100.00
299-E18-2	7/10/92	B06PJ3				7500.00
299-E18-2	7/10/92	B06PJ8		5.00 U		
299-E18-2	12/16/92	B07S37				7700.00
299-E18-3	8/16/88	H0008018	5.00 U			
299-E18-3	8/16/88	H0008018		5.00 U		
299-E18-3	11/10/88	H0008023	5.00 U			
299-E18-3	11/10/88	H0008023		5.00 U		
299-E18-3	2/16/89	H0008029	5.00 U			
299-E18-3	2/16/89	H0008029		5.00 U		
299-E18-3	6/01/89	H0008033	5.00 U			
299-E18-3	6/01/89	H0008033		5.00 U		
299-E18-3	6/01/89	H0008036	5.00 U			
299-E18-3	6/01/89	H0008036		5.00 U		
299-E18-3	8/08/89	H0008037	5.00 U			
299-E18-3	8/08/89	H0008037		5.00 U		
299-E18-3	11/27/89	H0008041	5.00 U			
299-E18-3	11/27/89	H0008041		5.00 U		
299-E18-3	11/27/89	H0008044	5.00 U			
299-E18-3	11/27/89	H0008044		5.00 U		
299-E18-3	9/06/91	B00LC4				8300.00
299-E18-3	6/03/92	B06PK0				7900.00
299-E18-3	6/03/92	B06PK1				8100.00
299-E18-3	6/03/92	B06PK4		5.00 U		
299-E18-3	6/03/92	B06PK5		5.00 U		
299-E18-3	12/16/92	B07S44				7700.00
299-E18-3	12/16/92	B07S46				7700.00
299-E18-4	8/16/88	H0008053	9.50			
299-E18-4	8/16/88	H0008053		5.00 U		
299-E18-4	11/09/88	H0008058	6.00			
299-E18-4	11/09/88	H0008058		5.00 U		
299-E18-4	2/15/89	H0008064	5.00 U			
299-E18-4	2/15/89	H0008064		5.00 U		
299-E18-4	5/26/89	H0008068	5.00 U			
299-E18-4	5/26/89	H0008068		5.00 U		
299-E18-4	8/08/89	H0008072	5.00 U			
299-E18-4	8/08/89	H0008072		5.00 U		
299-E18-4	8/08/89	H0008075	5.00 U			
299-E18-4	8/08/89	H0008075		5.00 U		
299-E18-4	11/21/89	H0008076	5.00 U			
299-E18-4	11/21/89	H0008076		5.00 U		
299-E18-4	9/06/91	B00LC8				8400.00
299-E18-4	6/03/92	B06PK6				7800.00

Groundwater Data for 2101-M Pond

Well Name	Collection Date	Sample Number	LEAD 76/ ./.	FLEAD 40/ppb 5/50	PB212 140/pCi/L ./.	MAGNES 34/ppb 100/.
299-E18-4	6/03/92	B06PL2		5.00 U		
299-E18-4	12/16/92	B07S57				7200.00

Well Name	Collection Date	Sample Number	MAGNES 35/ppb ./.	FMAGNES 34/ppb 100/.	MALHYDR 21/ppb ./.	MALOILE 21/ppb ./.
299-E18-1	8/16/88	H0007ZT7	15300.00			
299-E18-1	8/16/88	H0007ZT7		17100.00		
299-E18-1	9/22/88	H0007ZV1	17000.00			
299-E18-1	9/22/88	H0007ZV1		16500.00		
299-E18-1	11/10/88	H0007ZV2	15200.00		500.00 U	10.00 U
299-E18-1	11/10/88	H0007ZV2		15300.00		
299-E18-1	11/10/88	H0007ZV5	14700.00			
299-E18-1	11/10/88	H0007ZV5		14700.00		
299-E18-1	2/15/89	H0007ZV8	13900.00			
299-E18-1	2/15/89	H0007ZV8		14400.00		
299-E18-1	5/26/89	H0007ZW2	14600.00			
299-E18-1	5/26/89	H0007ZW2		15100.00		
299-E18-1	8/08/89	H0007ZW6	13700.00			
299-E18-1	8/08/89	H0007ZW6		16200.00		
299-E18-1	10/31/89	H0007ZX0	14700.00		500.00 U	10.00 U
299-E18-1	10/31/89	H0007ZX0		15500.00		
299-E18-1	7/09/91	H00071X9F		14000.00		
299-E18-1	9/06/91	B00LB6F		14000.00		
299-E18-1	1/24/92	B01Q60		13000.00 D		
299-E18-1	6/03/92	B06PJ2		14000.00		
299-E18-1	12/16/92	B07S36		14000.00		
299-E18-2	8/16/88	H0007ZX9	6750.00			
299-E18-2	8/16/88	H0007ZX9		7340.00		
299-E18-2	9/22/88	H0007ZY3	6790.00			
299-E18-2	9/22/88	H0007ZY3		6710.00		
299-E18-2	11/10/88	H0007ZY4	6460.00		500.00 U	10.00 U
299-E18-2	11/10/88	H0007ZY4		7170.00		
299-E18-2	11/22/88	H0007ZY8	6890.00			
299-E18-2	11/22/88	H0007ZY8		6910.00		
299-E18-2	2/16/89	H0007ZZ4	7190.00			
299-E18-2	2/16/89	H0007ZZ4		7150.00		
299-E18-2	2/16/89	H0007ZZ7	7220.00			
299-E18-2	2/16/89	H0007ZZ7		7510.00		
299-E18-2	6/01/89	H0007ZZ8	7800.00			
299-E18-2	6/01/89	H0007ZZ8		7140.00		
299-E18-2	8/11/89	H0008002	7330.00			

Groundwater Data for 2101-M Pond

Well Name	Collection Date	Sample Number	MAGNES 35/ppb ./.	FMAGNES 34/ppb 100/.	MALHYDR 21/ppb ./.	MALOILE 21/ppb ./.
299-E18-2	8/11/89	H0008002		8670.00		
299-E18-2	11/27/89	H0008006	7510.00		500.00 U	10.00 U
299-E18-2	11/27/89	H0008006		7280.00		
299-E18-2	9/06/91	B00LC0F		7200.00		
299-E18-2	7/10/92	B06PJ8		7200.00		
299-E18-2	12/16/92	B07S41		7500.00		
299-E18-3	8/16/88	H0008018	7170.00			
299-E18-3	8/16/88	H0008018		7550.00		
299-E18-3	9/22/88	H0008022	7900.00			
299-E18-3	9/22/88	H0008022		8080.00		
299-E18-3	11/10/88	H0008023	7180.00		500.00 U	10.00 U
299-E18-3	11/10/88	H0008023		7850.00		
299-E18-3	2/16/89	H0008029	8320.00			
299-E18-3	2/16/89	H0008029		8270.00		
299-E18-3	6/01/89	H0008033	7720.00			
299-E18-3	6/01/89	H0008033		7740.00		
299-E18-3	6/01/89	H0008036	7790.00			
299-E18-3	6/01/89	H0008036		7600.00		
299-E18-3	8/08/89	H0008037	7400.00			
299-E18-3	8/08/89	H0008037		8000.00		
299-E18-3	11/27/89	H0008041	7960.00		500.00 U	10.00 U
299-E18-3	11/27/89	H0008041		7910.00		
299-E18-3	11/27/89	H0008044	7670.00		500.00 U	10.00 U
299-E18-3	11/27/89	H0008044		7800.00		
299-E18-3	9/06/91	B00LC4F		7200.00		
299-E18-3	6/03/92	B06PK4		7900.00		
299-E18-3	6/03/92	B06PK5		7900.00		
299-E18-3	12/16/92	B07S55		7700.00		
299-E18-3	12/16/92	B07S56		7700.00		
299-E18-4	8/16/88	H0008053	7810.00			
299-E18-4	8/16/88	H0008053		8340.00		
299-E18-4	9/22/88	H0008057	8070.00			
299-E18-4	9/22/88	H0008057		8060.00		
299-E18-4	11/09/88	H0008058	7850.00		500.00 U	10.00 U
299-E18-4	11/09/88	H0008058		7940.00		
299-E18-4	2/15/89	H0008064	7930.00			
299-E18-4	2/15/89	H0008064		7850.00		
299-E18-4	5/26/89	H0008068	8650.00			
299-E18-4	5/26/89	H0008068		9350.00		
299-E18-4	8/08/89	H0008072	8580.00			
299-E18-4	8/08/89	H0008072		9060.00		
299-E18-4	8/08/89	H0008075	8470.00			
299-E18-4	8/08/89	H0008075		8970.00		
299-E18-4	11/21/89	H0008076	8100.00		500.00 U	10.00 U
299-E18-4	11/21/89	H0008076		7970.00		

Groundwater Data for 2101-M Pond

Well Name	Collection Date	Sample Number	MAGNES 35/ppb ./.	FMAGNES 34/ppb 100/.	MALHYDR 21/ppb ./.	MALOILE 21/ppb ./.
299-E18-4	9/06/91	B00LC8F		8200.00		
299-E18-4	6/03/92	B06PL2		7700.00		
299-E18-4	12/16/92	B07S61		7200.00		

Well Name	Collection Date	Sample Number	MANGESE 34/ppb 10/50s	MANGESE 35/ppb ./50s	FMANGAN 34/ppb 10/50s	MERCURY 41/ppb .2/2
299-E18-1	8/16/88	H0007ZT7		70.00		
299-E18-1	8/16/88	H0007ZT7			51.00	
299-E18-1	9/22/88	H0007ZV1		46.00		
299-E18-1	9/22/88	H0007ZV1			19.00	
299-E18-1	11/10/88	H0007ZV2		12.00		
299-E18-1	11/10/88	H0007ZV2			5.00 U	
299-E18-1	11/10/88	H0007ZV5		12.00		
299-E18-1	11/10/88	H0007ZV5			5.00 U	
299-E18-1	2/15/89	H0007ZV8		5.00 U		
299-E18-1	2/15/89	H0007ZV8			5.00 U	
299-E18-1	5/26/89	H0007ZW2		12.00		
299-E18-1	5/26/89	H0007ZW2			5.00 U	
299-E18-1	8/08/89	H0007ZW6		12.00		
299-E18-1	8/08/89	H0007ZW6			5.00 U	
299-E18-1	10/31/89	H0007ZX0		18.00		
299-E18-1	10/31/89	H0007ZX0			5.00 U	
299-E18-1	7/09/91	H00071X9	26.00			
299-E18-1	7/09/91	H00071X9F			10.00 U	
299-E18-1	9/06/91	B00LB6	16.00			
299-E18-1	9/06/91	B00LB6F			10.00 U	
299-E18-1	1/24/92	B01Q59	10.00 UD			
299-E18-1	1/24/92	B01Q60			10.00 UD	
299-E18-1	6/03/92	B06PH8	10.00 U			.20 U
299-E18-1	6/03/92	B06PJ2			10.00 U	
299-E18-1	12/16/92	B07S32	20.00			
299-E18-1	12/16/92	B07S36			10.00 U	
299-E18-1	12/16/92	B07SN0				.20 U
299-E18-2	8/16/88	H0007ZX9		6.00		
299-E18-2	8/16/88	H0007ZX9			5.00 U	
299-E18-2	9/22/88	H0007ZY3		13.00		
299-E18-2	9/22/88	H0007ZY3			5.00 U	
299-E18-2	11/10/88	H0007ZY4		5.00 U		
299-E18-2	11/10/88	H0007ZY4			5.00 U	
299-E18-2	11/22/88	H0007ZY8		5.00		
299-E18-2	11/22/88	H0007ZY8			5.00 U	

Groundwater Data for 2101-M Pond

Well Name	Collection Date	Sample Number	MANGESE 34/ppb 10/50s	MANGESE 35/ppb ./50s	FMANGAN 34/ppb 10/50s	MERCURY 41/ppb .2/2
299-E18-2	2/16/89	H0007ZZ4		8.00		
299-E18-2	2/16/89	H0007ZZ4			5.00 U	
299-E18-2	2/16/89	H0007ZZ7		9.00		
299-E18-2	2/16/89	H0007ZZ7			5.00 U	
299-E18-2	6/01/89	H0007ZZ8		9.00		
299-E18-2	6/01/89	H0007ZZ8			5.00 U	
299-E18-2	8/11/89	H0008002		5.00 U		
299-E18-2	8/11/89	H0008002			5.00 U	
299-E18-2	11/27/89	H0008006		5.00 U		
299-E18-2	11/27/89	H0008006			5.00 U	
299-E18-2	9/06/91	B00LC0	10.00 U			
299-E18-2	9/06/91	B00LC0F			10.00 U	
299-E18-2	7/10/92	B06PJ3	17.00			.20 U
299-E18-2	7/10/92	B06PJ8			10.00 U	
299-E18-2	12/16/92	B07S37	10.00			
299-E18-2	12/16/92	B07S41			10.00 U	
299-E18-3	8/16/88	H0008018		15.00		
299-E18-3	8/16/88	H0008018			5.00 U	
299-E18-3	9/22/88	H0008022		22.00		
299-E18-3	9/22/88	H0008022			5.00 U	
299-E18-3	11/10/88	H0008023		5.00 U		
299-E18-3	11/10/88	H0008023			5.00 U	
299-E18-3	2/16/89	H0008029		18.00		
299-E18-3	2/16/89	H0008029			5.00 U	
299-E18-3	6/01/89	H0008033		7.00		
299-E18-3	6/01/89	H0008033			5.00 U	
299-E18-3	6/01/89	H0008036		7.00		
299-E18-3	6/01/89	H0008036			5.00 U	
299-E18-3	8/08/89	H0008037		12.00		
299-E18-3	8/08/89	H0008037			5.00 U	
299-E18-3	11/27/89	H0008041		12.00		
299-E18-3	11/27/89	H0008041			5.00 U	
299-E18-3	11/27/89	H0008044		5.00 U		
299-E18-3	11/27/89	H0008044			5.00 U	
299-E18-3	9/06/91	B00LC4	10.00 U			
299-E18-3	9/06/91	B00LC4F			10.00 U	
299-E18-3	6/03/92	B06PK0	10.00 U			.20 U
299-E18-3	6/03/92	B06PK1	10.00 U			.20 U
299-E18-3	6/03/92	B06PK4			10.00 U	
299-E18-3	6/03/92	B06PK5			10.00 U	
299-E18-3	12/16/92	B07S44	10.00 U			
299-E18-3	12/16/92	B07S46	10.00 U			
299-E18-3	12/16/92	B07S55			10.00 U	
299-E18-3	12/16/92	B07S56			10.00 U	
299-E18-4	8/16/88	H0008053		13.00		

Groundwater Data for 2101-M Pond

Well Name	Collection Date	Sample Number	MANGESE 34/ppb 10/50s	MANGESE 35/ppb ./50s	FMANGAN 34/ppb 10/50s	MERCURY 41/ppb .2/2
299-E18-4	8/16/88	H0008053			8.00	
299-E18-4	9/22/88	H0008057		32.00		
299-E18-4	9/22/88	H0008057			11.00	
299-E18-4	11/09/88	H0008058		5.00		
299-E18-4	11/09/88	H0008058			5.00 U	
299-E18-4	2/15/89	H0008064		10.00		
299-E18-4	2/15/89	H0008064			5.00 U	
299-E18-4	5/26/89	H0008068		5.00 U		
299-E18-4	5/26/89	H0008068			6.00	
299-E18-4	8/08/89	H0008072		10.00		
299-E18-4	8/08/89	H0008072			5.00 U	
299-E18-4	8/08/89	H0008075		12.00		
299-E18-4	8/08/89	H0008075			5.00	
299-E18-4	11/21/89	H0008076		8.00		
299-E18-4	11/21/89	H0008076			5.00 U	
299-E18-4	9/06/91	B00LC8	10.00 U			
299-E18-4	9/06/91	B00LC8F			10.00 U	
299-E18-4	6/03/92	B06PK6	11.00			.20 U
299-E18-4	6/03/92	B06PL2			10.00 U	
299-E18-4	12/16/92	B07S57	10.00 U			
299-E18-4	12/16/92	B07S61			10.00 U	

Well Name	Collection Date	Sample Number	FMERCUR 41/ppb .2/2	METHACR 16/ppb 5/.	METHTHI 16/ppb ./.	METHAPY 19/ppb 10/.
299-E18-1	8/16/88	H0007ZT7	.10 U			
299-E18-1	11/10/88	H0007ZV2		10.00 U	10.00 U	10.00 U
299-E18-1	11/10/88	H0007ZV2	.10 U			
299-E18-1	11/10/88	H0007ZV3		10.00 U	10.00 U	
299-E18-1	11/10/88	H0007ZV4		10.00 U	10.00 U	
299-E18-1	11/10/88	H0007ZV5		10.00 U	10.00 U	
299-E18-1	11/23/88	H0007ZV6		10.00 U	10.00 U	
299-E18-1	2/15/89	H0007ZV8	.10 U			
299-E18-1	5/26/89	H0007ZW2	.10 U			
299-E18-1	8/08/89	H0007ZW6	.10 U			
299-E18-1	10/31/89	H0007ZX0		10.00 U	10.00 U	10.00 U
299-E18-1	10/31/89	H0007ZX0	.10 U			
299-E18-1	6/03/92	B06PJ2	.20 U			
299-E18-1	12/16/92	B07SN1	.20 U			
299-E18-2	8/16/88	H0007ZX9	.10 U			
299-E18-2	11/10/88	H0007ZY4		10.00 U	10.00 U	10.00 U
299-E18-2	11/10/88	H0007ZY4	.10 U			

Groundwater Data for 2101-M Pond

Well Name	Collection Date	Sample Number	FMERCUR 41/ppb .2/2	METHACR 16/ppb 5/.	METHTHI 16/ppb ./.	METHAPY 19/ppb 10/.
299-E18-2	11/10/88	H0007ZY7		10.00 U	10.00 U	
299-E18-2	11/22/88	H0007ZY8	.10 U			
299-E18-2	11/23/88	H0007ZZ2		10.00 U	10.00 U	
299-E18-2	2/16/89	H0007ZZ4	.10 U			
299-E18-2	2/16/89	H0007ZZ7	.10 U			
299-E18-2	6/01/89	H0007ZZ8	.10 U			
299-E18-2	8/11/89	H0008002	.10 U			
299-E18-2	11/27/89	H0008006		10.00 U	10.00 U	10.00 U
299-E18-2	11/27/89	H0008006	.10 U			
299-E18-2	3/13/90	H0008010		10.00 U	10.00 U	
299-E18-2	7/10/92	B06PJ8	.20 U			
299-E18-3	8/16/88	H0008018	.10 U			
299-E18-3	11/10/88	H0008023		10.00 U	10.00 U	10.00 U
299-E18-3	11/10/88	H0008023	.10 U			
299-E18-3	11/10/88	H0008026		10.00 U	10.00 U	
299-E18-3	11/28/88	H0008027		10.00 U	10.00 U	
299-E18-3	2/16/89	H0008029	.10 U			
299-E18-3	6/01/89	H0008033	.10 U			
299-E18-3	6/01/89	H0008036	.10 U			
299-E18-3	8/08/89	H0008037	.10 U			
299-E18-3	11/27/89	H0008041		10.00 U	10.00 U	10.00 U
299-E18-3	11/27/89	H0008041	.10 U			
299-E18-3	11/27/89	H0008044		10.00 U	10.00 U	10.00 U
299-E18-3	11/27/89	H0008044	.10 U			
299-E18-3	3/13/90	H0008045		10.00 U	10.00 U	
299-E18-3	6/03/92	B06PK4	.20 U			
299-E18-3	6/03/92	B06PK5	.20 U			
299-E18-4	8/16/88	H0008053	.10 U			
299-E18-4	11/09/88	H0008058		10.00 U	10.00 U	10.00 U
299-E18-4	11/09/88	H0008058	.10 U			
299-E18-4	11/09/88	H0008061		10.00 U	10.00 U	
299-E18-4	11/23/88	H0008062		10.00 U	10.00 U	
299-E18-4	2/15/89	H0008064	.10 U			
299-E18-4	5/26/89	H0008068	.10 U			
299-E18-4	8/08/89	H0008072	.10 U			
299-E18-4	8/08/89	H0008075	.10 U			
299-E18-4	11/21/89	H0008076		10.00 U	10.00 U	10.00 U
299-E18-4	11/21/89	H0008076	.10 U			
299-E18-4	6/03/92	B06PL2	.20 U			

Groundwater Data for 2101-M Pond

Well Name	Collection Date	Sample Number	METHNYL 21/ppb ./.	METHLOR 17/ppb 2/100	IODOMET 16/ppb 5/.	METHBRO 16/ppb 10/.
299-E18-1	8/16/88	H0007ZT7		3.00 U		
299-E18-1	11/10/88	H0007ZV2	10.00 U	3.00 U	10.00 U	10.00 U
299-E18-1	11/10/88	H0007ZV3			10.00 U	10.00 U
299-E18-1	11/10/88	H0007ZV4			10.00 U	10.00 U
299-E18-1	11/10/88	H0007ZV5			10.00 U	10.00 U
299-E18-1	11/23/88	H0007ZV6			10.00 U	10.00 U
299-E18-1	2/15/89	H0007ZV8		3.00 U		
299-E18-1	5/26/89	H0007ZW2		3.00 U		
299-E18-1	8/08/89	H0007ZW6		3.00 U		
299-E18-1	10/31/89	H0007ZX0	10.00 U	3.00 U	10.00 U	10.00 U
299-E18-1	6/03/92	B06PH8		2.00 U		
299-E18-1	12/16/92	B07SN0		2.00 U		
299-E18-2	8/16/88	H0007ZX9		3.00 U		
299-E18-2	11/10/88	H0007ZY4	10.00 U	3.00 U	10.00 U	10.00 U
299-E18-2	11/10/88	H0007ZY7			10.00 U	10.00 U
299-E18-2	11/22/88	H0007ZY8		3.00 U		
299-E18-2	11/23/88	H0007ZZ2			10.00 U	10.00 U
299-E18-2	2/16/89	H0007ZZ4		3.00 U		
299-E18-2	6/01/89	H0007ZZ8		3.00 U		
299-E18-2	8/11/89	H0008002		3.00 U		
299-E18-2	11/27/89	H0008006	10.00 U	3.00 U	10.00 U	10.00 U
299-E18-2	3/13/90	H0008010			10.00 U	10.00 U
299-E18-2	7/10/92	B06PJ3		2.00 U		
299-E18-3	8/16/88	H0008018		3.00 U		
299-E18-3	11/10/88	H0008023	10.00 U	3.00 U	10.00 U	10.00 U
299-E18-3	11/10/88	H0008026			10.00 U	10.00 U
299-E18-3	11/28/88	H0008027			10.00 U	10.00 U
299-E18-3	2/16/89	H0008029		3.00 U		
299-E18-3	6/01/89	H0008033		3.00 U		
299-E18-3	6/01/89	H0008036		3.00 U		
299-E18-3	8/08/89	H0008037		3.00 U		
299-E18-3	11/27/89	H0008041	10.00 U	3.00 U	10.00 U	10.00 U
299-E18-3	11/27/89	H0008044	10.00 U	3.00 U	10.00 U	10.00 U
299-E18-3	3/13/90	H0008045			10.00 U	10.00 U
299-E18-3	6/03/92	B06PK0		2.00 U		
299-E18-3	6/03/92	B06PK1		2.00 U		
299-E18-4	8/16/88	H0008053		3.00 U		
299-E18-4	11/09/88	H0008058	10.00 U	3.00 U	10.00 U	10.00 U
299-E18-4	11/09/88	H0008061			10.00 U	10.00 U
299-E18-4	11/23/88	H0008062			10.00 U	10.00 U
299-E18-4	2/15/89	H0008064		3.00 U		
299-E18-4	5/26/89	H0008068		3.00 U		
299-E18-4	8/08/89	H0008072		3.00 U		
299-E18-4	11/21/89	H0008076	10.00 U	3.00 U	10.00 U	10.00 U
299-E18-4	6/03/92	B06PK6		2.00 U		

Groundwater Data for 2101-M Pond

Well Name	Collection Date	Sample Number	METHNYL 21/ppb ./.	METHLOR 17/ppb 2/100	IODOMET 16/ppb 5/.	METHBRO 16/ppb 10/.

Well Name	Collection Date	Sample Number	METHCHL 16/ppb 10/.	METHONE 16/ppb 100/.	METACRY 21/ppb ./.	METMSUL 21/ppb ./.
299-E18-1	11/10/88	H0007ZV2	10.00 U	10.00 U	10.00 U	10.00 U
299-E18-1	11/10/88	H0007ZV3	10.00 U	10.00 U	10.00 U	
299-E18-1	11/10/88	H0007ZV4	10.00 U	10.00 U	10.00 U	
299-E18-1	11/10/88	H0007ZV5	10.00 U	10.00 U	10.00 U	
299-E18-1	11/23/88	H0007ZV6	10.00 U	10.00 U	10.00 U	
299-E18-1	2/15/89	H0007ZV8		10.00 U		
299-E18-1	5/26/89	H0007ZW2		10.00 U		
299-E18-1	8/08/89	H0007ZW6		10.00 U		
299-E18-1	10/31/89	H0007ZX0	10.00 U	10.00 U	10.00 U	10.00 U
299-E18-1	6/03/92	B06PH8		100.00 U		
299-E18-2	11/10/88	H0007ZY4	10.00 U	10.00 U	10.00 U	10.00 U
299-E18-2	11/10/88	H0007ZY7	10.00 U	10.00 U	10.00 U	
299-E18-2	11/22/88	H0007ZY8		10.00 U		
299-E18-2	11/23/88	H0007ZZ2	10.00 U	10.00 U	10.00 U	
299-E18-2	11/27/89	H0008006	10.00 U	10.00 U	10.00 U	10.00 U
299-E18-2	3/13/90	H0008010	10.00 U	10.00 U		
299-E18-2	7/10/92	B06PJ3		100.00 U		
299-E18-3	11/10/88	H0008023	10.00 U	10.00 U	10.00 U	10.00 U
299-E18-3	11/10/88	H0008026	10.00 U	10.00 U	10.00 U	
299-E18-3	11/28/88	H0008027	10.00 U	10.00 U	10.00 U	
299-E18-3	11/27/89	H0008041	10.00 U	10.00 U	10.00 U	10.00 U
299-E18-3	11/27/89	H0008044	10.00 U	10.00 U	10.00 U	10.00 U
299-E18-3	3/13/90	H0008045	10.00 U	10.00 U		
299-E18-3	6/03/92	B06PK0		100.00 U		
299-E18-3	6/03/92	B06PK1		100.00 U		
299-E18-4	11/09/88	H0008058	10.00 U	10.00 U	10.00 U	10.00 U
299-E18-4	11/09/88	H0008061	10.00 U	10.00 U	10.00 U	
299-E18-4	11/23/88	H0008062	10.00 U	10.00 U	10.00 U	
299-E18-4	11/21/89	H0008076	10.00 U	10.00 U	10.00 U	10.00 U
299-E18-4	6/03/92	B06PK6		100.00 U		

Well Name	Collection Date	Sample Number	METHPAR 29/ppb .5/.	METHYCH 16/ppb 5/.	METHIOU 21/ppb ./.	MBP 57/ppb ./.
299-E18-1	11/10/88	H0007ZV2	2.00 U	10.00 U	10.00 U	5000.00 U

Groundwater Data for 2101-M Pond

Well Name	Collection Date	Sample Number	METHPAR 29/ppb .5/.	METHYCH 16/ppb 5/.	METHIOU 21/ppb ./.	MBP 57/ppb ./.
299-E18-1	11/10/88	H0007ZV3		10.00 U		
299-E18-1	11/10/88	H0007ZV4		10.00 U		
299-E18-1	11/10/88	H0007ZV5		10.00 U		
299-E18-1	11/23/88	H0007ZV6		10.00 U		
299-E18-1	2/15/89	H0007ZV8		5.00 U		
299-E18-1	5/26/89	H0007ZW2		5.00 U		
299-E18-1	8/08/89	H0007ZW6		5.00 U		
299-E18-1	10/31/89	H0007ZX0	2.00 U	5.00 U	10.00 U	10000.00 U
299-E18-1	6/03/92	B06PH8		5.00 U		
299-E18-2	11/10/88	H0007ZY4	2.00 U	10.00 U	10.00 U	5000.00 U
299-E18-2	11/10/88	H0007ZY7		10.00 U		
299-E18-2	11/22/88	H0007ZY8		10.00 U		
299-E18-2	11/23/88	H0007ZZ2		10.00 U		
299-E18-2	11/27/89	H0008006	2.00 U	5.00	10.00 U	10000.00 U
299-E18-2	3/13/90	H0008010		5.00 U		
299-E18-2	7/10/92	B06PJ3		5.00 U		
299-E18-3	11/10/88	H0008023	2.00 U	10.00 U	10.00 U	5000.00 U
299-E18-3	11/10/88	H0008026		10.00 U		
299-E18-3	11/28/88	H0008027		10.00 U		
299-E18-3	11/27/89	H0008041	2.00 U	3.00 U	10.00 U	10000.00 U
299-E18-3	11/27/89	H0008044	2.00 U	75.00	10.00 U	10000.00 U
299-E18-3	3/13/90	H0008045		5.00 U		
299-E18-3	6/03/92	B06PK0		5.00 U		
299-E18-3	6/03/92	B06PK1		5.00 U		
299-E18-4	11/09/88	H0008058	2.00 U	10.00 U	10.00 U	5000.00 U
299-E18-4	11/09/88	H0008061		10.00 U		
299-E18-4	11/23/88	H0008062		10.00 U		
299-E18-4	11/21/89	H0008076	2.00 U	5.00 U	10.00 U	10000.00 U
299-E18-4	6/03/92	B06PK6		5.00 U		

Well Name	Collection Date	Sample Number	NNDIEHY 16/ppb ./.	NNIURET 21/ppb ./.	DIPRNIT 21/ppb ./.	NNIBUTY 21/ppb ./.
299-E18-1	11/10/88	H0007ZV2	10.00 U	10.00 U	10.00 U	10.00 U
299-E18-1	11/10/88	H0007ZV3	10.00 U			
299-E18-1	11/10/88	H0007ZV4	10.00 U			
299-E18-1	11/10/88	H0007ZV5	10.00 U			
299-E18-1	11/23/88	H0007ZV6	10.00 U			
299-E18-1	10/31/89	H0007ZX0	10.00 U	10.00 U	10.00 U	10.00 U
299-E18-2	11/10/88	H0007ZY4	10.00 U	10.00 U	10.00 U	10.00 U
299-E18-2	11/10/88	H0007ZY7	10.00 U			
299-E18-2	11/23/88	H0007ZZ2	10.00 U			

Groundwater Data for 2101-M Pond

Well Name	Collection Date	Sample Number	NNDIEHY 16/ppb ./.	NNIURET 21/ppb ./.	DIPRNIT 21/ppb ./.	NNIBUTY 21/ppb ./.
299-E18-2	11/27/89	H0008006	10.00 U	10.00 U	10.00 U	10.00 U
299-E18-2	3/13/90	H0008010	10.00 U			
299-E18-3	11/10/88	H0008023	10.00 U	10.00 U	10.00 U	10.00 U
299-E18-3	11/10/88	H0008026	10.00 U			
299-E18-3	11/28/88	H0008027	10.00 U			
299-E18-3	11/27/89	H0008041	10.00 U	10.00 U	10.00 U	10.00 U
299-E18-3	11/27/89	H0008044	10.00 U	10.00 U	10.00 U	10.00 U
299-E18-3	3/13/90	H0008045	10.00 U			
299-E18-4	11/09/88	H0008058	10.00 U	10.00 U	10.00 U	10.00 U
299-E18-4	11/09/88	H0008061	10.00 U			
299-E18-4	11/23/88	H0008062	10.00 U			
299-E18-4	11/21/89	H0008076	10.00 U	10.00 U	10.00 U	10.00 U

Well Name	Collection Date	Sample Number	NNIDIEA 79/ppb ./.	NNIDIEY 21/ppb ./.	NNIDIME 21/ppb ./.	NNDIPHA 21/ppb ./.
299-E18-1	11/10/88	H0007ZV2	10.00 U	10.00 U	10.00 U	
299-E18-1	10/31/89	H0007ZX0	10.00 U	10.00 U	10.00 U	10.00 U
299-E18-2	11/10/88	H0007ZY4	10.00 U	10.00 U	10.00 U	
299-E18-2	11/27/89	H0008006	10.00 U	10.00 U	10.00 U	10.00 U
299-E18-3	11/10/88	H0008023	10.00 U	10.00 U	10.00 U	
299-E18-3	11/27/89	H0008041	10.00 U	10.00 U	10.00 U	10.00 U
299-E18-3	11/27/89	H0008044	10.00 U	10.00 U	10.00 U	10.00 U
299-E18-4	11/09/88	H0008058	10.00 U	10.00 U	10.00 U	
299-E18-4	11/21/89	H0008076	10.00 U	10.00 U	10.00 U	10.00 U

Well Name	Collection Date	Sample Number	NNIMETH 21/ppb ./.	NNIVINY 21/ppb ./.	NNIMORP 21/ppb ./.	NNINICO 21/ppb ./.
299-E18-1	11/10/88	H0007ZV2	10.00 U	10.00 U	10.00 U	10.00 U
299-E18-1	10/31/89	H0007ZX0	10.00 U	10.00 U	10.00 U	10.00 U
299-E18-2	11/10/88	H0007ZY4	10.00 U	10.00 U	10.00 U	10.00 U
299-E18-2	11/27/89	H0008006	10.00 U	10.00 U	10.00 U	10.00 U
299-E18-3	11/10/88	H0008023	10.00 U	10.00 U	10.00 U	10.00 U
299-E18-3	11/27/89	H0008041	10.00 U	10.00 U	10.00 U	10.00 U
299-E18-3	11/27/89	H0008044	10.00 U	10.00 U	10.00 U	10.00 U
299-E18-4	11/09/88	H0008058	10.00 U	10.00 U	10.00 U	10.00 U
299-E18-4	11/21/89	H0008076	10.00 U	10.00 U	10.00 U	10.00 U

Groundwater Data for 2101-M Pond

Well Name	Collection Date	Sample Number	NNIMETH 21/ppb ./.	NNIVINY 21/ppb ./.	NNIMORP 21/ppb ./.	NNINICO 21/ppb ./.

Well Name	Collection Date	Sample Number	NNIPIPE 21/ppb ./.	PHENREA 18/ppb ./.	PROPYLA 28/ppb ./.	NAPHTHA 21/ppb ./.
299-E18-1	11/10/88	H0007ZV2	10.00 U	500.00 U	10000.00 U	10.00 U
299-E18-1	10/31/89	H0007ZX0	10.00 U	500.00 U	10000.00 U	10.00 U
299-E18-2	11/10/88	H0007ZY4	10.00 U	500.00 U	10000.00 U	10.00 U
299-E18-2	11/27/89	H0008006	10.00 U	500.00 U	10000.00 U	10.00 U
299-E18-3	11/10/88	H0008023	10.00 U	500.00 U	10000.00 U	10.00 U
299-E18-3	11/27/89	H0008041	10.00 U	500.00 U	10000.00 U	10.00 U
299-E18-3	11/27/89	H0008044	10.00 U	500.00 U	10000.00 U	10.00 U
299-E18-4	11/09/88	H0008058	10.00 U	500.00 U	10000.00 U	10.00 U
299-E18-4	11/21/89	H0008076	10.00 U	500.00 U	10000.00 U	10.00 U

Well Name	Collection Date	Sample Number	NICKEL 34/ppb 30/.	NICKEL 35/ppb ./.	FNICKEL 34/ppb 30/.	NITRATE 124/ppb 200/45000
299-E18-1	8/16/88	H0007ZT7		15.00		
299-E18-1	8/16/88	H0007ZT7			10.00 U	
299-E18-1	9/22/88	H0007ZV1		48.00		
299-E18-1	9/22/88	H0007ZV1			10.00 U	
299-E18-1	11/10/88	H0007ZV2		25.00		
299-E18-1	11/10/88	H0007ZV2			16.00	
299-E18-1	11/10/88	H0007ZV5		19.00		
299-E18-1	11/10/88	H0007ZV5			15.00	
299-E18-1	2/15/89	H0007ZV8		10.00 U		
299-E18-1	2/15/89	H0007ZV8			10.00 U	
299-E18-1	5/26/89	H0007ZW2		13.00		
299-E18-1	5/26/89	H0007ZW2			10.00 U	
299-E18-1	8/08/89	H0007ZW6		44.00		
299-E18-1	8/08/89	H0007ZW6			10.00 U	
299-E18-1	10/31/89	H0007ZX0		22.00		
299-E18-1	10/31/89	H0007ZX0			10.00 U	
299-E18-1	7/09/91	H00071X9	67.00			
299-E18-1	7/09/91	H00071X9F			30.00 U	
299-E18-1	9/06/91	B00LB6	42.00			
299-E18-1	9/06/91	B00LB6F			30.00 U	
299-E18-1	1/24/92	B01Q59	30.00 UD			13000.00
299-E18-1	1/24/92	B01Q60			30.00 UD	

Groundwater Data for 2101-M Pond

Well Name	Collection Date	Sample Number	NICKEL 34/ppb 30/.	NICKEL 35/ppb ./.	FNICKEL 34/ppb 30/.	NITRATE 124/ppb 200/45000
299-E18-1	6/03/92	B06PH8	30.00 U			12000.00
299-E18-1	6/03/92	B06PJ2			30.00 U	
299-E18-1	12/16/92	B07S32	50.00			13000.00
299-E18-1	12/16/92	B07S36			30.00 U	
299-E18-2	8/16/88	H0007ZX9		16.00		
299-E18-2	8/16/88	H0007ZX9			10.00 U	
299-E18-2	9/22/88	H0007ZY3		43.00		
299-E18-2	9/22/88	H0007ZY3			10.00 U	
299-E18-2	11/10/88	H0007ZY4		20.00		
299-E18-2	11/10/88	H0007ZY4			17.00	
299-E18-2	11/22/88	H0007ZY8		20.00		
299-E18-2	11/22/88	H0007ZY8			10.00	
299-E18-2	2/16/89	H0007ZZ4		28.00		
299-E18-2	2/16/89	H0007ZZ4			10.00 U	
299-E18-2	2/16/89	H0007ZZ7		40.00		
299-E18-2	2/16/89	H0007ZZ7			10.00 U	
299-E18-2	6/01/89	H0007ZZ8		11.00		
299-E18-2	6/01/89	H0007ZZ8			10.00 U	
299-E18-2	8/11/89	H0008002		18.00		
299-E18-2	8/11/89	H0008002			10.00 U	
299-E18-2	11/27/89	H0008006		10.00 U		
299-E18-2	11/27/89	H0008006			10.00 U	
299-E18-2	9/06/91	B00LC0	30.00 U			
299-E18-2	9/06/91	B00LC0F			30.00 U	
299-E18-2	7/10/92	B06PJ3	91.00 R			500.00
299-E18-2	7/10/92	B06PJ8			30.00 U	
299-E18-2	12/16/92	B07S37	50.00			500.00
299-E18-2	12/16/92	B07S41			30.00 U	
299-E18-3	8/16/88	H0008018		31.00		
299-E18-3	8/16/88	H0008018			10.00 U	
299-E18-3	9/22/88	H0008022		35.00		
299-E18-3	9/22/88	H0008022			10.00 U	
299-E18-3	11/10/88	H0008023		20.00		
299-E18-3	11/10/88	H0008023			12.00	
299-E18-3	2/16/89	H0008029		54.00		
299-E18-3	2/16/89	H0008029			13.00	
299-E18-3	6/01/89	H0008033		21.00		
299-E18-3	6/01/89	H0008033			12.00	
299-E18-3	6/01/89	H0008036		22.00		
299-E18-3	6/01/89	H0008036			10.00 U	
299-E18-3	8/08/89	H0008037		49.00		
299-E18-3	8/08/89	H0008037			10.00 U	
299-E18-3	11/27/89	H0008041		30.00		
299-E18-3	11/27/89	H0008041			10.00 U	
299-E18-3	11/27/89	H0008044		19.00		

Groundwater Data for 2101-M Pond

Well Name	Collection Date	Sample Number	NICKEL 34/ppb 30/.	NICKEL 35/ppb ./.	FNICKEL 34/ppb 30/.	NITRATE 124/ppb 200/45000
299-E18-3	11/27/89	H0008044			10.00 U	
299-E18-3	9/06/91	B00LC4	30.00 U			
299-E18-3	9/06/91	B00LC4F			30.00 U	
299-E18-3	6/03/92	B06PK0	30.00 U			2100.00 Q
299-E18-3	6/03/92	B06PK1	30.00 U			600.00 Q
299-E18-3	6/03/92	B06PK4			30.00 U	
299-E18-3	6/03/92	B06PK5			120.00 R	
299-E18-3	12/16/92	B07S44	30.00 U			500.00
299-E18-3	12/16/92	B07S46	30.00 U			600.00
299-E18-3	12/16/92	B07S55			30.00 U	
299-E18-3	12/16/92	B07S56			40.00	
299-E18-4	8/16/88	H0008053		34.00		
299-E18-4	8/16/88	H0008053			13.00	
299-E18-4	9/22/88	H0008057		79.00		
299-E18-4	9/22/88	H0008057			16.00	
299-E18-4	11/09/88	H0008058		16.00		
299-E18-4	11/09/88	H0008058			11.00	
299-E18-4	2/15/89	H0008064		21.00		
299-E18-4	2/15/89	H0008064			10.00 U	
299-E18-4	5/26/89	H0008068		12.00		
299-E18-4	5/26/89	H0008068			17.00	
299-E18-4	8/08/89	H0008072		35.00		
299-E18-4	8/08/89	H0008072			11.00	
299-E18-4	8/08/89	H0008075		41.00		
299-E18-4	8/08/89	H0008075			10.00 U	
299-E18-4	11/21/89	H0008076		33.00		
299-E18-4	11/21/89	H0008076			10.00 U	
299-E18-4	9/06/91	B00LC8	64.00			
299-E18-4	9/06/91	B00LC8F			30.00 U	
299-E18-4	6/03/92	B06PK6	76.00			500.00
299-E18-4	6/03/92	B06PL2			32.00	
299-E18-4	12/16/92	B07S57	30.00			400.00
299-E18-4	12/16/92	B07S61			30.00 U	

Well Name	Collection Date	Sample Number	NITRATE 130/ppb ./45000	NITRATE 46/ppb ./45000	NITRATE 82/ppm ./45	NITRITE 124/ppb 200/.
299-E18-1	8/16/88	H0007ZT7		10100.00		
299-E18-1	11/10/88	H0007ZV2		8400.00		
299-E18-1	11/10/88	H0007ZV5		8400.00		
299-E18-1	2/15/89	H0007ZV8		11400.00		
299-E18-1	5/26/89	H0007ZW2		12000.00		

Groundwater Data for 2101-M Pond

Well Name	Collection Date	Sample Number	NITRATE 130/ppb ./45000	NITRATE 46/ppb ./45000	NITRATE 82/ppm ./45	NITRITE 124/ppb 200/.
299-E18-1	8/08/89	H0007ZW6		12500.00		
299-E18-1	10/31/89	H0007ZX0		12200.00		
299-E18-1	5/30/90	H0007ZX5		12600.00		
299-E18-1	7/09/91	H00071X9	13300.00			
299-E18-1	9/06/91	B00LB6	11400.00			
299-E18-1	1/24/92	B01Q59				200.00 U
299-E18-1	6/03/92	B06PH8				200.00 U
299-E18-1	12/16/92	B07S32				200.00 U
299-E18-2	8/16/88	H0007ZX9		500.00 U		
299-E18-2	11/10/88	H0007ZY4		500.00 U		
299-E18-2	11/22/88	H0007ZY8		500.00 U		
299-E18-2	2/16/89	H0007ZZ4		500.00 U		
299-E18-2	6/01/89	H0007ZZ8		600.00		
299-E18-2	8/11/89	H0008002		600.00		
299-E18-2	3/13/90	H0008010		500.00		
299-E18-2	5/30/90	H0008014		500.00 U		
299-E18-2	5/30/90	H0008017		500.00		
299-E18-2	9/06/91	B00LC0	390.00			
299-E18-2	9/06/91	B00LL4			.33	
299-E18-2	7/10/92	B06PJ3				200.00 U
299-E18-2	12/16/92	B07S37				200.00 U
299-E18-3	8/16/88	H0008018		500.00 U		
299-E18-3	11/10/88	H0008023		500.00 U		
299-E18-3	2/16/89	H0008029		500.00 U		
299-E18-3	6/01/89	H0008033		500.00		
299-E18-3	6/01/89	H0008036		500.00 U		
299-E18-3	8/08/89	H0008037		500.00 U		
299-E18-3	11/27/89	H0008041		600.00		
299-E18-3	11/27/89	H0008044		500.00		
299-E18-3	5/30/90	H0008049		500.00		
299-E18-3	9/06/91	B00LC4	430.00			
299-E18-3	9/06/91	B00LL5			.40	
299-E18-3	6/03/92	B06PK0				200.00 U
299-E18-3	6/03/92	B06PK1				200.00 U
299-E18-3	12/16/92	B07S44				200.00 U
299-E18-3	12/16/92	B07S46				200.00 U
299-E18-4	8/16/88	H0008053		500.00 U		
299-E18-4	11/09/88	H0008058		500.00 U		
299-E18-4	2/15/89	H0008064		800.00		
299-E18-4	5/26/89	H0008068		1000.00		
299-E18-4	8/08/89	H0008072		500.00 U		
299-E18-4	8/08/89	H0008075		570.00		
299-E18-4	11/21/89	H0008076		500.00 U		
299-E18-4	5/30/90	H0008080		500.00 U		
299-E18-4	9/06/91	B00LC8	430.00			

Groundwater Data for 2101-M Pond

Well Name	Collection Date	Sample Number	NITRATE 130/ppb ./45000	NITRATE 46/ppb ./45000	NITRATE 82/ppm ./45	NITRITE 124/ppb 200/.
299-E18-4	9/06/91	B00LL6			.27	
299-E18-4	6/03/92	B06PK6				200.00 U
299-E18-4	12/16/92	B07S57				200.00 U

Well Name	Collection Date	Sample Number	NITRITE 55/ppb ./.	NITBENZ 21/ppb ./.	NITRPYR 21/ppb ./.	TRIPHOS 21/ppb ./.
299-E18-1	11/10/88	H0007ZV2	1000.00 U	10.00 U	10.00 U	10.00 U
299-E18-1	11/10/88	H0007ZV5	1000.00 U			
299-E18-1	2/15/89	H0007ZV8	1000.00 U			
299-E18-1	5/26/89	H0007ZW2	1000.00 U			
299-E18-1	8/08/89	H0007ZW6	1000.00 U			
299-E18-1	10/31/89	H0007ZX0	1000.00 U	10.00 U	10.00 U	10.00 U
299-E18-1	5/30/90	H0007ZX5	1000.00 U			
299-E18-2	11/10/88	H0007ZY4	1000.00 U	10.00 U	10.00 U	10.00 U
299-E18-2	11/22/88	H0007ZY8	1000.00 U			
299-E18-2	2/16/89	H0007ZZ4	1000.00 U			
299-E18-2	6/01/89	H0007ZZ8	1000.00 U			
299-E18-2	8/11/89	H0008002	1000.00 U			
299-E18-2	11/27/89	H0008006		10.00 U	10.00 U	10.00 U
299-E18-2	3/13/90	H0008010	1000.00 U			
299-E18-2	5/30/90	H0008014	1000.00 U			
299-E18-2	5/30/90	H0008017	1000.00 U			
299-E18-3	11/10/88	H0008023	1000.00 U	10.00 U	10.00 U	10.00 U
299-E18-3	2/16/89	H0008029	1000.00 U			
299-E18-3	6/01/89	H0008033	1000.00 U			
299-E18-3	6/01/89	H0008036	1000.00 U			
299-E18-3	8/08/89	H0008037	1000.00 U			
299-E18-3	11/27/89	H0008041	1000.00 U	10.00 U	10.00 U	10.00 U
299-E18-3	11/27/89	H0008044	1000.00 U	10.00 U	10.00 U	10.00 U
299-E18-3	5/30/90	H0008049	1000.00 U			
299-E18-4	11/09/88	H0008058	1000.00 U	10.00 U	10.00 U	10.00 U
299-E18-4	2/15/89	H0008064	1000.00 U			
299-E18-4	5/26/89	H0008068	1000.00 U			
299-E18-4	8/08/89	H0008072	1000.00 U			
299-E18-4	8/08/89	H0008075	1000.00 U			
299-E18-4	11/21/89	H0008076	1000.00 U	10.00 U	10.00 U	10.00 U
299-E18-4	5/30/90	H0008080	1000.00 U			

Groundwater Data for 2101-M Pond

Well Name	Collection Date	Sample Number	DIPHOS 19/ppb 10/.	PCDDS 51/ppb .01/.	PCDFS 51/ppb .01/.	PARALDE 28/ppb ./.
299-E18-1	11/10/88	H0007ZV2				2000.00 U
299-E18-1	10/31/89	H0007ZX0	10.00 U	.01 U	.01 U	10000.00 U
299-E18-2	11/10/88	H0007ZY4				2000.00 U
299-E18-2	11/27/89	H0008006	10.00 U	.01 U	.01 U	10000.00 U
299-E18-3	11/10/88	H0008023				2000.00 U
299-E18-3	11/27/89	H0008041	10.00 U	.01 U	.01 U	10000.00 U
299-E18-3	11/27/89	H0008044	10.00 U	.01 U	.01 U	10000.00 U
299-E18-4	11/09/88	H0008058				2000.00 U
299-E18-4	11/21/89	H0008076	10.00 U	.01 U	.01 U	10000.00 U

Well Name	Collection Date	Sample Number	PARATHI 29/ppb ./.	PENTCHB 21/ppb ./.	PENTACH 16/ppb 5/.	PENTCHN 21/ppb ./.
299-E18-1	11/10/88	H0007ZV2	2.00 U	10.00 U	10.00 U	10.00 U
299-E18-1	11/10/88	H0007ZV3			10.00 U	
299-E18-1	11/10/88	H0007ZV4			10.00 U	
299-E18-1	11/10/88	H0007ZV5			10.00 U	
299-E18-1	11/23/88	H0007ZV6			10.00 U	
299-E18-1	10/31/89	H0007ZX0	2.00 U	10.00 U	10.00 U	10.00 U
299-E18-2	11/10/88	H0007ZY4	2.00 U	10.00 U	10.00 U	10.00 U
299-E18-2	11/10/88	H0007ZY7			10.00 U	
299-E18-2	11/23/88	H0007ZZ2			10.00 U	
299-E18-2	11/27/89	H0008006	2.00 U	10.00 U	10.00 U	10.00 U
299-E18-2	3/13/90	H0008010			10.00 U	
299-E18-3	11/10/88	H0008023	2.00 U	10.00 U	10.00 U	10.00 U
299-E18-3	11/10/88	H0008026			10.00 U	
299-E18-3	11/28/88	H0008027			10.00 U	
299-E18-3	11/27/89	H0008041	2.00 U	10.00 U	10.00 U	10.00 U
299-E18-3	11/27/89	H0008044	2.00 U	10.00 U	10.00 U	10.00 U
299-E18-3	3/13/90	H0008045			10.00 U	
299-E18-4	11/09/88	H0008058	2.00 U	10.00 U	10.00 U	10.00 U
299-E18-4	11/09/88	H0008061			10.00 U	
299-E18-4	11/23/88	H0008062			10.00 U	
299-E18-4	11/21/89	H0008076	2.00 U	10.00 U	10.00 U	10.00 U

Well Name	Collection Date	Sample Number	PENTCHP 21/ppb ./.	PENTCHP 30/ppb 100/.	PERCHLO 46/ppb ./.	PHENTIN 21/ppb ./.
299-E18-1	11/10/88	H0007ZV2	50.00 U		1000.00 U	10.00 U

Groundwater Data for 2101-M Pond

Well Name	Collection Date	Sample Number	PENTCHP 21/ppb ./.	PENTCHP 30/ppb 100/.	PERCHLO 46/ppb ./.	PHENTIN 21/ppb ./.
299-E18-1	10/31/89	H0007ZX0	50.00 U		500.00 U	10.00 U
299-E18-1	1/24/92	B01Q59		100.00 U		
299-E18-1	6/03/92	B06PH8		100.00 U		
299-E18-1	12/16/92	B07SN0		100.00 U		
299-E18-2	11/10/88	H0007ZY4	50.00 U		1000.00 U	10.00 U
299-E18-2	11/27/89	H0008006	50.00 U		500.00 U	10.00 U
299-E18-2	7/10/92	B06PJ3		100.00 U		
299-E18-3	11/10/88	H0008023	50.00 U		1000.00 U	10.00 U
299-E18-3	11/27/89	H0008041	50.00 U		500.00 U	10.00 U
299-E18-3	11/27/89	H0008044	50.00 U		500.00 U	10.00 U
299-E18-3	6/03/92	B06PK0		100.00 U		
299-E18-3	6/03/92	B06PK1		100.00 U		
299-E18-4	11/09/88	H0008058	50.00 U		1000.00 U	10.00 U
299-E18-4	11/21/89	H0008076	50.00 U		500.00 U	10.00 U
299-E18-4	6/03/92	B06PK6		100.00 U		

Well Name	Collection Date	Sample Number	PHENANT 21/ppb ./.	LPHENOL 30/ppb 1/.	LPHENOL 32/ppb ./.	PHENINE 21/ppb ./.
299-E18-1	8/16/88	H0007ZT7		10.00 U		
299-E18-1	11/10/88	H0007ZV2			10.00 U	10.00 U
299-E18-1	2/15/89	H0007ZV8		10.00 U		
299-E18-1	5/26/89	H0007ZW2		10.00 U		
299-E18-1	8/08/89	H0007ZW6		10.00 U		
299-E18-1	10/31/89	H0007ZX0	10.00 U		10.00 U	10.00 U
299-E18-1	7/09/91	H00071X9		U		
299-E18-1	1/24/92	B01Q59		1.00 UQ		
299-E18-1	6/03/92	B06PH8		1.00 U		
299-E18-1	12/16/92	B07SN0		1.00 U		
299-E18-2	8/16/88	H0007ZX9		10.00 U		
299-E18-2	11/10/88	H0007ZY4			10.00 U	10.00 U
299-E18-2	11/22/88	H0007ZY8		10.00 U		
299-E18-2	2/16/89	H0007ZZ4		10.00 U		
299-E18-2	6/01/89	H0007ZZ8		10.00 U		
299-E18-2	8/11/89	H0008002		10.00 U		
299-E18-2	11/27/89	H0008006	10.00 U		10.00 U	10.00 U
299-E18-2	7/10/92	B06PJ3		1.00 U		
299-E18-3	8/16/88	H0008018		10.00 U		
299-E18-3	11/10/88	H0008023			10.00 U	10.00 U
299-E18-3	2/16/89	H0008029		10.00 U		
299-E18-3	6/01/89	H0008033		10.00 U		
299-E18-3	6/01/89	H0008036		10.00 U		

Groundwater Data for 2101-M Pond

Well Name	Collection Date	Sample Number	PHENANT 21/ppb ./.	LPHENOL 30/ppb 1/.	LPHENOL 32/ppb ./.	PHENINE 21/ppb ./.
299-E18-3	8/08/89	H0008037		10.00 U		
299-E18-3	11/27/89	H0008041	10.00 U		10.00 U	10.00 U
299-E18-3	11/27/89	H0008044	10.00 U		10.00 U	10.00 U
299-E18-3	6/03/92	B06PK0		1.00 U		
299-E18-3	6/03/92	B06PK1		1.00 U		
299-E18-4	8/16/88	H0008053		10.00 U		
299-E18-4	11/09/88	H0008058			10.00 U	10.00 U
299-E18-4	2/15/89	H0008064		10.00 U		
299-E18-4	5/26/89	H0008068		10.00 U		
299-E18-4	8/08/89	H0008072		10.00 U		
299-E18-4	11/21/89	H0008076	10.00 U		10.00 U	10.00 U
299-E18-4	6/03/92	B06PK6		1.00 U		

Well Name	Collection Date	Sample Number	PHORATE 29/ppb 2/.	PHOSPHA 124/ppb 400/.	PHOSPHA 46/ppb ./.	PHOSPHA 82/ppm ./.
299-E18-1	8/16/88	H0007ZT7			1000.00 U	
299-E18-1	11/10/88	H0007ZV2			1000.00 U	
299-E18-1	11/10/88	H0007ZV5			1000.00 U	
299-E18-1	2/15/89	H0007ZV8			1000.00 U	
299-E18-1	5/26/89	H0007ZW2			1000.00 U	
299-E18-1	8/08/89	H0007ZW6			1000.00 U	
299-E18-1	10/31/89	H0007ZX0	2.00 U		1000.00 U	
299-E18-1	5/30/90	H0007ZX5			1000.00 U	
299-E18-1	7/09/91	H00071X9		U		
299-E18-1	1/24/92	B01Q59		400.00 U		
299-E18-1	6/03/92	B06PH8		400.00 U		
299-E18-1	12/16/92	B07S32		400.00 U		
299-E18-2	8/16/88	H0007ZX9			1000.00 U	
299-E18-2	11/10/88	H0007ZY4			1000.00 U	
299-E18-2	11/22/88	H0007ZY8			1000.00 U	
299-E18-2	2/16/89	H0007ZZ4			1000.00 U	
299-E18-2	6/01/89	H0007ZZ8			1000.00 U	
299-E18-2	8/11/89	H0008002			1000.00 U	
299-E18-2	11/27/89	H0008006	2.00 U			
299-E18-2	3/13/90	H0008010			1000.00 U	
299-E18-2	5/30/90	H0008014			1000.00 U	
299-E18-2	5/30/90	H0008017			1000.00 U	
299-E18-2	9/06/91	B00LL4				U
299-E18-2	7/10/92	B06PJ3		400.00 U		
299-E18-2	12/16/92	B07S37		400.00 U		
299-E18-3	8/16/88	H0008018			1000.00 U	

Groundwater Data for 2101-M Pond

Well Name	Collection Date	Sample Number	PHORATE 29/ppb 2/.	PHOSPHA 124/ppb 400/.	PHOSPHA 46/ppb ./.	PHOSPHA 82/ppm ./.
299-E18-3	11/10/88	H0008023			1000.00 U	
299-E18-3	2/16/89	H0008029			1000.00 U	
299-E18-3	6/01/89	H0008033			1000.00 U	
299-E18-3	6/01/89	H0008036			1000.00 U	
299-E18-3	8/08/89	H0008037			1000.00 U	
299-E18-3	11/27/89	H0008041	2.00 U		1000.00 U	
299-E18-3	11/27/89	H0008044	2.00 U		1000.00 U	
299-E18-3	5/30/90	H0008049			1000.00 U	
299-E18-3	9/06/91	B00LL5				U
299-E18-3	6/03/92	B06PK0		400.00 U		
299-E18-3	6/03/92	B06PK1		400.00 U		
299-E18-3	12/16/92	B07S44		400.00 U		
299-E18-3	12/16/92	B07S46		400.00 U		
299-E18-4	8/16/88	H0008053			1000.00 U	
299-E18-4	11/09/88	H0008058			1000.00 U	
299-E18-4	2/15/89	H0008064			1000.00 U	
299-E18-4	5/26/89	H0008068			1000.00 U	
299-E18-4	8/08/89	H0008072			1000.00 U	
299-E18-4	8/08/89	H0008075			1000.00 U	
299-E18-4	11/21/89	H0008076	2.00 U		1000.00 U	
299-E18-4	5/30/90	H0008080			1000.00 U	
299-E18-4	9/06/91	B00LL6				U
299-E18-4	6/03/92	B06PK6		400.00 U		
299-E18-4	12/16/92	B07S57		400.00 U		

Well Name	Collection Date	Sample Number	PHTHEST 21/ppb ./.	PU-238 146/pCi/L ./.	PU-238 77/pCi/L ./.	PU39-40 146/pCi/L ./.
299-E18-1	11/10/88	H0007ZV2	10.00 U			
299-E18-1	10/31/89	H0007ZX0	10.00 U		-.00 U	
299-E18-1	7/09/91	H00072Q7		.00 U		-.00 U
299-E18-2	11/10/88	H0007ZY4	10.00 U			
299-E18-2	11/27/89	H0008006	10.00 U			
299-E18-2	9/06/91	B00LL4		.00 U		-.00 U
299-E18-3	11/10/88	H0008023	10.00 U			
299-E18-3	11/27/89	H0008041	10.00 U			
299-E18-3	11/27/89	H0008044	10.00 U			
299-E18-3	9/06/91	B00LL5		-.00 U		-.00 U
299-E18-4	11/09/88	H0008058	10.00 U			
299-E18-4	11/21/89	H0008076	10.00 U			
299-E18-4	9/06/91	B00LL6		-.00 U		.00 U

Groundwater Data for 2101-M Pond

Well Name	Collection Date	Sample Number	PHTHEST 21/ppb ./.	PU-238 146/pCi/L ./.	PU-238 77/pCi/L ./.	PU39-40 146/pCi/L ./.

Well Name	Collection Date	Sample Number	POTASUM 34/ppb 300/.	POTASUM 35/ppb ./.	FPOTASS 34/ppb 300/.	K-40 140/pCi/L ./.
299-E18-1	8/16/88	H0007ZT7		6350.00		
299-E18-1	8/16/88	H0007ZT7			6980.00	
299-E18-1	9/22/88	H0007ZV1		7200.00		
299-E18-1	9/22/88	H0007ZV1			6870.00	
299-E18-1	11/10/88	H0007ZV2		6330.00		
299-E18-1	11/10/88	H0007ZV2			6540.00	
299-E18-1	11/10/88	H0007ZV5		6410.00		
299-E18-1	11/10/88	H0007ZV5			6380.00	
299-E18-1	2/15/89	H0007ZV8		5570.00		
299-E18-1	2/15/89	H0007ZV8			5800.00	
299-E18-1	5/26/89	H0007ZW2		5780.00		
299-E18-1	5/26/89	H0007ZW2			5810.00	
299-E18-1	8/08/89	H0007ZW6		5340.00		
299-E18-1	8/08/89	H0007ZW6			6210.00	
299-E18-1	10/31/89	H0007ZX0		5460.00		
299-E18-1	10/31/89	H0007ZX0			5790.00	
299-E18-1	7/09/91	H00071X9	5200.00 Q			
299-E18-1	7/09/91	H00071X9F			4700.00 Q	
299-E18-1	9/06/91	B00LB6	5600.00			159.00 R
299-E18-1	9/06/91	B00LB6F			5600.00	
299-E18-1	1/24/92	B01Q59	4900.00 D			
299-E18-1	1/24/92	B01Q60			5600.00 D	
299-E18-1	6/03/92	B06PH8	5900.00			
299-E18-1	6/03/92	B06PJ2			6000.00	
299-E18-1	12/16/92	B07S32	5900.00			
299-E18-1	12/16/92	B07S36			5500.00	
299-E18-2	8/16/88	H0007ZX9		4920.00		
299-E18-2	8/16/88	H0007ZX9			5280.00	
299-E18-2	9/22/88	H0007ZY3		5090.00		
299-E18-2	9/22/88	H0007ZY3			4930.00	
299-E18-2	11/10/88	H0007ZY4		4560.00		
299-E18-2	11/10/88	H0007ZY4			5220.00	
299-E18-2	11/22/88	H0007ZY8		4860.00		
299-E18-2	11/22/88	H0007ZY8			4850.00	
299-E18-2	2/16/89	H0007ZZ4		5210.00		
299-E18-2	2/16/89	H0007ZZ4			5100.00	
299-E18-2	2/16/89	H0007ZZ7		5220.00		
299-E18-2	2/16/89	H0007ZZ7			5350.00	

Groundwater Data for 2101-M Pond

Well Name	Collection Date	Sample Number	POTASUM 34/ppb 300/.	POTASUM 35/ppb ./.	FPOTASS 34/ppb 300/.	K-40 140/pCi/L ./.
299-E18-2	6/01/89	H0007ZZ8		5150.00		
299-E18-2	6/01/89	H0007ZZ8			4790.00	
299-E18-2	8/11/89	H0008002		4920.00		
299-E18-2	8/11/89	H0008002			5770.00	
299-E18-2	11/27/89	H0008006		5080.00		
299-E18-2	11/27/89	H0008006			4850.00	
299-E18-2	9/06/91	B00LC0	5900.00			226.00 R
299-E18-2	9/06/91	B00LC0F			5100.00	
299-E18-2	7/10/92	B06PJ3	5300.00			
299-E18-2	7/10/92	B06PJ8			5200.00	
299-E18-2	12/16/92	B07S37	5100.00			
299-E18-2	12/16/92	B07S41			5000.00	
299-E18-3	8/16/88	H0008018		4860.00		
299-E18-3	8/16/88	H0008018			5030.00	
299-E18-3	9/22/88	H0008022		5140.00		
299-E18-3	9/22/88	H0008022			5220.00	
299-E18-3	11/10/88	H0008023		4620.00		
299-E18-3	11/10/88	H0008023			5290.00	
299-E18-3	2/16/89	H0008029		5500.00		
299-E18-3	2/16/89	H0008029			5310.00	
299-E18-3	6/01/89	H0008033		4960.00		
299-E18-3	6/01/89	H0008033			5050.00	
299-E18-3	6/01/89	H0008036		5100.00		
299-E18-3	6/01/89	H0008036			5010.00	
299-E18-3	8/08/89	H0008037		5020.00		
299-E18-3	8/08/89	H0008037			5100.00	
299-E18-3	11/27/89	H0008041		4850.00		
299-E18-3	11/27/89	H0008041			5030.00	
299-E18-3	11/27/89	H0008044		4660.00		
299-E18-3	11/27/89	H0008044			4780.00	
299-E18-3	9/06/91	B00LC4	5500.00			53.60 UR
299-E18-3	9/06/91	B00LC4F			3900.00	
299-E18-3	6/03/92	B06PK0	5300.00			
299-E18-3	6/03/92	B06PK1	5500.00			
299-E18-3	6/03/92	B06PK4			5100.00	
299-E18-3	6/03/92	B06PK5			5200.00	
299-E18-3	12/16/92	B07S44	4700.00			
299-E18-3	12/16/92	B07S46	5200.00			
299-E18-3	12/16/92	B07S55			4700.00	
299-E18-3	12/16/92	B07S56			5200.00	
299-E18-4	8/16/88	H0008053		5250.00		
299-E18-4	8/16/88	H0008053			5580.00	
299-E18-4	9/22/88	H0008057		5640.00		
299-E18-4	9/22/88	H0008057			5570.00	
299-E18-4	11/09/88	H0008058		5400.00		

Groundwater Data for 2101-M Pond

Well Name	Collection Date	Sample Number	POTASUM 34/ppb 300/.	POTASUM 35/ppb ./.	FPOTASS 34/ppb 300/.	K-40 140/pCi/L ./.
299-E18-4	11/09/88	H0008058			5450.00	
299-E18-4	2/15/89	H0008064		5370.00		
299-E18-4	2/15/89	H0008064			5390.00	
299-E18-4	5/26/89	H0008068		5490.00		
299-E18-4	5/26/89	H0008068			5980.00	
299-E18-4	8/08/89	H0008072		5650.00		
299-E18-4	8/08/89	H0008072			5570.00	
299-E18-4	8/08/89	H0008075		5460.00		
299-E18-4	8/08/89	H0008075			5480.00	
299-E18-4	11/21/89	H0008076		5510.00		
299-E18-4	11/21/89	H0008076			5450.00	
299-E18-4	9/06/91	B00LC8	5100.00 Q			199.00 R
299-E18-4	9/06/91	B00LC8F			4900.00 Q	
299-E18-4	6/03/92	B06PK6	5600.00			
299-E18-4	6/03/92	B06PL2			5400.00	
299-E18-4	12/16/92	B07S57	5200.00			
299-E18-4	12/16/92	B07S61			5200.00	

Well Name	Collection Date	Sample Number	PRONIDE 21/ppb ./.	PROPCN 16/ppb ./.	PYRENE 21/ppb ./.	PYRIDIN 16/ppb 5/.
299-E18-1	11/10/88	H0007ZV2	10.00 U			500.00 U
299-E18-1	11/10/88	H0007ZV3				500.00 U
299-E18-1	11/10/88	H0007ZV4				500.00 U
299-E18-1	11/10/88	H0007ZV5				500.00 U
299-E18-1	11/23/88	H0007ZV6				500.00 U
299-E18-1	10/31/89	H0007ZX0	10.00 U	5.00 U	10.00 U	500.00 U
299-E18-2	11/10/88	H0007ZY4	10.00 U			500.00 U
299-E18-2	11/10/88	H0007ZY7				500.00 U
299-E18-2	11/23/88	H0007ZZ2				500.00 U
299-E18-2	11/27/89	H0008006	10.00 U	5.00 U	10.00 U	500.00 U
299-E18-2	3/13/90	H0008010		5.00 U		500.00 U
299-E18-3	11/10/88	H0008023	10.00 U			500.00 U
299-E18-3	11/10/88	H0008026				500.00 U
299-E18-3	11/28/88	H0008027				500.00 U
299-E18-3	11/27/89	H0008041	10.00 U	5.00 U	10.00 U	500.00 U
299-E18-3	11/27/89	H0008044	10.00 U	5.00 U	10.00 U	500.00 U
299-E18-3	3/13/90	H0008045		5.00 U		500.00 U
299-E18-4	11/09/88	H0008058	10.00 U			500.00 U
299-E18-4	11/09/88	H0008061				500.00 U
299-E18-4	11/23/88	H0008062				500.00 U
299-E18-4	11/21/89	H0008076	10.00 U	5.00 U	10.00 U	500.00 U

Groundwater Data for 2101-M Pond

Well Name	Collection Date	Sample Number	PRONIDE 21/ppb ./.	PROPCN 16/ppb ./.	PYRENE 21/ppb ./.	PYRIDIN 16/ppb 5/.

Well Name	Collection Date	Sample Number	RADIUM 137/pCi/L ./.	RESERPI 21/ppb ./.	RESORCI 21/ppb ./.	RU-106 140/pCi/L ./.
299-E18-1	11/10/88	H0007ZV2		10.00 U	10.00 U	
299-E18-1	10/31/89	H0007ZX0		10.00 U	10.00 U	
299-E18-1	9/06/91	B00LB6	.09 U			-48.90 U
299-E18-1	6/03/92	B06PH8	-.02 U			28.50 U
299-E18-1	12/16/92	B07SN0	.12 U			
299-E18-2	11/10/88	H0007ZY4		10.00 U	10.00 U	
299-E18-2	11/27/89	H0008006		10.00 U	10.00 U	
299-E18-2	9/06/91	B00LC0	.07 U			-27.00 U
299-E18-2	7/10/92	B06PJ3	-.02 U			-11.50 U
299-E18-3	11/10/88	H0008023		10.00 U	10.00 U	
299-E18-3	11/27/89	H0008041		10.00 U	10.00 U	
299-E18-3	11/27/89	H0008044		10.00 U	10.00 U	
299-E18-3	9/06/91	B00LC4	.10 U			-2.06 U
299-E18-3	6/03/92	B06PK0	.08 U			-90.70 U
299-E18-3	6/03/92	B06PK1	-.04 U			-14.10 U
299-E18-4	11/09/88	H0008058		10.00 U	10.00 U	
299-E18-4	11/21/89	H0008076		10.00 U	10.00 U	
299-E18-4	9/06/91	B00LC8	.03 U			15.30 U
299-E18-4	6/03/92	B06PK6	-.02 U			13.20 U

Well Name	Collection Date	Sample Number	SAFROL 21/ppb ./.	SELENUM 48/ppb 10/10	SELENUM 76/ ./.	SILICON 35/ppb ./.
299-E18-1	8/16/88	H0007ZT7			14.90	
299-E18-1	9/22/88	H0007ZV1			10.00	
299-E18-1	11/10/88	H0007ZV2	10.00 U		7.00	
299-E18-1	11/10/88	H0007ZV5			7.00	
299-E18-1	2/15/89	H0007ZV8			7.00	13600.00
299-E18-1	5/26/89	H0007ZW2			6.00	15000.00
299-E18-1	8/08/89	H0007ZW6			7.00	14900.00
299-E18-1	10/31/89	H0007ZX0	10.00 U		6.00	16200.00
299-E18-1	6/03/92	B06PH8		10.00 U		
299-E18-1	12/16/92	B07S32		10.00 U		
299-E18-2	8/16/88	H0007ZX9			8.90	
299-E18-2	9/22/88	H0007ZY3			5.00 U	

Groundwater Data for 2101-M Pond

Well Name	Collection Date	Sample Number	SAFROL 21/ppb ./.	SELENUM 48/ppb 10/10	SELENUM 76/ ./.	SILICON 35/ppb ./.
299-E18-2	11/10/88	H0007ZY4	10.00 U		5.00 U	
299-E18-2	11/22/88	H0007ZY8			5.00 U	
299-E18-2	2/16/89	H0007ZZ4			5.00 U	19800.00
299-E18-2	2/16/89	H0007ZZ7			5.00 U	19600.00
299-E18-2	6/01/89	H0007ZZ8			5.00 U	19800.00
299-E18-2	8/11/89	H0008002			5.00 U	18900.00
299-E18-2	11/27/89	H0008006	10.00 U		5.00 U	18200.00
299-E18-2	7/10/92	B06PJ3		10.00 U		
299-E18-2	12/16/92	B07S37		10.00 U		
299-E18-3	8/16/88	H0008018			48.60	
299-E18-3	9/22/88	H0008022			5.00 U	
299-E18-3	11/10/88	H0008023	10.00 U		5.00 U	
299-E18-3	2/16/89	H0008029			5.00 U	19600.00
299-E18-3	6/01/89	H0008033			5.00 U	17600.00
299-E18-3	6/01/89	H0008036			5.00 U	18100.00
299-E18-3	8/08/89	H0008037			5.00 U	17500.00
299-E18-3	11/27/89	H0008041	10.00 U		5.00 U	17200.00
299-E18-3	11/27/89	H0008044	10.00 U		5.00 U	17000.00
299-E18-3	6/03/92	B06PK0		10.00 U		
299-E18-3	6/03/92	B06PK1		10.00 U		
299-E18-3	12/16/92	B07S44		10.00 U		
299-E18-3	12/16/92	B07S46		10.00 U		
299-E18-4	8/16/88	H0008053			5.00 U	
299-E18-4	9/22/88	H0008057			5.00 U	
299-E18-4	11/09/88	H0008058	10.00 U		5.00 U	
299-E18-4	2/15/89	H0008064			5.00 U	17100.00
299-E18-4	5/26/89	H0008068			5.00 U	18300.00
299-E18-4	8/08/89	H0008072			5.00 U	19100.00
299-E18-4	8/08/89	H0008075			5.00 U	18800.00
299-E18-4	11/21/89	H0008076	10.00 U		5.00 U	17500.00
299-E18-4	6/03/92	B06PK6		10.00 U		
299-E18-4	12/16/92	B07S57		10.00 U		

Well Name	Collection Date	Sample Number	SILVER 34/ppb 20/50	SILVER 35/ppb ./50	FSILVER 34/ppb 20/50	SODIUM 34/ppb 300/.
299-E18-1	8/16/88	H0007ZT7		10.00 U		
299-E18-1	8/16/88	H0007ZT7			10.00 U	
299-E18-1	9/22/88	H0007ZV1		10.00 U		
299-E18-1	9/22/88	H0007ZV1			10.00 U	
299-E18-1	11/10/88	H0007ZV2		10.00 U		
299-E18-1	11/10/88	H0007ZV2			10.00 U	

Groundwater Data for 2101-M Pond

Well Name	Collection Date	Sample Number	SILVER 34/ppb 20/50	SILVER 35/ppb ./50	FSILVER 34/ppb 20/50	SODIUM 34/ppb 300/.
299-E18-1	11/10/88	H0007ZV5		10.00 U		
299-E18-1	11/10/88	H0007ZV5			10.00 U	
299-E18-1	2/15/89	H0007ZV8		10.00 U		
299-E18-1	2/15/89	H0007ZV8			10.00 U	
299-E18-1	5/26/89	H0007ZW2		10.00 U		
299-E18-1	5/26/89	H0007ZW2			10.00 U	
299-E18-1	8/08/89	H0007ZW6		10.00 U		
299-E18-1	8/08/89	H0007ZW6			10.00 U	
299-E18-1	10/31/89	H0007ZX0		10.00 U		
299-E18-1	10/31/89	H0007ZX0			10.00 U	
299-E18-1	7/09/91	H00071X9	20.00 U			26000.00
299-E18-1	7/09/91	H00071X9F			20.00 U	
299-E18-1	9/06/91	B00LB6	20.00 U			27000.00
299-E18-1	9/06/91	B00LB6F			20.00 U	
299-E18-1	1/24/92	B01Q59	20.00 UD			25000.00 D
299-E18-1	1/24/92	B01Q60			20.00 UD	
299-E18-1	6/03/92	B06PH8	20.00 U			26000.00
299-E18-1	6/03/92	B06PJ2			20.00 U	
299-E18-1	12/16/92	B07S32	20.00 U			28000.00
299-E18-1	12/16/92	B07S36			20.00 U	
299-E18-2	8/16/88	H0007ZX9		10.00 U		
299-E18-2	8/16/88	H0007ZX9			10.00 U	
299-E18-2	9/22/88	H0007ZY3		10.00 U		
299-E18-2	9/22/88	H0007ZY3			10.00 U	
299-E18-2	11/10/88	H0007ZY4		10.00 U		
299-E18-2	11/10/88	H0007ZY4			10.00 U	
299-E18-2	11/22/88	H0007ZY8		10.00 U		
299-E18-2	11/22/88	H0007ZY8			10.00 U	
299-E18-2	2/16/89	H0007ZZ4		10.00 U		
299-E18-2	2/16/89	H0007ZZ4			10.00 U	
299-E18-2	2/16/89	H0007ZZ7		10.00 U		
299-E18-2	2/16/89	H0007ZZ7			10.00 U	
299-E18-2	6/01/89	H0007ZZ8		10.00 U		
299-E18-2	6/01/89	H0007ZZ8			10.00 U	
299-E18-2	8/11/89	H0008002		10.00 U		
299-E18-2	8/11/89	H0008002			10.00 U	
299-E18-2	11/27/89	H0008006		10.00 U		
299-E18-2	11/27/89	H0008006			10.00 U	
299-E18-2	9/06/91	B00LC0	20.00 U			14000.00
299-E18-2	9/06/91	B00LC0F			20.00 U	
299-E18-2	7/10/92	B06PJ3	20.00 U			15000.00
299-E18-2	7/10/92	B06PJ8			20.00 U	
299-E18-2	12/16/92	B07S37	20.00 U			14000.00
299-E18-2	12/16/92	B07S41			20.00 U	
299-E18-3	8/16/88	H0008018		10.00 U		

Groundwater Data for 2101-M Pond

Well Name	Collection Date	Sample Number	SILVER 34/ppb 20/50	SILVER 35/ppb ./50	FSILVER 34/ppb 20/50	SODIUM 34/ppb 300/.
299-E18-3	8/16/88	H0008018			10.00 U	
299-E18-3	9/22/88	H0008022		10.00 U		
299-E18-3	9/22/88	H0008022			10.00 U	
299-E18-3	11/10/88	H0008023		10.00 U		
299-E18-3	11/10/88	H0008023			10.00 U	
299-E18-3	2/16/89	H0008029		10.00 U		
299-E18-3	2/16/89	H0008029			10.00 U	
299-E18-3	6/01/89	H0008033		10.00 U		
299-E18-3	6/01/89	H0008033			10.00 U	
299-E18-3	6/01/89	H0008036		10.00 U		
299-E18-3	6/01/89	H0008036			10.00 U	
299-E18-3	8/08/89	H0008037		10.00 U		
299-E18-3	8/08/89	H0008037			10.00 U	
299-E18-3	11/27/89	H0008041		10.00 U		
299-E18-3	11/27/89	H0008041			10.00 U	
299-E18-3	11/27/89	H0008044		10.00 U		
299-E18-3	11/27/89	H0008044			10.00 U	
299-E18-3	9/06/91	B00LC4	20.00 U			5900.00
299-E18-3	9/06/91	B00LC4F			20.00 U	
299-E18-3	6/03/92	B06PK0	20.00 U			5700.00
299-E18-3	6/03/92	B06PK1	20.00 U			5900.00
299-E18-3	6/03/92	B06PK4			20.00 U	
299-E18-3	6/03/92	B06PK5			20.00 U	
299-E18-3	12/16/92	B07S44	20.00 U			6000.00
299-E18-3	12/16/92	B07S46	20.00 U			6000.00
299-E18-3	12/16/92	B07S55			20.00 U	
299-E18-3	12/16/92	B07S56			20.00 U	
299-E18-4	8/16/88	H0008053		10.00 U		
299-E18-4	8/16/88	H0008053			10.00 U	
299-E18-4	9/22/88	H0008057		10.00 U		
299-E18-4	9/22/88	H0008057			10.00 U	
299-E18-4	11/09/88	H0008058		10.00 U		
299-E18-4	11/09/88	H0008058			10.00 U	
299-E18-4	2/15/89	H0008064		10.00 U		
299-E18-4	2/15/89	H0008064			10.00 U	
299-E18-4	5/26/89	H0008068		10.00 U		
299-E18-4	5/26/89	H0008068			10.00 U	
299-E18-4	8/08/89	H0008072		10.00 U		
299-E18-4	8/08/89	H0008072			10.00 U	
299-E18-4	8/08/89	H0008075		10.00 U		
299-E18-4	8/08/89	H0008075			10.00 U	
299-E18-4	11/21/89	H0008076		10.00 U		
299-E18-4	11/21/89	H0008076			10.00 U	
299-E18-4	9/06/91	B00LC8	20.00 U			8400.00
299-E18-4	9/06/91	B00LC8F			20.00 U	

Groundwater Data for 2101-M Pond

Well Name	Collection Date	Sample Number	SILVER 34/ppb 20/50	SILVER 35/ppb ./50	FSILVER 34/ppb 20/50	SODIUM 34/ppb 300/.
299-E18-4	6/03/92	B06PK6	20.00 U			10000.00
299-E18-4	6/03/92	B06PL2			20.00 U	
299-E18-4	12/16/92	B07S57	20.00 U			10000.00
299-E18-4	12/16/92	B07S61			20.00 U	

Well Name	Collection Date	Sample Number	SODIUM 35/ppb ./.	FSODIUM 34/ppb 300/.	CONDUCT 73/umhos 1/.	CONDUCT 76/ ./.
299-E18-1	8/16/88	H0007ZT7	28700.00		534.00	812.00
299-E18-1	8/16/88	H0007ZT7		31500.00		
299-E18-1	8/16/88	H0007ZT8			521.00	809.00
299-E18-1	8/16/88	H0007ZT9			529.00	811.00
299-E18-1	8/16/88	H0007ZV0			531.00	812.00
299-E18-1	9/22/88	H0007ZV1	28800.00			
299-E18-1	9/22/88	H0007ZV1		27400.00		
299-E18-1	11/10/88	H0007ZV2	25900.00		571.00	595.00
299-E18-1	11/10/88	H0007ZV2		28100.00		
299-E18-1	11/10/88	H0007ZV3			583.00	594.00
299-E18-1	11/10/88	H0007ZV4			588.00	593.00
299-E18-1	11/10/88	H0007ZV5	27000.00		586.00	594.00
299-E18-1	11/10/88	H0007ZV5		26700.00		
299-E18-1	11/23/88	H0007ZV6				633.00
299-E18-1	2/15/89	H0007ZV8	25800.00		514.00	537.00
299-E18-1	2/15/89	H0007ZV8		27100.00		
299-E18-1	2/15/89	H0007ZV9			517.00	531.00
299-E18-1	2/15/89	H0007ZW0			510.00	532.00
299-E18-1	2/15/89	H0007ZW1			512.00	534.00
299-E18-1	5/26/89	H0007ZW2	27800.00		503.00	550.00
299-E18-1	5/26/89	H0007ZW2		28500.00		
299-E18-1	5/26/89	H0007ZW3			498.00	549.00
299-E18-1	5/26/89	H0007ZW4			484.00	549.00
299-E18-1	5/26/89	H0007ZW5			474.00	549.00
299-E18-1	8/08/89	H0007ZW6	26100.00		533.00	564.00
299-E18-1	8/08/89	H0007ZW6		30500.00		
299-E18-1	8/08/89	H0007ZW7			535.00	567.00
299-E18-1	8/08/89	H0007ZW8			534.00	568.00
299-E18-1	8/08/89	H0007ZW9			532.00	567.00
299-E18-1	10/31/89	H0007ZX0	25900.00			552.00
299-E18-1	10/31/89	H0007ZX0		27800.00		
299-E18-1	11/29/89	H0007ZX1			542.00	563.00
299-E18-1	11/29/89	H0007ZX2			552.00	560.00
299-E18-1	11/29/89	H0007ZX3			550.00	561.00

Groundwater Data for 2101-M Pond

Well Name	Collection Date	Sample Number	SODIUM 35/ppb ./.	FSODIUM 34/ppb 300/.	CONDUCT 73/umhos 1/.	CONDUCT 76/ ./.
299-E18-1	11/29/89	H0007ZX4			543.00	562.00
299-E18-1	5/30/90	H0007ZX5			545.00	529.00
299-E18-1	5/30/90	H0007ZX6			557.00	530.00
299-E18-1	5/30/90	H0007ZX7			556.00	530.00
299-E18-1	5/30/90	H0007ZX8			558.00	529.00
299-E18-1	7/09/91	H00071X9			540.00	
299-E18-1	7/09/91	H00071X9F		25000.00		
299-E18-1	9/06/91	B00LB6F		26000.00		
299-E18-1	1/24/92	B01Q60		25000.00 D		
299-E18-1	6/03/92	B06PJ2		26000.00		
299-E18-1	12/16/92	B07S32			520.00	
299-E18-1	12/16/92	B07S36		27000.00		
299-E18-2	8/16/88	H0007ZX9	18000.00		251.00	352.00
299-E18-2	8/16/88	H0007ZX9		19700.00		
299-E18-2	8/16/88	H0007ZY0			248.00	355.00
299-E18-2	8/16/88	H0007ZY1			249.00	355.00
299-E18-2	8/16/88	H0007ZY2			249.00	354.00
299-E18-2	9/22/88	H0007ZY3	17700.00			
299-E18-2	9/22/88	H0007ZY3		17300.00		
299-E18-2	11/10/88	H0007ZY4	16600.00		269.00	283.00
299-E18-2	11/10/88	H0007ZY4		19000.00		
299-E18-2	11/10/88	H0007ZY5			271.00	282.00
299-E18-2	11/10/88	H0007ZY6			270.00	282.00
299-E18-2	11/10/88	H0007ZY7			271.00	282.00
299-E18-2	11/22/88	H0007ZY8	17600.00			257.00
299-E18-2	11/22/88	H0007ZY8		17600.00		
299-E18-2	11/22/88	H0007ZY9				260.00
299-E18-2	11/22/88	H0007ZZ0				260.00
299-E18-2	11/22/88	H0007ZZ1				260.00
299-E18-2	11/23/88	H0007ZZ2				279.00
299-E18-2	2/16/89	H0007ZZ4	19200.00		252.00	256.00
299-E18-2	2/16/89	H0007ZZ4		18700.00		
299-E18-2	2/16/89	H0007ZZ5			258.00	256.00
299-E18-2	2/16/89	H0007ZZ6			256.00	256.00
299-E18-2	2/16/89	H0007ZZ7	19000.00		263.00	256.00
299-E18-2	2/16/89	H0007ZZ7		19800.00		
299-E18-2	6/01/89	H0007ZZ8	18700.00		247.00	244.00
299-E18-2	6/01/89	H0007ZZ8		17400.00		
299-E18-2	6/01/89	H0007ZZ9			252.00	244.00
299-E18-2	6/01/89	H0008000			249.00	243.00
299-E18-2	6/01/89	H0008001			223.00	244.00
299-E18-2	8/11/89	H0008002	17500.00		285.00	288.00
299-E18-2	8/11/89	H0008002		20800.00		
299-E18-2	8/11/89	H0008003			288.00	286.00
299-E18-2	8/11/89	H0008004			288.00	285.00

Groundwater Data for 2101-M Pond

Well Name	Collection Date	Sample Number	SODIUM 35/ppb ./.	FSODIUM 34/ppb 300/.	CONDUCT 73/umhos 1/.	CONDUCT 76/ ./.
299-E18-2	8/11/89	H0008005			284.00	285.00
299-E18-2	11/27/89	H0008006	17100.00			278.00
299-E18-2	11/27/89	H0008006		16300.00		
299-E18-2	11/27/89	H0008007				281.00
299-E18-2	11/27/89	H0008008				285.00
299-E18-2	11/27/89	H0008009				283.00
299-E18-2	3/13/90	H0008010				262.00
299-E18-2	3/13/90	H0008011				260.00
299-E18-2	3/13/90	H0008012				263.00
299-E18-2	3/13/90	H0008013				261.00
299-E18-2	5/30/90	H0008014			301.00	312.00
299-E18-2	5/30/90	H0008015			303.00	312.00
299-E18-2	5/30/90	H0008016			304.00	313.00
299-E18-2	5/30/90	H0008017			304.00	312.00
299-E18-2	9/06/91	B00LC0F		14000.00		
299-E18-2	7/10/92	B06PJ8		15000.00		
299-E18-2	12/16/92	B07S37			260.00	
299-E18-2	12/16/92	B07S41		14000.00		
299-E18-3	8/16/88	H0008018	5570.00		200.00	279.00
299-E18-3	8/16/88	H0008018		5480.00		
299-E18-3	8/16/88	H0008019			204.00	280.00
299-E18-3	8/16/88	H0008020			204.00	280.00
299-E18-3	8/16/88	H0008021			200.00	279.00
299-E18-3	9/22/88	H0008022	5310.00			
299-E18-3	9/22/88	H0008022		5360.00		
299-E18-3	11/10/88	H0008023	5280.00		229.00	232.00
299-E18-3	11/10/88	H0008023		6020.00		
299-E18-3	11/10/88	H0008024			234.00	232.00
299-E18-3	11/10/88	H0008025			233.00	232.00
299-E18-3	11/10/88	H0008026			233.00	232.00
299-E18-3	11/28/88	H0008027				247.00
299-E18-3	2/16/89	H0008029	6560.00		235.00	207.00
299-E18-3	2/16/89	H0008029		6460.00		
299-E18-3	2/16/89	H0008030			230.00	205.00
299-E18-3	2/16/89	H0008031			224.00	205.00
299-E18-3	2/16/89	H0008032			232.00	206.00
299-E18-3	6/01/89	H0008033	5710.00		183.00	176.00
299-E18-3	6/01/89	H0008033		5980.00		
299-E18-3	6/01/89	H0008034			201.00	176.00
299-E18-3	6/01/89	H0008035			178.00	178.00
299-E18-3	6/01/89	H0008036	5930.00		178.00	176.00
299-E18-3	6/01/89	H0008036		5890.00		
299-E18-3	8/08/89	H0008037	5640.00		232.00	156.00
299-E18-3	8/08/89	H0008037		5800.00		
299-E18-3	8/08/89	H0008038			234.00	157.00

Groundwater Data for 2101-M Pond

Well Name	Collection Date	Sample Number	SODIUM 35/ppb ./.	FSODIUM 34/ppb 300/.	CONDUCT 73/umhos 1/.	CONDUCT 76/ ./.
299-E18-3	8/08/89	H0008039			232.00	156.00
299-E18-3	8/08/89	H0008040			233.00	156.00
299-E18-3	11/27/89	H0008041	5410.00		247.00	238.00
299-E18-3	11/27/89	H0008041		5700.00		
299-E18-3	11/27/89	H0008042			248.00	230.00
299-E18-3	11/27/89	H0008043			247.00	235.00
299-E18-3	11/27/89	H0008044	5550.00		245.00	233.00
299-E18-3	11/27/89	H0008044		5710.00		
299-E18-3	3/13/90	H0008045				226.00
299-E18-3	3/13/90	H0008046				227.00
299-E18-3	3/13/90	H0008047				226.00
299-E18-3	3/13/90	H0008048				227.00
299-E18-3	5/30/90	H0008049			279.00	287.00
299-E18-3	5/30/90	H0008050			278.00	284.00
299-E18-3	5/30/90	H0008051			279.00	285.00
299-E18-3	5/30/90	H0008052			279.00	286.00
299-E18-3	9/06/91	B00LC4F		5100.00		
299-E18-3	6/03/92	B06PK4		5700.00		
299-E18-3	6/03/92	B06PK5		5700.00		
299-E18-3	12/16/92	B07S44			230.00	
299-E18-3	12/16/92	B07S46			230.00	
299-E18-3	12/16/92	B07S55		5900.00		
299-E18-3	12/16/92	B07S56		5900.00		
299-E18-4	8/16/88	H0008053	6010.00		219.00	303.00
299-E18-4	8/16/88	H0008053		6310.00		
299-E18-4	8/16/88	H0008054			218.00	303.00
299-E18-4	8/16/88	H0008055			219.00	303.00
299-E18-4	8/16/88	H0008056			220.00	303.00
299-E18-4	9/22/88	H0008057	6760.00			
299-E18-4	9/22/88	H0008057		6680.00		
299-E18-4	11/09/88	H0008058	6740.00		242.00	270.00
299-E18-4	11/09/88	H0008058		6620.00		
299-E18-4	11/09/88	H0008059			250.00	270.00
299-E18-4	11/09/88	H0008060			251.00	271.00
299-E18-4	11/09/88	H0008061			250.00	271.00
299-E18-4	11/23/88	H0008062				252.00
299-E18-4	2/15/89	H0008064	11400.00		228.00	248.00
299-E18-4	2/15/89	H0008064		9640.00		
299-E18-4	2/15/89	H0008065			242.00	248.00
299-E18-4	2/15/89	H0008066			261.00	248.00
299-E18-4	2/15/89	H0008067			263.00	248.00
299-E18-4	5/26/89	H0008068	6790.00		296.00	255.00
299-E18-4	5/26/89	H0008068		14400.00		
299-E18-4	5/26/89	H0008069			293.00	255.00
299-E18-4	5/26/89	H0008070			294.00	255.00

Groundwater Data for 2101-M Pond

Well Name	Collection Date	Sample Number	SODIUM 35/ppb ./.	FSODIUM 34/ppb 300/.	CONDUCT 73/umhos 1/.	CONDUCT 76/ ./.
299-E18-4	5/26/89	H0008071			262.00	255.00
299-E18-4	8/08/89	H0008072	6130.00		253.00	171.00
299-E18-4	8/08/89	H0008072		6250.00		
299-E18-4	8/08/89	H0008073			251.00	171.00
299-E18-4	8/08/89	H0008074			254.00	171.00
299-E18-4	8/08/89	H0008075	5900.00		254.00	171.00
299-E18-4	8/08/89	H0008075		6180.00		
299-E18-4	11/21/89	H0008076	10600.00		278.00	236.00
299-E18-4	11/21/89	H0008076		9260.00		
299-E18-4	11/21/89	H0008077			285.00	236.00
299-E18-4	11/21/89	H0008078			287.00	234.00
299-E18-4	11/21/89	H0008079			286.00	239.00
299-E18-4	5/30/90	H0008080			284.00	259.00
299-E18-4	5/30/90	H0008081			285.00	255.00
299-E18-4	5/30/90	H0008082			271.00	258.00
299-E18-4	5/30/90	H0008083			279.00	261.00
299-E18-4	9/06/91	B00LC8F		8400.00		
299-E18-4	6/03/92	B06PL2		9900.00		
299-E18-4	12/16/92	B07S57			240.00	
299-E18-4	12/16/92	B07S61		10000.00		

Well Name	Collection Date	Sample Number	CONDUCT 94/umhos ./.	STRONUM 35/ppb ./.	STYRENE 16/ppb 5/.	SULFATE 124/ppb 500/250000s
299-E18-1	8/16/88	H0007ZT7		249.00		
299-E18-1	11/10/88	H0007ZV2		249.00		
299-E18-1	11/10/88	H0007ZV5		241.00		
299-E18-1	2/15/89	H0007ZV8		240.00		
299-E18-1	5/26/89	H0007ZW2		257.00		
299-E18-1	8/08/89	H0007ZW6		231.00		
299-E18-1	10/31/89	H0007ZX0		250.00	5.00 U	
299-E18-1	7/09/91	H00071X9	521.00			130000.00
299-E18-1	9/06/91	B00LB6	515.00			
299-E18-1	9/06/91	B00LB7	516.00			
299-E18-1	9/06/91	B00LB8	515.00			
299-E18-1	9/06/91	B00LB9	515.00			
299-E18-1	1/24/92	B01Q59	527.00			140000.00
299-E18-1	6/03/92	B06PH8	558.00			130000.00
299-E18-1	6/03/92	B06PH9	556.00			
299-E18-1	6/03/92	B06PJ0	560.00			
299-E18-1	6/03/92	B06PJ1	560.00			
299-E18-1	11/03/92	B07LH1	553.00			

Groundwater Data for 2101-M Pond

Well Name	Collection Date	Sample Number	CONDUCT 94/umhos ./.	STRONUM 35/ppb ./.	STYRENE 16/ppb 5/.	SULFATE 124/ppb 500/250000s
299-E18-1	11/03/92	B07LH2	554.00			
299-E18-1	11/03/92	B07LH3	556.00			
299-E18-1	11/03/92	B07LH4	555.00			
299-E18-1	12/16/92	B07S32	510.00			130000.00
299-E18-1	12/16/92	B07S33	506.00			
299-E18-1	12/16/92	B07S34	516.00			
299-E18-1	12/16/92	B07S35	513.00			
299-E18-2	8/16/88	H0007ZX9		133.00		
299-E18-2	11/10/88	H0007ZY4		129.00		
299-E18-2	11/22/88	H0007ZY8		135.00		
299-E18-2	2/16/89	H0007ZZ4		146.00		
299-E18-2	2/16/89	H0007ZZ7		147.00		
299-E18-2	6/01/89	H0007Z28		161.00		
299-E18-2	8/11/89	H0008002		147.00		
299-E18-2	11/27/89	H0008006		153.00	5.00 U	
299-E18-2	3/13/90	H0008010			5.00 U	
299-E18-2	9/06/91	B00LC0	255.00			
299-E18-2	9/06/91	B00LC1	259.00			
299-E18-2	9/06/91	B00LC2	259.00			
299-E18-2	9/06/91	B00LC3	259.00			
299-E18-2	7/10/92	B06PJ3	266.00			25000.00
299-E18-2	11/03/92	B07LH5	267.00			
299-E18-2	11/03/92	B07LH6	263.00			
299-E18-2	11/03/92	B07LH7	262.00			
299-E18-2	11/03/92	B07LH8	265.00			
299-E18-2	12/16/92	B07S37	264.00			25000.00
299-E18-2	12/16/92	B07S38	264.00			
299-E18-2	12/16/92	B07S39	259.00			
299-E18-2	12/16/92	B07S40	262.00			
299-E18-3	8/16/88	H0008018		128.00		
299-E18-3	11/10/88	H0008023		130.00		
299-E18-3	2/16/89	H0008029		161.00		
299-E18-3	6/01/89	H0008033		148.00		
299-E18-3	6/01/89	H0008036		149.00		
299-E18-3	8/08/89	H0008037		141.00		
299-E18-3	11/27/89	H0008041		150.00	5.00 U	
299-E18-3	11/27/89	H0008044		146.00	5.00 U	
299-E18-3	3/13/90	H0008045			5.00 U	
299-E18-3	9/06/91	B00LC4	228.00			
299-E18-3	9/06/91	B00LC5	225.00			
299-E18-3	9/06/91	B00LC6	225.00			
299-E18-3	9/06/91	B00LC7	227.00			
299-E18-3	6/03/92	B06PK0	243.00			11000.00
299-E18-3	6/03/92	B06PK1	243.00			12000.00
299-E18-3	6/03/92	B06PK2	244.00			

Groundwater Data for 2101-M Pond

Well Name	Collection Date	Sample Number	CONDUCT 94/umhos ./.	STRONUM 35/ppb ./.	STYRENE 16/ppb 5/.	SULFATE 124/ppb 500/250000s
299-E18-3	6/03/92	B06PK3	244.00			
299-E18-3	11/03/92	B07LJ0	242.00			
299-E18-3	11/03/92	B07LJ1	241.00			
299-E18-3	11/03/92	B07LJ2	242.00			
299-E18-3	11/03/92	B07LJ4	240.00			
299-E18-3	12/16/92	B07S44	225.00			12000.00
299-E18-3	12/16/92	B07S46	224.00			12000.00
299-E18-3	12/16/92	B07S50	225.00			
299-E18-4	8/16/88	H0008053		146.00		
299-E18-4	11/09/88	H0008058		148.00		
299-E18-4	2/15/89	H0008064		150.00		
299-E18-4	5/26/89	H0008068		173.00		
299-E18-4	8/08/89	H0008072		169.00		
299-E18-4	8/08/89	H0008075		165.00		
299-E18-4	11/21/89	H0008076		158.00	5.00 U	
299-E18-4	9/06/91	B00LC8	251.00			
299-E18-4	9/06/91	B00LC9	252.00			
299-E18-4	9/06/91	B00LD0	252.00			
299-E18-4	9/06/91	B00LD1	253.00			
299-E18-4	6/03/92	B06PK6	267.00			13000.00
299-E18-4	6/03/92	B06PK8	269.00			
299-E18-4	6/03/92	B06PL0	270.00			
299-E18-4	6/03/92	B06PL1	269.00			
299-E18-4	11/03/92	B07LJ5	247.00			
299-E18-4	11/03/92	B07LJ6	247.00			
299-E18-4	11/03/92	B07LJ7	245.00			
299-E18-4	11/03/92	B07LJ8	246.00			
299-E18-4	12/16/92	B07S57	252.00			13000.00
299-E18-4	12/16/92	B07S58	247.00			
299-E18-4	12/16/92	B07S59	247.00			
299-E18-4	12/16/92	B07S60	245.00			

Well Name	Collection Date	Sample Number	SULFATE 46/ppb ./250000s	SULFATE 82/ppm ./250s	SULFIDE 63/ppb 10000/.	TMP_C 170/DegC .1/.
299-E18-1	8/16/88	H0007ZT7	168000.00			
299-E18-1	8/16/88	H000GLJ0				22.00
299-E18-1	11/10/88	H0007ZV2	172000.00		1000.00 U	
299-E18-1	11/10/88	H0007ZV5	169000.00			
299-E18-1	11/10/88	H000GMG7				21.00
299-E18-1	11/23/88	H000GMN5				20.00
299-E18-1	2/15/89	H0007ZV8	149000.00			

Groundwater Data for 2101-M Pond

Well Name	Collection Date	Sample Number	SULFATE 46/ppb ./250000s	SULFATE 82/ppm ./250s	SULFIDE 63/ppb 10000/.	TMP_C 170/DegC .1/.
299-E18-1	2/15/89	H000GND6				20.00
299-E18-1	5/26/89	H0007ZW2	151000.00			
299-E18-1	5/26/89	H000GKS2				20.70
299-E18-1	8/08/89	H0007ZW6	153000.00			
299-E18-1	8/08/89	H000GNQ1				21.60
299-E18-1	10/31/89	H0007ZX0	148000.00		1000.00 U	
299-E18-1	10/31/89	H000GPC4				20.70
299-E18-1	11/29/89	H000GPJ3				20.60
299-E18-1	5/30/90	H0007ZX5	142000.00			
299-E18-1	5/30/90	H000GRK4				20.00
299-E18-1	7/09/91	H00071X9				21.50
299-E18-1	9/06/91	B00LB6				22.30
299-E18-1	1/24/92	B01Q59				21.60
299-E18-1	6/03/92	B06PH8				20.60
299-E18-1	11/03/92	B07LH1				20.20
299-E18-1	12/16/92	B07S32				20.40
299-E18-2	8/16/88	H0007ZX9	23500.00			
299-E18-2	8/16/88	H000GLH9				20.00
299-E18-2	11/10/88	H0007ZY4	26600.00		1000.00 U	
299-E18-2	11/10/88	H000GMG6				19.00
299-E18-2	11/22/88	H0007ZY8	28100.00			
299-E18-2	11/22/88	H000GMN1				19.00
299-E18-2	11/23/88	H000GMN6				19.00
299-E18-2	2/16/89	H0007ZZ4	31600.00			
299-E18-2	2/16/89	H000GND7				18.00
299-E18-2	6/01/89	H0007ZZ8	44000.00			
299-E18-2	6/01/89	H000GKP5				18.80
299-E18-2	8/11/89	H0008002	45000.00			
299-E18-2	8/11/89	H000GNK5				20.10
299-E18-2	11/27/89	H0008006			1000.00 U	
299-E18-2	11/27/89	H000GPJ9				19.40
299-E18-2	3/13/90	H0008010	44400.00			
299-E18-2	3/13/90	H000GQG1				19.10
299-E18-2	5/30/90	H0008014	39700.00			
299-E18-2	5/30/90	H0008017	39700.00			
299-E18-2	5/30/90	H000GRL3				19.50
299-E18-2	9/06/91	B00LC0				19.80
299-E18-2	9/06/91	B00LL4		27.40		
299-E18-2	7/10/92	B06PJ3				20.40
299-E18-2	11/03/92	B07LH5				18.90
299-E18-2	11/03/92	B07LH6				18.90
299-E18-2	11/03/92	B07LH7				18.90
299-E18-2	11/03/92	B07LH8				18.90
299-E18-2	12/16/92	B07S37				19.50
299-E18-2	12/16/92	B07S40				20.00

Groundwater Data for 2101-M Pond

Well Name	Collection Date	Sample Number	SULFATE 46/ppb ./250000s	SULFATE 82/ppm ./250s	SULFIDE 63/ppb 10000/.	TMP_C 170/DegC .1/.
299-E18-3	8/16/88	H0008018	13000.00			
299-E18-3	8/16/88	H000GLH8				20.00
299-E18-3	11/10/88	H0008023	14700.00		1000.00 U	
299-E18-3	11/10/88	H000GMG5				20.00
299-E18-3	11/28/88	H000GMM2				18.00
299-E18-3	2/16/89	H0008029	12500.00			
299-E18-3	2/16/89	H000GNF2				18.00
299-E18-3	6/01/89	H0008033	12500.00			
299-E18-3	6/01/89	H0008036	12600.00			
299-E18-3	6/01/89	H000GKP6				18.60
299-E18-3	8/08/89	H0008037	13900.00			
299-E18-3	8/08/89	H000GNP8				19.70
299-E18-3	11/27/89	H0008041	15500.00		1000.00 U	
299-E18-3	11/27/89	H0008044	15500.00		1000.00 U	
299-E18-3	11/27/89	H000GPK0				14.40
299-E18-3	3/13/90	H000GQG2				17.90
299-E18-3	5/30/90	H0008049	15400.00			
299-E18-3	5/30/90	H000GRK6				19.00
299-E18-3	9/06/91	B00LC4				19.70
299-E18-3	9/06/91	B00LL5		12.00		
299-E18-3	6/03/92	B06PK0				19.90
299-E18-3	11/03/92	B07LJ0				18.20
299-E18-3	11/03/92	B07LJ1				18.40
299-E18-3	11/03/92	B07LJ2				18.40
299-E18-3	11/03/92	B07LJ4				18.40
299-E18-3	12/16/92	B07S44				18.70
299-E18-4	8/16/88	H0008053	13500.00			
299-E18-4	8/16/88	H000GLH7				20.00
299-E18-4	11/09/88	H0008058	17000.00		1000.00 U	
299-E18-4	11/09/88	H000GMG8				19.00
299-E18-4	11/23/88	H000GMN7				19.00
299-E18-4	2/15/89	H0008064	22100.00			
299-E18-4	2/15/89	H000GND8				19.00
299-E18-4	5/26/89	H0008068	35400.00			
299-E18-4	5/26/89	H000GKQ4				19.00
299-E18-4	8/08/89	H0008072	14900.00			
299-E18-4	8/08/89	H0008075	14800.00			
299-E18-4	8/08/89	H000GNP7				19.50
299-E18-4	11/21/89	H0008076	23900.00		1000.00 U	
299-E18-4	11/21/89	H000GPJ2				19.60
299-E18-4	5/30/90	H0008080	14200.00			
299-E18-4	5/30/90	H000GRK7				18.50
299-E18-4	9/06/91	B00LC8				19.60
299-E18-4	9/06/91	B00LL6		12.50		
299-E18-4	6/03/92	B06PK6				19.20

Groundwater Data for 2101-M Pond

Well Name	Collection Date	Sample Number	SULFATE 46/ppb ./250000s	SULFATE 82/ppm ./250s	SULFIDE 63/ppb 10000/.	TMP_C 170/DegC .1/.
299-E18-4	11/03/92	B07LJ5				17.50
299-E18-4	11/03/92	B07LJ6				17.50
299-E18-4	11/03/92	B07LJ7				17.50
299-E18-4	11/03/92	B07LJ8				17.50
299-E18-4	12/16/92	B07S57				18.50

Well Name	Collection Date	Sample Number	PERCENE 16/ppb 5/.	TETPHNL 30/ppb 10/.	TETEPYR 29/ppb ./.	TAF 16/ppb 10/.
299-E18-1	11/10/88	H0007ZV2	5.00 U		2.00 U	10.00 U
299-E18-1	11/10/88	H0007ZV3	5.00 U			10.00 U
299-E18-1	11/10/88	H0007ZV4	5.00 U			10.00 U
299-E18-1	11/10/88	H0007ZV5	5.00 U			10.00 U
299-E18-1	11/23/88	H0007ZV6	5.00 U			10.00 U
299-E18-1	2/15/89	H0007ZV8	5.00 U			10.00 U
299-E18-1	5/26/89	H0007ZW2	5.00 U			10.00 U
299-E18-1	8/08/89	H0007ZW6	5.00 U			10.00 U
299-E18-1	10/31/89	H0007ZX0	5.00 U		2.00 U	10.00 U
299-E18-1	1/24/92	B01Q59		10.00 U		
299-E18-1	6/03/92	B06PH8	5.00 U	10.00 U		10.00 U
299-E18-1	12/16/92	B07SN0		10.00 U		
299-E18-2	11/10/88	H0007ZY4	5.00 U		2.00 U	10.00 U
299-E18-2	11/10/88	H0007ZY7	5.00 U			10.00 U
299-E18-2	11/22/88	H0007ZY8	5.00 U			
299-E18-2	11/23/88	H0007ZZ2	5.00 U			10.00 U
299-E18-2	11/27/89	H0008006	5.00 U		2.00 U	10.00 U
299-E18-2	3/13/90	H0008010	5.00 U			10.00 U
299-E18-2	7/10/92	B06PJ3	5.00 U	10.00 U		10.00 U
299-E18-3	11/10/88	H0008023	5.00 U		2.00 U	10.00 U
299-E18-3	11/10/88	H0008026	5.00 U			10.00 U
299-E18-3	11/28/88	H0008027	5.00 U			10.00 U
299-E18-3	11/27/89	H0008041	5.00 U		2.00 U	10.00 U
299-E18-3	11/27/89	H0008044	5.00 U		2.00 U	10.00 U
299-E18-3	3/13/90	H0008045	5.00 U			10.00 U
299-E18-3	6/03/92	B06PK0	5.00 U	10.00 U		10.00 U
299-E18-3	6/03/92	B06PK1	5.00 U	10.00 U		10.00 U
299-E18-4	11/09/88	H0008058	5.00 U		2.00 U	10.00 U
299-E18-4	11/09/88	H0008061	5.00 U			10.00 U
299-E18-4	11/23/88	H0008062	5.00 U			10.00 U
299-E18-4	11/21/89	H0008076	5.00 U		2.00 U	10.00 U
299-E18-4	6/03/92	B06PK6	5.00 U	10.00 U		10.00 U

Groundwater Data for 2101-M Pond

Well Name	Collection Date	Sample Number	PERCENE 16/ppb 5/.	TETPHNL 30/ppb 10/.	TETEPYR 29/ppb ./.	TAF 16/ppb 10/.

Well Name	Collection Date	Sample Number	THALLIUM 76/ ./.	FTHALIUM 42/ppb 5/.	THIONOX 21/ppb ./.	THIOURA 18/ppb ./.
299-E18-1	11/10/88	H0007ZV2	5.00 U		10.00 U	200.00 U
299-E18-1	11/10/88	H0007ZV2		5.00 U		
299-E18-1	11/10/88	H0007ZV5	5.00 U			
299-E18-1	11/10/88	H0007ZV5		5.00 U		
299-E18-1	10/31/89	H0007ZX0	5.00 U		10.00 U	200.00 U
299-E18-1	10/31/89	H0007ZX0		5.00 U		
299-E18-2	11/10/88	H0007ZY4	5.00 U		10.00 U	200.00 U
299-E18-2	11/10/88	H0007ZY4		5.00 U		
299-E18-2	11/27/89	H0008006	5.00 U		10.00 U	200.00 U
299-E18-2	11/27/89	H0008006		5.00 U		
299-E18-3	11/10/88	H0008023	5.00 U		10.00 U	200.00 U
299-E18-3	11/10/88	H0008023		5.00 U		
299-E18-3	11/27/89	H0008041	5.00 U		10.00 U	200.00 U
299-E18-3	11/27/89	H0008041		5.00 U		
299-E18-3	11/27/89	H0008044	5.00 U		10.00 U	200.00 U
299-E18-3	11/27/89	H0008044		5.00 U		
299-E18-4	11/09/88	H0008058	5.00 U		10.00 U	200.00 U
299-E18-4	11/09/88	H0008058		5.00 U		
299-E18-4	11/21/89	H0008076	5.00 U		10.00 U	200.00 U
299-E18-4	11/21/89	H0008076		5.00 U		

Well Name	Collection Date	Sample Number	THIURAM 21/ppb ./.	TIN 34/ppb 100/.	TIN 35/ppb ./.	FTIN 34/ppb 100/.
299-E18-1	11/10/88	H0007ZV2	10.00 U			
299-E18-1	2/15/89	H0007ZV8			30.00 U	
299-E18-1	2/15/89	H0007ZV8				30.00 U
299-E18-1	5/26/89	H0007ZW2			30.00 U	
299-E18-1	5/26/89	H0007ZW2				30.00 U
299-E18-1	8/08/89	H0007ZW6			30.00 U	
299-E18-1	8/08/89	H0007ZW6				30.00 U
299-E18-1	10/31/89	H0007ZX0	10.00 U		30.00 U	
299-E18-1	10/31/89	H0007ZX0				30.00 U
299-E18-1	7/09/91	H00071X9		100.00 U		
299-E18-1	7/09/91	H00071X9F				100.00 U

Groundwater Data for 2101-M Pond

Well Name	Collection Date	Sample Number	THIURAM 21/ppb ./.	TIN 34/ppb 100/.	TIN 35/ppb ./.	FTIN 34/ppb 100/.
299-E18-1	9/06/91	B00LB6		100.00 U		
299-E18-1	9/06/91	B00LB6F				100.00 U
299-E18-1	1/24/92	B01Q59		100.00 UD		
299-E18-1	1/24/92	B01Q60				100.00 UD
299-E18-1	6/03/92	B06PH8		100.00 U		
299-E18-1	6/03/92	B06PJ2				100.00 U
299-E18-1	12/16/92	B07S32		100.00 U		
299-E18-1	12/16/92	B07S36				100.00 U
299-E18-2	11/10/88	H0007ZY4	10.00 U			
299-E18-2	2/16/89	H0007ZZ4			30.00 U	
299-E18-2	2/16/89	H0007ZZ4				30.00 U
299-E18-2	2/16/89	H0007ZZ7			30.00 U	
299-E18-2	2/16/89	H0007ZZ7				30.00 U
299-E18-2	6/01/89	H0007ZZ8			30.00 U	
299-E18-2	6/01/89	H0007ZZ8				30.00 U
299-E18-2	8/11/89	H0008002			30.00 U	
299-E18-2	8/11/89	H0008002				30.00 U
299-E18-2	11/27/89	H0008006	10.00 U		30.00 U	
299-E18-2	11/27/89	H0008006				30.00 U
299-E18-2	9/06/91	B00LC0		100.00 U		
299-E18-2	9/06/91	B00LC0F				100.00 U
299-E18-2	7/10/92	B06PJ3		100.00 U		
299-E18-2	7/10/92	B06PJ8				100.00 U
299-E18-2	12/16/92	B07S37		100.00 U		
299-E18-2	12/16/92	B07S41				100.00 U
299-E18-3	11/10/88	H0008023	10.00 U			
299-E18-3	2/16/89	H0008029			30.00 U	
299-E18-3	2/16/89	H0008029				30.00 U
299-E18-3	6/01/89	H0008033			30.00 U	
299-E18-3	6/01/89	H0008033				30.00 U
299-E18-3	6/01/89	H0008036			30.00 U	
299-E18-3	6/01/89	H0008036				30.00 U
299-E18-3	8/08/89	H0008037			30.00 U	
299-E18-3	8/08/89	H0008037				30.00 U
299-E18-3	11/27/89	H0008041	10.00 U		30.00 U	
299-E18-3	11/27/89	H0008041				30.00 U
299-E18-3	11/27/89	H0008044	10.00 U		30.00 U	
299-E18-3	11/27/89	H0008044				30.00 U
299-E18-3	9/06/91	B00LC4		100.00 U		
299-E18-3	9/06/91	B00LC4F				100.00 U
299-E18-3	6/03/92	B06PK0		100.00 U		
299-E18-3	6/03/92	B06PK1		100.00 U		
299-E18-3	6/03/92	B06PK4				100.00 U
299-E18-3	6/03/92	B06PK5				100.00 U
299-E18-3	12/16/92	B07S44		100.00 U		

Groundwater Data for 2101-M Pond

Well Name	Collection Date	Sample Number	THIURAM 21/ppb ./.	TIN 34/ppb 100/.	TIN 35/ppb ./.	FTIN 34/ppb 100/.
299-E18-3	12/16/92	B07S46		100.00 U		
299-E18-3	12/16/92	B07S55				100.00 U
299-E18-3	12/16/92	B07S56				100.00 U
299-E18-4	11/09/88	H0008058	10.00 U			
299-E18-4	2/15/89	H0008064			30.00 U	
299-E18-4	2/15/89	H0008064				30.00 U
299-E18-4	5/26/89	H0008068			30.00 U	
299-E18-4	5/26/89	H0008068				30.00 U
299-E18-4	8/08/89	H0008072			30.00 U	
299-E18-4	8/08/89	H0008072				30.00 U
299-E18-4	8/08/89	H0008075			30.00 U	
299-E18-4	8/08/89	H0008075				30.00 U
299-E18-4	11/21/89	H0008076	10.00 U		30.00 U	
299-E18-4	11/21/89	H0008076				30.00 U
299-E18-4	9/06/91	B00LC8		100.00 U		
299-E18-4	9/06/91	B00LC8F				100.00 U
299-E18-4	6/03/92	B06PK6		100.00 U		
299-E18-4	6/03/92	B06PL2				100.00 U
299-E18-4	12/16/92	B07S57		100.00 U		
299-E18-4	12/16/92	B07S61				100.00 U

Well Name	Collection Date	Sample Number	TOLUENE 16/ppb 5/.	TC 127/ppb 2000/.	TDS 65/ppm 10/.	TOC 122/ppb 1000/.
299-E18-1	11/10/88	H0007ZV2	5.00 U	21500.00		
299-E18-1	11/10/88	H0007ZV3	5.00 U			
299-E18-1	11/10/88	H0007ZV4	5.00 U			
299-E18-1	11/10/88	H0007ZV5	5.00 U			
299-E18-1	11/23/88	H0007ZV6	5.00 U			
299-E18-1	2/15/89	H0007ZV8	5.00 U	23800.00		
299-E18-1	5/26/89	H0007ZW2	5.00 U			
299-E18-1	8/08/89	H0007ZW6	5.00 U	24200.00		
299-E18-1	10/31/89	H0007ZX0	5.00 U	24600.00	347000.00	
299-E18-1	7/09/91	H00071X9				U
299-E18-1	1/24/92	B01Q59				1000.00 U
299-E18-1	6/03/92	B06PH8	5.00 U			1000.00 U
299-E18-1	6/03/92	B06PH9				1000.00 U
299-E18-1	6/03/92	B06PJ0				1000.00 U
299-E18-1	6/03/92	B06PJ1				1000.00 U
299-E18-1	12/16/92	B07S32				1000.00 U
299-E18-1	12/16/92	B07S33				1000.00 U
299-E18-1	12/16/92	B07S34				1000.00 U

Groundwater Data for 2101-M Pond

Well Name	Collection Date	Sample Number	TOLUENE 16/ppb 5/.	TC 127/ppb 2000/.	TDS 65/ppm 10/.	TOC 122/ppb 1000/.
299-E18-1	12/16/92	B07S35				1000.00 U
299-E18-2	11/10/88	H0007ZY4	5.00 U	22900.00		
299-E18-2	11/10/88	H0007ZY7	5.00 U			
299-E18-2	11/23/88	H0007ZZ2	5.00 U			
299-E18-2	11/27/89	H0008006	5.00 U	21500.00		
299-E18-2	3/13/90	H0008010	5.00 U			
299-E18-2	7/10/92	B06PJ3	5.00 U			1000.00 U
299-E18-2	7/10/92	B06PJ4				1000.00 U
299-E18-2	7/10/92	B06PJ5				1000.00 U
299-E18-2	7/10/92	B06PJ7				1000.00 U
299-E18-2	12/16/92	B07S37				1000.00 U
299-E18-2	12/16/92	B07S38				1000.00 U
299-E18-2	12/16/92	B07S39				1000.00 U
299-E18-2	12/16/92	B07S40				1000.00 U
299-E18-3	11/10/88	H0008023	5.00 U	21200.00		
299-E18-3	11/10/88	H0008026	5.00 U			
299-E18-3	11/28/88	H0008027	5.00 U			
299-E18-3	11/27/89	H0008041	5.00 U	24800.00		
299-E18-3	11/27/89	H0008044	5.00 U	25000.00		
299-E18-3	3/13/90	H0008045	5.00 U			
299-E18-3	6/03/92	B06PK0	5.00 U			1000.00 U
299-E18-3	6/03/92	B06PK1	5.00 U			1000.00 U
299-E18-3	6/03/92	B06PK2				1000.00 U
299-E18-3	6/03/92	B06PK3				1000.00 U
299-E18-3	12/16/92	B07S44				1000.00 U
299-E18-3	12/16/92	B07S46				1000.00 U
299-E18-3	12/16/92	B07S50				1000.00 U
299-E18-3	12/16/92	B07S51				1000.00 U
299-E18-3	12/16/92	B07S52				1000.00 U
299-E18-3	12/16/92	B07S53				1000.00 U
299-E18-3	12/16/92	B07S54				1000.00 U
299-E18-4	11/09/88	H0008058	5.00 U	22200.00		
299-E18-4	11/09/88	H0008061	5.00 U			
299-E18-4	11/23/88	H0008062	5.00 U			
299-E18-4	11/21/89	H0008076	5.00 U	23800.00		
299-E18-4	6/03/92	B06PK6	5.00 U			1000.00 U
299-E18-4	6/03/92	B06PK8				1000.00 U
299-E18-4	6/03/92	B06PL0				1000.00 U
299-E18-4	6/03/92	B06PL1				1000.00 U
299-E18-4	12/16/92	B07S57				1000.00 U
299-E18-4	12/16/92	B07S58				1000.00 U
299-E18-4	12/16/92	B07S59				1000.00 U
299-E18-4	12/16/92	B07S60				1000.00 U

Groundwater Data for 2101-M Pond

Well Name	Collection Date	Sample Number	TOLUENE 16/ppb 5/.	TC 127/ppb 2000/.	TDS 65/ppm 10/.	TOC 122/ppb 1000/.

Well Name	Collection Date	Sample Number	TOC 66/ppb ./.	TOXLDL 67/ppb 10/.	TOXAENE 17/ppb 2/5	TOXAENE 37/ppb ./5
299-E18-1	8/16/88	H0007ZT7	532.00 U	1.30 U		1.00 U
299-E18-1	8/16/88	H0007ZT8	397.00 U	-4.80 U		
299-E18-1	8/16/88	H0007ZT9	382.00 U	11.40 U		
299-E18-1	8/16/88	H0007ZV0	890.00 U	11.50 U		
299-E18-1	11/10/88	H0007ZV2	400.00 U	4.00 U		1.00 U
299-E18-1	11/10/88	H0007ZV3	300.00 U	3.00 U		
299-E18-1	11/10/88	H0007ZV4	300.00 U	3.00 U		
299-E18-1	11/10/88	H0007ZV5	300.00 U	.00 U		
299-E18-1	2/15/89	H0007ZV8	200.00 U	5.00 U		1.00 U
299-E18-1	2/15/89	H0007ZV9	200.00 U	5.00 U		
299-E18-1	2/15/89	H0007ZW0	200.00 U	.01 U		
299-E18-1	2/15/89	H0007ZW1	200.00 U	5.00 U		
299-E18-1	5/26/89	H0007ZW2	500.00 U	4.00 U		1.00 U
299-E18-1	5/26/89	H0007ZW3	600.00 U	3.00 U		
299-E18-1	5/26/89	H0007ZW4	300.00 U	3.00 U		
299-E18-1	5/26/89	H0007ZW5	500.00 U	3.00 U		
299-E18-1	8/08/89	H0007ZW6	300.00 U	3.00 U		1.00 U
299-E18-1	8/08/89	H0007ZW7	300.00 U	2.00 U		
299-E18-1	8/08/89	H0007ZW8	300.00 U	4.00 U		
299-E18-1	8/08/89	H0007ZW9	400.00 U	4.00 U		
299-E18-1	10/31/89	H0007ZX0	500.00 U	1.00 U		1.00 U
299-E18-1	11/29/89	H0007ZX1	200.00 U	3.00 U		
299-E18-1	11/29/89	H0007ZX2	300.00 U	8.00 U		
299-E18-1	11/29/89	H0007ZX3	300.00 U	4.00 U		
299-E18-1	11/29/89	H0007ZX4	300.00 U	5.00 U		
299-E18-1	5/30/90	H0007ZX5	200.00 U	1.00 U		
299-E18-1	5/30/90	H0007ZX6	200.00 U			
299-E18-1	5/30/90	H0007ZX7	500.00 U			
299-E18-1	5/30/90	H0007ZX8	200.00 U			
299-E18-1	7/09/91	H00071X9		U		
299-E18-1	1/24/92	B01Q59		10.00 UA		
299-E18-1	6/03/92	B06PH8		10.00 UA	2.00 U	
299-E18-1	6/03/92	B06PH9		10.00 A		
299-E18-1	6/03/92	B06PJ0		10.00 UA		
299-E18-1	6/03/92	B06PJ1		10.00 A		
299-E18-1	11/03/92	B07LH1		10.00 UA		
299-E18-1	11/03/92	B07LH2		10.00 UA		
299-E18-1	11/03/92	B07LH3		10.00 UA		

Groundwater Data for 2101-M Pond

Well Name	Collection Date	Sample Number	TOC 66/ppb ./.	TOXLDL 67/ppb 10/.	TOXAENE 17/ppb 2/5	TOXAENE 37/ppb ./5
299-E18-1	11/03/92	B07LH4		10.00 UA		
299-E18-1	12/16/92	B07S32		10.00 UA		
299-E18-1	12/16/92	B07S33		10.00 UA		
299-E18-1	12/16/92	B07S34		10.00 UA		
299-E18-1	12/16/92	B07S35		10.00 UA		
299-E18-1	12/16/92	B07SN0			2.00 U	
299-E18-2	8/16/88	H0007ZX9	341.00 U	-4.70 U		1.00 U
299-E18-2	8/16/88	H0007ZY0	543.00 U	9.90 U		
299-E18-2	8/16/88	H0007ZY1	717.00 U	-1.80 U		
299-E18-2	8/16/88	H0007ZY2	356.00 U	-.90 U		
299-E18-2	11/10/88	H0007ZY4	200.00 U	7.00 U		1.00 U
299-E18-2	11/10/88	H0007ZY5	500.00 U	7.00 U		
299-E18-2	11/10/88	H0007ZY6	300.00 U	2.00 U		
299-E18-2	11/10/88	H0007ZY7	300.00 U	1.00 U		
299-E18-2	11/22/88	H0007ZY8	200.00 U	7.00 U		1.00 U
299-E18-2	11/22/88	H0007ZY9	200.00 U	6.00 U		
299-E18-2	11/22/88	H0007ZZ0	300.00 U	2.00 U		
299-E18-2	11/22/88	H0007ZZ1	300.00 U	7.00 U		
299-E18-2	2/16/89	H0007ZZ4	500.00 U	4.00 U		1.00 U
299-E18-2	2/16/89	H0007ZZ5	1000.00 U	3.00 U		
299-E18-2	2/16/89	H0007ZZ6	900.00 U	5.00 U		
299-E18-2	2/16/89	H0007ZZ7	700.00 U	3.00 U		
299-E18-2	6/01/89	H0007ZZ8	400.00 U	15.00		1.00 U
299-E18-2	6/01/89	H0007ZZ9	400.00 U	13.00		
299-E18-2	6/01/89	H0008000	500.00 U	12.00		
299-E18-2	6/01/89	H0008001	600.00 U	14.00		
299-E18-2	8/11/89	H0008002	300.00 U	5.00 U		1.00 U
299-E18-2	8/11/89	H0008003	800.00 U	13.00		
299-E18-2	8/11/89	H0008004	500.00 U	12.00		
299-E18-2	8/11/89	H0008005	700.00 U	13.00		
299-E18-2	11/27/89	H0008006	400.00 U	6.00 U		1.00 U
299-E18-2	11/27/89	H0008007	600.00 U	7.00 U		
299-E18-2	11/27/89	H0008008	400.00 U	8.00 U		
299-E18-2	11/27/89	H0008009	700.00 U	8.00 U		
299-E18-2	5/30/90	H0008014	300.00 U			
299-E18-2	5/30/90	H0008015	300.00 U			
299-E18-2	5/30/90	H0008016	300.00 U			
299-E18-2	5/30/90	H0008017	300.00 U			
299-E18-2	7/10/92	B06PJ3		30.00 RA	2.00 U	
299-E18-2	7/10/92	B06PJ4		30.00 RA		
299-E18-2	7/10/92	B06PJ5		10.00 UA		
299-E18-2	7/10/92	B06PJ7		10.00 UA		
299-E18-2	11/03/92	B07LH5		10.00 UA		
299-E18-2	11/03/92	B07LH6		10.00 UA		
299-E18-2	11/03/92	B07LH7		10.00 UA		

Groundwater Data for 2101-M Pond

Well Name	Collection Date	Sample Number	TOC 66/ppb ./.	TOXLDL 67/ppb 10/.	TOXAENE 17/ppb 2/5	TOXAENE 37/ppb ./5
299-E18-2	11/03/92	B07LH8		10.00 UA		
299-E18-2	12/16/92	B07S37		10.00 UA		
299-E18-2	12/16/92	B07S38		10.00 UA		
299-E18-2	12/16/92	B07S39		10.00 UA		
299-E18-2	12/16/92	B07S40		10.00 UA		
299-E18-3	8/16/88	H0008018	546.00 U	2.90 U		1.00 U
299-E18-3	8/16/88	H0008019	492.00 U	5.10 U		
299-E18-3	8/16/88	H0008020	498.00 U	37.20		
299-E18-3	8/16/88	H0008021	531.00 U	13.70 U		
299-E18-3	11/10/88	H0008023	400.00 U	5.00 U		1.00 U
299-E18-3	11/10/88	H0008024	500.00 U	6.00 U		
299-E18-3	11/10/88	H0008025	500.00 U	2.00 U		
299-E18-3	11/10/88	H0008026	500.00 U	7.00 U		
299-E18-3	2/16/89	H0008029	800.00 U	8.00 U		1.00 U
299-E18-3	2/16/89	H0008030	600.00 U	11.00		
299-E18-3	2/16/89	H0008031	500.00 U	12.00		
299-E18-3	2/16/89	H0008032	800.00 U	5.00 U		
299-E18-3	6/01/89	H0008033	500.00 U	11.00		1.00 U
299-E18-3	6/01/89	H0008034	400.00 U	15.00		
299-E18-3	6/01/89	H0008035	400.00 U	21.00		
299-E18-3	6/01/89	H0008036	500.00 U	9.00 U		1.00 U
299-E18-3	8/08/89	H0008037	500.00 U	8.00 U		1.00 U
299-E18-3	8/08/89	H0008038	600.00 U	8.00 U		
299-E18-3	8/08/89	H0008039	700.00 U	3.00 U		
299-E18-3	8/08/89	H0008040	600.00 U	7.00 U		
299-E18-3	11/27/89	H0008041	700.00 U	7.00 U		1.00 U
299-E18-3	11/27/89	H0008042	500.00 U	6.00 U		
299-E18-3	11/27/89	H0008043	400.00 U	5.00 U		
299-E18-3	11/27/89	H0008044	400.00 U	7.00 U		1.00 U
299-E18-3	6/03/92	B06PK0		30.00 QA	2.00 U	
299-E18-3	6/03/92	B06PK1		60.00 AQ	2.00 U	
299-E18-3	6/03/92	B06PK2		40.00 A		
299-E18-3	6/03/92	B06PK3		50.00 A		
299-E18-3	11/03/92	B07LJ0		10.00 UA		
299-E18-3	11/03/92	B07LJ1		10.00 UA		
299-E18-3	11/03/92	B07LJ2		10.00 UA		
299-E18-3	11/03/92	B07LJ4		20.00 A		
299-E18-3	12/16/92	B07S44		10.00 UA		
299-E18-3	12/16/92	B07S46		10.00 UA		
299-E18-3	12/16/92	B07S50		10.00 UA		
299-E18-3	12/16/92	B07S51		10.00 UA		
299-E18-3	12/16/92	B07S52		10.00 UA		
299-E18-3	12/16/92	B07S53		10.00 UA		
299-E18-3	12/16/92	B07S54		10.00 A		
299-E18-4	8/16/88	H0008053	453.00 U	.90 U		1.00 U

Groundwater Data for 2101-M Pond

Well Name	Collection Date	Sample Number	TOC 66/ppb ./.	TOXLDL 67/ppb 10/.	TOXAENE 17/ppb 2/5	TOXAENE 37/ppb ./5
299-E18-4	8/16/88	H0008054	642.00 U	12.70 U		
299-E18-4	8/16/88	H0008055	440.00 U	-3.20 U		
299-E18-4	8/16/88	H0008056	503.00 U	7.70 U		
299-E18-4	11/09/88	H0008058	500.00 U	4.00 U		1.00 U
299-E18-4	11/09/88	H0008059	500.00 U	2.00 U		
299-E18-4	11/09/88	H0008060	500.00 U	3.00 U		
299-E18-4	11/09/88	H0008061	600.00 U	2.00 U		
299-E18-4	2/15/89	H0008064	600.00 U	8.00 U		1.00 U
299-E18-4	2/15/89	H0008065	600.00 U	8.00 U		
299-E18-4	2/15/89	H0008066	600.00 U	9.00 U		
299-E18-4	2/15/89	H0008067	600.00 U	9.00 U		
299-E18-4	5/26/89	H0008068	900.00 U	5.00 U		1.00 U
299-E18-4	5/26/89	H0008069	900.00 U	16.00		
299-E18-4	5/26/89	H0008070	1000.00 U	12.00		
299-E18-4	5/26/89	H0008071	900.00 U	7.00 U		
299-E18-4	8/08/89	H0008072	500.00 U	6.00 U		1.00 U
299-E18-4	8/08/89	H0008073	400.00 U	14.00		
299-E18-4	8/08/89	H0008074	500.00 U	5.00 U		
299-E18-4	8/08/89	H0008075	400.00 U	10.00		
299-E18-4	11/21/89	H0008076	400.00 U	8.00 U		1.00 U
299-E18-4	11/21/89	H0008077	600.00 U	7.00 U		
299-E18-4	11/21/89	H0008078	700.00 U	11.00		
299-E18-4	11/21/89	H0008079	600.00 U	4.00 U		
299-E18-4	5/30/90	H0008080	300.00 U			
299-E18-4	5/30/90	H0008081	300.00 U			
299-E18-4	5/30/90	H0008082	300.00 U			
299-E18-4	5/30/90	H0008083	300.00 U			
299-E18-4	6/03/92	B06PK6		20.00 A	2.00 U	
299-E18-4	6/03/92	B06PK8		50.00 A		
299-E18-4	6/03/92	B06PL0		30.00 A		
299-E18-4	6/03/92	B06PL1		50.00 A		
299-E18-4	11/03/92	B07LJ5		10.00 A		
299-E18-4	11/03/92	B07LJ6		10.00 UA		
299-E18-4	11/03/92	B07LJ7		10.00 UA		
299-E18-4	11/03/92	B07LJ8		10.00 A		
299-E18-4	12/16/92	B07S57		10.00 UA		
299-E18-4	12/16/92	B07S58		10.00 UA		
299-E18-4	12/16/92	B07S59		10.00 UA		
299-E18-4	12/16/92	B07S60		10.00 UA		

Well Name	Collection Date	Sample Number	TRICENE 16/ppb 5/5	TRCMEOL 16/ppb ./.	TRCMFLM 16/ppb 5/.	TRIPHNL 30/ppb 5/.
299-E18-1	11/10/88	H0007ZV2	5.00 U	10.00 U	10.00 U	
299-E18-1	11/10/88	H0007ZV3	5.00 U	10.00 U	10.00 U	
299-E18-1	11/10/88	H0007ZV4	5.00 U	10.00 U	10.00 U	
299-E18-1	11/10/88	H0007ZV5	5.00 U	10.00 U	10.00 U	
299-E18-1	11/23/88	H0007ZV6	5.00 U	10.00 U	10.00 U	
299-E18-1	2/15/89	H0007ZV8	5.00 U			
299-E18-1	5/26/89	H0007ZW2	5.00 U			
299-E18-1	8/08/89	H0007ZW6	5.00 U			
299-E18-1	10/31/89	H0007ZX0	5.00 U	10.00 U	10.00 U	
299-E18-1	1/24/92	B01Q59				5.00 U
299-E18-1	6/03/92	B06PH8	5.00 U			5.00 U
299-E18-1	12/16/92	B07SN0				5.00 U
299-E18-2	11/10/88	H0007ZY4	5.00 U	10.00 U	10.00 U	
299-E18-2	11/10/88	H0007ZY7	5.00 U	10.00 U	10.00 U	
299-E18-2	11/22/88	H0007ZY8	5.00 U			
299-E18-2	11/23/88	H0007ZZ2	5.00 U	10.00 U	10.00 U	
299-E18-2	11/27/89	H0008006	5.00 U	10.00 U	10.00 U	
299-E18-2	3/13/90	H0008010	5.00 U	10.00 U	10.00 U	
299-E18-2	7/10/92	B06PJ3	5.00 U			5.00 U
299-E18-3	11/10/88	H0008023	5.00 U	10.00 U	10.00 U	
299-E18-3	11/10/88	H0008026	5.00 U	10.00 U	10.00 U	
299-E18-3	11/28/88	H0008027	5.00 U	10.00 U	10.00 U	
299-E18-3	11/27/89	H0008041	5.00 U	10.00 U	10.00 U	
299-E18-3	11/27/89	H0008044	5.00 U	10.00 U	10.00 U	
299-E18-3	3/13/90	H0008045	5.00 U	10.00 U	10.00 U	
299-E18-3	6/03/92	B06PK0	5.00 U			5.00 U
299-E18-3	6/03/92	B06PK1	5.00 U			5.00 U
299-E18-4	11/09/88	H0008058	5.00 U	10.00 U	10.00 U	
299-E18-4	11/09/88	H0008061	5.00 U	10.00 U	10.00 U	
299-E18-4	11/23/88	H0008062	5.00 U	10.00 U	10.00 U	
299-E18-4	11/21/89	H0008076	5.00 U	10.00 U	10.00 U	
299-E18-4	6/03/92	B06PK6	5.00 U			5.00 U

Well Name	Collection Date	Sample Number	TRISPHO 21/ppb ./.	TRITIUM 142/pCi/L ./20000	TRITIUM 77/pCi/L ./20000	TURBID 126/NTU .1/1
299-E18-1	11/10/88	H0007ZV2	10.00 U		-287.00 U	
299-E18-1	2/15/89	H0007ZV8			-55.70 U	
299-E18-1	5/26/89	H0007ZW2			-93.90 U	
299-E18-1	8/08/89	H0007ZW6			-.96 U	
299-E18-1	10/31/89	H0007ZX0	10.00 U		86.30 U	
299-E18-1	7/09/91	H0007Z07		25300.00		

Groundwater Data for 2101-M Pond

Well Name	Collection Date	Sample Number	TRISPHO 21/ppb ./.	TRITIUM 142/pCi/L ./20000	TRITIUM 77/pCi/L ./20000	TURBID 126/NTU .1/1
299-E18-1	9/06/91	B00LB6		-150.00 U		
299-E18-1	1/24/92	B01Q59		58.20 U		
299-E18-1	6/03/92	B06PH8		108.00 U		.80
299-E18-1	12/16/92	B07S32				1.80
299-E18-1	12/16/92	B07SN0		483.00		
299-E18-2	11/10/88	H0007ZY4	10.00 U		-216.00 U	
299-E18-2	11/22/88	H0007ZY8			391.00 U	
299-E18-2	8/11/89	H0008002			35.40 U	
299-E18-2	11/27/89	H0008006	10.00 U			
299-E18-2	9/06/91	B00LC0		23.90 U		
299-E18-2	9/06/91	B00LL4		1.04 U		
299-E18-2	7/10/92	B06PJ3		42.20 U		1.10
299-E18-2	12/16/92	B07S37				.80
299-E18-3	11/10/88	H0008023	10.00 U		-341.00 U	
299-E18-3	8/08/89	H0008037			-56.60 U	
299-E18-3	11/27/89	H0008041	10.00 U			
299-E18-3	11/27/89	H0008044	10.00 U			
299-E18-3	9/06/91	B00LC4		72.70 U		
299-E18-3	9/06/91	B00LL5		3910.00		
299-E18-3	6/03/92	B06PK0		237.00 U		1.60 Q
299-E18-3	6/03/92	B06PK1		31.70 U		.90 Q
299-E18-3	12/16/92	B07S44				.70
299-E18-3	12/16/92	B07S46				.70
299-E18-4	11/09/88	H0008058	10.00 U		847.00	
299-E18-4	8/08/89	H0008072			-48.00 U	
299-E18-4	11/21/89	H0008076	10.00 U			
299-E18-4	9/06/91	B00LC8		51.90 U		
299-E18-4	9/06/91	B00LL6		1940.00		
299-E18-4	6/03/92	B06PK6		237.00 U		1.70
299-E18-4	12/16/92	B07S57				1.10

Well Name	Collection Date	Sample Number	TURBID 76/ ./.	URANIUM 145/ppb ./.	VANADUM 34/ppb 30/.	VANADUM 35/ppb ./.
299-E18-1	8/16/88	H0007ZT7				5.00 U
299-E18-1	9/22/88	H0007ZV1				5.00
299-E18-1	11/10/88	H0007ZV2				6.00
299-E18-1	11/10/88	H0007ZV5				5.00 U
299-E18-1	2/15/89	H0007ZV8	1.40			5.00 U
299-E18-1	5/26/89	H0007ZW2	19.50			6.00
299-E18-1	5/26/89	H0007ZW5	19.20			
299-E18-1	8/08/89	H0007ZW6	3.00			12.00

Groundwater Data for 2101-M Pond

Well Name	Collection Date	Sample Number	TURBID 76/ ./.	URANIUM 145/ppb ./.	VANADUM 34/ppb 30/.	VANADUM 35/ppb ./.
299-E18-1	10/31/89	H0007ZX0	11.00			9.00
299-E18-1	5/30/90	H0007ZX5	3.50			
299-E18-1	7/09/91	H00071X9			30.00 U	
299-E18-1	9/06/91	B00LB6		6.13	30.00 U	
299-E18-1	1/24/92	B01Q59			30.00 UD	
299-E18-1	6/03/92	B06PH8		5.84	30.00 U	
299-E18-1	12/16/92	B07S32		6.78	30.00 U	
299-E18-2	8/16/88	H0007ZX9				15.00
299-E18-2	9/22/88	H0007ZY3				19.00
299-E18-2	11/10/88	H0007ZY4				12.00
299-E18-2	11/22/88	H0007ZY8	1.50			20.00
299-E18-2	2/16/89	H0007ZZ4				29.00
299-E18-2	2/16/89	H0007ZZ7				20.00
299-E18-2	6/01/89	H0007ZZ8	.90			27.00
299-E18-2	8/11/89	H0008002	2.70			24.00
299-E18-2	11/27/89	H0008006	.70			20.00
299-E18-2	5/30/90	H0008014	1.10			
299-E18-2	9/06/91	B00LC0		3.62	30.00 U	
299-E18-2	7/10/92	B06PJ3		29.90 R	30.00 U	
299-E18-2	12/16/92	B07S37		3.01	30.00 U	
299-E18-3	8/16/88	H0008018				23.00
299-E18-3	9/22/88	H0008022				26.00
299-E18-3	11/10/88	H0008023				22.00
299-E18-3	2/16/89	H0008029				32.00
299-E18-3	6/01/89	H0008033	3.00			31.00
299-E18-3	6/01/89	H0008036				29.00
299-E18-3	8/08/89	H0008037	2.20			30.00
299-E18-3	11/27/89	H0008041	2.10			28.00
299-E18-3	11/27/89	H0008044				27.00
299-E18-3	5/30/90	H0008049	1.30			
299-E18-3	9/06/91	B00LC4		2.76	30.00 U	
299-E18-3	6/03/92	B06PK0		2.14	30.00 U	
299-E18-3	6/03/92	B06PK1		2.38	31.00	
299-E18-3	12/16/92	B07S44		1.11 Q	30.00 U	
299-E18-3	12/16/92	B07S46		2.80 Q	30.00 U	
299-E18-4	8/16/88	H0008053				20.00
299-E18-4	9/22/88	H0008057				22.00
299-E18-4	11/09/88	H0008058				25.00
299-E18-4	2/15/89	H0008064				22.00
299-E18-4	5/26/89	H0008068	1.40			27.00
299-E18-4	8/08/89	H0008072	2.10			29.00
299-E18-4	8/08/89	H0008075				29.00
299-E18-4	11/21/89	H0008076	1.10			27.00
299-E18-4	5/30/90	H0008080	1.60			
299-E18-4	9/06/91	B00LC8		4.45	32.00	

Groundwater Data for 2101-M Pond

Well Name	Collection Date	Sample Number	TURBID 76/ ./.	URANIUM 145/ppb ./.	VANADUM 34/ppb 30/.	VANADUM 35/ppb ./.
299-E18-4	6/03/92	B06PK6		3.03	30.00	
299-E18-4	12/16/92	B07S57		8.73	30.00 U	

Well Name	Collection Date	Sample Number	FVANADI 34/ppb 30/.	VINYLAC 16/ppb 5/.	VINYIDE 16/ppb 10/2	XYLENE 16/ppb 5/.
299-E18-1	8/16/88	H0007ZT7	5.00 U			
299-E18-1	9/22/88	H0007ZV1	5.00 U			
299-E18-1	11/10/88	H0007ZV2			10.00 U	5.00 U
299-E18-1	11/10/88	H0007ZV2	5.00 U			
299-E18-1	11/10/88	H0007ZV3			10.00 U	5.00 U
299-E18-1	11/10/88	H0007ZV4			10.00 U	5.00 U
299-E18-1	11/10/88	H0007ZV5			10.00 U	5.00 U
299-E18-1	11/10/88	H0007ZV5	5.00 U			
299-E18-1	11/23/88	H0007ZV6			10.00 U	5.00 U
299-E18-1	2/15/89	H0007ZV8			10.00 U	5.00 U
299-E18-1	2/15/89	H0007ZV8	6.00			
299-E18-1	5/26/89	H0007ZW2			10.00 U	5.00 U
299-E18-1	5/26/89	H0007ZW2	14.00			
299-E18-1	8/08/89	H0007ZW6			10.00 U	5.00 U
299-E18-1	8/08/89	H0007ZW6	14.00			
299-E18-1	10/31/89	H0007ZX0		5.00 U	10.00 U	5.00 U
299-E18-1	10/31/89	H0007ZX0	8.00			
299-E18-1	7/09/91	H00071X9F	30.00 U			
299-E18-1	9/06/91	B00LB6F	30.00 U			
299-E18-1	1/24/92	B01Q60	30.00 UD			
299-E18-1	6/03/92	B06PH8			10.00 U	5.00 U
299-E18-1	6/03/92	B06PJ2	30.00 U			
299-E18-1	12/16/92	B07S36	30.00 U			
299-E18-2	8/16/88	H0007ZX9	13.00			
299-E18-2	9/22/88	H0007ZY3	18.00			
299-E18-2	11/10/88	H0007ZY4			10.00 U	5.00 U
299-E18-2	11/10/88	H0007ZY4	16.00			
299-E18-2	11/10/88	H0007ZY7			10.00 U	5.00 U
299-E18-2	11/22/88	H0007ZY8				5.00 U
299-E18-2	11/22/88	H0007ZY8	17.00			
299-E18-2	11/23/88	H0007ZZ2			10.00 U	5.00 U
299-E18-2	2/16/89	H0007ZZ4	24.00			
299-E18-2	2/16/89	H0007ZZ7	27.00			
299-E18-2	6/01/89	H0007ZZ8	25.00			
299-E18-2	8/11/89	H0008002	26.00			
299-E18-2	11/27/89	H0008006		5.00 U	10.00 U	5.00 U

Groundwater Data for 2101-M Pond

Well Name	Collection Date	Sample Number	FVANADI 34/ppb 30/.	VINYLAC 16/ppb 5/.	VINYIDE 16/ppb 10/2	XYLENE 16/ppb 5/.
299-E18-2	11/27/89	H0008006	22.00			
299-E18-2	3/13/90	H0008010		5.00 U	10.00 U	5.00 U
299-E18-2	9/06/91	B00LC0F	30.00 U			
299-E18-2	7/10/92	B06PJ3			10.00 U	5.00 U
299-E18-2	7/10/92	B06PJ8	30.00 U			
299-E18-2	12/16/92	B07S41	30.00 U			
299-E18-3	8/16/88	H0008018	21.00			
299-E18-3	9/22/88	H0008022	27.00			
299-E18-3	11/10/88	H0008023			10.00 U	5.00 U
299-E18-3	11/10/88	H0008023	24.00			
299-E18-3	11/10/88	H0008026			10.00 U	5.00 U
299-E18-3	11/28/88	H0008027			10.00 U	5.00 U
299-E18-3	2/16/89	H0008029	31.00			
299-E18-3	6/01/89	H0008033	35.00			
299-E18-3	6/01/89	H0008036	34.00			
299-E18-3	8/08/89	H0008037	34.00			
299-E18-3	11/27/89	H0008041		5.00 U	10.00 U	5.00 U
299-E18-3	11/27/89	H0008041	27.00			
299-E18-3	11/27/89	H0008044		5.00 U	10.00 U	5.00 U
299-E18-3	11/27/89	H0008044	28.00			
299-E18-3	3/13/90	H0008045		5.00 U	10.00 U	5.00 U
299-E18-3	9/06/91	B00LC4F	30.00 U			
299-E18-3	6/03/92	B06PK0			10.00 U	5.00 U
299-E18-3	6/03/92	B06PK1			10.00 U	5.00 U
299-E18-3	6/03/92	B06PK4	30.00 U			
299-E18-3	6/03/92	B06PK5	30.00 U			
299-E18-3	12/16/92	B07S55	30.00 U			
299-E18-3	12/16/92	B07S56	30.00 U			
299-E18-4	8/16/88	H0008053	19.00			
299-E18-4	9/22/88	H0008057	19.00			
299-E18-4	11/09/88	H0008058			10.00 U	5.00 U
299-E18-4	11/09/88	H0008058	25.00			
299-E18-4	11/09/88	H0008061			10.00 U	5.00 U
299-E18-4	11/23/88	H0008062			10.00 U	5.00 U
299-E18-4	2/15/89	H0008064	22.00			
299-E18-4	5/26/89	H0008068	25.00			
299-E18-4	8/08/89	H0008072	32.00			
299-E18-4	8/08/89	H0008075	32.00			
299-E18-4	11/21/89	H0008076		5.00 U	10.00 U	5.00 U
299-E18-4	11/21/89	H0008076	28.00			
299-E18-4	9/06/91	B00LC8F	30.00 U			
299-E18-4	6/03/92	B06PK6			10.00 U	5.00 U
299-E18-4	6/03/92	B06PL2	30.00 U			
299-E18-4	12/16/92	B07S61	30.00 U			

Groundwater Data for 2101-M Pond

Well Name	Collection Date	Sample Number	FVANADI 34/ppb 30/.	VINYLAC 16/ppb 5/.	VINYIDE 16/ppb 10/2	XYLENE 16/ppb 5/.

Well Name	Collection Date	Sample Number	ZINC 34/ppb 10/.	ZINC 35/ppb ./.	FZINC 34/ppb 10/.	ZRN8-95 140/pCi/L ./.
299-E18-1	8/16/88	H0007ZT7		181.00		
299-E18-1	8/16/88	H0007ZT7			145.00	
299-E18-1	9/22/88	H0007ZV1		73.00		
299-E18-1	9/22/88	H0007ZV1			46.00	
299-E18-1	11/10/88	H0007ZV2		79.00		
299-E18-1	11/10/88	H0007ZV2			26.00	
299-E18-1	11/10/88	H0007ZV5		53.00		
299-E18-1	11/10/88	H0007ZV5			41.00	
299-E18-1	2/15/89	H0007ZV8		23.00		
299-E18-1	2/15/89	H0007ZV8			30.00	
299-E18-1	5/26/89	H0007ZW2		30.00		
299-E18-1	5/26/89	H0007ZW2			12.00	
299-E18-1	8/08/89	H0007ZW6		22.00		
299-E18-1	8/08/89	H0007ZW6			19.00	
299-E18-1	10/31/89	H0007ZX0		25.00		
299-E18-1	10/31/89	H0007ZX0			7.00	
299-E18-1	7/09/91	H00071X9	12.00			
299-E18-1	7/09/91	H00071X9F			10.00 U	
299-E18-1	9/06/91	B00LB6	12.00			5.86 U
299-E18-1	9/06/91	B00LB6F			10.00 U	
299-E18-1	1/24/92	B01Q59	10.00 UD			
299-E18-1	1/24/92	B01Q60			10.00 UD	
299-E18-1	6/03/92	B06PH8	10.00 U			
299-E18-1	6/03/92	B06PJ2			10.00 U	
299-E18-1	12/16/92	B07S32	10.00 U			
299-E18-1	12/16/92	B07S36			10.00 U	
299-E18-2	8/16/88	H0007ZX9		5.00 U		
299-E18-2	8/16/88	H0007ZX9			5.00 U	
299-E18-2	9/22/88	H0007ZY3		5.00 U		
299-E18-2	9/22/88	H0007ZY3			5.00 U	
299-E18-2	11/10/88	H0007ZY4		332.00		
299-E18-2	11/10/88	H0007ZY4			235.00	
299-E18-2	11/22/88	H0007ZY8		96.00		
299-E18-2	11/22/88	H0007ZY8			67.00	
299-E18-2	2/16/89	H0007ZZ4		27.00		
299-E18-2	2/16/89	H0007ZZ4			11.00	
299-E18-2	2/16/89	H0007ZZ7		22.00		
299-E18-2	2/16/89	H0007ZZ7			20.00	

Groundwater Data for 2101-M Pond

Well Name	Collection Date	Sample Number	ZINC 34/ppb 10/.	ZINC 35/ppb ./.	FZINC 34/ppb 10/.	ZRNB-95 140/pCi/L ./.
299-E18-2	6/01/89	H0007ZZ8		10.00		
299-E18-2	6/01/89	H0007ZZ8			5.00 U	
299-E18-2	8/11/89	H0008002		16.00		
299-E18-2	8/11/89	H0008002			11.00	
299-E18-2	11/27/89	H0008006		5.00		
299-E18-2	11/27/89	H0008006			5.00 U	
299-E18-2	9/06/91	B00LC0	13.00			2.92 U
299-E18-2	9/06/91	B00LC0F			10.00 U	
299-E18-2	7/10/92	B06PJ3	15.00			
299-E18-2	7/10/92	B06PJ8			10.00 U	
299-E18-2	12/16/92	B07S37	10.00 U			
299-E18-2	12/16/92	B07S41			10.00 U	
299-E18-3	8/16/88	H0008018		64.00		
299-E18-3	8/16/88	H0008018			23.00	
299-E18-3	9/22/88	H0008022		34.00		
299-E18-3	9/22/88	H0008022			5.00 U	
299-E18-3	11/10/88	H0008023		33.00		
299-E18-3	11/10/88	H0008023			5.00	
299-E18-3	2/16/89	H0008029		22.00		
299-E18-3	2/16/89	H0008029			5.00	
299-E18-3	6/01/89	H0008033		22.00		
299-E18-3	6/01/89	H0008033			5.00 U	
299-E18-3	6/01/89	H0008036		9.00		
299-E18-3	6/01/89	H0008036			5.00 U	
299-E18-3	8/08/89	H0008037		24.00		
299-E18-3	8/08/89	H0008037			6.00	
299-E18-3	11/27/89	H0008041		15.00		
299-E18-3	11/27/89	H0008041			5.00 U	
299-E18-3	11/27/89	H0008044		6.00		
299-E18-3	11/27/89	H0008044			5.00 U	
299-E18-3	9/06/91	B00LC4	13.00			-4.73 U
299-E18-3	9/06/91	B00LC4F			11.00	
299-E18-3	6/03/92	B06PK0	10.00 U			
299-E18-3	6/03/92	B06PK1	10.00 U			
299-E18-3	6/03/92	B06PK4			10.00 U	
299-E18-3	6/03/92	B06PK5			10.00 U	
299-E18-3	12/16/92	B07S44	10.00 U			
299-E18-3	12/16/92	B07S46	10.00 U			
299-E18-3	12/16/92	B07S55			10.00 U	
299-E18-3	12/16/92	B07S56			10.00 U	
299-E18-4	8/16/88	H0008053		21.00		
299-E18-4	8/16/88	H0008053			5.00 U	
299-E18-4	9/22/88	H0008057		10.00		
299-E18-4	9/22/88	H0008057			5.00 U	
299-E18-4	11/09/88	H0008058		32.00		

Groundwater Data for 2101-M Pond

Well Name	Collection Date	Sample Number	ZINC 34/ppb 10/.	ZINC 35/ppb ./.	FZINC 34/ppb 10/.	ZRNB-95 140/pCi/L ./.
299-E18-4	11/09/88	H0008058			15.00	
299-E18-4	2/15/89	H0008064		9.00		
299-E18-4	2/15/89	H0008064			6.00	
299-E18-4	5/26/89	H0008068		8.00		
299-E18-4	5/26/89	H0008068			5.00 U	
299-E18-4	8/08/89	H0008072		12.00		
299-E18-4	8/08/89	H0008072			16.00	
299-E18-4	8/08/89	H0008075		12.00		
299-E18-4	8/08/89	H0008075			14.00	
299-E18-4	11/21/89	H0008076		6.00		
299-E18-4	11/21/89	H0008076			5.00 U	
299-E18-4	9/06/91	B00LC8	10.00 U			-4.55 U
299-E18-4	9/06/91	B00LC8F			10.00 U	
299-E18-4	6/03/92	B06PK6	10.00 U			
299-E18-4	6/03/92	B06PL2			10.00 U	
299-E18-4	12/16/92	B07S57	10.00 U			
299-E18-4	12/16/92	B07S61			10.00 U	

Well Name	Collection Date	Sample Number	ALLYLCL 16/ppb 100/.	g-BHC 17/ppb .05/4	DINBENZ 19/ppb 10/.	TOLDHYD 21/ppb ./.
299-E18-1	8/16/88	H0007ZT7		.10 U		
299-E18-1	11/10/88	H0007ZV2		.10 U	10.00 U	10.00 U
299-E18-1	2/15/89	H0007ZV8		.10 U		
299-E18-1	5/26/89	H0007ZW2		.10 U		
299-E18-1	8/08/89	H0007ZW6		.10 U		
299-E18-1	10/31/89	H0007ZX0	100.00 U	.10 U	10.00 U	10.00 U
299-E18-1	6/03/92	B06PH8		.05 U		
299-E18-1	12/16/92	B07SN0		.05 U		
299-E18-2	8/16/88	H0007ZX9		.10 U		
299-E18-2	11/10/88	H0007ZY4		.10 U	10.00 U	10.00 U
299-E18-2	11/22/88	H0007ZY8		.10 U		
299-E18-2	2/16/89	H0007ZZ4		.10 U		
299-E18-2	6/01/89	H0007ZZ8		.10 U		
299-E18-2	8/11/89	H0008002		.10 U		
299-E18-2	11/27/89	H0008006	100.00 U	.10 U	10.00 U	10.00 U
299-E18-2	3/13/90	H0008010	100.00 U			
299-E18-2	7/10/92	B06PJ3		.05 U		
299-E18-3	8/16/88	H0008018		.10 U		
299-E18-3	11/10/88	H0008023		.10 U	10.00 U	10.00 U
299-E18-3	2/16/89	H0008029		.10 U		
299-E18-3	6/01/89	H0008033		.10 U		

Groundwater Data for 2101-M Pond

Well Name	Collection Date	Sample Number	ALLYLCL 16/ppb 100/.	g-BHC 17/ppb .05/4	DINBENZ 19/ppb 10/.	TOLDHYD 21/ppb ./.
299-E18-3	6/01/89	H0008036		.10 U		
299-E18-3	8/08/89	H0008037		.10 U		
299-E18-3	11/27/89	H0008041	100.00 U	.10 U	10.00 U	10.00 U
299-E18-3	11/27/89	H0008044	100.00 U	.10 U	10.00 U	10.00 U
299-E18-3	3/13/90	H0008045	100.00 U			
299-E18-3	6/03/92	B06PK0		.05 U		
299-E18-3	6/03/92	B06PK1		.05 U		
299-E18-4	8/16/88	H0008053		.10 U		
299-E18-4	11/09/88	H0008058		.10 U	10.00 U	10.00 U
299-E18-4	2/15/89	H0008064		.10 U		
299-E18-4	5/26/89	H0008068		.10 U		
299-E18-4	8/08/89	H0008072		.10 U		
299-E18-4	11/21/89	H0008076	100.00 U	.10 U	10.00 U	10.00 U
299-E18-4	6/03/92	B06PK6		.05 U		

Well Name	Collection Date	Sample Number	PBENZQU 21/ppb ./.	DIMEAMB 21/ppb ./.	PH 125/ .01/6.5-8.5s	PH 75/ ./8.5s
299-E18-1	8/16/88	H0007ZT7				7.90
299-E18-1	8/16/88	H0007ZT8				7.90
299-E18-1	8/16/88	H0007ZT9				7.90
299-E18-1	8/16/88	H0007ZV0				7.90
299-E18-1	11/10/88	H0007ZV2	10.00 U	10.00 U		7.90
299-E18-1	11/10/88	H0007ZV3				7.90
299-E18-1	11/10/88	H0007ZV4				8.00
299-E18-1	11/10/88	H0007ZV5				7.90
299-E18-1	2/15/89	H0007ZV8				7.90
299-E18-1	2/15/89	H0007ZV9				7.80
299-E18-1	2/15/89	H0007ZW0				7.70
299-E18-1	2/15/89	H0007ZW1				7.80
299-E18-1	5/26/89	H0007ZW2				8.00
299-E18-1	5/26/89	H0007ZW3				8.00
299-E18-1	5/26/89	H0007ZW4				8.00
299-E18-1	5/26/89	H0007ZW5				8.00
299-E18-1	8/08/89	H0007ZW6				8.00
299-E18-1	8/08/89	H0007ZW7				8.00
299-E18-1	8/08/89	H0007ZW8				8.00
299-E18-1	8/08/89	H0007ZW9				8.00
299-E18-1	10/31/89	H0007ZX0	10.00 U	10.00 U		
299-E18-1	11/29/89	H0007ZX1				7.30
299-E18-1	11/29/89	H0007ZX2				7.80
299-E18-1	11/29/89	H0007ZX3				7.80

Groundwater Data for 2101-M Pond

Well Name	Collection Date	Sample Number	PBENZQU 21/ppb ./.	DIMEAMB 21/ppb ./.	PH 125/ .01/6.5-8.5s	PH 75/ ./8.5s
299-E18-1	11/29/89	H0007ZX4				7.80
299-E18-1	5/30/90	H0007ZX5				7.90
299-E18-1	5/30/90	H0007ZX6				7.90
299-E18-1	5/30/90	H0007ZX7				7.90
299-E18-1	5/30/90	H0007ZX8				7.90
299-E18-1	7/09/91	H00071X9			8.25	
299-E18-1	12/16/92	B07S32			8.20	
299-E18-2	8/16/88	H0007ZX9				8.00
299-E18-2	8/16/88	H0007ZY0				8.00
299-E18-2	8/16/88	H0007ZY1				8.00
299-E18-2	8/16/88	H0007ZY2				8.00
299-E18-2	11/10/88	H0007ZY4	10.00 U	10.00 U		7.80
299-E18-2	11/10/88	H0007ZY5				7.90
299-E18-2	11/10/88	H0007ZY6				7.90
299-E18-2	11/10/88	H0007ZY7				7.80
299-E18-2	2/16/89	H0007ZZ4				8.10
299-E18-2	2/16/89	H0007ZZ5				8.10
299-E18-2	2/16/89	H0007ZZ6				8.10
299-E18-2	2/16/89	H0007ZZ7				8.10
299-E18-2	6/01/89	H0007ZZ8				8.10
299-E18-2	6/01/89	H0007ZZ9				8.10
299-E18-2	6/01/89	H0008000				8.10
299-E18-2	6/01/89	H0008001				8.10
299-E18-2	8/11/89	H0008002				7.90
299-E18-2	8/11/89	H0008003				8.00
299-E18-2	8/11/89	H0008004				8.00
299-E18-2	8/11/89	H0008005				8.00
299-E18-2	11/27/89	H0008006	10.00 U	10.00 U		
299-E18-2	5/30/90	H0008014				8.00
299-E18-2	5/30/90	H0008015				8.00
299-E18-2	5/30/90	H0008016				8.00
299-E18-2	5/30/90	H0008017				7.90
299-E18-2	12/16/92	B07S37			8.10	
299-E18-3	8/16/88	H0008018				8.00
299-E18-3	8/16/88	H0008019				8.00
299-E18-3	8/16/88	H0008020				8.00
299-E18-3	8/16/88	H0008021				8.00
299-E18-3	11/10/88	H0008023	10.00 U	10.00 U		7.80
299-E18-3	11/10/88	H0008024				7.90
299-E18-3	11/10/88	H0008025				7.90
299-E18-3	11/10/88	H0008026				7.80
299-E18-3	2/16/89	H0008029				8.20
299-E18-3	2/16/89	H0008030				8.10
299-E18-3	2/16/89	H0008031				8.20
299-E18-3	2/16/89	H0008032				8.20

Groundwater Data for 2101-M Pond

Well Name	Collection Date	Sample Number	PBENZQU 21/ppb ./.	DIMEAMB 21/ppb ./.	PH 125/ .01/6.5-8.5s	PH 75/ ./8.5s
299-E18-3	6/01/89	H0008033				8.10
299-E18-3	6/01/89	H0008034				8.20
299-E18-3	6/01/89	H0008035				8.10
299-E18-3	6/01/89	H0008036				8.20
299-E18-3	8/08/89	H0008037				8.10
299-E18-3	8/08/89	H0008038				8.20
299-E18-3	8/08/89	H0008039				8.10
299-E18-3	8/08/89	H0008040				8.10
299-E18-3	11/27/89	H0008041	10.00 U	10.00 U		8.00
299-E18-3	11/27/89	H0008042				8.10
299-E18-3	11/27/89	H0008043				8.00
299-E18-3	11/27/89	H0008044	10.00 U	10.00 U		8.00
299-E18-3	5/30/90	H0008049				8.10
299-E18-3	5/30/90	H0008050				8.10
299-E18-3	5/30/90	H0008051				8.10
299-E18-3	5/30/90	H0008052				8.10
299-E18-3	12/16/92	B07S44			8.20	
299-E18-3	12/16/92	B07S46			8.20	
299-E18-4	8/16/88	H0008053				8.00
299-E18-4	8/16/88	H0008054				8.00
299-E18-4	8/16/88	H0008055				8.00
299-E18-4	8/16/88	H0008056				8.00
299-E18-4	11/09/88	H0008058	10.00 U	10.00 U		7.90
299-E18-4	11/09/88	H0008059				8.00
299-E18-4	11/09/88	H0008060				8.00
299-E18-4	11/09/88	H0008061				7.90
299-E18-4	2/15/89	H0008064				8.10
299-E18-4	2/15/89	H0008065				8.00
299-E18-4	2/15/89	H0008066				8.00
299-E18-4	2/15/89	H0008067				8.10
299-E18-4	5/26/89	H0008068				8.20
299-E18-4	5/26/89	H0008069				8.10
299-E18-4	5/26/89	H0008070				8.10
299-E18-4	5/26/89	H0008071				8.10
299-E18-4	8/08/89	H0008072				8.00
299-E18-4	8/08/89	H0008073				8.10
299-E18-4	8/08/89	H0008074				8.00
299-E18-4	8/08/89	H0008075				8.10
299-E18-4	11/21/89	H0008076	10.00 U	10.00 U		7.90
299-E18-4	11/21/89	H0008077				8.00
299-E18-4	11/21/89	H0008078				8.00
299-E18-4	11/21/89	H0008079				8.00
299-E18-4	5/30/90	H0008080				8.00
299-E18-4	5/30/90	H0008081				8.00
299-E18-4	5/30/90	H0008082				8.00

Groundwater Data for 2101-M Pond

Well Name	Collection Date	Sample Number	PBENZQU 21/ppb ./.	DIMEAMB 21/ppb ./.	PH 125/ .01/6.5-8.5s	PH 75/ ./8.5s
299-E18-4	5/30/90	H0008083				8.00
299-E18-4	12/16/92	B07S57			8.10	

Well Name	Collection Date	Sample Number	PH 76/ ./8.5s	PH 93/ .1/6.5-8.5s	SYMTRIN 21/ppb ./.	TRANDCE 16/ppb 5/.
299-E18-1	8/16/88	H0007ZT7	7.80			
299-E18-1	8/16/88	H0007ZT8	7.80			
299-E18-1	8/16/88	H0007ZT9	7.90			
299-E18-1	8/16/88	H0007ZV0	7.80			
299-E18-1	11/10/88	H0007ZV2	8.60		10.00 U	10.00 U
299-E18-1	11/10/88	H0007ZV3	8.50			10.00 U
299-E18-1	11/10/88	H0007ZV4	8.50			10.00 U
299-E18-1	11/10/88	H0007ZV5	8.60			10.00 U
299-E18-1	11/23/88	H0007ZV6	8.50			10.00 U
299-E18-1	2/15/89	H0007ZV8	7.00			5.00 U
299-E18-1	2/15/89	H0007ZV9	6.90			
299-E18-1	2/15/89	H0007ZW0	6.90			
299-E18-1	2/15/89	H0007ZW1	7.00			
299-E18-1	5/26/89	H0007ZW2	7.89			5.00 U
299-E18-1	5/26/89	H0007ZW3	7.89			
299-E18-1	5/26/89	H0007ZW4	7.89			
299-E18-1	5/26/89	H0007ZW5	7.89			
299-E18-1	8/08/89	H0007ZW6	7.89			5.00 U
299-E18-1	8/08/89	H0007ZW7	7.88			
299-E18-1	8/08/89	H0007ZW8	7.88			
299-E18-1	8/08/89	H0007ZW9	7.89			
299-E18-1	10/31/89	H0007ZX0	7.95		10.00 U	5.00 U
299-E18-1	11/29/89	H0007ZX1	8.09			
299-E18-1	11/29/89	H0007ZX2	8.10			
299-E18-1	11/29/89	H0007ZX3	8.09			
299-E18-1	11/29/89	H0007ZX4	8.08			
299-E18-1	5/30/90	H0007ZX5	7.98			
299-E18-1	5/30/90	H0007ZX6	7.97			
299-E18-1	5/30/90	H0007ZX7	7.98			
299-E18-1	5/30/90	H0007ZX8	7.99			
299-E18-1	7/09/91	H00071X9		8.07		
299-E18-1	9/06/91	B00LB6		8.02		
299-E18-1	9/06/91	B00LB7		8.02		
299-E18-1	9/06/91	B00LB8		8.03		
299-E18-1	9/06/91	B00LB9		8.04		
299-E18-1	1/24/92	B01Q59		8.08		

Groundwater Data for 2101-M Pond

Well Name	Collection Date	Sample Number	PH 76/ ./8.5s	PH 93/ .1/6.5-8.5s	SYMTRIN 21/ppb ./.	TRANDCE 16/ppb 5/.
299-E18-1	6/03/92	B06PH8		7.99		5.00 U
299-E18-1	6/03/92	B06PH9		7.98		
299-E18-1	6/03/92	B06PJ0		7.98		
299-E18-1	6/03/92	B06PJ1		7.97		
299-E18-1	11/03/92	B07LH1		8.22		
299-E18-1	11/03/92	B07LH2		8.22		
299-E18-1	11/03/92	B07LH3		8.21		
299-E18-1	11/03/92	B07LH4		8.22		
299-E18-1	12/16/92	B07S32		8.12		
299-E18-1	12/16/92	B07S33		8.19		
299-E18-1	12/16/92	B07S34		8.18		
299-E18-1	12/16/92	B07S35		8.17		
299-E18-2	8/16/88	H0007ZX9	7.90			
299-E18-2	8/16/88	H0007ZY0	7.90			
299-E18-2	8/16/88	H0007ZY1	7.90			
299-E18-2	8/16/88	H0007ZY2	7.90			
299-E18-2	11/10/88	H0007ZY4	8.40		10.00 U	10.00 U
299-E18-2	11/10/88	H0007ZY5	8.40			
299-E18-2	11/10/88	H0007ZY6	8.40			
299-E18-2	11/10/88	H0007ZY7	8.40			10.00 U
299-E18-2	11/22/88	H0007ZY8	8.00			
299-E18-2	11/22/88	H0007ZY9	8.10			
299-E18-2	11/22/88	H0007ZZ0	8.10			
299-E18-2	11/22/88	H0007ZZ1	8.10			
299-E18-2	11/23/88	H0007ZZ2	8.50			10.00 U
299-E18-2	2/16/89	H0007ZZ4	8.00			
299-E18-2	2/16/89	H0007ZZ5	8.00			
299-E18-2	2/16/89	H0007ZZ6	8.00			
299-E18-2	2/16/89	H0007ZZ7	8.00			
299-E18-2	6/01/89	H0007ZZ8	7.45			
299-E18-2	6/01/89	H0007ZZ9	7.46			
299-E18-2	6/01/89	H0008000	7.46			
299-E18-2	6/01/89	H0008001	7.46			
299-E18-2	8/11/89	H0008002	8.01			
299-E18-2	8/11/89	H0008003	8.00			
299-E18-2	8/11/89	H0008004	8.00			
299-E18-2	8/11/89	H0008005	8.00			
299-E18-2	11/27/89	H0008006	8.14		10.00 U	5.00 U
299-E18-2	11/27/89	H0008007	8.11			
299-E18-2	11/27/89	H0008008	8.13			
299-E18-2	11/27/89	H0008009	8.12			
299-E18-2	3/13/90	H0008010	8.12			5.00 U
299-E18-2	3/13/90	H0008011	8.11			
299-E18-2	3/13/90	H0008012	8.14			
299-E18-2	3/13/90	H0008013	8.11			

Groundwater Data for 2101-M Pond

Well Name	Collection Date	Sample Number	PH 76/ ./8.5s	PH 93/ .1/6.5-8.5s	SYMTRIN 21/ppb ./.	TRANDCE 16/ppb 5/.
299-E18-2	5/30/90	H0008014	8.12			
299-E18-2	5/30/90	H0008015	8.12			
299-E18-2	5/30/90	H0008016	8.12			
299-E18-2	5/30/90	H0008017	8.11			
299-E18-2	9/06/91	B00LC0		7.99		
299-E18-2	9/06/91	B00LC1		7.99		
299-E18-2	9/06/91	B00LC2		7.98		
299-E18-2	9/06/91	B00LC3		7.99		
299-E18-2	7/10/92	B06PJ3		7.59		5.00 U
299-E18-2	11/03/92	B07LH5		8.10		
299-E18-2	11/03/92	B07LH6		8.13		
299-E18-2	11/03/92	B07LH7		8.14		
299-E18-2	11/03/92	B07LH8		8.14		
299-E18-2	12/16/92	B07S37		8.15		
299-E18-2	12/16/92	B07S38		8.15		
299-E18-2	12/16/92	B07S39		8.16		
299-E18-2	12/16/92	B07S40		8.16		
299-E18-3	8/16/88	H0008018	7.90			
299-E18-3	8/16/88	H0008019	7.90			
299-E18-3	8/16/88	H0008020	7.90			
299-E18-3	8/16/88	H0008021	7.90			
299-E18-3	11/10/88	H0008023	8.10		10.00 U	10.00 U
299-E18-3	11/10/88	H0008024	8.10			
299-E18-3	11/10/88	H0008025	8.10			
299-E18-3	11/10/88	H0008026	8.10			10.00 U
299-E18-3	11/28/88	H0008027	8.40			10.00 U
299-E18-3	2/16/89	H0008029	8.00			
299-E18-3	2/16/89	H0008030	8.00			
299-E18-3	2/16/89	H0008031	8.00			
299-E18-3	2/16/89	H0008032	8.00			
299-E18-3	6/01/89	H0008033	7.39			
299-E18-3	6/01/89	H0008034	7.41			
299-E18-3	6/01/89	H0008035	7.40			
299-E18-3	6/01/89	H0008036	7.40			
299-E18-3	8/08/89	H0008037	8.20			
299-E18-3	8/08/89	H0008038	8.20			
299-E18-3	8/08/89	H0008039	8.20			
299-E18-3	8/08/89	H0008040	8.20			
299-E18-3	11/27/89	H0008041	8.08		10.00 U	5.00 U
299-E18-3	11/27/89	H0008042	8.12			
299-E18-3	11/27/89	H0008043	8.09			
299-E18-3	11/27/89	H0008044	8.09		10.00 U	5.00 U
299-E18-3	3/13/90	H0008045	8.26			5.00 U
299-E18-3	3/13/90	H0008046	8.24			
299-E18-3	3/13/90	H0008047	8.26			

Groundwater Data for 2101-M Pond

Well Name	Collection Date	Sample Number	PH 76/ ./8.5s	PH 93/ .1/6.5-8.5s	SYMTRIN 21/ppb ./.	TRANDCE 16/ppb 5/.
299-E18-3	3/13/90	H0008048	8.26			
299-E18-3	5/30/90	H0008049	8.21			
299-E18-3	5/30/90	H0008050	8.22			
299-E18-3	5/30/90	H0008051	8.21			
299-E18-3	5/30/90	H0008052	8.21			
299-E18-3	9/06/91	B00LC4		8.17		
299-E18-3	9/06/91	B00LC5		8.16		
299-E18-3	9/06/91	B00LC6		8.16		
299-E18-3	9/06/91	B00LC7		8.16		
299-E18-3	6/03/92	B06PK0		8.28		5.00 U
299-E18-3	6/03/92	B06PK1		8.28		5.00 U
299-E18-3	6/03/92	B06PK2		8.28		
299-E18-3	6/03/92	B06PK3		8.28		
299-E18-3	11/03/92	B07LJ0		8.33		
299-E18-3	11/03/92	B07LJ1		8.32		
299-E18-3	11/03/92	B07LJ2		8.31		
299-E18-3	11/03/92	B07LJ4		8.30		
299-E18-3	12/16/92	B07S44		8.32		
299-E18-3	12/16/92	B07S46		8.32		
299-E18-3	12/16/92	B07S50		8.32		
299-E18-4	8/16/88	H0008053	7.80			
299-E18-4	8/16/88	H0008054	8.00			
299-E18-4	8/16/88	H0008055	8.00			
299-E18-4	8/16/88	H0008056	7.90			
299-E18-4	11/09/88	H0008058	8.20		10.00 U	10.00 U
299-E18-4	11/09/88	H0008059	8.20			
299-E18-4	11/09/88	H0008060	8.20			
299-E18-4	11/09/88	H0008061	8.20			10.00 U
299-E18-4	11/23/88	H0008062	8.40			10.00 U
299-E18-4	2/15/89	H0008064	7.00			
299-E18-4	2/15/89	H0008065	7.00			
299-E18-4	2/15/89	H0008066	7.00			
299-E18-4	2/15/89	H0008067	7.00			
299-E18-4	5/26/89	H0008068	8.05			
299-E18-4	5/26/89	H0008069	8.05			
299-E18-4	5/26/89	H0008070	8.05			
299-E18-4	5/26/89	H0008071	8.05			
299-E18-4	8/08/89	H0008072	8.09			
299-E18-4	8/08/89	H0008073	8.09			
299-E18-4	8/08/89	H0008074	8.08			
299-E18-4	8/08/89	H0008075	8.08			
299-E18-4	11/21/89	H0008076	8.09		10.00 U	5.00 U
299-E18-4	11/21/89	H0008077	8.10			
299-E18-4	11/21/89	H0008078	8.10			
299-E18-4	11/21/89	H0008079	8.11			

Groundwater Data for 2101-M Pond

Well Name	Collection Date	Sample Number	PH 76/ ./8.5s	PH 93/ .1/6.5-8.5s	SYMTRIN 21/ppb ./.	TRANDCE 16/ppb 5/.
299-E18-4	5/30/90	H0008080	7.76			
299-E18-4	5/30/90	H0008081	7.81			
299-E18-4	5/30/90	H0008082	7.86			
299-E18-4	5/30/90	H0008083	7.82			
299-E18-4	9/06/91	B00LC8		7.90		
299-E18-4	9/06/91	B00LC9		7.97		
299-E18-4	9/06/91	B00LD0		7.98		
299-E18-4	9/06/91	B00LD1		7.99		
299-E18-4	6/03/92	B06PK6		8.17		5.00 U
299-E18-4	6/03/92	B06PK8		8.17		
299-E18-4	6/03/92	B06PL0		8.16		
299-E18-4	6/03/92	B06PL1		8.16		
299-E18-4	11/03/92	B07LJ5		8.31		
299-E18-4	11/03/92	B07LJ6		8.32		
299-E18-4	11/03/92	B07LJ7		8.35		
299-E18-4	11/03/92	B07LJ8		8.33		
299-E18-4	12/16/92	B07S57		8.13		
299-E18-4	12/16/92	B07S58		8.13		
299-E18-4	12/16/92	B07S59		8.13		
299-E18-4	12/16/92	B07S60		8.13		

Well Name	Collection Date	Sample Number	TDIBUTEN 16/ppb 5/.
299-E18-1	11/10/88	H0007ZV2	10.00 U
299-E18-1	11/10/88	H0007ZV3	10.00 U
299-E18-1	11/10/88	H0007ZV4	10.00 U
299-E18-1	11/10/88	H0007ZV5	10.00 U
299-E18-1	11/23/88	H0007ZV6	10.00 U
299-E18-1	10/31/89	H0007ZX0	10.00 U
299-E18-2	11/10/88	H0007ZY4	10.00 U
299-E18-2	11/10/88	H0007ZY7	10.00 U
299-E18-2	11/23/88	H0007ZZ2	10.00 U
299-E18-2	11/27/89	H0008006	10.00 U
299-E18-2	3/13/90	H0008010	10.00 U
299-E18-3	11/10/88	H0008023	10.00 U
299-E18-3	11/10/88	H0008026	10.00 U
299-E18-3	11/28/88	H0008027	10.00 U
299-E18-3	11/27/89	H0008041	10.00 U
299-E18-3	11/27/89	H0008044	10.00 U
299-E18-3	3/13/90	H0008045	10.00 U
299-E18-4	11/09/88	H0008058	10.00 U

Groundwater Data for 2101-M Pond

Well Name	Collection Date	Sample Number	TDIBUTEN 16/ppb 5/.
299-E18-4	11/09/88	H0008061	10.00 U
299-E18-4	11/23/88	H0008062	10.00 U
299-E18-4	11/21/89	H0008076	10.00 U

9513319.2209

This page intentionally left blank.

Table E1-8. Concentrations Used for Calculation of Baseline Values. (sheet 1 of 11)

Well	Collection Date	Analyte No.	Analyte Name	Detect. Limit	Units	Conc.
6-19-43	28-Dec-87	191	Specific conductance	1	UMHO	312
6-19-43	3-Feb-88	191	Specific conductance	1	UMHO	310
6-19-43	22-May-88	191	Specific conductance	1	UMHO	380
6-19-43	16-Sep-88	191	Specific conductance	1	UMHO	390
6-32-77	5-Feb-86	191	Specific conductance	1	UMHO	287
6-32-77	15-Nov-87	191	Specific conductance	1	UMHO	213
6-32-77	4-Jan-88	191	Specific conductance	1	UMHO	259
6-32-77	11-May-88	191	Specific conductance	1	UMHO	260
6-32-77	24-Aug-88	191	Specific conductance	1	UMHO	228
6-55-76	2-Dec-87	191	Specific conductance	1	UMHO	279
6-55-76	12-Feb-88	191	Specific conductance	1	UMHO	332
6-55-76	6-Jun-88	191	Specific conductance	1	UMHO	307
6-55-76	21-Nov-88	191	Specific conductance	1	UMHO	369
6-55-76	21-Nov-88	191	Specific conductance	1	UMHO	370
6-67-86	22-Dec-87	191	Specific conductance	1	UMHO	286
6-67-86	23-Feb-88	191	Specific conductance	1	UMHO	279
6-67-86	22-Jun-88	191	Specific conductance	1	UMHO	294
6-67-86	30-Aug-88	191	Specific conductance	1	UMHO	194
6-67-86	13-Jan-89	191	Specific conductance	1	UMHO	295
6-S3-25	8-Jun-87	191	Specific conductance	1	UMHO	492
6-S3-25	15-Sep-87	191	Specific conductance	1	UMHO	455
6-S31-1	17-Oct-85	191	Specific conductance	1	UMHO	235
6-S31-1	22-Jun-87	191	Specific conductance	1	UMHO	220
6-S31-1	24-Aug-87	191	Specific conductance	1	UMHO	197
6-S31-1	4-Aug-88	191	Specific conductance	1	UMHO	220
6-19-43	28-Dec-87	199	pH, Field Measurement	0.1		7.70
6-19-43	3-Feb-88	199	pH, Field Measurement	0.1		7.60
6-19-43	22-May-88	199	pH, Field Measurement	0.1		8.00
6-19-43	16-Sep-88	199	pH, Field Measurement	0.1		7.80
6-32-77	5-Feb-86	199	pH, Field Measurement	0.1		7.80
6-32-77	15-Nov-87	199	pH, Field Measurement	0.1		7.50
6-32-77	4-Jan-88	199	pH, Field Measurement	0.1		6.30
6-32-77	11-May-88	199	pH, Field Measurement	0.1		7.70
6-32-77	24-Aug-88	199	pH, Field Measurement	0.1		7.50
6-55-76	2-Dec-87	199	pH, Field Measurement	0.1		7.70
6-55-76	12-Feb-88	199	pH, Field Measurement	0.1		7.50
6-55-76	6-Jun-88	199	pH, Field Measurement	0.1		7.70
6-55-76	21-Nov-88	199	pH, Field Measurement	0.1		8.00
6-55-76	21-Nov-88	199	pH, Field Measurement	0.1		8.10
6-55-76	21-Nov-88	199	pH, Field Measurement	0.1		8.20
6-67-86	22-Dec-87	199	pH, Field Measurement	0.1		6.80
6-67-86	23-Feb-88	199	pH, Field Measurement	0.1		7.90
6-67-86	22-Jun-88	199	pH, Field Measurement	0.1		7.50

Table E1-8. Concentrations Used for Calculation of Baseline Values. (sheet 2 of 11)

Well	Collection Date	Analyte No.	Analyte Name	Detect. Limit	Units	Conc.
6-67-86	30-Aug-88	199	pH, Field Measurement	0.1		7.60
6-67-86	13-Jan-89	199	pH, Field Measurement	0.1		7.60
6-S3-25	8-Jun-87	199	pH, Field Measurement	0.1		7.20
6-S3-25	15-Sep-87	199	pH, Field Measurement	0.1		7.10
6-S31-1	17-Oct-85	199	pH, Field Measurement	0.1		7.70
6-S31-1	22-Jun-87	199	pH, Field Measurement	0.1		7.30
6-S31-1	24-Aug-87	199	pH, Field Measurement	0.1		7.30
6-S31-1	4-Aug-88	199	pH, Field Measurement	0.1		7.70
6-19-43	28-Dec-87	C69	Total organic carbon	2000	PPB	335<
6-19-43	3-Feb-88	C69	Total organic carbon	2000	PPB	237<
6-19-43	22-May-88	C69	Total organic carbon	2000	PPB	359<
6-19-43	16-Sep-88	C69	Total organic carbon	2000	PPB	200<
6-32-77	5-Feb-86	C69	Total organic carbon	2000	PPB	598<
6-32-77	15-Nov-87	C69	Total organic carbon	2000	PPB	276<
6-32-77	4-Jan-88	C69	Total organic carbon	2000	PPB	358<
6-32-77	11-May-88	C69	Total organic carbon	2000	PPB	263<
6-32-77	24-Aug-88	C69	Total organic carbon	2000	PPB	304<
6-55-76	2-Dec-87	C69	Total organic carbon	2000	PPB	228<
6-55-76	12-Feb-88	C69	Total organic carbon	2000	PPB	170<
6-55-76	6-Jun-88	C69	Total organic carbon	2000	PPB	234<
6-55-76	21-Nov-88	C69	Total organic carbon	2000	PPB	200<
6-55-76	21-Nov-88	C69	Total organic carbon	2000	PPB	300<
6-67-86	22-Dec-87	C69	Total organic carbon	2000	PPB	175<
6-67-86	23-Feb-88	C69	Total organic carbon	2000	PPB	431<
6-67-86	22-Jun-88	C69	Total organic carbon	2000	PPB	339<
6-67-86	30-Aug-88	C69	Total organic carbon	2000	PPB	455<
6-67-86	13-Jan-89	C69	Total organic carbon	2000	PPB	200<
6-S3-25	8-Jun-87	C69	Total organic carbon	2000	PPB	260<
6-S3-25	15-Sep-87	C69	Total organic carbon	2000	PPB	418<
6-S31-1	17-Oct-85	C69	Total organic carbon	2000	PPB	1500
6-S31-1	18-Jul-86	C69	Total organic carbon	2000	PPB	1000
6-S31-1	22-Jun-87	C69	Total organic carbon	2000	PPB	1380
6-S31-1	24-Aug-87	C69	Total organic carbon	2000	PPB	1190
6-S31-1	4-Aug-88	C69	Total organic carbon	2000	PPB	301<
6-19-43	28-Dec-87	H42	Total Organic Halogen	10	PPB	4<
6-19-43	3-Feb-88	H42	Total Organic Halogen	10	PPB	5.3<
6-19-43	22-May-88	H42	Total Organic Halogen	10	PPB	5<
6-32-77	15-Nov-87	H42	Total Organic Halogen	10	PPB	3<
6-32-77	4-Jan-88	H42	Total Organic Halogen	10	PPB	3.2<
6-32-77	11-May-88	H42	Total Organic Halogen	10	PPB	20<
6-55-76	2-Dec-87	H42	Total Organic Halogen	10	PPB	0.7<

Table E1-8. Concentrations Used for Calculation of Baseline Values. (sheet 3 of 11)

Well	Collection Date	Analyte No.	Analyte Name	Detect. Limit	Units	Conc.
6-55-76	12-Feb-88	H42	Total Organic Halogen	10	PPB	2.4<
6-55-76	6-Jun-88	H42	Total Organic Halogen	10	PPB	11.5<
6-55-76	21-Nov-88	H42	Total Organic Halogen	10	PPB	2<
6-55-76	21-Nov-88	H42	Total Organic Halogen	10	PPB	4<
6-55-76	21-Nov-88	H42	Total Organic Halogen	10	PPB	10<
6-67-86	22-Dec-87	H42	Total Organic Halogen	10	PPB	2<
6-67-86	23-Feb-88	H42	Total Organic Halogen	10	PPB	3.3<
6-67-86	22-Jun-88	H42	Total Organic Halogen	10	PPB	5.9<
6-S3-25	8-Jun-87	H42	Total Organic Halogen	10	PPB	20<
6-S3-25	15-Sep-87	H42	Total Organic Halogen	10	PPB	37.6
6-S31-1	22-Jun-87	H42	Total Organic Halogen	10	PPB	60.8
6-S31-1	24-Aug-87	H42	Total Organic Halogen	10	PPB	5.6<
6-S31-1	4-Aug-88	H42	Total Organic Halogen	10	PPB	0.9<
6-19-43	28-Dec-87	C75	Chloride	500	PPB	7880
6-19-43	3-Feb-88	C75	Chloride	500	PPB	6590
6-19-43	22-May-88	C75	Chloride	500	PPB	6550
6-19-43	16-Sep-88	C75	Chloride	500	PPB	6490
6-32-77	5-Feb-86	C75	Chloride	500	PPB	7480
6-32-77	15-Nov-87	C75	Chloride	500	PPB	7530
6-32-77	4-Jan-88	C75	Chloride	500	PPB	8130
6-32-77	11-May-88	C75	Chloride	500	PPB	7220
6-32-77	24-Aug-88	C75	Chloride	500	PPB	5810
6-55-76	2-Dec-87	C75	Chloride	500	PPB	22900
6-55-76	12-Feb-88	C75	Chloride	500	PPB	24500
6-55-76	6-Jun-88	C75	Chloride	500	PPB	23900
6-55-76	21-Nov-88	C75	Chloride	500	PPB	22200
6-67-86	22-Dec-87	C75	Chloride	500	PPB	4960
6-67-86	23-Feb-88	C75	Chloride	500	PPB	4860
6-67-86	22-Jun-88	C75	Chloride	500	PPB	5190
6-67-86	30-Aug-88	C75	Chloride	500	PPB	4770
6-67-86	13-Jan-89	C75	Chloride	500	PPB	4700
6-S3-25	8-Jun-87	C75	Chloride	500	PPB	24100
6-S3-25	15-Sep-87	C75	Chloride	500	PPB	22700
6-S31-1	17-Oct-85	C75	Chloride	500	PPB	4680
6-S31-1	22-Jun-87	C75	Chloride	500	PPB	5540
6-S31-1	24-Aug-87	C75	Chloride	500	PPB	5330
6-S31-1	4-Aug-88	C75	Chloride	500	PPB	5120
6-19-43	28-Dec-87	A17	Manganese	5	PPB	6
6-32-77	5-Feb-86	A17	Manganese	5	PPB	8
6-55-76	21-Nov-88	A17	Manganese	5	PPB	21

Table E1-8. Concentrations Used for Calculation of Baseline Values. (sheet 4 of 11)

Well	Collection Date	Analyte No.	Analyte Name	Detect. Limit	Units	Conc.
6-S31-1	17-Oct-85	A17	Manganese	5	PPB	5
6-S31-1	4-Aug-88	A17	Manganese	5	PPB	5<
6-19-43	3-Feb-88	H29	Manganese, filtered	5	PPB	5<
6-19-43	22-May-88	H29	Manganese, filtered	5	PPB	5<
6-19-43	16-Sep-88	H29	Manganese, filtered	5	PPB	7
6-32-77	15-Nov-87	H29	Manganese, filtered	5	PPB	5<
6-32-77	4-Jan-88	H29	Manganese, filtered	5	PPB	5<
6-32-77	11-May-88	H29	Manganese, filtered	5	PPB	5<
6-32-77	24-Aug-88	H29	Manganese, filtered	5	PPB	5<
6-55-76	2-Dec-87	H29	Manganese, filtered	5	PPB	47
6-55-76	12-Feb-88	H29	Manganese, filtered	5	PPB	20
6-55-76	6-Jun-88	H29	Manganese, filtered	5	PPB	30
6-55-76	21-Nov-88	H29	Manganese, filtered	5	PPB	15
6-67-86	22-Dec-87	H29	Manganese, filtered	5	PPB	5<
6-67-86	23-Feb-88	H29	Manganese, filtered	5	PPB	5<
6-67-86	22-Jun-88	H29	Manganese, filtered	5	PPB	5<
6-67-86	30-Aug-88	H29	Manganese, filtered	5	PPB	5<
6-67-86	13-Jan-89	H29	Manganese, filtered	5	PPB	5<
6-S31-1	22-Jun-87	H29	Manganese, filtered	5	PPB	5<
6-S31-1	24-Aug-87	H29	Manganese, filtered	5	PPB	5<
6-S31-1	4-Aug-88	H29	Manganese, filtered	5	PPB	5<
6-19-43	28-Dec-87	A11	Sodium	200	PPB	20100
6-32-77	5-Feb-86	A11	Sodium	200	PPB	21500
6-55-76	21-Nov-88	A11	Sodium	200	PPB	9950
6-S31-1	17-Oct-85	A11	Sodium	200	PPB	8580
6-S31-1	4-Aug-88	A11	Sodium	200	PPB	9440
6-19-43	3-Feb-88	H24	Sodium, filtered	200	PPB	17400
6-19-43	22-May-88	H24	Sodium, filtered	200	PPB	18400
6-19-43	16-Sep-88	H24	Sodium, filtered	200	PPB	21800
6-32-77	15-Nov-87	H24	Sodium, filtered	200	PPB	21600
6-32-77	4-Jan-88	H24	Sodium, filtered	200	PPB	19800
6-32-77	11-May-88	H24	Sodium, filtered	200	PPB	17700
6-32-77	24-Aug-88	H24	Sodium, filtered	200	PPB	19500
6-55-76	2-Dec-87	H24	Sodium, filtered	200	PPB	9160
6-55-76	12-Feb-88	H24	Sodium, filtered	200	PPB	9270
6-55-76	6-Jun-88	H24	Sodium, filtered	200	PPB	10100
6-55-76	21-Nov-88	H24	Sodium, filtered	200	PPB	10200
6-67-86	22-Dec-87	H24	Sodium, filtered	200	PPB	18000

Table E1-8. Concentrations Used for Calculation of Baseline Values. (sheet 5 of 11)

Well	Collection Date	Analyte No.	Analyte Name	Detect. Limit	Units	Conc.
6-67-86	23-Feb-88	H24	Sodium, filtered	200	PPB	15700
6-67-86	22-Jun-88	H24	Sodium, filtered	200	PPB	15700
6-67-86	30-Aug-88	H24	Sodium, filtered	200	PPB	18600
6-67-86	13-Jan-89	H24	Sodium, filtered	200	PPB	16000
6-S3-25	8-Jun-87	H24	Sodium, filtered	200	PPB	25300
6-S3-25	15-Sep-87	H24	Sodium, filtered	200	PPB	22200
6-S31-1	22-Jun-87	H24	Sodium, filtered	200	PPB	8990
6-S31-1	24-Aug-87	H24	Sodium, filtered	200	PPB	8500
6-S31-1	4-Aug-88	H24	Sodium, filtered	200	PPB	9060
6-19-43	28-Dec-87	C73	Sulfate	500	PPB	60400
6-19-43	3-Feb-88	C73	Sulfate	500	PPB	59000
6-19-43	22-May-88	C73	Sulfate	500	PPB	51500
6-19-43	16-Sep-88	C73	Sulfate	500	PPB	60500
6-32-77	5-Feb-86	C73	Sulfate	500	PPB	18900
6-32-77	15-Nov-87	C73	Sulfate	500	PPB	20300
6-32-77	4-Jan-88	C73	Sulfate	500	PPB	19700
6-32-77	11-May-88	C73	Sulfate	500	PPB	18600
6-32-77	24-Aug-88	C73	Sulfate	500	PPB	19800
6-55-76	2-Dec-87	C73	Sulfate	500	PPB	42900
6-55-76	12-Feb-88	C73	Sulfate	500	PPB	47300
6-55-76	6-Jun-88	C73	Sulfate	500	PPB	43000
6-55-76	21-Nov-88	C73	Sulfate	500	PPB	48100
6-67-86	22-Dec-87	C73	Sulfate	500	PPB	38000
6-67-86	23-Feb-88	C73	Sulfate	500	PPB	37800
6-67-86	22-Jun-88	C73	Sulfate	500	PPB	37300
6-67-86	30-Aug-88	C73	Sulfate	500	PPB	36100
6-67-86	13-Jan-89	C73	Sulfate	500	PPB	36200
6-S3-25	8-Jun-87	C73	Sulfate	500	PPB	82400
6-S3-25	15-Sep-87	C73	Sulfate	500	PPB	71900
6-S31-1	17-Oct-85	C73	Sulfate	500	PPB	16500
6-S31-1	22-Jun-87	C73	Sulfate	500	PPB	17700
6-S31-1	24-Aug-87	C73	Sulfate	500	PPB	16600
6-S31-1	4-Aug-88	C73	Sulfate	500	PPB	17200
6-19-43	28-Dec-87	A20	Arsenic	5	PPB	5<
6-32-77	5-Feb-86	A20	Arsenic	5	PPB	5<
6-55-76	21-Nov-88	A20	Arsenic	5	PPB	5<
6-S31-1	17-Oct-85	A20	Arsenic	5	PPB	5<
6-S31-1	4-Aug-88	A20	Arsenic	5	PPB	6

Table E1-8. Concentrations Used for Calculation of Baseline Values. (sheet 6 of 11)

Well	Collection Date	Analyte No.	Analyte Name	Detect. Limit	Units	Conc.
6-19-43	3-Feb-88	H37	Arsenic, filtered	5	PPB	5<
6-19-43	22-May-88	H37	Arsenic, filtered	5	PPB	5<
6-32-77	15-Nov-87	H37	Arsenic, filtered	5	PPB	5<
6-32-77	4-Jan-88	H37	Arsenic, filtered	5	PPB	5<
6-32-77	11-May-88	H37	Arsenic, filtered	5	PPB	5<
6-55-76	2-Dec-87	H37	Arsenic, filtered	5	PPB	5<
6-55-76	12-Feb-88	H37	Arsenic, filtered	5	PPB	5<
6-55-76	6-Jun-88	H37	Arsenic, filtered	5	PPB	5<
6-55-76	21-Nov-88	H37	Arsenic, filtered	5	PPB	5<
6-67-86	22-Dec-87	H37	Arsenic, filtered	5	PPB	5<
6-67-86	23-Feb-88	H37	Arsenic, filtered	5	PPB	5<
6-67-86	22-Jun-88	H37	Arsenic, filtered	5	PPB	5<
6-S3-25	8-Jun-87	H37	Arsenic, filtered	5	PPB	5<
6-S3-25	15-Sep-87	H37	Arsenic, filtered	5	PPB	5<
6-S31-1	22-Jun-87	H37	Arsenic, filtered	5	PPB	5<
6-S31-1	24-Aug-87	H37	Arsenic, filtered	5	PPB	6
6-S31-1	4-Aug-88	H37	Arsenic, filtered	5	PPB	6
6-19-43	28-Dec-87	A06	Barium	6	PPB	56
6-32-77	5-Feb-86	A06	Barium	6	PPB	21
6-55-76	21-Nov-88	A06	Barium	6	PPB	20
6-S31-1	17-Oct-85	A06	Barium	6	PPB	12
6-S31-1	4-Aug-88	A06	Barium	6	PPB	12
6-19-43	3-Feb-88	H20	Barium, filtered	6	PPB	54
6-19-43	22-May-88	H20	Barium, filtered	6	PPB	50
6-19-43	16-Sep-88	H20	Barium, filtered	6	PPB	58
6-32-77	15-Nov-87	H20	Barium, filtered	6	PPB	27
6-32-77	4-Jan-88	H20	Barium, filtered	6	PPB	7
6-32-77	11-May-88	H20	Barium, filtered	6	PPB	24
6-32-77	24-Aug-88	H20	Barium, filtered	6	PPB	22
6-55-76	2-Dec-87	H20	Barium, filtered	6	PPB	23
6-55-76	12-Feb-88	H20	Barium, filtered	6	PPB	24
6-55-76	6-Jun-88	H20	Barium, filtered	6	PPB	27
6-55-76	21-Nov-88	H20	Barium, filtered	6	PPB	19
6-67-86	22-Dec-87	H20	Barium, filtered	6	PPB	17
6-67-86	23-Feb-88	H20	Barium, filtered	6	PPB	13
6-67-86	22-Jun-88	H20	Barium, filtered	6	PPB	14
6-67-86	30-Aug-88	H20	Barium, filtered	6	PPB	17
6-67-86	13-Jan-89	H20	Barium, filtered	6	PPB	12
6-S3-25	8-Jun-87	H20	Barium, filtered	6	PPB	66
6-S3-25	15-Sep-87	H20	Barium, filtered	6	PPB	64
6-S31-1	22-Jun-87	H20	Barium, filtered	6	PPB	19

Table E1-8. Concentrations Used for Calculation of Baseline Values. (sheet 7 of 11)

Well	Collection Date	Analyte No.	Analyte Name	Detect. Limit	Units	Conc.
6-S31-1	24-Aug-87	H20	Barium, filtered	6	PPB	19
6-S31-1	4-Aug-88	H20	Barium, filtered	6	PPB	6<
6-19-43	28-Dec-87	A07	Cadmium	2	PPB	2<
6-32-77	5-Feb-86	A07	Cadmium	2	PPB	2<
6-55-76	21-Nov-88	A07	Cadmium	2	PPB	2<
6-S31-1	17-Oct-85	A07	Cadmium	2	PPB	2<
6-S31-1	4-Aug-88	A07	Cadmium	2	PPB	2<
6-19-43	3-Feb-88	H21	Cadmium, filtered	2	PPB	2<
6-19-43	22-May-88	H21	Cadmium, filtered	2	PPB	2<
6-19-43	16-Sep-88	H21	Cadmium, filtered	2	PPB	2<
6-32-77	15-Nov-87	H21	Cadmium, filtered	2	PPB	2<
6-32-77	4-Jan-88	H21	Cadmium, filtered	2	PPB	2<
6-32-77	11-May-88	H21	Cadmium, filtered	2	PPB	2<
6-32-77	24-Aug-88	H21	Cadmium, filtered	2	PPB	2<
6-55-76	2-Dec-87	H21	Cadmium, filtered	2	PPB	2<
6-55-76	12-Feb-88	H21	Cadmium, filtered	2	PPB	2<
6-55-76	6-Jun-88	H21	Cadmium, filtered	2	PPB	2<
6-55-76	21-Nov-88	H21	Cadmium, filtered	2	PPB	2<
6-67-86	22-Dec-87	H21	Cadmium, filtered	2	PPB	2
6-67-86	23-Feb-88	H21	Cadmium, filtered	2	PPB	2<
6-67-86	22-Jun-88	H21	Cadmium, filtered	2	PPB	2<
6-67-86	30-Aug-88	H21	Cadmium, filtered	2	PPB	2<
6-67-86	13-Jan-89	H21	Cadmium, filtered	2	PPB	2<
6-S3-25	8-Jun-87	H21	Cadmium, filtered	2	PPB	2<
6-S3-25	15-Sep-87	H21	Cadmium, filtered	2	PPB	2<
6-S31-1	22-Jun-87	H21	Cadmium, filtered	2	PPB	2<
6-S31-1	24-Aug-87	H21	Cadmium, filtered	2	PPB	2<
6-S31-1	4-Aug-88	H21	Cadmium, filtered	2	PPB	2<
6-19-43	28-Dec-87	A08	Chromium	10	PPB	10<
6-32-77	5-Feb-86	A08	Chromium	10	PPB	10<
6-55-76	21-Nov-88	A08	Chromium	10	PPB	10<
6-S31-1	17-Oct-85	A08	Chromium	10	PPB	10<
6-S31-1	4-Aug-88	A08	Chromium	10	PPB	10<
6-19-43	3-Feb-88	H22	Chromium, filtered	10	PPB	10<
6-19-43	22-May-88	H22	Chromium, filtered	10	PPB	10<
6-19-43	16-Sep-88	H22	Chromium, filtered	10	PPB	10<
6-32-77	15-Nov-87	H22	Chromium, filtered	10	PPB	10<

Table E1-8. Concentrations Used for Calculation of Baseline Values. (sheet 8 of 11)

Well	Collection Date	Analyte No.	Analyte Name	Detect. Limit	Units	Conc.
6-32-77	4-Jan-88	H22	Chromium, filtered	10	PPB	10<
6-32-77	11-May-88	H22	Chromium, filtered	10	PPB	10<
6-32-77	24-Aug-88	H22	Chromium, filtered	10	PPB	10<
6-55-76	2-Dec-87	H22	Chromium, filtered	10	PPB	10<
6-55-76	12-Feb-88	H22	Chromium, filtered	10	PPB	10<
6-55-76	6-Jun-88	H22	Chromium, filtered	10	PPB	10<
6-55-76	21-Nov-88	H22	Chromium, filtered	10	PPB	10<
6-67-86	22-Dec-87	H22	Chromium, filtered	10	PPB	18
6-67-86	23-Feb-88	H22	Chromium, filtered	10	PPB	20
6-67-86	22-Jun-88	H22	Chromium, filtered	10	PPB	21
6-67-86	30-Aug-88	H22	Chromium, filtered	10	PPB	26
6-67-86	13-Jan-89	H22	Chromium, filtered	10	PPB	25
6-S3-25	8-Jun-87	H22	Chromium, filtered	10	PPB	10<
6-S3-25	15-Sep-87	H22	Chromium, filtered	10	PPB	10<
6-S31-1	22-Jun-87	H22	Chromium, filtered	10	PPB	10<
6-S31-1	24-Aug-87	H22	Chromium, filtered	10	PPB	10<
6-S31-1	4-Aug-88	H22	Chromium, filtered	10	PPB	10<
6-S31-1	17-Oct-85	A09	Lead	30	PPB	30<
6-19-43	3-Feb-88	H41	Lead, filtered	5	PPB	5<
6-19-43	22-May-88	H41	Lead, filtered	5	PPB	5<
6-32-77	15-Nov-87	H41	Lead, filtered	5	PPB	5<
6-32-77	4-Jan-88	H41	Lead, filtered	5	PPB	5<
6-32-77	11-May-88	H41	Lead, filtered	5	PPB	5<
6-55-76	2-Dec-87	H41	Lead, filtered	5	PPB	5<
6-55-76	12-Feb-88	H41	Lead, filtered	5	PPB	5<
6-55-76	6-Jun-88	H41	Lead, filtered	5	PPB	5<
6-55-76	21-Nov-88	H41	Lead, filtered	5	PPB	5<
6-67-86	22-Dec-87	H41	Lead, filtered	5	PPB	5<
6-67-86	23-Feb-88	H41	Lead, filtered	5	PPB	5<
6-67-86	22-Jun-88	H41	Lead, filtered	5	PPB	5<
6-S3-25	8-Jun-87	H41	Lead, filtered	5	PPB	5<
6-S3-25	15-Sep-87	H41	Lead, filtered	5	PPB	5<
6-S31-1	22-Jun-87	H41	Lead, filtered	5	PPB	5<
6-S31-1	24-Aug-87	H41	Lead, filtered	5	PPB	5<
6-S31-1	4-Aug-88	H41	Lead, filtered	5	PPB	5<
6-19-43	28-Dec-87	A22	Selenium	5	PPB	5<
6-32-77	5-Feb-86	A22	Selenium	5	PPB	5<
6-55-76	21-Nov-88	A22	Selenium	5	PPB	5<

Table E1-8. Concentrations Used for Calculation of Baseline Values. (sheet 9 of 11)

Well	Collection Date	Analyte No.	Analyte Name	Detect. Limit	Units	Conc.
6-S31-1	17-Oct-85	A22	Selenium	5	PPB	5<
6-S31-1	4-Aug-88	A22	Selenium	5	PPB	5<
6-19-43	3-Feb-88	H39	Selenium, filtered	5	PPB	5<
6-19-43	22-May-88	H39	Selenium, filtered	5	PPB	5<
6-32-77	15-Nov-87	H39	Selenium, filtered	5	PPB	5<
6-32-77	4-Jan-88	H39	Selenium, filtered	5	PPB	5<
6-32-77	11-May-88	H39	Selenium, filtered	5	PPB	5<
6-55-76	2-Dec-87	H39	Selenium, filtered	5	PPB	5<
6-55-76	12-Feb-88	H39	Selenium, filtered	5	PPB	5<
6-55-76	6-Jun-88	H39	Selenium, filtered	5	PPB	5<
6-55-76	21-Nov-88	H39	Selenium, filtered	5	PPB	5<
6-67-86	22-Dec-87	H39	Selenium, filtered	5	PPB	5<
6-67-86	23-Feb-88	H39	Selenium, filtered	5	PPB	5<
6-67-86	22-Jun-88	H39	Selenium, filtered	5	PPB	5<
6-S3-25	8-Jun-87	H39	Selenium, filtered	5	PPB	5<
6-S3-25	15-Sep-87	H39	Selenium, filtered	5	PPB	5<
6-S31-1	22-Jun-87	H39	Selenium, filtered	5	PPB	5<
6-S31-1	24-Aug-87	H39	Selenium, filtered	5	PPB	5<
6-S31-1	4-Aug-88	H39	Selenium, filtered	5	PPB	5<
6-19-43	28-Dec-87	A21	Mercury	0.1	PPB	0.1<
6-32-77	5-Feb-86	A21	Mercury	0.1	PPB	0.1<
6-55-76	21-Nov-88	A21	Mercury	0.1	PPB	0.1<
6-S31-1	17-Oct-85	A21	Mercury	0.1	PPB	0.1<
6-S31-1	4-Aug-88	A21	Mercury	0.1	PPB	0.1<
6-19-43	3-Feb-88	H38	Mercury, filtered	0.1	PPB	0.1<
6-19-43	22-May-88	H38	Mercury, filtered	0.1	PPB	0.1<
6-32-77	15-Nov-87	H38	Mercury, filtered	0.1	PPB	0.1<
6-32-77	4-Jan-88	H38	Mercury, filtered	0.1	PPB	0.1<
6-32-77	11-May-88	H38	Mercury, filtered	0.1	PPB	0.1<
6-55-76	2-Dec-87	H38	Mercury, filtered	0.1	PPB	0.1<
6-55-76	12-Feb-88	H38	Mercury, filtered	0.1	PPB	0.1<
6-55-76	6-Jun-88	H38	Mercury, filtered	0.1	PPB	0.1<
6-55-76	21-Nov-88	H38	Mercury, filtered	0.1	PPB	0.1<
6-67-86	22-Dec-87	H38	Mercury, filtered	0.1	PPB	0.1<
6-67-86	23-Feb-88	H38	Mercury, filtered	0.1	PPB	0.1<
6-67-86	22-Jun-88	H38	Mercury, filtered	0.1	PPB	0.1<
6-S3-25	8-Jun-87	H38	Mercury, filtered	0.1	PPB	0.1<
6-S3-25	15-Sep-87	H38	Mercury, filtered	0.1	PPB	0.1<
6-S31-1	22-Jun-87	H38	Mercury, filtered	0.1	PPB	0.1<

Table E1-8. Concentrations Used for Calculation of Baseline Values. (sheet 10 of 11)

Well	Collection Date	Analyte No.	Analyte Name	Detect. Limit	Units	Conc.
6-S31-1	24-Aug-87	H38	Mercury, filtered	0.1	PPB	0.1<
6-S31-1	4-Aug-88	H38	Mercury, filtered	0.1	PPB	0.1<
6-19-43	28-Dec-87	A10	Silver	10	PPB	10<
6-32-77	5-Feb-86	A10	Silver	10	PPB	10<
6-55-76	21-Nov-88	A10	Silver	10	PPB	10<
6-S31-1	17-Oct-85	A10	Silver	10	PPB	10<
6-S31-1	4-Aug-88	A10	Silver	10	PPB	10<
6-19-43	3-Feb-88	H23	Silver, filtered	10	PPB	10<
6-19-43	22-May-88	H23	Silver, filtered	10	PPB	10<
6-19-43	16-Sep-88	H23	Silver, filtered	10	PPB	10<
6-32-77	15-Nov-87	H23	Silver, filtered	10	PPB	10<
6-32-77	4-Jan-88	H23	Silver, filtered	10	PPB	10<
6-32-77	11-May-88	H23	Silver, filtered	10	PPB	10<
6-32-77	24-Aug-88	H23	Silver, filtered	10	PPB	10<
6-55-76	2-Dec-87	H23	Silver, filtered	10	PPB	10<
6-55-76	12-Feb-88	H23	Silver, filtered	10	PPB	10<
6-55-76	6-Jun-88	H23	Silver, filtered	10	PPB	10<
6-55-76	21-Nov-88	H23	Silver, filtered	10	PPB	10<
6-67-86	22-Dec-87	H23	Silver, filtered	10	PPB	10<
6-67-86	23-Feb-88	H23	Silver, filtered	10	PPB	10<
6-67-86	22-Jun-88	H23	Silver, filtered	10	PPB	10<
6-67-86	30-Aug-88	H23	Silver, filtered	10	PPB	10<
6-67-86	13-Jan-89	H23	Silver, filtered	10	PPB	10<
6-S3-25	8-Jun-87	H23	Silver, filtered	10	PPB	10<
6-S3-25	15-Sep-87	H23	Silver, filtered	10	PPB	10<
6-S31-1	22-Jun-87	H23	Silver, filtered	10	PPB	10<
6-S31-1	24-Aug-87	H23	Silver, filtered	10	PPB	10<
6-S31-1	4-Aug-88	H23	Silver, filtered	10	PPB	10<
6-19-43	28-Dec-87	A13	Copper	10	PPB	10<
6-32-77	5-Feb-86	A13	Copper	10	PPB	10<
6-55-76	21-Nov-88	A13	Copper	10	PPB	10<
6-S31-1	17-Oct-85	A13	Copper	10	PPB	10<
6-S31-1	4-Aug-88	A13	Copper	10	PPB	10<
6-19-43	3-Feb-88	H26	Copper, filtered	10	PPB	10<
6-19-43	22-May-88	H26	Copper, filtered	10	PPB	10<
6-19-43	16-Sep-88	H26	Copper, filtered	10	PPB	10<
6-32-77	15-Nov-87	H26	Copper, filtered	10	PPB	10<

Table E1-8. Concentrations Used for Calculation of Baseline Values. (sheet 11 of 11)

Well	Collection Date	Analyte No.	Analyte Name	Detect. Limit	Units	Conc.
6-32-77	4-Jan-88	H26	Copper, filtered	10	PPB	10<
6-32-77	11-May-88	H26	Copper, filtered	10	PPB	10<
6-32-77	24-Aug-88	H26	Copper, filtered	10	PPB	10<
6-55-76	2-Dec-87	H26	Copper, filtered	10	PPB	10<
6-55-76	12-Feb-88	H26	Copper, filtered	10	PPB	10<
6-55-76	6-Jun-88	H26	Copper, filtered	10	PPB	10<
6-55-76	21-Nov-88	H26	Copper, filtered	10	PPB	10<
6-67-86	22-Dec-87	H26	Copper, filtered	10	PPB	10<
6-67-86	23-Feb-88	H26	Copper, filtered	10	PPB	12
6-67-86	22-Jun-88	H26	Copper, filtered	10	PPB	10<
6-67-86	30-Aug-88	H26	Copper, filtered	10	PPB	10<
6-67-86	13-Jan-89	H26	Copper, filtered	10	PPB	10<
6-S3-25	8-Jun-87	H26	Copper, filtered	10	PPB	10<
6-S3-25	15-Sep-87	H26	Copper, filtered	10	PPB	10<
6-S31-1	22-Jun-87	H26	Copper, filtered	10	PPB	10<
6-S31-1	24-Aug-87	H26	Copper, filtered	10	PPB	10<
6-S31-1	4-Aug-88	H26	Copper, filtered	10	PPB	10<

This page intentionally left blank.

9513319.2216

APPENDIX F-1.

THE 2101-M BUILDING EFFLUENT DATA

This page intentionally left blank.

2101-M Laboratory Wastewater

Sample ID ML00: 5 UST Samples

Detected Analytes

Note: Units are PPB unless otherwise indicated.

Analyte	N	Average	Minimum	Maximum	90% CI
Alpha Activity (LDL,pCi/L)	4	6.5E-01	1.2E-01	1.3E+00	1.0E+00
Beta Activity (pCi/L)	5	5.1E+00	2.6E+00	1.1E+01	7.5E+00
Acetone (VOA)	1	4.0E+01			
Aluminum	3	2.5E+02	2.0E+02	3.3E+02	3.3E+02
Ammonium	2	1.5E+02	1.2E+02	1.8E+02	2.3E+02
Barium	5	2.2E+01	1.0E+01	3.0E+01	2.8E+01
Bis(ethylhexyl) phthalate	1	7.1E+02			
Calcium	5	1.3E+04	5.8E+03	1.8E+04	1.6E+04
Chloride	5	2.4E+03	7.0E+02	3.5E+03	3.2E+03
Chloroform	3	2.3E+01	1.1E+01	3.2E+01	3.4E+01
Chromium	1	1.0E+01			
Conductivity-Field (uS)	5	8.5E+01	1.4E+01	1.3E+02	1.2E+02
Copper	5	2.6E+02	4.2E+01	5.3E+02	4.1E+02
Iron	5	4.8E+02	9.4E+01	1.3E+03	7.9E+02
Lead (GFAA)	1	3.6E+01			
Magnesium	5	3.0E+03	1.3E+03	4.2E+03	3.8E+03
Manganese	5	9.2E+00	6.0E+00	1.9E+01	1.3E+01
Mercury	2	9.0E-01	3.0E-01	1.5E+00	2.7E+00
Nitrate	1	5.0E+02			
Phosphate	1	1.5E+03			
pH-Field	5	6.2E+00	5.1E+00	7.5E+00	6.9E+00
Potassium	5	6.8E+02	3.2E+02	8.8E+02	8.4E+02
Sodium	5	1.7E+03	2.7E+02	2.8E+03	2.5E+03
Sulfate	5	1.1E+04	5.0E+03	1.4E+04	1.3E+04
Temperature-Field (celsius)	4	2.5E+01	2.2E+01	3.2E+01	2.8E+01
TOC	7	3.4E+03	1.0E+03	1.3E+04	5.7E+03
TOX	2	1.7E+02	1.6E+02	1.9E+02	2.3E+02
TOX (LDL)	1	4.0E+01			
Uranium	5	4.6E-01	3.1E-01	6.8E-01	5.7E-01
Zinc	5	8.1E+01	4.6E+01	1.4E+02	1.1E+02

2101-M Laboratory Wastewater

ID: MLOO, S=50019, 09/17/85 10:50

Detected Analytes

Note: Units are PPB unless otherwise indicated.

Key	Analyte	Result
S	Alpha Activity (LDL,pCi/L)	1.30E+00
S	Beta Activity (pCi/L)	4.33E+00
S	Barium	2.10E+01
S	Bis(ethylhexyl) phthalate	7.10E+02
S	Calcium	1.42E+04
S	Chloride	2.34E+03
S	Chloroform	1.10E+01
S	Chromium	1.00E+01
S	Conductivity-Field (uS)	1.27E+02
S	Copper	4.20E+01
S	Iron	9.40E+01
S	Magnesium	3.20E+03
S	Manganese	6.00E+00
S	Nitrate	5.00E+02
S	Phosphate	1.46E+03
S	pH-Field	7.51E+00
S	Potassium	8.82E+02
S	Sodium	2.69E+02
S	Sulfate	1.34E+04
S	Temperature-Field (celsius)	2.24E+01
S	TOC	1.02E+03
S	TOC	1.43E+03
S	Uranium	3.48E-01
S	Zinc	8.10E+01

Key: S = Sample, E = Extract, B = Blank, T = Trip Blank

2101-M Laboratory Wastewater

ID: MLOO, S=50019, 09/17/85 10:50

Undetected Analytes

Note: MDAs are defined by contract with US Testing.
They do not reflect procedural limitations.
Units are PPB unless otherwise indicated.

Key	Analyte	Result
S	Acetonitrile	<1.00E+01
S	Acetonyl bromide	<1.00E+01
S	Acetophenone	<1.00E+01
S	2-Acetylaminofluorene	<1.00E+01
S	Acrolein	<1.00E+01
S	Acrylamide	<3.00E+03
S	Acrylonitrile	<1.00E+01
S	Aldicarb	<1.00E+01
S	Allyl alcohol	<3.00E+03
S	Aluminum	<1.50E+02
S	4-Aminobiphenyl	<1.00E+01
S	Aminoethylene	<1.00E+01
S	5-Aminoethyl-3-isoxazolol	<1.00E+01
S	2-Aminonapthalene	<1.00E+01
S	Amitrole	<1.00E+01
S	Ammonium	<5.00E+01
S	Aniline	<1.00E+01
S	Antimony	<1.00E+02
S	Aramite	<1.00E+01
S	Auramine	<1.00E+01
S	Benz[c]acridine	<1.00E+01
S	Benz[a]anthracene	<1.00E+01
S	Benzene	<1.00E+01
S	Benzidine	<1.00E+01
S	Benzo[b]fluoranthene	<1.00E+01
S	Benzo[j]fluoranthene	<1.00E+01
S	Benzo[rst]pentaphene	<1.00E+01
S	Benzo[a]pyrene	<1.00E+01
S	p-Benzoquinone	<1.00E+01
S	Benzyl chloride	<1.00E+01

Key: S = Sample, E = Extract, B = Blank, T = Trip Blank

2101-M Laboratory Wastewater

ID: ML00, S=50019, 09/17/85 10:50

Undetected Analytes

Note: MDAs are defined by contract with US Testing.
They do not reflect procedural limitations.
Units are PPB unless otherwise indicated.

Key	Analyte	Result
S	Beryllium	<5.00E+00
S	Bis(2-chloroethoxy) ether	<1.00E+01
S	Bis(2-chloroethoxy)methane	<1.00E+01
S	Bis(chloroisopropyl) ether	<1.00E+01
S	Bis(chloromethyl) ether	<1.00E+01
S	Bromocyanide	<3.00E+03
S	Bromoform	<1.00E+01
S	4-Bromophenyl phenyl ether	<1.00E+01
S	Butylbenzyl phthalate	<1.00E+01
S	Cadmium	<2.00E+00
S	Carbon disulfide	<1.00E+01
S	Carbon tetrachloride	<1.00E+01
S	Chloral	<3.00E+03
S	Chloroacetaldehyde	<3.00E+03
S	Chloroalkyl ethers	<1.00E+01
S	p-Chloroaniline	<1.00E+01
S	Chlorobenzene (VOA)	<1.00E+01
S	p-Chloro-m-cresol	<1.00E+01
S	Chlorocyanide	<3.00E+03
S	1-Chloro-2,3-epoxypropane	<1.00E+01
S	2-Chloroethyl vinyl ether	<1.00E+01
S	Chloromethyl methyl ether	<1.00E+01
S	Chloronaphazine	<1.00E+01
S	2-Chloronapthalene	<1.00E+01
S	o-Chlorophenol	<1.00E+01
S	3-Chloropropionitrile	<3.00E+03
S	Chrysene	<1.00E+01
S	Cresol	<1.00E+01
S	Crotonaldehyde	<1.00E+01
S	Cyanide	<1.00E+01

Key: S = Sample, E = Extract, B = Blank, T = Trip Blank

2101-M Laboratory Wastewater

ID: ML00, S=50019, 09/17/85 10:50

Undetected Analytes

Note: MDAs are defined by contract with US Testing.
They do not reflect procedural limitations.
Units are PPB unless otherwise indicated.

Key	Analyte	Result
S	Cyanogen	<3.00E+03
S	2,4-DCP	<1.00E+01
S	Dibenz[a,h]acridine	<1.00E+01
S	Dibenz[a,j]acridine	<1.00E+01
S	Dibenz[a,h]anthracene	<1.00E+01
S	7H-Dibenzo[c,g]carbazole	<1.00E+01
S	Dibenzo[a,e]pyrene	<1.00E+01
S	Dibenzo[a,h]pyrene	<1.00E+01
S	Dibromo-3-chloropropane	<1.00E+01
S	1,2-Dibromoethane	<1.00E+01
S	Dibromomethane	<1.00E+01
S	Di-n-butylnitrosamine	<1.00E+01
S	Di-n-butyl phthalate	<1.00E+01
S	m-Dichlorobenzene	<1.00E+01
S	o-Dichlorobenzene	<1.00E+01
S	p-Dichlorobenzene (ABN)	<1.00E+01
S	3,3'-Dichlorobenzidine	<1.00E+01
S	1,4-Dichloro-2-butene	<1.00E+01
S	Dichlorodifluoromethane	<1.00E+01
S	1,1-Dichloroethane	<1.00E+01
S	1,2-Dichloroethane	<1.00E+01
S	1,2-Dichloroethylene	<1.00E+01
S	Dichloromethylbenzene	<1.00E+01
S	2,6-Dichlorophenol	<1.00E+01
S	Dichloropropanol	<3.00E+03
S	1,2-Dichloropropane	<1.00E+01
S	1,3-Dichloropropane	<1.00E+01
S	Diethylarsine	<1.00E+01
S	Sym-Diethylhydrazine	<1.00E+01
S	Diethylnitrosamine	<1.00E+01

Key: S = Sample, E = Extract, B = Blank, T = Trip Blank

2101-M Laboratory Wastewater

ID: ML00, S=50019, 09/17/85 10:50

Undetected Analytes

Note: MDAs are defined by contract with US Testing.
They do not reflect procedural limitations.
Units are PPB unless otherwise indicated.

Key	Analyte	Result
S	Diethylphthalate	<1.00E+01
S	Dihydrosafrole	<1.00E+01
S	3,3'-Dimethoxybenzidine	<1.00E+01
S	p-Dimethylaminoazobenzene	<1.00E+01
S	Dimethylbenz(a)anthracene	<1.00E+01
S	3,3'-Dimethylbenzidine	<1.00E+01
S	Sym-Dimethylhydrazine	<3.00E+03
S	Unsym-Dimethylhydrazine	<3.00E+03
S	Dimethylnitrosamine	<1.00E+01
S	2,4-Dimethylphenol	<1.00E+01
S	Dimethyl phthalate	<1.00E+01
S	Dinitrobenzene	<1.00E+01
S	Dinitrocresol and salts	<1.00E+01
S	Dinitro-o-cyclohexylphenol	<1.00E+01
S	2,4-Dinitrophenol	<1.00E+01
S	2,4-Dinitrotoluene	<1.00E+01
S	2,6-Dinitrotoluene	<1.00E+01
S	Dinoseb	<1.00E+01
S	Di-n-octyl phthalate	<1.00E+01
S	p-Dioxane	<5.00E+02
S	p-Dioxane	<3.00E+03
S	Diphenylamine	<1.00E+01
S	Sym-Diphenylhydrazine	<1.00E+01
S	Di-n-propylnitrosamine	<1.00E+01
S	Ethyl cyanide (DAI)	<3.00E+03
S	Ethylene oxide	<3.00E+03
S	Ethylmethacrylate	<3.00E+03
S	Ethylmethanesulfonate	<1.00E+01
S	Fluoranthene	<1.00E+01
S	Fluoride (IC)	<5.00E+02

Key: S = Sample, E = Extract, B = Blank, T = Trip Blank

2101-M Laboratory Wastewater

ID: ML00, S=50019, 09/17/85 10:50

Undetected Analytes

Note: MDAs are defined by contract with US Testing.
They do not reflect procedural limitations.
Units are PPB unless otherwise indicated.

Key	Analyte	Result
S	Fluoroacetic acid	<3.00E+03
S	Formaldehyde	<5.00E+02
S	Glycidylaldehyde	<3.00E+03
S	Hexachlorocyclopentadiene	<1.00E+01
S	Hexachloroethane	<1.00E+01
S	Hexachloroghene	<1.00E+01
S	Hexachloropropene	<1.00E+01
S	Hydrazine	<3.00E+03
S	Hydrogen sulfide	<1.00E+01
S	Indeno(1,2,3-cd)pyrene	<1.00E+01
S	Iodomethane	<1.00E+01
S	Isosafrole	<1.00E+01
S	Isobutyl alcohol	<3.00E+03
S	Kerosene	<1.00E+04
S	Lead (ICAP)	<3.00E+01
S	Maleichydrazide	<5.00E+02
S	Malononitrile	<1.00E+01
S	Melphalan	<1.00E+01
S	Mercury	<1.00E-01
S	Methacrylonitrile	<1.00E+01
S	Methapyrilene	<1.00E+01
S	Methomyl	<1.00E+01
S	2-Methylaziridine	<1.00E+01
S	Methyl bromide	<1.00E+01
S	3-Methylcholanthrene	<1.00E+01
S	Methyl chloride	<1.00E+01
S	Methylenebischloroaniline	<1.00E+01
S	Methylene chloride	<1.00E+01
S	Methyl ethyl ketone	<1.00E+01
S	Methylhydrazine	<3.00E+03

Key: S = Sample, E = Extract, B = Blank, T = Trip Blank

2101-M Laboratory Wastewater

ID: ML00, S=50019, 09/17/85 10:50

Undetected Analytes

Note: MDAs are defined by contract with US Testing.
They do not reflect procedural limitations.
Units are PPB unless otherwise indicated.

Key	Analyte	Result
S	2-Methyllactonitrile	<1.00E+01
S	Methyl mercaptan	<1.00E+01
S	Methyl methacrylate	<1.00E+01
S	Methyl methanesulfonate	<1.00E+01
S	Methylnitrosourethane	<1.00E+01
S	Methylnitrosovinylamine	<1.00E+01
S	2-Methylpyridine	<1.00E+01
S	Methylthiouracil	<1.00E+01
S	1-Naphthalamine	<1.00E+01
S	Naphthalene	<1.00E+01
S	1,4-Naphthalenedione	<1.00E+01
S	Nickel	<1.00E+01
S	Nicotinic acid	<1.00E+02
S	p-Nitroaniline	<1.00E+01
S	Nitrobenzene	<1.00E+01
S	p-Nitrophenol	<1.00E+01
S	N-Nitrosodiethanolamine	<1.00E+01
S	N-Nitrosomethylethylamine	<1.00E+01
S	N-Nitrosomorpholine	<1.00E+01
S	N-Nitrosonornicotine	<1.00E+01
S	Nitrosopiperidine	<1.00E+01
S	Nitrosopyrrolidine	<1.00E+01
S	5-Nitro-o-toluidine	<1.00E+01
S	Osmium	<3.00E+02
S	Paraldehyde	<3.00E+03
S	Pentachlorobenzene	<1.00E+01
S	Pentachloroethane	<1.00E+01
S	Pentachloronitrobenzene	<1.00E+01
S	Pentachlorophenol	<1.00E+01
S	Perchlorobenzene	<1.00E+01

Key: S = Sample, E = Extract, B = Blank, T = Trip Blank

2101-M Laboratory Wastewater

ID: ML00, S=50019, 09/17/85 10:50

Undetected Analytes

Note: MDAs are defined by contract with US Testing.
They do not reflect procedural limitations.
Units are PPB unless otherwise indicated.

Key	Analyte	Result
S	Perchlorobutadiene	<1.00E+01
S	Phenacetin	<1.00E+01
S	Phenol	<1.00E+01
S	2-Phenyl-tert-butylamine	<1.00E+01
S	p-Phenylenediamine	<1.00E+01
S	Phthalic acid esters	<1.00E+01
S	Pronamide	<1.00E+01
S	1-Propanamine	<3.00E+03
S	Propargyl alcohol	<3.00E+03
S	Pyridine	<5.00E+02
S	Reserpine	<1.00E+01
S	Resorcinol	<1.00E+01
S	Safrol	<1.00E+01
S	Silver	<1.00E+01
S	Strontium	<3.00E+02
S	Strychnine	<5.00E+01
S	Sulfide	<1.00E+03
S	1,2,3,4-Tetrachlorobenzene	<1.00E+01
S	1,2,3,5-Tetrachlorobenzene	<1.00E+01
S	1,2,4,5-Tetrachlorobenzene	<1.00E+01
S	1,1,1,2-Tetrachloroethane	<1.00E+01
S	1,1,2,2-Tetrachloroethane	<1.00E+01
S	Tetrachloroethylene	<1.00E+01
S	Tetrachloroethylene	<1.00E+01
S	2,3,4,6-Tetrachlorophenol	<1.00E+01
S	Thiofanox	<1.00E+01
S	Thiophenol	<1.00E+01
S	Thiuram	<1.00E+01
S	Toluene	<1.00E+01
S	Toluenediamine	<1.00E+01

Key: S = Sample, E = Extract, B = Blank, T = Trip Blank

2101-M Laboratory Wastewater

ID: ML00, S=50019, 09/17/85 10:50

Undetected Analytes

Note: MDAs are defined by contract with US Testing.
They do not reflect procedural limitations.
Units are PPB unless otherwise indicated.

Key	Analyte	Result
S	o-Toluidine hydrochloride	<1.00E+01
S	TOX	<7.54E+01
S	1,2,3-Trichlorobenzene	<1.00E+01
S	1,2,4-Trichlorobenzene	<1.00E+01
S	1,3,5-Trichlorobenzene	<1.00E+01
S	1,1,1-Trichloroethane	<1.00E+01
S	1,1,2-Trichloroethane	<1.00E+01
S	Trichloroethene	<1.00E+01
S	Trichloromethanethiol	<1.00E+01
S	Trichloromonofluoromethane	<1.00E+01
S	2,4,5-Trichlorophenol	<1.00E+01
S	2,4,6-Trichlorophenol	<1.00E+01
S	Trichloropropane	<1.00E+01
S	1,2,3-Trichloropropane	<1.00E+01
S	Triethylphosphorothioate	<1.00E+01
S	Sym-Trinitrobenzene	<1.00E+01
S	TRIS	<1.00E+01
S	Urethane	<3.00E+03
S	Vanadium	<5.00E+00
S	Vinyl chloride	<1.00E+01
S	Vinylidene dichloride	<1.00E+01
S	Warfarin	<1.00E+01
S	m-Xylene	<1.00E+01
S	o-, p-Xylene	<1.00E+01

Key: S = Sample, E = Extract, B = Blank, T = Trip Blank

2101-M Laboratory Wastewater

ID: ML00, S=50051, 05/23/86 13:50
(B=50052)

Detected Analytes

Note: Units are PPB unless otherwise indicated.

Key	Analyte	Result
S	Alpha Activity (LDL,pCi/L)	5.89E-01
S	Beta Activity (pCi/L)	1.12E+01
S	Aluminum	3.32E+02
S	Barium	3.00E+01
S	Calcium	1.71E+04
S	Chloride	2.68E+03
S	Chloroform	2.50E+01
S	Conductivity-Field (uS)	1.38E+01
S	Copper	1.76E+02
S	Iron	5.01E+02
S	Magnesium	4.11E+03
S	Manganese	8.00E+00
S	Mercury	1.50E+00
B	Methylene chloride	2.10E+02
S	pH-Field	7.10E+00
S	Potassium	7.66E+02
S	Sodium	2.29E+03
S	Sulfate	1.28E+04
S	Temperature-Field (celsius)	2.19E+01
S	TOC	2.21E+03
S	TOC	2.47E+03
S	TOX	1.56E+02
S	Uranium	6.81E-01
S	Zinc	6.90E+01

Key: S = Sample, E = Extract, B = Blank, T = Trip Blank

2101-M Laboratory Wastewater

ID: ML00, S=50051, 05/23/86 13:50
(B=50052)

Undetected Analytes

Note: MDAs are defined by contract with US Testing.
They do not reflect procedural limitations.
Units are PPB unless otherwise indicated.

Key	Analyte	Result
S	Acetonitrile	<3.00E+03
S	Acetonyl bromide	<1.00E+01
B	Acetonyl bromide	<1.00E+01
S	Acetophenone	<1.00E+01
S	2-Acetylaminofluorene	<1.00E+01
S	Acrolein	<1.00E+01
B	Acrolein	<1.00E+01
S	Acrylamide	<3.00E+03
S	Acrylonitrile	<1.00E+01
B	Acrylonitrile	<1.00E+01
S	Aldicarb	<1.00E+01
S	Allyl alcohol	<3.00E+03
S	4-Aminobiphenyl	<1.00E+01
S	Aminoethylene	<1.00E+01
S	5-Aminoethyl-3-isoxazolol	<1.00E+01
S	2-Aminonapthalene	<1.00E+01
S	Amitrole	<1.00E+01
S	Ammonium	<3.00E+01
S	Aniline	<1.00E+01
S	Antimony	<1.00E+02
S	Aramite	<1.00E+01
S	Auramine	<1.00E+01
S	Benz[c]acridine	<1.00E+01
S	Benz[a]anthracene	<1.00E+01
S	Benzene	<1.00E+01
B	Benzene	<1.00E+01
S	Benzidine	<1.00E+01
S	Benzo[b]fluoranthene	<1.00E+01
S	Benzo[j]fluoranthene	<1.00E+01
S	Benzo[rst]pentaphene	<1.00E+01

Key: S = Sample, E = Extract, B = Blank, T = Trip Blank

2101-M Laboratory Wastewater

ID: ML00, S=50051, 05/23/86 13:50
(B=50052)

Undetected Analytes

Note: MDAs are defined by contract with US Testing.
They do not reflect procedural limitations.
Units are PPB unless otherwise indicated.

Key	Analyte	Result
S	Benzo[a]pyrene	<1.00E+01
S	p-Benzoquinone	<1.00E+01
S	Benzyl chloride	<1.00E+01
S	Beryllium	<5.00E+00
S	Bis(2-chloroethoxy) ether	<1.00E+01
S	Bis(2-chloroethoxy)methane	<1.00E+01
S	Bis(chloroisopropyl) ether	<1.00E+01
S	Bis(chloromethyl) ether	<1.00E+01
B	Bis(chloromethyl) ether	<1.00E+01
S	Bis(ethylhexyl) phthalate	<1.00E+01
S	Bromocyanide	<3.00E+03
S	Bromoform	<1.00E+01
B	Bromoform	<1.00E+01
S	4-Bromophenyl phenyl ether	<1.00E+01
S	Butylbenzyl phthalate	<1.00E+01
S	Cadmium	<2.00E+00
S	Carbon disulfide	<1.00E+01
B	Carbon disulfide	<1.00E+01
S	Carbon tetrachloride	<1.00E+01
B	Carbon tetrachloride	<1.00E+01
S	Chloral	<3.00E+03
S	Chloroacetaldehyde	<3.00E+03
S	Chloroalkyl ethers	<1.00E+01
S	p-Chloroaniline	<1.00E+01
S	Chlorobenzene (VOA)	<1.00E+01
B	Chlorobenzene (VOA)	<1.00E+01
S	p-Chloro-m-cresol	<1.00E+01
S	Chlorocyanide	<3.00E+03
S	1-Chloro-2,3-epoxypropane	<1.00E+01
S	2-Chloroethyl vinyl ether	<1.00E+01

Key: S = Sample, E = Extract, B = Blank, T = Trip Blank

2101-M Laboratory Wastewater

ID: ML00, S=50051, 05/23/86 13:50
(B=50052)

Undetected Analytes

Note: MDAs are defined by contract with US Testing.
They do not reflect procedural limitations.
Units are PPB unless otherwise indicated.

Key	Analyte	Result
B	2-Chloroethyl vinyl ether	<1.00E+01
B	Chloroform	<1.00E+01
S	Chloromethyl methyl ether	<1.00E+01
B	Chloromethyl methyl ether	<1.00E+01
S	Chloronaphazine	<1.00E+01
S	2-Chloronaphthalene	<1.00E+01
S	o-Chlorophenol	<1.00E+01
S	3-Chloropropionitrile	<3.00E+03
S	Chromium	<1.00E+01
S	Chrysene	<1.00E+01
S	Cresol	<1.00E+01
S	Crotonaldehyde	<1.00E+01
B	Crotonaldehyde	<1.00E+01
S	Cyanide	<1.00E+01
S	Cyanogen	<3.00E+03
S	2,4-DCP	<1.00E+01
S	Dibenz[a,h]acridine	<1.00E+01
S	Dibenz[a,j]acridine	<1.00E+01
S	Dibenz[a,h]anthracene	<1.00E+01
S	7H-Dibenzo[c,g]carbazole	<1.00E+01
S	Dibenzo[a,e]pyrene	<1.00E+01
S	Dibenzo[a,h]pyrene	<1.00E+01
S	Dibromo-3-chloropropane	<1.00E+01
B	Dibromo-3-chloropropane	<1.00E+01
S	1,2-Dibromoethane	<1.00E+01
B	1,2-Dibromoethane	<1.00E+01
S	Dibromomethane	<1.00E+01
B	Dibromomethane	<1.00E+01
S	Di-n-butylnitrosamine	<1.00E+01
S	Di-n-butyl phthalate	<1.00E+01

Key: S = Sample, E = Extract, B = Blank, T = Trip Blank

2101-M Laboratory Wastewater

ID: ML00, S=50051, 05/23/86 13:50
(B=50052)

Undetected Analytes

Note: MDAs are defined by contract with US Testing.
They do not reflect procedural limitations.
Units are PPB unless otherwise indicated.

Key	Analyte	Result
S	m-Dichlorobenzene	<1.00E+01
S	o-Dichlorobenzene	<1.00E+01
S	p-Dichlorobenzene (ABN)	<1.00E+01
S	3,3'-Dichlorobenzidine	<1.00E+01
S	1,4-Dichloro-2-butene	<1.00E+01
B	1,4-Dichloro-2-butene	<1.00E+01
S	Dichlorodifluoromethane	<1.00E+01
B	Dichlorodifluoromethane	<1.00E+01
S	1,1-Dichloroethane	<1.00E+01
B	1,1-Dichloroethane	<1.00E+01
S	1,2-Dichloroethane	<1.00E+01
B	1,2-Dichloroethane	<1.00E+01
S	1,2-Dichloroethylene	<1.00E+01
B	1,2-Dichloroethylene	<1.00E+01
S	Dichloromethylbenzene	<1.00E+01
S	2,6-Dichlorophenol	<1.00E+01
S	Dichloropropanol	<3.00E+03
S	1,2-Dichloropropane	<1.00E+01
B	1,2-Dichloropropane	<1.00E+01
S	1,3-Dichloropropane	<1.00E+01
B	1,3-Dichloropropane	<1.00E+01
S	Diethylarsine	<1.00E+01
B	Diethylarsine	<1.00E+01
S	Sym-Diethylhydrazine	<1.00E+01
B	Sym-Diethylhydrazine	<1.00E+01
S	Diethylnitrosamine	<1.00E+01
S	Diethylphthalate	<1.00E+01
S	Dihydrosafrole	<1.00E+01
S	3,3'-Dimethoxybenzidine	<1.00E+01
S	p-Dimethylaminoazobenzene	<1.00E+01

Key: S = Sample, E = Extract, B = Blank, T = Trip Blank

2101-M Laboratory Wastewater

ID: MLOO, S=50051, 05/23/86 13:50
(B=50052)

Undetected Analytes

Note: MDAs are defined by contract with US Testing.
They do not reflect procedural limitations.
Units are PPB unless otherwise indicated.

Key	Analyte	Result
S	Dimethylbenz[a]anthracene	<1.00E+01
S	3,3'-Dimethylbenzidine	<1.00E+01
S	Sym-Dimethylhydrazine	<3.00E+03
S	Unsym-Dimethylhydrazine	<3.00E+03
S	Dimethylnitrosamine	<1.00E+01
S	2,4-Dimethylphenol	<1.00E+01
S	Dimethyl phthalate	<1.00E+01
S	Dinitrobenzene	<1.00E+01
S	Dinitrocresol and salts	<1.00E+01
S	Dinitro-o-cyclohexylphenol	<1.00E+01
S	2,4-Dinitrophenol	<1.00E+01
S	2,4-Dinitrotoluene	<1.00E+01
S	2,6-Dinitrotoluene	<1.00E+01
S	Dinoseb	<1.00E+01
S	Di-n-octyl phthalate	<1.00E+01
S	p-Dioxane	<5.00E+02
B	p-Dioxane	<5.00E+02
S	Diphenylamine	<1.00E+01
S	Sym-Diphenylhydrazine	<1.00E+01
S	Di-n-propylnitorsamine	<1.00E+01
S	Ethyl cyanide (DAI)	<3.00E+03
S	Ethylene oxide	<3.00E+03
S	Ethylmethacrylate	<1.00E+01
B	Ethylmethacrylate	<1.00E+01
S	Ethylmethanesulfonate	<1.00E+01
S	Fluoranthene	<1.00E+01
S	Fluoride (IC)	<5.00E+02
S	Fluoroacetic acid	<3.00E+03
S	Formaldehyde	<5.00E+02
B	Formaldehyde	<5.00E+02

Key: S = Sample, E = Extract, B = Blank, T = Trip Blank

2101-M Laboratory Wastewater

ID: MLOO, S=50051, 05/23/86 13:50
(B=50052)

Undetected Analytes

Note: MDAs are defined by contract with US Testing.
They do not reflect procedural limitations.
Units are PPB unless otherwise indicated.

Key	Analyte	Result
S	Glycidylaldehyde	<3.00E+03
S	Hexachlorocyclopentadiene	<1.00E+01
S	Hexachloroethane	<1.00E+01
S	Hexachlorophene	<1.00E+01
S	Hexachloropropene	<1.00E+01
S	Hydrazine	<3.00E+03
S	Hydrogen sulfide	<1.00E+01
B	Hydrogen sulfide	<1.00E+01
S	Indeno(1,2,3-cd)pyrene	<1.00E+01
S	Iodomethane	<1.00E+01
B	Iodomethane	<1.00E+01
S	Isosafrole	<1.00E+01
S	Isobutyl alcohol	<3.00E+03
S	Kerosene	<1.00E+04
S	Maleichydrazide	<5.00E+02
S	Malononitrile	<1.00E+01
S	Melphalan	<1.00E+01
S	Methacrylonitrile	<1.00E+01
B	Methacrylonitrile	<1.00E+01
S	Methapyrilene	<1.00E+01
S	Methomyl	<1.00E+01
S	2-Methylaziridine	<1.00E+01
S	Methyl bromide	<1.00E+01
B	Methyl bromide	<1.00E+01
S	3-Methylcholanthrene	<1.00E+01
S	Methyl chloride	<1.00E+01
B	Methyl chloride	<1.00E+01
S	Methylenebischloroaniline	<1.00E+01
S	Methylene chloride	<1.00E+01
S	Methyl ethyl ketone	<1.00E+01

Key: S = Sample, E = Extract, B = Blank, T = Trip Blank

2101-M Laboratory Wastewater

ID: ML00, S=50051, 05/23/86 13:50
(B=50052)

Undetected Analytes

Note: MDAs are defined by contract with US Testing.
They do not reflect procedural limitations.
Units are PPB unless otherwise indicated.

Key	Analyte	Result
B	Methyl ethyl ketone	<1.00E+01
S	Methylhydrazine	<3.00E+03
S	2-Methyllactonitrile	<1.00E+01
S	Methyl mercaptan	<1.00E+01
B	Methyl mercaptan	<1.00E+01
S	Methyl methacrylate	<1.00E+01
B	Methyl methacrylate	<1.00E+01
S	Methyl methanesulfonate	<1.00E+01
S	Methylnitrosourethane	<1.00E+01
S	Methylnitrosovinylamine	<1.00E+01
S	2-Methylpyridine	<1.00E+01
S	Methylthiouracil	<1.00E+01
S	1-Naphthalamine	<1.00E+01
S	Naphthalene	<1.00E+01
S	1,4-Naphthalenedione	<1.00E+01
S	Nickel	<1.00E+01
S	Nicotinic acid	<1.00E+02
S	Nitrate	<5.00E+02
S	p-Nitroaniline	<1.00E+01
S	Nitrobenzene	<1.00E+01
S	p-Nitrophenol	<1.00E+01
S	N-Nitrosodiethanolamine	<1.00E+01
S	N-Nitrosomethylethylamine	<1.00E+01
S	N-Nitrosomorpholine	<1.00E+01
S	N-Nitrosonornicotine	<1.00E+01
S	Nitrosopiperidine	<1.00E+01
S	Nitrosopyrrolidine	<1.00E+01
S	5-Nitro-o-toluidine	<1.00E+01
S	Osmium	<3.00E+02
S	Paraldehyde	<3.00E+03

: S = Sample, E = Extract, B = Blank, T = Trip Blank

2101-M Laboratory Wastewater

ID: ML00, S=50051, 05/23/86 13:50
(B=50052)

Undetected Analytes

Note: MDAs are defined by contract with US Testing.
They do not reflect procedural limitations.
Units are PPB unless otherwise indicated.

Key	Analyte	Result
S	Pentachlorobenzene	<1.00E+01
S	Pentachloroethane	<1.00E+01
B	Pentachloroethane	<1.00E+01
S	Pentachloronitrobenzene	<1.00E+01
S	Pentachlorophenol	<1.00E+01
S	Perchlorobenzene	<1.00E+01
S	Perchlorobutadiene	<1.00E+01
S	Phenacetin	<1.00E+01
S	Phenol	<1.00E+01
S	2-Phenyl-tert-butylamine	<1.00E+01
S	p-Phenylenediamine	<1.00E+01
S	Phosphate	<1.00E+03
S	Phthalic acid esters	<1.00E+01
S	Pronamide	<1.00E+01
S	1-Propanamine	<3.00E+03
S	Propargyl alcohol	<3.00E+03
S	Pyridine	<5.00E+02
B	Pyridine	<5.00E+02
S	Reserpine	<1.00E+01
S	Resorcinol	<1.00E+01
S	Safrol	<1.00E+01
S	Silver	<1.00E+01
S	Strontium	<3.00E+02
S	Strychnine	<5.00E+01
S	Sulfide	<1.00E+03
S	1,2,3,4-Tetrachlorobenzene	<1.00E+01
S	1,2,3,5-Tetrachlorobenzene	<1.00E+01
S	1,2,4,5-Tetrachlorobenzene	<1.00E+01
S	1,1,1,2-Tetrachloroethane	<1.00E+01
B	1,1,1,2-Tetrachloroethane	<1.00E+01

Key: S = Sample, E = Extract, B = Blank, T = Trip Blank

2101-M Laboratory Wastewater

ID: MLOO, S=50051, 05/23/86 13:50
(B=50052)

Undetected Analytes

Note: MDAs are defined by contract with US Testing.
They do not reflect procedural limitations.
Units are PPB unless otherwise indicated.

Key	Analyte	Result
S	1,1,2,2-Tetrachloroethane	<1.00E+01
B	1,1,2,2-Tetrachloroethane	<1.00E+01
S	Tetrachloroethylene	<1.00E+01
B	Tetrachloroethylene	<1.00E+01
S	2,3,4,6-Tetrachlorophenol	<1.00E+01
S	Thiofanox	<1.00E+01
S	Thiophenol	<1.00E+01
S	Thiuram	<1.00E+01
S	Toluene	<1.00E+01
B	Toluene	<1.00E+01
S	Toluenediamine	<1.00E+01
S	o-Toluidine hydrochloride	<1.00E+01
S	1,2,3-Trichlorobenzene	<1.00E+01
S	1,2,4-Trichlorobenzene	<1.00E+01
S	1,3,5-Trichlorobenzene	<1.00E+01
S	1,1,1-Trichloroethane	<1.00E+01
B	1,1,1-Trichloroethane	<1.00E+01
S	1,1,2-Trichloroethane	<1.00E+01
B	1,1,2-Trichloroethane	<1.00E+01
S	Trichloroethene	<1.00E+01
B	Trichloroethene	<1.00E+01
S	Trichloromethanethiol	<1.00E+01
B	Trichloromethanethiol	<1.00E+01
S	Trichloromonofluoromethane	<1.00E+01
B	Trichloromonofluoromethane	<1.00E+01
S	2,4,5-Trichlorophenol	<1.00E+01
S	2,4,6-Trichlorophenol	<1.00E+01
S	Trichloropropane	<1.00E+01
B	Trichloropropane	<1.00E+01
S	1,2,3-Trichloropropane	<1.00E+01

Key: S = Sample, E = Extract, B = Blank, T = Trip Blank

2101-M Laboratory Wastewater

ID: MLOO, S=50051, 05/23/86 13:50
(B=50052)

Undetected Analytes

Note: MDAs are defined by contract with US Testing.
They do not reflect procedural limitations.
Units are PPB unless otherwise indicated.

Key	Analyte	Result
B	1,2,3-Trichloropropane	<1.00E+01
S	Triethylphosphorothioate	<1.00E+01
S	Sym-Trinitrobenzene	<1.00E+01
S	TRIS	<1.00E+01
S	Urethane	<3.00E+03
S	Vanadium	<5.00E+00
S	Vinyl chloride	<1.00E+01
B	Vinyl chloride	<1.00E+01
S	Vinylidene dichloride	<1.00E+01
B	Vinylidene dichloride	<1.00E+01
S	Warfarin	<1.00E+01
S	m-Xylene	<1.00E+01
B	m-Xylene	<1.00E+01
S	o-, p-Xylene	<1.00E+01
B	o-, p-Xylene	<1.00E+01

Key: S = Sample, E = Extract, B = Blank, T = Trip Blank

2101-M Laboratory Wastewater

ID: MLOO, S=50089, 07/17/86 13:20
(B=50090)

Detected Analytes

Note: Units are PPB unless otherwise indicated.

Key	Analyte	Result
S	Alpha Activity (LDL,pCi/L)	1.20E-01
S	Beta Activity (pCi/L)	3.02E+00
S	Aluminum	1.95E+02
S	Barium	3.00E+01
S	Calcium	1.77E+04
S	Chloride	3.54E+03
S	Chloroform	3.20E+01
S	Conductivity-Field (uS)	1.30E+02
S	Copper	8.90E+01
S	Iron	2.80E+02
S	Magnesium	4.16E+03
S	Manganese	6.00E+00
S	Mercury	3.00E-01
B	Methylene chloride	1.70E+02
S	pH-Field	6.07E+00
S	Potassium	7.97E+02
S	Sodium	2.38E+03
S	Sulfate	1.42E+04
S	Temperature-Field (celsius)	2.24E+01
S	TOC	1.96E+03
S	TOX	1.91E+02
S	Uranium	5.66E-01
S	Zinc	7.00E+01

Key: S = Sample, E = Extract, B = Blank, T = Trip Blank

2101-M Laboratory Wastewater

ID: MLOO, S=50089, 07/17/86 13:20
(B=50090)

Undetected Analytes

Note: MDAs are defined by contract with US Testing.
They do not reflect procedural limitations.
Units are PPB unless otherwise indicated.

Key	Analyte	Result
S	Acetonitrile	<3.00E+03
S	Acetonyl bromide	<1.00E+01
B	Acetonyl bromide	<1.00E+01
S	Acetophenone	<1.00E+01
S	2-Acetylaminofluorene	<1.00E+01
S	Acrolein	<1.00E+01
B	Acrolein	<1.00E+01
S	Acrylamide	<3.00E+03
S	Acrylonitrile	<1.00E+01
B	Acrylonitrile	<1.00E+01
S	Aldicarb	<1.00E+01
S	Allyl alcohol	<3.00E+03
S	4-Aminobiphenyl	<1.00E+01
S	Aminoethylene	<1.00E+01
S	5-Aminoethyl-3-isoxazolol	<1.00E+01
S	2-Aminonapthalene	<1.00E+01
S	Amitrole	<1.00E+01
S	Ammonium	<5.00E+01
S	Aniline	<1.00E+01
S	Antimony	<1.00E+02
S	Aramite	<1.00E+01
S	Auramine	<1.00E+01
S	Benz[c]acridine	<1.00E+01
S	Benz[a]anthracene	<1.00E+01
S	Benzene	<1.00E+01
B	Benzene	<1.00E+01
S	Benzidine	<1.00E+01
S	Benzo[b]fluoranthene	<1.00E+01
S	Benzo[j]fluoranthene	<1.00E+01
S	Benzo[rst]pentaphene	<1.00E+01

Key: S = Sample, E = Extract, B = Blank, T = Trip Blank

2101-M Laboratory Wastewater

ID: MLOO, S=50089, 07/17/86 13:20
(B=50090)

Undetected Analytes

Note: MDAs are defined by contract with US Testing.
They do not reflect procedural limitations.
Units are PPB unless otherwise indicated.

Key	Analyte	Result
S	Benzo[a]pyrene	<1.00E+01
S	p-Benzoquinone	<1.00E+01
S	Benzyl chloride	<1.00E+01
S	Beryllium	<5.00E+00
S	Bis(2-chloroethoxy) ether	<1.00E+01
S	Bis(2-chloroethoxy)methane	<1.00E+01
S	Bis(chloroisopropyl) ether	<1.00E+01
S	Bis(chloromethyl) ether	<1.00E+01
B	Bis(chloromethyl) ether	<1.00E+01
S	Bis(ethylhexyl) phthalate	<1.00E+01
S	Bromocyanide	<3.00E+03
S	Bromoform	<1.00E+01
B	Bromoform	<1.00E+01
S	4-Bromophenyl phenyl ether	<1.00E+01
S	Butylbenzyl phthalate	<1.00E+01
S	Cadmium	<2.00E+00
S	Carbon disulfide	<1.00E+01
B	Carbon disulfide	<1.00E+01
S	Carbon tetrachloride	<1.00E+01
B	Carbon tetrachloride	<1.00E+01
S	Chloral	<3.00E+03
S	Chloroacetaldehyde	<3.00E+03
S	Chloroalkyl ethers	<1.00E+01
S	p-Chloroaniline	<1.00E+01
S	Chlorobenzene (VOA)	<1.00E+01
B	Chlorobenzene (VOA)	<1.00E+01
S	p-Chloro-m-cresol	<1.00E+01
S	Chlorocyanide	<3.00E+03
S	1-Chloro-2,3-epoxypropane	<1.00E+01
S	2-Chloroethyl vinyl ether	<1.00E+01

Key: S = Sample, E = Extract, B = Blank, T = Trip Blan

2101-M Laboratory Wastewater

ID: MLOO, S=50089, 07/17/86 13:20
(B=50090)

Undetected Analytes

Note: MDAs are defined by contract with US Testing.
They do not reflect procedural limitations.
Units are PPB unless otherwise indicated.

Key	Analyte	Result
B	2-Chloroethyl vinyl ether	<1.00E+01
B	Chloroform	<1.00E+01
S	Chloromethyl methyl ether	<1.00E+01
B	Chloromethyl methyl ether	<1.00E+01
S	Chloronaphazine	<1.00E+01
S	2-Chloronapthalene	<1.00E+01
S	o-Chlorophenol	<1.00E+01
S	3-Chloropropionitrile	<3.00E+03
S	Chromium	<1.00E+01
S	Chrysene	<1.00E+01
S	Cresol	<1.00E+01
S	Crotonaldehyde	<1.00E+01
B	Crotonaldehyde	<1.00E+01
S	Cyanide	<1.00E+01
S	Cyanogen	<3.00E+03
S	2,4-DCP	<1.00E+01
S	Dibenz[a,h]acridine	<1.00E+01
S	Dibenz[a,j]acridine	<1.00E+01
S	Dibenz[a,h]anthracene	<1.00E+01
S	7H-Dibenzo[c,g]carbazole	<1.00E+01
S	Dibenzo[a,e]pyrene	<1.00E+01
S	Dibenzo[a,h]pyrene	<1.00E+01
S	Dibromo-3-chloropropane	<1.00E+01
B	Dibromo-3-chloropropane	<1.00E+01
S	1,2-Dibromoethane	<1.00E+01
B	1,2-Dibromoethane	<1.00E+01
S	Dibromomethane	<1.00E+01
B	Dibromomethane	<1.00E+01
S	Di-n-butylnitrosamine	<1.00E+01
S	Di-n-butyl phthalate	<1.00E+01

Key: S = Sample, E = Extract, B = Blank, T = Trip Blank

2101-M Laboratory Wastewater

ID: MLOO, S=50089, 07/17/86 13:20
(B=50090)

Undetected Analytes

Note: MDAs are defined by contract with US Testing.
They do not reflect procedural limitations.
Units are PPB unless otherwise indicated.

Key	Analyte	Result
S	m-Dichlorobenzene	<1.00E+01
S	o-Dichlorobenzene	<1.00E+01
S	p-Dichlorobenzene (ABN)	<1.00E+01
S	3,3'-Dichlorobenzidine	<1.00E+01
S	1,4-Dichloro-2-butene	<1.00E+01
B	1,4-Dichloro-2-butene	<1.00E+01
S	Dichlorodifluoromethane	<1.00E+01
B	Dichlorodifluoromethane	<1.00E+01
S	1,1-Dichloroethane	<1.00E+01
B	1,1-Dichloroethane	<1.00E+01
S	1,2-Dichloroethane	<1.00E+01
B	1,2-Dichloroethane	<1.00E+01
S	1,2-Dichloroethylene	<1.00E+01
B	1,2-Dichloroethylene	<1.00E+01
S	Dichloromethylbenzene	<1.00E+01
S	2,6-Dichlorophenol	<1.00E+01
S	Dichloropropanol	<3.00E+03
S	1,2-Dichloropropane	<1.00E+01
B	1,2-Dichloropropane	<1.00E+01
S	1,3-Dichloropropane	<1.00E+01
B	1,3-Dichloropropane	<1.00E+01
S	Diethylarsine	<1.00E+01
B	Diethylarsine	<1.00E+01
S	Sym-Diethylhydrazine	<1.00E+01
B	Sym-Diethylhydrazine	<1.00E+01
S	Diethylnitrosamine	<1.00E+01
S	Diethylphthalate	<1.00E+01
S	Dihydrosafrole	<1.00E+01
S	3,3'-Dimethoxybenzidine	<1.00E+01
S	p-Dimethylaminoazobenzene	<1.00E+01

Key: S = Sample, E = Extract, B = Blank, T = Trip Blank

2101-M Laboratory Wastewater

ID: MLOO, S=50089, 07/17/86 13:20
(B=50090)

Undetected Analytes

Note: MDAs are defined by contract with US Testing.
They do not reflect procedural limitations.
Units are PPB unless otherwise indicated.

Key	Analyte	Result
S	Dimethylbenz[a]anthracene	<1.00E+01
S	3,3'-Dimethylbenzidine	<1.00E+01
S	Sym-Dimethylhydrazine	<3.00E+03
S	Unsym-Dimethylhydrazine	<3.00E+03
S	Dimethylnitrosamine	<1.00E+01
S	2,4-Dimethylphenol	<1.00E+01
S	Dimethyl phthalate	<1.00E+01
S	Dinitrobenzene	<1.00E+01
S	Dinitrocresol and salts	<1.00E+01
S	Dinitro-o-cyclohexylphenol	<1.00E+01
S	2,4-Dinitrophenol	<1.00E+01
S	2,4-Dinitrotoluene	<1.00E+01
S	2,6-Dinitrotoluene	<1.00E+01
S	Dinoseb	<1.00E+01
S	Di-n-octyl phthalate	<1.00E+01
S	p-Dioxane	<5.00E+02
B	p-Dioxane	<5.00E+02
S	Diphenylamine	<1.00E+01
S	Sym-Diphenylhydrazine	<1.00E+01
S	Di-n-propylnitorsamine	<1.00E+01
S	Ethyl cyanide (DAI)	<3.00E+03
S	Ethylene oxide	<3.00E+03
S	Ethylmethacrylate	<1.00E+01
B	Ethylmethacrylate	<1.00E+01
S	Ethylmethanesulfonate	<1.00E+01
S	Fluoranthene	<1.00E+01
S	Fluoride (IC)	<5.00E+02
S	Fluoroacetic acid	<3.00E+03
S	Formaldehyde	<5.00E+02
B	Formaldehyde	<5.00E+02

Key: S = Sample, E = Extract, B = Blank, T = Trip Blank

2101-M Laboratory Wastewater

ID: ML00, S=50089, 07/17/86 13:20
(B=50090)

Undetected Analytes

Note: MDAs are defined by contract with US Testing.
They do not reflect procedural limitations.
Units are PPB unless otherwise indicated.

Key	Analyte	Result
S	Glycidylaldehyde	<3.00E+03
S	Hexachlorocyclopentadiene	<1.00E+01
S	Hexachloroethane	<1.00E+01
S	Hexachlorophene	<1.00E+01
S	Hexachloropropene	<1.00E+01
S	Hydrazine	<3.00E+03
S	Hydrogen sulfide	<1.00E+01
B	Hydrogen sulfide	<1.00E+01
S	Indeno(1,2,3-cd)pyrene	<1.00E+01
S	Iodomethane	<1.00E+01
B	Iodomethane	<1.00E+01
S	Isosafrole	<1.00E+01
S	Isobutyl alcohol	<3.00E+03
S	Kerosene	<1.00E+04
S	Maleichydrazide	<5.00E+02
S	Malononitrile	<1.00E+01
S	Melphalan	<1.00E+01
S	Methacrylonitrile	<1.00E+01
B	Methacrylonitrile	<1.00E+01
S	Methapyrilene	<1.00E+01
S	Methomyl	<1.00E+01
S	2-Methylaziridine	<1.00E+01
S	Methyl bromide	<1.00E+01
B	Methyl bromide	<1.00E+01
S	3-Methylcholanthrene	<1.00E+01
S	Methyl chloride	<1.00E+01
B	Methyl chloride	<1.00E+01
S	Methylenebischloroaniline	<1.00E+01
S	Methylene chloride	<1.00E+01
S	Methyl ethyl ketone	<1.00E+01

Key: S = Sample, E = Extract, B = Blank, T = Trip Blank

2101-M Laboratory Wastewater

ID: ML00, S=50089, 07/17/86 13:20
(B=50090)

Undetected Analytes

Note: MDAs are defined by contract with US Testing.
They do not reflect procedural limitations.
Units are PPB unless otherwise indicated.

Key	Analyte	Result
B	Methyl ethyl ketone	<1.00E+01
S	Methylhydrazine	<3.00E+03
S	2-Methyllactonitrile	<1.00E+01
S	Methyl mercaptan	<1.00E+01
B	Methyl mercaptan	<1.00E+01
S	Methyl methacrylate	<1.00E+01
B	Methyl methacrylate	<1.00E+01
S	Methyl methanesulfonate	<1.00E+01
S	Methylnitrosourethane	<1.00E+01
S	Methylnitrosovinylamine	<1.00E+01
S	2-Methylpyridine	<1.00E+01
S	Methylthiouracil	<1.00E+01
S	1-Naphthalamine	<1.00E+01
S	Naphthalene	<1.00E+01
S	1,4-Naphthalenedione	<1.00E+01
S	Nickel	<1.00E+01
S	Nicotinic acid	<1.00E+02
S	Nitrate	<5.00E+02
S	p-Nitroaniline	<1.00E+01
S	Nitrobenzene	<1.00E+01
S	p-Nitrophenol	<1.00E+01
S	N-Nitrosodiethanolamine	<1.00E+01
S	N-Nitrosomethylethylamine	<1.00E+01
S	N-Nitrosomorpholine	<1.00E+01
S	N-Nitrosonornicotine	<1.00E+01
S	Nitrosopiperidine	<1.00E+01
S	Nitrosopyrrolidine	<1.00E+01
S	5-Nitro-o-toluidine	<1.00E+01
S	Osmium	<3.00E+02
S	Paraldehyde	<3.00E+03

Key: S = Sample, E = Extract, B = Blank, T = Trip Blank

2101-M Laboratory Wastewater

ID: MLOO, S=50089, 07/17/86 13:20
(B=50090)

Undetected Analytes

Note: MDAs are defined by contract with US Testing.
They do not reflect procedural limitations.
Units are PPB unless otherwise indicated.

Key	Analyte	Result
S	Pentachlorobenzene	<1.00E+01
S	Pentachloroethane	<1.00E+01
B	Pentachloroethane	<1.00E+01
S	Pentachloronitrobenzene	<1.00E+01
S	Pentachlorophenol	<1.00E+01
S	Perchlorobenzene	<1.00E+01
S	Perchlorobutadiene	<1.00E+01
S	Phenacetin	<1.00E+01
S	Phenol	<1.00E+01
S	2-Phenyl-tert-butylamine	<1.00E+01
S	p-Phenylenediamine	<1.00E+01
S	Phosphate	<1.00E+03
S	Phthalic acid esters	<1.00E+01
S	Pronamide	<1.00E+01
S	1-Propanamine	<3.00E+03
S	Propargyl alcohol	<3.00E+03
S	Pyridine	<5.00E+02
B	Pyridine	<5.00E+02
S	Reserpine	<1.00E+01
S	Resorcinol	<1.00E+01
S	Safrol	<1.00E+01
S	Silver	<1.00E+01
S	Strontium	<3.00E+02
S	Strychnine	<5.00E+01
S	Sulfide	<1.00E+03
S	1,2,3,4-Tetrachlorobenzene	<1.00E+01
S	1,2,3,5-Tetrachlorobenzene	<1.00E+01
S	1,2,4,5-Tetrachlorobenzene	<1.00E+01
S	1,1,1,2-Tetrachloroethane	<1.00E+01
B	1,1,1,2-Tetrachloroethane	<1.00E+01

Key: S = Sample, E = Extract, B = Blank, T = Trip Blank

2101-M Laboratory Wastewater

ID: MLOO, S=50089, 07/17/86 13:20
(B=50090)

Undetected Analytes

Note: MDAs are defined by contract with US Testing.
They do not reflect procedural limitations.
Units are PPB unless otherwise indicated.

Key	Analyte	Result
S	1,1,2,2-Tetrachloroethane	<1.00E+01
B	1,1,2,2-Tetrachloroethane	<1.00E+01
S	Tetrachloroethylene	<1.00E+01
B	Tetrachloroethylene	<1.00E+01
S	2,3,4,6-Tetrachlorophenol	<1.00E+01
S	Thiofanox	<1.00E+01
S	Thiophenol	<1.00E+01
S	Thiuram	<1.00E+01
S	Toluene	<1.00E+01
B	Toluene	<1.00E+01
S	Toluenediamine	<1.00E+01
S	o-Toluidine hydrochloride	<1.00E+01
S	1,2,3-Trichlorobenzene	<1.00E+01
S	1,2,4-Trichlorobenzene	<1.00E+01
S	1,3,5-Trichlorobenzene	<1.00E+01
S	1,1,1-Trichloroethane	<1.00E+01
B	1,1,1-Trichloroethane	<1.00E+01
S	1,1,2-Trichloroethane	<1.00E+01
B	1,1,2-Trichloroethane	<1.00E+01
S	Trichloroethene	<1.00E+01
B	Trichloroethene	<1.00E+01
S	Trichloromethanethiol	<1.00E+01
B	Trichloromethanethiol	<1.00E+01
S	Trichloromonofluoromethane	<1.00E+01
B	Trichloromonofluoromethane	<1.00E+01
S	2,4,5-Trichlorophenol	<1.00E+01
S	2,4,6-Trichlorophenol	<1.00E+01
S	Trichloropropane	<1.00E+01
B	Trichloropropane	<1.00E+01
S	1,2,3-Trichloropropane	<1.00E+01

Key: S = Sample, E = Extract, B = Blank, T = Trip Blank

2101-M Laboratory Wastewater

ID: MLOO, S=50089, 07/17/86 13:20
(B=50090)

Undetected Analytes

Note: MDAs are defined by contract with US Testing.
They do not reflect procedural limitations.
Units are PPB unless otherwise indicated.

Key	Analyte	Result
B	1,2,3-Trichloropropane	<1.00E+01
S	Triethylphosphorothioate	<1.00E+01
S	Sym-Trinitrobenzene	<1.00E+01
S	TRIS	<1.00E+01
S	Urethane	<3.00E+03
S	Vanadium	<5.00E+00
S	Vinyl chloride	<1.00E+01
B	Vinyl chloride	<1.00E+01
S	Vinylidene dichloride	<1.00E+01
B	Vinylidene dichloride	<1.00E+01
S	Warfarin	<1.00E+01
S	m-Xylene	<1.00E+01
B	m-Xylene	<1.00E+01
S	o-, p-Xylene	<1.00E+01
B	o-, p-Xylene	<1.00E+01

Key: S = Sample, E = Extract, B = Blank, T = Trip Blank

2101-M Laboratory Wastewater

ID: MLOO, S=50167, 10/30/86 13:22
(B=50168)

Detected Analytes

Note: Units are PPB unless otherwise indicated.

Key	Analyte	Result
S	Alpha Activity (LDL,pCi/L)	5.88E-01
S	Beta Activity (pCi/L)	4.24E+00
S	Acetone (VOA)	4.00E+01
S	Aluminum	2.32E+02
S	Ammonium	1.22E+02
S	Barium	1.70E+01
S	Calcium	1.05E+04
S	Chloride	2.89E+03
S	Conductivity-Field (uS)	9.20E+01
S	Copper	5.33E+02
S	Iron	1.26E+03
S	Lead (GFAA)	3.60E+01 (1 Dilution)
S	Magnesium	2.13E+03
S	Manganese	1.90E+01
B	Methylene chloride	1.20E+02
S	pH-Field	5.10E+00
S	Potassium	6.63E+02
S	Sodium	2.82E+03
S	Sulfate	8.60E+03
S	TOC	2.18E+03
S	Uranium	3.90E-01
S	Zinc	1.41E+02

Key: S = Sample, E = Extract, B = Blank, T = Trip Blank

2101-M Laboratory Wastewater

ID: MLOO, S=50167, 10/30/86 13:22
(B=50168)

Undetected Analytes

Note: MDAs are defined by contract with US Testing.
They do not reflect procedural limitations.
Units are PPB unless otherwise indicated.

Key	Analyte	Result
S	Acetonitrile	<3.00E+03
S	Acetonyl bromide	<1.00E+01
B	Acetonyl bromide	<1.00E+01
S	Acetophenone	<1.00E+01
S	2-Acetylaminofluorene	<1.00E+01
S	Acrolein	<1.00E+01
B	Acrolein	<1.00E+01
S	Acrylamide	<3.00E+03
S	Acrylonitrile	<1.00E+01
B	Acrylonitrile	<1.00E+01
S	Aldicarb	<1.00E+01
S	Allyl alcohol	<3.00E+03
S	4-Aminobiphenyl	<1.00E+01
S	Aminoethylene	<1.00E+01
S	5-Aminoethyl-3-isoxazolol	<1.00E+01
S	2-Aminonaphthalene	<1.00E+01
S	Amitrole	<1.00E+01
S	Aniline	<1.00E+01
S	Antimony	<1.00E+02
S	Aramite	<1.00E+01
S	Auramine	<1.00E+01
S	Benz[c]acridine	<1.00E+01
S	Benz[a]anthracene	<1.00E+01
S	Benzene	<1.00E+01
B	Benzene	<1.00E+01
S	Benzidine	<1.00E+01
S	Benzo[b]fluoranthene	<1.00E+01
S	Benzo[j]fluoranthene	<1.00E+01
S	Benzo[rst]pentaphene	<1.00E+01
S	Benzo[a]pyrene	<1.00E+01

Key: S = Sample, E = Extract, B = Blank, T = Trip Blank

2101-M Laboratory Wastewater

ID: MLOO, S=50167, 10/30/86 13:22
(B=50168)

Undetected Analytes

Note: MDAs are defined by contract with US Testing.
They do not reflect procedural limitations.
Units are PPB unless otherwise indicated.

Key	Analyte	Result
S	p-Benzoquinone	<1.00E+01
S	Benzyl chloride	<1.00E+01
S	Beryllium	<5.00E+00
S	Bis(2-chloroethoxy) ether	<1.00E+01
S	Bis(2-chloroethoxy)methane	<1.00E+01
S	Bis(chloroisopropyl) ether	<1.00E+01
S	Bis(chloromethyl) ether	<1.00E+01
B	Bis(chloromethyl) ether	<1.00E+01
S	Bis(ethylhexyl) phthalate	<1.00E+01
S	Bromocyanide	<3.00E+03
S	Bromoform	<1.00E+01
B	Bromoform	<1.00E+01
S	4-Bromophenyl phenyl ether	<1.00E+01
S	Butylbenzyl phthalate	<1.00E+01
S	Cadmium	<2.00E+00
S	Carbon disulfide	<1.00E+01
B	Carbon disulfide	<1.00E+01
S	Carbon tetrachloride	<1.00E+01
B	Carbon tetrachloride	<1.00E+01
S	Chloral	<3.00E+03
S	Chloroacetaldehyde	<3.00E+03
S	Chloroalkyl ethers	<1.00E+01
S	p-Chloroaniline	<1.00E+01
S	Chlorobenzene (VOA)	<1.00E+01
B	Chlorobenzene (VOA)	<1.00E+01
S	p-Chloro-m-cresol	<1.00E+01
S	Chlorocyanide	<3.00E+03
S	1-Chloro-2,3-epoxypropane	<1.00E+01
S	2-Chloroethyl vinyl ether	<1.00E+01
B	2-Chloroethyl vinyl ether	<1.00E+01

Key: S = Sample, E = Extract, B = Blank, T = Trip Blank

2101-M Laboratory Wastewater

ID: MLOO, S=50167, 10/30/86 13:22
(B=50168)

Undetected Analytes

Note: MDAs are defined by contract with US Testing.
They do not reflect procedural limitations.
Units are PPB unless otherwise indicated.

Key	Analyte	Result
S	Chloroform	<1.00E+01
B	Chloroform	<1.00E+01
S	Chloromethyl methyl ether	<1.00E+01
B	Chloromethyl methyl ether	<1.00E+01
S	Chloronaphazine	<1.00E+01
S	2-Chloronapthalene	<1.00E+01
S	o-Chlorophenol	<1.00E+01
S	3-Chloropropionitrile	<3.00E+03
S	Chromium	<1.00E+01
S	Chrysene	<1.00E+01
S	Cresol	<1.00E+01
S	Crotonaldehyde	<1.00E+01
B	Crotonaldehyde	<1.00E+01
S	Cyanide	<1.00E+01
S	Cyanogen	<3.00E+03
S	2,4-DCP	<1.00E+01
S	Dibenz[a,h]acridine	<1.00E+01
S	Dibenz[a,j]acridine	<1.00E+01
S	Dibenz[a,h]anthracene	<1.00E+01
S	7H-Dibenzo[c,g]carbazole	<1.00E+01
S	Dibenzo[a,e]pyrene	<1.00E+01
S	Dibenzo[a,h]pyrene	<1.00E+01
S	Dibromo-3-chloropropane	<1.00E+01
B	Dibromo-3-chloropropane	<1.00E+01
S	1,2-Dibromoethane	<1.00E+01
B	1,2-Dibromoethane	<1.00E+01
S	Dibromomethane	<1.00E+01
B	Dibromomethane	<1.00E+01
S	Di-n-butylnitrosamine	<1.00E+01
S	Di-n-butyl phthalate	<1.00E+01

Key: S = Sample, E = Extract, B = Blank, T = Trip Blank

2101-M Laboratory Wastewater

ID: MLOO, S=50167, 10/30/86 13:22
(B=50168)

Undetected Analytes

Note: MDAs are defined by contract with US Testing.
They do not reflect procedural limitations.
Units are PPB unless otherwise indicated.

Key	Analyte	Result
S	m-Dichlorobenzene	<1.00E+01
S	o-Dichlorobenzene	<1.00E+01
S	p-Dichlorobenzene (ABN)	<1.00E+01
S	3,3'-Dichlorobenzidine	<1.00E+01
S	1,4-Dichloro-2-butene	<1.00E+01
B	1,4-Dichloro-2-butene	<1.00E+01
S	Dichlorodifluoromethane	<1.00E+01
B	Dichlorodifluoromethane	<1.00E+01
S	1,1-Dichloroethane	<1.00E+01
B	1,1-Dichloroethane	<1.00E+01
S	1,2-Dichloroethane	<1.00E+01
B	1,2-Dichloroethane	<1.00E+01
S	1,2-Dichloroethylene	<1.00E+01
B	1,2-Dichloroethylene	<1.00E+01
S	Dichloromethylbenzene	<1.00E+01
S	2,6-Dichlorophenol	<1.00E+01
S	Dichloropropanol	<3.00E+03
S	1,2-Dichloropropane	<1.00E+01
B	1,2-Dichloropropane	<1.00E+01
S	1,3-Dichloropropane	<1.00E+01
B	1,3-Dichloropropane	<1.00E+01
S	Diethylarsine	<1.00E+01
B	Diethylarsine	<1.00E+01
S	Sym-Diethylhydrazine	<1.00E+01
B	Sym-Diethylhydrazine	<1.00E+01
S	Diethylnitrosamine	<1.00E+01
S	Diethylphthalate	<1.00E+01
S	Dihydrosafrole	<1.00E+01
S	3,3'-Dimethoxybenzidine	<1.00E+01
S	p-Dimethylaminoazobenzene	<1.00E+01

Key: S = Sample, E = Extract, B = Blank, T = Trip Blank

2101-M Laboratory Wastewater

ID: ML00, S=50167, 10/30/86 13:22
(B=50168)

Undetected Analytes

Note: MDAs are defined by contract with US Testing.
They do not reflect procedural limitations.
Units are PPB unless otherwise indicated.

Key	Analyte	Result
S	Dimethylbenz[a]anthracene	<1.00E+01
S	3,3'-Dimethylbenzidine	<1.00E+01
S	Sym-Dimethylhydrazine	<3.00E+03
S	Unsym-Dimethylhydrazine	<3.00E+03
S	Dimethylnitrosamine	<1.00E+01
S	2,4-Dimethylphenol	<1.00E+01
S	Dimethyl phthalate	<1.00E+01
S	Dinitrobenzene	<1.00E+01
S	Dinitrocresol and salts	<1.00E+01
S	Dinitro-o-cyclohexylphenol	<1.00E+01
S	2,4-Dinitrophenol	<1.00E+01
S	2,4-Dinitrotoluene	<1.00E+01
S	2,6-Dinitrotoluene	<1.00E+01
S	Dinoseb	<1.00E+01
S	Di-n-octyl phthalate	<1.00E+01
S	p-Dioxane	<5.00E+02
B	p-Dioxane	<5.00E+02
S	Diphenylamine	<1.00E+01
S	Sym-Diphenylhydrazine	<1.00E+01
S	Di-n-propylnitorsamine	<1.00E+01
S	Ethyl cyanide (DAI)	<3.00E+03
S	Ethylene oxide	<3.00E+03
S	Ethylmethacrylate	<1.00E+01
B	Ethylmethacrylate	<1.00E+01
S	Ethylmethanesulfonate	<1.00E+01
S	Fluoranthene	<1.00E+01
S	Fluoride (IC)	<5.00E+02
S	Fluoroacetic acid	<3.00E+03
S	Formaldehyde	<5.00E+02
B	Formaldehyde	<5.00E+02

Key: S = Sample, E = Extract, B = Blank, T = Trip Blank

2101-M Laboratory Wastewater

ID: ML00, S=50167, 10/30/86 13:22
(B=50168)

Undetected Analytes

Note: MDAs are defined by contract with US Testing.
They do not reflect procedural limitations.
Units are PPB unless otherwise indicated.

Key	Analyte	Result
S	Glycidylaldehyde	<3.00E+03
S	Hexachlorocyclopentadiene	<1.00E+01
S	Hexachloroethane	<1.00E+01
S	Hexachlorophene	<1.00E+01
S	Hexachloropropene	<1.00E+01
S	Hydrazine	<3.00E+03
S	Hydrogen sulfide	<1.00E+01
B	Hydrogen sulfide	<1.00E+01
S	Indeno(1,2,3-cd)pyrene	<1.00E+01
S	Iodomethane	<1.00E+01
B	Iodomethane	<1.00E+01
S	Isosafrole	<1.00E+01
S	Isobutyl alcohol	<3.00E+03
S	Kerosene	<1.00E+04
S	Maleichydrazide	<5.00E+02
S	Malononitrile	<1.00E+01
S	Melphalan	<1.00E+01
S	Mercury	<1.00E-01
S	Methacrylonitrile	<1.00E+01
B	Methacrylonitrile	<1.00E+01
S	Methapyrilene	<1.00E+01
S	Methomyl	<1.00E+01
S	2-Methylaziridine	<1.00E+01
S	Methyl bromide	<1.00E+01
B	Methyl bromide	<1.00E+01
S	3-Methylcholanthrene	<1.00E+01
S	Methyl chloride	<1.00E+01
B	Methyl chloride	<1.00E+01
S	Methylenebischloroaniline	<1.00E+01
S	Methylene chloride	<1.00E+01

Key: S = Sample, E = Extract, B = Blank, T = Trip Blank

2101-M Laboratory Wastewater

ID: ML00, S=50167, 10/30/86 13:22
(B=50168)

Undetected Analytes

Note: MDAs are defined by contract with US Testing.
They do not reflect procedural limitations.
Units are PPB unless otherwise indicated.

Key	Analyte	Result
S	Methyl ethyl ketone	<1.00E+01
B	Methyl ethyl ketone	<1.00E+01
S	Methylhydrazine	<3.00E+03
S	2-Methyllactonitrile	<1.00E+01
S	Methyl mercaptan	<1.00E+01
B	Methyl mercaptan	<1.00E+01
S	Methyl methacrylate	<1.00E+01
B	Methyl methacrylate	<1.00E+01
S	Methyl methanesulfonate	<1.00E+01
S	Methylnitrosourethane	<1.00E+01
S	Methylnitrosovinylamine	<1.00E+01
S	2-Methylpyridine	<1.00E+01
S	Methylthiouracil	<1.00E+01
S	1-Naphthalamine	<1.00E+01
S	Naphthalene	<1.00E+01
S	1,4-Naphthalenedione	<1.00E+01
S	Nickel	<1.00E+01
S	Nicotinic acid	<1.00E+02
S	Nitrate	<5.00E+02
S	p-Nitroaniline	<1.00E+01
S	Nitrobenzene	<1.00E+01
S	p-Nitrophenol	<1.00E+01
S	N-Nitrosodiethanolamine	<1.00E+01
S	N-Nitrosomethylethylamine	<1.00E+01
S	N-Nitrosomorpholine	<1.00E+01
S	N-Nitrosonornicotine	<1.00E+01
S	Nitrosopiperidine	<1.00E+01
S	Nitrosopyrrolidine	<1.00E+01
S	5-Nitro-o-toluidine	<1.00E+01
S	Osmium	<3.00E+02

Key: S = Sample, E = Extract, B = Blank, T = Trip Blank

2101-M Laboratory Wastewater

ID: ML00, S=50167, 10/30/86 13:22
(B=50168)

Undetected Analytes

Note: MDAs are defined by contract with US Testing.
They do not reflect procedural limitations.
Units are PPB unless otherwise indicated.

Key	Analyte	Result
S	Paraldehyde	<3.00E+03
S	Pentachlorobenzene	<1.00E+01
S	Pentachloroethane	<1.00E+01
B	Pentachloroethane	<1.00E+01
S	Pentachloronitrobenzene	<1.00E+01
S	Pentachlorophenol	<1.00E+01
S	Perchlorobenzene	<1.00E+01
S	Perchlorobutadiene	<1.00E+01
S	Phenacetin	<1.00E+01
S	Phenol	<1.00E+01
S	2-Phenyl-tert-butylamine	<1.00E+01
S	p-Phenylenediamine	<1.00E+01
S	Phosphate	<1.00E+03
S	Phthalic acid esters	<1.00E+01
S	Pronamide	<1.00E+01
S	1-Propenamine	<3.00E+03
S	Propargyl alcohol	<3.00E+03
S	Pyridine	<5.00E+02
B	Pyridine	<5.00E+02
S	Reserpine	<1.00E+01
S	Resorcinol	<1.00E+01
S	Safrol	<1.00E+01
S	Silver	<1.00E+01
S	Strontium	<3.00E+02
S	Strychnine	<5.00E+01
S	Sulfide	<1.00E+03
S	1,2,3,4-Tetrachlorobenzene	<1.00E+01
S	1,2,3,5-Tetrachlorobenzene	<1.00E+01
S	1,2,4,5-Tetrachlorobenzene	<1.00E+01
S	1,1,1,2-Tetrachloroethane	<1.00E+01

Key: S = Sample, E = Extract, B = Blank, T = Trip Blank

2101-M Laboratory Wastewater

ID: ML00, S=50167, 10/30/86 13:22
(B=50168)

Undetected Analytes

Note: MDAs are defined by contract with US Testing.
They do not reflect procedural limitations.
Units are PPB unless otherwise indicated.

Key	Analyte	Result
B	1,1,1,2-Tetrachloroethane	<1.00E+01
S	1,1,2,2-Tetrachloroethane	<1.00E+01
B	1,1,2,2-Tetrachloroethane	<1.00E+01
S	Tetrachloroethylene	<1.00E+01
B	Tetrachloroethylene	<1.00E+01
S	2,3,4,6-Tetrachlorophenol	<1.00E+01
S	Thiofanox	<1.00E+01
S	Thiophenol	<1.00E+01
S	Thiuram	<1.00E+01
S	Toluene	<1.00E+01
B	Toluene	<1.00E+01
S	Toluenediamine	<1.00E+01
S	o-Toluidine hydrochloride	<1.00E+01
S	TOX	<1.00E+02
S	1,2,3-Trichlorobenzene	<1.00E+01
S	1,2,4-Trichlorobenzene	<1.00E+01
S	1,3,5-Trichlorobenzene	<1.00E+01
S	1,1,1-Trichloroethane	<1.00E+01
B	1,1,1-Trichloroethane	<1.00E+01
S	1,1,2-Trichloroethane	<1.00E+01
B	1,1,2-Trichloroethane	<1.00E+01
S	Trichloroethene	<1.00E+01
B	Trichloroethene	<1.00E+01
S	Trichloromethanethiol	<1.00E+01
B	Trichloromethanethiol	<1.00E+01
S	Trichloromonofluoromethane	<1.00E+01
B	Trichloromonofluoromethane	<1.00E+01
S	2,4,5-Trichlorophenol	<1.00E+01
S	2,4,6-Trichlorophenol	<1.00E+01
S	Trichloropropane	<1.00E+01

Key: S = Sample, E = Extract, B = Blank, T = Trip Blank

2101-M Laboratory Wastewater

ID: ML00, S=50167, 10/30/86 13:22
(B=50168)

Undetected Analytes

Note: MDAs are defined by contract with US Testing.
They do not reflect procedural limitations.
Units are PPB unless otherwise indicated.

Key	Analyte	Result
B	Trichloropropane	<1.00E+01
S	1,2,3-Trichloropropane	<1.00E+01
B	1,2,3-Trichloropropane	<1.00E+01
S	Triethylphosphorothioate	<1.00E+01
S	Sym-Trinitrobenzene	<1.00E+01
S	TRIS	<1.00E+01
S	Urethane	<3.00E+03
S	Vanadium	<5.00E+00
S	Vinyl chloride	<1.00E+01
B	Vinyl chloride	<1.00E+01
S	Vinylidene dichloride	<1.00E+01
B	Vinylidene dichloride	<1.00E+01
S	Warfarin	<1.00E+01
S	m-Xylene	<1.00E+01
B	m-Xylene	<1.00E+01
S	o-, p-Xylene	<1.00E+01
B	o-, p-Xylene	<1.00E+01

Key: S = Sample, E = Extract, B = Blank, T = Trip Blank

2101-M Laboratory Wastewater

ID: ML00, S=50232, 01/26/87 10:25
(B=50233)

Detected Analytes

Note: Units are PPB unless otherwise indicated.

Key	Analyte	Result
S	Beta Activity (pCi/L)	2.57E+00
S	Ammonium	1.76E+02
S	Barium	1.00E+01
S	Calcium	5.80E+03
S	Chloride	7.00E+02
S	Conductivity-Field (uS)	6.30E+01
S	Copper	4.56E+02
S	Iron	2.41E+02
S	Magnesium	1.30E+03
S	Manganese	7.00E+00
B	Methylene chloride	5.50E+01
S	pH-Field	5.24E+00
S	Potassium	3.16E+02
S	Sodium	7.39E+02
S	Sulfate	4.97E+03
S	Temperature-Field (celsius)	3.17E+01
S	TOC	1.28E+04
S	TOX (LDL)	4.02E+01
S	Uranium	3.12E-01
S	Zinc	4.60E+01

Undetected Analytes

Note: MDAs are defined by contract with US Testing.
They do not reflect procedural limitations.
Units are PPB unless otherwise indicated.

Key	Analyte	Result
S	Acetonitrile	<3.00E+03
S	Acetonyl bromide	<1.00E+01
B	Acetonyl bromide	<1.00E+01
S	Acetophenone	<1.00E+01
S	2-Acetylaminofluorene	<1.00E+01

Key: S = Sample, E = Extract, B = Blank, T = Trip Blank

2101-M Laboratory Wastewater

ID: ML00, S=50232, 01/26/87 10:25
(B=50233)

Undetected Analytes

Note: MDAs are defined by contract with US Testing.
They do not reflect procedural limitations.
Units are PPB unless otherwise indicated.

Key	Analyte	Result
S	Acrolein	<1.00E+01
B	Acrolein	<1.00E+01
S	Acrylamide	<3.00E+03
S	Acrylonitrile	<1.00E+01
B	Acrylonitrile	<1.00E+01
S	Aldicarb	<1.00E+01
S	Allyl alcohol	<3.00E+03
S	Aluminum	<1.50E+02
S	4-Aminobiphenyl	<1.00E+01
S	Aminoethylene	<1.00E+01
S	5-Aminoethyl-3-isoxazolol	<1.00E+01
S	2-Aminonapthalene	<1.00E+01
S	Amitrole	<1.00E+01
S	Aniline	<1.00E+01
S	Antimony	<1.00E+02
S	Aramite	<1.00E+01
S	Auramine	<1.00E+01
S	Benz[c]acridine	<1.00E+01
S	Benz[a]anthracene	<1.00E+01
S	Benzene	<1.00E+01
B	Benzene	<1.00E+01
S	Benzidine	<1.00E+01
S	Benzo[b]fluoranthene	<1.00E+01
S	Benzo[j]fluoranthene	<1.00E+01
S	Benzo[rst]pentaphene	<1.00E+01
S	Benzo[a]pyrene	<1.00E+01
S	p-Benzoquinone	<1.00E+01
S	Benzyl chloride	<1.00E+01
S	Beryllium	<5.00E+00
S	Bis(2-chloroethoxy) ether	<1.00E+01

Key: S = Sample, E = Extract, B = Blank, T = Trip Blank

2101-M Laboratory Wastewater

ID: MLOO, S=50232, 01/26/87 10:25
(B=50233)

Undetected Analytes

Note: MDAs are defined by contract with US Testing.
They do not reflect procedural limitations.
Units are PPB unless otherwise indicated.

Key	Analyte	Result
S	Bis(2-chloroethoxy)methane	<1.00E+01
S	Bis(chloroisopropyl) ether	<1.00E+01
S	Bis(chloromethyl) ether	<1.00E+01
B	Bis(chloromethyl) ether	<1.00E+01
S	Bis(ethylhexyl) phthalate	<1.00E+01
S	Bromocyanide	<3.00E+03
S	Bromoform	<1.00E+01
B	Bromoform	<1.00E+01
S	4-Bromophenyl phenyl ether	<1.00E+01
S	Butylbenzyl phthalate	<1.00E+01
S	Cadmium	<2.00E+00
S	Carbon disulfide	<1.00E+01
B	Carbon disulfide	<1.00E+01
S	Carbon tetrachloride	<1.00E+01
B	Carbon tetrachloride	<1.00E+01
S	Chloral	<3.00E+03
S	Chloroacetaldehyde	<3.00E+03
S	Chloroalkyl ethers	<1.00E+01
S	p-Chloroaniline	<1.00E+01
S	Chlorobenzene (VOA)	<1.00E+01
B	Chlorobenzene (VOA)	<1.00E+01
S	p-Chloro-m-cresol	<1.00E+01
S	Chlorocyanide	<3.00E+03
S	1-Chloro-2,3-epoxypropane	<1.00E+01
S	2-Chloroethyl vinyl ether	<1.00E+01
B	2-Chloroethyl vinyl ether	<1.00E+01
S	Chloroform	<1.00E+01
B	Chloroform	<1.00E+01
S	Chloromethyl methyl ether	<1.00E+01
B	Chloromethyl methyl ether	<1.00E+01

Key: S = Sample, E = Extract, B = Blank, T = Trip Blank

2101-M Laboratory Wastewater

ID: MLOO, S=50232, 01/26/87 10:25
(B=50233)

Undetected Analytes

Note: MDAs are defined by contract with US Testing.
They do not reflect procedural limitations.
Units are PPB unless otherwise indicated.

Key	Analyte	Result
S	Chloronaphazine	<1.00E+01
S	2-Chloronaphthalene	<1.00E+01
S	o-Chlorophenol	<1.00E+01
S	3-Chloropropionitrile	<3.00E+03
S	Chromium	<1.00E+01
S	Chrysene	<1.00E+01
S	Cresol	<1.00E+01
S	Crotonaldehyde	<1.00E+01
B	Crotonaldehyde	<1.00E+01
S	Cyanide	<1.00E+01
S	Cyanogen	<3.00E+03
S	2,4-DCP	<1.00E+01
S	Dibenz[a,h]acridine	<1.00E+01
S	Dibenz[a,j]acridine	<1.00E+01
S	Dibenz[a,h]anthracene	<1.00E+01
S	7H-Dibenzo[c,g]carbazole	<1.00E+01
S	Dibenzo[a,e]pyrene	<1.00E+01
S	Dibenzo[a,h]pyrene	<1.00E+01
S	Dibromo-3-chloropropane	<1.00E+01
B	Dibromo-3-chloropropane	<1.00E+01
S	1,2-Dibromoethane	<1.00E+01
B	1,2-Dibromoethane	<1.00E+01
S	Dibromomethane	<1.00E+01
B	Dibromomethane	<1.00E+01
S	Di-n-butylnitrosamine	<1.00E+01
S	Di-n-butyl phthalate	<1.00E+01
S	m-Dichlorobenzene	<1.00E+01
S	o-Dichlorobenzene	<1.00E+01
S	p-Dichlorobenzene (ABN)	<1.00E+01
S	3,3'-Dichlorobenzidine	<1.00E+01

Key: S = Sample, E = Extract, B = Blank, T = Trip Blank

2101-M Laboratory Wastewater

ID: MLOO, S=50232, 01/26/87 10:25
(B=50233)

Undetected Analytes

Note: MDAs are defined by contract with US Testing.
They do not reflect procedural limitations.
Units are PPB unless otherwise indicated.

Key #	Analyte	Result
S	1,4-Dichloro-2-butene	<1.00E+01
B	1,4-Dichloro-2-butene	<1.00E+01
S	Dichlorodifluoromethane	<1.00E+01
B	Dichlorodifluoromethane	<1.00E+01
S	1,1-Dichloroethane	<1.00E+01
B	1,1-Dichloroethane	<1.00E+01
S	1,2-Dichloroethane	<1.00E+01
B	1,2-Dichloroethane	<1.00E+01
S	1,2-Dichloroethylene	<1.00E+01
B	1,2-Dichloroethylene	<1.00E+01
S	Dichloromethylbenzene	<1.00E+01
S	2,6-Dichlorophenol	<1.00E+01
S	Dichloropropanol	<3.00E+03
S	1,2-Dichloropropane	<1.00E+01
B	1,2-Dichloropropane	<1.00E+01
S	1,3-Dichloropropene	<1.00E+01
B	1,3-Dichloropropene	<1.00E+01
S	Diethylarsine	<1.00E+01
B	Diethylarsine	<1.00E+01
S	Sym-Diethylhydrazine	<1.00E+01
B	Sym-Diethylhydrazine	<1.00E+01
S	Diethylnitrosamine	<1.00E+01
S	Diethylphthalate	<1.00E+01
S	Dihydrosafrole	<1.00E+01
S	3,3'-Dimethoxybenzidine	<1.00E+01
S	p-Dimethylaminoazobenzene	<1.00E+01
S	DimethylbenzCalanthracene	<1.00E+01
S	3,3'-Dimethylbenzidine	<1.00E+01
S	Sym-Dimethylhydrazine	<3.00E+03
S	Unsym-Dimethylhydrazine	<3.00E+03

Key: S = Sample, E = Extract, B = Blank, T = Trip Blank

2101-M Laboratory Wastewater

ID: MLOO, S=50232, 01/26/87 10:25
(B=50233)

Undetected Analytes

Note: MDAs are defined by contract with US Testing.
They do not reflect procedural limitations.
Units are PPB unless otherwise indicated.

Key #	Analyte	Result
S	Dimethylnitrosamine	<1.00E+01
S	2,4-Dimethylphenol	<1.00E+01
S	Dimethyl phthalate	<1.00E+01
S	Dinitrobenzene	<1.00E+01
S	Dinitrocresol and salts	<1.00E+01
S	Dinitro-o-cyclohexylphenol	<1.00E+01
S	2,4-Dinitrophenol	<1.00E+01
S	2,4-Dinitrotoluene	<1.00E+01
S	2,6-Dinitrotoluene	<1.00E+01
S	Dinoseb	<1.00E+01
S	Di-n-octyl phthalate	<1.00E+01
S	p-Dioxane	<5.00E+02
B	p-Dioxane	<5.00E+02
S	Diphenylamine	<1.00E+01
S	Sym-Diphenylhydrazine	<1.00E+01
S	Di-n-propylnitorsamine	<1.00E+01
S	Ethyl cyanide (DAI)	<3.00E+03
S	Ethylene oxide	<3.00E+03
S	Ethylmethacrylate	<1.00E+01
B	Ethylmethacrylate	<1.00E+01
S	Ethylmethanesulfonate	<1.00E+01
S	Fluoranthene	<1.00E+01
S	Fluoride (IC)	<5.00E+02
S	Fluoroacetic acid	<3.00E+03
S	Formaldehyde	<5.00E+02
B	Formaldehyde	<5.00E+02
S	Glycidylaldehyde	<3.00E+03
S	Hexachlorocyclopentadiene	<1.00E+01
S	Hexachloroethane	<1.00E+01
S	Hexachlorophene	<1.00E+01

Key: S = Sample, E = Extract, B = Blank, T = Trip Blank

2101-M Laboratory Wastewater

ID: MLOO, S=50232, 01/26/87 10:25
(B=50233)

Undetected Analytes

Note: MDAs are defined by contract with US Testing.
They do not reflect procedural limitations.
Units are PPB unless otherwise indicated.

Key	Analyte	Result
S	Hexachloropropene	<1.00E+01
S	Hydrazine	<3.00E+03
S	Hydrogen sulfide	<1.00E+01
B	Hydrogen sulfide	<1.00E+01
S	Indeno(1,2,3-cd)pyrene	<1.00E+01
S	Iodomethane	<1.00E+01
B	Iodomethane	<1.00E+01
S	Isosafrole	<1.00E+01
S	Isobutyl alcohol	<3.00E+03
S	Kerosene	<1.00E+04
S	Lead (GFAA)	<5.00E+00
S	Maleichydrazide	<5.00E+02
S	Malononitrile	<1.00E+01
S	Melphalan	<1.00E+01
S	Mercury	<1.00E-01
S	Methacrylonitrile	<1.00E+01
B	Methacrylonitrile	<1.00E+01
S	Methapyrilene	<1.00E+01
S	Methomyl	<1.00E+01
S	2-Methylaziridine	<1.00E+01
S	Methyl bromide	<1.00E+01
B	Methyl bromide	<1.00E+01
S	3-Methylcholanthrene	<1.00E+01
S	Methyl chloride	<1.00E+01
B	Methyl chloride	<1.00E+01
S	Methylenebischloroaniline	<1.00E+01
S	Methylene chloride	<1.00E+01
S	Methyl ethyl ketone	<1.00E+01
B	Methyl ethyl ketone	<1.00E+01
S	Methylhydrazine	<3.00E+03

Key: S = Sample, E = Extract, B = Blank, T = Trip Blank

2101-M Laboratory Wastewater

ID: MLOO, S=50232, 01/26/87 10:25
(B=50233)

Undetected Analytes

Note: MDAs are defined by contract with US Testing.
They do not reflect procedural limitations.
Units are PPB unless otherwise indicated.

Key	Analyte	Result
S	2-Methyllactonitrile	<1.00E+01
S	Methyl mercaptan	<1.00E+01
B	Methyl mercaptan	<1.00E+01
S	Methyl methacrylate	<1.00E+01
B	Methyl methacrylate	<1.00E+01
S	Methyl methanesulfonate	<1.00E+01
S	Methylnitrosourethane	<1.00E+01
S	Methylnitrosovinylamine	<1.00E+01
S	2-Methylpyridine	<1.00E+01
S	Methylthiouracil	<1.00E+01
S	1-Naphthalamine	<1.00E+01
S	Naphthalene	<1.00E+01
S	1,4-Naphthalenedione	<1.00E+01
S	Nickel	<1.00E+01
S	Nicotinic acid	<1.00E+02
S	Nitrate	<5.00E+02
S	p-Nitroaniline	<1.00E+01
S	Nitrobenzene	<1.00E+01
S	p-Nitrophenol	<1.00E+01
S	N-Nitrosodiethanolamine	<1.00E+01
S	N-Nitrosomethylethylamine	<1.00E+01
S	N-Nitrosomorpholine	<1.00E+01
S	N-Nitrosonornicotine	<1.00E+01
S	Nitrosopiperidine	<1.00E+01
S	Nitrosopyrrolidine	<1.00E+01
S	5-Nitro-o-toluidine	<1.00E+01
S	Osmium	<3.00E+02
S	Paraldehyde	<3.00E+03
S	Pentachlorobenzene	<1.00E+01
S	Pentachloroethane	<1.00E+01

Key: S = Sample, E = Extract, B = Blank, T = Trip Blank

2101-M Laboratory Wastewater

ID: ML00, S=50232, 01/26/87 10:25
(B=50233)

Undetected Analytes

Note: MDAs are defined by contract with US Testing.
They do not reflect procedural limitations.
Units are PPB unless otherwise indicated.

Key	Analyte	Result
B	Pentachloroethane	<1.00E+01
S	Pentachloronitrobenzene	<1.00E+01
S	Pentachlorophenol	<1.00E+01
S	Perchlorobenzene	<1.00E+01
S	Perchlorobutadiene	<1.00E+01
S	Phenacetin	<1.00E+01
S	Phenol	<1.00E+01
S	2-Phenyl-tert-butylamine	<1.00E+01
S	p-Phenylenediamine	<1.00E+01
S	Phosphate	<1.00E+03
S	Phthalic acid esters	<1.00E+01
S	Pronamide	<1.00E+01
S	1-Propanamine	<3.00E+03
S	Propargyl alcohol	<3.00E+03
S	Pyridine	<5.00E+02
B	Pyridine	<5.00E+02
S	Reserpine	<1.00E+01
S	Resorcinol	<1.00E+01
S	Safrol	<1.00E+01
S	Silver	<1.00E+01
S	Strontium	<3.00E+02
S	Strychnine	<5.00E+01
S	Sulfide	<1.00E+03
S	1,2,3,4-Tetrachlorobenzene	<1.00E+01
S	1,2,3,5-Tetrachlorobenzene	<1.00E+01
S	1,2,4,5-Tetrachlorobenzene	<1.00E+01
S	1,1,1,2-Tetrachloroethane	<1.00E+01
B	1,1,1,2-Tetrachloroethane	<1.00E+01
S	1,1,2,2-Tetrachloroethane	<1.00E+01
B	1,1,2,2-Tetrachloroethane	<1.00E+01

Key: S = Sample, E = Extract, B = Blank, T = Trip Blank

2101-M Laboratory Wastewater

ID: ML00, S=50232, 01/26/87 10:25
(B=50233)

Undetected Analytes

Note: MDAs are defined by contract with US Testing.
They do not reflect procedural limitations.
Units are PPB unless otherwise indicated.

Key	Analyte	Result
S	Tetrachloroethylene	<1.00E+01
B	Tetrachloroethylene	<1.00E+01
S	2,3,4,6-Tetrachlorophenol	<1.00E+01
S	Thiofanox	<1.00E+01
S	Thiophenol	<1.00E+01
S	Thiuram	<1.00E+01
S	Toluene	<1.00E+01
B	Toluene	<1.00E+01
S	Toluenediamine	<1.00E+01
S	o-Toluidine hydrochloride	<1.00E+01
S	1,2,3-Trichlorobenzene	<1.00E+01
S	1,2,4-Trichlorobenzene	<1.00E+01
S	1,3,5-Trichlorobenzene	<1.00E+01
S	1,1,1-Trichloroethane	<1.00E+01
B	1,1,1-Trichloroethane	<1.00E+01
S	1,1,2-Trichloroethane	<1.00E+01
B	1,1,2-Trichloroethane	<1.00E+01
S	Trichloroethene	<1.00E+01
B	Trichloroethene	<1.00E+01
S	Trichloromethanethiol	<1.00E+01
B	Trichloromethanethiol	<1.00E+01
S	Trichloromonofluoromethane	<1.00E+01
B	Trichloromonofluoromethane	<1.00E+01
S	2,4,5-Trichlorophenol	<1.00E+01
S	2,4,6-Trichlorophenol	<1.00E+01
S	Trichloropropane	<1.00E+01
B	Trichloropropane	<1.00E+01
S	1,2,3-Trichloropropane	<1.00E+01
B	1,2,3-Trichloropropane	<1.00E+01
S	Triethylphosphorothioate	<1.00E+01

ey: S = Sample, E = Extract, B = Blank, T = Trip Blank

2101-M Laboratory Wastewater

ID: MLOO, S=50232, 01/26/87 10:25
(B=50233)

Undetected Analytes

Note: MDAs are defined by contract with US Testing.
They do not reflect procedural limitations.
Units are PPB unless otherwise indicated.

Key	Analyte	Result
S	Sym-Trinitrobenzene	<1.00E+01
S	TRIS	<1.00E+01
S	Urethane	<3.00E+03
S	Vanadium	<5.00E+00
S	Vinyl chloride	<1.00E+01
B	Vinyl chloride	<1.00E+01
S	Vinylidene dichloride	<1.00E+01
B	Vinylidene dichloride	<1.00E+01
S	Warfarin	<1.00E+01
S	m-Xylene	<1.00E+01
B	m-Xylene	<1.00E+01
S	o-, p-Xylene	<1.00E+01
B	o-, p-Xylene	<1.00E+01

Questionable Results

Note: a = Less than Negative of Result
Units are PPB unless otherwise indicated.

Key	Analyte	Result
S	Alpha Activity (LDL,pCi/L)	a5.67E-02

Key: S = Sample, E = Extract, B = Blank, T = Trip Blank

DISTRIBUTION

Number of Copies			
ONSITE			
7	U.S. Department of Energy-Richland Operations Office		Document No.
	R. M. Carosino	A4-52	11-15
	R. N. Krekel	A5-15	
	R. G. McLeod	A5-19	
	J. E. Rasmussen	A5-15	
	MACTEC	A4-35	
	DOE-RL Reading Room (2)	H2-53	
2	Pacific Northwest Laboratory		
	M. A. Chamness	K6-96	22
	Hanford Technical Library	P8-55	19
23	Westinghouse Hanford Company		
	W. G. Cox (3)	H6-23	20,24,25,41
	R. A. Jekel	L5-63	40
	P. J. Mackey	B3-15	18
	S. M. Price	H6-23	
	W. A. Retterer	S2-20	17
	F. A. Ruck III	H6-23	21
	J. L. Waite	B2-35	16
	Central Files (3)	L8-04	32
	Document Clearance and Administration (3)	H4-17	35,36,37
	RCRA Files/GHL	H6-23	38

This page intentionally left blank.