START

0038816

DOE/RL-94-48
Draft A

100-KR-4 Operable Unit Focused Feasibility Study Report

9413294.3098

United States
Department of Energy
Richland, Washington

Approved for Public Release

THIS PAGE INTENTIONALLY
LEFT BLANK

TRADEMARK DISCLAIMER

Reference herein to any specific commercial product, process, or service by trade name, trademark, manufacturer, or otherwise, does not necessarily constitute or imply its endorsement, recommendation, or favoring by the United States Government or any agency thereof or its contractors or subcontractors.

This report has been reproduced from the best available copy.

Printed in the United States of America

DISCLM-4.CHP (1-91)

THIS PAGE INTENTIONALLY
LEFT BLANK

DOE/RL-94-48

Draft A

100-KR-4 Operable Unit Focused Feasibility Study Report

Date Published
October 1994

United States
Department of Energy
P.O. Box 550
Richland, Washington 99352

Approved for Public Release

THIS PAGE INTENTIONALLY
LEFT BLANK

EXECUTIVE SUMMARY

This focused feasibility study (FFS) report presents the detailed analysis of alternatives for interim remedial measures (IRM) for the 100-KR-4 Operable Unit. The 100-KR-4 Operable Unit is one of four operable units associated with the 100 K Area of the Hanford Site. Three of the operable units (100-KR-1, KR-2, and KR-3) are source units. The 100-KR-4 Groundwater Operable Unit includes the groundwater beneath the source operable units and the adjacent groundwater, surface water, fluvial sediments, and aquatic biota impacted by the overlying source operable unit.

The key assumptions which form the basis for the FFS are as follows:

- The purpose of the IRM is to address an identified threat to human health or the environment.
- The objectives of the FFS are to protect the Columbia River and to abate offsite migration of contaminants.
- To meet the objectives, the alternatives are aimed at containment and control of contaminant plumes. (The alternatives are not designed for mass reduction or aquifer cleanup.)
- The occasional-use scenario is assumed for the operable unit.
- For purposes of cost estimates, the FFS uses a finite lifecycle for the IRM to the year 2008. At this time it is assumed that any final action will be implemented, be it a continuation of the IRM or a redirection of the action.
- The *100 Area Feasibility Study Phases 1 & 2* (DOE-RL 1994a) forms the basis for the alternatives evaluated in the FFS. Additional alternatives or deviations from the alternatives are only considered when the defined alternative does not meet the operable unit specifics. The Comprehensive Environmental Response, Compensation, and Liability Act (CERCLA) does, however, allow the flexibility of specifying different process options at any point in the remedial investigation/feasibility study process if warranted by site circumstances.
- Disposal to the Environment Restoration Disposal Facility is assumed for all solid wastes generated. This includes the assumption that sufficient space is available and that the facility will be operating on a schedule consistent with the IRM.

Based on the qualitative risk assessment performed for the operable unit, all these contaminants of potential concern (COPC) had incremental cancer risks in the low or very low range ($< 1E-4$) under the occasional-use exposure scenario. Therefore, none of these COPC represent an unacceptable human health risk under this exposure scenario.

Ecological scenarios were evaluated using biological receptors which live in or near the Columbia River. The ecological risk assessment identified potential risks from carbon-14, chromium, iron, lead, silver, and zinc based on exceedances of Ambient Water Quality Criteria. These exceedances were based on the maximum concentrations detected in the near river wells. No allowance was made for environmental attenuation of contaminants. These constituents were generally not identified in the river; the concentrations are significantly reduced by the mixing and dilution action of the river.

Based on an additional analysis of the data, carbon-14, chromium, and zinc are identified as the contaminants of concern (COC) for the operable unit. In the context of FFS, COC are those constituents that must be addressed by remedial actions.

The FFS process includes an evaluation of remedial action objectives (RAO). The RAO are medium-specific or operable unit-specific objectives for protecting human health and the environment. The RAO are based on the exposure scenario, COC, applicable or relevant and appropriate requirements (ARAR), and exposure pathways and include specific remediation goals so that an appropriate range of remedial options can be developed for analysis.

The RAO for environmental protection are:

- control groundwater movement to minimize release of COC from groundwater to surface water that would result in concentrations in the river in excess of Ambient Water Quality Criteria

- prevent destruction of critical habitat; minimize destruction of noncritical habitat; prevent adverse impacts to threatened or endangered species

- prevent erosion of soil during remediation that would contribute to surface water concentrations greater than the Ambient Water Quality Criteria for the COC in surface water.

The preliminary remediation goal (PRG) for chromium is 50 μg/L measured in two consecutive sampling rounds in the near-river wells as established in the Tri-Party Agreement Change Control Form M-15-93-02 (Ecology et al. 1994). Chromium concentrations below the chronic Ambient Water Quality Criterion of 11 μg/L as measured in the substrate are considered alternate PRG. These PRG represent screening criteria for the FFS the PRG for carbon-14 is 4900 pCi/L; the PRG for zinc is 110 μg/L. Final remediation goals will be set in the record of decision.

In the *100 Area Feasibility Study Phases 1 and 2* (DOE-RL 1994a), alternatives were developed and screened for the 100 Area as a whole. The FFS modifies these alternatives to meet site-specific conditions. The alternatives considered in the FFS are:

- GW-1 - no action
- GW-2 - institutional controls/continued current actions
- GW-3 - containment

- GW-4 - in situ treatment
- GW-5 - removal, treatment, disposal using ion exchange
- GW-6 - removal, treatment, disposal using reverse osmosis.

Table ES-1 lists the processes included in each alternative. Alternative GW-4 was not considered in the FFS because this alternative applies to organic contaminants and nitrate, neither of which are COC for the operable unit.

The alternatives are defined in detail in the FFS to facilitate the detailed analysis. The detailed analysis is presented in tables where each alternative is compared to seven of the nine CERCLA criteria. These criteria are as follows:

- overall protectiveness
- compliance with ARAR
- long-term effectiveness
- reduction of toxicity, mobility, or volume
- short-term effectiveness
- implementability
- cost.

The comparative analysis uses the results of the detailed analysis to compare alternatives to each other for their relative ability to meet the CERCLA criteria. The results of the detailed and comparative analyses are summarized in Figure ES-1. The FFS will support the proposed plan for the IRM in the operable unit.

9413294.3103

THIS PAGE INTENTIONALLY
LEFT BLANK

Figure ES-1 Summary of Comparative Analysis

Evaluation Criteria	100-KR-4 Groundwater Operable Unit				
	Alternatives[1]				
	GW-1	GW-2	GW-3	GW-5	GW-6
Overall Protection of Human Health and Environment					
Compliance with ARAR[2]					
Long-Term Effectiveness and Permanence					
Reduction of Toxicity, Mobility, and Volume					
Short-Term Effectiveness					
Implementability					
Present Worth ($ millions)	0	0.8	66.8	76.1	44.3

Notes:

1. Alternatives are summarized as follows:
   - GW-1 No Interim Action
   - GW-2 Institutional Controls/Continued Current Actions
   - GW-3 Containment
   - GW-5 Removal/Ion Exchange Treatment/Disposal
   - GW-6 Removal/Reverse Osmosis Treatment/Disposal
2. ARAR - applicable or relevant and appropriate requirement

Note: GW-4 (In Situ Treatment) was not evaluated.

Key:

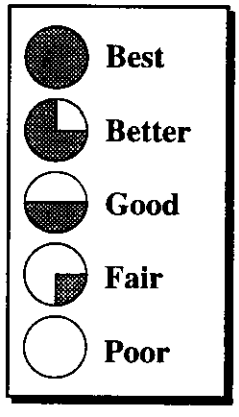

E940829.8b

9413294.3104

THIS PAGE INTENTIONALLY
LEFT BLANK

Table ES-1 Alternatives and Process Options

ALTERNATIVE	PROCESSES
GW-1: No Action	Groundwater monitoring
GW-2: Institutional Controls/ Continued Current Actions	Access restrictions Groundwater monitoring Evaluation of results of current actions - pilot-scale treatability test - Columbia River Comprehensive Impact Evaluation - river/groundwater interaction studies - chromium speciation studies
GW-3: Containment	Sheet pile Extraction wells
GW-5: Removal, Treatment, and Disposal Using Ion Exchange	Removal - extraction wells Physical treatment: - filtration - ion exchange Stabilization/solidification: - cement-based solidification Liquid disposal: - river discharge or injection into an aquifer Solids disposal: - ERDF, W-025, or other site Monitoring
GW-6: Removal, Treatment, and Disposal Using Reverse Osmosis	Removal: - extraction wells Physical treatment: - filtration - reverse osmosis - forced evaporation Stabilization/solidification: - cement-based solidification Liquid disposal: - crib disposal - river disposal - injection to aquifer Solids disposal: - ERDF, W-025, or other site Monitoring

ERDF - Environmental Restoration Disposal Facility

THIS PAGE INTENTIONALLY
LEFT BLANK

ACRONYMS

ARAR	applicable or relevant and appropriate requirement
BAT	best available technology
CAD	computer-aided design
CERCLA	Comprehensive Environmental Response, Compensation, and Liability Act
CFR	Code of Federal Regulations
COPC	contaminants of potential concern
COC	contaminants of concern
CRCIA	Columbia River Comprehensive Impact Assessment
CSCF	continuously stirred continuous flow
CSTR	continuously stirred - tank bioreactors
DF	decontamination factor
DOE	U.S. Department of Energy
DOT	U.S. Department of Transportation
Ecology	Washington State Department of Ecology
EHQ	environmental hazard quotient
EM	environmental management
EPA	U.S. Environmental Protection Agency
ERA	expedited response action
ERDF	Environmental Restoration Disposal Facility
FBR	fluidized-bed bioreactors
FFS	focused feasibility study
FS	feasibility study
GRA	general response action
HI	hazard index
HQ	hazard quotient
HRA-EIS	Hanford Remedial Action Environmental Impact Statement
HSRAM	Hanford Site Risk Assessment Methodology
ICR	incremental cancer risk
IRM	interim remedial measures
LFI	limited field investigation
MCL	maximum contaminant level
meq/mL	milliequivalent per milliliter
MMOC	modified method of characteristics
MOC	method of characteristics
MTCA	Model Toxics Control Act
NEPA	National Environmental Policy Act
NCP	National Contingency Plan
NPDES	National Pollutant Discharge Elimination System
NPL	National Priorities List
O&M	operations and maintenance
OTD	Office of Technology Development
PNL	Pacific Northwest Laboratory
PRG	preliminary remediation goal
QRA	qualitative risk assessment

9413294.3106

ACRONYMS (cont)

RAO	remedial action objective
RCRA	Resource Conservation and Recovery Act
RI	remedial investigation
ROD	record of decision
SDWA	Safe Drinking Water Act
SVE	soil vapor extraction
TBC	to be considered
Tri-Party Agreement	Hanford Federal Facility Agreement and Consent Order
USGS	United States Geological Service
VOC	volatile organic compounds
WAC	Washington Administrative Code

9413294.3107

CONTENTS

1.0 INTRODUCTION 1-1
1.1 PURPOSE AND SCOPE 1-1
1.2 REPORT ORGANIZATION 1-2
1.3 SUMMARY OF THE HANFORD PAST-PRACTICE STRATEGY 1-3
1.4 SUMMARY OF 100 AREA FEASIBILITY STUDY PHASES 1 AND 2 1-3
1.5 100 AREA-WIDE AND AGGREGATE AREA STUDIES 1-4
1.5.1 Hanford Site Background 1-4
1.5.2 Hanford Remedial Action Environmental Impact Statement 1-5
1.5.3 Ecological Summary 1-5
1.5.4 Groundwater/River Interaction 1-6
1.5.5 Comprehensive River Study 1-7
1.5.6 Investigations of Chromium in Groundwater 1-7
1.6 SUMMARY OF 100 AREA GROUNDWATER TREATABILITY STUDIES 1-7
1.6.1 Precipitation/Reduction 1-8
1.6.2 Ion Exchange 1-9
1.7 PILOT-SCALE TREATABILITY STUDY 1-10
1.8 KEY ASSUMPTIONS FOR FFS 1-11

2.0 OPERABLE UNIT BACKGROUND 2-1
2.1 LIMITED FIELD INVESTIGATION 2-1
2.2 QUALITATIVE RISK ASSESSMENT 2-2
2.3 CULTURAL REVIEW 2-3

3.0 REMEDIAL ACTION OBJECTIVES 3-1
3.1 LAND-USE 3-2
3.2 CONTAMINANTS OF CONCERN 3-2
3.3 APPLICABLE OR RELEVANT AND APPROPRIATE REQUIREMENTS 3-4
3.4 PRELIMINARY REMEDIATION GOALS AND POINTS OF COMPLIANCE 3-5

4.0 ALTERNATIVE DEVELOPMENT AND SCREENING 4-1
4.1 ALTERNATIVE GW-1 - NO ACTION 4-1
4.2 ALTERNATIVE GW-2 - INSTITUTIONAL CONTROLS/CONTINUED CURRENT ACTIONS 4-2
4.2.1 Access Restrictions 4-2
4.2.2 Monitoring 4-3
4.2.3 Continued Current Actions 4-3
4.3 ALTERNATIVE GW-3 - CONTAINMENT 4-3
4.3.1 Cutoff Wall Selection 4-4
4.3.2 Containment System Configuration 4-4
4.3.3 Containment System Implementation 4-5

CONTENTS (cont)

4.3.4 Containment System Modeling Results 4-5
4.4 ALTERNATIVE GW-4 - IN SITU TREATMENT 4-6
4.5 ALTERNATIVE GW-5 - REMOVAL, TREATMENT, DISPOSAL USING ION EXCHANGE 4-6
4.5.1 Treatment System Modifications 4-7
4.5.2 Site Specific Implementation 4-9
4.5.3 Operational Considerations 4-9
4.5.4 Modeling Results 4-10
4.6 ALTERNATIVE GW-6 - REMOVAL, TREATMENT, DISPOSAL USING REVERSE OSMOSIS 4-10
4.6.1 Treatment System Modifications 4-11
4.6.2 Site Specific Implementation 4-12
4.6.3 Operational Considerations 4-12
4.6.4 Modeling Results 4-13
4.7 UNCERTAINTY ISSUES 4-13
4.7.1 Alternative GW-1 4-13
4.7.2 Alternative GW-2 4-14
4.7.3 Alternative GW-3 4-14
4.7.4 Alternative GW-4 4-14
4.7.5 Alternative GW-5 4-15
4.7.6 Alternative GW-6 4-15

5.0 MODELING RESULTS 5-1
5.1 INTRODUCTION 5-1
5.2 GROUNDWATER FLOW MODEL 5-1
5.2.1 Model Design 5-1
5.2.2 K Area Groundwater Flow Model 5-2
5.3 SOLUTE TRANSPORT MODEL 5-4
5.3.1 Model Design 5-4
5.4 MODELING RESULTS 5-5
5.4.1 Alternative GW-1 - No Action Alternative 5-5
5.4.2 Alternative GW-3 - Vertical Barrier Alternative 5-6
5.4.3 Alternatives GW-5 and GW-6 - Groundwater Extraction and Treatment Alternatives 5-6
5.4.4 Summary 5-7

6.0 DETAILED ANALYSIS OF ALTERNATIVES 6-1
6.1 METHODOLOGY AND CRITERIA 6-1
6.1.1 Overall Protection of Human Health and the Environment 6-1
6.1.2 Compliance with ARAR 6-1
6.1.3 Long-Term Effectiveness and Permanence 6-2
6.1.4 Reduction of Toxicity, Mobility, or Volume through Treatment . . 6-3
6.1.5 Short-Term Effectiveness 6-3
6.1.6 Implementability 6-4

CONTENTS (cont)

6.1.7 Cost 6-4
6.1.8 Regulatory Acceptance 6-5
6.1.9 Community Acceptance 6-5
6.2 DETAILED ANALYSIS 6-5

7.0 QUALITATIVE SENSITIVITY ANALYSIS 7-1

8.0 COMPARATIVE ANALYSIS 8-1
8.1 OVERALL PROTECTIVENESS OF HUMAN HEALTH AND THE ENVIRONMENT 8-1
8.2 COMPLIANCE WITH ARAR 8-1
8.3 LONG-TERM EFFECTIVENESS 8-2
8.4 REDUCTION OF TOXICITY, MOBILITY, OR VOLUME 8-2
8.5 SHORT-TERM EFFECTIVENESS 8-2
8.6 IMPLEMENTABILITY 8-3
8.7 COST 8-3

9.0 REFERENCES 9-1

APPENDICES:

A - APPLICABLE OR RELEVANT AND APPROPRIATE REQUIREMENTS A-1
B - DETAILED DESCRIPTIONS OF REMEDIAL ALTERNATIVES FROM THE 100 AREA FEASIBILITY STUDY PHASES 1 AND 2 . . . . . B-1
C - COST MODELS C-1

FIGURES:

ES-1 Summary of Comparative Analysis ESF-1
1-1 Hanford Site 1F-1
1-2 100-KR-4 Operable Unit 1F-2
1-3 Hanford Past-Practice Strategy Diagram 1F-3
2-1 Well Location Map 2F-1
2-2 Chromium Concentrations 2F-2
2-3 Carbon-14 Concentrations 2F-3
2-4 Cultural Survey Areas 2F-4
4-1 Cross-Section Through Near-River Wells 4F-1
4-2 Conceptual Process Flow Diagram for Alternative GW-5 Application at 100-KR-4 Operable Unit 4F-2
4-3 Conceptual Process Flow Diagram for Alternative GW-6 Application at 100-KR-4 Operable Unit 4F-3
5-1 100 K Area Model Grid 5F-1
5-2 Model Simulated Groundwater Elevations in the 100 K Area Current Conditions 5F-2

CONTENTS (cont)

FIGURES (cont)

5-3 Model Simulated Chromium Concentrations in the 100 K Area Current Conditions 5F-3
5-4 Model Simulated Chromium Concentrations in the Year 2008 No Action Scenario, 100 K Area 5F-4
5-5 Model Simulated Groundwater Elevations in the Year 2008 Vertical Barrier Alternative, 100 K Area 5F-5
5-6 Model Simulated Chromium Concentrations in the Year 2008 Vertical Barrier Alternative, 100 K Area 5F-6
5-7 Model Simulated Groundwater Elevations in the Year 2008 Pump and Treat Alternative, 100 K Area 5F-7
5-8 Model Simulated Chromium Concentrations in the Year 2008 Pump and Treat Alternative, 100 K Area 5F-8
8-1 Summary of Comparative Analysis 8F-1
B-1 Conceptual Vertical Barrier Alternative GW-3 . . . . . B-30
B-2 Conceptual In Situ Treatment Alternative GW-4 . . . . . B-31
B-3 Conceptual Ion Exchange Treatment System for Alternative GW-5 . . . . . B-32
B-4 Conceptual Reverse Osmosis Treatment System for Alternative GW-6 . . . . . B-33

TABLES:

ES-1 Alternatives and Process Options EST-1
1-1 Alternatives Retained from 100 Area Feasibility Study 1T-1
2-1 Summary of Maximum Concentrations for Contaminants of Potential Concern . . . 2T-1
2-2 Exposure Parameters for Frequent- and Occasional-Use Scenarios 2T-2
2-3 Human Health Risk Summary - Noncarcinogenic Effects 2T-3
2-4 Human Health Risk Summary - Carcinogenic Effects 2T-4
2-5 Ecological Summary for Radionuclides Organism: Fish-Eating Duck 2T-5
2-6 Ecological Summary for Nonradionuclides 2T-6
3-1 Chemical Specific ARAR and TBC 3T-1
5-1 Comparison of Model Predicted vs Observed Water Level Elevations 5T-1
5-2 Summary of Model Results 5T-2
6-1 Detailed Analysis for GW-1, No Action Alternative 6T-1a
6-2 Detailed Analysis for GW-2, Institutional Controls/Continued Current Actions Alternative 6T-2a
6-3 Detailed Analysis of GW-3, Containment Alternative 6T-3a
6-4 Detailed Analysis of GW-5, Removal, Treatment, and Disposal Alternative with Ion Exchange Treatment 6T-4a
6-5 Detailed Analysis of GW-6, Removal, Treatment, and Disposal Alternative with Reverse Osmosis Treatment 6T-5a
6-6 Compliance with ARAR 6T-6a
7-1 Qualitative Sensitivity Analysis of Key Assumptions 7T-1a
8-1 Cost Comparison Alternatives 8T-1
A-1 Potential Federal Chemical-Specific ARAR A-3

CONTENTS (cont)

TABLES (cont):

A-2 Potential State Chemical-Specific ARAR A-5
A-3 Potential Chemical-Specific TBC A-8
A-4 Potential Federal Action-Specific ARAR A-10
A-5 Potential State Action-Specific ARAR A-13
A-6 Potential Action-Specific TBC A-16
A-7 Potential Federal Location-Specific ARAR A-17
A-8 Potential State Location-Specific ARAR A-19
A-9 Potential Location-Specific TBC A-20
B-1 Secondary Waste Streams for Alternative GW-5 . . . . . B-34
B-2 Secondary Waste Stream for Alternative GW-6 . . . . . B-35

9413294.3412

THIS PAGE INTENTIONALLY
LEFT BLANK

1.0 INTRODUCTION

This focused feasibility study (FFS) report is in support of the Comprehensive Environmental Response, Compensation, and Liability Act of 1980 (CERCLA) remedial investigation/feasibility study (RI/FS) activities for the 100-KR-4 Groundwater Operable Unit. The RI/FS process is described in the *Guidance for Conducting Remedial Investigations and Feasibility Studies Under CERCLA* (EPA 1988). The 100 Area is one of four areas on the Hanford Site that are on the U.S. Environmental Protection Agency's (EPA) National Priorities List (NPL) under CERCLA (Figure 1-1). The 100-KR-4 Operable Unit is one of four operable units associated with the K Reactor area in the 100 Area of the Hanford Site (Figure 1-2). Three of the 100 K operable units are source units (100-KR-1, 100-KR-2, and 100-KR-3). The 100-KR-4 Groundwater Operable Unit includes the groundwater beneath the source operable units and the adjacent groundwater, surface water, sediments, and aquatic biota impacted by the overlying source operable units. The groundwater in the K Area contains mainly heavy metals (such as chromium and lead) and a radionuclide (carbon-14) that have been identified for consideration for remediation by interim remedial measures (IRM).

The approach for the RI/FS activities for the 100 Area operable units has been further defined in the *Hanford Past-Practice Strategy* (DOE-RL 1991a). This strategy streamlines the past-practice remedial action process with a bias for action through optimizing the use of expedited response actions (ERA) and IRM.

All work conducted at the 100 Area waste sites is in accordance with the conditions set forth in the *Hanford Federal Facility Agreement and Consent Order* (Tri-Party Agreement) (Ecology et al. 1990) and its amendments, signed by the Washington Department of Ecology (Ecology), EPA, and the U.S. Department of Energy (DOE).

1.1 PURPOSE AND SCOPE

The *Hanford Past-Practice Strategy* (DOE-RL 1991a) defines the FFS as an evaluation of a limited number of alternatives that are focused to the scope of the response action planned. The FFS constitutes the detailed analysis phase which completes the FS evaluation process for the targeted IRM. In addition to the screened alternatives evaluated in the *100 Area Feasibility Study Phases 1 and 2* (DOE-RL 1994a), the detailed analysis phases integrate the results of area-wide studies such as river impact, shoreline, ecological, cultural resources, treatability, and background studies as well as information from operable unit-specific limited field investigations (LFI) and qualitative risk assessments (QRA).

The FFS does the following things:

- updates and refines remedial action objectives (RAO), contaminants of concern (COC), applicable or relevant and appropriate requirements (ARAR), and remedial alternatives based on new information developed since the

development of the *100 Area Feasibility Study Phases 1 and 2* (DOE-RL 1994a) (additional risk assessment may be used to refine RAO and COC)

- performs detailed and comparative analysis of IRM alternatives.

The FFS is performed primarily to provide a detailed analysis of remedial action alternatives for sites remaining on the IRM pathway as identified in the operable unit-specific LFI reports.

The objective of the FFS is to provide decision makers sufficient information on waste site conditions and remedial alternatives to allow them to make an appropriate and timely decision on remediation of sites to be addressed through IRM. The FFS evaluates alternatives identified in the *100 Area Feasibility Study Phases 1 and 2* (DOE-RL 1994a) and considers new information on technologies, operable unit characteristics, and area-wide studies.

Concurrently, FFS are being prepared for some of the 100 Area source operable units. Source remediation is integral to successful remediation of groundwater; therefore, the remediation of groundwater is closely tied to the remediation of the sources of contamination. The source FFS currently under preparation are aimed at the high priority sites, mainly the liquid waste sites. Remediation of these sites will likely play a major role in remediation of the groundwater by eliminating a pathway for continued contamination.

1.2 REPORT ORGANIZATION

The FFS is organized into the following sections:

- Section 1.0 - introduction and discussion of purpose of report and summaries of 100 Area studies that support the FFS.

- Section 2.0 - operable unit background and summaries of operable unit-specific reports.

- Section 3.0 - discussion of RAO including land use, COC, ARAR, and remediation goals.

- Section 4.0 - detailed descriptions of the groundwater remedial alternatives identified in the 100 Area FS including any modifications to the alternatives based on new information concerning contaminants or technologies; discussion of uncertainties associated with the alternatives.

- Section 5.0 - discussion of modeling efforts for FFS.

- Section 6.0 - discussion of detailed analysis methodology; detailed analysis tables comparing each alternative to the CERCLA nine criteria.

- Section 7.0 - discussion of qualitative sensitivities of key assumptions.
- Section 8.0 - comparative analysis of alternatives using the CERCLA nine criteria.
- Section 9.0 - references.
- Appendix A - ARAR.
- Appendix B - baseline descriptions of alternatives.
- Appendix C - cost models.

9413294.3115

1.3 SUMMARY OF THE HANFORD PAST-PRACTICE STRATEGY

The strategy streamlines the past-practice remedial action process with a bias for action through the use of ERA and IRM. The strategy focuses on reaching early decisions to initiate and complete clean-up projects, maximizing the use of existing data, coupled with focused, short time-frame investigations where necessary.

Figure 1-3 depicts the interrelationships and sequencing of steps and activities that must be integrated to bring an operable unit from field investigation through record of decision (ROD). The diagram is consistent with the approach outlined in the *Hanford Past-Practice Strategy* (DOE-RL 1991a). This figure provides a graphical description of the entire process of characterization activities, risk assessments, treatability studies, and FS for the high and low priority sites within an operable unit and for the operable unit as a whole. Each of the figure elements and their interrelationships are described in the *100 Area Feasibility Study Phases 1 and 2* (DOE-RL 1994a).

1.4 SUMMARY OF 100 AREA FEASIBILITY STUDY PHASES 1 AND 2

The 100 Area Phase 1 and 2 FS provided an evaluation of the known 100 Area characteristics and identified the range of remedial alternatives that were most appropriate for protection of human health and the environment for the entire 100 Area. The purpose of the 100 Area FS was to:

- provide a generalized view of applicable and workable remedial technologies as applied to the site contamination problems as a whole
- evaluate groups of sites based on similarity, as opposed to geographical location and operable unit designation
- develop and screen remedial alternatives to be used in the detailed analysis phase of the FFS for IRM or final FS for individual operable units.

The 100 Area Phase 1 and 2 FS consisted of four principal tasks:

- identify COC for the media of concern (COC were identified in the Phase 1 and 2 based on existing knowledge; additional information collected during the LFI are used to refine the list of COC for the operable unit as initially identified in the Phase 1 and 2 FS)

- identify ARAR pertinent to all general response actions (GRA)

- develop remedial alternatives (Phase 1) applicable to the 100 Area including development of RAO, development of GRA, identification and screening of technologies and process options, and assembly of remedial alternatives from representative technology types

- screen alternatives (Phase 2) developed in Phase I for implementability, effectiveness, and costs to identify those alternatives that warrant advancement to the detailed analysis phase of future FFS.

General response actions and alternatives that were retained from the Phase 1 and 2 FS include:

- no action
- institutional controls
- containment actions
- in situ treatment actions
- removal/treatment/disposal actions.

Alternatives retained from Phases 1 and 2 are listed in Table 1-1. These alternatives are general to the 100 Area. This FFS refines the alternatives developed and screened in the Phase 1 and 2 FS based on the 100-KR-4 Operable Unit-specifics.

1.5 100 AREA-WIDE AND AGGREGATE AREA STUDIES

The 100 Area aggregate studies and Hanford Site studies such as the Hanford Site background studies, provide integrated analyses of selected issues on a scale larger than an operable unit. The 100 Area groundwater work plans (DOE-RL 1992a-d) address studies common to the 100 Area covering topics such as river impact, shoreline, ecology, and cultural resources. Results of these studies are summarized in the following sections. Details of the studies can be found in the corresponding references.

1.5.1 Hanford Site Background

The natural inorganic chemical composition of groundwater in the unconfined aquifer system beneath the Hanford site is presented in *Hanford Site Groundwater Background* (DOE-RL 1992e). The characterization effort identifies the types and concentrations of

inorganic analytes that exist naturally in the groundwater. Provisional threshold levels for 40 inorganic analytes developed in this effort are listed in the LFI. Background values for most radionuclides and organic constituents have not been developed.

1.5.2 Hanford Remedial Action Environmental Impact Statement

In accordance with DOE Order 5400.4 and Chapter 10 Code of Federal Regulations (CFR) Part 1021, the values of the National Environmental Policy Act (NEPA) of 1969 are to be incorporated in the CERCLA process. Many of the NEPA values are addressed in the detailed analysis of remedial alternatives within this FFS; however, Hanford Site and area-wide impacts are addressed by the *Hanford Remedial Action Environmental Impact Statement* (HRA-EIS).

The HRA-EIS analyzes the impacts caused by remediating the CERCLA/Resource Conservation and Recovery Act (RCRA) past-practice waste sites on the Hanford Site. The NEPA strategy follows a tiered approach that allows the issues addressed in the HRA-EIS to be incorporated into subsequent assessments by reference alone (40 CFR 1502.20). A draft of the HRA-EIS is scheduled for public review in August 1994. The final ROD for the HRA-EIS is scheduled for April 1995.

1.5.3 Ecological Summary

Bird, mammal, and plant surveys were conducted and reported in Sackschewsky and Landeen (1992). Current contamination data has been compiled from other sources, along with ecological pathways and lists of all wildlife and plants at the site, including threatened and endangered species (Weiss and Mitchell 1992). Another report (Caldwell 1994), discusses aquatic species on the Hanford Reach of the Columbia River; mapping activities of vegetation on the site and efforts to survey species of concern; shrub-steppe bird surveys; and mule deer and elk population monitoring. Report conclusions state that intrusive activities, such as remedial actions, that are conducted inside the controlled-area fences will not have a significant impact on the wildlife. Intrusive activities outside the controlled-area fences will have minimal impact on wildlife if the recommendations contained in the three documents listed below are followed (Landeen et al. 1993):

- *Bald Eagle Management Plan* (Fitzner and Weiss 1994)
- *Biological Assessment of Threatened and Endangered Species* (Fitzner et al. 1994).

The ecology of the riverine and riparion zones associated with the Columbia River is summarized in the *Columbia River Impact Evaluation Plan* (DOE-RL 1993a). Additional information sources are included as references in the evaluation plan.

The DOE policy also states that site-specific ecological surveys will be conducted at all sites where cleanup and remedial actions are performed.

1.5.4 Groundwater/River Interaction

Several projects are contributing to a better understanding of how contaminated groundwater from the Hanford Site enters the Columbia River along the 100 Areas. This topic was included in an earlier Tri-Party Agreement milestone that addressed 100 Areas general investigations (M-30-00 series). A submilestone required 1) installing equipment and 2) initiating monitoring activities to perform long-term evaluation of river/aquifer interaction; both milestone requirements were completed by September 1993. There are no subsequent milestones, however, to present the results of the evaluation of interaction.

Automated equipment is installed in wells at each reactor area to measure water levels at hourly intervals. Similar stations are operating at four reactor areas to measure river stage changes. Selected stations also contain sensors to record temperature and electrical conductivity. In the 100 H Area, simultaneous recording of water levels, temperature, and conductivity are being made in the nearshore river, in riverbank seepage, and in a shoreline monitoring well. All of these stations will be operated for a time period sufficient to describe daily, weekly, and seasonal river cycles (most stations will have meet this objective by Fall 1994). Operation of the equipment and selected results are described in annual progress reports (e.g. Campbell 1994).

Monitoring activities include data collection by the equipment just described, as well as data collected for operable unit sampling tasks, as listed in work plans. Groundwater, riverbank seepage, and shoreline sediments are all sampled as part of operable unit sampling. Non-environmental restoration program activities, such as RCRA groundwater monitoring and Sitewide Environmental surveillance conducted under DOE Order 5400.1, also contribute data that are relevant to river/aquifer interaction investigations. A summary of water quality data from near-river monitoring wells, riverbank seepage, and nearshore river water is presented in Peterson and Johnson (1992). Riverbank seepage, shoreline sediment, and river water data for sampling activities conducted for the environmental restoration program are published in DOE-RL (1992f) and WHC (1993a). The data are also available from the Hanford Environmental Information System.

Interpretation of river/aquifer interaction data is in progress. Initial results show that groundwater is affected by river stage changes in several ways. River fluctuations can be observed as water level changes in wells throughout the reactor areas, with a time lag and amplitude decrease occurring as the well's distance from the river increases. This information has potential use for inferring aquifer hydraulic properties (e.g. McMahon and Peterson 1992). River stage changes also affect water quality, but only within several hundred feet of the river, and to varying degrees depending on the magnitude and duration of stage changes. Evidence for some degree of groundwater dilution by river water prior to crossing the channel interface is found in river bank seepage concentrations of contaminants. Seepage concentrations are almost always intermediate between values in shoreline wells and nearshore river water (Peterson and Johnson 1992).

An understanding of the physical and chemical environment at the aquifer/river interface, and of the processes occurring at the interface, is fundamental for assessing the impact of Hanford Site groundwater on Columbia River water quality and ecosystems. It is

also relevant in assessing the performance of remediation activities. Continued investigation of aquifer/river exchange is strongly encouraged to support future ROD for environmental restoration.

1.5.5 Comprehensive River Study

The Columbia River Comprehensive Impact Assessment (CRCIA), established in Tri-Party Agreement Milestone M-13-80, will evaluate the current human and ecological risks to the Columbia River attributable to past and present activities on the Hanford Site. The CRCIA is being conducted by Pacific Northwest Laboratory (PNL). Human risk from exposure to radioactive and hazardous materials will be addressed for a range of river use options. Ecological risk will be evaluated relative to the health of the current river ecosystem (Eslinger et al. 1994).

1.5.6 Investigations of Chromium in Groundwater

Several projects have been completed or are underway that contribute to a better understanding of groundwater contamination by chromium in the 100-HR-3 Operable Unit. Estimates for the volume of contaminated groundwater, the mass of chromium within that volume, and the changes in characteristics between 1988 and 1992 in the 100 H Area are presented in Peterson and Connelly (1993). Their estimates suggest a chromium plume in excess of 100 ppb (EPA drinking water standard) to have a volume of approximately 180,000 m^3 and containing approximately 26 kg of chromium. The estimates indicate a slight increase in the plume during the time interval analyzed, and three possible reasons were offered. The most likely cause is the influx of chromium-bearing groundwater from the west into the 100 H Area, resulting from past disposal in the 100 D Area. Other possible causes are unidentified continuing sources in the 100 H Area and increased release from the soil column.

An effort is underway to describe how chromium moves with groundwater and where chromium fixation might occur (DOE-RL 1993a). This study of chromium speciation looks at the concentrations and valence state of chromium in the unconfined aquifer, at the interface between the aquifer and the river, and in the nearshore river. Analysis of the various valence states in sediments and periphyton coatings on sediments is included, along with tests involving potential changes in valence state that occurs when groundwater is mixed with river water. Initial interpretations suggest that some hexavalent chromium in groundwater is reduced to the less-toxic and less-mobile trivalent state at the aquifer/river interface.

1.6 SUMMARY OF 100 AREA GROUNDWATER TREATABILITY STUDIES

The following treatability tests were conducted on groundwater samples collected from the 100-HR-3 Groundwater Operable Unit to gather data on treatment technologies:

- bench-scale biodenitrification
- bench-scale precipitation/reduction
- bench-scale ion exchange.

In addition, a pilot-scale treatability test of ion exchange is planned for the operable unit.

The biodenitrification tests were conducted under the *100-HR-3 Groundwater Treatability Test Plan* (DOE-RL 1992f), the *Treatability Study Program Plan* (DOE-RL 1992g), and the *100 Area Groundwater Biodenitrification Bench-Scale Treatability Study Procedures* (Peyton and Martin 1993). The results of the test are presented in *100 Area Groundwater Biodenitrification Bench-Scale Treatability Study -- Final Report* (Peyton 1994). This test is not applicable to this operable unit, therefore will not be discussed further.

The precipitation/reduction and ion exchange are described in the *100-HR-3 Groundwater Treatability Test Plan* (DOE-RL 1992f). Procedures for the tests are specified in *100-HR-3 Area Groundwater Treatment Tests for Ex Situ Removal of Chromate, Nitrate, and Uranium (VI) by Precipitation/Reduction and/or Ion Exchange* (WHC 1993a); results are presented in *Treatment Tests for Ex Situ Removal of Chromate, Nitrate, and Uranium (VI) from Hanford (100-HR-3) Groundwater Final Report* (WHC 1993b). Results of each test are summarized in the following sections.

1.6.1 Precipitation/Reduction

1.6.1.1 Sulfide Precipitation. A ferrous sulfate/sodium sulfide method was tested to first reduce the chromium (VI) to chromium (III) and then to coprecipitate the reduced chromium with the resulting ferric hydroxide and/or ferric sulfide (WHC 1993b). The possible reduction and/or precipitation of uranium was also investigated. The ferrous sulfate/sodium sulfide treatment was effective at removing the chromium (decontamination factor [DF] of 64); however, the treatment failed to remove uranium or nitrate and generated significant quantities of sludge. (The DF is defined as the original concentration of the contaminant divided by the concentration after treatment. A DF <2 is considered insignificant.) The method resulted in a colloidal suspension which was not removed by centrifugation.

1.6.1.2 Brushite Coprecipitation. Disodium hydrogen phosphate was used to precipitate brushite from the contained calcium ion naturally present in the groundwater to determine the potential for removing uranium. The incidental removal of chromate from solution by coprecipitation with brushite was also investigated. The brushite treatment produced significant DF for uranium (DF = 32). This treatment did not result in significant DF (>2) for chromate and had little effect on nitrate concentrations. Because neither precipitation method resulted in removal of both chromate and uranium and because both generated significant quantities of sludge or flocculent, no further tests were conducted.

1.6.2 Ion Exchange

Three different strong-base anion exchange resins were tested based on recommendations of resin manufacturers (Dowex 21K™ from Dow Chemical Company and Amberlite 402™ and 410™ from Rohm and Haas Company). All three resins had excellent DF for uranium (90±70 to 110±70) and chromate (60±46 to 90±12). The Dowex 21K™ had a much higher DF for nitrate (40±20) than the Amberlite 410™ (12±2) or Amberlite 402™ (6±1). The Dowex 21K™ removed the high concentration of contaminants down to the level of detection for several hundred column volumes.

The test was a full factorial experiment, which means that all combinations of the variables of interest were explored. Tests conducted included batch tests, equilibrium tests, and breakthrough tests. Equilibrium tests showed that the adsorption potential for Dowex 21K™ for uranium and chromate was far higher than the amount of groundwater available for spiking.

9413294.3121

The following summarizes the results of the batch anion exchange resin test results:

- No pretreatment requirements were identified in the treatability tests; however a prefilter is recommended for field application.

- The optimum resin for treatment of chromate, nitrate, and uranium based on the results of the tests is Dowex 21K™, a strong-base anion exchange resin.

- No breakthrough was observed in water from Well 199-H4-4 for chromium or uranium. Nitrate showed breakthrough after 445 column volumes. The concentrations from this well were 84,600 ppb nitrate, 49 ppb uranium, 65.5 ppb chromate, and 79.4 ppb total chromium.

- Breakthrough for water from Well 199-D5-15 occurred at 450 column volumes for nitrate and 1,100 column volumes for chromium. Initial concentrations were 49,700 ppb nitrate, 12 ppb uranium, 1,930 ppb chromate, and 2,025 ppb total chromium. Breakthrough for chromium occurred at 100 ppb; therefore, 1925 ppb was taken up by the ion exchange resin. The capacity of the Dowex 21K™ is 2.79 μg chromium per mg of resin based on the test results for this well water.

- No degradation of resin or resin life was noted during multiple cycles.

- During the multiple cycles, the contaminant concentrations were below the performance goals with the exception of uranium. This may not be too significant because the levels of uranium introduced in the test were much higher (8 times) than typical 100 Area groundwater uranium concentrations.

- The ion exchange was eluted with 4 to 5 column volumes of 4 M sodium chloride then washed with one to two column volumes to regenerate the resin for reuse. The concentrations in the eluate were typically several hundred

thousand ppb chromium, ten million ppb nitrate, and thirty thousand ppb uranium. Both the eluate and wash contained uranium and were considered mixed waste.

As part of the breakthrough tests, a low flow rate (16 column volumes per hour [3.4E-4 gal/min]) test using groundwater spiked with 700 ppb uranium, 1,770 ppb chromium (VI), 2,020 ppb total chromium, and 192,300 ppb nitrate showed that 1,800 column volumes were insufficient to show breakthrough for uranium. Chromium concentrations at 1,800 column volumes were near the performance level at 3% to 4% of original concentrations. Nitrate showed breakthrough at 350 column volumes, which corresponds to a resin loading of 1.1 milliequivalent/milliliter (meq/mL) of wet conditioned resin. This loading is very close to the theoretical capacity of 1.2 meq/mL for the Dowex 21K™ resin. (Breakthrough is defined as 50% of the original concentration.)

A high flow rate (27 column volumes per hour [5.7E-4 gal/min]) test using groundwater spiked with 820 ppb uranium, 2,100 ppb chromium, 1,990 ppb chromate, and 212,700 ppb nitrate showed no breakthrough for chromium; however, the test was ended prematurely due to equipment failures. Uranium concentrations were slightly higher in the effluent than in the slow flow rate test which may indicate that the kinetics of uranium adsorption are slow. The uranium concentration was always less than the performance level (22 μg/L).

1.7 PILOT-SCALE TREATABILITY STUDY

Milestone M-15-06E requires that DOE begin pilot-scale pump and treat operations for 100-HR-3 Operable Unit by August 1994. The pilot-scale is to address chromium. Assuming the pilot scale is successful, it would continue to operate until the ROD. Full-scale operation would be implemented if it were determined to be the selected remedy under the 100-HR-3 ROD. If the pump and treat operation is the selected remedy under the ROD it would continue until the three parties evaluate the operation using the following criteria:

1) Hexavalent chromium measured in wells near the Columbia River fall below the Model Toxics Control Act (MTCA) standard for chromium of 50 μg/L for two consection sampling periods.

2) Sampling of water occurring in the river bottom substrate environment, where springs are suspected to discharge contaminated groundwater, in concentrations representative of the plume, indicates that hexavalent chromium in this environment is below and will remain below the chronic Ambient Water Quality Criterion for the protection of freshwater aquatic life for hexavalent chromium (11 μg/L) set by the EPA.

3) Groundwater/Columbia River interaction studies, numerical models or physical models indicate that predicted levels of hexavalent chromium within the riverbed substrate environment, where contaminated groundwater is suspected

to discharge, in concentrations representative of the plume, are below the chronic Ambient Water Quality Criterion for the protection of freshwater aquatic life for hexavalent chromium (11 μg/L) set by the EPA.

4) Biological surveys, such as aerial photographic records, of Columbia River sections where contaminated groundwater discharges may reasonably be expected to occur, indicate that contemporary salmonid redd distributions are at concentrations and locations expected if hexavalent chromium were not an influence.

5) The effectiveness (including cost/unit of hexavalent chromium removed) of the treatment technology does not justify further operation.

6) An alternate treatment technique, such as chemical reduction of the hexavalent chromium to a less toxic valence, that is more effective or is less costly is substituted.

Assumptions associated with the Tri-Party Agreement Change Control Form (Ecology et al. 1994) for the pilot-scale treatability test are as follows:

- The LFI activities do not identify hexavalent chromium data inconsistent with data to date.
- The QRA justifies the need for remediation.
- Treated effluent containing contaminants above State water quality standards can be disposed of the soil column or aquifer.
- Hazardous, radioactive and/or mixed waste (e.g. resins) will be stored and/or disposed of on-site at locations as agreed to by the three parties.
- Bench-scale tests will confirm treatment assumptions.
- The pilot-scale treatability test will be performed in accordance with the *100-HR-3 Groundwater Treatability Test Plan* (DOE-RL 1992f).

The *Pilot-Scale Treatability Test Plan for the 100-HR-3 Operable Unit* (DOE-RL 1994b) provides an outline for the pilot-scale test using the Dowex 21K™ resin in an ion exchange pump and treat system.

1.8 KEY ASSUMPTIONS FOR FFS

The key assumptions which form the basis for the FFS are as follows:

- The purpose of the IRM is to address an identified threat to human health or the environment.

- The objectives of the FFS are to protect the Columbia River and to abate offsite migration of contaminants.

- To meet the objectives, the alternatives are aimed at containment and control of contaminant plumes. (The alternatives are not designed for mass reduction or aquifer cleanup.)

- The occasional-use scenario is assumed for the operable unit.

- For purposes of cost estimates, the FFS uses a finite lifecycle for the IRM to the year 2008. At this time it is assumed that any final action will be implemented, be it a continuation of the IRM or a redirection of the action.

- The *100 Area Feasibility Study Phases 1 & 2* (DOE-RL 1994a) forms the basis for the alternatives evaluated in the FFS. Additional alternatives or deviations from the alternatives are only considered when the defined alternative does not meet the operable unit specifics. The CERCLA does, however, allow the flexibility of specifying different process options at any point in the RI/FS process if warranted by site circumstances.

- Disposal to the Environmental Restoration Disposal Facility (ERDF) is assumed for all solid wastes generated. This includes the assumption that sufficient space is available and that the facility will be operating on a schedule consistent with the IRM.

Each of these key assumptions is discussed in Sections 2.0 through 6.0 of the FFS. The sensitivities associated with these assumptions are discussed in Section 7.0.

9413294.3124

Figure 1-1 Hanford Site

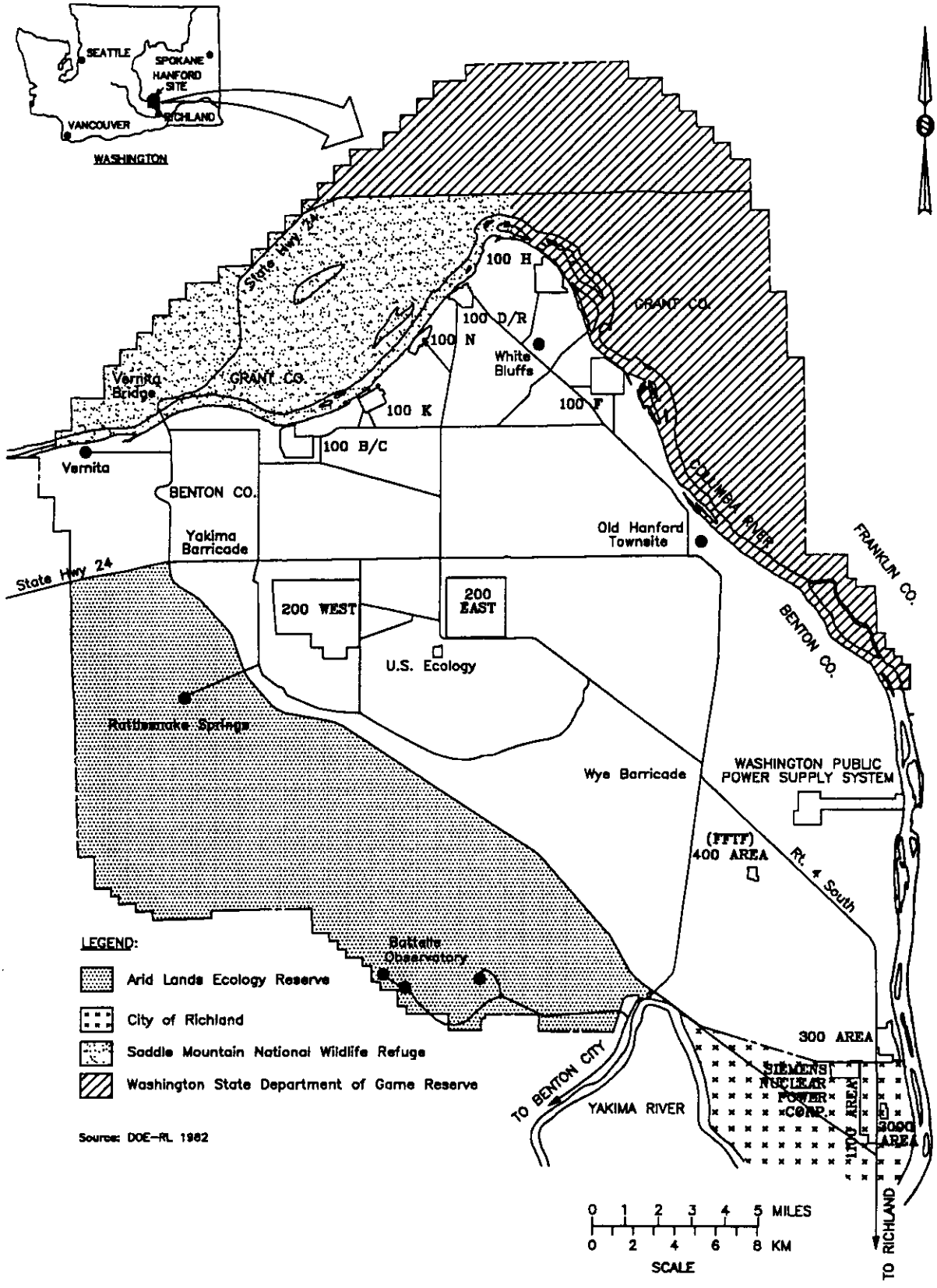

THIS PAGE INTENTIONALLY
LEFT BLANK

Figure 1-2 100-KR-4 Operable Unit

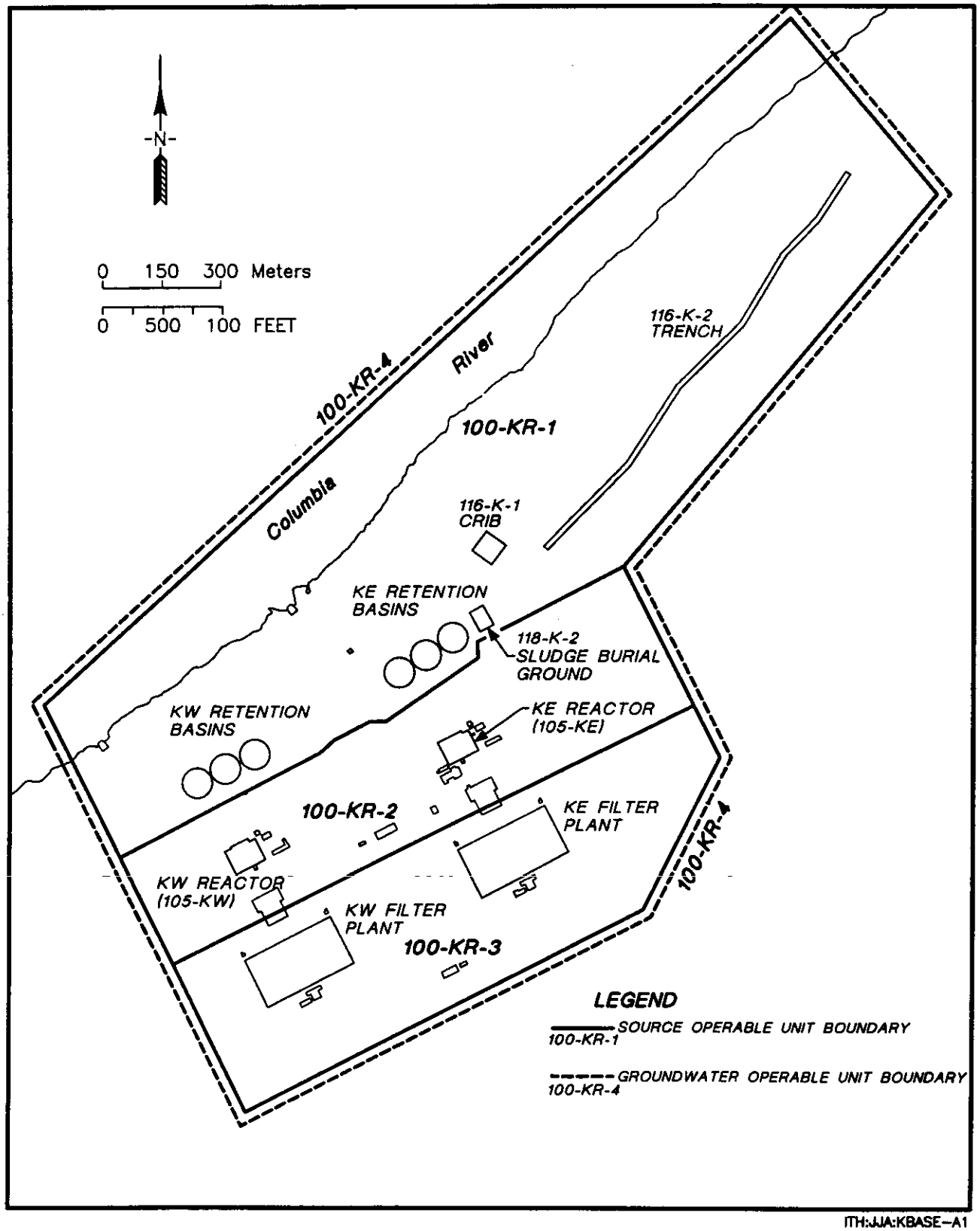

ITH:JJA:KBASE-A1

9413294.3126

THIS PAGE INTENTIONALLY
LEFT BLANK

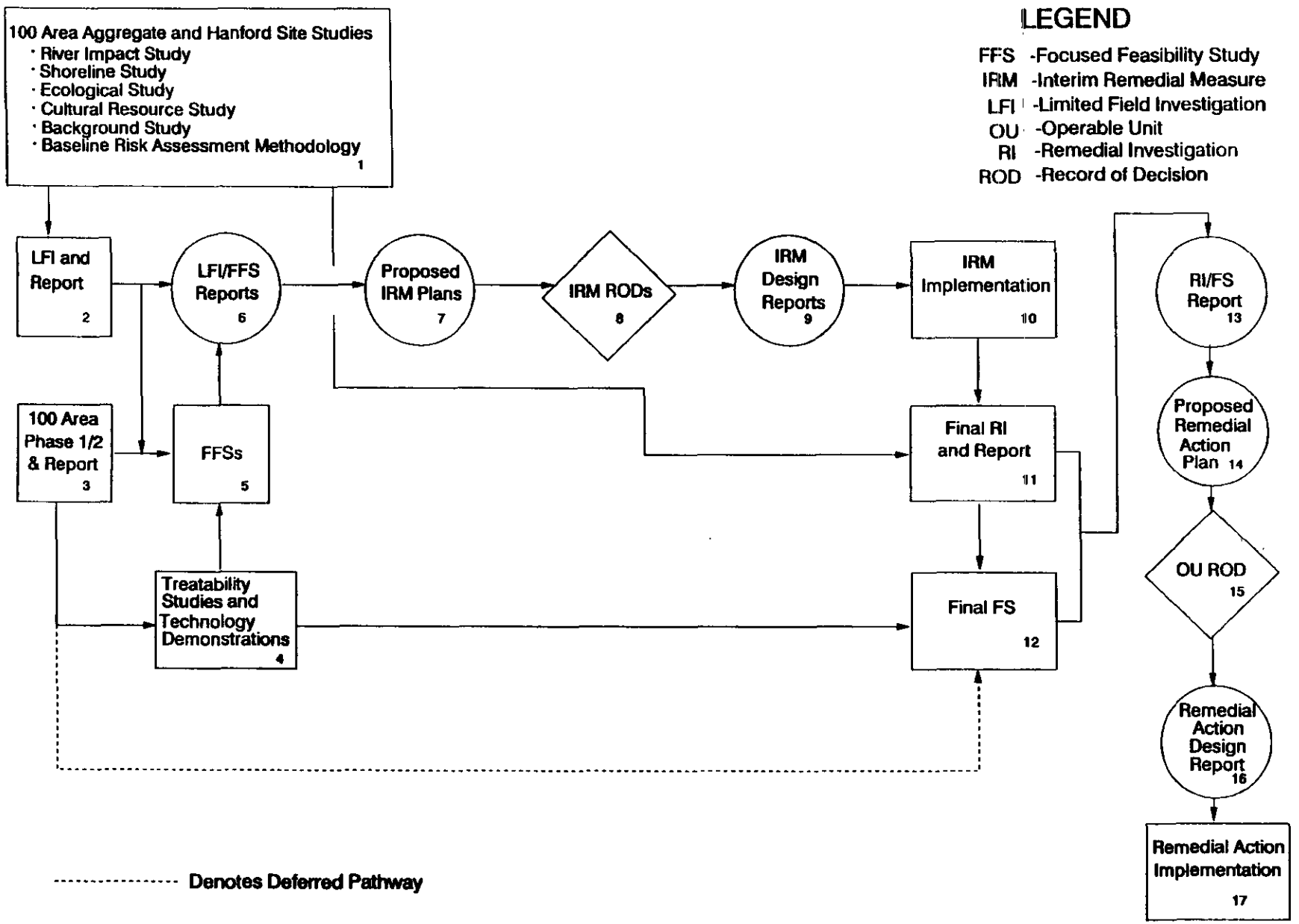

Figure 1-3 Hanford Past-Practice Strategy Diagram

THIS PAGE INTENTIONALLY
LEFT BLANK

Table 1-1 Alternatives Retained from 100 Area Feasibility Study

Alternative	Description		Recommendation
GW-1	No Action		Retain for detailed analysis and risk assessment data.
GW-2	Institutional:	Water-rights and deed restrictions Groundwater monitoring Columbia River as alternate water supply	Retain to preserve range of GRA to be evaluated in the FFS.
GW-3	Containment:	Slurry walls Extraction wells	Retain to preserve range of GRA to be evaluated in the FFS.
GW-4	In Situ Treatment:	Biodenitrification Air stripping	Retain as an in situ treatment action.
GW-5	Removal, Treatment, & Disposal:	Extraction wells Biodenitrification Chemical oxidation, precipitation, and chemical reduction Media filtration and ion exchange Cement-based solidification Injection into aquifer, and ERDF disposal	Retain as a removal, treatment, and disposal action based on chemical treatment processes.
GW-6	Removal, Treatment, & Disposal:	Extraction wells Biodenitrification Air stripping, forced evaporation, media filtration, and reverse osmosis Cement-based solidification Injection, crib disposal, and ERDF disposal	Retain as a removal, treatment, and disposal action based on physical treatment processes.

GRA = general response action
ERDF = Environmental Restoration Disposal Facility
FFS = focused feasibility study

THIS PAGE INTENTIONALLY
LEFT BLANK

2.0 OPERABLE UNIT BACKGROUND

The 100-KR-4 Operable Unit is located in the northwestern portion of the Hanford Site along the southern shoreline of the Columbia River (see Figures 1-1 and 1-2). The operable unit is located within Sections 5 and 6 of Township 13 North, Range 26 East, and Sections 31 and 32 of Township 14 North, Range 26 East, of the Willamette baseline and meridian. The 100-KR-4 Operable Unit lies between Hanford grid coordinates N73500 and N76700, and W63700 and W71700. The operable unit also includes outfall structures and effluent pipelines that extend into the Columbia River. Outfall structures and effluent pipelines will be addressed by an ERA.

The 100 K Area was the site for two water-cooled, graphite-moderated plutonium production reactors. The operation of the reactors and their support facilities resulted int he disposal of large quantities of waste. Liquid waste disposal is believed to have created plumes of contamination in groundwater centered near the two reactors and along the 116-K-2 Trench. Liquids were discharged to unlined cribs, basins, and trenches, resulting in migration of contaminants to the groundwater. The KW and KE Retention Basins, the 116-K-1 Crib, the 116-K-2 Trench, the 118-K-2 Sludge Burial Ground, and other miscellaneous small cribs and french drains are the likely sources of the chromium and zinc contamination. The carbon-14 present in the 100 K Area groundwater is associated with the reactor inert gas systems. Due to the environment of the inert gas systems in the reactors and the drying processes in the gas recirculation systems, a series of radiological and chemical reactions occurred when nitrogen was used as the inert gas. These unique circumstances led to the creation of two radioactive wastes, carbon-14 and tritium. These wastes were disposed to french drains adjacent to the reactors.

Since the preparation of the *100 Area Feasibility Study Phases 1 and 2* report (DOE-RL 1994a), additional data have been collected relevant to the 100 Area in general as well as the 100 K Area and the 100-KR-4 Operable Unit specifically. An LFI has been conducted and reported in *Limited Field Investigation Report for the 100-KR-4 Operable Unit* (DOE-RL 1993b). A QRA (WHC 1993c) and a variety of aggregate area studies were performed to evaluate risk, cultural resources, the ecosystem, the Columbia River, and the river sediments.

2.1 LIMITED FIELD INVESTIGATION

As part of the LFI, seven new groundwater monitoring wells were installed in the 100-KR-4 Operable Unit. These wells were constructed to help define groundwater quality in areas of potential public or environmental exposure and immediately down-gradient of priority source waste sites in 100-KR-1, 100-KR-2, and 100-KR-3. Figure 2-1 presents the locations of the monitoring wells.

Groundwater samples were collected from these wells and existing monitoring wells. A total of 82 samples (exclusive of duplicates and splits), including samples from 600 Area wells, were collected from 22 monitoring wells over four rounds of sampling

(DOE-RL 1993b). Analyses were conducted for organic, inorganic, and radioactive constituents. Soil samples were collected during well drilling activities and analyzed for physical, chemical, and radioactive characteristics. The data derived from this sampling and analysis effort were used to perform a QRA (WHC 1993c). The maximum concentrations for the aquifer, the near-river wells, the springs and seeps, and the river associated with the operable unit are presented in Table 2-1. Concentrations for chromium and carbon-14 are shown in Figures 2-2 and 2-3.

2.2 QUALITATIVE RISK ASSESSMENT

The QRA for the 100-HR-3 Operable Unit focuses on a limited set of human and environmental exposure scenarios. The QRA provides an analysis that will aid in making defensible decisions regarding the need to conduct IRM.

The QRA used the first three rounds of LFI groundwater sampling data. The data were evaluated for consistency and compliance with EPA guidance (EPA 1989). Data from all wells were used to identify a maximum concentration. This maximum concentration was then used in the calculation of human health risk.

For the ecological evaluation, maximum concentration data from near-river wells only were used. This data represented a conservative estimate of concentrations available for biological exposure at the groundwater/river interface (such as springs and seeps).

Frequent- and occasional-use exposure scenarios were evaluated in the human health QRA to provide bounding estimates of risk consistent with the residential and recreational exposure scenarios presented in the *Hanford Site Risk Assessment Methodology* (HSRAM) (DOE-RL 1994c). Human exposure was limited to ingestion of contaminated groundwater, inhalation of volatile contaminants during water use, and external exposure to radionuclides.

The results of the human health risk estimations for carcinogens are grouped into the following categories based on lifetime incremental cancer risk (ICR):

- high $> 1 \times 10^{-2}$
- medium 1×10^{-4} to 1×10^{-2}
- low 1×10^{-6} to 1×10^{-4}
- very low $< 1 \times 10^{-6}$.

The results of the QRA for human-health and ecological evaluations are presented by area in Tables 2-2 through 2-6. Human health risk associated with the occasional-use scenario of medium or high ICR or a hazard index (HI) > 1 keeps a waste site on the IRM pathway. The results of the ecological risk assessment were evaluated in terms of an ecological hazard quotient (EHQ). Any contaminant with an EHQ > 1 was identified as contaminant of potential concern (COPC).

The frequent-use scenario assessment identified tritium, carbon-14, and arsenic as COPC.

Analysis using the occasional-use scenario resulted in low to very low ICR. Therefore, none of these COPC represent an unacceptable human health risk under this exposure scenario.

Ecological scenarios were evaluated using biological receptors which live in or near the Columbia River. The ecological risk assessment identified potential risks from carbon-14, chromium, iron, lead, silver, and zinc based on exceedances of Ambient Water Quality Criteria. These exceedances were based on the maximum concentrations detected in the near river wells. No allowance was made for environmental fate. These constituents were not identified in the river; the concentrations are significantly reduced by the mixing and dilution action of the river. The QRA presents a discussion of the uncertainties associated with the ecological risk assessment.

While the ecological portion of the QRA conservatively estimated risk based on near-river well concentrations, no analysis has been performed on the risks to salmon redds and fry in the substrate of the river. Chromium in concentrations above 11 μg/L potentially cause negative impacts to these receptors. However, because data are unavailable for this ecological pathway, great uncertainty exists in the potential risk associated with this media.

2.3 CULTURAL REVIEW

As part of a comprehensive cultural resources review of the 100 Area operable units, several archeological surveys have been conducted in the 100 K Area operable units. These surveys included literature and record reviews and pedestrian surveys of the area. These efforts were conducted following the procedures set forth in the *Hanford Cultural Resources Management Plan* (Chatters 1989). These surveys have located two historic and six prehistoric sites, which could be potentially impacted by IRM activities; the southern portion of the Ryegrass Archaeological District would also be impacted. Figure 2-4 shows the areas of the operable unit which have been surveyed.

Two pumphouses located on the river are the historic sites which have the potential of being impacted by activities in the K Area. Six prehistoric sites (45BN150, 45BN151, 45BN423, 45BN424, 45BN434, and 45BN464) have the potential of being impacted by activities in the K Area. The southern portion of the Ryegrass Archaeological District (which includes sites 45BN150, 45BN151 and 45BN424) is located near the river in the 100 K Area. This district is on the National Register of Historic Places and is reported to contain graves.

All of the potential impact sites within the 100-KR-4 Operable Unit not included in the Ryegrass Archaeological District will need to be evaluated for National Register of Historic Places eligibility. Any sites found eligible for listing either should be avoided during activities or plans for data recovery/mitigation will be required. Extensive consultation with the four local Native American tribes would be required before any work could be done in the area included in the Ryegrass district.

THIS PAGE INTENTIONALLY
LEFT BLANK

Figure 2-1 Well Location Map

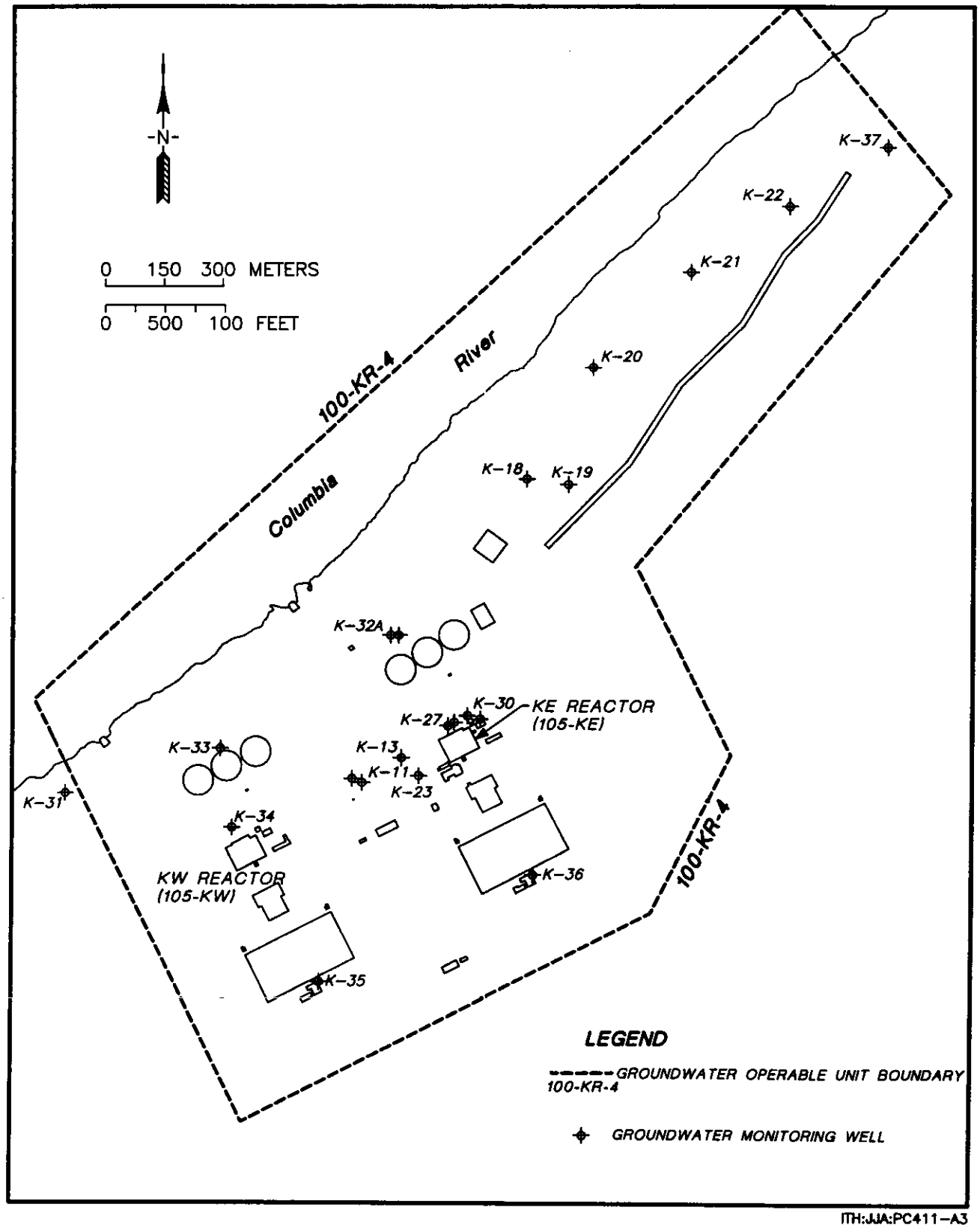

ITH:JJA:PC411-A3

THIS PAGE INTENTIONALLY
LEFT BLANK

Figure 2-2 Chromium Concentrations

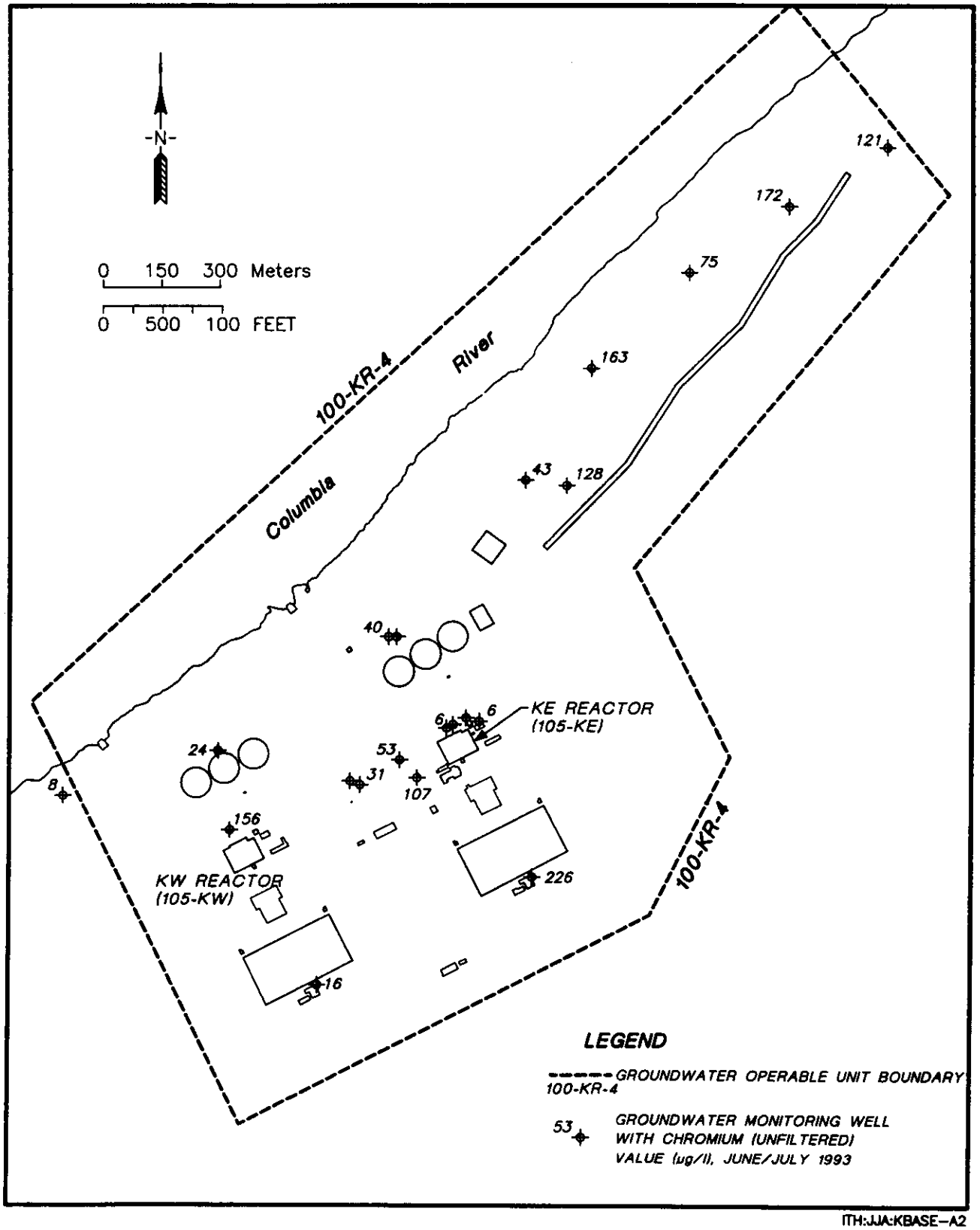

ITH:JJA:KBASE—A2

THIS PAGE INTENTIONALLY
LEFT BLANK

Figure 2-3 Carbon-14 Concentrations

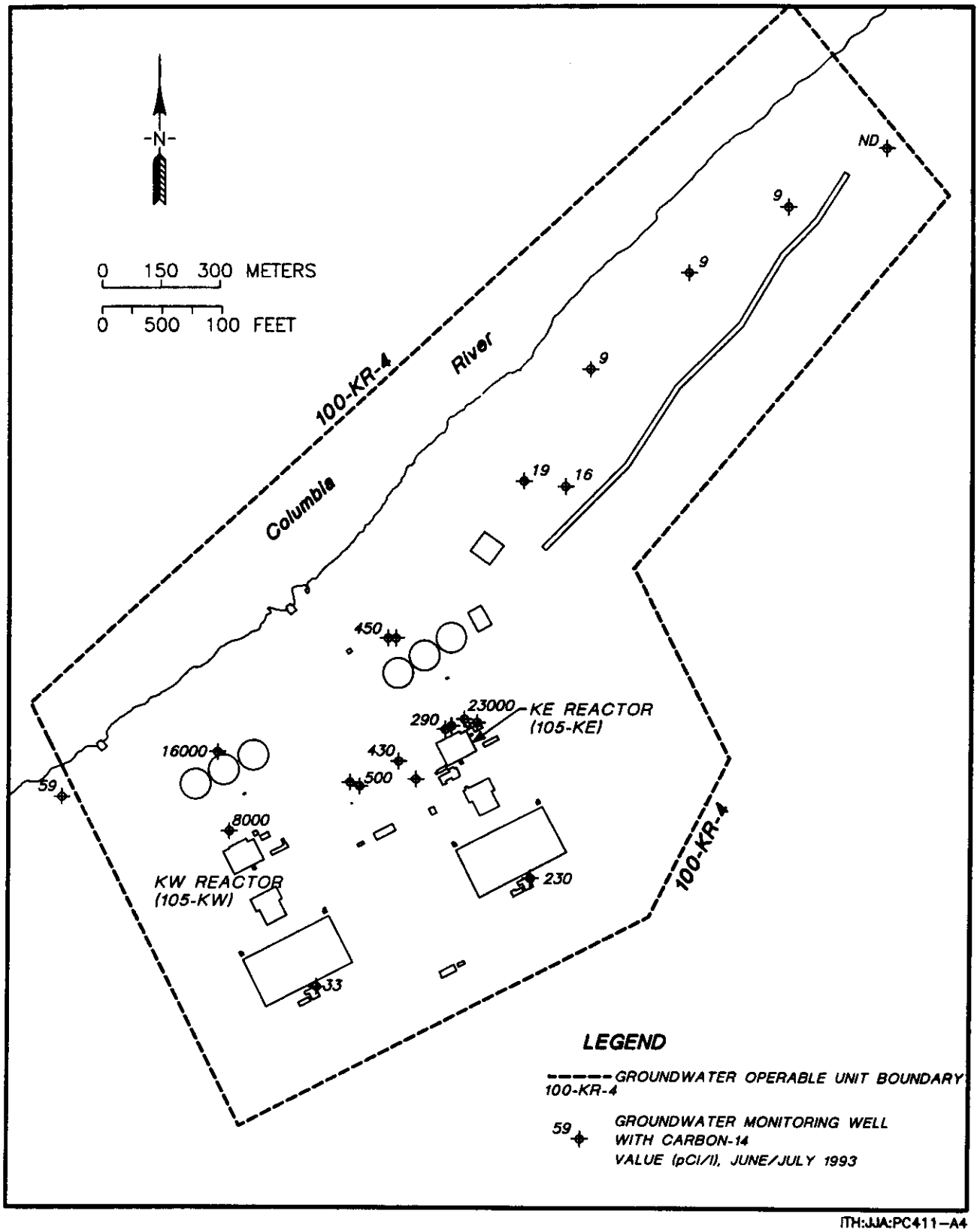

ITH:JJA:PC411—A4

THIS PAGE INTENTIONALLY
LEFT BLANK

Figure 2-4 Cultural Survey Areas

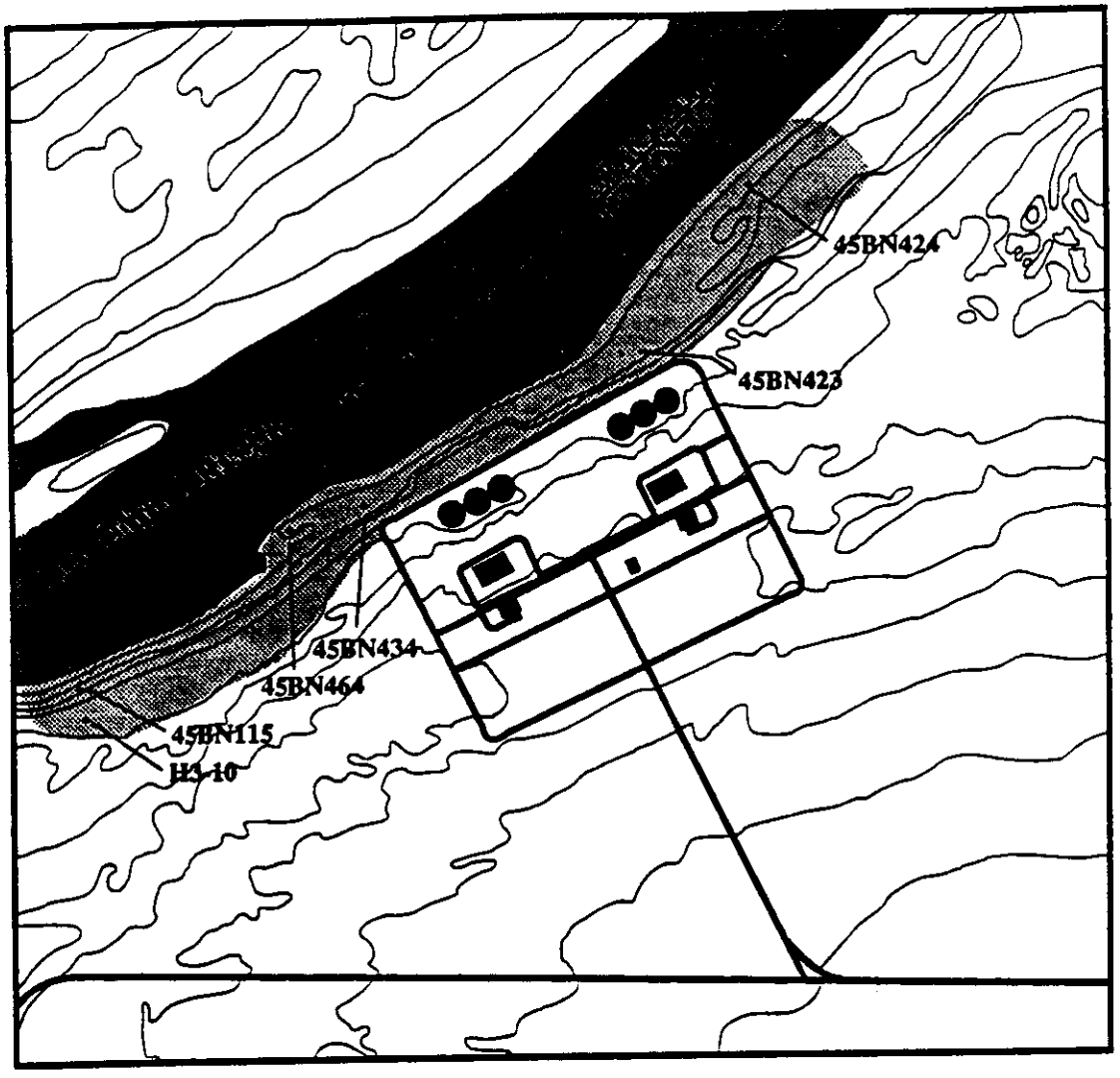

THIS PAGE INTENTIONALLY
LEFT BLANK

Table 2-1 Summary of Maximum Concentrations for Contaminants of Potential Concern

Constitutent	All Groundwater Wells	Near-River Groundwater Wells	100 K Area Springs	100 K Area Columbia River
Carbon-14 (pCi/L)	23000	16000	NA	NA
Chromium (μg/L)	1950	261	68.7	ND
Zinc (μg/L)	461	461	ND	6.4

ND = Not Detected
NA = No Data Available

9413294.3136

THIS PAGE INTENTIONALLY
LEFT BLANK

Table 2-2 Exposure Parameters for Frequent- and Occasional-Use Scenarios

	Route	Daily Intake Rate	Exposure Frequency (d/yr)	Exposure Duration (yr)	Body Weight (kg)	Averaging Time (yr x d/yr)	Conversion Factors
Occasional-Use Scenario							
Noncarcinogens	Ingestion	1 L	7	6	16	6 x 365	--
Nonradioactive Carcinogens	Ingestion	2 L	7	30	70	70 x 365	--
Radioactive Carcinogens	Ingestion	2 L	7	30	--	--	--
Frequent-Use Scenario							
Noncarcinogens	Ingestion	1 L	365	6	16	6 x 365	--
	Inhalation	15 m3	365	30	70	30 x 365	0.5 L/m3
Nonradioactive carcinogens	Ingestion	2 L	365	30	70	70 x 365	--
	Inhalation	15 m3	365	30	70	70 x 365	0.5 L/m3
Radioactive carcinogens	Ingestion	2L	365	30	--	--	--

Reference: DOE-RL 1994c

THIS PAGE INTENTIONALLY
LEFT BLANK

Table 2-3 Human Health Risk Summary - Noncarcinogenic Effects

	Occasional			Frequent		
Analyte	Comparison of HQ to 1.0	Percent of Total HI	Cumulative Percent of Total HI	Comparison of HQ to 1.0	Percent of Total HI	Cumulative Percent of Total HI
Chromium	BELOW	83.2	83.2	ABOVE	83.4	83.4
Arsenic	BELOW	7.5	90.7	ABOVE	7.4	90.8
Nitrate/Nitrite	BELOW	3.4	94.1	ABOVE	3.5	94.3
Manganese	BELOW	3.0	97.1	BELOW	3.0	97.3
Vanadium	BELOW	0.7	97.9	BELOW	0.7	98.0
Trichloroethene	BELOW	0.7	98.6	BELOW	0.7	98.7
Cadmium	BELOW	0.5	99.1	BELOW	0.5	99.1
Chloroform	BELOW	0.4	99.5	BELOW	0.3	99.5
Zinc	BELOW	0.4	99.8	BELOW	0.3	99.8
Aluminum	BELOW	0.2	100.0	BELOW	0.2	100.0
Iron	No Data	NA	-	No Data	NA	-
Lead	No Data	NA	-	No Data	NA	-
Total HI	BELOW			ABOVE		

HQ - hazard quotient
HI - hazard index

THIS PAGE INTENTIONALLY
LEFT BLANK

Table 2-4 Human Health Risk Summary - Carcinogenic Effects

	Occasional			Frequent		
Analyte	Qualitative Risk	Percent of Total Risk	Cumulative Percent of Total Risk	Qualitative Risk	Percent of Total Risk	Cumulative Percent of Total Risk
Tritium	LOW	76.1	76.1	MEDIUM	74.4	74.4
Carbon-14	LOW	15.3	91.4	MEDIUM	15.0	89.4
Arsenic	LOW	7.3	98.8	MEDIUM	7.1	96.5
Total Chloroform	VERY LOW	<0.1	98.8	LOW	2.1	98.7
Strontium-90	VERY LOW	1.0	99.8	LOW	0.9	99.6
Total Trichloroethene	VERY LOW	0.1	99.9	LOW	0.3	99.9
Uranium-238	VERY LOW	<0.1	99.9	LOW	0.1	99.9
Technetium-99	VERY LOW	<0.1	100.0	LOW	<0.1	100.0
Uranium-233/234	VERY LOW	<0.1	100.0	LOW	<0.1	100.0
Uranium-235	VERY LOW	<0.1	100.0	VERY LOW	<0.1	100.0
Total Risk	**LOW**			**MEDIUM**		

THIS PAGE INTENTIONALLY
LEFT BLANK

Table 2-5 Ecological Summary for Radionuclides
Organism: Fish-Eating Duck

Analyte	Near-River Groundwater Wells		
	Comparison to EHQ = 1.0	Percent of Total EHQ	Cumulative Percent of Total EHQ
Carbon-14	ABOVE	99.8	99.8
Strontium-90	BELOW	0.2	100.0
Uranium-233/234	BELOW	<0.1	100.0
Tritium	BELOW	<0.1	100.0
Uranium-238	BELOW	<0.1	100.0
Uranium-235	BELOW	<0.1	100.0
Technitium-99	BELOW	<0.1	100.0
Total EHQ	**ABOVE**		

EHQ - environmental hazard quotient

THIS PAGE INTENTIONALLY
LEFT BLANK

Table 2-6 Ecological Summary for Nonradionuclides

Analyte	Near-River Groundwater Wells	
	Comparison to Acute EHQ=1.0	Comparison to Chronic EHQ=1.0
Chromium	ABOVE	ABOVE
Zinc	ABOVE	ABOVE
Iron	ABOVE	NA
Silver	BELOW	ABOVE
Lead	BELOW	ABOVE
Aluminum	BELOW	BELOW
Cadmium	BELOW	BELOW
Nickel	BELOW	BELOW
Vanadium	BELOW	NA
Chloroform	BELOW	BELOW
Manganese	BELOW	NA
Tricloroethene	NA	BELOW
Chloride	NA	NA
Nitrate/Nitrite	NA	NA
Total Dissolved Solids	NA	NA

NA - No Data Available

EHQ - environmental hazard quotient

THIS PAGE INTENTIONALLY
LEFT BLANK

3.0 REMEDIAL ACTION OBJECTIVES

The RAO are medium-specific or operable unit-specific objectives for protecting human health and the environment. The RAO are based on exposure scenario, COC, ARAR, exposure pathways, and specify remediation goals so that an appropriate range of remedial options can be developed for analysis. This section presents the steps taken in refining the initial RAO (defined in 100 Area FS [DOE-RL 1994a]) based on a more thorough evaluation of the 100 Area groundwater operable unit data from the LFI reports.

The RAO refinement process begins with the refinement of COPC for the groundwater operable unit. This information is used to ensure that remedial alternatives being considered in this FFS can adequately address the types of contaminants and to facilitate the refinement of ARAR. The RAO also provide the basis for developing the GRA that will satisfy the objectives of protecting human health and the environment. The RAO are defined as specifically as possible without limiting the range of GRA that can be applied.

The RAO for protecting human receptors express both a contaminant level and an exposure route. Remedial action objectives for protecting the environment are expressed in terms of the medium of interest and target clean-up levels, because the intent of the remedial action is to preserve or restore the medium of interest.

Remedial action objectives are based on CERCLA guidance (EPA 1988). Assumptions used to develop RAO for the 100-KR-4 Operable Unit include:

- The main objectives are protection of the river and abatement of migration of contaminated groundwater plumes outside the operable unit.
- The recreational exposure scenario is assumed.
- The IRM will continue to the year 2008, at which time the final action for the operable unit will be implemented, or until cleanup goals are met. (This assumption is for costing purposes and does not represent the final cleanup period.)
- Based on the QRA for the occasional-use scenario, all identified COPC were within acceptable risk ranges (i.e., incremental cancer risk of 1×10^{-4} to 1×10^{-6} or an hazard quotient [HQ] < 1). Therefore, the potential risk from the operable unit is to the environment.

The RAO for environmental protection are:

- control groundwater movement to prevent release of COC from groundwater to surface water that would result in concentrations in the river in excess of Ambient Water Quality Criteria

- prevent destruction of critical habitat; minimize destruction of noncritical habitat; prevent adverse impacts to threatened or endangered species

- prevent erosion of soil during remediation that would contribute to surface water concentrations greater than the Ambient Water Quality Criteria for the COC in surface water.

Discussion supporting the RAO is given in the subsections below.

3.1 LAND-USE

Although the QRA uses frequent- and occasional-use scenarios (corresponding to residential and recreational uses respectively), there are no residential or recreational land-uses in the 100 Area at this time. The Hanford Future Site Uses Working Group (HFSUWG 1992) recommended the 100 Area be considered for the following four potential future land-uses:

- Native American uses
- limited recreation, recreation-related commercial uses and wildlife
- B Reactor as a museum/visitor center
- wildlife and recreation.

None of the group's recommendations included potential future residential use by definition; however, the scenarios include a range of restricted and unrestricted uses. The DOE currently limits the access to the 100 Area; this access restriction is assumed to continue during the IRM period. Therefore, for purposes of the FFS and given the relative timeframe of the IRM, the recreational scenario will be used to determine remedial action goals for the IRM. As defined in the past-practice strategy, the 100 Area will be reevaluated, including a comprehensive baseline risk assessment, in the future for removal from the NPL. Land-use will be reevaluated at that time.

3.2 CONTAMINANTS OF CONCERN

This section refers to two groups of contaminants, COPC and COC. The first group, COPC, was initially identified in the LFI (DOE-RL 1993b) as contaminants with the potential of having an adverse impact on human health or the environment. The second group is the COC which are refined from the list of COPC. In the context of FFS, COC are those constituents that must be addressed by remedial actions. The CERCLA requires that actions selected to remediate hazardous waste sites be protective of human health and the environment. In order to support this requirement, COPC identified in the LFI are refined to COC for the FFS.

The COPC were determined in the LFI for both human and ecological receptors based on the QRA and additional analysis of the data. For the occasional-use scenario (corresponding to recreational use), no human health COPC were identified in the QRA. It

should be noted that the ecological COPC were identified in the near-river wells. This resulted in a very conservative COPC list because the risks associated with the actual river/groundwater interface has not been determined or no allowance has been made for mixing and dilution of the contaminant concentrations by the river. The quantification of risk at this interface would aid in understanding the real threats to the environment so that they could be more properly addressed.

Ecological COPC were identified in the QRA as:

- carbon-14
- chromium
- iron
- lead
- silver
- zinc.

As part of the FFS, the COPC are further evaluated to narrow the list of contaminants which must be remediated. The following COPC were eliminated from the list of contaminants which are included in the evaluation of alternatives:

- Iron - only one detection out of 25 samples in the period March 1993 to January 1994 exceeded EPA's Ambient Water Quality Criteria for iron of 1,000 μg/L. The rest of the detectable concentrations were well below this level with many nondetects. (Two hits were eliminated from consideration as described in Appendix A of the LFI.)

- Lead - lead concentrations were all below 5.9 μg/L and appear to represent a background level more than a contaminant plume. Fifteen out of a total of twenty samples were below the method detection limit. The five detectable concentrations ranged from 3.1 μg/L to 5.9 μg/L. The ambient water quality criteria is a function of water hardness and ranges from 2.8 to 5.3 μg/L based on hardness of 90 to 150 mg/L (Washington Administrative Code [WAC] 173-201).

- Silver - only one detectable concentration out of a total of 26 samples was identified in the period from January 1993 to January 1994 for the near river wells.

The COC considered in this FFS are carbon-14, chromium, and zinc. Chromium is assumed to present the greatest potential for ecological impact because of the potential risk to fish eggs and therefore is the focus of the FFS. Treatment processes are identified for the other contaminants; however, modeling was performed for the chromium only. By addressing the chromium plume, the other contaminants are also addressed because of the extent and mobilite of the chromium plume. The other contaminant plumes are smaller than the chromium plume and located within the contours of the chromium plume (DOE-RL 1993b). The chromium and carbon-14 have similar retardation characteristics, i.e., they are mobile contaminants within the groundwater. Therefore, by modeling the most mobile

contaminant, the other contaminants can be conservatively estimated to be addressed through remediation of the chromium.

3.3 APPLICABLE OR RELEVANT AND APPROPRIATE REQUIREMENTS

Section 121 of CERCLA requires that any remedial action selected for a Superfund site be protective of human health and the environment. A component of an action's protectiveness is its ability to comply with ARAR. An ARAR is a promulgated Federal or State environmental cleanup standard, standard of control, substantive environmental protection requirement, criteria, or limitation. It must be either:

- "Applicable," (i.e., specifically addressing the substances, location, or action being considered).

- "Relevant and appropriate," (i.e., addressing a situation sufficiently similar to that encountered at the CERCLA site that its use is well suited to the particular site). A standard or criterion must be both relevant and appropriate to be an ARAR.

There are three categories of ARAR:

- chemical-specific ARAR - numerical values or methodologies used to determine acceptable concentrations of a contaminant

- location-specific ARAR - requirements that dictate or restrict actions at or surrounding the CERCLA site because of sensitive or unique conditions

- action-specific ARAR - technology or activity-based requirements or limitations on actions taken with respect to hazardous waste.

In addition to ARAR, to be considered (TBC) guidance consists of nonpromulgated criteria, advisories, guidelines, or proposed regulations. Since TBC guidance is not legally binding, it does not have the status of ARAR; however, TBC are identified and considered if ARAR do not exist for the substances or situations of concern or the ARAR alone would not be sufficiently protective.

The ARAR and TBC used in the analysis of alternatives for the groundwater operable unit FFS are identified in Appendix A. Table 3-1 lists the chemical-specific ARAR and TBC for the COPC for the operable unit.

The implementation and operation of the remedial alternatives may result in the generation of low-level or mixed waste. The proposed disposal for these wastes would be to the ERDF (if unavailable to meet the required schedule, then existing facilities such as W-025, would be used until the ERDF is available). The ARAR and TBC for the ERDF are not included in the ARAR tables for the FFS. These are addressed in the *Remedial*

Investigation and Feasibility Study Report for the Environmental Restoration Disposal Facility (DOE-RL 1994d). Waste acceptance criteria have not yet been developed for ERDF.

3.4 PRELIMINARY REMEDIATION GOALS AND POINTS OF COMPLIANCE

Because protection of the river is the goal of the FFS and because the greatest perceived threat is to the eggs and fry of the fish, the point of compliance should be at the groundwater/river interface. However, monitoring of this interface is difficult. Therefore, the proposed point of compliance is the near-river wells as defined in the QRA. The preliminary remediation goal (PRG) for this compliance point would be 50 μg/L measured in two consecutive sampling rounds as established in the Tri-Party Agreement Change Control Form M-15-93-02 (Ecology et al. 1994). Chromium concentrations below the chronic Ambient Water Quality Criterion of 11 μg/L as measured in the substrate are considered alternate PRG. The PRG for carbon-14 is 4900 pCi/L, the PRG for zinc is 110 μg/L. These PRG represent screening criteria for the FFS. Final remediation goals will be set in the ROD.

THIS PAGE INTENTIONALLY
LEFT BLANK

Table 3-1 Chemical Specific ARAR and TBC

Constituent	Safe Drinking Water Act				RCRA Subpart F (e)	MTCA (groundwater/ surface water) (f)	EPA Water Quality Criteria (chronic/acute) (g)	Washington Water Quality Standards (chronic/acute) (h)
	Primary MCL (a)	MCLG (b)	Secondary MCL (c)	Proposed MCL (d)				
Carbon-14								
Chromium	100	100	--	--	50	80/810	11/16	11/16
Zinc			5000			4800/16500 or 5000 under secondary MCL	110/120	86/205(i)

NOTE: All units for radionuclides in pCi/L; all other units in ug/L.
(a) 40 CFR 141.16 (radionuclides), 40 CFR 141.61 (organics), 40 CFR 141.62 (inorganics), as amended at 56 FR 31838 July 17, 1992
(b) 40 CFR 141.50 and 51 as amended at 56 FR 31838 July 17, 1992
(c) 40 CFR 143.3 as amended at 56 FR 3597 January 30, 1991 - TBC under federal regulations, possible ARAR under MTCA
(d) 56 FR 33120 July 18, 1991 - Proposed rules - TBC
(e) 40 CFR 264.94
(f) WAC 173-340-720, Model Toxics Control Act, Groundwater Cleanup Standards, Method B and WAC 173-340-730 Surface Water Cleanup Standards, Method B
(g) EPA's "Quality Criteria for Water 1986" and EPA's "Update #2 to Quality Criteria for Water 1986" - TBCs for surface waters only
(h) WAC 173-201-047, Toxic Substances - applies to surface waters only
(i) Value is dependent on water hardness; ranges are given for hardness between 90 and 250 mg/L as $CaCO_3$

THIS PAGE INTENTIONALLY
LEFT BLANK

4.0 ALTERNATIVE DEVELOPMENT AND SCREENING

The alternatives developed in the *100 Area Feasibility Study Phases 1 and 2* (DOE-RL 1994a) provide a range of remedial actions applicable to the general site characteristics and contaminants within the 100 Area. Appendix B contains detailed descriptions of the alternatives retained from the Phase 1 and 2 FS. These alternatives are intended to be generally applicable anywhere in the 100 Area. In the FFS, the alternatives are further defined and modified based on additional information from operable unit LFI, 100 Area aggregate studies and treatability testing. This section describes the groundwater alternatives presented in Appendix B relative to interim action at the 100-KR-4 Operable Unit. Section 4.1 describes the application of groundwater alternatives to the 100-KR-4 Operable Unit. Section 4.2 describes uncertainty issues associated with the application of each groundwater alternative at the 100-KR-4 Operable Unit.

This section refers to two groups of contaminants, COPC and COC. The first group, COPC, was initially identified in the LFI (DOE-RL 1993b) as contaminants with the potential of having an adverse impact on human health or the environment. The second group is the COC which are refined from the list of COPC and are present in the 100-KR-4 Operable Unit at concentrations exceeding background levels, thus requiring remedial actions with established remedial criteria. The COC include carbon-14, chromium, and zinc.

The DOE's Environmental Management (EM) Office of Technology Development (OTD) (EM-50) is managing an aggressive national program for applied research, development, demonstration, testing, and evaluation. The objective of this program is to develop technologies to cleanup the DOE nuclear production and manufacturing sites and to manage DOE generated wastes more cost-effectively than current environmental cleanup technologies. The program is addressing several major problem areas including groundwater and soil cleanup; and waste retrieval and processing. There is a suite of mutually complimentary technologies for environmental restoration in various stages of development and demonstration that will be ready for implementation in the near future.

4.1 ALTERNATIVE GW-1 - NO ACTION

Alternative GW-1, the no action alternative, is required by the National Contingency Plan (NCP) to serve as a baseline for evaluation of other alternatives. The no action alternative may be selected for sites where contamination does not exceed the level of unacceptable risk, where site contamination is in compliance with ARAR, where short-term risks associated with the remedial action exceed the risk of no action, or where the cost of remediation is excessive compared to the benefit gained in risk reduction.

The no action alternative for the groundwater operable units in essence implies walking away from the site (i.e., no actions are taken of any nature). The contamination is allowed to dissipate through natural attenuation processes. For radionuclides this is mainly natural radioactive decay. The effectiveness of the natural attenuation process is related to the half-life of the radionuclide and the affinity of the radionuclide to adsorb to the Hanford

Site soils. For other contaminants, such as chromium, the major attenuation factor is advection/dispersion, which depends on natural groundwater flow and the river flushing action to reduce concentrations.

Application of the no action alternative is independent of any site-specific considerations, as this alternative requires no restrictions, controls, or active remedial measures. Therefore, the baseline description for this alternative as described in Appendix B is directly applicable to the 100-KR-4 Operable Unit without modification. Contaminant plumes are allowed to dissipate through natural attenuation processes. Existing monitoring activities are continued through the IRM period (year 2008).

This definition of the no action alternative forms the basis for comparison of the more proactive alternatives. The no action alternative is assumed to have a $0 cost. However, in reality, the DOE will likely maintain control of the site for the near-term. Therefore, groundwater monitoring and access restrictions will be a part of the no action alternative. They will not, however, be considered by the FFS.

9413294.3149

4.2 ALTERNATIVE GW-2 - INSTITUTIONAL CONTROLS/CONTINUED CURRENT ACTIONS

Alternative GW-2 has been developed as an institutional controls GRA. Alternative GW-2 was initially developed in the 100 Area FS Phases 1 and 2 (DOE-RL 1994a) to prevent access to contaminated groundwater plumes beneath the 100 Area. The following process options are specified for the alternative:

- access restrictions:
  - deed restrictions
  - water rights restrictions
- monitoring:
  - groundwater monitoring
- continued current actions:
  - pilot-scale treatability test in 100-HR-3 Operable Unit
  - groundwater/river interaction studies
  - chromium speciation studies
  - Columbia River Comprehensive Impact Evaluation study.

4.2.1 Access Restrictions

The access restrictions included in this alternative are unique to groundwater media. Government control of the Hanford Site, and therefore the operable unit, is anticipated through the IRM period. Sitewide access restriction measures already existing at the Hanford Site, such as security fences and guarded entrances, will ensure 100-HR-3 groundwater is not accessible to the general public. Deed restrictions and water rights are

not required during the period of government control. The institutional controls alternative therefore does not require implementation, but only continued maintenance and enforcement.

4.2.2 Monitoring

In addition to restricting groundwater use and access to groundwater, the institutional action alternative also includes groundwater and environmental monitoring. Monitoring will be required to determine if and when institutional controls to restrict access to groundwater are no longer necessary.

4.2.3 Continued Current Actions

The continued current actions listed are efforts currently underway to complete the conceptual model of the groundwater operable units and to generate more certain technology performance data. These efforts support the selection of the most appropriate remedial action for the 100 Area groundwater operable units. The treatability test will provide data on technology performance and optimization, on waste generation, and possibly on aquifer response. The river/groundwater interaction studies will help describe the mixing zone to better predict the hydrologic actions affecting concentrations. The speciation studies will better quantify the amount of chromium (VI) to provide a more realistic conceptual model of contaminant movement in the aquifer and interaction with the sediments. The river impact assessment will provide risk assessment data specific to the receptors in the river. Source remediation will provide additional information on groundwater quality once potential continuing sources are cleaned up. All the information will be assessed to determine the best solution for the remediation of the operable unit. When the results of the current actions are available, the conceptual model may be complete enough to identify a final action for the operable unit.

4.3 ALTERNATIVE GW-3 - CONTAINMENT

The containment alternative is comprised of remedial technologies that will contain contaminated groundwater plumes beneath the 100 K Area. The general description of this alternative is presented in Section 1.3 of Appendix B and includes several subsurface barrier (cutoff wall) technologies that are potentially applicable in the 100 K Area. The baseline description specifies extraction wells for hydraulic control and groundwater monitoring for contaminants as associated process options. The appropriate cutoff wall technology for use at the 100-KR-4 Operable Unit has been determined on the basis of site-specific characteristics affecting implementation at the 100 K Area. These characteristics include the site geologic formation and wall depth requirements. Groundwater modeling results enable determination of the optimum configuration of the cutoff walls and hydraulic control wells in the 100 K Area.

4.3.1 Cutoff Wall Selection

The cutoff wall technology considered most appropriate for the 100 K Area is a sheet pile. Although sheet pile technology is not applicable in the Hanford formation, where the potential for cobbles and boulders exists, soils beneath the ground surface adjacent to the river are predominantly of the Ringold Formation. The sandy gravels and silty sands comprising Ringold soils are amenable to the pile driving associated with sheet pile construction. Based on the 32 m (105 ft) depth requirement in the 100 K Area, sheet pile construction is considered readily implementable (Figure 4-1). A technical implementation concern involves an area along the river in the 100 K Area where the river bank is steep. Along this area, excavation may be required to facilitate sheet pile installation. The sheet pile wall presents the best options as far as low conductivity, ease of future removal if needed, and minimal disturbance on the environment.

4.3.2 Containment System Configuration

Within the 100-KR-4 Operable Unit, groundwater in the unconfined aquifer generally flows northwest towards the Columbia River (DOE-RL 1993b). Near the Columbia River in the 100 K Area, groundwater flows parallel to the bank during high and low river stages (DOE-RL 1993b). Therefore, placement of the sheet piling cutoff wall is proposed downgradient of the plume as close as reasonably possible to the river. Based on the near-river topography in the 100 K Area, the location proposed for placement of the sheet pile cutoff wall is between the river and the 11 m (36 ft) high embankment. This space is approximately 150 m (500 ft) wide and may require excavation to enable placement of the sheet pile cutoff wall. It is assumed that the subsurface in this region is comprised primarily of Ringold Formation soils which do not contain large cobbles or boulders that would otherwise inhibit pile driving activities.

Immediately adjacent to the river, the unconfined aquifer is just below the ground surface. Assuming the thickness of the aquifer is similar to other locations in the 100 K Area, the aquifer thickness will range from 4 to 7 m (13 to 24 ft) (DOE-RL 1993b). The clay/silt layer beneath the unconfined aquifer provides a less permeable zone into which to key the wall. The required depth of the wall will be approximately 32 m (105 ft). This depth includes an additional 1 m (3 ft) for key-in to the clay/silt layer.

The 100 K Area sheet piling cutoff wall will be constructed along the Columbia River and will span the length of the chromium plume identified in the LFI (DOE-RL 1993b). Groundwater modeling indicates that the length of the wall required for the 100 K Area to be approximately 2,900 m (9,500 ft). This wall will also contain the other contaminant plumes identified at the 100 K Area that coexist within the larger chromium plume (carbon-14 and zinc). The configuration of the sheet pile wall must also account for groundwater flow parallel to the Columbia River during high river stages. Additional sheets can be added later to lengthen the wall if needed to meet changes in performance requirements.

The description of this alternative, presented in Section 1.3 of Appendix B, specifies upgradient extraction wells to control the hydraulic head behind the barrier and injection

wells placed downgradient to maintain the hydrologic conditions in the aquifer near the barrier. The hydraulic gradient in the 100-KR-4 Operable Unit might be sufficiently small to eliminate the need for the proposed extraction/injection well system. Results of groundwater modeling indicate that one pumping well located at each end of the sheet pile wall slightly enhances plume containment by preventing contaminated groundwater from escaping around the ends of the wall. However, the extraction wells at the walls would also result in additional potential for worker exposure associated with the removal and injection system. The removal/injection system also increases operations and maintenance (O&M) activities and implementability considerations. The extracted groundwater may contain high COC concentrations, and, therefore, treatment of the extracted groundwater may be required prior to reinjection in the upgradient portion of the contaminant plume. The wall acts to increase the travel time of the contaminants reaching the river. Eventually, the contaminants will migrate around the wall ends unless additional actions are taken, such as additional extraction of the contaminated groundwater near the ends.

9413294.3152

4.3.3 Containment System Implementation

Implementation of a sheet piling wall in the 100 K Area will involve pile driving thick steel sheets into the soils of the Ringold Formation near the bank of the Columbia River. The sheet piles will be constructed with sealable joints to ensure that a continuous cutoff wall can be formed. To accomplish this, each sheet pile is constructed so that the contacting edges between successive sheet piles form an annulus that can be injected with a sealant (such as cement). Sheet pile construction equipment requirements include a hoist truck (to place sheet pilings), a mobile crane (to perform pile driving), and a generator (Waterloo Center for Groundwater Research 1992). Sheet pile installation may require limited excavation but will not require large construction areas.

The specified sheet piling cutoff wall must provide strength to maintain structural integrity and sufficiently reduced permeability relative to the unconfined aquifer to ensure containment. Steel sheet thicknesses of 11 mm to 15 mm (0.4 in to 0.6 in) are considered applicable for constructing cutoff wall to depths of 30 m (100 ft) (Waterloo Center for Groundwater Research 1992). The hydraulic conductivity of the unconfined aquifer along the river in the 100-KR-4 Operable Unit ranges from 7.6×10^{-3} to 5.8×10^{-2} cm/sec (DOE-RL 1993b). Sealable joint sheet piling walls can attain hydraulic conductivities between 10^{-7} to 10^{-10} cm/s depending on the joint sealant material (Starr et al. 1992).

4.3.4 Containment System Modeling Results

Groundwater modeling was performed to assess the transport of chromium into the Columbia River. Modeling for other COC was not performed for this FFS. Groundwater modeling results indicate that the containment system described above can significantly reduce the mass of chromium entering the Columbia River. In comparison to the baseline, or no action, an 85 to 88% reduction (85% for wall without extraction/injection system and 88% for wall with the system) in chromium entering the river is achieved during the period of interim action. Although the chromium concentrations in groundwater entering the river

may remain above the EPA Ambient Water Quality Criteria level of 11 μg/L, the flow rate of contaminated groundwater would be significantly reduced, and dilution with the river still occurs. These modeling results are based on the assumption that the required sheet pile wall can be successfully implemented. (See Section 5.0 for additional modeling information.)

4.4 ALTERNATIVE GW-4 - IN SITU TREATMENT

The baseline description of Alternative GW-4, as presented in Section 1.4 of Appendix B, includes the remedial technologies for in situ treatment of nitrate and volatile organic compound contaminated groundwater beneath the 100 Area. The COC for the 100-KR-4 Operable Unit include only heavy metals and carbon-14; nitrate and volatile organic compounds are not found in the operable unit in concentrations high enough to include them as COC. Because Alternative GW-4 does not address the major contaminants in 100-KR-4 (heavy metals and carbon-14), this alternative is not applicable. On this basis, no further discussion of the in situ treatment alternative is necessary.

4.5 ALTERNATIVE GW-5 - REMOVAL, TREATMENT, DISPOSAL USING ION EXCHANGE

The baseline description of Alternative GW-5, presented in Section 1.5 of Appendix B, specifies remedial technologies for removal, treatment, and disposal of contaminated groundwater beneath the 100 Area. The objective of the Alternative GW-5 are to pump and treat the contaminant plume prior to migration to the river. The remedial technologies and associated process options are:

- removal:
  - extraction wells
- biological treatment:
  - biodenitrification (nitrates)
- chemical treatment:
  - chemical oxidation (organics)
  - precipitation (heavy metals and radionuclides)
  - chemical reduction (hexavalent chromium)
- physical treatment:
  - filtration (remove precipitates and suspended solids)
  - ion exchange (polishing for removal of any remaining ionic contaminants)
- stabilization/solidification:
  - cement-based solidification (secondary waste streams)

- liquid disposal:
  - river discharge or reinjection into an aquifer
- solids disposal:
  - ERDF, W-025, or another site
- monitoring
  - groundwater monitoring.

Modifications to this description are required based on the COC identified following evaluation of COPC in the 100-KR-4 Operable Unit LFI (DOE-RL 1993b). Because the removal, disposal, and monitoring aspects of this alternative are universally applicable to all 100 Area groundwater operable units, modifications to this alternative are specific to the treatment system.

4.5.1 Treatment System Modifications

The COC include carbon-14, chromium, and zinc. Since there are no organic COC identified in 100 K Area groundwater, the chemical oxidation process for destruction of organic contaminants can be eliminated from the baseline treatment system. Similarly, because nitrate is not identified as a COC in 100 K Area groundwater, based on the occasional-use scenario, the biodenitrification process can be eliminated from the baseline treatment system. The results of the ion exchange treatability study, however, showed that nitrate is removed by the ion exchange media.

The baseline treatment system can be further modified based on the results of the treatability study for chemical precipitation and ion exchange which were investigated for removal of chromate, nitrate, and uranium-238 from 100-HR-3 groundwater (WHC 1993b). Results of this treatability study indicate that ion exchange is more effective than precipitation for removal of chromium in that it reduced chromium levels in groundwater to below the detection limits of the chemical analysis techniques used in the studies (29 ppb total chromium, 19 ppb chromium VI) (WHC 1993b). Moreover, the chemical precipitation process, when specified as a primary treatment, generates larger quantities of secondary waste requiring disposal than does ion exchange.

Furthermore, the remediation goals (Section 3.0) for the removal of zinc is considerably lower than levels that chemical precipitation can economically achieve; therefore, other viable technologies, such as ion exchange, would be more suitable for achieving the remediation goals.

The modifications described above reduce the baseline treatment system to a single treatment process consisting of ion exchange as a primary treatment technology with chemical precipitation to treat the COC from the regeneration solution when the ion exchange resins are regenerated. The conceptual flow diagram is presented in Figure 4-2. Filtration of the groundwater feed entering the treatment system is required to remove particulates and suspended solids. The ion exchange system for the 100-KR-4 Operable Unit includes two

sections for removing contaminants. The first section consists of an anionic resin bed with a higher selectivity for carbonate and bicarbonate anions to remove carbon-14 which is assumed to be in the carbonate/bicarbonate form. It is assumed that the amount of carbon-14 removed by the resin bed is in proportion to its concentration relative to the removed alkalinity of the groundwater. A 90% reduction in alkalinity would result in 90% removal of carbon-14.

The first section of the ion exchange system consists of a cationic resin bed for cationic heavy metals such as trivalent chromium, and zinc. Once COC breakthrough is detected, both the anionic and cationic resin beds are regenerated in place using sodium hydroxide and sulfuric acid, respectively. The waste liquid generated by the regeneration operation is treated by chemical precipitation followed by dewatering in a filter press. The resulting filter cake, which contains almost all of the COC removed from the resin beds, is treated by chemical fixation and solidification prior to transportation to ERDF for disposal. The filtrate effluent stream from the chemical precipitation/filter press process is pumped back to the ion exchange feed line.

The second section of the ion exchange system consists of an anionic resin bed with a high selectivity toward chromate anions (chromium VI). Upon breakthrough of chromate anions, the resins are regenerated in place with strong sodium hydroxide solution, followed by polishing with sulfuric acid solution. The chromate waste stream produced in the regeneration process is first chemically treated to reduce the hexavalent chromium to trivalent chromium, and then is treated in the same chemical precipitation unit used for the treatment of generated waste from the cationic resin beds.

The following processes are included in the application of GW-5 to the 100-KR-4 Operable Unit:

- removal:
  - extraction wells
- physical treatment:
  - filtration (remove particulates and suspended solids)
  - ion exchange (anionic and cationic resin beds to address COC)
  - chemical precipitation (treat resin regeneration solutions)
- stabilization/solidification:
  - cement-based solidification (secondary waste streams)
- liquid disposal:
  - river discharge or injection into an aquifer
- solids disposal:
  - ERDF, W-025, or another site
- monitoring
  - groundwater monitoring.

4.5.2 Site Specific Implementation

Application of Alternative GW-5 to the 100 K Area was simulated by two-dimensional groundwater modeling to facilitate optimization of implementation design parameters. Modeling results indicate that a line of 11 extraction wells placed 30 m to 150 m (100 ft to 500 ft) from the Columbia River and spaced approximately 220 m (720 ft) apart maximized the capture of the chromium plume, minimized leakage into the river, and minimized river water extraction. However, due to the close proximity of the river to the pumping system, river water will be extracted and treated with the groundwater. The combined extraction rate of all 11 wells is approximately 1,100 gpm (100 gpm from each well).

4.5.3 Operational Considerations

Although the COC identified in 100 K Area groundwater are limited to carbon-14, chromium, and zinc, low concentrations of other constituents, such as nitrate, aluminum, nickel, and high alkalinity as well as relatively high concentrations of inorganic ions, such as calcium, magnesium, potassium, sodium, and sulfate are present (DOE-RL 1993b). The potential for these additional contaminants to enter and interfere with the treatment system must be considered.

A treatability study on the performance of the ion exchange system has not been conducted to evaluate the impact of non-COC compounds and ions present in the 100 K Area groundwater. To assess the system's potential to achieve the remediation criteria, a treatability study would be required to estimate the consumption rate of the ion exchange resin media, because the non-COC compounds and ions typically compete with the COC for the binding sites on the resin media. Ion exchange treatment is a well-demonstrated technology for removing inorganic anions and cations from water effluents (Patterson 1985). It is capable of achieving the remediation criteria for the 100-KR-4 Operable Unit, but a treatability study would provide additional information for estimating design and cost parameters.

Interference of non-COC constituents in the groundwater may be minimized with appropriate pretreatment (e.g., filtration, pH adjustment, etc.). Effluent monitoring will enable determination of chromium and carbon-14 breakthrough.

Treated system effluent would be injected back into the unconfined aquifer. This effluent may contain tritium activity concentrations above the Safe Drinking Water Act (SDWA) maximum contaminant level (MCL) (20,000 pCi/L). The location of injection wells may need to be sufficiently upgradient from the Columbia River to ensure that natural radioactive decay will reduce tritium levels to below the SDWA MCL prior to reaching the Columbia River. Hydrogeologic modeling would be needed to optimize the injection well location to account for the tritium; the peak concentration of tritium has been determined to be approximately 1,900,000 pCi/L in the 100-KR-4 Operable Unit (DOE-RL 1993b).

4.5.4 Modeling Results

Groundwater modeling results indicate two benefits of the removal, treatment, and disposal alternatives. First, the extraction system acts as an effective hydraulic control measure by minimizing further migration of the chromium plume. Second, the treatment system effectively reduces the concentration of COC within the groundwater. The results are independent of the treatment system because the groundwater model does not account for aboveground activities. However, based on the results of the ion exchange treatability study for the 100-HR-3 Operable Unit and past performance of ion exchange technology, the treatment system specified for Alternative GW-5 is expected to effectively remove the COC from groundwater extracted from the 100-KR-4 Operable Unit. The injection system was not modeled for this evaluation of alternatives. Treatability testing to determine the potential for river disposal would aid in optimizing the disposal of treated water. Additional modeling would be required to locate injection wells depending on treated water quality (i.e., injecting contaminated water may require a different system than noncontaminated water). The injection of treated water may increase the gradient in the area of injection, thereby pushing the contaminants towards the river and the extraction wells. Optimum extraction and injection rates would be determined in the design phase.

In comparison to the baseline (no action), a reduction of approximately 95% in the mass of chromium entering the river from 100 K Area groundwater would be achieved during the period of interim action. Although the modeling results show that chromium concentrations in groundwater entering the river may still exceed the EPA Ambient Water Quality Criteria level of 11 ppb, the hydraulic effects of the extraction system significantly reduce the flow rate of contaminated groundwater into the river.

4.6 ALTERNATIVE GW-6 - REMOVAL, TREATMENT, DISPOSAL USING REVERSE OSMOSIS

Alternative GW-6 is similar to Alternative GW-5 in that both alternatives specify remedial technologies for removal, treatment, and disposal of contaminated groundwater in the 100 K Area. Therefore, the baseline description of Alternative GW-6 (see Section 1.6 of Appendix B) requires modification for application to the COC identified in Section 2.0. Since the removal, disposal, and monitoring aspects of this alternative are independent of the particular groundwater operable unit, modifications to this alternative are specific to the treatment system. Alternative GW-6, as described in Appendix B, consists of the following remedial technologies and associated process options:

- removal:
  - extraction wells

- physical treatment:
  - air stripping/carbon adsorption (organics)
  - filtration (remove suspended solids)
  - forced evaporation (for volume reduction prior to solidification)
  - reverse osmosis (high molecular weight inorganic contaminants)

- stabilization/solidification:
  - cement-based solidification (secondary waste streams)

- liquid disposal:
  - crib disposal

- solids disposal:
  - ERDF, W-025, or another site

- monitoring
  - groundwater monitoring (100 Area groundwater).

4.6.1 Treatment System Modifications

The baseline treatment system described for Alternative GW-6 is modified on the basis of COC identified in 100 K Area groundwater. As described for Alternative GW-5, no organic COC are identified in 100 K Area groundwater. Therefore, the air stripping/carbon adsorption process for removal of organic contaminants may be eliminated from the baseline treatment system.

Based on past performance of reverse osmosis technology in similar applications, a recovery rate of up to 90% may be achieved for Alternative GW-6 (i.e., the permeate flow rate would be 90% of influent groundwater flow rate). Thus, the reverse osmosis concentrate treatment rate is about 110 gpm. Potassium permanganate oxidation and manganese green sand filtration units are also included upstream of the reverse osmosis system to alleviate the potential adverse impact of the relatively high concentration of iron in the extracted groundwater. No other modifications to the baseline treatment system for Alternative GW-6 are anticipated.

The modifications described above reduce the baseline treatment system to reverse osmosis followed by ion exchange treatment of the concentrate. Groundwater fed into the treatment system is pretreated by pH adjustment, an antiscaling agent, and iron oxidation to maximize the efficiency of reverse osmosis. Cement solidification is retained for treatment of residual waste from the ion exchange and precipitation systems and other secondary wastes (settling tank sludge). The reverse osmosis permeate from the process are disposed of as described in the baseline description of this alternative. Figure 4-3 presents a conceptual flow diagram of the modified treatment system proposed for application of Alternative GW-6 to the 100-KR-4 Operable Unit.

- removal:
  - extraction wells

- physical treatment:
  - filtration (remove suspended solids)
  - reverse osmosis (high molecular weight inorganic contaminants)
  - forced evaporation

- stabilization/solidification:
  - cement-based solidification (secondary waste streams)

- liquid disposal:
  - crib disposal
  - river disposal
  - injection to aquifer

- solids disposal:
  - ERDF, W-025, or another site

- monitoring
  - groundwater monitoring (100 Area groundwater).

9413294.3159

4.6.2 Site Specific Implementation

The site specific implementation discussed previously for Alternative GW-5 is also applicable to Alternative GW-6. The extraction well system configuration in the 100 K Area consists of 11 wells with a combined pumping rate of approximately 1,100 gpm, as described in Section 4.5.2 for Alternative GW-5.

4.6.3 Operational Considerations

Although the COC identified in 100 K Area groundwater for treatment are limited to carbon-14, chromium, and zinc, low concentrations of other constituents, such as nitrate, aluminum, and nickel, as well as relatively high concentrations of inorganic ions, such as calcium, magnesium, potassium, sodium, and sulfate are also present. High alkalinity values are also present in the operable unit (DOE-RL 1993b). The potential for these additional constituents and parameters to enter and interfere with the treatment system must be considered. The effect of these other constituents on each treatment process is assessed below, in the absence of treatability study data, on the basis of whether the technology has been previously applied in similar situations. Evaporation processes become increasingly less cost effective with increasing flow rates.

Reverse osmosis is specified as a best available technology (BAT) for removing chromium and nitrate to MCL in the SDWA (40 CFR 141.62[c]). Moreover, reverse osmosis has been demonstrated to effectively remove inorganic contaminants such as hexavalent chromium, trivalent chromium, nitrates, and carbonates, and achievement of concentrations of less than 0.1 μg/L for metals and inorganic anions have been demonstrated for ultrapure water requirements (Amjad 1993, Patterson 1985). The permanganate oxidation of the iron pretreatment is not expected to be materially impacted by other constituents, with the possible exception of a higher permanganate usage rate. Because carbon-14 is likely present as a carbonate, reverse osmosis should remove the radionuclide. One consideration is the potential for the carbon-14 to be released during evaporation or

precipitation of the regeneration liquid. This can be addressed through prudent control of pH and the use of warning systems.

Effluent from the reverse osmosis treatment system that is contaminated with tritium at concentrations above the SDWA MCL (20,000 pCi/L) is disposed through injection to the aquifer as in Alternative GW-5 (see Section 4.1.5.3) or discharged into a crib(s). The practicality or effectiveness of crib disposal has not yet been assessed because the lateral extent of soil plumes have not been delineated. Thus, the availability of ground surface and percolation rates have not been evaluated. Based on a peak tritium concentration of 1,900,000 pCi/L in the 100 K Area, however, disposal of tritium contaminated groundwater may be necessary.

4.6.4 Modeling Results

The groundwater modeling results described previously for Alternative GW-5 (see Section 4.5.4) are also applicable to Alternative GW-6. As noted previously, the results presented are independent of the treatment process because the groundwater model does not include the effects of aboveground activities. Based on previously demonstrated effectiveness of reverse osmosis for chromium removal as opposed to ion exchange, the groundwater modeling results are considered valid for this alternative. The result of removal, treatment, and disposal of groundwater in the 100 K Area is to significantly reduce chromium concentrations in the contaminant plumes and minimize plume migration into the Columbia River.

4.7 UNCERTAINTY ISSUES

Application of the groundwater alternatives at the 100-KR-4 Operable Unit involve some degree of uncertainty as to implementability and effectiveness. Although other considerations, such as community and regulatory acceptance of an alternative, will also be uncertain, only technical uncertainty will be addressed here. The following sections describe the uncertainty associated with each alternative relative to the 100-KR-4 Operable Unit. One technical issue common to all alternatives is the assumption that all chromium is chromium VI. This assumption is being investigated for the 100-HR-3 Operable Unit through speciation studies. The speciation of the chromium affects the retardation factor in the modeling, risk analysis, treatment system selection, and remediation goals. The assumption results in conservative estimates of risk and remediation goals.

4.7.1 Alternative GW-1

There is no uncertainty associated with implementation of this alternative because no action is required. The objective of the interim action is protection of the Columbia River; because the risks at the groundwater/river interface have not been quantified, the ability of the no action alternative to meet remedial goals is uncertain. Contaminant concentrations, based on limited existing data, are generally orders of magnitude lower in the springs and

river than in the aquifer. Uncertainty exists in the COC identified for the operable unit. Because identification of the COC is based on the concentrations in the near-river wells, they may not accurately represent concentrations available for uptake by biological resources. The uncertainty could be lessened by modeling the interface between the river and the groundwater to determine an appropriate mixing value. This uncertainty applies to all the alternatives and is a major factor in the analysis of benefits versus costs. Natural attenuation and dispersion are reliable and have been observed to work at the Hanford Site.

4.7.2 Alternative GW-2

Implementation of the institutional controls alternative is relatively straight-forward, requiring only administrative effort and legal enforcement. Since the Hanford Site will remain under government control throughout the IRM period (through the year 2008), this alternative is essentially in place. The primary purpose of the IRM is protection of the Columbia River from contaminated groundwater. However, the uncertainty associated with this alternative is the effectiveness of access restrictions in protecting the Columbia River. Institutional controls will have no effect on the migration of contaminated groundwater into the river. Only natural attenuation, dispersion, and decay aid in the aquifer remediation.

9413294.3161

4.7.3 Alternative GW-3

The uncertainty associated with the containment alternative in the 100 K Area is the ability to implement a sheet piling wall along the bank of the Columbia River. Construction of a sheet piling wall requires pile driving steel sheets into the soil formation directly adjacent to the river. These soils are considered to be predominately Ringold Formation soils. However, the presence of subsurface obstructions, such as large cobbles or boulders, can inhibit pile driving activities. Limited excavation may be applicable for infrequent subsurface obstruction removal requirements. However, if obstructions are encountered and cannot be removed by excavation, a different type of barrier may be considered. For the most part, all methods of vertical barrier are similar in cost and benefit and differ mainly in the implementability.

An additional concern involves the ability to construct the sheet piling wall in the area along the river where a steep embankment exists close to the river. Excavation of this embankment may be required to enable construction of the sheet pile wall in this area. Additional characterization of the 100 K Area along the river bank or treatability testing is required to verify implementability of the sheet piling wall.

4.7.4 Alternative GW-4

The in situ treatment alternative is not applicable to the conditions in the 100-KR-4 Operable Unit because the alternative is aimed at remediation of nitrate and organic contaminants. Because these constituents are not COC at 100-KR-4, no discussion of uncertainties is presented.

4.7.5 Alternative GW-5

The primary uncertainty associated with this alternative is the effectiveness of pump and treat to satisfy RAO for preventing migration of contaminated groundwater into the Columbia River (i.e., the objective of the alternative is containment of the plume as opposed to mass reduction of the contaminants). Groundwater modeling results for the 100 K Area indicate a significant reduction in the mass of chromium and volume of contaminated groundwater reaching the river. However, the concentration of chromium in groundwater entering the river might still exceed the EPA Ambient Water Quality Criteria level (11 ppb). Although conventional pump-and-treat methods have been shown to reduce contaminant mass and prevent further migration, their ability to reduce contaminant levels in the aquifer to drinking water standards has been limited (PE 1993) because contaminants that are adsorbed onto soil particles may dissolve into the groundwater once pumping stops, thereby re-contaminating the aquifer.

The second area of uncertainty for this alternative is the pumping rate and duration of the pump-and-treat remedy. The thickness of the groundwater plume has not yet been delineated. Thus, no three-dimensional modeling has been done to optimize the configuration of and extraction flow rates from the wells. Such an optimization minimizes the extraction flow rate while enhancing the capture efficiency of the well. Lower extraction rates from the wells would directly impact the sizing and, thus, the associated capital and operating costs of the groundwater treatment system. The total extraction flow rate of 1,100 gpm used for the technology selection and associated cost estimates is based on a simple two-dimensional model that did not consider the impact of plume thickness on the extraction flow rate. Additional optimization would be necessary for more final design of the extraction and treatment system.

The third area of uncertainty is the lack of data from a treatability study which would allow for a better selection of process configuration and estimation of the design parameters and ion exchange resin consumption rates. It would also enable a better estimation of the extent of interference with the selectivity of the ion exchange media from non-COC constituents (e.g., hardness and alkalinity). Professional judgment and vendor information have been the basis of developing and evaluating this alternative.

4.7.6 Alternative GW-6

The uncertainties associated with the groundwater extraction and ex situ treatment in this alternative are identical to those identified for Alternative GW-5. These aspects of Alternatives GW-5 and GW-6 are essentially the same except for the technologies specified for treating contaminated groundwater. Uncertainty exists in the economic feasibility of reverse osmosis for treating to the remediation criteria concentration levels. Treatability testing of operable unit-specific groundwater would help resolve the uncertainty.

An additional uncertainty for this alternative relative to Alternative GW-5 is the effectiveness and feasibility of crib discharge of the treated groundwater to flush the contaminated vadose zone. The lateral extent of soil plume(s), availability of ground surface

for percolation, percolation rate, duration of percolation, and time requirement of flushing contaminants through the vadose zone and subsequent capture and treatment by the pump-and-treat method have not been evaluated yet.

9413224.3163

Figure 4-1 Cross-Section Through Near-River Wells

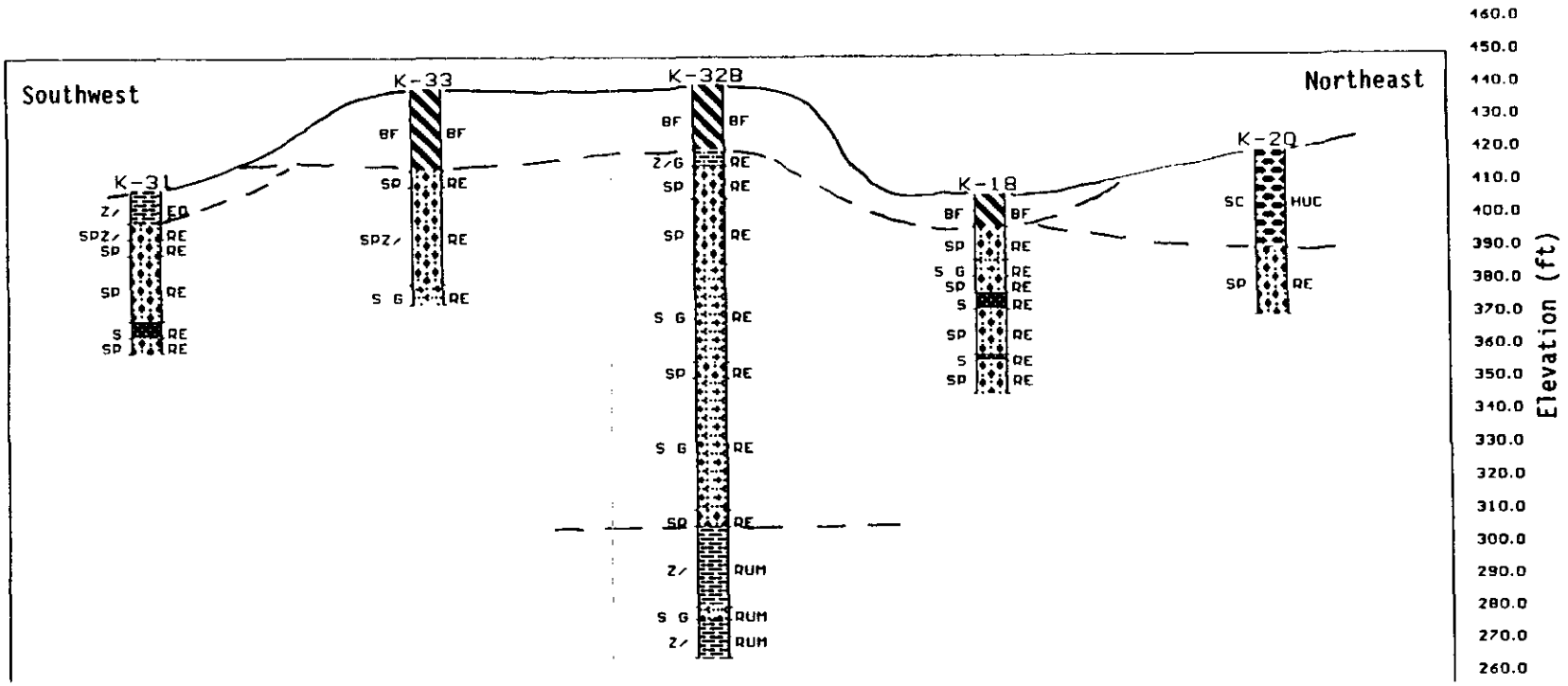

GEOLOGIC UNITS:
- BF = backfill
- H = Hanford fm
- HUC = Hanford fm, upper cobble/boulder unit
- RC = Ringold Fm, Unit C
- RE = Ringold Fm, Unit E
- RUM = Ringold Fm, upper muds

LITHOLOGY KEY:
- BF = backfill
- SP = sandy pebble/cobble gravel
- SPZ = silty sandy pebble/cobble gravel
- GS = gravelly sand
- SC = sandy cobble/boulder gravel
- S = sand
- SZG = sandy silt/clay, minor gravel
- ZG = silt/clay, minor gravel
- SZ = sandy silt/clay
- Z/CA = silt/clay, carbonate rich
- SZCA = sandy silt/clay, carbonate rich
- Z/ = silt/clay
- GSZ/ = silty gravelly sand

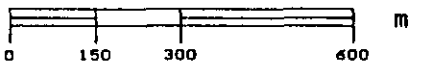

THIS PAGE INTENTIONALLY
LEFT BLANK

Figure 4-2 Conceptual Process Flow Diagram for Alternative GW-5 Application at 100-KR-4 Operable Unit

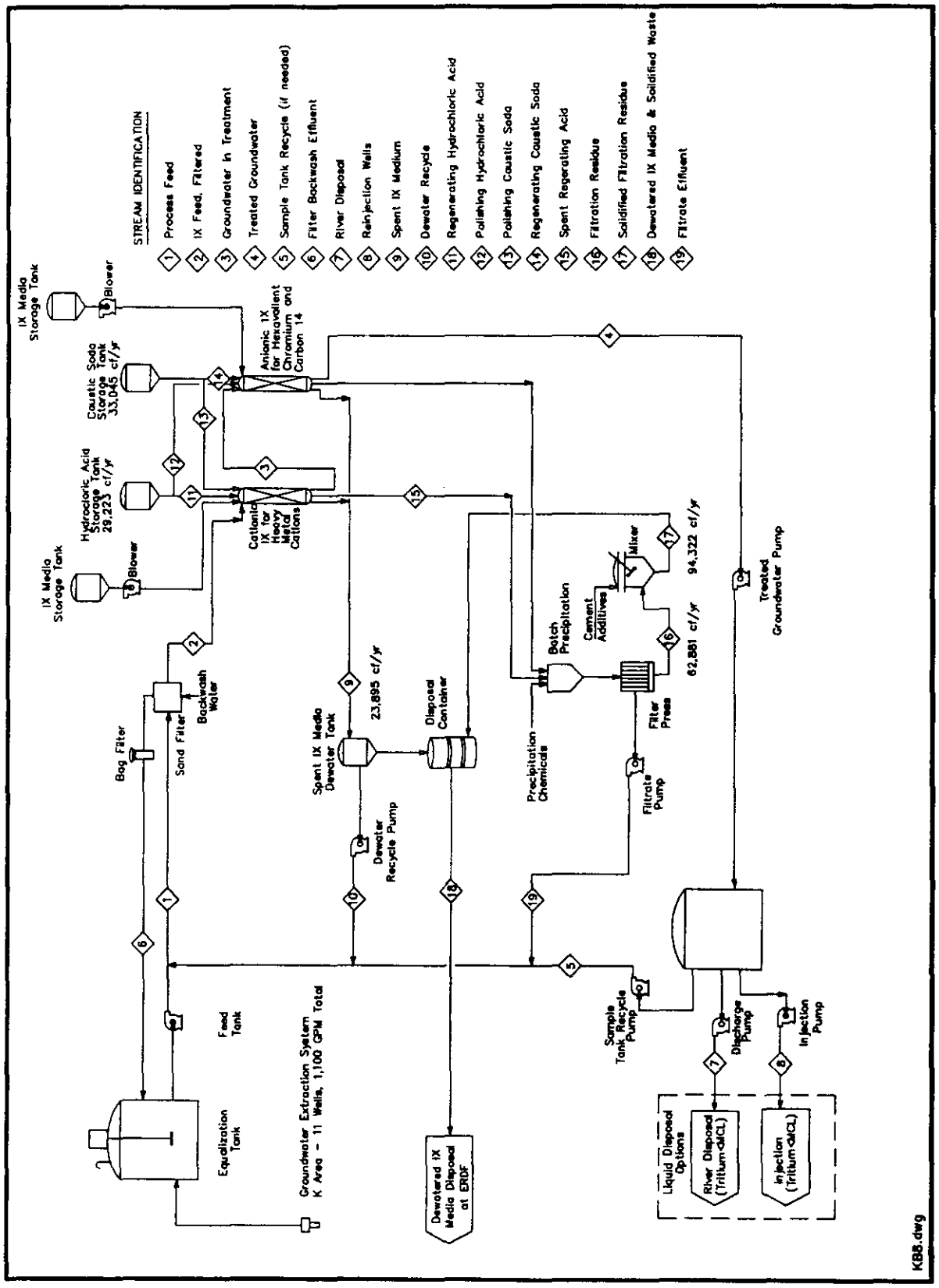

THIS PAGE INTENTIONALLY
LEFT BLANK

Figure 4-3 Conceptual Process Flow Diagram for Alternative GW-6 Application at 100-KR-4 Operable Unit

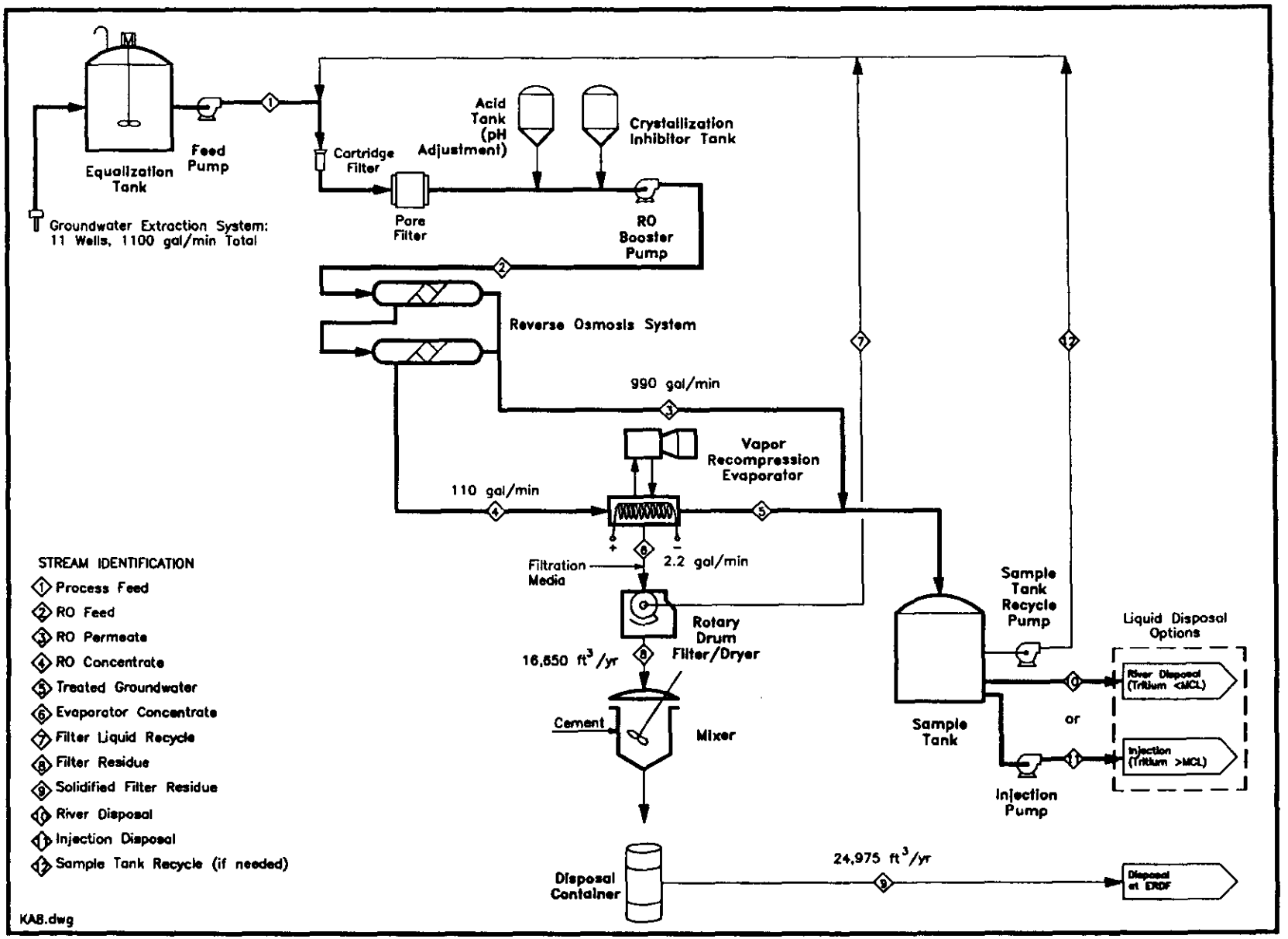

THIS PAGE INTENTIONALLY
LEFT BLANK

5.0 MODELING RESULTS

5.1 INTRODUCTION

Numerical groundwater flow and solute transport models of the unconfined groundwater flow system in the 100 K Area were developed to aid in the specification and evaluation of IRM for minimizing further migration of chromium to the Columbia River. This section describes the design of these numerical models and the assumptions used in constructing the models.

5.2 GROUNDWATER FLOW MODEL

5.2.1 Model Design

A groundwater flow model for the 100 K Area was designed and constructed with ModelCad$^{386™}$, a computer-aided design (CAD) software package for groundwater modeling (Geraghty and Miller 1993). ModelCad$^{386™}$ has an interactive graphical interface, which provides a fast and accurate method for designing and constructing numerical groundwater flow model.

5.2.1.1 Model Code. The groundwater flow model code used for the 100 K Area models was MODFLOW (McDonald and Harbaugh 1988), a finite-difference groundwater flow model code developed by the United States Geological Survey (USGS). MODFLOW was selected for this evaluation after a review of the *Descriptions of Codes and Models to be Used in Risk Assessment* report (DOE-RL 1991b) and because it is capable of simulating the unconfined aquifer on a personal computer. The code can be linked to MT3D, a well documented transport code. Because the purpose of the modeling effort was to support detailed analysis of alternatives, a simple, personal computer-based model was desired. The intent was to quantify in relative terms the effectiveness of the alternatives. The modeling serves only as a tool for analysis.

5.2.1.2 Assumptions of Model Design. All of the hydrogeologic conditions that control the movement of groundwater in an aquifer system are not known exactly, therefore some assumptions and simplifications must be made in constructing numerical models that simulate groundwater flow. The following assumptions were made in the construction of the groundwater flow models:

- the unconfined aquifer receives recharge by infiltration of precipitation
- there is no vertical flow of groundwater between the unconfined aquifer and the underlying layers
- the Columbia River has a uniform streambed thickness and a uniform depth along the entire reach of the river within the model grid.

The scope of the modeling effort was to develop models to compare the relative effectiveness of the various alternatives, not for design purposes. Therefore, it was not feasible to model all of the details of the aquifer system, in particular, the large daily and seasonal variations in the Columbia River stage. Because all of the alternatives are simulated in the same manner and use the average river stage, the modeling is adequate for the comparison of relative effectiveness of alternatives. Because the mixing zone between the aquifer and the river was not simulated, the results are conservative, with more chromium going to the Columbia River than if the chromium was diluted in the mixing zone.

5.2.2 K Area Groundwater Flow Model

5.2.2.1 K Area Model Grid. A 135 row by 195 column, two-dimensional (one layer), finite-difference grid was constructed for the 100 K Area groundwater flow model (Figure 5-1). The grid was uniformly spaced, with a row and column spacing of 20 m (66 ft). The y-direction of the grid was oriented in a northwest-southeast direction, approximately parallel to the principal direction of groundwater flow in the 100 K Area.

5.2.2.2 Boundary Conditions. The boundary conditions of a model define the head elevation or groundwater flow rate along the boundaries of the model domain and were used to simulate hydrogeologic conditions that affect the flow of groundwater in the aquifer system. The boundary conditions used in the 100 K Area groundwater flow model were:

- top of the model - water table (free-surface boundary)
- bottom of the model - no flow
- northwest and southeast boundaries - no flow (parallel to groundwater flow)
- south boundary - constant head
- north boundary - river nodes (head-dependent flow).

The lower boundary of the model grid was represented as a no-flow boundary because the unconfined aquifer in the 100 K area is underlain by low-hydraulic conductivity clays (DOE-RL 1993b).

The Columbia River was simulated in the model as river nodes, a type of head-dependent flow boundary. The model adjusted the direction and rate of flow across the river nodes based on the difference in the groundwater levels simulated by the model and the stage elevations of the river nodes. When the simulated groundwater levels were higher than the stage elevations of the river nodes, flow was outward from the model along the nodes. When the simulated groundwater levels were lower than the stage elevations of the river nodes, flow was inward to the model along the nodes. The river nodes were used to simulate, in a simplified manner, the hydraulic interaction between the Columbia River and the unconfined aquifer in the 100 K Area.

5.2.2.3 Initial Conditions. Head elevations along the constant-head boundary and river stage elevations in the river nodes were specified as initial conditions for the 100 K Area groundwater flow model. The head elevations for the constant-head boundaries were estimated by constructing a groundwater elevation contour map of the unconfined aquifer

from water levels measured in the monitoring wells on September 15, 1993, and projecting the elevation contours to the model grid boundaries. River stage elevations were estimated by extrapolating the mean daily stage elevation recorded at the 100 B/C gaging station on September 15, 1993, to the 100 K Area using the river gradient measured on the USGS 1:24,000 scale topographic quadrangle maps of the area. The initial estimated constant-head boundary and river stages were further modified during the process of flow model calibration.

5.2.2.4 Bottom Elevations of Model Grid. The bottom elevations of the unconfined aquifer (Unit E of the Ringold Formation) was constructed from the geologic logs of the monitoring wells in the 100 K Area using the computer graphics software package SURFER™ (Golden Software 1991). The bottom elevation contour map was discretized to the model grid nodes for input to MODFLOW using ModelCad^{386}™.

5.2.2.5 Recharge. Three recharge zones were used in the 100 K Area flow model. The recharge rates of the three zones were 7.62 cm/yr (3 in/yr), 5.08 cm/yr (2 in/yr), and 2.54 cm/yr (1 in/yr), respectively. The recharge rate were determined by the ground surface conditions of the land uses and calibration of the flow model under steady-state flow conditions (Gee 1987).

5.2.2.6 Aquifer Hydraulic Conductivity. The hydraulic conductivities of the 100 K Area were reported to range from 5.8 to 44.2 m/d (19 to 145 ft/d) from a aquifer slug test conducted in six monitoring wells located in 100 K Area (DOE-RL 1993b). The hydraulic conductivity values used in the calibrated flow model ranged from 10 to 45 m/d (32.8 to 147.6 ft/d). These values of aquifer hydraulic conductivity were determined by adjusting the initial values during calibration of the flow model under steady-state flow conditions.

5.2.2.7 Aquifer Porosity and Storage coefficient. A uniform porosity of 20% and the storage coefficient 0.2 was used in the 100 K Area simulations. However, steady-state options were chosen for all the flow simulations in 100 K Area. The storage coefficients for the unconfined aquifer at the Hanford Site are reported to range from 0.01 to 0.2 (Hartman and Peterson 1992).

5.2.2.8 River Nodes. The MODFLOW River Package is used to simulate the Columbia River in the flow model. This package simulates the interaction of the Columbia River with the unconfined aquifer in the 100 K Area. The river package requires the following as input for each node simulating the Columbia River in the model grid:

- river stage elevation
- bottom elevation of the river bed
- hydraulic conductance of the river bed.

River stage elevations were estimated by extrapolating the mean daily stage elevation recorded at the 100 B/C gaging station on September 15, 1993, to the 100 K Area. A uniform river depth of 4 m (13.12 ft) was assumed to estimate the elevation of the river bed bottom at each river node.

The river bed hydraulic conductance is defined by the equation (McDonald and Harbaugh 1988):

$$C_{RIV} = K\ L\ W\ /\ M$$

where:

C_{RIV} = hydraulic conductance of the river bed
K = vertical hydraulic conductivity of the river bed material
L = length of the river reach within the model grid cell
W = width of the river reach within the model grid cell
M = thickness of the river bed.

The hydraulic conductance of the river nodes representing the Columbia River in the flow model was calculated based on the following assumptions:

- the Columbia River has a uniform river bed thickness of 1 m (3.28 ft) in the 100 K Area
- the river bed has a vertical hydraulic conductivity of 5 m/d (16.4 ft/d) in the modeled area
- groundwater flow into or out of the Columbia River is symmetric from both sides of the river.

5.2.2.9 Model Calibration. The 100 K Area groundwater flow model was calibrated to the water levels in 13 monitoring wells on September 15, 1993. The flow model was calibrated by inputing estimated recharge, aquifer hydraulic conductivity and river bed conductance into the flow model and solving for steady-state flow conditions. These input parameters were then varied in successive simulations until the calibrated steady-state groundwater elevations reasonably matched the measured water levels in the monitoring wells. A comparison of the steady-state head solution of the calibrated model and the September 1993 water levels is presented in Table 5-1 and the simulated water table surface is shown in Figure 5-2.

5.3 SOLUTE TRANSPORT MODEL

5.3.1 Model Design

The 100 K Area solute transport model was designed and constructed with ModelCad$^{386™}$ (Geraghty and Miller 1993).

5.3.1.1 Transport Code. The solute transport code that was used for the 100 K Areas was MT3D, a finite-difference code developed by S.S. Papadopulos & Associates (1991). The MT3D code simulates advection, dispersion, and chemical reactions of dissolved contaminants in groundwater flow systems. The code uses a combination of the method of

characteristics (MOC) and the modified method of characteristics (MMOC) for the solution of the advection-dispersion-reaction equation. The MOC technique was originally developed for solute transport models by the USGS (Konikow and Bredehoeft 1978). MT3D was selected for this evaluation because it is well documented and is designed to be used in conjunction with the groundwater flow model code MODFLOW.

5.3.1.2 Technical Approach. Solute transport models are typically developed by calibration of the models to both past and present water quality conditions in a groundwater flow system. Because the available historical water quality data from the 100 K Area are very limited, a different approach was used to develop the transport model for this area. The solute transport model for the 100 K Area was developed by using the June/July 1993 water quality data as the initial plume (Figure 5-3) input to the solute transport model. The remedial action alternatives were then evaluated by using a set of parameters for the transport simulations as described below.

5.3.1.3 Parameters. A set of moderate solute transport parameters obtained from 100 D/DR Area solute transport model sensitivity analysis were chosen for the 100 K Area solute transport simulations (DOE-RL 1994e).

The June-July 1993 unfiltered chromium concentrations were used as initial concentrations for the transport simulations. Migration of the chromium plume was simulated for a period of 15 years (to 2008) using the flow field solution from the calibrated steady-state flow model. The parameters used in the simulations were porosity of 20%, longitudinal to transverse dispersivities of 10/1 m (30/3 ft), and retardation factors of 25. The porosities, dispersivities and retardation factors used in the 100 K Area model simulations were considered to represent the moderate range of values used in the solute transport models at other areas within the Hanford site (for example, 100 D Area).

5.4 MODELING RESULTS

5.4.1 Alternative GW-1 - No Action Alternative

For the no action alternative, chromium plume migration was simulated to the year 2008. The June-July 1993 unfiltered chromium concentrations were used as the initial concentrations for the solute transport simulation. Plume migration was simulated using the flow field solution from the calibrated steady-state groundwater flow model. The transport simulation was run using a porosity of 20%, longitudinal to transverse dispersivities of 10 to 1 m (30/3 ft), and retardation factors of 25. Total simulation time was 15 years (to 2008). The chromium concentration contour map from the transport simulation solution for no action alternative is shown in Figure 5-4.

5.4.2 Alternative GW-3 - Vertical Barrier Alternative

The vertical barrier alternative consisted of a vertical, low permeability wall placed near the Columbia River, which would act as a barrier for the further migration of contaminated groundwater into the river. In the model, a single groundwater extraction well was installed at each end of the vertical barrier to minimize migration of groundwater around the ends of the wall.

For the barrier wall simulations, the calibrated groundwater flow model was modified by reducing the aquifer hydraulic conductivity in a line of grid nodes along the Columbia River to represent the barrier wall. Based on the grid size and the wall material hydraulic conductivity of $1x10^{-6}$ cm/sec the effective hydraulic conductivity of the cell where the wall is located was calculated in order to properly represent the thickness of the vertical barrier wall. The calculate effective hydraulic conductivity is 0.0189 m/d (2.2×10^{-5} cm/sec) and the length of the wall is 2,700 m (8,856 ft). Two well nodes were also added to the model near the each end of the simulated barrier wall to represent the groundwater extraction wells. The discharge rate of the well nodes were set at 109 m^3/d (20 gpm). Plume migration was then simulated using the flow field solution from the modified calibrated groundwater flow model. The total simulation time for the flow and transport simulations was 15 years (to 2008).

9413294.3172

Groundwater elevation and chromium concentration maps from the barrier wall simulation at year 2008 are shown Figures 5-5 and 5-6. In the barrier wall simulation, the chromium going to the river in the IRM period was reduced by 85 to 88% in comparison to the no action simulation. This simulation indicated that the rate of plume migration to the river would be reduced by a vertical barrier wall. Figure 5-5 shows that groundwater elevations were raised near the low permeability vertical barrier wall. If more pumping wells were installed at up gradient location the wall would be more effective in minimizing further migration of the plume into the Columbia River. It should be noted that the wall acts to increase the travel time of the contaminants; the contaminants will eventually reach the river if further actions are not initiated.

5.4.3 Alternatives GW-5 and GW-6 - Groundwater Extraction and Treatment Alternatives

Modeling the groundwater extraction and treatment alternative consisted of simulating a line of extraction wells along the Columbia River to control further migration of the contaminated groundwater into the river.

For the groundwater extraction and treatment simulations, the calibrated groundwater flow model was modified by adding a line of eleven well nodes along the Columbia River. A well spacing of extraction wells is approximately 220 m (660 ft) with a varied distance to the river ranged from 40 m to 120 m (130 ft to 400 ft).

The location, spacing and discharge rates of these well nodes were varied in successive simulation to maximize the plume capture. Discharge rate of 540 m^3/day (100 gpm) maximized plume capture in this simulation.

Plume migration was simulated using the flow field solution from the modified calibrated groundwater flow model. The total simulation time was 15 years (to 2008) for the solute transport simulations.

The water table contour map and the chromium concentration contour map from the extraction well system at 2008 are shown in Figures 5-7 and 5-8. This simulation reduced the amount of chromium going to the river by 96% from no-action alternative. The contamination extending to the river in Figure 5-7 is residual chromium that was present prior to pumping.

5.4.4 Summary

A summary of modeling results for the different remedial action alternatives in the 100 K Area is listed in Table 5-2. This comparison shows that the pumping and treat alternative is the more effective alternative for reducing chromium migration to the Columbia River.

THIS PAGE INTENTIONALLY
LEFT BLANK

Figure 5-1 100 K Area Model Grid

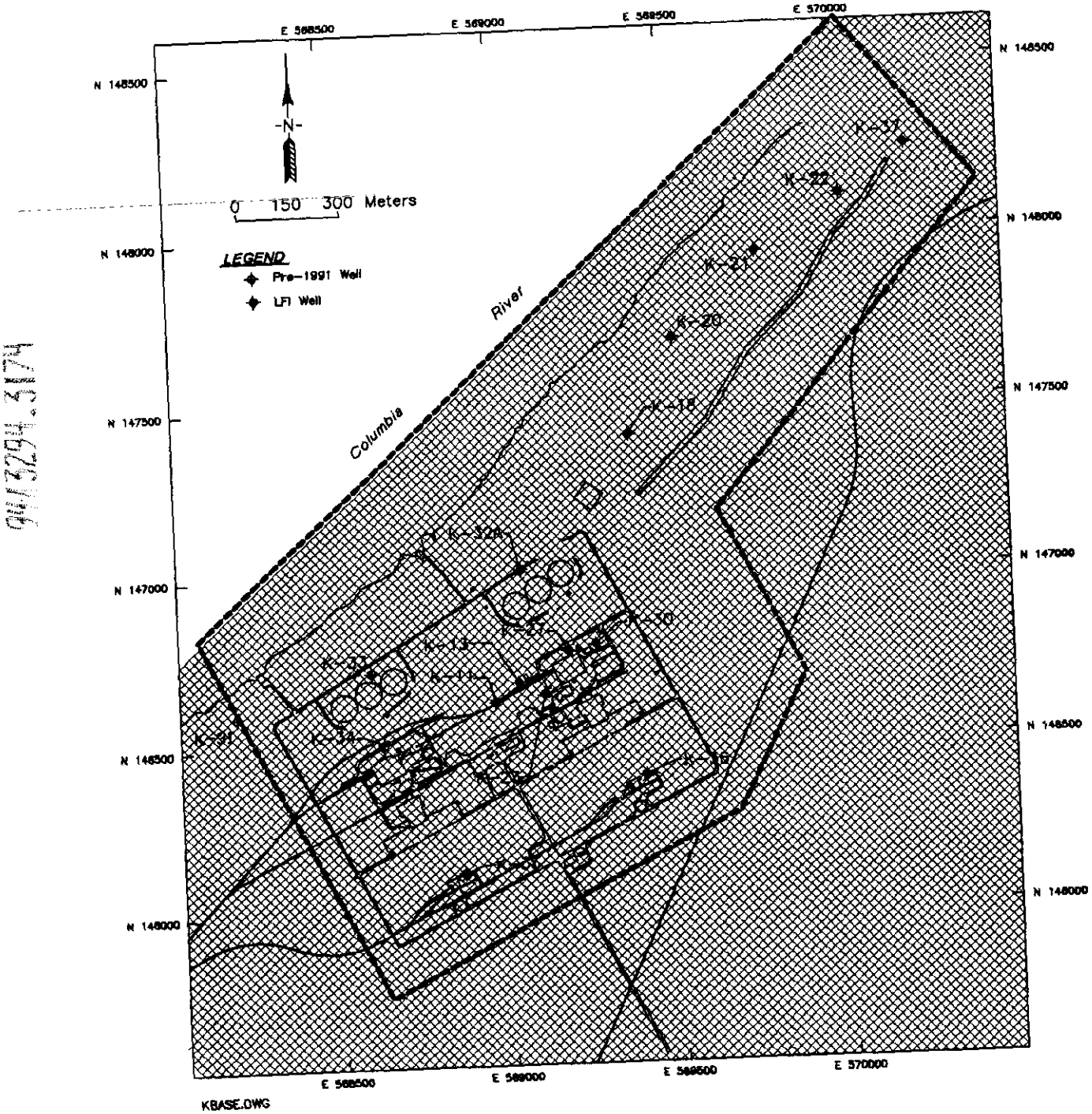

THIS PAGE INTENTIONALLY
LEFT BLANK

Figure 5-2 Model Simulated Groundwater Elevations in the 100 K Area Current Conditions

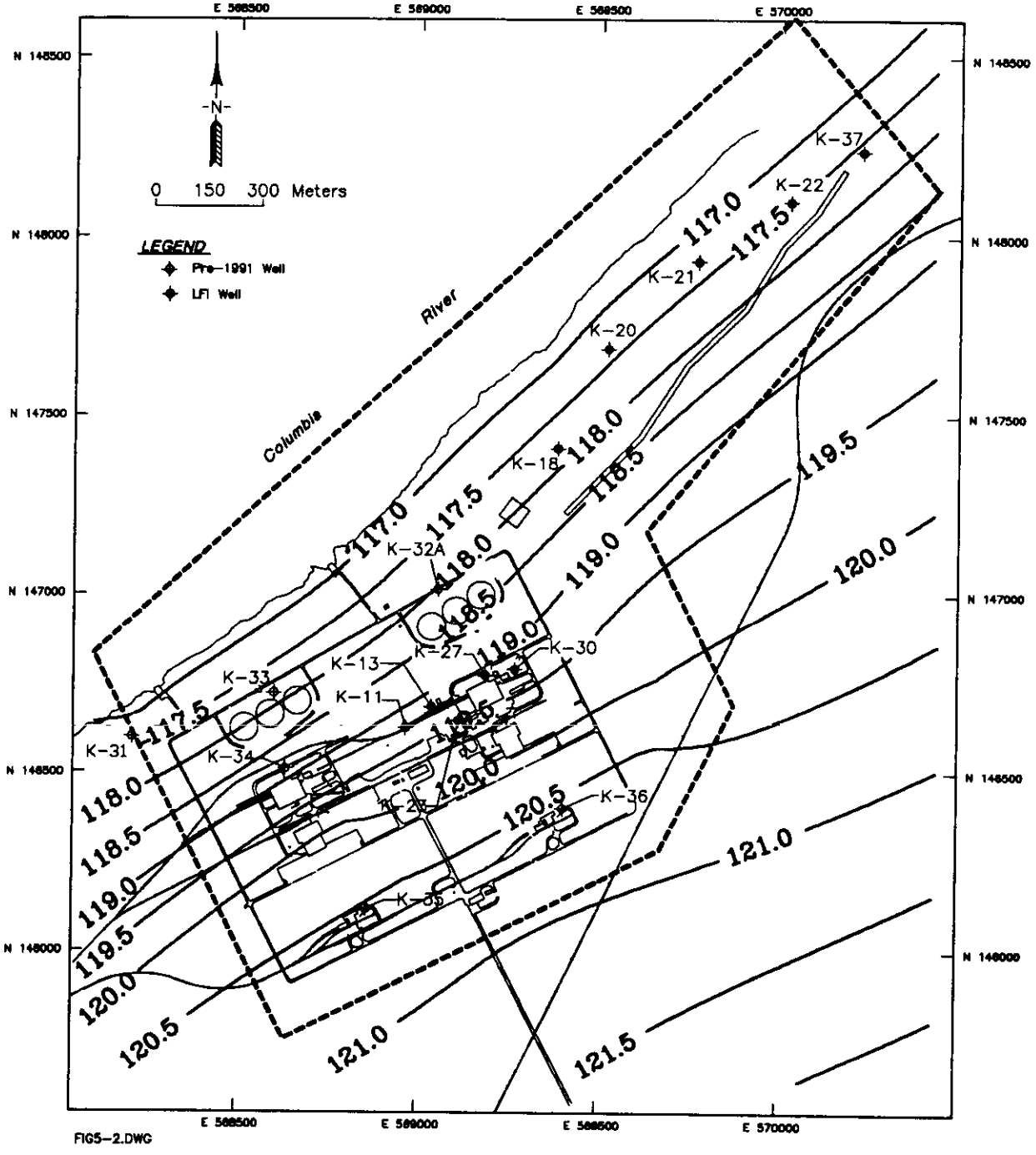

THIS PAGE INTENTIONALLY
LEFT BLANK

Figure 5-3 Model Simulated Chromium Concentrations in the 100 K Area Current Conditions

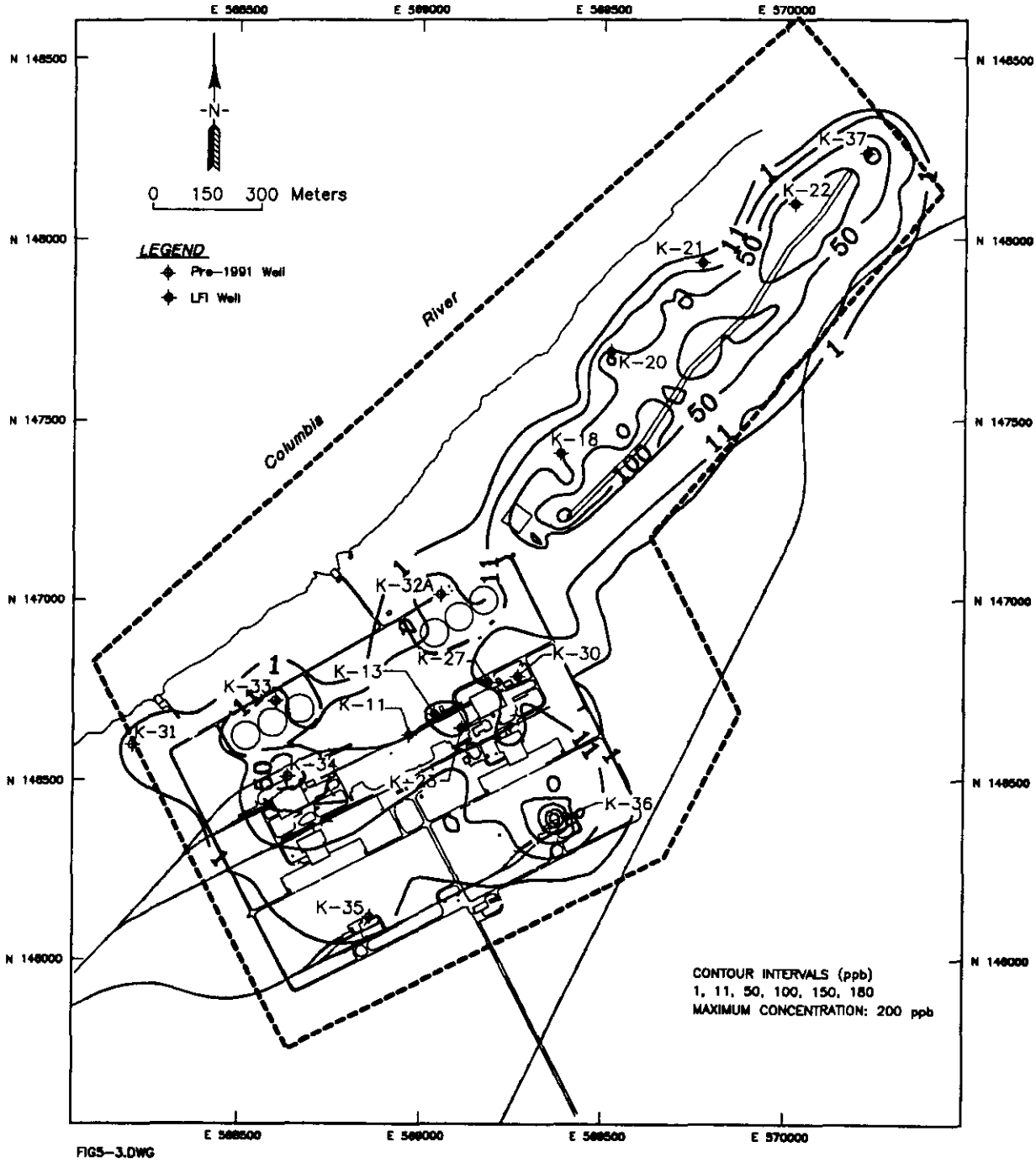

9413294.3176

THIS PAGE INTENTIONALLY
LEFT BLANK

Figure 5-4 Model Simulated Chromium Concentrations in the Year 2008 No Action Scenario, 100 K Area

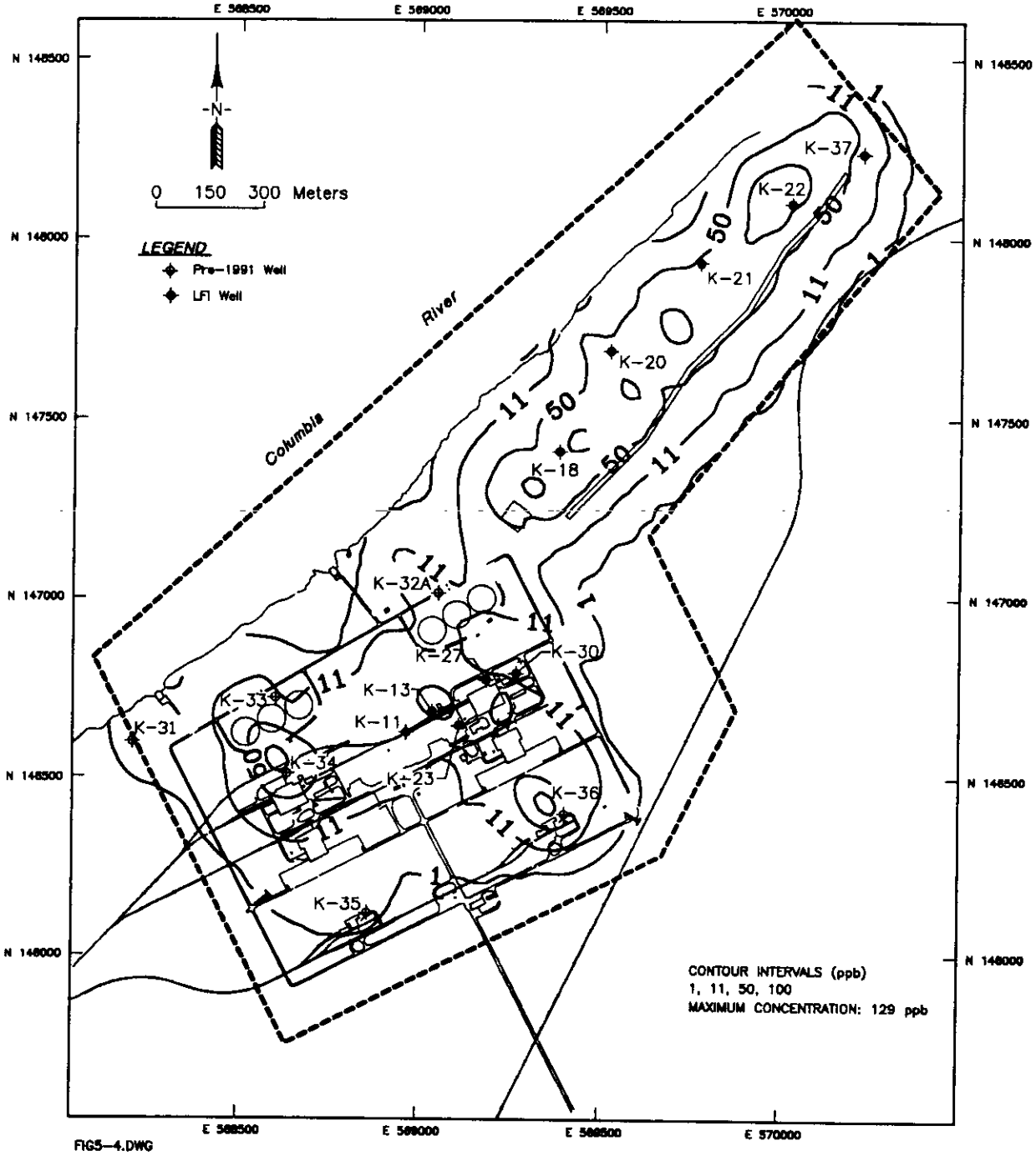

THIS PAGE INTENTIONALLY
LEFT BLANK

Figure 5-5 Model Simulated Groundwater Elevations in the Year 2008 Vertical Barrier Alternative, 100 K Area

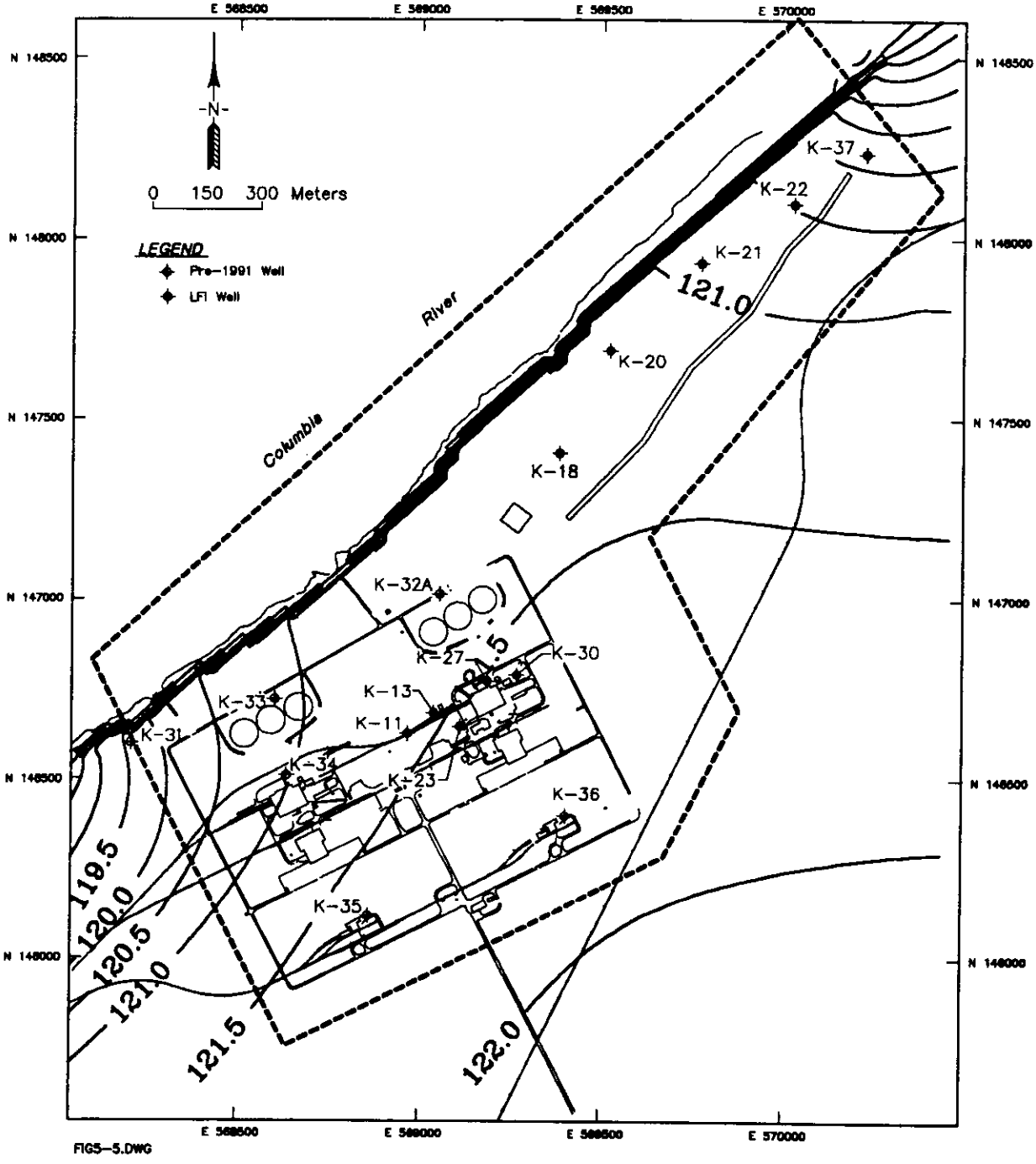

THIS PAGE INTENTIONALLY
LEFT BLANK

Figure 5-6 Model Simulated Chromium Concentrations in the Year 2008 Vertical Barrier Alternative, 100 K Area

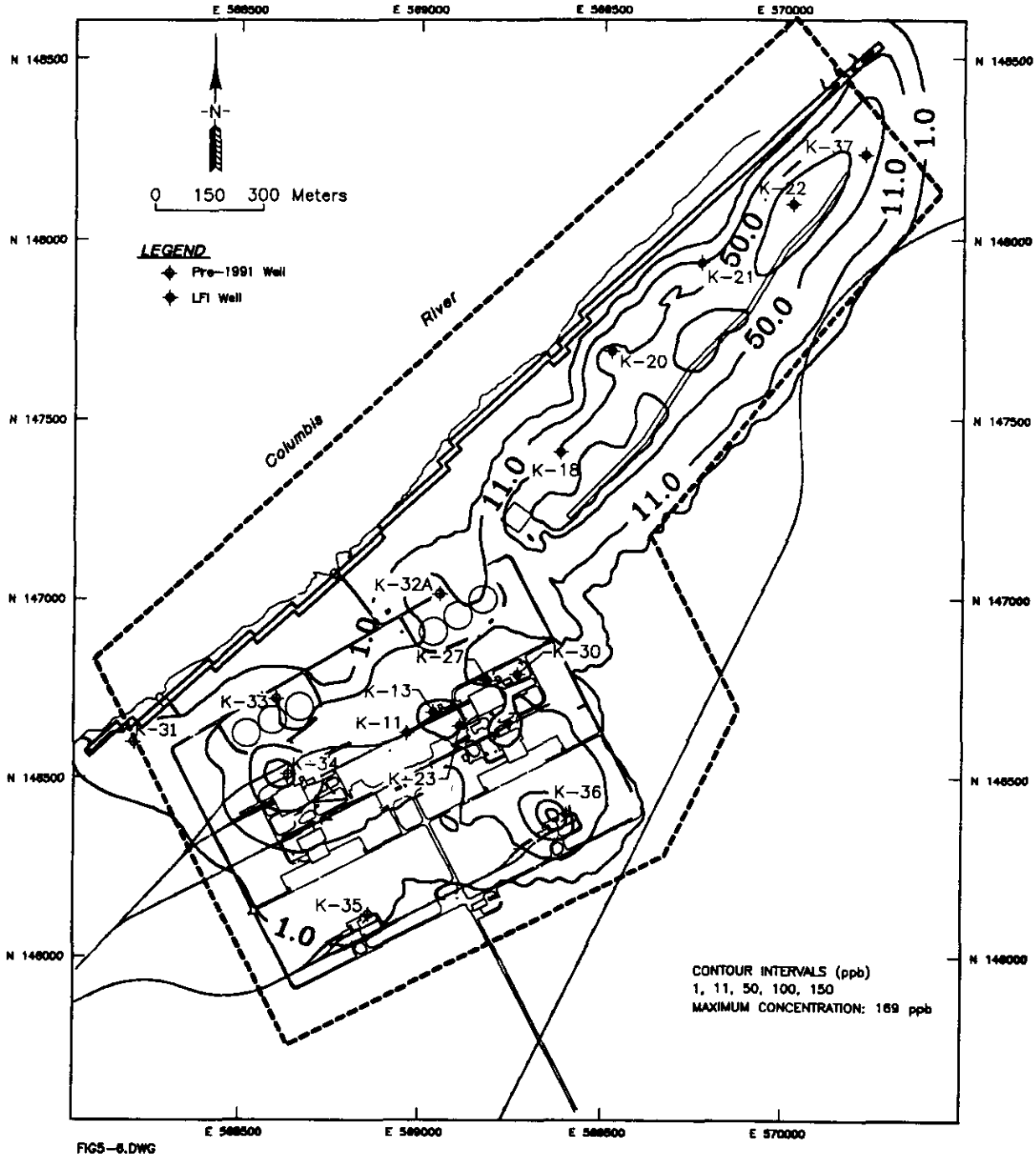

THIS PAGE INTENTIONALLY
LEFT BLANK

Figure 5-7 Model Simulated Groundwater Elevations in the Year 2008 Pump and Treat Alternative, 100 K Area

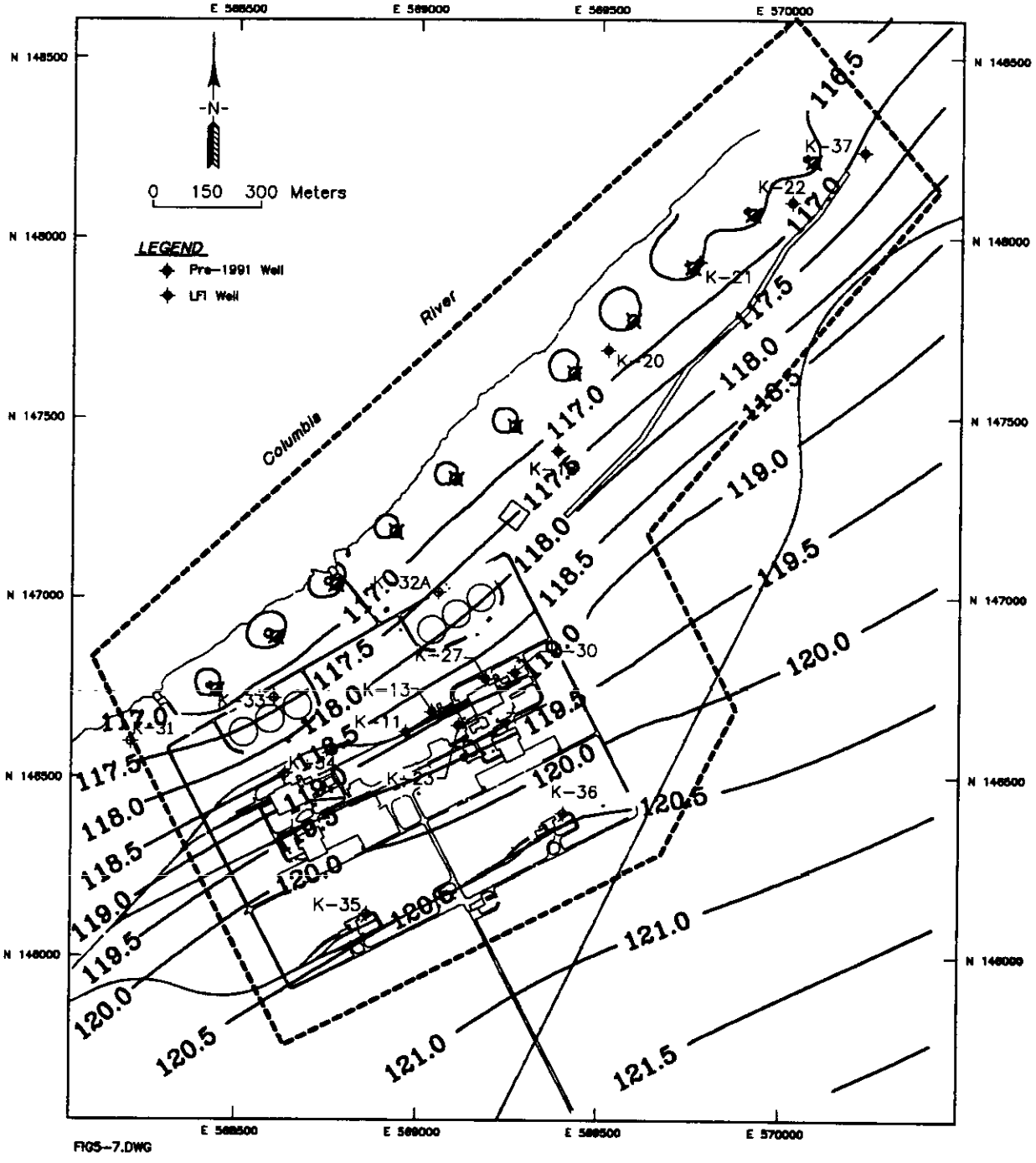

THIS PAGE INTENTIONALLY
LEFT BLANK

Figure 5-8 Model Simulated Chromium Concentrations in the Year 2008 Pump and Treat Alternative, 100 K Area

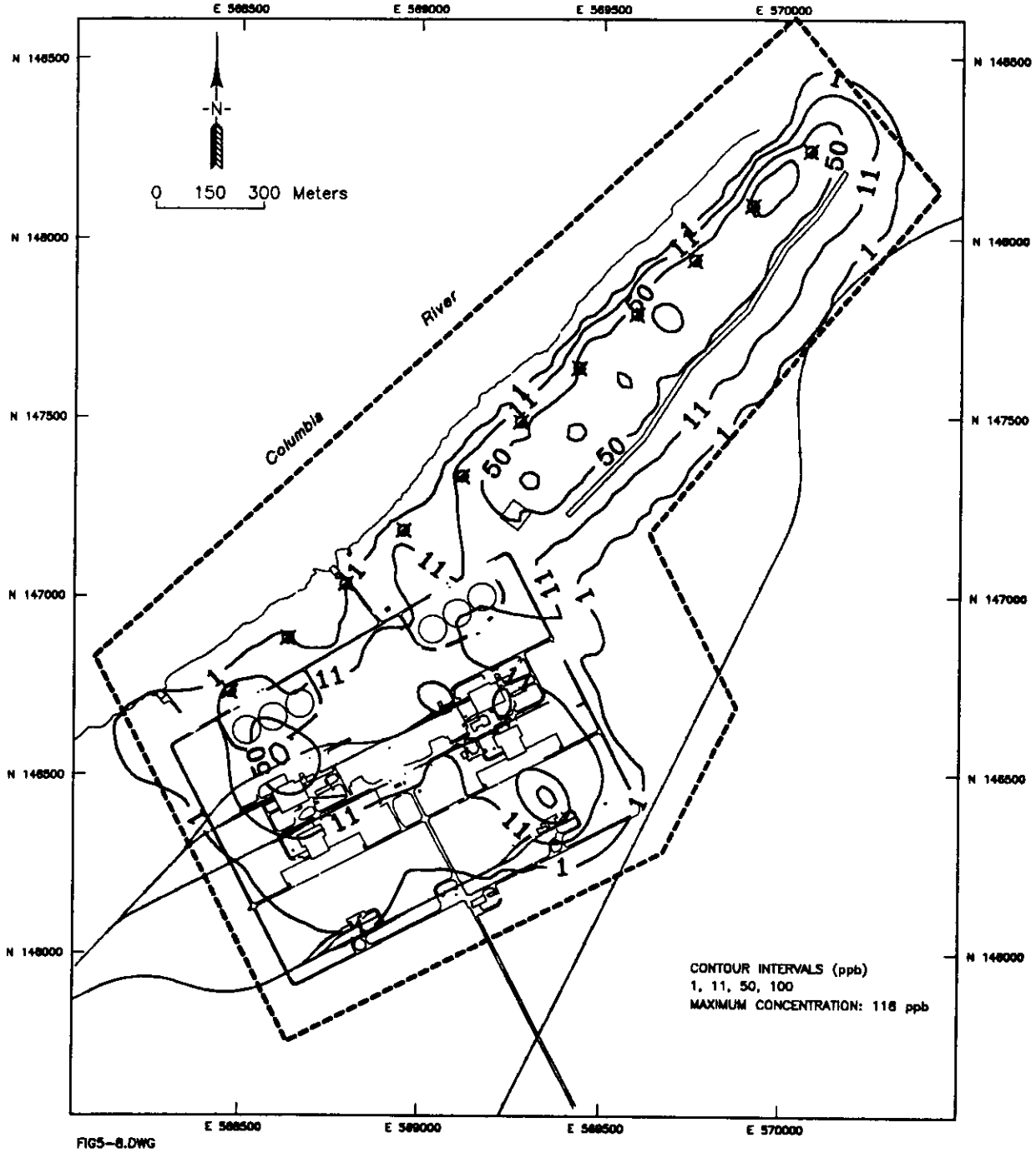

THIS PAGE INTENTIONALLY
LEFT BLANK

Table 5-1 Comparison of Model Predicted vs Observed Water Level Elevations

Well ID	Model Grid Location		Observed head (m)	Simulated head (m)	Residuals (m)
	Row	Column			
199-K-21	142	15	117.12	117.19	-0.07
199-K-20	125	16	117.59	117.26	0.33
199-K-22	157	18	117.37	117.39	-0.02
199-K-37	170	19	117.71	117.46	0.25
199-K-33	59	20	117.39	117.7	-0.31
199-K-18	110	21	117.34	117.65	-0.31
199-K-32A	85	25	118.12	117.92	0.2
199-K-19	113	26	117.85	118.09	-0.24
199-K-34	53	29	118.75	118.69	0.06
199-K-11	69	36	119.16	119.11	0.05
199-K-13	73	36	118.71	119.04	-0.33
199-K-35	48	51	120.47	120.47	0
199-K-36	77	59	120.71	120.53	0.18
Mean Error		0.016			
Absolute Mean Error		0.181			
Root Mean Square Error		0.217			

9413294.3182

THIS PAGE INTENTIONALLY
LEFT BLANK

Table 5-2 Summary of Model Results

Remedial Action Alternative	Model Simulation	Initial Concentrations	Simulation Time (years)	Chromium Discharged to River (Kg)	Chromium Removed From Extraction Wells (Kg)[1]
No Action	kalt1s1	June-July/1993	15	30.04	N/A
Vertical Barrier Wall	klwalls1	June-July/1993	15	3.63	6.63
	klwalls2	June-July/1993	15	4.62	N/A
Groundwater Extraction and Treatment	kalt4s5	June-July/1993	15	1.27	744.51

[1] Total during 15 year extraction period

THIS PAGE INTENTIONALLY
LEFT BLANK

6.0 DETAILED ANALYSIS OF ALTERNATIVES

This section presents the methodology and criteria to be used in the detailed analysis and then presents the evaluation of alternatives against the CERCLA evaluation criteria.

6.1 METHODOLOGY AND CRITERIA

Nine evaluation criteria have been identified in EPA guidance to evaluate remedial actions. The evaluation criteria are the basis for the detailed analysis task during the FS. The evaluation criteria as defined in *Guidance for Conducting Remedial Investigations and Feasibility Studies Under CERCLA* (EPA 1988) are discussed below.

6.1.1 Overall Protection of Human Health and the Environment

This criterion provides an assessment of whether each alternative provides adequate protection of human health and the environment. Evaluation focuses on a specific alternative's ability to achieve adequate protection and describes how site risks posed through each pathway being evaluated by the FFS are eliminated, reduced, or controlled through natural processes, treatment, engineering, or institutional controls. This evaluation also allows for consideration of any unacceptable short-term or cross-media impacts associated with each alternative. The following questions represent the information included in the analysis of this criterion:

- Will risk be at acceptable levels?
- What is the time frame to achieve acceptable levels?
- Will additional threats be minimized?

6.1.2 Compliance with ARAR

This criterion is used to determine whether each alternative will meet Federal and State ARAR and TBC or if there is justification for an ARAR waiver. The CERCLA defines six types of ARAR waivers as follows:

- interim actions
- greater risk to health and the environment
- technical impracticability
- equivalent standard of performance
- inconsistent application of state requirements
- fund-balancing.

Questions concerning compliance with ARAR which are addressed in the detailed analysis include:

- Are ARAR available?
- What are the potential ARAR?
- Will the potential ARAR be met and how?
- What is the basis for waivers?
- If ARAR are not available, what are the potential TBC?
- Is the alternative consistent with the potential TBC?

6.1.3 Long-Term Effectiveness and Permanence

This criterion addresses the risk remaining at the site after RAO have been met. The primary focus of this evaluation is the extent and effectiveness of the controls that may be required to manage the risk posed by treatment residuals and/or untreated wastes. The following questions are addressed in the detailed analysis:

- What is the magnitude of the remaining risk?
- What remaining sources of risk can be identified? How much is due to treatment residuals and how much is due to untreated residual contamination?
- Will a 5-year review be required?
- What is the likelihood that the technologies will meet required process efficiencies of performance specifications?
- What type and degree of long-term management is required?
- What are the requirements for long-term monitoring?
- What operation and maintenance functions must be performed?
- What difficulties and uncertainties may be associated with long-term operation and maintenance?
- What is the potential need for replacement of technical components?
- What is the magnitude of the threats or risks should the remedial action need replacement?
- What is the degree of confidence that controls can adequately handle potential problems?
- What are the uncertainties associated with land disposal of residuals and untreated waste?

9413294.3185

6.1.4 Reduction of Toxicity, Mobility, or Volume through Treatment

The goal of this criterion is to address the statutory preference for remedial actions which employ treatment technologies that permanently and significantly reduce toxicity, mobility, and volume. This evaluation focuses on the following questions:

- Does the treatment process employed address the principal threats?
- Are there any special requirements for the treatment process?
- What portion (mass, volume) of contaminated material is destroyed?
- What portion (mass, volume) of contaminated material is treated?
- To what extent is the total mass of toxic contaminants reduced?
- To what extent is the mobility of toxic contaminants reduced?
- To what extent is the volume of toxic contaminants reduced?
- To what extent are the effects of treatment irreversible?
- What residuals remain?
- What are their quantities and characteristics?
- What risks do treatment residuals pose?
- Are principal threats within the scope of the action?
- Is treatment used to reduce inherent hazards posed by principal threats at the site?

6.1.5 Short-Term Effectiveness

This evaluation criterion addresses the effects of the alternative during the construction and implementation phase until RAO are met. The following factors should be addressed as appropriate for each alternative:

- health and safety of the community during remedial actions
- health and safety of workers during remedial actions
- environmental impacts
- time until remedial response objectives are achieved.

6.1.6 Implementability

The implementability criterion addresses the technical and administrative feasibility of implementing an alternative and the availability of various services and materials required during its implementation. This criterion involves analysis of the following factors:

- technical feasibility
  - construction and operation
  - reliability of technology
  - ease of undertaking additional remedial action
  - monitoring considerations
  - ability of technology to meet PRG, including detection limit

- administrative feasibility - activities needed to coordinate with other offices and agencies

- availability of services and materials
  - availability of adequate offsite treatment, storage capacity, and disposal services
  - availability of necessary equipment and specialists, and provisions to ensure any necessary additional resources
  - availability of services and materials plus the potential for obtaining competitive bids, which may be particularly important for innovative technologies
  - availability of prospective technologies.

6.1.7 Cost

This criterion addresses capital costs, both direct and indirect, annual O&M costs, accuracy of cost estimate, present worth analysis and cost sensitivity analysis of alternatives.

6.1.7.1 Direct Capital Costs. Direct capital costs include the following:

- construction costs
- equipment costs
- land and site-development costs
- buildings and services costs
- relocation expenses
- disposal costs.

6.1.7.2 Indirect Capital Costs. Indirect capital costs include the following:

- engineering expenses
- license or permit costs

- startup and shakedown costs
- contingency allowances.

6.1.7.3 Annual O&M Costs. Annual operations and maintenance costs include the following:

- operating labor costs
- maintenance materials and labor costs
- auxiliary material and energy
- disposal of residues
- purchased services
- administrative costs
- insurance, taxes, and licensing costs
- maintenance reserve and contingency funds
- rehabilitation costs
- costs of periodic site reviews.

6.1.7.4 Accuracy of Cost Estimates. Study estimates of costs are expected to provide an accuracy of +50% to -30% and are prepared using data available from the LFI, treatability studies, and on-going projects.

6.1.7.5 Present Worth Analysis. Present worth analysis is used to evaluate expenditures that occur over different time periods by discounting all future costs to a common base year, usually the current year. This allows all alternatives to be assessed based on current costs of the remedial action. The present worth analysis requires assumption to be made regarding the discount rate and the period of performance. A discount rate of 5% before taxes and after inflation is recommended. Period of performance should not exceed 30 years.

6.1.8 Regulatory Acceptance

Evaluates the technical and administrative concerns of the regulating agency. These concerns are generally addressed in the ROD by the regulatory agencies and will not be addressed in this FFS.

6.1.9 Community Acceptance

This is an evaluation of the concerns of the public and is addressed by the regulatory agencies in the ROD.

6.2 DETAILED ANALYSIS

The detailed analysis for the 100-KR-4 Operable Unit is presented in Tables 6-1 through 6-5. An analysis of the compliance with ARAR is presented in Table 6-6. Cost details are presented in Appendix C.

THIS PAGE INTENTIONALLY
LEFT BLANK

Table 6-1 Detailed Analysis for GW-1, No Action Alternative (Page 1 of 8)

OVERALL PROTECTION OF HUMAN HEALTH AND THE ENVIRONMENT	ALTERNATIVE GW-1: NO ACTION
Will risk be at acceptable levels?	Human Health: Yes, current human health risk is low (ICR 10^{-6} to 10^{-4}, HQ < 1) for the occasional use scenario, based on the QRA. Environment: Uncertain; potential ecological risk exists based on concentrations of chromium, zinc, and carbon-14 in the near-river well samples that exceeded ecological ARAR levels; however, the actual risk at the groundwater/river interface has not been quantified. Near-river well concentrations do not account for mixing at the river-aquifer interface. Concentrations of chromium in the Columbia River were nondetectable; information on the concentrations of carbon-14 in the Columbia River is not available (DOE-RL 1993c). No quantification of risk in the substrate has been made.
Timeframe to achieve acceptable levels?	The no action alternative does not affect concentration levels in the IRM period (year 2008). These concentrations may increase as the peak concentrations in the plume approach the river.
Will additional threats be minimized?	No additional threats result from implementation of this alternative.

Table 6-1 Detailed Analysis for GW-1, No Action Alternative (Page 2 of 8)

COMPLIANCE WITH ARAR	ALTERNATIVE GW-1: NO ACTION
What are the potential ARAR?	See Table 6-6.
Will the potential ARAR be met? How?	See Table 6-6.
Basis for waivers?	This alternative represents an IRM preceding a final remedial action to be implemented by the year 2008. The final remedial action should be selected to ensure compliance with ARAR.
What are the potential TBC?	See Table 6-6.
Is the alternative consistent with TBC listed above	See Table 6-6.

9413294.3191

Table 6-1 Detailed Analysis for GW-1, No Action Alternative (Page 3 of 8)

LONG-TERM EFFECTIVENESS AND PERMANENCE	ALTERNATIVE GW-1: NO ACTION
What is the magnitude of the remaining risk?	The potential ecological risk identified in the QRA will remain. The COC concentrations in the near-river wells would not be reduced and might increase slightly as the peak COC concentrations in the plume approach the river. However, these risks have not been quantified.
What remaining sources of risk can be identified?	The source of risk remaining after implementation of the no action alternative will be that associated with the plume concentrations above the EPA Ambient Water Quality Criteria levels. Currently, concentrations of chromium in the river near the operable unit are nondetectable. Waste sites in the source operable units will be remediated with IRM thereby further reducing the sources of contamination.
What is the likelihood that the technologies will meet performance needs?	Remedial technologies are not included in the no action alternative. The no action alternative may not ensure protection of the Columbia River if actual risks are equal to or exceed those identified in the QRA.
What type and degree of long-term management is required?	No long-term management requirements are required for this alternative. Monitoring and access restrictions of the operable unit are conducted under existing programs. Long-term management requirements beyond the IRM period will be addressed by the final remedial action.
What are the requirements for long-term monitoring?	The current monitoring program will continue through the duration of the IRM period (year 2008). Evaluations will be made periodically (i.e. every 5 years) to determine need for additional remedial action or changes to the monitoring program. Long-term monitoring requirements beyond the IRM period will be addressed by the final remedial action selected.
What O&M functions must be performed?	No O&M function will be required throughout the IRM period to perform and maintain groundwater monitoring activities and to continue site security.
What difficulties may be associated with long-term O&M?	None.
What is the potential need for replacement of technical components?	None.

Table 6-1 Detailed Analysis for GW-1, No Action Alternative (Page 4 of 8)

LONG-TERM EFFECTIVENESS AND PERMANENCE	ALTERNATIVE GW-1: NO ACTION
What is the magnitude of risk if the remedial action needs replacement?	No different than current risk.
What is the degree of confidence that controls can adequately handle potential problems?	The number of monitoring wells currently in place is considered adequate to effectively monitor the migration of contaminant plumes within the 100 K Area. The frequency of sampling and the number of samples obtained can facilitate accurate monitoring results.
How is the removed contamination disposed of?	Not applicable. Outside of wastes generated during monitoring activities, no contaminants will be removed from the aquifer.
What are potential final actions?	Potential final actions likely include no action, institutional controls, and pump and treat for mass reduction. The vertical barrier option is not considered for final action because chromium is persistent in the environment and does not readily degrade. The wall will contain the chromium by lengthening the travel time for the contaminants to reach the river; however, the contaminants will eventually migrate around the wall.
Is the alternative for the IRM compatible with potential final actions?	Yes. The no action alternative for IRM would allow time for source cleanup and additional information collection through the treatability test in 100-HR-3 prior to implementing a final action. The no action alternative is compatible with both the no action and institutional controls final actions in that these are simply an extension of the IRM no action alternative.

Table 6-1 Detailed Analysis for GW-1, No Action Alternative (Page 5 of 8)

REDUCTION OF TOXICITY, MOBILITY, OR VOLUME	ALTERNATIVE GW-1: NO ACTION
Does the treatment process address the principal threats?	The principal threat of a release of COC into the river is not addressed by this alternative. However, the magnitude of this threat has not been quantified.
Are there any special requirements for the treatment process?	Not applicable. This alternative does not involve a treatment process.
What portion of the contaminated material is treated/destroyed?	Not applicable. Contaminated material is neither treated nor destroyed.
To what extent is total mass of toxic contaminants reduced?	This alternative will not result in a reduction of contaminant mass.
To what extent is the mobility of toxic contaminants reduced?	This alternative will not result in a reduction of contaminant mobility.
To what extent is the volume of toxic contaminants reduced?	This alternative will not result in a reduction of contaminant volume.
To what extent are the effects of the treatment irreversible?	Not applicable. No treatment is involved in this alternative. However, it should be noted that contaminant migration into the river as well as the movement of contaminant plumes is irreversible.
What are the quantities of residuals and characteristics of the residual risks?	No treatment is associated with this alternative. Therefore, no residuals will be generated.
What risks do treatment of residuals pose?	Not applicable. Refer to the previous response listed above.
Is treatment used to reduce inherent hazards posed by principal threats at the site?	The inherent hazards associated with the principal threat are not reduced as no treatment is associated with this alternative.

Table 6-1 Detailed Analysis for GW-1, No Action Alternative (Page 6 of 8)

SHORT-TERM EFFECTIVENESS	ALTERNATIVE GW-1: NO ACTION
What are the risks to the community during remedial actions that must be addressed?	None.
How will the risks to the community be addressed and mitigated?	Not applicable.
What risks remain to the community that cannot be readily controlled?	None.
What are the risks to the workers that need to be addressed?	None.
What risks remain to the workers that cannot be readily controlled?	None.
How will the risks to the workers be addressed and mitigated?	None.
What environmental impacts are expected with the construction and implementation of the alternative?	None based on the use of existing monitoring wells.
What are the impacts that cannot be avoided should the alternative be implemented?	None.
How long until remedial action objectives are achieved?	Due to the persistence of the COC, the concentrations in the near-river wells will remain elevated during the IRM period. Because the chromium concentrations in the river are nondetectable, the RAO may be satisfied for that contaminant. The risks associated with the COC have not been quantified at the receptor. The final remedial action should ensure that the RAO are appropriate and achieved within a reasonable timeframe.

Table 6-1 Detailed Analysis for GW-1, No Action Alternative (Page 7 of 8)

IMPLEMENTABILITY	ALTERNATIVE GW-1: NO ACTION
What difficulties and uncertainties are associated with construction?	Not applicable. Construction is not required for the implementation of this alternative.
What is the likelihood that technical problems will lead to schedule delays?	See the previous response listed above.
What likely future remedial actions are anticipated?	Future remedial actions are not anticipated within the time frame of the IRM (year 2008). Final remedial actions will be determined during the IRM timeframe.
What risks of exposure exist should monitoring be insufficient to detect failure?	Since this alternative does not involve the use of active remedial measures, groundwater monitoring failure would not result in exposure risks other than what is currently present (migration of COC into the Columbia River at concentrations above ecological ARAR, EPA Water Quality Criteria). The human health risk under the occasional-use scenario would be low.
What activities are proposed which require coordination with other agencies?	None.
Are adequate treatment, storage capacity, and disposal services available?	Treatment, storage, and disposal are not required for this alternative.
Are the necessary equipment and specialists available?	Yes, groundwater monitoring is a well-established technology.
What additional equipment and specialists are required and what are their potential impacts to implementation?	None. See the previous response listed above.
Are technologies under consideration generally available and sufficiently demonstrated?	Yes, groundwater monitoring is a well-established technology.
Will technologies require further development before they can be applied at the site?	No.
Will more than one vendor be available to provide a competitive bid?	Yes, groundwater monitoring equipment and services are commercially available.

Table 6-1 Detailed Analysis for GW-1, No Action Alternative (Page 8 of 8)

COST COMPONENT	ALTERNATIVE GW-1: NO ACTION
Capital	$0
Operation and Maintenance	$0
Present Worth	$0

ICR - incremental cancer risk
HQ - hazard quotient
QRA - qualitative risk assessment
ARAR - applicable or relevant and appropriate requirements
IRM - interim remedial measures
TBC - to be considered
O&M - operations and maintenance
COC - contaminants of concern
EPA - U.S. Environmental Protection Agency
RAO - remedial action objective

9413294.3196

Table 6-3 Detailed Analysis of GW-3, Containment Alternative (Page 1 of 12)

OVERALL PROTECTION OF HUMAN HEALTH AND THE ENVIRONMENT	ALTERNATIVE GW-3: CONTAINMENT
Will risk be at acceptable levels?	Human Health: Yes, the QRA indicates that the baseline risk to human health is low (ICR 10^{-6} to 10^{-4}, HI < 1) for the occasional-use scenario. Environment: Uncertain; groundwater modeling results indicate that the sheet piling cutoff wall in combination with hydraulic control can reduce the mass of chromium entering the Columbia River by approximately 85 to 88 percent (the higher percentage is for a system that includes groundwater extraction at the wall ends). The potential risks associated with concentrations of chromium and aluminum above the ambient water quality criteria in the near-river wells will remain because these concentrations will remain elevated. This risk as determined in the QRA is conservative because no allowance has been made for natural attentuation of the contaminants. The risk associated with the substrate of the Columbia River has not been quantified.
Timeframe to achieve acceptable levels?	The effect of the wall is coincident with wall installation. The timeframe to achieve the 85 to 88% percent reduction in chromium mass entering the Columbia River is equivalent to the time required for procurement and installation of the sheet piling cutoff wall and hydraulic control wells which is estimated to be approximately 1 year, i.e., the implementation of the wall immediately prevents chromium behind the wall from reaching the river. However, chromium located between the wall and the river will not be obstructed from reaching the river. However, the time required to obtain the necessary permits and agreements to perform construction activities along the river is unknown. It should be noted that the zone between the wall and the river contains contaminant concentrations that are unaffected by the barrier and will continue to migrate to the river.
Will additional threats be minimized?	Additional threats to workers during construction and monitoring activities will be minimized by implementing health and safety protocols that define training requirements, safe work practices, personal protection equipment, contamination control measures, and decontamination procedures. Additional threats to the environment resulting from implementation of this alternative will be minimized by limiting habitat disturbances to the extent possible and performing construction activities during seasons when threatened or endangered species, such as the bald eagle, do not inhabit the area.

Table 6-3 Detailed Analysis of GW-3, Containment Alternative (Page 2 of 12)

COMPLIANCE WITH ARAR	ALTERNATIVE GW-3: CONTAINMENT
What are the potential ARAR?	See Table 6-6.
Will the potential ARAR be met? How?	See Table 6-6.
Basis for waivers?	This alternative may represent an IRM preceding a final remedial action that is to be implemented according to the past-practice strategy. The final remedial action should ensure compliance with ARAR or allow for ARAR waiver. Reduction of COC concentrations in groundwater entering the Columbia River to below the EPA Ambient Water Quality Criteria levels may be technically impractical. Although the purpose of the IRM is not aquifer restoration, contaminant concentrations in the aquifer represent the quality of the water potentially entering the river. Due to the persistence of heavy metals and carbon-14 in the environment, removal is probably the best means of accomplishing permanent ARAR compliance. However, conventional pump-and-treat only addresses the extracted groundwater and, therefore, might not result in sufficient COC reduction in the aquifer to attain ARAR compliance.
What are the potential TBC?	See Table 6-6.
Is the alternative consistent with TBC listed above?	See Table 6-6.

Table 6-3 Detailed Analysis of GW-3, Containment Alternative (Page 3 of 12)

LONG-TERM EFFECTIVENESS AND PERMANENCE	ALTERNATIVE GW-3: CONTAINMENT
What is the magnitude of the remaining risk?	Although groundwater modeling results indicate that this alternative can reduce the mass of chromium entering the Columbia River by 85 to 88% (relative to the no action alternative) during the IRM period, contaminated groundwater will remain in the unconfined aquifer. The integrity of the containment system (sheet piling cutoff wall and hydraulic control wells) can be maintained through the duration of the IRM period, but final remedial action may be required to address the remaining contaminated groundwater.
What remaining sources of risk can be identified?	This alternative does not involve removal or treatment of the contaminated groundwater. Therefore, COC contaminated groundwater contained by the sheet piling wall will remain at concentrations above the EPA Ambient Water Quality Criteria levels.
What is the likelihood that the technologies will meet performance needs?	Sheet piling cutoff wall technology is well developed. The use of hydraulic control measures (extraction wells at the ends of the sheet piling wall) can enhance the effectiveness of the wall. Groundwater modeling results indicate that this containment system may be effective in reducing the mass of heavy metals and carbon-14 entering the river. However, since contamination within the aquifer is not reduced, additional remedial actions may be required in the future.
What type and degree of long-term management is required?	Long-term management requirements for this alternative include monitoring and maintenance of the containment system through the year 2008. Groundwater monitoring between the river and the sheet piling wall can be used to detect unacceptable leakage through the cutoff wall. Additional sheet piles may be installed as required if leakage is identified.
What are the requirements for long-term monitoring?	Groundwater monitoring as well as cutoff wall integrity monitoring is required to assess the effectiveness of the containment system for the duration that containment is required.
What O&M functions must be performed?	Operating requirements include monitoring activities. Maintenance of the monitoring and containment systems might be required on an as needed basis.
What difficulties may be associated with long-term O&M?	No O&M difficulties are anticipated during the period of IRM (through year 2008). Final remedial action selection and installation will be completed by the end of the IRM period and maintained through the year 2018.

Table 6-3 Detailed Analysis of GW-3, Containment Alternative (Page 4 of 12)

LONG-TERM EFFECTIVENESS AND PERMANENCE	ALTERNATIVE GW-3: CONTAINMENT
What is the potential need for replacement of technical components?	Assuming proper installation of the sheet piling wall, the need for replacement is unlikely within the IRM timeframe (through the year 2008). However, some maintenance and repair of the cutoff wall might be required on an as needed basis. Replacement of groundwater monitoring wells and equipment might be required on an as-needed basis.
What is the magnitude of risk should the remedial action need replacement?	The magnitude of risk to workers and the environment during replacement of the sheet piling wall is equivalent to the risk during the initial installation. In addition, migration of the plume during replacement activities may result in a release of contamination to the river.
What is the degree of confidence that controls can adequately handle potential problems?	Sheet piling wall technology is considered to be well established. Groundwater monitoring downgradient from the wall can effectively determine potential problems associated with the containment system. Repair of the wall is relatively simple and involves installation of additional sheet piles.
How is the removed contamination disposed of?	Sheet piling wall construction and hydraulic control well installation will not require contact with contaminated soil or groundwater. Sonic drilling may be used to reduce the generation of cuttings requiring disposal. In the event that monitoring activities or standard operations generate contaminated materials, ERDF is the specified disposal site (W-025, or another site will be used if ERDF is unavailable).
What are potential final actions?	Potential final actions likely include no action, institutional controls, and pump and treat for mass reduction. The vertical barrier option is not considered for final action because chromium is persistent in the environment and does not readily degrade. The wall will contain the chromium by lengthening the travel time for the contaminants to reach the river; however, the contamination will eventually migrate around the wall.

Table 6-3 Detailed Analysis of GW-3, Containment Alternative (Page 5 of 12)

LONG-TERM EFFECTIVENESS AND PERMANENCE	ALTERNATIVE GW-3: CONTAINMENT
Is the alternative for the IRM compatible with potential final actions.	Yes. The vertical barrier is compatible with all the potential final actions. If the barrier is installed as an IRM, it will not have an adverse effect on a no action or institutional controls final action and in fact will provide additional protection above and beyond that provided by no action or institutional controls. The wall would augment the mass reduction pump and treat by reducing the effects of the river on the pumping system and the amount of river water extraction. The wall would contain the plume pending source remediation and treatability test results. This would allow optimization of the pump and treat system based on maximum information.

Table 6-3 Detailed Analysis of GW-3, Containment Alternative (Page 6 of 12)

REDUCTION OF TOXICITY, MOBILITY, OR VOLUME	ALTERNATIVE GW-3: CONTAINMENT
Does the treatment process address the principal threats?	Although no treatment process is involved in the implementation of this alternative, the majority of contaminated groundwater within the unconfined aquifer would be contained and therefore prevented from entering the Columbia River. However, contaminated groundwater contained by the sheet piling wall will remain contaminated.
Are there any special requirements for the treatment process?	Correct installation of the wall is required to ensure maximum containment. Because the wall is only a short term solution for mobile contaminants (i.e., the contaminant travel time is increased but the contaminants will eventually migrate around the ends of the wall), future actions may be required.
What portion of the contaminated material is treated/destroyed?	The purpose of this alternative is containment, and therefore contamination is neither treated nor destroyed.
To what extent is total mass of toxic contaminants reduced?	The total mass of COC will not be reduced by this alternative. However, the majority of contamination within the unconfined aquifer will be prevented from migrating into the Columbia River.
To what extent is the mobility of toxic contaminants reduced?	Contaminant mobility is temporarily reduced by the sheet piling wall. The hydraulic conductivity of the wall (10^{-6} cm/sec) will be several orders of magnitude less than the hydraulic conductivity of the unconfined aquifer near the river (7.6×10^{-3} to 5.8×10^{-2} cm/sec). This results in increased travel time for the contaminants to reach the river. The contaminants will, however, eventually reach the river.
To what extent is the volume of toxic contaminants reduced?	The volume of contamination is not reduced by containment.
To what extent are the effects of the treatment irreversible?	No treatment is involved in this alternative. Isolation of contaminated groundwater by installation of a sheet piling wall and hydraulic control wells is reversible. Isolation is temporary and dependent on maintaining the integrity of the containment system.
What are the quantities of residuals and characteristics of the residual risks?	Residuals will not be generated by this alternative.

Table 6-3 Detailed Analysis of GW-3, Containment Alternative (Page 7 of 12)

REDUCTION OF TOXICITY, MOBILITY, OR VOLUME	ALTERNATIVE GW-3: CONTAINMENT
What risks do treatment of residuals pose?	The contaminated groundwater isolated by the containment system will not be treated during the IRM period (through the year 2008). Selection and implementation of the final remedial action will address the management of isolated contaminated groundwater.
Is treatment used to reduce inherent hazards posed by principal threats at the site?	This alternative does not involve treatment and therefore does not reduce the inherent hazards posed by the contaminated groundwater.

Table 6-3 Detailed Analysis of GW-3, Containment Alternative (Page 8 of 12)

SHORT-TERM EFFECTIVENESS	ALTERNATIVE GW-3: CONTAINMENT
What are the risks to the community during remedial actions that must be addressed?	Construction of the sheet piling wall will pose minimal risk to the surrounding communities. Due to the remote location of the 100 K Area, construction activities are not expected to impact the surrounding community. Based on the nature of sheet piling wall construction, no contact with contamination is required or anticipated.
How will the risks to the community be addressed and mitigated?	No risks to the community will result from the implementation of this alternative.
What risks remain to the community that cannot be readily controlled?	Potential risks to humans through contact with spring water with elevated chromium concentrations.
What are the risks to the workers that need to be addressed?	Since contact with contamination is not required during implementation of this alternative, only physical hazards relating to construction activities will present risk to workers. These physical hazards are associated with pile driving, handling and placement of the sheet pilings, and vehicle operations. The containment alternative has the greatest potential for impacts to the worker. Use of heavy equipment and the physical size of the project result in a medium to high worker risk from physical hazards. Exposure risks are expected to be low.
What risks remain to the workers that cannot be readily controlled?	None.
How will the risks to the workers be addressed and mitigated?	Health risks to workers resulting from physical hazards associated with construction activities will be minimized by implementing health and safety protocols that define training requirements, safe work practices, personal protection equipment, contamination control measures, and decontamination procedures.

Table 6-3 Detailed Analysis of GW-3, Containment Alternative (Page 9 of 12)

SHORT-TERM EFFECTIVENESS	ALTERNATIVE GW-3: CONTAINMENT
What environmental impacts are expected with the construction and implementation of the alternative?	The primary environmental impacts from this alternative will result from installing the sheet piling wall. The wall is to be constructed near the southern shore of the Columbia River. In the area surrounding the location of the wall, physical disturbances to habitat will result from equipment and vehicle operations. These disturbances may temporarily impact the endangered species such as the bald eagle. However, construction during seasons when endangered species are not within the area will minimize potential impacts. The barrier would be located in a potential wetland/floodplain zone. Assessment of impacts would be required prior to implementation. Other threatened and endangered species would need to be identified in the proposed zone of construction. Impacts would be minimal by proper placement design. Environmental and cultural surveys required prior to implementation.
What are the impacts that cannot be avoided should the alternative be implemented?	Environmental impacts resulting from sheet piling wall construction may not be avoided but can be minimized. Physical disturbances to habitat will be temporary and limited to approximately 2,700 m (8,900 ft) along the Columbia River shore. No significant impacts such as disturbances to threatened or endangered species are anticipated.
How long until remedial action objectives are achieved?	The RAO for protection of the Columbia River will be achieved upon installation of the sheet piling wall and operation of the hydraulic control wells for the zone behind the wall. However, contamination between the wall and the river will continue to migrate to the river. As noted previously, procurement and installation of this containment system is estimated to require approximately one year. However, the time required to obtain the required permits and agreements to begin construction is unknown.

Table 6-3 Detailed Analysis of GW-3, Containment Alternative (Page 10 of 12)

IMPLEMENTABILITY	ALTERNATIVE GW-3: CONTAINMENT
What difficulties and uncertainties are associated with construction?	The primary uncertainty associated with construction of the sheet piling wall is the presence of subsurface obstructions in the formation below the specified location of the wall. Sheet piling wall construction is not considered implementable in the Hanford formation because of the presence of boulders and large cobbles. However, the geologic formation near the Columbia River shore is primarily the Ringold Formation. Since the distinction between the formations is not exact, the presence of subsurface obstructions could damage or deflect the piles and render the wall ineffective. The secondary uncertainty is the depth to the uppermost confining layer which is currently not well defined.
What is the likelihood that technical problems will lead to schedule delays?	Sheet piling wall construction is well established. However, if the presence of subsurface obstructions have not been determined prior to installation, obstructions might lead to schedule delays. If conditions allow, subsurface obstructions could be removed by excavation. If obstructions are encountered and excavation is not possible, the wall might not be implementable.
What likely future remedial actions are anticipated?	Since the containment system proposed in this alternative does not reduce COC concentrations in the groundwater, future remedial actions after the IRM period may be required. These include pump and treat, innovative in situ techniques, or other alternatives. Current activities are being directed at defining true risks to the river and the future need for remedial actions. Final remedial actions will be determined and implemented by the year 2008.
What risks of exposure exist should monitoring be insufficient to detect failure?	Failure of the sheet piling wall containment system would result in continued COC release into the river at concentrations above EPA Ambient Water Quality Criteria levels. The resulting exposure risk would be no worse than the current conditions at the 100 K Area.
What activities are proposed which require coordination with other agencies?	None.
Are adequate treatment, storage capacity, and disposal services available?	It is not anticipated that the implementation of this alternative will require treatment, storage, or disposal services.
Are the necessary equipment and specialists available?	Yes, sheet piling cutoff wall construction equipment and specialists are commercially available. All other equipment and specialists required are available as Hanford Site contractors.

Table 6-3 Detailed Analysis of GW-3, Containment Alternative (Page 11 of 12)

IMPLEMENTABILITY	ALTERNATIVE GW-3: CONTAINMENT
What additional equipment and specialists are required and what are their potential impacts to implementation?	No additional equipment or specialists are anticipated to be required for the implementation of this alternative.
Are technologies under consideration generally available and sufficiently demonstrated?	Yes, but pilot studies are needed to demonstrate the implementability of sheet piling walls at the site location. Additional borings and studies are required to assess the geological and logistic characteristics of the site with respect to the implementability of the proposed alternative.
Will technologies require further development before they can be applied at the site?	No, but pilot studies to demonstrate the implementability of sheet piling walls are needed.
Will more than one vendor be available to provide a competitive bid?	Yes, sheet piling wall construction technology is commercially available through several vendors.

Table 6-3 Detailed Analysis of GW-3, Containment Alternative (Page 12 of 12)

COST COMPONENT	ALTERNATIVE GW-3: CONTAINMENT
Capital	$33,000,000
Operation and Maintenance	$45,600,000
Present Worth	$66,800,000

QRA - qualitative risk assessment
ICR - incremental cancer risk
HI - hazard index
ARAR - applicable or relevant and appropriate requirements
COC - contaminants of concern
EPA - U.S. Environmental Protection Agency
TBC - to be considered
O&M - operations and maintenance
ERDF - Environmental Restoration Disposal Facility

9413294.3208

Table 6-4 Detailed Analysis of GW-5, Removal, Treatment, and Disposal Alternative with Ion Exchange Treatment (Page 1 of 11)

OVERALL PROTECTION OF HUMAN HEALTH AND THE ENVIRONMENT	ALTERNATIVE GW-5: REMOVAL/TREATMENT/DISPOSAL
Will risk be at acceptable levels?	Human Health: Yes, the QRA (WHC 1993c) indicates that the risk to human health for the occasional-use scenario is low (ICR 10^{-6} to 10^{-4}, HI < 1). Environment: Uncertain: the potential risks associated with concentrations of chromium and aluminum above the ambient water quality criteria in the near-river wells will remain because these concentrations will remain elevated. This risk as determined in the QRA is conservative because no allowance has been made for natural attentuation of the contaminants. It is not anticipated that this alternative will reduce concentrations below the Ambient Water Quality Criteria during the IRM timeframe. The potential ecological risk identified in the LFI QRA can be significantly reduced by the implementation of this alternative. Potential risks exist because the concentrations of chromium and aluminum exceed the ambient water quality criteria in the near-river wells. This risk as determined in the QRA is conservative because no allowance has been made for natural attentuation of the contaminants. Groundwater modeling results indicate that an 11-well extraction system positioned along the Columbia River can remove up to 740 kg of chromium from the groundwater, reducing the mass of chromium entering the river during the IRM period. Ion exchange, a proven groundwater treatment technology, has been shown in other water treatment applications to achieve treatment levels lower than the remediation criteria for the COC in 100-KR-4 Operable Unit (Patterson 1985). The risk associated with the Columbia River substrate has not been quantified.
Timeframe to achieve acceptable levels?	Based on groundwater modeling results, operation of the pump-and-treat system in the 100 K Area is required for the duration of the IRM period, through the year 2008, in order to maintain protection of the Columbia River. Once initiated, the volume of chromium contaminated groundwater entering the river will be substantially reduced; however, the concentrations will remain elevated above PRG. It should be noted that the intent of the pump-and-treat system is to protect the Columbia River rather than to restore the aquifer.
Will additional threats be minimized?	Additional threats posed by removing chromium from groundwater are insignificant. Carbon-14 will be concentrated on an anionic ion exchange resin, which will then be solidified with cement prior to disposal at ERDF, W-025, or another site. Heavy metals removed from the ion exchange resin beds upon bed regeneration will be precipitated and filtered out in filter cake which will also be solidified with cement and disposed of at ERDF. Therefore, all treatment residuals and cement waste will be disposed of at ERDF.

Table 6-4 Detailed Analysis of GW-5, Removal, Treatment, and Disposal Alternative with Ion Exchange Treatment (Page 2 of 11)

COMPLIANCE WITH ARAR	ALTERNATIVE GW-5: REMOVAL/TREATMENT/DISPOSAL
What are the potential ARAR?	See Table 6-6.
Will the potential ARAR be met? How?	See Table 6-6.
Basis for waivers?	This alternative represents an IRM preceding a final action which is to be implemented by the year 2008. The final remedial action should be selected to ensure ARAR compliance. Reducing the COC concentrations in groundwater entering the Columbia River to below the EPA Ambient Water Quality Criteria levels might be technically impractical. Although the purpose of the IRM is not aquifer restoration, contaminant concentrations in the aquifer represent the contaminant concentrations potentially entering the river. Because of the persistence of heavy metals and carbon-14, removal is the only means of ensuring permanent ARAR compliance. Conventional pump-and-treat might not sufficiently reduce the COC concentrations in the aquifer to accomplish ARAR compliance, although the flow rate of contaminated groundwater into the river is substantially reduced. Ion exchange treatability study results on chromium removal from 100-HR-3 Operable Unit groundwater provide very limited information on the feasibility of achieving remediation criteria for COC in 100-KR-4 Operable Unit. The performance goal for chromium, the only COC common to the two operable unit, was 100 μg/L, which is considerably higher than the remediation criteria of 11 μg/L. A treatability study is needed to evaluate the performance of the ion exchange system in achieving remediation criteria for COC before establishing any basis for waivers for treatment/discharge criteria. Based on past performance of the ion exchange technology is similar applications (Patterson 1985), the need for waivers is not anticipated. Based on their MCL for chromium (100 μg/L), ion exchange is specified by the SDWA as the Best Available Technology (BAT) for chromium treatment. Previous studies have shown ion exchange to remove chromium (VI) in groundwater with 95 to 99 percent efficiency (Huxstep and Sorg 1988). However, in order to assess the ability to satisfy the EPA Ambient Water Quality Criteria for the COC and to optimize the design parameters of the ion exchange system, a treatability study is required.
What are the potential TBC?	See Table 6-6.
Is the alternative consistent with TBC listed above?	See Table 6-6.

Table 6-4 Detailed Analysis of GW-5, Removal, Treatment, and Disposal Alternative with Ion Exchange Treatment (Page 3 of 11)

LONG-TERM EFFECTIVENESS AND PERMANENCE	ALTERNATIVE GW-5: REMOVAL/TREATMENT/DISPOSAL
What is the magnitude of the remaining risk?	The magnitude of risk from residuals left in treated effluent and contaminated groundwater left in the aquifer has not yet been quantified. The COC concentrations in groundwater extracted from the unconfined aquifer can be significantly reduced by utilizing an ion exchange system. Groundwater modeling results indicate that the mass of chromium entering the river may be reduced by approximately 95 percent relative to the no action alternative. However, groundwater modeling results also indicate that pump-and-treat might be required beyond the period of IRM in order to maintain protection of the river.
What remaining sources of risk can be identified?	The remaining sources of risk are untreated groundwater remaining in the aquifer, treated groundwater discharged to the Columbia River, and untreated groundwater leakage past the extraction system. The final remedial action will address the risk caused by the COC contaminated groundwater that remains in the aquifer after the IRM period.
What is the likelihood that the technologies will meet performance needs?	Groundwater modeling results indicate that the extraction system may reduce the mass of contaminants entering the Columbia River by approximately 95 percent relative to the no action alternative. ion exchange technology is a proven technology for high purity water applications, and has high potential for achieving the remediation or discharge criteria. However, a treatability study would be required to better evaluate this aspect of the alternative during design efforts.
What type and degree of long-term management is required?	Long-term management is required for the duration of the IRM period to maintain the operation of the ion exchange treatment system and the extraction wells, to satisfy annual reporting requirements, and to conduct periodic groundwater monitoring. Monitoring will continue through the year 2018.
What are the requirements for long-term monitoring?	The current monitoring program will continue through the year 2018. Evaluations of groundwater monitoring data will be made every 5 years to ensure the effectiveness of the treatment.
What O&M functions must be performed?	O&M functions, including maintenance of pumps, piping, and water treatment equipment, and regular regeneration and polishing of ion exchange resins, will be required for the duration of the IRM period to ensure continuous treatment and monitoring.
What difficulties may be associated with long-term O&M?	No difficulties associated with O&M are foreseen for the IRM period since all deployed technologies and equipment are proven and commercially available.

Table 6-4 Detailed Analysis of GW-5, Removal, Treatment, and Disposal Alternative with Ion Exchange Treatment (Page 4 of 11)

LONG-TERM EFFECTIVENESS AND PERMANENCE	ALTERNATIVE GW-5: REMOVAL/TREATMENT/DISPOSAL
What is the potential need for replacement of technical components?	Periodic replacement of the ion exchange system components (e.g., ion exchange resins), extraction wells, monitoring wells, and associated ancillary equipment may be required.
What is the magnitude of risk should the remedial action need replacement?	The time required to replace components of the treatment system is not considered significant. But if treatment were to be unavailable and the holding capacity of storage tanks exceeded during the period of operation, contaminated groundwater might enter the river.
What is the degree of confidence that controls can adequately handle potential problems?	Potential problems associated with operation of the treatment and extraction systems include equipment failure, leaks or spills, and inefficiency in removing the COC. Control measures can adequately protect human health and the environment should such problems arise. The treatment system will be equipped with automated shut-down controls, secondary containment measures, and effluent COC concentration monitoring, ensuring a high degree of confidence.
How is the removed contamination disposed of?	Spent anionic resins for carbonates (carbon-14) and contaminated sludge (heavy metals) discharged from the rotary drum filter will be solidified in cement and disposed of at ERDF, W-025, or another site.
What are potential final actions?	Potential final actions likely include no action, institutional controls, and pump and treat for mass reduction. The vertical barrier option is not considered for final action because chromium is persistent in the environment and does not readily degrade. The wall will contain the chromium by lengthening the travel time for the contaminants to reach the river; however, the contamination will eventually migrate around the wall.
Is the alternative for the IRM compatible with potential final actions?	The pump and treat alternative for containment and some mass reduction as proposed in this FFS is consistent with future pump and treat scenarios for mass removal. The IRM system can be expanded to meet changing objective, such as significant mass removal. This situation is similar to that proposed in the 100-HR-3 treatability test where a small pump and treat system will be installed to obtain information about the technology specific to the chromium plume in the operable unit. The proposed plan is to expand the treatability system to an IRM if results are favorable for the technology. The IRM system is not very compatible with the no action and institutional controls alternatives because of the expense involved in installing and operating the pumping system during the IRM period only to shut it down for final action.

Table 6-4 Detailed Analysis of GW-5, Removal, Treatment, and Disposal Alternative with Ion Exchange Treatment (Page 5 of 11)

REDUCTION OF TOXICITY, MOBILITY, OR VOLUME	ALTERNATIVE GW-5: REMOVAL/TREATMENT/DISPOSAL
Does the treatment process address the principal threats?	The treatment system would meet effluent discharge criteria. Ion exchange can result in about one to two orders of magnitude reduction of the concentration of heavy metals, such as hexavalent chromium, and carbonate/bicarbonates (carbon-14) in groundwater (Patterson 1985).
Are there any special requirements for the treatment process?	Pretreatment may be required to prevent fouling of the ion exchange resin beds caused by adsorption of certain compounds that cannot be easily removed in the regeneration step. Sand filtration will be used to remove suspended solids from groundwater upstream of the ion exchange system.
What portion of the contaminated material is treated/destroyed?	This alternative treats only the extracted groundwater and will not treat the contaminated groundwater left in the aquifer or entering the river via migration. The volume of contaminated groundwater to be treated is equivalent to 1,100 gpm, the design flow rate, multiplied by the operation time. Assuming continuous operation from 1996 to 2008, the IRM period, the volume of groundwater to be treated is 6.9×10^9 gallons.
To what extent is total mass of toxic contaminants reduced?	Groundwater modeling indicates that an extraction and treatment system can reduce the mass of chromium entering the Columbia River by approximately 95 percent relative to the no action alternative. The concentration of chromium in the treatment effluent would be reduced to the levels achievable by the ion exchange system. Previous studies have shown that ion exchange technology can achieve one to two orders of magnitude reduction in the concentration of carbonate/bicarbonate (carbon-14) and heavy metals (Patterson 1985).
To what extent is the mobility of toxic contaminants reduced?	The mobility of COC removed by the ion exchange treatment system will be minimized by subsequent precipitation (heavy metals), followed by solidification in cement and disposal at an approved facility. The mobility of untreated groundwater in the aquifer or residual COC remaining in treated groundwater will not be reduced only non-toxic resins will be used.
To what extent is the volume of toxic contaminants reduced?	The reduction in the volume of contaminated groundwater by the end of the IRM period will be equal to the volume of groundwater that is extracted and treated, approximately 6.9×10^9 gallons. Modeling results indicate that this corresponds to about a 95 percent reduction in the volume of contaminated groundwater entering the Columbia River via migration.
To what extent are the effects of the treatment irreversible?	Removal of COC from groundwater extracted from the unconfined aquifer is irreversible.

Table 6-4 Detailed Analysis of GW-5, Removal, Treatment, and Disposal Alternative with Ion Exchange Treatment (Page 6 of 11)

REDUCTION OF TOXICITY, MOBILITY, OR VOLUME	ALTERNATIVE GW-5: REMOVAL/TREATMENT/DISPOSAL
What are the quantities of residuals and characteristics of the residual risks?	Multiple treatment of the extracted contaminated groundwater by ion exchange, and precipitation/ filtration is expected to result in a reduction in the COC concentration of one to two orders of magnitude in the treated groundwater. The separated COC will be concentrated into solidified cement wastes. The volume of this residual waste is very small relative to the volume of the extracted groundwater. Moreover, the COC are highly immobilized by the final fixation/solidification treatment.
What risks do treatment of residuals pose?	Cement solidification is a well developed technology and has been used for radioactive and hazardous wastes. The risk from residuals treatment is considered minimal.
Is treatment used to reduce inherent hazards posed by principal threats at the site?	Yes, COC removal from the 100-KR-4 Operable Unit will reduce the threat posed by the migration of contaminated groundwater into the Columbia River by achieving a mass reduction of approximately 95 percent. Treatment effluent residuals will pose minimal risk to human health and the environment based on using cement solidification to immobilize the wastes, followed by disposal at an approved facility.

Table 6-4 Detailed Analysis of GW-5, Removal, Treatment, and Disposal Alternative with Ion Exchange Treatment (Page 7 of 11)

SHORT-TERM EFFECTIVENESS	ALTERNATIVE GW-5: REMOVAL/TREATMENT/DISPOSAL
What are the risks to the community during remedial actions that must be addressed?	No risks to the community have been identified. The 100 K Area is highly secured from public access. There are no populated areas within several miles of the 100 K Area.
How will the risks to the community be addressed and mitigated?	Not applicable. See the previous response.
What risks remain to the community that cannot be readily controlled?	No risks to the community have been identified.
What are the risks to the workers that need to be addressed?	Risks to workers may be associated with handling treatment residuals, operation and maintenance of treatment process equipment, and groundwater monitoring. The risks to workers associated with groundwater extraction and handling is considered to be low.
What risks remain to the workers that cannot be readily controlled?	None.
How will the risks to the workers be addressed and mitigated?	Standard operating procedures will be established to define proper treatment system operating parameters and maintenance requirements. Health and safety protocols that define safe work practices, training requirements, personal protection equipment usage, treatment residual handling procedures, contamination control measures, and decontamination procedures will be implemented.
What environmental impacts are expected with the construction and implementation of the alternative?	Environmental impacts resulting from treatment system construction are considered minimal. The primary impact to the environment will be associated with installation of extraction wells and construction of the piping system to transport groundwater to and from the wells. These activities may result in physical disturbances to habitat potentially inhabited by threatened or endangered species such as bald eagles. These however will be of short duration. The treatment process would reside within the facilities area of the 100 K Area and will not result in additional impacts to the environment. Ecological and cultural surveys required prior to implementation. A floodplain/wetlands assessment may alos be required.

Table 6-4 Detailed Analysis of GW-5, Removal, Treatment, and Disposal Alternative with Ion Exchange Treatment (Page 8 of 11)

SHORT-TERM EFFECTIVENESS	ALTERNATIVE GW-5: REMOVAL/TREATMENT/DISPOSAL
What are the impacts that cannot be avoided should the alternative be implemented?	Physical disturbances to habitat resulting from construction activities are unavoidable. However, construction activities will be conducted to avoid or minimize such impacts. For example, construction may be scheduled during seasons when endangered species, such as the bald eagle, are not present in the area.
How long until remedial action objectives are achieved?	Since the primary goal of the IRM is protection of the Columbia River rather than aquifer restoration, a pump-and-treat system is required for the duration of the IRM period to maintain protection of the river. Aquifer restoration will be addressed by the final remedial action which should be selected to meet final remedial action objectives. Use of the pump-and-treat system may be continued as a final remedial action.

Table 6-4 Detailed Analysis of GW-5, Removal, Treatment, and Disposal Alternative with Ion Exchange Treatment (Page 9 of 11)

IMPLEMENTABILITY	ALTERNATIVE GW-5: REMOVAL/TREATMENT/DISPOSAL
What difficulties and uncertainties are associated with construction?	None. Construction of extraction wells and ion exchange treatment systems is a well developed technology.
What is the likelihood that technical problems will lead to schedule delays?	Since the treatment systems (ion exchange, precipitation/filtration, cement solidification, and pumping wells) are well developed technologies, technical problems are not likely to cause major schedule delays. However, failure of the treatment system to achieve performance objectives may result in schedule delays. Conducting a treatability study prior to the design and construction of the treatment system may minimize the likelihood of such failure.
What likely future remedial actions are anticipated?	No additional remedial actions are considered necessary during the IRM period. Since modeling results indicate that a pump-and-treat system may be required for the duration of IRM period, a final remedial action might be required. This remedial action may be a containment alternative or the continuation of the pump-and-treat alternative.
What risks of exposure exist should monitoring be insufficient to detect failure?	Monitoring failure could lead to a premature termination of treatment operations or inadequate treatment of the extracted groundwater. The resulting risk would depend on the extent of treatment accomplished, but would be no greater than the baseline conditions identified in the LFI QRA.
What activities are proposed which require coordination with other agencies?	None.
Are adequate treatment, storage capacity, and disposal services available?	Adequate storage and disposal services are available at ERDF or existing facilities.
Are the necessary equipment and specialists available?	Yes, services for the design, construction, operation and maintenance of the ion exchange, precipitation/filtration, and chemical fixation/solidification systems are available through the DOE and private industry.
What additional equipment and specialists are required and what are their potential impacts to implementation?	No additional equipment or specialists have been identified, and, therefore, there are no potential impacts to implementation of this alternative.

Table 6-4 Detailed Analysis of GW-5, Removal, Treatment, and Disposal Alternative with Ion Exchange Treatment (Page 10 of 11)

IMPLEMENTABILITY	ALTERNATIVE GW-5: REMOVAL/TREATMENT/DISPOSAL
Are technologies under consideration generally available and sufficiently demonstrated?	Yes, ion exchange is a proven technology for the removal of heavy metals and anions to very low concentration levels. However, the application of ion exchange to the site-specific conditions at the 100-KR-4 Operable Unit requires that a treatability study be conducted to establish the pretreatment requirements and optimal operating conditions, as well as to determine resin types and configurations to achieve optimum COC removal.
Will technologies require further development before they can be applied at the site?	No further development of technologies is required, but treatability testing is required to optimize ion exchange system design and performance based on the site-specific water quality condition (chemical composition).
Will more than one vendor be available to provide a competitive bid?	Yes, these technologies are readily available in private industry through several vendors.

Table 6-4 Detailed Analysis of GW-5, Removal, Treatment, and Disposal Alternative with Ion Exchange Treatment (Page 11 of 11)

COST COMPONENT	ALTERNATIVE GW-5: REMOVAL/TREATMENT/DISPOSAL
Capital	$7,600,000
Operation and Maintenance	$91,500,000
Present Worth	$76,000,000

QRA - qualitative risk assessment
ICR - incremental cancer risk
LFI - limited field investigation
IRM - interim remedial measures
COC - contaminants of concern
ERDF - Environmental Restoration Disposal Facility
EPA - U.S. Environmental Protection Agency
ARAR - applicable or relevant and appropriate requirements
MCL - maximum contaminant level
O&M - operations and maintenance
HI - hazard index
FFS - focused feasibility study
DOE - U.S. Department of Energy
SDWA - Safe Drinking Water Act

9413294.3219

THIS PAGE INTENTIONALLY
LEFT BLANK

Table 6-5 Detailed Analysis of GW-6, Removal, Treatment, and Disposal Alternative with Reverse Osmosis Treatment (Page 2 of 12)

COMPLIANCE WITH ARAR	ALTERNATIVE GW-6: REMOVAL/TREATMENT/DISPOSAL
What are the potential ARAR?	See Table 6-6.
Will the potential ARAR be met? How?	See Table 6-6.
Basis for waivers?	This alternative represents an IRM preceding a final action which is to be implemented by the year 2008. The final remedial action should be selected to ensure ARAR compliance. Reducing the COC concentrations in groundwater entering the Columbia River to below the EPA Ambient Water Quality Criteria levels might be technically impractical. Although the purpose of the IRM is not aquifer restoration, contaminant concentrations in the aquifer represent the contaminant concentrations potentially entering the river. Because of the persistence of heavy metals and carbon-14, removal is the only means of ensuring permanent ARAR compliance. Conventional pump-and-treat might not sufficiently reduce the COC concentrations in the aquifer to accomplish ARAR compliance, although the flow rate of contaminated groundwater into the river is substantially reduced. Based on the MCL for chromium (100 μg/L), reverse osmosis is specified by the SDWA as the Best Available Technology (BAT) for chromium treatment. Previous studies have shown reverse osmosis to remove chromium (VI) in groundwater with 95 to 99 percent efficiency (Huxstep and Sorg 1988). However, in order to assess reverse osmosis' ability (or lack thereof) to satisfy the EPA Ambient Water Quality Criteria for the COC and to optimize the design parameters of the reverse osmosis system, a treatability study would be required.
What are the potential TBC?	See Table 6-6.
Is the alternative consistent with TBC listed above?	See Table 6-6.

Table 6-5 Detailed Analysis of GW-6, Removal, Treatment, and Disposal Alternative with Reverse Osmosis Treatment (Page 1 of 12)

OVERALL PROTECTION OF HUMAN HEALTH AND THE ENVIRONMENT	ALTERNATIVE GW-6: REMOVAL/TREATMENT/DISPOSAL
Will risk be at acceptable levels?	Human Health: Yes, the QRA (WHC 1993c) indicates that the baseline risk to human health for the occasional-use scenario is low (ICR 10^{-6} to 10^{-4}, HI < 1). Environment: Uncertain; the potential risks associated with concentrations of chromium and aluminum above the ambient water quality criteria in the near-river wells will remain because these concentrations will remain elevated. This risk as determined in the QRA is conservative because no allowance has been made for natural attentuation of the contaminants. It is not anticipated that this alternative will reduce concentrations below Ambient Water Quality Criteria in the IRM timeframe. The potential ecological risk identified in the LFI QRA can be significantly reduced by the implementation of this alternative. Groundwater modeling results indicate that an 11-well extraction system positioned along the Columbia River can remove 740 kg of chromium from the groundwater during the IRM period, reducing the mass of chromium entering the river. Reverse osmosis, a proven groundwater treatment technology, has been shown to obtain removal efficiencies between 95 and 99 percent for most heavy metals including chromium (VI) (Huxstep and Sorg 1988). This corresponds to a chromium reduction from 1,950 μg/L (highest reported concentration [DOE-RL 1993b]) to 20 to 100 μg/L. The risks associated with the substrate of the Columbia River has not been quantified.
Timeframe to achieve acceptable levels?	Based on groundwater modeling results, operation of the pump-and-treat system in the 100 K Area is required for the duration of the IRM period, through the year 2008, in order to maintain protection of the Columbia River. Once initiated, the volume of chromium contaminated groundwater entering the river will be substantially reduced. It should be noted that the intent of the pump-and-treat system is to protect the Columbia River rather than to restore the aquifer.
Will additional threats be minimized?	Additional threats posed by removing chromium from groundwater are insignificant. Although concentrate from the reverse osmosis/ion exchange treatment may be classified as mixed waste, it will be solidified in cement. All treatment residuals and cement waste will be disposed of at ERDF, W-025, or another site.

Table 6-5 Detailed Analysis of GW-6, Removal, Treatment, and Disposal Alternative with Reverse Osmosis Treatment (Page 4 of 12)

LONG-TERM EFFECTIVENESS AND PERMANENCE	ALTERNATIVE GW-6: REMOVAL/TREATMENT/DISPOSAL
What difficulties may be associated with long-term O&M?	No difficulties associated with O&M are foreseen for the IRM period because all deployed technologies and equipment are proven and commercially available.
What is the potential need for replacement of technical components?	Periodic replacement of the reverse osmosis/ion exchange system components (e.g., reverse osmosis membrane and ion exchange resins), extraction wells, monitoring wells, and associated ancillary equipment may be required.
What is the magnitude of risk should the remedial action need replacement?	The time required to replace components of the treatment system is not considered significant. But if treatment were to be unavailable and the holding tank capacity exceeded during the period of operation, contaminated groundwater might enter the river.
What is the degree of confidence that controls can adequately handle potential problems?	Potential problems associated with operation of the treatment system include equipment failure, leaks or spills, and inefficiency in removing COC. Control measures can adequately protect human health and the environment should such problems arise. The treatment system will be equipped with automated shut-down controls, secondary containment measures, and effluent COC concentration monitoring, ensuring a high degree of confidence.
How is the removed contamination disposed of?	Spent anionic resins for carbonates (carbon-14) and contaminated sludge (heavy metals) discharged from the rotary drum filter will be solidified in cement. These solidified residues will be disposed of at ERDF or another acceptable site.
What are potential final actions?	Potential final actions likely include no action, institutional controls, and pump and treat for mass reduction. The vertical barrier option is not considered for final action because chromium is persistent in the environment and does not readily degrade. The wall will contain the chromium by lengthening the travel time for the contaminants to reach the river; however, the contamination will eventually migrate around the wall.

Table 6-5 Detailed Analysis of GW-6, Removal, Treatment, and Disposal Alternative with Reverse Osmosis Treatment (Page 3 of 12)

LONG-TERM EFFECTIVENESS AND PERMANENCE	ALTERNATIVE GW-6: REMOVAL/TREATMENT/DISPOSAL
What is the magnitude of the remaining risk?	The magnitude of risk from residuals left in treated effluent and contaminated groundwater left in the aquifer has not been quantified. The COC concentrations in groundwater extracted from the unconfined aquifer can be significantly reduced by utilizing an reverse osmosis system. Groundwater modeling results indicate that the mass of chromium entering the river may be reduced by approximately 95 percent relative to the no action alternative. However, groundwater modeling results also indicate that pump-and-treat might be required beyond the IRM period in order to maintain protection of the river.
What remaining sources of risk can be identified?	The remaining sources of risk are untreated groundwater remaining in the aquifer, treated groundwater discharged to the Columbia River, and untreated groundwater leakage past the extraction system. The final remedial action will address the risk caused by the COC contaminated groundwater that remains in the aquifer after the IRM period.
What is the likelihood that the technologies will meet performance needs?	Groundwater modeling results indicate that the extraction system may significantly reduce the mass of contaminants entering the Columbia River relative to the no action alternative. Reverse osmosis is specified by the SDWA as a BAT for chromium, and past performance of reverse osmosis has demonstrated a substantial removal of contaminants, which suggests that a multistaged reverse osmosis might achieve needed performance. However, a treatability study is required to evaluate this alternative. The ability of RO to meet the 11 μg/L Ambient Water Quality Criteria is uncertain.
What type and degree of long-term management is required?	Long-term management is required for the duration of the IRM period to maintain the operation of the reverse osmosis treatment system and the extraction wells, to satisfy annual reporting requirements, and to conduct periodic groundwater monitoring. Monitoring will continue through the year 2018.
What are the requirements for long-term monitoring?	The current monitoring program will continue through the IRM period. Evaluations of groundwater monitoring data will be made every 5 years to ensure the effectiveness of the treatment.
What O&M functions must be performed?	O&M functions, including maintenance of pumps, piping, and water treatment equipment, regular replacement of membranes, and regeneration of ion exchange resins, will be required for the duration of the IRM period to ensure continuous treatment and monitoring.

Table 6-5 Detailed Analysis of GW-6, Removal, Treatment, and Disposal Alternative with Reverse Osmosis Treatment (Page 6 of 12)

REDUCTION OF TOXICITY, MOBILITY, OR VOLUME	ALTERNATIVE GW-6: REMOVAL/TREATMENT/DISPOSAL
Does the treatment process address the principal threats?	The treatment system would meet discharge criteria. reverse osmosis can result in 95 to 99 percent removal of heavy metals such as hexavalent chromium and 50 to 80 percent removal of bicarbonates in groundwater (Huxstep and Sorg 1988 and Patterson 1985).
Are there any special requirements for the treatment process?	Pretreatment is required to prevent fouling the reverse osmosis membrane(s) due to high solids content or precipitation of salts. Sand filtration will be used to remove suspended solids from groundwater upstream of the reverse osmosis system. Antiscaling agents and pH adjustment will be used to prevent salts from precipitating within the reverse osmosis unit.
What portion of the contaminated material is treated/destroyed?	This alternative treats only the extracted groundwater and will not treat the contaminated groundwater left in the aquifer or entering the river via migration. The volume of contaminated groundwater to be treated is equivalent to 1,100 gpm, the design flow rate, multiplied by the operation time. Assuming continuous operation from 1996 to 2008, the IRM period, the volume of groundwater to be treated is 6.9×10^9 gallons.
To what extent is total mass of toxic contaminants reduced?	Groundwater modeling indicates that an extraction and treatment system can reduce the mass of chromium entering the Columbia River by approximately 95 percent relative to the no action alternative. The concentration of chromium in the treatment effluent will be reduced to the levels achievable by the reverse osmosis system. Previous studies have shown reverse osmosis to remove chromium (VI) in groundwater with 95 to 99 percent efficiency (Huxstep and Sorg 1988). Similar reduction of other heavy metal and a 50 to 80 percent reduction in carbon-14 are expected (Patterson 1985).
To what extent is the mobility of toxic contaminants reduced?	The mobility of COC removed by the reverse osmosis treatment system will be minimized by subsequent ion exchange and precipitation (heavy metals) treatments, followed by solidification in cement and disposal at an approved facility. The mobility of untreated groundwater in the aquifer or residual COC remaining in treated groundwater will not be reduced.
To what extent is the volume of toxic contaminants reduced?	The reduction in the volume of contaminated groundwater by the end of the IRM period will be equal to the volume of groundwater that is extracted and treated, approximately 6.9×10^9 gallons. Modeling results indicate that this corresponds to about a 95 percent reduction in the volume of contaminated groundwater entering the Columbia River via migration.

Table 6-5 Detailed Analysis of GW-6, Removal, Treatment, and Disposal Alternative with Reverse Osmosis Treatment (Page 5 of 12)

LONG-TERM EFFECTIVENESS AND PERMANENCE	ALTERNATIVE GW-6: REMOVAL/TREATMENT/DISPOSAL
Is the alternative for the IRM compatible with potential final actions?	The pump and treat alternative for containment and some mass reduction as proposed in this FFS is consistent with future pump and treat scenarios for mass removal. The IRM system can be expanded to meet changing objective, such as significant mass removal. This situation is similar to that proposed in the 100-HR-3 treatability test where a small pump and treat system will be installed to obtain information about the technology specific to the chromium plume in the operable unit. The proposed plan is to expand the treatability system to an IRM if results are favorable for the technology. The IRM system is not very compatible with the no action and institutional controls alternatives because of the expense involved in installing and operating the pumping system during the IRM period only to shut it down for final action.

Table 6-5 Detailed Analysis of GW-6, Removal, Treatment, and Disposal Alternative with Reverse Osmosis Treatment (Page 8 of 12)

SHORT-TERM EFFECTIVENESS	ALTERNATIVE GW-6: REMOVAL/TREATMENT/DISPOSAL
What are the risks to the community during remedial actions that must be addressed?	No risks to the community have been identified. The 100 K Area is highly secured from public access. There are no populated areas within several miles of the 100 K Area.
How will the risks to the community be addressed and mitigated?	Not applicable. See the previous response.
What risks remain to the community that cannot be readily controlled?	No risks to the community have been identified.
What are the risks to the workers that need to be addressed?	Risks to workers may be associated with handling treatment residuals, operation and maintenance of treatment process equipment, and groundwater monitoring. Worker risks associated with groundwater extraction and handling are considered low.
What risks remain to the workers that cannot be readily controlled?	None.
How will the risks to the workers be addressed and mitigated?	Standard operating procedures will be established to define proper treatment system operating parameters and maintenance requirements. Health and safety protocols that define safe work practices, training requirements, personal protection equipment usage, treatment residual handling procedures, contamination control measures, and decontamination procedures will be implemented.
What environmental impacts are expected with the construction and implementation of the alternative?	Environmental impacts resulting from treatment system construction are considered minimal. The primary impact to the environment will be associated with installation of extraction wells and construction of the piping system to transport groundwater to and from the wells. These activities may result in physical disturbances to habitat potentially inhabited by threatened or endangered species such as bald eagles. The treatment process (reverse osmosis/ion exchange) would reside within the facilities area of the 100 K Area and will not result in additional impacts to the environment. Ecological and cultural evaluations required prior to implementation. Floodplain/wetlands assessment may also be necessary.

Table 6-5 Detailed Analysis of GW-6, Removal, Treatment, and Disposal Alternative with Reverse Osmosis Treatment (Page 7 of 12)

REDUCTION OF TOXICITY, MOBILITY, OR VOLUME	ALTERNATIVE GW-6: REMOVAL/TREATMENT/DISPOSAL
To what extent are the effects of the treatment irreversible?	Removal of COC from groundwater extracted from the unconfined aquifer is irreversible.
What are the quantities of residuals and characteristics of the residual risks?	Multiple treatment of the extracted contaminated groundwater by reverse osmosis, ion exchange, and precipitation/filtration is expected to result in a reduction in the concentration of COC of about two orders of magnitude in the treated groundwater. The separated COC will be concentrated into solidified cement wastes. The volume of this residual waste is very small relative to the volume of the extracted groundwater. Moreover, the COC are highly immobilized by the final fixation/solidification treatment.
What risks do treatment of residuals pose?	Cement solidification is a well developed technology and has been used for radioactive and hazardous wastes. The risk from residuals treatment is considered minimal.
Is treatment used to reduce inherent hazards posed by principal threats at the site?	Yes, COC removal from the 100-KR-4 Operable Unit will reduce the threat posed by the migration of contaminated groundwater into the Columbia River by achieving a mass reduction of approximately 95 percent. Treatment effluent residuals will pose minimal risk to human health and the environment based on using cement solidification to immobilize the wastes, followed by disposal at ERDF or another site.

Table 6-5 Detailed Analysis of GW-6, Removal, Treatment, and Disposal Alternative with Reverse Osmosis Treatment (Page 10 of 12)

IMPLEMENTABILITY	ALTERNATIVE GW-6: REMOVAL/TREATMENT/DISPOSAL
What difficulties and uncertainties are associated with construction?	None. Construction of extraction wells and reverse osmosis treatment systems is a well developed technology.
What is the likelihood that technical problems will lead to schedule delays?	Since the treatment systems (reverse osmosis, ion exchange, precipitation/filtration, cement solidification, and pumping wells) are well developed technologies, technical problems are not likely to cause schedule delays. However, failure of the treatment system to achieve performance objectives would result in schedule delays. Conducting a treatability study prior to the design and construction of the treatment system may minimize the likelihood of such failure.
What likely future remedial actions are anticipated?	No additional remedial actions are considered necessary during the IRM period. Since modeling results indicate that a pump-and-treat system may be required for the duration of IRM period, a final remedial action might be required. This remedial action may be a containment alternative or the continuation of the pump-and-treat alternative.
What risks of exposure exist should monitoring be insufficient to detect failure?	Monitoring failure could lead to the premature end of treatment operations or inadequate treatment of the extracted groundwater. The resulting risk would depend on the extent of treatment accomplished, but would be no greater than the baseline conditions identified in the LFI QRA.
What activities are proposed which require coordination with other agencies?	None.
Are adequate treatment, storage capacity, and disposal services available?	Treatment services are widely available in private industry. Adequate storage and disposal services are available at ERDF or other sites. Groundwater extraction equipment are readily available and reliable.
Are the necessary equipment and specialists available?	Yes, services for the design, construction, operation and maintenance of the reverse osmosis, ion exchange, precipitation/filtration, and chemical fixation/solidification systems are available through the DOE and private industry.
What additional equipment and specialists are required and what are their potential impacts to implementation?	No additional equipment or specialists have been identified, and, therefore, there are no potential impacts to implementation of this alternative.

Table 6-5 Detailed Analysis of GW-6, Removal, Treatment, and Disposal Alternative with Reverse Osmosis Treatment (Page 9 of 12)

SHORT-TERM EFFECTIVENESS	ALTERNATIVE GW-6: REMOVAL/TREATMENT/DISPOSAL
What are the impacts that cannot be avoided should the alternative be implemented?	Physical disturbances to habitat resulting from construction activities are unavoidable. However, construction activities will be conducted to avoid or minimize such impacts. For example, construction may be scheduled during seasons when endangered species, such as the bald eagle, are not present in the area.
How long until remedial action objectives are achieved?	Since the primary goal of the IRM is protection of the Columbia River rather than aquifer restoration, a pump-and-treat system is required for the duration of the IRM period to maintain protection of the river. Aquifer restoration will be addressed by the final remedial action which should be selected to meet final remedial action objectives. Use of the pump-and-treat system may be continued as a final remedial action.

Table 6-5 Detailed Analysis of GW-6, Removal, Treatment, and Disposal Alternative with Reverse Osmosis Treatment (Page 12 of 12)

COST COMPONENT	ALTERNATIVE GW-6: REMOVAL/TREATMENT/DISPOSAL
Capital	$12,900,000
Operation and Maintenance	$42,500,000
Present Worth	$44,300,000

QRA - qualitative risk assessment
ICR - incremental cancer risk
HI - hazard index
IRM - interim remedial measure
LFI - limited field investigation
ERDF - Environmental Restoration Disposal Facility
ARAR - applicable or relevant and appropriate requirements
COC - contaminants of concern
MCL - maximum contaminant level
SDWA - Safe Drinking Water Act
EPA - U.S. Environmental Protection Agency
TBC - to be considered
FFS - focused feasibility study
DOE - U.S. Department of Energy

Table 6-5 Detailed Analysis of GW-6, Removal, Treatment, and Disposal Alternative with Reverse Osmosis Treatment (Page 11 of 12)

IMPLEMENTABILITY	ALTERNATIVE GW-6: REMOVAL/TREATMENT/DISPOSAL
Are technologies under consideration generally available and sufficiently demonstrated?	Yes, reverse osmosis is specified as a BAT by the SDWA and has been applied to radioactive wastewater in the commercial nuclear industry. However, the application of reverse osmosis and ion exchange to the site-specific conditions at the 100-KR-4 Operable Unit requires that a treatability study be conducted to establish the pretreatment requirements, operating conditions, and membrane selection, as well as to determine resin types and configurations to achieve optimum COC removal.
Will technologies require further development before they can be applied at the site?	No further development of technologies is required, but treatability testing is required to optimize reverse osmosis/ion exchange system design and performance based on the site-specific water quality condition (chemical composition).
Will more than one vendor be available to provide a competitive bid?	Yes, these technologies are readily available in private industry through several vendors.

Table 6-6 Compliance with ARAR and TBC (Page 2 of 6)

ARAR	ALTERNATIVE AFFECTED	REQUIREMENT	HOW ARE REQUIREMENTS MET?
40 CFR 144	GW-3, GW-5, GW-6	Prohibits injections that allows movement of contaminated fluid into underground sources of drinking water if they would violate 40 CFR 142 or adversely affect human health	No current use of groundwater as residential drinking water. Treatment will likely meet drinking water standards for all constituents except tritium; currently, no feasible treatments exist for tritium so there is a basis for ARAR waiver under technical impracticability.
40 CFR 146	GW-3, GW-5, GW-6	Establishes siting, construction, operating, monitoring, and closure requirements for injection wells	All injection wells will be in compliance with requirements
40 CFR 261	GW-3, GW-5, GW-6	Chromium may be a hazardous waste	All solid wastes will be solidified prior to disposal
40 CFR 262.34	GW-3, GW-5, GW-6	Allows accumulation of hazardous waste for 90 days or less without a permit	Wastes will not be stored on site longer than 90 days
40 CFR 268	GW-3, GW-5, GW-6	Prohibits placement of RCRA wastes in landfill unless treated.	All solid wastes will be treated prior to disposal
40 CFR 50.6	GW-3, GW-5, GW-6	$\leq 50\ \mu g/m^3$ annual average concentration of particulate emissions or 150 $\mu g/m^3$ per 24-hr period	Excavation and drilling activities will use dust control measures as required. No other particulate emissions are anticipated from the treatment systems.

9413294.3233

Table 6-6 Compliance with ARAR and TBC (Page 1 of 6)

ARAR	ALTERNATIVE AFFECTED	REQUIREMENT	HOW ARE REQUIREMENTS MET?
40 CFR 141	All	Chromium - 100 μg/L	Discharges after treatment will meet ARAR; concentrations at near river wells will remain above ARAR for lifecycle of IRM; however, mixing of the groundwater with the river will limit impacts. These standards apply at the completion of the CERCLA action; therefore the MCL will be addressed by any final action.
40 CFR 143	All	Zinc - 5000 μg/L	
40 CFR 264.92	All	Chromium - 50 μg/L	Discharges after treatment will meet ARAR; concentrations at near river wells will remain above ARAR for lifecycle of IRM; however, mixing of the groundwater with the river will limit impacts. These standards apply at the completion of the CERCLA action.
Ambient Water Quality Criteria	All	11 μg/L chromium	Not met in the near river wells during the IRM; currently met in the river. The substrate has not been characterized so it is uncertain whether the criteria are met for this zone
40 CFR 122	GW-3, GW-5, GW-6	Sets discharge limits to surface waters; requires use of BAT	No treated water will be discharge to the river which exceeds drinking water standards or ambient water quality criteria; both ion exchange and reverse osmosis have been identified as BAT for chromium under the Safe Drinking Water Act.
40 CFR 110	GW-3, GW-5, GW-6	Prohibits discharge of oil above water quality standards or that causes a sheen on water surface	Runoff control will be implemented during all activities. All tanks will be bermed.

Table 6-6 Compliance with ARAR and TBC (Page 4 of 6)

ARAR	ALTERNATIVE AFFECTED	REQUIREMENT	HOW ARE REQUIREMENTS MET?
40 CFR 257.3-2	GW-3, GW-5, GW-6	Prohibits facilities or practices from causing or contributing to the taking of endangered or threatened species	Activities will be scheduled to avoid impacts to eagles. Runoff control will be employed to prevent construction contaminants from impacting river biota; minimal impacts would be attributable to the pump and treat alternative; the vertical barrier would disturb an area near the river for implementation. This area would be restored after implementation.
16 U.S.C. 1271	GW-3, GW-5, GW-6	Prohibits federal agencies from recommending authorization of water resource projects that would have a direct and adverse affect on the qualities of the wild and scenic river	Impacts from the pumping system would be minimal. The vertical barrier would present a short duration impact to visual resources; however, after implementation the site would be restored to provide the visual aesthetics
WAC 173-340-720	All	Chromium VI - 80 μg/L	This level is achievable through the treatment systems; however, the groundwater entering the river will be at a higher concentration. A large mass reduction to the river is achieved by both vertical barriers and pump and treat. This ARAR applies at the end of the CERCLA action.
WAC 173-340-730	All	Chromium VI - 810 μg/L Copper - 2660 μg/L	The concentrations currently in the river are within these limits.
WAC 173-201A-030	All	Sets limits for temperature and pH for surface waters	No temperature impacts are associated with the alternatives. No waters with unacceptable pH will be discharged to the river.
WAC 173-201A-040	All	Chromium - 11 μg/L chronic Zinc - 86 to 205 μg/L based on hardness of 90 to 250 mg/L	Not met in the near river wells during the IRM; currently met in the river. The substrate has not been characterized so it is uncertain whether the criteria are met for this zone

Table 6-6 Compliance with ARAR and TBC (Page 3 of 6)

ARAR	ALTERNATIVE AFFECTED	REQUIREMENT	HOW ARE REQUIREMENTS MET?
16 U.S.C. 469	GW-3, GW-5, GW-6	Requires recovery or preservation of artifacts	Only a few sites have been identified in the area of potential action. Consideration of these sites would be given in placing a vertical barrier in this area. Additional testing of these sites may be required. Impacts from extraction wells could be minimized by prudent placement.
50 CFR 17, 222, 225, 226, 227, 402, 424	GW-3, GW-5, GW-6	Actions must not threaten the continued existence of a listed species or destroy critical habitat	Fish and Wildlife Service will be consulted prior to actions
16 U.S.C. 461	All	Requirements for preservation of historic sites, buildings, or objects of national significance. Undesirable impacts must be mitigated.	See 16 U.S.C. 469
16 U.S.C. 470 et seq.	All	Prohibits impacts and requires mitigation for unavoidable impacts on cultural resources	See 16 U.S.C 469
40 CFR 257.3-1	GW-3, GW-5, GW-6	Prohibits facilities or practices from restricting flow of base flood, reducing temporary storage capacity of floodplain, or causing washout of solid waste	Vertical barrier may have some impact on local ground and surface water flow. However, the wall is relatively short and should not impact the base flood. Other alternatives do not significantly impact floodplain

Table 6-6 Compliance with ARAR and TBC (Page 6 of 6)

ARAR	ALTERNATIVE AFFECTED	REQUIREMENT	HOW ARE REQUIREMENTS MET?
WAC 173-304-200	GW-3, GW-5, GW-6	Sets requirements for containers and vehicles to be used on site to store or transport solid waste	Any solid waste generated on site as a result of remedial action will be handled according to requirements
WAC 173-160	GW-3, GW-5, GW-6	Establishes minimum standards for wells	All wells will be installed, operated, and closed according to requirements
TBC			
Section 400-060	GW-3, GW-5, GW-6	Prohibits emissions > 0.10 grain per ft^3	
10 CFR 1022	GW-3, GW-5, GW-6	Requires federal agencies to avoid adverse effects associated with development of floodplains	Only temporary effects associated with vertical barrier installation. The wall will be below land surface; land above the wall altered during installation can be restored.
Executive Order 11593	All	Provides direction to federal agencies to preserve, restore, and maintain cultural resources	Several sites may be impacted by implementation of vertical barrier. Impacts can be minimized by careful selection of barrier location and consultation with archaeologists prior and during installation.
P.L. 100-605	All	Requires minimization of direct and adverse effects on the values for which a river is under study.	Impacts from barrier installation will be relatively short term; disturbed areas can be restored after installation.
DOE Order 5400.5	All	< 1 rad/day to ecological receptors	Current activities within this limit.

ARAR = applicable or relevant and appropriate requirements
IRM = interim remedial measure
CERCLA = Comprehensive Environmental Response, Compensation, and Liability Act
ERDF = Environmental Restoration Disposal Facility
RCRA = Resource Conservation and Recovery Act
* These ranges equate to water hardness between 90 and 250 mg/L

Table 6-6 Compliance with ARAR and TBC (Page 5 of 6)

ARAR	ALTERNATIVE AFFECTED	REQUIREMENT	HOW ARE REQUIREMENTS MET?
WAC 232-12-292	All	Requires protection of bald eagle habitat	All activities will be scheduled to avoid impacts to the eagles during nesting; remedial actions will not result in destruction of eagle nesting habitat.
WAC 232-12-297	All	Prescribes actions to protect wildlife defined as endangered or threatened	Activities will be scheduled to avoid impacts to eagles. Runoff control will be employed to prevent construction contaminants from impacting river biota; minimal impacts would be attributable to the pump and treat alternative; the vertical barrier would disturb an area near the river for implementation. This area would be restored after implementation.
WAC 173-400-040	GW-3, GW-5, GW-6	Requires reasonable precautions to minimize fugitive dust emissions; requires good practices to control odors	Dust control measures will be used as required; odors should not be a problem for the proposed alternatives.
WAC 173-340-360	All	Establishes cleanup requirements; identifies treatment technologies	Cleanup technologies are considered by consideration of a range of general response actions; feasibility studies and proposed plans are prepared with input from regulatory agencies
WAC 173-340-400	All	Ensures that cleanup actions are performed in accordance with cleanup plan	Regulatory agencies have input into feasibility studies and proposed plans
WAC 173-340-440	All	Requires physical measures to limit interference with cleanup	Fences and signs will be installed around active remedial projects
RCW 90.44	GW-3, GW-5, GW-6	Sets requirements for withdrawal of state groundwater	Requirements will be met for extraction wells

9413294.3236

7.0 QUALITATIVE SENSITIVITY ANALYSIS

The sensitivities associated with the key assumptions for the FFS are presented qualitatively in Table 7-1. This table identifies each key assumption and the impacts that the assumption has on the direction of the FFS and on the associated costs. Additional discussions on uncertainties and sensitivities is included in Section 4.0 and in Appendix C. The details of the cost assumptions used in defining alternative costs are included in the detailed cost model printouts in Appendix C.

9413294.3238

THIS PAGE INTENTIONALLY
LEFT BLANK

Table 7-1 Qualitative Sensitivity Analysis of Key Assumptions (Page 1 of 3)

ASSUMPTION	IMPACT
The purpose of the IRM is to address an identified threat to human health or the environment	The LFI recommended that the operable unit remain on the IRM pathway based on the QRA ecological risk estimation. The ecological risk assessment used concentrations in the near-river wells to determine the EHQ. This resulted in very conservative estimate of risks. If the ecological risk is sufficiently overestimated then the need for remedial action may be artificial. If the risk estimation is underestimated, then additional RAO may be required along with corresponding changes in alternative design. The overestimation of risk results in overexpenditure for potentially unnecessary remedial actions. This overexpenditure would be equivalent to the cost of the remedial action selected for implementation.
The objectives the FFS are to protect the Columbia River and to abate offsite migration of contaminants.	The costs developed in the FFS are based on this assumption. If the objectives were to clean up the aquifer and reduce the mass of contaminant then the remedial systems would have to be redesigned or potentially eliminated in the case of the vertical barrier. The barrier does not perform well in the long term with a persistent mobile contaminant. The wall will hold up the contaminants in the short term, but the contamination will eventually travel around the wall to the river. If mass reduction is the objective, then the well number, placement, and pumping rates would have to be adjusted to meet the objective. The costs for pump and treat are mainly influenced by well installation costs and pumping rate. The mass reduction scenario would likely require more wells than currently proposed and increased pumping rates. This scenario would probably result in significant increases to both the pump and treat options.

Table 7-1 Qualitative Sensitivity Analysis of Key Assumptions (Page 2 of 3)

To meet the objectives, the alternatives are aimed at containment and control of contaminant plumes. (The alternatives are not designed for mass reduction or aquifer cleanup.)	The same sensitivities apply to this assumption as to the previous assumption.
The occasional-use scenario is assumed for the operable unit.	This assumption does not include drinking water wells. The frequent-use scenario does include drinking water wells and would have an effect on RAO and objectives for the IRM. The frequent-use scenario results in the identification of additional COC for human health. The treatment processes for the pump and treat scenarios would have to be modified to address these additional COC and the objectives of the IRM would be modified to include both protection of the river and mass reduction. Alternate water supplies could be considered. The technical practicability of achieving these RAO through pump and treat is uncertain. Additional testing may be required to determine aquifer response and surface treatment. The cost of the alternatives would increase somewhat to account for system changes. Additional costs would be incurred determining aquifer response and for system modification to address RAO.
The lifecycle for the FFS is assumed to be to 2008	The present worth calculations are tied to this timeframe. The capital costs, O&M costs, and present worths for each year can be seen on the present worth tables presented in Appendix C. Costs associated with years past 2008 can be extrapolated from the tables.

Table 7-1 Qualitative Sensitivity Analysis of Key Assumptions (Page 3 of 3)

The *100 Area Feasibility Study Phases 1 & 2* (DOE-RL 1994a) forms the basis for the alternatives evaluated in the FFS. Additional alternatives or deviations from the alternatives are only considered when the defined alternative does not meet the operable unit specifics. The Comprehensive Environmental Response, Compensation, and Liability Act (CERCLA) does, however, allow the flexibility of specifying different process options at any point in the remedial investigation/feasibility study process if warranted by site circumstances.	The sensitivities to this assumption are small because most of the emerging technologies are not yet implementable in field applications. Research and development activities are proceeding and could lead to significant cost savings to the remedial actions if these innovative technologies become field ready. The technologies can be integrated into the IRM program as data and new techniques become available.
ERDF has sufficient space for operable unit waste and is available to meet schedule	The disposal costs for the pump and treat options tend to be major cost drivers. The disposal cost used in the FFS is \$70/yd^3. At the current stage of design for the ERDF, this cost is still uncertain. To provide an estimate of the sensitivity of this cost, \$700/yd^3 and \$7,000/yd^3 were input into the cost models. Based on analysis of disposal costs associated with an ion exchange or reverse osmosis system (1100 gpm), at \$700/yd^3, disposal costs increase by +48% resulting in an increase in total project cost of +2%. At a disposal cost of \$7000/yd^3, disposal costs increase by +323% resulting in an increase in total project cost of +23%. The total project costs for the vertical barrier are not significantly affected by disposal costs. The cost drivers for the barrier are the length and width of the wall. Uncertainties in hydrogeologic parameters are reflected in the vertical barrier alternative.

THIS PAGE INTENTIONALLY
LEFT BLANK

8.0 COMPARATIVE ANALYSIS

Figure 8-1 summarizes the comparative analysis. Additional discussion is provided in the following sections.

8.1 OVERALL PROTECTIVENESS OF HUMAN HEALTH AND THE ENVIRONMENT

The current human health risk is acceptable under the occasional-use scenario. The ecological risk has been identified in the QRA; however this risk is uncertain because no allowance has been made for natural attenuation of contaminants. The concentrations of contaminants in the river are currently below PRG level; however, the concentrations have not been measured in the substrate of the river where potential impacts may be occurring in the salmon redds. None of the alternatives evaluated for 100-KR-4 Operable Unit would completely eliminate migration into the Columbia River of groundwater with COC concentrations above PRG. However, based on the groundwater modeling results for chromium and compared to the no action alternative (Alternative GW-1), the implementation of a vertical barrier, Alternative GW-3, would reduce the mass flow of chromium into the Columbia River by about 85 to 88%, while that of pump-and-treat, Alternatives GW-5 and GW-6, would provide a reduction of approximately 95%. These reductions would provide a proportional reduction in risks to human health and the environment. The institutional controls/continued current action alternative (GW-2) does not affect the flow of contaminants but does allow for further evaluation of true ecological risk prior to final remedial action decisions.

8.2 COMPLIANCE WITH ARAR

The primary goal of the IRM is protection of the river rather than restoration of the aquifer. Moreover, a key ARAR is the Ambient Water Quality Criteria for COC. None of the alternatives evaluated can completely eliminate the migration of groundwater with COC concentrations exceeding the Ambient Water Quality Criteria. Because this is an interim action and alternatives GW-3, GW-5, and GW-6 provide significant reduction of subsurface mass flow of contaminated groundwater into the Columbia River, there is a basis for an ARAR waiver. In addition, the ARAR must generally be met at the conclusion of the remedial action. Any final actions would need to consider compliance with ARAR. Cleanup of the sources of contamination through source operable unit IRM may significantly impact the quality of the groundwater. The institutional controls/continued current actions alternative provides continued access restriction to the groundwater during source remediation followed by an evaluation of the effect of the remediation on groundwater quality. At that time future actions can be considered along with compliance with ARAR.

8.3 LONG-TERM EFFECTIVENESS

In the timeframe of the IRM (the year 1996 to the year 2008), none of the alternatives would achieve the Ambient Water Quality Criteria for the contaminated groundwater in the 100 K Area. However, alternatives GW-5 and GW-6 provide for the removal and ex situ treatment of a large volume of the contaminated groundwater, while Alternatives GW-1 and GW-3 involve no removal or treatment. Therefore, Alternatives GW-5 and GW-6 achieve a much higher degree of long-term effectiveness. The long-term effectiveness is more thoroughly addressed by the final remedial action which would be implemented prior to the year 2008.

8.4 REDUCTION OF TOXICITY, MOBILITY, OR VOLUME

Alternatives GW-5 and GW-6 involve pump-and-treat and, thus, provide the greatest degree of reduction in mobility and volume of COC contaminated groundwater. The generated waste will be solidified and disposed of at the ERDF, W-025, of another site at the Hanford Site, so some reduction in the toxicity of the COC may be achieved. Alternative GW-3 provides temporary reduction in mobility by isolating and containing the COC plume but provides no reduction in the volume or toxicity. Alternatives GW-1 and GW-2 provide no reduction in toxicity, mobility, or volume of COC contaminated groundwater.

8.5 SHORT-TERM EFFECTIVENESS

The short-term effectiveness criterion is reasonably well met by all the alternatives. Alternative GW-3 (the vertical barrier) has the highest potential for short-term risks to workers because of the possible excavation. Effects can be controlled through implementation of stringent health and safety guidelines and policies. Off-site effects are minimal and controllable through the use of dust control measures where necessary. The pump-and-treat scenario using reverse osmosis (Alternative GW-6) results in the next highest potential for short-term risks, followed by the ion exchange alternative (Alternative GW-5). The no action and institutional controls/continued current actions alternatives have minimal short-term risks.

The short term ecological effects are greatest for the vertical barrier because of significant disturbance of the surface. This may result in disturbance or destruction of habitat from heavy equipment used for road building, site preparation, and wall installation. The effects from the pump and treat alternatives are lower than the vertical barrier because the only disturbance is for installation of wells and facilities for the treatment system which involve significantly less surface area than the vertical barrier. The no action and institutional controls/continued current actions alternatives have minimal short term impacts. Alternative GW-2 results in only short term exposure for sampling activities.

8.6 IMPLEMENTABILITY

The no action, institutional controls/continued current actions, and pump-and-treat alternatives are considered easily implementable, but it is uncertain to what extent reverse osmosis or ion exchange systems are able to achieve the PRG. Treatability testing of the reverse osmosis and ion exchange systems would be required to develop better cost and performance information. The implementability of the sheet pile barrier at 100 K Area is somewhat uncertain and would likely require pilot testing or further geological site investigation.

8.7 COST

Costs for the alternatives are compared in Table 7-1. Additional details and assumptions for the costs are presented in Appendix C. The costs developed for this FFS cover only those for the implementation and operation of the IRM. Consideration of final action costs are outside the scope of the FFS; however, some general statements are provided for consideration as follows:

- Costs for continuation of the IRM as a final action can be extrapolated from the FFS costs.
- Costs for combining alternatives (such as a vertical barrier in conjunction with pump and treat) can be assumed to be additive (on an order of magnitude basis).
- Costs for institutional controls past the IRM period would be similar to the no action IRM (GW-1).

THIS PAGE INTENTIONALLY
LEFT BLANK

Figure 8-1 Summary of Comparative Analysis

Evaluation Criteria	100-KR-4 Groundwater Operable Unit				
	Alternatives[1]				
	GW-1	GW-2	GW-3	GW-5	GW-6
Overall Protection of Human Health and Environment					
Compliance with ARAR[2]					
Long-Term Effectiveness and Permanence					
Reduction of Toxicity, Mobility, and Volume					
Short-Term Effectiveness					
Implementability					
Present Worth ($ millions)	0	0.8	66.8	76.1	44.3

Notes:

1. Alternatives are summarized as follows:
   - GW-1 No Interim Action
   - GW-2 Institutional Controls/Continued Current Actions
   - GW-3 Containment
   - GW-5 Removal/Ion Exchange Treatment/Disposal
   - GW-6 Removal/Reverse Osmosis Treatment/Disposal
2. ARAR - applicable or relevant and appropriate requirement

Note: GW-4 (In Situ Treatment) was not evaluated.

Key:

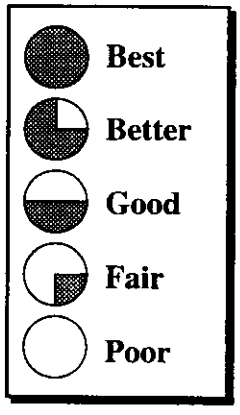

E940829.8a

THIS PAGE INTENTIONALLY
LEFT BLANK

Table 8-1 Cost Comparison Alternatives

Alternative	Capital Costs	O&M Costs	Present Worth
GW-1 No Action	$0	$0	$0
GW-2 Institutional Controls/Continued Current Actions	$0	$1,000,000	$760,000
GW-3 Containment	$33,000,000	$45,600,000	$66,800,000
GW-5 Removal, Treatment, Disposal Using Ion Exchange	$7,600,000	$91,500,000	$76,000,000
GW-6 Removal, Treatment, Disposal Using Reverse Osmosis	$12,900,000	$42,500,000	$44,300,000

9413294.3246

THIS PAGE INTENTIONALLY
LEFT BLANK

9.0 REFERENCES

Amjad, Z., 1993, *Reverse Osmosis: Membrane Technology, Water Chemistry, and Industrial Application,* Van Nostrand Reinhold, New York, New York.

Brouns, T.M., S.S. Koegler, J.K. Fredrickson, S.P. Luttrell, and K.A. Borgeson, 1991, *On-Site Bioreclamation, Processes for Zenobiotic and Hydrocarbon Treatment*, Butterworth-Heinemann, Stoneham, Massachusetts.

Caldwell, L.L., 1994, *Wildlife Studies on the Hanford Site: 1993 Highlights Report*, PNL-7380, Pacific Northwest Laboratory, Richland, Washington.

Campbell, M.D., 1994, *Monitoring Groundwater and River Interaction Along the Hanford Reach of the Columbia River*, PNL-9437, Pacific Northwest Laboratory, Richland, Washington.

Chatters, J.C., 1989, *Hanford Cultural Resources Management Plan,* PNL-6942, Pacific Northwest Laboratory, Richland, Washington.

Corbitt, R.A., 1990, *Standard Handbook of Environmental Engineering*, McGraw-Hill Publishing Company, New York, New York.

DOE, 1988, *Low-Level Radioactive Waste Volume Reduction and Stabilization Technologies Resource Manual*, U.S. Department of Energy, Idaho Operations Office, Boise, Idaho.

DOE-RL, 1994a, *100 Area Feasibility Study Phases 1 and 2*, Rev. 0, DOE/RL-92-11, U.S. Department of Energy, Richland, Washington.

DOE-RL, 1994b, *Pilot-Scale Treatability Test Plan for the 100-HR-3 Operable Unit*, Decisional Draft, DOE/RL-94-54, U.S. Department of Energy, Richland, Washington.

DOE-RL, 1994c, *Hanford Site Risk Assessment Methodology*, Rev. 3, DOE/RL-91-45, U.S. Department of Energy, Richland, Washington.

DOE-RL, 1994d, *Remedial Investigation and Feasibility Study Report for the Environmental Restoration Disposal Facility*, DOE/RL-93-99, Decisional Draft, U.S. Department of Energy, Richland, Washington.

DOE-RL, 1994e, *100-HR-3 Operable Unit Focused Feasibility Study Report*, DOE/RL-94-67, Decisional Draft, U.S. Department of Energy, Richland Operations Office, Richland, Washington.

DOE-RL, 1993a, *Columbia River Impact Evaluation Plan*, Rev. 0, DOE/RL-92-28, U.S. Department of Energy, Richland, Washington.

DOE-RL, 1993b, *Limited Field Investigation Report for the 100-KR-4 Operable Unit*, DOE/RL-93-79, Draft A, U.S. Department of Energy, Richland, Washington.

DOE-RL, 1992a, *Remedial Investigation/Feasibility Study Work Plan for the 100-FR-3 Operable Unit, Hanford Site, Richland, Washington*, DOE/RL-91-53, Rev. 0, U.S. Department of Energy, Richland Operations Office, Richland, Washington.

DOE-RL, 1992b, *Remedial Investigation/Feasibility Study Work Plan for the 100-KR-4 Operable Unit, Hanford Site, Richland, Washington*, DOE/RL-90-21, Rev. 0, U.S. Department of Energy, Richland Operations Office, Richland, Washington.

DOE-RL, 1992c, *RCRA Facility Investigation/Corrective Measures Study Work Plan for the 100-HR-3 Operable Unit*, DOE/RL-88-36, Rev. 0, U.S. Department of Energy, Richland Operations Office, Richland, Washington.

DOE-RL, 1992d, *Remedial Investigation/Feasibility Study Work Plan for the 100-BC-5 Operable Unit, Hanford Site, Richland, Washington*, DOE/RL-90-08, Rev. 0, U.S. Department of Energy, Richland Operations Office, Richland, Washington.

DOE-RL, 1992e, *Hanford Site Groundwater Background*, DOE/RL-92-23, Rev. 0, U.S. Department of Energy, Richland Operations Office, Richland, Washington.

DOE-RL, 1992f, *100-HR-3 Groundwater Treatability Test Plan*, DOE/RL-92-73, Draft A, U.S. Department of Energy, Richland Operations Office, Richland, Washington.

DOE-RL, 1992g, *Treatability Study Program Plan*, DOE/RL-92-48, Draft A, U.S. Department of Energy, Richland Operations Office, Richland, Washington.

DOE-RL, 1991a, *Hanford Past-Practice Strategy*, DOE/RL-91-40, Draft A, U.S. Department of Energy, Washington, D.C.

DOE-RL, 1991b, *Description of Codes and Models to be Used in Risk Assessment*, DOE/RL-91-44, Rev. 0, U.S. Department of Energy, Richland, Washington.

Driscoll, F.G., 1986, *Groundwater and Wells*, 2nd edition, Johnson Division, St. Paul, Minnesota.

Ecology, EPA, and DOE, 1994, *Hanford Federal Facility Agreement and Consent Order, Change Order Control Form M-15-93-02*, Washington State Department of Ecology, Olympia, Washington, U.S. Environmental Protection Agency, Region X, Seattle, Washington, and U.S. Department of Energy, Richland Operations Office, Richland, Washington.

Ecology, EPA, and DOE, 1990, *Hanford Federal Facility Agreement and Consent Order*, Washington State Department of Ecology, Olympia, Washington, U.S. Environmental Protection Agency, Region X, Seattle, Washington, and U.S. Department of Energy, Richland Operations Office, Richland, Washington.

EPA, 1993, *perox-pure™ Chemical Oxidation Technology Peroxidation Systems, Inc.*, U.S. Environmental Protection Agency, Washington DC.

EPA, 1989, *Risk Assessment Guidance for Superfund, Volume 1 - Human Health Evaluation Manual*, Part A, Interim Final, U.S. Environmental Protection Agency, Washington, D.C.

EPA, 1988, *Guidance for Conducting Remedial Investigations and Feasibility Studies under CERCLA*, EPA/540/G-89/004, Environmental Protection Agency, Office of Emergency and Remedial Response, Washington, D.C.

EPA, 1987 *A Compendium of Technologies Used in the Treatment of Hazardous Wastes*, U.S. Environmental Protection Agency, Cincinnati, Ohio.

Eslinger, P.W., L.R. Huesties, A.D. Maughan, T.B. Miley, and W.H. Walters, 1994, *Data Compendium for the Columbia River Comprehensive Impact Assessment*, PNL-9785/-UC-630, Pacific Northwest Laboratory, Richland, Washington.

Fitzner, R. E. (Pacific Northwest Laboratory), and S. G. Weiss (Westinghouse Hanford Company), 1994, *Bald Eagle Site Management Plan for the Hanford Site, South-Central Washington,* WHC-EP-0510, Rev. 1, Westinghouse Hanford Company, Richland, Washington

Fitzner, R. E. (Pacific Northwest Laboratory), S. G. Weiss and J.A. Stegen (Westinghouse Hanford Company), 1994, *Biological Assessment for Threatened and Endangered Species,* WHC-EP-0513, Rev. 1, Westinghouse Hanford Company, Richland, Washington

Freeman, H.M., 1989, *Standard Handbook of Hazardous Waste Treatment and Disposal*, McGraw-Hill Book Company, New York, New York.

Gee, G.W., 1987, *Recharge at the Hanford Site: Status Report,* PNL-6403, Pacific Northwest Laboratories, Richland Washington.

Geraghty and Miller, Inc, 1993, *Computer Aided Design Software for Groundwater Modeling,* Model Cad^{386TM}, Version No. 2.14, Serial No. 538.

Golden Software, 1991, *Surfer®,* Version 4, Serial No. 28609.

Hartman, M.J. and R.E. Peterson, 1992, *Hydrologic Information Summary for the Northern Hanford Site,* WHC-SD-EN-TI-023, Rev. 0, Westinghouse Hanford Company, Richland, Washington.

Hanford Future Site Uses Working Group, 1992, *Future for Hanford: Uses and Cleanup*, Richland, Washington.

Hazardous Waste Consultant, 1993, *Advances in Air Sparging Design*, January/February 1993, pp. 1.1-1.10.

Huxstep, M.R. and T.J. Sorg, 1988, *Project Summary, Reverse Osmosis Treatment to Remove Inorganic Contaminants from Drinking Water*, EPA/600/S2-87/109, U.S. Environmental Protection Agency, Cincinnati, Ohio.

Konikow, L.F. and J.D. Bredehoeft, 1978, *Computer Model of Two-Dimensional Solute Transport and Dispersion in Groundwater*, U.S. Geological Survey Water Resource Investigations, Book 7, Chapter C2, 90 pp.

Landeen, D.S., M.R. Sackschewsky, and S.G. Weiss, 1993, *100 Areas CERCLA Ecological Investigations* WHC-EP-0620, Westinghouse Hanford Company, Richland, Washington.

McDonald, J.M. and A.W. Harbaugh, 1988, *Modular Three-Dimensional Finite-Difference Groundwater Flow Model*, MODFLOW, Techniques of Water Resources Investigations of the U.S. Geological Survey, Book 6, 586 pp.

McMahon, W.J. and R.E. Peterson, 1992, *Estimating Aquifer Hydraulic Properties Using the Ferris Method, Hanford Site, Washington*, DOE/RL-92-64, Rev. 0, U.S. Department of Energy, Richland Operations Office, Richland, Washington.

Moghissi, A.A., H.W. Godbee, and S.A. Hobart, 1986, *Radioactive Waste Technology*, American Society of Mechanical Engineers, The, U.S.A.

Nonveiller, E., 1989, *Grouting Theory and Practice*, Elsevier Science Publishers, Amsterdam, The Netherlands.

Patterson, J.W., 1985, *Industrial Wastewater Treatment Technology*, Butterworth-Heineman, Stoneham, Massachusetts.

P.E., 1993, "Moving Beyond Pump-and-Treat", *Pollution Engineering*, March 1993.

Peterson, R.E. and M.P. Connelly, 1992, *Characterization of a Chromium Plume in Groundwater Along the Columbia River Shoreline, Hanford Site, Washington*, WHC-SA-1674-VA, Westinghouse Hanford Company, Richland, Washington.

Peterson, R.E. and V.G. Johnson, 1992, *Riverbank Seepage of Groundwater Along the Hanford Reach of the Columbia River, Washington*, WHC-EP-0609, Westinghouse Hanford Company, Richland, Washington.

Peyton, B.M., 1994, *100 Area Groundwater Biodentrification Bench-Scale Treatability Study -- Final Report*, WHC-SD-EN-ES-043, Rev. 0, Westinghouse Hanford Company, Richland, Washington.

Peyton, B.M. and K.R. Martin, 1993, *100 Area Groundwater Biodenitrification Bench-Scale Treatability Study Procedures*, PNL-8610, Pacific Northwest Laboratory, Richland, Washington.

Porter, M.C., 1990, *Handbook of Industrial Membrane Technology*, Noyes Publications, Mill Road, New Jersey.

Reese, J.S., 1992, *Cleaning Water With Low Profile Strippers*, IT Corporation, Ocala, Florida.

Sachschewsky, M.R. and D.S. Landeen, 1992, *Fiscal Year 1991 100 Areas CERCLA Ecology Investigations*, WHC-EP-0448, Westinghouse Hanford Company, Richland, Washington.

Skeen, R.S., S.P. Luttrell, T.M. Brouns, B.S. Hooker, and J.N. Petersen, 1993, *In-Situ Bioremediation of Hanford Groundwater*, pp. 353-367.

Spooner, P., R. Wetzel, C. Spooner, C. Furman, E. Tokarski, G. Hunt, V. Hodge, and T. Robinson, 1985, *Slurry Trench Construction for Pollution Migration Control*, Noyes Publications, Mill Road, New Jersey.

S.S. Papadopulos & Associates, 1991, *A Modular Three-Dimensional Transport Model for Simulation of Advection, Dispersion and Chemical Reactions of Contaminants in Groundwater Systems*, MT3D, Version 1.5.

Starr, R.C., J.A. Cherry and E.S. Vales, 1992, *A New Type of Steel Sheet Piling with Sealed Joints for Groundwater Control*, University of Waterloo, Waterloo Ontario.

Waterloo Center for Groundwater Research, 1992, *A New Method for Groundwater Pollution Control by cutoff Walls: The Waterloo Barrier*, Draft, University of Waterloo, Waterloo, Ontario.

Weiss, S. and R.M Mitchell, 1992, *A Synthesis of Ecological Data from the 100 Areas of the Hanford Site*, WHC-EP-0601, Westinghouse Hanford Company, Richland, Washington.

WHC, 1993a, *100-HR-3 Area Groundwater Treatment Tests for Ex Situ Removal of Chromate, Nitrate, and Uranium (VI) by Precipitation/Reduction and/or Ion Exchange*, WHC-SD-EN-TC-003, Rev. 1, Westinghouse Hanford Company, Richland, Washington.

WHC, 1993b, *Treatment Tests for Ex Situ Removal of Chromate, Nitrate, and Uranium (VI) from Hanford (100-HR-3) Groundwater Final Report*, WHC-SD-ER-DTR-001, Rev. 0, Westinghouse Hanford Company, Richland, Washington.

WHC, 1993c, *Qualitative Risk Assessment for the 100-KR-4 Operable Unit*, WHC-SD-EN-RA-010, Rev. 0, Westinghouse Hanford Company, Richland, Washington.

Winterkorn, H.F. and H. Fang, 1975, *Foundation Engineering Handbook*, Van Nostrand Reinhold Company, New York, New York.

9413294.3252

9413294.3253

APPENDIX A

APPLICABLE OR RELEVANT AND APPROPRIATE REQUIREMENTS

THIS PAGE INTENTIONALLY
LEFT BLANK

Table A-1 Potential Federal Chemical-Specific ARAR (Page 1 of 2)

Description	Citation	A/ R&A*	Requirements	Remarks	Alternatives Potentially Affected
Safe Drinking Water Act	42 U.S.C. 300f et seq.		Creates a comprehensive national framework to ensure the quality and safety of drinking water.		
National Primary Drinking Water Regulations	40 CFR Part 141	R&A	Establishes maximum contaminant levels (MCL) and maximum contaminant level goals (MCLG) for organic, inorganic, and radioactive constituents. The MCL for combined radium-226 and radium-228 is 5 pCi/L. The MCL for gross alpha particle activity (including radium-226 but excluding radon and uranium) is 15 pCi/L. The average annual concentration of beta particle and photon radioactivity from manmade radionuclides in drinking water shall not produce an annual dose equivalent to total body or any internal organ in excess of 4 millirem/year. chromium — µg/l 100	Applicable to public water systems. Potential chemicals and radionuclides of concern may migrate to the drinking water supply as a result of remedial activities. Although federal MCLGs are not enforceable standards, they are potential ARARs under the Washington State Model Toxics Control Act when more stringent than other standards. See state ARARs.	All
National Secondary Drinking Water Regulations	40 CFR Part 143	R&A	Controls contaminants in drinking water that primarily affect the aesthetic qualities relating to the public acceptance of drinking water. zinc — µg/l 5000	Although federal secondary drinking water standards are not enforceable, they are potential ARARs under the Washington State Model Toxics Control Act when more stringent than other standards. See state ARARs.	All
Ambient Water Quality Criteria		A	Sets acute and chronic constituent concentrations for the protection of surface waters. Chromium (chronic) 11 µg/L Chromium (acute) 16 µg/L		All

Table A-1 Potential Federal Chemical-Specific ARAR (Page 2 of 2)

Description	Citation	A/ R&A*	Requirements	Remarks	Alternatives Potentially Affected
Solid Waste Disposal Act, as amended by the Resource Conservation and Recovery Act (RCRA)	42 U.S.C. 6901 et seq.		Establishes the basic framework for federal regulation of solid and hazardous waste.		
Groundwater Protection Standards	40 CFR §264.92 [WAC 173-303-6 45][1]	A	A facility shall not contaminate the uppermost aquifer underlying the waste management area beyond the point of compliance, which is a vertical surface located at the hydraulically downgradient limit of the waste management area that extends down into the uppermost aquifer underlying the regulated area. The concentration of certain chemicals shall not exceed background levels, certain specified maximum concentrations, or alternate concentration limits, whichever is higher. chromium — µg/l: 50	Groundwater concentration limits in this section do not exceed 40 CFR 141, except for chromium which has a limit of 50 µg/L.	GW-4, GW-5, GW-6,

*NOTE: A = Applicable, R&A = Relevant and Appropriate

[1]These are State of Washington regulatory citations which are equivalent to Title 40 Code of Federal Regulations, Parts 264 and 268 as stated in Washington Administrative Code 173-303.

Table A-2 Potential State Chemical-Specific ARAR (Page 1 of 3)

Description	Citation	A/ R&A*	Requirements	Remarks	Alternatives Potentially Affected
Model Toxics Control Act (MTCA)	70.105D RCW		Requires remedial actions to attain a degree of cleanup protective of human health and the environment.		
Cleanup Regulations	WAC 173-340		Establishes cleanup levels and prescribes methods to calculate cleanup levels for soils, groundwater, surface water, and air.		
Groundwater Cleanup Standards	WAC 173-340-720	A	Requires that where the groundwater is a potential source of drinking water, cleanup levels under Method B must be at least as stringent as concentrations established under applicable state and federal laws, including the following: (A) MCL established under the Safe Drinking Water Act and published in 40 CFR 141, as amended; (B) MCLG for noncarcinogens established under the Safe Drinking Water Act and published in 40 CFR 141, as amended; (C) Secondary MCL established under the Safe Drinking Water Act and published in 40 CFR 143, as amended; as established by the state board of health and published in Chapter 248-54 WAC, as amended.	Federal MCLG for drinking water (40 CFR Part 141) and federal secondary drinking water regulation standards (40 CFR Part 143) are potential ARARs under MTCA when they are more stringent than other standards. Method B cleanup levels are levels applicable to remediation at Hanford unless a demonstration can be made that method C (alternate cleanup levels) is valid. Method B — µg/l July 1993 update tables chromium VI — 80 copper — 592	All
Surface Water Cleanup Standards	WAC 173-340-730	A	Requires surface water cleanup levels to be based on estimates of the highest beneficial use and the reasonable maximum exposure expected to occur under both current and potential future site use conditions.	MTCA method B values from the July 9, 1993 MTCA Cleanup Standards Database: Chromium (VI) — 80 µg/L	All

Table A-2 Potential State Chemical-Specific ARAR (Page 2 of 3)

Description	Citation	A/ R&A*	Requirements	Remarks	Alternatives Potentially Affected
Water Pollution Control	90.48 RCW				
Surface Water Quality Standards	WAC 173-201A		Sets surface water quality standards for the state.		
Water Criteria Classes	WAC 173-201A-030	A	Standards for surface water designated "Class A" include: freshwater temperature shall not exceed 18.0°C due to human activities. Temperature increases shall not at any time exceed $t = 28/T+7$ where "t" represents the maximum permissible temperature increase measured at a dilution zone boundary and "T" represents the background temperature as measured at a point or points unaffected by the discharge and representative of the highest ambient water temperature in the vicinity of the discharge. When natural conditions exceed 18.0° (freshwater) and 16.0° (marine water), no temperature increase will be allowed which will raise the receiving water temperature by greater than 0.3°C. Provided that temperature increase resulting from nonpoint source activities shall not exceed 2.8°C, and the maximum water temperature shall not exceed 18.3°C (freshwater). pH shall be within the range of 6.5 to 8.5 (freshwater) with a man-caused variation within a range of less than 0.5 units.	The Hanford reach of the Columbia River is classified "Class A."	GW-5, GW-6
Toxic Substances	WAC 173-201A-040	A	Sets surface water limits for toxic substances. Freshwater limits in micrograms per liter for 100 Area contaminants are: (acute) (chronic) Chromium 16.0[a] 11.0[b] [a]A one-hour average concentration not to be exceeded more than once every three years. [b]A four-day average concentration not to be exceeded more than once every three years.		All

Table A-2 Potential State Chemical-Specific ARAR (Page 3 of 3)

Description	Citation	A/ R&A*	Requirements	Remarks	Alternatives Potentially Affected
Radiation Protection -- Air Emissions	WAC 246-247		Estabilishes procedures for monitoring, control, and reporting of airborne radionuclide emissions.		
New and Modified Sources	WAC 246-247-070	A	Requires the use of best available radionuclide control technology (BARCT),		All
Radiation Protection Standards	WAC 246-221		Establishes standards for protection against radiation hazards.		
Radiation dose to individuals in restricted areas	WAC 246-221-010	A	Specifies dose limits to individuals in restricted areas for hands and wrists, ankles and feet of 18.75 rem/quarter and for skin of 7.5 rem/quarter.		All

*NOTE: A = Applicable, R&A = Relevant and Appropriate

Table A-3 Potential Chemical-Specific TBC (Page 1 of 2)

Description	Citation	Requirements	Remarks	Alternatives Potentially Affected
Safe Drinking Water Act	42 U.S.C. 300f et seq.			
National Primary Drinking Water Regulations	40 CFR 141	Proposed maximum contaminant level goals (MCLGs) (Federal Register, July 18, 1991) are: Contaminant — MCLG Radium-226 — zero Radium-228 — zero Uranium — zero Gross alpha emitters — zero Beta and photon emitters — zero	Federal MCLGs are ARAR under MTCA when they are more stringent than other state standards.	All
National Primary Drinking Water Regulations; Radionuclides - Proposed Rules	FR Vol. 56, No. 138, July 18, 1991	Provides numerical standards for radionuclides corresponding to 4 mrem/yr dose through drinking water as follows (pCi/L): Tritium — 69,040 Carbon-14 — 3,200 Strontium-90 — 42 Technitium-99 — 3,790 Uranium-235 — 14.5	When promulgated, these proposed rules will replace sections in 40 CFR 141 and 142	All
Solid Waste Disposal Act, as amended by RCRA	42 U.S.C. 6901 et seq.			
Corrective Action for Solid Waste Management Units	40 CFR 264 Subpart S, proposed	Estabilishes requirements for investigation and corrective action for releases of hazardous waste from solid waste management units.		GW-4, GW-5, GW-6
U.S. Department of Energy Orders				
Radiation Protection of the Public and the Environment	DOE 5400.5	Establishes radiation protection standards for the public and environment.		
Radiation Dose Limit (All Pathways)	DOE 5400.5, Chapter II, Section 1a	The exposure of the public to radiation sources as a consequence of all routine DOE activities shall not cause, in a year, an effective dose equivalent greater than 100 mrem from all exposure pathways, except under specified circumstances.	Pertinent if remedial activities are "routine DOE activities."	All

Table A-3 Potential Chemical-Specific TBC (Page 2 of 2)

Description	Citation	Requirements	Remarks	Alternatives Potentially Affected
Radiation Dose Limit (Drinking Water Pathway)	DOE 5400.5, Chapter II, Section 1d	Provides a level of protection for persons consuming water from a public drinking water supply operated by DOE so that persons consuming water from the supply shall not receive an effective dose equivalent greater than 4 mrem per year. Combined radium-226 and radium-228 shall not exceed 5×10^{-9} µCi/mL and gross alpha activity (including radium-226 but excluding radon and uranium) shall not exceed 1.5×10^{-8} µCi/mL.	Pertinent if radionuclides may be released during remediation.	All

Table A-4 Potential Federal Action-Specific ARAR (Page 1 of 3)

Description	Citation	A/ R&A*	Requirements	Remarks	Alternatives Potentially Affected
Federal Water Pollution Control Act (FWPCA), as amended by the Clean Water Act of 1977 (CWA)	33 U.S.C. 1251 et seq.		Creates the basic national framework for water pollution control and water quality management in the United States.	Applicable to discharges of pollutants to navigable waters.	
The National Pollutant Discharge Elimination System (NPDES)	40 CFR Part 122	A	Part 122 covers establishing technology-based limitations and standards, control of toxic pollutants, and monitoring of effluent to assure limits are not exceeded.	Applicable if remediation includes wastewater discharge; also applies to storm water runoff associated with industrial activities. Effluent limitations established by EPA and included in NPDES permit.	GW-5, GW-6
NPDES Criteria and Standards	40 CFR §125.104		Best management practices program shall be developed in accordance with good engineering practice.		
Discharge of Oil	40 CFR Part 110	A	Prohibits discharge of oil that violates applicable water quality standards or causes a sheen of oil on water surface.	Runoff from site will need control for oily waste discharge to waters of the United States.	All
Safe Drinking Water Act (SDWA), as amended	42 U.S.C. 300f et seq.		Creates a comprehensive national framework designed to ensure the quality and safety of drinking water supplies.	Applicable to public water systems.	
Underground Injection Control (UIC) Program	40 CFR Part 144	A	Identifies the minimum requirements for UIC programs. Requires all UI wells to be permitted and describes permitting procedures.	Applicable for remedial action involving reinjection of groundwater.	GW-5
Criteria and Standards for the Underground Injection Control (UIC) Program	40 CFR Part 146	A	Establishes siting, construction, operating, monitoring, and closure requirements for all classes of injection wells. (Criteria and standards for class IV wells are reserved at this time.)	Applicable for remedial action involving reinjection of groundwater.	GW-5
Solid Waste Disposal Act as amended by the Resource Conservation and Recovery Act (RCRA)	42 U.S.C.6901 et seq.		Establishes the basic framework for federal regulation of solid waste. Subpart C of RCRA controls the generation, transportation, treatment, storage, and disposal of hazardous waste through a comprehensive "cradle to grave" system of hazardous waste management techniques and requirements.	Hazardous waste generated by site remediation activities must meet RCRA generator and treatment, storage, or disposal (TSD) requirements.	

Table A-4 Potential Federal Action-Specific ARAR (Page 2 of 3)

Description	Citation	A/ R&A*	Requirements	Remarks	Alternatives Potentially Affected
Identification and Listing of Hazardous Waste	40 CFR Part 261 [WAC 173-303-016]	A	Identifies by both listing and characterization, those solid wastes subject to regulation as hazardous wastes under Parts 261-265, 268, and 270.	Applicable if remediation techniques result in generation of hazardous wastes.	GW-5, GW-6
Standards Applicable to Generators of Hazardous Waste	40 CFR Part 262 [WAC 173-303]		Describes regulatory requirements imposed on generators of hazardous wastes who treat, store, or dispose of the waste on-site.	Applicable if remediation techniques result in generation of hazardous waste.	
Accumulation Time	40 CFR §262.34 [WAC 173-303-200]	A	Allows a generator to accumulate hazardous waste on-site for 90 days or less without a permit, provided that all waste is containerized and labeled.	Hazardous waste removed from the 100-Area operable units, and waste treatment residues, are subject to the 90-day generator accumulation requirements if the waste is stored on site for 90 days or less. If hazardous waste is stored for more than 90 days, the full permitting standards for TSD facilities must be met.	GW-5, GW-6
Standards for Owners and Operators of Hazardous Waste Treatment, Storage, and Disposal Facilities	40 CFR Part 264 [WAC 173-303]		Establishes requirements for operating hazardous waste treatment, storage, and disposal facilities.	Applies to facilities put in operation since November 19, 1980. Facilities in operation before that date and existing facilities handling newly regulated wastes must meet similar requirements in 40 CFR Part 265. Applies if remediation technique results in on-site treatment, storage, or disposal of hazardous waste.	
Land Disposal Restrictions (LDR)	40 CFR Part 268 [WAC 173-303-140- WAC 173-303-141]	A	Generally prohibits placement of restricted RCRA hazardous wastes in land-based units such as landfills, surface impoundments, and waste piles. Prohibits storage of restricted waste for longer than one year unless the owner/operator can prove storage is necessary to facilitate proper recovery, treatment, or disposal.	Applicable unless wastes have been treated, treatment has been waived, a treatment variance has been set for the waste, an equivalent treatment method petition has been approved, a no-migration petition has been approved, or the waste has been delisted.	GW-5, GW-6
Treatment Standards	40 CFR §§268.40- 268.44 [WAC 173-303-140]	A	Establishes treatment standards that must be met prior to land disposal.	Applicable if wastes contain RCRA hazardous constituents.	GW-5, GW-6

Table A-4 Potential Federal Action-Specific ARAR (Page 3 of 3)

Description	Citation	A/ R&A*	Requirements	Remarks	Alternatives Potentially Affected
Clean Air Act, as amended	42 U.S.C. 7401 et seq.		A comprehensive environmental law designed to regulate any activities that affect air quality, providing the national framework for controlling air pollution.		
National Primary and Secondary Ambient Air Quality Standards	40 CFR Part 50		Sets National Ambient Air Quality Standards for ambient pollutants which are regulated within a region.		
Air Standards for Particulates	40 CFR §50.6	A	Prohibits average concentrations of particulate emissions in excess of 50 micrograms/m^3 annually or 150 micrograms/m^3 per 24-hour period.	A potential for particulate emissions exists during material handling or treatment, including incineration.	GW-5, GW-6
Air Standards for Lead	40 CFR §50.12	A	The national primary and secondary ambient air quality standard for lead and its compounds measured as elemental lead are 1.5 micrograms per cubic meter, maximum arithmetic mean averaged over a calendar quarter.	Applicable if particulates suspended during remedial activities are contaminated with lead, or if remediation includes incineration.	GW-5, GW-6
National Emissions Standards for Hazardous Air Pollutants (NESHAP)	40 CFR Part 61		Establishes numerical standards for hazardous air pollutants.		
Radionuclide Emissions from DOE Facilities (except Airborne Radon-222)	40 CFR §61.92	A	Prohibits emissions of radionuclides to the ambient air exceeding an effective dose equivalent of 10 mrem per year.	Applicable to incinerators and other remedial technologies where air emission may occur.	GW-5, GW-6

*NOTE: A = Applicable, R&A = Relevant and Appropriate

Table A-5 Potential State Action-Specific ARAR (Page 1 of 3)

Description	Citation	A/ R&A*	Requirements	Remarks	Alternatives Potentially Affected
Department of Ecology	43.21A RCW		Vests the Washington Department of Ecology with the authority to undertake the state air regulation and management program.		
Air Pollution Regulations	WAC 173-400		Establishes requirements for the control and/or prevention of the emission of air contaminants.	Applicable if emission sources are created during remedial action.	
Standards for Maximum Emissions	WAC 173-400-040	A	Requires best available control technology be used to control fugitive emissions of dust from materials handling, construction, demolition, or any other activities that are sources of fugitive emissions. Restricts emitted particulates from being deposited beyond Hanford. Requires control of odors emitted from the source. Prohibits masking or concealing prohibited emissions. Requires measures to prevent fugitive dust from becoming airborne.	Applicable to dust emissions from cutting of concrete and metal and vehicular traffic during remediation.	GW-2, GW-3, GW-4, GW-5, GW-6
Emission Limits for Radionuclides	WAC 173-480		Controls air emissions of radionuclides from specific sources.	Applicable to remedial activities that result in air emissions.	
New and Modified Emission Units	WAC 173-480-060	A	Requires the best available radionuclide control technology be utilized in planning constructing, installating, or establishing a new emission unit.	Applicable to remedial actions that result in air emissions.	GW-3, GW-4, GW-5, GW-6
Washington Clean Air Act	RCW 70.94				
Controls for New Sources of Toxic Air Pollutants	WAC 173-460		Establishes systematic control of new sources emitting toxic air pollutants.		
Demonstrating Ambient Impact Compliance	WAC 173-460-080	A	Requires the owner or operator of a new source to complete an acceptable source impact level analysis using dispersion modeling to estimate maximum incremental ambient impact of each Class A or B toxic air pollutant. Establishes numerical limits for small quantity emission rates.	Applicable to remedial alternative with the potential to release toxic air pollutants.	GW-3, GW-4, GW-5, GW-6

Table A-5 Potential State Action-Specific ARAR (Page 2 of 3)

Description	Citation	A/ R&A*	Requirements	Remarks	Alternatives Potentially Affected
Hazardous Waste Management Act of 1976 as amended in 1980 and 1983[1]	70.105 RCW		Establishes a statewide framework for the planning, regulation, control, and management of hazardous waste.		
Dangerous Waste Regulations	WAC 173-303		Establishes the design, operation, and monitoring requirements for management of hazardous waste.	Includes requirements for generators of dangerous waste. Dangerous waste includes the full universe of wastes regulated by WAC 173-303 including extremely hazardous waste.	
Model Toxics Control Act	70.105D RCW		Authorizes the state to investigate releases of hazardous substances, conduct remedial actions, carry out state programs authorized by federal cleanup laws, and take other actions.		
Hazardous Waste Cleanup Regulations	WAC 173-340		Addresses releases of hazardous substances caused by past activities, and potential and ongoing releases from current activities.	Applicable to facilities where hazardous substances have been released, or there is a threatened release that may pose a threat to human health or the environment.	
Selection of Cleanup Actions	WAC 173-340-360	R&A	Establishes cleanup requirements to include in cleanup plans. Identifies technologies to be considered for remediation of hazardous substances.		All
Cleanup Actions	WAC 173-340-400	R&A	Ensures that the cleanup action is designed, constructed, and operated in accordance with the cleanup plan and other specified requirements.		All
Institutional Controls	WAC 173-340-440	R&A	Requires physical measures such as fences and signs to limit interference with cleanup, and legal and administrative mechanisms to enforce them.		GW-2, GW-3, GW-4, GW-5, GW-6
Regulation of Public Groundwater	90.44 RCW	R&A	Sets requirements for withdrawal and management of state groundwater.	Applicable if remediation includes groundwater withdrawal.	GW-3, GW-5, GW-6

[1]The Hazardous Waste Management Act and regulations pursuant to the Act provide the statutory and regulatory basis for state authorization to implement RCRA. State of Washington regulations that are equivalent to RCRA regulations are cited in brackets in the federal ARARs. The WAC 173-303 regulations cited in this section are those judged to be more stringent than RCRA regulations.

Table A-5 Potential State Action-Specific ARAR (Page 3 of 3)

Description	Citation	A/ R&A*	Requirements	Remarks	Alternatives Potentially Affected
Solid Waste Management Act	70.95 RCW		Establishes a statewide program for solid waste handling, recovery, and/or recycling.	Applicable if management of solid waste occurs during remediation. Solid waste controlled by this Act includes garbage, industrial waste, construction waste, ashes, and swill.	
Minimum Functional Standards for Solid Waste Handling	WAC 173-304		Establishes requirements to be met statewide for the handling of all solid waste.		
On-site Containerized Storage, Collection, and Transportation Standards	WAC 173-304-200	R&A	Sets requirements for containers and vehicles to be used on site; requires monthly inspections and retention of inspection records for at least two years.		All
Water Pollution Control Act	90.48 RCW		Prohibits discharge of polluting matter in waters.		
State Waste Discharge Permit Program	WAC 173-216		Implements a state permit program, applicable to the discharge of waste materials from industrial, commercial, and municipal operations into the ground and surface waters of the state. Excludes discharges under NPDES and underground injection control programs.		
Permit Terms and Conditions	WAC 173-216-110	R&A	Requires the use of all known, available, and reasonable methods of prevention, control, and treatment.		GW-5, GW-6
Water Well Construction Act	18.104 RCW				
Standards for Construction and Maintenance of Wells	WAC 173-160	A	Establishes minimum standards for design, construction, capping, and sealing of all wells; sets additional requirements including disinfection of equipment, abandonment of wells, and quality of drilling water.	Applicable if water supply wells, monitoring wells, or other wells are utilized during remediation.	GW-2, GW-3, GW-4, GW-5, GW-6

*NOTE: A = Applicable, R&A = Relevant and Appropriate

9413294.3267

Table A-6 Potential Action-Specific TBC

Description	Citation	Requirements	Remarks	Alternatives Potentially Affected
U.S. Department of Energy Orders				
Radiation Protection of the Public and the Environment	DOE 5400.5	Establishes standards and requirements for operations of DOE and DOE contractors respecting protection of the public and the environment against undue risk of radiation.		All

Table A-7 Potential Federal Location-Specific ARAR (Page 1 of 2)

Description	Citation	A/ R&A*	Requirements	Remarks	Alternatives Potentially Affected
Archaeological and Historical Preservation Act of 1974	16 U.S.C. 469	A	Requires action to recover and preserve artifacts in areas where activity may cause irreparable harm, loss, or destruction of significant artifacts.	Applicable when remedial action threatens significant scientific, prehistorical, historical, or archeological data.	GW-2, GW-3, GW-4, GW-5, GW-6
Endangered Species Act of 1973	16 U.S.C. 1531 et seq.		Prohibits federal agencies from jeopardizing threatened or endangered species or adversely modifying habitats essential to their survival.		
Fish and Wildlife Services List of Endangered and Threatened Wildlife and Plants	50 CFR Parts 17, 222, 225, 226, 227, 402, 424	A	Requires identification of activities that may affect listed species. Actions must not threaten the continued existence of a listed species or destroy critical habitat.	Requires consultation with the Fish and Wildlife Service to determine if threatened or endangered species could be impacted by activity.	All
Historic Sites, Buildings, and Antiquities Act	16 U.S.C. 461	A	Establishes requirements for preservation of historic sites, buildings, or objects of national significance. Undesirable impacts to such resources must be mitigated.		GW-2, GW-3, GW-4, GW-5, GW-6
National Historic Preservation Act of 1966, as amended.	16 U.S.C. 470 et seq.	A	Prohibits impacts on cultural resources. Where impacts are unavoidable, requires impact mitigation through design and data recovery.	Applicable to properties listed in the National Register of Historic Places, or eligible for such listing.	GW-2, GW-3, GW-4, GW-5, GW-6
Solid Waste Disposal Act, as amended by the Resource Conservation and Recovery Act (RCRA)	42 U.S.C. 6901 et seq.		Establishes the basic framework for federal regulation of solid and hazardous waste.		
Criteria for Classification of Solid Waste Disposal Facilities and Practices	40 CFR 257		Sets criteria for determining which solid waste disposal facilities and practices pose a reasonable probability of adverse effects on health or the environment.		
Floodplains	40 CFR §257.3-1	A	Prohibits facilities or practices in floodplains from restricting the flow of the base flood, reducing the temporary water storage capacity of the floodplain, or causing washout of solid waste, so as to pose a hazard to human life, wildlife, or land or water resources.		GW-5, GW-6,

Table A-7 Potential Federal Location-Specific ARAR (Page 2 of 2)

Description	Citation	A/ R&A*	Requirements	Remarks	Alternatives Potentially Affected
Endangered Species	40 CFR §257.3-2	A	Prohibits facilities or practices from causing or contributing to the taking of any endangered or threatened species of plants, fish, or wildlife. Prohibits destruction or adverse modification of habitat of endangered or threatened species.		All
Wild and Scenic Rivers Act	16 U.S.C 1271	R&A	Prohibits federal agencies from recommending authorization of any water resource project that would have a direct and adverse effect on the values for which a river was designated as a wild and scenic river or included as a study area.	The Hanford Reach of the Columbia River is under study for inclusion as a wild and scenic river.	GW-3, GW-4, GW-5, GW-6

*NOTE: A = Applicable, R&A = Relevant and Appropriate

Table A-8 Potential State Location-Specific ARAR

Description	Citation	A/ R&A*	Requirements	Remarks	Alternatives Potentially Affected
Habitat Buffer Zone for Bald Eagle Rules	RCW 77.12.655				
Bald Eagle Protection Rules	WAC 232-12-292	A	Prescribes action to protect bald eagle habitat, such as nesting or roost sites, through the development of a site management plan.	Applicable if the areas of remedial activities includes bald eagle habitat.	All
Regulating the Taking or Possessing of Game	RCW 77.12.040				
Endangered, Threatened, or Sensitive Wildlife Species Classification	WAC 232-12-297	A	Prescribes action to protect wildlife classified as endangered, threatened, or sensitive, through development of a site management plan.	Applicable if wildlife classified as endangered, threatened, or sensitive are present in areas impacted by remedial activities.	All

*NOTE: A = Applicable, R&A = Relevant and Appropriate

Table A-9 Potential Location-Specific TBC

Description	Citation	Requirements	Remarks	Alternatives Potentially Affected
Floodplains/Wetlands Environmental Review	10 CFR Part 1022	Requires federal agencies to avoid, to the extent possible, adverse effects associated with the development of a floodplain or the destruction or loss of wetlands.	Pertinent if remedial activities take place in a floodplain or wetlands.	All
Protection and Enhancement of the Cultural Environment	Executive Order 11593	Provides direction to federal agencies to preserve, restore, and maintain cultural resources.	Pertains to sites, structures, and objects of historical, archeological, or architectural significance.	All
Hanford Reach Study Act	P.L. 100-605	Provides for a comprehensive river conservation study. Prohibits the construction of any dam, channel, or navigation project by a federal agency for 8 years after enactment. New federal and non-federal projects and activities are required, to the extent practicable, to minimize direct and adverse effects on the values for which the river is under study and to utilize existing structures.	This law was enacted November 4, 1988.	GW-3, GW-4, GW-5, GW-6

9413294.3272

APPENDIX B

DETAILED DESCRIPTIONS OF REMEDIAL ALTERNATIVES FROM THE 100 AREA FEASIBILITY STUDY PHASES 1 AND 2

THIS PAGE INTENTIONALLY
LEFT BLANK

1.0 GROUNDWATER REMEDIAL ALTERNATIVE DESCRIPTIONS

The alternatives considered for treatment of the 100 Area groundwater operable unit were developed and screened in the *100 Area Feasibility Study Phases 1 and 2* (DOE-RL 1994a). This section of the FFS presents detailed descriptions of each groundwater alternative retained from the 100 Area FS for more detailed analysis. The descriptions for these alternatives (referred as the baseline alternatives) are expanded from the information presented in the 100 Area FS and are modified as needed to reflect new information gathered since preparation of the FS. These alternative descriptions will be modified to reflect site-specifics (as needed) in the individual operable unit FFS.

1.1 ALTERNATIVE GW-1

1.1.1 Description

Alternative GW-1, the no action alternative, is required by the NCP to serve as a baseline for evaluation of other alternatives. The no action alternative may be selected for sites where contamination does not exceed the level of unacceptable risk, where site contamination is in compliance with ARAR, where short-term risks associated with the remedial action exceed the risk of no action, or where the cost of remediation is excessive compared to the benefit gained in risk reduction. The no action alternative assumes no further action at a site. For example, no action for the groundwater operable unit consists of continued existing access controls and groundwater monitoring events through 2018 at which time these activities cease. The contamination is allowed to dissipate through natural attenuation processes. For radionuclides this is mainly natural radioactive decay. The effectiveness of the natural attenuation process is related to the half-life of the radionuclide and the affinity of the radionuclide to sorb to the Hanford soils. For other contaminants, such as chromium, the major attenuation factor is advection/dispersion which depends on natural groundwater flow and the river flushing action to reduce concentrations.

1.2 ALTERNATIVE GW-2

A single alternative has been developed for the general response action of institutional controls (designated Alternative GW-2). The remedial technologies and associated process options specified for this alternative in the 100 Area FS Phases 1 and 2 (DOE-RL 1994a) have been modified. Based on the requirement to consider only the recreational use scenario, identification of an alternate water supply for residential, industrial, or agricultural use is no longer necessary. Therefore, the institutional controls proposed to prevent access to contaminated groundwater plumes beneath the 100 Area are:

- access restrictions:
  - deed restrictions
  - water rights restrictions

- monitoring
  - groundwater monitoring.

1.2.1 Description

The institutional controls alternative for groundwater involves restricting access to contaminated sites within the 100 Area. The restrictions included in this alternative are unique to groundwater media. Types of restrictions are defined as follows:

- Deed restrictions may be established to place limitations on groundwater use. These limitations could specify restrictions on acceptable groundwater uses and may take the form of covenants that limit activities resulting in human contact. Deed restrictions may include a prohibition on groundwater use or less stringent limitations on use for off-site farming and industrial activities.

- Water-rights restrictions limit access to contaminated groundwater. The water-rights restrictions could be imposed by deed restrictions, as discussed below, or by designated use, should the title to the 100 Area remain with the federal government. Water-rights restrictions merely designate the acceptable use of 100 Area groundwater (if at all) for recreational use, such as temporary drinking water. This action may require an additional change in water-rights administration to be effective. At this time, no state water-rights restrictions are necessary if consumptive use is <5,000 gal/day (WAC 173-160-040).

In addition to restricting groundwater use and access to groundwater, the institutional action alternative also includes groundwater and environmental monitoring. Monitoring will be required to determine if and when institutional controls to restrict access to groundwater are no longer necessary. Institutional control are assumed to be in place during the period of DOE control. After DOE release of the site, deed and water right restrictions can be implemented to prevent access.

1.3 ALTERNATIVE GW-3

Alternative GW-3 has been developed as a containment GRA. The objective of Alternative GW-3 is to eliminate source to receptor pathways by preventing migration of contaminated groundwater to environmental resources, such as the Columbia River, and preventing further migration of contaminated groundwater outside the operable unit. In order to achieve this objective, Alternative GW-3 is designed to isolate and contain existing contaminant plumes. Through the use of cutoff walls and extraction/injection wells, contaminant plumes would be contained to prevent migration and isolated to prevent further contamination of the unconfined aquifer. In addition to containment and isolation of contaminant plumes, this remedial action would be implemented to minimize overall effects on the general hydrologic conditions of the unconfined aquifer. The containment alternative objectives must be maintained until natural attenuation reduces concentrations to acceptable levels or until alternate cleanup standards can be negotiated and agreed upon by the parties to

the Tri-Party Agreement. Contaminants that are persistent in the environment especially may require additional remedial action or determination of alternate cleanup levels.

1.3.1 Baseline Description

Alternative GW-3 was initially developed in the 100 Area FS Phases 1 and 2 (DOE-RL 1994a). The alternative initially developed forms the baseline from which modifications are made for application to the 100-HR-3 Operable Unit. The baseline description of this alternative is based on the remedial technologies and associated process options specified in the 100 Area FS for containment of contaminated groundwater plumes beneath the 100 Area:

- vertical barriers:
  - cutoff walls
- hydraulic control:
  - extraction wells
  - injection wells (as necessary)
- monitoring:
  - groundwater monitoring.

9413294.3275

1.3.1.1 Cutoff Wall Options. The baseline description of this alternative includes several subsurface barrier (cutoff wall) technologies that are potentially applicable in the 100 Area. A cutoff wall is a subsurface barrier designed to prevent the flow of contaminated groundwater. Several cutoff wall technologies are available that may be applicable in the 100 Area depending on site-specific conditions and requirements. Each technology has advantages and disadvantages based on the specific applications. Therefore, no one specific cutoff wall technology will be universally applicable in the 100 Area. The cutoff wall technologies considered potentially applicable in the 100 Area are:

- slurry wall
- deep soil mixing
- sheet piling
- injection grouting.

The specific cutoff wall technology selected to represent the containment alternative will be determined on an operable unit-specific basis. In this manner, the cutoff wall technology most applicable to operable unit site-specific conditions and requirements can be specified.

In situations where subsurface barriers may not be applicable due to technical limitations such as wall depth requirements, hydraulic control measures may be specified as the method of contaminant plume containment. Hydraulic control provides containment by extraction of contaminated groundwater from the downgradient front of the plume followed by reinjection in the upgradient portion of the plume. Continuous extraction and injection

can effectively isolate contaminant plumes, but are considered operating and maintenance intensive compared to vertical barriers. This method of containment would only be used in situations where the use of a subsurface barrier is not applicable. This alternative does not represent a complete solution for persistent contaminants but is consistent with the IRM approach and with the final remedy.

1.3.1.1.1 Slurry Walls. Typical slurry wall construction involves trench excavation under a slurry. The slurry provides hydraulic shoring to maintain the integrity of the trench while at the same time forming a low permeability filter cake on the trench walls that prevents fluid loss into the surrounding soil. Once a portion of the trench has been excavated to depth, a backfill material is added. In this manner, excavation and backfilling occur simultaneously until the wall is complete. The completed wall is designed to be less permeable than the surrounding native soil and thereby forms a barrier to groundwater flow.

9413294.3276

Backfill materials commonly used in slurry wall construction include mixtures of bentonite slurry and soil, or mixtures of cement, bentonite, and water. Slurry walls constructed of soil/bentonite are generally the least permeable, least susceptible to contaminant degradation, and least expensive (Spooner et al. 1985). Slurry walls constructed of cement/bentonite are generally easier to install, provide more strength, and can be installed to greater depths (Spooner et al. 1985).

The depth of a slurry wall is dependent on the depth of the aquitard beneath the contaminant plume. To ensure effective containment of contaminant plumes, slurry walls must be keyed-in to a low permeability or aquitard zone beneath the aquifer. In the case of the 100 Area, this aquitard may be a silty sand zone that separates the coarse sand and gravel zones in the unconfined aquifer or a paleosol/overbank deposit at the base of the unconfined aquifer. However, if contaminant plumes extend throughout the Ringold aquifers, the clay, silt, and fine sand of the Ringold lower mud unit ("Blue Clay") may be the nearest aquitard. In any case, the required depth of the slurry wall will depend on the nearest aquitard.

Filter cake formation regulates the amount of slurry lost to the surrounding soils. Formation of the filter cake depends on the permeability of the soil, pore size, type of slurry, and any additives used. In gravel beds, which allow groundwater velocities of 1 to 10 cm/sec, the pores are too large to be easily closed. Fines, such as sand, are used in these cases to assist pore space blockage. Slurries are typically mixed with up to 10% fines to assist formation of the filter cake. The Hanford formation is classified as a sandy gravelly unit with a water movement rate of about 0.1 cm/sec (DOE-RL 1993b). Generally, a bentonite/soil slurry would be chosen because of its low permeability; however, sand or other fines may be added to the slurry to increase filter cake formation. Testing must be done on the specific soil conditions to determine the need to add fines.

The equipment used for excavating slurry wall trenches is also dependent on the required wall depth and the former is limited by the maximum digging depth capabilities of the machinery. In general, long-reach type backhoe equipment can provide excavation depth up to approximately 24 m (80 ft) (Spooner et al. 1985). Draglines or clamshell excavation equipment is typically required for depths >24 m (>80 ft) (Spooner et al. 1985). The presence of large rock or boulders can present problems during the implementation phase.

The potential for large boulders is reduced by placing the wall as close to the river as possible because the Hanford formation has often been eroded in this area. Most of the large boulders are associated with the Hanford formation; the Ringold Formation generally does not contain these boulders. By placing the barrier close to the river, the effectiveness is increased and the need to excavate through the Hanford formation is minimized.

Slurry preparation and placement generally requires raw material areas, mixing equipment, transport equipment, storage ponds, and cleaning equipment. Raw materials required for a slurry mixture include water, bentonite, cement (if specified), and soil (engineered if necessary). Formation of the slurries can be accomplished with venturi (flash) mixers or paddle (vortex) mixers (Spooner et al. 1985). Storage ponds provide surge capacity for continuous application of slurry into excavation trenches. Pumps, pipes, valves, hoses, and other associated fitting and tools are required to move the slurry from mixing area to the storage pond or from storage pond to the excavation.

Backfill preparation and placement also requires raw materials storage, mixing, transport, and placement equipment. Backfilling is generally less complicated than slurry preparation and placement. Raw materials include bentonite, soil, and cement (if necessary). Mixing is generally carried out with bucket loaders or bulldozers, but can also be accomplished mechanically with a pugmill. Initial placement of backfill in the trench requires a clamshell to lower the material to the bottom. This prevents segregation of backfill particles and entrapment of slurry pockets with the backfill (Spooner et al. 1985). Thereafter, a bulldozer or bucket loader can simply push backfill into the trench.

1.3.1.1.2 Deep Soil Mixing. Deep soil mixing is a commercially available technology for construction of vertical barriers with properties similar to slurry walls. The deep soil mixing technique uses a crane-mounted boring/mixing tool containing injection nozzles. The tool is initially driven into the soil formation to the required cutoff wall depth. The tool is then partially withdrawn (approximately half the cutoff wall depth) to begin injection of slurry material. As injection continues the tool is driven back down to the required cutoff wall depth. Injection is continued until the tool is completely withdrawn. The tool mixes the slurry and soil throughout the injection process. The slurry materials selected for injection are typically cement, bentonite, or cement-bentonite mixtures, depending on the required permeability. The cutoff wall is formed by installation of a continuous series of overlapping columns.

The primary advantage of deep soil mixing is that the technique does not require removal of contaminated soil. Mixing occurs in the subsurface without exposing workers and the environment to contaminated soil and groundwater. The technique essentially eliminates disposal requirements, handling contaminated materials, as well as worker and environmental exposures.

The operational depth of deep soil mixing is dependent on the equipment specifications and the geologic formation in which the cutoff wall is to be installed. The deep soil mixing method performs poorly in formations with boulders. The presence of large rock or boulders (> 18") in the Hanford formation can present problems during implementation. Large boulders can be removed by pre-excavation or worked around by

offsetting the columns. A typical deep soil mixing system requires and area of 130' x 50' to accommodate set up and tear down the crane. Operation of the system also requires an on-site support area and an adjacent equipment decontamination pad. The soil formation must be able to support the system (crane and mixing tool), approximately 15 pounds per square foot.

1.3.1.1.3 Sheet Pile. Sheet piling is a commercially available technology that has been widely used for earth retaining structures such as dock walls bulkheads, river walls piers and dry dock walls. The technology has more recently become used for contaminated groundwater control as seepage cutoff walls. Sheet steel piling consists of hot-rolled steel sections provided with clutches or interlocks for connecting successive piles to one another such that a continuous wall can be formed. The sheet piles are usually driven in pairs using hammers of the double acting type or diesel hammers. The driving of each new sheet is started once the neighbor sheet has been about one-third driven. Since the sheet pile is assumed not to undergo bending moments, the anticipated soil resistance to be overcome during driving will determine the thickness of steel required in the cross section, as well as the quality of steel from which the piles should be manufactured. The interlock (or annulus) between sheet piles is completely soil tight and can be injected with a sealant (such as grout) to ensure an appropriate impermeability.

Characteristics of the geologic formation can impose some limitations in the applicability of the sheet pile technique. Splitting the web during driving is not uncommon, particularly when obstructions or dense granular soils are being penetrated. Driving sheet piles becomes difficult and often times impracticable in formations which contain large boulders. Corrosion is another factor to be taken into consideration when evaluating the use of sheet pile cutoff walls. Groundwater chemistry will have the most significant impact on corrosion of a sheet pile wall, however, a protective coating can be applied if necessary. Depth limitations exist for the sheet pile technology with walls currently extending <30 m (100 ft) in depth.

1.3.1.1.4 Jet Grouting. Grouting technology has wide applications in engineering practice. Grout curtains are typically used as containment barriers to control seepage through dam foundations, protect excavations conducted under groundwater level, and prevent contaminant migration. Injection grouting has also been used for other engineering applications such as soil improvement, pre-stressing of rock and lifting and leveling of structures. Grout injection is a technique used to force grout into voids and fissures of a soil formation to obtain a desired property, such as reduced permeability.

Jet grouting typically involves drilling boreholes into a formation and then injecting grout under pressure until the voids around the injected section are filled to satisfy a specified design condition. The properties of the grout vary with the application, and often times a combination of different grouts are selected based on the specific characteristics of the site. Grouting consists of the following sequence of operations (Nonveiller 1989):

- drilling injection boreholes in a predetermined arrangement and depth

- preparation, proportioning, weighing and mixing of the selected grout suspension

- injecting the prepared suspension into the designated section of the borehole such that soil voids are filled.

The spacing of the injection holes is based on the results obtained from test grouting plots injected at the site. Rotary or percussion rotary drilling rigs are used for drilling the injection holes. Rotary percussion drill rigs can be used for depths up to 180 m (500 ft) with drilling speeds of 20 m/h (66 ft/h) (Nonveiller 1989). Rotary percussion is considered the most suitable drilling method in Hanford formation due to the potential for subsurface boulders.

The appropriate grouting compound for a specific project is dependent upon the characteristics and properties of the geologic formation in which the cutoff wall is to be installed. Thick cement, clay and bentonite suspensions are typically recommended for the grouting compounds used for uniform medium sand and gravel (Nonveiller 1989). Other suspensions such as clay cement, bentonite gel and clay gel are used in similar applications. Treatability studies would be required to determine the optimum grouting compound for use in the geologic formation of the 100 Area.

The efficiency of injection grouting depends on the maximum pressure at which a grouted section of a borehole will become saturated. Low saturation pressures will permeate only a small volume of the soil whereas high pressures will cause hydrofracturing. The injection pressure must always be higher than the overburden stress at the level of injection. Formulae to calculate injection pressures are provided in literature (Nonveiller 1989).

In granular soils, the discharge of grouting decreases as the injection process takes place (at constant injection pressure). This decrease in permeability is a function of three parameters: the grain size of solids elements of the grout, the percentage of dry materials, and the state of flocculation (Winterkorn and Fang 1975). Laboratory experiments have demonstrated that slightly loaded grouts would more easily penetrate a soil than a highly loaded grout. Therefore, engineering practice shows that the cement quantity should be minimized to obtain the desired resistance into the soil. Stability of the grout can be ensured by low percentages of ultracolloidal clay (i.e., bentonite). Typical cement-bentonite grouts used to form low permeability soils will contain approximately 170 kg (374 lb) of dry materials for 1 m^3 (35 cu ft) grout.

The state of flocculation is also a parameter of concern. A stable suspension penetrates the soil more easily when it contains few grains or when the diameters of the grains is small. This means that slightly loaded grouts without any cement (i.e., clay and bentonite grout) are used for impermeability requirements. Clay or bentonite should be dispersed in the grout as elementary grains and not in flocculated form.

The total grout volume necessary is based on the void volume of the soil. However, the radius of grout flow is typically irregular and usually involves significant losses of grout

into unintended areas of the formation. Permeable formations, such as Hanford formation, can result in large losses of grout if the grouting selection has not been carefully planned.

The depth limitation of injection grouting is that of the drilling and pressure unit devices. Depths of up to 200 m (656 ft) have been reported in literature (Nonveiller 1989).

1.3.1.2 Containment System Configuration. The containment response action can be implemented in a number of different ways. The optimum number and location of cutoff walls and extraction/injection wells required to contain contaminant plumes in the 100 Area will be determined by hydrologic modeling. Cutoff walls can be constructed to completely surround contaminant plumes; to divert uncontaminated groundwater around contaminant plumes; or to prevent migration of contaminant plumes. Extraction wells can be operated to produce an artificial gradient that stagnates movement of contaminant plumes, to intercept uncontaminated groundwater before contacting contaminant plumes, or to intercept contaminated groundwater movement around the barrier. In general, the combination of cutoff walls and extraction/injection wells will be located such that contaminated groundwater plumes are isolated and contained.

It is assumed for purposes of this FS that the containment alternative is implemented as follows: cutoff walls would be built to prevent migration of contaminant plumes; groundwater extraction wells, if necessary, would be placed to intercept contaminated groundwater at the ends of the wall; and injection wells would be placed to minimize the effects on the overall hydrologic conditions of the unconfined aquifer, if necessary. The baseline concept of Alternative GW-3 is presented graphically in Figure 4-1. All the barrier options are assumed to have expected useful lines much greater than the IRM period.

1.3.1.3 Disposal Distances and Location. Wastes requiring disposal may result from drilling activities and/or construction of the cutoff walls. Slurry wall construction would result in generation of more significant quantities of waste than the other cutoff wall technologies. During slurry wall construction, the addition of slurry agents results in a net excess of soil. Approximately 33% of the total excavated volume for a soil-bentonite wall and up to 60% for a soil-bentonite-cement wall would require disposal (Spooner et al. 1985). To minimize the volume of contaminated soil produced, materials could be segregated so that the uncontaminated vadose zone soil would make up most of the excess soil.

Radiologically and/or chemically contaminated soils will be transported by truck or rail to the ERDF, W-025, or another site for disposal. It is anticipated that all wastes will meet ERDF waste acceptance criteria only preliminary guidelines for waste acceptance criteria have been identified in the ERDF conceptual design reports.

Liquid waste disposal is not applicable to Alternative GW-3. Although hydraulic control (extraction) wells may be used to remove groundwater to stop contaminant migration around the ends of the wall, this water would be reinjected into the aquifer in a recycle loop.

1.3.1.4 Monitoring. The containment-action alternative also includes groundwater and environmental monitoring. Monitoring will be required to evaluate the long-term

effectiveness of slurry walls and provide information to base subsequent decisions regarding the continued need for containment actions.

1.4 ALTERNATIVE GW-4

A single alternative has been developed for the in situ treatment GRA (designated GW-4). The remedial technologies and associated process options selected in the 100 Area FS Phases 1 and 2 (DOE-RL 1994a) for in situ groundwater treatment are:

- biological treatment:
  - biodenitrification (nitrates)
- physical treatment:
  - air sparging (this may be combined with soil vapor extraction (SVE) to eliminate venting organics to the atmosphere)
- monitoring:
  - groundwater monitoring.

1.4.1 Objective

The objective of Alternative GW-4 is to eliminate source to receptor pathways by in situ remediation of contaminated groundwater plumes. In order to achieve this objective, Alternative GW-4 is designed to eliminate nitrate and organic contaminated groundwater in situ. Biodenitrification and air sparging are the in situ treatment technologies specified to remove nitrate and volatile organic compound (VOC) contamination, respectively. Other in situ treatment technologies such as biodegradation may be required on a case-by-case basis to remove semi- or non-volatile organics that may also be present in contaminated groundwater plumes. It is noted here that the objective of this alternative will not be completely satisfied due to limitations in the current status of in situ remedial technologies. Currently there are no proven or innovative in situ treatment technologies capable of reducing or eliminating the health and environmental risks from metals and radionuclides.

1.4.2 System Configuration

Although nitrates are expected at each of the 100 Area groundwater operable unit, the location of organic contamination is not as well defined. The LFI for the groundwater operable unit describe the contamination present in 100 Area groundwater.

Air sparging and biodenitrification systems can be implemented in several different ways. Each system requires an injection well system to ensure treatment encompasses the entire plume. Extraction well systems are generally not necessary since treatment occurs below ground. However, extraction wells can be used to facilitate treatment or satisfy regulatory requirements. In situ air sparging systems can utilize extraction wells (i.e., soil

vapor extraction) to prevent VOC from venting into the atmosphere (potential regulatory requirement) or to facilitate vertical migration of volatilized contaminants. In situ bioremediation systems utilize extraction wells to facilitate effective mixing of nutrients, microbes, and contaminants.

The size and configuration of Alternative GW-4 treatment systems will be determined by the extent of nitrate and organic contamination in 100 Area groundwater. Optimizing the number and location of treatment systems will be determined by hydrologic modeling. Optimizing operating parameters of the treatment systems will be determined by laboratory and pilot-scale testing as well as treatability studies.

1.4.3 Unit Operations

The concept of in situ treatment technologies specified for Alternative GW-4 are presented graphically in Figure B-2. Process operations, equipment requirements, and design considerations are described below.

1.4.3.1 In Situ Biodenitrification. Development and demonstration of in situ bioremediation of nitrates and carbon tetrachloride by indigenous microbes in Hanford groundwater is currently ongoing (Skeen et al. 1993). The process under development involves stimulating indigenous microorganisms to reduce nitrates to nitrogen gas during metabolization of organic carbon. To facilitate this process for remediation of 100 Area nitrate plumes, additions of nutrients (e.g. phosphorus) and a carbon source (acetate or methanol) may be required. The denitrification process is chemically represented according to the following simplified reaction:

$$NO_3^{-1} \xrightarrow{\text{Bacterial Metabolic Process}} N_2\uparrow$$

The in situ biodenitrification process proposed involves a combination of extraction and injection wells. Placement of these wells is specified such that a closed pumping circuit is developed between extraction and injection wells. Well-to-well interaction is achieved by using one well for injection and nutrient addition and another well for extraction (Skeen et al. 1993). Extracted groundwater is transferred to a series of nutrient mixing tanks before injection back into the aquifer. The interaction between wells enhances flow and ensures proper mixing between wells (Skeen et al. 1993). Concentrations of additives required are based on pilot tests and continuous monitoring of extracted groundwater.

Equipment required for the in situ bioremediation scheme includes extraction wells, injections wells, nutrient feed tanks, mixing tanks, and associated pumps, piping, valves, monitoring and control systems. Due to the potential for leaks and spills in any hazardous liquid system, secondary containment measures may also be required in the event of an

accident. Such measures could include double walled piping, berms around tanks, and overflow collection equipment.

The number and location of injection and extraction wells would be determined on the basis of hydrologic modeling. Design, installation, and operation requirements for the extraction and injection wells will be similar to standard production water wells. The primary design consideration for these wells is locating and sizing the screened area such that only that portion of the aquifer containing nitrate contamination is affected and the interaction between wells facilitates the closed pumping circuit concept described above.

Prior to injecting groundwater and additives back into the aquifer, mixing is required to ensure homogeneity. Nutrient mixing tanks utilizing mechanical agitation by a motor driven internal impeller are specified for this purpose. The specified mixing tanks operate on a continuous basis with the capability of maintaining a design residence time.

9413294.3283

Nutrient feed can be made directly into the mixing tanks or the piping leading to the mixing tanks. Nutrient feed tanks are sized according to the required capacity of the system. A small capacity pump or gravity feed system will be required to inject nutrients at the specified location in the system.

1.4.3.2 Air Sparging. Air sparging is proposed for remediation of isolated plumes of VOC contamination in 100 Area groundwater. This remediation technology is similar to air stripping and involves injecting air into the soil or strata below contaminated groundwater plumes. Volatile organic compounds dissolved in groundwater and adsorbed onto soils are volatilized into the gas phase as air bubbles flow upward through the water column (Hazardous Waste Consultant 1993). A crude air stripping process is developed where the soil in the aquifer acts as tower packing that maximizes water surface area contact with air. Stripped contaminants are either drawn upward and collected with a vapor extraction system or, if permissible, allowed to naturally migrate to the surface and enter the atmosphere. An additional effect of injecting air into the aquifer is that natural aerobic biodegradation may be enhanced.

Air sparging is generally most effective in coarse-grained soils. Fine-grained soils tend to require greater air injection pressures that can result in lateral rather than vertical dispersion of air (Hazardous Waste Consultant 1993). Air movement in heterogeneous soils will follow the path of least resistance and can therefore short circuit the intended area of influence. The potential effects of short circuiting include missing target contamination due to vertical channeling and/or horizontal migration of contamination (Hazardous Waste Consultant 1993).

An additional concern involves the heterogeneity of vadose zone soils which range in particle size from boulders to silt. The heterogeneity of vadose zone soils may prevent effective natural migration of stripped VOC to the surface for venting to the atmosphere. Potential for horizontal channelling may result in contaminant migration without venting to the atmosphere. To eliminate this potential, installation of a soil vapor extraction system is required with well screens located just above the saturated zone. The vapor extraction

system will capture volatilized contaminants before lateral migration in the vadose zone can occur.

The number, location, and spacing of injection and extraction wells will be determined on the basis of modeling and pilot tests. Pilot tests are used to determine the radius of influence of injection and extraction wells within the subsurface of the area of contamination. In general, the radius of influence is larger in highly permeable soils and smaller in low permeability soils (Hazardous Waste Consultant 1993). To ensure effective contaminant removal, injection and extraction wells are spaced such that the radius of influence of each system is overlapping.

There are four types of well configurations used for in situ air sparging: spaced wells, nested wells, horizontal wells, and combined horizontal/vertical wells (Hazardous Waste Consultant 1993). The spaced well configuration is most common and involves the use of independent vertical wells to perform extraction and injection. The nested well configuration involves the use of a single vertical borehole to perform both injection and extraction. The horizontal well configuration utilizes horizontal drilling techniques or trenching to install injection and extraction wells. Combined horizontal/vertical wells uses a combination of both vertical and horizontal wells to perform injection and extraction. The configuration best suited for remediation of 100 Area sites must be determined on a case-by-case basis.

9413294.3284

Equipment requirements for the proposed in situ air sparging system include an extraction/injection well network, vapor abatement system (if necessary), air compressor or blower, vacuum pump, and associated piping, valves, monitoring and control equipment. The compressor or blower size is typically based on a design maximum expected flow rate and pressure. Each injection well requires pressure measurement and regulation controls to maintain the design operating conditions. Typical well construction materials include metal or PVC piping. Injection well screens are generally 0.3 to 1 m (1 to 3 ft) in length and must be properly sealed to prevent air flow into the borehole (Hazardous Waste Consultant 1993). Due to the elevated temperature of air leaving the compressor, steel and/or rubber air hose is recommended for the pressurized air distribution system (Hazardous Waste Consultant 1993). Captured vapor will be released to the atmosphere unless an abatement system using carbon adsorption, thermal treatment, or chemical oxidation is used.

In situ air sparging may artificially elevate the water table. This effect should be considered if floating free product is present or if elevating the water table would impact the direction of plume migration.

1.4.3.3 Groundwater Monitoring System. Post-treatment monitoring of nitrate and organic contaminant plumes will be necessary to ensure that established remediation levels have been satisfied. The number and location of monitoring wells required will be determined based on contaminant distribution. Monitoring well design, equipment requirements, and installation are unique due to periodic use and the necessity to obtain representative groundwater samples.

Monitoring wells are typically operated at low, intermittent pumping rates and therefore require much smaller pumps than production-type extraction wells. Wells will be installed to ensure that samples taken are representative and do not include contaminants resulting from materials used for well installation. Also of concern is potential interactions between construction materials and the groundwater being sampled. The design of monitoring wells therefore must specify construction materials that are inert to the chemistry of groundwater being sampled.

1.4.4 Disposal Distances and Location

Wastes requiring disposal include well drilling and construction wastes and vapor treatment wastes. All other treatment processes are in situ treatment techniques, thereby eliminating any other disposal requirements.

1.5 ALTERNATIVE GW-5

Alternative GW-5 has been developed as a removal, treatment, and disposal GRA. The remedial technologies and associated process options that comprise this alternative were initially specified in the 100 Area FS Phases 1 and 2 (DOE-RL 1994a). Based on review of additional information (LFI, 100 Area aggregate studies, treatability testing, and refined RAO), no modifications to this alternative are required. Therefore, the remedial technologies and associated process options are as initially developed:

- removal:
  - extraction wells
- biological treatment:
  - biodenitrification (nitrates)
- chemical treatment:
  - chemical oxidation (organics)
  - precipitation (heavy metals and radionuclides)
  - chemical reduction (hexavalent chromium)
- physical treatment:
  - filtration (remove precipitates and suspended solids)
  - ion exchange (polishing for removal of any remaining ionic contaminants)
- stabilization/solidification:
  - cement-based solidification (secondary waste streams)
- liquid disposal:
  - river discharge or reinjection into an aquifer

- solids disposal:
  - ERDF, W-025, or another site

- monitoring
  - groundwater monitoring.

1.5.1 Objective

The objective of Alternative GW-5 is to contain the contaminant plumes from reaching the river or migrating outside the operable unit and to eliminate source to receptor pathways by removing, treating, and disposing of contaminated groundwater. Alternative GW-5 is designed to remove contaminant plumes from the unconfined aquifer; treat contaminated groundwater to the levels established by remedial action goals; isolate and dispose treatment residuals from the accessible environment; and reinject treated groundwater into the unconfined aquifer or discharge it to the river.

9413294.3286

1.5.2 Size and Configuration

Several options are available for implementing groundwater treatment, including a single treatment facility for all contaminated groundwater within the 100 Area or separate treatment facilities for each groundwater operable unit. Although past practices at the 100 Area reactor sites may have resulted in the same contaminants being released to the environment, sampling and analysis indicates the concentrations of contaminants in each operable unit are not the same. Therefore, separate treatment facilities at each operable unit are considered to prevent cross-contamination and enable tailoring treatment systems to specific COC at each operable unit. Pump and treat alternatives have variable life cycles depending on remediation goals and technology performance for specific sites, i.e., the system can run until goals are met or until the technology limitations are met.

1.5.3 Unit Operations

Figure B-3 is a conceptual flow diagram of the unit operations proposed for Alternative GW-5. Each unit operation, equipment requirements and options, and design considerations are described below.

1.5.3.1 Groundwater Extraction System. The belowground portion of the groundwater extraction system will consist of a series of extraction wells. The extraction wells proposed for removing contaminated groundwater from beneath the 100 Area will be similar to standard production-type water wells used for domestic and industrial applications. The number and location of extraction wells required for each contaminant plume will be determined by hydrologic modeling.

An extraction well consists of vertical borehole tapping the contaminated aquifer. The depth of the well is determined by the vertical extent of contamination and the

characteristics of the aquifer. Casing materials would conform to DOE and state requirements for well completion. The casing serves to maintain the borehole integrity and support the pumping mechanism. The well casing is grouted into place so it will not be a conduit for the downward migration of additional contamination.

Extraction wells should be completed using stainless steel, continuous wire-wrapped well screens. The screen prevents sediment uptake and provides support for loose formation material (Driscoll 1986). The screen slot size is specifically designed for the aquifer materials to minimize entrance velocity and prevent the influx of aquifer fines after development. The screened interval of the well must be developed following installation and before it is used for remediation. Development consists of optimizing the flow characteristics of the well screen/aquifer interface by the removal of aquifer fines through surging, over-pumping, or other means.

Any commonly available well pump may be used for extraction of contaminated groundwater. Selection of pump type and power are determined by the response of the aquifer to pumping, the movement of contaminants and the capacity of the remediation system. Typical systems, in order of decreasing capacity and/or pumping depth capability, include:

- line-shaft turbines
- submersible turbines
- jet
- centrifugal
- positive displacement
- peristaltic.

Centrifugal and peristaltic pumps are generally not applicable for suction (i.e., inlet) lifts exceeding 6 m (20 ft) (Driscoll 1986).

The above-ground portion of the groundwater extraction system will consist of a piping network that connects each extraction well to a manifold. From the manifold a single pipeline will bring contaminated groundwater to a storage tank near the treatment area. The storage tank will allow flow equalization and settling of suspended solids that may interfere with subsequent treatment operations. The piping system will be of double-walled construction to ensure leak protection. A single-walled, above-ground storage tank is specified with secondary containment provided by an engineered berm. Pumps, valves, sampling, and monitoring equipment will be specified as needed for the capacity and requirements of the system.

1.5.3.2 Chemical Oxidation System. Chemical oxidation is the initial unit operation proposed for destruction of organic contamination in 100 Area groundwater. Groundwater and reagents, such as hydrogen peroxide and ozone, are pumped into a process vessel where organic contaminants are oxidized (the reaction may be enhanced by ultraviolet light). A simplified reaction (for a hydrocarbon) of this process is:

$$C_xH_y + H_2O_2/O_3 \xrightarrow{uv} xCO_2\uparrow + \frac{y}{2}H_2O$$

Groundwater entering the chemical oxidation system is filtered to remove suspended solids. Two cartridge filters arranged in parallel are specified for this application to allow for continuous operation during maintenance or filter replacement. After filtration the oxidizing reagent is combined with the groundwater and passed through a static mixer to ensure the feed into the oxidation reactor is homogeneous. A static mixer is selected for this application for simplicity, as such a unit has no moving parts and requires no maintenance or operating costs.

Once the groundwater and reagents have been combined, the mixture is fed into the oxidation reactor vessel. Inside the reactor this mixture is exposed to ultra violet lamps that catalyze the oxidation process. Organic contaminants are oxidized to form carbon dioxide and water (assuming 100% reaction efficiency). A hydrochloric acid scrubber is required if chlorinated organics are present[1]. An acid or base may be required to adjust pH before and after the oxidation reactor to optimize the efficiency of oxidizing organic contaminants (EPA 1993).

9413294.3288

1.5.3.3 Precipitation System. Following chemical oxidation, chemical precipitation is proposed to remove radionuclides and heavy metals. In general, metal contaminants can be precipitated from solution as hydroxides, sulfides, carbonates, or other insoluble salts (EPA 1987). Common precipitation reagents include lime, caustics such as sodium hydroxide, sulfides such as sodium bisulfide, ferrous sulfide, calcium carbonate, and sodium carbonate (Corbitt 1990). However, because contaminant concentrations are so dilute, most of the precipitating species will consist of common water minerals. Common methods for precipitation involve addition of precipitation reagents or pH adjustment.

Specification of precipitation reagents and pH is contaminant dependent. A precipitation reaction resulting in the formation of an insoluble form of strontium-90 occurs as described by the following simplified reaction:

$$^{90}Sr + CO_3 \rightarrow {}^{90}SrCO_3\downarrow$$

A conceptual chemical precipitation process consists of a mixing tank, a reagent feed system, and a clarifier tank. Associated piping, pumps, valves, and monitoring and control equipment complete the equipment requirements. The process stream and precipitation reagents are combined in a continuously stirred continuous flow (CSCF) reactor vessel. The mixture is then pumped to the clarifier tank where the resulting insoluble salts are separated from the process stream as a concentrate. The process stream or overflow from the clarifier is then pumped to chromium reduction process.

The concentrate from the CSCF reactor is pumped to a rotary drum filter for dewatering. A filtration media such as diatomaceous earth is added to the concentrate to facilitate the filtration process. The resulting filter cake is collected and transported to the

[1]Hydrochloric acid is a byproduct of oxidation of chlorinated organics.

solidification system. The liquid effluent from dewatering is combined with the process stream from the clarifier for subsequent treatment in the chromium reduction process.

1.5.3.4 Chromium Reduction System. Following chemical precipitation unit operations, chromium reduction is proposed to reduce hexavalent chromium. Hexavalent chromium can be reduced from the soluble hexavalent state to the less soluble trivalent state (pH ≤ 3) and precipitated under basic conditions (pH of 8 to 9) (Corbitt 1990). Chromium may also be reduced by reaction with reagents such as sulfur dioxide, sulfite salts (such as sodium metabisulfite), and ferrous sulfate (Corbitt 1990). Hexavalent chromium can be reduced by reacting with sulfur dioxide and then precipitated as a hydroxide according to the following reactions:

$$Cr_2O_7^{2-} + 6Fe^{2+} + 6SO_4^{2-} + 14H^+ \rightarrow 2Cr^{3+}(SO_4^{2-})_3 \downarrow + 6Fe^{3+}$$

The chemical reduction process is similar to the chemical precipitation process described previously. Separate process equipment is required to perform chemical reduction because of the conditions and reagents under which the required reaction occurs. The process stream, reducing agent, and precipitation reagent are combined in a CSCF reactor vessel. The mixture is then pumped to the clarifier tank where the resulting insoluble salt is separated from the process stream as a concentrate. The process stream or overflow from the clarifier is then pumped to the biodenitrification system.

The concentrate from the CSCF is pumped to a rotary drum filter for dewatering. A filtration media such as diatomaceous earth is added to the concentrate to facilitate the filtration system. The resulting filter cake is transferred to the solidification process to be prepared for disposal. The liquid effluent from dewatering is combined with the process stream from the clarifier for subsequent treatment in the biodenitrification system.

1.5.3.5 Biodenitrification System. Following chemical reduction, biodenitrification is proposed to reduce nitrates to elemental nitrogen. The growth of microorganisms is dependent on the availability of nutrients and a carbon source (Corbitt 1990). In the denitrification process, bacteria use nitrates as an electron acceptor. Denitrification occurs according to the following simplified reaction:

$$NO_3^{-1} \xrightarrow{\text{Bacterial Metabolic Process}} N_2\uparrow$$

The biodenitrification treatment process requires a feed system, reactor vessel, clarifier, and monitoring and control equipment (Brouns et al. 1991). Piping, pumps, and valves are required as needed for the capacity requirements of the system.

The feed system adds nitrate contaminated groundwater plus a carbon source, such as acetate or methanol, into a reactor vessel. Depending on the type of bioreactor, recycling biomass or growth of the original culture will preclude the need for addition of bacteria. Off-gas chemistry, pressure, temperature, and pH are monitored to control the denitrification process.

Bioreactors are generally classified into two categories: suspended-growth systems and fixed-growth systems (Corbitt 1990). Suspended-growth systems, such as a continuously stirred-tank bioreactors (CSTR), or fixed-growth systems, such as a fluidized-bed bioreactors (FBR), can be used for denitrification applications (Brouns et al. 1991). The CSTR vessel mixes contaminated groundwater with suspended biomass to maximize contact between contaminants and microorganisms. The FBR vessel contains biomass attached to a support media, such as anthracite coal. Contaminated groundwater passes through the support media where nitrate contaminants contact microorganisms.

Effluent from the reactor vessel is sent to a settling tank. In the case of the CSTR, suspended biomass is removed for recovery and recycled back into the reactor. The settling tank clarifies the effluent for subsequent processing in the ion exchange process.

1.5.3.6 Ion Exchange System. Following biodenitrification, ion exchange is proposed to remove radionuclides not readily precipitated (either by pH adjustment or by redox), such as cesium-137 and technetium-99. The ion exchange process is the final unit operation applied to contaminated groundwater prior to reinjection into an aquifer. Both cation and anion exchange resins are proposed to ensure removal of any contaminants that may still remain in trace concentrations. The proposed ion exchange process consists of media filtration followed by separate cation and anion exchange columns, and a resin regeneration loop.

The performance of ion exchange resins will be impaired by the presence of suspended solids, bacteria, colloids, or oily materials in the feed stream (Corbitt 1990, Moghissi et al. 1986). Therefore, the process design specifies that the feed stream is filtered prior to entering the exchange columns. Two cartridge filters arranged in parallel are specified for this application to allow for continuous operation during maintenance or filter replacement. Pressure monitoring equipment is required to identify when replacement is necessary due to particulate loading.

The proposed ion exchange design will utilize a separate-bed system as opposed to a mixed-bed system in order to facilitate resin regeneration. The separate-bed system involves two vessels arranged in series. The first vessel containing the cation exchange resin and the second vessel containing the anion exchange resin. The separate-bed system is preferred for removing specific radionuclides (Moghissi et al. 1986). Similar to the cartridge filter design, two separate-bed systems may be arranged in parallel to allow for continuous operation during maintenance, regeneration, or resin replacement.

Specification of ion exchange resins for this process will depend on the type of contaminants to be removed, the contaminant concentration remediation levels, and the presence of other ions in the feed stream that may interfere with the efficiency of removing contaminants (Corbitt 1990). There are four general types of ion exchange resins that

include strong- and weak-acid cation resins and strong- and weak-base anion exchange resins (Corbitt 1990). Ion specific exchange resins are available for isotopes of Cs^{+}, Co^{+2}, Sr^{+2}, and Mn^{+2} (Moghissi et al. 1986). Ion-selective exchange resins can be used to remove any one or more these specific contaminants. Selective resins are typically zeolite and glass-based materials. The primary benefit of ion-selective exchange resins is a reduction in the amount of resin spent on removing ions from the process stream that are not of concern.

Strong-acid cation and strong-base anion exchange resins have a low regeneration efficiency (Moghissi et al. 1986). Therefore, regeneration of these resins can result in large quantities of regenerative waste. Conversely, weak-acid cation and weak-base anion exchange resins can be regenerated with near stoichiometric quantities of regenerants (Moghissi et al. 1986). Another option is a chabazite zeolite cation exchange resin. The zeolite resin is nonregenerable and would be discarded after loading. The benefit from using the zeolite resin is that it is not regenerated and thus no liquid regeneration wastes are generated. The only waste product is the contaminated solid zeolite. These once-through zeolites are economical because the secondary waste is a solid waste rather than a liquid waste which must be further processed (at considerable additional cost).

A regeneration loop is included in the ion exchange process to maximize the life of the ion exchange resins. A design variation may avoid regeneration by specifying disposal of spent resins (e.g., chabazite zeolite); however, regeneration is assumed in this application for conservatism. Monitoring the conductivity of the effluent from each ion exchange vessel will identify when the resins will require regeneration. Regeneration is accomplished by stripping contaminant ions from exhausted resin beds with concentrated acid, caustic, or other reagent solutions. In this process, contaminant cations are replaced with innocuous cations, such as hydronium (H^{+}), and contaminant anions are replaced with innocuous anions, such as hydroxide (OH^{-}) (Corbitt 1990). The equipment requirements to perform regeneration include acid and caustic storage tanks, regenerative waste storage tank, and any associated piping, pumps, valves, and monitoring equipment.

The regeneration loop results in secondary liquid waste requiring solidification prior to disposal. Therefore, liquid regenerative wastes will be sent to a cement-based solidification process.

1.5.3.7 Cement-Based Solidification System. Cement-based solidification is proposed for all liquid-, sludge-, or slurry-type waste streams generated as a result of treating contaminated groundwater prior to disposal. Secondary waste streams such as spent ion exchange resins may or may not require solidification prior to disposal depending on the requirements of the ERDF waste acceptance criteria. The secondary waste streams generated from each treatment process are summarized in Table B-1.

Cement is the most commonly used material for solidification of radioactive wastes (DOE 1988). The types of cement used for waste solidification are Portland cement, masonry cement, and gypsum (DOE 1988). Special additives have been developed to enhance the capabilities of cement-based solidification such as waste loading, contaminant leachability, compressive strength, and setting characteristics.

Filter cake, ion exchange resins, and decontamination solutions are compatible with cement-based solidification (DOE 1988). However, cement-based solidification of each secondary waste stream generated from treatment of 100 Area groundwater is likely to require development of separate recipes or formulations. Differences in cement formulations may require separate solidification systems for each secondary waste stream or batch processing each secondary waste stream separately. The equipment requirements for cement-based solidification depend on pretreatment requirements, physical form, and waste volume.

Pretreatment such as pH adjustment of liquid wastes may be required. Resin regenerative wastes may require addition of an acid or caustic for pH adjustment prior to solidification. The physical form of secondary wastes will influence equipment specifications for items such as piping, pumps, and storage tanks for liquids. Conveying equipment and storage bins or silos may also be required.

9413294.3292

The volume of secondary wastes generated will be used to determine whether solidification can be accomplished directly within containers or whether larger more complex mixing equipment is required. In-container mixing processes are generally applicable to small volume waste streams. These processes involve simply adding cement and waste (in predetermined proportions) directly into the disposal container and mixing. Mixing can be accomplished by placing a mixing weight into the container, sealing the container, and then using a drum tumbler or shaker until the contents are thoroughly mixed. Motor driven mixing rods are available in which the mixing rod can be either reused or simply left in the container (DOE 1988).

Large volume waste streams require mixing waste and cement in large vessels. This type of system consists of storage tanks for liquid wastes, feed hoppers for solid wastes and dry materials such as cement and additives. Waste, cement, and water (if necessary) are combined in larger mixing vessels. The resulting mixture is then metered and fed into disposal containers. This type of solidification process enables continuous processing or may be used on a batch-type basis.

Secondary waste streams which do not require solidification in cement, such as filter cartridges, will be packaged directly into disposal containers and transported to ERDF.

1.5.4 Disposal Distances and Location

1.5.4.1 Liquid Disposal. Treated groundwater is the only liquid effluent generated by this alternative and it will be discharged to the Columbia River or reinjected to the aquifer. The treatment train described above treats the groundwater for every contaminant except tritium (no practicable treatment is currently available for tritium). The tritium levels in most plumes in the 100 Area are already below the MCL, thus the water can be discharge directly to the river. However, if tritium levels in the effluent exceed the MCL, then the effluent cannot be discharged to a surface water (i.e., it doesn't meet drinking water standards).

Effluent contaminated by tritium above the MCL will be reinjected into the groundwater. This establishes an extraction/injection loop which allows time for natural radioactive decay of the tritium. The injection point can be chosen such that the travel time to the river is sufficient for the tritium to radioactively decay below the MCL before reaching the river. Both river discharge and reinjection process options are discussed below.

1.5.4.1.1 River Discharge. The treated water will be collected in a surge tank to determine if is below MCL for the contaminants. If so, the treated water will be directed to the river via a buried gravity flow pipeline. It is assumed that the flow would be routed via an existing river outfall (such as 009 in the 100 N Area) or a new outfall. An analysis of the condition of existing pipelines and outfalls would be required prior to implementation.

River discharge may require an National Pollutant Discharge Elimination System (NPDES) permit. Although some outfalls have been operating under existing NPDES permits, additional permitting requirements, if any, have not yet been established for river disposal of treated water. Establishing permitting requirements would require discussions with regulators. In addition, the Tri-Party Agreement Milestone M-17 requiring cessation of liquid effluent discharges by 1995 may affect treated water disposal options.

1.5.4.1.2 Reinjection System. Following treatment, effluent with tritium levels above MCL is to be reinjected into the aquifer beneath the 100 Area. The number and location of injection wells will be determined on the basis of hydrologic modeling and required flow rates. Design, installation, and equipment requirements for such an injection system will similar to the equipment described previously for extraction wells. Treated groundwater will be pumped in a single pipeline. At the injection point, a manifold will be used to feed the treated groundwater to each injection well.

The primary design considerations involved with injection wells are efficiency and well life (Driscoll 1986). The efficiency of an injection well is dependent on the selection and location of the screen. The well screen should be located in the area of the aquifer and/or vadose zone that has the greatest hydraulic conductivity. Screen openings should be as large as possible such that treated groundwater can enter the formation without excessive pressure build-up. Material selection can be an important consideration for ensuring adequate well life. However, due to the quality of treated groundwater exiting the ion exchange process, this should not be a major concern.

1.5.4.2 Disposal of Solidified Residues. Solid wastes generated as a result of treating contaminated groundwater are disposed in the ERDF (approximately 9 miles from the 100 Area). Solidified waste is transported by truck for disposal. Radioactive and mixed secondary waste will meet ERDF acceptance criteria. However, these criteria have not been established. This may necessitate alternate disposal locations, or result in the elimination of alternatives with high secondary solid waste generation.

1.5.5 Groundwater Monitoring

Post-treatment monitoring of 100 Area groundwater will be necessary to ensure that established remediation levels have been satisfied and additional sources of contamination are not discovered. The number and location of monitoring wells required will be determined based on contaminant distribution. Monitoring well design, equipment requirements, and installation were described previously under Alternative GW-4.

1.6 ALTERNATIVE GW-6

Alternative GW-6 has been developed as a removal, treatment, and disposal general response action. The remedial technologies and associated process options initially specified for this alternative in the 100 Area FS Phases 1 and 2 (DOE-RL 1994a) have been significantly modified. The biodenitrification and ion exchange processes initially specified have been determined to be redundant and no longer necessary. This determination is based on the capabilities of reverse osmosis for removing contaminants applicable to biodenitrification and ion exchange treatment. Based on these modifications, Alternative GW-6 now consists of the following remedial technologies and associated process options:

- removal:
  - extraction wells
- physical treatment:
  - air stripping/carbon adsorption (organics)
  - filtration (remove suspended solids)
  - forced evaporation (for volume reduction prior to solidification)
  - reverse osmosis (high molecular weight inorganic contaminants)
- stabilization/solidification:
  - cement-based solidification (secondary waste streams)
- liquid disposal:
  - crib disposal
- solids disposal:
  - ERDF, W-025, or another site
- monitoring
  - groundwater monitoring (100 Area groundwater).

1.6.1 Objective

The objective of Alternative GW-6 is identical to that described previously for Alternative GW-5. Source to receptor pathways are to be eliminated by complete removal, treatment, and disposal of contaminants in the 100 Area. Alternative GW-6 satisfies this

objective in the same manner as Alternative GW-5 except for the methods of treatment. Alternative GW-6 is designed to remove contaminant plumes from the unconfined aquifer; treat contaminated groundwater to the levels established by remedial action goals; isolate and dispose treatment residuals from the accessible environment; and dispose treated groundwater by reinjection to the unconfined aquifer or to the river.

1.6.2 Size and Configuration

Alternatives GW-6 and GW-5 are similar in that both alternatives are developed as removal, treatment, and disposal general response actions. The primary difference between these alternatives is the treatment technologies specified to achieve RAO. The aspects of alternative GW-6 that are differ from alternative GW-5 are summarized below:

- biological treatment - no biological treatments are specified in GW-6
- chemical treatment - no chemical treatment are specified in GW-6
- physical treatment - only physical treatments are specified in GW-6
- disposal - crib disposal as an option to injection or river disposal.

The primary components of the unit operations required for alternative GW-6 are presented schematically in Figure B-4.

1.6.3 Unit Operations

Figure B-4 is a conceptual flow diagram of the unit operations proposed for Alternative GW-6. As noted previously, the biodenitrification and ion exchange unit operations initially specified for this alternative in the 100 Area FS Phases 1 and 2 (DOE-RL 1994a) are no longer included. In addition, the location within the treatment train initially specified for the evaporator has also been changed. Since operable unit-specific treatment processes are being considered as opposed to a single 100 Area treatment facility, the primary purpose of the evaporator has changed from volume reduction of groundwater entering the treatment system to volume reduction of liquid effluent from the reverse osmosis process. Unit operations, equipment requirements and options, and design considerations are described below.

1.6.3.1 Groundwater Extraction System. The groundwater extraction system proposed for Alternative GW-6 is identical to the system described for Alternative GW-5. Refer to the description presented previously for Alternative GW-5 for details.

1.6.3.2 Air Stripping/Carbon Adsorption. Air stripping followed by carbon adsorption is the initial series of unit operations proposed in this alternative for treating 100 Area groundwater. This process removes low concentrations of VOC from contaminated groundwater. Due to the extent and type of organic contamination in 100 Area groundwater, the process would be required only on an as needed basis. Air stripping is generally applicable to dilute aqueous wastes with VOC concentrations less than approximately 100 mg/L (Freeman 1989). The VOC are removed from groundwater by countercurrent

gas-liquid desorption. Once removed from the groundwater, VOC can then adsorbed onto activated carbon.

Groundwater entering the process is filtered to remove suspended solids. Two cartridge filters arranged in parallel are specified for this application to allow for continuous operation during maintenance or filter replacement. After filtration, groundwater is pumped to the air stripper.

Several air stripper designs are currently available, however, the most common or conventional air strippers are vertical towers filled with a packing media. In this design contaminated water enters the top of the tower and falls by gravity through the packing media to a collection sump. Simultaneously, uncontaminated air enters from the bottom of the tower and is discharged at the top. The packing media maximizes the liquid surface area exposed to air flowing countercurrent to the liquid. Depending on water quality, packed-tower air strippers can be susceptible to fouling from scaling or solids deposition.

9413294.3296

Newer designs involve low-profile air strippers which are essentially diffused aerators that bubble air up through a chamber filled with contaminated water (Reese 1992). Low-profile air strippers offer several advantages over conventional packed-tower designs: reduced potential for fouling; less maintenance requirements; and higher efficiency at lower contaminant concentrations. However, the low-profile design uses higher air/water ratios that require higher horsepower blowers and result in increased off-gas volume requiring treatment.

Liquid effluent from the air stripper is pumped to the reverse osmosis system for inorganic contaminant removal while VOC laden off-gas is treated in carbon adsorption units. Two carbon beds in parallel are placed in series with one polishing carbon bed for removing VOC from the air stripper off-gas. Vapor phase carbon adsorption beds are available in disposable canisters or larger reusable vessels. Large activated carbon beds can be regenerated or disposed once saturated with contaminants. Treated air is discharged to the atmosphere.

1.6.3.3 Reverse Osmosis System. Following the organics treatment system, reverse osmosis is proposed to remove soluble inorganic contaminants, especially those of higher molecular weight. Reverse osmosis is a cross-flow membrane separation process that purifies contaminated water by application of high pressure which forces pure water through a semipermeable membrane, but leaves the contaminants in a concentrated waste stream (EPA 1987). The process is commercially available and highly effective for purifying water containing dissolved ions and radionuclides. However, a chief disadvantage is the generation of a substantial volume of secondary liquid waste that must be volume reduced and solidified prior to disposal.

Reverse osmosis membranes are typically either spiral wound into a cylindrical configuration or are fabricated into hollow fibers. The membranes provide a pore size in the range of one to ten angstroms (0.0001 - 0.001 microns). There are essentially three types of reverse osmosis membranes: cellulose acetate, aromatic polyamides, and thin-film

composites (Freeman 1989). The thin-film composite type membranes are generally considered to be the most effective.

An reverse osmosis system may consist of three separate components. The first component in the system provides pretreatment of the feed stream to comply with the reverse osmosis membrane manufactures specifications. The second component is the reverse osmosis treatment vessel which, depending on the final system design, may consist of multiple reverse osmosis vessels. The third component provides post-treatment to the purified effluent to meet reuse standards or to prepare for additional treatment. The third component is not considered applicable to this system as any treatment required for additional unit operations will be considered pretreatment for that particular system.

Pretreatment requirements are based on the type and manufacturer of the reverse osmosis membrane specified and the condition of the feed stream. If necessary, pretreatment will maximize reverse osmosis membrane operating efficiency and reduce the potential for fouling. Pretreatment requirements may include (Porter 1990, Freeman 1989, Moghissi et al. 1986):

- elimination of suspended solids 1 micrometer or larger
- pH adjustment to between 4 and 6
- addition of precipitation inhibitors
- removal of oxidizing compounds
- elimination of organic contaminants
- temperature elevation.

The reverse osmosis portion of the system consists primarily of a high pressure pump, reverse osmosis module (containing the reverse osmosis membrane), piping, valves, and control and monitoring equipment. The high pressure pump pressurizes feed water to above osmotic pressures such that the reverse osmosis phenomenon occurs. The reverse osmosis module contains the membrane packaging and is categorized into four possible designs: plate and frame, spiral-wound, tubular, and hollow fine fiber (Porter 1990). The tubular design reverse osmosis module is least susceptible to fouling, has the highest tolerance to suspended solids, and has the possibility of mechanical membrane cleaning (Porter 1990).

1.6.3.4 Evaporation System. Following the reverse osmosis process, forced evaporation is proposed to reduce the volume of reverse osmosis concentrate requiring cement solidification. Depending on the type of evaporation system specified, concentrations of up to 50% total solids can be achieved (DOE 1988). Evaporation technology has been used for liquid radioactive waste treatment for several decades (Moghissi et al. 1986). The evaporation process involves the use of heat to vaporize water, thereby leaving a concentrated solution containing nonvolatile contaminants. The resulting concentrated solution requires additional treatment while vaporized water is simply condensed and sent for disposal.

Evaporators generally fall into one of two categories, either natural circulation or forced circulation. Natural or forced refers to the way in which liquid waste is circulated through the heat exchanger and vapor body. Natural circulation evaporators include

rising-film and fixed-film types. Forced circulation evaporators include evaporative crystallizer, wiped-film, and extruder types. The evaporative crystallizer is the most commonly used evaporator for radioactive waste applications (DOE 1988).

Forced circulation evaporators have proven to be more effective in concentrating solids than natural circulation evaporators (DOE 1988). In addition, forced circulation evaporators allow separation of the heat transfer, vapor-liquid separation, and crystallization functions (Moghissi et al. 1986), thereby facilitating maintenance operations.

Evaporator energy requirements can be substantially reduced by recycling heated vapor generated by the evaporator back into the heat exchanger to facilitate evaporation of additional feed waste. Not only is the energy stored in the steam reused to heat feed waste, but the need for a condenser is eliminated. This process is commonly referred to as vapor recompression. Vapor recompression can reduce energy consumption by up to 80% (DOE 1988).

9413294.3298

The evaporation system specified for application to Hanford 100 Area groundwater is the forced circulation, evaporative crystallizer with mechanical recompression. Due to the low capacity of typical evaporators, multiple evaporators may be required. Each evaporator system consists of a heat exchanger, vapor body (or flash chamber), recirculation pump, entrainment separator, and condenser (or compressor for recompression). Associated piping, valves, feed and effluent pumps, and control and monitoring equipment will be required as needed.

Concentrate from the evaporator is fed to a rotary vacuum drum filter for dewatering. A filtration media such as diatomaceous earth is added to the concentrate to facilitate the filtration process. The resulting filter cake is collected in a hopper which can be transported with industrial equipment such as a forklift to the solidification system. Liquid effluent from the rotary drum filter is recirculated back into the feed stream entering the reverse osmosis system.

1.6.3.5 Cement-Based Solidification System. As described previously for Alternative GW-5, cement-based solidification is proposed for liquid-, sludge-, or slurry-type waste streams generated as a result of treating contaminated groundwater (see Table B-2). Solidified wastes will be transported to the 200 Area for disposal. The secondary waste streams generated from each treatment system are summarized as follows:

The secondary waste streams generated by the treatment systems proposed for Alternative GW-6 are similar to those generated from the Alternative GW-5 treatment systems. Those secondary waste streams unique to Alternative GW-6 include fouled packing material from the air stripping tower, spent activated carbon beds, and fouled reverse osmosis membranes from the carbon adsorption units. Secondary waste streams in solid form such as filter cartridges, air stripper packing material, spent carbon, and fouled reverse osmosis membranes, will generally be packaged directly into containers suitable for disposal. However, if solidification is required for any of these materials (based on ERDF requirements), size reduction may be necessary to ensure complete encapsulation in cement.

The cement solidification system and materials described previously for Alternative GW-5 would be identical to the cement solidification system requirements for this alternative. In general, the applicable secondary waste streams will be pretreated (if necessary), mixed with cement, and placed in Department of Transportation (DOT) approved containers. After the appropriate curing time has elapsed, solidified wastes will be transported by truck to the ERDF, W-025, or another site for disposal.

1.6.4 Disposal Distances and Location

1.6.4.1 Liquid Disposal. Disposal of liquid effluents generated by implementation of Alternative GW-6 is nearly identical to the previous discussion for Alternative GW-5. Surface discharge into cribs is specified for Alternative GW-6 as opposed to the reinjection/river discharge technique specified for Alternative GW-5.

1.6.4.2 Disposal of Solidified Residues. Disposal of solidified waste generated by implementation of Alternative GW-6 is identical to the previous discussion for Alternative GW-5.

9413294.3299

1.6.5 Groundwater Monitoring

As described previously in Alternative GW-5, post-treatment monitoring of 100 Area groundwater will be necessary to ensure that established remediation levels have been satisfied and additional sources of contamination are not discovered. The number and location of monitoring wells required will be determined based on contaminant distribution. Monitoring well design, equipment requirements, and installation are the same as described previously in Alternative GW-4.

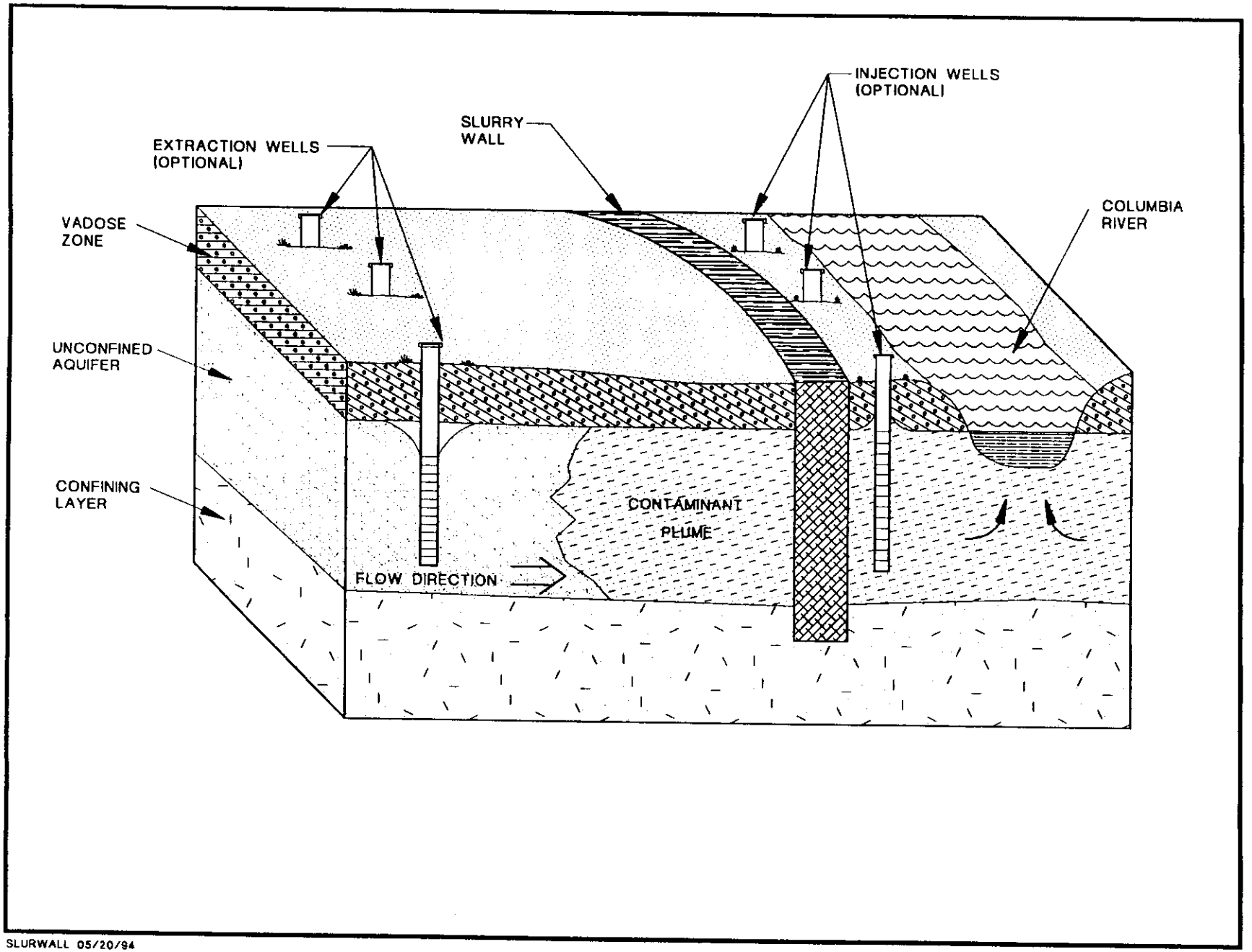

Figure B-1 Conceptual Vertical Barrier Alternative GW-3

Figure B-2 Conceptual In Situ Treatment Alternative GW-4

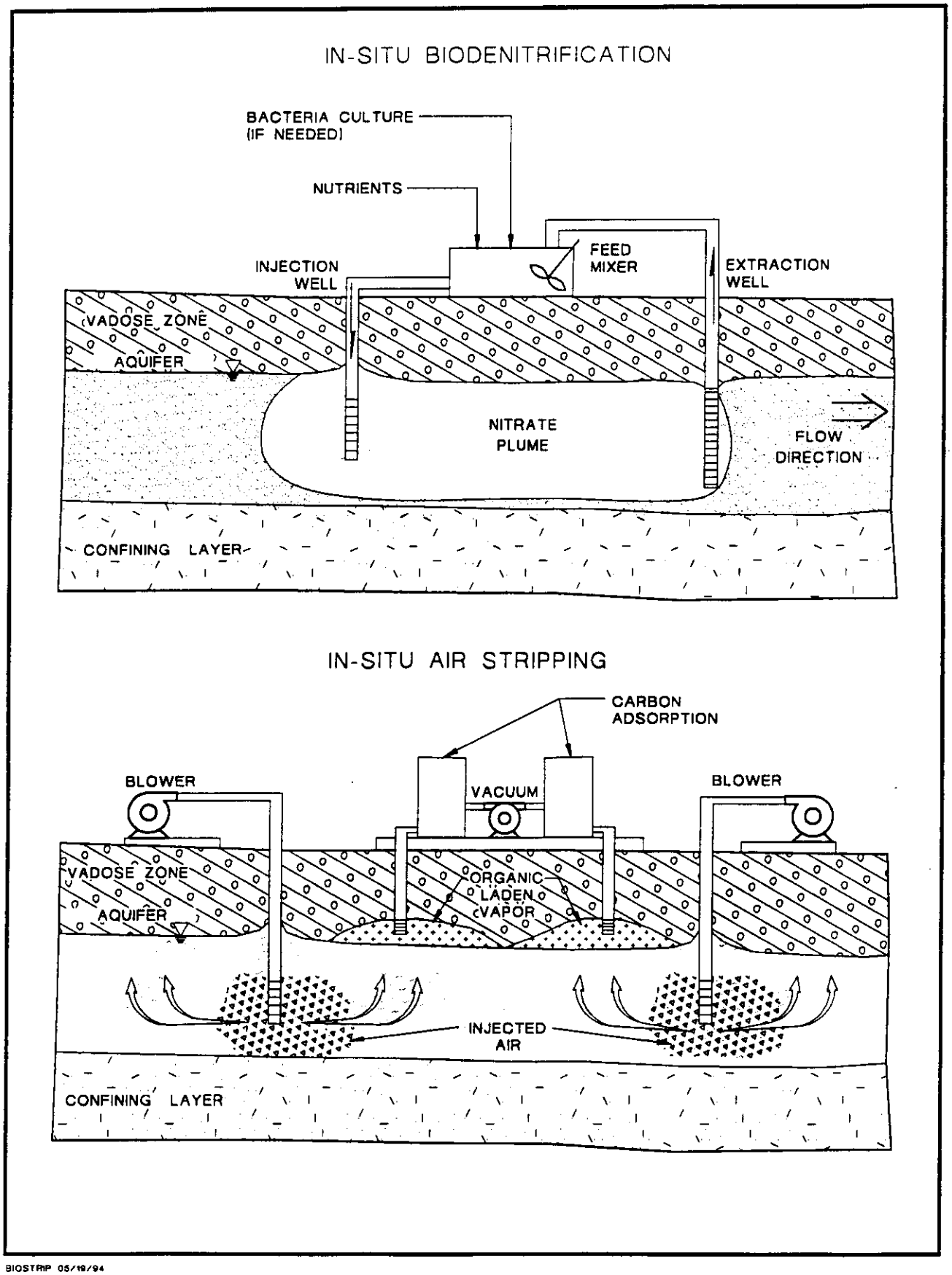

BIOSTRIP 05/19/94

Figure B-3 Conceptual Ion Exchange Treatment System for Alternative GW-5

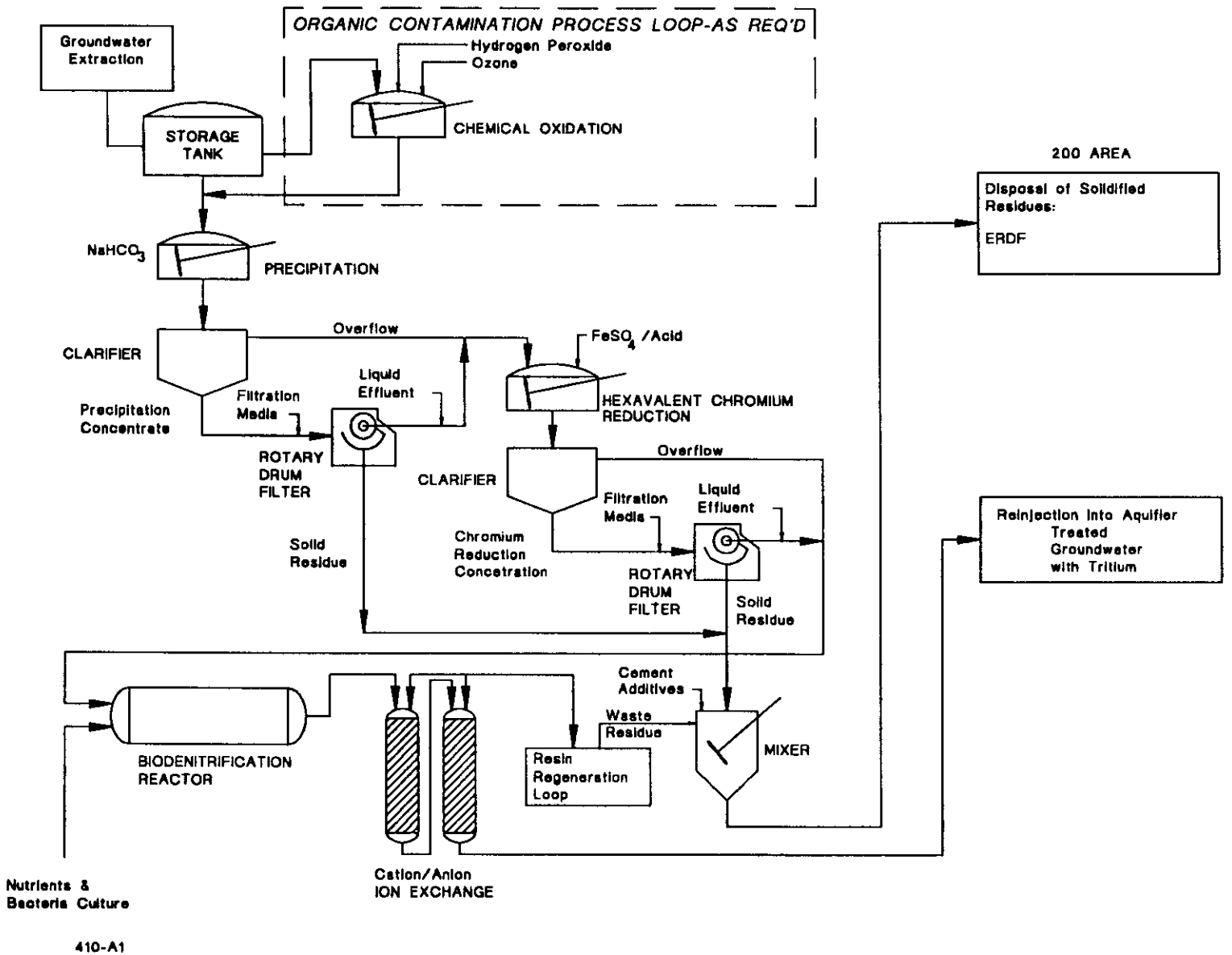

Figure B-4 Conceptual Reverse Osmosis Treatment System for Alternative GW-6

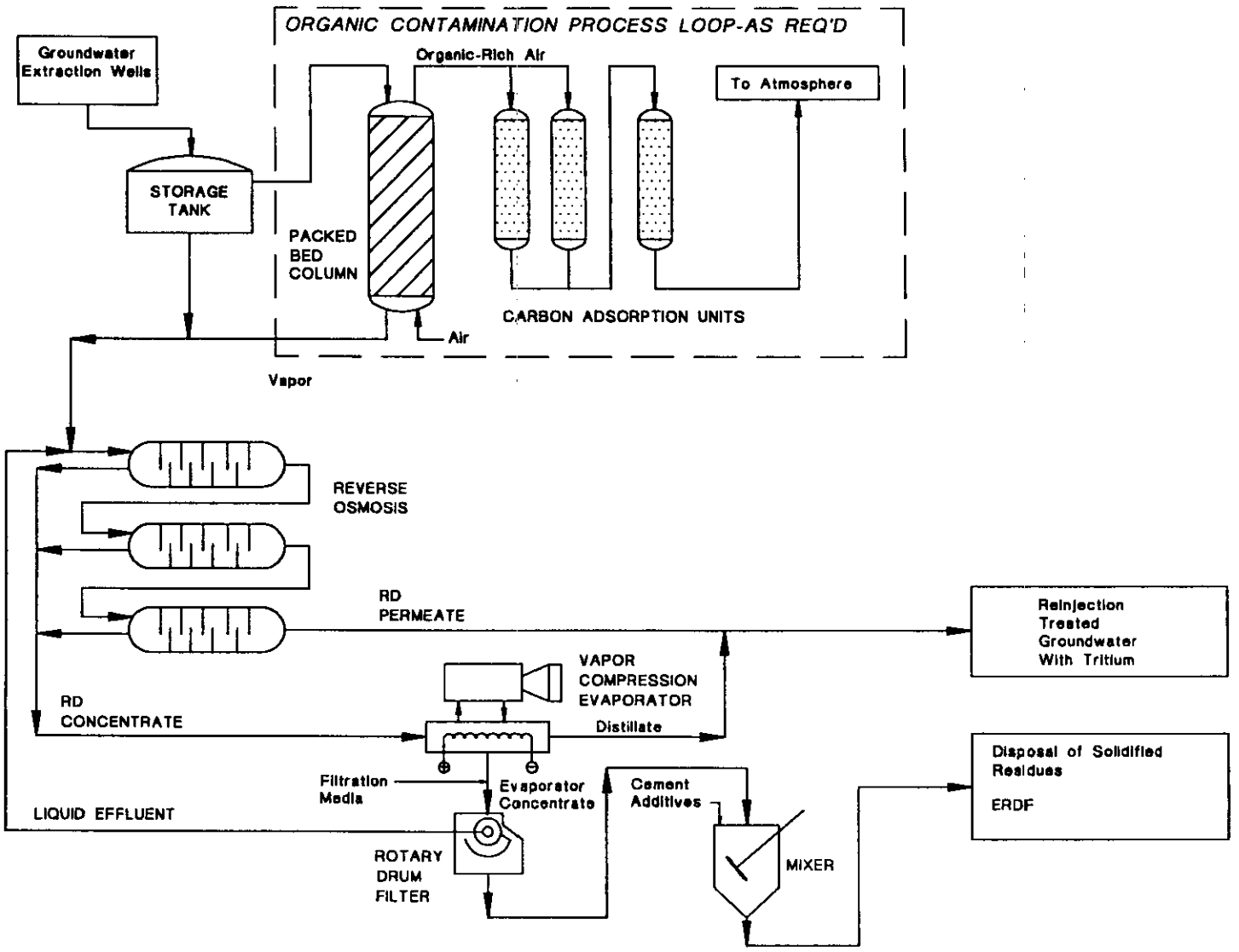

410-A2

Table B-1 Secondary Waste Streams for Alternative GW-5

Treatment Process	Description	Physical Form
Equalization storage tank	Tank bottoms	Sludge
Chemical oxidation	Filter cartridges	Solid
Chemical precipitation	Rotary drum filter cake	Filter cake
Chemical reduction	Rotary drum filter cake	Filter cake
Biodenitrification	Clarifier concentrate	Slurry
Ion exchange	Filter cartridges	Solid
	Spent ion exchange resins	Solid
	Regenerative waste	Slurry

9413294.3304

Table B-2 Secondary Waste Stream for Alternative GW-6

Treatment Process	Description	Physical Form
Equalization storage tank	Tank bottoms	Sludge
Air stripping	Filter cartridges	Solid
	Fouled packing	Solid
	Activated carbon	Solid
Reverse osmosis	Fouled membranes	Solid
Evaporator	Rotary drum filter cake	Filter cake

9413294.3305

THIS PAGE INTENTIONALLY
LEFT BLANK

9413294.3306

APPENDIX C

COST MODELS

THIS PAGE INTENTIONALLY
LEFT BLANK

1.0 COST MODEL DETAILS AND ASSUMPTIONS

This appendix presents the cost estimate details for the 100-KR-4 FFS. Included are assumptions and other criteria used to establish costs of implementing each remedial alternative. Four subsections are provided that include:

Section 1.1 Present Worth Tables
Capital expenditures and operation and maintenance costs are tabulated by year and linked with the discount factors to arrive at a present worth for that remedial technology. Dollar amounts for capital and operation and maintenance are taken from Cost Summary Sheets provided in Section 1.3.

Section 1.2 Cost Model Assumptions
Included are assumptions for each remedial alternative by task/subtask/sub-subtask. The source for costs associated with the task/subtask/sub-subtask assumption(s) are also provided.

Section 1.3 Cost Summary Sheets
The cost summary tables provide a link between the remedial alternative cost models and their respective present worth. It is here that capital and operation and maintenance costs are summed by year for subsequent entry into the present worth tables.

Section 1.4 Remedial Alternative Cost Models
Cost elements of each remedial alternative are listed by task/subtask/sub-subtask using the MCACES cost model software. Additional details such as lineal feet of pipe, pump size, and flow capacity of equipment are also included.

Adders such as tax, project management costs, and contingencies are introduced into the remedial alternative cost at this stage.

9413294.3308

SECTION 1.1 PRESENT WORTH TABLES

PRESENT WORTH CALCULATIONS

100-KR-4: INSTITUTIONAL CONTROLS/CONTINUED CURRENT ACTIONS

ANNUAL DISCOUNT RATE = 5%

YEAR	CAPITAL COST	O&M COST	DISCOUNT FACTOR	ANNUAL EXPENDITURE	PRESENT WORTH
0	$0	$0	1.0000	$0	$0
1	$0	$112,678	0.9524	$112,678	$107,315
2	$0	$82,598	0.9070	$82,598	$74,916
3	$0	$82,598	0.8638	$82,598	$71,348
4	$0	$82,598	0.8227	$82,598	$67,953
5	$0	$82,598	0.7835	$82,598	$64,716
6	$0	$82,598	0.7462	$82,598	$61,635
7	$0	$82,598	0.7107	$82,598	$58,702
8	$0	$82,598	0.6768	$82,598	$55,902
9	$0	$82,598	0.6446	$82,598	$53,243
10	$0	$82,598	0.6139	$82,598	$50,707
11	$0	$82,598	0.5847	$82,598	$48,295
12	$0	$82,598	0.5568	$82,598	$45,991
TOTALS	$0	$1,021,256			$760,723

TOTAL COST OF THE ALTERNATIVE: ***$760,723***

PRESENT WORTH CALCULATIONS

100-KR-4: VERTICAL BARRIER ALTERNATIVE (SLURRY WALL)

ANNUAL DISCOUNT RATE = 5%

YEAR	CAPITAL COST	O&M COST	DISCOUNT FACTOR	ANNUAL EXPENDITURE	PRESENT WORTH
0	$33,094,100	$0	1.0000	$33,094,100	$33,094,100
1	$0	$3,816,396	0.9524	$3,816,396	$3,634,736
2	$0	$3,784,936	0.9070	$3,784,936	$3,432,937
3	$0	$3,843,996	0.8638	$3,843,996	$3,320,444
4	$0	$3,784,936	0.8227	$3,784,936	$3,113,867
5	$0	$3,784,936	0.7835	$3,784,936	$2,965,497
6	$0	$3,843,996	0.7462	$3,843,996	$2,868,390
7	$0	$3,784,936	0.7107	$3,784,936	$2,689,954
8	$0	$3,784,936	0.6768	$3,784,936	$2,561,645
9	$0	$3,843,996	0.6446	$3,843,996	$2,477,840
10	$0	$3,784,936	0.6139	$3,784,936	$2,323,572
11	$0	$3,784,936	0.5847	$3,784,936	$2,213,052
12	$28,830	$3,784,936	0.5568	$3,813,766	$2,123,505
TOTALS	$33,122,930	$45,627,872			$66,819,538

TOTAL COST OF THE ALTERNATIVE: ***$66,819,538***

PRESENT WORTH CALCULATIONS

100-KR-4: REMOVAL, TREATMENT, AND DISPOSAL ALTERNATIVE WITH ION EXCHANGE

ANNUAL DISCOUNT RATE = 5%

YEAR	CAPITAL COST	O&M COST	DISCOUNT FACTOR	ANNUAL EXPENDITURE	PRESENT WORTH
0	$7,549,950	$0	1.0000	$7,549,950	$7,549,950
1	$0	$10,026,775	0.9524	$10,026,775	$9,549,501
2	$0	$6,331,265	0.9070	$6,331,265	$5,742,457
3	$0	$10,277,625	0.8638	$10,277,625	$8,877,812
4	$0	$6,331,265	0.8227	$6,331,265	$5,208,732
5	$0	$6,331,265	0.7835	$6,331,265	$4,960,546
6	$0	$10,277,625	0.7462	$10,277,625	$7,669,164
7	$0	$6,331,265	0.7107	$6,331,265	$4,499,630
8	$0	$6,331,265	0.6768	$6,331,265	$4,285,000
9	$0	$10,277,625	0.6446	$10,277,625	$6,624,957
10	$0	$6,331,265	0.6139	$6,331,265	$3,886,764
11	$0	$6,331,265	0.5847	$6,331,265	$3,701,891
12	$32,300	$6,331,265	0.5568	$6,363,565	$3,543,233
TOTALS	$7,582,250	$91,509,770			$76,099,636

TOTAL COST OF THE ALTERNATIVE: ***$76,099,636***

PRESENT WORTH CALCULATIONS

100-KR-4: REMOVAL, TREATMENT, AND DISPOSAL ALTERNATIVE WITH REVERSE OSMOSIS

ANNUAL DISCOUNT RATE = 5%

YEAR	CAPITAL COST	O&M COST	DISCOUNT FACTOR	ANNUAL EXPENDITURE	PRESENT WORTH
0	$12,871,100	$0	1.0000	$12,871,100	$12,871,100
1	$0	$3,530,250	0.9524	$3,530,250	$3,362,210
2	$0	$3,455,020	0.9070	$3,455,020	$3,133,703
3	$0	$3,780,950	0.8638	$3,780,950	$3,265,985
4	$0	$3,455,020	0.8227	$3,455,020	$2,842,445
5	$0	$3,455,020	0.7835	$3,455,020	$2,707,008
6	$0	$3,780,950	0.7462	$3,780,950	$2,821,345
7	$0	$3,455,020	0.7107	$3,455,020	$2,455,483
8	$0	$3,455,020	0.6768	$3,455,020	$2,338,358
9	$0	$3,780,950	0.6446	$3,780,950	$2,437,200
10	$0	$3,455,020	0.6139	$3,455,020	$2,121,037
11	$0	$3,455,020	0.5847	$3,455,020	$2,020,150
12	$32,280	$3,455,020	0.5568	$3,487,300	$1,941,729
TOTALS	$12,903,380	$42,513,260			$44,317,752

TOTAL COST OF THE ALTERNATIVE: ***$44,317,752***

9413294.3312

9413291.3313

SECTION 1.2 COST MODEL ASSUMPTIONS

KR-4 AREA INSTITUTIONAL CONTROLS/CURRENT ACTION

TASK NUMBER	ASSUMPTIONS	JUSTIFICATION
ANA:02.08.02. Ground Water Analysis (Yrs 1-12)	• Assume sampling of 7 monitoring wells on a semiannual basis for the 12-year lifecycle (14 samples/yr) • All on-site sample analyses performed by WHC mobile lab. • 10% off-site verification analysis of reduced analyte list with CLP protocol. (10% of 14 = 1 ea)	DOE Cost Meeting
WHC:02.08.02. Ground Water Analysis (Yrs 1-12)	• Assume sampling of 7 monitoring well on a semiannual basis for the 12-year lifecycle (14 samples/yr) - Total samples = 14 • 90% of samples for analysis at mobile lab (90% of 14 = 13)	DOE Cost Meeting
WHC:02.08.04. Ground Water Monitor Samples	• Assume sampling of 7 monitoring wells on a semiannual basis for the 12-year lifecycle. (14 samples/yr) • Assume 2 field technicians for 6 hours on a semiannual basis for the 12-year lifecycle. (24 hrs/yr)	DOE Cost Meeting
WHC:13.21.11 Prepare Annual Report (Yrs 1-12)	• Assume 2 FTE's for 6 months each year	HR-3 Cost Workshop

KR-4 AREA VERTICAL BARRIER (SLURRY WALL)

TASK NUMBER	ASSUMPTIONS	JUSTIFICATION
ANA:02.08.02. Ground Water Analysis Yr 1-12	• Assume sampling of 7 monitoring wells on a semiannual basis for the 12-year lifecycle. (14 samples) • Assume monthly performance monitoring of 7 wells for the 12-year lifecycle. (84 Samples) - Total samples = 98 • All on-site sample analyses performed by WHC mobile lab • 10% off-site verification analysis of reduced analyte list with CLP protocol. (10% of 98 = 10 ea)	Best professional judgement Best professional judgement DOE Cost Meeting DOE Cost Meeting
SUB:01.02.02 Mobilize Trailers	• Includes mobilization of field office, storage, and decontamination trailers	Best professional judgement
SUB:01.04.01 Setup Trailers	• Includes setup of field office, storage, and decontamination trailers	Best professional judgement
SUB:01.04.02. Construct Decon Area	• Construct decontamination area/pad for equipment and vehicles • Crew and Equipment: Fixed Price Contractor: 1 Group 6 Operator, 3 Group 1 Laborers, and 3 Group 2 Laborers Equipment: 1 Backhoe, 1 pickup truck Output: Assumed duration for this activity is 3 crew days. • Allowance for Tank Assume 1000 gal plastic tank for water collection	Best professional judgement
SUB:01.04.03 Site Survey	• Survey site for construction	Best professional judgement
SUB:01.05 Construct Temporary Utilities	• Includes connections for temporary electricity, telephone, water, and sewer facilities	Best professional judgement

TASK NUMBER	ASSUMPTIONS	JUSTIFICATION
SUB:01.06 Pre-Construction Submittals	• Includes pre-construction submittals by fixed-price contractor	Best professional judgement
SUB:03.03 Earthwork	• Includes dirtwork to prepare site	Best professional judgement
SUB:03.04. Roads/Parking/ Curbs/Walks	• Access Roads to Wells Assume 4750 lf of road per well, 10 ft wide, native materials 4750 lf/well x 14 wells - 19,000 lf	Well spacing utilized to estimate road placement, Richardson Cost Estimating Guide
SUB:03.06. Electrical Distribution	• Includes pulling power to site	Best professional judgement
SUB:06.01.01. Groundwater Collection and Control	• Drill/Install Extr/Inject Wells Note: 2 new extraction wells and 2 new injection wells, 105 ft deep, 8 in diameter, screened for 50 ft. Unit cost is assumed to include handling and packaging of contaminated well cuttings, transport to the disposal facility and associated disposal fees.	Modelling, geological reports, and actual costs from the WHC RCRA drilling program
	• Allowance for well Head Covers Assume manhole type cover at each well head	
	• Allowance for Well Pumps-20 gpm	
	• Allowance for Controls and Connections at Well Heads	Best professional judgement Richardson Cost Estimating Guide,
	• Allowance for Water Level Monitoring Instrumentation	Best professional judgement
	• Assume 5 piezometers per extraction well using well points	Best professional judgement
	• Allowance for well testing	Best professional judgement
		Best professional judgement

TASK NUMBER	ASSUMPTIONS	JUSTIFICATION
SUB:06.01.04. Operations and Maintenance 3,6,9	• Allowance for Well Workover Assume 1 every 3 years for each well for the 12-year lifecycle. Workovers in years 3,6,9 • Allowance for Well Pump Assume 1 pump replacement per extraction well every three years for the 12-year lifecycle. Pump replacement in years 3,6,9.	Best professional judgement Best professional judgement
SUB:06.01.9X. Site Piping	• Allowance for Piping from extraction well to distribution point. Assume 4750 lf of double-wall PVC piping per extraction well. 4750 lf/well x 2 wells = 9500 lf • Allowance for leak detection • Allowance for Force Main Discharge Piping Assume 4,750 lf double-wall PVC piping per injection well. 4,750 lf/well x 2 wells = 9500 lf	Well spacing utilized to estimate flow line length, Best professional judgement
SUB:06:03. Slurry Walls	• Construct slurry wall: Assume 105 ft. deep x 9500 lf = 997,500 sf. • Install soil cap over barrier	Vendor quote
SUB:20.04 Site Restoration	• Includes revegetation at end of project	Best professional judgement
SUB:21.02.02 Demobilize Trailers	• Demobilize field office, storage, and decontamination trailers	Best professional judgement
SUB:21.04.02. Remove Decon Area	• Work to be performed: Remove decontamination area/pad for equipment and vehicles • Crew and Equipment: Fixed Price Contractor: 1 Group 6 Operator, 3 Group 1 Laborers, and 3 Group 2 Laborers Equipment: 1 backhoe, 1 pickup Output: Assumed duration for this activity is 1 crew day.	Best professional judgement
SUB:21.05 Disconnect Temporary Utilities	• Includes disconnecting electricity, telephone, water, and sewer services	Best professional judgement

TASK NUMBER	ASSUMPTIONS	JUSTIFICATION
SUB:21.06 Post-Construction Submittals	• Includes post-construction submittals by fixed-price contractor	Best professional judgement
WHC:02.08.02. Ground Water Analysis	• Assume sampling of 7 monitoring wells on a semiannual basis for the 12-year lifecycle. (14 samples) • Assume monthly performance monitoring of 7 wells for the 12-year lifecycle. (84 samples) - Total samples = 98 • 90% of samples analyzed by mobile lab (90% of 98 = 88) • All on-site samples analyses performed by WHC mobile lab	DOE Cost Meeting
WHC:02.08.04. Take Ground Water Samples	• Assume sampling of 7 monitoring wells on a semiannual basis for the 12-year lifecycle. (14 samples) • Assume 2 Field Technicians for 6 hours on a semiannual basis for the 12-year lifecycle. (24 hrs/yr)	DOE Cost Meeting Best Professional Judgement
WHC:06.03. Groundwater Collection and Control, Slurry Wall Yr. 1	• Assume WHC QA and safety oversite for the construction project.	Best professional judgement
WHC:06.05. Slurry Wall Operation and Maintenance	• Allowance for Electricity Wells: 147 kW-h/d Assume 24 hr/day x 365 days/yr Total = 53,655 kW-h/yr	Vendor catalogs, vendor quotes
WHC: 13.21.11. Prepare Annual Report (Yr 1)	• Assume 2 FTE's for 6 months per year	HR-3 Cost Workshop
WHC: 13.21.12 Prepare Annual Report (Yrs. 2-12)	• Assume 2 FTE's for 4 months per year	HR-3 Cost Workshop

KR-4 AREA ION EXCHANGE

TASK NUMBER	ASSUMPTIONS	JUSTIFICATION
ANA:02.08.02. Ground Water Analysis Yr - 1	• Assume shake-down period with following sampling of treatment system: - First 2 days: Sample every four hours of influent and effluent (24 samples) - Next 5 days: 1 sample per day of influent and effluent (10 samples) - Next 7 weeks: 1 sample per week of influent and effluent (14 samples)	Best professional judgement
	• 1 sample per ion exchange media canister regeneration (7 days) of the influent and effluent for the 12-yr lifecycle (104 samples/yr)	Best professional judgement
	• Assume sampling of 7 monitoring wells on a semiannual basis for the 12-year lifecycle (14 samples/yr) - Total samples = Yr 1 - 166	Best professional judgement
	• All on-site sample analyses performed by WHC mobile lab	DOE Cost Meeting
	• 10% off-site verification analysis of reduced analyte list with CLP protocol. - (10% of 166 = 17 ea)	DOE Cost Meeting
ANA:02.08.03. Ground Water Analysis Yrs 2-12	• Assume 1 sample per ion exchange media canister regeneration (7 days) of influent and effluent for the 12-yr lifecycle. 104 samples/yr)	Best professional judgement
	• Assume sampling of 7 monitoring wells on a semiannual basis for the 12-yr lifecycle (14 samples/yr)	Best professional judgement
	• All on-site samples analyses performed by WHC mobile lab	DOE Cost Meeting
	• 10% off-site verification analysis of reduced analyte list with CLP protocol (10% of 118 = 12 ea)	DOE Cost Meeting

TASK NUMBER	ASSUMPTIONS	JUSTIFICATION
SUB:01.02.02 Mobilize Trailers	• Includes mobilization of field office, storage, and decontamination trailers	Best professional judgement
SUB:01.04.01 Setup Trailers	• Includes setup of field office, storage, and decontamination trailers	Best professional judgement
SUB:01.04.02. Construct Decon Area	• Work to be Performed: Construct decontamination area/pad for equipment and vehicles. • Crew and Equipment Fixed Price Contractor: 1 Group 6 Operator, 3 Group 1 Laborers, and 3 Group 2 Laborers Equipment: 1 backhoe, 1 pickup truck • Output: Assumed duration for this activity is 3 crew days • Allowance for Tank Assume 1000 gal plastic tank for water collection	Best professional judgement
SUB:01.04.03 Site Survey	• Survey site for construction	Best professional judgement
SUB:01.05 Construct Temporary Utilities	• Includes connections for temporary electricity, telephone, water, and sewer facilities	Best professional judgement
SUB:01.06 Pre-Construction Submittals	• Includes pre-construction submittals by fixed-price contractor	Best professional judgement
SUB:03.03 Earthwork	• Includes dirtwork to prepare site	Best professional judgement
SUB:03.04. Roads/Parking/Curbs/ Walks	• Access Roads to Wells Assume 3000 lf of road per well, 10 ft wide, native materials 3000 lf/well x 22 wells = 66,000 lf	Well spacing utilized to estimate road placement, Richardson Cost Estimating Guide
SUB:03.05. Fencing	• Allowance for Permanent Fencing Assume 7 ft high security fence	Industry standard, Best professional judgement
SUB:03.06 Electrical Distribution	• Includes pulling power to site	Best professional judgement

TASK NUMBER	ASSUMPTIONS	JUSTIFICATION
SUB:06. Groundwater Collection and Control	• Drill/install extraction wells Note: 11 new extraction and 11 new injection wells, 100 ft deep, 8 in diameter, screened for 50 ft. Unit cost is assumed to include handling and packaging of contaminated well cuttings, transport to the disposal facility, and associated disposal fees.	Modelling, geological reports, and actual costs from WHC RCRA drilling program
	• Allowance for Well Pumps and Installation-100 GPM	Richardson Cost Estimating Guide,
	• Allowance for Controls and Connections at Well Heads	Best professional judgement
	• Allowance for Water Level Monitoring Instrumentation	Best professional judgement
	• Assume 5 peizometers per extraction well using well points.	Best professional judgement
	• Allowance for Well Head Covers Assume manhole type cover at each well head	Best professional judgement
	• Allowance for Well Testing	Best professional judgement
SUB:06.01.04. Operations and Maintenance 3, 6, 9	• Allowance for Well Workover Assume 1 workover every 3 yrs for each well for the 12-year lifecycle. Workovers in year 3,6,9	Best professional judgement
	• Allowance for Well Pump Replacement Assume one pump replacement and installation per well every 3 years for the 12-year lifecycle Replacement in years 3,6,9	Best professional judgement

TASK NUMBER	ASSUMPTIONS	JUSTIFICATION
SUB:06.01.9X. Site Piping	• Allowance for Piping from Well Head to Treatment Plant Assume 3000 lf of double-wall PVC piping per extraction well 3000 lf/well x 11 wells = 33,000 lf • Allowance for Leak Detection • Allowance for Force Main Discharge Piping Assume 3000 lf single-wall PVC piping per injection well 3000 lf/well x 11 wells = 33000 lf	Well spacing utilized to estimate flow line length, Best professional judgement
SUB:12. Chemical Treatment	• Excavate and Install Building Foundation Install Butler Building Assume a prefabricated heated building complete with frame, doors, roll up doors, gutters, insulation, and roof vent.	Vendor quote
	• Ion Exchange Equipment/Staging Includes 1 x 1100 gpm treatment system, resin regen equipment, 531 vessels. Resin included in O&M.	Vendor quote, results from treatability study
	• Precipitation system/Sludge tank Liquid loading = 20 gpm	Vendor quote
	• Allowance for Bldg Electrical Includes lighting, fixtures, motor starters, controllers, junction boxes, transformer, chart recorders, annunciators, panels, conduit, and wiring.	Best professional judgement
	• Allowance for Bldg Mechanical Includes equipment installation and connections, controls/instrumentation, interior piping (plastic), floor drains and piping, and HVAC.	Best professional judgement
SUB:20.04 Site Restoration	• Includes revegetation at end of project	Best professional judgement
SUB:21.02.02 Demobilize Trailers	• Demobilize field office, storage, and decontamination trailers	Best professional judgement

TASK NUMBER	ASSUMPTIONS	JUSTIFICATION
SUB:21.04. Demobilize Temp Facilities	• Includes removal of decontamination area • Crew and Equipment: Fixed Price Contractor:1 Group 6 Operator, 3 Group 1 Laborer, and 3 Group 2 Laborers • Equipment: 1 backhoe, 1 pickup truck • Output: Assumed duration for this activity is 1 crew day	Best professional judgement
SUB:21.05 Disconnect Temporary Utilities	• Includes disconnecting electricity, telephone, water, and sewer services	Best professional judgement
SUB:21.06 Post-Construction Submittals	• Includes post-construction submittals by fixed-price contractor	Best professional judgement
WHC:02.08.02. Ground Water Analysis Yr - 1	• Assume shake-down period with following sampling of treatment system: - First 2 days: Sample every four hours of influent and effluent (24 samples) - Next 5 days: 1 sample per day of influent and effluent (10 samples) - Next 7 weeks: 1 sample per week of influent and effluent (14 samples/yr)	Best professional judgement, cost meeting
	• Assume 1 sample per ion exchange media regeneration (7 days) of the influent and effluent for the 12-yr lifecycle (104 samples/yr)	Best professional judgement
	• Assume sampling of 7 monitoring wells on a semiannual basis for the 12-yr lifecycle (14 samples/yr) - Total samples Yr. 1 = 166	DOE Cost Meeting
	• 90% of samples analyzed a mobile lab (90% of 166 = 149)	DOE Cost Meeting
	• HACH kit samples are taken 1 per shift for the 12-yr lifecycle plus an additional 48 samples during the shake-down period. (Yr 1 = 1,143 samples)	DOE Cost Meeting

TASK NUMBER	ASSUMPTIONS	JUSTIFICATION
WHC:02.08.03. Ground Water Analysis Yr 2 - 12	• Assume 1 sample per ion exchange media canister regeneration (7 days) of the influent and effluent for the 12-yr lifecycle. (104 samples/yr)	Best professional judgement
	• Assume sampling of 7 monitoring wells on a semiannual basis for the 12-year lifecycle. (14 samples/yr)	DOE Cost Meeting
	- Total Samples Yrs 2-12 = 118	
	• 90% of samples analyzed at mobile lab (90% of 118 = 106)	DOE Cost Meeting
	• HACH kit samples are taken 1 per shift for the 12-yr lifecycle. (1,095 samples/year)	DOE Cost Meeting
WHC:02.08.04. Ground Water Monitor Samples	• Assume sampling of 7 monitoring wells on a semiannual basis for the 12-year lifecycle. (14 samples/yr)	DOE Cost Meeting
	• Assume 2 field technicians for 6 hours on a semiannual basis for the 12-year lifecycle. (24 hrs/yr)	Best professional judgement
WHC:12.05.06 Personnel Training	• Includes operator time and allowance to attend 40-hour training	Best professional judgement

TASK NUMBER	ASSUMPTIONS	JUSTIFICATION
WHC:12.05.08 Operations & Maintenance Yrs 1-12	• Treatment facility will be fully staffed with 2 FTE's per shift, 3 shifts per day, 7 days per week. (365 days/yr x 24 hrs/day = 8760 hrs/yr)	Best professional judgement
	• Ion exchange media to be regenerated every 7 days for Carbon 14, Chrome X1, and zinc treatment	Vendor quote, treatability test report results
	• 2 FTE crew will be composed of the following members: 0.25 ea - supervisor 1.00 ea - operator 0.50 - TP tech support 0.25 ea - maintenance engineer	
	• Allowance for electricity Wells: 3014 kW-hr/d Precip/Sludge system: 627 kW-hr/d Assume 24 hrs/day x 365 days/yr Total = 1,328,965 kW-hr/yr	Vendor catalogs, vendor quotes
	• Allowance for Water Usage Water for regen solution and rinse during resin regeneration. Resin regeneration every 7 days. Assume 2 vessel volumes regen solution to regen and 6 vessel volumes to rinse. 531 vessels x (2+6 vessel volumes) x 50 cf/vessel x 1/wk x 52 wk/yr = 212,400 cf/yr (8,920,800 gal/yr)	Best professional judgement

TASK NUMBER	ASSUMPTIONS	JUSTIFICATION
WHC:12.05.08 Operation and Maintenance Yrs 1-12 (Continued)	• Disposal Fee for Regen Solids Media Derived from resin regeneration. Assume disposal at ERDF for years 1-12 of the 12-year lifecycle Resin Regeneration NaOH: 33,045 cf/yr HCl: 29,223 cf/yr Precipitation Solids COCs: 613 cf/yr Total = 62,881 cf/yr Assume 50% volume increase to stabilize solids 1.5 x 62,881 cf/yr = 94,322 cf/yr	Vendor quote
	• Allowance for NaOH to Regenerate Resin Assume 2 vessel volumes/wk of 5% NaOH to regenerate resin. Requires 80,500 lbs/wk of NaOH x 52 wks/yr = 4,186,000 lbs/yr (12,312 drums/yr)	Vendor quote
	• Allowance for HCl to regenerate resin Assume 2 vessel volumes/wk of 5% HCl to regenerate resin. Requires 52,250 lbs/wk of HCl x 52 wks/yr = 2,717,00 lbs/yr (17,529 drums/yr)	Vendor quote
WHC:12.05.09 Operation and Maintenance Yrs 1,3,6,9	• Replace Anion Resin Replace resin every 3 years. Initial loading in year 1 subsequent replacements in years 3,6,9. 322 vessels x 45 cf/vessel = 14,490 cf	Vendor quote
	• Replace Cation Resin Replace resin every three years. Initial loading in year 1, subsequent replacements in years 3,6,9. 209 vessels x 45 cf/vessel = 9,405 cf	Vendor quote
	• Disposal Fee for Ion Exchange Media Assume disposal at ERDF for years 3,6,9,12	Vendor quote
WHC:12.05.11. Prepare Annual Report Yr 1	• Assume 2 FTE's for 6 months each year	HR-3 Cost Workshop

TASK NUMBER	ASSUMPTIONS	JUSTIFICATION
WHC:12.05.12. Prepare Annual Report Yrs 2-12	• Assume 2 FTE's for 4 months each year	HR-3 Cost Workshop

KR-4 AREA REVERSE OSMOSIS

TASK NUMBER	ASSUMPTIONS	JUSTIFICATION
ANA:02.08.02. Ground Water Analysis (YR 1)	• Assume shake-down period with the following sampling schedule for the treatment system: - First 2 days: Samples every four hours of influent and effluent (24 samples) - Next 5 days: 1 sample per day of influent and effluent (10 samples) - Next 7 weeks: 1 sample per week of influent and effluent (14 samples)	Best professional judgement
	• 1 sample per filter change out (1 week) of the influent and effluent for the 12-yr lifecycle (104 samples/yr)	Best professional judgement
	• Assume sampling of 7 monitoring wells on a semiannual basis for the 12-year lifecycle (14 samples/yr) - Total samples = 166	Best professional judgement
	• All on-site samples analyses performed by WHC mobile lab	DOE Cost Meeting
	• 10% off-site verification analysis of reduced analyte list with CLP protocol. (10% of 166 = 17 ea)	DOE Cost Meeting
ANA:02.08.03. Ground Water Analysis (YRS 2-12)	• Assume 1 sample per filter change out (1 week) of the influent and effluent for the 12-yr lifecycle. (104 samples/yr)	Best professional judgement
	• Assume sampling of 7 monitoring wells on a semiannual basis for the 12-year lifecycle (14 samples/yr) - Total Samples = 118	Best professional judgement
	• All on-site sample analyses performed by WHC mobile lab	DOE Cost Meeting
	• 10% off-site verification analysis of reduced analyte list with CLP protocol (10% of 118 = 12)	DOE Cost Meeting
SUB:01.02.02 Mobilize Trailers	• Includes mobilization of field office, storage, and decon trailers	Best professional judgement
SUB:01.04.01. Setup/Construct Temporary Facilities	• Includes setup of field office, storage, and decon trailers	Best professional judgement

TASK NUMBER	ASSUMPTIONS	JUSTIFICATION
SUB:01.04.02. Construct Decon Area	• Work to be performed: Construct decontamination area/pad for equipment and vehicles. • Crew and Equipment • Fixed Price Contractor: 1 Group 6 Operator, 3 Group 1 Laborers, 3 Group 2 Laborers Equipment: 1 backhoe, 1 pickup truck Assumed duration for this activity is 3 crew days. • Allowance for Tank Assume 1000 gal plastic tank for water collection	Best professional judgement
SUB:01.04.03. Site Survey	• Survey site for construction	Best professional judgement
SUB:01.05. Construct Temporary Utilities	• Includes connections for temporary electricity, telephone, water, and sewer services	Best professional judgement
SUB:01.06. Pre-Construction Submittals	• Includes pre-construction submittals by fixed-price contractor	Best professional judgement
SUB:03.03. Earthwork	• Includes dirtwork to prepare site	Best professional judgement
SUB:03.04. Roads/Parking/ Curbs/Walks	• Assume 3000 lf of access road per well. 10 ft wide, native materials 3000 lf/well x 22 wells = 66,000 lf	Well spacing utilized to estimate road placement, Richardson Cost Estimating Guide
SUB:03.05. Fencing	• Allowance for Permanent Fencing Assume 7 ft high security fence	Industry standard, Best professional judgement
SUB:03.06 Electrical Distribution	• Includes pulling power to site	Best professional judgement

TASK NUMBER	ASSUMPTIONS	JUSTIFICATION
SUB:06. Groundwater Collection & Control	• Drill/Install Extr/Inject Wells Note: 11 new extraction wells and 11 new injection wells, 100 ft deep, 8 in diameter, screened for 50 ft. Unit cost is assumed to include handling and cuttings, transport to the disposal facility, and associated disposal fees. • Allowance for Well Pumps - 100 gpm • Allowance for controls and connections at well heads • Allowance for Water Level Monitoring Instrumentation Assume 5 peizometers per extraction well using well points • Allowance for Well Head Covers Assume manhole type cover at each well head • Allowance for Well Testing	Modelling, geological reports, and actual costs form WHC RCRA Drilling Program Richardson Cost Estimating Guide, Best professional judgement Best professional judgement Best professional judgement
SUB:06.01.04 Operations and Maintenance 3,6,9	• Allowance for Well Workover Assume 1 workover for every 3 yrs. for each well; workovers in years 3,6,9 • Allowance for Well Pump Replacement. Assume 1 pump replacement per extraction well every 3 years; pump replacements in years 3,6,9	Best professional judgement Best professional judgement
SUB:06.01.9X. Site Piping	• Allowance for Piping from Well Head to Treatment Plant Assume 3000 lf of double-wall PVC piping per extraction well. 3000 lf/well x 11 wells = 33,000 lf • Allowance for Force Main Discharge Piping Assume 3000 lf of single-wall PVC for each injection well. 3000 lf/well x 11 wells - 33,000 lf	Well spacing utilized to estimate flow line length, Best professional judgement

Table 6-2 Detailed Analysis for GW-2, Institutional Controls/Continued Current Actions Alternative (Page 1 of 8)

OVERALL PROTECTION OF HUMAN HEALTH AND THE ENVIRONMENT	ALTERNATIVE GW-2: INSTITUTIONAL CONTROLS/CONTINUED CURRENT ACTIONS
Will risk be at acceptable levels?	Human Health: Yes, current human health risk is low (ICR 10^{-6} to 10^{-4}, HQ < 1) for the occasional use scenario, based on the QRA. Environment: Uncertain; potential ecological risk exists based on concentrations of chromium, zinc, and carbon-14 in the near-river well samples that exceeded ecological ARAR levels; however, the actual risk at the groundwater/river interface has not been quantified. Near-river well concentrations do not account for mixing at the river-aquifer interface. Concentrations of chromium in the Columbia River were nondetectable; information on the concentrations of carbon-14 in the Columbia River is not available (DOE-RL 1993c). No quantification of risks associated with the substrate has been made.
Timeframe to achieve acceptable levels?	The institutional controls/continued current actions alternative does not affect concentration levels in the IRM period (year 2008). These concentrations may increase as the peak concentrations in the plume approach the river.
Will additional threats be minimized?	No additional threats result from implementation of this alternative.

Table 6-2 Detailed Analysis for GW-2, Institutional Controls/Continued Current Actions Alternative (Page 2 of 8)

COMPLIANCE WITH ARAR	ALTERNATIVE GW-2: INSTITUTIONAL CONTROLS/CONTINUED CURRENT ACTIONS
What are the potential ARAR?	See Table 6-6.
Will the potential ARAR be met? How?	See Table 6-6.
Basis for waivers?	This alternative represents an IRM preceding a final remedial action to be implemented by the year 2008. The final remedial action should be selected to ensure compliance with ARAR.
What are the potential TBC?	See Table 6-6.
Is the alternative consistent with TBC listed above	See Table 6-6.

Table 6-2 Detailed Analysis for GW-2, Institutional Controls/Continued Current Actions Alternative (Page 3 of 8)

LONG-TERM EFFECTIVENESS AND PERMANENCE	ALTERNATIVE GW-2: INSTITUTIONAL CONTROLS/CONTINUED CURRENT ACTIONS
What is the magnitude of the remaining risk?	The potential ecological risk identified in the QRA will remain. The COC concentrations in the near-river wells would not be reduced and might increase slightly as the peak COC concentrations in the plume approach the river. However, these risks have not been quantified.
What remaining sources of risk can be identified?	The source of risk remaining after implementation of the no action alternative will be that associated with the plume concentrations above the EPA Ambient Water Quality Criteria levels. Currently, concentrations of chromium in the river near the operable unit are nondetectable. Waste sites in the source operable units will be remediated with IRM thereby further reducing the sources of contamination.
What is the likelihood that the technologies will meet performance needs?	Remedial technologies are not included in the no action alternative. However, monitoring and government control of the site is assumed to continue through the IRM period. These actions will restrict public access and provide warning of changes in contaminant migration.
What type and degree of long-term management is required?	Long-term management requirements for this alternative involve continued access restriction enforcement and groundwater monitoring through the duration of the IRM period (year 2008). Remedial actions beyond the IRM period will be addressed by a comprehensive risk assessment and final remedial action. Long-term management requirements beyond 2008 will be addressed by the final remedial action.
What are the requirements for long-term monitoring?	The current monitoring program will continue through the duration of the IRM period (year 2008). Evaluations will be made periodically (i.e. every 5 years) to determine need for additional remedial action or changes to the monitoring program. Long-term monitoring requirements beyond 2008 will be addressed by the final remedial action selected.
What O&M functions must be performed?	O&M will be required throughout the IRM period to perform and maintain groundwater monitoring activities and to continue site security.
What difficulties may be associated with long-term O&M?	Based on government control of the Hanford Site, no foreseeable difficulties have been identified.

Table 6-2 Detailed Analysis for GW-2, Institutional Controls/Continued Current Actions Alternative (Page 4 of 8)

LONG-TERM EFFECTIVENESS AND PERMANENCE	ALTERNATIVE GW-2: INSTITUTIONAL CONTROLS/CONTINUED CURRENT ACTIONS
What is the potential need for replacement of technical components?	Periodic replacement or refurbishing of groundwater monitoring wells might be required.
What is the magnitude of risk if the remedial action needs replacement?	Negligible risk is associated with maintenance or replacement of groundwater monitoring wells. These activities primarily involve physical hazards to workers (i.e., during drilling activities).
What is the degree of confidence that controls can adequately handle potential problems?	The number of monitoring wells currently in place is considered adequate to effectively monitor the migration of contaminant plumes within the 100 K Area. The frequency of sampling and the number of samples obtained can facilitate accurate monitoring results.
How is the removed contamination disposed of?	Not applicable. Outside of wastes generated during monitoring activities, no contaminants will be removed from the aquifer.
What are potential final actions?	Potential final actions likely include no action, institutional controls, and pump and treat for mass reduction. The vertical barrier option is not considered for final action because chromium is persistent in the environment and does not readily degrade. The wall will contain the chromium by lengthening the travel time for the contaminants to reach the river; however, the contaminants will eventually migrate around the wall.
Is the alternative for the IRM compatible with potential final actions.	Yes. The institutional controls/continued current actions alternative for IRM would allow time for source cleanup and additional information collection through the treatability test in 100-HR-3 prior to implementing a final action. The institutional controls/continued current actionsalternative is compatible with both the no action and institutional controls final actions in that these are simply an extension of the IRM no action alternative.

Table 6-2 Detailed Analysis for GW-2, Institutional Controls/Continued Current Actions Alternative (Page 5 of 8)

REDUCTION OF TOXICITY, MOBILITY, OR VOLUME	ALTERNATIVE GW-2: INSTITUTIONAL CONTROLS/CONTINUED CURRENT ACTIONS
Does the treatment process address the principal threats?	The principal threat of a release of COC into the river is not addressed by this alternative. However, the magnitude of this threat has not been quantified.
Are there any special requirements for the treatment process?	Not applicable. This alternative does not involve a treatment process.
What portion of the contaminated material is treated/destroyed?	Not applicable. Contaminated material is neither treated nor destroyed.
To what extent is total mass of toxic contaminants reduced?	This alternative will not result in a reduction of contaminant mass.
To what extent is the mobility of toxic contaminants reduced?	This alternative will not result in a reduction of contaminant mobility.
To what extent is the volume of toxic contaminants reduced?	This alternative will not result in a reduction of contaminant volume.
To what extent are the effects of the treatment irreversible?	Not applicable. No treatment is involved in this alternative. However, it should be noted that contaminant migration into the river as well as the movement of contaminant plumes is irreversible.
What are the quantities of residuals and characteristics of the residual risks?	No treatment is associated with this alternative. Therefore, no residuals will be generated.
What risk do treatment of residuals pose?	Not applicable. Refer to the previous response listed above.
Is treatment used to reduce inherent hazards posed by principal threats at the site?	The inherent hazards associated with the principal threat are not reduced as no treatment is associated with this alternative.

Table 6-2 Detailed Analysis for GW-2, Institutional Controls/Continued Current Actions Alternative (Page 6 of 8)

SHORT-TERM EFFECTIVENESS	ALTERNATIVE GW-2: INSTITUTIONAL CONTROLS/CONTINUED CURRENT ACTIONS
What are the risks to the community during remedial actions that must be addressed?	None.
How will the risks to the community be addressed and mitigated?	Not applicable.
What risks remain to the community that cannot be readily controlled?	None.
What are the risks to the workers that need to be addressed?	Risks to workers are associated with groundwater monitoring activities. Minimal exposure risks are anticipated and the exposure duration is estimated to be 12 hours per year per worker.
What risks remain to the workers that cannot be readily controlled?	None.
How will the risks to the workers be addressed and mitigated?	Workers involved with monitoring activities will be required to undergo extensive training in sample collection and handling procedures. Health and safety protocols will be established and enforced, such as specification of personal protection equipment, safe work practices, contamination control measures, and decontamination procedures.
What environmental impacts are expected with the construction and implementation of the alternative?	Not applicable. Construction is not required to implement this alternative. Existing monitoring wells will be utilized and negligible impacts are anticipated if periodic well maintenance is required.
What are the impacts that cannot be avoided should the alternative be implemented?	There are no impacts.
How long until remedial action objectives are achieved?	Due to the persistence of the COC, the concentrations in the near-river wells will remain elevated during the IRM period. Because the chromium concentrations in the river are nondetectable, the RAO may be satisfied for that contaminant. The risks associated with the COC have not been quantified at the receptor. The final remedial action should ensure that the RAO are appropriate and achieved within a reasonable timeframe.

Table 6-2 Detailed Analysis for GW-2, Institutional Controls/Continued Current Actions Alternative (Page 7 of 8)

IMPLEMENTABILITY	ALTERNATIVE GW-2: INSTITUTIONAL CONTROLS/CONTINUED CURRENT ACTIONS
What difficulties and uncertainties are associated with construction?	Not applicable. Construction is not required for the implementation of this alternative.
What is the likelihood that technical problems will lead to schedule delays?	See the previous response listed above.
What likely future remedial actions are anticipated?	Future remedial actions are not anticipated within the time frame of IRM (year 2008). Final remedial actions will be determined during the IRM timeframe.
What risks of exposure exist should monitoring be insufficient to detect failure?	Since this alternative does not involve the use of active remedial measures, groundwater monitoring failure would not result in exposure risks other than what is currently present (migration of COC into the Columbia River at concentrations above ecological ARAR, EPA Water Quality Criteria). The human health risk under the occasional-use scenario would be low.
What activities are proposed which require coordination with other agencies?	None.
Are adequate treatment, storage capacity, and disposal services available?	Treatment, storage, and disposal are readily available for disposal of monitoring waste.
Are the necessary equipment and specialists available?	Yes, groundwater monitoring is a well-established technology.
What additional equipment and specialists are required and what are their potential impacts to implementation?	None. See the previous response listed above.
Are technologies under consideration generally available and sufficiently demonstrated?	Yes, groundwater monitoring is a well-established technology.
Will technologies require further development before they can be applied at the site?	No.
Will more than one vendor be available to provide a competitive bid?	Yes, groundwater monitoring equipment and services are commercially available.

Table 6-2 Detailed Analysis for GW-2, Institutional Controls/Continued Current Actions Alternative (Page 8 of 8)

COST COMPONENT	ALTERNATIVE GW-2: INSTITUTIONAL CONTROLS/CONTINUED CURRENT ACTIONS
Capital	$0
Operation and Maintenance	$1,000,000
Present Worth	$760,000

ICR - incremental cancer risk
HQ - hazard quotient
QRA - qualitative risk assessment
ARAR - applicable or relevant and appropriate requirements
IRM - interim remedial measures
TBC - to be considered
O&M - operations and maintenance
COC - contaminants of concern
EPA - U.S. Environmental Protection Agency
RAO - remedial action objective

9413294.3338

TASK NUMBER	ASSUMPTIONS	JUSTIFICATION
SUB:13.21.04. Construction of Permanent Plant	• Excavate and Install Building Foundation • Install Butler Building Assume a prefabricated heated building complete with frame, doors, roll up doors, gutters, insulation, and roof vent. • Reverse Osmosis Equipment/Staging Includes 1 - 1100 gpm treatment system, 225 psi inlet pressure, 10% reject • Vapor Recompression Evaporator Capacity = 1100 gpm x 0.1 = 110 gpm, includes startup boiler, 2% reject • Rotary Drum Filter/Dryer Liquid loading: 1100 gpm x 0.1 x 0.02 = 2.2 gpm = 1100 lbs/hr Drying area = 210 sf • Steam Generator Evaporate 2.2 gpm = 1100 lbs/hr 1,884,400 BTU • Allowance for Bldg Electrical Includes lighting, fixtures, motor starters, controllers, junction boxes, transformer, chart recorders, annunciators, panels, conduit, and wiring. • Allowance for Bldg Mechanical Includes equipment installation and connections, controls/instrumentation, interior piping (plastic), floor drains and piping, and HVAC.	Best professional judgement Vendor quote Vendor quote Richardson Cost Estimating Guide Vendor catalog Best professional judgement Best professional judgement
SUB: 20.04 Site Restoration	• Includes revegetation at end of project	Best professional judgement
SUB: 21.02.02 Demobilization	• Demobilize field office, storage, and decontamination trailers	Best professional judgement
SUB: 21.04.02. Remove Decon Area-Yr 12	• Includes removal of decontamination area • Crew and Equipment: Fixed Price Contractor:1 Group 6 Operator, 3 Group 1 Laborers, and 3 Group 2 Laborers Equipment: 1 backhoe, 1 pickup Output: Assumed duration for this activity is 1 crew day	Best professional judgement

TASK NUMBER	ASSUMPTIONS	JUSTIFICATION
SUB 21.05 Disconnect Temporary Utilities	• Includes disconnecting electricity, telephone, water, and sewer services.	Best professional judgement
SUB 21.06 Post-Construction Submittals	• Includes post-construction submittals by fixed-price contractor	Best professional judgement
WHC:02.08.02. Ground Water Analysis-Yr 1	• Assume shake-down period with the following sampling of treatment system: - First 2 days: Sample every four hours of influent and effluent (24 samples) - Next 5 days: 1 sample per day of influent and effluent (10 samples) - Next 7 weeks: 1 sample per week of influent and effluent (14 samples)	Best professional judgement, cost meeting
	• 1 sample per filter change out (1 week) of the influent and effluent for the 12-yr lifecycle (104 samples/yr)	Best professional judgement
	• Assume sampling of 7 monitoring wells on a semiannual basis for the 12-year lifecycle (14 samples/yr) - Total samples = 166	Best professional judgement
	• 90% of samples for analysis at mobile lab (90% of 166 = 149)	
	• HACH kit samples are taken 1 per shift for the 12-yr lifecycle plus an additional 48 samples during the shake-down period. (1143 samples)	DOE cost meeting
	• HACH Kit Replacement Assume 1 per yr	DOE cost meeting

TASK NUMBER	ASSUMPTIONS	JUSTIFICATION
WHC:02.08.03. Ground Water Analysis-Yrs 2-12	• 1 sample per filter change out (1 week) of the influent and effluent for the 12-yr lifecycle (104 samples/yr) • Assume sampling of 7 monitoring wells on a semiannual basis for the 12-year lifecycle (14 samples/yr) - Total samples = 118 • 90% of samples for analysis at mobile lab (90% of 118 = 106) • HACH kit samples are taken 1 per shift for the 12-yr lifecycle (1143 samples) • WHC HACH kit Replacement Assume 1 per yr	Best professional judgement DOE cost meeting DOE cost meeting DOE cost meeting
WHC:02.08.04. Ground Water Monitor Samples	• Assume sampling of 7 monitoring wells on a semiannual basis for the 12-year lifecycle. (14 samples/yr) • Assume 2 field technicians for 6 hours on a semiannual basis for the 12-year lifecycle. (24 hrs/yr)	DOE cost meeting Best professional judgement
WHC:13.21.06. Personnel Training	• Note: This account to allow for operator time and an allowance for 40 hour training course	Best professional judgement
WHC:13.21.08. Operation and Maint-Yrs 1-12	• Treatment facility will be fully staffed with 2 FTE's per shift, 3 shifts per day, 7 days per week. (365 days/year x 24 hrs/day = 8760 hrs) • Reverse Osmosis filters will be replaced every week for the 12-year lifecycle. • 2 FTE crew will be composed of the following members: 0.25 ea - supervisor 1.00 ea - operator 0.50 ea - TP tech support 0.25 ea - maintenance supervisor	Best professional judgement Best professional judgement

TASK NUMBER	ASSUMPTIONS	JUSTIFICATION
WHC:13.21.08. Operation and Maint-Yrs 1-12 (Continued)	• Allowance for Electricity Wells: 3014 kW-hr/d RO System: 4301 kW-hr/d Recompr Evap: 12,658 kW-hr/d Rotary Filter/Drum: 13,233 kW-hr/d Assume 24 hrs/day x 365 days/yr Total = 12,120,190 kW-hr/yr	Vendor catalogs, vendor quotes
	• RO System Chemicals Includes scale inhibitors, $0.34/1000 gal 1100 gpm x 1440 m/d x 365 d/y = 578.2 MMgpy	Vendor quote
	• Reverse Osmosis Filter Replacement Assume replacement of 2 filters on a weekly basis for the 12-year lifecycle. (52 wk/yr x 2 filters/wk)	Best professional judgement
	• Disposal Fee for Reverse Osmosis Filters Assume disposal at ERDF for years 1 - 12 of the 12-year lifecycle. Assume each filter to be 40 cu ft.	HR-3 cost workshop
	• Disposal Fee - Evaporation Cake 1100 gpm x 325 ppm = 45.6 cf/day 45.6 cf/day x 365 days = 16,650 cf/year	Best professional judgement
	Assume 50% volume increase to stabilize evaporation cake 1.5 x 16,650 cf/yr = 24,975 cf/yr	HR-3 Cost Workshop
	• Allowance for Water Usage. Assume 1000 gal per month usage for the 12 year lifecycle	Best professional judgement
WHC:13.21.11. Prepare Annual Report (Yr-1)	• Assume 2 FTE's for 6 months each year	HR-3 Cost Workshop
WHC:13.21.12. Prepare Annual Report (Yrs 2-12)	• Assume 2 FTE's for 4 months each year	HR-3 Cost Workshop

9413270.3312

SECTION 1.3 COST SUMMARY TABLES

Cost Summary for 100 KR-4 Area			Cost[b]						
Cost Element			Type		Year(s) Applicable	Institutional Controls/ Continued Current Actions	Slurry Wall	Pump and Treat with Ion Exchange	Pump and Treat with Reverse Osmosis
			CAP	O&M					
ANA: Off-Site Analytical Services									
ANA:02	Monitoring, Sampling, and Analysis	Offsite Yr 1		x	1	4,210	42,100	71,570	71,570
		Offsite Yrs 2-12		x	2-12	4,210	42,100	50,520	50,520
SUB: Fixed Price Contractor									
SUB:01	Mobilization & Preparatory		x		0	-	37,780	37,930	37,910
SUB:03	Site Work		x		0	-	76,110	222,630	218,450
SUB:06	Groundwater Collection and Control	Drilling	x		0	-	454,530	2,552,140	2,550,770
		O&M 3,6,9		x	3,6,9	-	59,060	326,110	325,930
		Piping	x		0	-	445,540	1,410,120	1,409,370
		Slurry Wall	x		0	-	32,080,140	-	-
SUB:12	Chemical Treatment		x		0	-	-	3,327,130	-
SUB:13	Physical Treatment		x		0	-	-	-	8,654,600
SUB:20	Site Restoration		x		12	-	9,500	12,890	12,880
SUB:21	Demobilization		x		12	-	19,330	19,410	19,400
WHC:Westinghouse Hanford Company									
WHC:02	Monitoring, Sampling, & Analysis	Yr 1		x	1	5860	2,300	60,410	60,410
		Yrs 2-12		x	2-12	5860	-	43,180	43,210
		Yrs 1-12		x	1-12	-	35,860	660	660

Cost Summary for 100 KR-4 Area			Cost [b]						
Cost Element			Type		Year(s) Applicable	Institutional Controls/ Continued Current Actions	Slurry Wall	Pump and Treat with Ion Exchange	Pump and Treat with Reverse Osmosis
			CAP	O&M					
WHC:06	Groundwater Collection and Control	Yr 1		x	1	-	2,300	-	-
		Yrs 2-12		x	2-12	-	3,220	-	-
WHC:12	Chemical Treatment	Training Yr 1		x	1	-	-	6900	-
		O&M Yrs 1-12		x	1-12	-	-	4,602,320	-
		Resin Yrs 1,3,6,9		x	1,3,6,9	-	-	3,620,250	-
		Annual Rpt Yr 1		x	1	90,150	90,150	90,150	-
		Annual Rpt Yrs 2-12		x	2-12	60,070	60,070	60,070	-
WHC:13	Physical Treatment [a]	Training Yr 1		x	1	-	-	-	6900
		O&M Yrs 1-12		x	1-12	-	-	-	1,689,230
		Annual Rpt Yr 1		x	1	-	-	-	90,150
		Annual Rpt Yrs 2-12		x	2-12	-	-	-	60,070
Miscellaneous	Overhead			x	1-12	-	409,183	97,145	162,593
	Profit			x	1-12	-	178,113	44,112	73,830
	Bond			x	1-12	-	11,338	3,403	5,108
	B&O Tax			x	1-12	-	12,936	3,083	5,158
	Material/Supply MPR			x	1-12	-	-	33,955	4,572
	Subcontractor MPR			x	1-12	-	201,858	48,109	80,478

Cost Summary for 100 KR-4 Area			Cost [b]					
Cost Element			Type		Year(s) Applicable	Institutional Controls/ Continued Current Actions	Slurry Wall	Pump and Treat with Ion Exchange	Pump and Treat with Reverse Osmosis
			CAP	O&M					
Project Management/Construction Management				x	1-12	1,951	447,448	212,120	201,821
General & Admin/Common Support Pool				x	1-12	3,814	874,762	414,695	394,560
Contingency				x	1-12	6,693	1,508,048	717,893	683,210
Total Miscellaneous					1-12	12,458	3,643,686	1,574,515	1,611,330
SUMMARY									
	Capital	Year 0				0	33,094,100	7,549,950	12,871,100
		Year 12				0	28,830	32,300	32,280
	Annual O&M	Year 1				112,678	3,816,396	10,026,775	3,530,250
		Years 2,4,5,7 8,10,11,12,				82,598	3,784,936	6,331,265	3,455,020
		Years 3,6,9				82,598	3,843,996	10,277,625	3,780,950
	Present Worth					760,723	66,819,538	76,099,636	44,317,752

(a) For Institutional Controls/Continued Current Actions and Slurry Wall = Annual Report

(b) Costs for task/subtask/sub-subtask elements are obtained from the Contract Cost column of the level 5 Project Owner Summaries (MCACES Cost Model Runs-Section 1.4). Yearly Miscellaneous Costs are obtained by taking 1/12 of the individual line-item Miscellaneous Costs from the Total Cost Column of the Level 1 Project Direct Summaries (12 years is the project duration).

CAP = Capital

O&M = Operation & Maintenance

9413294.3317

SECTION 1.4 REMEDIAL ALTERNATIVE COST MODELS

9413294.3348

HANFORD: ER PROGRAM
100 KR-4 INSTIT CONTROLS/CONT'D
CURRENT ACTIONS
1.4.10.1.1.10.5.2.4
PRELIMINARY COST MODEL

Designed By:
Estimated By: IT Corporation

Prepared By: USACE/CENPW COST ENG BRANCH
Project Time & Cost, Inc.

Date: 10/07/94

M C A C E S G O L D E D I T I O N
Composer GOLD Copyright (C) 1985, 1988, 1990, 1992
by Building Systems Design, Inc.
Release 5.20J

SUMMARY REPORTS SUMMARY PAGE

PROJECT OWNER SUMMARY - LEVEL 1.....1
PROJECT OWNER SUMMARY - LEVEL 2.....2
PROJECT OWNER SUMMARY - LEVEL 4.....3
PROJECT INDIRECT SUMMARY - LEVEL 1.....4
PROJECT INDIRECT SUMMARY - LEVEL 2.....5
PROJECT INDIRECT SUMMARY - LEVEL 4.....6
PROJECT DIRECT SUMMARY - LEVEL 1.....8
PROJECT DIRECT SUMMARY - LEVEL 2.....9
PROJECT DIRECT SUMMARY - LEVEL 4.....10

DETAILED ESTIMATE DETAIL PAGE

ANA. Off-Site Analytical Services
02. Monitoring, Sampling & Analysis
08. Sampling Rad Contaminated Media
02. Ground Water Analysis (Yrs 1-12).....1
WHC. Westinghouse Hanford Company
02. Monitoring, Sampling & Analysis
08. Sampling Rad Contaminated Media
02. Ground Water Analysis-Yrs (1-12).....2
04. Ground Water Monitor Samples.....3
13. Annual Report
21. Annual Report
11. Prepare Annual Report (Yr 1).....4
12. Prepare Annual Report (Yrs 2-12).....5

BACKUP REPORTS BACKUP PAGE

LABOR BACKUP.....1
EQUIPMENT BACKUP.....2

* * * END TABLE OF CONTENTS * * *

9413294.3350

Fri 07 Oct 1994

U.S. Army Corps of Engineers
PROJECT KNOACT: HANFORD: ER PROGRAM - 100 KR-4 INSTIT CONTROLS/CONT'D
100 KR-4 INSTIT CONTROLS/CONT'D CURRENT ACTIONS
** PROJECT OWNER SUMMARY - LEVEL 1 (Rounded to 10's) **

TIME 07:13:27
SUMMARY PAGE 1

		QUANTITY UOM	CONTRACT COST	SUB MPR	PM/CM	G&A/CSP	CONTINGN	TOTAL COST	UNIT COST
ANA	Off-Site Analytical Services		4,210	0	0	0	1,470	5,680	
WHC	Westinghouse Hanford Company		156,080	0	23,410	45,770	78,840	304,110	
	HANFORD: ER PROGRAM		160,290	0	23,410	45,770	80,320	309,790	

Fri 07 Oct 1994

U.S. Army Corps of Engineers
PROJECT KNOACT: HANFORD: ER PROGRAM - 100 KR-4 INSTIT CONTROLS/CONT'D
100 KR-4 INSTIT CONTROLS/CONT'D CURRENT ACTIONS
** PROJECT OWNER SUMMARY - LEVEL 2 (Rounded to 10's) **

TIME 07:13:27
SUMMARY PAGE 2

	QUANTITY UOM	CONTRACT COST	SUB MPR	PM/CM	G&A/CSP	CONTINGN	TOTAL COST	UNIT COST
ANA Off-Site Analytical Services								
ANA:02 Monitoring, Sampling & Analysis		4,210	0	0	0	1,470	5,680	
Off-Site Analytical Services		4,210	0	0	0	1,470	5,680	
WHC Westinghouse Hanford Company								
WHC:02 Monitoring, Sampling & Analysis		5,860	0	880	1,720	2,960	11,420	
WHC:13 Annual Report		150,220	0	22,530	44,050	75,880	292,680	
Westinghouse Hanford Company		156,080	0	23,410	45,770	78,840	304,110	
HANFORD: ER PROGRAM		160,290	0	23,410	45,770	80,320	309,790	

Fri 07 Oct 1994

U.S. Army Corps of Engineers
PROJECT KNOACT: HANFORD: ER PROGRAM - 100 KR-4 INSTIT CONTROLS/CONT'D
100 KR-4 INSTIT CONTROLS/CONT'D CURRENT ACTIONS
** PROJECT OWNER SUMMARY - LEVEL 4 (Rounded to 10's) **

TIME 07:13:27
SUMMARY PAGE 3

	QUANTITY UOM	CONTRACT COST	SUB MPR	PM/CM	G&A/CSP	CONTINGN	TOTAL COST	UNIT COST
ANA Off-Site Analytical Services								
ANA:02 Monitoring, Sampling & Analysis								
ANA:02.08 Sampling Rad Contaminated Media								
ANA:02.08.02 Ground Water Analysis (Yrs 1-12)	1.00 EA	4,210	0	0	0	1,470	5,680	5683.50
Sampling Rad Contaminated Media		4,210	0	0	0	1,470	5,680	
Monitoring, Sampling & Analysis		4,210	0	0	0	1,470	5,680	
Off-Site Analytical Services		4,210	0	0	0	1,470	5,680	
WHC Westinghouse Hanford Company								
WHC:02 Monitoring, Sampling & Analysis								
WHC:02.08 Sampling Rad Contaminated Media								
WHC:02.08.02 Ground Water Analysis-Yrs (1-12)	13.00 EA	5,200	0	780	1,520	2,630	10,130	779.36
WHC:02.08.04 Ground Water Monitor Samples	24.00 HR	660	0	100	190	330	1,290	53.82
Sampling Rad Contaminated Media		5,860	0	880	1,720	2,960	11,420	
Monitoring, Sampling & Analysis		5,860	0	880	1,720	2,960	11,420	
WHC:13 Annual Report								
WHC:13.21 Annual Report								
WHC:13.21.11 Prepare Annual Report (Yr 1)	2080.00 HR	90,150	0	13,520	26,440	45,540	175,640	84.44
WHC:13.21.12 Prepare Annual Report (Yrs 2-12)	1386.00 HR	60,070	0	9,010	17,620	30,340	117,040	84.44
Annual Report		150,220	0	22,530	44,050	75,880	292,680	
Annual Report		150,220	0	22,530	44,050	75,880	292,680	
Westinghouse Hanford Company		156,080	0	23,410	45,770	78,840	304,110	
HANFORD: ER PROGRAM		160,290	0	23,410	45,770	80,320	309,790	

Fri 07 Oct 1994

U.S. Army Corps of Engineers
PROJECT KNOACT: HANFORD: ER PROGRAM - 100 KR-4 INSTIT CONTROLS/CONT'D
100 KR-4 INSTIT CONTROLS/CONT'D CURRENT ACTIONS
** PROJECT INDIRECT SUMMARY - LEVEL 1 (Rounded to 10's) **

TIME 07:13:27
SUMMARY PAGE 4

	QUANTITY UOM	TOTAL DIRECT	OVERHEAD	PROFIT	BOND	B&O TAX	MAT MPR	TOTAL COST	UNIT COST
ANA Off-Site Analytical Services		4,210	0	0	0	0	0	4,210	
WHC Westinghouse Hanford Company		156,080	0	0	0	0	0	156,080	
HANFORD: ER PROGRAM		160,290	0	0	0	0	0	160,290	
Project Management/Construction Mgnt								23,410	
SUBTOTAL								183,700	
General & Admin/Common Support Pool								45,770	
SUBTOTAL								229,470	
Contingency								80,320	
TOTAL INCL OWNER COSTS								309,790	

Fri 07 Oct 1994

U.S. Army Corps of Engineers
PROJECT KNOACT: HANFORD: ER PROGRAM - 100 KR-4 INSTIT CONTROLS/CONT'D
100 KR-4 INSTIT CONTROLS/CONT'D CURRENT ACTIONS
** PROJECT INDIRECT SUMMARY - LEVEL 2 (Rounded to 10's) **

TIME 07:13:27
SUMMARY PAGE 5

	QUANTITY UOM	TOTAL DIRECT	OVERHEAD	PROFIT	BOND	B&O TAX	MAT MPR	TOTAL COST	UNIT COST
ANA Off-Site Analytical Services									
ANA:02 Monitoring, Sampling & Analysis		4,210	0	0	0	0	0	4,210	
Off-Site Analytical Services		4,210	0	0	0	0	0	4,210	
WHC Westinghouse Hanford Company									
WHC:02 Monitoring, Sampling & Analysis		5,860	0	0	0	0	0	5,860	
WHC:13 Annual Report		150,220	0	0	0	0	0	150,220	
Westinghouse Hanford Company		156,080	0	0	0	0	0	156,080	
HANFORD: ER PROGRAM		160,290	0	0	0	0	0	160,290	
Project Management/Construction Mgnt								23,410	
SUBTOTAL								183,700	
General & Admin/Common Support Pool								45,770	
SUBTOTAL								229,470	
Contingency								80,320	
TOTAL INCL OWNER COSTS								309,790	

Fri 07 Oct 1994

U.S. Army Corps of Engineers
PROJECT KNOACT: HANFORD: ER PROGRAM - 100 KR-4 INSTIT CONTROLS/CONT'D
100 KR-4 INSTIT CONTROLS/CONT'D CURRENT ACTIONS
** PROJECT INDIRECT SUMMARY - LEVEL 4 (Rounded to 10's) **

TIME 07:13:27
SUMMARY PAGE 6

	QUANTITY UOM	TOTAL DIRECT	OVERHEAD	PROFIT	BOND	B&O TAX	MAT MPR	TOTAL COST	UNIT COST
ANA Off-Site Analytical Services									
ANA:02 Monitoring, Sampling & Analysis									
ANA:02.08 Sampling Rad Contaminated Media									
ANA:02.08.02 Ground Water Analysis (Yrs 1-1	1.00 EA	4,210	0	0	0	0	0	4,210	4210.00
Sampling Rad Contaminated Medi		4,210	0	0	0	0	0	4,210	
Monitoring, Sampling & Analysi		4,210	0	0	0	0	0	4,210	
Off-Site Analytical Services		4,210	0	0	0	0	0	4,210	
WHC Westinghouse Hanford Company									
WHC:02 Monitoring, Sampling & Analysis									
WHC:02.08 Sampling Rad Contaminated Media									
WHC:02.08.02 Ground Water Analysis-Yrs (1-1	13.00 EA	5,200	0	0	0	0	0	5,200	400.00
WHC:02.08.04 Ground Water Monitor Samples	24.00 HR	660	0	0	0	0	0	660	27.62
Sampling Rad Contaminated Medi		5,860	0	0	0	0	0	5,860	
Monitoring, Sampling & Analysi		5,860	0	0	0	0	0	5,860	
WHC:13 Annual Report									
WHC:13.21 Annual Report									
WHC:13.21.11 Prepare Annual Report (Yr 1)	2080.00 HR	90,150	0	0	0	0	0	90,150	43.34
WHC:13.21.12 Prepare Annual Report (Yrs 2-1	1386.00 HR	60,070	0	0	0	0	0	60,070	43.34
Annual Report		150,220	0	0	0	0	0	150,220	
Annual Report		150,220	0	0	0	0	0	150,220	
Westinghouse Hanford Company		156,080	0	0	0	0	0	156,080	
HANFORD: ER PROGRAM		160,290	0	0	0	0	0	160,290	
Project Management/Construction Mgnt								23,410	
SUBTOTAL								183,700	
General & Admin/Common Support Pool								45,770	
SUBTOTAL								229,470	
Contingency								80,320	

Fri 07 Oct 1994

U.S. Army Corps of Engineers
PROJECT KNOACT: HANFORD: ER PROGRAM - 100 KR-4 INSTIT CONTROLS/CONT'D
100 KR-4 INSTIT CONTROLS/CONT'D CURRENT ACTIONS
** PROJECT INDIRECT SUMMARY - LEVEL 4 (Rounded to 10's) **

TIME 07:13:27
SUMMARY PAGE 7

	QUANTITY	UOM	TOTAL DIRECT	OVERHEAD	PROFIT	BOND	B&O TAX	MAT MPR	TOTAL COST	UNIT COST
TOTAL INCL OWNER COSTS									309,790	

Fri 07 Oct 1994

U.S. Army Corps of Engineers
PROJECT KNOACT: HANFORD: ER PROGRAM - 100 KR-4 INSTIT CONTROLS/CONT'D
100 KR-4 INSTIT CONTROLS/CONT'D CURRENT ACTIONS
** PROJECT DIRECT SUMMARY - LEVEL 1 (Rounded to 10's) **

TIME 07:13:27
SUMMARY PAGE 8

		QUANTITY UOM	LABOR	EQUIPMNT	MAT/SUPP	UNIT CST	TOTAL COST	UNIT COST
ANA	Off-Site Analytical Services		0	0	0	4,210	4,210	
WHC	Westinghouse Hanford Company		150,880	0	0	5,200	156,080	
	HANFORD: ER PROGRAM		150,880	0	0	9,410	160,290	
	Project Management/Construction Mgnt						23,410	
	SUBTOTAL						183,700	
	General & Admin/Common Support Pool						45,770	
	SUBTOTAL						229,470	
	Contingency						80,320	
	TOTAL INCL OWNER COSTS						309,790	

Fri 07 Oct 1994

U.S. Army Corps of Engineers
PROJECT KNOACT: HANFORD: ER PROGRAM - 100 KR-4 INSTIT CONTROLS/CONT'D
100 KR-4 INSTIT CONTROLS/CONT'D CURRENT ACTIONS
** PROJECT DIRECT SUMMARY - LEVEL 2 (Rounded to 10's) **

TIME 07:13:27
SUMMARY PAGE 9

	QUANTITY UOM	LABOR	EQUIPMNT	MAT/SUPP	UNIT CST	TOTAL COST	UNIT COST
ANA Off-Site Analytical Services							
ANA:02 Monitoring, Sampling & Analysis		0	0	0	4,210	4,210	
Off-Site Analytical Services		0	0	0	4,210	4,210	
WHC Westinghouse Hanford Company							
WHC:02 Monitoring, Sampling & Analysis		660	0	0	5,200	5,860	
WHC:13 Annual Report		150,220	0	0	0	150,220	
Westinghouse Hanford Company		150,880	0	0	5,200	156,080	
HANFORD: ER PROGRAM		150,880	0	0	9,410	160,290	
Project Management/Construction Mgnt						23,410	
SUBTOTAL						183,700	
General & Admin/Common Support Pool						45,770	
SUBTOTAL						229,470	
Contingency						80,320	
TOTAL INCL OWNER COSTS						309,790	

	QUANTITY UOM	LABOR	EQUIPMNT	MAT/SUPP	UNIT CST	TOTAL COST	UNIT COST
ANA Off-Site Analytical Services							
ANA:02 Monitoring, Sampling & Analysis							
ANA:02.08 Sampling Rad Contaminated Media							
ANA:02.08.02 Ground Water Analysis (Yrs 1-12)	1.00 EA	0	0	0	4,210	4,210	4210.00
Sampling Rad Contaminated Media		0	0	0	4,210	4,210	
Monitoring, Sampling & Analysis		0	0	0	4,210	4,210	
Off-Site Analytical Services		0	0	0	4,210	4,210	
WHC Westinghouse Hanford Company							
WHC:02 Monitoring, Sampling & Analysis							
WHC:02.08 Sampling Rad Contaminated Media							
WHC:02.08.02 Ground Water Analysis-Yrs (1-12)	13.00 EA	0	0	0	5,200	5,200	400.00
WHC:02.08.04 Ground Water Monitor Samples	24.00 HR	660	0	0	0	660	27.62
Sampling Rad Contaminated Media		660	0	0	5,200	5,860	
Monitoring, Sampling & Analysis		660	0	0	5,200	5,860	
WHC:13 Annual Report							
WHC:13.21 Annual Report							
WHC:13.21.11 Prepare Annual Report (Yr 1)	2080.00 HR	90,150	0	0	0	90,150	43.34
WHC:13.21.12 Prepare Annual Report (Yrs 2-12)	1386.00 HR	60,070	0	0	0	60,070	43.34
Annual Report		150,220	0	0	0	150,220	
Annual Report		150,220	0	0	0	150,220	
Westinghouse Hanford Company		150,880	0	0	5,200	156,080	
HANFORD: ER PROGRAM		150,880	0	0	9,410	160,290	
Project Management/Construction Mgnt						23,410	
SUBTOTAL						183,700	
General & Admin/Common Support Pool						45,770	
SUBTOTAL						229,470	
Contingency						80,320	

Fri 07 Oct 1994

U.S. Army Corps of Engineers
PROJECT KNOACT: HANFORD: ER PROGRAM - 100 KR-4 INSTIT CONTROLS/CONT'D
100 KR-4 INSTIT CONTROLS/CONT'D CURRENT ACTIONS
** PROJECT DIRECT SUMMARY - LEVEL 4 (Rounded to 10's) **

TIME 07:13:27
SUMMARY PAGE 11

	QUANTITY UOM	LABOR	EQUIPMNT	MAT/SUPP	UNIT CST	TOTAL COST	UNIT COST
TOTAL INCL OWNER COSTS						309,790	

ANA. Off-Site Analytical Services
ANA:02. Monitoring, Sampling & Analysis
ANA:02.08. Sampling Rad Contaminated Media
ANA:02.08.02. Ground Water Analysis (Yrs 1-12)

Assumptions:

1. Assume sampling of 7 monitoring wells on a semiannual basis for the 12-year lifecycle (14 samples/yr)

   - Total samples = 14

2. All on-site sample analyses performed by WHC mobile lab.

3. 10% off-site verification analysis of reduced analyte list with CLP protocol. (10% of 14 = 1 ea)

ANA:02. Monitoring, Sampling & Analysis	QUANTY UOM CREW ID	LABOR	EQUIPMNT	MAT/SUPP	UNIT CST	TOTAL COST	UNIT COST
ANA Analyze LLW Sample - Off-site Lab	1.00 EA	0.00 0	0.00 0	0.00 0	4210.00 4,210	4210.00 4,210	4210.00
Ground Water Analysis (Yrs 1-12)	1.00 EA	0	0	0	4,210	4,210	4210.00
Sampling Rad Contaminated Media		0	0	0	4,210	4,210	
Monitoring, Sampling & Analysis		0	0	0	4,210	4,210	
Off-Site Analytical Services		0	0	0	4,210	4,210	

WHC:02. Monitoring, Sampling & Analysis	QUANTY UOM CREW ID	LABOR	EQUIPMNT	MAT/SUPP	UNIT CST	TOTAL COST	UNIT COST

WHC. Westinghouse Hanford Company
WHC:02. Monitoring, Sampling & Analysis
WHC:02.08. Sampling Rad Contaminated Media
WHC:02.08.02. Ground Water Analysis-Yrs (1-12)

Assumptions:

1. Assume sampling of 7 monitoring wells on a semiannual basis for the 12-year lifecycle (14 samples/yr)

   - Total samples = 14

2. 90% of samples for analysis at mobile lab (90% of 14 = 13)

WHC	Analyze LLW Sample - Mobile Lab		0.00	0.00	0.00	400.00	400.00	
		13.00 EA	0	0	0	5,200	5,200	400.00
	Ground Water Analysis-Yrs (1-12)	13.00 EA	0	0	0	5,200	5,200	400.00

WHC:02. Monitoring, Sampling & Analysis	QUANTY UOM CREW ID	LABOR	EQUIPMNT	MAT/SUPP	UNIT CST	TOTAL COST	UNIT COST
WHC:02.08.04. Ground Water Monitor Samples							
Work to be Performed:							
Take semiannual groundwater monitoring samples.							
Assumptions:							
1. Assume sampling of 7 monitoring wells on a semiannual basis for the 12-year lifecycle. (14 samples/yr)							
2. Assume 2 field Technicians for 6 hours on a semiannual basis for the 12-year lifecycle. (24 hrs/yr)							
WHC Technician, Environmental		27.62	0.00	0.00	0.00	27.62	
Restoration Ops - 2 ea	24.00 HR 85201	663	0	0	0	663	27.62
Ground Water Monitor Samples	24.00 HR	663	0	0	0	663	27.62
Sampling Rad Contaminated Media		663	0	0	5,200	5,863	
Monitoring, Sampling & Analysis		663	0	0	5,200	5,863	

WHC:13. Annual Report		QUANTY UOM	CREW ID	LABOR	EQUIPMNT	MAT/SUPP	UNIT CST	TOTAL COST	UNIT COST
WHC:13. Annual Report									
WHC:13.21. Annual Report									
WHC:13.21.11. Prepare Annual Report (Yr 1)									
Assume 2 FTE's for 6 months each year.									
WHC	Engineer, Environmental			43.34	0.00	0.00	0.00	43.34	
	Restoration Ops - 1 ea	1040.00 HR	85101	45,074	0	0	0	45,074	43.34
WHC	Scientist, Environmental			43.34	0.00	0.00	0.00	43.34	
	Restoration Ops - 1 ea	1040.00 HR	85102	45,074	0	0	0	45,074	43.34
	Prepare Annual Report (Yr 1)	2080.00 HR		90,148	0	0	0	90,148	43.34

WHC:13. Annual Report		QUANTY UOM CREW ID	LABOR	EQUIPMNT	MAT/SUPP	UNIT CST	TOTAL COST	UNIT COST
WHC:13.21.12. Prepare Annual Report (Yrs 2-12) Assume a 66% effort level of the Year 1 Report (2 FTE's for 4 months each year)								
WHC	Engineer, Environmental		43.34	0.00	0.00	0.00	43.34	
	Restoration Ops	693.00 HR 85101	30,035	0	0	0	30,035	43.34
WHC	Scientist, Environmental		43.34	0.00	0.00	0.00	43.34	
	Restoration Ops	693.00 HR 85102	30,035	0	0	0	30,035	43.34
	Prepare Annual Report (Yrs 2-12)	1386.00 HR	60,070	0	0	0	60,070	43.34
	Annual Report		150,218	0	0	0	150,218	
	Annual Report		150,218	0	0	0	150,218	
	Westinghouse Hanford Company		150,881	0	0	5,200	156,081	
	HANFORD: ER PROGRAM		150,881	0	0	9,410	160,291	

9413294.3366

Fri 07 Oct 1994

U.S. Army Corps of Engineers
PROJECT KNOACT: HANFORD: ER PROGRAM - 100 KR-4 INSTIT CONTROLS/CONT'D
100 KR-4 INSTIT CONTROLS/CONT'D CURRENT ACTIONS
** LABOR BACKUP **

TIME 07:13:27

BACKUP PAGE 1

SRC LABOR ID	DESCRIPTION	BASE	OVERTM	TXS/INS	FRNG	TRVL	RATE	UOM	UPDATE	**** TOTAL **** DEFAULT	HOURS
WHC 85101	Engineer, Environmental	35.38	0.0%	22.5%	0.00	0.00	43.34	HR	01/07/94	0.00	1733
WHC 85102	Scientist, Environmental	35.38	0.0%	22.5%	0.00	0.00	43.34	HR	01/07/94	0.00	1733
WHC 85201	Technician, Environmental	22.55	0.0%	22.5%	0.00	0.00	27.62	HR	01/07/94	0.00	24

9413294.3367

HANFORD: ER PROGRAM
100 KR-4 SLURRY WALL
1.4.10.1.1.10.5.2.4
VERTICAL BARRIER
PRELIMINARY COST MODEL

Designed By:
Estimated By: IT Corporation

Prepared By: USACE/CENPW COST ENG BRANCH
Project Time & Cost, Inc.

Date: 10/07/94

M C A C E S G O L D E D I T I O N
Composer GOLD Copyright (C) 1985, 1988, 1990, 1992
by Building Systems Design, Inc.
Release 5.20J

SUMMARY REPORTS — SUMMARY PAGE

PROJECT OWNER SUMMARY - LEVEL 1....1
PROJECT OWNER SUMMARY - LEVEL 2....2
PROJECT OWNER SUMMARY - LEVEL 5....3
PROJECT INDIRECT SUMMARY - LEVEL 1....8
PROJECT INDIRECT SUMMARY - LEVEL 2....9
PROJECT INDIRECT SUMMARY - LEVEL 5....10
PROJECT DIRECT SUMMARY - LEVEL 1....15
PROJECT DIRECT SUMMARY - LEVEL 2....16
PROJECT DIRECT SUMMARY - LEVEL 5....17

DETAILED ESTIMATE — DETAIL PAGE

ANA. Off-Site Analytical Services
02. Monitoring, Sampling & Analysis
08. Sampling Rad Contaminated Media
02. Ground Water Analysis Yr 1 - 12....1
SUB. Fixed Price Contractor
01. Mobilization & Preparatory Work
02. Mobilize Personnel & Equipment
02. Mobilize Trailers....2
04. Setup/Construct Temp facilities
01. Establish Facilities....3
02. Construct Decon Area....4
03. Site Survey....5
05. Construct Temporary Utilities....6
06. Pre-Construction Submittals....7
03. Site Work
03. Earthwork....8
04. Roads/Parking/Curbs/Walks....9
06. Electrical Distribution....10
06. Groundwater Collection & Control
01. Extraction & Injection Wells
01. Well Drilling & Construction....11
04. Operations and Maintenance 3,6,9....12
9X. Site Piping....13
03. Slurry Walls....14
20. Site Restoration
04. Revegetation and Planting....15
21. Demobilization
02. Demobilize Personnel & Equipment
02. Demobilize Trailers....16
04. Demobilize Temp Facilities
02. Remove Decon Area....17
05. Disconnect Temporary Utilities....18
06. Post-Construction Submittals....19
WHC. Westinghouse Hanford Company
02. Monitoring, Sampling & Analysis
08. Sampling Rad Contmntd Media 1-12
02. Ground Water Analysis....20
04. Take Ground Water Samples....21

DETAILED ESTIMATE DETAIL PAGE

06. Groundwater Collection & Control
03. Slurry Walls (Yr 1).....22
13. Slurry Wall
21. Slurry Wall
08. Operation and Maint-Yrs 1-12.....23
11. Prepare Annual Report (Yr 1).....24
12. Prepare Annual Report (Yrs 2-12).....25

BACKUP REPORTS BACKUP PAGE

LABOR BACKUP.....1
EQUIPMENT BACKUP.....2

* * * END TABLE OF CONTENTS * * *

Fri 07 Oct 1994

U.S. Army Corps of Engineers
PROJECT KSLRRY: HANFORD: ER PROGRAM - 100 KR-4 SLURRY WALL
VERTICAL BARRIER MODEL
** PROJECT OWNER SUMMARY - LEVEL 1 (Rounded to 10's) **

TIME 07:15:02
SUMMARY PAGE 1

		QUANTITY UOM	CONTRACT COST	SUB MPR	PM/CM	G&A/CSP	CONTINGN	TOTAL COST	UNIT COST
ANA	Off-Site Analytical Services		42,100	0	0	0	14,740	56,840	
SUB	Fixed Price Contractor		33,181,990	2,422,290	5,340,640	10440950	17985060	69,370,930	
WHC	Westinghouse Hanford Company		191,600	0	28,740	56,190	96,790	373,320	
	HANFORD: ER PROGRAM		33,415,700	2,422,290	5,369,380	10497140	18096580	69,801,080	

Fri 07 Oct 1994

U.S. Army Corps of Engineers
PROJECT KSLRRY: HANFORD: ER PROGRAM - 100 KR-4 SLURRY WALL
VERTICAL BARRIER MODEL
** PROJECT OWNER SUMMARY - LEVEL 2 (Rounded to 10's) **

TIME 07:15:02
SUMMARY PAGE 2

	QUANTITY UOM	CONTRACT COST	SUB MPR	PM/CM	G&A/CSP	CONTINGN	TOTAL COST	UNIT COST
ANA Off-Site Analytical Services								
ANA:02 Monitoring, Sampling & Analysis		42,100	0	0	0	14,740	56,840	
Off-Site Analytical Services		42,100	0	0	0	14,740	56,840	
SUB Fixed Price Contractor								
SUB:01 Mobilization & Preparatory Work		37,780	2,760	6,080	11,890	20,480	78,980	
SUB:03 Site Work		76,110	5,560	12,250	23,950	41,250	159,130	
SUB:06 Groundwater Collection & Control		33,039,270	2,411,870	5,317,670	10396040	17907700	69,072,540	
SUB:20 Site Restoration		9,500	690	1,530	2,990	5,150	19,860	
SUB:21 Demobilization		19,330	1,410	3,110	6,080	10,480	40,410	
Fixed Price Contractor		33,181,990	2,422,290	5,340,640	10440950	17985060	69,370,930	
WHC Westinghouse Hanford Company								
WHC:02 Monitoring, Sampling & Analysis		35,860	0	5,380	10,520	18,120	69,870	
WHC:06 Groundwater Collection & Control		2,300	0	350	680	1,160	4,490	
WHC:13 Slurry Wall		153,440	0	23,020	45,000	77,510	298,960	
Westinghouse Hanford Company		191,600	0	28,740	56,190	96,790	373,320	
HANFORD: ER PROGRAM		33,415,700	2,422,290	5,369,380	10497140	18096580	69,801,080	

Fri 07 Oct 1994

U.S. Army Corps of Engineers
PROJECT KSLRRY: HANFORD: ER PROGRAM - 100 KR-4 SLURRY WALL
VERTICAL BARRIER MODEL
** PROJECT OWNER SUMMARY - LEVEL 5 (Rounded to 10's) **

TIME 07:15:02
SUMMARY PAGE 3

	QUANTITY UOM	CONTRACT COST	SUB MPR	PM/CM	G&A/CSP	CONTINGN	TOTAL COST	UNIT COST
ANA Off-Site Analytical Services								
ANA:02 Monitoring, Sampling & Analysis								
ANA:02.08 Sampling Rad Contaminated Media								
ANA:02.08.02 Ground Water Analysis Yr 1 - 12								
Ground Water Analysis Yr 1 - 12	10.00 EA	42,100	0	0	0	14,740	56,840	5683.50
Sampling Rad Contaminated Media		42,100	0	0	0	14,740	56,840	
Monitoring, Sampling & Analysis		42,100	0	0	0	14,740	56,840	
Off-Site Analytical Services		42,100	0	0	0	14,740	56,840	
SUB Fixed Price Contractor								
SUB:01 Mobilization & Preparatory Work								
SUB:01.02 Mobilize Personnel & Equipment								
SUB:01.02.02 Mobilize Trailers								
Mobilize Trailers		960	70	150	300	520	2,010	
Mobilize Personnel & Equipment		960	70	150	300	520	2,010	
SUB:01.04 Setup/Construct Temp Facilities								
SUB:01.04.01 Establish Facilities								
SUB:01.04.01.02 Setup Trailers		4,890	360	790	1,540	2,650	10,220	
Establish Facilities		4,890	360	790	1,540	2,650	10,220	
SUB:01.04.02 Construct Decon Area								
Construct Decon Area	24.00 HR	11,800	860	1,900	3,710	6,400	24,670	1027.91
SUB:01.04.03 Site Survey								

Fri 07 Oct 1994

U.S. Army Corps of Engineers
PROJECT KSLRRY: HANFORD: ER PROGRAM - 100 KR-4 SLURRY WALL
VERTICAL BARRIER MODEL
** PROJECT OWNER SUMMARY - LEVEL 5 (Rounded to 10's) **

TIME 07:15:02
SUMMARY PAGE 4

	QUANTITY UOM	CONTRACT COST	SUB MPR	PM/CM	G&A/CSP	CONTINGN	TOTAL COST	UNIT COST
Site Survey		1,280	90	210	400	700	2,680	
Setup/Construct Temp Facilities		17,970	1,310	2,890	5,660	9,740	37,580	
SUB:01.05 Construct Temporary Utilities								
Construct Temporary Utilities		6,000	440	970	1,890	3,250	12,550	
SUB:01.06 Pre-Construction Submittals								
Pre-Construction Submittals	4.00 EA	12,840	940	2,070	4,040	6,960	26,840	6710.76
Mobilization & Preparatory Work		37,780	2,760	6,080	11,890	20,480	78,980	
SUB:03 Site Work								
SUB:03.03 Earthwork								
Earthwork		6,420	470	1,030	2,020	3,480	13,420	
SUB:03.04 Roads/Parking/Curbs/Walks								
Roads/Parking/Curbs/Walks		56,850	4,150	9,150	17,890	30,820	118,860	
SUB:03.06 Electrical Distribution								
Electrical Distribution		12,840	940	2,070	4,040	6,960	26,840	
Site Work		76,110	5,560	12,250	23,950	41,250	159,130	
SUB:06 Groundwater Collection & Control								
SUB:06.01 Extraction & Injection Wells								
SUB:06.01.01 Well Drilling & Construction								
Well Drilling & Construction	4.00 EA	454,530	33,180	73,160	143,020	246,360	950,240	237561.01
SUB:06.01.04 Operations and Maintenance 3,6,9								
Operations and Maintenance 3,6,9		59,060	4,310	9,510	18,580	32,010	123,480	

Fri 07 Oct 1994

U.S. Army Corps of Engineers
PROJECT KSLRRY: HANFORD: ER PROGRAM - 100 KR-4 SLURRY WALL
VERTICAL BARRIER MODEL
** PROJECT OWNER SUMMARY - LEVEL 5 (Rounded to 10's) **

TIME 07:15:02
SUMMARY PAGE 5

	QUANTITY UOM	CONTRACT COST	SUB MPR	PM/CM	G&A/CSP	CONTINGN	TOTAL COST	UNIT COST
SUB:06.01.9X Site Piping								
Site Piping		445,540	32,520	71,710	140,190	241,490	931,450	
Extraction & Injection Wells		959,130	70,020	154,370	301,800	519,860	2,005,180	
SUB:06.03 Slurry Walls								
Slurry Walls		32,080,140	2,341,850	5,163,300	10094250	17387840	67,067,370	
Groundwater Collection & Control		33,039,270	2,411,870	5,317,670	10396040	17907700	69,072,540	
SUB:20 Site Restoration								
SUB:20.04 Revegetation and Planting								
Revegetation and Planting		9,500	690	1,530	2,990	5,150	19,860	
Site Restoration		9,500	690	1,530	2,990	5,150	19,860	
SUB:21 Demobilization								
SUB:21.02 Demobilize Personnel & Equipment								
SUB:21.02.02 Demobilize Trailers								
Demobilize Trailers		960	70	150	300	520	2,010	
Demobilize Personnel & Equipment		960	70	150	300	520	2,010	
SUB:21.04 Demobilize Temp Facilities								
SUB:21.04.02 Remove Decon Area								
Remove Decon Area	8.00 HR	2,320	170	370	730	1,260	4,850	605.91
Demobilize Temp Facilities		2,320	170	370	730	1,260	4,850	
SUB:21.05 Disconnect Temporary Utilities								
Disconnect Temporary Utilities		3,210	230	520	1,010	1,740	6,710	
SUB:21.06 Post-Construction Submittals								

	QUANTITY UOM	CONTRACT COST	SUB MPR	PM/CM	G&A/CSP	CONTINGN	TOTAL COST	UNIT COST
Post-Construction Submittals	4.00 EA	12,840	940	2,070	4,040	6,960	26,840	6710.76
Demobilization		19,330	1,410	3,110	6,080	10,480	40,410	
Fixed Price Contractor		33,181,990	2,422,290	5,340,640	10440950	17985060	69,370,930	
WHC Westinghouse Hanford Company								
WHC:02 Monitoring, Sampling & Analysis								
WHC:02.08 Sampling Rad Contmntd Media 1-12								
WHC:02.08.02 Ground Water Analysis								
Ground Water Analysis	88.00 EA	35,200	0	5,280	10,320	17,780	68,580	779.35
WHC:02.08.04 Take Ground Water Samples								
Take Ground Water Samples	24.00 HR	660	0	100	190	330	1,290	53.82
Sampling Rad Contmntd Media 1-12		35,860	0	5,380	10,520	18,120	69,870	
Monitoring, Sampling & Analysis		35,860	0	5,380	10,520	18,120	69,870	
WHC:06 Groundwater Collection & Control								
WHC:06.03 Slurry Walls (Yr 1)								
Slurry Walls (Yr 1)		2,300	0	350	680	1,160	4,490	
Groundwater Collection & Control		2,300	0	350	680	1,160	4,490	
WHC:13 Slurry Wall								
WHC:13.21 Slurry Wall								
WHC:13.21.08 Operation and Maint-Yrs 1-12								
Operation and Maint-Yrs 1-12		3,220	0	480	940	1,630	6,270	
WHC:13.21.11 Prepare Annual Report (Yr 1)								

Fri 07 Oct 1994

U.S. Army Corps of Engineers
PROJECT KSLRRY: HANFORD: ER PROGRAM - 100 KR-4 SLURRY WALL
VERTICAL BARRIER MODEL
** PROJECT OWNER SUMMARY - LEVEL 5 (Rounded to 10's) **

TIME 07:15:02
SUMMARY PAGE 7

		QUANTITY UOM	CONTRACT COST	SUB MPR	PM/CM	G&A/CSP	CONTINGN	TOTAL COST	UNIT COST
	Prepare Annual Report (Yr 1)		90,150	0	13,520	26,440	45,540	175,640	
WHC:13.21.12	Prepare Annual Report (Yrs 2-12)								
	Prepare Annual Report (Yrs 2-12)		60,070	0	9,010	17,620	30,340	117,040	
	Slurry Wall		153,440	0	23,020	45,000	77,510	298,960	
	Slurry Wall		153,440	0	23,020	45,000	77,510	298,960	
	Westinghouse Hanford Company		191,600	0	28,740	56,190	96,790	373,320	
	HANFORD: ER PROGRAM		33,415,700	2,422,290	5,369,380	10497140	18096580	69,801,080	

Fri 07 Oct 1994

U.S. Army Corps of Engineers
PROJECT KSLRRY: HANFORD: ER PROGRAM - 100 KR-4 SLURRY WALL
VERTICAL BARRIER MODEL
** PROJECT INDIRECT SUMMARY - LEVEL 1 (Rounded to 10's) **

TIME 07:15:02
SUMMARY PAGE 8

		QUANTITY UOM	TOTAL DIRECT	OVERHEAD	PROFIT	BOND	B&O TAX	MAT MPR	TOTAL COST	UNIT COST
ANA	Off-Site Analytical Services		42,100	0	0	0	0	0	42,100	
SUB	Fixed Price Contractor		25,843,160	4,910,200	2,137,360	136,050	155,230	0	33,181,990	
WHC	Westinghouse Hanford Company		191,600	0	0	0	0	0	191,600	
	HANFORD: ER PROGRAM		26,076,860	4,910,200	2,137,360	136,050	155,230	0	33,415,700	
	Subcontractor MPR								2,422,290	
	SUBTOTAL								35,837,980	
	Project Management/Construction Mgnt								5,369,380	
	SUBTOTAL								41,207,360	
	General & Admin/Common Support Pool								10,497,140	
	SUBTOTAL								51,704,510	
	Contingency								18,096,580	
	TOTAL INCL OWNER COSTS								69,801,080	

Fri 07 Oct 1994

U.S. Army Corps of Engineers
PROJECT KSLRRY: HANFORD: ER PROGRAM - 100 KR-4 SLURRY WALL
VERTICAL BARRIER MODEL
** PROJECT INDIRECT SUMMARY - LEVEL 2 (Rounded to 10's) **

TIME 07:15:02
SUMMARY PAGE 9

	QUANTITY UOM	TOTAL DIRECT	OVERHEAD	PROFIT	BOND	B&O TAX	MAT MPR	TOTAL COST	UNIT COST
ANA Off-Site Analytical Services									
ANA:02 Monitoring, Sampling & Analysis		42,100	0	0	0	0	0	42,100	
Off-Site Analytical Services		42,100	0	0	0	0	0	42,100	
SUB Fixed Price Contractor									
SUB:01 Mobilization & Preparatory Work		29,420	5,590	2,430	150	180	0	37,780	
SUB:03 Site Work		59,280	11,260	4,900	310	360	0	76,110	
SUB:06 Groundwater Collection & Control		25,732,000	4,889,080	2,128,170	135,460	154,560	0	33,039,270	
SUB:20 Site Restoration		7,400	1,410	610	40	40	0	9,500	
SUB:21 Demobilization		15,060	2,860	1,250	80	90	0	19,330	
Fixed Price Contractor		25,843,160	4,910,200	2,137,360	136,050	155,230	0	33,181,990	
WHC Westinghouse Hanford Company									
WHC:02 Monitoring, Sampling & Analysis		35,860	0	0	0	0	0	35,860	
WHC:06 Groundwater Collection & Control		2,300	0	0	0	0	0	2,300	
WHC:13 Slurry Wall		153,440	0	0	0	0	0	153,440	
Westinghouse Hanford Company		191,600	0	0	0	0	0	191,600	
HANFORD: ER PROGRAM		26,076,860	4,910,200	2,137,360	136,050	155,230	0	33,415,700	
Subcontractor MPR								2,422,290	
SUBTOTAL								35,837,980	
Project Management/Construction Mgnt								5,369,380	
SUBTOTAL								41,207,360	
General & Admin/Common Support Pool								10,497,140	
SUBTOTAL								51,704,510	
Contingency								18,096,580	
TOTAL INCL OWNER COSTS								69,801,080	

Fri 07 Oct 1994

U.S. Army Corps of Engineers
PROJECT KSLRRY: HANFORD: ER PROGRAM - 100 KR-4 SLURRY WALL
VERTICAL BARRIER MODEL
** PROJECT INDIRECT SUMMARY - LEVEL 5 (Rounded to 10's) **

TIME 07:15:02
SUMMARY PAGE 10

	QUANTITY UOM	TOTAL DIRECT	OVERHEAD	PROFIT	BOND	B&O TAX	MAT MPR	TOTAL COST	UNIT COST
ANA Off-Site Analytical Services									
ANA:02 Monitoring, Sampling & Analysis									
ANA:02.08 Sampling Rad Contaminated Media									
ANA:02.08.02 Ground Water Analysis Yr 1 - 1									
Ground Water Analysis Yr 1	10.00 EA	42,100	0	0	0	0	0	42,100	4210.00
Sampling Rad Contaminated M		42,100	0	0	0	0	0	42,100	
Monitoring, Sampling & Anal		42,100	0	0	0	0	0	42,100	
Off-Site Analytical Service		42,100	0	0	0	0	0	42,100	
SUB Fixed Price Contractor									
SUB:01 Mobilization & Preparatory Work									
SUB:01.02 Mobilize Personnel & Equipment									
SUB:01.02.02 Mobilize Trailers									
Mobilize Trailers		750	140	60	0	0	0	960	
Mobilize Personnel & Equipm		750	140	60	0	0	0	960	
SUB:01.04 Setup/Construct Temp Facilities									
SUB:01.04.01 Establish Facilities									
SUB:01.04.01.02 Setup Trailers		3,810	720	310	20	20	0	4,890	
Establish Facilities		3,810	720	310	20	20	0	4,890	
SUB:01.04.02 Construct Decon Area									
Construct Decon Area	24.00 HR	9,190	1,750	760	50	60	0	11,800	491.68
SUB:01.04.03 Site Survey									

	QUANTITY UOM	TOTAL DIRECT	OVERHEAD	PROFIT	BOND	B&O TAX	MAT MPR	TOTAL COST	UNIT COST
Site Survey		1,000	190	80	10	10	0	1,280	
Setup/Construct Temp Facili		14,000	2,660	1,160	70	80	0	17,970	
SUB:01.05 Construct Temporary Utilities									
Construct Temporary Utiliti		4,680	890	390	20	30	0	6,000	
SUB:01.06 Pre-Construction Submittals									
Pre-Construction Submittals	4.00 EA	10,000	1,900	830	50	60	0	12,840	3209.94
Mobilization & Preparatory		29,420	5,590	2,430	150	180	0	37,780	
SUB:03 Site Work									
SUB:03.03 Earthwork									
Earthwork		5,000	950	410	30	30	0	6,420	
SUB:03.04 Roads/Parking/Curbs/Walks									
Roads/Parking/Curbs/Walks		44,280	8,410	3,660	230	270	0	56,850	
SUB:03.06 Electrical Distribution									
Electrical Distribution		10,000	1,900	830	50	60	0	12,840	
Site Work		59,280	11,260	4,900	310	360	0	76,110	
SUB:06 Groundwater Collection & Control									
SUB:06.01 Extraction & Injection Wells									
SUB:06.01.01 Well Drilling & Construction									
Well Drilling & Constructio	4.00 EA	354,000	67,260	29,280	1,860	2,130	0	454,530	113631.86
SUB:06.01.04 Operations and Maintenance 3,6									
Operations and Maintenance		46,000	8,740	3,800	240	280	0	59,060	

Fri 07 Oct 1994

U.S. Army Corps of Engineers
PROJECT KSLRRY: HANFORD: ER PROGRAM - 100 KR-4 SLURRY WALL
VERTICAL BARRIER MODEL
** PROJECT INDIRECT SUMMARY - LEVEL 5 (Rounded to 10's) **

TIME 07:15:02
SUMMARY PAGE 12

	QUANTITY UOM	TOTAL DIRECT	OVERHEAD	PROFIT	BOND	B&O TAX	MAT MPR	TOTAL COST	UNIT COST
SUB:06.01.9X Site Piping									
Site Piping		347,000	65,930	28,700	1,830	2,080	0	445,540	
Extraction & Injection Well		747,000	141,930	61,780	3,930	4,490	0	959,130	
SUB:06.03 Slurry Walls									
Slurry Walls		24,985,000	4,747,150	2,066,380	131,530	150,070	0	32,080,140	
Groundwater Collection & Co		25,732,000	4,889,080	2,128,170	135,460	154,560	0	33,039,270	
SUB:20 Site Restoration									
SUB:20.04 Revegetation and Planting									
Revegetation and Planting		7,400	1,410	610	40	40	0	9,500	
Site Restoration		7,400	1,410	610	40	40	0	9,500	
SUB:21 Demobilization									
SUB:21.02 Demobilize Personnel & Equipment									
SUB:21.02.02 Demobilize Trailers									
Demobilize Trailers		750	140	60	0	0	0	960	
Demobilize Personnel & Equi		750	140	60	0	0	0	960	
SUB:21.04 Demobilize Temp Facilities									
SUB:21.04.02 Remove Decon Area									
Remove Decon Area	8.00 HR	1,810	340	150	10	10	0	2,320	289.82
Demobilize Temp Facilities		1,810	340	150	10	10	0	2,320	
SUB:21.05 Disconnect Temporary Utilities									
Disconnect Temporary Utilit		2,500	480	210	10	20	0	3,210	
SUB:21.06 Post-Construction Submittals									

	QUANTITY UOM	TOTAL DIRECT	OVERHEAD	PROFIT	BOND	B&O TAX	MAT MPR	TOTAL COST	UNIT COST
Post-Construction Submittal	4.00 EA	10,000	1,900	830	50	60	0	12,840	3209.94
Demobilization		15,060	2,860	1,250	80	90	0	19,330	
Fixed Price Contractor		25,843,160	4,910,200	2,137,360	136,050	155,230	0	33,181,990	
WHC Westinghouse Hanford Company									
WHC:02 Monitoring, Sampling & Analysis									
WHC:02.08 Sampling Rad Contmntd Media 1-12									
WHC:02.08.02 Ground Water Analysis									
Ground Water Analysis	88.00 EA	35,200	0	0	0	0	0	35,200	400.00
WHC:02.08.04 Take Ground Water Samples									
Take Ground Water Samples	24.00 HR	660	0	0	0	0	0	660	27.62
Sampling Rad Contmntd Media		35,860	0	0	0	0	0	35,860	
Monitoring, Sampling & Anal		35,860	0	0	0	0	0	35,860	
WHC:06 Groundwater Collection & Control									
WHC:06.03 Slurry Walls (Yr 1)									
Slurry Walls (Yr 1)		2,300	0	0	0	0	0	2,300	
Groundwater Collection & Co		2,300	0	0	0	0	0	2,300	
WHC:13 Slurry Wall									
WHC:13.21 Slurry Wall									
WHC:13.21.08 Operation and Maint-Yrs 1-12									
Operation and Maint-Yrs 1-1		3,220	0	0	0	0	0	3,220	
WHC:13.21.11 Prepare Annual Report (Yr 1)									

	QUANTITY UOM	TOTAL DIRECT	OVERHEAD	PROFIT	BOND	B&O TAX	MAT MPR	TOTAL COST	UNIT COST
Prepare Annual Report (Yr 1		90,150	0	0	0	0	0	90,150	
WHC:13.21.12 Prepare Annual Report (Yrs 2-1									
Prepare Annual Report (Yrs		60,070	0	0	0	0	0	60,070	
Slurry Wall		153,440	0	0	0	0	0	153,440	
Slurry Wall		153,440	0	0	0	0	0	153,440	
Westinghouse Hanford Compan		191,600	0	0	0	0	0	191,600	
HANFORD: ER PROGRAM		26,076,860	4,910,200	2,137,360	136,050	155,230	0	33,415,700	
Subcontractor MPR								2,422,290	
SUBTOTAL								35,837,980	
Project Management/Construction Mgnt								5,369,380	
SUBTOTAL								41,207,360	
General & Admin/Common Support Pool								10,497,140	
SUBTOTAL								51,704,510	
Contingency								18,096,580	
TOTAL INCL OWNER COSTS								69,801,080	

Fri 07 Oct 1994

U.S. Army Corps of Engineers
PROJECT KSLRRY: HANFORD: ER PROGRAM - 100 KR-4 SLURRY WALL
VERTICAL BARRIER MODEL
** PROJECT DIRECT SUMMARY - LEVEL 1 (Rounded to 10's) **

TIME 07:15:02
SUMMARY PAGE 15

		QUANTITY UOM	LABOR	EQUIPMNT	MAT/SUPP	UNIT CST	TOTAL COST	UNIT COST
ANA	Off-Site Analytical Services		0	0	0	42,100	42,100	
SUB	Fixed Price Contractor		13,550	2,920	7,010	25,819,680	25,843,160	
WHC	Westinghouse Hanford Company		153,190	0	0	38,420	191,600	
	HANFORD: ER PROGRAM		166,730	2,920	7,010	25,900,200	26,076,860	
	Overhead						4,910,200	
	SUBTOTAL						30,987,070	
	Profit						2,137,360	
	SUBTOTAL						33,124,420	
	Bond						136,050	
	SUBTOTAL						33,260,470	
	B&O Tax						155,230	
	TOTAL INCL INDIRECTS						33,415,700	
	Subcontractor MPR						2,422,290	
	SUBTOTAL						35,837,980	
	Project Management/Construction Mgnt						5,369,380	
	SUBTOTAL						41,207,360	
	General & Admin/Common Support Pool						10,497,140	
	SUBTOTAL						51,704,510	
	Contingency						18,096,580	
	TOTAL INCL OWNER COSTS						69,801,080	

Fri 07 Oct 1994

U.S. Army Corps of Engineers
PROJECT KSLRRY: HANFORD: ER PROGRAM - 100 KR-4 SLURRY WALL
VERTICAL BARRIER MODEL
** PROJECT DIRECT SUMMARY - LEVEL 2 (Rounded to 10's) **

TIME 07:15:02
SUMMARY PAGE 16

	QUANTITY UOM	LABOR	EQUIPMNT	MAT/SUPP	UNIT CST	TOTAL COST	UNIT COST
ANA Off-Site Analytical Services							
ANA:02 Monitoring, Sampling & Analysis		0	0	0	42,100	42,100	
Off-Site Analytical Services		0	0	0	42,100	42,100	
SUB Fixed Price Contractor							
SUB:01 Mobilization & Preparatory Work		9,600	1,820	7,010	11,000	29,420	
SUB:03 Site Work		0	0	0	59,280	59,280	
SUB:06 Groundwater Collection & Control		0	0	0	25,732,000	25,732,000	
SUB:20 Site Restoration		0	0	0	7,400	7,400	
SUB:21 Demobilization		3,950	1,110	0	10,000	15,060	
Fixed Price Contractor		13,550	2,920	7,010	25,819,680	25,843,160	
WHC Westinghouse Hanford Company							
WHC:02 Monitoring, Sampling & Analysis		660	0	0	35,200	35,860	
WHC:06 Groundwater Collection & Control		2,300	0	0	0	2,300	
WHC:13 Slurry Wall		150,220	0	0	3,220	153,440	
Westinghouse Hanford Company		153,190	0	0	38,420	191,600	
HANFORD: ER PROGRAM		166,730	2,920	7,010	25,900,200	26,076,860	
Overhead						4,910,200	
SUBTOTAL						30,987,070	
Profit						2,137,360	
SUBTOTAL						33,124,420	
Bond						136,050	
SUBTOTAL						33,260,470	
B&O Tax						155,230	
TOTAL INCL INDIRECTS						33,415,700	
Subcontractor MPR						2,422,290	
SUBTOTAL						35,837,980	
Project Management/Construction Mgnt						5,369,380	
SUBTOTAL						41,207,360	
General & Admin/Common Support Pool						10,497,140	
SUBTOTAL						51,704,510	
Contingency						18,096,580	
TOTAL INCL OWNER COSTS						69,801,080	

	QUANTITY UOM	LABOR	EQUIPMNT	MAT/SUPP	UNIT CST	TOTAL COST	UNIT COST
ANA Off-Site Analytical Services							
ANA:02 Monitoring, Sampling & Analysis							
ANA:02.08 Sampling Rad Contaminated Media							
ANA:02.08.02 Ground Water Analysis Yr 1 - 12							
Ground Water Analysis Yr 1 - 12	10.00 EA	0	0	0	42,100	42,100	4210.00
Sampling Rad Contaminated Media		0	0	0	42,100	42,100	
Monitoring, Sampling & Analysis		0	0	0	42,100	42,100	
Off-Site Analytical Services		0	0	0	42,100	42,100	
SUB Fixed Price Contractor							
SUB:01 Mobilization & Preparatory Work							
SUB:01.02 Mobilize Personnel & Equipment							
SUB:01.02.02 Mobilize Trailers							
Mobilize Trailers		0	750	0	0	750	
Mobilize Personnel & Equipment		0	750	0	0	750	
SUB:01.04 Setup/Construct Temp Facilities							
SUB:01.04.01 Establish Facilities							
SUB:01.04.01.02 Setup Trailers		3,000	0	810	0	3,810	
Establish Facilities		3,000	0	810	0	3,810	
SUB:01.04.02 Construct Decon Area							
Construct Decon Area	24.00 HR	4,350	1,070	3,770	0	9,190	382.93
SUB:01.04.03 Site Survey							

	QUANTITY UOM	LABOR	EQUIPMNT	MAT/SUPP	UNIT CST	TOTAL COST	UNIT COST
Site Survey		0	0	0	1,000	1,000	
Setup/Construct Temp Facilities		7,350	1,070	4,580	1,000	14,000	
SUB:01.05 Construct Temporary Utilities							
Construct Temporary Utilities		2,250	0	2,430	0	4,680	
SUB:01.06 Pre-Construction Submittals							
Pre-Construction Submittals	4.00 EA	0	0	0	10,000	10,000	2500.00
Mobilization & Preparatory Work		9,600	1,820	7,010	11,000	29,420	
SUB:03 Site Work							
SUB:03.03 Earthwork							
Earthwork		0	0	0	5,000	5,000	
SUB:03.04 Roads/Parking/Curbs/Walks							
Roads/Parking/Curbs/Walks		0	0	0	44,280	44,280	
SUB:03.06 Electrical Distribution							
Electrical Distribution		0	0	0	10,000	10,000	
Site Work		0	0	0	59,280	59,280	
SUB:06 Groundwater Collection & Control							
SUB:06.01 Extraction & Injection Wells							
SUB:06.01.01 Well Drilling & Construction							
Well Drilling & Construction	4.00 EA	0	0	0	354,000	354,000	88500.00
SUB:06.01.04 Operations and Maintenance 3,6,9							
Operations and Maintenance 3,6,9		0	0	0	46,000	46,000	

	QUANTITY UOM	LABOR	EQUIPMNT	MAT/SUPP	UNIT CST	TOTAL COST	UNIT COST
SUB:06.01.9X Site Piping							
Site Piping		0	0	0	347,000	347,000	
Extraction & Injection Wells		0	0	0	747,000	747,000	
SUB:06.03 Slurry Walls							
Slurry Walls		0	0	0	24,985,000	24,985,000	
Groundwater Collection & Control		0	0	0	25,732,000	25,732,000	
SUB:20 Site Restoration							
SUB:20.04 Revegetation and Planting							
Revegetation and Planting		0	0	0	7,400	7,400	
Site Restoration		0	0	0	7,400	7,400	
SUB:21 Demobilization							
SUB:21.02 Demobilize Personnel & Equipment							
SUB:21.02.02 Demobilize Trailers							
Demobilize Trailers		0	750	0	0	750	
Demobilize Personnel & Equipment		0	750	0	0	750	
SUB:21.04 Demobilize Temp Facilities							
SUB:21.04.02 Remove Decon Area							
Remove Decon Area	8.00 HR	1,450	360	0	0	1,810	225.72
Demobilize Temp Facilities		1,450	360	0	0	1,810	
SUB:21.05 Disconnect Temporary Utilities							
Disconnect Temporary Utilities		2,500	0	0	0	2,500	
SUB:21.06 Post-Construction Submittals							

	QUANTITY UOM	LABOR	EQUIPMNT	MAT/SUPP	UNIT CST	TOTAL COST	UNIT COST
Post-Construction Submittals	4.00 EA	0	0	0	10,000	10,000	2500.00
Demobilization		3,950	1,110	0	10,000	15,060	
Fixed Price Contractor		13,550	2,920	7,010	25,819,680	25,843,160	
WHC Westinghouse Hanford Company							
WHC:02 Monitoring, Sampling & Analysis							
WHC:02.08 Sampling Rad Contmntd Media 1-12							
WHC:02.08.02 Ground Water Analysis							
Ground Water Analysis	88.00 EA	0	0	0	35,200	35,200	400.00
WHC:02.08.04 Take Ground Water Samples							
Take Ground Water Samples	24.00 HR	660	0	0	0	660	27.62
Sampling Rad Contmntd Media 1-12		660	0	0	35,200	35,860	
Monitoring, Sampling & Analysis		660	0	0	35,200	35,860	
WHC:06 Groundwater Collection & Control							
WHC:06.03 Slurry Walls (Yr 1)							
Slurry Walls (Yr 1)		2,300	0	0	0	2,300	
Groundwater Collection & Control		2,300	0	0	0	2,300	
WHC:13 Slurry Wall							
WHC:13.21 Slurry Wall							
WHC:13.21.08 Operation and Maint-Yrs 1-12							
Operation and Maint-Yrs 1-12		0	0	0	3,220	3,220	
WHC:13.21.11 Prepare Annual Report (Yr 1)							

	QUANTITY UOM	LABOR	EQUIPMNT	MAT/SUPP	UNIT CST	TOTAL COST	UNIT COST
Prepare Annual Report (Yr 1)		90,150	0	0	0	90,150	
WHC:13.21.12 Prepare Annual Report (Yrs 2-12)							
Prepare Annual Report (Yrs 2-12)		60,070	0	0	0	60,070	
Slurry Wall		150,220	0	0	3,220	153,440	
Slurry Wall		150,220	0	0	3,220	153,440	
Westinghouse Hanford Company		153,190	0	0	38,420	191,600	
HANFORD: ER PROGRAM		166,730	2,920	7,010	25,900,200	26,076,860	
Overhead						4,910,200	
SUBTOTAL						30,987,070	
Profit						2,137,360	
SUBTOTAL						33,124,420	
Bond						136,050	
SUBTOTAL						33,260,470	
B&O Tax						155,230	
TOTAL INCL INDIRECTS						33,415,700	
Subcontractor MPR						2,422,290	
SUBTOTAL						35,837,980	
Project Management/Construction Mgnt						5,369,380	
SUBTOTAL						41,207,360	
General & Admin/Common Support Pool						10,497,140	
SUBTOTAL						51,704,510	
Contingency						18,096,580	
TOTAL INCL OWNER COSTS						69,801,080	

ANA:02. Monitoring, Sampling & Analysis	QUANTY UOM CREW ID	LABOR	EQUIPMNT	MAT/SUPP	UNIT CST	TOTAL COST	UNIT COST
ANA. Off-Site Analytical Services							
ANA:02. Monitoring, Sampling & Analysis							
ANA:02.08. Sampling Rad Contaminated Media							
ANA:02.08.02. Ground Water Analysis Yr 1 - 12							
Assumptions:							
1. Assume sampling of 7 monitoring wells on a semiannual basis for the 12-year lifecycle. (14 samples)							
2. Assume monthly performance monitoring of 7 wells for the 12-year lifecycle. (84 samples)							
- Total samples = 98							
3. All on-site sample analyses performed by WHC mobile lab							
4. 10% off-site verification analysis of reduced analyte list with CLP protocol. (10% of 98 = 10 ea)							
ANA Analyze LLW Sample - Off-site		0.00	0.00	0.00	4210.00	4210.00	
Lab	10.00 EA	0	0	0	42,100	42,100	4210.00
Ground Water Analysis Yr 1 - 12	10.00 EA	0	0	0	42,100	42,100	4210.00
Sampling Rad Contaminated Media		0	0	0	42,100	42,100	
Monitoring, Sampling & Analysis		0	0	0	42,100	42,100	
Off-Site Analytical Services		0	0	0	42,100	42,100	

Fri 07 Oct 1994

DETAILED ESTIMATE

U.S. Army Corps of Engineers
PROJECT KSLRRY: HANFORD: ER PROGRAM - 100 KR-4 SLURRY WALL
VERTICAL BARRIER MODEL
SUB. Fixed Price Contractor

TIME 07:15:02

DETAIL PAGE 2

SUB:01. Mobilization & Preparatory Work	QUANTY UOM CREW ID	LABOR	EQUIPMNT	MAT/SUPP	UNIT CST	TOTAL COST	UNIT COST
SUB. Fixed Price Contractor							
SUB:01. Mobilization & Preparatory Work							
SUB:01.02. Mobilize Personnel & Equipment							
SUB:01.02.02. Mobilize Trailers							
FPC S3 Mobilize Field Office Trailer		0.00	250.00	0.00	0.00	250.00	
	1.00 EA	0	250	0	0	250	250.00
FPC S3 Mobilize Storage Trailer		0.00	250.00	0.00	0.00	250.00	
	1.00 EA	0	250	0	0	250	250.00
FPC S3 Mobilize Decon Trailer		0.00	250.00	0.00	0.00	250.00	
	1.00 EA	0	250	0	0	250	250.00
Mobilize Trailers		0	750	0	0	750	
Mobilize Personnel & Equipment		0	750	0	0	750	

Fri 07 Oct 1994

DETAILED ESTIMATE

U.S. Army Corps of Engineers
PROJECT KSLRRY: HANFORD: ER PROGRAM - 100 KR-4 SLURRY WALL
VERTICAL BARRIER MODEL
SUB. Fixed Price Contractor

TIME 07:15:02

DETAIL PAGE 3

SUB:01. Mobilization & Preparatory Work	QUANTY UOM CREW ID	LABOR	EQUIPMNT	MAT/SUPP	UNIT CST	TOTAL COST	UNIT COST
SUB:01.04. Setup/Construct Temp Facilities							
SUB:01.04.01. Establish Facilities							
SUB:01.04.01.02. Setup Trailers							
M FPC S3 Setup Field Office Trailer		1000.00	0.00	269.50	0.00	1269.50	
	1.00 EA	1,000	0	270	0	1,270	1269.50
M FPC S3 Setup Storage Trailer		1000.00	0.00	269.50	0.00	1269.50	
	1.00 EA	1,000	0	270	0	1,270	1269.50
M FPC S3 Setup Decon Trailer		1000.00	0.00	269.50	0.00	1269.50	
	1.00 EA	1,000	0	270	0	1,270	1269.50
Setup Trailers		3,000	0	809	0	3,809	
Establish Facilities		3,000	0	809	0	3,809	

SUB:01. Mobilization & Preparatory Work	QUANTY	UOM	CREW ID	LABOR	EQUIPMNT	MAT/SUPP	UNIT CST	TOTAL COST	UNIT COST
SUB:01.04.02. Construct Decon Area Work to be Performed: Construct decontamination area/pad for equipment and vehicles. Crew and Equipment: Fixed Price Contractor: 1 Group 6 Operator, 3 Group 1 Laborers, and 3 Group 2 Laborers Equipment: 1 backhoe, 1 pickup truck Output: Assumed duration for this activity is 3 crew days.									
FPC S3 Laborer Group - 1				25.20	0.00	0.00	0.00	25.20	
- 3 ea	72.00	HR	0029	1,814	0	0	0	1,814	25.20
FPC S3 Laborer Group - 2				25.50	0.00	0.00	0.00	25.50	
- 3 ea	72.00	HR	0030	1,836	0	0	0	1,836	25.50
FPC S3 Group-6 Power Equipment Operator				29.10	0.00	0.00	0.00	29.10	
- 1 ea	24.00	HR	0039	698	0	0	0	698	29.10
FPC S3 Small Tools - 2 ea				0.00	1.39	0.00	0.00	1.39	
	48.00	HR	XMIXX020	0	67	0	0	67	1.39
FPC S3 TRK,HWY,4X4,F250,3/4T,8800 GVW 4X4 3/4 TON PICK-UP				0.00	7.31	0.00	0.00	7.31	
- 1 ea	24.00	HR	T50F0004	0	175	0	0	175	7.31
FPC S3 HYD EXCAV,TRK MTD,.5 CY BKT,6X4				0.00	34.44	0.00	0.00	34.44	
HYDRO-SCOPIC - 1 ea	24.00	HR	H30BA001	0	826	0	0	826	34.44
M FPC S3 Construction Materials/Supplies				0.00	0.00	2156.00	0.00	2156.00	
Allowance	1.00	LS		0	0	2,156	0	2,156	2156.00
M FPC S3 Allowance for Tank				0.00	0.00	1617.00	0.00	1617.00	
Assume 1000 gal plastic tank for water collection	1.00	EA		0	0	1,617	0	1,617	1617.00
				---	---	---	---	---	
Construct Decon Area	24.00	HR		4,349	1,069	3,773	0	9,190	382.93

SUB:01. Mobilization & Preparatory Work	QUANTY UOM CREW ID	LABOR	EQUIPMNT	MAT/SUPP	UNIT CST	TOTAL COST	UNIT COST
SUB:01.04.03. Site Survey							
FPC S3 Allowance for Site Survey		0.00	0.00	0.00	1000.00	1000.00	
Prepare site for construction	1.00 LS	0	0	0	1,000	1,000	1000.00
Site Survey		0	0	0	1,000	1,000	
Setup/Construct Temp facilities		7,349	1,069	4,582	1,000	13,999	

SUB:01. Mobilization & Preparatory Work	QUANTY UOM CREW ID	LABOR	EQUIPMNT	MAT/SUPP	UNIT CST	TOTAL COST	UNIT COST
SUB:01.05. Construct Temporary Utilities							
M FPC S3 Allowance for Temporary Power		1.00	0.00	1.08	0.00	2.08	
	500.00 LF	500	0	539	0	1,039	2.08
M FPC S3 Allowance for Telephone		0.50	0.00	0.54	0.00	1.04	
	500.00 LF	250	0	270	0	520	1.04
M FPC S3 Allowance for Temporary Water and Sewer Service	500.00 LF	3.00	0.00	3.23	0.00	6.23	
		1,500	0	1,617	0	3,117	6.23
Construct Temporary Utilities		2,250	0	2,426	0	4,676	

Fri 07 Oct 1994 | U.S. Army Corps of Engineers | TIME 07:15:02

DETAILED ESTIMATE | PROJECT KSLRRY: HANFORD: ER PROGRAM - 100 KR-4 SLURRY WALL VERTICAL BARRIER MODEL SUB. Fixed Price Contractor | DETAIL PAGE 7

SUB:01. Mobilization & Preparatory Work	QUANTY UOM CREW ID	LABOR	EQUIPMNT	MAT/SUPP	UNIT CST	TOTAL COST	UNIT COST
SUB:01.06. Pre-Construction Submittals							
FPC S3 Allowance for Pre-Construction Submittals by Fixed Price Contractor	4.00 EA	0.00 0	0.00 0	0.00 0	2500.00 10,000	2500.00 10,000	2500.00
Pre-Construction Submittals	4.00 EA	0	0	0	10,000	10,000	2500.00
Mobilization & Preparatory Work		9,599	1,819	7,007	11,000	29,424	

Fri 07 Oct 1994

DETAILED ESTIMATE

U.S. Army Corps of Engineers
PROJECT KSLRRY: HANFORD: ER PROGRAM - 100 KR-4 SLURRY WALL
VERTICAL BARRIER MODEL
SUB. Fixed Price Contractor

TIME 07:15:02

DETAIL PAGE 8

SUB:03. Site Work	QUANTY	UOM	CREW ID	LABOR	EQUIPMNT	MAT/SUPP	UNIT CST	TOTAL COST	UNIT COST
SUB:03. Site Work									
SUB:03.03. Earthwork									
FPC S3 Allowance for Site Preparation				0.00	0.00	0.00	5000.00	5000.00	
	1.00	LS		0	0	0	5,000	5,000	5000.00
Earthwork				0	0	0	5,000	5,000	

SUB:03. Site Work	QUANTY UOM CREW ID	LABOR	EQUIPMNT	MAT/SUPP	UNIT CST	TOTAL COST	UNIT COST
SUB:03.04. Roads/Parking/Curbs/Walks							
FPC S3 Allowance for Access Road		0.00	0.00	0.00	10.00	10.00	
	400.00 SY	0	0	0	4,000	4,000	10.00
FPC S3 Access Roads to Wells		0.00	0.00	0.00	2.12	2.12	
Assume 4750 lf of road per well, 10 ft wide, native materials 4750 lf/well x 4 wells = 19,000 lf	19000 LF	0	0	0	40,280	40,280	2.12
Roads/Parking/Curbs/Walks		0	0	0	44,280	44,280	

SUB:03. Site Work	QUANTY UOM CREW ID	LABOR	EQUIPMNT	MAT/SUPP	UNIT CST	TOTAL COST	UNIT COST
SUB:03.06. Electrical Distribution							
FPC S3 Allowance for Site Electrical		0.00	0.00	0.00	10000.00	10000.00	
	1.00 LS	0	0	0	10,000	10,000	10000.00
Electrical Distribution		0	0	0	10,000	10,000	
Site Work		0	0	0	59,280	59,280	

SUB:06. Groundwater Collection & Control	QUANTY UOM CREW ID	LABOR	EQUIPMNT	MAT/SUPP	UNIT CST	TOTAL COST	UNIT COST
SUB:06. Groundwater Collection & Control							
SUB:06.01. Extraction & Injection Wells							
SUB:06.01.01. Well Drilling & Construction							
FPC S3 Drill/Inst Extr/Inject Wells		0.00	0.00	0.00	700.00	700.00	
Note: 2 new extraction and 2 new injection wells, 105 ft deep, 8 in diameter, screened for 50 ft. Unit cost is assumed to include handling and packaging of contaminated well cuttings, transport to the disposal facility, and associated disposal fees.	420.00 LF	0	0	0	294,000	294,000	700.00
FPC S3 Allowance for Well Pumps- 20 GPM		0.00	0.00	0.00	3000.00	3000.00	
	2.00 EA	0	0	0	6,000	6,000	3000.00
FPC S3 Allowance for Controls and connections at wellheads		0.00	0.00	0.00	10000.00	10000.00	
	4.00 EA	0	0	0	40,000	40,000	10000.00
FPC S3 Allowance for Water Level monitoring instrumentation. Assume 5 piezometers per extraction well using well points		0.00	0.00	0.00	1000.00	1000.00	
	10.00	0	0	0	10,000	10,000	1000.00
FPC S3 Allowance for Wellhead Covers Assume manhole-type cover for each wellhead		0.00	0.00	0.00	1000.00	1000.00	
	4.00 EA	0	0	0	4,000	4,000	1000.00
Well Drilling & Construction	4.00 EA	0	0	0	354,000	354,000	88500.00

SUB:06. Groundwater Collection & Control	QUANTY UOM CREW ID	LABOR	EQUIPMNT	MAT/SUPP	UNIT CST	TOTAL COST	UNIT COST
SUB:06.01.04. Operations and Maintenance 3,6,9							
FPC S3 Allowance for Well Workover		0.00	0.00	0.00	10000.00	10000.00	
Assume 1 every 3 years for each well during the 12-year lifecycle	4.00 EA	0	0	0	40,000	40,000	10000.00
FPC S3 Allowance for Well Pump Replacement		0.00	0.00	0.00	3000.00	3000.00	
Assume pump replacement every 3 years for each extraction well	2.00 EA	0	0	0	6,000	6,000	3000.00
Operations and Maintenance 3,6,9		0	0	0	46,000	46,000	

SUB:06. Groundwater Collection & Control	QUANTY UOM CREW ID	LABOR	EQUIPMNT	MAT/SUPP	UNIT CST	TOTAL COST	UNIT COST
SUB:06.01.9X. Site Piping							
FPC S3 Allowance for Piping from Well Head to distribution point Assume 4750 lf of double-wall PVC pipe per extraction well		0.00	0.00	0.00	18.00	18.00	
	9500.00 LF	0	0	0	171,000	171,000	18.00
FPC S3 Allowance for Leak Detection		0.00	0.00	0.00	5000.00	5000.00	
	1.00 LS	0	0	0	5,000	5,000	5000.00
FPC S3 Allowance for Force Main Discharge Piping Assume 4750 lf of double-wall PVC piping per injection well		0.00	0.00	0.00	18.00	18.00	
	9500.00 LF	0	0	0	171,000	171,000	18.00
Site Piping		0	0	0	347,000	347,000	
Extraction & Injection Wells		0	0	0	747,000	747,000	

Fri 07 Oct 1994

DETAILED ESTIMATE

U.S. Army Corps of Engineers
PROJECT KSLRRY: HANFORD: ER PROGRAM - 100 KR-4 SLURRY WALL
VERTICAL BARRIER MODEL
SUB. Fixed Price Contractor

TIME 07:15:02

DETAIL PAGE 14

SUB:06. Groundwater Collection & Control	QUANTY UOM CREW ID	LABOR	EQUIPMNT	MAT/SUPP	UNIT CST	TOTAL COST	UNIT COST
SUB:06.03. Slurry Walls							
FPC S3 Construct Slurry Wall		0.00	0.00	0.00	25.00	25.00	
Assume 105 ft deep x 9500 lf Includes mob of equipment, excavation, and installation of slurry wall.	997500 SF	0	0	0	24,937,500	24,937,500	25.00
FPC S3 Install Soil Cap over Barrier		0.00	0.00	0.00	5.00	5.00	
	9500.00 LF	0	0	0	47,500	47,500	5.00
Slurry Walls		0	0	0	24,985,000	24,985,000	
Groundwater Collection & Control		0	0	0	25,732,000	25,732,000	

Fri 07 Oct 1994

DETAILED ESTIMATE

U.S. Army Corps of Engineers
PROJECT KSLRRY: HANFORD: ER PROGRAM - 100 KR-4 SLURRY WALL
VERTICAL BARRIER MODEL
SUB. Fixed Price Contractor

TIME 07:15:02

DETAIL PAGE 15

SUB:20. Site Restoration	QUANTY UOM CREW ID	LABOR	EQUIPMNT	MAT/SUPP	UNIT CST	TOTAL COST	UNIT COST
SUB:20. Site Restoration							
SUB:20.04. Revegetation and Planting							
FPC S3 Allowance for Site Restoration		0.00	0.00	0.00	2.00	2.00	
	3700.00 SY	0	0	0	7,400	7,400	2.00
Revegetation and Planting		0	0	0	7,400	7,400	
Site Restoration		0	0	0	7,400	7,400	

SUB:21. Demobilization	QUANTY	UOM	CREW ID	LABOR	EQUIPMNT	MAT/SUPP	UNIT CST	TOTAL COST	UNIT COST
SUB:21. Demobilization									
SUB:21.02. Demobilize Personnel & Equipment									
SUB:21.02.02. Demobilize Trailers									
FPC S3 Demob Field Office Trailer				0.00	250.00	0.00	0.00	250.00	
	1.00	EA		0	250	0	0	250	250.00
FPC S3 Demob Storage Trailer				0.00	250.00	0.00	0.00	250.00	
	1.00	EA		0	250	0	0	250	250.00
FPC S3 Demob Decon Trailer				0.00	250.00	0.00	0.00	250.00	
	1.00	EA		0	250	0	0	250	250.00
Demobilize Trailers				0	750	0	0	750	
Demobilize Personnel & Equipment				0	750	0	0	750	

SUB:21. Demobilization	QUANTY UOM CREW ID	LABOR	EQUIPMNT	MAT/SUPP	UNIT CST	TOTAL COST	UNIT COST
SUB:21.04. Demobilize Temp Facilities							
SUB:21.04.02. Remove Decon Area							
Work to be Performed:							
Remove decontamination area/pad for equipment and vehicles.							
Crew and Equipment:							
Fixed Price Contractor: 1 Group 6 Operator, 3 Group 1 Laborers, and 3 Group 2 Laborers							
Equipment: 1 backhoe, 1 pickup truck							
Output:							
Assumed duration for this activity is 1 crew day.							
FPC S3 Group-6 Power Equipment Operator - 1 ea	8.00 HR 0039	29.10 233	0.00 0	0.00 0	0.00 0	29.10 233	29.10
FPC S3 Laborer Group - 1 - 3 ea	24.00 HR 0029	25.20 605	0.00 0	0.00 0	0.00 0	25.20 605	25.20
FPC S3 Laborer Group - 2 - 3 ea	24.00 HR 0030	25.50 612	0.00 0	0.00 0	0.00 0	25.50 612	25.50
FPC S3 HYD EXCAV,TRK MTD,.5 CY BKT,6X4 HYDRO-SCOPIC - 1 ea	8.00 HR H30BA001	0.00 0	34.44 275	0.00 0	0.00 0	34.44 275	34.44
FPC S3 TRK,HWY,4X4,F250,3/4T,8800 GVW 4X4 3/4 TON PICK-UP - 1 ea	8.00 HR T50F0004	0.00 0	7.31 58	0.00 0	0.00 0	7.31 58	7.31
FPC S3 Small Tools - 2 ea	16.00 HR XMIXX020	0.00 0	1.39 22	0.00 0	0.00 0	1.39 22	1.39
Remove Decon Area	8.00 HR	1,450	356	0	0	1,806	225.72
Demobilize Temp Facilities		1,450	356	0	0	1,806	

SUB:21. Demobilization	QUANTY UOM CREW ID	LABOR	EQUIPMNT	MAT/SUPP	UNIT CST	TOTAL COST	UNIT COST
SUB:21.05. Disconnect Temporary Utilities							
M FPC S3 Remove Temporary Power		1.00	0.00	0.00	0.00	1.00	
	500.00 LF	500	0	0	0	500	1.00
M FPC S3 Remove Telephone		1.00	0.00	0.00	0.00	1.00	
	500.00 LF	500	0	0	0	500	1.00
M FPC S3 Remove Temporary Water and Sewer Service		3.00	0.00	0.00	0.00	3.00	
	500.00 LF	1,500	0	0	0	1,500	3.00
Disconnect Temporary Utilities		2,500	0	0	0	2,500	

SUB:21. Demobilization	QUANTY UOM CREW ID	LABOR	EQUIPMNT	MAT/SUPP	UNIT CST	TOTAL COST	UNIT COST
SUB:21.06. Post-Construction Submittals							
FPC S3 Allowance for Post-Construction Submittals by Fixed Price Contractor, Year 12	4.00 EA	0.00 0	0.00 0	0.00 0	2500.00 10,000	2500.00 10,000	2500.00
Post-Construction Submittals	4.00 EA	0	0	0	10,000	10,000	2500.00
Demobilization		3,950	1,106	0	10,000	15,056	
Fixed Price Contractor		13,548	2,925	7,007	25,819,680	25,843,160	

WHC:02. Monitoring, Sampling & Analysis	QUANTY UOM CREW ID	LABOR	EQUIPMNT	MAT/SUPP	UNIT CST	TOTAL COST	UNIT COST

WHC. Westinghouse Hanford Company
WHC:02. Monitoring, Sampling & Analysis
WHC:02.08. Sampling Rad Contamtd Media 1-12
WHC:02.08.02. Ground Water Analysis

Assumptions:

1. Assume sampling of 7 monitoring wells on a semiannual basis for the 12-year lifecycle.
   (14 samples)

2. Assume monthly performance monitoring of 7 wells for the 12-year lifecycle.
   (84 samples)

   - Total samples = 98

3. 90% of samples analyzed at mobile lab
   (90% of 98 = 88)

WHC	Analyze LLW Sample - Mobile Lab		0.00	0.00	0.00	400.00	400.00	
		88.00 EA	0	0	0	35,200	35,200	400.00
	Ground Water Analysis	88.00 EA	0	0	0	35,200	35,200	400.00

WHC:02. Monitoring, Sampling & Analysis	QUANTY UOM CREW ID	LABOR	EQUIPMNT	MAT/SUPP	UNIT CST	TOTAL COST	UNIT COST
WHC:02.08.04. Take Ground Water Samples							
Assumptions:							
1. Assume sampling of 7 monitoring wells on a semiannual basis for the 12-year lifecycle (14 samples)							
2. Assume 2 field technicians for 6 hours on a semiannual basis for the 12-year lifecycle (24 hours)							
WHC Technician, Environmental		27.62	0.00	0.00	0.00	27.62	
Restoration Ops - 2 ea	24.00 HR 85201	663	0	0	0	663	27.62
Take Ground Water Samples	24.00 HR	663	0	0	0	663	27.62
Sampling Rad Contmntd Media 1-12		663	0	0	35,200	35,863	
Monitoring, Sampling & Analysis		663	0	0	35,200	35,863	

WHC:06. Groundwater Collection & Control	QUANTY UOM CREW ID	LABOR	EQUIPMNT	MAT/SUPP	UNIT CST	TOTAL COST	UNIT COST
WHC:06. Groundwater Collection & Control							
WHC:06.03. Slurry Walls (Yr 1)							
Assume WHC QA and safety oversite for the construction project.							
WHC Technician, Environmental		28.80	0.00	0.00	0.00	28.80	
Restoration Ops	80.00 HR 85201	2,304	0	0	0	2,304	28.80
Slurry Walls (Yr 1)		2,304	0	0	0	2,304	
Groundwater Collection & Control		2,304	0	0	0	2,304	

WHC:13. Slurry Wall	QUANTY UOM CREW ID	LABOR	EQUIPMNT	MAT/SUPP	UNIT CST	TOTAL COST	UNIT COST
WHC:13. Slurry Wall							
WHC:13.21. Slurry Wall							
WHC:13.21.08. Operation and Maint-Yrs 1-12							
WHC Allowance for Electricity		0.00	0.00	0.00	0.06	0.06	
Wells: 147 kW-hr/d	53655 KW	0	0	0	3,219	3,219	0.06
Assume 24 hrs/d x 365 days/yr for the 12-year lifecycle							
Operation and Maint-Yrs 1-12		0	0	0	3,219	3,219	

WHC:13. Slurry Wall		QUANTY	UOM	CREW ID	LABOR	EQUIPMNT	MAT/SUPP	UNIT CST	TOTAL COST	UNIT COST
WHC:13.21.11. Prepare Annual Report (Yr 1)										
WHC	Engineer, Environmental				43.34	0.00	0.00	0.00	43.34	
	Restoration Ops	1040.00	HR	85101	45,074	0	0	0	45,074	43.34
WHC	Scientist, Environmental				43.34	0.00	0.00	0.00	43.34	
	Restoration Ops	1040.00	HR	85102	45,074	0	0	0	45,074	43.34
	Prepare Annual Report (Yr 1)				90,148	0	0	0	90,148	

WHC:13. Slurry Wall		QUANTY	UOM	CREW ID	LABOR	EQUIPMNT	MAT/SUPP	UNIT CST	TOTAL COST	UNIT COST
WHC:13.21.12. Prepare Annual Report (Yrs 2-12) Assume 66% Year 1 Annual Report effort (2 FTE's for 4 months each year)										
WHC	Engineer, Environmental				43.34	0.00	0.00	0.00	43.34	
	Restoration Ops	693.00	HR	85101	30,035	0	0	0	30,035	43.34
WHC	Scientist, Environmental				43.34	0.00	0.00	0.00	43.34	
	Restoration Ops	693.00	HR	85102	30,035	0	0	0	30,035	43.34
	Prepare Annual Report (Yrs 2-12)				60,070	0	0	0	60,070	
	Slurry Wall				150,218	0	0	3,219	153,437	
	Slurry Wall				150,218	0	0	3,219	153,437	
	Westinghouse Hanford Company				153,185	0	0	38,419	191,605	
	HANFORD: ER PROGRAM				166,734	2,925	7,007	25,900,199	26,076,865	

Fri 07 Oct 1994

U.S. Army Corps of Engineers
PROJECT KSLRRY: HANFORD: ER PROGRAM - 100 KR-4 SLURRY WALL
VERTICAL BARRIER MODEL
** LABOR BACKUP **

TIME 07:15:02
BACKUP PAGE 1

SRC	LABOR ID	DESCRIPTION	BASE	OVERTM	TXS/INS	FRNG	TRVL	RATE	UOM	UPDATE	**** TOTAL **** DEFAULT	HOURS
FPC	0029	Laborer Group - 1	15.84	0.0%	28.7%	3.57	1.25	25.20	HR	07/09/93	0.00	96
FPC	0030	Laborer Group - 2	16.09	0.0%	28.5%	3.57	1.25	25.50	HR	07/09/93	0.00	96
FPC	0039	Group-6 Power Equipment Operator	18.02	0.0%	27.4%	4.90	1.25	29.10	HR	07/09/93	0.00	32
WHC	85101	Engineer, Environmental	35.38	0.0%	22.5%	0.00	0.00	43.34	HR	01/07/94	0.00	1733
WHC	85102	Scientist, Environmental	35.38	0.0%	22.5%	0.00	0.00	43.34	HR	01/07/94	0.00	1733
WHC	85201	Technician, Environmental	22.55	0.0%	22.5%	0.00	0.00	27.62	HR	01/07/94	0.00	104

Fri 07 Oct 1994

U.S. Army Corps of Engineers
PROJECT KSLRRY: HANFORD: ER PROGRAM - 100 KR-4 SLURRY WALL
VERTICAL BARRIER MODEL
** EQUIPMENT BACKUP **

TIME 07:15:02

BACKUP PAGE 2

SRC	EQUIP ID	DESCRIPTION	DEPR	CAPT	FUEL	FOG	EQ REP	TR WR	TR REP	TOTAL UOM	** TOTAL HOURS **
MIL	W30BA001	HYD EXCAV,TRK MTD,.5 CY BKT,6X4	14.36	3.58	4.07	1.4	9.83	0.98	0.15	34.44 HR	32
MIL	T50FO004	TRK,HWY,4X4,F250,3/4T,8800 GVW	1.58	0.39	2.67	0.7	1.60	0.27	0.04	7.31 HR	32
MIL	XMIXX020	Small Tools	0.46	0.17	0.13	0.0	0.57			1.39 HR	64

9413294.3418

HANFORD: ER PROGRAM
100 KR-4 ION EXCHANGE
1.4.10.1.1.10.5.2.4
ION EXCHANGE REMEDIATION
PRELIMINARY COST MODEL

Designed By:
Estimated By: IT Corporation

Prepared By: USACE/CENPW COST ENG BRANCH
Project Time & Cost, Inc.

Date: 10/07/94

M C A C E S G O L D E D I T I O N
Composer GOLD Copyright (C) 1985, 1988, 1990, 1992
by Building Systems Design, Inc.
Release 5.20J

SUMMARY REPORTS — SUMMARY PAGE

PROJECT OWNER SUMMARY - LEVEL 1....1
PROJECT OWNER SUMMARY - LEVEL 2....2
PROJECT OWNER SUMMARY - LEVEL 5....3
PROJECT INDIRECT SUMMARY - LEVEL 1....8
PROJECT INDIRECT SUMMARY - LEVEL 2....9
PROJECT INDIRECT SUMMARY - LEVEL 5....10
PROJECT DIRECT SUMMARY - LEVEL 1....16
PROJECT DIRECT SUMMARY - LEVEL 2....17
PROJECT DIRECT SUMMARY - LEVEL 5....19

DETAILED ESTIMATE — DETAIL PAGE

ANA. Off-Site Analytical Services
02. Monitoring, Sampling & Analysis
08. Sampling Rad Contaminated Media
02. Ground Water Analysis Yr - 1....1
03. Ground Water Analysis Yrs 2-12....2
SUB. Fixed Price Contractor
01. Mobilization & Preparatory Work
02. Mobilize Personnel & Equipment
02. Mobilize Trailers....3
04. Setup/Construct Temp Facilities
01. Establish Facilities....4
02. Construct Decon Area....5
03. Site Survey....6
05. Construct Temporary Utilities....7
06. Pre-Construction Submittals....8
03. Site Work
03. Earthwork....9
04. Roads/Parking/Curbs/Walks....10
05. Fencing....11
06. Electrical Distribution....12
06. Groundwater Collection & Control
01. Extraction & Injection Wells
01. Well Drilling & Construction....13
04. Operations and Maintenance 3,6,9....14
9X. Site Piping....15
12. Chemical Treatment
05. Ion Exchange
04. Construction of Permanent Plant....16
20. Site Restoration
04. Revegetation and Planting....17
21. Demobilization
02. Demobilize Personnel & Equipment
02. Demobilize Trailers....18
04. Demobilize Temp Facilities
02. Remove Decon Area....19
05. Disconnect Temporary Utilities....20
06. Post-Construction Submittals....21
WHC. Westinghouse Hanford Company

DETAILED ESTIMATE — DETAIL PAGE

02. Monitoring, Sampling & Analysis
08. Sampling Rad Contaminated Media
02. Ground Water Analysis Yr - 1.....22
03. Ground Water Analysis Yr 2 - 12.....23
04. Ground Water Monitor Smples 1-12.....24
12. Chemical Treatment
05. Ion Exchange
06. Personnel Training.....25
08. Operation & Maintenance Yrs 1-12.....26
09. Operation & Maint (Yrs 1,3,6,9).....28
11. Prepare Annual Report (Yr 1).....29
12. Prepare Annual Report (Yrs 2-12).....30

BACKUP REPORTS — BACKUP PAGE

LABOR BACKUP.....1
EQUIPMENT BACKUP.....2

* * * END TABLE OF CONTENTS * * *

9413294.3421

Fri 07 Oct 1994

U.S. Army Corps of Engineers
PROJECT KAREIX: HANFORD: ER PROGRAM - 100 KR-4 ION EXCHANGE
100 KR-4 ION EXCHANGE REMEDIATION MODEL
** PROJECT OWNER SUMMARY - LEVEL 1 (Rounded to 10's) **

TIME 08:42:51
SUMMARY PAGE 1

		QUANTITY UOM	CONTRACT COST	SUB MPR	PM/CM	G&A/CSP	CONTINGN	TOTAL COST	UNIT COST
ANA	Off-Site Analytical Services		122,090	0	0	0	42,730	164,820	
SUB	Fixed Price Contractor		7,908,350	577,310	1,272,850	2,488,420	4,286,430	16,533,360	
WHC	Westinghouse Hanford Company		8,483,940	0	1,272,590	2,487,910	4,285,560	16,530,000	
	HANFORD: ER PROGRAM		16,514,380	577,310	2,545,440	4,976,340	8,614,710	33,228,180	

Fri 07 Oct 1994

U.S. Army Corps of Engineers
PROJECT KAREIX: HANFORD: ER PROGRAM - 100 KR-4 ION EXCHANGE
100 KR-4 ION EXCHANGE REMEDIATION MODEL
** PROJECT OWNER SUMMARY - LEVEL 2 (Rounded to 10's) **

TIME 08:42:51
SUMMARY PAGE 2

	QUANTITY UOM	CONTRACT COST	SUB MPR	PM/CM	G&A/CSP	CONTINGN	TOTAL COST	UNIT COST
ANA Off-Site Analytical Services								
ANA:02 Monitoring, Sampling & Analysis		122,090	0	0	0	42,730	164,820	
Off-Site Analytical Services		122,090	0	0	0	42,730	164,820	
SUB Fixed Price Contractor								
SUB:01 Mobilization & Preparatory Work		37,930	2,770	6,100	11,930	20,560	79,290	
SUB:03 Site Work		222,630	16,250	35,830	70,050	120,670	465,430	
SUB:06 Groundwater Collection & Control		4,288,370	313,050	690,210	1,349,370	2,324,350	8,965,350	
SUB:12 Chemical Treatment		3,327,130	242,880	535,500	1,046,910	1,803,350	6,955,760	
SUB:20 Site Restoration		12,890	940	2,070	4,060	6,990	26,950	
SUB:21 Demobilization		19,410	1,420	3,120	6,110	10,520	40,570	
Fixed Price Contractor		7,908,350	577,310	1,272,850	2,488,420	4,286,430	16,533,360	
WHC Westinghouse Hanford Company								
WHC:02 Monitoring, Sampling & Analysis		104,250	0	15,640	30,570	52,660	203,120	
WHC:12 Chemical Treatment		8,379,690	0	1,256,950	2,457,340	4,232,890	16,326,870	
Westinghouse Hanford Company		8,483,940	0	1,272,590	2,487,910	4,285,560	16,530,000	
HANFORD: ER PROGRAM		16,514,380	577,310	2,545,440	4,976,340	8,614,710	33,228,180	

	QUANTITY UOM	CONTRACT COST	SUB MPR	PM/CM	G&A/CSP	CONTINGN	TOTAL COST	UNIT COST
ANA Off-Site Analytical Services								
ANA:02 Monitoring, Sampling & Analysis								
ANA:02.08 Sampling Rad Contaminated Media								
ANA:02.08.02 Ground Water Analysis Yr - 1								
Ground Water Analysis Yr - 1	17.00 EA	71,570	0	0	0	25,050	96,620	5683.50
ANA:02.08.03 Ground Water Analysis Yrs 2-12								
Ground Water Analysis Yrs 2-12	12.00 EA	50,520	0	0	0	17,680	68,200	5683.50
Sampling Rad Contaminated Media		122,090	0	0	0	42,730	164,820	
Monitoring, Sampling & Analysis		122,090	0	0	0	42,730	164,820	
Off-Site Analytical Services		122,090	0	0	0	42,730	164,820	
SUB Fixed Price Contractor								
SUB:01 Mobilization & Preparatory Work								
SUB:01.02 Mobilize Personnel & Equipment								
SUB:01.02.02 Mobilize Trailers								
Mobilize Trailers		970	70	160	300	520	2,020	
Mobilize Personnel & Equipment		970	70	160	300	520	2,020	
SUB:01.04 Setup/Construct Temp Facilities								
SUB:01.04.01 Establish Facilities								
SUB:01.04.01.02 Setup Trailers		4,910	360	790	1,540	2,660	10,260	
Establish Facilities		4,910	360	790	1,540	2,660	10,260	
SUB:01.04.02 Construct Decon Area								

	QUANTITY UOM	CONTRACT COST	SUB MPR	PM/CM	G&A/CSP	CONTINGN	TOTAL COST	UNIT COST
Construct Decon Area	24.00 HR	11,850	860	1,910	3,730	6,420	24,770	1031.90
SUB:01.04.03 Site Survey								
Site Survey		1,290	90	210	410	700	2,690	
Setup/Construct Temp Facilities		18,040	1,320	2,900	5,680	9,780	37,720	
SUB:01.05 Construct Temporary Utilities								
Construct Temporary Utilities		6,030	440	970	1,900	3,270	12,600	
SUB:01.06 Pre-Construction Submittals								
Pre-Construction Submittals	4.00 EA	12,890	940	2,070	4,060	6,990	26,950	6736.82
Mobilization & Preparatory Work		37,930	2,770	6,100	11,930	20,560	79,290	
SUB:03 Site Work								
SUB:03.03 Earthwork								
Earthwork		6,440	470	1,040	2,030	3,490	13,470	
SUB:03.04 Roads/Parking/Curbs/Walks								
Roads/Parking/Curbs/Walks		189,370	13,820	30,480	59,590	102,640	395,910	
SUB:03.05 Fencing								
Fencing		13,920	1,020	2,240	4,380	7,550	29,100	
SUB:03.06 Electrical Distribution								
Electrical Distribution		12,890	940	2,070	4,060	6,990	26,950	
Site Work		222,630	16,250	35,830	70,050	120,670	465,430	
SUB:06 Groundwater Collection & Control								
SUB:06.01 Extraction & Injection Wells								

Fri 07 Oct 1994

U.S. Army Corps of Engineers
PROJECT KAREIX: HANFORD: ER PROGRAM - 100 KR-4 ION EXCHANGE
100 KR-4 ION EXCHANGE REMEDIATION MODEL
** PROJECT OWNER SUMMARY - LEVEL 5 (Rounded to 10's) **

TIME 08:42:51
SUMMARY PAGE 5

	QUANTITY UOM	CONTRACT COST	SUB MPR	PM/CM	G&A/CSP	CONTINGN	TOTAL COST	UNIT COST
SUB:06.01.01 Well Drilling & Construction								
Well Drilling & Construction	22.00 EA	2,552,140	186,310	410,770	803,050	1,383,290	5,335,560	242525.38
SUB:06.01.04 Operations and Maintenance 3,6,9								
Operations and Maintenance 3,6,9		326,110	23,810	52,490	102,610	176,750	681,770	
SUB:06.01.9X Site Piping								
Site Piping		1,410,120	102,940	226,960	443,710	764,300	2,948,030	
Extraction & Injection Wells		4,288,370	313,050	690,210	1,349,370	2,324,350	8,965,350	
Groundwater Collection & Control		4,288,370	313,050	690,210	1,349,370	2,324,350	8,965,350	
SUB:12 Chemical Treatment								
SUB:12.05 Ion Exchange								
SUB:12.05.04 Construction of Permanent Plant								
Construction of Permanent Plant	12600.00 SF	3,327,130	242,880	535,500	1,046,910	1,803,350	6,955,760	552.04
Ion Exchange		3,327,130	242,880	535,500	1,046,910	1,803,350	6,955,760	
Chemical Treatment		3,327,130	242,880	535,500	1,046,910	1,803,350	6,955,760	
SUB:20 Site Restoration								
SUB:20.04 Revegetation and Planting								
Revegetation and Planting		12,890	940	2,070	4,060	6,990	26,950	
Site Restoration		12,890	940	2,070	4,060	6,990	26,950	
SUB:21 Demobilization								
SUB:21.02 Demobilize Personnel & Equipment								
SUB:21.02.02 Demobilize Trailers								

	QUANTITY UOM	CONTRACT COST	SUB MPR	PM/CM	G&A/CSP	CONTINGN	TOTAL COST	UNIT COST
Demobilize Trailers		970	70	160	300	520	2,020	
Demobilize Personnel & Equipment		970	70	160	300	520	2,020	
SUB:21.04 Demobilize Temp Facilities								
SUB:21.04.02 Remove Decon Area								
Remove Decon Area	8.00 HR	2,330	170	370	730	1,260	4,870	608.26
Demobilize Temp Facilities		2,330	170	370	730	1,260	4,870	
SUB:21.05 Disconnect Temporary Utilities								
Disconnect Temporary Utilities		3,220	240	520	1,010	1,750	6,740	
SUB:21.06 Post-Construction Submittals								
Post-Construction Submittals	4.00 EA	12,890	940	2,070	4,060	6,990	26,950	6736.82
Demobilization		19,410	1,420	3,120	6,110	10,520	40,570	
Fixed Price Contractor		7,908,350	577,310	1,272,850	2,488,420	4,286,430	16,533,360	
WHC Westinghouse Hanford Company								
WHC:02 Monitoring, Sampling & Analysis								
WHC:02.08 Sampling Rad Contaminated Media								
WHC:02.08.02 Ground Water Analysis Yr - 1								
Ground Water Analysis Yr - 1	149.00 EA	60,410	0	9,060	17,710	30,510	117,700	789.90
WHC:02.08.03 Ground Water Analysis Yr 2 - 12								
Ground Water Analysis Yr 2 - 12	106.00 EA	43,180	0	6,480	12,660	21,810	84,140	793.74
WHC:02.08.04 Ground Water Monitor Smples 1-12								

Fri 07 Oct 1994

U.S. Army Corps of Engineers
PROJECT KAREIX: HANFORD: ER PROGRAM - 100 KR-4 ION EXCHANGE
100 KR-4 ION EXCHANGE REMEDIATION MODEL
** PROJECT OWNER SUMMARY - LEVEL 5 (Rounded to 10's) **

TIME 08:42:51
SUMMARY PAGE 7

	QUANTITY UOM	CONTRACT COST	SUB MPR	PM/CM	G&A/CSP	CONTINGN	TOTAL COST	UNIT COST
Ground Water Monitor Smples 1-12	24.00 HR	660	0	100	190	330	1,290	53.82
Sampling Rad Contaminated Media		104,250	0	15,640	30,570	52,660	203,120	
Monitoring, Sampling & Analysis		104,250	0	15,640	30,570	52,660	203,120	
WHC:12 Chemical Treatment								
WHC:12.05 Ion Exchange								
WHC:12.05.06 Personnel Training								
Personnel Training		6,900	0	1,040	2,020	3,490	13,450	
WHC:12.05.08 Operation & Maintenance Yrs 1-12								
Operation & Maintenance Yrs 1-12	1.00 YR	4,602,320	0	690,350	1,349,630	2,324,800	8,967,090	8967094.47
WHC:12.05.09 Operation & Maint (Yrs 1,3,6,9)								
Operation & Maint (Yrs 1,3,6,9)	1.00 YR	3,620,250	0	543,040	1,061,640	1,828,720	7,053,640	7053643.71
WHC:12.05.11 Prepare Annual Report (Yr 1)								
Prepare Annual Report (Yr 1)	2080.00 HR	90,150	0	13,520	26,440	45,540	175,640	84.44
WHC:12.05.12 Prepare Annual Report (Yrs 2-12)								
Prepare Annual Report (Yrs 2-12)		60,070	0	9,010	17,620	30,340	117,040	
Ion Exchange		8,379,690	0	1,256,950	2,457,340	4,232,890	16,326,870	
Chemical Treatment		8,379,690	0	1,256,950	2,457,340	4,232,890	16,326,870	
Westinghouse Hanford Company		8,483,940	0	1,272,590	2,487,910	4,285,560	16,530,000	
HANFORD: ER PROGRAM		16,514,380	577,310	2,545,440	4,976,340	8,614,710	33,228,180	

Fri 07 Oct 1994

U.S. Army Corps of Engineers
PROJECT KAREIX: HANFORD: ER PROGRAM - 100 KR-4 ION EXCHANGE
100 KR-4 ION EXCHANGE REMEDIATION MODEL
** PROJECT INDIRECT SUMMARY - LEVEL 1 (Rounded to 10's) **

TIME 08:42:51
SUMMARY PAGE 8

		QUANTITY UOM	TOTAL DIRECT	OVERHEAD	PROFIT	BOND	B&O TAX	MAT MPR	TOTAL COST	UNIT COST
ANA	Off-Site Analytical Services		122,090	0	0	0	0	0	122,090	
SUB	Fixed Price Contractor		6,135,450	1,165,740	529,340	40,840	37,000	0	7,908,350	
WHC	Westinghouse Hanford Company		8,076,480	0	0	0	0	407,460	8,483,940	
	HANFORD: ER PROGRAM		14,334,020	1,165,740	529,340	40,840	37,000	407,460	16,514,380	
	Subcontractor MPR								577,310	
	SUBTOTAL								17,091,690	
	Project Management/Construction Mgnt								2,545,440	
	SUBTOTAL								19,637,130	
	General & Admin/Common Support Pool								4,976,340	
	SUBTOTAL								24,613,470	
	Contingency								8,614,710	
	TOTAL INCL OWNER COSTS								33,228,180	

Fri 07 Oct 1994

U.S. Army Corps of Engineers
PROJECT KAREIX: HANFORD: ER PROGRAM - 100 KR-4 ION EXCHANGE
100 KR-4 ION EXCHANGE REMEDIATION MODEL
** PROJECT INDIRECT SUMMARY - LEVEL 2 (Rounded to 10's) **

TIME 08:42:51
SUMMARY PAGE 9

	QUANTITY UOM	TOTAL DIRECT	OVERHEAD	PROFIT	BOND	B&O TAX	MAT MPR	TOTAL COST	UNIT COST
ANA Off-Site Analytical Services									
ANA:02 Monitoring, Sampling & Analysis		122,090	0	0	0	0	0	122,090	
Off-Site Analytical Services		122,090	0	0	0	0	0	122,090	
SUB Fixed Price Contractor									
SUB:01 Mobilization & Preparatory Work		29,420	5,590	2,540	200	180	0	37,930	
SUB:03 Site Work		172,720	32,820	14,900	1,150	1,040	0	222,630	
SUB:06 Groundwater Collection & Control		3,327,000	632,130	287,040	22,140	20,060	0	4,288,370	
SUB:12 Chemical Treatment		2,581,250	490,440	222,700	17,180	15,560	0	3,327,130	
SUB:20 Site Restoration		10,000	1,900	860	70	60	0	12,890	
SUB:21 Demobilization		15,060	2,860	1,300	100	90	0	19,410	
Fixed Price Contractor		6,135,450	1,165,740	529,340	40,840	37,000	0	7,908,350	
WHC Westinghouse Hanford Company									
WHC:02 Monitoring, Sampling & Analysis		104,250	0	0	0	0	0	104,250	
WHC:12 Chemical Treatment		7,972,230	0	0	0	0	407,460	8,379,690	
Westinghouse Hanford Company		8,076,480	0	0	0	0	407,460	8,483,940	
HANFORD: ER PROGRAM		14,334,020	1,165,740	529,340	40,840	37,000	407,460	16,514,380	
Subcontractor MPR								577,310	
SUBTOTAL								17,091,690	
Project Management/Construction Mgnt								2,545,440	
SUBTOTAL								19,637,130	
General & Admin/Common Support Pool								4,976,340	
SUBTOTAL								24,613,470	
Contingency								8,614,710	
TOTAL INCL OWNER COSTS								33,228,180	

Fri 07 Oct 1994

U.S. Army Corps of Engineers
PROJECT KAREIX: HANFORD: ER PROGRAM - 100 KR-4 ION EXCHANGE
100 KR-4 ION EXCHANGE REMEDIATION MODEL
** PROJECT INDIRECT SUMMARY - LEVEL 5 (Rounded to 10's) **

TIME 08:42:51
SUMMARY PAGE 10

	QUANTITY UOM	TOTAL DIRECT	OVERHEAD	PROFIT	BOND	B&O TAX	MAT MPR	TOTAL COST	UNIT COST
ANA Off-Site Analytical Services									
ANA:02 Monitoring, Sampling & Analysis									
ANA:02.08 Sampling Rad Contaminated Media									
ANA:02.08.02 Ground Water Analysis Yr - 1									
Ground Water Analysis Yr -	17.00 EA	71,570	0	0	0	0	0	71,570	4210.00
ANA:02.08.03 Ground Water Analysis Yrs 2-12									
Ground Water Analysis Yrs 2	12.00 EA	50,520	0	0	0	0	0	50,520	4210.00
Sampling Rad Contaminated M		122,090	0	0	0	0	0	122,090	
Monitoring, Sampling & Anal		122,090	0	0	0	0	0	122,090	
Off-Site Analytical Service		122,090	0	0	0	0	0	122,090	
SUB Fixed Price Contractor									
SUB:01 Mobilization & Preparatory Work									
SUB:01.02 Mobilize Personnel & Equipment									
SUB:01.02.02 Mobilize Trailers									
Mobilize Trailers		750	140	60	0	0	0	970	
Mobilize Personnel & Equipm		750	140	60	0	0	0	970	
SUB:01.04 Setup/Construct Temp Facilities									
SUB:01.04.01 Establish Facilities									
SUB:01.04.01.02 Setup Trailers		3,810	720	330	30	20	0	4,910	
Establish Facilities		3,810	720	330	30	20	0	4,910	
SUB:01.04.02 Construct Decon Area									

Fri 07 Oct 1994

U.S. Army Corps of Engineers
PROJECT KAREIX: HANFORD: ER PROGRAM - 100 KR-4 ION EXCHANGE
100 KR-4 ION EXCHANGE REMEDIATION MODEL
** PROJECT INDIRECT SUMMARY - LEVEL 5 (Rounded to 10's) **

TIME 08:42:51
SUMMARY PAGE 11

	QUANTITY UOM	TOTAL DIRECT	OVERHEAD	PROFIT	BOND	B&O TAX	MAT MPR	TOTAL COST	UNIT COST
Construct Decon Area	24.00 HR	9,190	1,750	790	60	60	0	11,850	493.58
SUB:01.04.03 Site Survey									
Site Survey		1,000	190	90	10	10	0	1,290	
Setup/Construct Temp Facili		14,000	2,660	1,210	90	80	0	18,040	
SUB:01.05 Construct Temporary Utilities									
Construct Temporary Utiliti		4,680	890	400	30	30	0	6,030	
SUB:01.06 Pre-Construction Submittals									
Pre-Construction Submittals	4.00 EA	10,000	1,900	860	70	60	0	12,890	3222.40
Mobilization & Preparatory		29,420	5,590	2,540	200	180	0	37,930	
SUB:03 Site Work									
SUB:03.03 Earthwork									
Earthwork		5,000	950	430	30	30	0	6,440	
SUB:03.04 Roads/Parking/Curbs/Walks									
Roads/Parking/Curbs/Walks		146,920	27,910	12,680	980	890	0	189,370	
SUB:03.05 Fencing									
Fencing		10,800	2,050	930	70	70	0	13,920	
SUB:03.06 Electrical Distribution									
Electrical Distribution		10,000	1,900	860	70	60	0	12,890	
Site Work		172,720	32,820	14,900	1,150	1,040	0	222,630	
SUB:06 Groundwater Collection & Control									
SUB:06.01 Extraction & Injection Wells									

Fri 07 Oct 1994

U.S. Army Corps of Engineers
PROJECT KAREIX: HANFORD: ER PROGRAM - 100 KR-4 ION EXCHANGE
100 KR-4 ION EXCHANGE REMEDIATION MODEL
** PROJECT INDIRECT SUMMARY - LEVEL 5 (Rounded to 10's) **

TIME 08:42:51
SUMMARY PAGE 12

	QUANTITY UOM	TOTAL DIRECT	OVERHEAD	PROFIT	BOND	B&O TAX	MAT MPR	TOTAL COST	UNIT COST
SUB:06.01.01 Well Drilling & Construction									
Well Drilling & Constructio	22.00 EA	1,980,000	376,200	170,820	13,180	11,940	0	2,552,140	116006.45
SUB:06.01.04 Operations and Maintenance 3,6									
Operations and Maintenance		253,000	48,070	21,830	1,680	1,530	0	326,110	
SUB:06.01.9X Site Piping									
Site Piping		1,094,000	207,860	94,380	7,280	6,600	0	1,410,120	
Extraction & Injection Well		3,327,000	632,130	287,040	22,140	20,060	0	4,288,370	
Groundwater Collection & Co		3,327,000	632,130	287,040	22,140	20,060	0	4,288,370	
SUB:12 Chemical Treatment									
SUB:12.05 Ion Exchange									
SUB:12.05.04 Construction of Permanent Plan									
Construction of Permanent P	12600.00 SF	2,581,250	490,440	222,700	17,180	15,560	0	3,327,130	264.06
Ion Exchange		2,581,250	490,440	222,700	17,180	15,560	0	3,327,130	
Chemical Treatment		2,581,250	490,440	222,700	17,180	15,560	0	3,327,130	
SUB:20 Site Restoration									
SUB:20.04 Revegetation and Planting									
Revegetation and Planting		10,000	1,900	860	70	60	0	12,890	
Site Restoration		10,000	1,900	860	70	60	0	12,890	
SUB:21 Demobilization									
SUB:21.02 Demobilize Personnel & Equipment									
SUB:21.02.02 Demobilize Trailers									

	QUANTITY UOM	TOTAL DIRECT	OVERHEAD	PROFIT	BOND	B&O TAX	MAT MPR	TOTAL COST	UNIT COST
Demobilize Trailers		750	140	60	0	0	0	970	
Demobilize Personnel & Equi		750	140	60	0	0	0	970	
SUB:21.04 Demobilize Temp Facilities									
SUB:21.04.02 Remove Decon Area									
Remove Decon Area	8.00 HR	1,810	340	160	10	10	0	2,330	290.95
Demobilize Temp Facilities		1,810	340	160	10	10	0	2,330	
SUB:21.05 Disconnect Temporary Utilities									
Disconnect Temporary Utilit		2,500	480	220	20	20	0	3,220	
SUB:21.06 Post-Construction Submittals									
Post-Construction Submittal	4.00 EA	10,000	1,900	860	70	60	0	12,890	3222.40
Demobilization		15,060	2,860	1,300	100	90	0	19,410	
Fixed Price Contractor		6,135,450	1,165,740	529,340	40,840	37,000	0	7,908,350	
WHC Westinghouse Hanford Company									
WHC:02 Monitoring, Sampling & Analysis									
WHC:02.08 Sampling Rad Contaminated Media									
WHC:02.08.02 Ground Water Analysis Yr - 1									
Ground Water Analysis Yr -	149.00 EA	60,410	0	0	0	0	0	60,410	405.41
WHC:02.08.03 Ground Water Analysis Yr 2 - 1									
Ground Water Analysis Yr 2	106.00 EA	43,180	0	0	0	0	0	43,180	407.38
WHC:02.08.04 Ground Water Monitor Smples 1-									

Fri 07 Oct 1994

U.S. Army Corps of Engineers
PROJECT KAREIX: HANFORD: ER PROGRAM - 100 KR-4 ION EXCHANGE
100 KR-4 ION EXCHANGE REMEDIATION MODEL
** PROJECT INDIRECT SUMMARY - LEVEL 5 (Rounded to 10's) **

TIME 08:42:51
SUMMARY PAGE 14

	QUANTITY UOM	TOTAL DIRECT	OVERHEAD	PROFIT	BOND	B&O TAX	MAT MPR	TOTAL COST	UNIT COST
Ground Water Monitor Smples	24.00 HR	660	0	0	0	0	0	660	27.62
Sampling Rad Contaminated M		104,250	0	0	0	0	0	104,250	
Monitoring, Sampling & Anal		104,250	0	0	0	0	0	104,250	
WHC:12 Chemical Treatment									
WHC:12.05 Ion Exchange									
WHC:12.05.06 Personnel Training									
Personnel Training		6,900	0	0	0	0	0	6,900	
WHC:12.05.08 Operation & Maintenance Yrs 1-									
Operation & Maintenance Yrs	1.00 YR	4,602,320	0	0	0	0	0	4,602,320	4602315.74
WHC:12.05.09 Operation & Maint (Yrs 1,3,6,9									
Operation & Maint (Yrs 1,3,	1.00 YR	3,212,790	0	0	0	0	407,460	3,620,250	3620246.85
WHC:12.05.11 Prepare Annual Report (Yr 1)									
Prepare Annual Report (Yr 1	2080.00 HR	90,150	0	0	0	0	0	90,150	43.34
WHC:12.05.12 Prepare Annual Report (Yrs 2-1									
Prepare Annual Report (Yrs		60,070	0	0	0	0	0	60,070	
Ion Exchange		7,972,230	0	0	0	0	407,460	8,379,690	
Chemical Treatment		7,972,230	0	0	0	0	407,460	8,379,690	
Westinghouse Hanford Compan		8,076,480	0	0	0	0	407,460	8,483,940	
HANFORD: ER PROGRAM		14,334,020	1,165,740	529,340	40,840	37,000	407,460	16,514,380	
Subcontractor MPR								577,310	
SUBTOTAL								17,091,690	

Fri 07 Oct 1994

U.S. Army Corps of Engineers
PROJECT KAREIX: HANFORD: ER PROGRAM - 100 KR-4 ION EXCHANGE
100 KR-4 ION EXCHANGE REMEDIATION MODEL
** PROJECT INDIRECT SUMMARY - LEVEL 5 (Rounded to 10's) **

TIME 08:42:51
SUMMARY PAGE 15

	QUANTITY UOM	TOTAL DIRECT	OVERHEAD	PROFIT	BOND	B&O TAX	MAT MPR	TOTAL COST	UNIT COST
Project Management/Construction Mgnt								2,545,440	
SUBTOTAL								19,637,130	
General & Admin/Common Support Pool								4,976,340	
SUBTOTAL								24,613,470	
Contingency								8,614,710	
TOTAL INCL OWNER COSTS								33,228,180	

Fri 07 Oct 1994

U.S. Army Corps of Engineers
PROJECT KAREIX: HANFORD: ER PROGRAM - 100 KR-4 ION EXCHANGE
100 KR-4 ION EXCHANGE REMEDIATION MODEL
** PROJECT DIRECT SUMMARY - LEVEL 1 (Rounded to 10's) **

TIME 08:42:51
SUMMARY PAGE 16

		QUANTITY UOM	LABOR	EQUIPMNT	MAT/SUPP	UNIT CST	TOTAL COST	UNIT COST
ANA	Off-Site Analytical Services		0	0	0	122,090	122,090	
SUB	Fixed Price Contractor		13,550	2,920	7,010	6,111,970	6,135,450	
WHC	Westinghouse Hanford Company		691,500	0	0	7,384,970	8,076,480	
	HANFORD: ER PROGRAM		705,050	2,920	7,010	13,619,030	14,334,020	
	Overhead						1,165,740	
	SUBTOTAL						15,499,750	
	Profit						529,340	
	SUBTOTAL						16,029,090	
	Bond						40,840	
	SUBTOTAL						16,069,930	
	B&O Tax						37,000	
	SUBTOTAL						16,106,920	
	Material/Supply MPR						407,460	
	TOTAL INCL INDIRECTS						16,514,380	
	Subcontractor MPR						577,310	
	SUBTOTAL						17,091,690	
	Project Management/Construction Mgnt						2,545,440	
	SUBTOTAL						19,637,130	
	General & Admin/Common Support Pool						4,976,340	
	SUBTOTAL						24,613,470	
	Contingency						8,614,710	
	TOTAL INCL OWNER COSTS						33,228,180	

Fri 07 Oct 1994

U.S. Army Corps of Engineers
PROJECT KAREIX: HANFORD: ER PROGRAM - 100 KR-4 ION EXCHANGE
100 KR-4 ION EXCHANGE REMEDIATION MODEL
** PROJECT DIRECT SUMMARY - LEVEL 2 (Rounded to 10's) **

TIME 08:42:51
SUMMARY PAGE 17

	QUANTITY UOM	LABOR	EQUIPMNT	MAT/SUPP	UNIT CST	TOTAL COST	UNIT COST
ANA Off-Site Analytical Services							
ANA:02 Monitoring, Sampling & Analysis		0	0	0	122,090	122,090	
Off-Site Analytical Services		0	0	0	122,090	122,090	
SUB Fixed Price Contractor							
SUB:01 Mobilization & Preparatory Work		9,600	1,820	7,010	11,000	29,420	
SUB:03 Site Work		0	0	0	172,720	172,720	
SUB:06 Groundwater Collection & Control		0	0	0	3,327,000	3,327,000	
SUB:12 Chemical Treatment		0	0	0	2,581,250	2,581,250	
SUB:20 Site Restoration		0	0	0	10,000	10,000	
SUB:21 Demobilization		3,950	1,110	0	10,000	15,060	
Fixed Price Contractor		13,550	2,920	7,010	6,111,970	6,135,450	
WHC Westinghouse Hanford Company							
WHC:02 Monitoring, Sampling & Analysis		660	0	0	103,590	104,250	
WHC:12 Chemical Treatment		690,840	0	0	7,281,390	7,972,230	
Westinghouse Hanford Company		691,500	0	0	7,384,970	8,076,480	
HANFORD: ER PROGRAM		705,050	2,920	7,010	13,619,030	14,334,020	
Overhead						1,165,740	
SUBTOTAL						15,499,750	
Profit						529,340	
SUBTOTAL						16,029,090	
Bond						40,840	
SUBTOTAL						16,069,930	
B&O Tax						37,000	
SUBTOTAL						16,106,920	
Material/Supply MPR						407,460	
TOTAL INCL INDIRECTS						16,514,380	
Subcontractor MPR						577,310	
SUBTOTAL						17,091,690	
Project Management/Construction Mgnt						2,545,440	
SUBTOTAL						19,637,130	
General & Admin/Common Support Pool						4,976,340	
SUBTOTAL						24,613,470	

Fri 07 Oct 1994

U.S. Army Corps of Engineers
PROJECT KAREIX: HANFORD: ER PROGRAM - 100 KR-4 ION EXCHANGE
100 KR-4 ION EXCHANGE REMEDIATION MODEL
** PROJECT DIRECT SUMMARY - LEVEL 2 (Rounded to 10's) **

TIME 08:42:51
SUMMARY PAGE 18

	QUANTITY UOM	LABOR	EQUIPMNT	MAT/SUPP	UNIT CST	TOTAL COST	UNIT COST
Contingency						8,614,710	
TOTAL INCL OWNER COSTS						33,228,180	

	QUANTITY UOM	LABOR	EQUIPMNT	MAT/SUPP	UNIT CST	TOTAL COST	UNIT COST
ANA Off-Site Analytical Services							
ANA:02 Monitoring, Sampling & Analysis							
ANA:02.08 Sampling Rad Contaminated Media							
ANA:02.08.02 Ground Water Analysis Yr - 1							
Ground Water Analysis Yr - 1	17.00 EA	0	0	0	71,570	71,570	4210.00
ANA:02.08.03 Ground Water Analysis Yrs 2-12							
Ground Water Analysis Yrs 2-12	12.00 EA	0	0	0	50,520	50,520	4210.00
Sampling Rad Contaminated Media		0	0	0	122,090	122,090	
Monitoring, Sampling & Analysis		0	0	0	122,090	122,090	
Off-Site Analytical Services		0	0	0	122,090	122,090	
SUB Fixed Price Contractor							
SUB:01 Mobilization & Preparatory Work							
SUB:01.02 Mobilize Personnel & Equipment							
SUB:01.02.02 Mobilize Trailers							
Mobilize Trailers		0	750	0	0	750	
Mobilize Personnel & Equipment		0	750	0	0	750	
SUB:01.04 Setup/Construct Temp Facilities							
SUB:01.04.01 Establish Facilities							
SUB:01.04.01.02 Setup Trailers		3,000	0	810	0	3,810	
Establish Facilities		3,000	0	810	0	3,810	
SUB:01.04.02 Construct Decon Area							

	QUANTITY UOM	LABOR	EQUIPMNT	MAT/SUPP	UNIT CST	TOTAL COST	UNIT COST
Construct Decon Area	24.00 HR	4,350	1,070	3,770	0	9,190	382.93
SUB:01.04.03 Site Survey							
Site Survey		0	0	0	1,000	1,000	
Setup/Construct Temp Facilities		7,350	1,070	4,580	1,000	14,000	
SUB:01.05 Construct Temporary Utilities							
Construct Temporary Utilities		2,250	0	2,430	0	4,680	
SUB:01.06 Pre-Construction Submittals							
Pre-Construction Submittals	4.00 EA	0	0	0	10,000	10,000	2500.00
Mobilization & Preparatory Work		9,600	1,820	7,010	11,000	29,420	
SUB:03 Site Work							
SUB:03.03 Earthwork							
Earthwork		0	0	0	5,000	5,000	
SUB:03.04 Roads/Parking/Curbs/Walks							
Roads/Parking/Curbs/Walks		0	0	0	146,920	146,920	
SUB:03.05 Fencing							
Fencing		0	0	0	10,800	10,800	
SUB:03.06 Electrical Distribution							
Electrical Distribution		0	0	0	10,000	10,000	
Site Work		0	0	0	172,720	172,720	
SUB:06 Groundwater Collection & Control							
SUB:06.01 Extraction & Injection Wells							

	QUANTITY UOM	LABOR	EQUIPMNT	MAT/SUPP	UNIT CST	TOTAL COST	UNIT COST
SUB:06.01.01 Well Drilling & Construction							
Well Drilling & Construction	22.00 EA	0	0	0	1,980,000	1,980,000	90000.00
SUB:06.01.04 Operations and Maintenance 3,6,9							
Operations and Maintenance 3,6,9		0	0	0	253,000	253,000	
SUB:06.01.9X Site Piping							
Site Piping		0	0	0	1,094,000	1,094,000	
Extraction & Injection Wells		0	0	0	3,327,000	3,327,000	
Groundwater Collection & Control		0	0	0	3,327,000	3,327,000	
SUB:12 Chemical Treatment							
SUB:12.05 Ion Exchange							
SUB:12.05.04 Construction of Permanent Plant							
Construction of Permanent Plant	12600.00 SF	0	0	0	2,581,250	2,581,250	204.86
Ion Exchange		0	0	0	2,581,250	2,581,250	
Chemical Treatment		0	0	0	2,581,250	2,581,250	
SUB:20 Site Restoration							
SUB:20.04 Revegetation and Planting							
Revegetation and Planting		0	0	0	10,000	10,000	
Site Restoration		0	0	0	10,000	10,000	
SUB:21 Demobilization							
SUB:21.02 Demobilize Personnel & Equipment							
SUB:21.02.02 Demobilize Trailers							

	QUANTITY UOM	LABOR	EQUIPMNT	MAT/SUPP	UNIT CST	TOTAL COST	UNIT COST
Demobilize Trailers		0	750	0	0	750	
Demobilize Personnel & Equipment		0	750	0	0	750	
SUB:21.04 Demobilize Temp Facilities							
SUB:21.04.02 Remove Decon Area							
Remove Decon Area	8.00 HR	1,450	360	0	0	1,810	225.72
Demobilize Temp Facilities		1,450	360	0	0	1,810	
SUB:21.05 Disconnect Temporary Utilities							
Disconnect Temporary Utilities		2,500	0	0	0	2,500	
SUB:21.06 Post-Construction Submittals							
Post-Construction Submittals	4.00 EA	0	0	0	10,000	10,000	2500.00
Demobilization		3,950	1,110	0	10,000	15,060	
Fixed Price Contractor		13,550	2,920	7,010	6,111,970	6,135,450	
WHC Westinghouse Hanford Company							
WHC:02 Monitoring, Sampling & Analysis							
WHC:02.08 Sampling Rad Contaminated Media							
WHC:02.08.02 Ground Water Analysis Yr - 1							
Ground Water Analysis Yr - 1	149.00 EA	0	0	0	60,410	60,410	405.41
WHC:02.08.03 Ground Water Analysis Yr 2 - 12							
Ground Water Analysis Yr 2 - 12	106.00 EA	0	0	0	43,180	43,180	407.38
WHC:02.08.04 Ground Water Monitor Smples 1-12							

	QUANTITY UOM	LABOR	EQUIPMNT	MAT/SUPP	UNIT CST	TOTAL COST	UNIT COST
Ground Water Monitor Smples 1-12	24.00 HR	660	0	0	0	660	27.62
Sampling Rad Contaminated Media		660	0	0	103,590	104,250	
Monitoring, Sampling & Analysis		660	0	0	103,590	104,250	
WHC:12 Chemical Treatment							
WHC:12.05 Ion Exchange							
WHC:12.05.06 Personnel Training							
Personnel Training		1,100	0	0	5,800	6,900	
WHC:12.05.08 Operation & Maintenance Yrs 1-12							
Operation & Maintenance Yrs 1-12	1.00 YR	539,520	0	0	4,062,800	4,602,320	4602315.74
WHC:12.05.09 Operation & Maint (Yrs 1,3,6,9)							
Operation & Maint (Yrs 1,3,6,9)	1.00 YR	0	0	0	3,212,790	3,212,790	3212788.05
WHC:12.05.11 Prepare Annual Report (Yr 1)							
Prepare Annual Report (Yr 1)	2080.00 HR	90,150	0	0	0	90,150	43.34
WHC:12.05.12 Prepare Annual Report (Yrs 2-12)							
Prepare Annual Report (Yrs 2-12)		60,070	0	0	0	60,070	
Ion Exchange		690,840	0	0	7,281,390	7,972,230	
Chemical Treatment		690,840	0	0	7,281,390	7,972,230	
Westinghouse Hanford Company		691,500	0	0	7,384,970	8,076,480	
HANFORD: ER PROGRAM		705,050	2,920	7,010	13,619,030	14,334,020	
Overhead						1,165,740	
SUBTOTAL						15,499,750	

Fri 07 Oct 1994

U.S. Army Corps of Engineers
PROJECT KAREIX: HANFORD: ER PROGRAM - 100 KR-4 ION EXCHANGE
100 KR-4 ION EXCHANGE REMEDIATION MODEL
** PROJECT DIRECT SUMMARY - LEVEL 5 (Rounded to 10's) **

TIME 08:42:51
SUMMARY PAGE 24

	QUANTITY UOM	LABOR	EQUIPMNT	MAT/SUPP	UNIT CST	TOTAL COST	UNIT COST
Profit						529,340	
SUBTOTAL						16,029,090	
Bond						40,840	
SUBTOTAL						16,069,930	
B&O Tax						37,000	
SUBTOTAL						16,106,920	
Material/Supply MPR						407,460	
TOTAL INCL INDIRECTS						16,514,380	
Subcontractor MPR						577,310	
SUBTOTAL						17,091,690	
Project Management/Construction Mgnt						2,545,440	
SUBTOTAL						19,637,130	
General & Admin/Common Support Pool						4,976,340	
SUBTOTAL						24,613,470	
Contingency						8,614,710	
TOTAL INCL OWNER COSTS						33,228,180	

ANA:02. Monitoring, Sampling & Analysis	QUANTY UOM CREW ID	LABOR	EQUIPMNT	MAT/SUPP	UNIT CST	TOTAL COST	UNIT COST

ANA. Off-Site Analytical Services
ANA:02. Monitoring, Sampling & Analysis
ANA:02.08. Sampling Rad Contaminated Media
ANA:02.08.02. Ground Water Analysis Yr - 1

Assumptions:

1. Assume shake-down period with following sampling of treatment system:
   - First 2 days: Sample every four hours of influent and effluent (24 samples)
   - Next 5 days: 1 sample per day of influent and effluent (10 samples)
   - Next 7 weeks: 1 sample per week of influent and effluent (14 samples)

2. 1 sample per ion exchange media regeneration (7 days) of the influent and effluent for the 12-yr lifecycle (104 samples/yr)

3. Assume sampling of 7 monitoring wells on a semiannual basis for the 12-year lifecycle (14 samples/yr)

   - Total samples = Yr 1 - 166

4. All on-site sample analyses performed by WHC mobile lab

5. 10% off-site verification analysis of reduced analyte list with CLP protocol. (10% of 166 = 17 ea)

ANA	Analyze LLW Sample - Off-site Lab	17.00 EA	0.00 0	0.00 0	0.00 0	4210.00 71,570	4210.00 71,570	4210.00
	Ground Water Analysis Yr - 1	17.00 EA	0	0	0	71,570	71,570	4210.00

ANA:02. Monitoring, Sampling & Analysis	QUANTY UOM CREW ID	LABOR	EQUIPMNT	MAT/SUPP	UNIT CST	TOTAL COST	UNIT COST
ANA:02.08.03. Ground Water Analysis Yrs 2-12							
Assumptions:							
1. Assume 1 sample per ion exchange media regeneration (7 days) of influent and effluent for the 12-yr lifecycle (104 samples/yr)							
2. Assume sampling of 7 monitoring wells on a semiannual basis for the 12 year lifecycle (14 samples/yr)							
- Total Samples Yrs 2 - 12 = 118/yr							
3. All on-site sample analyses performed by WHC mobile lab							
4. 10% off-site verification analysis of reduced analyte list with CLP protocol (10% of 118 = 12 ea)							
ANA Analyze LLW Sample - Off-site		0.00	0.00	0.00	4210.00	4210.00	
Lab	12.00 EA	0	0	0	50,520	50,520	4210.00
Ground Water Analysis Yrs 2-12	12.00 EA	0	0	0	50,520	50,520	4210.00
Sampling Rad Contaminated Media		0	0	0	122,090	122,090	
Monitoring, Sampling & Analysis		0	0	0	122,090	122,090	
Off-Site Analytical Services		0	0	0	122,090	122,090	

Fri 07 Oct 1994

DETAILED ESTIMATE

U.S. Army Corps of Engineers
PROJECT KAREIX: HANFORD: ER PROGRAM - 100 KR-4 ION EXCHANGE
100 KR-4 ION EXCHANGE REMEDIATION MODEL
SUB. Fixed Price Contractor

TIME 08:42:51

DETAIL PAGE 3

SUB:01. Mobilization & Preparatory Work	QUANTY	UOM	CREW ID	LABOR	EQUIPMNT	MAT/SUPP	UNIT CST	TOTAL COST	UNIT COST
SUB. Fixed Price Contractor									
SUB:01. Mobilization & Preparatory Work									
SUB:01.02. Mobilize Personnel & Equipment									
SUB:01.02.02. Mobilize Trailers									
FPC S3 Mobilize Field Office Trailer				0.00	250.00	0.00	0.00	250.00	
	1.00	EA		0	250	0	0	250	250.00
FPC S3 Mobilize Storage Trailer				0.00	250.00	0.00	0.00	250.00	
	1.00	EA		0	250	0	0	250	250.00
FPC S3 Mobilize Decon Trailer				0.00	250.00	0.00	0.00	250.00	
	1.00	EA		0	250	0	0	250	250.00
Mobilize Trailers				0	750	0	0	750	
Mobilize Personnel & Equipment				0	750	0	0	750	

SUB:01. Mobilization & Preparatory Work	QUANTY UOM CREW ID	LABOR	EQUIPMNT	MAT/SUPP	UNIT CST	TOTAL COST	UNIT COST
SUB:01.04. Setup/Construct Temp Facilities							
SUB:01.04.01. Establish Facilities							
SUB:01.04.01.02. Setup Trailers							
M FPC S3 Setup Field Office Trailer		1000.00	0.00	269.50	0.00	1269.50	
	1.00 EA	1,000	0	270	0	1,270	1269.50
M FPC S3 Setup Storage Trailer		1000.00	0.00	269.50	0.00	1269.50	
	1.00 EA	1,000	0	270	0	1,270	1269.50
M FPC S3 Setup Decon Trailer		1000.00	0.00	269.50	0.00	1269.50	
	1.00 EA	1,000	0	270	0	1,270	1269.50
Setup Trailers		3,000	0	809	0	3,809	
Establish Facilities		3,000	0	809	0	3,809	

SUB:01. Mobilization & Preparatory Work	QUANTY	UOM	CREW ID	LABOR	EQUIPMNT	MAT/SUPP	UNIT CST	TOTAL COST	UNIT COST
SUB:01.04.02. Construct Decon Area Work to be Performed: Construct decontamination area/pad for equipment and vehicles. Crew and Equipment: Fixed Price Contractor: 1 Group 6 Operator, 3 Group 1 Laborers, and 3 Group 2 Laborers Equipment: 1 backhoe, 1 pickup truck Output: Assumed duration for this activity is 3 crew days.									
FPC S3 Laborer Group - 1				25.20	0.00	0.00	0.00	25.20	
- 3 ea	72.00	HR	0029	1,814	0	0	0	1,814	25.20
FPC S3 Laborer Group - 2				25.50	0.00	0.00	0.00	25.50	
- 3 ea	72.00	HR	0030	1,836	0	0	0	1,836	25.50
FPC S3 Group-6 Power Equipment Operator				29.10	0.00	0.00	0.00	29.10	
- 1 ea	24.00	HR	0039	698	0	0	0	698	29.10
FPC S3 Small Tools - 2 ea				0.00	1.39	0.00	0.00	1.39	
	48.00	HR	XMIXX020	0	67	0	0	67	1.39
FPC S3 TRK,HWY,4X4,F250,3/4T,8800 GVW				0.00	7.31	0.00	0.00	7.31	
4X4 3/4 TON PICK-UP - 1 ea	24.00	HR	T50F0004	0	175	0	0	175	7.31
FPC S3 HYD EXCAV,TRK MTD,.5 CY BKT,6X4				0.00	34.44	0.00	0.00	34.44	
HYDRO-SCOPIC - 1 ea	24.00	HR	H30BA001	0	826	0	0	826	34.44
M FPC S3 Construction Materials/Supplies				0.00	0.00	2156.00	0.00	2156.00	
Allowance	1.00	LS		0	0	2,156	0	2,156	2156.00
M FPC S3 Allowance for Tank				0.00	0.00	1617.00	0.00	1617.00	
Assume 1000 gal plastic tank for water collection	1.00	EA		0	0	1,617	0	1,617	1617.00
Construct Decon Area	24.00	HR		4,349	1,069	3,773	0	9,190	382.93

SUB:01. Mobilization & Preparatory Work	QUANTY UOM CREW ID	LABOR	EQUIPMNT	MAT/SUPP	UNIT CST	TOTAL COST	UNIT COST
SUB:01.04.03. Site Survey Prepare site for construction							
FPC S3 Allowance for Site Survey		0.00	0.00	0.00	1000.00	1000.00	
	1.00 LS	0	0	0	1,000	1,000	1000.00
Site Survey		0	0	0	1,000	1,000	
Setup/Construct Temp Facilities		7,349	1,069	4,582	1,000	13,999	

SUB:01. Mobilization & Preparatory Work	QUANTY UOM CREW ID	LABOR	EQUIPMNT	MAT/SUPP	UNIT CST	TOTAL COST	UNIT COST
SUB:01.05. Construct Temporary Utilities							
M FPC S3 Allowance for Temporary Power		1.00	0.00	1.08	0.00	2.08	
	500.00 LF	500	0	539	0	1,039	2.08
M FPC S3 Allowance for Telephone		0.50	0.00	0.54	0.00	1.04	
	500.00 LF	250	0	270	0	520	1.04
M FPC S3 Allowance for Temporary Water and Sewer Service	500.00 LF	3.00	0.00	3.23	0.00	6.23	
		1,500	0	1,617	0	3,117	6.23
Construct Temporary Utilities		2,250	0	2,426	0	4,676	

SUB:01. Mobilization & Preparatory Work	QUANTY UOM CREW ID	LABOR	EQUIPMNT	MAT/SUPP	UNIT CST	TOTAL COST	UNIT COST
SUB:01.06. Pre-Construction Submittals							
FPC S3 Allowance for Pre-Construction Submittals by Fixed Price Contractor	4.00 EA	0.00 0	0.00 0	0.00 0	2500.00 10,000	2500.00 10,000	2500.00
Pre-Construction Submittals	4.00 EA	0	0	0	10,000	10,000	2500.00
Mobilization & Preparatory Work		9,599	1,819	7,007	11,000	29,424	

Fri 07 Oct 1994 | U.S. Army Corps of Engineers | TIME 08:42:51

DETAILED ESTIMATE | PROJECT KAREIX: HANFORD: ER PROGRAM - 100 KR-4 ION EXCHANGE | DETAIL PAGE 9

100 KR-4 ION EXCHANGE REMEDIATION MODEL

SUB. Fixed Price Contractor

SUB:03. Site Work	QUANTY	UOM	CREW ID	LABOR	EQUIPMNT	MAT/SUPP	UNIT CST	TOTAL COST	UNIT COST
SUB:03. Site Work									
SUB:03.03. Earthwork									
FPC S3 Allowance for Site Preparation				0.00	0.00	0.00	5000.00	5000.00	
	1.00	LS		0	0	0	5,000	5,000	5000.00
Earthwork				0	0	0	5,000	5,000	

SUB:03. Site Work	QUANTY UOM CREW ID	LABOR	EQUIPMNT	MAT/SUPP	UNIT CST	TOTAL COST	UNIT COST
SUB:03.04. Roads/Parking/Curbs/Walks							
FPC S3 Allowance for Access Road		0.00	0.00	0.00	10.00	10.00	
	400.00 SY	0	0	0	4,000	4,000	10.00
FPC S3 Allowance Gravel Parking Area		0.00	0.00	0.00	10.00	10.00	
	300.00 SY	0	0	0	3,000	3,000	10.00
FPC S3 Access Roads to Wells		0.00	0.00	0.00	2.12	2.12	
Assume 3000 lf of road per well, 10 ft wide, native material 3000 lf/well x 22 wells = 66,000 lf	66000 LF	0	0	0	139,920	139,920	2.12
Roads/Parking/Curbs/Walks		0	0	0	146,920	146,920	

Fri 07 Oct 1994

DETAILED ESTIMATE

U.S. Army Corps of Engineers
PROJECT KAREIX: HANFORD: ER PROGRAM - 100 KR-4 ION EXCHANGE
100 KR-4 ION EXCHANGE REMEDIATION MODEL
SUB. Fixed Price Contractor

TIME 08:42:51

DETAIL PAGE 11

SUB:03. Site Work	QUANTY UOM CREW ID	LABOR	EQUIPMNT	MAT/SUPP	UNIT CST	TOTAL COST	UNIT COST
SUB:03.05. Fencing							
FPC S3 Allowance for Permanent Fencing		0.00	0.00	0.00	21.00	21.00	
Assume 7 ft high security fence	500.00 LF	0	0	0	10,500	10,500	21.00
FPC S3 Allowance for Entrance Gate		0.00	0.00	0.00	300.00	300.00	
	1.00 EA	0	0	0	300	300	300.00
Fencing		0	0	0	10,800	10,800	

Fri 07 Oct 1994

DETAILED ESTIMATE

U.S. Army Corps of Engineers
PROJECT KAREIX: HANFORD: ER PROGRAM - 100 KR-4 ION EXCHANGE
100 KR-4 ION EXCHANGE REMEDIATION MODEL
SUB. Fixed Price Contractor

TIME 08:42:51

DETAIL PAGE 12

SUB:03. Site Work	QUANTY UOM CREW ID	LABOR	EQUIPMNT	MAT/SUPP	UNIT CST	TOTAL COST	UNIT COST
SUB:03.06. Electrical Distribution							
FPC S3 Allowance for Site Electrical		0.00	0.00	0.00	10000.00	10000.00	
	1.00 LS	0	0	0	10,000	10,000	10000.00
Electrical Distribution		0	0	0	10,000	10,000	
Site Work		0	0	0	172,720	172,720	

SUB:06. Groundwater Collection & Control	QUANTY UOM CREW ID	LABOR	EQUIPMNT	MAT/SUPP	UNIT CST	TOTAL COST	UNIT COST
SUB:06. Groundwater Collection & Control							
SUB:06.01. Extraction & Injection Wells							
SUB:06.01.01. Well Drilling & Construction							
FPC S3 Drill/Install Extr/Inject Wells Note: 11 new extraction and 11 new injection wells, 100 ft deep, 8 in diameter, screened for 50 ft. Unit cost is assumed to include handling and packaging of contaminated well cuttings, transport to the disposal facility, and associated disposal fees.	2200.00 LF	0.00 0	0.00 0	0.00 0	700.00 1,540,000	700.00 1,540,000	700.00
FPC S3 Allowance for Well Pumps-100 gpm	11.00 EA	0.00 0	0.00 0	0.00 0	3000.00 33,000	3000.00 33,000	3000.00
FPC S3 Allowance for Controls and Connections at Well Heads	22.00 EA	0.00 0	0.00 0	0.00 0	10000.00 220,000	10000.00 220,000	10000.00
FPC S3 Allowance for Water Level Monitoring Instrumentation Assume 5 peizometers per extraction well using well points	55.00 EA	0.00 0	0.00 0	0.00 0	1000.00 55,000	1000.00 55,000	1000.00
FPC S3 Allowance for Well Head Covers Assume manhole type cover at each well head	22.00 EA	0.00 0	0.00 0	0.00 0	1000.00 22,000	1000.00 22,000	1000.00
FPC S3 Allowance for Well Testing	22.00 EA	0.00 0	0.00 0	0.00 0	5000.00 110,000	5000.00 110,000	5000.00
Well Drilling & Construction	22.00 EA	0	0	0	1,980,000	1,980,000	90000.00

SUB:06. Groundwater Collection & Control	QUANTY UOM CREW ID	LABOR	EQUIPMNT	MAT/SUPP	UNIT CST	TOTAL COST	UNIT COST
SUB:06.01.04. Operations and Maintenance 3,6,9							
FPC S3 Allowance for Well Workover		0.00	0.00	0.00	10000.00	10000.00	
Assume 1 workover every 3 yrs for each well. Workovers in years 3,6,9.	22.00 EA	0	0	0	220,000	220,000	10000.00
FPC S3 Allowance for Well Pump Replacement		0.00	0.00	0.00	3000.00	3000.00	
Assume 1 pump replacement per production well every 3 years Replacement in years 3,6,9	11.00 EA	0	0	0	33,000	33,000	3000.00
Operations and Maintenance 3,6,9		0	0	0	253,000	253,000	

SUB:06. Groundwater Collection & Control	QUANTY UOM CREW ID	LABOR	EQUIPMNT	MAT/SUPP	UNIT CST	TOTAL COST	UNIT COST
SUB:06.01.9X. Site Piping							
FPC S3 Allowance for Piping from Well Head to Treatment Plant Assume 3000 lf of double wall PVC piping per extraction well 3000 lf/well x 11 wells = 33,000 lf		0.00	0.00	0.00	18.00	18.00	
	33000 LF	0	0	0	594,000	594,000	18.00
FPC S3 Allowance for Leak Detection		0.00	0.00	0.00	5000.00	5000.00	
	1.00 LS	0	0	0	5,000	5,000	5000.00
FPC S3 Allowance for Force Main Discharge Piping Assume 3000 lf of single-wall PVC piping per injection well 3000 lf/well x 11 wells = 33,000 lf		0.00	0.00	0.00	15.00	15.00	
	33000 LF	0	0	0	495,000	495,000	15.00
Site Piping		0	0	0	1,094,000	1,094,000	
Extraction & Injection Wells		0	0	0	3,327,000	3,327,000	
Groundwater Collection & Control		0	0	0	3,327,000	3,327,000	

SUB:12. Chemical Treatment	QUANTY UOM CREW ID	LABOR	EQUIPMNT	MAT/SUPP	UNIT CST	TOTAL COST	UNIT COST
SUB:12. Chemical Treatment							
SUB:12.05. Ion Exchange							
SUB:12.05.04. Construction of Permanent Plant							
FPC S3 Excavate and Install Building		0.00	0.00	0.00	20.00	20.00	
Foundation	12600 SF	0	0	0	252,000	252,000	20.00
FPC S3 Install Butler Building		0.00	0.00	0.00	20.00	20.00	
Assume a prefabricated heated building complete with frame, doors, roll up doors, gutters, insulation, and roof vent.	12600 SF	0	0	0	252,000	252,000	20.00
FPC S3 Ion Exchange Equipment/Staging		0.00	0.00	0.00	783000.00	783000.00	
Assume 1 - 1100 gpm treatment system, regen equipment, 531 resin vessels. Resin included in O&M	1.00 LS	0	0	0	783,000	783,000	783000.00
FPC S3 Precip System/Sludge Tank		0.00	0.00	0.00	160250.00	160250.00	
Liquid loading = 20 gpm	1.00 LS	0	0	0	160,250	160,250	160250.00
FPC S3 Allowance for Bldg Mechanical		0.00	0.00	0.00	50.00	50.00	
Includes equipment installation and connections, controls/instrumentation, interior piping (plastic), floor drains and piping, and HVAC.	12600 SF	0	0	0	630,000	630,000	50.00
FPC S3 Allowance for Bldg Electrical		0.00	0.00	0.00	40.00	40.00	
Includes lighting, fixtures, motor starters, controllers, junction boxes, transformer, chart recorders, annunciators, panels, conduit, and wiring.	12600 SF	0	0	0	504,000	504,000	40.00
Construction of Permanent Plant	12600 SF	0	0	0	2,581,250	2,581,250	204.86
Ion Exchange		0	0	0	2,581,250	2,581,250	
Chemical Treatment		0	0	0	2,581,250	2,581,250	

SUB:20. Site Restoration	QUANTY UOM CREW ID	LABOR	EQUIPMNT	MAT/SUPP	UNIT CST	TOTAL COST	UNIT COST
SUB:20. Site Restoration							
SUB:20.04. Revegetation and Planting							
FPC S3 Allowance for Site Restoration		0.00	0.00	0.00	2.00	2.00	
	5000.00 SY	0	0	0	10,000	10,000	2.00
Revegetation and Planting		0	0	0	10,000	10,000	
Site Restoration		0	0	0	10,000	10,000	

SUB:21. Demobilization	QUANTY UOM CREW ID	LABOR	EQUIPMNT	MAT/SUPP	UNIT CST	TOTAL COST	UNIT COST
SUB:21. Demobilization							
SUB:21.02. Demobilize Personnel & Equipment							
SUB:21.02.02. Demobilize Trailers							
FPC S3 Demob Field Office Trailer		0.00	250.00	0.00	0.00	250.00	
	1.00 EA	0	250	0	0	250	250.00
FPC S3 Demob Storage Trailer		0.00	250.00	0.00	0.00	250.00	
	1.00 EA	0	250	0	0	250	250.00
FPC S3 Demob Decon Trailer		0.00	250.00	0.00	0.00	250.00	
	1.00 EA	0	250	0	0	250	250.00
Demobilize Trailers		0	750	0	0	750	
Demobilize Personnel & Equipment		0	750	0	0	750	

SUB:21. Demobilization	QUANTY	UOM	CREW ID	LABOR	EQUIPMNT	MAT/SUPP	UNIT CST	TOTAL COST	UNIT COST
SUB:21.04. Demobilize Temp Facilities									
SUB:21.04.02. Remove Decon Area									
Work to be Performed:									
Remove decontamination area/pad for equipment and vehicles.									
Crew and Equipment:									
Fixed Price Contractor: 1 Group 6 Operator, 3 Group 1 Laborers, and 3 Group 2 Laborers									
Equipment: 1 backhoe, 1 pickup truck									
Output:									
Assumed duration for this activity is 1 crew day.									
FPC S3 Group-6 Power Equipment Operator - 1 ea	8.00	HR	0039	29.10 233	0.00 0	0.00 0	0.00 0	29.10 233	29.10
FPC S3 Laborer Group - 1 - 3 ea	24.00	HR	0029	25.20 605	0.00 0	0.00 0	0.00 0	25.20 605	25.20
FPC S3 Laborer Group - 2 - 3 ea	24.00	HR	0030	25.50 612	0.00 0	0.00 0	0.00 0	25.50 612	25.50
FPC S3 HYD EXCAV,TRK MTD,.5 CY BKT,6X4 HYDRO-SCOPIC - 1 ea	8.00	HR	H30BA001	0.00 0	34.44 275	0.00 0	0.00 0	34.44 275	34.44
FPC S3 TRK,HWY,4X4,F250,3/4T,8800 GVW 4X4 3/4 TON PICK-UP - 1 ea	8.00	HR	T50F0004	0.00 0	7.31 58	0.00 0	0.00 0	7.31 58	7.31
FPC S3 Small Tools - 2 ea	16.00	HR	XMIXX020	0.00 0	1.39 22	0.00 0	0.00 0	1.39 22	1.39
Remove Decon Area	8.00	HR		1,450	356	0	0	1,806	225.72
Demobilize Temp Facilities				1,450	356	0	0	1,806	

SUB:21. Demobilization	QUANTY UOM CREW ID	LABOR	EQUIPMNT	MAT/SUPP	UNIT CST	TOTAL COST	UNIT COST
SUB:21.05. Disconnect Temporary Utilities							
M FPC S3 Remove Temporary Power		1.00	0.00	0.00	0.00	1.00	
	500.00 LF	500	0	0	0	500	1.00
M FPC S3 Remove Telephone		1.00	0.00	0.00	0.00	1.00	
	500.00 LF	500	0	0	0	500	1.00
M FPC S3 Remove Temporary Water and Sewer Service		3.00	0.00	0.00	0.00	3.00	
	500.00 LF	1,500	0	0	0	1,500	3.00
Disconnect Temporary Utilities		2,500	0	0	0	2,500	

SUB:21. Demobilization	QUANTY UOM CREW ID	LABOR	EQUIPMNT	MAT/SUPP	UNIT CST	TOTAL COST	UNIT COST
SUB:21.06. Post-Construction Submittals							
FPC S3 Allowance for Post-Construction Submittals by Fixed Price Contractor	4.00 EA	0.00 0	0.00 0	0.00 0	2500.00 10,000	2500.00 10,000	2500.00
Post-Construction Submittals	4.00 EA	0	0	0	10,000	10,000	2500.00
Demobilization		3,950	1,106	0	10,000	15,056	
Fixed Price Contractor		13,548	2,925	7,007	6,111,970	6,135,450	

WHC:02. Monitoring, Sampling & Analysis		QUANTY UOM CREW ID	LABOR	EQUIPMNT	MAT/SUPP	UNIT CST	TOTAL COST	UNIT COST

WHC. Westinghouse Hanford Company
WHC:02. Monitoring, Sampling & Analysis
WHC:02.08. Sampling Rad Contaminated Media
WHC:02.08.02. Ground Water Analysis Yr - 1

Assumptions:

1. Assume shake-down period with following sampling of treatment system:
   - First 2 days: Sample every four hours of influent and effluent (24 samples)
   - Next 5 days: 1 sample per day of influent and effluent (10 samples)
   - Next 7 weeks: 1 sample per week of influent and effluent (14 samples)

2. 1 sample per ion exchange media regeneration (7 days) of the influent and effluent for the 12-yr lifecycle (104 samples/yr)

3. Assume sampling of 7 monitoring wells on a semiannual basis for the 12-year lifecycle (14 samples/yr)

   - Total samples Yr 1 = 166

4. 90% of samples analyzed by mobile lab (90% of 166 = 149)

4. HACH kit samples are taken 1 per shift for the 12-yr lifecycle plus an additional 48 samples during the shake-down period. (Yr 1 = 1,143 samples)

WHC	Analyze LLW Sample - Mobile Lab		0.00	0.00	0.00	400.00	400.00	
		149.00 EA	0	0	0	59,600	59,600	400.00
WHC	HACH Kit Sampling		0.00	0.00	0.00	0.50	0.50	
		1143.00 EA	0	0	0	572	572	0.50
WHC	HACH Kit Replacement		0.00	0.00	0.00	235.00	235.00	
	Assume 1 per yr	1.00 EA	0	0	0	235	235	235.00
	Ground Water Analysis Yr - 1	149.00 EA	0	0	0	60,407	60,407	405.41

WHC:02. Monitoring, Sampling & Analysis	QUANTY	UOM	CREW ID	LABOR	EQUIPMNT	MAT/SUPP	UNIT CST	TOTAL COST	UNIT COST
WHC:02.08.03. Ground Water Analysis Yr 2 - 12									

Assumptions:

1. Assume 1 sample per ion exchange media regeneration (7 days) of the influent and effluent for the 12-yr lifecycle. (104 samples/yr)

2. Assume sampling of 7 monitoring wells on a semiannual basis for the 12-year lifecycle. (14 samples/yr)

   - Total Samples Yrs 2-12 = 118

3. 90% of samples analyzed by mobile lab (90% of 118 = 106)

4. HACH kit samples are taken 1 per shift for the 12-yr lifecycle. (1,095 samples/yr)

WHC	Analyze LLW Sample - Mobile Lab			0.00	0.00	0.00	400.00	400.00	
		106.00	EA	0	0	0	42,400	42,400	400.00
WHC	HACH Kit Sampling			0.00	0.00	0.00	0.50	0.50	
		1095.00	EA	0	0	0	548	548	0.50
WHC	HACH Kit Replacement			0.00	0.00	0.00	235.00	235.00	
	Assume 1 per yr	1.00	EA	0	0	0	235	235	235.00
	Ground Water Analysis Yr 2 - 12	106.00	EA	0	0	0	43,183	43,183	407.38

WHC:02. Monitoring, Sampling & Analysis	QUANTY UOM CREW ID	LABOR	EQUIPMNT	MAT/SUPP	UNIT CST	TOTAL COST	UNIT COST

WHC:02.08.04. Ground Water Monitor Smples 1-12
Work to be Performed:
Take semiannual groundwater monitoring samples

Assumptions:
1. Assume sampling of 7 monitoring wells on a semiannual basis for the 12-year lifecycle. (14 samples/yr)

2. Assume 2 field technicians for 12 hours on a semiannual basis for the 12-year lifecycle. (24 hrs/yr)

WHC	Technician, Environmental		27.62	0.00	0.00	0.00	27.62	
	Restoration Ops - 2 ea	24.00 HR 85201	663	0	0	0	663	27.62
	Ground Water Monitor Smples 1-12	24.00 HR	663	0	0	0	663	27.62
	Sampling Rad Contaminated Media		663	0	0	103,589	104,252	
	Monitoring, Sampling & Analysis		663	0	0	103,589	104,252	

WHC:12. Chemical Treatment		QUANTY UOM CREW ID	LABOR	EQUIPMNT	MAT/SUPP	UNIT CST	TOTAL COST	UNIT COST
WHC:12. Chemical Treatment								
WHC:12.05. Ion Exchange								
WHC:12.05.06. Personnel Training								
Note: This account to allow for operator time and an allowance for a 40 hour training course.								
WHC	Operator, Environmental		27.62	0.00	0.00	0.00	27.62	
	Restoration Ops	40.00 HR 85302	1,105	0	0	0	1,105	27.62
WHC	Allowance for 40 hr Training		0.00	0.00	0.00	800.00	800.00	
		1.00 LS	0	0	0	800	800	800.00
WHC	Allowance for Maintenance		0.00	0.00	0.00	5000.00	5000.00	
	Manuals	1.00 LS	0	0	0	5,000	5,000	5000.00
	Personnel Training		1,105	0	0	5,800	6,905	

WHC:12. Chemical Treatment		QUANTY UOM CREW ID	LABOR	EQUIPMNT	MAT/SUPP	UNIT CST	TOTAL COST	UNIT COST
WHC:12.05.08. Operation & Maintenance Yrs 1-12								
	Assumptions: 1. Treatment facility will be fully staffed with 2 FTE's per shift, 3 shifts per day, 7 days per week. (365 days/yr x 24 hrs/day = 8760 hrs/yr) 2. Ion exchange media to be regenerated every 7 days for Carbon 14, Chrome XI, and zinc treatment. 3. 2 FTE crew will be composed of the following members: 0.25 ea - supervisor 1.00 ea - operator 0.50 ea - TP tech support 0.25 ea - maintenance engineer							
WHC	Technician, Environmental Restoration Ops - Supervisor - 0.25 ea	2190.00 HR 85201	28.80 63,080	0.00 0	0.00 0	0.00 0	28.80 63,080	28.80
WHC	Operator, Environmental Restoration Ops - 1 ea	8760.00 HR 85302	27.62 241,984	0.00 0	0.00 0	0.00 0	27.62 241,984	27.62
WHC	Technician, Health Physics - 0.50 ea	4380.00 HR 33201	39.72 173,958	0.00 0	0.00 0	0.00 0	39.72 173,958	39.72
WHC	Skilled Craft, Environmental Restoration Ops - Maintenance - 0.25 ea	2190.00 HR 85301	27.62 60,496	0.00 0	0.00 0	0.00 0	27.62 60,496	27.62
WHC	Allowance for Electricity Wells: 3014 kW-hr/d Precip/Sludge System: 627 kW-hr/d Assume 24 hrs/day x 365 days/yr Total = 1,328,965 kW-hr/yr	1328965 KWH	0.00 0	0.00 0	0.00 0	0.04 53,159	0.04 53,159	0.04
WHC	Allowance for Water Usage Water for regen solution and rinse during resin regeneration. Resin regeneration every 7 days. Assume 2 vessel volumes regen solution and 6 vessel volumes to rinse. 531 vessels x (2+6 vessel volumes) x 50 cf/vessel = 212,400 cf/yr (8,920,800 gal/yr)	8920800 GAL	0.00 0	0.00 0	0.00 0	0.02 178,416	0.02 178,416	0.02

WHC:12. Chemical Treatment		QUANTY UOM CREW ID	LABOR	EQUIPMNT	MAT/SUPP	UNIT CST	TOTAL COST	UNIT COST
WHC	Disposal Fee for Regen Solids Derived from resin regeneration. Assume disposal at ERDF for years 1 - 12 of the 12-year lifecycle. Resin Regeneration NaOH: 33,045 cf/yr HCl: 29,223 cf/yr Precipitation Solids COCs: 613 cf/yr Total = 62,881 cf/yr Assume 50% volume increase to stabilize solids 1.5 x 62,881 cf/yr = 94,322 cf/yr	94322 CF	0.00 0	0.00 0	0.00 0	2.59 244,294	2.59 244,294	2.59
WHC	Allowance for NaOH Assume 2 vessel volumes/wk of 5% NaOH to regenerate resin. Requires 80,500 lb/wk of NaOH x 52 wks/yr = 4.186 MM lbs/yr (12,312 drums/yr)	12312 BBL	0.00 0	0.00 0	0.00 0	163.20 2,009,318	163.20 2,009,318	163.20
WHC	Allowance for HCl Assume 2 vessel volumes of 5% HCl to regenerate resin. Requires 52,250 lbs/wk HCl x 52 wks/yr = 2.717 MM lb HCl/yr (17,529 drums)	17529 BBL	0.00 0	0.00 0	0.00 0	90.00 1,577,610	90.00 1,577,610	90.00
	Operation & Maintenance Yrs 1-12	1.00 YR	539,519	0	0	4,062,797	4,602,316	4602315.74

WHC:12. Chemical Treatment	QUANTY UOM CREW ID	LABOR	EQUIPMNT	MAT/SUPP	UNIT CST	TOTAL COST	UNIT COST
WHC:12.05.09. Operation & Maint (Yrs 1,3,6,9)							
Assumptions:							
1. Treatment facility will be fully staffed with 2 FTE's per shift, 3 shifts per day, 7 days per week. (365 days/yr x 24 hrs/day = 8760 hrs/yr)							
2. Ion exchange media to be regenerated every 7 days for chromium treatment.							
3. 2 FTE crew will be composed of the following members:							
0.25 ea - supervisor							
1.00 ea - operator							
0.50 ea - TP tech support							
0.25 ea - maintenance engineer							
M WHC S2 Replace Anion Resin		0.00	0.00	0.00	185.00	185.00	
Replace resin every 3 years. Initial loading in year 0(1) subsequent replacements in years 3,6,9. 322 vessels x 45 cf/vessel = 14,490 cf	14490 CF	0	0	0	2,680,650	2,680,650	185.00
M WHC Replace Cation Resin		0.00	0.00	0.00	50.00	50.00	
Replace resin every three years. Initial loading in year 0(1), subsequent replacements in years 3,6,9. 209 vessels x 45 cf/vessel = 9405 cf	9405.00 CF	0	0	0	470,250	470,250	50.00
WHC Disposal Fee for Ion Exchange Media		0.00	0.00	0.00	2.59	2.59	
Assume disposal at ERDF for years 3,6,9,12	23895 CF	0	0	0	61,888	61,888	2.59
Operation & Maint (Yrs 1,3,6,9)	1.00 YR	0	0	0	3,212,788	3,212,788	3212788.05

WHC:12. Chemical Treatment		QUANTY UOM CREW ID	LABOR	EQUIPMNT	MAT/SUPP	UNIT CST	TOTAL COST	UNIT COST
WHC:12.05.11. Prepare Annual Report (Yr 1) Assume 2 FTE's for 6 months each year								
WHC	Engineer, Environmental		43.34	0.00	0.00	0.00	43.34	
	Restoration Ops - 1 ea	1040.00 HR 85101	45,074	0	0	0	45,074	43.34
WHC	Scientist, Environmental		43.34	0.00	0.00	0.00	43.34	
	Restoration Ops - 1 ea	1040.00 HR 85102	45,074	0	0	0	45,074	43.34
	Prepare Annual Report (Yr 1)	2080.00 HR	90,148	0	0	0	90,148	43.34

WHC:12. Chemical Treatment		QUANTY UOM CREW ID	LABOR	EQUIPMNT	MAT/SUPP	UNIT CST	TOTAL COST	UNIT COST
WHC:12.05.12. Prepare Annual Report (Yrs 2-12) Assume 66% of a Year 1 Annual Report effort (2 FTE's for 4 months each year)								
WHC	Engineer, Environmental		43.34	0.00	0.00	0.00	43.34	
	Restoration Ops - 1 ea	693.00 HR 85101	30,035	0	0	0	30,035	43.34
WHC	Scientist, Environmental		43.34	0.00	0.00	0.00	43.34	
	Restoration Ops - 1 ea	693.00 HR 85102	30,035	0	0	0	30,035	43.34
	Prepare Annual Report (Yrs 2-12)		60,070	0	0	0	60,070	
	Ion Exchange		690,842	0	0	7,281,385	7,972,227	
	Chemical Treatment		690,842	0	0	7,281,385	7,972,227	
	Westinghouse Hanford Company		691,505	0	0	7,384,974	8,076,479	
	HANFORD: ER PROGRAM		705,053	2,925	7,007	13,619,034	14,334,019	

Fri 07 Oct 1994

U.S. Army Corps of Engineers
PROJECT KAREIX: HANFORD: ER PROGRAM - 100 KR-4 ION EXCHANGE
100 KR-4 ION EXCHANGE REMEDIATION MODEL
** LABOR BACKUP **

TIME 08:42:51

BACKUP PAGE 1

SRC	LABOR ID	DESCRIPTION	BASE	OVERTM	TXS/INS	FRNG	TRVL	RATE	UOM	UPDATE	**** TOTAL **** DEFAULT	HOURS
FPC	0029	Laborer Group - 1	15.84	0.0%	28.7%	3.57	1.25	25.20	HR	07/09/93	0.00	96
FPC	0030	Laborer Group - 2	16.09	0.0%	28.5%	3.57	1.25	25.50	HR	07/09/93	0.00	96
FPC	0039	Group-6 Power Equipment Operator	18.02	0.0%	27.4%	4.90	1.25	29.10	HR	07/09/93	0.00	32
WHC	33201	Technician, Health Physics	28.78	0.0%	38.0%	0.00	0.00	39.72	HR	01/07/94	0.00	4380
WHC	85101	Engineer, Environmental	35.38	0.0%	22.5%	0.00	0.00	43.34	HR	01/07/94	0.00	1733
WHC	85102	Scientist, Environmental	35.38	0.0%	22.5%	0.00	0.00	43.34	HR	01/07/94	0.00	1733
WHC	85201	Technician, Environmental	22.55	0.0%	22.5%	0.00	0.00	27.62	HR	01/07/94	0.00	2214
WHC	85301	Skilled Craft, Environmental	22.55	0.0%	22.5%	0.00	0.00	27.62	HR	01/07/94	0.00	2190
WHC	85302	Operator, Environmental	22.55	0.0%	22.5%	0.00	0.00	27.62	HR	01/07/94	0.00	8800

Fri 07 Oct 1994

U.S. Army Corps of Engineers
PROJECT KAREIX: HANFORD: ER PROGRAM - 100 KR-4 ION EXCHANGE
100 KR-4 ION EXCHANGE REMEDIATION MODEL
** EQUIPMENT BACKUP **

TIME 08:42:51
BACKUP PAGE 2

SRC	EQUIP ID	DESCRIPTION	DEPR	CAPT	FUEL	FOG	EQ REP	TR WR	TR REP	TOTAL	UOM	** TOTAL ** HOURS
MIL	H30BA001	HYD EXCAV,TRK MTD,.5 CY BKT,6X4	14.36	3.58	4.07	1.4	9.83	0.98	0.15	34.44	HR	32
MIL	T50F0004	TRK,HWY,4X4,F250,3/4T,8800 GVW	1.58	0.39	2.67	0.7	1.60	0.27	0.04	7.31	HR	32
MIL	XMIXX020	Small Tools	0.46	0.17	0.13	0.0	0.57			1.39	HR	64

9413294.3477

HANFORD: ER PROGRAM
100 KR-4 REVERSE OSMOSIS
1.4.10.1.1.10.5.2.4
REVERSE OSMOSIS REMEDIATION
PRELIMINARY COST MODEL

Designed By:
Estimated By: IT Corporation

Prepared By: USACE/CENPW COST ENG BRANCH
Project Time & Cost, Inc.

Date: 10/07/94

M C A C E S G O L D E D I T I O N
Composer GOLD Copyright (C) 1985, 1988, 1990, 1992
by Building Systems Design, Inc.
Release 5.20J

SUMMARY REPORTS — SUMMARY PAGE

PROJECT OWNER SUMMARY - LEVEL 1....1
PROJECT OWNER SUMMARY - LEVEL 2....2
PROJECT OWNER SUMMARY - LEVEL 5....3
PROJECT INDIRECT SUMMARY - LEVEL 1....8
PROJECT INDIRECT SUMMARY - LEVEL 2....9
PROJECT INDIRECT SUMMARY - LEVEL 5....10
PROJECT DIRECT SUMMARY - LEVEL 1....16
PROJECT DIRECT SUMMARY - LEVEL 2....17
PROJECT DIRECT SUMMARY - LEVEL 5....19

DETAILED ESTIMATE — DETAIL PAGE

ANA. Off-Site Analytical Services
02. Monitoring, Sampling & Analysis
08. Sampling Rad Contaminated Media
02. Ground Water Analysis (YR 1)....1
03. Ground Water Analysis (YRS 2-12)....2
SUB. Fixed Price Contractor
01. Mobilization & Preparatory Work
02. Mobilize Personnel & Equipment
02. Mobilize Trailers....3
04. Setup/Construct Temp Facilities
01. Establish Facilities....4
02. Construct Decon Area....5
03. Site Survey....6
05. Construct Temporary Utilities....7
06. Pre-Construction Submittals....8
03. Site Work
03. Earthwork....9
04. Roads/Parking/Curbs/Walks....10
05. Fencing....11
06. Electrical Distribution....12
06. Groundwater Collection & Control
01. Extraction & Injection Wells
01. Well Drilling & Construction....13
04. Operations and Maintenance 3,6,9....14
9X. Site Piping....15
13. Physical Treatment
21. Reverse Osmosis
04. Construction of Permanent Plant....16
20. Site Restoration
04. Revegetation and Planting Yr 12....18
21. Demobilization
02. Demobilize Personnel & Equipment
02. Demobilize Trailers-Yr 12....19
04. Demobilize Temp Facilities
02. Remove Decon Area-Yr 12....20
05. Disconnect Temporary Utilities....21
06. Post-Construction Submittals....22
WHC. Westinghouse Hanford Company

DETAILED ESTIMATE — DETAIL PAGE

02. Monitoring, Sampling & Analysis
08. Sampling Rad Contaminated Media
02. Ground Water Analysis-Yr 1.....23
03. Ground Water Analysis-Yr 2-12.....24
04. Ground Water Monitor Samples.....25
13. Physical Treatment
21. Reverse Osmosis
06. Personnel Training.....26
08. Operation and Maint (Yrs 1-12).....27
11. Prepare Annual Report (Yr 1).....29
12. Prepare Annual Report (Yrs 2-12).....30

BACKUP REPORTS — BACKUP PAGE

LABOR BACKUP.....1
EQUIPMENT BACKUP.....2

* * * END TABLE OF CONTENTS * * *

Fri 07 Oct 1994

U.S. Army Corps of Engineers
PROJECT KARERO: HANFORD: ER PROGRAM - 100 KR-4 REVERSE OSMOSIS
100 KR-4 REVERSE OSMOSIS
** PROJECT OWNER SUMMARY - LEVEL 1 (Rounded to 10's) **

TIME 07:14:00
SUMMARY PAGE 1

		QUANTITY UOM	CONTRACT COST	SUB MPR	PM/CM	G&A/CSP	CONTINGN	TOTAL COST	UNIT COST
ANA	Off-Site Analytical Services		122,090	0	0	0	42,730	164,820	
SUB	Fixed Price Contractor		13,229,310	965,740	2,129,260	4,162,700	7,170,450	27,657,460	
WHC	Westinghouse Hanford Company		1,950,630	0	292,590	572,020	985,340	3,800,580	
	HANFORD: ER PROGRAM		15,302,030	965,740	2,421,850	4,734,720	8,198,520	31,622,860	

Fri 07 Oct 1994

U.S. Army Corps of Engineers
PROJECT KARERO: HANFORD: ER PROGRAM - 100 KR-4 REVERSE OSMOSIS
100 KR-4 REVERSE OSMOSIS
** PROJECT OWNER SUMMARY - LEVEL 2 (Rounded to 10's) **

TIME 07:14:00
SUMMARY PAGE 2

	QUANTITY UOM	CONTRACT COST	SUB MPR	PM/CM	G&A/CSP	CONTINGN	TOTAL COST	UNIT COST
ANA Off-Site Analytical Services								
ANA:02 Monitoring, Sampling & Analysis		122,090	0	0	0	42,730	164,820	
Off-Site Analytical Services		122,090	0	0	0	42,730	164,820	
SUB Fixed Price Contractor								
SUB:01 Mobilization & Preparatory Work		37,910	2,770	6,100	11,930	20,550	79,250	
SUB:03 Site Work		218,450	15,950	35,160	68,740	118,400	456,700	
SUB:06 Groundwater Collection & Control		4,286,070	312,880	689,840	1,348,640	2,323,110	8,960,550	
SUB:13 Physical Treatment		8,654,600	631,790	1,392,960	2,723,230	4,690,900	18,093,480	
SUB:20 Site Restoration		12,880	940	2,070	4,050	6,980	26,930	
SUB:21 Demobilization		19,400	1,420	3,120	6,100	10,510	40,550	
Fixed Price Contractor		13,229,310	965,740	2,129,260	4,162,700	7,170,450	27,657,460	
WHC Westinghouse Hanford Company								
WHC:02 Monitoring, Sampling & Analysis		104,280	0	15,640	30,580	52,670	203,170	
WHC:13 Physical Treatment		1,846,350	0	276,950	541,440	932,660	3,597,410	
Westinghouse Hanford Company		1,950,630	0	292,590	572,020	985,340	3,800,580	
HANFORD: ER PROGRAM		15,302,030	965,740	2,421,850	4,734,720	8,198,520	31,622,860	

Fri 07 Oct 1994

U.S. Army Corps of Engineers
PROJECT KARERO: HANFORD: ER PROGRAM - 100 KR-4 REVERSE OSMOSIS
100 KR-4 REVERSE OSMOSIS
** PROJECT OWNER SUMMARY - LEVEL 5 (Rounded to 10's) **

TIME 07:14:00
SUMMARY PAGE 3

	QUANTITY UOM	CONTRACT COST	SUB MPR	PM/CM	G&A/CSP	CONTINGN	TOTAL COST	UNIT COST
ANA Off-Site Analytical Services								
ANA:02 Monitoring, Sampling & Analysis								
ANA:02.08 Sampling Rad Contaminated Media								
ANA:02.08.02 Ground Water Analysis (YR 1)								
Ground Water Analysis (YR 1)	17.00 EA	71,570	0	0	0	25,050	96,620	5683.50
ANA:02.08.03 Ground Water Analysis (YRS 2-12)								
Ground Water Analysis (YRS 2-12)	12.00 EA	50,520	0	0	0	17,680	68,200	5683.50
Sampling Rad Contaminated Media		122,090	0	0	0	42,730	164,820	
Monitoring, Sampling & Analysis		122,090	0	0	0	42,730	164,820	
Off-Site Analytical Services		122,090	0	0	0	42,730	164,820	
SUB Fixed Price Contractor								
SUB:01 Mobilization & Preparatory Work								
SUB:01.02 Mobilize Personnel & Equipment								
SUB:01.02.02 Mobilize Trailers								
Mobilize Trailers		970	70	160	300	520	2,020	
Mobilize Personnel & Equipment		970	70	160	300	520	2,020	
SUB:01.04 Setup/Construct Temp Facilities								
SUB:01.04.01 Establish Facilities								
SUB:01.04.01.02 Setup Trailers		4,910	360	790	1,540	2,660	10,260	
Establish Facilities		4,910	360	790	1,540	2,660	10,260	
SUB:01.04.02 Construct Decon Area								

Fri 07 Oct 1994

U.S. Army Corps of Engineers
PROJECT KARERO: HANFORD: ER PROGRAM - 100 KR-4 REVERSE OSMOSIS
100 KR-4 REVERSE OSMOSIS
** PROJECT OWNER SUMMARY - LEVEL 5 (Rounded to 10's) **

TIME 07:14:00
SUMMARY PAGE 4

	QUANTITY UOM	CONTRACT COST	SUB MPR	PM/CM	G&A/CSP	CONTINGN	TOTAL COST	UNIT COST
Construct Decon Area	24.00 HR	11,840	860	1,910	3,730	6,420	24,750	1031.35
SUB:01.04.03 Site Survey								
Site Survey		1,290	90	210	410	700	2,690	
Setup/Construct Temp Facilities		18,030	1,320	2,900	5,670	9,770	37,700	
SUB:01.05 Construct Temporary Utilities								
Construct Temporary Utilities		6,020	440	970	1,900	3,260	12,590	
SUB:01.06 Pre-Construction Submittals								
Pre-Construction Submittals	4.00 EA	12,880	940	2,070	4,050	6,980	26,930	6733.21
Mobilization & Preparatory Work		37,910	2,770	6,100	11,930	20,550	79,250	
SUB:03 Site Work								
SUB:03.03 Earthwork								
Earthwork		6,440	470	1,040	2,030	3,490	13,470	
SUB:03.04 Roads/Parking/Curbs/Walks								
Roads/Parking/Curbs/Walks		189,270	13,820	30,460	59,560	102,590	395,700	
SUB:03.05 Fencing								
Fencing		9,860	720	1,590	3,100	5,340	20,600	
SUB:03.06 Electrical Distribution								
Electrical Distribution		12,880	940	2,070	4,050	6,980	26,930	
Site Work		218,450	15,950	35,160	68,740	118,400	456,700	
SUB:06 Groundwater Collection & Control								
SUB:06.01 Extraction & Injection Wells								

Fri 07 Oct 1994

U.S. Army Corps of Engineers
PROJECT KARERO: HANFORD: ER PROGRAM - 100 KR-4 REVERSE OSMOSIS
100 KR-4 REVERSE OSMOSIS
** PROJECT OWNER SUMMARY - LEVEL 5 (Rounded to 10's) **

TIME 07:14:00
SUMMARY PAGE 5

	QUANTITY UOM	CONTRACT COST	SUB MPR	PM/CM	G&A/CSP	CONTINGN	TOTAL COST	UNIT COST
SUB:06.01.01 Well Drilling & Construction								
Well Drilling & Construction	22.00 EA	2,550,770	186,210	410,550	802,620	1,382,550	5,332,700	242395.47
SUB:06.01.04 Operations and Maintenance 3,6,9								
Operations and Maintenance 3,6,9		325,930	23,790	52,460	102,560	176,660	681,400	
SUB:06.01.9X Site Piping								
Site Piping		1,409,370	102,880	226,840	443,470	763,890	2,946,450	
Extraction & Injection Wells		4,286,070	312,880	689,840	1,348,640	2,323,110	8,960,550	
Groundwater Collection & Control		4,286,070	312,880	689,840	1,348,640	2,323,110	8,960,550	
SUB:13 Physical Treatment								
SUB:13.21 Reverse Osmosis								
SUB:13.21.04 Construction of Permanent Plant								
Construction of Permanent Plant	800.00 SF	8,654,600	631,790	1,392,960	2,723,230	4,690,900	18,093,480	22616.84
Reverse Osmosis		8,654,600	631,790	1,392,960	2,723,230	4,690,900	18,093,480	
Physical Treatment		8,654,600	631,790	1,392,960	2,723,230	4,690,900	18,093,480	
SUB:20 Site Restoration								
SUB:20.04 Revegetation and Planting Yr 12								
Revegetation and Planting Yr 12		12,880	940	2,070	4,050	6,980	26,930	
Site Restoration		12,880	940	2,070	4,050	6,980	26,930	
SUB:21 Demobilization								
SUB:21.02 Demobilize Personnel & Equipment								
SUB:21.02.02 Demobilize Trailers-Yr 12								

	QUANTITY UOM	CONTRACT COST	SUB MPR	PM/CM	G&A/CSP	CONTINGN	TOTAL COST	UNIT COST
Demobilize Trailers-Yr 12		970	70	160	300	520	2,020	
Demobilize Personnel & Equipment		970	70	160	300	520	2,020	
SUB:21.04 Demobilize Temp Facilities								
SUB:21.04.02 Remove Decon Area-Yr 12								
Remove Decon Area-Yr 12	8.00 HR	2,330	170	370	730	1,260	4,860	607.94
Demobilize Temp Facilities		2,330	170	370	730	1,260	4,860	
SUB:21.05 Disconnect Temporary Utilities								
Disconnect Temporary Utilities		3,220	240	520	1,010	1,750	6,730	
SUB:21.06 Post-Construction Submittals								
Post-Construction Submittals	4.00 EA	12,880	940	2,070	4,050	6,980	26,930	6733.21
Demobilization		19,400	1,420	3,120	6,100	10,510	40,550	
Fixed Price Contractor		13,229,310	965,740	2,129,260	4,162,700	7,170,450	27,657,460	
WHC Westinghouse Hanford Company								
WHC:02 Monitoring, Sampling & Analysis								
WHC:02.08 Sampling Rad Contaminated Media								
WHC:02.08.02 Ground Water Analysis-Yr 1								
Ground Water Analysis-Yr 1	149.00 EA	60,410	0	9,060	17,710	30,510	117,700	789.90
WHC:02.08.03 Ground Water Analysis-Yr 2-12								
Ground Water Analysis-Yr 2-12	106.00 EA	43,210	0	6,480	12,670	21,830	84,180	794.18
WHC:02.08.04 Ground Water Monitor Samples								

Fri 07 Oct 1994

U.S. Army Corps of Engineers
PROJECT KARERO: HANFORD: ER PROGRAM - 100 KR-4 REVERSE OSMOSIS
100 KR-4 REVERSE OSMOSIS
** PROJECT OWNER SUMMARY - LEVEL 5 (Rounded to 10's) **

TIME 07:14:00
SUMMARY PAGE 7

	QUANTITY UOM	CONTRACT COST	SUB MPR	PM/CM	G&A/CSP	CONTINGN	TOTAL COST	UNIT COST
Ground Water Monitor Samples	24.00 HR	660	0	100	190	330	1,290	53.82
Sampling Rad Contaminated Media		104,280	0	15,640	30,580	52,670	203,170	
Monitoring, Sampling & Analysis		104,280	0	15,640	30,580	52,670	203,170	
WHC:13 Physical Treatment								
WHC:13.21 Reverse Osmosis								
WHC:13.21.06 Personnel Training								
Personnel Training		6,900	0	1,040	2,020	3,490	13,450	
WHC:13.21.08 Operation and Maint (Yrs 1-12)								
Operation and Maint (Yrs 1-12)	1.00 YR	1,689,230	0	253,380	495,370	853,290	3,291,270	3291273.83
WHC:13.21.11 Prepare Annual Report (Yr 1)								
Prepare Annual Report (Yr 1)	2080.00 HR	90,150	0	13,520	26,440	45,540	175,640	84.44
WHC:13.21.12 Prepare Annual Report (Yrs 2-12)								
Prepare Annual Report (Yrs 2-12)		60,070	0	9,010	17,620	30,340	117,040	
Reverse Osmosis		1,846,350	0	276,950	541,440	932,660	3,597,410	
Physical Treatment		1,846,350	0	276,950	541,440	932,660	3,597,410	
Westinghouse Hanford Company		1,950,630	0	292,590	572,020	985,340	3,800,580	
HANFORD: ER PROGRAM		15,302,030	965,740	2,421,850	4,734,720	8,198,520	31,622,860	

Fri 07 Oct 1994

U.S. Army Corps of Engineers
PROJECT KARERO: HANFORD: ER PROGRAM - 100 KR-4 REVERSE OSMOSIS
100 KR-4 REVERSE OSMOSIS
** PROJECT INDIRECT SUMMARY - LEVEL 1 (Rounded to 10's) **

TIME 07:14:00
SUMMARY PAGE 8

		QUANTITY UOM	TOTAL DIRECT	OVERHEAD	PROFIT	BOND	B&O TAX	MAT MPR	TOTAL COST	UNIT COST
ANA	Off-Site Analytical Services		122,090	0	0	0	0	0	122,090	
SUB	Fixed Price Contractor		10,269,050	1,951,120	885,960	61,290	61,890	0	13,229,310	
WHC	Westinghouse Hanford Company		1,895,770	0	0	0	0	54,860	1,950,630	
	HANFORD: ER PROGRAM		12,286,910	1,951,120	885,960	61,290	61,890	54,860	15,302,030	
	Subcontractor MPR								965,740	
	SUBTOTAL								16,267,770	
	Project Management/Construction Mgnt								2,421,850	
	SUBTOTAL								18,689,620	
	General & Admin/Common Support Pool								4,734,720	
	SUBTOTAL								23,424,340	
	Contingency								8,198,520	
	TOTAL INCL OWNER COSTS								31,622,860	

Fri 07 Oct 1994

U.S. Army Corps of Engineers
PROJECT KARERO: HANFORD: ER PROGRAM - 100 KR-4 REVERSE OSMOSIS
100 KR-4 REVERSE OSMOSIS
** PROJECT INDIRECT SUMMARY - LEVEL 2 (Rounded to 10's) **

TIME 07:14:00
SUMMARY PAGE 9

	QUANTITY UOM	TOTAL DIRECT	OVERHEAD	PROFIT	BOND	B&O TAX	MAT MPR	TOTAL COST	UNIT COST
ANA Off-Site Analytical Services									
ANA:02 Monitoring, Sampling & Analysis		122,090	0	0	0	0	0	122,090	
Off-Site Analytical Services		122,090	0	0	0	0	0	122,090	
SUB Fixed Price Contractor									
SUB:01 Mobilization & Preparatory Work		29,420	5,590	2,540	180	180	0	37,910	
SUB:03 Site Work		169,570	32,220	14,630	1,010	1,020	0	218,450	
SUB:06 Groundwater Collection & Control		3,327,000	632,130	287,040	19,860	20,050	0	4,286,070	
SUB:13 Physical Treatment		6,718,000	1,276,420	579,600	40,100	40,490	0	8,654,600	
SUB:20 Site Restoration		10,000	1,900	860	60	60	0	12,880	
SUB:21 Demobilization		15,060	2,860	1,300	90	90	0	19,400	
Fixed Price Contractor		10,269,050	1,951,120	885,960	61,290	61,890	0	13,229,310	
WHC Westinghouse Hanford Company									
WHC:02 Monitoring, Sampling & Analysis		104,280	0	0	0	0	0	104,280	
WHC:13 Physical Treatment		1,791,500	0	0	0	0	54,860	1,846,350	
Westinghouse Hanford Company		1,895,770	0	0	0	0	54,860	1,950,630	
HANFORD: ER PROGRAM		12,286,910	1,951,120	885,960	61,290	61,890	54,860	15,302,030	
Subcontractor MPR								965,740	
SUBTOTAL								16,267,770	
Project Management/Construction Mgnt								2,421,850	
SUBTOTAL								18,689,620	
General & Admin/Common Support Pool								4,734,720	
SUBTOTAL								23,424,340	
Contingency								8,198,520	
TOTAL INCL OWNER COSTS								31,622,860	

Fri 07 Oct 1994

U.S. Army Corps of Engineers
PROJECT KARERO: HANFORD: ER PROGRAM - 100 KR-4 REVERSE OSMOSIS
100 KR-4 REVERSE OSMOSIS
** PROJECT INDIRECT SUMMARY - LEVEL 5 (Rounded to 10's) **

TIME 07:14:00
SUMMARY PAGE 10

	QUANTITY UOM	TOTAL DIRECT	OVERHEAD	PROFIT	BOND	B&O TAX	MAT MPR	TOTAL COST	UNIT COST
ANA Off-Site Analytical Services									
ANA:02 Monitoring, Sampling & Analysis									
ANA:02.08 Sampling Rad Contaminated Media									
ANA:02.08.02 Ground Water Analysis (YR 1)									
Ground Water Analysis (YR 1	17.00 EA	71,570	0	0	0	0	0	71,570	4210.00
ANA:02.08.03 Ground Water Analysis (YRS 2-1									
Ground Water Analysis (YRS	12.00 EA	50,520	0	0	0	0	0	50,520	4210.00
Sampling Rad Contaminated M		122,090	0	0	0	0	0	122,090	
Monitoring, Sampling & Anal		122,090	0	0	0	0	0	122,090	
Off-Site Analytical Service		122,090	0	0	0	0	0	122,090	
SUB Fixed Price Contractor									
SUB:01 Mobilization & Preparatory Work									
SUB:01.02 Mobilize Personnel & Equipment									
SUB:01.02.02 Mobilize Trailers									
Mobilize Trailers		750	140	60	0	0	0	970	
Mobilize Personnel & Equipm		750	140	60	0	0	0	970	
SUB:01.04 Setup/Construct Temp Facilities									
SUB:01.04.01 Establish Facilities									
SUB:01.04.01.02 Setup Trailers		3,810	720	330	20	20	0	4,910	
Establish Facilities		3,810	720	330	20	20	0	4,910	
SUB:01.04.02 Construct Decon Area									

Fri 07 Oct 1994

U.S. Army Corps of Engineers
PROJECT KARERO: HANFORD: ER PROGRAM - 100 KR-4 REVERSE OSMOSIS
100 KR-4 REVERSE OSMOSIS
** PROJECT INDIRECT SUMMARY - LEVEL 5 (Rounded to 10's) **

TIME 07:14:00
SUMMARY PAGE 11

	QUANTITY UOM	TOTAL DIRECT	OVERHEAD	PROFIT	BOND	B&O TAX	MAT MPR	TOTAL COST	UNIT COST
Construct Decon Area	24.00 HR	9,190	1,750	790	50	60	0	11,840	493.32
SUB:01.04.03 Site Survey									
Site Survey		1,000	190	90	10	10	0	1,290	
Setup/Construct Temp Facili		14,000	2,660	1,210	80	80	0	18,030	
SUB:01.05 Construct Temporary Utilities									
Construct Temporary Utiliti		4,680	890	400	30	30	0	6,020	
SUB:01.06 Pre-Construction Submittals									
Pre-Construction Submittals	4.00 EA	10,000	1,900	860	60	60	0	12,880	3220.68
Mobilization & Preparatory		29,420	5,590	2,540	180	180	0	37,910	
SUB:03 Site Work									
SUB:03.03 Earthwork									
Earthwork		5,000	950	430	30	30	0	6,440	
SUB:03.04 Roads/Parking/Curbs/Walks									
Roads/Parking/Curbs/Walks		146,920	27,910	12,680	880	890	0	189,270	
SUB:03.05 Fencing									
Fencing		7,650	1,450	660	50	50	0	9,860	
SUB:03.06 Electrical Distribution									
Electrical Distribution		10,000	1,900	860	60	60	0	12,880	
Site Work		169,570	32,220	14,630	1,010	1,020	0	218,450	
SUB:06 Groundwater Collection & Control									
SUB:06.01 Extraction & Injection Wells									

Fri 07 Oct 1994

U.S. Army Corps of Engineers
PROJECT KARERO: HANFORD: ER PROGRAM - 100 KR-4 REVERSE OSMOSIS
100 KR-4 REVERSE OSMOSIS
** PROJECT INDIRECT SUMMARY - LEVEL 5 (Rounded to 10's) **

TIME 07:14:00
SUMMARY PAGE 12

	QUANTITY UOM	TOTAL DIRECT	OVERHEAD	PROFIT	BOND	B&O TAX	MAT MPR	TOTAL COST	UNIT COST
SUB:06.01.01 Well Drilling & Construction									
Well Drilling & Constructio	22.00 EA	1,980,000	376,200	170,820	11,820	11,930	0	2,550,770	115944.31
SUB:06.01.04 Operations and Maintenance 3,6									
Operations and Maintenance		253,000	48,070	21,830	1,510	1,520	0	325,930	
SUB:06.01.9X Site Piping									
Site Piping		1,094,000	207,860	94,380	6,530	6,590	0	1,409,370	
Extraction & Injection Well		3,327,000	632,130	287,040	19,860	20,050	0	4,286,070	
Groundwater Collection & Co		3,327,000	632,130	287,040	19,860	20,050	0	4,286,070	
SUB:13 Physical Treatment									
SUB:13.21 Reverse Osmosis									
SUB:13.21.04 Construction of Permanent Plan									
Construction of Permanent P	800.00 SF	6,718,000	1,276,420	579,600	40,100	40,490	0	8,654,600	10818.25
Reverse Osmosis		6,718,000	1,276,420	579,600	40,100	40,490	0	8,654,600	
Physical Treatment		6,718,000	1,276,420	579,600	40,100	40,490	0	8,654,600	
SUB:20 Site Restoration									
SUB:20.04 Revegetation and Planting Yr 12									
Revegetation and Planting Y		10,000	1,900	860	60	60	0	12,880	
Site Restoration		10,000	1,900	860	60	60	0	12,880	
SUB:21 Demobilization									
SUB:21.02 Demobilize Personnel & Equipment									
SUB:21.02.02 Demobilize Trailers-Yr 12									

Fri 07 Oct 1994

U.S. Army Corps of Engineers
PROJECT KARERO: HANFORD: ER PROGRAM - 100 KR-4 REVERSE OSMOSIS
100 KR-4 REVERSE OSMOSIS
** PROJECT INDIRECT SUMMARY - LEVEL 5 (Rounded to 10's) **

TIME 07:14:00
SUMMARY PAGE 13

	QUANTITY UOM	TOTAL DIRECT	OVERHEAD	PROFIT	BOND	B&O TAX	MAT MPR	TOTAL COST	UNIT COST
Demobilize Trailers-Yr 12		750	140	60	0	0	0	970	
Demobilize Personnel & Equi		750	140	60	0	0	0	970	
SUB:21.04 Demobilize Temp Facilities									
SUB:21.04.02 Remove Decon Area-Yr 12									
Remove Decon Area-Yr 12	8.00 HR	1,810	340	160	10	10	0	2,330	290.79
Demobilize Temp Facilities		1,810	340	160	10	10	0	2,330	
SUB:21.05 Disconnect Temporary Utilities									
Disconnect Temporary Utilit		2,500	480	220	10	20	0	3,220	
SUB:21.06 Post-Construction Submittals									
Post-Construction Submittal	4.00 EA	10,000	1,900	860	60	60	0	12,880	3220.68
Demobilization		15,060	2,860	1,300	90	90	0	19,400	
Fixed Price Contractor		10,269,050	1,951,120	885,960	61,290	61,890	0	13,229,310	
WHC Westinghouse Hanford Company									
WHC:02 Monitoring, Sampling & Analysis									
WHC:02.08 Sampling Rad Contaminated Media									
WHC:02.08.02 Ground Water Analysis-Yr 1									
Ground Water Analysis-Yr 1	149.00 EA	60,410	0	0	0	0	0	60,410	405.41
WHC:02.08.03 Ground Water Analysis-Yr 2-12									
Ground Water Analysis-Yr 2-	106.00 EA	43,210	0	0	0	0	0	43,210	407.61
WHC:02.08.04 Ground Water Monitor Samples									

Fri 07 Oct 1994

U.S. Army Corps of Engineers
PROJECT KARERO: HANFORD: ER PROGRAM - 100 KR-4 REVERSE OSMOSIS
100 KR-4 REVERSE OSMOSIS
** PROJECT INDIRECT SUMMARY - LEVEL 5 (Rounded to 10's) **

TIME 07:14:00
SUMMARY PAGE 14

	QUANTITY UOM	TOTAL DIRECT	OVERHEAD	PROFIT	BOND	B&O TAX	MAT MPR	TOTAL COST	UNIT COST
Ground Water Monitor Sample	24.00 HR	660	0	0	0	0	0	660	27.62
Sampling Rad Contaminated M		104,280	0	0	0	0	0	104,280	
Monitoring, Sampling & Anal		104,280	0	0	0	0	0	104,280	
WHC:13 Physical Treatment									
WHC:13.21 Reverse Osmosis									
WHC:13.21.06 Personnel Training									
Personnel Training		6,900	0	0	0	0	0	6,900	
WHC:13.21.08 Operation and Maint (Yrs 1-12)									
Operation and Maint (Yrs 1-	1.00 YR	1,634,370	0	0	0	0	54,860	1,689,230	1689229.60
WHC:13.21.11 Prepare Annual Report (Yr 1)									
Prepare Annual Report (Yr 1	2080.00 HR	90,150	0	0	0	0	0	90,150	43.34
WHC:13.21.12 Prepare Annual Report (Yrs 2-1									
Prepare Annual Report (Yrs		60,070	0	0	0	0	0	60,070	
Reverse Osmosis		1,791,500	0	0	0	0	54,860	1,846,350	
Physical Treatment		1,791,500	0	0	0	0	54,860	1,846,350	
Westinghouse Hanford Compan		1,895,770	0	0	0	0	54,860	1,950,630	
HANFORD: ER PROGRAM		12,286,910	1,951,120	885,960	61,290	61,890	54,860	15,302,030	
Subcontractor MPR								965,740	
SUBTOTAL								16,267,770	
Project Management/Construction Mgnt								2,421,850	
SUBTOTAL								18,689,620	
General & Admin/Common Support Pool								4,734,720	
SUBTOTAL								23,424,340	

Fri 07 Oct 1994

U.S. Army Corps of Engineers
PROJECT KARERO: HANFORD: ER PROGRAM - 100 KR-4 REVERSE OSMOSIS
100 KR-4 REVERSE OSMOSIS
** PROJECT INDIRECT SUMMARY - LEVEL 5 (Rounded to 10's) **

TIME 07:14:00
SUMMARY PAGE 15

	QUANTITY	UOM	TOTAL DIRECT	OVERHEAD	PROFIT	BOND	B&O TAX	MAT MPR	TOTAL COST	UNIT COST
Contingency									8,198,520	
TOTAL INCL OWNER COSTS									31,622,860	

Fri 07 Oct 1994

U.S. Army Corps of Engineers
PROJECT KARERO: HANFORD: ER PROGRAM - 100 KR-4 REVERSE OSMOSIS
100 KR-4 REVERSE OSMOSIS
** PROJECT DIRECT SUMMARY - LEVEL 1 (Rounded to 10's) **

TIME 07:14:00
SUMMARY PAGE 16

		QUANTITY UOM	LABOR	EQUIPMNT	MAT/SUPP	UNIT CST	TOTAL COST	UNIT COST
ANA	Off-Site Analytical Services		0	0	0	122,090	122,090	
SUB	Fixed Price Contractor		13,550	2,920	7,010	10,245,570	10,269,050	
WHC	Westinghouse Hanford Company		691,500	0	360,890	843,380	1,895,770	
	HANFORD: ER PROGRAM		705,050	2,920	367,900	11,211,040	12,286,910	
	Overhead						1,951,120	
	SUBTOTAL						14,238,030	
	Profit						885,960	
	SUBTOTAL						15,124,000	
	Bond						61,290	
	SUBTOTAL						15,185,290	
	B&O Tax						61,890	
	SUBTOTAL						15,247,170	
	Material/Supply MPR						54,860	
	TOTAL INCL INDIRECTS						15,302,030	
	Subcontractor MPR						965,740	
	SUBTOTAL						16,267,770	
	Project Management/Construction Mgnt						2,421,850	
	SUBTOTAL						18,689,620	
	General & Admin/Common Support Pool						4,734,720	
	SUBTOTAL						23,424,340	
	Contingency						8,198,520	
	TOTAL INCL OWNER COSTS						31,622,860	

Fri 07 Oct 1994

U.S. Army Corps of Engineers
PROJECT KARERO: HANFORD: ER PROGRAM - 100 KR-4 REVERSE OSMOSIS
100 KR-4 REVERSE OSMOSIS
** PROJECT DIRECT SUMMARY - LEVEL 2 (Rounded to 10's) **

TIME 07:14:00
SUMMARY PAGE 17

	QUANTITY UOM	LABOR	EQUIPMNT	MAT/SUPP	UNIT CST	TOTAL COST	UNIT COST
ANA Off-Site Analytical Services							
ANA:02 Monitoring, Sampling & Analysis		0	0	0	122,090	122,090	
Off-Site Analytical Services		0	0	0	122,090	122,090	
SUB Fixed Price Contractor							
SUB:01 Mobilization & Preparatory Work		9,600	1,820	7,010	11,000	29,420	
SUB:03 Site Work		0	0	0	169,570	169,570	
SUB:06 Groundwater Collection & Control		0	0	0	3,327,000	3,327,000	
SUB:13 Physical Treatment		0	0	0	6,718,000	6,718,000	
SUB:20 Site Restoration		0	0	0	10,000	10,000	
SUB:21 Demobilization		3,950	1,110	0	10,000	15,060	
Fixed Price Contractor		13,550	2,920	7,010	10,245,570	10,269,050	
WHC Westinghouse Hanford Company							
WHC:02 Monitoring, Sampling & Analysis		660	0	0	103,610	104,280	
WHC:13 Physical Treatment		690,840	0	360,890	739,770	1,791,500	
Westinghouse Hanford Company		691,500	0	360,890	843,380	1,895,770	
HANFORD: ER PROGRAM		705,050	2,920	367,900	11,211,040	12,286,910	
Overhead						1,951,120	
SUBTOTAL						14,238,030	
Profit						885,960	
SUBTOTAL						15,124,000	
Bond						61,290	
SUBTOTAL						15,185,290	
B&O Tax						61,890	
SUBTOTAL						15,247,170	
Material/Supply MPR						54,860	
TOTAL INCL INDIRECTS						15,302,030	
Subcontractor MPR						965,740	
SUBTOTAL						16,267,770	
Project Management/Construction Mgnt						2,421,850	
SUBTOTAL						18,689,620	
General & Admin/Common Support Pool						4,734,720	
SUBTOTAL						23,424,340	

Fri 07 Oct 1994

U.S. Army Corps of Engineers
PROJECT KARERO: HANFORD: ER PROGRAM - 100 KR-4 REVERSE OSMOSIS
100 KR-4 REVERSE OSMOSIS
** PROJECT DIRECT SUMMARY - LEVEL 2 (Rounded to 10's) **

TIME 07:14:00
SUMMARY PAGE 18

	QUANTITY UOM	LABOR	EQUIPMNT	MAT/SUPP	UNIT CST	TOTAL COST	UNIT COST
Contingency						8,198,520	
TOTAL INCL OWNER COSTS						31,622,860	

	QUANTITY UOM	LABOR	EQUIPMNT	MAT/SUPP	UNIT CST	TOTAL COST	UNIT COST
ANA Off-Site Analytical Services							
ANA:02 Monitoring, Sampling & Analysis							
ANA:02.08 Sampling Rad Contaminated Media							
ANA:02.08.02 Ground Water Analysis (YR 1)							
Ground Water Analysis (YR 1)	17.00 EA	0	0	0	71,570	71,570	4210.00
ANA:02.08.03 Ground Water Analysis (YRS 2-12)							
Ground Water Analysis (YRS 2-12)	12.00 EA	0	0	0	50,520	50,520	4210.00
Sampling Rad Contaminated Media		0	0	0	122,090	122,090	
Monitoring, Sampling & Analysis		0	0	0	122,090	122,090	
Off-Site Analytical Services		0	0	0	122,090	122,090	
SUB Fixed Price Contractor							
SUB:01 Mobilization & Preparatory Work							
SUB:01.02 Mobilize Personnel & Equipment							
SUB:01.02.02 Mobilize Trailers							
Mobilize Trailers		0	750	0	0	750	
Mobilize Personnel & Equipment		0	750	0	0	750	
SUB:01.04 Setup/Construct Temp Facilities							
SUB:01.04.01 Establish Facilities							
SUB:01.04.01.02 Setup Trailers		3,000	0	810	0	3,810	
Establish Facilities		3,000	0	810	0	3,810	
SUB:01.04.02 Construct Decon Area							

	QUANTITY UOM	LABOR	EQUIPMNT	MAT/SUPP	UNIT CST	TOTAL COST	UNIT COST
Construct Decon Area	24.00 HR	4,350	1,070	3,770	0	9,190	382.93
SUB:01.04.03 Site Survey							
Site Survey		0	0	0	1,000	1,000	
Setup/Construct Temp Facilities		7,350	1,070	4,580	1,000	14,000	
SUB:01.05 Construct Temporary Utilities							
Construct Temporary Utilities		2,250	0	2,430	0	4,680	
SUB:01.06 Pre-Construction Submittals							
Pre-Construction Submittals	4.00 EA	0	0	0	10,000	10,000	2500.00
Mobilization & Preparatory Work		9,600	1,820	7,010	11,000	29,420	
SUB:03 Site Work							
SUB:03.03 Earthwork							
Earthwork		0	0	0	5,000	5,000	
SUB:03.04 Roads/Parking/Curbs/Walks							
Roads/Parking/Curbs/Walks		0	0	0	146,920	146,920	
SUB:03.05 Fencing							
Fencing		0	0	0	7,650	7,650	
SUB:03.06 Electrical Distribution							
Electrical Distribution		0	0	0	10,000	10,000	
Site Work		0	0	0	169,570	169,570	
SUB:06 Groundwater Collection & Control							
SUB:06.01 Extraction & Injection Wells							

Fri 07 Oct 1994

U.S. Army Corps of Engineers
PROJECT KARERO: HANFORD: ER PROGRAM - 100 KR-4 REVERSE OSMOSIS
100 KR-4 REVERSE OSMOSIS
** PROJECT DIRECT SUMMARY - LEVEL 5 (Rounded to 10's) **

TIME 07:14:00
SUMMARY PAGE 21

	QUANTITY UOM	LABOR	EQUIPMNT	MAT/SUPP	UNIT CST	TOTAL COST	UNIT COST
SUB:06.01.01 Well Drilling & Construction							
Well Drilling & Construction	22.00 EA	0	0	0	1,980,000	1,980,000	90000.00
SUB:06.01.04 Operations and Maintenance 3,6,9							
Operations and Maintenance 3,6,9		0	0	0	253,000	253,000	
SUB:06.01.9X Site Piping							
Site Piping		0	0	0	1,094,000	1,094,000	
Extraction & Injection Wells		0	0	0	3,327,000	3,327,000	
Groundwater Collection & Control		0	0	0	3,327,000	3,327,000	
SUB:13 Physical Treatment							
SUB:13.21 Reverse Osmosis							
SUB:13.21.04 Construction of Permanent Plant							
Construction of Permanent Plant	800.00 SF	0	0	0	6,718,000	6,718,000	8397.50
Reverse Osmosis		0	0	0	6,718,000	6,718,000	
Physical Treatment		0	0	0	6,718,000	6,718,000	
SUB:20 Site Restoration							
SUB:20.04 Revegetation and Planting Yr 12							
Revegetation and Planting Yr 12		0	0	0	10,000	10,000	
Site Restoration		0	0	0	10,000	10,000	
SUB:21 Demobilization							
SUB:21.02 Demobilize Personnel & Equipment							
SUB:21.02.02 Demobilize Trailers-Yr 12							

	QUANTITY UOM	LABOR	EQUIPMNT	MAT/SUPP	UNIT CST	TOTAL COST	UNIT COST
Demobilize Trailers-Yr 12		0	750	0	0	750	
Demobilize Personnel & Equipment		0	750	0	0	750	
SUB:21.04 Demobilize Temp Facilities							
SUB:21.04.02 Remove Decon Area-Yr 12							
Remove Decon Area-Yr 12	8.00 HR	1,450	360	0	0	1,810	225.72
Demobilize Temp Facilities		1,450	360	0	0	1,810	
SUB:21.05 Disconnect Temporary Utilities							
Disconnect Temporary Utilities		2,500	0	0	0	2,500	
SUB:21.06 Post-Construction Submittals							
Post-Construction Submittals	4.00 EA	0	0	0	10,000	10,000	2500.00
Demobilization		3,950	1,110	0	10,000	15,060	
Fixed Price Contractor		13,550	2,920	7,010	10,245,570	10,269,050	
WHC Westinghouse Hanford Company							
WHC:02 Monitoring, Sampling & Analysis							
WHC:02.08 Sampling Rad Contaminated Media							
WHC:02.08.02 Ground Water Analysis-Yr 1							
Ground Water Analysis-Yr 1	149.00 EA	0	0	0	60,410	60,410	405.41
WHC:02.08.03 Ground Water Analysis-Yr 2-12							
Ground Water Analysis-Yr 2-12	106.00 EA	0	0	0	43,210	43,210	407.61
WHC:02.08.04 Ground Water Monitor Samples							

	QUANTITY UOM	LABOR	EQUIPMNT	MAT/SUPP	UNIT CST	TOTAL COST	UNIT COST
Ground Water Monitor Samples	24.00 HR	660	0	0	0	660	27.62
Sampling Rad Contaminated Media		660	0	0	103,610	104,280	
Monitoring, Sampling & Analysis		660	0	0	103,610	104,280	
WHC:13 Physical Treatment							
WHC:13.21 Reverse Osmosis							
WHC:13.21.06 Personnel Training							
Personnel Training		1,100	0	0	5,800	6,900	
WHC:13.21.08 Operation and Maint (Yrs 1-12)							
Operation and Maint (Yrs 1-12)	1.00 YR	539,520	0	360,890	733,970	1,634,370	1634374.54
WHC:13.21.11 Prepare Annual Report (Yr 1)							
Prepare Annual Report (Yr 1)	2080.00 HR	90,150	0	0	0	90,150	43.34
WHC:13.21.12 Prepare Annual Report (Yrs 2-12)							
Prepare Annual Report (Yrs 2-12)		60,070	0	0	0	60,070	
Reverse Osmosis		690,840	0	360,890	739,770	1,791,500	
Physical Treatment		690,840	0	360,890	739,770	1,791,500	
Westinghouse Hanford Company		691,500	0	360,890	843,380	1,895,770	
HANFORD: ER PROGRAM		705,050	2,920	367,900	11,211,040	12,286,910	
Overhead						1,951,120	
SUBTOTAL						14,238,030	
Profit						885,960	
SUBTOTAL						15,124,000	
Bond						61,290	
SUBTOTAL						15,185,290	

Fri 07 Oct 1994

U.S. Army Corps of Engineers
PROJECT KARERO: HANFORD: ER PROGRAM - 100 KR-4 REVERSE OSMOSIS
100 KR-4 REVERSE OSMOSIS
** PROJECT DIRECT SUMMARY - LEVEL 5 (Rounded to 10's) **

TIME 07:14:00
SUMMARY PAGE 24

	QUANTITY UOM	LABOR	EQUIPMNT	MAT/SUPP	UNIT CST	TOTAL COST	UNIT COST
B&O Tax						61,890	
SUBTOTAL						15,247,170	
Material/Supply MPR						54,860	
TOTAL INCL INDIRECTS						15,302,030	
Subcontractor MPR						965,740	
SUBTOTAL						16,267,770	
Project Management/Construction Mgnt						2,421,850	
SUBTOTAL						18,689,620	
General & Admin/Common Support Pool						4,734,720	
SUBTOTAL						23,424,340	
Contingency						8,198,520	
TOTAL INCL OWNER COSTS						31,622,860	

ANA:02. Monitoring, Sampling & Analysis	QUANTY UOM CREW ID	LABOR	EQUIPMNT	MAT/SUPP	UNIT CST	TOTAL COST	UNIT COST

ANA. Off-Site Analytical Services
ANA:02. Monitoring, Sampling & Analysis
ANA:02.08. Sampling Rad Contaminated Media
ANA:02.08.02. Ground Water Analysis (YR 1)

Assumptions:

1. Assume shake-down period with following sampling of treatment system:
   - First 2 days: Sample every four hours of influent and effluent (24 samples)
   - Next 5 days: 1 sample per day of influent and effluent (10 samples)
   - Next 7 weeks: 1 sample per week of influent and effluent (14 samples)

2. 1 sample per filter change out (1 week) of the influent and effluent for the 12-yr lifecycle (104 samples/yr)

3. Assume sampling of 7 monitoring wells on a semiannual basis for the 12-year lifecycle (14 samples/yr)

   - Total samples = 166

4. All on-site sample analyses performed by WHC mobile lab

5. 10% off-site verification analysis of reduced analyte list with CLP protocol. (10% of 166 = 17 ea)

ANA	Analyze LLW Sample - Off-site Lab	17.00 EA	0.00 0	0.00 0	0.00 0	4210.00 71,570	4210.00 71,570	4210.00
	Ground Water Analysis (YR 1)	17.00 EA	0	0	0	71,570	71,570	4210.00

ANA:02. Monitoring, Sampling & Analysis	QUANTY UOM CREW ID	LABOR	EQUIPMNT	MAT/SUPP	UNIT CST	TOTAL COST	UNIT COST

ANA:02.08.03. Ground Water Analysis (YRS 2-12)

Assumptions:

1. Assume 1 sample per filter change out (1 week) of the influent and effluent for the 12-yr lifecycle (104 samples/yr)

2. Assume sampling of 7 monitoring wells on a semiannual basis for the 12-year lifecycle (14 samples/yr)

   - Total Samples = 118

3. All on-site sample analysis performed by WHC mobile lab

4. 10% off-site verification analysis of reduced analyte list with CLP protocol (10% of 118 = 12)

ANA	Analyze LLW Sample - Off-site Lab	12.00 EA	0.00 0	0.00 0	0.00 0	4210.00 50,520	4210.00 50,520	4210.00
	Ground Water Analysis (YRS 2-12)	12.00 EA	0	0	0	50,520	50,520	4210.00
	Sampling Rad Contaminated Media		0	0	0	122,090	122,090	
	Monitoring, Sampling & Analysis		0	0	0	122,090	122,090	
	Off-Site Analytical Services		0	0	0	122,090	122,090	

Fri 07 Oct 1994

DETAILED ESTIMATE

PROJECT KARERO:

U.S. Army Corps of Engineers
HANFORD: ER PROGRAM - 100 KR-4 REVERSE OSMOSIS
100 KR-4 REVERSE OSMOSIS
SUB. Fixed Price Contractor

TIME 07:14:00

DETAIL PAGE 3

SUB:01. Mobilization & Preparatory Work	QUANTY	UOM	CREW ID	LABOR	EQUIPMNT	MAT/SUPP	UNIT CST	TOTAL COST	UNIT COST
SUB. Fixed Price Contractor									
SUB:01. Mobilization & Preparatory Work									
SUB:01.02. Mobilize Personnel & Equipment									
SUB:01.02.02. Mobilize Trailers									
FPC S3 Mobilize Field Office Trailer				0.00	250.00	0.00	0.00	250.00	
	1.00	EA		0	250	0	0	250	250.00
FPC S3 Mobilize Storage Trailer				0.00	250.00	0.00	0.00	250.00	
	1.00	EA		0	250	0	0	250	250.00
FPC S3 Mobilize Decon Trailer				0.00	250.00	0.00	0.00	250.00	
	1.00	EA		0	250	0	0	250	250.00
Mobilize Trailers				0	750	0	0	750	
Mobilize Personnel & Equipment				0	750	0	0	750	

Fri 07 Oct 1994 | U.S. Army Corps of Engineers | TIME 07:14:00

DETAILED ESTIMATE | PROJECT KARERO: HANFORD: ER PROGRAM - 100 KR-4 REVERSE OSMOSIS | DETAIL PAGE 4

100 KR-4 REVERSE OSMOSIS
SUB. Fixed Price Contractor

SUB:01. Mobilization & Preparatory Work	QUANTY UOM CREW ID	LABOR	EQUIPMNT	MAT/SUPP	UNIT CST	TOTAL COST	UNIT COST
SUB:01.04. Setup/Construct Temp Facilities							
SUB:01.04.01. Establish Facilities							
SUB:01.04.01.02. Setup Trailers							
M FPC S3 Setup Field Office Trailer		1000.00	0.00	269.50	0.00	1269.50	
	1.00 EA	1,000	0	270	0	1,270	1269.50
M FPC S3 Setup Storage Trailer		1000.00	0.00	269.50	0.00	1269.50	
	1.00 EA	1,000	0	270	0	1,270	1269.50
M FPC S3 Setup Decon Trailer		1000.00	0.00	269.50	0.00	1269.50	
	1.00 EA	1,000	0	270	0	1,270	1269.50
Setup Trailers		3,000	0	809	0	3,809	
Establish Facilities		3,000	0	809	0	3,809	

SUB:01. Mobilization & Preparatory Work	QUANTY	UOM	CREW ID	LABOR	EQUIPMNT	MAT/SUPP	UNIT CST	TOTAL COST	UNIT COST
SUB:01.04.02. Construct Decon Area Work to be Performed: Construct decontamination area/pad for equipment and vehicles. Crew and Equipment: Fixed Price Contractor: 1 Group 6 Operator, 3 Group 1 Laborers, and 3 Group 2 Laborers Equipment: 1 backhoe, 1 pickup truck Output: Assumed duration for this activity is 3 crew days.									
FPC S3 Laborer Group - 1				25.20	0.00	0.00	0.00	25.20	
- 3 ea	72.00	HR	0029	1,814	0	0	0	1,814	25.20
FPC S3 Laborer Group - 2				25.50	0.00	0.00	0.00	25.50	
- 3 ea	72.00	HR	0030	1,836	0	0	0	1,836	25.50
FPC S3 Group-6 Power Equipment Operator				29.10	0.00	0.00	0.00	29.10	
- 1 ea	24.00	HR	0039	698	0	0	0	698	29.10
FPC S3 Small Tools - 2 ea				0.00	1.39	0.00	0.00	1.39	
	48.00	HR	XM1XX020	0	67	0	0	67	1.39
FPC S3 TRK,HWY,4X4,F250,3/4T,8800 GVW 4X4 3/4 TON PICK-UP				0.00	7.31	0.00	0.00	7.31	
- 1 ea	24.00	HR	T50F0004	0	175	0	0	175	7.31
FPC S3 HYD EXCAV,TRK MTD,.5 CY BKT,6X4				0.00	34.44	0.00	0.00	34.44	
HYDRO-SCOPIC - 1 ea	24.00	HR	H30BA001	0	826	0	0	826	34.44
M FPC S3 Construction Materials/Supplies				0.00	0.00	2156.00	0.00	2156.00	
Allowance	1.00	LS		0	0	2,156	0	2,156	2156.00
M FPC S3 Allowance for Tank				0.00	0.00	1617.00	0.00	1617.00	
Assume 1000 gal plastic tank for water collection	1.00	EA		0	0	1,617	0	1,617	1617.00
Construct Decon Area	24.00	HR		4,349	1,069	3,773	0	9,190	382.93

Fri 07 Oct 1994
DETAILED ESTIMATE

PROJECT KARERO: U.S. Army Corps of Engineers
HANFORD: ER PROGRAM - 100 KR-4 REVERSE OSMOSIS
100 KR-4 REVERSE OSMOSIS
SUB. Fixed Price Contractor

TIME 07:14:00
DETAIL PAGE 6

SUB:01. Mobilization & Preparatory Work	QUANTY UOM CREW ID	LABOR	EQUIPMNT	MAT/SUPP	UNIT CST	TOTAL COST	UNIT COST
SUB:01.04.03. Site Survey Prepare site for construction							
FPC S3 Allowance for Site Survey		0.00	0.00	0.00	1000.00	1000.00	
	1.00 LS	0	0	0	1,000	1,000	1000.00
Site Survey		0	0	0	1,000	1,000	
Setup/Construct Temp Facilities		7,349	1,069	4,582	1,000	13,999	

Fri 07 Oct 1994 | U.S. Army Corps of Engineers | TIME 07:14:00

DETAILED ESTIMATE | PROJECT KARERO: HANFORD: ER PROGRAM - 100 KR-4 REVERSE OSMOSIS | DETAIL PAGE 7

100 KR-4 REVERSE OSMOSIS
SUB. Fixed Price Contractor

SUB:01. Mobilization & Preparatory Work	QUANTY UOM CREW ID	LABOR	EQUIPMNT	MAT/SUPP	UNIT CST	TOTAL COST	UNIT COST
SUB:01.05. Construct Temporary Utilities							
M FPC S3 Allowance for Temporary Power		1.00	0.00	1.08	0.00	2.08	
	500.00 LF	500	0	539	0	1,039	2.08
M FPC S3 Allowance for Telephone		0.50	0.00	0.54	0.00	1.04	
	500.00 LF	250	0	270	0	520	1.04
M FPC S3 Allowance for Temporary Water and Sewer Service		3.00	0.00	3.23	0.00	6.23	
	500.00 LF	1,500	0	1,617	0	3,117	6.23
Construct Temporary Utilities		2,250	0	2,426	0	4,676	

Fri 07 Oct 1994 | U.S. Army Corps of Engineers | TIME 07:14:00

DETAILED ESTIMATE | PROJECT KARERO: HANFORD: ER PROGRAM - 100 KR-4 REVERSE OSMOSIS | DETAIL PAGE 8

100 KR-4 REVERSE OSMOSIS

SUB. Fixed Price Contractor

SUB:01. Mobilization & Preparatory Work	QUANTY UOM CREW ID	LABOR	EQUIPMNT	MAT/SUPP	UNIT CST	TOTAL COST	UNIT COST
SUB:01.06. Pre-Construction Submittals							
FPC S3 Allowance for Pre-Construction Submittals by Fixed Price Contractor	4.00 EA	0.00 0	0.00 0	0.00 0	2500.00 10,000	2500.00 10,000	2500.00
Pre-Construction Submittals	4.00 EA	0	0	0	10,000	10,000	2500.00
Mobilization & Preparatory Work		9,599	1,819	7,007	11,000	29,424	

SUB:03. Site Work	QUANTY	UOM	CREW ID	LABOR	EQUIPMNT	MAT/SUPP	UNIT CST	TOTAL COST	UNIT COST
SUB:03. Site Work									
SUB:03.03. Earthwork									
FPC S3 Allowance for Site Preparation				0.00	0.00	0.00	5000.00	5000.00	
	1.00	LS		0	0	0	5,000	5,000	5000.00
Earthwork				0	0	0	5,000	5,000	

Fri 07 Oct 1994

DETAILED ESTIMATE

PROJECT KARERO:

U.S. Army Corps of Engineers
HANFORD: ER PROGRAM - 100 KR-4 REVERSE OSMOSIS
100 KR-4 REVERSE OSMOSIS
SUB. Fixed Price Contractor

TIME 07:14:00

DETAIL PAGE 10

SUB:03. Site Work	QUANTY UOM CREW ID	LABOR	EQUIPMNT	MAT/SUPP	UNIT CST	TOTAL COST	UNIT COST
SUB:03.04. Roads/Parking/Curbs/Walks							
FPC S3 Allowance for Access Road		0.00	0.00	0.00	10.00	10.00	
	400.00 SY	0	0	0	4,000	4,000	10.00
FPC S3 Allowance Gravel Parking Area		0.00	0.00	0.00	10.00	10.00	
	300.00 SY	0	0	0	3,000	3,000	10.00
FPC S3 Access Roads to Wells		0.00	0.00	0.00	2.12	2.12	
Assume 3000 lf of road per well, 10 ft wide, native materials 3000 lf/well x 22 wells =66000 lf	66000 LF	0	0	0	139,920	139,920	2.12
Roads/Parking/Curbs/Walks		0	0	0	146,920	146,920	

SUB:03. Site Work	QUANTY UOM CREW ID	LABOR	EQUIPMNT	MAT/SUPP	UNIT CST	TOTAL COST	UNIT COST
SUB:03.05. Fencing							
FPC S3 Allowance for Permanent Fencing		0.00	0.00	0.00	21.00	21.00	
Assume 7 ft high security fence	350.00 LF	0	0	0	7,350	7,350	21.00
FPC S3 Allowance for Entrance Gate		0.00	0.00	0.00	300.00	300.00	
	1.00 EA	0	0	0	300	300	300.00
Fencing		0	0	0	7,650	7,650	

SUB:03. Site Work	QUANTY UOM CREW ID	LABOR	EQUIPMNT	MAT/SUPP	UNIT CST	TOTAL COST	UNIT COST
SUB:03.06. Electrical Distribution							
FPC S3 Allowance for Site Electrical		0.00	0.00	0.00	10000.00	10000.00	
	1.00 LS	0	0	0	10,000	10,000	10000.00
Electrical Distribution		0	0	0	10,000	10,000	
Site Work		0	0	0	169,570	169,570	

SUB:06. Groundwater Collection & Control	QUANTY UOM CREW ID	LABOR	EQUIPMNT	MAT/SUPP	UNIT CST	TOTAL COST	UNIT COST
SUB:06. Groundwater Collection & Control							
SUB:06.01. Extraction & Injection Wells							
SUB:06.01.01. Well Drilling & Construction							
FPC S3 Drill/Install Extr/Inject Wells		0.00	0.00	0.00	700.00	700.00	
Note: 11 new extraction and 11 new injection wells, 100 ft deep, 8 in diameter, screened for 50 ft. Unit cost is assumed to include handling and packaging of contaminated well cuttings, transport to the disposal facility, and associated disposal fees.	2200.00 LF	0	0	0	1,540,000	1,540,000	700.00
FPC S3 Allowance for Well Pumps-100 gpm		0.00	0.00	0.00	3000.00	3000.00	
	11.00 EA	0	0	0	33,000	33,000	3000.00
FPC S3 Allowance for Controls and Connections at Well Heads		0.00	0.00	0.00	10000.00	10000.00	
	22.00 EA	0	0	0	220,000	220,000	10000.00
FPC S3 Allowance for Water Level Monitoring Instrumentation Assume 5 peizometers per extraction well using well points		0.00	0.00	0.00	1000.00	1000.00	
	55.00 EA	0	0	0	55,000	55,000	1000.00
FPC S3 Allowance for Well Head Covers Assume manhole type cover at each well head		0.00	0.00	0.00	1000.00	1000.00	
	22.00 EA	0	0	0	22,000	22,000	1000.00
FPC S3 Allowance for Well Testing		0.00	0.00	0.00	5000.00	5000.00	
	22.00 EA	0	0	0	110,000	110,000	5000.00
Well Drilling & Construction	22.00 EA	0	0	0	1,980,000	1,980,000	90000.00

SUB:06. Groundwater Collection & Control	QUANTY UOM CREW ID	LABOR	EQUIPMNT	MAT/SUPP	UNIT CST	TOTAL COST	UNIT COST
SUB:06.01.04. Operations and Maintenance 3,6,9							
FPC S3 Allowance for Well Workover Assume 1 every 3 yrs for each well for the 12-year lifecycle. Workovers performed in years 3, 6,9	22.00 EA	0.00 0	0.00 0	0.00 0	10000.00 220,000	10000.00 220,000	10000.00
FPC S3 Allowance for Well Pump Replacement Assume 1 pump replacement per production well every 3 years for the 12-year lifecycle. Pumps replaced in years 3,6,9	11.00 EA	0.00 0	0.00 0	0.00 0	3000.00 33,000	3000.00 33,000	3000.00
Operations and Maintenance 3,6,9		0	0	0	253,000	253,000	

SUB:06. Groundwater Collection & Control	QUANTY UOM CREW ID	LABOR	EQUIPMNT	MAT/SUPP	UNIT CST	TOTAL COST	UNIT COST
SUB:06.01.9X. Site Piping							
FPC S3 Allowance for Piping from Well Head to Treatment Plant Assume 3000 lf of double wall PVC piping per extraction well. 3000 lf/well x 11 wells = 33000 lf	33000 LF	0.00 0	0.00 0	0.00 0	18.00 594,000	18.00 594,000	18.00
FPC S3 Allowance for Leak Detection	1.00 LS	0.00 0	0.00 0	0.00 0	5000.00 5,000	5000.00 5,000	5000.00
FPC S3 Allowance for Force Main Discharge Piping Assume 3000 lf of single-wall PVC piping per injection well 3000 lf/well x 11 wells = 33000 lf	33000 LF	0.00 0	0.00 0	0.00 0	15.00 495,000	15.00 495,000	15.00
Site Piping		0	0	0	1,094,000	1,094,000	
Extraction & Injection Wells		0	0	0	3,327,000	3,327,000	
Groundwater Collection & Control		0	0	0	3,327,000	3,327,000	

SUB:13. Physical Treatment	QUANTY UOM CREW ID	LABOR	EQUIPMNT	MAT/SUPP	UNIT CST	TOTAL COST	UNIT COST
SUB:13. Physical Treatment							
SUB:13.21. Reverse Osmosis							
SUB:13.21.04. Construction of Permanent Plant							
FPC S3 Excavate and Install Building Foundation	800.00 SF	0.00 0	0.00 0	0.00 0	20.00 16,000	20.00 16,000	20.00
FPC S3 Install Butler Building Assume a prefabricated heated building complete with frame, doors, roll up doors, gutters, insulation, and roof vent.	800.00 SF	0.00 0	0.00 0	0.00 0	20.00 16,000	20.00 16,000	20.00
FPC S3 Reverse Osmosis Equipment/Staging Includes 1 - 1100 gpm treatment system, 225-psi inlet pressure, 10% reject	1.00 LS	0.00 0	0.00 0	0.00 0	1580000.00 1,580,000	1580000.00 1,580,000	1580000.00
FPC S3 Vapor Recompression Evaporator Capacity = 1100 gpm x 0.1 = 110 gpm, includes startup boiler, 2% reject	1.00 LS	0.00 0	0.00 0	0.00 0	1500000.00 1,500,000	1500000.00 1,500,000	1500000.00
FPC S3 Rotary Drum Filter/Dryer Liquid loading = 1100 gpm x 0.1 x 0.02 = 2.2 gpm = 1100 lbs/hr, Drying area = 210 sf	6.00 EA	0.00 0	0.00 0	0.00 0	585000.00 3,510,000	585000.00 3,510,000	585000.00
FPC S3 Steam Generator Evaporate 2.2 gpm = 1100 lbs/hr 1,884,400 BTU/Hr	15.00 EA	0.00 0	0.00 0	0.00 0	1600.00 24,000	1600.00 24,000	1600.00
FPC S3 Allowance for Bldg Electrical Includes lighting, fixtures, motor starters, controllers, junction boxes, transformer, chart recorders, annunciators, panels, conduit, and wiring.	800.00 SF	0.00 0	0.00 0	0.00 0	40.00 32,000	40.00 32,000	40.00
FPC S3 Allowance for Bldg Mechanical Includes equipment installation and connections, controls/instrumentation, interior piping (plastic), floor drains and piping, and HVAC.	800.00 SF	0.00 0	0.00 0	0.00 0	50.00 40,000	50.00 40,000	50.00
Construction of Permanent Plant	800.00 SF	0	0	0	6,718,000	6,718,000	8397.50

Fri 07 Oct 1994

DETAILED ESTIMATE

PROJECT KARERO:

U.S. Army Corps of Engineers
HANFORD: ER PROGRAM - 100 KR-4 REVERSE OSMOSIS
100 KR-4 REVERSE OSMOSIS
SUB. Fixed Price Contractor

TIME 07:14:00

DETAIL PAGE 17

SUB:13. Physical Treatment	QUANTY UOM CREW ID	LABOR	EQUIPMNT	MAT/SUPP	UNIT CST	TOTAL COST	UNIT COST
Reverse Osmosis		0	0	0	6,718,000	6,718,000	
Physical Treatment		0	0	0	6,718,000	6,718,000	

SUB:20. Site Restoration	QUANTY UOM CREW ID	LABOR	EQUIPMNT	MAT/SUPP	UNIT CST	TOTAL COST	UNIT COST
SUB:20. Site Restoration							
SUB:20.04. Revegetation and Planting Yr 12							
FPC S3 Allowance for Site Restoration		0.00	0.00	0.00	2.00	2.00	
	5000.00 SY	0	0	0	10,000	10,000	2.00
Revegetation and Planting Yr 12		0	0	0	10,000	10,000	
Site Restoration		0	0	0	10,000	10,000	

SUB:21. Demobilization	QUANTY	UOM	CREW ID	LABOR	EQUIPMNT	MAT/SUPP	UNIT CST	TOTAL COST	UNIT COST
SUB:21. Demobilization									
SUB:21.02. Demobilize Personnel & Equipment									
SUB:21.02.02. Demobilize Trailers-Yr 12									
FPC S3 Demob Field Office Trailer				0.00	250.00	0.00	0.00	250.00	
	1.00	EA		0	250	0	0	250	250.00
FPC S3 Demob Storage Trailer				0.00	250.00	0.00	0.00	250.00	
	1.00	EA		0	250	0	0	250	250.00
FPC S3 Demob Decon Trailer				0.00	250.00	0.00	0.00	250.00	
	1.00	EA		0	250	0	0	250	250.00
Demobilize Trailers-Yr 12				0	750	0	0	750	
Demobilize Personnel & Equipment				0	750	0	0	750	

SUB:21. Demobilization	QUANTY	UOM	CREW ID	LABOR	EQUIPMNT	MAT/SUPP	UNIT CST	TOTAL COST	UNIT COST
SUB:21.04. Demobilize Temp Facilities									
SUB:21.04.02. Remove Decon Area-Yr 12									
Work to be Performed:									
Remove decontamination area/pad for equipment and vehicles.									
Crew and Equipment:									
Fixed Price Contractor: 1 Group 6 Operator, 3 Group 1 Laborers, and 3 Group 2 Laborers									
Equipment: 1 backhoe, 1 pickup truck									
Output:									
Assumed duration for this activity is 1 crew day.									
FPC S3 Group-6 Power Equipment Operator - 1 ea	8.00	HR	0039	29.10 233	0.00 0	0.00 0	0.00 0	29.10 233	29.10
FPC S3 Laborer Group - 1 - 3 ea	24.00	HR	0029	25.20 605	0.00 0	0.00 0	0.00 0	25.20 605	25.20
FPC S3 Laborer Group - 2 - 3 ea	24.00	HR	0030	25.50 612	0.00 0	0.00 0	0.00 0	25.50 612	25.50
FPC S3 HYD EXCAV,TRK MTD,.5 CY BKT,6X4 HYDRO-SCOPIC - 1 ea	8.00	HR	H30BA001	0.00 0	34.44 275	0.00 0	0.00 0	34.44 275	34.44
FPC S3 TRK,HWY,4X4,F250,3/4T,8800 GVW 4X4 3/4 TON PICK-UP - 1 ea	8.00	HR	T50F0004	0.00 0	7.31 58	0.00 0	0.00 0	7.31 58	7.31
FPC S3 Small Tools - 2 ea	16.00	HR	XMIXX020	0.00 0	1.39 22	0.00 0	0.00 0	1.39 22	1.39
Remove Decon Area-Yr 12	8.00	HR		1,450	356	0	0	1,806	225.72
Demobilize Temp Facilities				1,450	356	0	0	1,806	

SUB:21. Demobilization	QUANTY UOM CREW ID	LABOR	EQUIPMNT	MAT/SUPP	UNIT CST	TOTAL COST	UNIT COST
SUB:21.05. Disconnect Temporary Utilities Yr 12							
M FPC S3 Remove Temporary Power		1.00	0.00	0.00	0.00	1.00	
	500.00 LF	500	0	0	0	500	1.00
M FPC S3 Remove Telephone		1.00	0.00	0.00	0.00	1.00	
	500.00 LF	500	0	0	0	500	1.00
M FPC S3 Remove Temporary Water and Sewer Service		3.00	0.00	0.00	0.00	3.00	
	500.00 LF	1,500	0	0	0	1,500	3.00
Disconnect Temporary Utilities		2,500	0	0	0	2,500	

SUB:21. Demobilization	QUANTY UOM CREW ID	LABOR	EQUIPMNT	MAT/SUPP	UNIT CST	TOTAL COST	UNIT COST
SUB:21.06. Post-Construction Submittals Yr 12							
FPC S3 Allowance for Post-Construction		0.00	0.00	0.00	2500.00	2500.00	
Submittals by Fixed Price Contractor	4.00 EA	0	0	0	10,000	10,000	2500.00
Post-Construction Submittals	4.00 EA	0	0	0	10,000	10,000	2500.00
Demobilization		3,950	1,106	0	10,000	15,056	
Fixed Price Contractor		13,548	2,925	7,007	10,245,570	10,269,050	

WHC:02. Monitoring, Sampling & Analysis	QUANTY UOM CREW ID	LABOR	EQUIPMNT	MAT/SUPP	UNIT CST	TOTAL COST	UNIT COST

WHC. Westinghouse Hanford Company
WHC:02. Monitoring, Sampling & Analysis
WHC:02.08. Sampling Rad Contaminated Media
WHC:02.08.02. Ground Water Analysis-Yr 1

Assumptions:

1. Assume shake-down period with following sampling of treatment system:
   - First 2 days: Sample every four hours of influent anf effluent (24 samples)
   - Next 5 days: 1 sample per day of influent and effluent (10 samples)
   - Next 7 weeks: 1 sample per week of influent and effluent (14 samples)

2. 1 sample per filter change out (1 week) of the influent and effluent for the 12-yr lifecycle (104 samples/yr)

3. Assume sampling of 7 monitoring wells on a semiannual basis for the 12-year lifecycle (14 samples/yr)

   - Total samples = 166

4. 90% of samples for analysis at mobile lab (90% of 166 = 149)

5. HACH kit samples are taken 1 per shift for the 12-yr lifecycle plus an additional 48 samples during the shake-down period. (1143 samples)

WHC	Analyze LLW Sample - Mobile Lab		0.00	0.00	0.00	400.00	400.00	
		149.00 EA	0	0	0	59,600	59,600	400.00
WHC	HACH Kit Sampling		0.00	0.00	0.00	0.50	0.50	
		1143.00 EA	0	0	0	572	572	0.50
WHC	HACH Kit Replacement		0.00	0.00	0.00	235.00	235.00	
	Assume 1 per yr	1.00 EA	0	0	0	235	235	235.00
	Ground Water Analysis-Yr 1	149.00 EA	0	0	0	60,407	60,407	405.41

WHC:02. Monitoring, Sampling & Analysis

WHC:02.08.03. Ground Water Analysis-Yr 2-12

Assumptions:

1. 1 sample per filter change out (1 week) of the influent and effluent for the 12-yr lifecycle (104 samples/yr)

2. Assume sampling of 7 monitoring wells on a semiannual basis for the 12-year lifecycle (14 samples/yr)

- Total samples = 118

4. 90% of samples for analysis at mobile lab (90% of 118 = 106)

5. HACH kit samples are taken 1 per shift for the 12-yr lifecycle (1143 samples)

		QUANTY	UOM	CREW ID	LABOR	EQUIPMNT	MAT/SUPP	UNIT CST	TOTAL COST	UNIT COST
WHC	Analyze LLW Sample - Mobile Lab				0.00	0.00	0.00	400.00	400.00	
		106.00	EA		0	0	0	42,400	42,400	400.00
WHC	HACH Kit Sampling				0.00	0.00	0.00	0.50	0.50	
		1143.00	EA		0	0	0	572	572	0.50
WHC	HACH Kit Replacement				0.00	0.00	0.00	235.00	235.00	
	Assume 1 per yr	1.00	EA		0	0	0	235	235	235.00
	Ground Water Analysis-Yr 2-12	106.00	EA		0	0	0	43,207	43,207	407.61

WHC:02. Monitoring, Sampling & Analysis	QUANTY UOM CREW ID	LABOR	EQUIPMNT	MAT/SUPP	UNIT CST	TOTAL COST	UNIT COST
WHC:02.08.04. Ground Water Monitor Samples							
Work to be Performed:							
Take semiannual groundwater monitoring samples.							
Assumptions:							
1. Assume sampling of 7 monitoring wells on a semiannual basis for the 12-year lifecycle. (14 samples/yr)							
2. Assume 2 field Technicians for 6 hours on a semiannual basis for the 12-year lifecycle. (24 hrs/yr)							
WHC Technician, Environmental		27.62	0.00	0.00	0.00	27.62	
Restoration Ops - 2 ea	24.00 HR 85201	663	0	0	0	663	27.62
Ground Water Monitor Samples	24.00 HR	663	0	0	0	663	27.62
Sampling Rad Contaminated Media		663	0	0	103,613	104,276	
Monitoring, Sampling & Analysis		663	0	0	103,613	104,276	

WHC:13. Physical Treatment		QUANTY UOM CREW ID	LABOR	EQUIPMNT	MAT/SUPP	UNIT CST	TOTAL COST	UNIT COST
WHC:13. Physical Treatment								
WHC:13.21. Reverse Osmosis								
WHC:13.21.06. Personnel Training								
Note: This account to allow for operator time and an allowance for a 40-hour training course.								
WHC	Operator, Environmental		27.62	0.00	0.00	0.00	27.62	
	Restoration Ops	40.00 HR 85302	1,105	0	0	0	1,105	27.62
WHC	Allowance for 40 hr Training		0.00	0.00	0.00	800.00	800.00	
		1.00 LS	0	0	0	800	800	800.00
WHC	Allowance for Maintainence		0.00	0.00	0.00	5000.00	5000.00	
	Manuals	1.00 LS	0	0	0	5,000	5,000	5000.00
	Personnel Training		1,105	0	0	5,800	6,905	

WHC:13. Physical Treatment		QUANTY UOM CREW ID	LABOR	EQUIPMNT	MAT/SUPP	UNIT CST	TOTAL COST	UNIT COST
WHC:13.21.08. Operation and Maint (Yrs 1-12)								
	Assumptions: 1. Treatment facility will be fully staffed with 2 FTE's per shift, 3 shifts per day, 7 days per week. (365 days/yr x 24 hrs/day = 8760 hrs) 2. Reverse Osmosis filters will be replaced every week for the 12-year lifecycle. 3. 2 FTE crew will be composed of the following members: 0.25 ea - supervisor 1.00 ea - operator 0.50 ea - TP tech support 0.25 ea - maintenance engineer							
WHC	Operator, Environmental Restoration Ops - 1 ea	8760.00 HR 85302	27.62 241,984	0.00 0	0.00 0	0.00 0	27.62 241,984	27.62
WHC	Technician, Health Physics - 0.50 ea	4380.00 HR 33201	39.72 173,958	0.00 0	0.00 0	0.00 0	39.72 173,958	39.72
WHC	Skilled Craft, Environmental Restoration Ops - Maintenance - 0.25 ea	2190.00 HR 85301	27.62 60,496	0.00 0	0.00 0	0.00 0	27.62 60,496	27.62
WHC	Allowance for Electricity Wells: 3014 kW-hr/d RO System: 4301 kW-hr/d Recompr Evap: 12,658 kW-hr/d (80 kW-hr/1000 gal) Rotary Filter: 13,233 kW-hr/d Assume 24 hrs/day x 365 days/yr Total = 12,120,190 kW-hr/yr	12120190 KWH	0.00 0	0.00 0	0.00 0	0.04 484,808	0.04 484,808	0.04
WHC	RO System Chemicals Includes scale inhibitors $ 0.34/1000 gal, 1100 gpm x 1440 m/d x 365 d/y = 578.2 MMgpy	******** GAL	0.00 0	0.00 0	0.00 0	0.00 173,460	0.00 173,460	0.00
M WHC S2	Reverse Osmosis Filter Replacement Assume replacement of 2 filters on a weekly basis for the 12-year lifecycle. (52 wk/yr x 2 filters/wk)	104.00 EA	0.00 0	0.00 0	3470.08 360,889	0.00 0	3470.08 360,889	3470.08

WHC:13. Physical Treatment		QUANTY UOM CREW ID	LABOR	EQUIPMNT	MAT/SUPP	UNIT CST	TOTAL COST	UNIT COST
WHC	Disposal Fee for Reverse Osmosis Filters Assume disposal at ERDF for years 1-12 of the 12-year lifecycle. Assume each filter to be 40 cf	4160.00 CF	0.00 0	0.00 0	0.00 0	2.59 10,774	2.59 10,774	2.59
WHC	Disposal Fee - Evaporation Cake Assume disposal at ERDF for years 1-12 of the 12-year lifecycle. 1100 gpm x 325 ppm = 45.6 cf/day, 45.6 cf/day x 365 days = 16,650 cf/yr Assume 50% volume increase to stabilize evaporation cake 1.5 x 16,650 cf/yr = 24,975 cf/yr	24975 CF	0.00 0	0.00 0	0.00 0	2.59 64,685	2.59 64,685	2.59
WHC	Technician, Environmental Restoration Ops - Supervisor - 0.25 ea	2190.00 HR 85201	28.80 63,080	0.00 0	0.00 0	0.00 0	28.80 63,080	28.80
WHC	Allowance for Water Usage Assume 1000 gal per month usage for the 12-year lifecycle	12000 GAL	0.00 0	0.00 0	0.00 0	0.02 240	0.02 240	0.02
	Operation and Maint (Yrs 1-12)	1.00 YR	539,519	0	360,889	733,967	1,634,375	1634374.54

WHC:13. Physical Treatment		QUANTY UOM CREW ID	LABOR	EQUIPMNT	MAT/SUPP	UNIT CST	TOTAL COST	UNIT COST
WHC:13.21.11. Prepare Annual Report (Yr 1) Assume 2 FTE's for 6 months each year								
WHC	Engineer, Environmental		43.34	0.00	0.00	0.00	43.34	
	Restoration Ops - 1 ea	1040.00 HR 85101	45,074	0	0	0	45,074	43.34
WHC	Scientist, Environmental		43.34	0.00	0.00	0.00	43.34	
	Restoration Ops - 1 ea	1040.00 HR 85102	45,074	0	0	0	45,074	43.34
	Prepare Annual Report (Yr 1)	2080.00 HR	90,148	0	0	0	90,148	43.34

WHC:13. Physical Treatment		QUANTY UOM CREW ID	LABOR	EQUIPMNT	MAT/SUPP	UNIT CST	TOTAL COST	UNIT COST
WHC:13.21.12. Prepare Annual Report (Yrs 2-12) Assume a 66% effort level of the year 1 report (2 FTE's for 4 months each year)								
WHC	Engineer, Environmental Restoration Ops - 1 ea	693.00 HR 85101	43.34 30,035	0.00 0	0.00 0	0.00 0	43.34 30,035	43.34
WHC	Scientist, Environmental Restoration Ops - 1 ea	693.00 HR 85102	43.34 30,035	0.00 0	0.00 0	0.00 0	43.34 30,035	43.34
	Prepare Annual Report (Yrs 2-12)		60,070	0	0	0	60,070	
	Reverse Osmosis		690,842	0	360,889	739,767	1,791,498	
	Physical Treatment		690,842	0	360,889	739,767	1,791,498	
	Westinghouse Hanford Company		691,505	0	360,889	843,380	1,895,774	
	HANFORD: ER PROGRAM		705,053	2,925	367,896	11,211,040	12,286,914	

Fri 07 Oct 1994

U.S. Army Corps of Engineers
PROJECT KARERO: HANFORD: ER PROGRAM - 100 KR-4 REVERSE OSMOSIS
100 KR-4 REVERSE OSMOSIS
** LABOR BACKUP **

TIME 07:14:00
BACKUP PAGE 1

SRC LABOR ID	DESCRIPTION	BASE	OVERTM	TXS/INS	FRNG	TRVL	RATE	UOM	UPDATE	**** TOTAL **** DEFAULT	HOURS
FPC 0029	Laborer Group - 1	15.84	0.0%	28.7%	3.57	1.25	25.20	HR	07/09/93	0.00	96
FPC 0030	Laborer Group - 2	16.09	0.0%	28.5%	3.57	1.25	25.50	HR	07/09/93	0.00	96
FPC 0039	Group-6 Power Equipment Operator	18.02	0.0%	27.4%	4.90	1.25	29.10	HR	07/09/93	0.00	32
WHC 33201	Technician, Health Physics	28.78	0.0%	38.0%	0.00	0.00	39.72	HR	01/07/94	0.00	4380
WHC 85101	Engineer, Environmental	35.38	0.0%	22.5%	0.00	0.00	43.34	HR	01/07/94	0.00	1733
WHC 85102	Scientist, Environmental	35.38	0.0%	22.5%	0.00	0.00	43.34	HR	01/07/94	0.00	1733
WHC 85201	Technician, Environmental	22.55	0.0%	22.5%	0.00	0.00	27.62	HR	01/07/94	0.00	2214
WHC 85301	Skilled Craft, Environmental	22.55	0.0%	22.5%	0.00	0.00	27.62	HR	01/07/94	0.00	2190
WHC 85302	Operator, Environmental	22.55	0.0%	22.5%	0.00	0.00	27.62	HR	01/07/94	0.00	8800

Fri 07 Oct 1994

U.S. Army Corps of Engineers
PROJECT KARERO: HANFORD: ER PROGRAM - 100 KR-4 REVERSE OSMOSIS
100 KR-4 REVERSE OSMOSIS
** EQUIPMENT BACKUP **

TIME 07:14:00
BACKUP PAGE 2

SRC EQUIP ID	DESCRIPTION	DEPR	CAPT	FUEL	FOG	EQ REP	TR WR	TR REP	TOTAL UOM	** TOTAL ** HOURS
MIL H308A001	HYD EXCAV,TRK MTD,.5 CY BKT,6X4	14.36	3.58	4.07	1.4	9.83	0.98	0.15	34.44 HR	32
MIL T50F0004	TRK,HWY,4X4,F250,3/4T,8800 GVW	1.58	0.39	2.67	0.7	1.60	0.27	0.04	7.31 HR	32
MIL XMIXX020	Small Tools	0.46	0.17	0.13	0.0	0.57			1.39 HR	64

THIS PAGE INTENTIONALLY
LEFT BLANK

DISTRIBUTION

Number of Copies		
Onsite		
31	U.S. Department of Energy, Richland Operations	
	J. K. Erickson (30)	~~A5-19~~
	Public Reading Room	A1-65
1	Pacific Northwest Laboratory	
	Hanford Technical Library	P8-55
13	Bechtel Hanford, Inc.	
	R. E. Moos (4)	H6-05
	R. C. Wilson	H4-79
	M. E. Todd	~~B2-68~~
	EPIC (2)	H6-08
	ERC	H6-07
	ERE Project File	H6-08
	Resource Center	~~N3-05~~
	Document Control (3)	~~H6-08~~ H4-79

THIS PAGE INTENTIONALLY
LEFT BLANK