This document was too large to scan as a whole document, therefore it required breaking into smaller sections.

Document number: SD-W314-CDR-001

Section 2 **of** 2

Title: CONCEPTUAL DESIGN REPORT for TANK FARM RESTORATION + SAFE OPERATIONS PROJECT W-314

Date: 5/03/96 **Revision:** 0

Originator: S.R. BRIGGS
Co: WHC

Recipient:
Co:

References: EDT-614745

APPENDIX K

Figures

FIGURE	TITLE
C-1	Hanford Site Plan
C-2	200 East Site Plan
C-3	200 West Site Plan
E-1	Electrical 241-AN Tank Farm One-line Diagram
E-2	Electrical 241-AP Tank Farm One-line Diagram
E-3	Electrical 241-AW Tank Farm One-line Diagram
E-4	Electrical 241-AY Tank Farm One-line Diagram
E-5	Electrical 241-AZ Tank Farm One-line Diagram
E-5A	Electrical 241-AZ Tank Farm One-line Diagram
E-6	Electrical 241-SY Tank Farm One-line Diagram
E-7	Electrical SST Tank Farms One-line Diagram
E-8	Electrical 244-A DCRT One-line Diagram
E-9	Electrical 244-S DCRT One-line Diagram
H-1	Instrumentation/HVAC Primary Ventilation System Flow Diagram
H-2	SY Tank Farm Annulus Exhaust Ventilation Flow Diagram
H-3	SY Tank Farm Annulus Supply System Flow Diagram
H-4	244-A/244-S DCRT Ventilation Systems Flow Diagram
H-5	Ventilation Drains and Seal Pot
I-1	Legend, Symbols, and Abbreviations
I-2	Tank Section IEFD
I-3	Encasement Leak Detection
I-4	TFLAN PLC/MPS Block Diagram
P-1	Site Plan AN Tank Farm
P-2	Valve Positioning Signal Pit Modification
P-3	Site Plan AP Tank Farm
P-4	Site Plan AW Tank Farm
P-5	Site Plan AY Tank Farm
P-6	Site Plan AZ Tank Farm
P-7	241-AZ-02B Sluice Pit Arrangement
P-8	Site Plan SY Tank Farm
P-9	Site Plan SST Farms (200 East)
P-10	Site Plan SST Farms (200 West)
P-11	Site Plan 244-A DCRT
P-12	Site Plan 244-A DCRT to 242-A Bldg
P-13	Site Plan 244-S DCRT
P-14	Waste Transfer Piping 241-AN-B to 241-AZ-02B
P-15	Waste Transfer Piping 241-AZ-02B to 241-AX-A
P-16	Waste Transfer Piping 241-A-A to 241-AW-A
P-17	Waste Transfer Piping 244-A to 241-A-B, 241-A-B to 241-AX-B, 241-AX-B to 241-AY-02D
P-18	241-A-A Valve Pit Arrangement

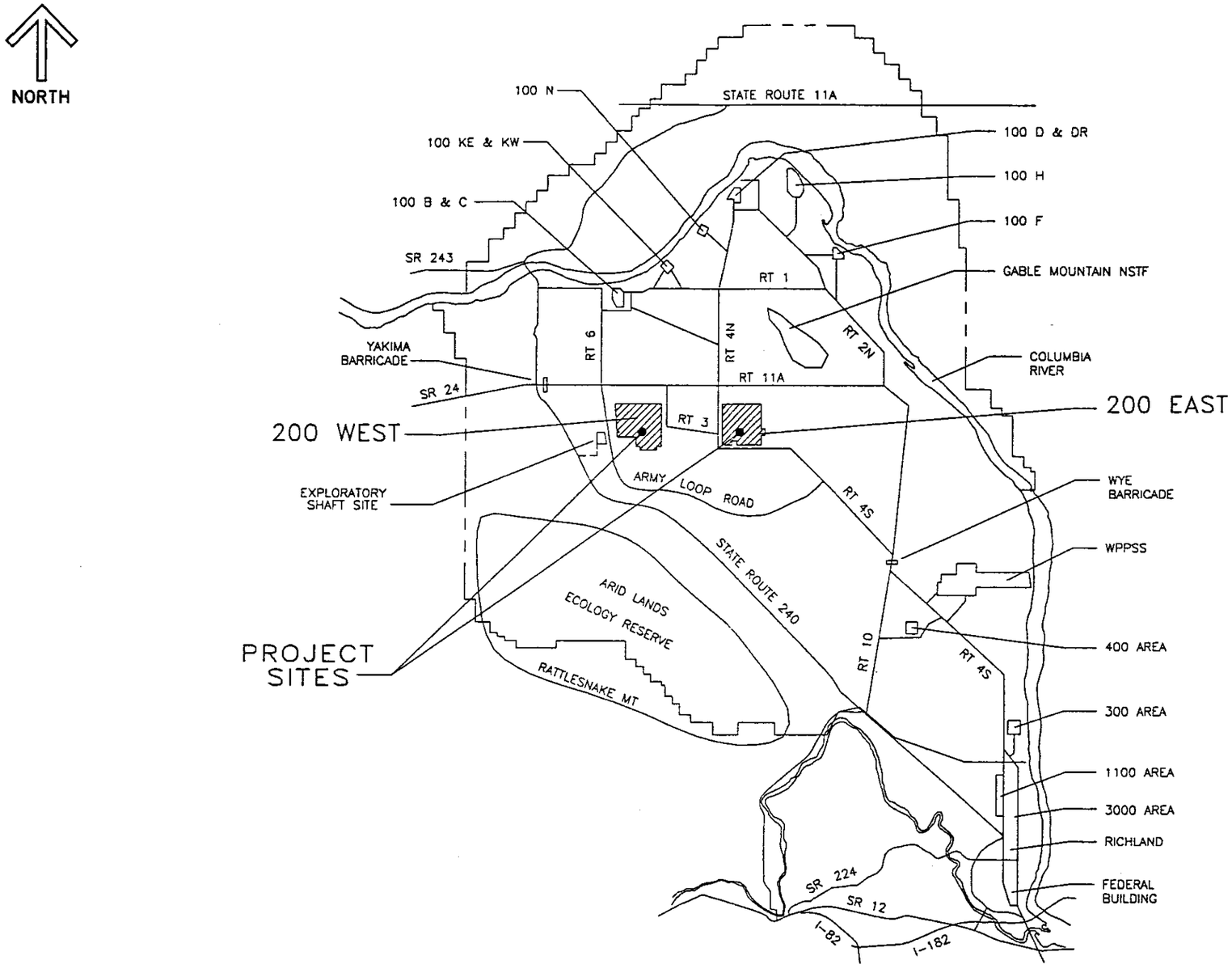

U.S. DEPARTMENT OF ENERGY
RICHLAND OPERATIONS OFFICE
KCP KAISER HANFORD COMPANY

HANFORD SITE PLAN

PROJECT W-314 CDR
SCALE 200E 200W
FIGURE C-1
NONE

2 PLOT SCALE: 1=1 KEHCAD

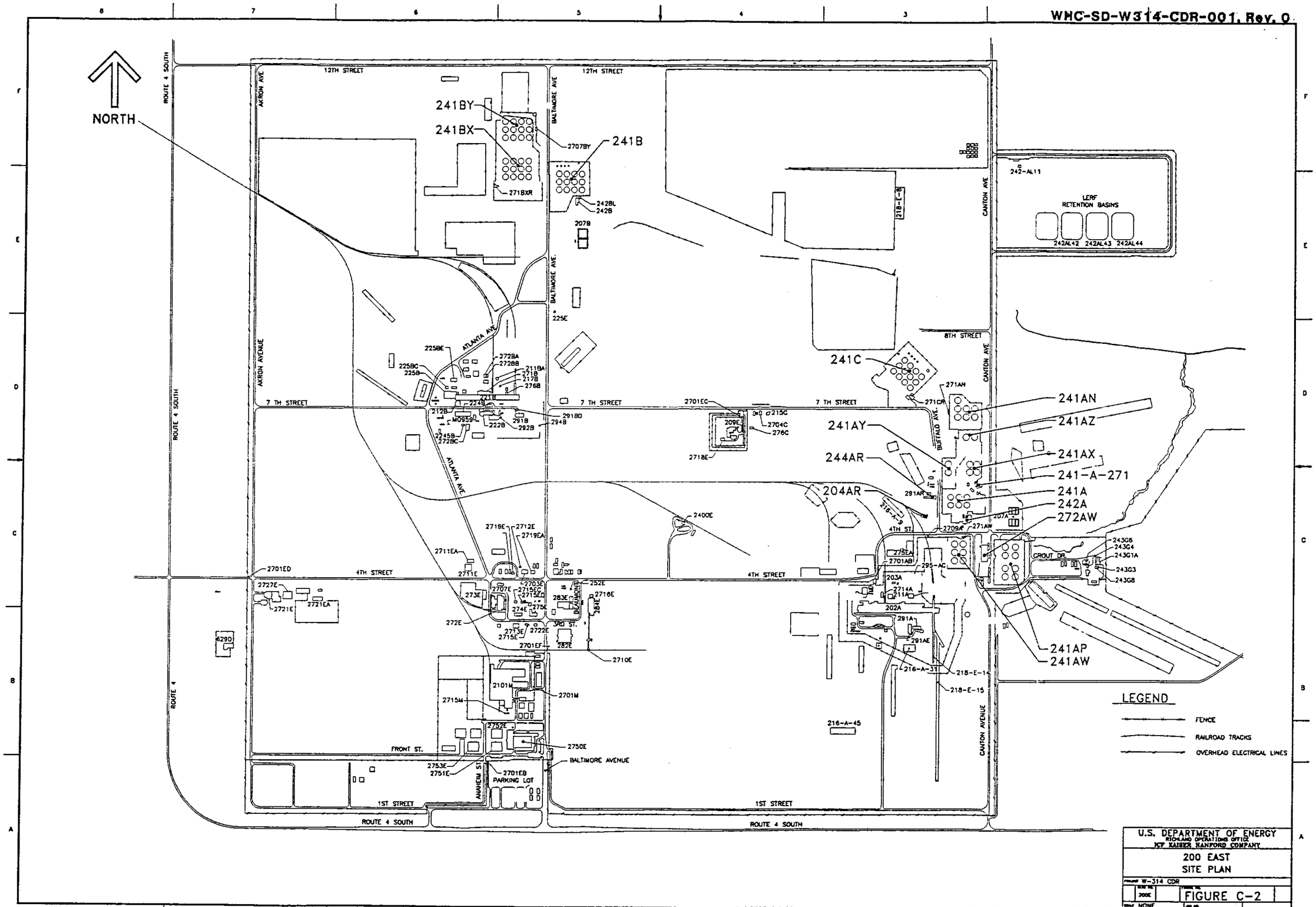
NORTH
ROUTE 4 SOUTH
AKRON AVE.
AKRON AVENUE
12TH STREET
BALTIMORE AVE.
CANTON AVE.
CANTON AVENUE
8TH STREET
7 TH STREET
ATLANTA AVE.
BUFFALO AVE.
4TH STREET
4TH ST.
3RD ST.
GROUT DR.
FRONT ST.
ANAHEIM ST.
BALTIMORE AVENUE
1ST STREET
ROUTE 4
241BY
241BX
241B
241C
241AN
241AZ
241AY
241AX
244AR
241-A-271
204AR
241A
242A
272AW
241AP
241AW
LERF RETENTION BASINS
242AL42
242AL43
242AL44
242-AL11
PARKING LOT
LEGEND
FENCE
RAILROAD TRACKS
OVERHEAD ELECTRICAL LINES
U.S. DEPARTMENT OF ENERGY
RICHLAND OPERATIONS OFFICE
KCP KAISER HANFORD COMPANY
200 EAST
SITE PLAN
W-314 CDR
200E
FIGURE C-2
NONE
PLOT SCALE: 1=1
KEHCAD

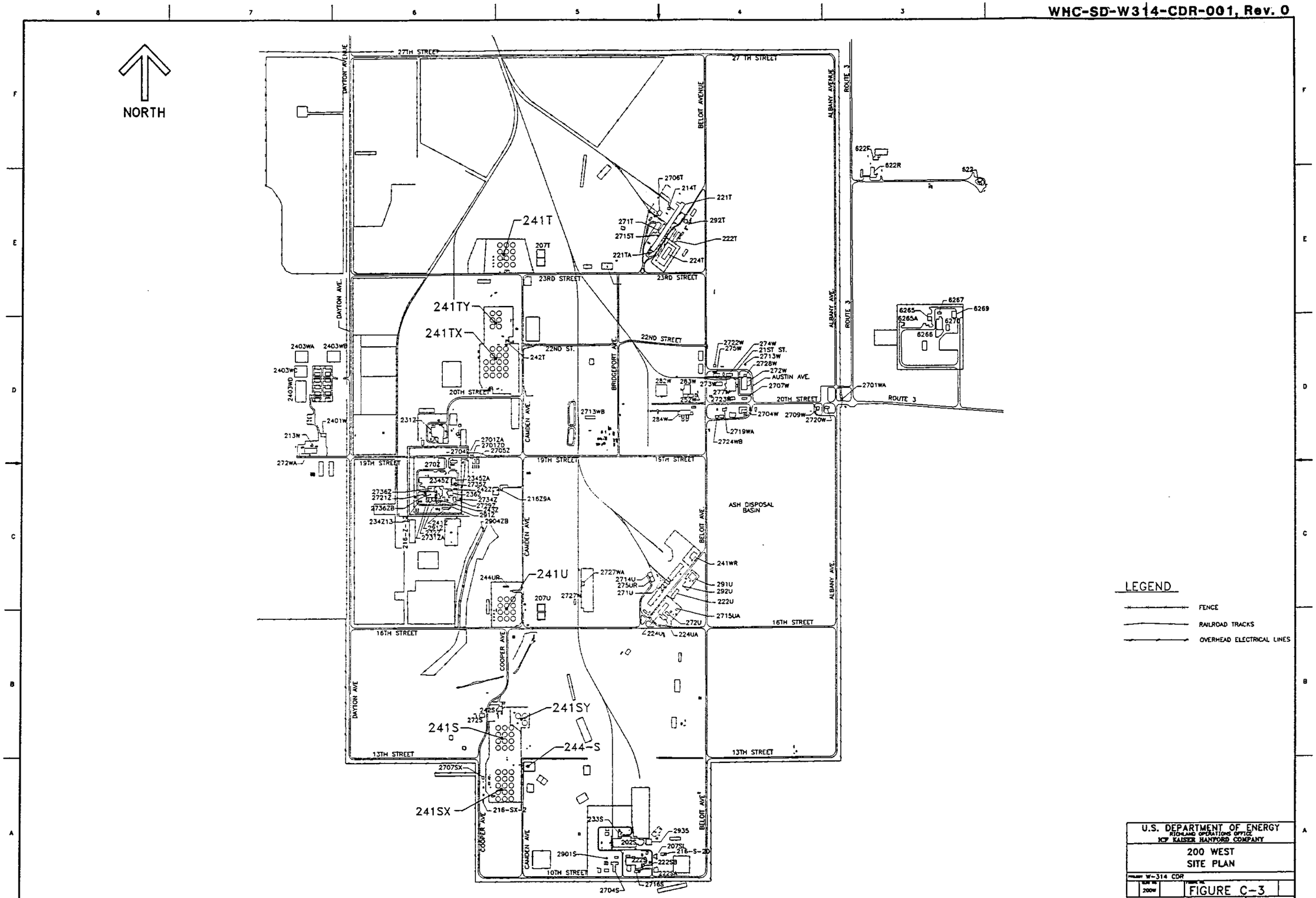
NORTH
27TH STREET
DAYTON AVENUE
BELOIT AVENUE
ALBANY AVENUE
ROUTE 3
23RD STREET
22ND STREET
20TH STREET
19TH STREET
16TH STREET
13TH STREET
10TH STREET
CAMDEN AVE.
BRIDGEPORT AVE.
COOPER AVE
AUSTIN AVE.
21ST ST.
ASH DISPOSAL BASIN
241T
241TY
241TX
241U
241S
241SY
241SX
244-S
LEGEND
FENCE
RAILROAD TRACKS
OVERHEAD ELECTRICAL LINES
U.S. DEPARTMENT OF ENERGY
RICHLAND OPERATIONS OFFICE
HCP KAISER HANFORD COMPANY
200 WEST
SITE PLAN
W-314 CDR
200W
FIGURE C-3
NONE
PLOT SCALE: 1=1
KEHCAD

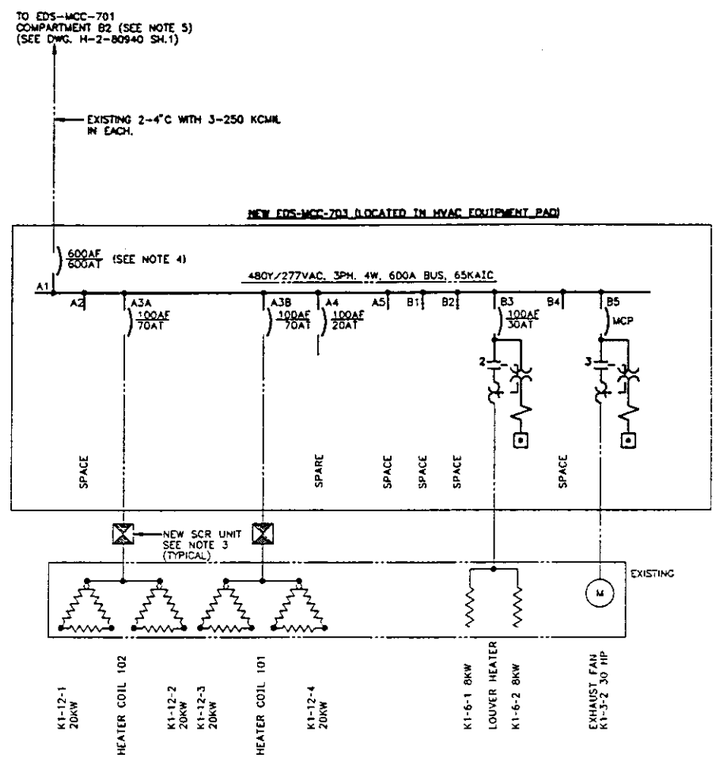

ONE LINE DIAGRAM

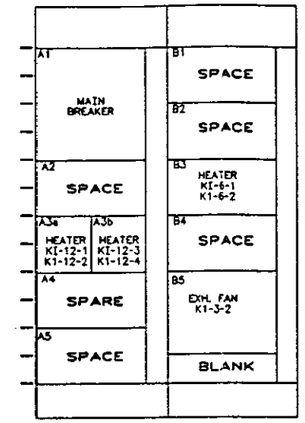

FRONT ARRANGEMENT
NEW EDS-MCC-703
SCALE: NONE

LEGEND

- SCR UNIT
- CONTROL STATION
- NEW
- EXISTING

NOTES:

1. PROVIDE AND INSTALL THE NEW EDS-MCC-703, COMPLETE WITH CIRCUIT BREAKERS, STARTERS, AND DEVICES IN NEMA 4 ENCLOSURE, TO REPLACE THE EXISTING UNIT AS SHOWN. RECONNECT AND/OR EXTEND EXISTING WIRINGS OF EXISTING LOADS AS REQUIRED. (SEE DWG. H-2-94850 SH. 1)
2. ALL CONDUIT BURIED UNDERGROUND SHALL BE GALVANIZED RIGID STEEL, PVC COATED.
3. REPLACE EXISTING HEATER CONTROLLER WITH NEW SCR UNIT COMPLETE WITH DEVICES AS REQUIRED. RECONNECT WIRES OF THE EXISTING LOADS TO THE NEW SCR UNIT AS SHOWN.
4. MAIN CIRCUIT BREAKER WITH ADJUSTABLE TRIP SET AT 200A.
5. THE EXISTING 600AF/500AT FEEDER BREAKER TRIP SETTING SHOULD BE RESET TO 300A.

U.S. DEPARTMENT OF ENERGY
RICHLAND OPERATIONS OFFICE
KCP KAISER HANFORD COMPANY

ELECTRICAL
241-AZ TANK FARM
ONE-LINE DIAGRAM

PROJECT W-314 CDR
DWG NO. 241-AZ
FIGURE NO. FIGURE E-5A
SCALE NONE
SHT NO.

2 PLOT SCALE 1=1 KEHCAD

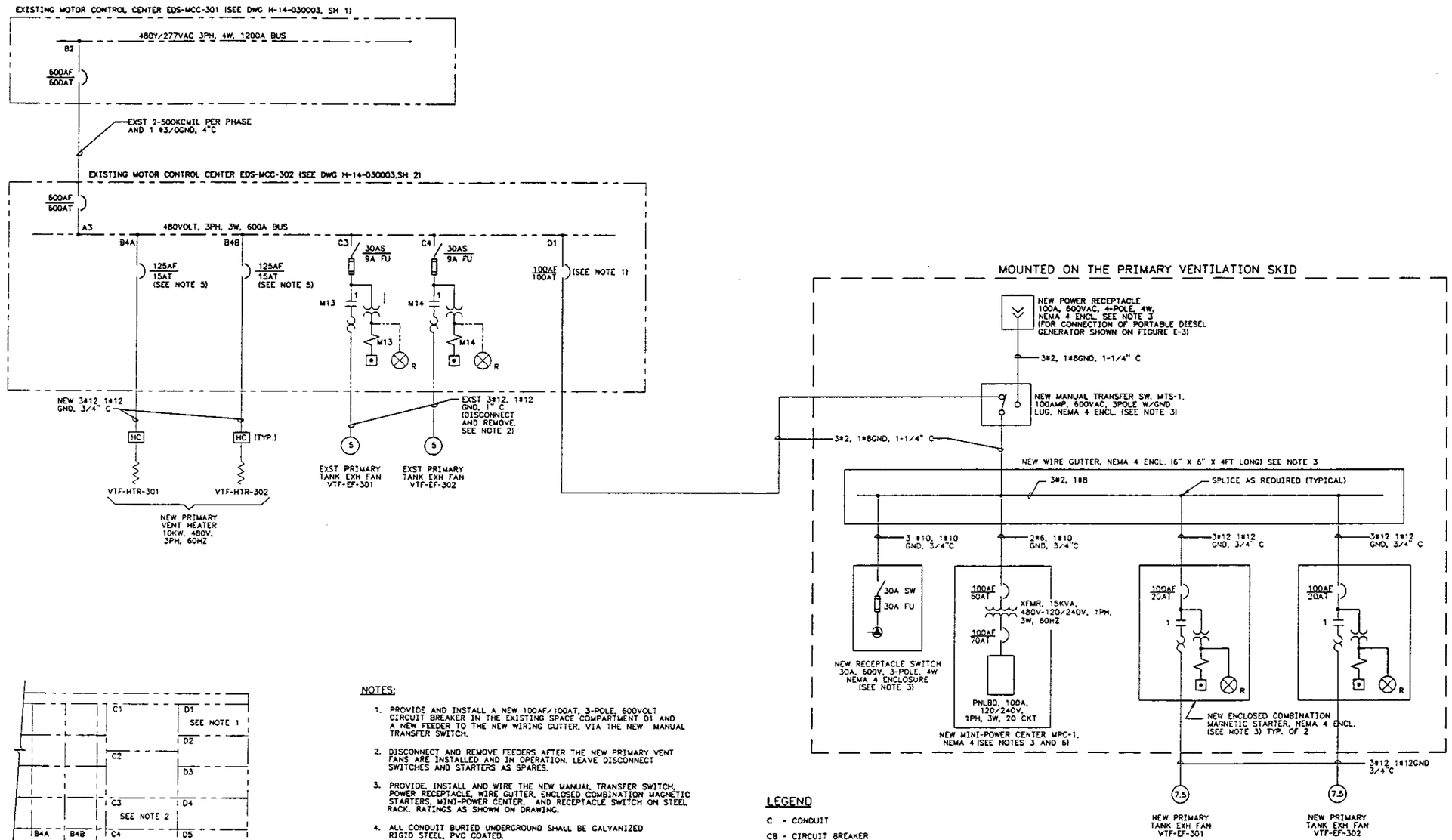

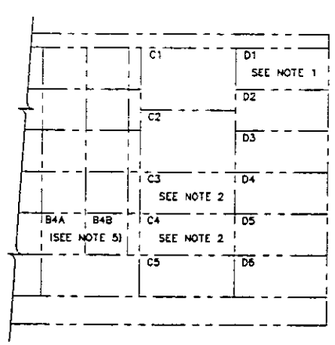

PARTIAL ELEVATION - EXST EDS-MCC-302

SCALE: NONE

NOTES:

1. PROVIDE AND INSTALL A NEW 100AF/100AT, 3-POLE, 600VOLT CIRCUIT BREAKER IN THE EXISTING SPACE COMPARTMENT D1 AND A NEW FEEDER TO THE NEW WIRING GUTTER, VIA THE NEW MANUAL TRANSFER SWITCH.
2. DISCONNECT AND REMOVE FEEDERS AFTER THE NEW PRIMARY VENT FANS ARE INSTALLED AND IN OPERATION. LEAVE DISCONNECT SWITCHES AND STARTERS AS SPARES.
3. PROVIDE, INSTALL AND WIRE THE NEW MANUAL TRANSFER SWITCH, POWER RECEPTACLE, WIRE GUTTER, ENCLOSED COMBINATION MAGNETIC STARTERS, MINI-POWER CENTER, AND RECEPTACLE SWITCH ON STEEL RACK. RATINGS AS SHOWN ON DRAWING.
4. ALL CONDUIT BURIED UNDERGROUND SHALL BE GALVANIZED RIGID STEEL, PVC COATED.
5. DISCONNECT AND REMOVE FEEDERS OF EXISTING HEATERS AND INSTALL FEEDERS OF THE NEW VENT HEATERS UTILIZING THE EXISTING CIRCUIT BREAKERS AS INDICATED.
6. PROVIDE TWO-120 VAC 20A DUPLEX RECEPTACLE WITH GROUND FAULT PROTECTION, IN WEATHERPROOF RAINTIGHT ENCLOSURE, MOUNTED BELOW THE MINI-POWER CENTER. THE RECEPTACLE WILL BE FED FROM THE THE MINI-POWER CENTER.

LEGEND

C - CONDUIT
CB - CIRCUIT BREAKER
DB - DIRECT BURIAL
HC - HEATER CONTROLLER
- - - - - EXISTING
——— NEW
⊗R - "MOTOR RUN " INDICATING RED LIGHT
▣ - "STOP"/"START" PUSHBUTTONS

U.S. DEPARTMENT OF ENERGY
RICHLAND OPERATIONS OFFICE
ICF KAISER HANFORD COMPANY

ELECTRICAL
241-AP TANK FARM
ONE-LINE DIAGRAM

PROJECT W-314 CDR
DWG NO. 241-AP
FIGURE NO. FIGURE E-2
SCALE NONE

2 PLOT SCALE: 1=1

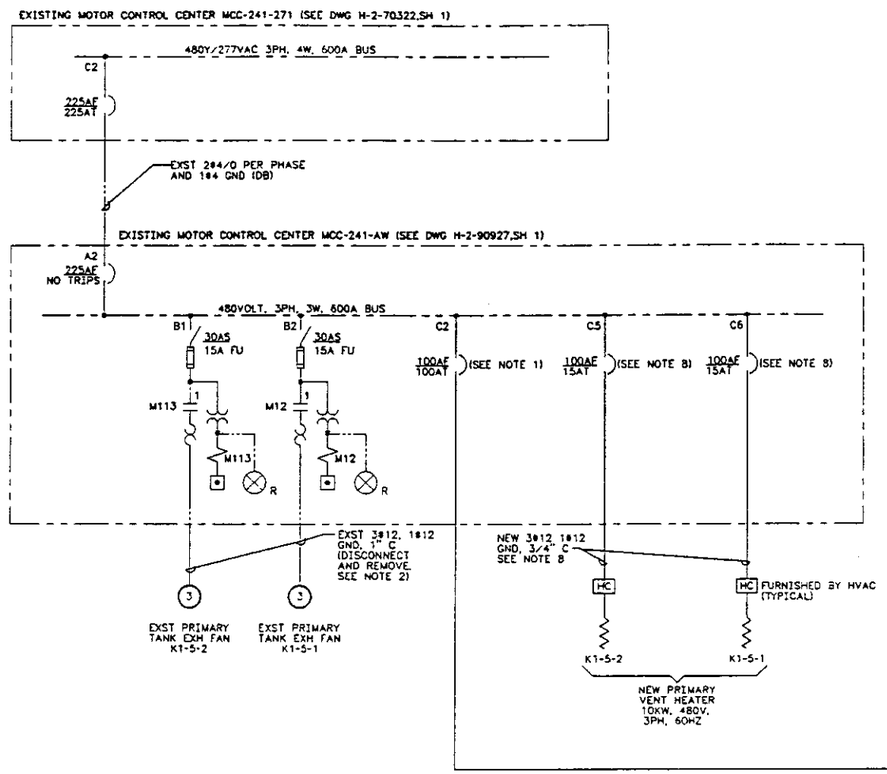

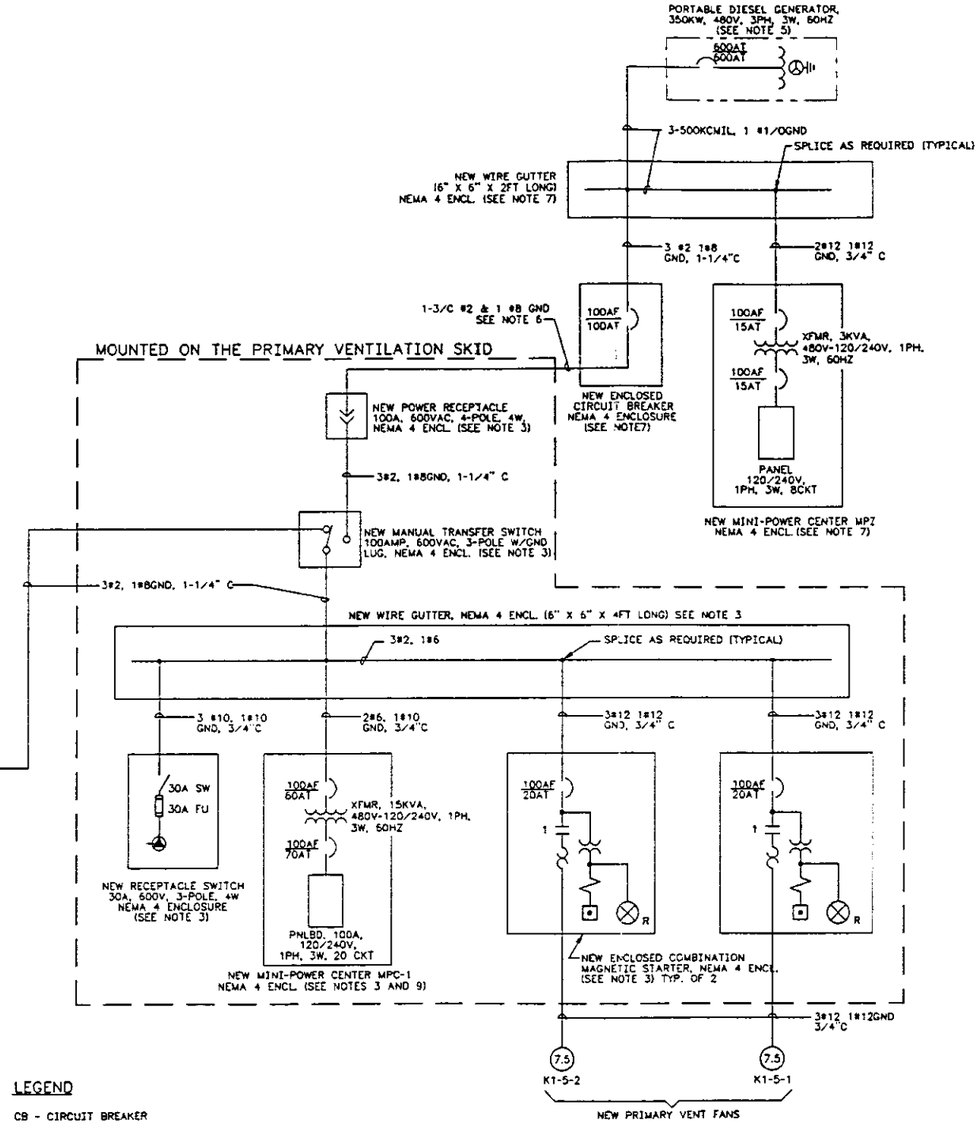

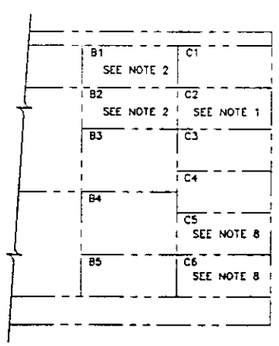

PARTIAL ELEVATION - EXST
MCC-241-AW

SCALE: NONE

NOTES:

1. PROVIDE AND INSTALL A NEW 100AF/100AT, 3-POLE, 600VOLT CIRCUIT BREAKER IN THE EXISTING SPACE COMPARTMENT C2 AND A NEW FEEDER TO THE NEW WIRING GUTTER, VIA THE NEW MANUAL TRANSFER SWITCH.
2. DISCONNECT AND REMOVE FEEDERS AFTER THE NEW PRIMARY VENT FANS ARE INSTALLED AND IN OPERATION. LEAVE DISCONNECT SWITCHES AND STARTERS AS SPARES.
3. PROVIDE, INSTALL AND WIRE THE NEW MANUAL TRANSFER SWITCH, POWER RECEPTACLE, WIRE GUTTER, ENCLOSED COMBINATION MAGNETIC STARTERS, MINI-POWER CENTER, AND RECEPTACLE SWITCH ON STEEL RACK. RATINGS AS SHOWN ON DRAWING.
4. ALL CONDUIT BURIED UNDERGROUND SHALL BE GALVANIZED RIGID STEEL, PVC COATED.
5. THE PORTABLE DIESEL GENERATOR IS EXISTING. SEE NOTES 6 AND 7 FOR PROPER MODIFICATION AS ROUIRED.
6. POWER CORD SHALL BE PROVIDED WITH 100A, 4-POLE, 4W PLUG TO MATCH POWER RECEPTACLE. CORD SHALL BE IN REEL MOUNTED IN THE DIESEL GENERATOR HOUSING.
7. PROVIDE, INSTALL AND WIRE THE NEW ENCLOSED CIRCUIT BREAKER, WIRE GUTTER, AND MINI-POWER CENTER IN THE EXISTING DIESEL GENERATOR SET. INSTALL 4-120V 20A GROUND FAULT DUPLEX RECEPTACLES IN INDIVIDUAL WEATHERPROOF ENCLOSURE ON SEPARATE 20A CIRCUIT FED FROM THE MINI-POWER CENTER MPZ.
8. DISCONNECT AND REMOVE FEEDERS OF EXISTING HEATERS AND INSTALL FEEDERS OF THE NEW VENT HEATERS UTILIZING THE EXISTING CIRCUIT BREAKERS AS INDICATED.
9. PROVIDE TWO-120 VAC 20A DUPLEX RECEPTACLE WITH GROUND FAULT PROTECTION, IN WEATHERPROOF RAINTIGHT ENCLOSURE, MOUNTED BELOW THE MINI-POWER CENTER. THE RECEPTACLE WILL BE FED FROM THE MINI-POWER CENTER.

LEGEND

CB - CIRCUIT BREAKER

DB - DIRECT BURIAL

HC - HEATER CONTROLLER (SCR UNIT)

EXISTING

NEW

R - "MOTOR RUN " INDICATING RED LIGHT

- "STOP"/"START" PUSHBUTTONS

U.S. DEPARTMENT OF ENERGY
RICHLAND OPERATIONS OFFICE
ICF KAISER HANFORD COMPANY

ELECTRICAL
241-AW TANK FARM
ONE-LINE DIAGRAM

PROJECT W-314 CDR

DWG NO. 241-AW

FIGURE E-3

SCALE NONE

PLOT SCALE: 1=1

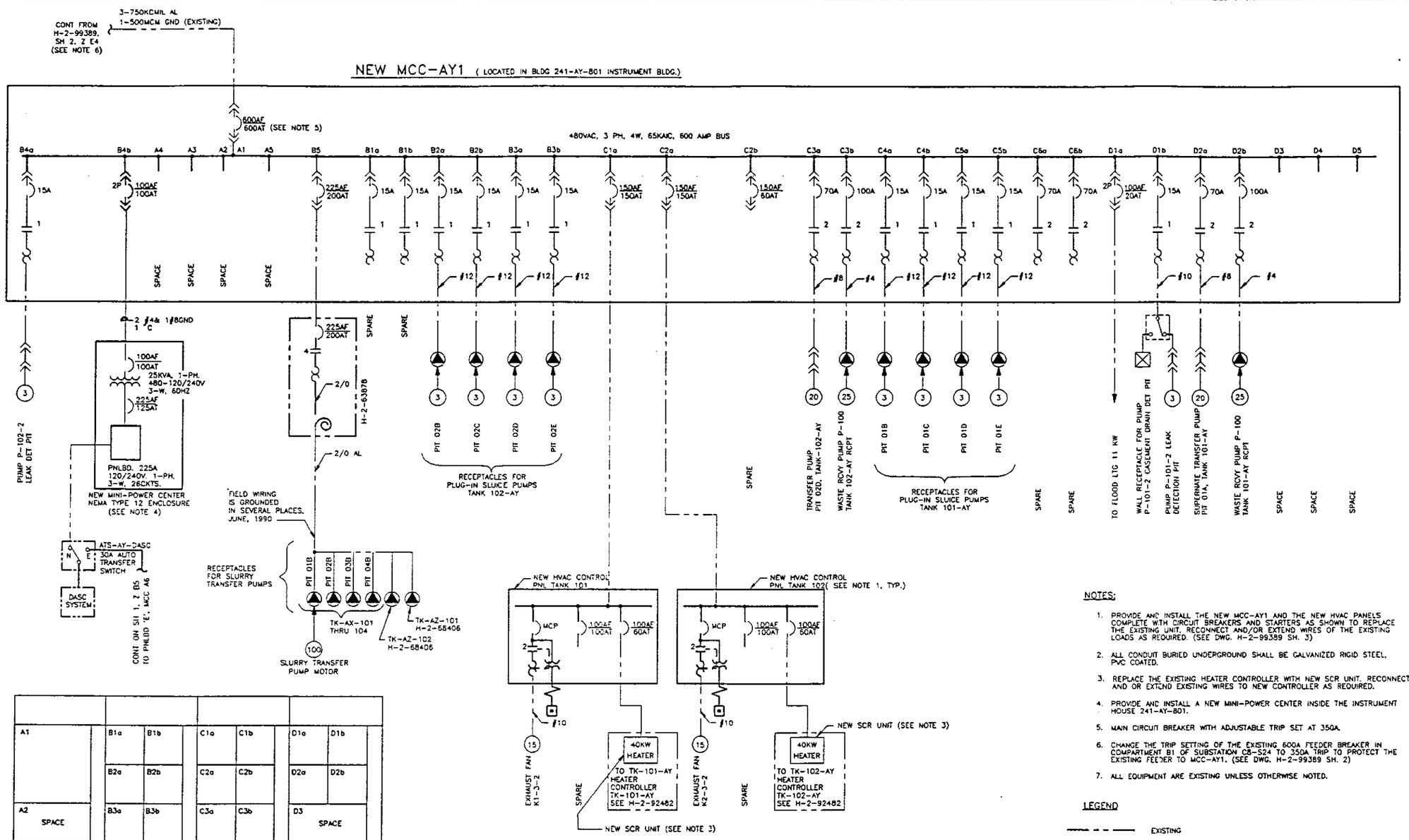

ONE-LINE DIAGRAM

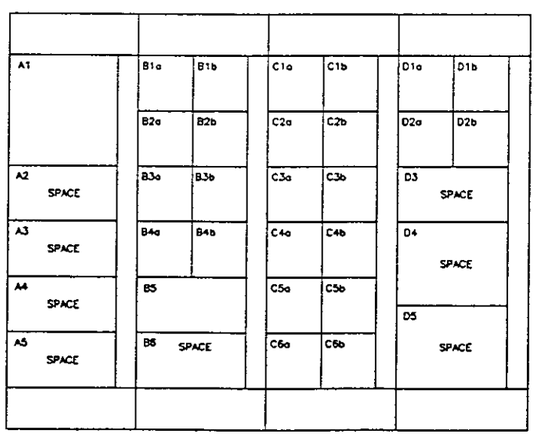

FRONT ARRANGEMENT
NEW MCC-241-AY
SCALE: NONE

NOTES:

1. PROVIDE AND INSTALL THE NEW MCC-AY1 AND THE NEW HVAC PANELS COMPLETE WITH CIRCUIT BREAKERS AND STARTERS AS SHOWN TO REPLACE THE EXISTING UNIT. RECONNECT AND/OR EXTEND WIRES OF THE EXISTING LOADS AS REQUIRED. (SEE DWG. H-2-99389 SH. 3)
2. ALL CONDUIT BURIED UNDERGROUND SHALL BE GALVANIZED RIGID STEEL, PVC COATED.
3. REPLACE THE EXISTING HEATER CONTROLLER WITH NEW SCR UNIT. RECONNECT AND OR EXTEND EXISTING WIRES TO NEW CONTROLLER AS REQUIRED.
4. PROVIDE AND INSTALL A NEW MINI-POWER CENTER INSIDE THE INSTRUMENT HOUSE 241-AY-801.
5. MAIN CIRCUIT BREAKER WITH ADJUSTABLE TRIP SET AT 350A.
6. CHANGE THE TRIP SETTING OF THE EXISTING 600A FEEDER BREAKER IN COMPARTMENT B1 OF SUBSTATION CB-S24 TO 350A TRIP TO PROTECT THE EXISTING FEEDER TO MCC-AY1. (SEE DWG. H-2-99389 SH. 2)
7. ALL EQUIPMENT ARE EXISTING UNLESS OTHERWISE NOTED.

LEGEND

EXISTING

NEW

U.S. DEPARTMENT OF ENERGY
RICHLAND OPERATIONS OFFICE
ICF KAISER HANFORD COMPANY

ELECTRICAL
241-AY TANK FARM
ONE-LINE DIAGRAM

PROJECT W-314 CDR
SCALE NONE
FIGURE E-4

PLOT SCALE 1=1 KEHCAD

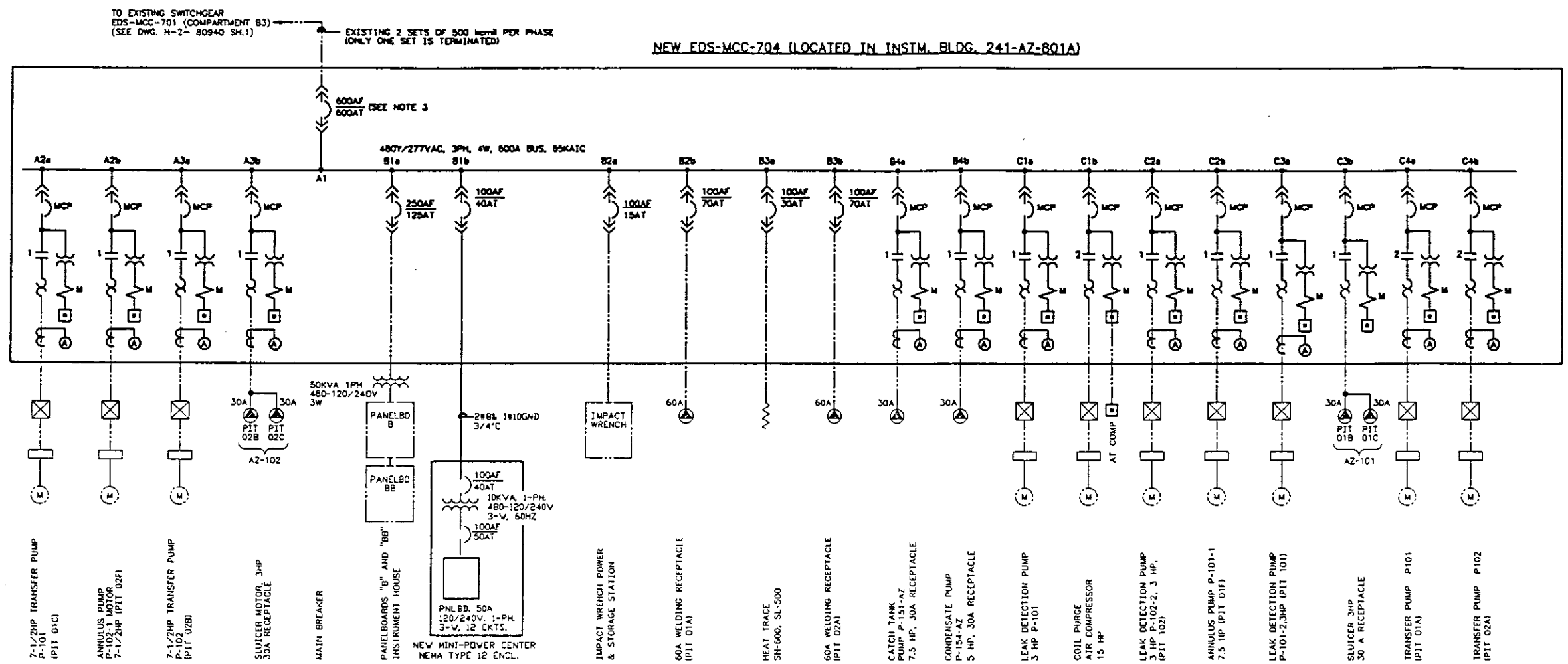

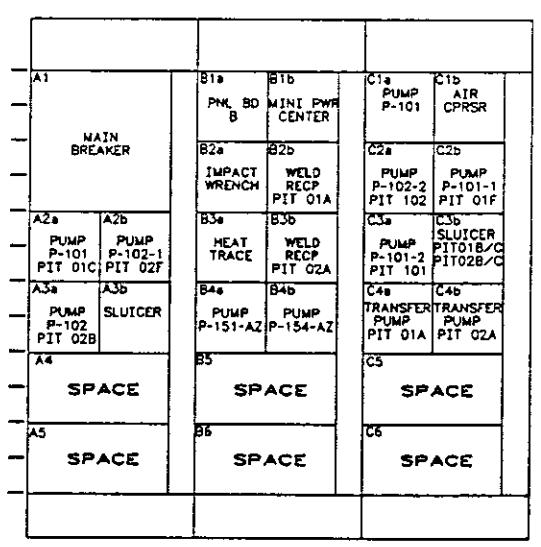

FRONT ARRANGEMENT
EDS-MCC-704
SCALE: NONE

ONE-LINE DIAGRAM

LEGEND:

——— NEW

—·—·— EXISTING

NOTES:

1. PROVIDE AND INSTALL THE NEW MOTOR CONTROL CENTER COMPLETE WITH CIRCUIT BREAKERS, STARTERS AND DEVICES AS SHOWN TO REPLACE THE EXISTING UNIT. RECONNECT AND/OR EXTENED WIRES OF THE EXISTING LOADS AS REQUIRED. (SEE DWG. H-2-94850 SH. 1)
2. ALL CONDUIT BURIED UNDERGROUND SHALL BE GALVANIZED RIGID STEEL, PVC COATED.
3. NEW MAIN CIRCUIT BREAKER WITH ADJUSTABLE TRIP SET AT 200A.
4. ALL EQUIPMENT ARE EXISTING UNLESS NOTED OTHERWISE.

U.S. DEPARTMENT OF ENERGY
RICHLAND OPERATIONS OFFICE
ICF KAISER HANFORD COMPANY

ELECTRICAL
241-AZ TANK FARM
ONE-LINE DIAGRAM

W-314 CDR
241-AZ
FIGURE E-5
NONE

PLOT SCALE 1=1 KEMCAD

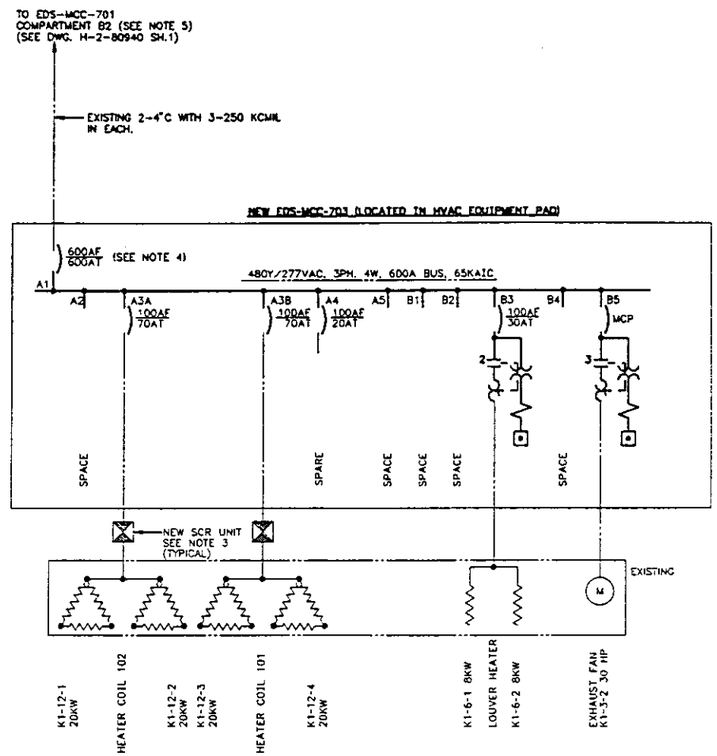

ONE LINE DIAGRAM

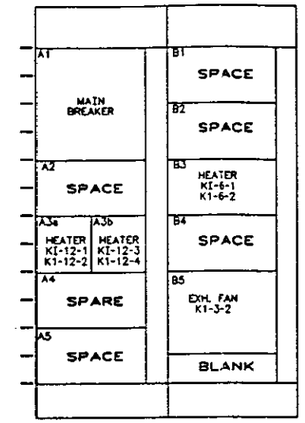

FRONT ARRANGEMENT
NEW EDS-MCC-703
SCALE: NONE

LEGEND

- SCR UNIT
- CONTROL STATION
- NEW
- EXISTING

NOTES:

1. PROVIDE AND INSTALL THE NEW EDS-MCC-703, COMPLETE WITH CIRCUIT BREAKERS, STARTERS, AND DEVICES IN NEMA 4 ENCLOSURE, TO REPLACE THE EXISTING UNIT AS SHOWN. RECONNECT AND/OR EXTEND EXISTING WIRINGS OF EXISTING LOADS AS REQUIRED. (SEE DWG. H-2-94850 SH. 1)
2. ALL CONDUIT BURIED UNDERGROUND SHALL BE GALVANIZED RIGID STEEL, PVC COATED.
3. REPLACE EXISTING HEATER CONTROLLER WITH NEW SCR UNIT COMPLETE WITH DEVICES AS REQUIRED. RECONNECT WIRES OF THE EXISTING LOADS TO THE NEW SCR UNIT AS SHOWN.
4. MAIN CIRCUIT BREAKER WITH ADJUSTABLE TRIP SET AT 200A.
5. THE EXISTING 600AF/500AT FEEDER BREAKER TRIP SETTING SHOULD BE RESET TO 300A.

U.S. DEPARTMENT OF ENERGY
RICHLAND OPERATIONS OFFICE
ICF KAISER HANFORD COMPANY

ELECTRICAL
241-AZ TANK FARM
ONE-LINE DIAGRAM

PROJECT W-314 CDR
DWG NO. 241-AZ
FIGURE NO. FIGURE E-5A
SCALE NONE
SHT NO.

2 PLOT SCALE 1=1 KEHCAD

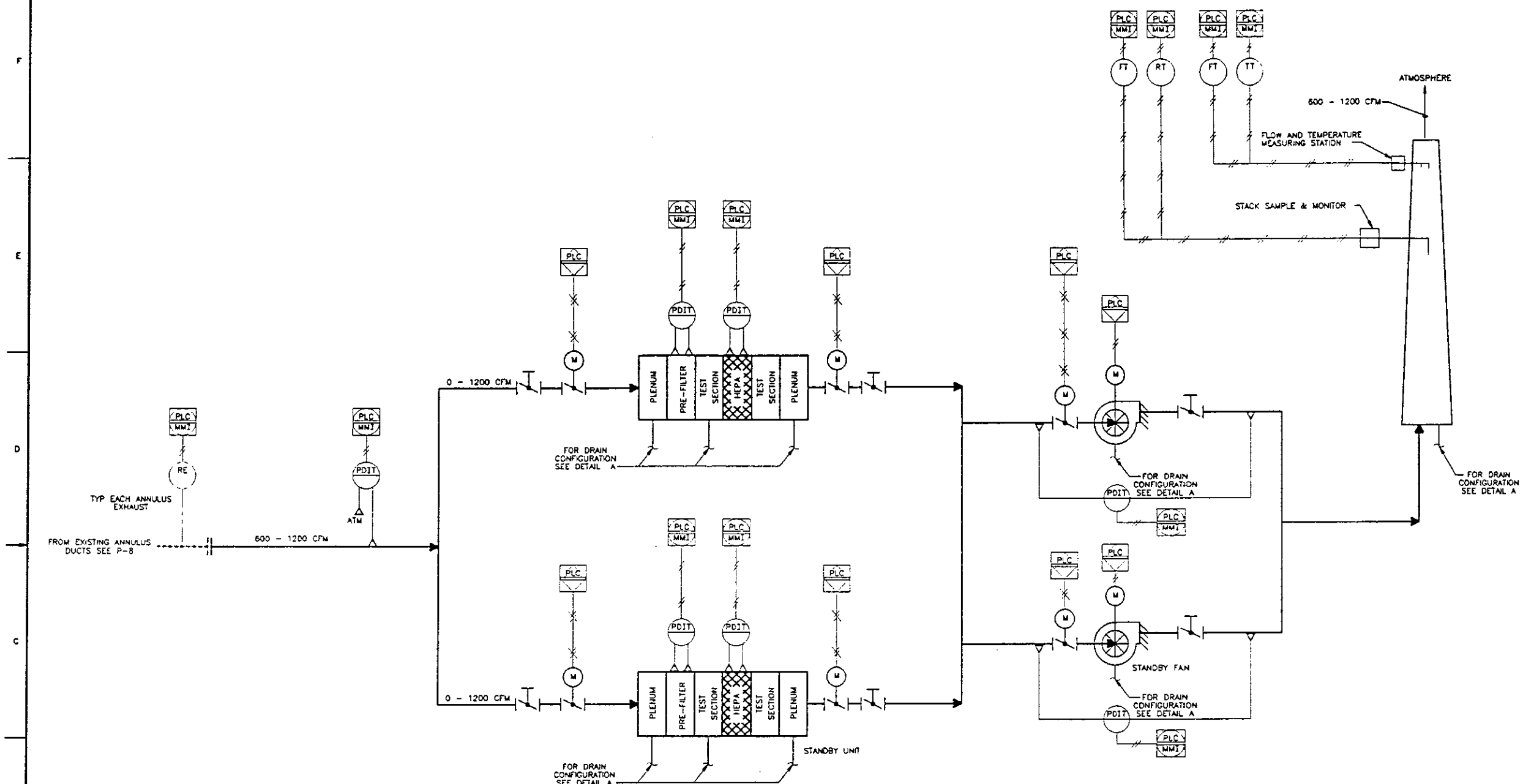

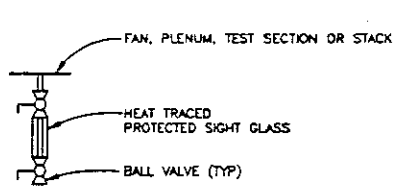

DETAIL A

NOTE

1. FOR SYMBOLS, LEGENDS AND NOTES SEE FIGURE I-1.

SYSTEM OPERATION

DURING NORMAL OPERATION, ONE FILTER TRAIN AND ONE FAN WILL BE ACTIVE. THE SYSTEM HAS 100% BACKUP CAPABILITY. EITHER FAN MAY OPERATE WITH EITHER FILTER TRAIN.

FILTER TRAINS OR FANS MAY BE SWITCHED MANUALLY OR AUTOMATICALLY FOR MAINTENANCE OR IN RESPONSE TO SYSTEM FAILURE.

U.S. DEPARTMENT OF ENERGY
RICHLAND OPERATIONS OFFICE
ICF KAISER HANFORD COMPANY

SY TANK FARM
ANNULUS EXHAUST VENTILATION
FLOW DIAGRAM

PROJECT W-314 CDR
24157
FIGURE H-2
SCALE NONE

PLOT SCALE 1=1 KEHCAD

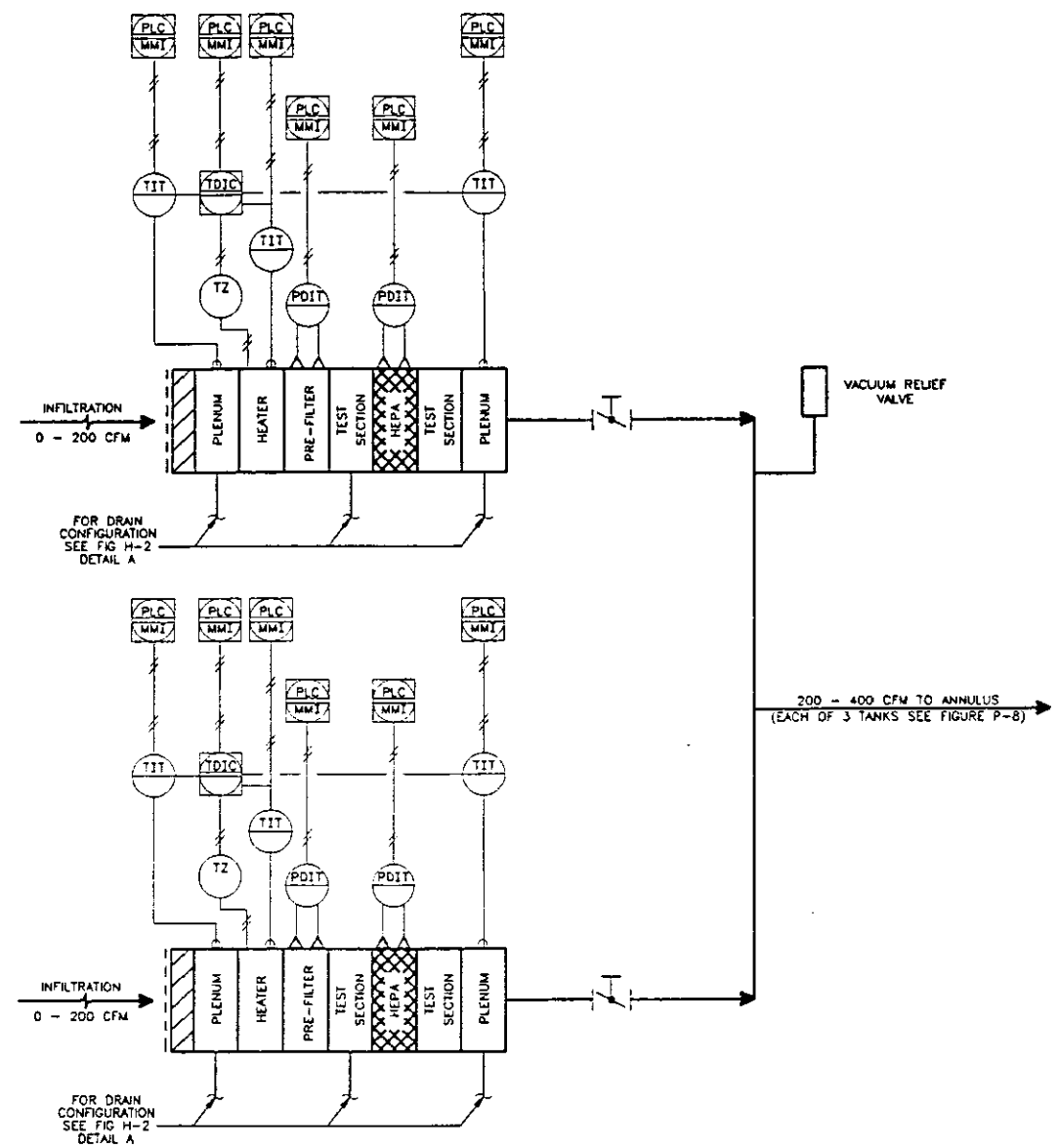

NOTES:

1. FOR SYMBOLS, LEGENDS AND NOTES SEE FIGURE I-1.

U.S. DEPARTMENT OF ENERGY
RICHLAND OPERATIONS OFFICE
KCP KAISER HANFORD COMPANY

SY TANK FARM
ANNULUS SUPPLY SYSTEM
FLOW DIAGRAM

W-314 CDR

24157

FIGURE H-3

NONE

PLOT SCALE 1=1 KEHCAD

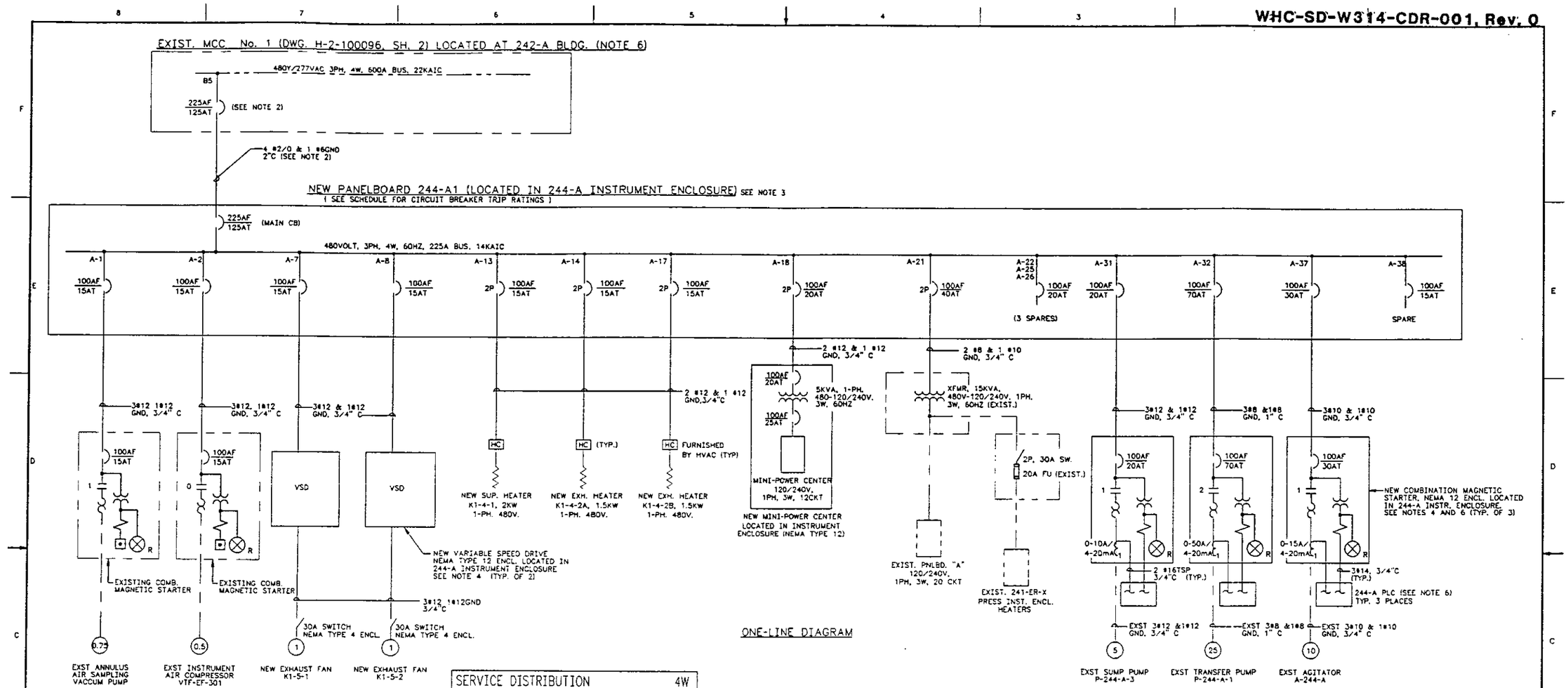

ONE-LINE DIAGRAM

SERVICE DISTRIBUTION 4W
PANELBOARD 244-A1 VOLTS:480 BUS:225A

MAIN CKT BKR: 125AT, 14,000 AIC SN:225A
BRANCH CKT BKR: 14,000 AIC TRIM: SURFACE

SERVICE	WATTS HP	A	P	NO		NO	P	A	WATTS HP	SERVICE
ANNULUS AIR SAMPLING VAC. PUMP	3/4 HP	15	3	1		2	3	15	1/2 HP	INSTR. AIR COMPRESSOR
EXHAUST FAN K1-5-1	1HP	15	3	7		8	3	15	1HP	EXHAUST FAN K1-5-2
SUPPLY HEATER K1-4-1	2KW	15	2	13		14	2	15	1.5KW	EXHAUST HEATER K1-4-2A
EXHAUST HEATER K1-4-2B	1.5KW	15	2	17		18	2	20	5KVA	MINI-PWR. CENTER
XFMR	15KVA	40	2	21		22	2	20		SPARE
SPARE		20	3	25		26	3	20		SPARE
SUMP PUMP P-244-A-3	5HP	20	3	31		32	3	70	25HP	TRANSFER PUMP P-244-A-1
AGITATOR A-244-A	10HP	30	3	37		38	3	15		SPARE

NOTES:

1. DISCONNECT AND REMOVE THE EXISTING FEEDER OF THE EXISTING POWER DISTRIBUTION CENTER LOCATED IN 244-A INSTRUMENT ENCLOSURE (SEE H-2-38209, SH. 1) FROM THE EXISTING MCC-2 (COMPARTMENT D5) LOCATED IN 244-AR BLDG. SEE DWG. H-2-62019, SH. 2. DISCONNECT EXISTING LOADS OF THE POWER DISTRIBUTION CENTER AND CONNECT THEM TO THE NEW PANELBOARD 244-A1.
2. INSTALL A NEW 225AF/125AT, 600VAC, 3-POLE CIRCUIT BREAKER IN THE EXISTING MCC No. 1 (COMPARTMENT B5) LOCATED INSIDE 242-A BDLG. INSTALL A NEW FEEDER FOR THE NEW PANELBOARD 244-A1 AS SHOWN. (SEE DWG. H-2-100096, SH. 2)
3. PROVIDE, INSTALL, AND WIRE THE NEW DISTRIBUTION PANELBOARD COMPLETE WITH CIRCUIT BREAKERS AND FEEDERS AS SHOWN IN THE ONE-LINE DIAGRAM.
4. PROVIDE, INSTALL AND WIRE THE NEW ENCLOSED COMBINATION MAGNETIC STARTERS, VARIABLE SPEED DRIVES AND THE NEW MINI-POWER CENTER AS SHOWN IN THE ONE-LINE DIAGRAM.
5. DISCONNECT AND ABANDON THE EXISTING FEEDERS OF THE EXISTING HEATERS K1-4-1 AND K1-4-2 FROM THE EXISTING PANELBOARD 'A' (CKTS # 1 & 21, LOCATED IN 244-A INSTRUMENT ENCLOSURE. (SEE DWG. H-2-38209, SH. 1)
6. DISCONNECT AND ABANDON THE EXISTING FEEDERS OF SUMP PUMP P-244-A-3, TRANSFER PUMP P-244-A-1, AND AGITATOR A-244-A. LEAVE MOTOR STARTERS AS SPARES IN MCC. REMOVE DISCONNECT SWITCHES IN 244-A INSTRUMENT ENCLOSURE AND INSTALL NEW ENCLOSED COMB. MAGNETIC STARTERS. UTILIZE EXISTING POWER CABLES OF THE PUMPS AND THE AGITATOR FROM STARTERS TO THE MOTORS. RUN NEW CONTROL/SIGNAL WIRES FROM NEW STARTERS TO 244-A PLC WHICH WILL TRANSMIT SIGNALS/CONTROLS TO 242-A PLC AND CONTROL PANEL.

LEGEND

— — — — EXISTING (EXST)
———— NEW
TSP - TWISTED SHIELDED PAIRS
HC - HEATER CONTROLLER (SCR UNIT)
⊗R - "MOTOR RUN " INDICATING RED LIGHT
⊡ - "STOP"/"START" PUSHBUTTONS
0-10A/ 4-20mA - CURRENT TRANSFORMER WITH INPUT/OUTPUT RATINGS AS SHOWN. (1 REQ'D)
VSD - VARIABLE SPEED DRIVE

U.S. DEPARTMENT OF ENERGY
RICHLAND OPERATIONS OFFICE
JCP KAISER HANFORD COMPANY

ELECTRICAL
244-A DCRT
ONE-LINE DIAGRAM

PROJECT W-314 CDR
SIZE F | DWG NO. 244-A | FIGURE NO. FIGURE E-8
SCALE NONE

PLOT SCALE: 1=1

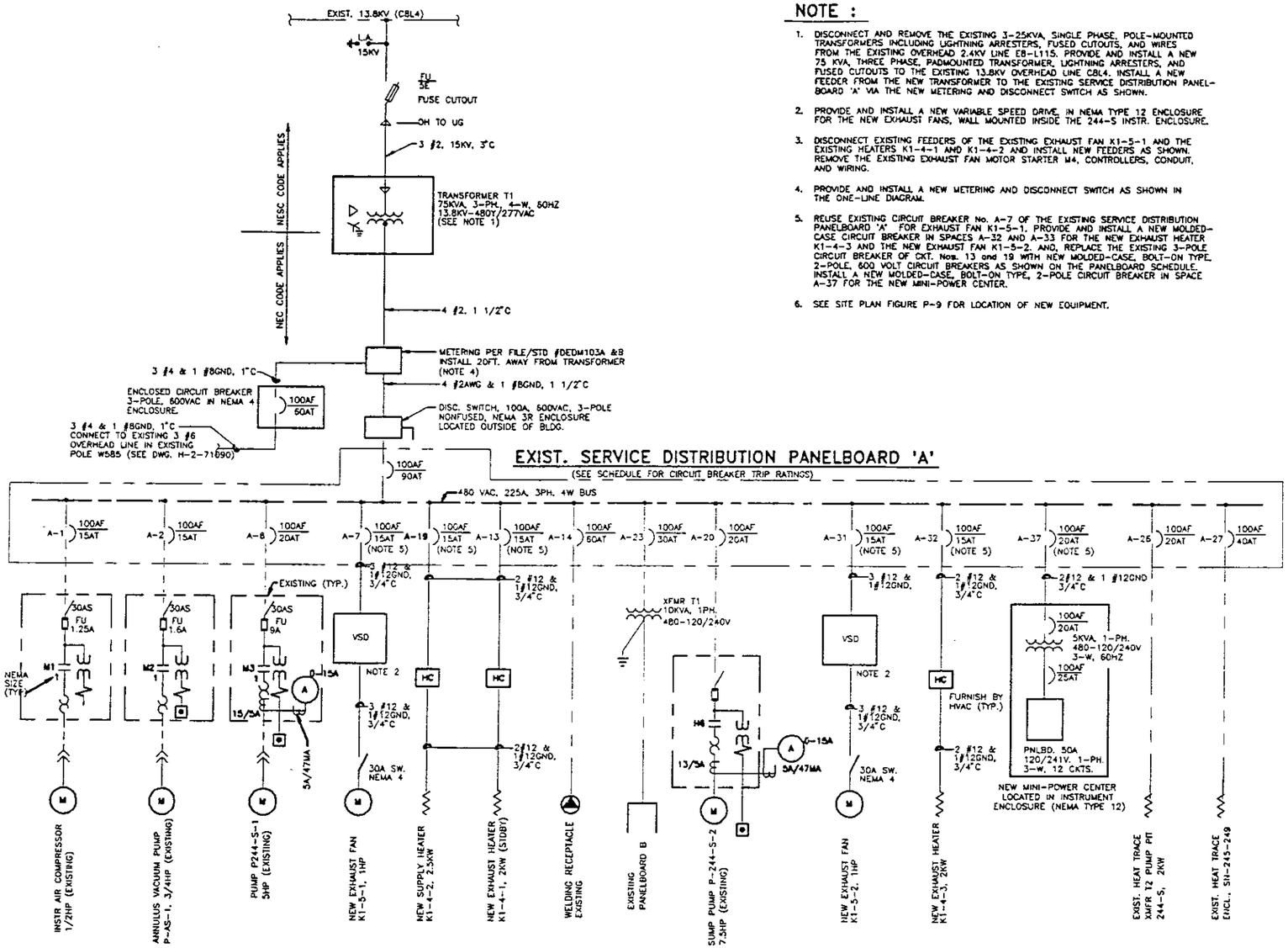

ONE-LINE DIAGRAM

NOTE :

1. DISCONNECT AND REMOVE THE EXISTING 3-25KVA, SINGLE PHASE, POLE-MOUNTED TRANSFORMERS INCLUDING LIGHTNING ARRESTERS, FUSED CUTOUTS, AND WIRES FROM THE EXISTING OVERHEAD 2.4KV LINE EB-L115. PROVIDE AND INSTALL A NEW 75 KVA, THREE PHASE, PADMOUNTED TRANSFORMER, LIGHTNING ARRESTERS, AND FUSED CUTOUTS TO THE EXISTING 13.8KV OVERHEAD LINE CBL4. INSTALL A NEW FEEDER FROM THE NEW TRANSFORMER TO THE EXISTING SERVICE DISTRIBUTION PANEL-BOARD 'A' VIA THE NEW METERING AND DISCONNECT SWITCH AS SHOWN.
2. PROVIDE AND INSTALL A NEW VARIABLE SPEED DRIVE, IN NEMA TYPE 12 ENCLOSURE FOR THE NEW EXHAUST FANS, WALL MOUNTED INSIDE THE 244-S INSTR. ENCLOSURE.
3. DISCONNECT EXISTING FEEDERS OF THE EXISTING EXHAUST FAN K1-5-1 AND THE EXISTING HEATERS K1-4-1 AND K1-4-2 AND INSTALL NEW FEEDERS AS SHOWN. REMOVE THE EXISTING EXHAUST FAN MOTOR STARTER M4, CONTROLLERS, CONDUIT, AND WIRING.
4. PROVIDE AND INSTALL A NEW METERING AND DISCONNECT SWITCH AS SHOWN IN THE ONE-LINE DIAGRAM.
5. REUSE EXISTING CIRCUIT BREAKER No. A-7 OF THE EXISTING SERVICE DISTRIBUTION PANELBOARD 'A' FOR EXHAUST FAN K1-5-1. PROVIDE AND INSTALL A NEW MOLDED-CASE CIRCUIT BREAKER IN SPACES A-32 AND A-33 FOR THE NEW EXHAUST HEATER K1-4-3 AND THE NEW EXHAUST FAN K1-5-2. AND, REPLACE THE EXISTING 3-POLE CIRCUIT BREAKER OF CKT. Nos. 13 and 19 WITH NEW MOLDED-CASE, BOLT-ON TYPE, 2-POLE, 600 VOLT CIRCUIT BREAKERS AS SHOWN ON THE PANELBOARD SCHEDULE. INSTALL A NEW MOLDED-CASE, BOLT-ON TYPE, 2-POLE CIRCUIT BREAKER IN SPACE A-37 FOR THE NEW MINI-POWER CENTER.
6. SEE SITE PLAN FIGURE P-9 FOR LOCATION OF NEW EQUIPMENT.

SERVICE DISTRIBUTION 4W
PANELBOARD: A VOLTS:480 BUS:225A
MAIN CKT BKR: 90 AT, 14,000 AIC SN: 225A
BRANCH CKT BKR: 14,000 AIC TRIM: SURFACE

SERVICE	WATS HP	A	P	NO		NO	P	A	WATS HP	SERVICE
INSTR AIR COMPRESSOR	1/2 HP	15	3	1		2	3	15	3/4 HP	ANNULUS VACUUM PUMP P-AS-1
EXHAUST FAN K1-5-1	1HP	15	3	7		8	3	20	5HP	PUMP P 244-S-1
EXHAUST HEATER K1-4-1	2KW	15	2	13		14	3	60		WELDING RECEPTACLE
SUPPLY HEATER K1-4-2	2.5KW	15	2	19		20	3	20	7-1/2 HP	SUMP PUMP P-244S-2
XFMR T1	10KVA	50	2	23		26	2	20		HT TRACE XFMR T2 PUMP PIT 244-S
SH-245-249 HEAT TRACE ENCL.		40	2	27						
EXHAUST FAN K1-5-2	1HP	15	3	31		32	2	15	2KW	EXHAUST HEATER K1-4-3
MINI-PWR. CENTER	5KW	20	2	37		38	3			SPACE
SPACE				41						

LEGEND

LA 15KV	-LIGHTNING ARRESTER
FU 5E	-FUSE CUTOUT, HOOK OPERATED
HC	-HEATER CONTROLLER (SCR UNIT)
— — —	-EXISTING
———	-NEW
OH	-OVERHEAD
UG	-UNDERGROUND
	-STRESS CONE (TERMINATION)
VSD	-VARIABLE SPEED DRIVE

U.S. DEPARTMENT OF ENERGY
RICHLAND OPERATIONS OFFICE
ICF KAISER HANFORD COMPANY

ELECTRICAL
244-S DCRT
ONE-LINE DIAGRAM

W-314 CDR
244-S
FIGURE E-9
SCALE NONE

2 PLOT SCALE 1=1 KEHCAD

LEGEND, SYMBOLS & ABBREVIATIONS

ATM	ATMOSPHERE
CFM	CUBIC FEET PER MINUTE
FC	FAIL CLOSE
LO	LOCKED OPEN
NO	NORMALLY OPEN
EHR	ENCASEMENT HYDROTEST RISER
ENC	ENCASEMENT
SL	SLURRY
SN	SUPERNATANT
COB	CLEANOUT BOX
LDE	LEAK DETECTION ELEMENT

ISOLATION VALVE

MOTORIZED CONTROL VALVE

HOSE CONNECTION

FLOW ELEMENT

REMOTE CONNECTOR NOZZLE

PUMP

GLOBE VALVE

BALL VALVE

BALL VALVE, THREE WAY

REDUCER

EXHAUST FAN WITH INLET VANES

EXHAUST FAN

VARIABLE SPEED DRIVE

MOTOR OPERATOR

BACKDRAFT DAMPER

FIRE PROTECTION PORT

FILTER TEST PORT

PRESSURE SENSING STATION

PLC/MMI INPUT/DISPLAY

PLC INTERLOCK/CALCULATION

FIELD MOUNTED INSTRUMENT

FIELD MOUNTED CONTROLLER

PANEL MOUNTED INSTRUMENT

PRESSURE SENSE CONNECTION

RTD INSTALLATION

PURGED AIR LINE

LEAK DETECTION ELEMENT (LDE)

EXISTING

NEW PROCESS LINE

TUBING/PNUEMATIC

ELECTRICAL, ANALOG

ELECTRICAL, BINARY

ELECTRICAL, UNDEFINED DIGITAL BUS

ELECTRICAL, TFLAN: PEER TO PEER NETWORK, TWISTED SHIELDED PAIR. SEE NOTE 1.

EN — ELECTRICAL, DIGITAL BUS (ETHERNET)

ELECTRICAL, PHONE LINE (MODEM)

INSTRUMENT SYMBOL LETTER IDENTIFICATION

SYMBOL	FIRST LETTER: MEASURED OR INITIATING VARIABLE	FIRST LETTER: MODIFIER	SUCCEEDING LETTERS: READOUT OR PASSIVE FUNCTION	SUCCEEDING LETTERS: OUTPUT FUNCTION	SUCCEEDING LETTERS: MODIFIER
A			ALARM		
C				CONTROL	
D		DIFFERENTIAL			
E			ELEMENT		
F	FLOW RATE				
H	HAND MANUALLY INITIATED				HIGH
I	CURRENT		INDICATOR		
J	POWER				
L	LEVEL OR LEAK		LIGHT		LOW
P	PRESSURE VACUUM				
R	RADIATION		RECORDER		
S				SWITCH	
T	TEMPERATURE			TRANSMITTER	
V				VALVE, DAMPER, LOUVER	
Y	EVENT, STATE OR PRESENCE			RELAY, COMPUTE, CONVERT	
Z	POSITION			ELECTRICAL POWER	

NOTES:

1. REFERENCE TO THE "MODBUS-PLUS" NETWORK IS NOT AN ATTEMPT TO SPECIFY A PARTICULAR MANUFACTURER AND IS ONLY USED AS AN EXAMPLE.

U.S. DEPARTMENT OF ENERGY
RICHLAND OPERATIONS OFFICE
ICF KAISER HANFORD COMPANY

LEGEND, SYMBOLS, AND ABBREVIATIONS

PROJ. W-314 CDR

FIGURE I-1

SCALE NONE

PLOT SCALE 1=1 | KEHCAD

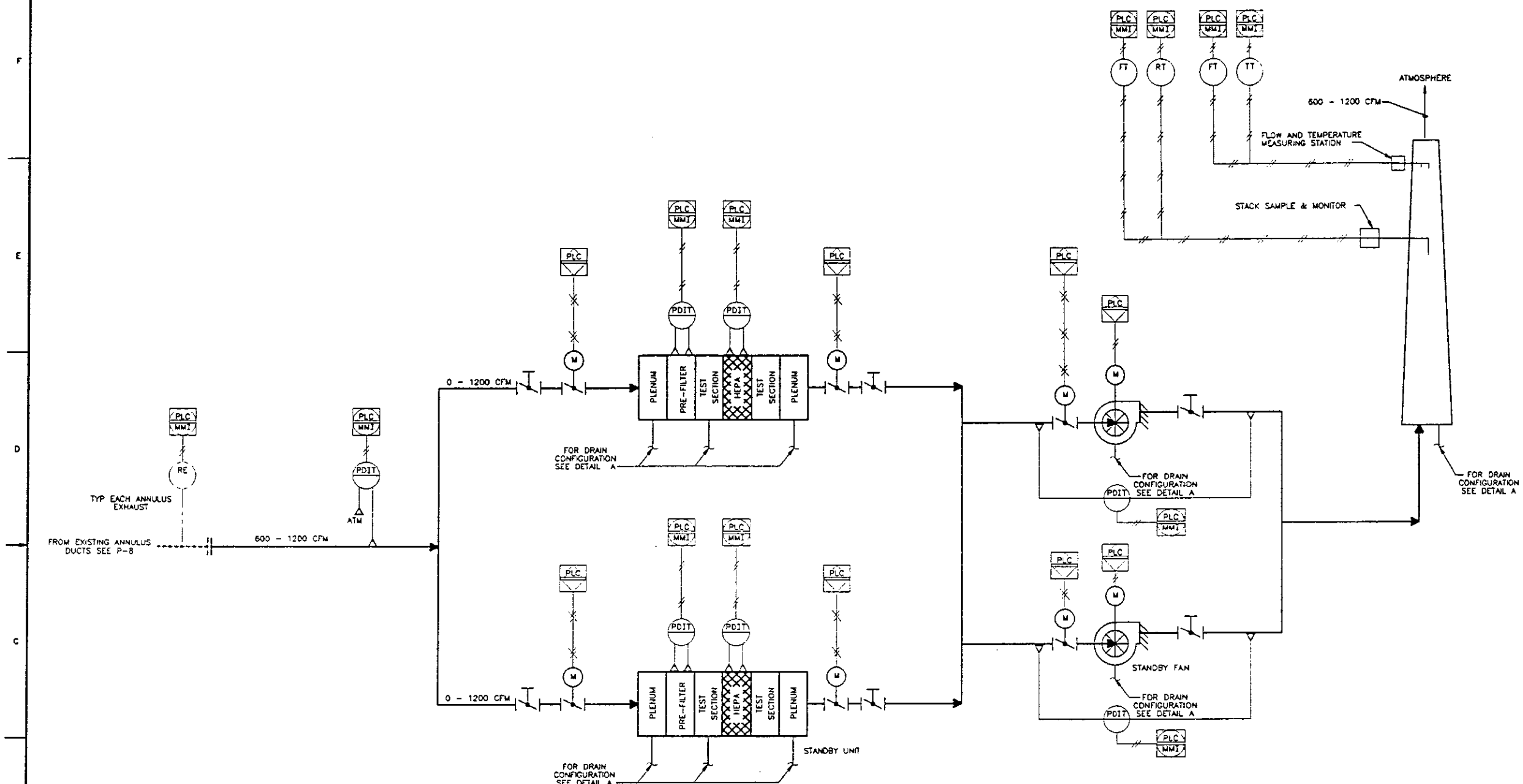

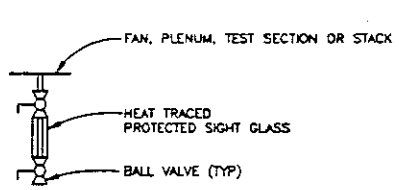

DETAIL A

NOTE

1. FOR SYMBOLS, LEGENDS AND NOTES SEE FIGURE I-1.

SYSTEM OPERATION

DURING NORMAL OPERATION, ONE FILTER TRAIN AND ONE FAN WILL BE ACTIVE. THE SYSTEM HAS 100% BACKUP CAPABILITY. EITHER FAN MAY OPERATE WITH EITHER FILTER TRAIN.

FILTER TRAINS OR FANS MAY BE SWITCHED MANUALLY OR AUTOMATICALLY FOR MAINTENANCE OR IN RESPONSE TO SYSTEM FAILURE.

U.S. DEPARTMENT OF ENERGY
RICHLAND OPERATIONS OFFICE
ICF KAISER HANFORD COMPANY

SY TANK FARM
ANNULUS EXHAUST VENTILATION
FLOW DIAGRAM

PROJECT W-314 CDR
24157
FIGURE H-2
SCALE NONE

PLOT SCALE 1=1 KEHCAD

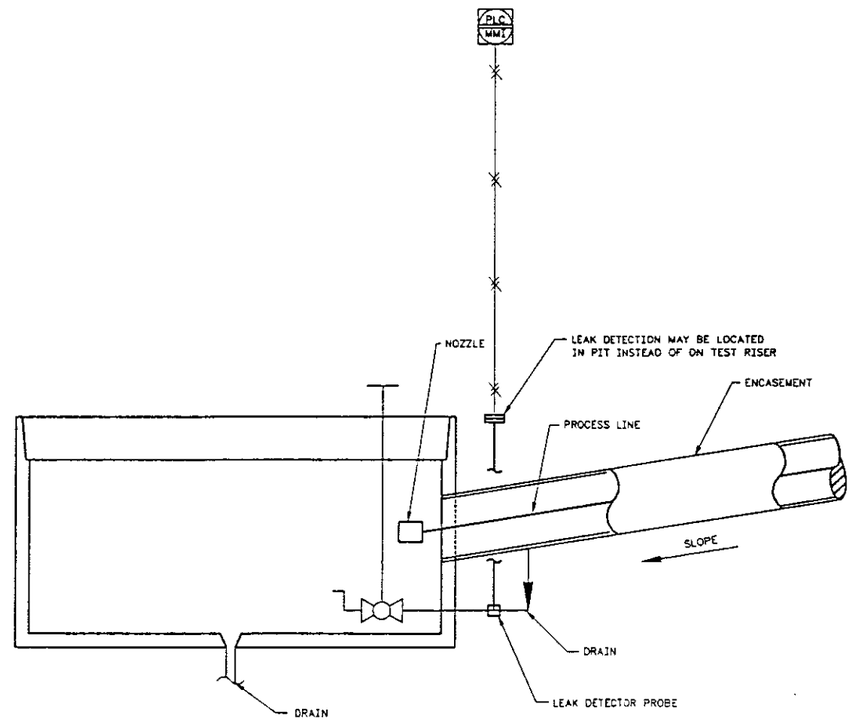

NOTE
1. FOR LEGEND SEE FIGURE 1-1.

U.S. DEPARTMENT OF ENERGY
RICHLAND OPERATIONS OFFICE
WCP KAISER HANFORD COMPANY

ENCASEMENT
LEAK DETECTION

W-314 CDR

FIGURE 1-3

NONE

PLOT SCALE 1=1 KEHCAD

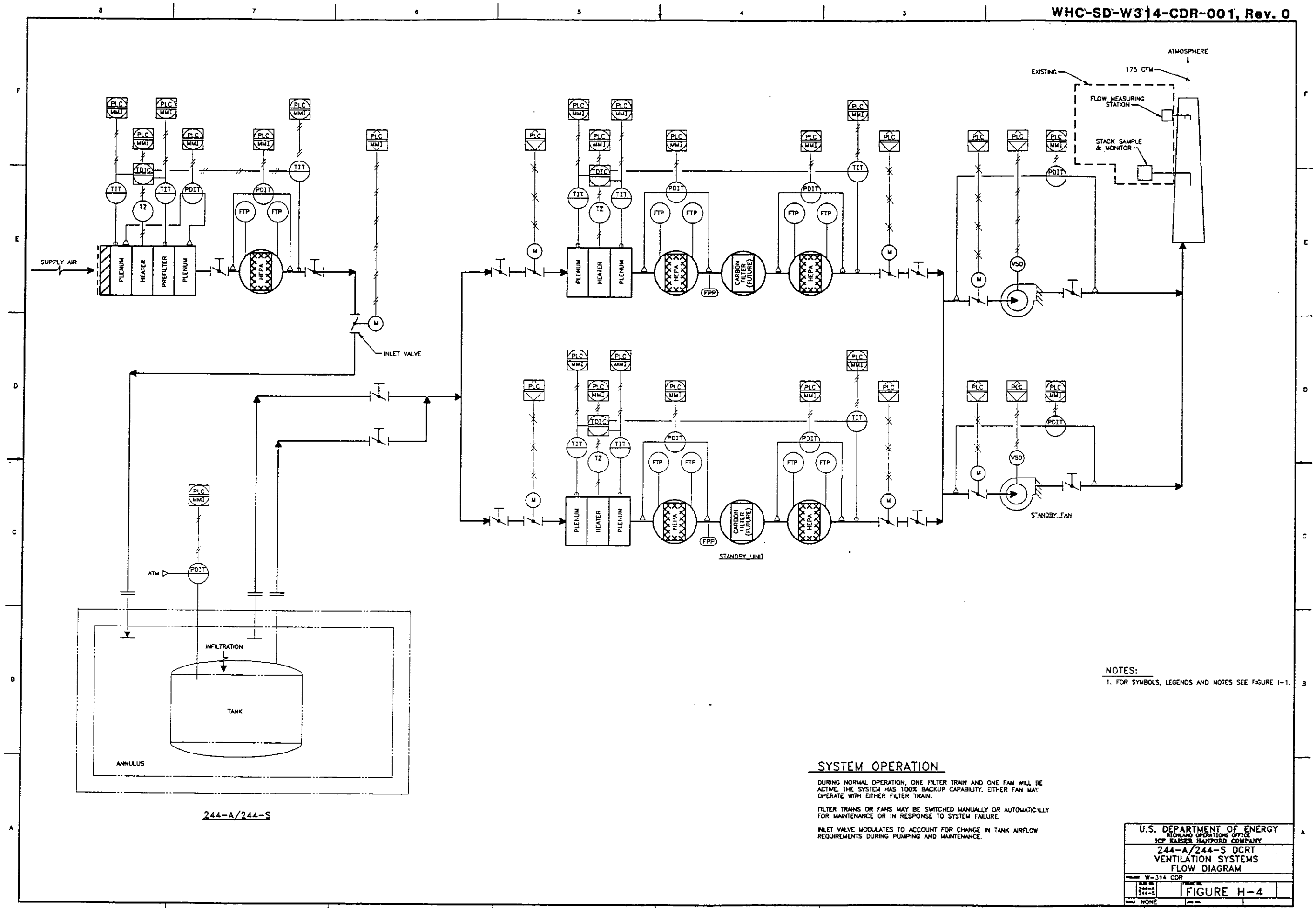

NOTES:

1. FOR SYMBOLS, LEGENDS AND NOTES SEE FIGURE I-1.

SYSTEM OPERATION

DURING NORMAL OPERATION, ONE FILTER TRAIN AND ONE FAN WILL BE ACTIVE. THE SYSTEM HAS 100% BACKUP CAPABILITY. EITHER FAN MAY OPERATE WITH EITHER FILTER TRAIN.

FILTER TRAINS OR FANS MAY BE SWITCHED MANUALLY OR AUTOMATICALLY FOR MAINTENANCE OR IN RESPONSE TO SYSTEM FAILURE.

INLET VALVE MODULATES TO ACCOUNT FOR CHANGE IN TANK AIRFLOW REQUIREMENTS DURING PUMPING AND MAINTENANCE.

U.S. DEPARTMENT OF ENERGY
RICHLAND OPERATIONS OFFICE
KCP KAISER HANFORD COMPANY

244-A/244-S DCRT
VENTILATION SYSTEMS
FLOW DIAGRAM

PROJECT W-314 CDR

FIGURE H-4

SCALE NONE

PLOT SCALE 1=1 | KEHCAD

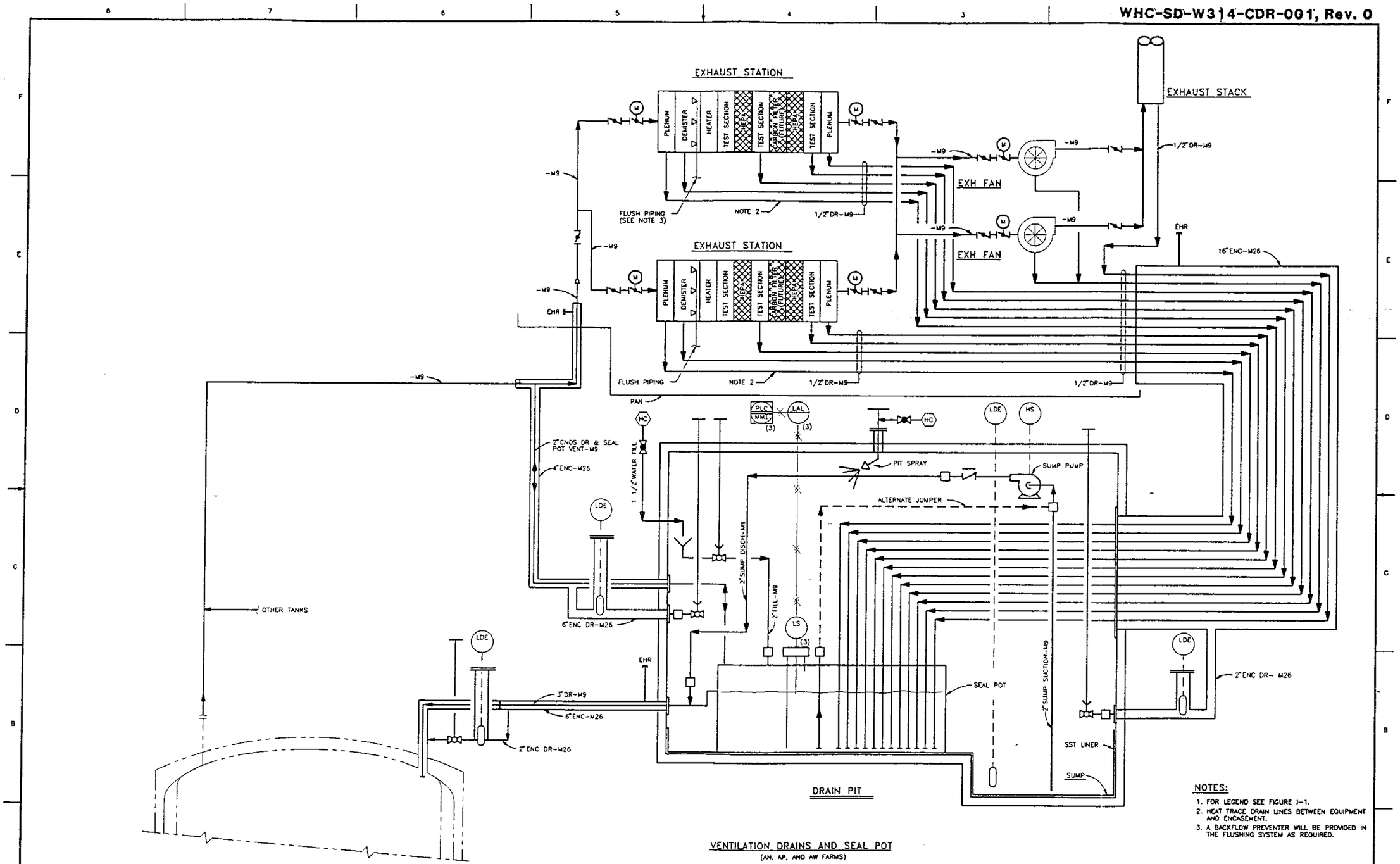

VENTILATION DRAINS AND SEAL POT
(AN, AP, AND AW FARMS)

NOTES:

1. FOR LEGEND SEE FIGURE I-1.
2. HEAT TRACE DRAIN LINES BETWEEN EQUIPMENT AND ENCASEMENT.
3. A BACKFLOW PREVENTER WILL BE PROVIDED IN THE FLUSHING SYSTEM AS REQUIRED.

U.S. DEPARTMENT OF ENERGY
RICHLAND OPERATIONS OFFICE
KCP KAISER HANFORD COMPANY

VENTILATION DRAINS AND SEAL POT

PROJECT W-314 CDR

FIGURE H-5

SCALE NONE

PLOT SCALE 1=1 | KEHCAD

LEGEND, SYMBOLS & ABBREVIATIONS

ATM	ATMOSPHERE
CFM	CUBIC FEET PER MINUTE
FC	FAIL CLOSE
LO	LOCKED OPEN
NO	NORMALLY OPEN
EHR	ENCASEMENT HYDROTEST RISER
ENC	ENCASEMENT
SL	SLURRY
SN	SUPERNATANT
COB	CLEANOUT BOX
LDE	LEAK DETECTION ELEMENT

ISOLATION VALVE

MOTORIZED CONTROL VALVE

HOSE CONNECTION

FLOW ELEMENT

REMOTE CONNECTOR NOZZLE

PUMP

GLOBE VALVE

BALL VALVE

BALL VALVE, THREE WAY

REDUCER

EXHAUST FAN WITH INLET VANES

EXHAUST FAN

VARIABLE SPEED DRIVE

MOTOR OPERATOR

BACKDRAFT DAMPER

FIRE PROTECTION PORT

FILTER TEST PORT

PRESSURE SENSING STATION

PLC/MMI INPUT/DISPLAY

PLC INTERLOCK/CALCULATION

FIELD MOUNTED INSTRUMENT

FIELD MOUNTED CONTROLLER

PANEL MOUNTED INSTRUMENT

PRESSURE SENSE CONNECTION

RTD INSTALLATION

PURGED AIR LINE

LEAK DETECTION ELEMENT (LDE)

EXISTING

NEW PROCESS LINE

TUBING/PNUEMATIC

ELECTRICAL, ANALOG

ELECTRICAL, BINARY

ELECTRICAL, UNDEFINED DIGITAL BUS

ELECTRICAL, TFLAN: PEER TO PEER NETWORK, TWISTED SHIELDED PAIR. SEE NOTE 1.

EN — ELECTRICAL, DIGITAL BUS (ETHERNET)

ELECTRICAL, PHONE LINE (MODEM)

INSTRUMENT SYMBOL LETTER IDENTIFICATION

SYMBOL	FIRST LETTER: MEASURED OR INITIATING VARIABLE	FIRST LETTER: MODIFIER	SUCCEEDING LETTERS: READOUT OR PASSIVE FUNCTION	SUCCEEDING LETTERS: OUTPUT FUNCTION	SUCCEEDING LETTERS: MODIFIER
A			ALARM		
C				CONTROL	
D		DIFFERENTIAL			
E			ELEMENT		
F	FLOW RATE				
H	HAND MANUALLY INITIATED				HIGH
I	CURRENT		INDICATOR		
J	POWER				
L	LEVEL OR LEAK		LIGHT		LOW
P	PRESSURE VACUUM				
R	RADIATION		RECORDER		
S				SWITCH	
T	TEMPERATURE			TRANSMITTER	
V				VALVE, DAMPER, LOUVER	
Y	EVENT, STATE OR PRESENCE			RELAY, COMPUTE, CONVERT	
Z	POSITION			ELECTRICAL POWER	

NOTES:

1. REFERENCE TO THE "MODBUS-PLUS" NETWORK IS NOT AN ATTEMPT TO SPECIFY A PARTICULAR MANUFACTURER AND IS ONLY USED AS AN EXAMPLE.

U.S. DEPARTMENT OF ENERGY
RICHLAND OPERATIONS OFFICE
ICF KAISER HANFORD COMPANY

LEGEND, SYMBOLS, AND ABBREVIATIONS

PROJ. W-314 CDR

FIGURE I-1

SCALE NONE

PLOT SCALE 1=1 | KEHCAD

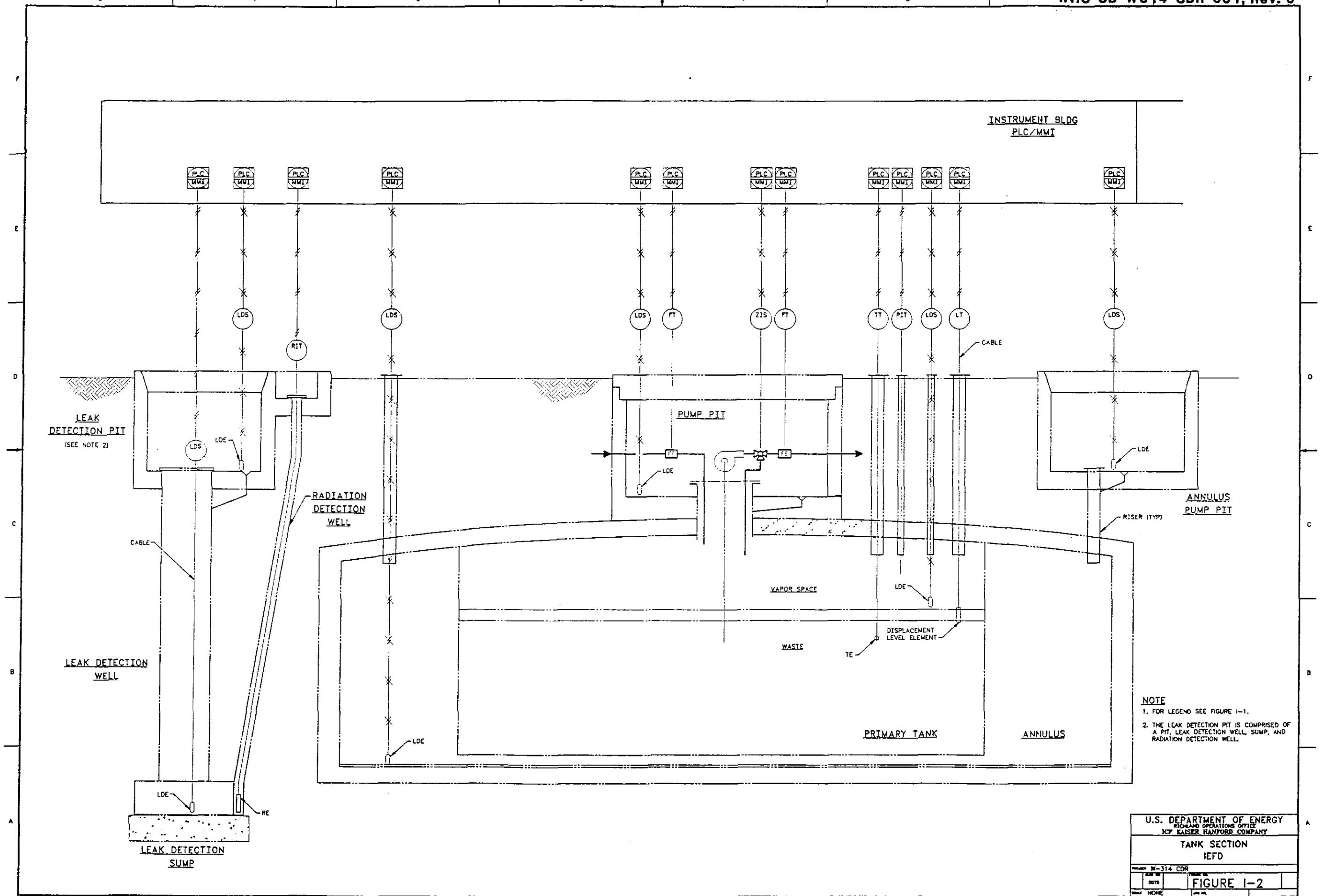
INSTRUMENT BLDG
PLC/MMI
PLC
MMI
LDS
RIT
FT
ZIS
TT
PIT
LT
CABLE
LEAK
DETECTION PIT
(SEE NOTE 2)
LDE
RADIATION
DETECTION
WELL
PUMP PIT
FC
ANNULUS
PUMP PIT
RISER (TYP)
VAPOR SPACE
WASTE
DISPLACEMENT
LEVEL ELEMENT
TE
LEAK DETECTION
WELL
PRIMARY TANK
ANNULUS
RE
LEAK DETECTION
SUMP
NOTE
1. FOR LEGEND SEE FIGURE 1-1.
2. THE LEAK DETECTION PIT IS COMPRISED OF A PIT, LEAK DETECTION WELL, SUMP, AND RADIATION DETECTION WELL.
U.S. DEPARTMENT OF ENERGY
RICHLAND OPERATIONS OFFICE
ICF KAISER HANFORD COMPANY
TANK SECTION
IEFD
W-314 CDR
DSTS
FIGURE 1-2
NONE
PLOT SCALE 1=1
KEHCAD

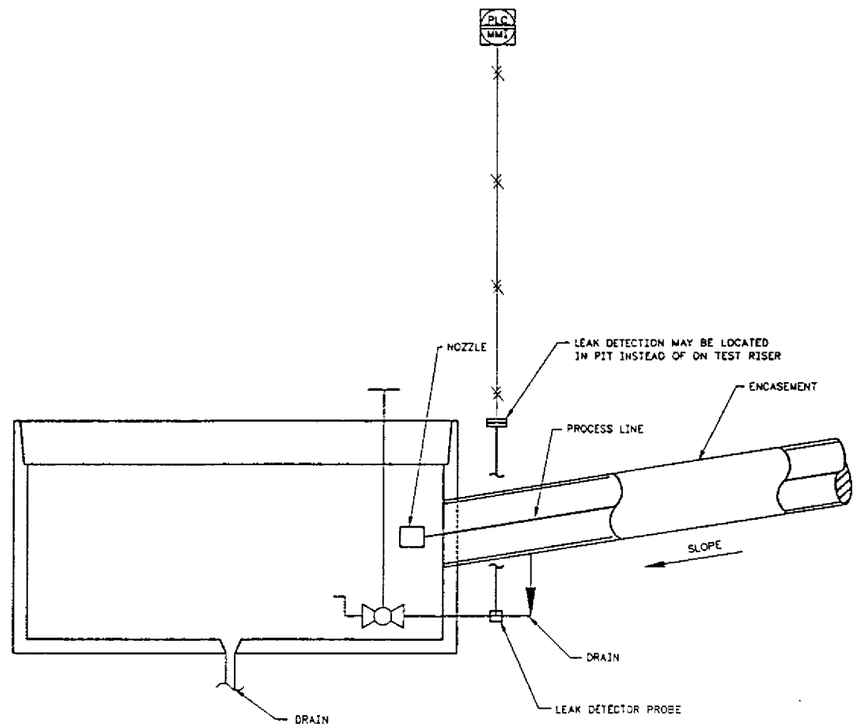

NOTE
1. FOR LEGEND SEE FIGURE 1-1.

U.S. DEPARTMENT OF ENERGY
RICHLAND OPERATIONS OFFICE
KAISER HANFORD COMPANY

ENCASEMENT
LEAK DETECTION

W-314 CDR

FIGURE 1-3

NONE

PLOT SCALE 1=1 KEHCAD

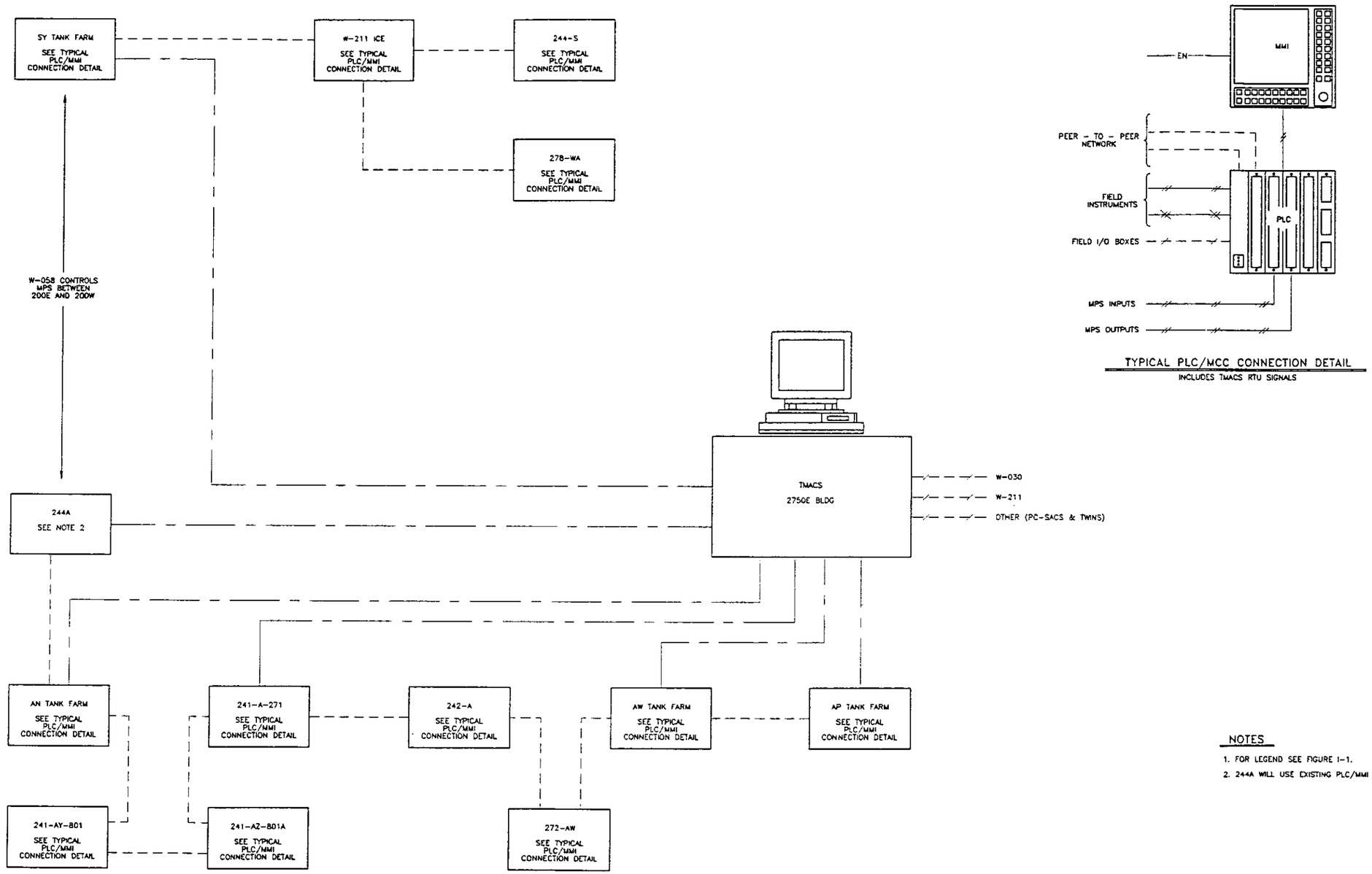

TYPICAL PLC/MCC CONNECTION DETAIL

INCLUDES TMACS RTU SIGNALS

NOTES

1. FOR LEGEND SEE FIGURE 1-1.
2. 244A WILL USE EXISTING PLC/MMI INSTALLED FOR PROJECT W-058.

U.S. DEPARTMENT OF ENERGY
RICHLAND OPERATIONS OFFICE
ICF KAISER HANFORD COMPANY

TFLAN PLC/MPS
BLOCK DIAGRAM

PROJECT W-314 CDR

FIGURE 1-4

SCALE NONE

PLOT SCALE 1=1 KEHCAD

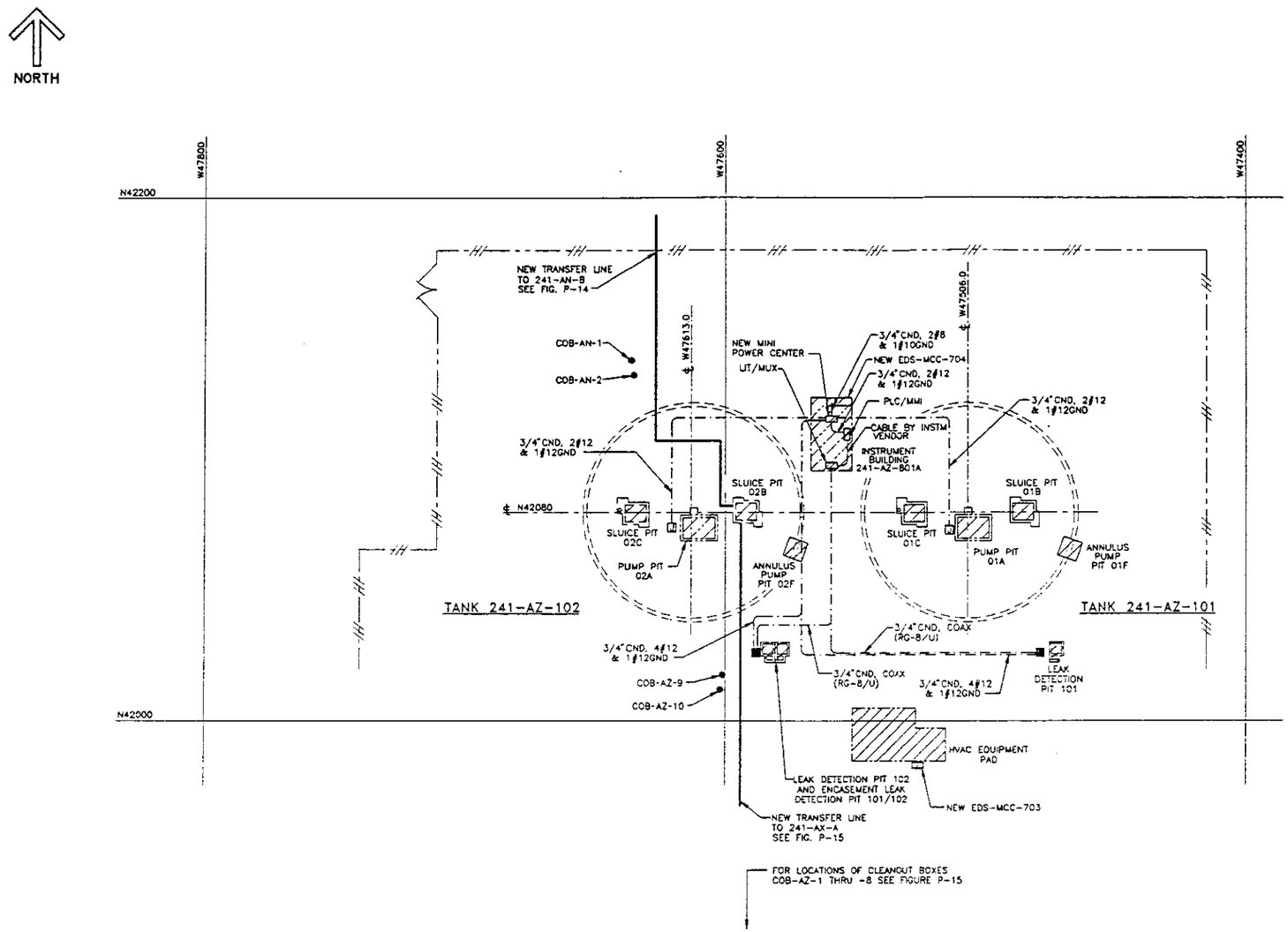

LEGEND

- EXST STRUCTURE, PIT BLDG, ETC.
- CENTERLINE
- FENCE
- NEW CONDUIT
- NEW PIPE LINE
- TFLAN PLC I/O BOX
- JUNCTION BOX MOUNTED 12" ABOVE GROUND
- CLEANOUT BOX

NOTE

1. THIS SITE PLAN PROVIDES LOCATIONS OF MAJOR EQUIPMENT AND CONDUIT RUNS AS PROVIDED FOR IN PROJECT W-314. STRUCTURES AND COMPONENTS ARE IDENTIFIED IN THE CDR TEXT WHERE THE UPGRADES WILL BE PERFORMED.

U.S. DEPARTMENT OF ENERGY
RICHLAND OPERATIONS OFFICE
KCF KAISER HANFORD COMPANY

SITE PLAN
AZ TANK FARM

PROJECT W-314 CDR
SCALE NO. 241AZ
FIGURE P-6
SCALE NONE

PLOT SCALE 1=240 | KEHCAD

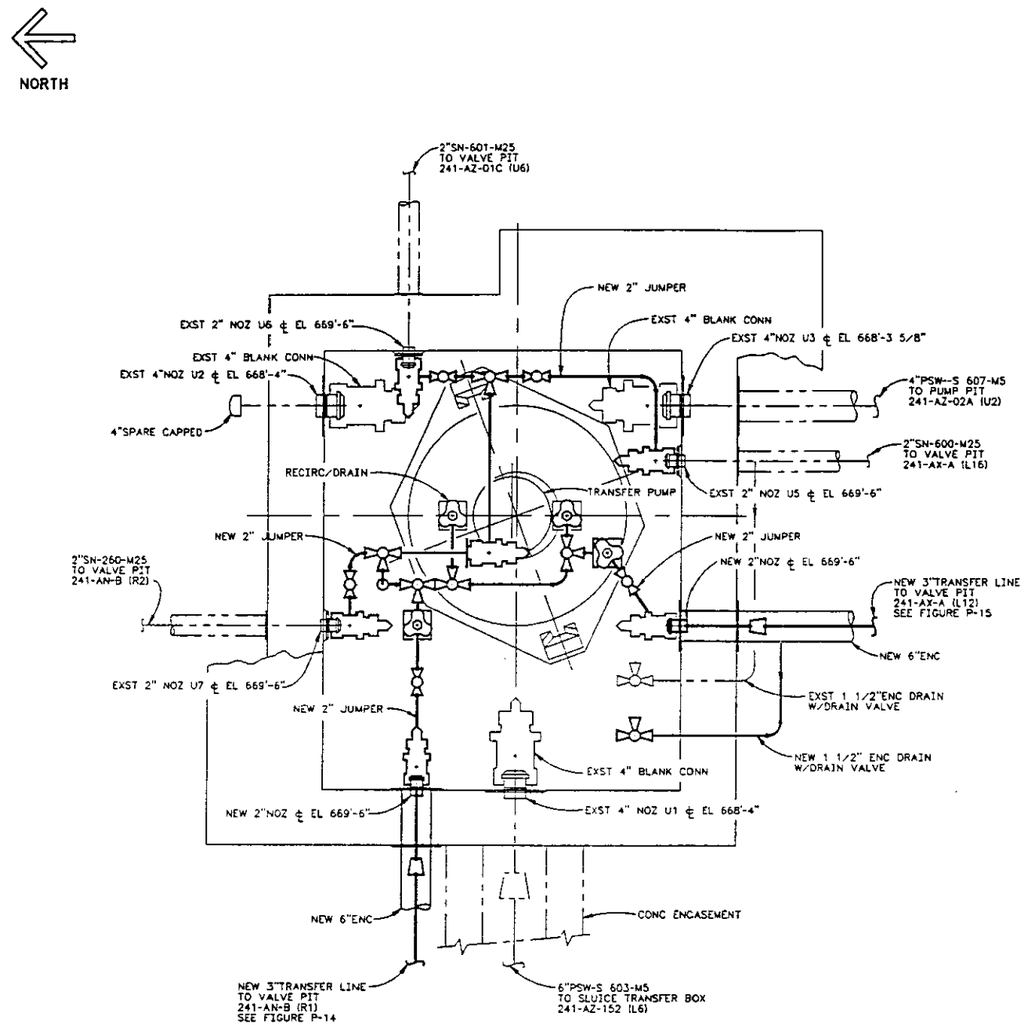

241-AZ-02B
SLUICE PIT ARRANGEMENT

LEGEND

- EXISTING TRANSFER PIPING
- NEW TRANSFER PIPING OR JUMPER COMPONENT
- INTEGRAL SEAL BLOCK REMOTE HORIZONTAL CONNECTOR
- INTEGRAL SEAL BLOCK REMOTE VERTICAL CONNECTOR
- REMOTE HORIZONTAL NOZZLE W/ KICK PLATE
- REMOTE VERTICAL NOZZLE W/ KICK PLATE
- BALL VALVE
- BALL VALVE 3-WAY
- REDUCER
- ENCASEMENT

U.S. DEPARTMENT OF ENERGY
RICHLAND OPERATIONS OFFICE
ICF KAISER HANFORD COMPANY

241-AZ-02B
SLUICE PIT ARRANGEMENT

PROJECT W-314 CDR
DRAWING NO. 241-AZ-02B
FIGURE NO. FIGURE P-7
SCALE NONE

PLOT SCALE: 1=12

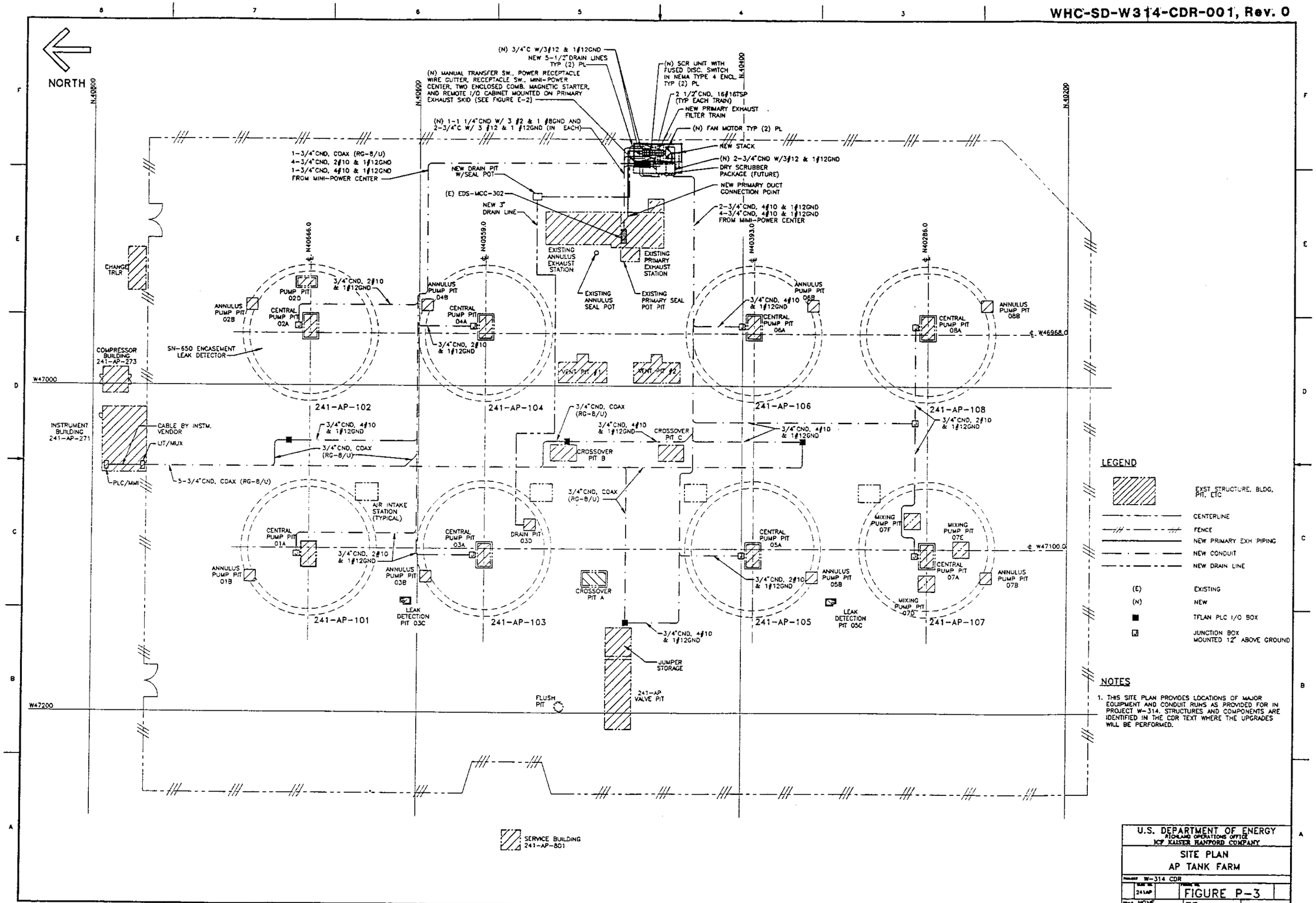
NORTH
(N) 3/4"C W/3#12 & 1#12GND
NEW 5-1/2" DRAIN LINES TYP (2) PL
(N) MANUAL TRANSFER SW., POWER RECEPTACLE WIRE GUTTER, RECEPTACLE SW., MINI-POWER CENTER, TWO ENCLOSED COMB. MAGNETIC STARTER, AND REMOTE I/O CABINET MOUNTED ON PRIMARY EXHAUST SKID (SEE FIGURE E-2)
(N) SCR UNIT WITH FUSED DISC. SWITCH IN NEMA TYPE 4 ENCL. TYP (2) PL
2 1/2"CND. 16#16TSP (TYP EACH TRAIN)
NEW PRIMARY EXHAUST FILTER TRAIN
(N) FAN MOTOR TYP (2) PL
(N) 1-1 1/4"CND W/ 3 #2 & 1 #8GND AND 2-3/4"C W/ 3 #12 & 1 #12GND (IN EACH)
NEW STACK
(N) 2-3/4"CND W/3#12 & 1#12GND
DRY SCRUBBER PACKAGE (FUTURE)
NEW PRIMARY DUCT CONNECTION POINT
1-3/4"CND. COAX (RG-8/U)
4-3/4"CND. 2#10 & 1#12GND
1-3/4"CND. 4#10 & 1#12GND
FROM MINI-POWER CENTER
NEW DRAIN PIT W/SEAL POT
(E) EDS-MCC-302
NEW 3" DRAIN LINE
2-3/4"CND. 4#10 & 1#12GND
4-3/4"CND. 4#10 & 1#12GND
FROM MINI-POWER CENTER
N.40800
N.40600
N.40400
N.40200
N40666.0
N40559.0
N40393.0
N40286.0
EXISTING ANNULUS EXHAUST STATION
EXISTING PRIMARY EXHAUST STATION
EXISTING ANNULUS SEAL POT
EXISTING PRIMARY SEAL POT PIT
CHANGE TRLR
PUMP PIT 02D
3/4"CND. 2#10 & 1#12GND
ANNULUS PUMP PIT 02B
CENTRAL PUMP PIT 02A
ANNULUS PUMP PIT 04B
CENTRAL PUMP PIT 04A
3/4"CND. 2#10 & 1#12GND
3/4"CND. 4#10 & 1#12GND
ANNULUS PUMP PIT 06B
CENTRAL PUMP PIT 06A
CENTRAL PUMP PIT 08A
ANNULUS PUMP PIT 08B
℄ W46968.0
COMPRESSOR BUILDING 241-AP-273
SN-650 ENCASEMENT LEAK DETECTOR
W47000
VENT PIT #1
VENT PIT #2
241-AP-102
241-AP-104
241-AP-106
241-AP-108
INSTRUMENT BUILDING 241-AP-271
CABLE BY INSTM. VENDOR
LIT/MUX
PLC/MMI
5-3/4"CND. COAX (RG-8/U)
3/4"CND. 4#10 & 1#12GND
3/4"CND. COAX (RG-8/U)
3/4"CND. COAX (RG-8/U)
3/4"CND. 4#10 & 1#12GND
CROSSOVER PIT B
CROSSOVER PIT C
3/4"CND. 4#10 & 1#12GND
3/4"CND. 2#10 & 1#12GND
3/4"CND. COAX (RG-8/U)
AIR INTAKE STATION (TYPICAL)
CENTRAL PUMP PIT 01A
ANNULUS PUMP PIT 01B
3/4"CND. 2#10 & 1#12GND
ANNULUS PUMP PIT 03B
CENTRAL PUMP PIT 03A
DRAIN PIT 03D
LEAK DETECTION PIT 03C
CROSSOVER PIT A
CENTRAL PUMP PIT 05A
3/4"CND. 2#10 & 1#12GND
ANNULUS PUMP PIT 05B
LEAK DETECTION PIT 05C
MIXING PUMP PIT 07F
MIXING PUMP PIT 07E
CENTRAL PUMP PIT 07A
MIXING PUMP PIT 07D
ANNULUS PUMP PIT 07B
℄ W47100.0
241-AP-101
241-AP-103
241-AP-105
241-AP-107
3/4"CND. 4#10 & 1#12GND
JUMPER STORAGE
241-AP VALVE PIT
FLUSH PIT
W47200
SERVICE BUILDING 241-AP-801
LEGEND
EXST. STRUCTURE, BLDG, PIT, ETC
CENTERLINE
FENCE
NEW PRIMARY EXH PIPING
NEW CONDUIT
NEW DRAIN LINE
(E) EXISTING
(N) NEW
TFLAN PLC I/O BOX
JUNCTION BOX MOUNTED 12" ABOVE GROUND
NOTES
1. THIS SITE PLAN PROVIDES LOCATIONS OF MAJOR EQUIPMENT AND CONDUIT RUNS AS PROVIDED FOR IN PROJECT W-314. STRUCTURES AND COMPONENTS ARE IDENTIFIED IN THE CDR TEXT WHERE THE UPGRADES WILL BE PERFORMED.
U.S. DEPARTMENT OF ENERGY
RICHLAND OPERATIONS OFFICE
ICF KAISER HANFORD COMPANY
SITE PLAN
AP TANK FARM
W-314 CDR
241AP
FIGURE P-3
NONE
2 PLOT SCALE 1=240
KEHCAD

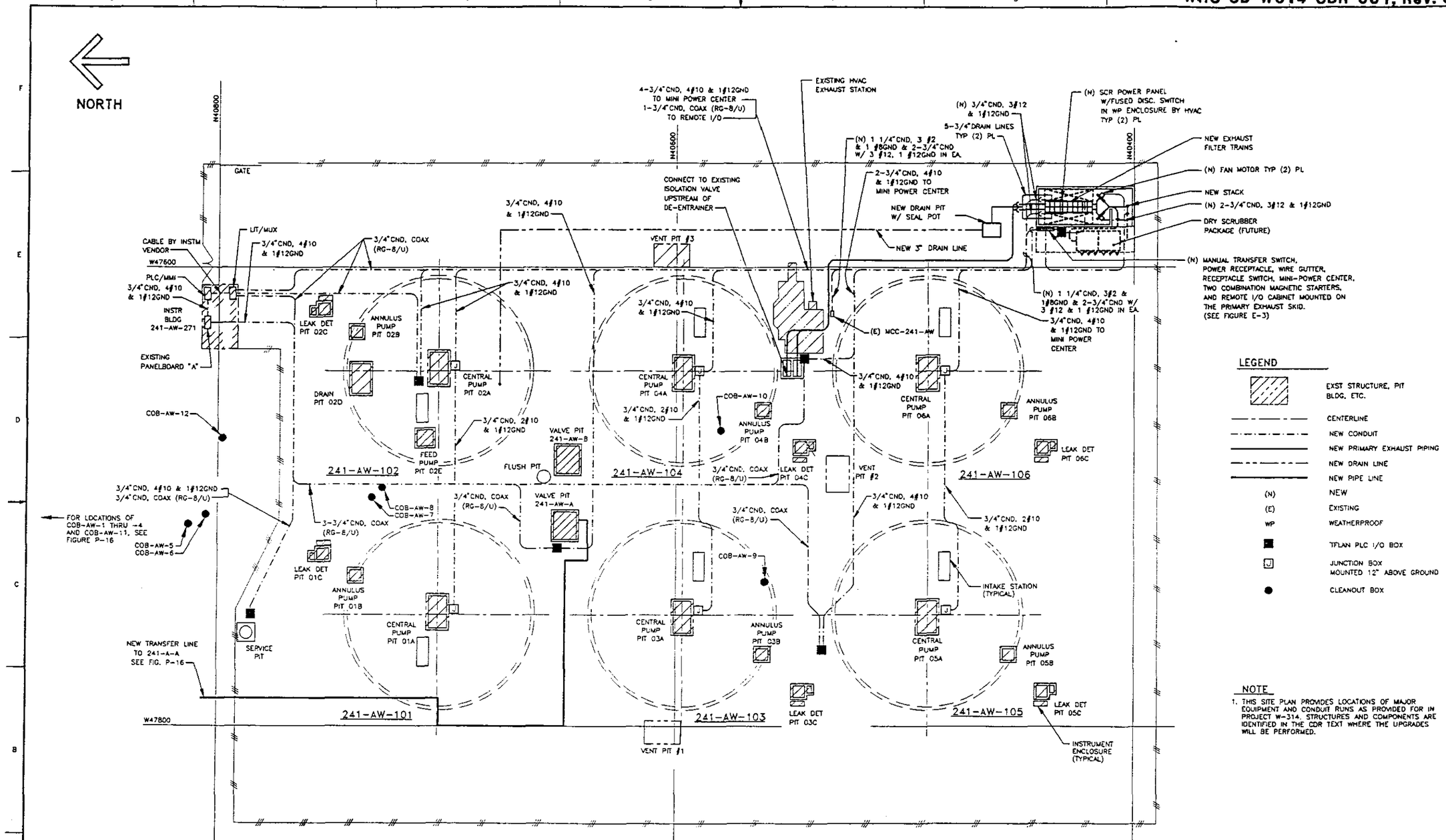

NOTE

1. THIS SITE PLAN PROVIDES LOCATIONS OF MAJOR EQUIPMENT AND CONDUIT RUNS AS PROVIDED FOR IN PROJECT W-314. STRUCTURES AND COMPONENTS ARE IDENTIFIED IN THE CDR TEXT WHERE THE UPGRADES WILL BE PERFORMED.

U.S. DEPARTMENT OF ENERGY
RICHLAND OPERATIONS OFFICE
KCP KAISER HANFORD COMPANY

SITE PLAN
AW TANK FARM

W-314 CDR

241-AW

FIGURE P-4

NONE

PLOT SCALE 1=16 | KEHCAD

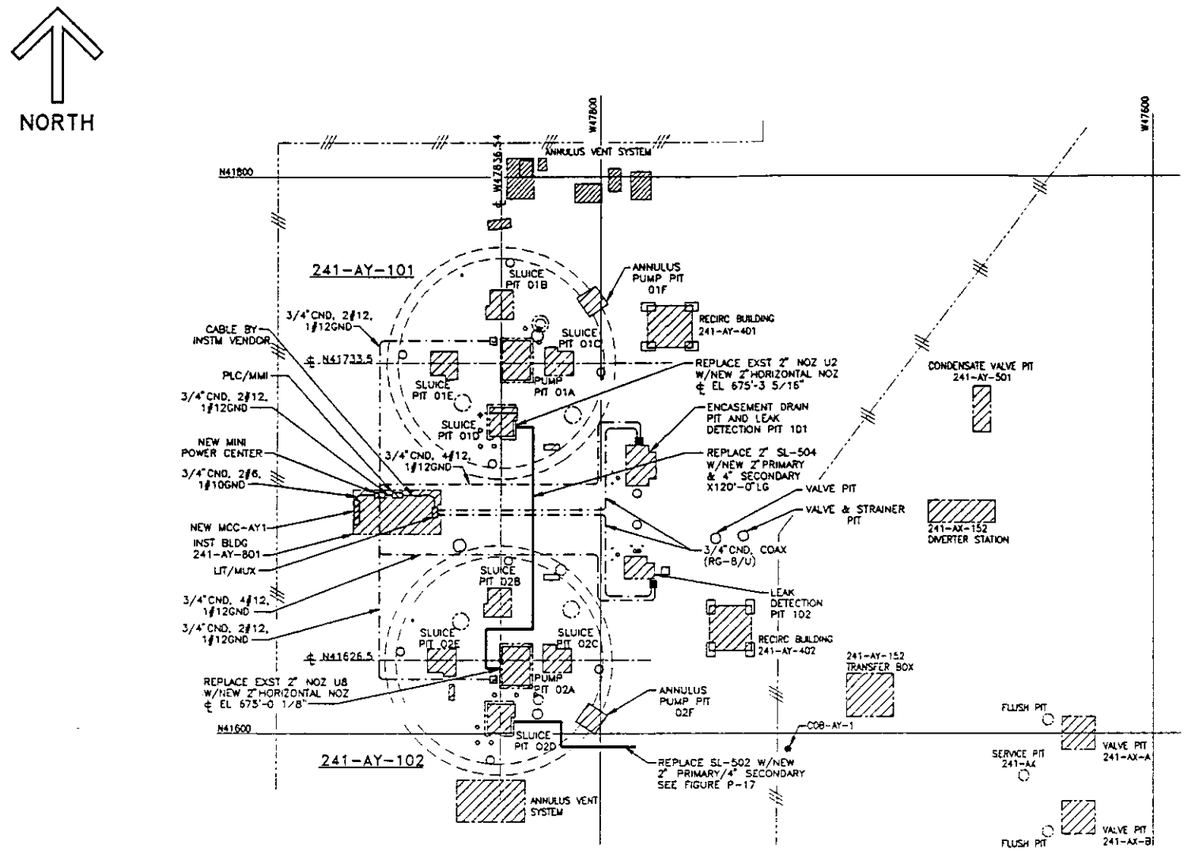

LEGEND

- EXST PIT, STRUCTURE, BLDG, ETC
- CENTERLINE
- EXST FENCE
- CONDUIT
- NEW PIPING
- TFLAN PLC I/O BOX
- JUNCTION BOX MOUNTED 12" ABOVE GROUND
- CLEANOUT BOX

NOTE

1. THIS SITE PLAN PROVIDES LOCATIONS OF MAJOR EQUIPMENT AND CONDUIT RUNS AS PROVIDED FOR IN PROJECT W-314. STRUCTURES AND COMPONENTS ARE IDENTIFIED IN THE CDR TEXT WHERE THE UPGRADES WILL BE PERFORMED.

U.S. DEPARTMENT OF ENERGY
RICHLAND OPERATIONS OFFICE
FCF KAISER HANFORD COMPANY

SITE PLAN
AY TANK FARM

PROJECT W-314 CDR
DWG NO. 241AY
FIGURE P-5
SCALE NONE

PLOT SCALE 1=240 KEHCAD

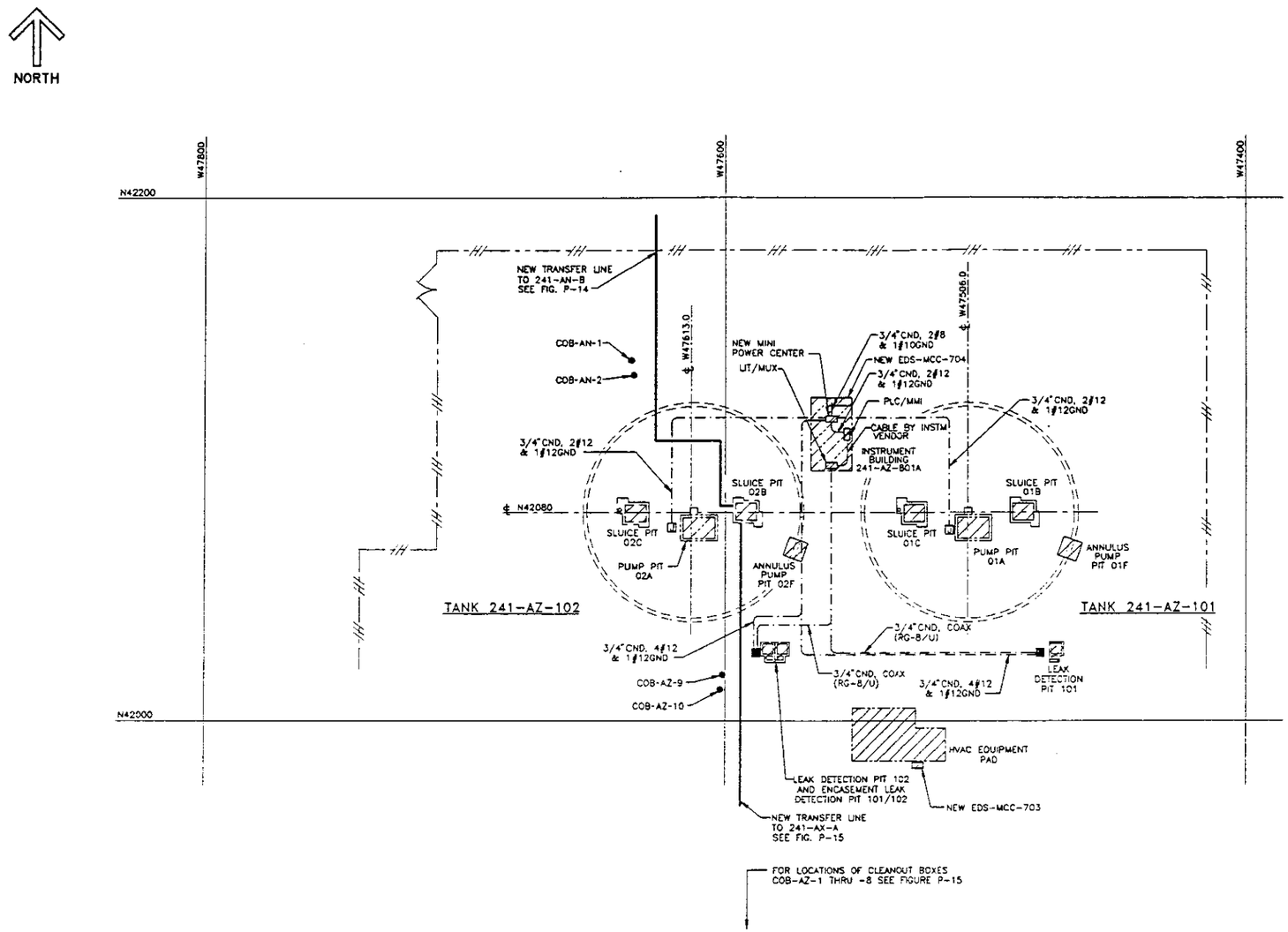

LEGEND

- EXST STRUCTURE, PIT BLDG, ETC.
- CENTERLINE
- FENCE
- NEW CONDUIT
- NEW PIPE LINE
- TFLAN PLC I/O BOX
- JUNCTION BOX MOUNTED 12" ABOVE GROUND
- CLEANOUT BOX

NOTE

1. THIS SITE PLAN PROVIDES LOCATIONS OF MAJOR EQUIPMENT AND CONDUIT RUNS AS PROVIDED FOR IN PROJECT W-314. STRUCTURES AND COMPONENTS ARE IDENTIFIED IN THE CDR TEXT WHERE THE UPGRADES WILL BE PERFORMED.

U.S. DEPARTMENT OF ENERGY
RICHLAND OPERATIONS OFFICE
KCF KAISER HANFORD COMPANY

SITE PLAN
AZ TANK FARM

PROJECT W-314 CDR
SCALE NO. 241AZ
FIGURE P-6
SCALE NONE

PLOT SCALE 1=240 | KEHCAD

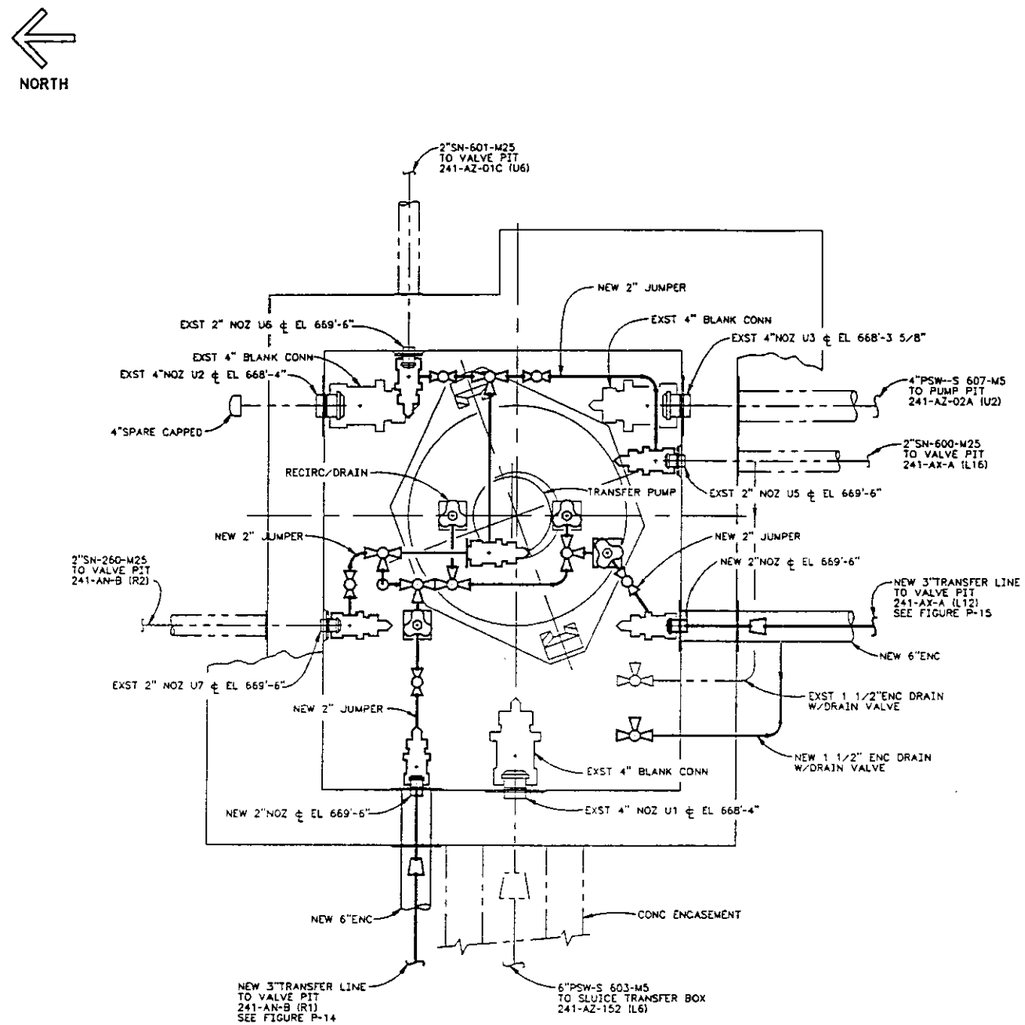

241-AZ-02B
SLUICE PIT ARRANGEMENT

LEGEND

- EXISTING TRANSFER PIPING
- NEW TRANSFER PIPING OR JUMPER COMPONENT
- INTEGRAL SEAL BLOCK REMOTE HORIZONTAL CONNECTOR
- INTEGRAL SEAL BLOCK REMOTE VERTICAL CONNECTOR
- REMOTE HORIZONTAL NOZZLE W/ KICK PLATE
- REMOTE VERTICAL NOZZLE W/ KICK PLATE
- BALL VALVE
- BALL VALVE 3-WAY
- REDUCER
- ENCASEMENT

U.S. DEPARTMENT OF ENERGY
RICHLAND OPERATIONS OFFICE
ICF KAISER HANFORD COMPANY

241-AZ-02B
SLUICE PIT ARRANGEMENT

PROJECT W-314 CDR
DRAWING NO. 241-AZ-02B
FIGURE NO. FIGURE P-7
SCALE NONE

PLOT SCALE: 1=12

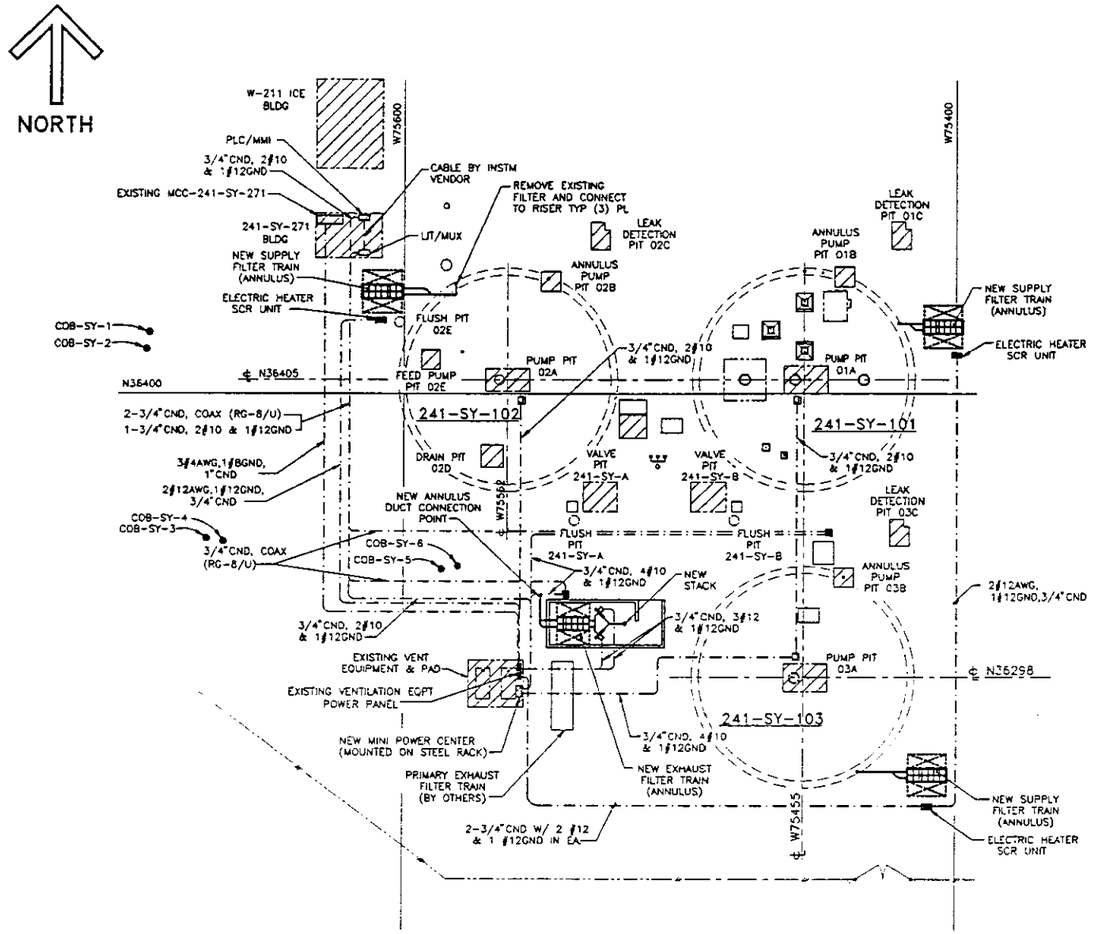

LEGEND

- PERIMETER FENCE
- NEW ANNULUS EXHAUST DUCT
- NEW CONDUIT
- LIGHT POLE
- EXST STRUCTURE, PIT, BLDG, ETC.
- TFLAN PLC I/O BOX
- JUNCTION BOX MOUNTED 12" ABOVE GROUND
- CLEANOUT BOX

NOTE :

1. THIS SITE PLAN PROVIDES LOCATIONS OF MAJOR EQUIPMENT AND CONDUIT RUNS AS PROVIDED FOR IN PROJECT W-314. STRUCTURES AND COMPONENTS ARE IDENTIFIED IN THE CDR TEXT WHERE THE UPGRADES WILL BE PERFORMED.

U.S. DEPARTMENT OF ENERGY
RICHLAND OPERATIONS OFFICE
HCP KAISER HANFORD COMPANY

SITE PLAN
SY TANK FARM

PROJECT W-314 CDR
DWG NO. 241SY
FIGURE NO. FIGURE P-8
SCALE NONE
JOB NO.

2 PLOT SCALE 1=240 | KEHCAD

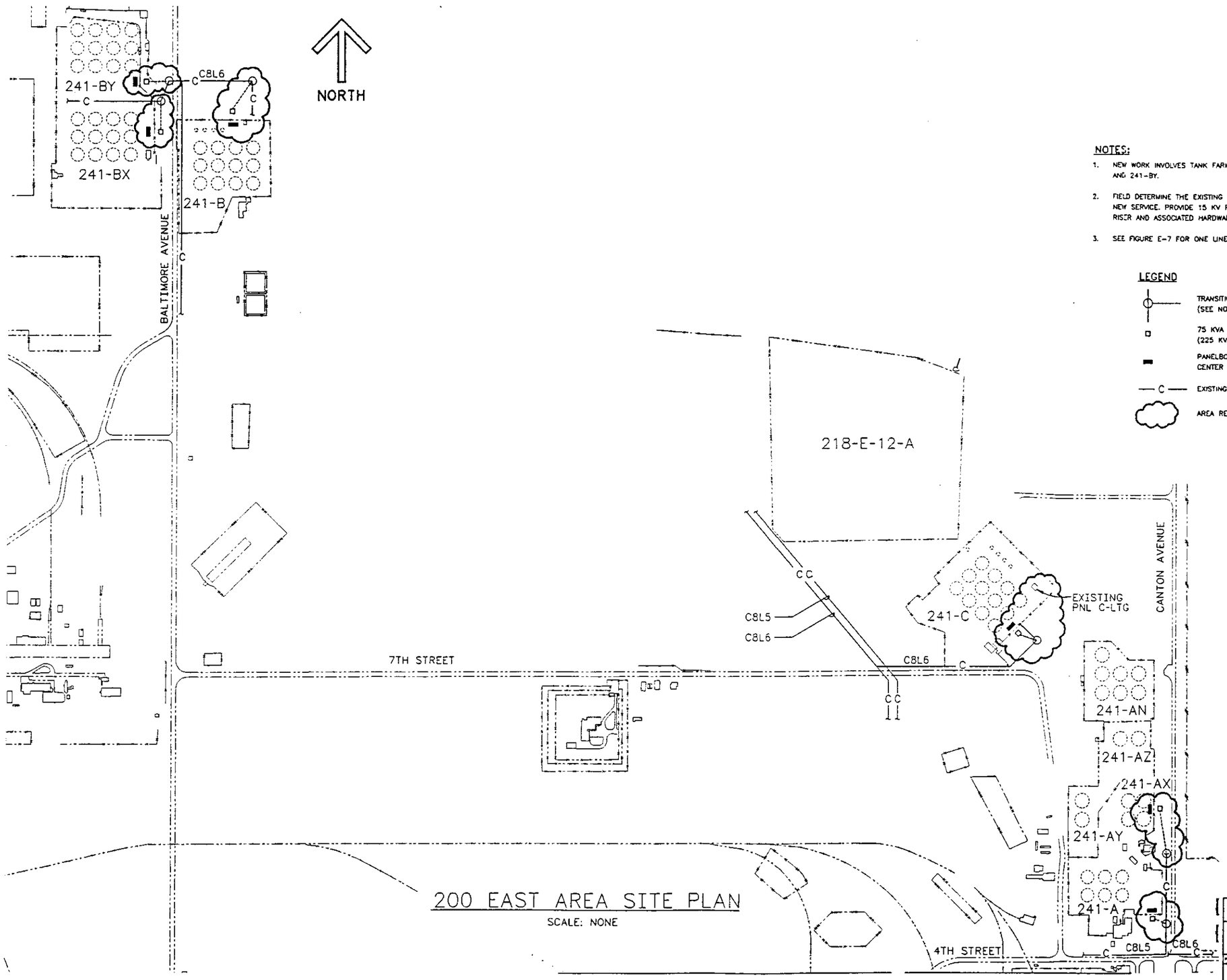

200 EAST AREA SITE PLAN

SCALE: NONE

NOTES:

1. NEW WORK INVOLVES TANK FARMS 241-A, 241-AX, 241-B, 241-C, 241-BX AND 241-BY.
2. FIELD DETERMINE THE EXISTING POWER POLE TO BE UTILIZED TO TAP FOR THE NEW SERVICE. PROVIDE 15 KV FUSED CUTOUTS, LIGHTNING ARRESTORS, POLE RISER AND ASSOCIATED HARDWARE FOR EACH NEW SERVICE.
3. SEE FIGURE E-7 FOR ONE LINE DIAGRAM.

LEGEND

- TRANSITION FROM AERIAL TO DIRECT BURIED SERVICE (SEE NOTES 1 & 2)
- 75 KVA TRANSFORMER, PAD MOUNTED (225 KVA FOR TANK FARM 241-C, SEE NOTE 1)
- PANELBOARD, (3) RECEPTACLE SWITCHES & MINI-POWER CENTER (MOUNTED ON STEEL BACK)
- —C— EXISTING 13.8 KV, 3 PH, 3 WIRE CIRCUIT
- AREA REQUIRING NEW WORK

U.S. DEPARTMENT OF ENERGY
RICHLAND OPERATIONS OFFICE
ICF KAISER HANFORD COMPANY

SITE PLAN
SST FARMS

W-314 CDR

200-E

FIGURE P-9

NONE

PLOT SCALE: 1=1

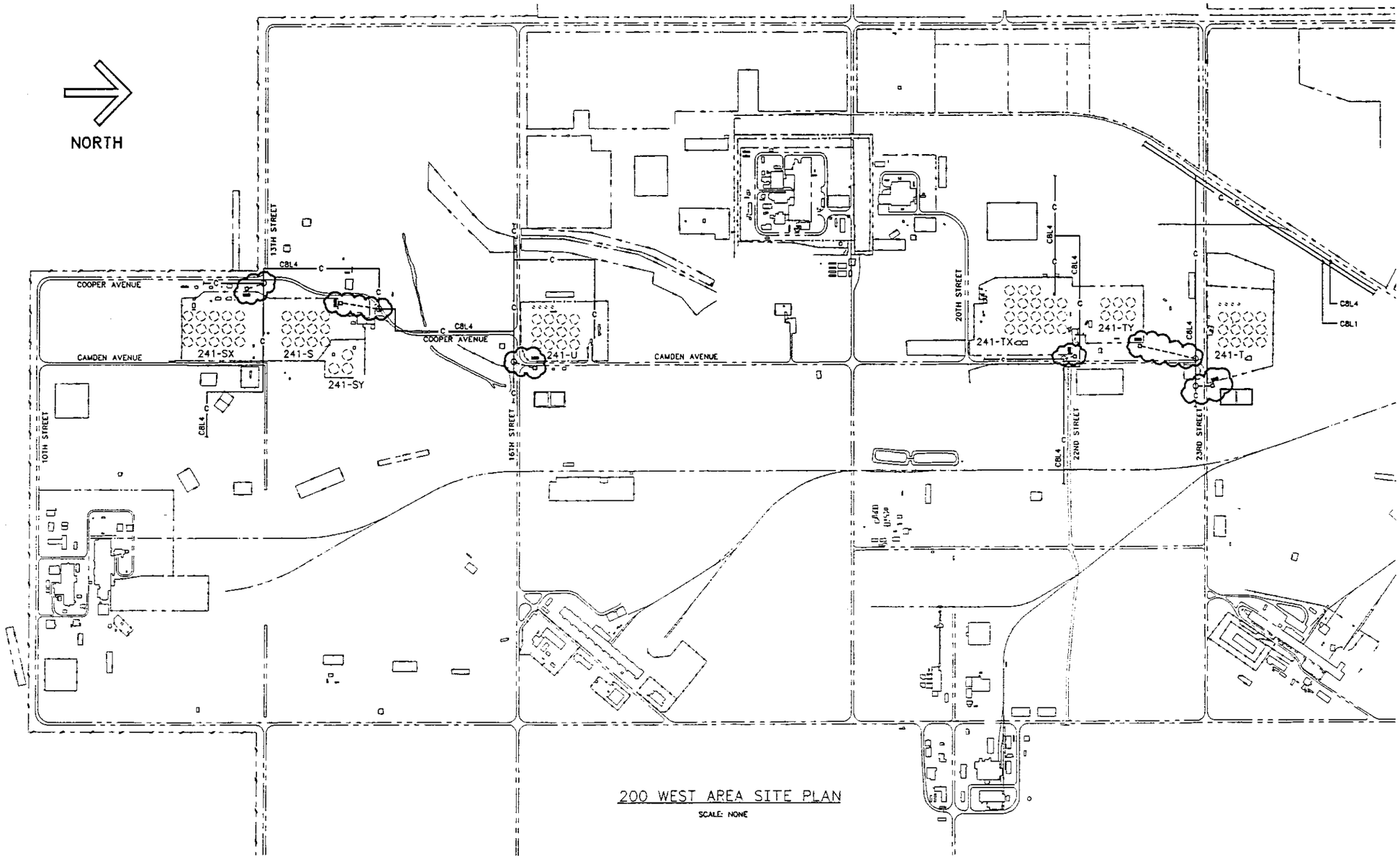

200 WEST AREA SITE PLAN

SCALE: NONE

LEGEND

- TRANSITION FROM AERIAL TO DIRECT BURIED SERVICE (SEE NOTES 1 & 2)
- 75 KVA TRANSFORMER, PAD MOUNTED (SEE NOTE 1)
- PANELBOARD, (3) RECEPTACLE SWITCHES & MINI-POWER CENTER (MOUNTED ON STEEL RACK, SEE NOTE 1)
- —C— EXISTING 13.8 KV, 3 PH, 3 WIRE CIRCUIT
- AREA REQUIRING NEW WORK

NOTES:

1. NEW WORK INVOLVES TANK FARMS 241-T, 241-TX, 241-TY, 241-U, 241-S AND 241-SX.
2. FIELD DETERMINE THE EXISTING POWER POLE TO BE UTILIZED TO TAP FOR THE NEW SERVICE. PROVIDE 15 KV FUSED CUTOUTS, LIGHTNING ARRESTORS, POLE RISER AND ASSOCIATED HARDWARE FOR EACH NEW SERVICE.
3. SEE FIGURE E-7 FOR ONE LINE DIAGRAM.

U.S. DEPARTMENT OF ENERGY
RICHLAND OPERATIONS OFFICE
WCF KAISER HANFORD COMPANY

SITE PLAN
SST FARMS

PROJECT W-314 CDR
SUB NO. 200-W
FIGURE NO. FIGURE P-10
SCALE NONE

PLOT SCALE: 1=1

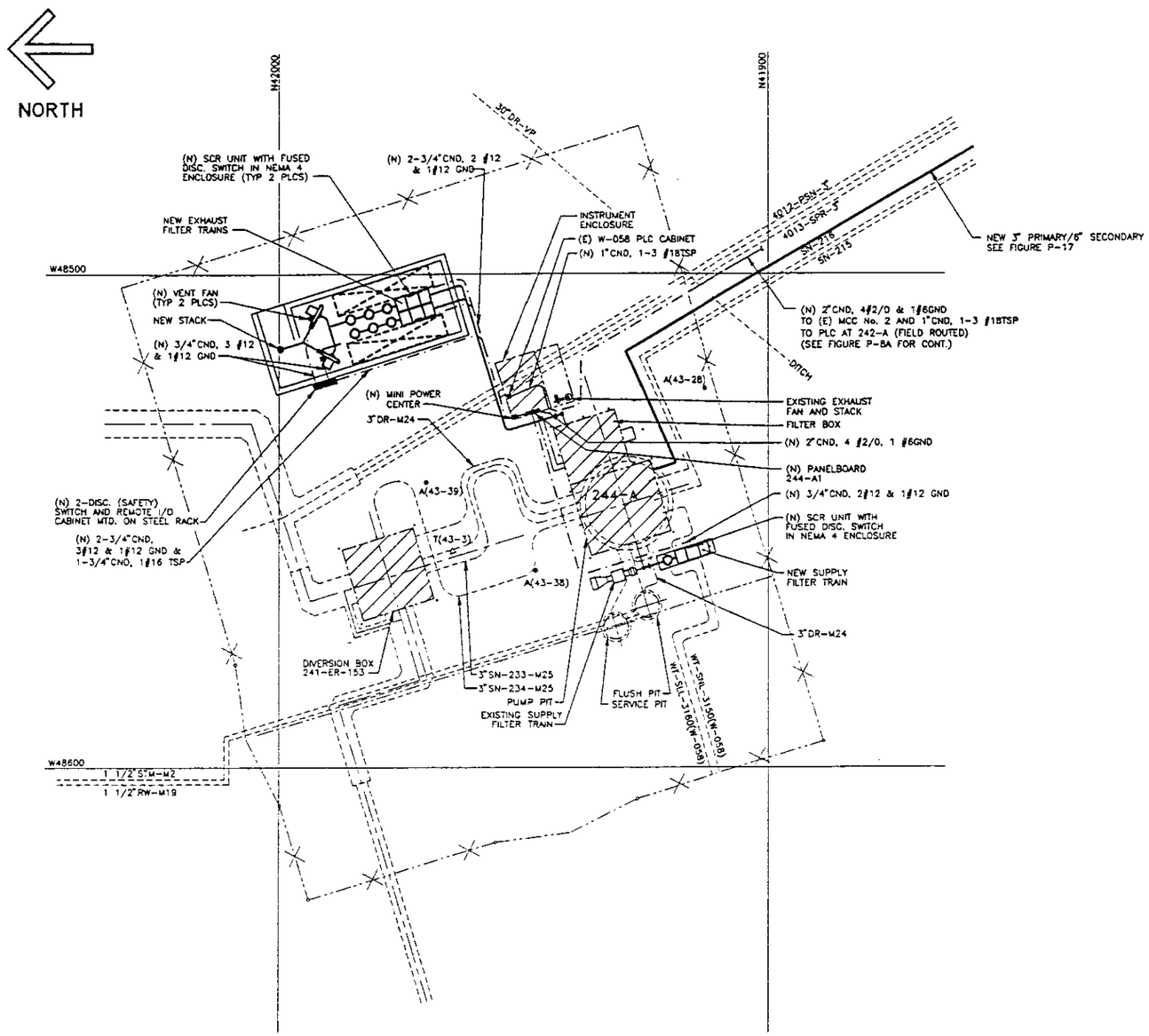

LEGEND

	EXST STRUCTURE, PIT BLDG, ETC.
— — —	CENTERLINE
- - - - - -	EXISTING PIPING
—X—	PERIMETER FENCE
— · — · —	NEW UNDERGROUND CONDUIT
———	NEW EXHAUST DUCTWORK
═══	NEW TRANSFER PIPING
•	POWER POLE
(E)	EXISTING
(N)	NEW
C	NEW CONDUIT
WP	WEATHERPROOF
TSP	TWISTED SHIELDED PAIR

NOTE

1. THIS SITE PLAN PROVIDES LOCATIONS OF MAJOR EQUIPMENT AND CONDUIT RUNS AS PROVIDED FOR IN PROJECT W-314. STRUCTURES AND COMPONENTS ARE IDENTIFIED IN THE CDR TEXT WHERE THE UPGRADES WILL BE PERFORMED.

U.S. DEPARTMENT OF ENERGY
RICHLAND OPERATIONS OFFICE
KCP KAISER HANFORD COMPANY

SITE PLAN
244-A DCRT

PROJECT W-314 CDR
FIGURE P-11
SCALE NONE

PLOT SCALE 1=120 KEHCAD

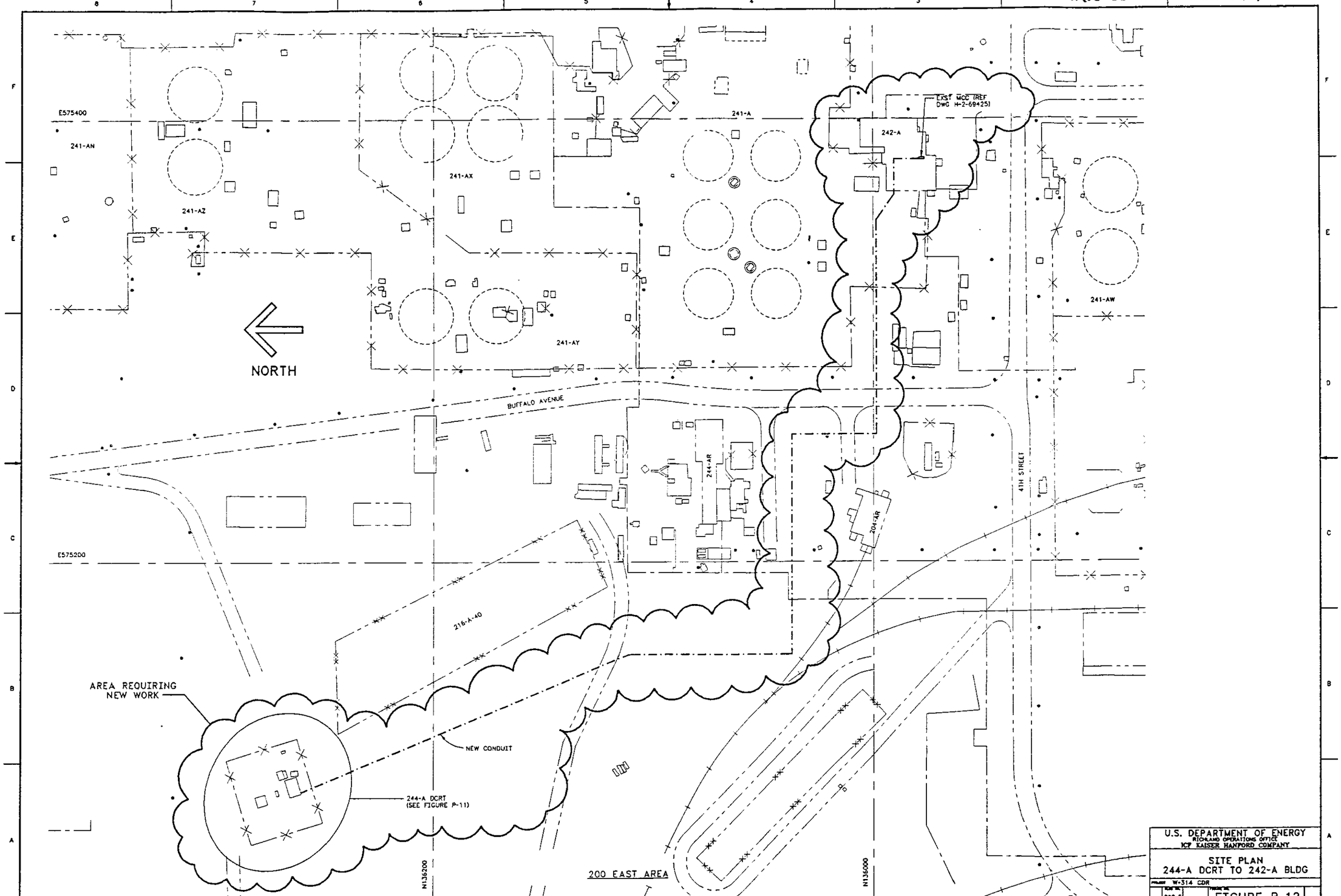
E575400
241-AN
241-AZ
241-AX
241-A
EXST MCC (REF DWG H-2-69425)
242-A
241-AW
241-AY
NORTH
BUFFALO AVENUE
244-AR
204-AR
4TH STREET
E575200
216-A-40
AREA REQUIRING NEW WORK
NEW CONDUIT
244-A DCRT (SEE FIGURE P-11)
N136200
200 EAST AREA
N136000
U.S. DEPARTMENT OF ENERGY
RICHLAND OPERATIONS OFFICE
BCF KAISER HANFORD COMPANY
SITE PLAN
244-A DCRT TO 242-A BLDG
W-314 CDR
200-E
FIGURE P-12
NONE
2 PLOT SCALE: 1=1

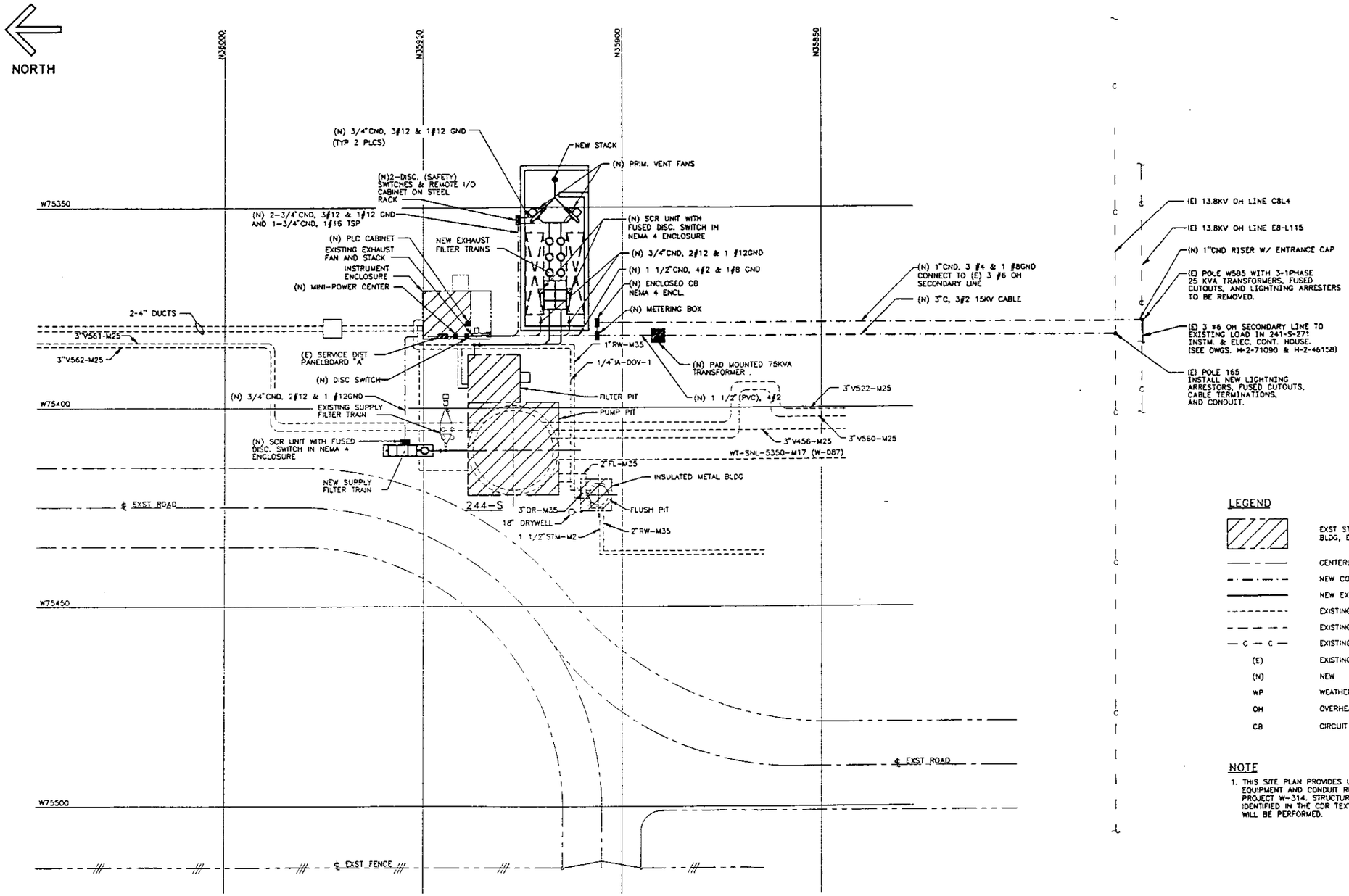

LEGEND

	EXST STRUCTURE, PIT BLDG, ETC.
	CENTERLINE
	NEW CONDUIT
	NEW EXHAUST DUCTWORK
	EXISTING PIPING
	EXISTING ELECTRICAL LINE
— C — C —	EXISTING OVERHEAD ELECTRICAL LINE
(E)	EXISTING
(N)	NEW
WP	WEATHERPROOF
OH	OVERHEAD
CB	CIRCUIT BREAKER

NOTE

1. THIS SITE PLAN PROVIDES LOCATIONS OF MAJOR EQUIPMENT AND CONDUIT RUNS AS PROVIDED FOR IN PROJECT W-314. STRUCTURES AND COMPONENTS ARE IDENTIFIED IN THE CDR TEXT WHERE THE UPGRADES WILL BE PERFORMED.

U.S. DEPARTMENT OF ENERGY
RICHLAND OPERATIONS OFFICE
ICP KAISER HANFORD COMPANY

SITE PLAN
244-S DCRT

PROJECT W-314 CDR
DWG NO. 244S
FIGURE P-13
SCALE NONE

2 PLOT SCALE 1-120 | KEHCAD

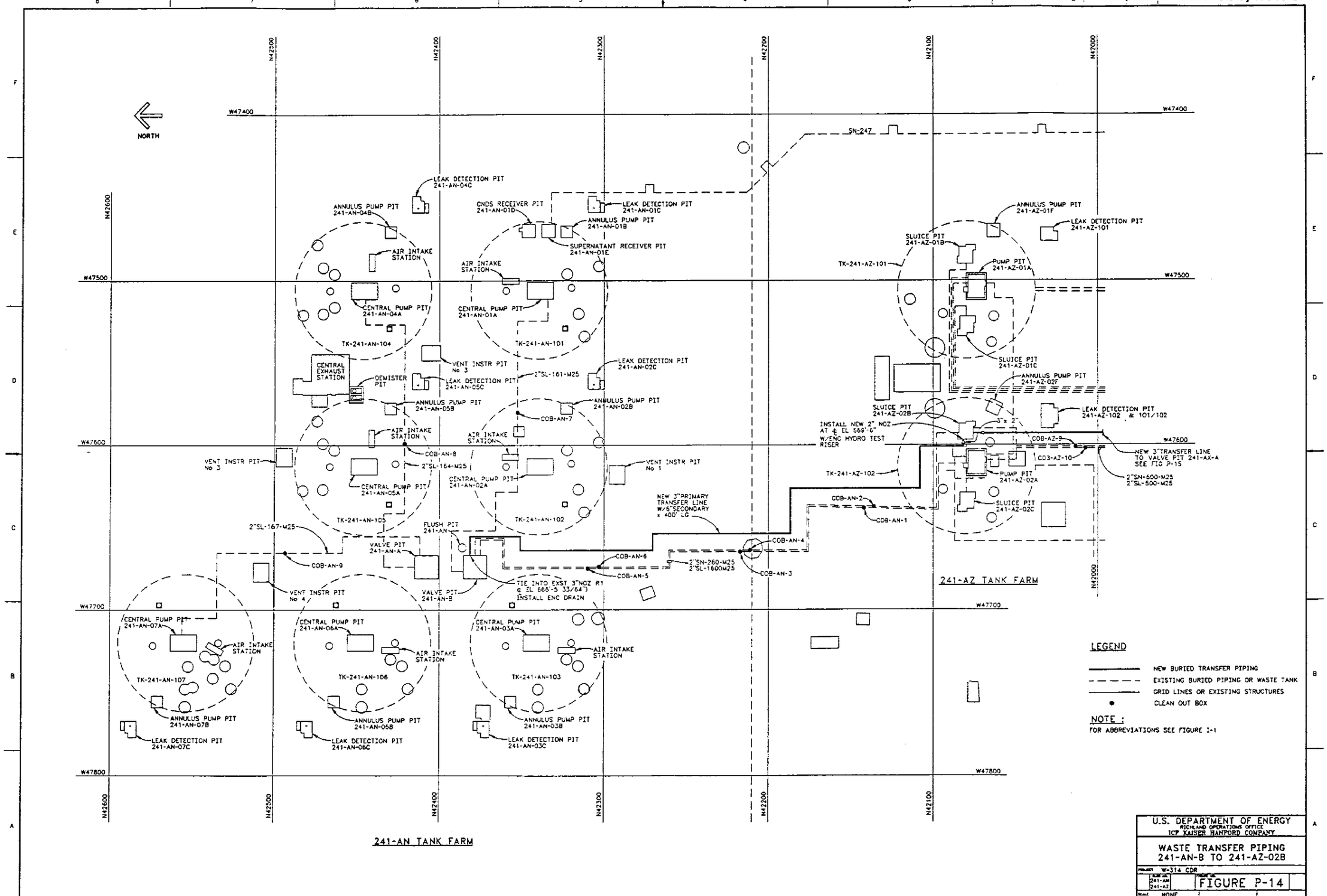
NORTH
W47400
W47500
W47600
W47700
W47800
N42600
N42500
N42400
N42300
N42200
N42100
N42000
N47000
SN-247
LEAK DETECTION PIT 241-AN-04C
ANNULUS PUMP PIT 241-AN-04B
AIR INTAKE STATION
CENTRAL PUMP PIT 241-AN-04A
TK-241-AN-104
CENTRAL EXHAUST STATION
DEMISTER PIT
VENT INSTR PIT No 3
LEAK DETECTION PIT 241-AN-05C
ANNULUS PUMP PIT 241-AN-05B
COB-AN-8
2"SL-164-M25
CENTRAL PUMP PIT 241-AN-05A
TK-241-AN-105
2"SL-167-M25
COB-AN-9
VENT INSTR PIT No 4
CENTRAL PUMP PIT 241-AN-07A
TK-241-AN-107
ANNULUS PUMP PIT 241-AN-07B
LEAK DETECTION PIT 241-AN-07C
CENTRAL PUMP PIT 241-AN-06A
TK-241-AN-106
ANNULUS PUMP PIT 241-AN-06B
LEAK DETECTION PIT 241-AN-06C
CNDS RECEIVER PIT 241-AN-01D
LEAK DETECTION PIT 241-AN-01C
ANNULUS PUMP PIT 241-AN-01B
SUPERNATANT RECEIVER PIT 241-AN-01E
CENTRAL PUMP PIT 241-AN-01A
TK-241-AN-101
LEAK DETECTION PIT 241-AN-02C
2"SL-161-M25
ANNULUS PUMP PIT 241-AN-02B
COB-AN-7
VENT INSTR PIT No 1
CENTRAL PUMP PIT 241-AN-02A
TK-241-AN-102
FLUSH PIT 241-AN-
VALVE PIT 241-AN-A
VALVE PIT 241-AN-B
TIE INTO EXST 3"NOZ @ EL 669'-5 33/64" INSTALL ENC DRAIN
NEW 3"PRIMARY TRANSFER LINE W/6"SECONDARY x 400' LG
COB-AN-6
COB-AN-5
2"SN-260-M25
2"SL-1600M25
COB-AN-4
COB-AN-3
CENTRAL PUMP PIT 241-AN-03A
TK-241-AN-103
ANNULUS PUMP PIT 241-AN-03B
LEAK DETECTION PIT 241-AN-03C
241-AN TANK FARM
ANNULUS PUMP PIT 241-AZ-01F
LEAK DETECTION PIT 241-AZ-101
SLUICE PIT 241-AZ-01B
TK-241-AZ-101
PUMP PIT 241-AZ-01A
SLUICE PIT 241-AZ-01C
ANNULUS PUMP PIT 241-AZ-02F
SLUICE PIT 241-AZ-02B
LEAK DETECTION PIT 241-AZ-102 & 101/102
INSTALL NEW 2" NOZ AT @ EL 669'-6" W/ENC HYDRO TEST RISER
3"x 2"
COB-AZ-9
COB-AZ-10
NEW 3"TRANSFER LINE TO VALVE PIT 241-AX-A SEE FIG P-15
TK-241-AZ-102
PUMP PIT 241-AZ-02A
2"SN-600-M25
2"SL-500-M25
COB-AN-2
COB-AN-1
SLUICE PIT 241-AZ-02C
241-AZ TANK FARM
LEGEND
NEW BURIED TRANSFER PIPING
EXISTING BURIED PIPING OR WASTE TANK
GRID LINES OR EXISTING STRUCTURES
CLEAN OUT BOX
NOTE :
FOR ABBREVIATIONS SEE FIGURE I-1
U.S. DEPARTMENT OF ENERGY
RICHLAND OPERATIONS OFFICE
ICF KAISER HANFORD COMPANY
WASTE TRANSFER PIPING
241-AN-B TO 241-AZ-02B
W-314 CDR
241-AN
241-AZ
FIGURE P-14
NONE
PLOT SCALE: 1=240
KEHCAD

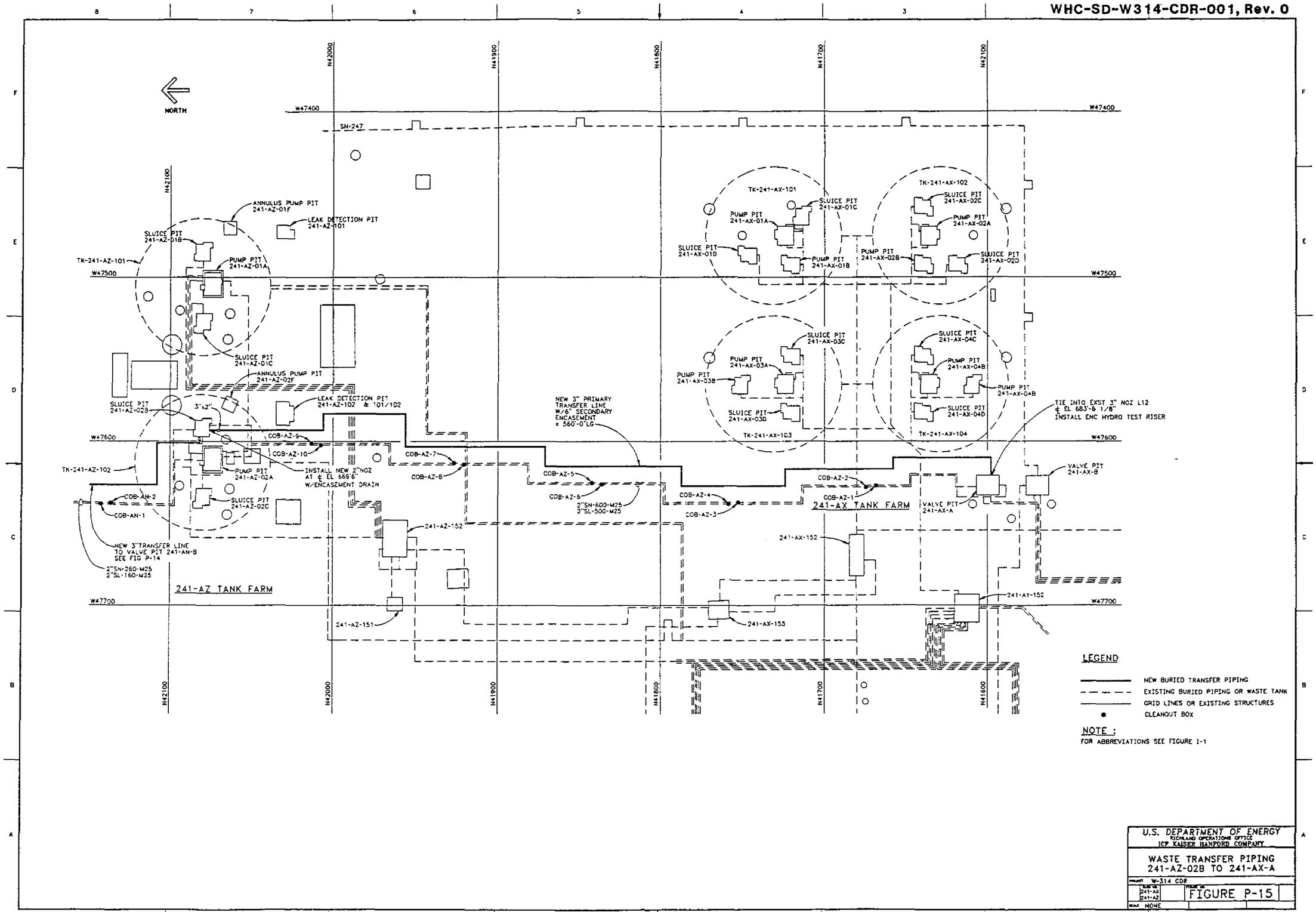
NORTH
W47400
W47500
W47600
W47700
N42000
N41900
N41800
N41700
N42100
N41600
SN-247
TK-241-AX-101
TK-241-AX-102
TK-241-AX-103
TK-241-AX-104
SLUICE PIT 241-AX-01C
PUMP PIT 241-AX-01A
SLUICE PIT 241-AX-01D
PUMP PIT 241-AX-01B
SLUICE PIT 241-AX-02C
PUMP PIT 241-AX-02A
PUMP PIT 241-AX-02B
SLUICE PIT 241-AX-02D
SLUICE PIT 241-AX-03C
PUMP PIT 241-AX-03A
PUMP PIT 241-AX-03B
SLUICE PIT 241-AX-03D
SLUICE PIT 241-AX-04C
PUMP PIT 241-AX-04B
PUMP PIT 241-AX-04B
SLUICE PIT 241-AX-04D
TIE INTO EXST 3" NOZ L12 @ EL 683'-6 1/8" INSTALL ENC HYDRO TEST RISER
VALVE PIT 241-AX-B
VALVE PIT 241-AX-A
241-AX TANK FARM
241-AX-152
241-AY-152
241-AX-155
NEW 3" PRIMARY TRANSFER LINE W/6" SECONDARY ENCASEMENT x 560'-0"LG
COB-AZ-1
COB-AZ-2
COB-AZ-3
COB-AZ-4
COB-AZ-5
COB-AZ-6
COB-AZ-7
COB-AZ-8
2"SN-600-M25
2"SL-500-M25
ANNULUS PUMP PIT 241-AZ-01F
LEAK DETECTION PIT 241-AZ-101
SLUICE PIT 241-AZ-01B
TK-241-AZ-101
PUMP PIT 241-AZ-01A
SLUICE PIT 241-AZ-01C
ANNULUS PUMP PIT 241-AZ-02F
LEAK DETECTION PIT 241-AZ-102 & 101/102
SLUICE PIT 241-AZ-02B
3"x2"
COB-AZ-9
COB-AZ-10
TK-241-AZ-102
PUMP PIT 241-AZ-02A
INSTALL NEW 2"NOZ AT @ EL 669'6" W/ENCASEMENT DRAIN
COB-AN-2
COB-AN-1
SLUICE PIT 241-AZ-02C
241-AZ-152
NEW 3"TRANSFER LINE TO VALVE PIT 241-AN-8 SEE FIG P-14
2"SN-260-M25
2"SL-160-M25
241-AZ TANK FARM
241-AZ-151
LEGEND
NEW BURIED TRANSFER PIPING
EXISTING BURIED PIPING OR WASTE TANK
GRID LINES OR EXISTING STRUCTURES
CLEANOUT BOX
NOTE :
FOR ABBREVIATIONS SEE FIGURE 1-1
U.S. DEPARTMENT OF ENERGY
RICHLAND OPERATIONS OFFICE
ICP KAISER HANFORD COMPANY
WASTE TRANSFER PIPING
241-AZ-02B TO 241-AX-A
W-314 CDR
241-AX
241-AZ
FIGURE P-15
NONE
PLOT SCALE: 1=240
KEHCAD

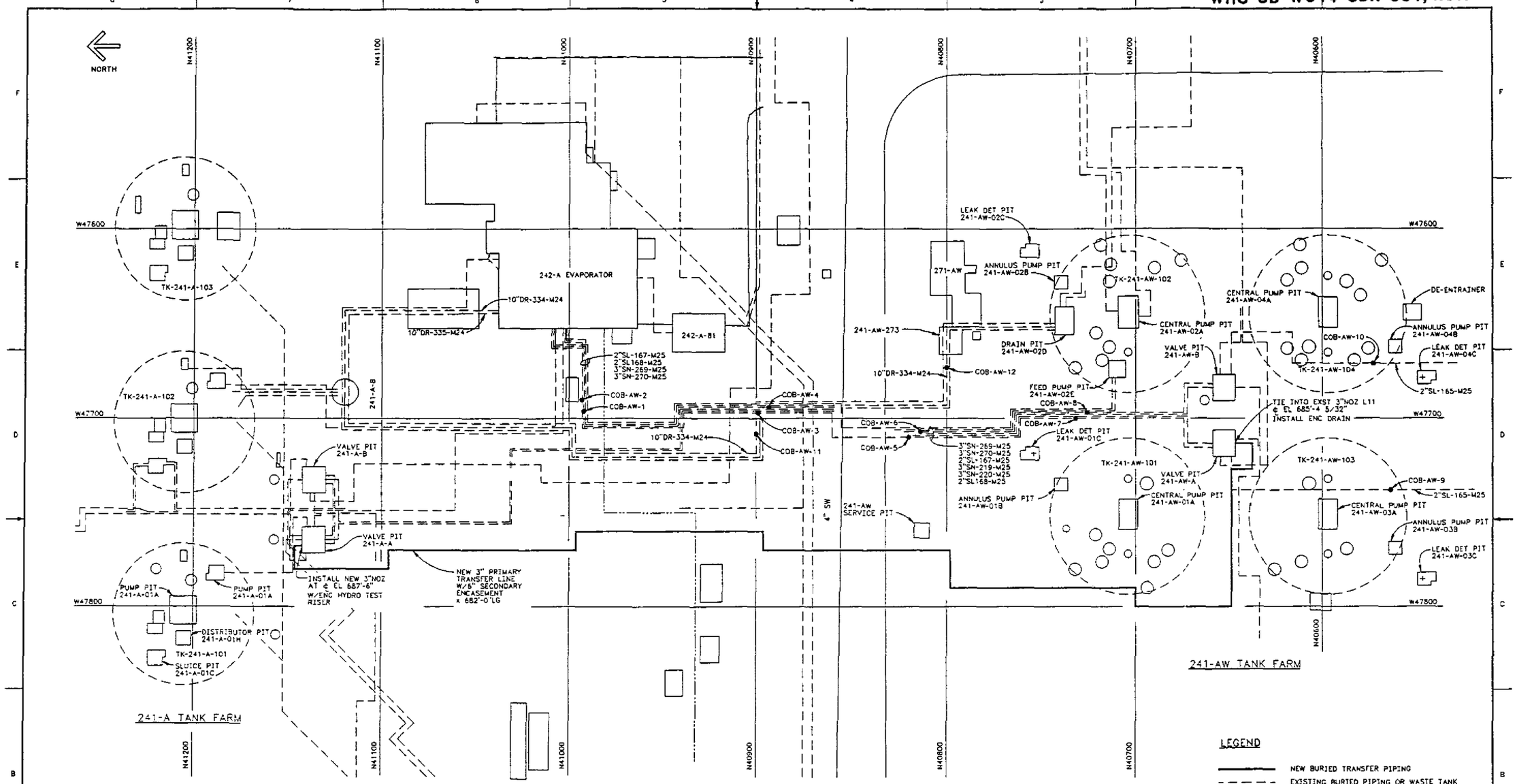

U.S. DEPARTMENT OF ENERGY
RICHLAND OPERATIONS OFFICE
ICF KAISER HANFORD COMPANY

WASTE TRANSFER PIPING
241-A-A TO 241-AW-A

PROJECT W-314 CDR
SCALE 241-A 241-AW
FIGURE P-16
SCALE NONE

PLOT SCALE: 1=240

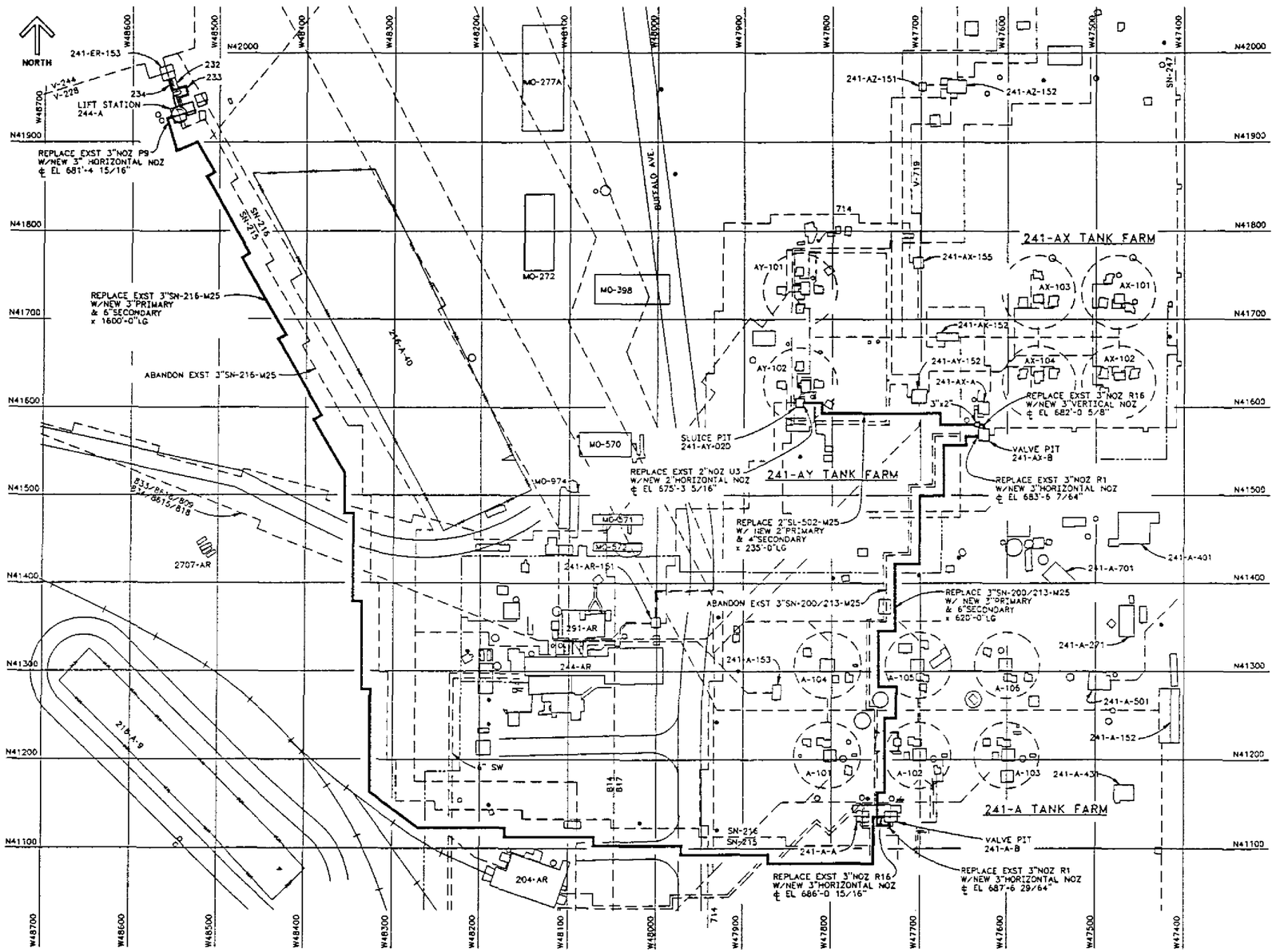

LEGEND

- NEW BURIED TRANSFER PIPING
- EXISTING BURIED PIPING OR WASTE TANK
- GRID LINES OR EXISTING ROADS & STRUCTURES
- EXISTING ABOVE GRADE PIPING
- EXISTING FENCE
- EXISTING RAILROAD

NOTE :
FOR ABBREVIATIONS SEE FIGURE I-1

U.S. DEPARTMENT OF ENERGY
RICHLAND OPERATIONS OFFICE
ICF KAISER HANFORD COMPANY

WASTE TRANSFER PIPING
244-A TO 241-A-B
241-A-B TO 241-AX-B
241-AX-B TO 241-AY-02D

PROJECT W-314 CDR
SCALE 200-E
FIGURE P-17
Sheet NONE

2 PLOT SCALE: 1=600

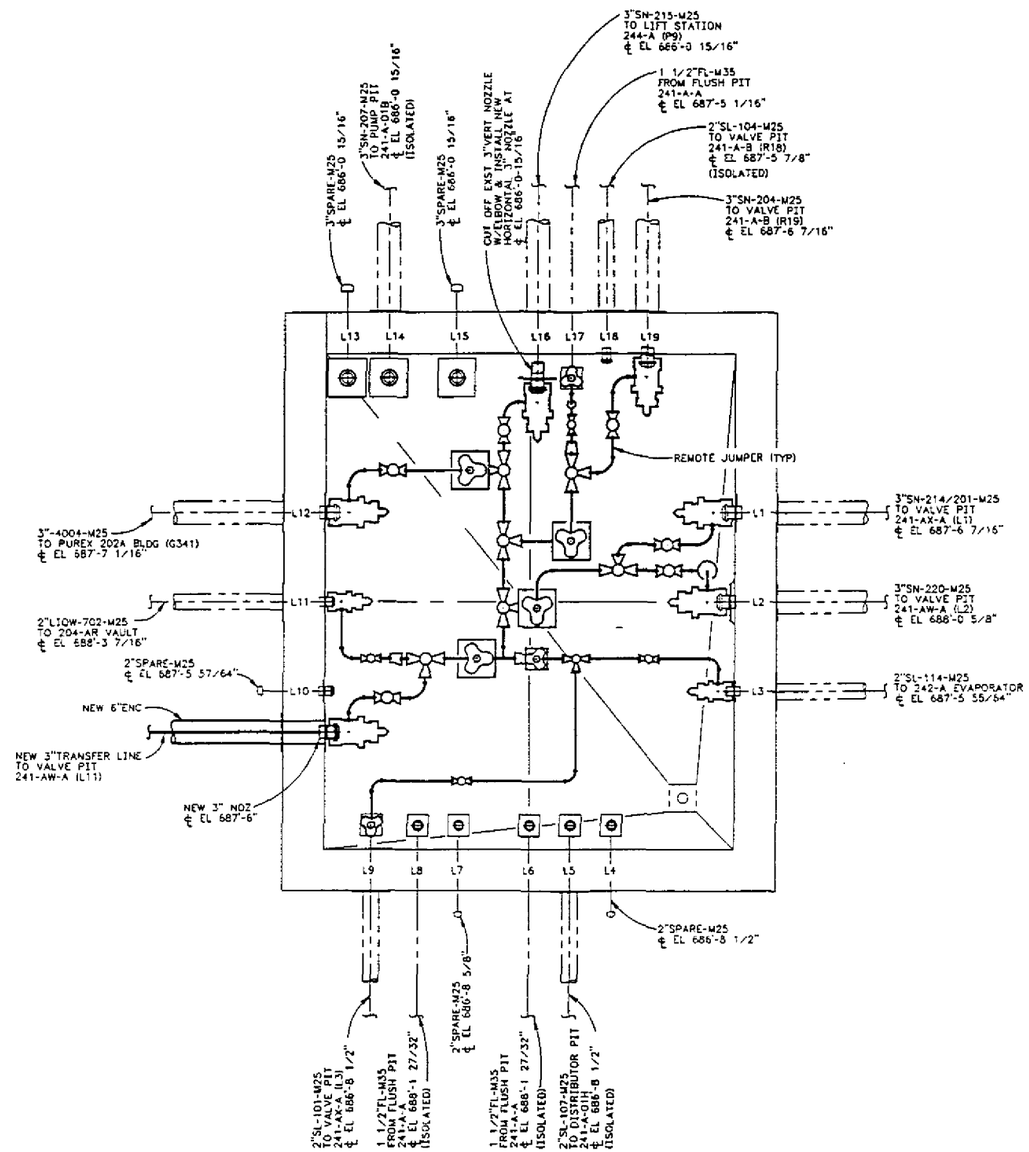

241-A-A
VALVE PIT ARRANGEMENT

LEGEND

- EXISTING TRANSFER PIPING
- NEW TRANSFER PIPING OR JUMPER COMPONENT
- INTEGRAL SEAL BLOCK REMOTE HORIZONTAL CONNECTOR
- INTEGRAL SEAL BLOCK REMOTE VERTICAL CONNECTOR
- REMOTE HORIZONTAL NOZZLE W/ KICK PLATE
- REMOTE VERTICAL NOZZLE W/ KICK PLATE
- BALL VALVE
- BALL VALVE 3-WAY
- REDUCER
- ENCASEMENT

U.S. DEPARTMENT OF ENERGY
RICHLAND OPERATIONS OFFICE
ICF KAISER HANFORD COMPANY

241-A-A
VALVE PIT ARRANGEMENT

PROJECT W-314 CDR
SCALE 241-A-A
FIGURE FIGURE P-18
SCALE NONE

PLOT SCALE: 1=16