START

0021936

Final

Meeting Minutes Transmittal/Approval
Unit Manager's Meeting: 300-FF-5 Operable Unit
EPA Conference Room, Richland, Washington
April 22, 1992

FROM/APPROVAL: Robert H. McLeod Date 5-25-92
Bob McLeod, 300-FF-5 Unit Manager, RL (A5-19)

APPROVAL: David R. Einan Date 28 May 92.
Dave Einan, 300-FF-5 Unit Manager, EPA (B5-01)

APPROVAL: Charles S. Cline Date 5/25/92
Charles S. Cline, 300-FF-5 Unit Manager, WA Department of Ecology

---

Meeting Minutes are attached. Minutes are comprised of the following:

Attachment #1 - Meeting Summary/Summary of Commitments and Agreements
Attachment #2 - Agenda For 300-FF-5 Meeting
Attachment #3 - Attendance List for 300-FF-1 and 300-FF-5
Attachment #4 - Action Items Status List
Attachment #5 - 300-FF-5 Work Progress
Attachment #6 - River Stage Monitoring
Attachment #7 - Surface Geophysics Status
Attachment #8 - Groundwater Modeling
Attachment #9 - Geologic Logs

JUL 1992
RECEIVED
EDMC

PREPARED BY: Suzanne Clarke Date 5/25/92.
Bill Mallio, Suzanne Clarke, GSSC

CONCURRENCE BY: L C Hulstrom Date 5/28/92
L. Hulstrom, WHC FF-5 RI Coordinator

9212632094

Attachment #1

Meeting Summary

Unit Manager's Meeting: 300-FF-5 Operable Unit
April 22, 1992

1. SIGNING OF THE MARCH 300-FF-5 MEETING MINUTES:

Minutes from the March 300-FF-5 Unit Managers Meeting were reviewed and approved after two minor changes to attachment 1.

2. ACTION ITEM UPDATE (See Attachment #4):

All previous action items have been closed.

3. NEW ACTION ITEMS (INITIATED MARCH 26, 1992):

No new Action Items were added at this meeting.

4. STATUS AND SCHEDULE OF TASKS:

- George Henckel presented the monthly update on task status for the 300-FF-5 Operable Unit (for details see attachments 5, 6, and 9). Because this Unit Manager's Meeting was rescheduled from the 23 to the 22 with very little notice to the Unit Manager, attachments 5, 6, and 9 were not distributed at the meeting.

- Joseph Kunk presented the status of surface geophysics activities at 300-FF-5 (see attachment 7).

- David Duranceau presented a briefing on the status of groundwater modeling at 300-FF-5 (see attachment 8).

5. INFORMATION ITEMS:

- Dave Einan (EPA) wanted it noted that no advance notification was provided to EPA for Task 7 sampling in March. He requested notification in advance.

- Ward Staubitz (USGS) requested copy of the write-up on groundwater modeling results.

9 2 1 2 0 1 3 2 0 9 5

Attachment #2

AGENDA
Unit Manager's Meeting: 300-FF-5 Operable Unit
EPA Conference Room, Richland, Washington
April 22, 1992

Introduction:

Status:

- Action Items
- Remedial Investigation
- Schedule

Issues:

Other Topics:

- Status of Geophysical Data Reduction (J. Kunk)
- Status of Modeling Activities (D. Duranceau)

Agreements and Commitments

Presenter - George Henckel for Larry Hulstrom

9 2 1 2 6 4 3 2 0 9 6

Attachment #3
300-FF-5 and
300-FF-1
Official Attendance Record
April 23, 1992

Please print clearly and use black ink

PRINTED NAME	SIGNATURE	ORGANIZATION	O.U. ROLE	TELEPHONE
William J Mallio	William J Mallio	SWCC	[illegible]	[illegible]
Ward Stoubitz	[illegible]	USGS	EPA Support	[illegible]
Dave Finan		EPA	[illegible]	[illegible]
Michael Frank	MA Frank	WHC	OU Assistant	509-376-2731
Ron Belden	RD Belden	WHC	OU ASST Lead OU SUPPORT	[illegible]
Richard Hibbert		Ecology	Proj Mgr.	[illegible]
Jerry Chuntan	[illegible]	PRC-FMI	EPA Support	[illegible]
[illegible]	[illegible]	DOE-RL	[illegible]	[illegible]
Lou Spaulding	[illegible]	FHC	[illegible]	[illegible]
Suzanne Clarke	[illegible]	SWCC	[illegible]	[illegible]
Joseph Kunk	[illegible]	WHC	[illegible]	[illegible]
George C Henckel	[illegible]	WHC	OU RI Remediation	376 1994
Chuck Cline	[illegible]	Ecology	Hydrogeo	[illegible]
Jack Sonnichsen	[illegible]	WHC	300-FF-5 Support	[illegible]
David Durancean	David A. Durancean	WHC	300-FF5 Support	509-376-6701
[illegible]	[illegible]	SWCC	[illegible]	[illegible]
Hal Dawney	H. D. Dawney	WHC	ER Program Office	376-5539

Attachment #4

Commitments/Agreements Status List
Unit Manager's Meeting: 300-FF-5 Operable Unit

April 22, 1992

Item No.	Action	Status

NO OPEN ITEMS AT THIS TIME

9 2 1 2 6 0 3 2 0 9 3

0 Remedial Investigation Activities

Well Drilling

Well Specifications for Tasks 2, 3, and 4

Activity Completed.

Groundwater Monitoring Wells

Activity Completed.

Geologic Characterization Borehole

Drilling of the first 60 feet with a cable tool drillrig was initiated on March 31 and completed on April 10, 1992. Preparations have been completed and as of April 21, 1992, drilling with the wireline mud rotary drillrig was initiated. To maximize the data obtained from this borehole the depth of drilling will be extended to the top of basalt rather than just to the top of the M3 or lower mud layer. Appropriate measures will be taken to insure that seals are established, where and when necessary, to prevent possible aquifer communication. In addition, a vertical seismic profile will also be run in order to enhance correlations between geophysical records and actual borehole stratigraphy. In order to accomplish these activities the projected completion date of this borehole will be extended to June 5, 1992, an extension of about 3 weeks.

Pumping Wells

The aquifer pump tests on boreholes 7T and 4T have been completed and both boreholes have been successfully abandoned. Results from the pump tests are being further analyzed. Additional details will be provided during the May Unit Managers meeting.

Existing Well Maintenance

Well remediation work has been completed on the initial 8 wells (1-1, 2-1, 3-9, 3-12, 4-1, 4-7, 4-9, and 6-1) that were identified. **Remediation work on the second group of 5 wells (1-2, 8-1, 8-2, 8-3, and 8-4) has now been completed. Identification of the next group of wells to be remediated is underway. Fitness for use surveys are ongoing in the remainder of the initially identified 25 wells.**

Task 1--Source Investigation

(Conducted in Source Operable Units)

9 2 1 2 6 3 2 0 9 9

April 22, 1992

0 Remedial Investigation Activities (continued)

Task 2--Geologic Investigation

Task 2a - Geophysical Surveys

Work is continuing to reduce data gathered to date. **An update will be provided at this meeting.**

Task 2b - 300-FF-5 Wide Geological Characterization

Work continues to utilize the stratigraphic information gained from the new wells drilled to update the geologic interpretation of the 300 Area. A draft report summarizing this information is currently in development.

Task 3--Soil Investigation

Surface Radiation Survey

Task completed.

Soil Sampling and Analysis

The status of this activity is similar to that reported last month. Progress has been made in finalizing geologic logs of all of the new wells. An example of the latest version is attached.

Due to the large number of data packages now being made available for validation it has become necessary to obtain additional subcontracted services for data validation. Services from IT Corporation are being obtained for validation of 300-FF-5 data.

Task 4--Groundwater Investigation

Task 4a - Hydrostratigraphy

Task 4b - Contaminant Distribution in Soil and Groundwater

A large portion of the chemical data from the first round of groundwater sampling has now been received. Validation of selected samples and data packages will begin as soon as subcontracted support is available. As yet little rad. data has been received.

The second round of groundwater sampling was initiated on April 9. Approximately 15 wells out of 62 will have been sampled by April 23.

9 2 1 2 6 4 3 2 1 0 0

0 Remedial Investigation Activities (continued)

Task 4c - Hydraulic Properties

Thirty transducers have been installed in wells 1-1, 1-7, 1-8, 1-9, 1-10B, 1-16B, 1-18A,B,C, 2-1, 3-9, 3-12, 4-1, 4-7, 4-9, 1A,B,C, 3A, 4A,B,C, 5A,B,C, 6-1, 7A,B,C, and 8A thus far. The transducer at the river monitoring station (SWS-1) has been receiving data since November 7, 1991. This leaves only 4 transducers to be installed. Two need well remediation prior to installation (1-2, 8-1) and 2 are near overhead powerlines (2-2, 5-1). **Temperature sensors have been installed in six wells (1-1, 2-1, 6-1, 4-1, 4-7, and 4-9) and at SWS-1.**

Task 4d - Aquifer Intercommunication - Well 399-1-16D

The next sampling of wells 16B and 16C is scheduled to occur the week of April 27. Results will be made available for discussion with the regulators soon after. Change form (300-FF-5-14) was provided for review at the March UMM and proposes to defer any attempts at abandoning well 16D until the Phase II RI. Approval of the change form is still pending.

Task 4e - Groundwater Modeling

Modeling efforts continue on schedule. An update will be provided at this meeting.

<u>Task 5--Surface-Water and Sediment Investigation</u>

Task 5a - Relative Data Compilation

Initiated in conjunction with site wide work and the 100 Areas. **A report entitled "Columbia River Monitoring Data Compilation", WHC-SD-EN-DP-024, was released in mid February.** This information will be included in the project files for use during the data evaluation phase. **Copies of this report have been previously transmitted to DOE and EPA. Additional copies are available for Ecology, if needed.**

Task 5b - Riverbank Springs

The river stage level continues to be at high levels which have prevented the acquisition of spring samples. Monitoring of the SWS-1 monitoring station will continue and sampling will occur when a low period can be predicted (likely next August to September). **An update on the river stage level is attached. Geodetic survey of the spring locations has been completed. An update on the plans for the fall sampling will be provided at the May UMM.**

9 2 1 2 6 1 3 2 1 0 1

0 Remedial Investigation Activities (continued)

Task 5c - Near Shore River Water and Sediment

Approximately 40 near shore river water samples (defined in Table 6 of the SAP) will be taken during the completion of Task 5b, and submitted to OSM for analysis. This work can not be accomplished until Task 5b is performed in order to provide the correlation with the riverbank springs.

Task 5d - Transect River Water

Coordination with the L-045 Project for the Process Sewer effluent treatment facility will continue. Assessment of the data obtained from this work will define further characterization activities. A copy of a final report on the results of characterization activities is being obtained and PNL has been requested to compare this against the workscope identified in the workplan.

Task 5e - River Stage

One of the two river stage measurement stations (SWS-1) has been active since November 7, 1991. The location of station SWS-2 has been confirmed. Based on an evaluation performed by PNL after review of the draft report written by C. Sherwood it is not advisable to place the second station at SWS-2 because of its close proximity to SWS-1 (approximately 1/2 mile apart). **Alternatives are still being discussed. A technical review meeting to discuss this issue will be scheduled sometime within the next month.**

Task 5f - Boundary Conditions Along the Columbia River

Scheduled for FY 1992, if required.

Task 5g - Numerical Algorithms for Groundwater to Surface Water Dispersion

Scheduled for FY 1992, if required.

<u>Task 6--Air Investigation</u>

(Conducted in Source Operable Units and in coordination with well drilling activities.)

9 2 1 2 6 4 3 2 1 0 2

0 Remedial Investigation Activities (continued)

Task 7--Biota Investigations

Riparian Plants

All of the plant tissue samples (willow and mulberry tree, and reed canary grass) to be collected have been sampled. Additional samples were collected at the spring locations. A total of 22 sample locations were identified. All of the samples have now been sent to TMA/Norcal for analysis. Split samples have been sent to Weston for analysis. **Results for metals analysis for about 80 samples have been received by the OSM. Validation of selected samples and data packages will begin as soon as subcontracted support is available. As yet little rad. data has been received.**

Aquatic Biota

The second round of sampling for periphyton was completed on March 27, 1992. Preparations for shipment (ie., sample drying) are now underway. Sample shipment is expected to occur by April 24. Macrophytes and another round of periphyton will be collected again during May to June, 1992.

Task 8--Data Evaluation

Performed with data available from the RI when gathered, and supplemented as new information becomes available.

Task 9--Baseline Risk Assessment

Efforts will be initiated soon to begin this task with available data. The site wide methodology being developed as part of Milestone M-29-00 will be utilized as soon as it becomes available. Development of the 300-FF-5 risk assessment has been initiated in conjunction with the risk assessment for the 300-FF-1 OU.

Task 10--Preliminary Site Characterization Summary Report

Task 10a - Draft Report
Task 10b - Final Report

Phase 1 Feasibility Study - Remedial Alternatives Development

Efforts will be initiated in **July, 1992** to begin this task with available data.

9 2 1 2 6 1 3 2 1 0 3

River Stage in the 300 Area

SWS - 1

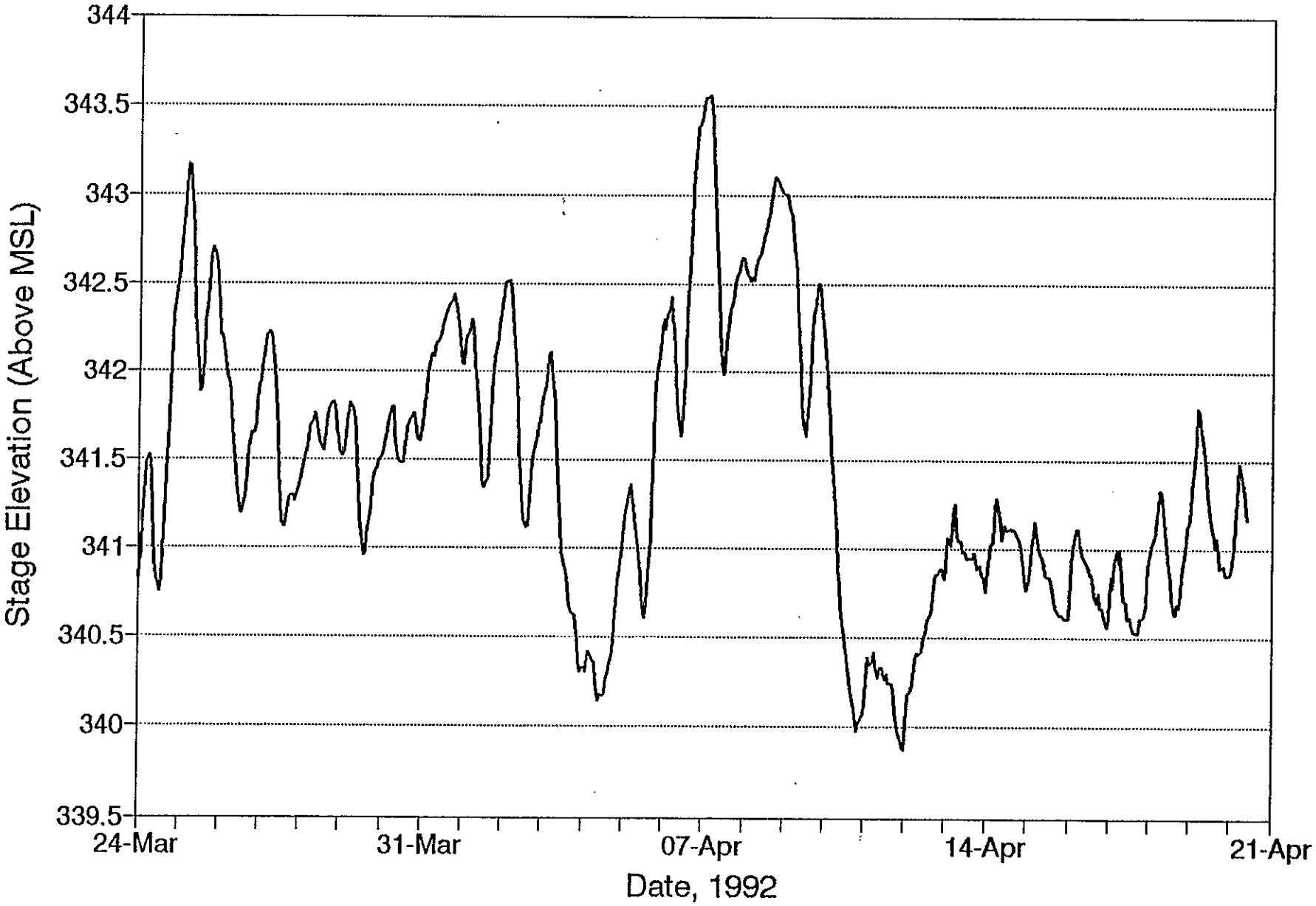

Attachment #7

300-FF-5 SURFACE GEOPHYSICS STATUS

JOSEPH KUNK

APRIL 22, 1992

9 2 1 2 6 4 3 2 1 0 5

300-FF-5 GEOPHYSICAL SURVEY STATUS

SEISMICS

Data Analysis Status

Vertical Seismic Profiles (VSP) in borehole 5T

EMI

Anomaly near borehole 1-18

9 2 1 2 6 4 3 2 1 0 6

300-FF-5

SEISMIC PROCESSING STATUS

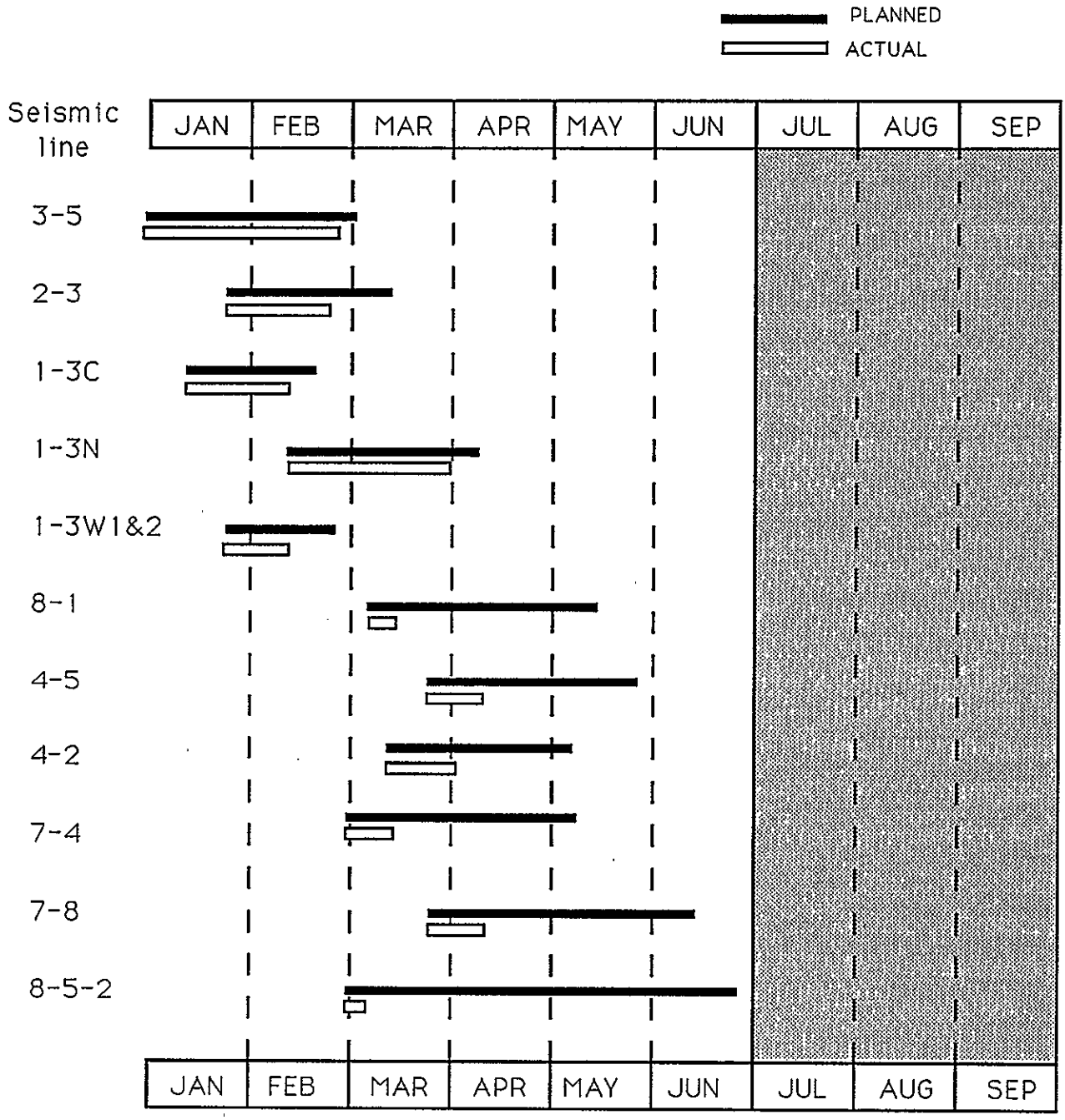

9 2 1 2 6 4 3 2 1 0 7

Basics of Vertical Seismic Profiling

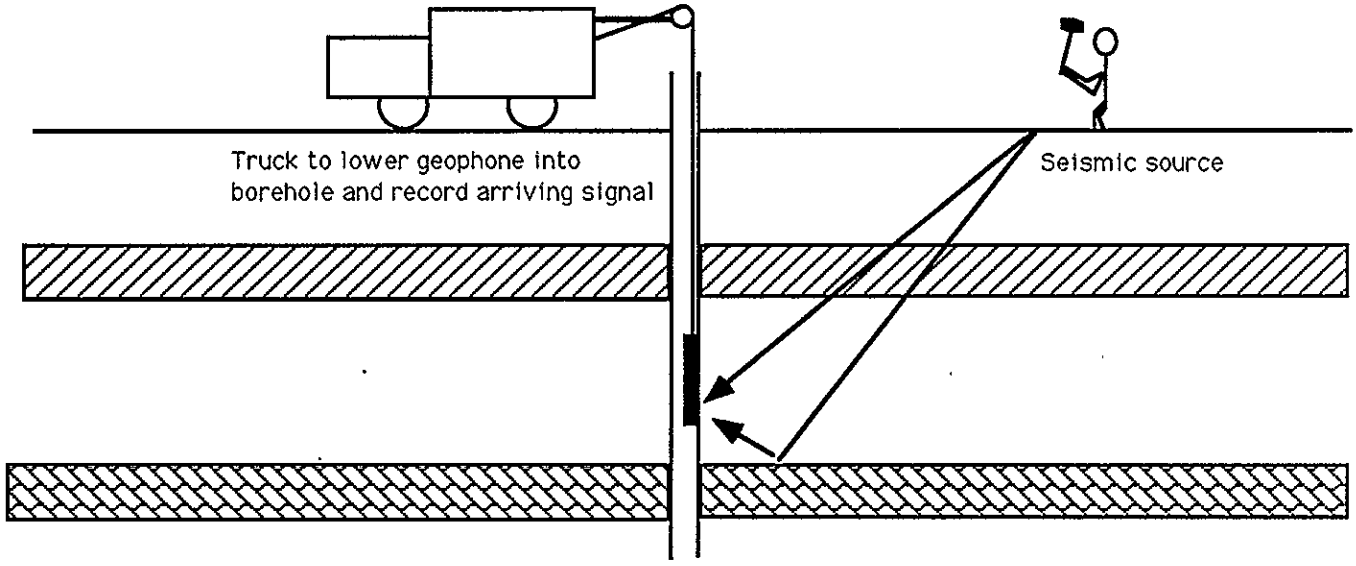

Direct arrival and reflection

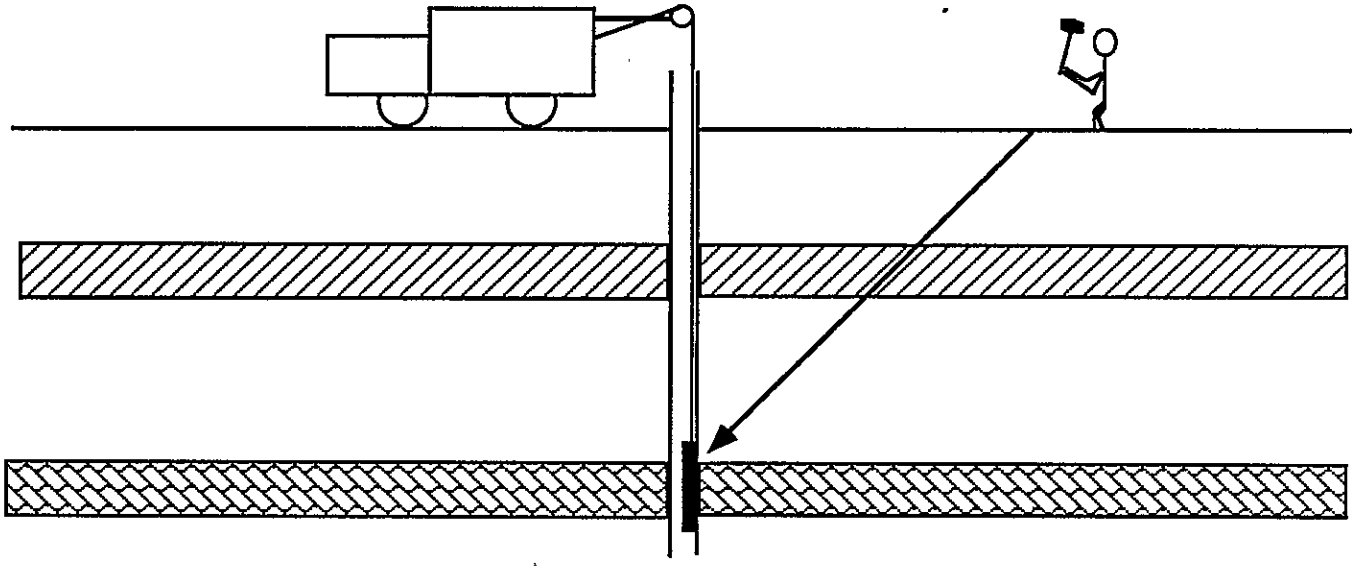

Direct arrival with geophone lowered

9 2 1 2 5 4 3 2 1 0 8

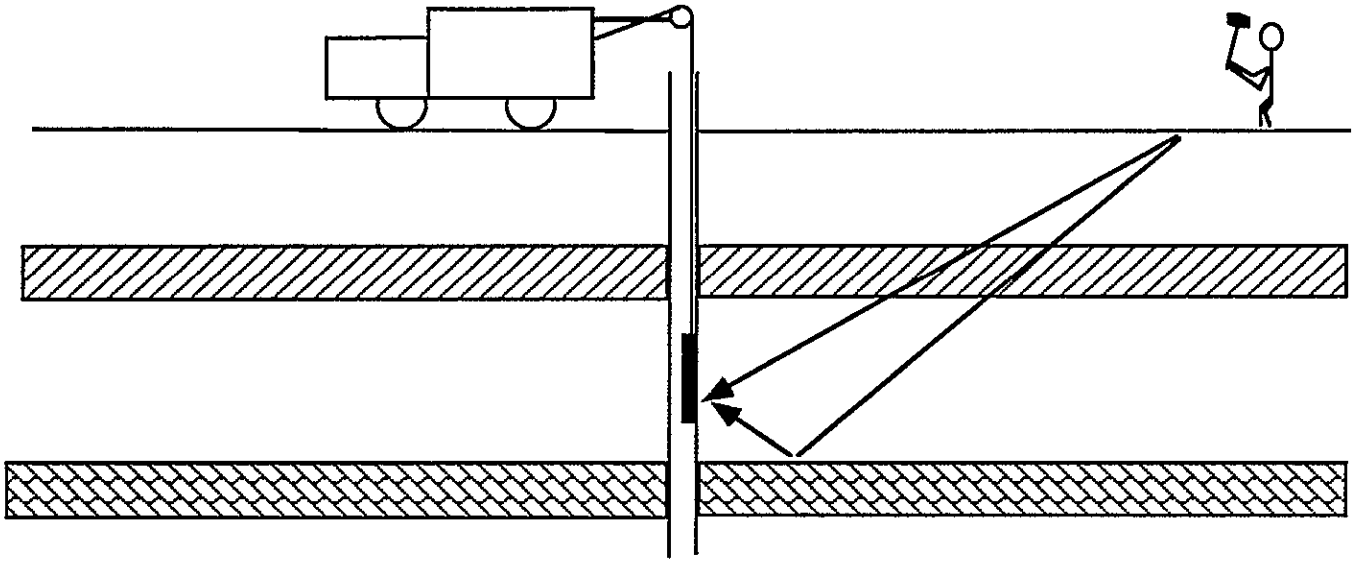

Seismic source moved

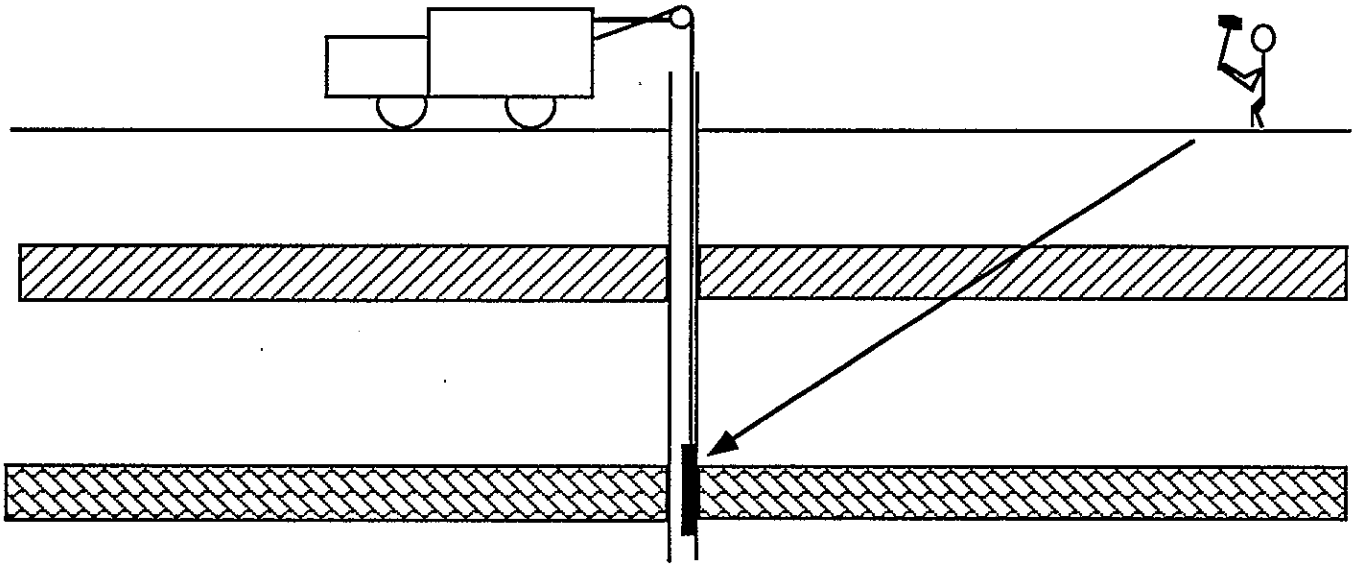

Seismic source and down hole geophone moved

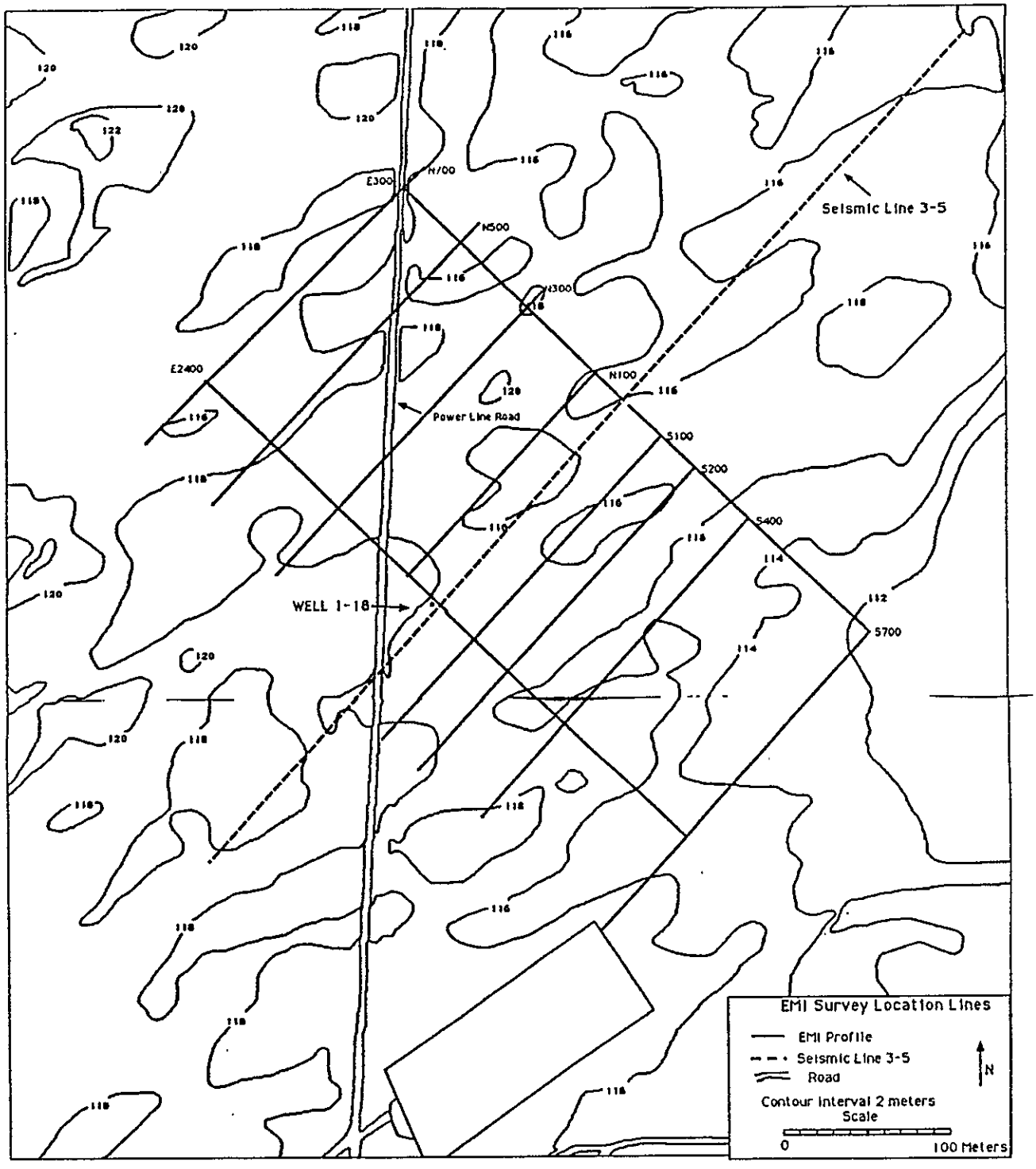

9 2 1 2 5 4 3 2 1 1 0

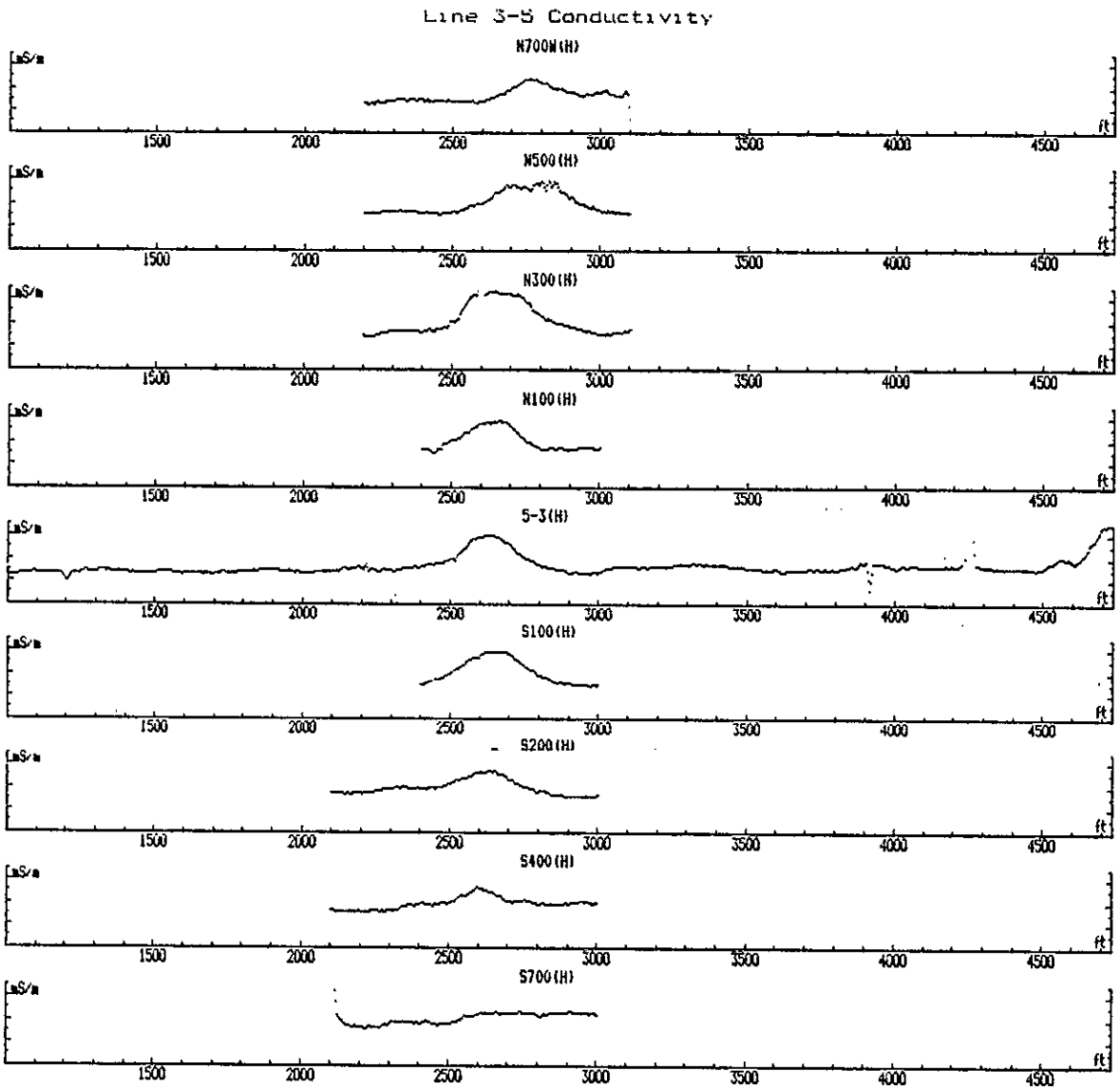

92126132111

300-FF-5 Groundwater Modeling Status Briefing

April 22, 1992

by
David A. Duranceau

Current Activities:

- Compiling hourly well and river stage information as it becomes available.

  This information will be used for future model calibration activities.

Hourly Well Data Status

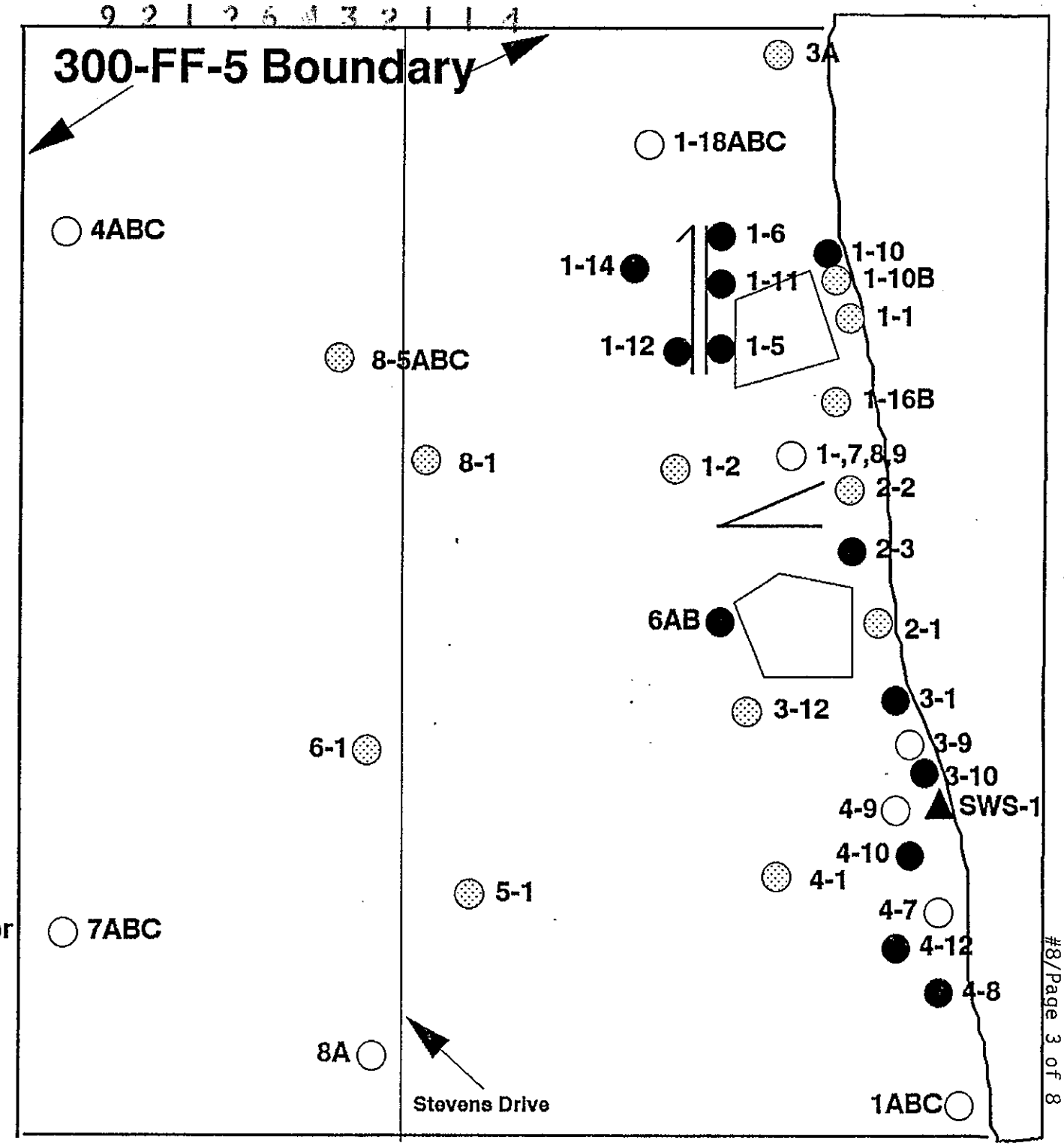

KEY:

- Hourly measurements currently available
- Reminaing wells identified for hourly measurements
- Other wells

Drawing Not to Scale

300 Area Wells 1-18A,B,&C and Columbia River Hydrograph

November 8, 1991 to January 1, 1992

(with adjusted river stage of +32 cm) *

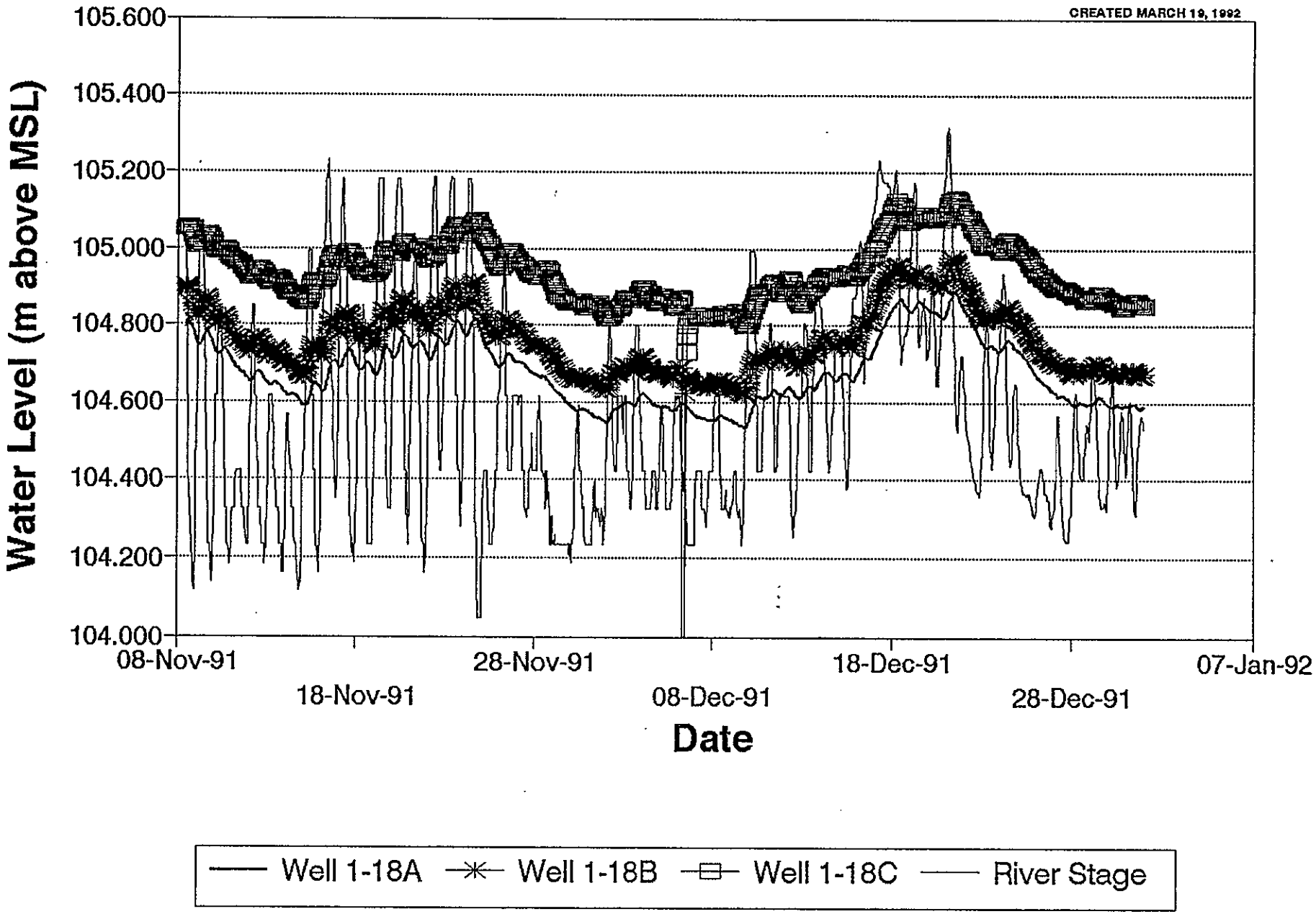

* Adjustment to correct for upstream/downstream river stage difference from SWS-1 assuming a river gradient of 1 foot per mile.

9 2 1 2 6 4 3 2 1 1 6

300 Area Well 1A, 1B, and Columbia River Hydrograph

November 23, 1991 to January 1, 1992

(with adjusted river stage of -18 cm) *

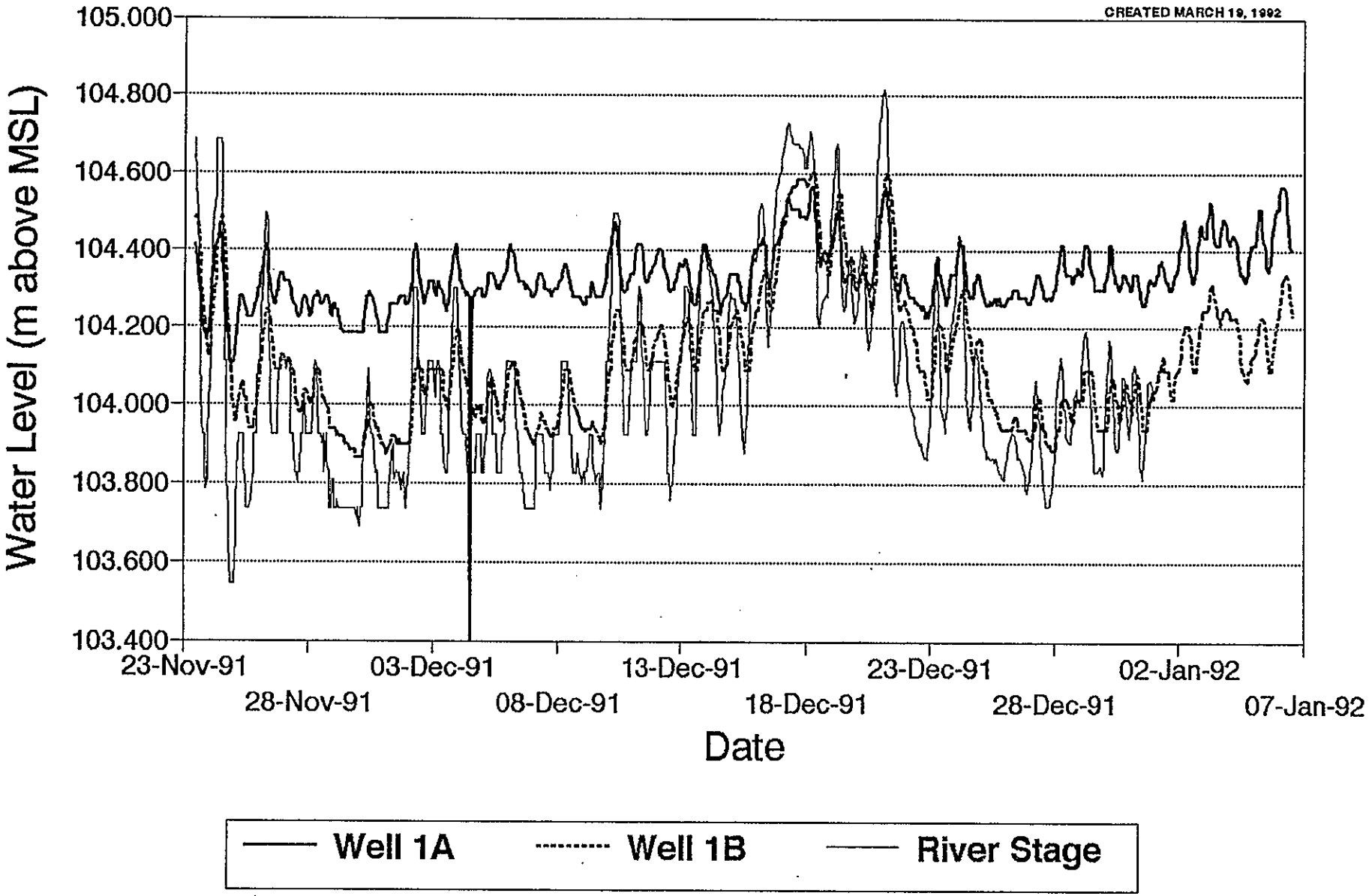

* Adjustment to correct for upstream/downstream river stage difference from SWS-1 assuming a river gradient of 1 foot per mile.

300 Area Well 1C and Columbia River Hydrograph

November 23, 1991 to January 1, 1992

(with adjusted river stage of -18 cm) *

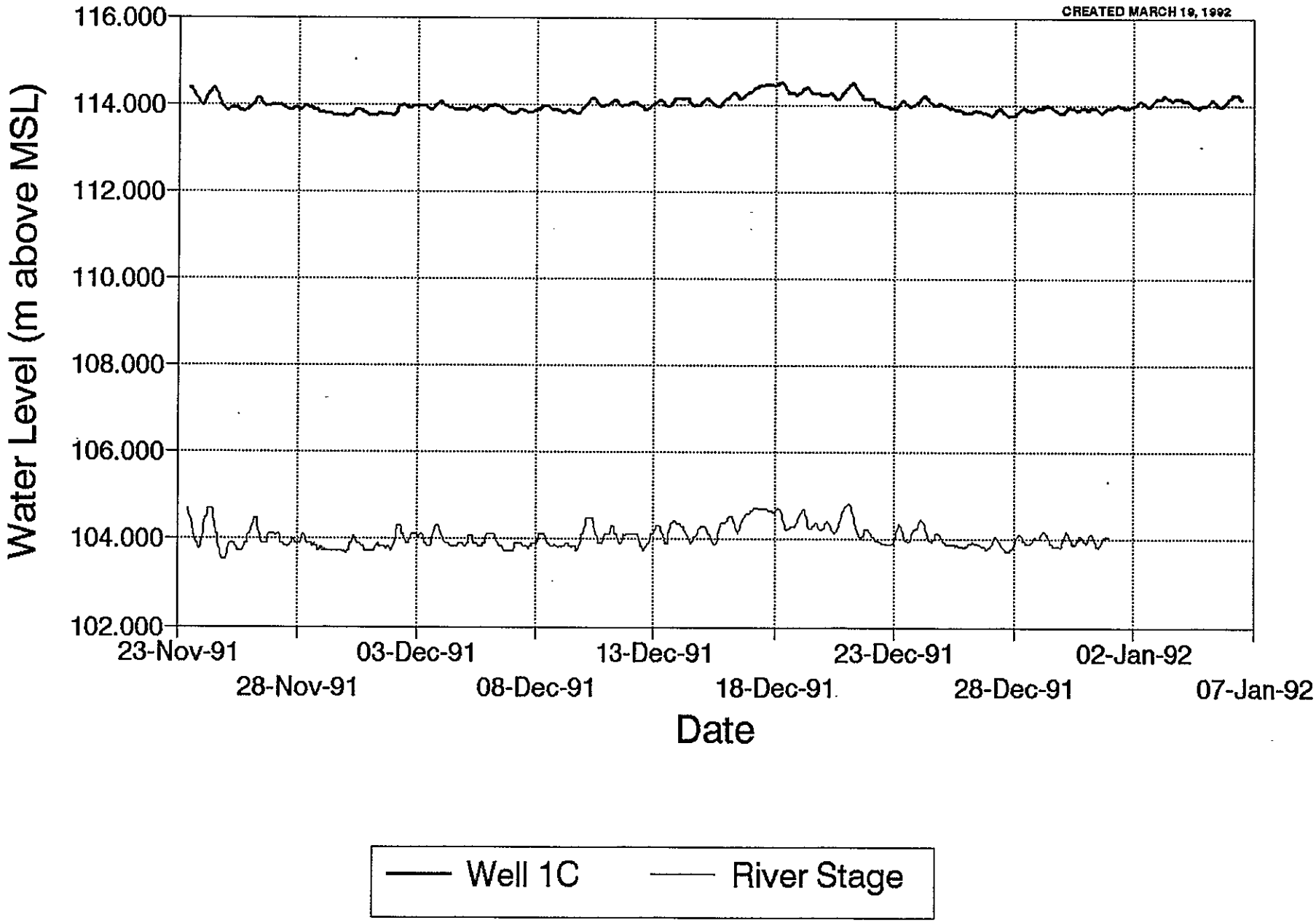

* Adjustment to correct for upstream/downstream river stage difference from SWS-1 assuming a river gradient of 1 foot per mile.

300 Area Well 7A,B,C, and Columbia River Hydrograph

November 23, 1991 to January 6, 1992

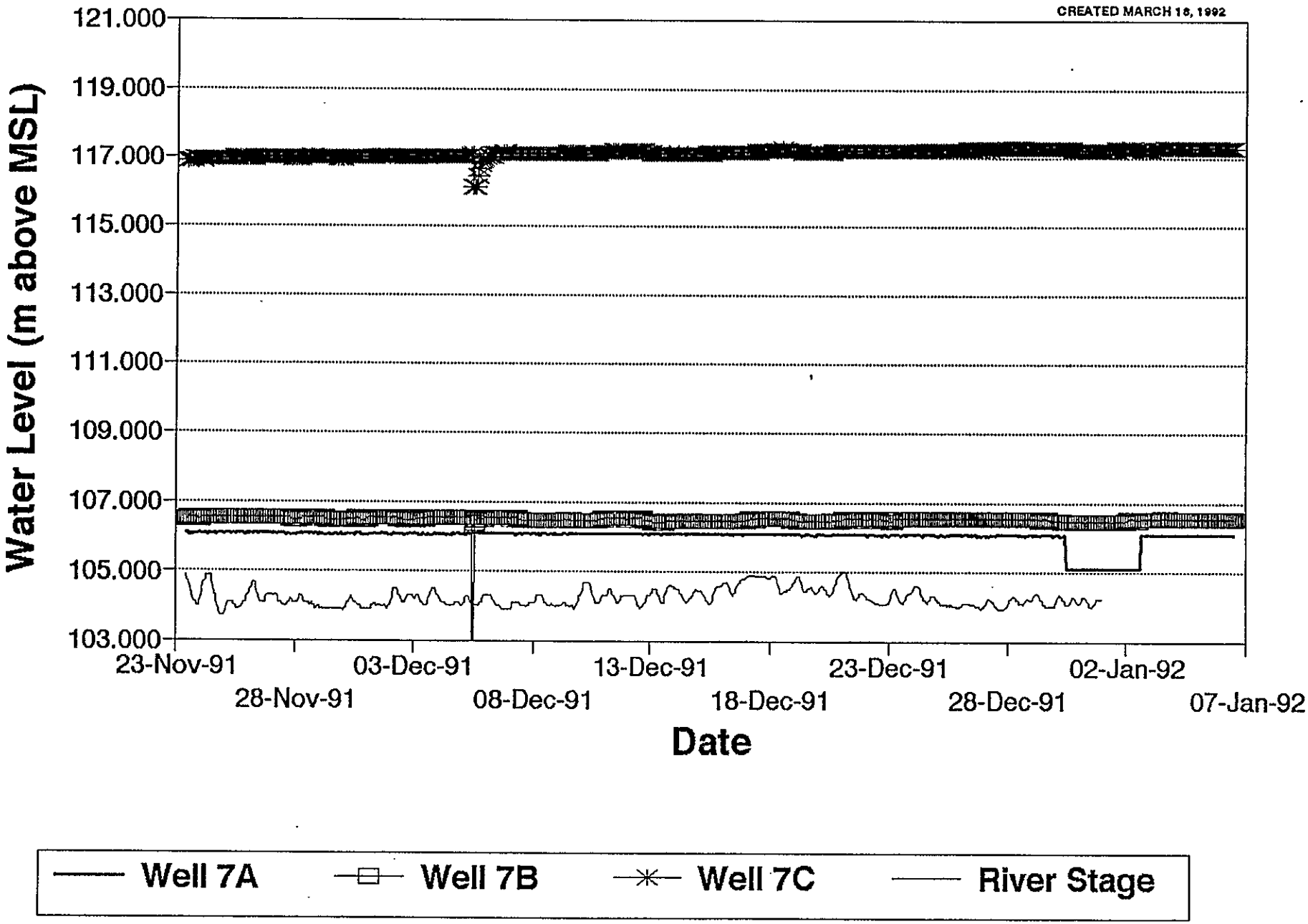

Future Investigations:

- Calibration of Overall Flow Field
  - Requires data from throughout the flow field that exhibits seasonal fluctuations.
- Estimation of Hydraulic Conductivities
  - Requires simultaneous hourly information from a line of wells orthogonal to the river.

    Example:
    - 4-7, 4-1, 5-1, 7ABC
    - 2-2, 1-7, 1-2, 8-1
    - 2-1, 3-12, 5-1, 8A

WELL SUMMARY SHEET

Boring or Well No. **1C**
Northing 114730.80 Easting 594742.44
Sheet 1 of 2

Location 300 Area
Elevation 377.03
Driller D. Rossman
Prepared by _____ (Sign/Print Name)

DRAFT

Project 300-FF-5
Drilling Contractor KEH
Drilling Method and Equipment Cable Tool Well Master
Reviewed By _____ (Sign/Print Name) Date 9-25-91

CONSTRUCTION DATA

Description

Portland Cement from 0 to 19.4'.

Bentonite Crumbles from 19.4 to 32.2'.

Bentonite Slurry from 32.2 to 137.5'.

16" casing set at 39.8'.

12" casing set at 90.2'.

Well Construction

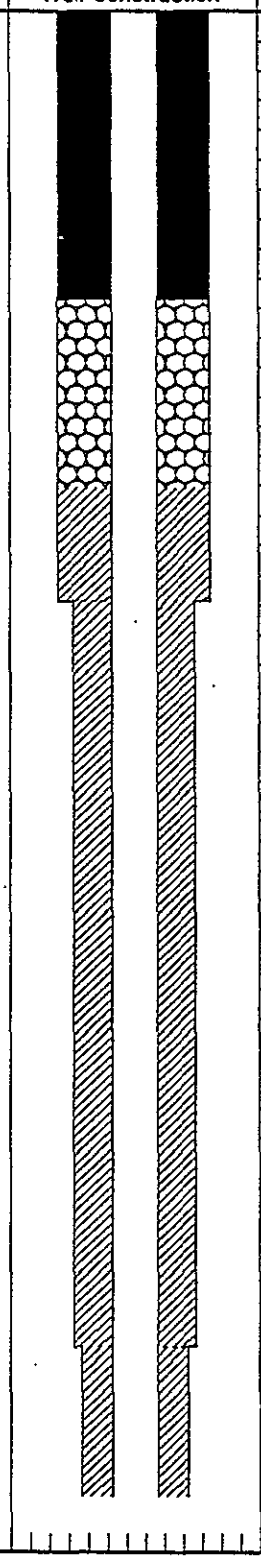

Depth in Feet

10, 20, 30, 40, 50, 60, 70, 80, 90

GEOLOGIC/HYDROLOGIC DATA

Graphic Log

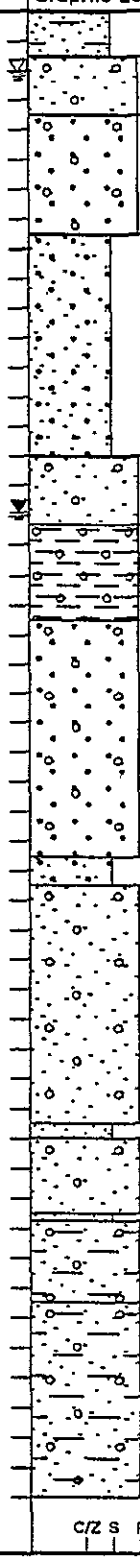

Lithologic Description

0-3' SLIGHTLY SILTY SAND.
3-7' SANDY GRAVEL.
7-15' GRAVEL.
15-30' GRAVELLY SAND.
30-34.5' SANDY GRAVEL.
34.5-41' SANDY, CLAYEY, GRAVEL.
41-57' GRAVEL
57-59' SILTY GRAVELLY SAND.
59-75' SANDY GRAVEL.
75-76' SAND.
76-81' SANDY, GRAVEL.
81-81.5' SAND.
81.5-87' SILTY, SANDY, GRAVEL with alternating SAND.
87-100' SILTY, SANDY, GRAVEL.

9 2 1 2 6 4 3 2 1 2 0

WELL SUMMARY SHEET

Boring or Well No. 1C
Northing 114730.80 Easting 594742.44
Sheet 2 of 2

DRAFT

Location 300 Area
Elevation 377.03
Driller D. Rossman
Prepared by _____ (Sign/Print Name)

Project 300-FF-5
Drilling Contractor KEH
Drilling Method and Equipment Cable Tool Well Master
Reviewed By _____ (Sign/Print Name) Date 9-25-91

CONSTRUCTION DATA		Depth in Feet	GEOLOGIC/HYDROLOGIC DATA	
Description	Well Construction		Graphic Log	Lithologic Description
				100-119' SILTY, SAND.
		110		
		120		119-165' CLAY and SILTY CLAY.
		130		
10" casing set at 144.6'.		140		
Cement Slurry from 137.5 to 157.2'.		150		
Bentonite Slurry from 157.2 to 160.3'.		160		
40-100 Silica Sand from 160.3 to 162.4'. 4" T-304 SS Wire Wrap 0.010 Slot Screen set at 165.3 to 176'.		170		165.5-175' SAND.
9" casing set at 174.7 ft 20-40 Silica Sand from 162.4 to 177.9'. TD= 177.9 FT.		180		BASALT TOTAL DEPTH IS 177.9'
		190		

C/Z S P C/B

9 2 1 2 6 4 3 2 1 2 1

9 2 1 2 6 4 3 2 1 2 2 DRAFT

Project: 300-FF-5		Well No: 1C	Page 1 of 3
Date Started: 6-14-91	Date Completed: 9-25-91	Total Depth: 177.90	Static Water Level: 33.80
Logged By: S. Consort	Checked By: G. Kelty	Surface Elevation: 377.03	Casing Elevation:
Drilling Co: KEH	Driller: D. Rossman	Northing: 114730.80	Easting: 594742.44
Drilling Method: Cable Tool		Drilling Equipment: Well Master	

Screen: T-304 Stainless Steel, Johnson wire wrap screen, slot size 0.010. Set at 176 to 165 ft.

Filter Pack: 20-40 Sand set from 177.9 to 162.4 ft. 40-100 Sand set from 162.4 to 160.3 ft.

Permanent Casing: T-304 Stainless Steel set from 0-165 ft. | Temporary Casing: 16" 0-39.8', 12" 0-90.2', 10" 0-144.4', 8" 0-174'.

Comments:

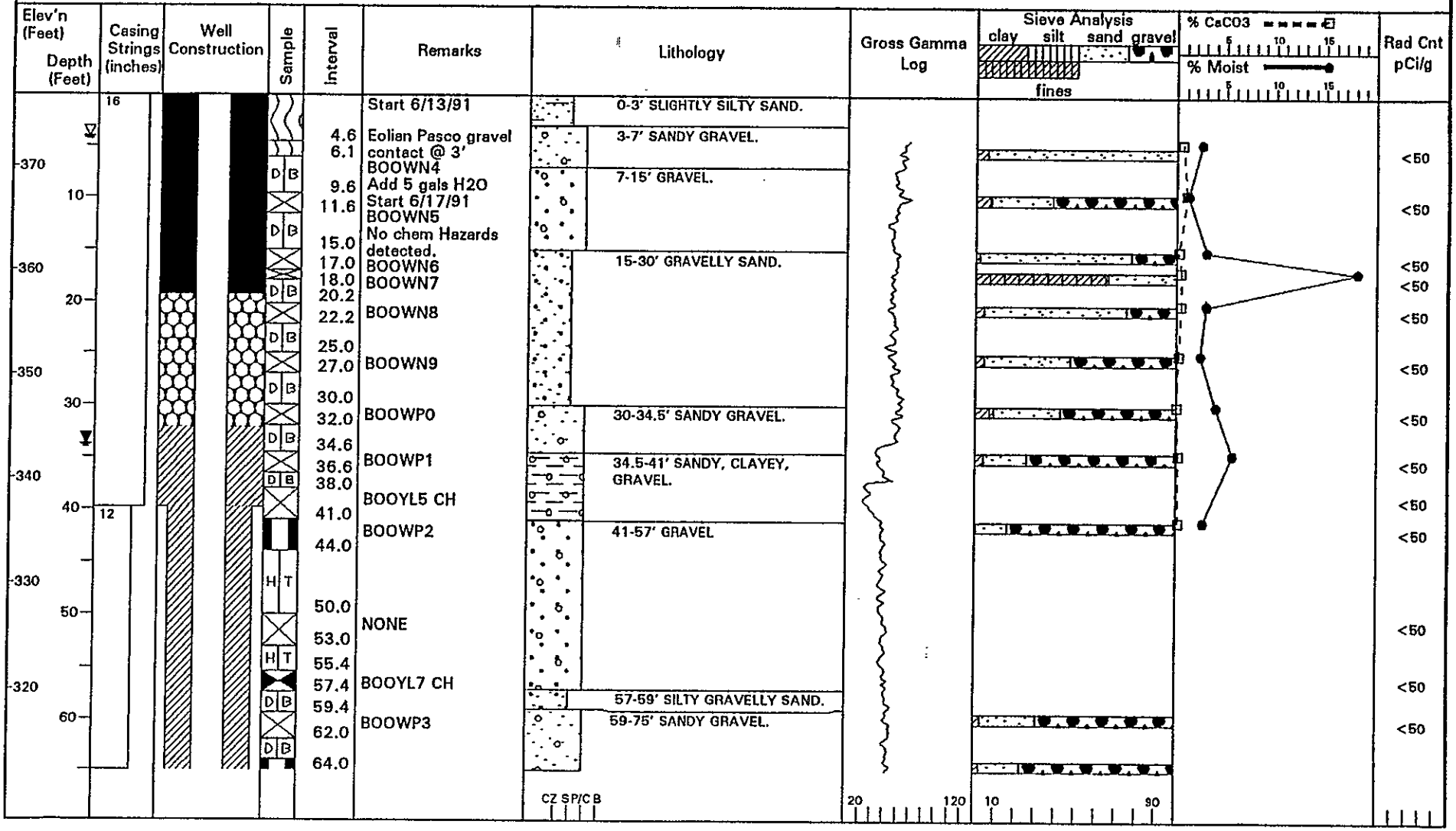

9 2 1 2 6 1 3 2 1 DRAFT

Project: 300-FF-5 | Well No: 1C | Page 2 of 3

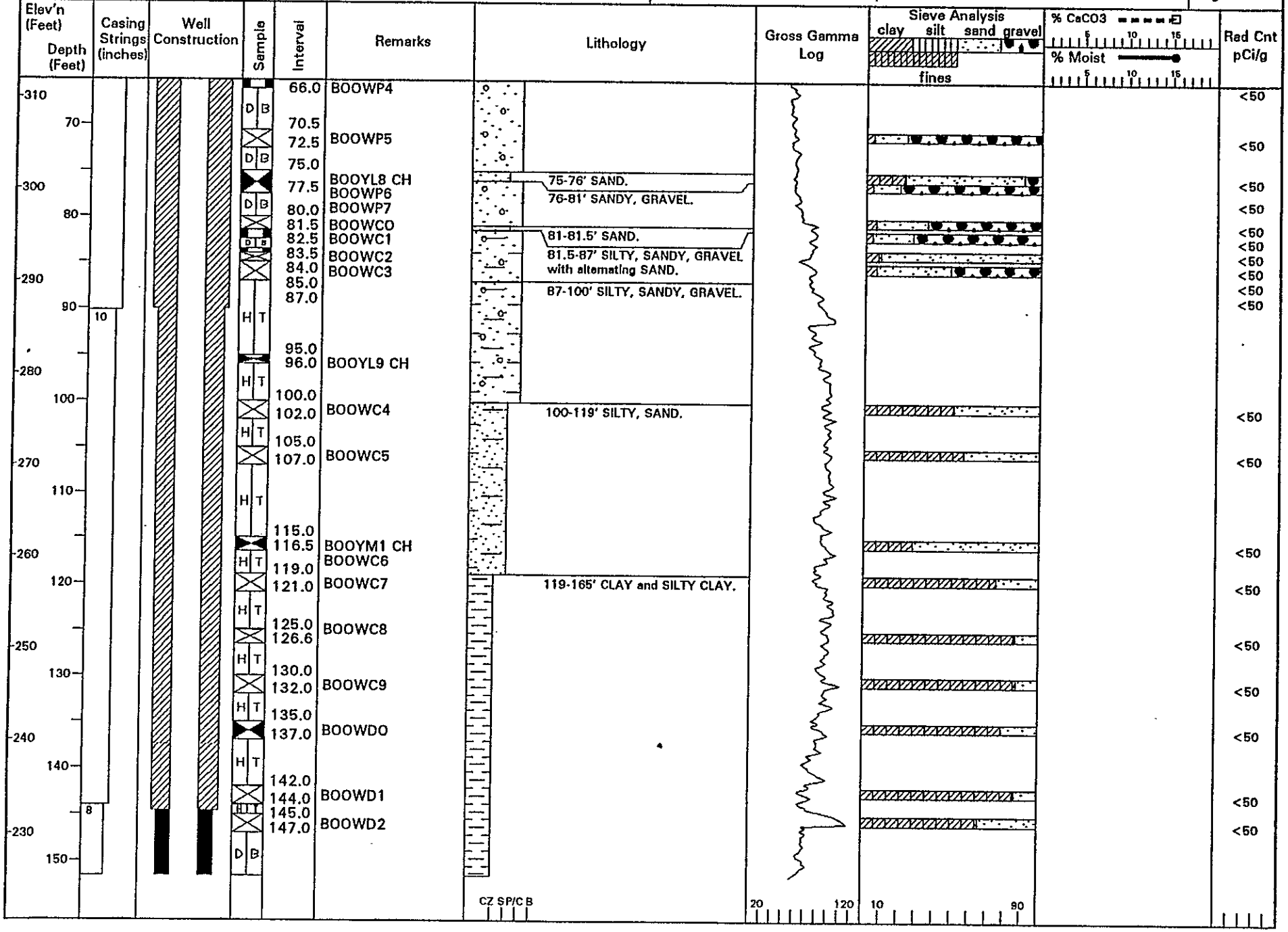

#9/ Page 4 of 5

9 2 1 2 6 4 3 2 DRAFT

Project: 300-FF-5 | Well No: 1C | Page 3 of 3

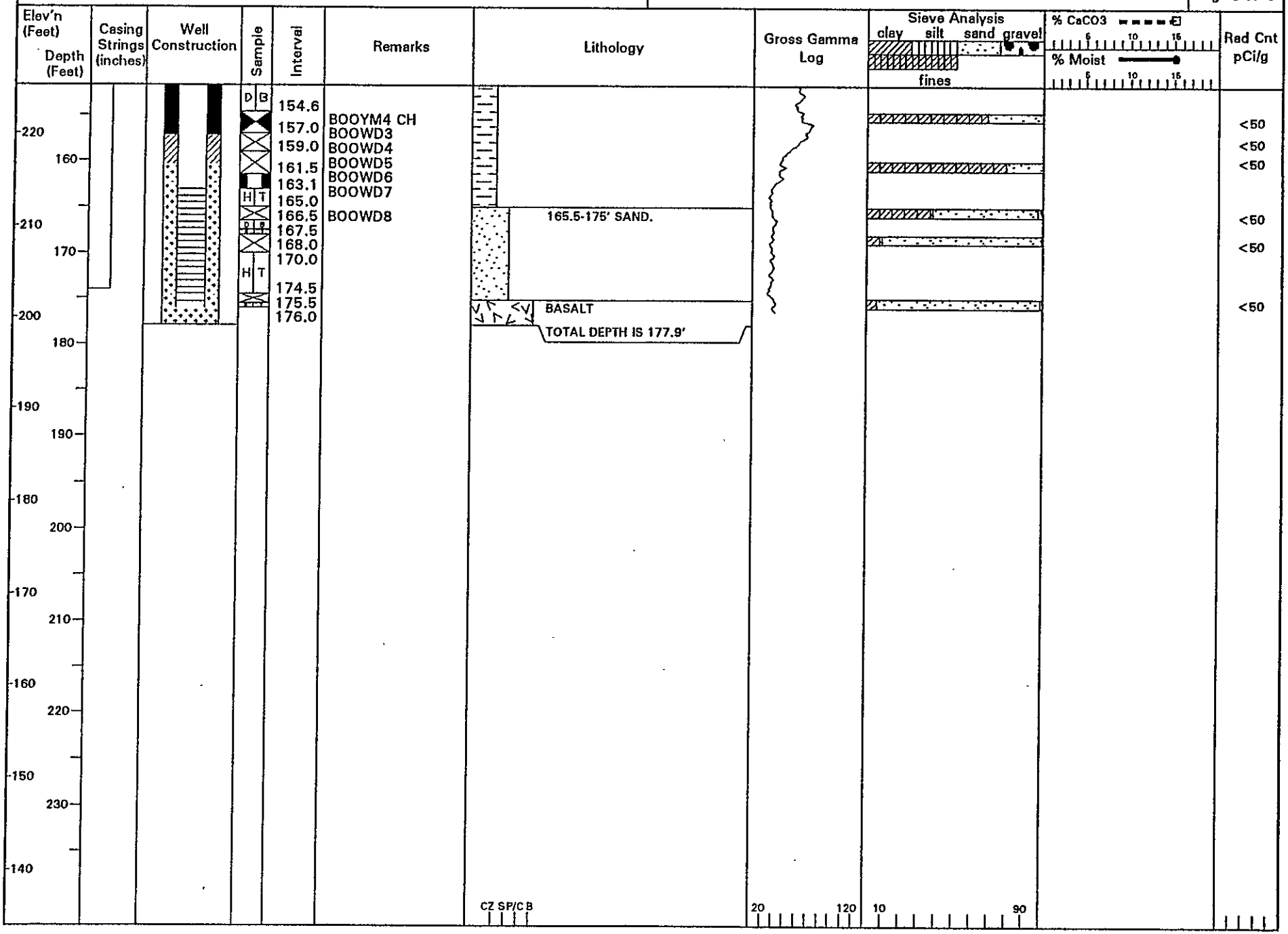

Distribution

Unit Manager's Meeting: 300-FF-5 Operable Unit
April 22, 1992

Ronald E. Gerton . . . . . Director, DOE-RL, WMD (A4-02)
Roger D. Freeberg . . . . . Chief, Rstr. Br., DOE-RL/ERD (A5-19)
Steven H. Wisness . . . . . TPA Proj. Mgr. (A5-15)
Diane Clark . . . . . DOE-RL (A5-55)
Mike Thompson . . . . . DOE-RL (A5-15)

Chuck Cline . . . . . WDOE

Ward Staubitz . . . . . USGS

Donna Lacombe . . . . . PRC

Richard D. Wojtasek . . . . . Program Mgr., WHC (L4-92)
Mel Adams . . . . . WHC (H4-55)
Tom Wintczak . . . . . WHC (L4-92)
Larry Hulstrom . . . . . WHC (H4-55)
Rich Carlson . . . . . WHC (H4-55)
L.D. Arnold . . . . . WHC (B2-35)
Don Praast . . . . . GAO (A1-80)

ADMINISTRATIVE RECORD: 300-FF-5; Care of EDMC, WHC (H4-22)

This list has been updated. Please inform Suzanne E. Clarke (SWEC) of deletions or additions to the distribution list.

9 2 1 2 6 4 3 2 1 2 5