START 9513319.0041

0023611

Sta #10

JUL 20 1992

ENGINEERING DATA TRANSMITTAL

1. EDT 129980

2. To: (Receiving Organization) Distribution

3. From: (Originating Organization) Tank Waste Remediation Projects

4. Related EDT No: N/A

5. Proj/Prog/Dept/Div: W-236

6. Cog/Proj Engr: B.A. Kendall

7. Purchase Order No: N/A

8. Originator Remarks:

The CDR for Project W-236, Multi-Function Waste Tank Facility, is being issued for review and approval.

9. Equip/Component No: N/A

10. System/Bldg/Facility: N/A

11. Receiver Remarks:

12. Major Assm Dwg No: N/A

13. Permit/Permit Application No. N/A

14. Required Response Date: N/A

15. DATA TRANSMITTED

(A) Item No.	(B) Document/Drawing No.	(C) Sheet No.	(D) Rev. No.	(E) Title or Description of Data Transmitted	(F) Impact Level	(G) Reason for Transmittal	(H) Originator Disposition	(I) Receiver Disposition
1	WHC-SD-W236-CDR-001		0	CDR Multi-Function Waste Tank Facility	1 SQ	1,4		

16. KEY

Impact Level (F)	Reason for Transmittal (G)	Disposition (H) & (I)
1, 2, 3, or 4 see MRP 5.43 and EP-1.7	1. Approval 2. Release 3. Information 4. Review 5. Post-Review 6. Dist (Receipt Acknow. Required)	1. Approved 2. Approved w/comment 3. Disapproved w/comment 4. Reviewed no/comment 5. Reviewed w/comment 6. Receipt acknowledged

17. SIGNATURE/DISTRIBUTION (See Impact Level for required signatures)

(G) Reason	(H) Disp	(J) Name	(K) Signature	(L) Date	(M) MSIN	(J) Name	(K) Signature	(L) Date	(M) MSIN	(G) Reason	(H) Disp
	1	Cog./Proj. Eng B. A. Kendall		6/24/92	B4-66						
		Cog./Proj. Eng. Mgr. R. L. Fritz		6-29-92	R3-49						
1	1	QA L. R. Hall		6-29-92	B4-66						
	1	Safety P. J. Martell		6-30-92	R3-08						
		Safeguards and Security									

OCT 1992

18. B.A. Kendall
B. A. Kendall 6/24/92
Signature of EDT Originator — Date

19. Authorized Representative for Receiving Organization — Date

20. R. L. Fritz 6-29-92
R. L. Fritz — Date
Cognizant/Project Engineer's Manager

21. DOE APPROVAL (if required) Ltr No. R.W. Brown
- [x] Approved 7-2-92
- [ ] Approved w/comments
- [ ] Disapproved w/comments

BD-7400-172 (2/89)

9513319.0042

SUPPORTING DOCUMENT

1. Total Pages ~~370~~ 271

2. Title	3. Number	4. Rev No.
Project W-236A, "Multi-Function Waste Tank Facility," Conceptual Design Criteria	WHC-SD-W236-CDR-001	0

5. Key Words

W-236A, Conceptual Design Report, Tanks, Multi-Function

6. Author

Name: B. A. Kendall

B.A. Kendall

Signature

Organization/Charge Code W24720/N3251

7. Abstract

8. PURPOSE AND USE OF DOCUMENT - This document was prepared for use within the U.S. Department of Energy and its contractors. It is to be used only to perform, direct, or integrate work under U.S. Department of Energy contracts. This document is not approved for public release until reviewed.

PATENT STATUS - This document copy, since it is transmitted in advance of patent clearance, is made available in confidence solely for use in performance of work under contracts with the U.S. Department of Energy. This document is not to be published nor its contents otherwise disseminated or used for purposes other than specified above before patent approval for such release or use has been secured, upon request, from the Patent Counsel, U.S. Department of Energy Field Office, Richland, WA.

DISCLAIMER - This report was prepared as an account of work sponsored by an agency of the United States Government. Neither the United States Government nor any agency thereof, nor any of their employees, nor any of their contractors, subcontractors or their employees, makes any warranty, express or implied, or assumes any legal liability or responsibility for the accuracy, completeness, or any third party's use or the results of such use of any information, apparatus, product, or process disclosed, or represents that its use would not infringe privately owned rights. Reference herein to any specific commercial product, process, or service by trade name, trademark, manufacturer, or otherwise, does not necessarily constitute or imply its endorsement, recommendation, or favoring by the United States Government or any agency thereof or its contractors or subcontractors. The views and opinions of authors expressed herein do not necessarily state or reflect those of the United States Government or any agency thereof.

9. Impact Level 1, SQ

10. RELEASE STAMP

OFFICIAL RELEASE BY WHC 23

DATE JUL 20 1992

Sta. #10

A-6400-073 (11/91) (EF) WEF124

9513319.0043

WHC-SD-W236-CDR-001, Rev. 0

CONCEPTUAL DESIGN REPORT

MULTI-FUNCTION WASTE TANK FACILITY

PROJECT W-236A

Prepared for

Westinghouse Hanford Company

June 1992

For the U.S. Department of Energy
Contract DE-AC06-87RL10900

Prepared by

Kaiser Engineers Hanford Company
Richland, Washington

W236A-CDR
ER1259

KAISER ENGINEERS
HANFORD

W236A-CDR

CONCEPTUAL DESIGN REPORT

FOR

MULTI-FUNCTION WASTE TANK FACILITY

PROJECT W-236A

Prepared by

Kaiser Engineers Hanford Company
Richland, Washington

for

Westinghouse Hanford Company

Principal Lead Engineer	6/19/92 Date	Technical Communications	6/19/92 Date
Safety Engineering	6/19/92 Date	Environmental Engineering	6/19/92 Date
Quality Engineering	6-19-92 Date	Project Manager	6-22-92 Date

Westinghouse Hanford Company

Projects Department		6-25-92 Date

TABLE OF CONTENTS

I. INTRODUCTION 1

II. SUMMARY 2

III. JUSTIFICATION 6

IV. DESCRIPTION OF PROJECT SCOPE 6
- A. IMPROVEMENTS TO LAND (460) 6
- B. BUILDINGS (501) 8
- C. OTHER STRUCTURES (550) 19
- D. UTILITIES (600) 24
- E. SPECIAL EQUIPMENT/PROCESS SYSTEMS (700) 27

V. METHODS OF PERFORMANCE 50
- A. ONSITE ARCHITECT-ENGINEER WORK 50
- B. PROCUREMENT STRATEGY 50
- C. ONSITE CONSTRUCTION CONTRACTOR 50
- D. OFFSITE CONSTRUCTION CONTRACTOR 50
- E. OPERATING CONTRACTOR 51

VI. REQUIREMENTS AND ASSESSMENTS 51
- A. SAFEGUARDS AND SECURITY 51
- B. HEALTH AND SAFETY 52
- C. DECONTAMINATION AND DECOMMISSIONING 53
- D. PROVISIONS FOR FALLOUT SHELTERS 54
- E. MAINTENANCE REQUIREMENTS 54
- F. AUTOMATED DATA PROCESSING EQUIPMENT 54
- G. QUALITY ASSURANCE/SAFETY CLASSIFICATION 55
- H. ENVIRONMENTAL COMPLIANCE 56
- I. PERMITS 65
- J. APPLICABLE CODES AND STANDARDS 67

VII. IDENTIFICATION AND ANALYSIS OF UNCERTAINTIES 73
- A. CURRENT UNCERTAINTIES 73
- B. CONCEPTUAL DESIGN BASES WHICH DIFFER FROM THE FUNCTIONAL DESIGN CRITERIA 76

VIII. REFERENCES 77
- A. DOCUMENTS 77
- B. DRAWINGS 78

APPENDICES

Appendix A. Work Breakdown Structure
Appendix B. BA/BO Schedule
Appendix C. Cost Estimate Summary
Appendix D. Conceptual Project Schedule
Appendix E. Outline Specification
Appendix F. Energy Conservation Report and Analysis
Appendix G. Preliminary Safety Evaluation
Appendix H. Economic Analysis and Life Cycle Cost Analysis
Appendix I. Physically Handicapped Assessment
Appendix J. Plant Forces Work Review
Appendix K. Drawings

ACRONYMS

ALARA	as low as reasonably achievable
ANSI	American National Standards Institute
ASHRAE	American Society of Heating, Refrigerating and Air Conditioning Engineers
ASME	American Society of Mechanical Engineers
AWS	American Welding Society
BACT	Best Available Control Technology
CAM	continous air monitor
CASS	computer automated surveillance system
CDR	Conceptual Design Report
CFR	Code of Federal Regulations
DBF	design basis fire
DCS	distributed control system
DOE	Department of Energy
Ecology	Washington State Department of Ecology
EIA	Electronic Industry Association
EMT	electrical-metallic tubing
EPA	Environmental Protection Agency
FDC	Functional Design Criteria
HEGA	high-efficiency gas adsorber
HEME	high-efficiency mist eliminator
HEMF	high-efficiency metal fiber
HEPA	high-efficiency particulate air
HLAN	Hanford Local Area Network
HPS	Hanford Plant Standards
HVAC	heating, ventilating, and air conditioning
HWVP	Hanford Waste Vitrification Plant
I&C	instrumentation and control
ISA	Instrument Society of America
IEEE	Institute of Electrical and Electronic Engineers
KEH	Kaiser Engineers Hanford Company
LAN	local area network
LCU	local control unit

ACRONYMS (Continued)

MCC	motor control center
MSA	major systems acquisition
MTP	multiple-thermocouple probe
MWTF	Multi-Function Waste Tank Facility
NFPA	National Fire Protection Association
PIO	particulate, iodine, and organic
PSE	preliminary safety evaluation
QA	quality assurance
QAPP	quality assurance program plan
RL	DOE Richland Field Office
SCADA	supervisory control and data acquisition
SDC	Standard Design Criteria
SPC	special protective coating
TIA	Telecommunications Industry Association
UL	Underwriters Laboratory, Inc.
UPS	uninterruptible power supply
WAC	Washington Administrative Code
WHC	Westinghouse Hanford Company
WSDOH	Washington State Department of Health

CONCEPTUAL DESIGN REPORT

MULTI-FUNCTION WASTE TANK FACILITY

PROJECT W-236A

I. INTRODUCTION

This conceptual design report describes the conceptual design and cost estimates of the Multi-Function Waste Tank Facility (MWTF) pursuant to the requirements specified in the project W-236A functional design criteria (FDC) (ref 1). The MWTF consists of four one-million-gallon (specifically 1.16-Mgal), underground, double-shell tanks and the associated systems. The facility will be located in the 200-East Area of the Hanford Site.

These tanks will provide safe and environmentally acceptable storage capacity to handle wastes generated during single-shell and double-shell tank remediation/retrieval activities. These activities are required to address current safety issues, future safety-related retrieval/remediation efforts, planned retrieval demonstrations, and to support the long-term cleanup mission at Hanford. A portion of the facility will be utilized for waste staging and/or storage in support of pretreatment and the Hanford Waste Vitrification Plant (HWVP). The completion of this facility will also allow continued interim waste storage in a safe, environmentally sound manner to comply with all applicable U. S. Department of Energy (DOE) Richland Field Office (RL), State, and Federal regulations.

The MWTF conceptual design is based on the technical criteria specified in the FDC and current regulatory requirements. The facility design will provide safety features to ensure safe storage and transfer of waste to and from other onsite facilities without creating undue risk to the public, the environment, or the onsite personnel during normal operation or credible accident conditions.

The safety classification assignments for the facility systems, structures, and components are specified in the FDC and expanded upon in the CDR. The facility design will be revised, as required, if there is a change in the safety classification designations in the future.

The cost estimate and schedule include the work for the Chemical Makeup and Storage Facility (W236ER2 Engineering Report), Supernatant Pumping Capabilities (W236LR Letter Report), and the Collection Tank Addition (KEH Letter W-236-86). The cost estimate summary and conceptual project schedule are in appendices C and D, respectively.

II. SUMMARY

The Multi-Function Waste Tank Facility (MWTF) will provide four double-shell waste storage tanks, a support facility containing all essential support systems, piping and sampling systems, and a weather protection enclosure over the underground tanks. A portion of the facility will be utilized for waste staging and/or storage in support of the Hanford Waste Vitrification Plant (HWVP) and pretreatment operations.

The MWTF will be constructed on approximately 24 acres located southeast of the HWVP site in the 200-East Area of the Hanford Site. Electric power, raw water, steam, sanitary water, and process lines will be routed to the site.

Two main structures will house the facility: the Weather Enclosure and the Ventilation Building. The Weather Enclosure will provide year-around operational and maintenance capabilities. The Ventilation Building will contain the ventilation systems and related equipment, in addition to a Sampling Room, changerooms, the Control Room, offices, and other support facilities.

Each underground, double-shell tank will be comprised of two main components: an outer structure made of reinforced concrete lined with a secondary steel liner (two tanks with carbon steel and two tanks with stainless steel liners) to contain

any leakage, and a primary tank which is a completely enclosed stainless-steel structure within the secondary steel liner. An annular space will separate the secondary liner from the primary tank. This space will allow for installation of leak detection devices and inspection equipment.

The transfer lines installed by project W-236A will provide connections to the existing facilities and storage tank systems at the Hanford Site. The primary tank ventilation system is designed with adequate capacity to remove heat generated in the tanks. The primary ventilation system consists of two subsystems: a closed-loop recirculation system and a once-through system. The recirculation system removes most of the heat from the tank. A fan in the recirculation loop circulates the moist air from the tank vapor space through a condenser to remove heat and moisture, returning the cooled air back to the tank. The once-through system is designed to maintain negative pressure in the tank and to exhaust noncondensable and combustible gases from the tank vapor space to the atmosphere after passing through moisture-removing and filtering equipment. The primary ventilation system is shown in Figure 1.

The MWTF systems and equipment are designed in accordance with criteria set forth in U. S. Department of Energy (DOE) Order 6430.1A and will be controlled and monitored by a distributed control system (DCS). The DCS is designed to maintain the facility parameters in the normal operating range. In the event an abnormal condition occurs or equipment malfunctions, the DCS is designed to alarm the condition in the Control Room, while actuating the safety features provided in the MWTF design.

Thermocouples will be installed on the primary tank and in the reinforced concrete structures. Leak detection devices will be provided to detect any uncontrolled release of hazardous material from the tank system. Two new double-ended substations for electrical power will be installed near the Ventilation Building. Backup power will be provided by a diesel generator.

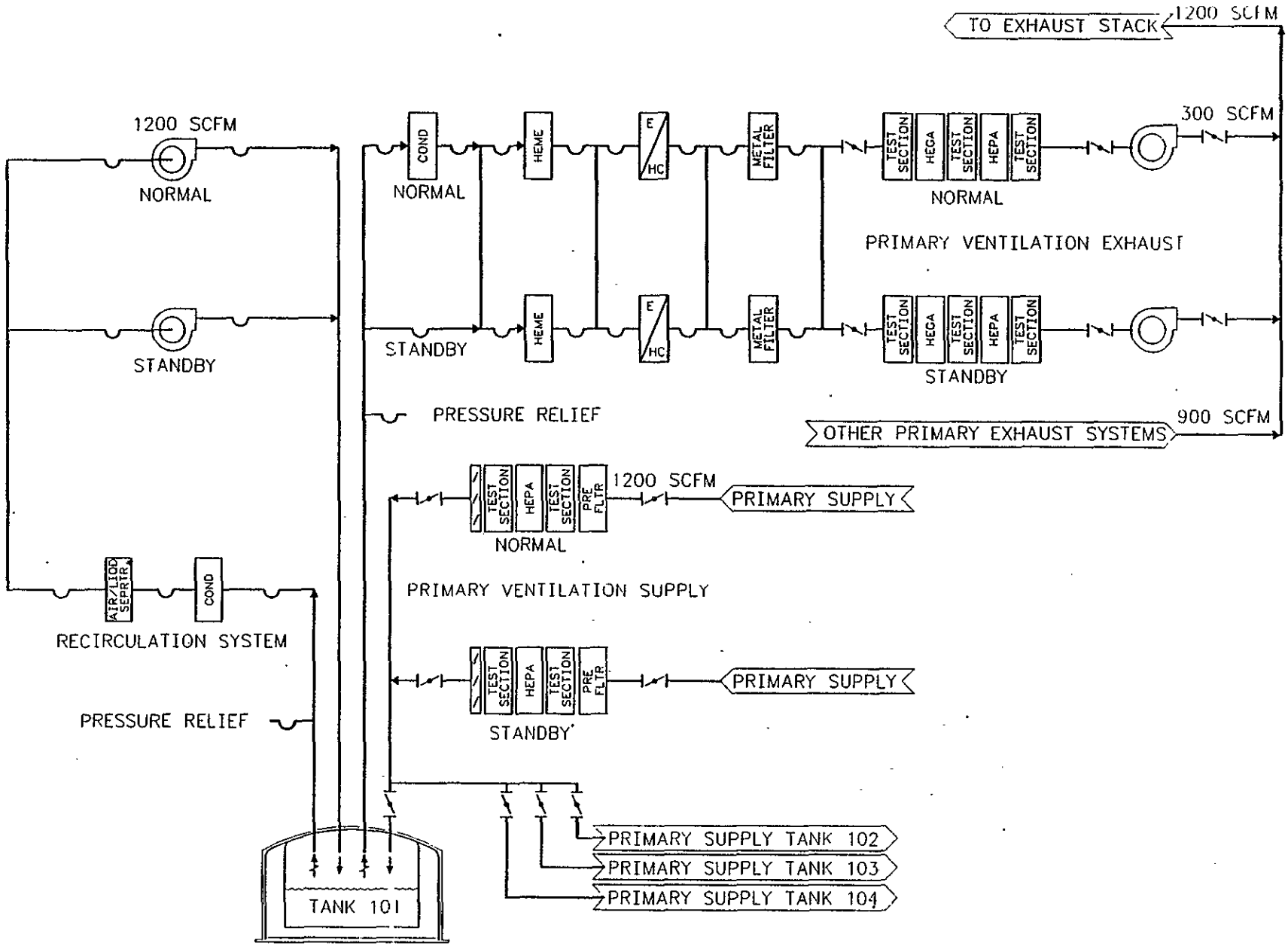

PRIMARY TANK VENTILATION SYSTEM

FIGURE 1

The MWTF design described in this conceptual design report (CDR) is developed based on the design of existing tank farms and other similar waste storage facilities currently being designed. Two main sources used in the design of the MWTF are the design of existing 241-AP Tank Farm and the conceptual design of the 241-AQ Tank Farm. Additional information is acquired from the on-going Project W-030, "Tank Farm Ventilation Upgrade."

The MWTF has certain features which differ from the previous designs. Features specific to the MWTF are:

- Stainless steel 304L material instead of carbon steel for the primary tanks.
- Stainless steel 304L material instead of carbon steel for the concrete structure liner for two of the four tank systems.
- Sloped bottom for cleanout of the primary tank.
- In-tank corrosion monitoring, gas sampling, and liquid sampling.
- Separation of primary tank ventilation systems for the four tanks to prevent mixing of condensate that is returned to the respective primary tanks.
- Recirculation feature of the primary ventilation system.
- Mixing pumps in the primary tanks to mix the tank contents.
- Distributed control system and state-of-the-art instrumentation.
- Condensers, chillers, mist eliminator equipment, metal fiber filters, and activated charcoal filters to minimize the release of particulates and condensible gases to the environment.

- Back-up power.

- A weather enclosure over the four underground tanks.

- Implementation of new Federal and State regulations which were issued subsequent to the design of previous facilities, including DOE Order 6430.1A.

The MWTF is a fiscal year 1993 Major Systems Acquisition (MSA) project. The total project cost is $435,000,000.

III. JUSTIFICATION

Additional safe, environmentally acceptable storage is required to support remediation/retrieval activities on the Hanford Site.

The MWTF will provide four double-shell waste storage tanks, a support facility containing all essential support systems, piping and sampling systems, and a weather-protection enclosure over the underground tanks. A portion of the facility.will be utilized for waste staging and/or storage in support of the HWVP and pretreatment operations.

The completion of the MWTF will allow continued interim waste storage in a safe, environmentally sound manner which will comply with all appropriate RL, State, and Federal regulations.

IV. DESCRIPTION OF PROJECT SCOPE

A. IMPROVEMENTS TO LAND (460)

Approximately 24 acres of land southeast of the HWVP site will be leveled and cleared for construction of the MWTF. The location corresponds to site "D" as indicated in the Site Evaluation Report. The new facility will

be arranged to provide ease of operation and maintenance. Electric power, raw water, steam, sanitary water, and process lines will be routed to the site.

An additional 13 acres will be leveled and graded to provide a construction access road and construction spoils pile area as shown on drawing SK-2-58741 (see appendix K for all drawings). The construction road ties into the HWVP project access road which provides traffic control at the intersection of Hanford Route 4 highway.

1. Excavation

Tank farm construction will require an excavation of approximately 60 ft deep by 260 ft square at the bottom, with an upward side slope of approximately 1-1/2- to 1 ft to the existing grade. To allow construction of the Ventilation Building and the underground storage tanks simultaneously, the southern side of the excavation will be supported by shoring. The shoring will utilize a tieback retaining wall system to provide adequate work space for the tank construction activities.

A construction road into the excavation, with a gradient of about 10%, will be provided during tank construction activity. The excavation spoil pile is located west of the site as shown on drawing SK-2-58741. During construction, the excavation and general construction area will be lighted to a level of 3 footcandle illumination. Local task lighting will be provided when higher levels of illumination are required.

2. Grading and Drainage

Existing natural drainage traverses north. The disposal of surface drainage from storm water and snow melt is through natural percolation. Finished grading of the site will provide both run-on and run-off control for the new facilities to prevent possible flooding. The

construction site is located atop a small knoll which will be partially removed during excavation for the tank construction. The natural slope of the adjacent land is away from the excavation site to the north, south, and east. The land immediately west is slightly higher and surface drainage will be channeled to the north and south at the site boundary.

3. Site Access

Access roads and parking will be provided for operational personnel and maintenance equipment. The paved parking area south of the main entrance will also provide an access area for filling the diesel fuel tanks. A 22-ft paved road from 4th Street will provide access for fire fighting equipment and emergency vehicles.

The MWTF site is inside the existing 200-East Area perimeter fence which has controlled access. This fence will be temporarily rerouted to provide uncontrolled access to the site during construction. (See drawing SK-2-58741.)

4. Land and Environment

The finished grade and the area disturbed during construction will be stabilized on completion of the project. The spoil pile location and barrow area will be stabilized by planting suitable vegetation. Where foot traffic and motorized traffic are expected, a suitable layer of crushed gravel will be used for stabilization. During construction, dust will be controlled by water sprinkling equipment.

B. BUILDINGS (501)

The MWTF consists of two main structures: the Weather Enclosure and the Ventilation Building.

Floor plans and the layout of both the Weather Enclosure and the Ventilation Building are shown on drawings SK-2-58743, SK-2-58744, and

SK-2-58745. Building sections and elevations are shown on drawings SK-2-58746, SK-2-58747, and SK-2-58748 which indicate key vertical heights and widths of both main structures.

1. **Weather Enclosure**

The Weather Enclosure is a single-volume structure which covers the four underground tanks located north of the Ventilation Building.

The principal function of the Weather Enclosure is to provide year-around operational and maintenance capabilities unconstrained by weather conditions. The enclosure is a 120-ft high insulated, preengineered metal structure of approximately 99,000 ft^2, with a clear roof span of 300 ft. The corrugated-metal ceiling panels on the underside of the composite roof structure are 100 ft above the concrete slab floor to provide adequate clearance for operation of all required maintenance equipment. Vehicle access into the Weather Enclosure will be through two 20-ft wide by 24-ft high, electrically operated, roll-up steel doors located on the east and west walls. Personnel access will be provided by 3- by 7-ft steel doors. A Gas Sampling Building will be located in the middle of the Weather Enclosure central to all four tanks.

Storage areas for both contaminated and clean solid waste will be located on the south side of the Weather Enclosure adjacent to the Ventilation Building.

The Liquid Sampling Room loading dock will also be located within the Weather Enclosure. The Weather Enclosure will be constructed to allow the inside surfaces to be decontaminated, however, it is not intended to provide confinement.

Illumination in the Weather Enclosure will be provided by high-pressure sodium fixtures at an average illumination level of

5 footcandles at floor level. Receptacles will be provided in the Weather Enclosure to permit use of portable lighting fixtures when additional light is required for specific tasks. The general area lighting in the Weather Enclosure will be powered by the backup power system.

The heating, cooling, and ventilating system for the Weather Enclosure will be designed to be energy efficient in accordance with DOE Order 6430.1A.

Heating, cooling, and ventilation for the Weather Enclosure will be provided by recirculating units consisting of a heating coil, an American Society of Heating, Refrigerating and Air Conditioning Engineers (ASHRAE)-rated filter bank, an evaporative cooling section, and a supply fan. (See drawing SK-2-58761, sh 2.) Wall exhaust fans will exhaust air from the Weather Enclosure during summer. Design temperatures for the Weather Enclosure will be 90°F in the summer and 40°F in the winter.

Exhaust units will be provided to exhaust diesel and gasoline fumes from vehicles operating in the Weather Enclosure. These units will provide attachments for flexible hose connections from vehicle exhaust pipes.

The Weather Enclosure will not contain a fire suppression system in order to preclude water intrusion into the tanks and the process pits. Alarm-pull boxes and manual fire extinguishers will be provided in the Weather Enclosure. The requirements of DOE Order 6430.1A, 1530-2.3.2, Criterion I, will be evaluated during definitive design.

2. <u>Ventilation Building</u>

The Ventilation Building is a two-story, 123,000-ft^2 structure. The first floor of the building, approximately 82,000 ft^2 in area, will be

constructed of cast-in-place, reinforced concrete. The second floor of the building, with an area of 41,000 ft^2, will be constructed using both cast-in-place concrete and structural steel components.

The Ventilation Building consists of both Safety Class 2 and 3 areas containing Safety Class 2 and 3 systems, respectively. The Safety Class 2 and 3 areas of the building will be designed for natural forces in accordance with Hanford Plant Standard (HPS), Standard Design Criteria (SDC), SDC-4.1.

To reduce heat gain or loss through the exterior concrete walls, as well as to protect the structure from weather, the building exterior will be covered with a finish/insulation system. Floors and wall surfaces of the process cells and pipe trenches will be lined with stainless steel. All other interior concrete surfaces subject to radioactive contamination will be painted with a special protective coating (SPC).

The concrete roof deck structure over the second floor operating galleries and the main corridors will be covered with tapered rigid insulation. The roofing membrane will be a single-ply modified bitumen system. The roof structure between the two main corridors will consist of steel trusses, steel joists, and a standing seam metal roof. Insulation in these areas will be fiberglass batt with a fabric liner vapor barrier.

The exterior area surrounding the MWTF will be lighted by low-pressure sodium fixtures. Light sensors will control the lights automatically with manual override capabilities. Interior lighting for the Ventilation Building will be provided by fluorescent fixtures.

The first floor of the Ventilation Building contains the following areas.

Pipe Trenches

Two parallel pipe trenches extending north and south on each side of the Ventilation Building provide shielded pathways for the primary ventilation piping and other process piping between the waste storage tanks and the process cells.

Process Cells

The process cells contain the primary tank ventilation system equipment.

Primary Intake and Exhaust Rooms

The Primary Exhaust Rooms contain the air-cleaning units which remove particulate matter and vapor from the primary tank exhaust prior to release to the environment. Primary Intake Rooms also contain air-cleaning units for the primary tank air supply system.

Fan Rooms

These rooms contain the primary tank ventilation system exhaust fans.

Operating Galleries

The operating galleries contain instrumentation and equipment for control and monitoring of the primary tank ventilation system.

Liquid Sampling Room

The Liquid Sampling Room contains the primary tank liquid waste sample collection and transfer systems. It will contain two cells with remote handling manipulators.

Exhaust Sampling Rooms

The three Exhaust Sampling Rooms contain air sampling and monitoring equipment for all exhaust systems. These rooms are

located on the north side of the Ventilation Building within the Weather Enclosure.

Backup Electrical Rooms

The Backup Electrical Rooms contain the backup motor control centers (MCCs) and the uninterruptible power supplies (UPS).

Control Room

Operating and engineering control stations are located in this room. The Control Room is located to provide safe and easy access to the operating galleries if an emergency requires facility operation from the operating galleries. The Control Room will have a recessed computer floor.

Communications Room

This room contains the communications equipment for the MWTF. The telephone main and intermediate distribution panels, HLAN file servers and terminations, and the fiber-optics modems and interfacing equipment are located in this room.

Cell Exhaust Rooms

These rooms contain the cell and pit ventilation exhaust equipment.

Air Compressor Room

This room contains two air compressors which supply instrument air for the facility. This room is located on the north side of the Ventilation Building within the Weather Enclosure. The compressor cooling units are housed in a separate room immediately above the Air Compressor Room.

Annulus Exhaust Room

This room contains air-cleaning units which remove particulate matter and vapor from the annulus exhaust.

Changeroom

This room contains personnel radiation monitoring equipment, separate washroom facilities for men and women, decontamination facilities, and storage for contaminated clothing.

Service Room

This room contains pressure regulators, strainers, flowmeters, backflow preventers, radiation monitors, and associated valves for raw water and steam supplies.

Administrative Area

The administrative area includes a lobby, offices, lunchroom, meeting/training rooms, restrooms, and an access control station, all of which have handicapped access.

The second floor of the Ventilation Building contains the following areas.

Operating Galleries

The operating galleries contain instrumentation and equipment for local control and monitoring of the primary tank ventilation system.

Restroom

A restroom will be provided on the second floor.

Building Exhaust Room

This room contains the air-cleaning units for the nonprocess areas of the Ventilation Building.

Building Heating, Ventilating, and Air Conditioning Supply Room

This room contains the supply air units for the Ventilation Building.

Electrical Room

This room contains electrical panels for the normal power supply.

Condenser Cooling Equipment Room

This room contains pumps, chillers, and other equipment associated with condenser cooling.

The heating, ventilating, and air-conditioning (HVAC) systems for the Ventilation Building will be energy efficient to meet the requirements of DOE Order 6430.1A. High-efficiency particulate air (HEPA) filter housings used throughout the building will meet applicable portions of American Society of Mechanical Engineers (ASME) N509. The housings will contain provisions for in-place testing of HEPA filters in accordance with ASME N510.

The environmental conditions for Ventilation Building areas are shown on Table 1.

TABLE 1

VENTILATION BUILDING INDOOR TEMPERATURES		
AREAS	TEMPERATURES °F DB	
	SUMMER	WINTER
Offices, Lunchroom, Lobby, Conference Rooms, Corridors, Operating Galleries, Liquid Sampling Room	78	72
Electrical Rooms (Normal and Backup)	80	65
Clean and Contaminated Solid-Waste Room, Condenser Cooling Equipment Room, Building Exhaust Room, Primary Exhaust Rooms, Fan Rooms, Annulus Exhaust Room, Cell Exhaust Rooms, Primary Intake Rooms, Building HVAC Supply Room, Exhaust Sampling Rooms, Air Compressor Room	85	65
Process Cells and Pipe Trenches	90	45
Communications Room and Control Room	72 ± 2°F; 45 ± 5% RH	72 ± 2°F; 45 ± 5% RH
Changeroom	78	75

The HVAC systems for the Ventilation Building will maintain differential air pressures listed in Table 2. Ventilation zones are shown on drawing SK-2-58764.

TABLE 2

VENTILATION BUILDING PRESSURE ZONES		
Zone	Pressure with Respect to Atmosphere	Area
I	(-)0.75 in. wc	Process Cells, Pipe Trenches, Liquid Sampling Cells
II	(-)0.25 in. wc	Cell Exhaust Rooms, Primary Exhaust Rooms, Liquid Sampling Room, Primary Intake Rooms, Exhaust Sampling Rooms
III	(-)0.15 in. wc	Building Exhaust Room, Annulus Exhaust Room, Changeroom, Contaminated Solid-Waste Room, Operating Galleries, Condenser Cooling Equipment Room, Primary Exhaust Fan Rooms
IV	(+)0.05 in. wc	Communications Room, Air Compressor Room, Building HVAC Supply Room, Control Room, Electrical Rooms, Administrative Areas

Airflow is directed from areas of low potential for contamination to areas of high potential for contamination. Heating, ventilating, and air-conditioning airflow and control systems are shown on drawings SK-2-58761 through SK-2-58763.

Heating and cooling for the cells and pipe trench areas of Ventilation Zone I will be provided by a supply air unit consisting of a heating coil, a filter bank, an evaporative cooling section, and a supply fan. A bank of HEPA filters will be provided in the supply duct for backflow protection. The exhaust system will contain HEPA filter trains and fans. A standby HEPA filter train and exhaust fan will be provided to facilitate filter changeout and repairs. The standby fan will start automatically upon failure of the operating exhaust fan.

Ventilation for the liquid sampling cells of Ventilation Zone I will be accomplished by directing air flow from the Liquid Sampling Room

to the cells. High-efficiency particulate air filters will be provided at the intake to the cells and at the cell outlet.

Heating and cooling for the Liquid Sampling Rooms in Ventilation Zone II will be provided by a supply air unit consisting of a heating coil, an ASHRAE-rated filter bank, a cooling coil, and a supply fan. The exhaust system will contain HEPA filter trains and fans. A standby filter train and exhaust fan will be provided.

Heating and cooling for the remaining areas in Ventilation Zone II will be provided by a supply air unit consisting of a heating coil, an ASHRAE-rated filter bank, an evaporative cooling section, a supply fan, and zone reheat coils. The exhaust system will contain HEPA filter trains and fans. A standby filter bank and exhaust fan will be provided.

Heating and cooling for Ventilation Zone III areas will be provided by supply air units consisting of heating coils, ASHRAE-rated filter banks, evaporative cooling sections or cooling coils, supply fans, and heating coils. The exhaust system will contain four HEPA filter trains (three in operation and one on standby) and two fans (one in service and one on standby).

Heating and cooling for Ventilation Zone IV areas will be provided by a recirculating supply air unit consisting of a return air fan, a heating coil, an ASHRAE-rated filter bank, a supply fan, and zone cooling and heating coils.

Several areas within the Ventilation Building have additional HVAC requirements. The Control Room and Communications Room will have air-conditioning units to control temperature and humidity. A standby air-conditioning unit will be provided for the Control Room. This unit will be connected to the backup power electrical system.

The Control Room will have a standby ventilation system that will circulate room air through a HEPA filter and maintain positive pressure in the Control Room with respect to atmosphere.

The building HVAC Supply Room will have a recirculating unit consisting of a heating coil, an ASHRAE-rated filter bank, an evaporative cooling section, a heating coil, and a supply fan.

Cooling water for the Ventilation Building HVAC systems will be provided by a central chilled-water system consisting of air-cooled chillers and pumps. Chilled-water pumps will be provided to circulate chilled water to the various cooling coils throughout the building. Standby chilled-water pumps will be provided. Steam for the HVAC system will be supplied from the Ventilation Building steam supply system.

The Ventilation Building fire protection system will be designed in accordance with DOE Order 6430.1A. The system will contain an appropriate integration of fire prevention and suppression features. Hand-held fire extinguishers will be provided throughout the facility.

The Ventilation Building will be protected by hydraulically calculated (Factory Mutual data sheets) automatic wet- or dry-sprinkler systems in accordance with National Fire Protection Association (NFPA), NFPA 13. The sprinkler systems (one per 52,000 ft^2) will be supplied from two reliable independent raw water sources, each with sufficient capacity for fire fighting. One of these two sources and the sprinkler systems will be installed to withstand natural forces as defined in SDC-4.1.

The sprinkler supply systems will have supervised post indicator valves located at a minimum of 40 ft from the Ventilation Building.

Containment for all water that can be released from the sprinkler systems and fire hoses will be provided by the Ventilation Building.

The fire alarm system will be provided with a local 60-hour backup battery. An alarm and control system will be provided for selective HVAC shutdown. The alarm system will transmit all trouble alarms to the radio fire alarm reporter. The radio fire alarm reporter will transmit all signals to the Hanford Fire Department.

Double-action manual pull stations will be provided with 24 V electronic strobe chimes and detection devices capable of operating in a radiation environment.

Wherever practical, the MWTF will be designed and constructed using fire-resistant and noncombustible materials. Combustible materials will not be used in the construction of process system confinement barriers.

C. OTHER STRUCTURES (550)

1. Process Pits

All process pits are located in the Weather Enclosure. (See drawing SK-2-58745.) The pits contain process-related equipment and will be lined with stainless steel. All pumps, valves, and piping in the process pits are designed to be remotely installed, operated, and removed.

Unless otherwise indicated, all pits will be equipped with spray nozzles for washdown of the interior surfaces of the pits with cover blocks in-place. Removable perimeter safety railings will be available for personnel protection whenever the cover blocks are removed. All process pits on each tank will drain to either of the two drain

collection pits located on the perimeter of the tank. Cover block thickness will be verified by analysis in order to meet ALARA.

Valve Pit

All waste transfer operations, to and from the tanks, will be routed through the valve pit. Spare connections will be provided for future use. The pit will have a jumper storage area and will drain to the drain pit on tank 103.

The valve pit will be approximately 30 by 18 by 7 ft deep, and the jumper storage area will be 18 by 18 by 7 ft deep. Both of these areas will be stainless steel lined. The cover blocks over the valve pit and jumper storage area will be 3 ft thick and 1 ft thick, respectively.

Transfer Pump Pits

A transfer pump pit will be constructed over the central riser of each tank for installation of a waste transfer pump. A riser within the pump pit is provided for future waste retrieval operations. Each pit will be approximately 14 by 8 by 7 ft deep and have 3 ft-thick cover blocks.

Annulus Pump Pits

An annulus pump pit will be constructed over a riser on the annulus of each tank. The pit will provide for installation of the annulus pump for removal of any leakage into the secondary containment. Each pit will be 5 by 5 by 10 ft deep and have 3-ft thick cover blocks.

Leak Detection Pit

The leak detection pit is located over a well which will collect any leakage from beneath the secondary liners of the four tanks. The leak detection pit provides for liquid sampling and measurement of

liquid level, temperature, and radiation. The 5- by 6- by 17-ft deep pit will have 3-ft thick cover blocks.

Drain Pit

A drain pit will be located at Tank 103. It will receive drainage from the valve pit, booster pump pit, primary air distribution pit, and crossover pits. The 6- by 6- by 11-ft deep pit will have 3-ft thick cover blocks.

Drain Collection Pits

Drain lines from all pits at each tank will drain to either of the two drain collection pits for eventual routing back to the tank. Each drain collection pit will be 10 by 20 by 10 ft deep and will have 3-ft thick cover blocks.

Liquid Sampling Pits

A sampling pit on each tank will contain three sample pump assemblies to collect liquid samples from three distinct levels in the primary tank. Each 5- by 5- by 8-ft deep pit will have 3-ft thick cover blocks.

Gas Sampling Pits

Four sampling pits on each tank will contain a riser and piping to collect gas samples from the vapor space in the primary tank. The pipe from each sampling pit will be routed to the Gas Sampling Building located in the middle of the Weather Enclosure. Each 5- by 5- by 8-ft deep pit will have 3-ft thick cover blocks.

Mixing Pump Pits

Six mixing pump pits containing mixing pumps will be located on each tank. The mixing pump motors will be cooled by a closed-loop water cooling system to remove heat generated in the motor. Each 8- by 8- by 11-ft deep pit will have 3-ft thick cover blocks.

Corrosion Sample Pits

A corrosion sample pit above each tank will contain two risers: one for corrosion coupon insertion and retrieval and the other for corrosion probes. Each 5- by 10- by 8-ft deep pit will have 3-ft thick cover blocks.

Primary Air Distribution Pit

The primary tank ventilation system air intake is located in the Ventilation Building. The intake air is routed to the primary air distribution pit where it is distributed to the four tanks. Distribution valving will be installed in this pit. This pit has no spray ring for washdown. The 14- by 8- by 8-ft deep pit will have 3-ft thick cover blocks.

Thermocouple Pits

A thermocouple pit will be located on each tank. The pits will contain thermocouple assemblies which are retrievable and will be used for monitoring the vapor space and liquid waste temperatures. The two HWVP support tanks will each have one additional thermocouple pit. Each 5- by 5- by 8-ft deep pit will have 3-ft thick cover blocks.

Cross-Over Pits

Two cross-over pits will provide the tie-in piping and valving for diversion of the annulus exhaust to the once-through primary exhaust system if a leak from the primary tank to the annulus is indicated. These pits have no spray rings for washdown. Each 9- by 12- by 8-ft deep pit will have 3-ft thick cover blocks.

Booster Pump Pit

The pit will be installed between the valve pit and Diversion Box 2 provided by project W-058. The pit contains a booster pump which

will provide additional pressure for the HWVP waste transfers. The 8- by 12- by 8-ft deep pit will have 3-ft thick cover blocks.

Flush Pit

A flush pit will contain raw water piping, valves, and check valves for flushing of valve pit jumpers and waste transfer piping. This pit will drain to Tank 103. This pit will be 5 ft in diameter and 5 ft deep with a hinged metal cover. This pit is not lined and has no spray ring for washdown.

2. Stack

A self-supported, stainless steel exhaust stack, 6 ft in diameter by 100 ft high, will be located approximately 110 ft east of the Ventilation Building. The stack will be connected to the various ventilation exhaust systems by a stainless steel lined underground concrete tunnel. Access to stack monitoring probes will be provided.

3. Gas Sampling Building

This building is located inside the Weather Enclosure and contains gas sampling equipment to monitor the vapor space in the four primary tanks. The reinforced concrete building is 20 by 20 by 10 ft high.

4. Diesel Generator Building

This reinforced concrete structure is located south of the Ventilation Building and contains the backup diesel generator.

5. Diesel Fuel Oil Tank Vault

This vault is located south of the Ventilation Building and contains a diesel fuel oil storage tank which will supply fuel for the backup diesel generator.

D. UTILITIES (600)

The MWTF will be provided with the following utilities.

1. Normal Power Supply

Two unit substations will be provided to serve the MWTF electrical loads. Both substations will be rated at 13.8 kV-480Y/277 Vac, 3-phase, 4-wire, 60 Hz, and will be located outdoors. One substation will furnish power for the mixing pumps. The other substation will serve the remainder of the tank farm loads and will provide 100% spare capacity for future loads. A 13.8 kV overhead line will be extended from the new HWVP substation to the MWTF. A temporary substation will provide 480 V, 3-phase power during construction. The normal power supply system will be designed for a minimum power factor of 0.95.

2. Steam Supply

The steam supply will be tied into an existing 8-in., 225-psig steam line south of B-Plant. A new 6-in. steam line, approximately 2,500 ft long, will be installed extending south to a pressure-reducing station adjacent to the Ventilation Building to supply approximately 8,000 lb of steam per hour. A condensate return line will be routed to a future sitewide condensate return system.

3. Raw/Sanitary Water

Three 12-in. lines will supply raw water to the MWTF. One line will be connected to a 12-in. raw water line at the RWX/SWX manifold shelter provided by the HWVP northwest of the MWTF. The other two 12-in. raw water lines will be connected to an existing 12-in. raw water line south of the MWTF providing a fire protection loop extending around the MWTF. The fire protection loop will contain six fire hydrants, as shown in drawing SK-2-58742.

An isolation and sectional valving arrangement on the fire protection loop outside the Ventilation Building will provide two alternate flow paths of raw water for the fire protection system.

A 6-in. fire main connected to the existing 12-in. raw water line south of the MWTF will supply raw water to the fire protection sprinkler system riser installed inside the Ventilation Building.

Another 12-in. line connected to the fire protection loop will be the source of raw water for the Ventilation Building. This line will enter the Service Room in the northeast corner of the Ventilation Building. A 4-in. process water line will be extended from the 12-in. raw water line in the Service Room and will be equipped with a strainer, a water flow meter, a pressure reducing valve, backflow preventers, and a radiation detector. This line will supply make-up process water for cooling towers, flushing, washdown, and other process water requirements.

A 6-in. line will be connected to an existing 8-in. sanitary water line southeast of the Ventilation Building at the intersection of 4th Street and Atlanta Avenue. This line will supply potable water to the MWTF.

4. Communications

Telephone

The MWTF telephone system will be tied into the existing telephone system through new underground cable duct banks. The telephone instruments provided by this project will be compatible with the existing Hanford Site telephone system. Intraplant paging capability will be provided from all telephones in the MWTF. The site emergency annunciation system receiver will be located in the MWTF Control Room.

Hanford Local Area Network

The existing Hanford Local Area Network (HLAN) will be extended to the MWTF using composite fiberoptic cables. The cables will pass through a communications vault and terminate in the Ventilation Building Communications Room. The HLAN will be designed to comply with Institute of Electrical and Electronic Engineers (IEEE) 802.3, 10 Base T standards.

Communications Room

The Communications Room will be centrally located so that all areas requiring communication services are located within a 200 ft radius of the room. The system design will provide access for maintenance. Conduit will be sized to allow for 100% expansion. The Communications Room will be protected by an automatic wet-pipe sprinkler fire protection system designed in accordance with DOE/EP-0108.

5. Sanitary Sewage System

Sanitary wastes from the changerooms, bathrooms, and lunchroom will be piped to an onsite subsurface treatment system that conforms to Washington State regulations. Based on an estimated peak daily occupancy of 60 operations personnel (130 personnel during construction), the sewage system will be sized for a 1,650 gal/day flowrate. The 3,000-gal septic tank system will include a disposal field of approximately 3,300 ft^2 and will be located east of the MWTF. This system will be installed early to provide service during construction.

E. SPECIAL EQUIPMENT/PROCESS SYSTEMS (700)

1. Instrumentation

A DCS will monitor, control, alarm, and record all process system parameters as shown on the drawings. Specifically, the DCS will

monitor and control facility parameters such as temperature, pressure, flow, level, leak detection and radiation, and indicate equipment status. Instrumentation will be designed for fail safe operation. Radiation and leak detection instrumentation will initiate failure alarms.

The DCS is a functionally distributed, microprocessor-based modular system consisting of operator and engineering control consoles, local control units (LCUs), and a redundant communications network. The LCUs will be stand-alone control units located throughout the facility, and will operate independently of the control consoles. All monitoring/control logic will be distributed at the LCU level. Redundancy will be provided at the LCU level for control and monitoring of critical facility parameters. No single failure will prevent a safe shutdown or continued operation of the facility. The control console design will meet the requirements of MIL-STD-1472D. The DCS block diagram is shown on Figure 2.

The DCS will have the following monitoring and display features as a minimum:

- User-definable and predefined graphic displays. Predefined displays include a facility overview, status summary, group summary, detailed summary, and an alarm summary.

- Real-time trending of analog and discrete points for display or outputs to printers and plotters.

- Analog and discrete historical data generation.

- Data archival and data retrieval capability.

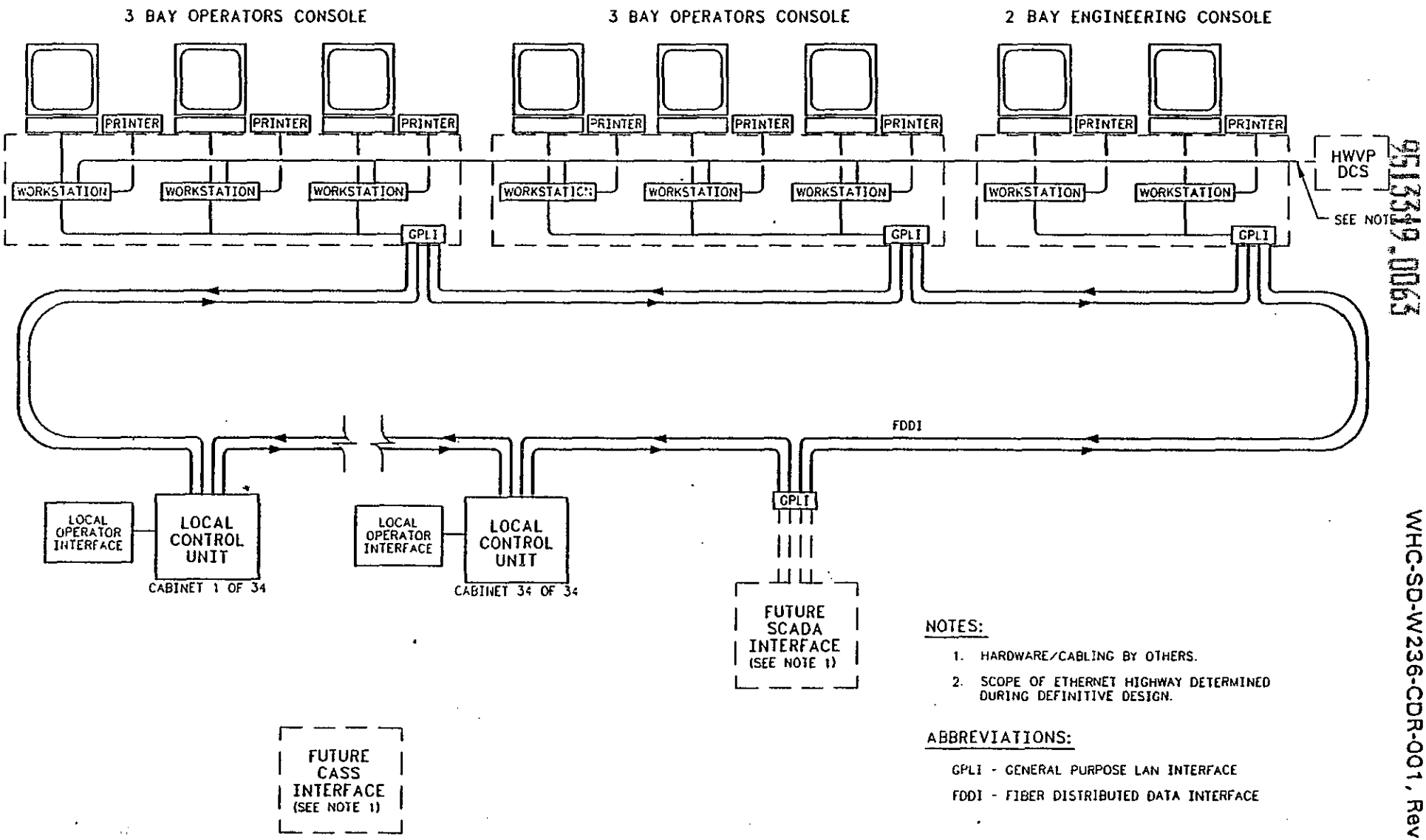

NOTES:

1. HARDWARE/CABLING BY OTHERS.
2. SCOPE OF ETHERNET HIGHWAY DETERMINED DURING DEFINITIVE DESIGN.

ABBREVIATIONS:

GPLI - GENERAL PURPOSE LAN INTERFACE

FDDI - FIBER DISTRIBUTED DATA INTERFACE

DCS BLOCK DIAGRAM

FIGURE 2

- Comprehensive alarm and event reporting including alarm logging, real-time alarm status, and critical alarm priorities.

- Real-time event display of discrete signals, such as valve position and pump or fan operational status.

Distributed Control System Interface

The DCS will provide for future tie-ins of the instrumentation signals to a supervisory control and data acquisition (SCADA) system. The DCS will include the necessary alarm output points for future tie-ins to the 200-East Area Computer Automated Surveillance System (CASS) and will also interface with the HWVP DCS (see Figure 2).

In-Tank Monitoring

The DCS will monitor and control waste level, temperature, and pressure in the primary tank. Any abnormal condition will be alarmed in the Control Room. The sludge level will also be monitored using buoyancy probes at four locations in each tank. (See drawings SK-2-58751 through SK-2-58754.)

Thermocouples

A total of 194 dual and/or replaceable thermocouples will be installed on the wall, dome, haunch, base, and castable refractory of the primary tank and the reinforced concrete structure surrounding the secondary containment liner to monitor temperatures.

Two multiple thermocouple probes (MTP) will be installed in the two primary tanks dedicated for HWVP. Each MTP will contain 18 single, replaceable thermocouples. The two MTPs will be placed in opposite quadrants equidistant from the centerline of the tank. Each of the other two tanks will have one MTP containing 18 single, replaceable thermocouples and one spare thermocouple riser.

Liquid Waste Sampling Monitoring and Control

Liquid waste samples will be taken from each tank at three different levels. The DCS will control and monitor the preprogrammed sample size and sampling frequency by time interval or proportioned flow with an option for manual operation. The DCS will provide sample bottle overfill protection and alarm, and will terminate the sampling operation in the event of any equipment malfunction. (See drawing SK-2-58755, sh 2.)

Primary Tank Ventilation Exhaust Monitoring and Control

A near isokinetic sampling and monitoring device will be installed downstream of the air filter train of the primary tank ventilation exhaust system to detect and alarm an abnormal release of radioactive material to the environment. Automatically controlled dampers will transfer the primary exhaust flow to the redundant air filter train. (See drawing SK-2-58760.)

Stack Monitoring

Monitoring systems will be installed on the stack to monitor and trend the concentration of radioactive and nonradioactive toxic materials released to the environment. Near-isokinetic and proportional samples collected by the probes are transmitted to the analyzers for measurement. Concentrations higher than allowable values will be alarmed by the DCS (see Figure 3).

The elements monitored are:

- Particulates, iodines, and organics (PIO)
- Beta and gamma radioactivity
- Tritium
- Nitrous oxides
- Total air mass flow and temperature

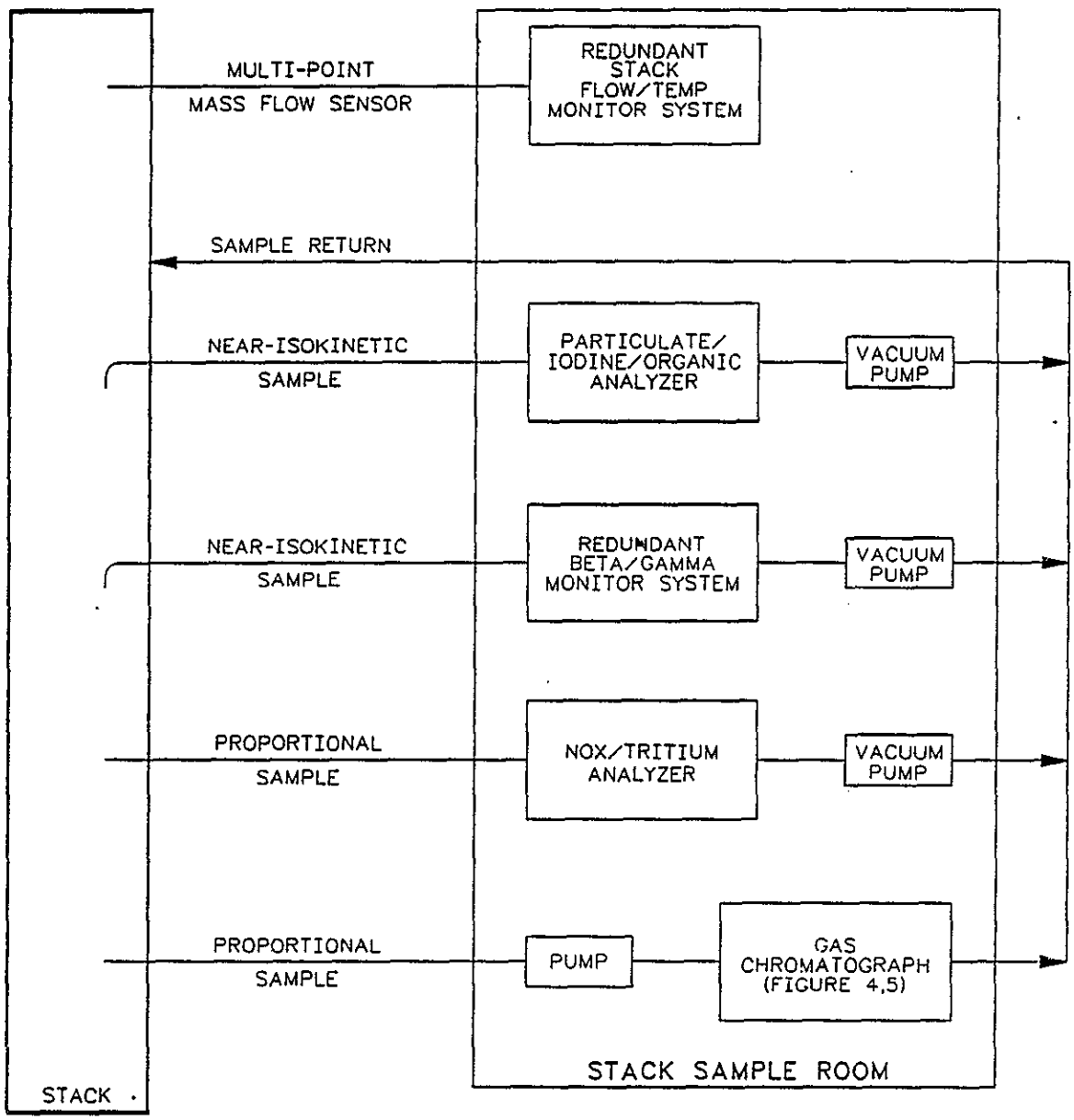

STACK MONITORING SYSTEM

FIGURE 3

The monitoring system will be designed and installed in accordance with American National Standards Institute (ANSI) N13.1 criteria.

Mixing Pump Monitoring and Control

A redundant set of transmitters will be installed on the mixing pumps for monitoring pump speed, vibration, and motor temperature. High-pump vibration, high- or low-pump speed, and high-motor temperature will be alarmed in the Control Room. The pumps are equipped with variable speed motors and will be controlled by the DCS. Any additional pump parameters that require monitoring will be evaluated in the detailed design. (See drawing SK-2-58765, sh 7.)

Leak Detection Well Monitoring

The leak detection well will be provided with level, temperature, and radiation monitoring devices. (See drawing SK-2-58755, sh 1.)

Annulus Exhaust Air Monitoring

A near-isokinetic sampling and monitoring device will be installed for each annulus ventilation exhaust system upstream of the HEPA filters to detect radioactivity in the annulus. The annulus air normally does not contain radioactive material in measurable quantities. Detection of radioactivity in the annulus exhaust air would indicate a possible leak from the primary tank into the annulus and would require transferring the annulus exhaust air to the once-through loop of the primary tank ventilation system. (See drawing SK-2-58760.)

Annulus Sump Level Monitoring

Leak detection will be installed in the annulus sump. Presence of liquid in the sump will be alarmed in the Control Room by the DCS indicating a possible leak from the primary tank to the annulus.

Corrosion Monitoring Probes

Removable electronic-resistance corrosion probes installed in the primary tanks are connected to the corrosion analyzers for measurement of the tank corrosion. The corrosion data will be monitored by the DCS.

Moisture Detection

A moisture analyzer will be installed at the primary tank ventilation exhaust outlet and another analyzer at the exhaust fans to measure the efficiency of the moisture removal equipment in the once-through loop of the primary tank ventilation system. (See drawings SK-2-58756, sh 2 and SK-2-58760).

Radiation Monitoring

Radiation monitors will be located throughout the MWTF. Local and remote readout and alarm capabilities will be provided. The exact placement and number required will be determined in later design phases. Continuous air monitors (CAMs) will be installed at several locations within the Ventilation Building. The Weather Enclosure will be equipped with space radiation sensors and CAMs.

Gas Chromatography

A gas chromatograph will be installed at the stack to measure the concentration of ignitable and hazardous gases released to the environment. Other gas chromatographs installed to monitor gases in the primary tank head space will be located in the Gas Sampling Building. The gas chromatographs will continuously detect and measure the presence of hydrogen, carbon monoxide, hydrogen sulfide, carbon disulfide, and organic gases. Gas chromatograph schematics are shown in Figures 4 and 5.

2. Tanks

Waste Tank Configuration

Each underground tank will be comprised of two main structures (see Figure 6). The outer structure will be made of reinforced concrete, designed to sustain all soil loads, dead loads, live loads, seismic loads, and the loads caused by temperature gradients between the radioactive wastes within the primary tank and the outside soil. This outer structure will be lined with a secondary liner (two tanks with carbon steel liners and the other two tanks with stainless steel liners) that extends along the bottom, side, and upper haunch of the concrete to the upper haunch of the primary tank. The secondary liner will contain any leakage that could result from a failure of the primary tank. The primary tank is a free-standing, completely enclosed, stainless steel structure. An annular space separates the carbon steel or stainless steel secondary liner from the primary tank.

The primary tank bottom will slope at 3% minimum to the center of the tank. (See Figure 6.)

A layer of castable refractory will be placed between the bottom of the primary tank and the secondary liner to protect the reinforced concrete slab base from thermal stresses caused by heat generated in the primary tank. The refractory will be constructed with passages for the annular space ventilation airflow. The castable refractory will be designed as a Safety Class 1 item.

a. **Secondary Liner**

The secondary liner material will be stainless steel type 304L for the two HWVP feed tanks and carbon steel for the other two waste tanks. The secondary liners will be designed in

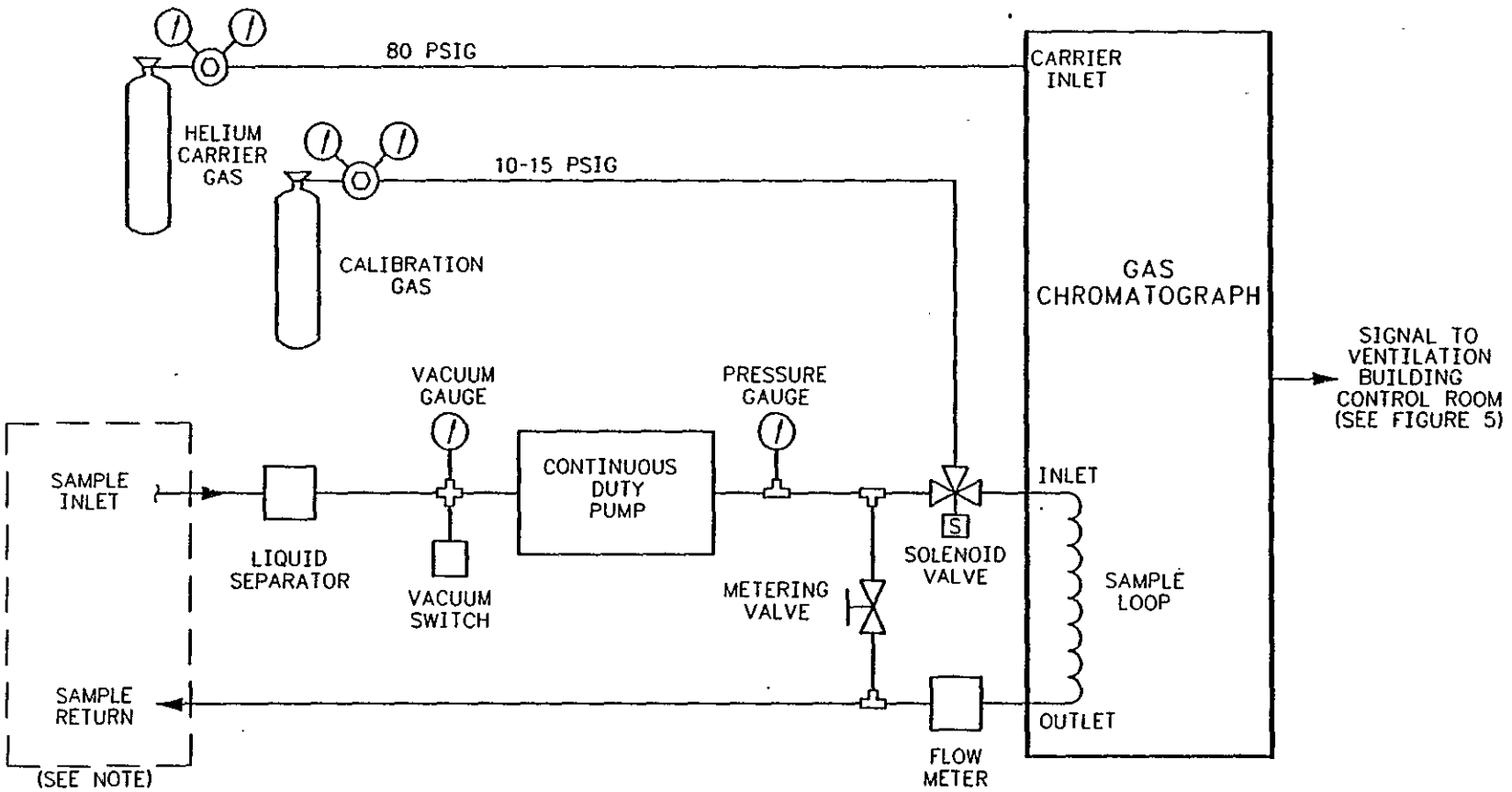

NOTE: EACH PRIMARY TANK WILL HAVE FOUR SAMPLE INLETS AND ONE SAMPLE RETURN. THE STACK WILL HAVE ONE SAMPLE INLET AND ONE SAMPLE RETURN.

GAS CHROMATOGRAPH SCHEMATIC (TYP OF 5)

FIGURE 4

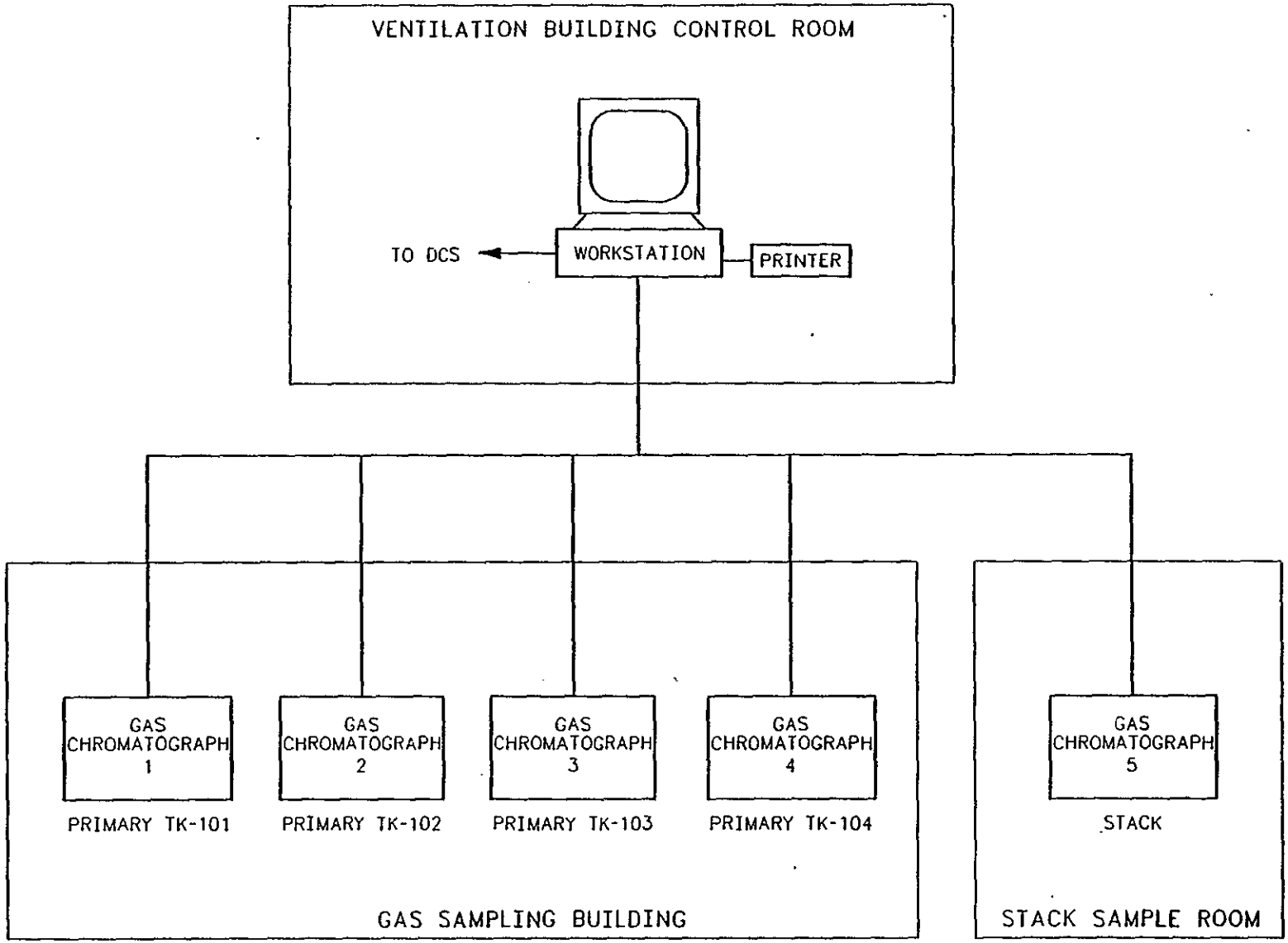

NOTE: FOR SAMPLING DETAILS REFER TO FIGURE 4.

GAS CHROMATOGRAPH SCHEMATIC

FIGURE 5

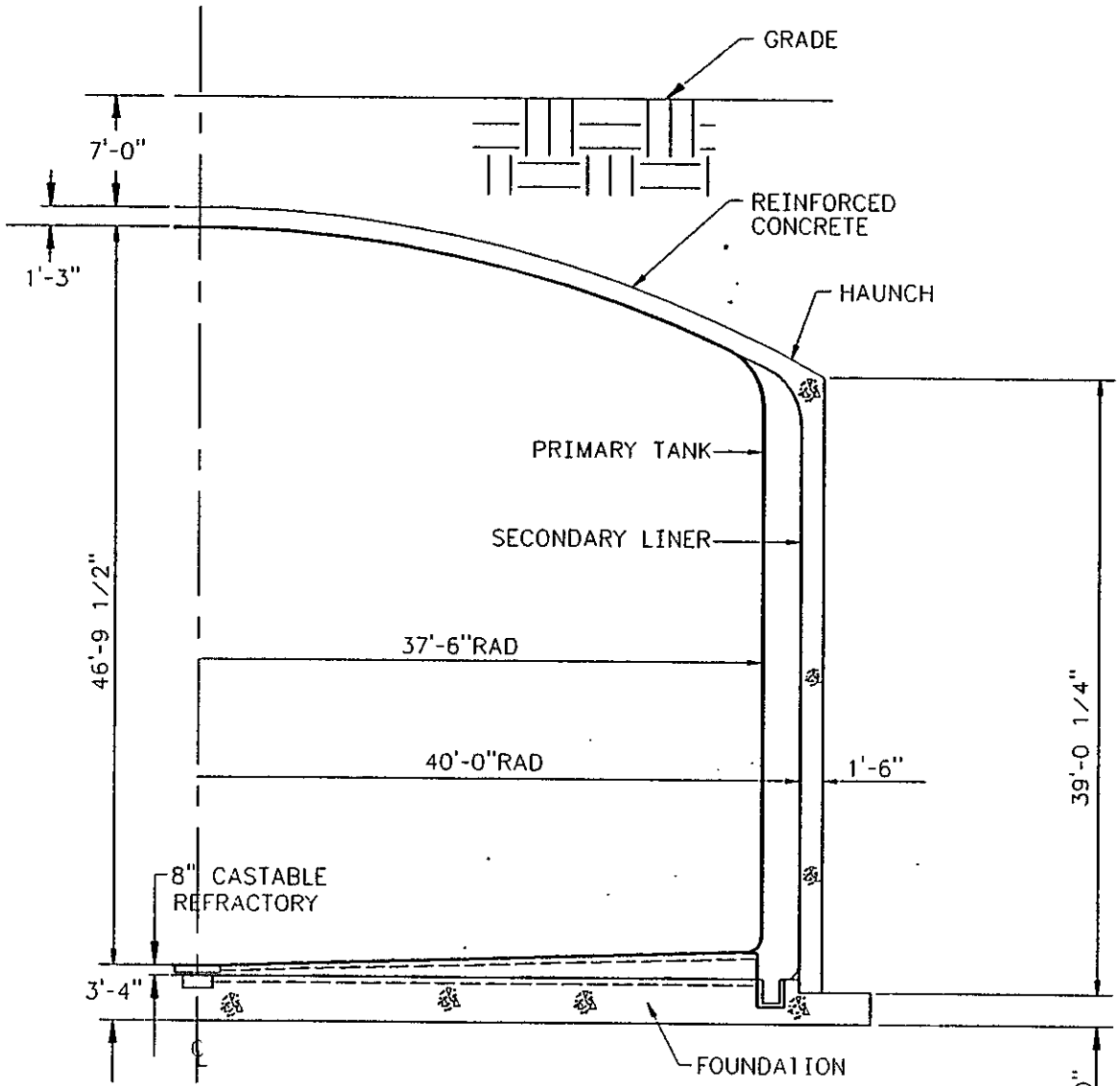

UNDERGROUND DOUBLE-SHELL STORAGE TANK

FIGURE 6

accordance with ASME Boiler and Pressure Vessel Code, Section VIII, Division 2 and will be designed as a Safety Class 2 item. The structural integrity and thickness of materials for both the carbon and stainless steel secondary liners are based on the preliminary analysis documented in Kaiser Engineers Hanford Company (KEH) letter report No. W236LR3.

b. **Primary Tank**

The primary tank is designed to confine radioactive waste as specified in the FDC. To meet this requirement, the primary tank material will be stainless steel type 304L. The structural integrity and thickness of material for the primary tanks are based on preliminary analysis documented in KEH letter report No. W236LR2.

The primary tanks will be designed as a Safety Class 1 item, and in accordance with ASME Boiler and Pressure Vessel Code, Section III, Division 1, Subsection NC.

Tank Dome Penetrations and Risers

Primary tank dome penetrations will provide access for primary tank monitoring and processing activities. Monitoring activities include measurements of liquid level, sludge level, temperature, and pressure. The primary tank dome penetrations also provide access for corrosion probes, corrosion coupons, and remote observation equipment. Processing activities that require tank penetrations include the tank ventilation, waste retrieval, waste mixing, pretreatment, and drainage collection from various pits and encasements located on or near the tank.

Secondary liner penetrations through the tank dome will provide access for all tank annulus monitoring and inspection equipment.

These penetrations will provide access for the annulus pump, ventilation air inlets and outlets, instrument leads, and annulus inspection, (100% visual inspection of the outside wall surface of the primary tank).

Pipe risers extending up from penetrations in the primary tank and annulus, not enclosed in pits, will terminate at or below grade, be protected by a traffic pad, and be shielded. The pads will be designed to protect the risers from damage by traffic on the dome. Flanged riser extensions will be used if needed to accommodate equipment that extends abovegrade.

Spare penetrations into the annulus and primary tank will be provided, including at least one spare for each size penetration or 10% of the total of each size penetration. Tank penetration risers provided for above grade equipment will be located to permit crane access for all maintenance work.

All risers not in use will be sealed in a manner capable of withstanding a range of -20 to +60 in. of water pressure. All risers will be designed so that connections of dissimilar metals are protected from corrosion. A list of the primary and annulus dome penetrations is given in Table 3.

TABLE 3

WASTE TANK DOME PENETRATIONS					
RISER NO.	QTY	SIZE	FUNCTION	ANGLE	RADIUS
1	3	6"	Spare	90°, 215°, 325°	17'-6"
2	1	6"	Liquid Level (LIT)	330°	10'-0"
3	1	24"	Transfer Pump	270°	6'-0"
4	2	12"	Observation Port	45°, 210°	10'-0"

TABLE 3 (Continued)

WASTE TANK DOME PENETRATIONS					
RISER NO.	QTY	SIZE	FUNCTION	ANGLE	RADIUS
5	1	6"	Spare	90°	22'-0"
6	2	24"	Annulus Access	90°, 270°	38'-6-3/8"
7	1	24"	Primary Exhaust	105°	28'-9"
8	8	6"	Air Inlet To Tank Refractory	15°, 60°, 105°, 150°, 195°, 240°, 285°, 330°	39'-3"
9	4	8"	Annulus Exhaust	62°-30', 140°-30', 242°-30', 332°-30'	38'-9"
10	2	12"	Spare	79°, 324°	30'-0"
11	1	42"	Spare (Retrieval Pump)	Central	0'
12	2	12"	Observation Port	225°, 317°	26'-0"
13	2	4"	Tank Pressure	238°, 307°	31'-6"
14	1	12"	Transfer Return	270°	9'-0"
15	1	6"	Spare	30°	16'-0"
16	6	6"	Spare	24°, 73°, 130°, 215°, 285°, 334°	30'-0"
17	16	12"	Annulus Inspection	18°, 36°, 54°, 78°, 108°, 126°, 144°, 162°, 191°, 216°, 236°, 256°, 278°, 300°, 324°, 349°	39'-3"
18	2	18"	Annulus Inspection	0°, 180°	39'-0"
19	6	6"	Annulus Instrumentation	49°, 117°, 165°, 228°, 295°, 342°	39'-4"
20	1	12"	Annulus Pump Out	206°-30'	38'-9"
21	1	12"	Contaminated Drain	183°	31'-0"
22	4	6"	Sludge Level	0°, 90°, 180°, 270°	14'-0"
23	3	6"	Level Detector Indicator	99°, 222°, 337°	38'-9"
24	1	6"	Spare	110°	32'-0"
25	1	6"	Liquid Level (High LE)	270°	20'-0"
26	1	6"	Liquid Level (LI)	137°	10'-0"
27	2	6"	Spare	155°, 315°	14'-0"
28	1	6"	Service and Flush Pit Drain or Spare	195°	34'-0"
29	1	12"	Sample-Process	141°	33'-0"
30	6	42"	Mixing Pump	0°, 60°, 120°, 180°, 240°, 300°	21'-0"

TABLE 3 (Continued)

WASTE TANK DOME PENETRATIONS					
RISER NO.	QTY	SIZE	FUNCTION	ANGLE	RADIUS
31	1	16"	Primary Vent-Through	280°	17'-0"
32	1	12"	Corrosion Sample	5°	33'-0"
33	1	12"	Corrosion Sample	355°	33'-0"
34	1	6"	Thermocouple	42°	29'-6"
35	1	6"	Thermocouple or Spare	250°	31'-6"
36	2	24"	Spare	90°, 270°	29'-6"
37	4	24"	Spare	26°, 154°, 206°,334°	24'-0"
38	1	4"	Sample-Gas	90°	9'-0"
39	3	4"	Sample-Gas	65°, 163°, 293°	33'-0"
40	1	6"	Drain	172°	34'-0"
41	1	18"	Spare	205°	32'-0"
42	1	4"	Spare	228°	14'-0"
43	1	8"	Spare	19°	34'-0"
44	1	16"	Spare	341°	33'-0"
45	1	12"	Primary Air Inlet	30°	34'-0"
46	1	18"	Primary Vent-Recirc	262°	28'-6"
47	1	4"	Sample Return-Process	103°	35'-0"
48	1	6"	Annulus Sump Instrumentation	112°	38'-9"
49	2	6"	Spare	70°, 250°	38'-9"
50	2	8"	Spare	113°, 319°	38'-9"
51	2	6"	Collection Tank Return	267°, 316°	33'-0"
52	1	6"	Chemical Add	16°	25'-0"

3. <u>Process Piping</u>

Process piping for the MWTF is shown on the engineering flow diagrams (drawings SK-2-58750 through SK-2-58756) and the hydraulic diagram (drawing SK-2-58757).

All process piping will be encased in secondary pipes to collect and detect any leakage from the primary process piping. All process

lines will be sloped to prevent fluid accumulation. Encasements will drain to the process pits in which they terminate.

Both the process piping and the encasement piping will be designed in accordance with the requirements of ASME B31.3 and will safely transport radioactive materials and corrosive liquids.

Both the primary process piping and the encasement piping will have provisions for pressure testing. The design pressures and temperatures will be the same for both primary and encasement piping.

The material specifications for the primary process piping and the secondary encasement piping are described in appendix E.

4. Process Equipment

Waste Transfer Pumps and Dummy Pump Heads

A total of five transfer pumps will be provided for the MWTF. A transfer pump will be installed in the transfer pump pit of each tank. A spare pump can be installed in any of the four annulus pump pits or in the leak detection well, as required for operations. Dummy pump heads will be installed on the transfer pump risers in the transfer pump pit when the transfer pumps are removed. Closure flanges will be installed on the annulus and leak detection pump risers when the pumps are not in place.

Waste Mixing Pumps

Each tank will be equipped with six 300-hp mixing pumps to maintain solids in suspension. Cooling of the mixing pump motors will be accomplished by circulating water through the pump motor jacket and a cooling tower.

Jumpers

All jumper components will be designed to minimize the amount of personal exposure time required for repair and replacement. All jumper process valves will be remotely positioned by motor actuators. Electrical and instrumentation connections between each process jumper and the terminal boxes will be provided by remote electrical jumpers.

5. <u>Primary Tank Ventilation System Equipment</u>

Each primary tank will have a separate primary ventilation system to preclude mixing of wastes between tanks. The primary tank ventilation system is designed to remove heat generated by radioactive decay and mixing pump operation, and to maintain negative pressure in the primary tank. The primary tank ventilation system includes condensers, cooling towers, chillers, and other equipment which will remove the majority of heat from each tank. A total of 2.6 MBtu/hr will be removed from the primary tank by the primary tank ventilation system (2.1 MBtu/hr), the annulus tank ventilation system (.1 MBtu/hr), and other natural heat transfer mechanisms (.4 MBtu/hr). A flow diagram of the primary ventilation system is shown in Figure 1.

Ventilation Piping

The primary tank ventilation system consists of two separate loops: a recirculation loop and a once-through loop. The recirculation loop will remove heat from the tank, and the once-through loop will sweep the primary tank head space to limit hydrogen and other gas accumulation in the tank and maintain a negative pressure. The primary tank ventilation system piping will be encased and routed below grade from the tanks to the Ventilation Building.

The recirculation loop will handle approximately 1,200 ft^3/min of air and remove approximately 1.6 MBtu/hr of heat for each tank.

The once-through loop will handle approximately 300 ft^3/min of air and remove approximately 0.5 MBtu/hr of heat for each tank.

Condensers

The recirculation loop condenser is a stainless steel heat exchanger located in a cell in the Ventilation Building. The condenser will cool the air stream from 200°F to 100°F. This will produce up to 10 gal/min of condensate which will be returned to the respective tank. Cooling for this condenser will be provided by a cooling tower.

The condenser in the once-through loop is a stainless steel heat exchanger located in a cell in the Ventilation Building. The condenser will cool the air stream from 200°F to 40°F. This will produce up to 1 gal/min of condensate which will be returned to the respective tank. Cooling for this condenser will be provided by a chiller system.

High-Efficiency Mist Eliminators

Redundant high-efficiency mist eliminators (HEME) in the once-through loop will be installed downstream of the condenser to remove aerosols and entrained water.

High-Efficiency Metal Fiber Filters

Redundant high-efficiency metal fiber (HEMF) filters in the once-through loop will be installed downstream of the HEMEs and heating coils. The high-efficiency metal fibers will remove particulates and will prolong the life of the final HEPA filter bank.

Exhaust System

The primary tank ventilation exhaust airflow and control system is shown in drawing SK-2-58760. The system will have redundant trains containing high-efficiency gas adsorbers (HEGA), prefilters, HEPA filters, and exhaust fans. The ventilation system components

are arranged for ease of maintenance. Pressure and temperature will be monitored and alarmed at LCUs and the MWTF Control Room. The HEPA filter housings will have devices for in-place testing of the HEPA filters.

Primary Ventilation Air Intake

Air will be supplied to the primary tank vapor space through redundant primary ventilation air intake units which contain prefilters, HEPA filters, and backdraft dampers. The intake units are located in the Primary Intake Rooms of the Ventilation Building. The air supply is distributed to the individual tanks through a primary air distribution pit which is located in the Weather Enclosure.

6. <u>Annulus Ventilation System</u>

The annulus ventilation airflow and control system is shown on drawing SK-2-58760. This once-through system will remove heat from the annular space between the primary tank and the secondary liner. Additionally, it will provide for detection of airborne radioactive materials and maintain negative pressure in the annulus.

The air intake stations, equipped with prefilters and HEPA filters will be located in the Weather Enclosure. Air is routed to the air distributors located immediately below the center of each primary tank. Air flows outwardly through channels in the insulating refractory to the annular space. The air is exhausted from the annulus through belowgrade piping to the Ventilation Building. Redundant exhaust trains located in the Ventilation Building will consist of preheaters, HEPA filters, and exhaust fans.

For each tank the annulus ventilation system will circulate air at approximately 1,100 ft^3/min. Pressure and temperature will be monitored and alarmed at LCUs and the Control Room.

7. Pit Ventilation System

The pit ventilation system maintains a negative pressure in the process pits when the cover blocks are installed and sealed. (See drawing SK-2-58763.) The system also services the Gas Sampling Building. The exhaust system will have a backup train of prefilters and HEPA filters. A standby exhaust fan will be provided.

8. Backup Generator

The backup diesel generator will be designed to receive a signal and start automatically when normal electric power is lost. When the generator achieves rated voltage and speed, the transfer switch will transfer the backup MCC to the generator which will power the backup equipment and systems. The primary ventilation fans will automatically be restarted by the DCS in a predetermined sequence. Other motor loads will be manually switched on, as required. The system will be designed to meet NFPA 70, NFPA 101, NFPA 110, and IEEE 446 requirements. The diesel generator will be supplied with fuel from a fuel tank and a pump contained in a reinforced concrete vault. (See drawing SK-2-58765, sh 8 and 9.) The backup power systems will be designed for a minimum power factor of 0.95.

9. Diesel Oil System

The diesel-oil storage tank that supplies fuel to the diesel generator will be housed in a concrete vault south of the Ventilation Building. Oil pipelines to and from the generator will be encased or provided with other secondary containment. Venting of the vault and the storage tank will meet NFPA requirements.

10. Uninterruptible Power Supply Systems

The MWTF emergency annunciation system and selected instrumentation will be powered by UPS systems. The UPS systems will be designed for a minimum power factor of 0.95.

11. Liquid Sampling System

Two stainless steel lined concrete cells within the Liquid Sampling Room will each be equipped with two master-slave manipulators, a single lead-glass shielding window, drain, internal lighting, a personnel access door and associated airlock, a load-in/load-out port for shielded sample containers, and provisions for removal and repair of the manipulators. A shielded transport cask will be provided to transport samples to another laboratory for analysis, if required.

During definitive design, a mock-up of a cell will be built at the Hanford Site. (Funding of this mock-up will be a project W-236 expense.)

A 5-ton overhead bridge crane will be provided within the Liquid Sampling Room. The crane will interface with a fixed monorail extension in the truck port for loading and unloading the shielded transport casks.

The samplers will be located within the shielded cells in the Liquid Sampling Room. The cells will be equipped with a water washdown system, a water flush for the sampler, and connections to permit decontamination solutions to be pumped through the washdown system. Instrument air will be supplied to drive the samplers. The pipes handling waste streams, including the drain system, will be encased and have leak detection instrumentation.

All drainage from the sample cells will be routed to the contaminated effluent system catch tank.

12. Compressed Air System

Dry, oil-free, compressed air for instruments will be supplied by an instrument air supply package consisting of two compressors located

in the Ventilation Building Air Compressor Room. Each compressor will be capable of supplying 150% of the MWTF requirements.

13. Contaminated Effluent System

Contaminated effluents from the decontamination shower and sinks in the regulated portion of the changeroom will be piped to an underground catch tank within a stainless steel lined concrete vault. The catch tank will have provisions for sampling, level indication, chemical addition, agitation, and pumpout capabilities.

14. Grounding System

A ground grid around the MWTF will be provided in accordance with SDC-7.5 for the electrical equipment grounding system. Grounding systems will also be provided for the tank farm instrumentation and for the lightning protection system. Wells will be drilled approximately 300 ft deep to the ground water table at the north and south ends of the grid for each grounding system (six wells, total) to permit installation of grounding electrodes in the water table. The remainder of the grounding electrodes and the buried ground cable making up the building ground grid will be installed in shallow wells and trenches which will be backfilled with low-resistance permanent grounding material. The grounding systems will have a single-bolted interconnection point in accordance with NFPA 70 and NFPA 78.

15. Lightning Protection System

A lightning protection system consisting of air terminals and interconnecting cabling will be installed on the Weather Enclosure, the Ventilation Building, and the exhaust stack. The lightning protection system materials will comply with NFPA 78.

16. Corrosion Protection System

A cathodic protection system will protect underground metallic structures against galvanic corrosion. This system will be

compatible with existing cathodic protection systems in the surrounding area.

V. METHODS OF PERFORMANCE

A. ONSITE ARCHITECT-ENGINEER WORK

The onsite engineer/constructor contractor will perform Title I preliminary design, Title II definitive design, Title III engineering support during construction, and Title III acceptance inspection on this project.

B. PROCUREMENT STRATEGY

The operating contractor will supply the following components for this project:

- Transfer pumps (5 each)
- Mixing pumps (24 each)
- PUREX connectors
- High-efficiency particulate air filters
- High-efficiency metal fiber filters

C. ONSITE CONSTRUCTION CONTRACTOR

The onsite engineer/constructor contractor will perform construction management, radioactively contaminated construction tie-ins, and jumper fabrication/installation on this project.

D. OFFSITE CONSTRUCTION CONTRACTOR

Offsite construction contractors will perform all construction for this project with the exception of radioactively contaminated construction tie-ins, electrical tie-in to power grid, and jumper fabrication/installation which are described elsewhere in this section. All fixed-price construction contracts will be managed and administered by the onsite engineer/

constructor contractor. The following fixed-priced contracts are anticipated for this project:

- Design-Construct Contracts
  - Primary tanks and secondary liners
- Construction Contracts
  - Site work.
  - Concrete encasement of secondary liners and backfill around tanks.
  - Buildings and support facilities.

E. OPERATING CONTRACTOR

The operating contractor will perform electrical tie-ins to the power grid. The operating contractor will provide overall project management during design, procurement, and construction on this project.

VI. REQUIREMENTS AND ASSESSMENTS

A. SAFEGUARDS AND SECURITY

The MWTF will be constructed within the 200-East Area security fence boundary.

All external doors will be administratively controlled by a restricted entry system. An indicator panel to monitor and control these doors will be located in the Control Room.

B. HEALTH AND SAFETY

1. Radiation Protection

Adequate shielding will be provided by cover blocks, shielding walls, and/or earthcover and will reduce exposure to as low as reasonably achievable (ALARA) for personnel safety. Exposure will not exceed 0.2 mR/hr maximum in controlled areas and 0.05 mR/hr in uncontrolled areas.

Tank Shielding

Approximately 7 ft of earthcover will be required over the tanks based on the radiation sources specified in the FDC.

Tank Risers and Pits Shielding

Tank risers and pits will be shielded by earth, concrete plugs, cover blocks, or a combination thereof, based on radiation sources specified in the FDC. Cover blocks will be approximately 3 ft thick for all process pits.

Building Shielding

Radiation areas in the buildings will be shielded by concrete walls.

2. Industrial Safety

Safe access to all areas of operation will be facilitated by stairways, ladders, platforms, and ramps with guardrails. Removable guardrails will be provided when cover blocks are removed from process cells and pits.

The facility will be designed in accordance with the Occupational Safety and Health Administration regulations and consideration will be given to traffic patterns during an emergency situation.

3. Risk Prevention During Construction

During construction, contractors will be required to take all reasonable precautions in their work to protect the health and safety of their employees, subcontractors, operation contractor, and DOE personnel.

All construction work will be performed in accordance with the Washington Administrative Code (WAC), WAC-296-155, "Washington Industrial Safety and Health Act Construction Code."

A 24-hr advance notice of any excavation work disrupting roadways or other services will be required to ensure that emergency personnel (i.e., patrol and fire department) are given adequate notification.

Applicable DOE standards and regulations will be complied with to minimize risks during construction. Appropriate safety standards and procedures will be followed for removing, packaging, and disposing of any contaminated soil and materials found during excavation. At all times, the construction contractor will ensure that the construction area is accessible to emergency vehicles or personnel and that emergency evacuation routes are not obstructed.

C. DECONTAMINATION AND DECOMMISSIONING

The MWTF will be designed to minimize contamination and release of hazardous materials. Confinement features, such as stainless steel liners in pits and cells, pit and riser spray rings, and specialized coating systems on concrete surfaces will enhance decontamination efforts during decommissioning. Process system components, with the exception of the primary tanks, can be isolated, packaged, and removed for further decontamination or disposal. Confinement systems that come into contact with waste, or have the potential to become contaminated, will be constructed of welded steel to minimize absorption of waste and facilitate decontamination.

Robotic manipulators and other decommissioning techniques are currently under development. It is anticipated that these technologies will be available when the MWTF is planned for closure.

During definitive design, consideration will be given to the decontamination and disposal of each component installed in the facility. Closure and postclosure plans will be developed during definitive design in accordance with WAC-173-303-610.

D. PROVISIONS FOR FALLOUT SHELTERS

Provisions for fallout shelters are not a part of this project.

E. MAINTENANCE REQUIREMENTS

The MWTF will be designed to allow access for maintenance work. The use of a bag-in/bag-out method during HEPA filter changes will minimize the spread of contamination and personnel exposure.

The location of risers, instrumentation, and electrical equipment will allow crane access to the process pits and cells. Space will be provided adjacent to the process pits and cells so that cover blocks can be stacked without moving the crane.

Equipment, instrumentation, detectors, and systems located in the process pits, cells, or tanks will be capable of being remotely removed and replaced. Rotating equipment not readily accessible will be remotely lubricated.

A staff of 40 to 60 operations and maintenance personnel will be required at the MWTF.

F. AUTOMATED DATA PROCESSING EQUIPMENT

The DCS will perform the function of automated data processing equipment (ADPE). There is no other ADP system or equipment in the

facility. Whether the DCS should be categorized as ADPE or not will be decided in a later design phase.

G. QUALITY ASSURANCE/SAFETY CLASSIFICATION

1. Quality Assurance Activities

Project activities for all contractors involved in design, procurement, construction, and acceptance will be governed, as applicable, by the requirements of ASME NQA-1 as interpreted guidance endorsed by DOE Order 5700.6C, "Quality Assurance" (QA). Minimum project quality requirements will be included in the project-specific QAPP. The QAPP will specify the QA requirements corresponding to the applicable safety classification assignments, and programmatic criteria, which are applicable to this project. Additional requirements may be added by appropriate controlling documents during definitive design. The specific technical and quality programmatic requirements, material certifications, qualification/certification of personnel, inspections, examinations/ testing, and applicable QA records will be established during definitive design and included in design documents.

The MWTF will be designed as a special facility in accordance with DOE Order 6430.1A, Division 13. The project has been assigned a "moderate hazard classification."

2. Safety Classification

Safety classifications of systems, components, and structures are established in accordance with WHC-CM-1-3, "Management Requirements and Procedures Manual," MRP 5.46, "Safety Classification of Systems, Components, and Structures."

Safety classifications are determined through analyses of consequences of system or component failures as indicated in the

Preliminary Safety Evaluation (PSE). Safety Class 1 is the highest level applied to any system, component, and/or structure of the MWTF.

Preliminary safety classifications of systems, components, and structures of the MWTF are shown in Table 4.

H. ENVIRONMENTAL COMPLIANCE

The MWTF design and operation will conform to Federal and State regulations for storage and treatment of hazardous waste. The design features providing compliance with regulations are listed below:

- Secondary containment will be provided for the primary tank and associated transfer systems that contain hazardous materials. The secondary containment for the primary tank is sized to contain the entire volume of the primary tank in case of a leak. Material selected for the secondary containment will be compatible with the waste stored in the primary tank to maintain the integrity of the secondary containment until the waste is transferred to another storage facility.

  A leak collection and monitoring system will be provided to identify a leak at the bottom of the secondary containment which cannot be inspected. This system will function as a tertiary confinement system to prevent release of liquid effluents to the soil.

- Exhaust air filtering and treatment systems will be provided for all contaminated air streams to control the release of radioactive and nonradioactive hazardous gases to the atmosphere in accordance with WHC-CM-7-5, "Environmental Compliance Manual." Monitoring

TABLE 4

SAFETY CLASSIFICATION MATRIX		
Systems/Structures/Components PSE Identification	Sub-Component Level Breakdown	Safety Class
Waste Storage Primary Tank	Primary Tank	1
Primary Tank Dome Penetrations	Primary Tank Risers	2
	Welded Attachments	2
Waste Storage Secondary Tank and Concrete	Secondary Tank Liner	2
	Secondary Tank Concrete	2
Secondary Tank Penetrations	Secondary Tank Risers	2
	Welded Attachments	2
Waste Storage Tank Refractory Concrete Pad	Refractory	1
Process Piping (Inner pipe) - including jumpers	Jumpers	2
	Diversion Box 2 to Central Valve Pit Piping	2
	Primary Process Piping	2
	Gas and Liquid Sample Piping	2
	Glove Boxes	2
	Pit Drain Seal Assemblies	2
	Dummy Pump Heads	2
	Process Line Blanks	2
	Encased Drain Piping (carrying process fluids)	2
Process Piping (outer pipe)	Process Piping Encasements	2
	Drain Piping Encasements	2
Process Valve Pits (Diversion Boxes)	Valve Pit	2
	Diversion Box 2	2

TABLE 4 (Continued)

Process Pits (1)	Jumper Storage Pit	3
	Sampling Pit	3
	Mixing Pump Pit	3
	Annulus Pump Pit	3
	Leak Detection Pit	3
	Cross Over Pit	3
	Corrosion Sample Pit	3
	Transfer Pump Pit	3
	Drain Pit	3
	Primary Exhaust Pit	3
	Primary Air Distribution Pit	3
	Pit Liners/Protective Coatings	3
	Leak Detection Well	3
	Flush Pit	3
	Thermocouple Pit	3
Sumps Pumps	Leak Detection Pit Pump Assembly	3
	Annulus Pump Assembly	3
Once-Through Primary Tank Ventilation - including Ducting	Air Intake System (HEPA, Piping)	2
	Air Intake Isolation Valve	2
	Piping from Tank to Ventilation Building	2
	Encasement	2
	Condensers	2
	HEME Housing (vessels)	2
	HEPA Housing	2
	HEMF Housing	2
	Heaters	2

TABLE 4 (Continued)

	Exhaust Fans	2
	Stack	2
	Concrete Exhaust Tunnel	2
	Concrete Exhaust Tunnel Backdraft Dampers	2
	Seal Pot (Loop)	2
	Primary Condensate and Encasement Piping	2
Recirculation Primary Ventilation System (1)	Piping and Encasement	2
	Condenser	2
	Air/Liquid Separator	2
	Recirculation Fan Housing	2
Secondary Tank Annulus Ventilation	Inlet Air System (HEPA Filters, Heaters, Air Distribution Piping)	3
	Annulus Exhaust System (Piping, Heaters, HEPA Filters)	3
	Annulus Exhaust Fans	3
	Annulus Piping Downstream of Fans	3
Pit Exhaust/Gas Sampling Building Ventilation System (1)	Air Distribution Piping and Encasement	3
	Gas Sampling Building Supply Unit	3
	Exhaust System (Piping, HEPA, Filters, Fans)	3
HVAC for Safety Related Areas(1)	Liquid Sampling Room HVAC	2
	Exhaust Sample Rooms HVAC	2

TABLE 4 (Continued)

	Backup Electrical Rooms HVAC	2
	Control Room HVAC	2
	Air Compressor Room HVAC	2
	Process Cells and Pipe Trenches HVAC	2
HVAC for Support System Areas(1)	Weather Enclosure HVAC	3
	Service Room HVAC	3
	Changeroom HVAC	3
	Annulus Exhaust Room HVAC	3
	Primary Exhaust and Fan Rooms HVAC	3
	Communications Room HVAC	3
	Lunchroom and Handicapped Restrooms HVAC	3
	Operating Galleries HVAC	3
	Lobby and Offices HVAC	3
	Primary Intake Room HVAC	3
	Cell Exhaust Room HVAC	3
	Contaminated Solid-Waste Room HVAC	3
	Clean Solid-Waste Room HVAC	3
	Corridors and Miscellaneous Service Rooms HVAC	3
	Condenser Cooling Equipment Room HVAC	3
	Building Exhaust Room HVAC	3

TABLE 4 (Continued)

	Electrical Exhaust Room (Normal Power) HVAC	3
	Building HVAC Supply Room HVAC	3
Temperature Measurement	Temperature Measurement	2
Level Indicator Leak Detection Elements (LDE)	Liquid Leak Detection	2
	Corrosion Instrumentation	2
Level Indicator Level Elements (LE), Level Indicators (LI)	Liquid Level Measurement	3
Sludge Level Monitoring (1)	Sludge Level Measurement	2
Ventilation System Differential Pressure Indicators (DPI)	HVAC Pressure Differential	2
Primary and Secondary Tank Pressure Indicators (PI)	Pressure Measurement/ Monitoring/Controls	2
Radiation Monitoring System	Air Radiation Monitoring/ Alarms/Interlocks	2
	Stack Exhaust Sampling and Monitoring/Alarms/Interlocks	2
Gas Monitoring (1)	Primary Tank Vapor Space Gas Monitoring	3
Control Systems	Vacuum Control	2
Primary Tank Mixing System	Waste Mixing Pump Assembly	3
Transfer Pumps	Transfer Pump Assembly	3
Waste Sampling System (excluding piping)	Waste Sampling Pump Assembly	3
Normal Power	Normal Power System	3
Back-up Power	Back-up Power System	2
	Diesel Generator/Diesel Fuel System	2
Uninterruptible Power Supply (UPS)	UPS (Batteries/Charger)	2

TABLE 4 (Continued)

Fire Protection Systems	Fire Protection Systems and Fire Alarms	3
Ventilation Buildings	Electrical Equipment Room (Backup Power)	2
	Control Room	2
	Liquid Sampling Room	2
	Exhaust Sample Rooms	2
	Primary Exhaust and Fan Room	2
	Catch Tank and Vault	2
	Operating Galleries	2
	Process Cells and Pipe Trenches	2
	Primary Intake Room	2
	Cell Exhaust Room	2
Ventilation Buildings Support Areas(1)	Service Room	3
	Changeroom	3
	Annulus Exhaust Room	3
	Communications Room	3
	Lobby and Offices	3
	Lunchroom and Handicapped Restrooms	3
	Contaminated Solid-Waste Room	3
	Clean Solid-Waste Room	3
	Condenser Cooling Equipment Room	3
	Building Exhaust Room	3
	Electrical Room (Normal Power)	3

TABLE 4 (Continued)

	Corridors and Misc. Service Rooms	3
	Building HVAC Supply Room	3
Generator Building	Diesel Generator Building	2
Air Compressors(1)	Instrument Air/Compressors	2
Nonprocess Piping (Drains, Drain Seals, nonencased lines, (etc.)(1)	Nonencased Drain Piping (Nonprocess Piping)	3
	Raw Water Spray Washdown	3
	Flush Lines	3
	Raw Water Line	3
	Leak Detection Pit Pump discharge Lines	3
	Vent Lines	3
	Steam High Pressure Lines	3
	Steam Low Pressure Lines	3
	Pit Exhaust Sample Lines	3
Auxiliary Systems(1)	Raw Water System	3
	Chemical System	3
	Cooling Towers	3
	Heat Exchangers	3
	Chiller System	3
Auxiliary Structures(1)	Weather Protection Enclosure	3
	Gas Sampling Building	2
	Diesel Fuel Storage Vaults	2
Auxiliary Instrumentation(1)	Heat Trace	3
	Cathodic Protection	3
	Lighting	3
	Communications	3

TABLE 4 (Continued)

	Signals	3
	Corrosion Retrieval Assemblies	3
(1) It should be noted that the table of safety classification has been expanded from the original PSE in the normal course of the design. The safety classifications assigned to these added items are intended to be consistent with the safety classifications assigned in the PSE. These additional classifications will be specifically addressed in the PSAR to be developed during preliminary design.		

and control systems will be provided to identify noncompliant streams and to automatically divert such streams to a redundant filter and treatment system.

The design and selection of the air treatment systems will be based on Best Available Control Technology (BACT) to minimize the release of hazardous materials to the environment. Performance of the selected equipment will be evaluated during definitive design to achieve the required objectives.

- Leak detection systems will be provided inside the secondary containments for the primary tanks and in the process pipe encasements. Leakage removal capabilities will be provided.

- Visual inspection capabilities will be provided in the annulus of the tank secondary containment.

- Cathodic protection will be provided for all tank system components and underground process piping systems.

- A coupon placement and retrieval system will be provided for monitoring corrosion of the primary tank material.

- Systems for sampling both the vapor and liquid contained within the primary tank will be provided.

- The primary tank will be maintained at a negative pressure (minimum: -12 in water) with respect to the atmosphere and tank over pressurization will be prevented by seal loops.

I. PERMITS

1. Dangerous Waste Regulations

The MWTF will be permitted for operation as a treatment and storage facility under the Resource Conservation and Recovery Act and the Washington State Dangerous Waste Regulations.

2. Air Emission Regulations

The MWTF will be permitted for operation under the Clean Air Act as a point source for the emission of radionuclides and nonradioactive hazardous materials. Registration will be required with the Washington State Department of Ecology (Ecology), Washington State Department of Health (WSDOH), and the Environmental Protection Agency (EPA). Additional permits or approvals required for the MWTF will be a Prevention of Significant Deterioration permit from Ecology and a New Source Construction Approval from Ecology and WSDOH.

Time Requirements

Construction will not proceed until all required permits are in-place. The total duration of permit activities is estimated to take 130 weeks. Approximate individual permit durations are shown in Table 5 and may run concurrently.

TABLE 5

PERMITTING SCHEDULE		
Permit	**Agency**	**Approximate Duration**
Permit Application Preparation	Operating Contractor	50-60 weeks
Hanford Facility Permit (RCRA Part B) Modification to Permit Attachment for Double-Shell Tank Operations	Ecology/EPA	30 weeks
Prevention of Significant Deterioration	Ecology	70 weeks
Toxic Air Pollutant Discharge	Ecology	70 weeks
Radioactive Air Emissions Program	WSDOH	30 weeks
National Emission Standards for Hazardous Air Pollutants	EPA	30 weeks

Permitting Strategy

The information generally needed for a permit application includes the emissions expected from the facility, the abatement equipment that will be installed, the type of sampling equipment that will be used, and any other monitoring or abatement equipment. It may be necessary to expedite definitive design of the MWTF ventilation system to support permit application and the desired start of construction.

3. Miscellaneous Approvals

Design approvals of the sanitary sewer collection, treatment, and disposal system and the sanitary water supply system will be obtained from Ecology as required by State regulations.

4. Liquid Discharge Regulations

The facility design will preclude discharge of hazardous liquid materials to the environment. Therefore, no permit is required for hazardous liquid discharges. However, discharge of

nonhazardous wastewater, such as steam condensate from space heating units, could occur if a condensate return system is not available. If nonhazardous wastewater is discharged from the facility, a State Waste Discharge Permit (WAC-173-216) will be obtained for a subsurface sewer disposal system.

J. APPLICABLE CODES AND STANDARDS

The following codes and standards are in addition to those already listed in the FDC. Unless otherwise noted, the latest edition of all codes and standards will apply.

1. National

American National Standards Institute

ANSI B16.3	American National Standard Malleable Iron Threaded Fittings, Class 150 and 300
ANSI B16.5	American National Standard Pipe Flanges and Flanged Fittings
ANSI B16.9,	American National Standard Factory-Made Wrought Steel Buttwelding
ANSI B16.9a-1981	Fittings
ANSI B16.11	American National Standard Forged Steel Fittings, Socket-Welding and Threaded
ANSI C80.1-1983	American National Standard for Rigid Steel Conduit-Zinc Coated
ANSI/ISA-S5.1	Instrumentation Symbols and Identification

ANSI/ISA-S5.2	Binary Logic Diagrams for Process Operations
ANSI/ISA-S5.4	Instrument Loop Diagrams

Instrument Society of America (ISA)

ISA-S5.3	Graphics Symbols for Distributed Control/Shared Display Instrumentation, Logic and Computer Systems

American Society of Mechanical Engineers

ASME Boiler and Pressure Vessel Code

Section II	Material Specifications
Section V	Nondestructive Examination
Section IX	Welding and Brazing Qualifications
ASME N510	Testing of Nuclear Air-Cleaning Systems
ASME NQA-1	Quality Assurance Program Requirements for Nuclear Facilities

American Society of Nondestructive Testing

Recommended Practice No. SNT-TC-1A	Personnel Qualification and Certification in Nondestructive Testing

American Welding Society (AWS)

AWS D1.1	Structural Welding Code-Steel
AWS D1.2	Structural Welding Code-Aluminum
AWS D1.3	Structural Welding Code-Sheet Steel
AWS D1.4	Structural Welding Code-Reinforcing Steel
AWS D9.1	Specification for Welding of Sheet Metal
AWS D10.4	Recommended Practices for Welding Austenitic Chromium-Nickel Stainless Steel Piping and Tubing
AWS QC1	Standard for Qualification and Certification of Welding Inspectors

American Water Works Association

C203-78	American National Standard for Coal-Tar Protective Coatings and Linings for Steel Water Pipelines--Enamel and Tape--Hot-Applied

Electronic Industry Association/Telecommunications Industry Association (EIA/TIA)

EIA/TIA-568	Commercial Building Wiring Standard
EIA-455-34	Interconnection Device Insertion Loss Test

REA	Rural Electric Association Telephone Practices/Specifications

Illuminating Engineering Society

Lighting Handbook

Institute of Electrical and Electronic Engineers

IEEE 802.3 10 Base T	Star Topology for Ethernet
IEEE 446	Recommended Practice for Emergency and Standby Power Systems for Industrial and Commercial Applications

National Fire Protection Association

NFPA 101	Life Safety Code
NFPA 110	Emergency and Standby Power Systems

National Electric Manufacturers Association (NEMA)

Standard Publication No. FB1-1988	Fittings, Cast Metal Boxes, and Conduit Bodies for Conduit and Cable Assemblies
Standard Publication No. RN 1-1989	Polyvinyl - Chlorine Externally Coated Galvanized Rigid Steel Conduit and Intermediate Metal Conduit
Standard Publication No. WD 1-1983 (R1989)	General Requirements for Wiring Devices

Sheet Metal and Air Conditioning Contractors National Association

Rectangular Industrial Duct Construction Standards
Round Industrial Duct Construction Standards

Uniform Building Code

International Conference of Building Officials - 1991 Edition

2. <u>Code of Federal Regulations (CFR)</u>

40 CFR 61, Subpart A	National Emission Standards for Hazardous Air Pollutants - General Provisions

3. <u>Department of Energy</u>

ERDA 76-21	Nuclear Air Cleaning Handbook
DOE/EP-0108	Standard for Fire Protection of DOE Electronic Computer/Data Processing Systems
UCRL-15910	Design and Evaluation Guidelines for Department of Energy Facilities Subjected to Natural Phenomena Hazards

4. <u>Hanford Plant Standards</u>

SDC-3.2	Minimum Depth of Underground Water Lines

SDC-7.4	Underground Power Distribution
SDC-7.5	Interior Electrical Power and Lighting Systems
E-12-1	Typical Electrical System Grounding for Buildings
E-12-2	Auxiliary Bonding of Electrical Equipment and Frames
E-12-5	Typical Grounding Grid and Connection for Building
E-14-1	Building and Process Wire and Cable - 600 Volt
HPS 111-M	Standard Specification for Identification of Piping Systems
DI and HPS 314-E	Instructions and Procurement Specification for Plastic Insulated, Jacketed Control Cable - 300 to 1000 Volts

5. <u>State Regulations</u>

WAC 173-216	State Waste Discharge Permit Program
WAC 173-400	General Regulations for Air Pollution Sources
WAC 246-272	On-Site Sewage Systems

WAC 246-290 Public Water Supplies

WAC 296-155, Part N Excavation, Trenching, and Shoring

VII. IDENTIFICATION AND ANALYSIS OF UNCERTAINTIES

Uncertainties for project W-236A fall into two categories. One category involves current uncertainties which are not clearly defined because of the early stage of design. The other category deals with the bases of conceptual design which, for various reasons described below, differ from information contained in the FDC.

A. CURRENT UNCERTAINTIES

1. Architectural

The primary reference cited by DOE Order 6430.1A for fire protection is NFPA 101. The only reference made to the Uniform Building Code is for definitions, fire resistive ratings, and types of construction. Because this project will come under the scrutiny of the State of Washington, via the Tri-Party Agreement, it is not clear if NFPA 101 will satisfy all fire protection requirements. Should it be decided at some future date that the entire UBC is applicable, cost and schedule impacts could result.

2. Structural

The method of qualifying the insulating refractory concrete to Safety Class 1 criteria is not defined at present. Existing industrial test standards are either not applicable or inadequate, and additional testing will be required to qualify the product as Safety Class 1.

3. Mechanical

If the process cells or pits become contaminated and the removal of the cover blocks is required for maintenance, the ventilation system will not maintain the negative air pressure to prevent the release of

contaminated air to the environment. Greenhousing has been assumed to be the method of confinement during maintenance activities in order to meet current regulatory requirements.

However, no analysis has been performed of the effectiveness of greenhousing to ensure that contaminated air will not be released to the environment while removing the cover blocks. Should it be determined during future design phases that greenhousing methods are not effective, substantial cost and schedule impacts could result.

4. Piping

The underground encasement pipe is designated as Safety Class 2 and a dynamic analysis in accordance with SDC-4.1 is required. It has not been found practical to perform this analysis for buried pipes. The analysis methodology planned to be used for the underground encasement pipe is a hand-calculation method which is based on Newmark's investigations and is published by ASME. If this methodology is found to be inadequate, the design cost and schedule could be impacted.

5. Heating, Ventilating, and Air-Conditioning

Air stream characteristics for exhaust air from the primary tanks have not been identified. For the conceptual design, it has been assumed that systems similar to those being proposed for other tank farms will be acceptable for the MWTF. Actual system selection will be determined when a comprehensive air stream characteristic study is provided.

The design basis fire (DBF) has not been identified and, therefore, has not been addressed in the design of the HVAC systems. When the DBF is identified, an analysis will be made of the design requirements.

6. Electrical

Should any electrically powered equipment be reclassified as Safety Class 1, extensive redesign of the electrical system will be required, including the addition of a second normal power line to the MWTF.

The method of installing grounding systems may not produce resistance readings as low as those required by the FDC. If these low-resistance readings are not achieved by the described methods, additional drilling and backfilling with special material will be required.

7. Tank Material

The steel thickness and material selection of the primary tank, and possibly the secondary liner, are uncertain at this time. Corrosion and erosion tests will have to be conducted with simulated waste and actual equipment, such as the mixing pumps, to develop reliable data in order to determine the appropriate material and thicknesses. If the test results indicate that material other than 304L stainless steel (carbon steel for two secondary liners) is required and/or that the steel thicknesses need to be increased, substantial cost and schedule impacts could result.

8. Distributed Control System Safety Class Designation

The FDC designates the entire DCS system as Safety Class 2. It is not practical to expect all components which make up the DCS system to be able to be qualified to the seismic criteria for Safety Class 2.

9. Thermal Analysis

The preliminary thermal analysis conducted during conceptual design was not completed due to the fact that the thermal computer code employed would not adequately handle turbulent flow generated by the mixing pumps. Furthermore, it was determined that the code did

not contain the iteration algorithms required for the solution of the nonlinear momentum equations. Actual testing involving scale models of the tanks and associated equipment will have to be conducted to determine flow characteristics and temperature distribution. Once test results have been collected, the thermal computer code will have to be modified accordingly and the appropriate thermal analysis completed. Until such time, the structural integrity of the double-shell tank system and the ability of the heat transfer system to remove the required amount of heat are questionable. Any redesign of the tank structure or the heat transfer system could result in substantial cost and schedule impacts.

10. Mixing Pumps

There was minimal information available during conceptual design concerning the mixing pumps. Issues of concern involve heat generation, weight, machine frequency, vibration, stress, cooling, etc. Further testing of the mixing pumps is required to verify both stresses imposed on the tank structure and the requirement for auxiliary systems such as cooling systems. Until adequate information is obtained and the appropriate analyses conducted, the structural integrity of the double-shell tank system relative to the loads imposed by the mixing pumps and the need for additional auxiliary systems is questionable. Any redesign of the tank structure or the requirement for additional auxiliary systems could result in substantial cost and schedule impacts.

B. CONCEPTUAL DESIGN BASES WHICH DIFFER FROM THE FUNCTIONAL DESIGN CRITERIA

1. NaOH Concentration

The NaOH concentration of 8.0 M is inconsistent with the corrosion allowance of .4 mil/yr in Table 1 of the FDC. The 8.0 M concentration of NaOH was disregarded in the conceptual design.

2. pH Design Criteria

The pH of 5 to 14 in Table 1 of the FDC is inconsistent with the corrosion allowance of .4 mil/yr also in Table 1 and, therefore, was disregarded in the conceptual design.

VIII. REFERENCES

A. DOCUMENTS

1. Functional Design Criteria, "Multi-Function Waste Tank Facility," Project W-236A, prepared by Westinghouse Hanford Company, Document No. WHC-SD-W236-FDC-001, Rev. 0, June 1992.

2. Report, "Site Evaluation Report for the Multi-Function Waste Tank Facility," prepared by Westinghouse Hanford Company, Document No. WHC-SD-W236-SE-001, Rev. 1, December 1991.

3. Report, "Preliminary Safety Evaluation," prepared by Westinghouse Hanford Company, Document No. WHC-SD-W236-PSE-001, Rev. 0, August 1991.

4. Letter Report, "Stress Analysis of Primary Tank," Project W-236, prepared by Kaiser Engineers Hanford Company, Document No. W236LR2, March 1992.

5. Letter Report, "Structural Analysis of Double-Shell Tank," Project W-236, prepared by Kaiser Engineers Hanford Company, Document No. W236LR3, March 1992.

B. DRAWINGS

H-2-36382	Instrument Waste Tank, Liquid Level Gauge Instrument and Riser Schedule
H-2-90568	Piping Plans and Details, Flush Pits 241-AP
H-2-71801	Farm Interface Board for Liquid Level Gauges
H-2-90833	Dummy Pump Head
H-2-90445	Structural Leak Detection Pits Plans, Section, and Detail
H-2-90446	Structural Annulus Pump Pits, Plans and Section
H-2-90447	Structural Central Pump Pits, Plans and Sections
H-2-90448	Structural 241-AP Valve Pit, Plan and Sections
H-2-90449	Structural Flush Pit Plan, Section and Detail
H-2-90450	Structural Vent Pits, Plans and Sections
H-2-90451	Structural Drain Pit Plan, Section and Detail
H-2-90452	Architect/Structural Plans, Section, and Electrical Support Facility
H-2-90453	Architect/Structural Details, Support Facilities
H-2-90562	Piping Plan, Central Pump Pit, 241-AP-01A through 08A

H-2-90563	Piping Sections and Detail, Ctl Pump Pit, 241-AP-01 through 08A
H-2-90564	Piping Plan, Annulus Pump Pit, 241-AP-01B through 08B
H-2-90565	Piping Section and Detail Annulus Pump Pit, 241-AP-01 through 08B
H-2-90566	Piping Plan, Leak Detection Pit, 241-AP-01C through 08C.
H-2-90567	Piping Section and Details, Leak Detail Pit 241-AP-01C through 08C
H-2-90571	Piping Arrgt and Details Drain Pit 241-AP-03D
H-2-90843	Piping, Miscellaneous Details III
H-9-1069	Pump, Vertical Turbine, Stainless Steel

APPENDIX A

Work Breakdown Structure

PROJECT SUMMARY WORK BREAKDOWN STRUCTURE

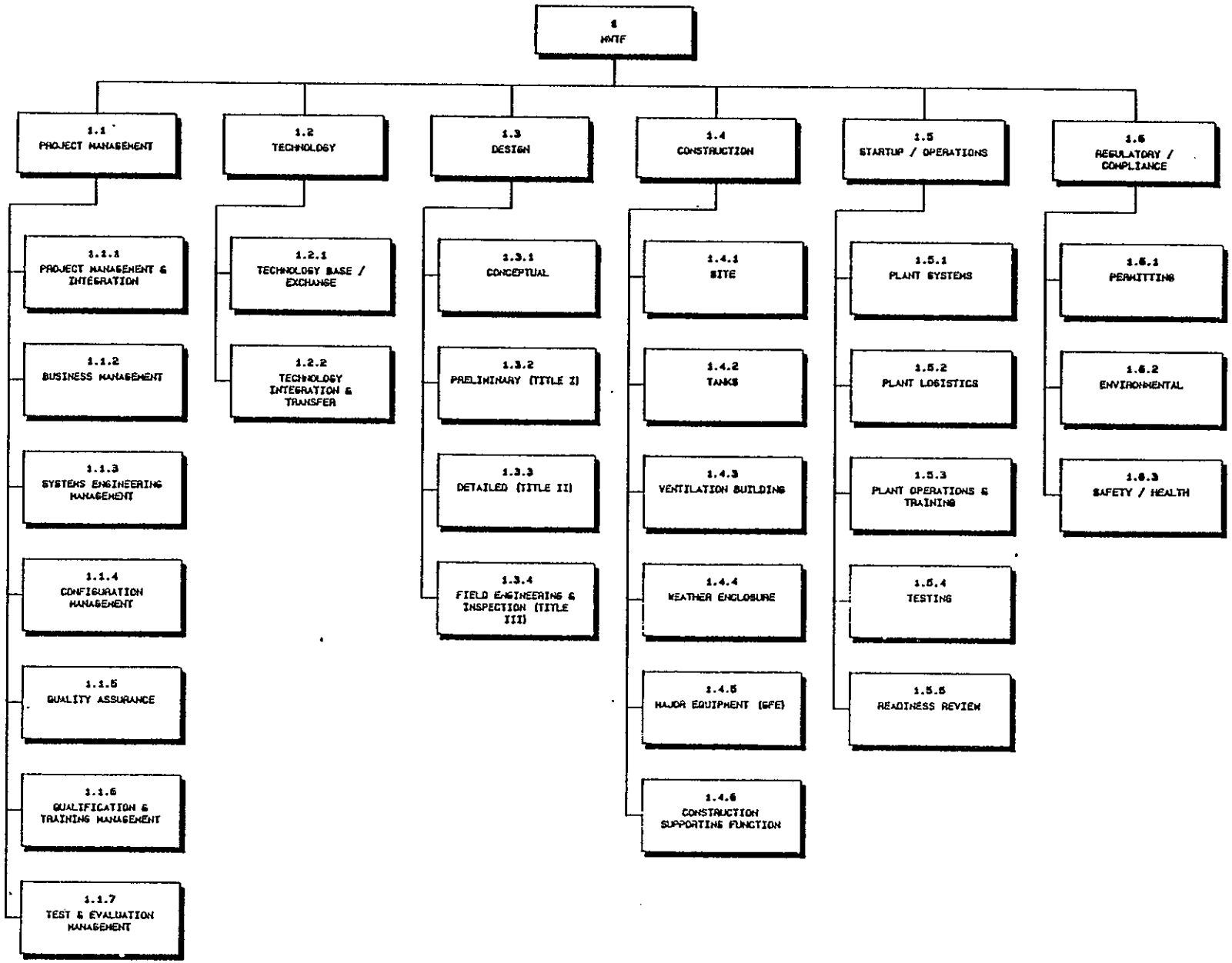

APPENDIX B

BA/BO Schedule

KAISER ENGINEERS HANFORD

MULTI-FUNCTION WASTE TANK FACILITY

BA / BO SCHEDULE (CAPITAL DOLLARS)

	TOTAL COST	PAST YEARS COST	FY 1993	FY 1994	FY 1995	FY 1996	FY 1997	FY 1998	FY 1999	FY 2000
			1 2 3 4	1 2 3 4	1 2 3 4	1 2 3 4	1 2 3 4	1 2 3 4	1 2 3 4	1 2 3 4
1.1 PROJECT MANAGEMENT	14080		1800/1000	2100/2100	2100/2100	2100/2100	2100/2100	2100/2100	1780/2100	0/480
1.2 TECHNOLOGY	0		SEE SHEET 2 - EXPENSE DOLLARS BA/BO SCHEDULE							
1.3.1 CONCEPTUAL DESIGN	0	0	SEE SHEET 2 - EXPENSE DOLLARS BA/BO SCHEDULE							
1.3.2 PRELIMINARY DESIGN (TITLE I)	12060		8500/5000	3560/7060						
1.3.3 DETAILED DESIGN (TITLE II)	37350			20000/15000	17350/19000	0/3350				
1.3.4 FIELD ENG/INSPECTION (TITLE III)	23100				3100/1700	5000/5000	5000/5000	5000/5000	5000/5000	0/1400
1.4.1 SITE	8300				3000/1500	5300/5500	0/1300			
1.4.2 TANKS	48050				10000/4100	18000/16000	18000/16000	2050/11950		
1.4.3 VENTILATION BUILDING	190905					40000/26000	60000/55000	60000/60000	30905/49905	
1.4.4 WEATHER ENCLOSURE	11480								11480/11480	
1.4.5 MAJOR EQUIPMENT (G.F.E.)	40025				20000/10000	20025/20000	0/10025			
1.4.6 CONSTRUCTION SUPPORT FUNCTION	32750				5000/2000	8000/8200	8000/8200	8000/8200	3750/6150	
1.5 START-UP/OPERATIONS	0		SEE SHEET 2 - EXPENSE DOLLARS BA/BO SCHEDULE							
1.6 REGULATORY/COMPLIANCE	0		SEE SHEET 2 - EXPENSE DOLLARS BA/BO SCHEDULE							
TOTALS BA / BO DOLLARS IN THOUSANDS	418100*	0	10300/6000	25660/24160	60550/40400	98425/86150	93100/97625	77150/87250	52915/74635	0/1880

* TPC COST IS $435,000 K

KAISER ENGINEERS HANFORD

MULTI-FUNCTION WASTE TANK FACILITY

BA / BO SCHEDULE (EXPENSE DOLLARS)

	TOTAL COST	PAST YEARS COST	FY 1993	FY 1994	FY 1995	FY 1996	FY 1997	FY 1998	FY 1999	FY 2000
1.1 PROJECT MANAGEMENT	0		SEE SHEET 1 - CAPITAL DOLLARS BA/BO SCHEDULE							
1.2 TECHNOLOGY	365		40/40	200/200	125/125					
1.3.1 CONCEPTUAL DESIGN	8805	5095	3710/3710							
1.3.2 PRELIMINARY DESIGN (TITLE I)	0		SEE SHEET 1 - CAPITAL DOLLARS BA/BO SCHEDULE							
1.3.3 DETAILED DESIGN (TITLE II)	0			SEE SHEET 1 - CAPITAL DOLLARS BA/BO SCHEDULE						
1.3.4 FIELD ENG/INSPECTION (TITLE III)	0				SEE SHEET 1 - CAPITAL DOLLARS BA/BO SCHEDULE					
1.4.1 SITE	0				SEE SHEET 1 - CAPITAL DOLLARS BA/BO SCHEDULE					
1.4.2 TANKS	0				SEE SHEET 1 - CAPITAL DOLLARS BA/BO SCHEDULE					
1.4.3 VENTILATION BUILDING	0					SEE SHEET 1 - CAPITAL DOLLARS BA/BO SCHEDULE				
1.4.4 WEATHER ENCLOSURE	0								SEE SHEET 1 - CAPITAL DOLLARS BA/BO SCHEDULE	
1.4.5 MAJOR EQUIPMENT (G.F.E.)	0				SEE SHEET 1 - CAPITAL DOLLARS BA/BO SCHEDULE					
1.4.6 CONSTRUCTION SUPPORT FUNCTION	0					SEE SHEET 1 - CAPITAL DOLLARS BA/BO SCHEDULE				
1.5 START-UP/OPERATIONS	3750		50/50	250/250	250/250	250/250	250/250	1000/1000	1500/1500	200/200
1.6 REGULATORY/COMPLIANCE	3980		200/200	600/600	600/600	600/600	600/600	600/600	780/780	
TOTALS BA / BO DOLLARS IN THOUSANDS	* 16900	5095	4000/4000	1050/1050	975/975	850/850	850/850	1600/1600	2280/2280	200/200

* TPC COST IS $435,000 K

APPENDIX C

Cost Estimate Summary

THIS PAGE INTENTIONALLY
LEFT BLANK

** KAISER ENGINEERS INTERACTIVE ESTIMATING **
MULTI-FUNCTION WASTE TANK FACILITY
CONCEPTUAL ESTIMATE
KEHR01 - PROJECT COST SUMMARY

COST CODE	DESCRIPTION	ESCALATED TOTAL COST	CONTINGENCY %	CONTINGENCY TOTAL	TOTAL DOLLARS
000	ENGINEERING	61,960,000	26	16,260,000	78,220,000
	(ADJUSTED TO MEET DOE 5100.4)	40,000		40,000	80,000
460	IMPROVEMENTS TO LAND	3,490,000	23	800,000	4,290,000
	(ADJUSTED TO MEET DOE 5100.4)	10,000		0	10,000
501	BUILDINGS	44,760,000	23	10,380,000	55,140,000
	(ADJUSTED TO MEET DOE 5100.4)	40,000		120,000	160,000
550	OTHER STRUCTURES	12,360,000	23	2,870,000	15,230,000
	(ADJUSTED TO MEET DOE 5100.4)	40,000		30,000	70,000
600	UTILITIES	4,990,000	27	1,350,000	6,340,000
	(ADJUSTED TO MEET DOE 5100.4)	10,000		50,000	60,000
700	SPECIAL EQUIP/PROCESS SYSTEMS	195,020,000	32	63,320,000	258,340,000
	(ADJUSTED TO MEET DOE 5100.4)	80,000		80,000	160,000
TOTAL ESTIMATED CONSTRUCTION COST		322,800,000		95,300,000	418,100,000
900	OTHER PROJECT COSTS	16,250,000	5	740,000	16,990,000
	(ADJUSTED TO MEET DOE 5100.4)	-50,000		-40,000	-90,000
TOTAL PROJECT COST		339,000,000	28	96,000,000	435,000,000

TYPE OF ESTIMATE	CONCEPTUAL	JUNE 23,1992
ARCHITECT ENGINEER	[signature]	6-24-92
OPERATING CONTRACTOR	[signature]	6-25-92

REMARKS:

(ROUNDED/ADJUSTED TO THE NEAREST " 10,000 / 100,000 " - PERCENTAGES NOT RECALCULATED TO REFLECT ROUNDING)

9513319.0094

WBS	DESCRIPTION	ESTIMATE SUBTOTAL	ONSITE INDIRECTS	SUB TOTAL	ESCALATION %	ESCALATION TOTAL	SUB TOTAL	CONTINGENCY %	CONTINGENCY TOTAL	TOTAL DOLLARS
1000	PROJECT MANAGEMENT O/C	9920000	0	9920000	29.00	2876800	12796800	10	1279680	14076480
SUBTOTAL 1	PROJECT MANAGEMENT O/C	9920000	0	9920000	29.00	2876800	12796800	10	1279680	14076480
2000	TECHNOLOGY	300000	0	300000	10.78	32340	332340	10	33234	365574
SUBTOTAL 2	TECHNOLOGY	300000	0	300000	10.78	32340	332340	10	33234	365574
3100	CONCEPTUAL DESIGN & ACD	8900000	0	8900000	0.00	0	8900000	0	0	8900000
SUBTOTAL 31	CONCEPTUAL DESIGN	8900000	0	8900000	0.00	0	8900000	0	0	8900000
3201	PLANNING	96720	0	96720	7.02	6789	103509	15	15526	119036
3211	SITE WORK	63478	0	63478	7.02	4456	67934	20	13586	81521
3212	UTILITIES	140134	0	140134	7.02	9838	149972	23	34494	184464
3221	PROCESS TANKS	198155	0	198155	7.02	13910	212065	30	63619	275685
3222	VAULTS AND PITS	125944	0	125944	7.02	8842	134786	30	40435	175220
3231	WEATHER ENCLOSURE	144124	0	144124	7.02	10117	154241	20	30847	185090
3232	VENTILATION BUILDING	787086	0	787086	7.02	55254	842340	30	252700	1095041
3233	OTHER STRUCTURES	112120	0	112120	7.02	7871	119991	30	35998	155989
3241	PRIMARY VENTILATION SYSTEM	252150	0	252150	7.02	17701	269851	30	80955	350806
3242	ANNULUS VENTILATION SYSTEM	110375	0	110375	7.02	7748	118123	20	23625	141748
3243	INSTRUMENTATION AND CONTROLS	1218600	0	1218600	7.02	85545	1304145	35	456451	1760596
3244	POWER DISTRIBUTION SYSTEM	148276	0	148276	7.02	10409	158685	25	39672	198356
3245	PROCESS PIPING	1119575	0	1119575	7.02	78595	1198170	25	299542	1497712
3251	TITLE II ENGINEERING ESTIMATE	120510	0	120510	7.02	8459	128969	20	25794	154764
3291	PROJECT MANAGEMENT	2818400	0	2818400	7.02	197852	3016252	20	603250	3619502
3292	QUALITY ASSURANCE	10400	0	10400	7.02	730	11130	20	2226	13356
3293	PROJECT CONTROLS	624440	0	624440	7.02	43836	668276	25	167069	835346
3294	CHIEF DESIGN ENGINEER OFFICE	345200	0	345200	7.02	24233	369433	20	73887	443319
3295	CONTRACT ADMINISTRATION	100340	0	100340	7.02	7044	107384	20	21477	128861
3296	ENVIRONMENTAL, HEALTH AND SAFETY	10400	0	10400	7.02	730	11130	20	2226	13356
3297	CONSTRUCTION TECHNICAL SERVICES	69240	0	69240	7.02	4861	74101	20	14821	88920
32AA	CHEMICAL MAKEUP	89000	0	89000	7.02	6248	95248	30	28574	123822
32BB	SLURRY & S. PUMPS	84924	0	84924	7.02	5962	90886	30	27266	118151
32CC	COLLECTION TANK	217280	0	217280	7.02	15253	232533	30	69760	302293
SUBTOTAL 32	PRELIM. DESIGN (TITLE I)	9006871	0	9006871	7.02	632283	9639154	25	2423800	12062954
3301	PLANNING	55280	0	55280	16.08	8888	64168	15	9625	73795
3311	SITE WORK	138919	0	138919	16.08	22338	161257	20	32251	193508

WBS	DESCRIPTION	ESTIMATE SUBTOTAL	ONSITE INDIRECTS	SUB TOTAL	ESCALATION %	ESCALATION TOTAL	SUB TOTAL	CONTINGENCY %	CONTINGENCY TOTAL	TOTAL DOLLARS
3312	UTILITIES	350661	0	350661	16.08	56386	407047	23	93621	500669
3321	PROCESS TANKS	668450	0	668450	16.08	107486	775936	30	232781	1008718
3322	VAULTS AND PITS	1082416	0	1082416	16.08	174052	1256468	30	376941	1633409
3331	WEATHER ENCLOSURE	199991	0	199991	16.08	32158	232149	20	46431	278580
3332	VENTILATION BUILDING	3456681	0	3456681	16.08	555834	4012515	30	1203754	5216270
3333	OTHER STRUCTURES	279253	0	279253	16.08	44903	324156	30	97247	421403
3341	PRIMARY VENTILATION SYSTEM	378860	0	378860	16.08	60921	439781	30	131935	571715
3342	ANNULUS VENTILATION SYSTEM	165775	0	165775	16.08	26656	192431	20	38486	230918
3343	INSTRUMENTATION AND CONTROLS	2363780	0	2363780	16.08	380096	2743876	35	960357	3704232
3344	POWER DISTRIBUTION SYSTEM	494950	0	494950	16.08	79588	574538	25	143634	718172
3345	PROCESS PIPING	4298330	0	4298330	16.08	691171	4989501	25	1247375	6236877
3351	E/I DURING CONSTRUCTION ESTIMATE	103440	0	103440	16.08	16632	120072	20	24015	1440872
3391	PROJECT MANAGEMENT	5197400	0	5197400	16.08	835742	6033142	20	1206628	7239770
3392	QUALITY ASSURANCE	41600	0	41600	16.08	6689	48289	20	9658	57947
3393	PROJECT CONTROLS	2324402	0	2324402	16.08	373764	2698166	25	674542	3372707
3394	CHIEF DESIGN ENGINEER OFFICE	1859850	0	1859850	16.08	299064	2158914	20	431783	2590696
3395	CONTRACT ADMINISTRATION	481400	0	481400	16.08	77409	558809	20	111762	670571
3396	ENVIRONMENTAL, HEALTH AND SAFETY	41600	0	41600	16.08	6689	48289	20	9658	57947
3397	CONSTRUCTION TECHNICAL SERVICES	487320	0	487320	16.08	78361	565681	20	113137	678818
33AA	CHEMICAL MAKEUP	268000	0	268000	16.08	43094	311094	30	93328	404423
33BB	SLURRY & S. PUMPS	254773	0	254773	16.08	40967	295740	30	88722	384463
33CC	COLLECTION TANK	651770	0	651770	16.08	104805	756575	30	226972	983547
SUBTOTAL 33	DETAIL DESIGN (TITLE II)	25644901	0	25644901	16.08	4123693	29768594	26	7604643	37373242
3410	PLANNING	113380	0	113380	38.66	43833	157213	30	47164	204377
3420	ENGINEERING DURING CONSTRUCTION	1684810	0	1684810	38.66	651347	2336157	30	700847	3037005
3430	ACCEPTANCE INSPECTION	3633333	0	3633333	38.66	1404647	5037980	30	1511394	6549373
3440	PROJECT MANAGEMENT	2868000	0	2868000	38.66	1108769	3976769	30	1193031	5169800
3450	QUALITY ASSURANCE	143000	0	143000	38.66	55284	198284	30	59485	257769
3460	PROJECT CONTROLS	1136000	0	1136000	38.66	439177	1575177	30	472554	2047731
3470	CHIEF DESIGN ENGINEER OFFICE	1040000	0	1040000	38.66	402064	1442064	30	432620	1874684
3480	CONTRACT ADMINISTRATION	928000	0	928000	38.66	358765	1286765	35	450368	1737132
3490	ENVIRONMENTAL, HEALTH & SAFETY	143000	0	143000	38.66	55284	198284	30	59485	257769
34AA	CHEMICAL MAKEUP	156000	0	156000	38.66	60310	216310	30	64893	281202
34BB	SLURRY & S. PUMPS	148618	0	148618	38.66	57456	206074	30	61822	267896
34CC	COLLECTION TANK	380170	0	380170	38.66	146974	527144	33	173957	701101
SUBTOTAL 34	FIELD ENGR/INSP. (TITLE III	12374311	0	12374311	38.66	4783910	17158221	30	5227620	22385839
SUBTOTAL 3	DESIGN	55926083	0	55926083	17.06	9539886	65465969	23	15256063	80722035
4111	UTILITIES	3192244	95768	3288012	19.67	646751	3934762	26	1038653	4973417

** KAISER ENGINEERS INTERACTIVE ESTIMATING **
MULTI-FUNCTION WASTE TANK FACILITY
CONCEPTUAL ESTIMATE
KEHR02 - WORK BREAKDOWN STRUCTURE SUMMARY

WBS	DESCRIPTION	ESTIMATE SUBTOTAL	ONSITE INDIRECTS	SUB TOTAL	ESCALATION %	ESCALATION TOTAL	SUB TOTAL	CONTINGENCY %	CONTINGENCY TOTAL	TOTAL DOLLARS
4112	CONSTRUCTION FENCE	53250	1598	54848	19.67	10789	65636	20	13127	78763
4113	ROAD CONSTRUCTION	114920	3447	118367	19.67	23283	141650	20	28330	169981
4114	SITE LEVELING	242859	7286	250145	19.67	49204	299348	20	59869	359218
4115	STABILIZATION	123910	3717	127627	19.67	25104	152732	20	30546	183278
SUBTOTAL 411	SITE PREP	3727183	111816	3838999	19.67	755131	4594128	25	1170525	5764657
4121	TANK & RAMP EXCAVATION	834873	25046	859919	19.67	169146	1029065	20	205813	1234878
4122	VENT BUILDING EXCAVATION	18400	552	18952	19.67	3728	22680	20	4536	27216
SUBTOTAL 412	TANK EXCAVATION	853273	25598	878871	19.67	172874	1051745	20	210349	1262094
4131	TANK FOUNDATION	826418	24792	851210	19.67	167433	1018644	25	254661	1273305
SUBTOTAL 413	TANK FOUNDATION	826418	24792	851210	19.67	167433	1018644	25	254661	1273305
SUBTOTAL 41	SITE	5406874	162206	5569080	19.67	1095438	6664517	25	1635535	8300056
4211	TANK DETAIL DESIGN	1200000	36000	1236000	25.02	309247	1545247	30	463574	2008821
4212	TANK ENGR/INSPEC.	600000	18000	618000	25.02	154624	772624	30	231787	1004411
SUBTOTAL 421	TANK DESIGN	1800000	54000	1854000	25.02	463871	2317871	30	695361	3013232
4221	REFRACTORY	600000	18000	618000	25.02	154624	772624	45	347681	1120304
4222	INNER SHELL	10204000	306120	10510120	25.02	2629632	13139752	40	5255901	18395653
4223	OUTER SHELL	6213600	186408	6400008	25.02	1601282	8001290	40	3200516	11201806
4224	CONCRETE ENCASEMENT	2358500	70755	2429255	25.02	607800	3037055	30	911116	3948171
4225	RISERS	6137309	184119	6321428	25.02	1581621	7903050	30	2370915	10273965
4226	ANNULUS PIPING	75054	2252	77306	25.02	19342	96647	30	28994	125642
SUBTOTAL 422	TANK CONSTRUCTION	25588463	767654	26356117	25.02	6594301	32950418	37	12115123	45065541
SUBTOTAL 42	TANKS	27388463	821654	28210117	25.02	7058172	35268289	36	12810484	48078773
4311	TANK FARM PITS	5534229	166031	5700260	31.22	1779622	7479880	21	1542429	9022298
4312	TANK FARM MECH UTILITIES	232689	6980	239669	31.22	74825	314495	30	94349	408843
4313	PROCESS MECH SYSTEM	19468189	372860	19841049	31.22	6194375	26035425	35	9227322	35262745
4314	TANK FARM ELECT POWER - SC3	2637993	79139	2717132	31.22	848289	3565421	26	937030	4502452
4316	SC3 - TANK FARM INSTRUMENTATION	647849	19436	667285	31.22	208326	875610	35	306464	1182074
4317	SC2 - TANK FARM INSTRUMENTATION	5455738	163674	5619412	31.22	1754381	7373789	35	2589313	9963102

WBS	DESCRIPTION	ESTIMATE SUBTOTAL	ONSITE INDIRECTS	SUB TOTAL	ESCALATION %	ESCALATION TOTAL	SUB TOTAL	CONTINGENCY %	CONTINGENCY TOTAL	TOTAL DOLLARS
4318	TANK BACKFILL	927783	27834	955617	31.22	298343	1253960	27	333444	1587404
4319	GAS SAMPLING BUILDING	204161	6124	210285	31.22	65652	275937	20	54025	329962
SUBTOTAL 431	TANK FARM AREA	35108631	842078	35950709	31.22	11223813	47174517	32	15084376	62258880
4321	VENTILATION BLDG STRUCTURE	21009571	630291	21639862	31.22	6755963	28395823	23	6490339	34886162
4322	PROCESS PIPING	13372123	242795	13614918	31.22	4250575	17865491	30	5417139	23282629
4323	PROCESS HVAC	4039404	121181	4160585	31.22	1298934	5459520	31	1703553	7163072
4324	BUILDING HVAC	3199304	95978	3295282	31.22	1028787	4324071	25	1081017	5405088
4325	BUILDING PIPING	1218287	36549	1254836	31.22	391759	1646594	27	441400	2087994
4326	VENT BLDG NORMAL PWR - SC3	2323408	69702	2393110	31.22	747129	3140240	28	882023	4022263
4327	SC2 - VENT BLDG EM POWER	1422229	42667	1464896	31.22	457341	1922237	25	480559	2402796
4328	VENT BLDG SC3 - INSTRUMENT.	1636733	49102	1685835	31.22	526318	2212153	35	774253	2986406
4329	VENT BLDG - SC2 INSTRUMENT.	7312300	219368	7531668	31.22	2351386	9883056	35	3467115	13350169
SUBTOTAL 432	VENT. BLDG. AREA	55533359	1507633	57040992	31.22	17808192	74849185	28	20737398	95586584
43AA	CHEMICAL MAKEUP	2452602	73577	2526179	31.22	788673	3314853	28	929806	4244659
43BB	SLURRY & S. PUMPS	2338087	70143	2408230	31.22	751850	3160079	31	977721	4137800
43CC	COLLECTION TANK	6410617	192319	6602936	31.22	2061437	8664372	34	2933597	11597969
43SD	SHIFT DIFFERENTIAL	6663369	199901	6863270	31.22	2142713	9005983	45	4052692	13058675
SUBTOTAL 43	VENTILATION BUILDING	108506665	2885651	111392316	31.22	34776678	146168989	31	44715590	190884567
4400	WEATHER ENCLOSURE BLDG	6076392	182292	6258684	43.79	2740677	8999362	21	1930448	10929811
44SD	SHIFT DIFFERENTIAL	284628	8539	293167	43.79	128378	421545	45	189695	611240
SUBTOTAL 44	WEATHER ENCLOSURE BLDG	6361020	190831	6551851	43.79	2869055	9420907	23	2120143	11541051
4511	TANK EQUIPMENT (GFE)	21859146	0	21859146	19.67	4299694	26158840	25	6539710	32698550
4521	VENT BLDG. EQUIPMENT (GFE)	2753652	0	2753652	19.67	541643	3295295	20	659059	3954354
4522	PROCESS HVAC PROCUREMENT	1112747	0	1112747	19.67	218877	1331624	20	266324	1597949
4523	BUILDING HVAC PROCUREMENT	921344	0	921344	19.67	181228	1102572	20	220515	1323086
4525	BUILDING PIPING PROCUREMENT	97825	0	97825	19.67	19242	117067	20	23413	140481
4530	ELECTRICAL GENERATOR SETS	216883	0	216883	19.67	42661	259544	30	77863	337407
SUBTOTAL 45	MAJOR EQUIPMENT (GFE)	26961597	0	26961597	19.67	5303345	32264942	24	7786884	40051827
4610	CONST. SUPPORT FACILITIES	500000	0	500000	29.34	146700	646700	40	258680	905380
4621	CONST. MANAGEMENT (ONSITE E/C)	17595680	0	17595680	29.34	5162572	22758252	40	9103301	31861553

** KAISER ENGINEERS INTERACTIVE ESTIMATING **
MULTI-FUNCTION WASTE TANK FACILITY
CONCEPTUAL ESTIMATE
KEHR02 - WORK BREAKDOWN STRUCTURE SUMMARY

WBS	DESCRIPTION	ESTIMATE SUBTOTAL	ONSITE INDIRECTS	SUB TOTAL	ESCALATION %	ESCALATION TOTAL	SUB TOTAL	CONTINGENCY %	CONTINGENCY TOTAL	TOTAL DOLLARS
4630	OPER. CONTR. CONST.	10000	0	10000	29.34	2934	12934	40	5174	18108
SUBTOTAL 46	CONST. SUPPORT FUNCTION	18105680	0	18105680	29.34	5312206	23417886	40	9367155	32785041
SUBTOTAL 4	CONSTRUCTION	192730299	4060342	196790641	28.67	56414894	253205530	31	78435791	331641315
5000	STARTUP / OPERATIONS	2625000	0	2625000	29.72	780150	3405150	10	340515	3745665
SUBTOTAL 5	STARTUP / OPERATIONS	2625000	0	2625000	29.72	780150	3405150	10	340515	3745665
6000	REGULATORY / COMPLIANCE	2850000	0	2850000	26.83	764655	3614655	10	361466	3976121
SUBTOTAL 6	REGULATORY / COMPLIANCE	2850000	0	2850000	26.83	764655	3614655	10	361466	3976121
PROJECT TOTAL		264,351,382	4,060,342	268,411,724	26.23	70,408,725	338,820,444	28	95,706,749	434,527,190

1. DOCUMENTS AND DRAWINGS

DOCUMENTS: FUNCTIONAL DESIGN CRITERIA, WHC-SD-W236-FDC-001, REV.0 , JUNE 1992.
CONCEPTUAL DESIGN REPORT , WHC-SD-W236-CDR-001, REV.0, JUNE 1992.

DRAWINGS: AS SHOWN ON DRAWING LIST, SK-2-58740 (PRELIMINARY).

2. MATERIAL PRICES

UNIT COSTS REPRESENT CURRENT PRICES FOR SPECIFIED MATERIAL. VENDOR INFORMATION WAS OBTAINED FOR THE FOLLOWING ITEMS: CHILLERS, HEHE'S, FANS, COOLING TOWERS, WATER SOFTENER, AIR SEPARATOR, CONDENSER, METAL FILTERS, HEATING COILS, TANKS, PUMPS, VALVES, WEATHER ENCLOSURE.

3. LABOR/LIQUIDATION RATES

CURRENT KEH BASE CRAFT RATES AS ISSUED BY KEH FINANCE (EFFECTIVE 10-28-91) INCLUDE FRINGE BENEFITS, LABOR INSURANCE, TAXES AND TRAVEL WHERE APPLICABLE. PER HANFORD SITE STABILIZATION AGREEMENT, APPENDIX A (EFFECTIVE 9-2-91). ED & I HOURLY RATES ARE BASED ON THE 1992 FISCAL YEAR BUDGET LIQUIDATION RATES AS ISSUED BY KEH FINANCE (EFFECTIVE 10-28-91). THE KEH DESIGN LIQUIDATION RATES HAVE BEEN MODIFIED SPECIFICALLY FOR THIS PROJECT. CADD SURCHARGES WERE NOT INCLUDED IN THE LIQUIDATION RATES BECAUSE COSTS FOR COMPUTERS AND ADP SUPPORT ARE MANLOADED IN THE ENGINEERING ESTIMATE.

4. GENERAL REQUIREMENTS/TECHNICAL SERVICES

A.) ONSITE CONSTRUCTION FORCES GENERAL REQUIREMENTS AND TECHNICAL SERVICES COSTS ARE INCLUDED AS A MANLOADED ESTIMATE BASED ON THE PROJECT SCOPE AND SCHEDULE. GENERAL AND ADMINISTRATIVE OVERHEADS ARE INCLUDED IN THE "OH&P/B&I" COLUMN OF THE ESTIMATE DETAIL.

B.) FIXED PRICE CONTRACTOR OVERHEAD, PROFIT, BOND AND INSURANCE COSTS HAVE BEEN APPLIED AT THE FOLLOWING PERCENTAGES AND ARE REFLECTED IN THE "OH&P / B & I" COLUMN OF THE ESTIMATE DETAIL:

LABOR @ 52.5% MATERIAL @ 16% SUBCONTRACTS @ 12.7%

C.) EFFECTIVE OCTOBER 28, 1991, A THREE PER CENT (3%) CHARGE HAS BEEN APPLIED TO THE CONTRACT ADMINISTRATION FACTOR FOR SUBCONTRACT ADMINISTRATION TO COVER THE GENERAL AND ADMINISTRATIVE COST. THIS COST APPEARS IN THE ADMINISTRATION TOTAL COLUMN OF THE "ONSITE INDIRECT COSTS BY WBS" REPORT. (KEHR07)

5. ESCALATION

ESCALATION CALCULATED BY THE HANFORD MATERIAL & LABOR ESCALATION STUDY , FEBRUARY, 1992.

6. ROUNDING - LINE ITEMS:

U.S. DEPARTMENT OF ENERGY - DOE ORDER 5100.4 PAGE J-2 SUBPARAGRAPH (M), REQUIRES ROUNDING OF A COST ESTIMATE TO $10,000 FOR ITEM COST AND $100,000 FOR TOTAL COST. REFERENCE: DOE 5100.4, FIGURE I-11, DATED 10-31-84.

9513319.0097

7. REMARKS

A.) THIS CONCEPTUAL ESTIMATE IS BASED ON THE FOLLOWING METHOD OF PERFORMANCE:

1. PRELIMINARY DESIGN (TITLE I) , DETAILED DESIGN (TITLE II), AND FIELD ENGINEERING AND INSPECTION (TITLE III) WILL BE PERFORMED BY THE ONSITE ENGINEER/CONSTRUCTOR (E/C).

2. PROCUREMENT OF THE GOVERNMENT FURNISHED EQUIPMENT WILL BE PERFORMED BY THE OPERATING CONTRACTOR (O/C).

3. THE DIVERSION BOX #2 TIE-INS AND JUMPER FABRICATION/INSTALLATION WILL BE PERFORMED BY THE ONSITE E/C.

4. THE MAJORITY OF CONSTRUCTION WILL BE PERFORMED BY OFFSITE CONSTRUCTION CONTRACTORS. THIS FIXED PRICE WORK WILL BE SEPARATED INTO FOUR CONSTRUCTION CONTRACTS. THESE CONTRACTS ARE AS FOLLOWS:

   a. SITEWORK WHICH INCLUDES THE SITE PREP, SITE UTILITIES, MASS EXCAVATION, AND TANK FOUNDATIONS WILL BE PERFORMED BY AN OFFSITE CONSTRUCTION CONTRACTOR.

   b. WASTE STORAGE TANKS WILL INCLUDE DETAIL DESIGN, ENGINEERING / INSPECTION, AUTHORIZED INSPECTION, CASTABLE REFRACTORY, TANK FABRICATION AND ERECTION, AND ANNULUS AIR DISTRIBUTION PIPING. THIS WORK WILL BE PERFORMED BASED ON A DESIGN/CONSTRUCT CONTRACT.

   c. THE TANK CONCRETE ENCASEMENT AND MASS BACKFILL WILL BE PERFORMED BY AN OFFSITE CONSTRUCTION CONTRACTOR.

   d. THE REMAINDER OF THE CONSTRUCTION WILL BE DONE BY AN OFFSITE CONSTRUCTION CONTRACTOR. THIS CONTRACT WILL INCLUDE TANK FARM PIPING, ELECTRICAL, INSTRUMENTATION, PITS AND VAULTS, WEATHER ENCLOSURE, VENTILATION BUILDING, AND FINAL SITEWORK.

5. THE ONSITE E/C WILL PROVIDE CONSTRUCTION MANAGEMENT FOR THIS PROJECT.

6. THE OPERATING CONTRACTOR WILL PERFORM ELECTRICAL TIE-IN TO THE POWER GRID.

7. OVERALL PROJECT MANAGEMENT WILL BE PERFORMED BY THE OPERATING CONTRACTOR.

B.) THE COSTS FOR DESIGN & FIELD ENGINEERING/INSPECTION ARE BASED ON THE FOLLOWING:

1. REFER TO THE TITLE I, TITLE II, & TITLE III ENGINEERING STATEMENTS OF WORK FOR DETAILS OF SCOPE, BASIS AND DELIVERABLES.

2. THE ENGINEERING COSTS REFLECT THE PROJECT SCOPE AT THE 90% STAGE OF THE CONCEPTUAL DESIGN.

3. THE FOLLOWING ASSUMPTIONS WERE USED IN THE DEVELOPMENT OF THE ENGINEERING ESTIMATE.

   a. SAFETY CLASS LIST AS CONTAINED IN THE REFERENCED FDC.

   b. RECIRCULATION OF THE PRIMARY VENTILATION SYSTEMS.

   c. THE OPERATING TEMPERATURE OF THE WASTE IS 200 DEGREES F.

   d. CONTAINMENT OF CELLS AND TANK RISERS DURING MAINTENANCE ACTIVITIES TO BE ACCOMPLISHED BY EXISTING (OR TO BE DEVELOPED) CONTAINMENT PROCEDURES BY THE OPERATING CONTRACTOR.

   e. ADEQUATE ELECTRICAL CAPACITY IN THE VICINITY OF THE NEW SITE.

   f. THE DESIGN WILL BE DEVELOPED BASED ON FOUR CONSTRUCTION CONTRACTS.

   g. AN ADVANCED CONCEPTUAL DESIGN EFFORT WILL BE PERFORMED (APPROX. 6 MONTH DURATION).

   h. COSTS ARE BASED ON ADEQUATE FUNDING AVAILABILITY IN ACCORDANCE WITH PROJECT BA/BO SCHEDULE.

C. THE FOLLOWING ASSUMPTIONS WERE MADE CONCERNING THE SITEWORK & UTILITIES:

1. AN ALLOWANCE WAS USED FOR QUANTITIES OF SITE LEVELING REQUIRED BECAUSE OF LIMITED ELEVATION INFORMATION ON ROADS, PARKING, LAYDOWN AREA AND SPOIL PILE.

2. ASSUMED ALL ENCASED CROSSINGS TO BE BORED AND STEEL CASING WITH CASING SPACERS USED.

3. AN ALLOWANCE WAS USED FOR THE TYPE AND THICKNESS OF THE CONCRETE SIDEWALKS, CONCRETE PADS AND CURBING.

4. ASSUMED THE TIE-IN TO THE 8" STEAM LINE WILL BE DONE DURING A SCHEDULED OUTAGE WITHOUT DELAYS TO THIS PROJECT.

5. ASSUMED THAT ALL TIE-INS TO WATER LINES WILL NOT NEED TO BE LIVE TAPS.

9513319.0098

D. THE FOLLOWING ASSUMPTIONS WERE MADE CONCERNING THE FOUR WASTE STORAGE TANKS:

1. THE TANKS WILL BE PERFORMED UNDER A DESIGN/CONSTRUCT CONTRACT.
2. THE ONSITE E/C WILL PROVIDE A PERFORMANCE SPECIFICATION FOR BASIS OF DESIGN.
3. THE PRIMARY TANK WILL BE DESIGNED AND BUILT TO ASME SECTION III AND FABRICATED FROM 304L SST MATERIAL.
4. THE SECONDARY LINER WILL BE DESIGNED AND BUILT TO ASME SECTION VIII DIV. 2. TWO OF THE TANKS WILL BE BUILT FROM 304L SST AND TWO FROM A 537 CARBON STEEL.
5. THE TANK D/C CONTRACTOR WILL ALSO INSTALL THE CASTABLE REFRACTORY.
6. UPON THE COMPLETION OF THE CONCRETE ENCASEMENT THE TANKS WILL BE BACKFILLED TO THE HAUNCH.
7. THE D/C CONTRACTOR WILL PROVIDE THE RISERS TO A SPECIFIC LENGTH. THE CONSTRUCTION CONTRACTOR FOR THE VENTILATION BUILDING WILL BE RESPONSIBLE FOR COMPLETING THE REMAINDER OF TANK FARM WORK.

E. THE FOLLOWING ASSUMPTIONS WERE MADE CONCERNING THE TANK PITS:

1. BLOCK OUTS WILL BE PROVIDED FOR ALL PENETRATIONS.
2. ALL PIT COVER BLOCKS WILL HAVE SPECIAL PROTECTIVE COATINGS (SPC) APPLIED TO ALL SIDES.

F. THE FOLLOWING ASSUMPTIONS WERE MADE CONCERNING THE TANK FARM PIPING:

1. ASSUMED ALL RISERS, EXCEPT FOR ANNULUS VENTING, WILL BE STAINLESS STEEL AND THE INTERNAL TANK PENETRATION OF THE RISER WILL BE NO MORE THAN 2'. ALL RISERS NOT SPECIFICALLY SHOWN WILL BE FLANGED AND PLACED IN A LOAD BEARING CONCRETE BOX WITH A METAL COVER AT GRADE.
2. ALL ROUTING OF PIPING IN THE TANK FARM AREA WAS BASED ON AN ESTIMATOR'S LAYOUT.
3. ASSUMED THAT ALL PIPING CAN BE INSTALLED IN THE AREA PROVIDED.
4. COSTS FOR EXPANSION VOIDS, SUPPORTS AND ANCHORS FOR THE UNDERGROUND PIPING ARE BASED ON PREVIOUS HANFORD TANK FARM DATA. SOME CONCERNS HAVE BEEN RAISED AS TO THE ABILITY TO QUALIFY THIS DESIGN.
5. ASSUMED EXPANSION VOIDS WILL BE REQUIRED ON BENDS FOR ALL PROCESS PIPING.

G. THE FOLLOWING ASSUMPTIONS WERE MADE CONCERNING THE TANK FARM ELECTRICAL & INSTRUMENTATION:

1. DUCT BANKS WILL BE REQUIRED TO DISTRIBUTE POWER, CONTROL, AND INSTRUMENTATION CABLES. THE SIZE AND NUMBER OF CONDUITS ARE ESTIMATED AS SHOWN IN THE ESTIMATE DETAIL REPORT.
2. LCUs, TO CONTROL TANK FARM OPERATION, WILL BE LOCATED IN THE NORTH END OF THE OPERATING GALLERIES WITH DUCT BANK CONNECTIONS TO THE TANK FARM.
3. THE GENERAL LIGHTING AND CONDUIT & WIRE CAN BE INSTALLED FROM ABOVE THE WEATHER ENCLOSURE INSIDE THE ROOF PANELS (I. E. THEY CAN BE WALKED ON)
4. POWER FEEDERS TO THE FOUR SWITCHBOARDS, FOR THE MIXING PUMPS, WILL BE COPPER BUS DUCT ROUTED IN A TUNNEL FROM THE SUBSTATION TO THE SWITCHBOARDS.
5. VARIABLE SPEED DRIVES AND INSTRUMENTATION FOR THE MIXING PUMPS ARE FURNISHED WITH THE PUMPS.
6. ROUTING OF ALL CONDUITS AND WIRE IN THE TANK FARM ARE AS QUANTIFIED IN THE ESTIMATE DETAIL.
7. LIGHTNING PROTECTION SYSTEM DESIGN HAS NOT BEEN DETERMINED. ITEMS SHOWN IN THE ESTIMATE DETAIL ARE ALLOWANCES.
8. FIRE ALARM SYSTEM QUANTITIES ARE ALLOWANCES.

H. THE FOLLOWING ASSUMPTIONS WERE MADE CONCERNING THE VENTILATION BUILDING STRUCTURE:

1. ASSUMED THREE ELECTRICAL BUSS DUCT TUNNELS WILL BE REQUIRED. NO VENTILATION OR SPC WILL BE REQUIRED IN THESE TUNNELS.
2. ASSUMED REBAR TO BE 70 LBS./CY FOR FOOTINGS AND SLABS. WALLS WERE ASSUMED AT 90 LBS/CY.
3. ASSUMED THE SST LINERS FOR THE PROCESS CELL AND TRENCHES WILL BE INSTALLED AFTER CONCRETE HAS REACHED THE MINIMUM CURE TIME.
4. ASSUMED BLOCK OUTS FOR ALL PENETRATIONS INTO THE HOT PIPE TRENCH AND PROCESS CELLS.
5. ASSUMED CEILING HEIGHT FOR CHANGE ROOMS TO BE 12' AND 15' FOR PROCESS AREAS.

I. THE FOLLOWING ASSUMPTIONS WERE MADE CONCERNING THE VENTILATION BUILDING PIPING:

1. ALL PIPING FOOTAGES AND ROUTING WERE BASED ON AN ESTIMATOR'S LAYOUT.
2. ASSUMED THE JUMPERS WILL BE FABRICATED AFTER THE NOZZLES AND EQUIPMENT HAVE BEEN SET.
3. ASSUMED HEPA FILTER DRAINS ARE ENCASED AND DRAIN TO THE SEAL POTS. METAL FILTER DRAINS ARE ADDRESSED IN THE SAME MANNER AS ALL OTHER CELL EQUIPMENT.
4. ALLOWANCES WERE MADE FOR THE DIESEL FUEL PIPING SYSTEM, DUE TO THE UNAVAILABILITY OF DESIGN DETAIL.
5. VALVING WAS ADDED FOR SYSTEMS SUCH AS SEAL LOOP DRAINS BASED ON ESTIMATOR'S JUDGEMENT.

9513319.0099

J. THE FOLLOWING ASSUMPTIONS WERE MADE CONCERNING THE VENTILATION BUILDING HVAC:

1. ASSUMED ALL PROCESS DUCTWORK TO BE SCH 10 SST WELDED.
2. BUILDING SUPPLY & RETURN DUCTS WERE ASSUMED TO BE GALVANIZED 2" WG LOW PRESSURE NON WELDED.
3. FIRE RETARDENT WRAP WAS INCLUDED FOR ALL PRIMARY, CELL, LIQUID SAMPLING EXHAUST DUCTS WITHIN THE VENTILATION BUILDING.
4. ALL ZONE 2,3,AND 4 SUPPLY DUCTWORK INCLUDES EXTERIOR INSULATION.
5. THE ROUTING AND LAYOUT OF ALL DUCT WAS ASSUMED BY THE ESTIMATOR.
6. FIRE PROTECTION SYSTEMS WERE INCLUDED WITHIN THE PROCESS FILTER HOUSING PLENUMS AND DRAINED TO A DEDICATED CATCH TANK.
7. ALLOWANCES WAS MADE FOR ALL FIRE DAMPERS.

K. THE FOLLOWING ASSUMPTIONS WERE MADE CONCERNING THE VENTILATION BUILDING ELECTRICAL AND INSTRUMENTATION.

1. LIGHTING - ALLOWED AT 1 FIXTURE/64 SF. QUANTITIES AND LOCATION OF RECEPTACLES ARE UNKNOWN. QUANTITIES SHOWN IN THE ESTIMATE ARE BASED ON ESTIMATOR'S PAST EXPERIENCE FOR SIMILAR PROJECTS.
2. SPECIFIC LIGHTNING PROTECTION SYSTEM DESIGN HAS NOT BEEN DETERMINED. ITEMS SHOWN IN THE ESTIMATE DETAIL ARE ALLOWANCES.
3. SPECIFIC QUANTITIES OF CONTINUOUS AIR MONITORS ARE UNKNOWN. ALLOWANCES WERE USED IN THE ESTIMATE.
4. ASSUMED HAND/FOOT RADIATION COUNTERS WOULD BE REQUIRED FOR SURVEY ON LEAVING CONTAMINATED AREAS. QUANTITIES SHOWN ARE ALLOWANCES.
5. ALLOWANCES WERE USED FOR THE COMMUNICATIONS ROOM EQUIPMENT, ROUTING AND TIE-IN TO EXISTING SYSTEMS.
6. FIRE ALARM SYSTEM QUANTITIES ARE ALLOWANCES.
7. SIZE AND ROUTING OF ALL CONDUITS AND CABLES ARE ALLOWANCES.
8. POWER FEEDERS TO THE MOTOR CONTROL CENTERS WILL BE COPPER BUS DUCT ROUTED IN A TUNNEL FROM THE SUBSTATION TO THE MCCs IN THE VENT BUILDING.
9. ASSUMED THE GENERATORS ARE CONNECTED TO THE BACKUP MCCs VIA COPPER BUS DUCT INSTALLED IN A TUNNEL TO THE GENERATOR BUILDING.
10. INSTRUMENTATION CONDUIT & WIRE IS AN ALLOWANCE OF 100' PER INSTRUMENT.

L. THE FOLLOWING ASSUMPTIONS WERE MADE CONCERNING THE MAJOR EQUIPMENT (GOVERNMENT FURNISHED EQUIPMENT):

1. ASSUMED ALL EQUIPMENT PROCURED FOR INSTALLATION IN CELLS TO BE MODIFIED BY THE SUPPLIER FOR REMOTABILITY. THE REMOTE CONNECTORS AND FLANGES WILL BE PROVIDED TO THE SUPPLIER. ALLOWANCES HAVE BEEN ADDED TO THE VENDOR SUPPLIED COSTS TO ACCOUNT FOR THIS REMOTE APPLICATION.

2. A 4% FACTOR WAS APPLIED TO ALL EQUIPMENT PURCHASES FOR THE OPERATING CONTRACTOR'S PROCUREMENT COSTS.

3. THE COST FIGURE FOR THE MIXING PUMPS WAS PROVIDED BY THE OPERATING CONTRACTOR ($750,000 EA.).

M. OTHER MISC. ASSUMPTIONS:

1. THE CONSTRUCTION SCHEDULE IS BASED ON TWO SHIFTS / 6 DAYS PER WEEK. THEREFORE, A SHIFT DIFFERENTIAL HAS BEEN INCLUDED IN THIS ESTIMATE TO ACCOUNT FOR PREMIUM PAY AND PRODUCTION INEFFICIENCIES. THIS FACTOR IS 14.5% OF DIRECT LABOR INCLUDING SUBCONTRACTS.

2. THE CONSTRUCTION MANAGEMENT COSTS HAVE BEEN MANLOADED.

3. ENGINEERING COSTS FOR THE WASTE TANK DESIGN/CONSTRUCT CONTRACT AND OPERATING PROJECT MANAGEMENT COST DURING DESIGN HAVE BEEN INCLUDED IN THE DOE COST CODE 000 ENGINEERING.

4. THE PROJECT COSTS FOR THREE ENGINEERING STUDIES HAVE BEEN ADDED TO THIS CONCEPTUAL ESTIMATE. THESE COSTS WERE ADDED AS LUMP SUMS BY DOE COST CODE. REFER TO THE STUDY ESTIMATES INCLUDED IN THE FOLLOWING KEH DOCUMENTS:

   o CHEMICAL MAKEUP: KEH ENGINEERING REPORT; CHEMICAL MAKEUP AND STORAGE FACILITY; W-236-ER2; MARCH 1992(ISSUE H).
   o S & S PUMPS: KEH LETTER REPORT; SUPERNATANT PUMPING CAPABILITIES; W-236-LR; MARCH 1992.
   o COLLECTION TANK: KEH LETTER; COLLECTION TANK;W-236-86.

9513319.0100

WBS	DESCRIPTION	ESTIMATE SUBTOTAL	ONSITE INDIRECTS	SUB TOTAL	ESCALATION %	ESCALATION TOTAL	SUB TOTAL	CONTINGENCY %	CONTINGENCY TOTAL	TOTAL DOLLARS
000	ENGINEERING									
1000	PROJECT MANAGEMENT O/C	2380800	0	2380800	29.00	690432	3071232	10	307123	3378355
3201	PLANNING	96720	0	96720	7.02	6789	103509	15	15526	119036
3211	SITE WORK	63478	0	63478	7.02	4456	67934	20	13586	81521
3212	UTILITIES	140134	0	140134	7.02	9838	149972	23	34494	184464
3221	PROCESS TANKS	198155	0	198155	7.02	13910	212065	30	63619	275685
3222	VAULTS AND PITS	125944	0	125944	7.02	8842	134786	30	40435	175220
3231	WEATHER ENCLOSURE	144124	0	144124	7.02	10117	154241	20	30847	185090
3232	VENTILATION BUILDING	787086	0	787086	7.02	55254	842340	30	252700	1095041
3233	OTHER STRUCTURES	112120	0	112120	7.02	7871	119991	30	35998	155989
3241	PRIMARY VENTILATION SYSTEM	252150	0	252150	7.02	17701	269851	30	80955	350806
3242	ANNULUS VENTILATION SYSTEM	110375	0	110375	7.02	7748	118123	20	23625	141748
3243	INSTRUMENTATION AND CONTROLS	1218600	0	1218600	7.02	85545	1304145	35	456451	1760596
3244	POWER DISTRIBUTION SYSTEM	148276	0	148276	7.02	10409	158685	25	39672	198356
3245	PROCESS PIPING	1119575	0	1119575	7.02	78595	1198170	25	299542	1497712
3251	TITLE II ENGINEERING ESTIMATE	120510	0	120510	7.02	8459	128969	20	25794	154764
3291	PROJECT MANAGEMENT	2818400	0	2818400	7.02	197852	3016252	20	603250	3619502
3292	QUALITY ASSURANCE	10400	0	10400	7.02	730	11130	20	2226	13356
3293	PROJECT CONTROLS	624440	0	624440	7.02	43836	668276	25	167069	835346
3294	CHIEF DESIGN ENGINEER OFFICE	345200	0	345200	7.02	24233	369433	20	73887	443319
3295	CONTRACT ADMINISTRATION	100340	0	100340	7.02	7044	107384	20	21477	128861
3296	ENVIRONMENTAL, HEALTH AND SAFETY	10400	0	10400	7.02	730	11130	20	2226	13356
3297	CONSTRUCTION TECHNICAL SERVICES	69240	0	69240	7.02	4861	74101	20	14821	88920
32AA	CHEMICAL MAKEUP	89000	0	89000	7.02	6248	95248	30	28574	123822
32BB	SLURRY & S. PUMPS	84924	0	84924	7.02	5962	90886	30	27266	118151
32CC	COLLECTION TANK	217280	0	217280	7.02	15253	232533	30	69760	302293
3301	PLANNING	55280	0	55280	16.08	8888	64168	15	9625	73795
3311	SITE WORK	138919	0	138919	16.08	22338	161257	20	32251	193508
3312	UTILITIES	350661	0	350661	16.08	56386	407047	23	93621	500669
3321	PROCESS TANKS	668450	0	668450	16.08	107486	775936	30	232781	1008718
3322	VAULTS AND PITS	1082416	0	1082416	16.08	174052	1256468	30	376941	1633409
3331	WEATHER ENCLOSURE	199991	0	199991	16.08	32158	232149	20	46431	278580
3332	VENTILATION BUILDING	3456681	0	3456681	16.08	555834	4012515	30	1203754	5216270
3333	OTHER STRUCTURES	279253	0	279253	16.08	44903	324156	30	97247	421403
3341	PRIMARY VENTILATION SYSTEM	378860	0	378860	16.08	60921	439781	30	131935	571715
3342	ANNULUS VENTILATION SYSTEM	165775	0	165775	16.08	26656	192431	20	38486	230918
3343	INSTRUMENTATION AND CONTROLS	2363780	0	2363780	16.08	380096	2743876	35	960357	3704232
3344	POWER DISTRIBUTION SYSTEM	494950	0	494950	16.08	79588	574538	25	143634	718172
3345	PROCESS PIPING	4298330	0	4298330	16.08	691171	4989501	25	1247375	6236877
3351	E/I DURING CONSTRUCTION ESTIMATE	103440	0	103440	16.08	16632	120072	20	24015	144087
3391	PROJECT MANAGEMENT	5197400	0	5197400	16.08	835742	6033142	20	1206628	7239770

WBS	DESCRIPTION	ESTIMATE SUBTOTAL	ONSITE INDIRECTS	SUB TOTAL	ESCALATION %	ESCALATION TOTAL	SUB TOTAL	CONTINGENCY %	CONTINGENCY TOTAL	TOTAL DOLLARS
3392	QUALITY ASSURANCE	41600	0	41600	16.08	6689	48289	20	9658	57947
3393	PROJECT CONTROLS	2324402	0	2324402	16.08	373764	2698166	25	674542	3372707
3394	CHIEF DESIGN ENGINEER OFFICE	1859850	0	1859850	16.08	299064	2158914	20	431783	2590696
3395	CONTRACT ADMINISTRATION	481400	0	481400	16.08	77409	558809	20	111762	670571
3396	ENVIRONMENTAL, HEALTH AND SAFETY	41600	0	41600	16.08	6689	48289	20	9658	57947
3397	CONSTRUCTION TECHNICAL SERVICES	487320	0	487320	16.08	78361	565681	20	113137	678818
33AA	CHEMICAL MAKEUP	268000	0	268000	16.08	43094	311094	30	93328	404423
33BB	SLURRY & S. PUMPS	254773	0	254773	16.08	40967	295740	30	88722	384463
33CC	COLLECTION TANK	651770	0	651770	16.08	104805	756575	30	226972	983547
3410	PLANNING	113380	0	113380	38.66	43833	157213	30	47164	204377
3420	ENGINEERING DURING CONSTRUCTION	1684810	0	1684810	38.66	651347	2336157	30	700847	3037005
3430	ACCEPTANCE INSPECTION	3633333	0	3633333	38.66	1404647	5037980	30	1511394	6549373
3440	PROJECT MANAGEMENT	2868000	0	2868000	38.66	1108769	3976769	30	1193031	5169800
3450	QUALITY ASSURANCE	143000	0	143000	38.66	55284	198284	30	59485	257769
3460	PROJECT CONTROLS	1136000	0	1136000	38.66	439177	1575177	30	472554	2047731
3470	CHIEF DESIGN ENGINEER OFFICE	1040000	0	1040000	38.66	402064	1442064	30	432620	1874684
3480	CONTRACT ADMINISTRATION	928000	0	928000	38.66	358765	1286765	35	450368	1737132
3490	ENVIRONMENTAL, HEALTH & SAFETY	143000	0	143000	38.66	55284	198284	30	59485	257769
34AA	CHEMICAL MAKEUP	156000	0	156000	38.66	60310	216310	30	64893	281202
34BB	SLURRY & S. PUMPS	148618	0	148618	38.66	57456	206074	30	61822	267896
34CC	COLLECTION TANK	380170	0	380170	38.66	146974	527144	33	173957	701101
4211	TANK DETAIL DESIGN	1200000	36000	1236000	25.02	309247	1545247	30	463574	2008821
4212	TANK ENGR/INSPEC.	600000	18000	618000	25.02	154624	772624	30	231787	1004411
TOTAL 000	ENGINEERING	51206883	54000	51260883	20.86	10694189	61955072	26	16258547	78213622
460	IMPROVEMENTS TO LAND									
4112	CONSTRUCTION FENCE	53250	1598	54848	19.67	10789	65636	20	13127	78763
4113	ROAD CONSTRUCTION	114920	3447	118367	19.67	23283	141650	20	28330	169981
4114	SITE LEVELING	242859	7286	250145	19.67	49204	299348	20	59869	359218
4115	STABILIZATION	123910	3717	127627	19.67	25104	152732	20	30546	183278
4121	TANK & RAMP EXCAVATION	834873	25046	859919	19.67	169146	1029065	20	205813	1234878
4122	VENT BUILDING EXCAVATION	18400	552	18952	19.67	3728	22680	20	4536	27216
4318	TANK BACKFILL	927783	27834	955617	31.22	298343	1253960	27	333444	1587404
4321	VENTILATION BLDG STRUCTURE	208033	6241	214274	31.22	66897	281170	20	56234	337404
43CC	COLLECTION TANK	176703	5301	182004	31.22	56822	238826	28	66871	305697
TOTAL 460	IMPROVEMENTS TO LAND	2700731	81022	2781753	25.28	703316	3485067	23	798770	4283839

501 BUILDINGS

WBS	DESCRIPTION	ESTIMATE SUBTOTAL	ONSITE INDIRECTS	SUB TOTAL	ESCALATION %	ESCALATION TOTAL	SUB TOTAL	CONTINGENCY %	CONTINGENCY TOTAL	TOTAL DOLLARS
4321	VENTILATION BLDG STRUCTURE	19574655	587244	20161899	31.22	6294543	26456439	23	6077599	32534043
4324	BUILDING HVAC	3199304	95978	3295282	31.22	1028787	4324071	25	1081017	5405088
4325	BUILDING PIPING	1218287	36549	1254836	31.22	391759	1646594	27	441400	2087994
4326	VENT BLDG NORMAL PWR - SC3	717415	21522	738937	31.22	230696	969634	35	339372	1309006
4327	SC2 - VENT BLDG EM POWER	468065	14042	482107	31.22	150514	632621	25	158155	790776
43AA	CHEMICAL MAKEUP	529680	15890	545570	31.22	170327	715897	23	164656	880554
43BB	SLURRY & S. PUMPS	140819	4225	145044	31.22	45283	190326	30	57098	247424
43CC	COLLECTION TANK	385807	11574	397381	31.22	124062	521444	28	146004	667448
4400	WEATHER ENCLOSURE BLDG	5536347	166091	5702438	43.79	2497097	8199535	21	1690500	9890036
4523	BUILDING HVAC PROCUREMENT	921344	0	921344	19.67	181228	1102572	20	220515	1323086
TOTAL 501	BUILDINGS	32691723	953115	33644838	33.03	11114296	44759133	23	10376316	55135455
550	OTHER STRUCTURES									
4131	TANK FOUNDATION	826418	24792	851210	19.67	167433	1018644	25	254661	1273305
4311	TANK FARM PITS	5534229	166031	5700260	31.22	1779622	7479880	21	1542429	9022298
4319	GAS SAMPLING BUILDING	204161	6124	210285	31.22	65652	275937	20	54025	329962
4321	VENTILATION BLDG STRUCTURE	1206571	36196	1242767	31.22	387992	1630761	21	348995	1979756
4323	PROCESS HVAC	243033	7291	250324	31.22	78151	328475	50	164238	492713
43AA	CHEMICAL MAKEUP	87308	2619	89927	31.22	28075	118003	25	29501	147503
43CC	COLLECTION TANK	636100	19083	655183	31.22	204548	859731	25	214933	1074664
4610	CONST. SUPPORT FACILITIES	500000	0	500000	29.34	146700	646700	40	258680	905380
TOTAL 550	OTHER STRUCTURES	9237820	262136	9499956	30.09	2858173	12358131	23	2867462	15225581
600	UTILITIES									
4111	UTILITIES	3192244	95768	3288012	19.67	646751	3934762	26	1038653	4973417
4312	TANK FARM MECH UTILITIES	232689	6980	239669	31.22	74825	314495	30	94349	408843
4313	PROCESS MECH SYSTEM	8576	257	8833	31.22	2758	11591	30	3477	15068
43AA	CHEMICAL MAKEUP	159771	4793	164564	31.22	51377	215941	26	56145	272086
43CC	COLLECTION TANK	372218	11167	383385	31.22	119693	503077	30	150923	654000
4630	OPER. CONTR. CONST.	10000	0	10000	29.34	2934	12934	40	5174	18108
TOTAL 600	UTILITIES	3975498	118965	4094463	21.94	898338	4992800	27	1348721	6341522
700	SPECIAL EQUIP/PROCESS SYSTEMS									
1000	PROJECT MANAGEMENT O/C	7539200	0	7539200	29.00	2186368	9725568	10	972557	10698125

** KAISER ENGINEERS INTERACTIVE ESTIMATING **
MULTI-FUNCTION WASTE TANK FACILITY
CONCEPTUAL ESTIMATE
KEHR04 - COST CODE ACCOUNT SUMMARY

WBS	DESCRIPTION	ESTIMATE SUBTOTAL	ONSITE INDIRECTS	SUB TOTAL	ESCALATION %	ESCALATION TOTAL	SUB TOTAL	CONTINGENCY %	CONTINGENCY TOTAL	TOTAL DOLLARS
4221	REFRACTORY	600000	18000	618000	25.02	154624	772624	45	347681	1120304
4222	INNER SHELL	10204000	306120	10510120	25.02	2629632	13139752	40	5255901	18395653
4223	OUTER SHELL	6213600	186408	6400008	25.02	1601282	8001290	40	3200516	11201806
4224	CONCRETE ENCASEMENT	2358500	70755	2429255	25.02	607800	3037055	30	911116	3948171
4225	RISERS	6137309	184119	6321428	25.02	1581621	7903050	30	2370915	10273965
4226	ANNULUS PIPING	75054	2252	77306	25.02	19342	96647	30	28994	125642
4313	PROCESS MECH SYSTEM	19459613	372603	19832216	31.22	6191617	26023834	35	9223845	35247679
4314	TANK FARM ELECT POWER - SC3	2637993	79139	2717132	31.22	848289	3565421	26	937030	4502452
4316	SC3 - TANK FARM INSTRUMENTATION	647849	19436	667285	31.22	208326	875610	35	306464	1182074
4317	SC2 - TANK FARM INSTRUMENTATION	5455738	163674	5619412	31.22	1754381	7373789	35	2589313	9963102
4321	VENTILATION BLDG STRUCTURE	20312	610	20922	31.22	6531	27453	27	7511	34964
4322	PROCESS PIPING	13372123	242795	13614918	31.22	4250575	17865491	30	5417139	23282629
4323	PROCESS HVAC	3796371	113890	3910261	31.22	1220783	5131045	30	1539315	6670359
4326	VENT BLDG NORMAL PWR - SC3	1605993	48180	1654173	31.22	516433	2170606	25	542651	2713257
4327	SC2 - VENT BLDG EM POWER	954164	28625	982789	31.22	306827	1289616	25	322404	1612020
4328	VENT BLDG SC3 - INSTRUMENT.	1636733	49102	1685835	31.22	526318	2212153	35	774253	2986406
4329	VENT BLDG - SC2 INSTRUMENT.	7312300	219368	7531668	31.22	2351386	9883056	35	3467115	13350169
43AA	CHEMICAL MAKEUP	1675843	50275	1726118	31.22	538894	2265012	30	679504	2944516
43BB	SLURRY & S. PUMPS	2197268	65918	2263186	31.22	706567	2969753	31	920623	3890376
43CC	COLLECTION TANK	4839789	145194	4984983	31.22	1556312	6541294	36	2354866	8896160
43SD	SHIFT DIFFERENTIAL	6663369	199901	6863270	31.22	2142713	9005983	45	4052692	13058675
4400	WEATHER ENCLOSURE BLDG	540045	16201	556246	43.79	243580	799827	30	239948	1039775
44SD	SHIFT DIFFERENTIAL	284628	8539	293167	43.79	128378	421545	45	189695	611240
4511	TANK EQUIPMENT (GFE)	21859146	0	21859146	19.67	4299694	26158840	25	6539710	32698550
4521	VENT BLDG. EQUIPMENT (GFE)	2753652	0	2753652	19.67	541643	3295295	20	659059	3954354
4522	PROCESS HVAC PROCUREMENT	1112747	0	1112747	19.67	218877	1331624	20	266324	1597949
4525	BUILDING PIPING PROCUREMENT	97825	0	97825	19.67	19242	117067	20	23413	140481
4530	ELECTRICAL GENERATOR SETS	216883	0	216883	19.67	42661	259544	30	77863	337407
4621	CONST. MANAGEMENT (ONSITE E/C)	17595680	0	17595680	29.34	5162572	22758252	40	9103301	31861553
TOTAL 700	SPECIAL EQUIP/PROCESS SYSTEMS	149863727	2591104	152454831	27.92	42563268	195018096	32	63321718	258339811
900	OTHER PROJECT COSTS									
2000	TECHNOLOGY	300000	0	300000	10.78	32340	332340	10	33234	365574
3100	CONCEPTUAL DESIGN & ACD	8900000	0	8900000	0.00	0	8900000	0	0	8900000
5000	STARTUP / OPERATIONS	2625000	0	2625000	29.72	780150	3405150	10	340515	3745665
6000	REGULATORY / COMPLIANCE	2850000	0	2850000	26.83	764655	3614655	10	361466	3976121
TOTAL 900	OTHER PROJECT COSTS	14675000	0	14675000	10.75	1577145	16252145	5	735215	16987360
PROJECT TOTAL		264,351,382	4,060,342	268,411,724	26.23	70,408,725	338,820,444	28	95,706,749	434,527,190

** KAISER ENGINEERS INTERACTIVE ESTIMATING **
MULTI-FUNCTION WASTE TANK FACILITY
CONCEPTUAL ESTIMATE
KEHR05 - ESTIMATE SUMMARY BY CSI DIVISION

WBS	DESCRIPTION	ESTIMATE SUBTOTAL	ONSITE INDIRECTS	SUB TOTAL	ESCALATION %	ESCALATION TOTAL	SUB TOTAL	CONTINGENCY %	CONTINGENCY TOTAL	TOTAL DOLLARS
ENGINEERING										
00	TECHNICAL SERVICES	1800000	54000	1854000	25.02	463871	2317871	30	695361	3013232
19	PROJECT MANAGEMENT (O/C)	2380800	0	2380800	29.00	690432	3071232	10	307123	3378355
20	PROJECT MANAGEMENT	3430000	0	3430000	21.97	753704	4183704	24	992040	5175744
29	PROJECT MANAGEMENT CLERICAL	4953800	0	4953800	19.92	987009	5940809	23	1361209	7302018
30	QUALITY ASSURANCE	195000	0	195000	32.16	62703	257703	28	71369	329072
40	PROJECT CONTROLS	1188300	0	1188300	22.74	270268	1458568	27	392929	1851497
41	ESTIMATING	1471302	0	1471302	22.26	327557	1798859	27	484658	2283516
42	CLERICAL / WORD PROCESSING	445200	0	445200	14.09	62710	507910	25	126977	634887
43	DOCUMENT CONTROL	504840	0	504840	25.23	127368	632208	27	173582	805791
44	TECHNICAL PUBLICATIONS	237200	0	237200	13.44	31872	269072	25	67268	336340
45	SPECIFICATIONS	238000	0	238000	15.55	37002	275002	25	68751	343753
50	CHIEF DESIGN ENGINEER	1850000	0	1850000	21.50	397773	2247773	23	521659	2769430
51	ARCHITECTURAL ENGINEERING	890577	0	890577	13.81	122973	1013550	27	277795	1291347
52	CIVIL / STRUCTURAL ENGINEERING	1719125	0	1719125	16.29	280074	1999199	28	558373	2557576
53	MECHANICAL ENGINEERING	10064884	0	10064884	16.09	1619509	11684393	27	3146026	14830418
54	ELECTRICAL / INSTRUMENTATION ENGR	5565927	0	5565927	16.09	895649	6461576	32	2063946	8525524
55	SPECIALTY ENGINEERING	2218450	0	2218450	15.98	354492	2572942	29	748052	3320996
56	QUALITY ENGINEERING	897000	0	897000	21.71	194701	1091701	23	254392	1346093
59	DESIGN OFFICE CLERICAL	156800	0	156800	13.82	21662	178462	20	35692	214154
60	CONTRACT ADMINISTRATION	1509740	0	1509740	29.36	443218	1952958	30	583607	2536564
61	CONTRACTS - CONSULTANTS	2500000	0	2500000	16.07	401650	2901650	22	649660	3551310
70	ENVIRONMENTAL, HEALTH & SAFETY	536250	0	536250	32.43	173928	710178	28	197916	908094
81	ACCEPTANCE / INSPECTION	3677793	0	3677793	38.45	1414084	5091877	30	1524013	6615887
82	CF ADMINISTRATION	19800	0	19800	16.08	3184	22984	20	4597	27581
83	CM ADMINISTRATION	426360	0	426360	15.18	64731	491091	20	98218	589310
85	CONSTRUCTION ENGINEERING	79200	0	79200	13.88	10996	90196	20	18040	108235
AA	CHEMICAL MAKEUP	513000	0	513000	21.37	109652	622652	30	186795	809447
BB	SLURRY & S. PUMPS	488315	0	488315	21.38	104385	592700	30	177810	770510
CC	COLLECTION TANK	1249220	0	1249220	21.38	267032	1516252	31	470689	1986941
TOTAL ENGINEERING		51206883	54000	51260883	20.86	10694189	61955072	26	16258547	78213622
CONSTRUCTION										
00	TECHNICAL SERVICES	14675000	0	14675000	10.75	1577145	16252145	5	735215	16987360
01	GENERAL REQUIRMENTS	500000	0	500000	29.34	146700	646700	40	258680	905380
02	SITEWORK	3118419	93552	3211971	24.92	800276	4012245	22	887941	4900189
03	CONCRETE	14238886	427169	14666055	29.71	4357385	19023437	23	4350063	23373499
05	METALS	12580908	377428	12958336	31.23	4046907	17005240	23	3987681	20992920

** KAISER ENGINEERS INTERACTIVE ESTIMATING **
MULTI-FUNCTION WASTE TANK FACILITY
CONCEPTUAL ESTIMATE
KEHR05 - ESTIMATE SUMMARY BY CSI DIVISION

WBS	DESCRIPTION	ESTIMATE SUBTOTAL	ONSITE INDIRECTS	SUB TOTAL	ESCALATION %	ESCALATION TOTAL	SUB TOTAL	CONTINGENCY %	CONTINGENCY TOTAL	TOTAL DOLLARS
06	WOOD AND PLASTICS	17255	518	17773	31.22	5549	23321	25	5830	29152
07	MOISTURE AND THERMAL	767287	23018	790305	33.09	261508	1051813	24	254504	1306317
08	DOORS,WINDOWS AND G	930105	27903	958008	34.94	334721	1292733	23	301750	1594483
09	FINISHES	1962936	58891	2021827	32.51	657377	2679201	25	669799	3348998
10	SPECIALTIES	103953	3118	107071	31.22	33426	140500	20	28100	168598
11	EQUIPMENT	16492	495	16987	31.22	5303	22290	34	7639	29930
13	SPECIAL CONSTRUCTION	3532223	105967	3638190	43.79	1593163	5231353	20	1046271	6277624
14	CONVEYING SYSTEMS	506707	15202	521909	39.56	206466	728373	20	145674	874049
15	MECHANICAL	88514471	1602855	90117326	26.17	23585446	113702776	31	35068111	148770887
16	ELECTRICAL	28395674	725747	29121421	30.50	8881173	38002593	33	12541575	50544167
17	SHIFT DIFFERENTIAL	6947997	208440	7156437	31.73	2271091	9427528	45	4242387	13669915
19	PROJECT MANAGEMENT (O/C)	7539200	0	7539200	29.00	2186368	9725568	10	972557	10698125
20	PROJECT MANAGEMENT	1638000	0	1638000	29.34	480589	2118589	40	847436	2966025
29	PROJECT MANAGEMENT CLERICAL	776800	0	776800	29.34	227913	1004713	40	401885	1406598
40	PROJECT CONTROLS	2254200	0	2254200	29.34	661382	2915582	40	1166233	4081815
41	ESTIMATING	786240	0	786240	29.34	230683	1016923	40	406769	1423692
43	DOCUMENT CONTROL	856520	0	856520	29.34	251303	1107823	40	443129	1550952
56	QUALITY ENGINEERING	1222000	0	1222000	29.34	358535	1580535	40	632214	2212749
60	CONTRACT ADMINISTRATION	1899440	0	1899440	29.34	557296	2456736	40	982694	3439430
70	ENVIRONMENTAL, HEALTH & SAFETY	951600	0	951600	29.34	279199	1230799	40	492320	1723119
82	CF ADMINISTRATION	564800	0	564800	29.34	165712	730512	40	292205	1022717
83	CM ADMINISTRATION	6274080	0	6274080	29.34	1840815	8114895	40	3245958	11360853
85	CONSTRUCTION ENGINEERING	372000	0	372000	29.34	109145	481145	40	192458	673603
AA	CHEMICAL MAKEUP	2452602	73577	2526179	31.22	788673	3314853	28	929806	4244659
BB	SLURRY & S. PUMPS	2338087	70143	2408230	31.22	751850	3160079	31	977721	4137800
CC	COLLECTION TANK	6410617	192319	6602936	31.22	2061437	8664372	34	2933597	11597969
	TOTAL CONSTRUCTION	213144499	4006342	217150841	27.50	59714536	276865372	29	79448202	356313568
	PROJECT TOTAL	264,351,382	4,060,342	268,411,724	26.23	70,408,725	338,820,444	28	95,706,749	434,527,190

REFERENCE: ESTIMATE BASIS SHEET — PAGE 7 THRU 13 OF 70
COST CODE ACCOUNT SUMMARY — PAGE 14 THRU 17 OF 70

THE U.S. DEPARTMENT OF ENERGY - RICHLAND ORDER 5700.3 "COST ESTIMATING, ANALYSIS AND STANDARDIZATION" DATED 3-27-85, PROVIDES GUIDELINES FOR ESTIMATE CONTINGENCIES. THE GUIDELINE FOR A CONCEPTUAL ESTIMATE SHOULD HAVE AN OVERALL RANGE OF 15 TO 25 % .

CONTINGENCY IS EVALUATED AT THE THIRD COST CODE LEVEL AND SUMMARIZED AT THE PRIMARY AND SECONDARY COST CODE LEVEL OF THE DETAILED COST ESTIMATE.

000 ENGINEERING

PROJ. MGMT.	CWBS	1000	A 10% CONTINGENCY WAS APPLIED AT THE DIRECTION OF THE OPERATING CONTRACTOR.
TITLE I	CWBS	3201	A CONTINGENCY OF 15 % WAS APPLIED TO PLANNING AS THE ON-SITE A/E IS FAMILIAR WITH THE PROJECT.
	CWBS	3211	A CONTINGENCY OF 20 % WAS APPLIED TO SITE WORK AS THE SITE FOR THE NEW TANK FARM HAS BEEN ESTABLISHED BASED ON REVISION 1 OF THE WHC SITE EVALUATION REPORT.
	CWBS	3212	A CONTINGENCY OF 23 % WAS APPLIED TO UTILITIES AS THE TANK FARM SITE LOCATION HAS BEEN ESTABLISHED (SEE CWBS 3211 ABOVE). HOWEVER, THE CONTINGENCY IS SLIGHTLY HIGHER BECAUSE THE AVAILABILITY OF ADEQUATE ELECTRICAL CAPACITY AND STEAM CONDENSATE DISPOSAL IS NOT CERTAIN AT THIS TIME.
	CWBS	3221	A CONTINGENCY OF 30 % WAS APPLIED TO PROCESS TANKS DUE TO THE UNCERTAINTY AT THIS TIME OF MATERIAL SELECTION, WASTE CHARACTERISTICS, AND DESIGN TEMPERATURES.
	CWBS	3222	A CONTINGENCY OF 30 % WAS APPLIED TO VAULTS AND PITS PRIMARILY BECAUSE OF THE REASONS DESCRIBED IN CWBS 3221 ABOVE. HOWEVER, THE DESIGN OF TANK FARM VAULTS AND PITS ARE GENERIC AND, WITH THE EXCEPTION OF SEALING, SHOULD NOT POSE UNIQUE DESIGN CONSIDERATIONS.
	CWBS	3231	A CONTINGENCY OF 20 % WAS APPLIED TO THE WEATHER ENCLOSURE BECAUSE OF THE SIMPLICITY OF THIS STRUCTURE. THE DESIGN TECHNOLOGY OF THIS METAL STRUCTURE IS WELL DEVELOPED.

CWBS 3232 A CONTINGENCY OF 30 % WAS APPLIED TO THE VENTILATION BUILDING BASED ON THE COMPLEXITY OF THE BUILDING. UNCERTAINTY OF AIR STREAM PARAMETERS ALSO CONTRIBUTED TO THIS CONTINGENCY PERCENTAGE.

CWBS 3233 A CONTINGENCY OF 30 % WAS APPLIED TO OTHER STRUCTURES BASED ON THE RELATIVE COMPLEXITY OF THE GAS SAMPLING BUILDING.

CWBS 3241 A CONTINGENCY OF 30 % WAS APPLIED TO THE PRIMARY VENTILATION SYSTEM BASED ON THE COMPLEXITY OF STATE-OF-THE-ART TREATMENT EQUIPMENT.

CWBS 3242 A CONTINGENCY OF 20 % WAS APPLIED TO THE ANNULUS VENTILATION SYSTEM BASED ON THE FACT THAT THIS SYSTEM WILL NOT DEVIATE DRASTICALLY FROM SYSTEMS CURRENTY IN USE. THE ANNULUS VENTILATION SYSTEM IS LESS COMPLEX THAN THE PRIMARY VENTILATION SYSTEM

CWBS 3243 A CONTINGENCY OF 35 % WAS APPLIED TO THE INSTRUMENTATION AND CONTROLS SYSTEM BECAUSE OF THE COMPLEXITY OF THE DISTRIBUTIVE CONTROL SYSTEM. THE CONTROL SYSTEMS ARE LESS DEFINED AT THIS STAGE OF THE PROJECT.

CWBS 3244 A CONTINGENCY OF 25 % WAS APPLIED TO THE POWER DISTRIBUTION SYSTEM BASED ON THE RELATIVELY STRAIGHT FORWARD NATURE OF DESIGN. THE ONLY MAJOR UNCERTAINTIES AT THIS TIME ARE THE AVAILABILITY OF FUTURE ELECTRICAL CAPACITY AT THE PROPOSED TANK FARM SITE AND THE RESISTANCE REQUIREMENTS OF THE ELECTRICAL GROUNDING SYSTEM.

CWBS 3245 A CONTINGENCY OF 25 % WAS APPLIED TO PROCESS PIPING BASED ON THE PAST EXPERIENCE OF ENGINEERS WHO PREPARED THIS ENGINEERING ESTIMATE. ALTHOUGH THIS CWBS CONTAINS NUMEROUS COMPLEX SYSTEMS, THE ENGINEERS WHO DEVELOPED THIS ESTIMATE HAVE EXPERIENCE ON SEVERAL HANFORD TANK FARMS AND THE DETAIL OF THE PLANNING SHEETS INDICATES THAT A LOWER CONTINGENCY THAN NORMAL SHOULD BE APPLIED.

CWBS 3251 A CONTINGENCY OF 20 % WAS APPLIED TO PLANNING FOR THE TITLE II ENGINEERING ESTIMATE BASED ON THE RELATIVE PREDICTABLE NATURE OF THIS ACTIVITY.

CWBS 3291 A CONTINGENCY OF 20 % WAS APPLIED TO PROJECT MANAGEMENT BASED ON THE RESOURCE LOADING OF THIS CWBS.

CWBS 3292 A CONTINGENCY OF 20 % WAS APPLIED TO QUALITY ASSURANCE BASED ON THE RELATIVELY PREDICTABLE NATURE OF THIS ACTIVITY AND RESOURCE LOADING OF THIS CWBS.

CWBS 3293 A CONTINGENCY OF 25 % WAS APPLIED TO PROJECT CONTROLS EVEN THOUGH FIVE OF SIX DISCIPLINES ARE RESOURCE LOADED. ESTIMATING AND CLERICAL SUPPORT ARE NOT CLEARLY DEFINED AT THIS STAGE AND HAVE RESULTED IN A HIGHER CONTINGENCY THAN WOULD BE NORMALLY CONSIDERED FOR A RESOURCE LOADED ACTIVITY.

9513319.0104

CWBS 3294 A CONTINGENCY OF 20 % WAS APPLIED TO THE OFFICE OF THE CHIEF DESIGN ENGINEER BASED ON RESOURCE LOADING OF THIS CWBS.

CWBS 3295 A CONTINGENCY OF 20 % WAS APPLIED TO CONTRACT ADMINISTRATION BASED ON A CLEARLY DEFINED WORK SCOPE FOR THIS ACTIVITY AND RESOURCE LOADING OF THIS CWBS.

CWBS 3296 A CONTINGENCY OF 20 % WAS APPLIED TO ENVIRONMENTAL, HEALTH AND SAFETY ACTIVITIES BASED ON RESOURCE LOADING OF THIS CWBS.

CWBS 3297 A CONTINGENCY OF 20 % WAS APPLIED TO CONSTRUCTION TECHNICAL SERVICES BASED ON RESOURCE LOADING OF THIS CWBS.

CWBS 32AA CHEMICAL MAKEUP
32BB S & S PUMPS
32CC COLLECTION TANK

FOR AN EXPLANATION OF CONTINGENCIES ASSOCIATED WITH THESE CWBS'S PLEASE REFER TO THE KEH DOCUMENTS WHICH ARE REFERENCED IN THE ESTIMATE BASIS (ITEM M-4).

AVERAGE TITLE I CONTINGENCY 25%

TITLE II

CWBS 3301 A CONTINGENCY OF 15 % WAS APPLIED TO PLANNING AS THE ON-SITE A/E IS FAMILIAR WITH THE PROJECT.

CWBS 3311 A CONTINGENCY OF 20 % WAS APPLIED TO SITE WORK AS THE SITE FOR THE NEW TANK FARM HAS BEEN ESTABLISHED BASED ON REVISION 1 OF THE WHC SITE EVALUATION REPORT.

CWBS 3312 A CONTINGENCY OF 23 % WAS APPLIED TO UTILITIES AS THE TANK FARM SITE LOCATION HAS BEEN ESTABLISHED (SEE CWBS 3311 ABOVE). HOWEVER, THE CONTINGENCY IS SLIGHTLY HIGHER BECAUSE THE AVAILABILITY OF ADEQUATE ELECTRICAL CAPACITY AND STEAM CONDENSATE DISPOSAL IS NOT CERTAIN AT THIS TIME.

CWBS 3321 A CONTINGENCY OF 30 % WAS APPLIED TO PROCESS TANKS DUE TO THE UNCERTAINTY OF MATERIAL SELECTION, WASTE CHARACTERISTICS, AND DESIGN TEMPERATURES.

CWBS 3322 A CONTINGENCY OF 30 % WAS APPLIED TO VAULTS AND PITS PRIMARILY BECAUSE OF THE REASONS DESCRIBED IN CWBS 3321 ABOVE. HOWEVER, THE DESIGN OF TANK FARM VAULTS AND PITS ARE GENERIC AND, WITH THE EXCEPTION OF SEALING, SHOULD NOT POSE UNIQUE DESIGN CONSIDERATIONS.

CWBS 3331 A CONTINGENCY OF 20 % WAS APPLIED TO THE WEATHER ENCLOSURE BECAUSE OF THE SIMPLICITY OF THIS STRUCTURE. THE DESIGN TECHNOLOGY OF THIS METAL STRUCTURE IS WELL DEVELOPED.

CWBS 3332 A CONTINGENCY OF 30 % WAS APPLIED TO THE VENTILATION BUILDING BASED ON THE COMPLEXITY OF THE BUILDING. UNCERTAINTY OF AIR STREAM PARAMETERS ALSO CONTRIBUTED TO THIS CONTINGENCY PERCENTAGE.

CWBS 3333 A CONTINGENCY OF 30 % WAS APPLIED TO OTHER STRUCTURES BASED ON THE RELATIVE COMPLEXITY OF THE GAS SAMPLING BUILDING.

CWBS 3341 A CONTINGENCY OF 30 % WAS APPLIED TO THE PRIMARY VENTILATION SYSTEM BASED ON THE COMPLEXITY OF STATE-OF-THE-ART TREATMENT EQUIPMENT.

CWBS 3342 A CONTINGENCY OF 20 % WAS APPLIED TO THE ANNULUS VENTILATION SYSTEM BASED ON THE FACT THAT THIS SYSTEM WILL NOT DEVIATE DRASTICALLY FROM SYSTEMS CURRENTLY IN USE. THE ANNULUS VENTILATION SYSTEM IS LESS COMPLEX THAN THE PRIMARY VENTILATION SYSTEM.

CWBS 3343 A CONTINGENCY OF 35 % WAS APPLIED TO THE INSTRUMENTATION AND CONTROLS SYSTEM BECAUSE OF THE COMPLEXITY OF THE DISTRIBUTIVE CONTROL SYSTEM. THE CONTROL SYSTEMS ARE LESS DEFINED AT THIS STAGE OF THE PROJECT.

CWBS 3344 A CONTINGENCY OF 25 % WAS APPLIED TO THE POWER DISTRIBUTION SYSTEM BASED ON THE RELATIVELY STRAIGHT FORWARD NATURE OF DESIGN. THE ONLY MAJOR UNCERTAINTIES AT THIS TIME ARE THE AVAILABILITY OF FUTURE ELECTRICAL CAPACITY AT THE PROPOSED TANK FARM SITE AND THE RESISTANCE REQUIREMENTS OF THE ELECTRICAL GROUNDING SYSTEM.

CWBS 3345 A CONTINGENCY OF 25 % WAS APPLIED TO PROCESS PIPING BASED ON THE PAST EXPERIENCE OF ENGINEERS WHO PREPARED THIS ENGINEERING ESTIMATE. ALTHOUGH THIS CWBS CONTAINS NUMEROUS COMPLEX SYSTEMS, THE ENGINEERS WHO DEVELOPED THIS ESTIMATE HAVE EXPERIENCE ON SEVERAL HANFORD TANK FARMS AND THE DETAIL OF THE PLANNING SHEETS INDICATES THAT A LOWER CONTINGENCY THAN NORMAL SHOULD BE APPLIED.

CWBS 3351 A CONTINGENCY OF 20 % WAS APPLIED TO PLANNING FOR THE E & I DURING CONSTRUCTION ESTIMATE BASED ON THE RELATIVE PREDICTABLE NATURE OF THIS ACTIVITY.

CWBS 3391 A CONTINGENCY OF 20 % WAS APPLIED TO PROJECT MANAGEMENT BASED ON THE RESOURCE LOADING OF THIS CWBS.

CWBS 3392 A CONTINGENCY OF 20 % WAS APPLIED TO QUALITY ASSURANCE BASED ON THE RELATIVELY PREDICTABLE NATURE OF THIS ACTIVITY AND RESOURCE LOADING OF THIS CWBS.

CWBS 3393 A CONTINGENCY OF 25 % WAS APPLIED TO PROJECT CONTROLS EVEN THOUGH FIVE OF SIX DISCIPLINES ARE RESOURCE LOADED. ESTIMATING AND CLERICAL SUPPORT ARE NOT CLEARLY DEFINED AT THIS STAGE AND HAVE RESULTED IN A HIGHER CONTINGENCY THAN WOULD BE NORMALLY CONSIDERED FOR A RESOURCE LOADED ACTIVITY.

9513319.0105

CWBS 3394	A CONTINGENCY OF 20 % WAS APPLIED TO THE OFFICE OF THE CHIEF DESIGN ENGINEER BASED ON RESOURCE LOADING OF THIS CWBS.	
CWBS 3395	A CONTINGENCY OF 20 % WAS APPLIED TO CONTRACT ADMINISTRATION BASED ON A CLEARLY DEFINED WORK SCOPE FOR THIS ACTIVITY AND RESOURCE LOADING OF THIS CWBS.	
CWBS 3396	A CONTINGENCY OF 20 % WAS APPLIED TO ENVIRONMENTAL, HEALTH AND SAFETY ACTIVITIES BASED ON RESOURCE LOADING OF THIS CWBS.	
CWBS 3397	A CONTINGENCY OF 20 % WAS APPLIED TO CONSTRUCTION TECHNICAL SERVICES BASED ON RESOURCE LOADING OF THIS CWBS.	
CWBS 33AA 33BB 33CC	CHEMICAL MAKEUP S & S PUMPS COLLECTION TANK	FOR AN EXPLANATION OF CONTINGENCIES ASSOCIATED WITH THESE CWBS'S PLEASE REFER TO THE KEH DOCUMENTS WHICH ARE REFERENCED IN THE ESTIMATE BASIS (ITEM M-4).

AVERAGE TITLE II CONTINGENCY 26 %

TITLE III	CWBS 3410 THRU CWBS 3490	A CONTINGENCY OF 30 % TO 35% WAS APPLIED TO THE ENTIRE TITLE III ESTIMATE BASED ON THE PRELIMINARY NATURE OF THE ESTIMATE.	
	CWBS 34AA 34BB 34CC	CHEMICAL MAKEUP S & S PUMPS COLLECTION TANK	FOR AN EXPLANATION OF CONTINGENCIES ASSOCIATED WITH THESE CWBS'S PLEASE REFER TO THE KEH DOCUMENTS WHICH ARE REFERENCED IN THE ESTIMATE BASIS (ITEM M-4).

AVERAGE TITLE III CONTINGENCY 30 %

TANK DESIGN & INSPEC.	CWBS 4211 CWBS 4212	A 30% CONTINGENCY WAS APPLIED TO THE WASTE TANKS DESIGN CONTRACT DUE TO THE UNCERTAINTIES CONCERNING CORROSION, STRESS, AND MATERIAL.

AVERAGE TANK ENGINEERING CONTINGENCY 30 %

AVERAGE ENGINEERING CONTINGENCY 26 %

CONSTRUCTION

460 IMPROVEMENTS TO LAND

CWBS 4112 THRU 4321 — AN AVERAGE CONTINGENCY OF 23% WAS APPLIED TO THE SITEWORK. THE WORK IS STRAIGHT FORWARD CONSTRUCTION WITH THE EXCEPTION OF THE BACKFILL OF THE TOP SECTION OF TANKS. THIS SECTION WILL BE DIFFICULT DUE TO THE CONGESTION FROM PIPING, PITS AND ELECTRICAL/INSTRUMENTATION CONDUITS.

CWBS 43CC COLLECTION TANK — FOR AN EXPLANATION OF CONTINGENCY ASSOCIATED WITH THIS CWBS PLEASE REFER TO THE KEH DOCUMENT WHICH IS REFERENCED IN THE ESTIMATE BASIS (ITEM M-4).

501 BUILDINGS

CWBS 4321 — AN AVERAGE CONTINGENCY OF 23% WAS APPLIED TO THE VENTILATION BUILDING STRUCTURE DUE TO THE ESTIMATOR'S ASSUMPTIONS FOR REBAR, HARDWARE, FINISHES, CONCRETE THICKNESS AND OTHER ITEMS THAT DESIGN DETAIL HAS YET TO BE DEVELOPED.

CWBS 4324 — AN AVERAGE CONTINGENCY OF 25% WAS APPLIED TO THE BUILDING HVAC DUE TO THE DESIGN DETAIL AVAILABILITY. ASSUMPTIONS WERE MADE AS TO THE SIZE AND ROUTING OF DUCT WORK.

CWBS 4325 — AN AVERAGE CONTINGENCY OF 27% WAS APPLIED TO THE NON-PROCESS PIPING. DESIGN DETAIL WAS NOT AVAILABLE AT THIS STAGE OF DESIGN, THEREFORE, THE ESTIMATOR MADE ASSUMPTIONS AS TO SIZING AND ROUTING OF PIPING.

CWBS 4326 — AN AVERAGE CONTINGENCY OF 35% WAS APPLIED TO THE VENTILATION BUILDING NORMAL POWER DUE TO UNDEFINED DESIGN DETAIL FOR THE COMMUNICATIONS EQUIPMENT, LIGHTING, FIRE ALARM SYSTEM, AND LIGHTNING PROTECTION SYSTEMS.

CWBS 4327 — AN AVERAGE CONTINGENCY OF 25% WAS APPLIED TO THE VENTILATION BUILDING EMERGENCY POWER DUE TO THE UNDEFINED DESIGN DETAIL FOR THE LIGHTING AND FIRE ALARM SYSTEM REQUIREMENTS.

CWBS 43AA CHEMICAL MAKEUP
43BB S & S PUMPS
43CC COLLECTION TANK
— FOR AN EXPLANATION OF CONTINGENCIES ASSOCIATED WITH THESE CWBS'S PLEASE REFER TO THE KEH DOCUMENTS WHICH ARE REFERENCED IN THE ESTIMATE BASIS (ITEM M-4).

CWBS 4400 — AN AVERAGE CONTINGENCY OF 21% WAS APPLIED TO THE WEATHER ENCLOSURE STRUCTURE SINCE VENDOR INFORMATION WAS AVAILABLE FOR BOTH THE BUILDING AND ERECTION COSTS. THE WEATHER ENCLOSURE HVAC CONTINGENCY WAS APPLIED DUE TO UNCERTAINTIES CONCERNING DUCT SIZING AND ROUTING. THE WEATHER ENCLOSURE ELECTRICAL CONTINGENCY WAS 25% DUE TO ASSUMPTIONS MADE FOR FIRE PROTECTION SYSTEMS, CONDUIT ROUTING FOR MOTORS, AND LIGHTNING PROTECTION SYSTEMS.

CWBS 4523 — A 20% CONTINGENCY WAS APPLIED TO THE VENTILATION BUILDING HEPA FILTERS AND HOUSINGS DUE TO UNCERTAINTIES CONCERNING THE FINAL CONFIGURATION OF THESE CUSTOM BUILT HOUSINGS.

9513319.0106

550 OTHER STRUCTURES

CWBS 4131 A 25% CONTINGENCY WAS APPLIED TO THE TANK FOUNDATION DUE TO THE DESIGN DETAIL AVAILABILITY. ALSO, UNCERTAINTIES EXIST DUE TO THE EMBEDMENTS IN CONCRETE SLABS.

CWBS 4311 AN AVERAGE CONTINGENCY OF 21% WAS APPLIED TO THE TANK FARM PITS DUE TO THE UNCERTAINTIES CONCERNING EMBEDS AND BLOCKOUTS.

CWBS 4319 A 20% CONTINGENCY WAS APPLIED TO THE GAS SAMPLING BUILDING BECAUSE THE EQUIPMENT INSTALLED IN THIS BUILDING HAS NOT BEEN LAID OUT, WHICH COULD CHANGE THE BUILDING CONFIGURATION.

CWBS 4321 A 21% CONTINGENCY WAS APPLIED TO THE HVAC AND ELECTRICAL TUNNELS DUE TO THE LACK OF DESIGN DETAIL AVAILABLE AT THIS TIME.

CWBS 4323 A 50% CONTINGENCY WAS APPLIED TO THE STACK SINCE THE FINAL HEIGHT HAS YET TO BE DETERMINED. ALSO, REFER TO THE UNCERTAINTIES SECTION OF THE CDR FOR FURTHER INFORMATION.

CWBS 43AA 43CC CHEMICAL MAKEUP COLLECTION TANK FOR AN EXPLANATION OF CONTINGENCIES ASSOCIATED WITH CWBS'S PLEASE REFER TO THE KEH DOCUMENTS WHICH ARE REFERENCED IN THE ESTIMATE BASIS (ITEM M-4).

CWBS 4610 A 40% CONTINGENCY WAS USED FOR THE CONSTRUCTION OFFICE TRAILERS SINCE THE TOTAL NUMBER NEEDED IS UNKNOWN AT THIS TIME.

600 UTILITIES

CWBS 4111 AN AVERAGE CONTINGENCY OF 26% WAS APPLIED TO SITE UTILITIES DUE TO THE DESIGN DETAIL AVAILABLE AT THIS TIME. THE MAJOR AREA OF UNCERTAINTY IS THE STEAM AND CONDENSATE LINE, SINCE THE TIE-IN POINT HAS YET TO BE DETERMINED. THE ELECTRICAL CONTINGENCY OF 26% WAS APPLIED DUE TO UNCERTAIN LOCATION OF ELECTRICAL TIE-INS AND CONNECTIONS FOR COMMUNICATIONS. ROAD AND PARKING LIGHTING REQUIREMENTS ARE UNDEFINED AND BASED ON THE ESTIMATOR'S CONSTRUCTION EXPERIENCE.

CWBS 4312 4313 A 30% CONTINGENCY WAS USED FOR THE MECHANICAL UTILITIES DUE TO UNCERTIANTIES CONCERNING SIZING AND ROUTING.

CWBS 43AA 43CC CHEMICAL MAKEUP COLLECTION TANK FOR AN EXPLANATION OF CONTINGENCIES ASSOCIATED WITH THESE CWBS'S PLEASE REFER TO THE KEH DOCUMENTS WHICH ARE REFERENCED IN THE ESTIMATE BASIS (ITEM M-4).

CWBS 4630 A 40% CONTINGENCY WAS APPLIED TO THE MAIN POWER TIE-INS BY THE OPERATING CONTRACTOR BECAUSE OF THE LACK OF DESIGN DETAIL AVAILABLE AT THES TIME.

700 SPECICAL EQUIP/PROCESS SYSTEMS

PROJ. MGMT. CWBS 1000 A 10% CONTINGENCY WAS APPLIED AT THE DIRECTION OF THE OPERATING CONTRACTOR.

CWBS 4221 A 45% CONTINGENCY WAS APPLIED TO THE REFRACTORY DUE TO LACK OF SPECIFIC DESIGN DETAIL.

CWBS 4222
CWBS 4223 A 40% CONTINGENCY WAS APPLIED TO THE WASTE TANKS DUE TO THE UNCERTAINTIES CONCERNING CORROSION, STRESS, AND MATERIAL. REFER TO THE CDR UNCERTAINTIES SECTION FOR FURTHER INFORMATION. (SECTION VII)

CWBS 4224 A 30% CONTINGENCY WAS APPLIED TO THE CONCRETE ENCASEMENT TO ACCOUNT FOR UNCERTAINTES CONCERNING FORMING, REBAR, AND QUALITY REQUIREMENTS.

CWBS 4225 A 30% CONTINGENCY WAS APPLIED TO THE TANK RISERS DUE TO UNCERTAINTIES CONCERNING PIT PENETRATIONS.

CWBS 4226 A 30% CONTINGENCY WAS APPLIED TO THE ANNULUS PIPING DUE TO UNCERTAINTIES CONCERNING SUPPORTS AND CONFIGURATION.

CWBS 4313 A 35% CONTINGENCY WAS APPLIED TO THE TANK FARM PROCESS PIPING DUE TO UNCERTAINTIES CONCERNING EXPANSION VOIDS, ROUTING, SUPPORTS, JUMPERS, AND OTHER INSTALLATION DETAILS.

CWBS 4314 AN AVERAGE CONTINGENCY OF 26% WAS APPLIED TO THE TANK FARM SAFETY CLASS 3 ELECTRICAL DUE TO ASSUMPTIONS MADE ON ROUTING AND SIZING OF CONDUIT AND WIRE. UNCERTAINTIES EXIST ON WHETHER DUCT BANKS WILL BE USED AND THE ROUTING OF THEM.

CWBS 4316 A 35 % CONTINGENCY WAS APPLIED TO THE TANK FARM SAFETY CLASS 3 INSTRUMENTATION DUE TO UNCERTAINTIES OF CONDUIT AND WIRE ROUTING.

CWBS 4317 A 35 % CONTINGENCY WAS APPLIED TO THE TANK FARM SAFETY CLASS 2 INSTRUMENTATION DUE TO UNCERTAINTIES OF CONDUIT AND WIRE ROUTING.

CWBS 4321 AN AVERAGE CONTINGENCY OF 27% WAS APPLIED TO THE DIESEL GENERATOR ELEC./INSTR. DUE TO LIMITED INFORMATION AVAILABLE. THE COST IS BASED ON THE ESTIMATORS JUDGEMENT.

CWBS 4322 AN AVERAGE CONTINGENCY OF 30% WAS APPLIED TO PROCESS PIPING DUE TO UNCERTAINTIES CONCERNING ROUTING, SUPPORTS, AND MISCELLANEOUS SUBSYSTEMS.

CWBS 4323 AN AVERAGE CONTINGENCY OF 30% WAS APPLIED TO THE PROCESS HVAC AS SHOWN ON HVAC FLOW DIAGRAMS DUE TO UNCERTAINTIES CONCERNING SIZING AND ROUTING OF DUCTWORK. ALSO, CONCERNS EXIST PERTAINING TO THE HEPA FILTERS DRAINING UNDER THE EXTREME NEGATIVE PRESSURE.

9513519.0107

CWBS 4326 AN AVERAGE CONTINGENCY OF 25% WAS APPLIED TO THE VENTILATION BUILDING NORMAL POWER DUE TO ASSUMED ROUTING OF MCC FEEDERS. ALLOWANCES WERE MADE FOR THE MOTOR FEEDER FOOTAGES.

CWBS 4327 AN AVERAGE CONTINGENCY OF 25% WAS APPLIED TO THE VENTILATION BUILDING BACK-UP POWER DUE TO THE LACK OF DESIGN DETAIL FOR SAFETY CLASS 2 EQUIPMENT AND UNDETERMINED ROUTING AND SIZING FOR MOTOR FEEDERS.

CWBS 4328 AN AVERAGE CONTINGENCY OF 35% WAS APPLIED TO THE VENTILATION BUILDING SAFETY CLASS 3 INSTRUMENTATION DUE TO THE UNDETERMINED NUMBER OF CAMS REQUIRED AND THE PLACEMENT AND ROUTING OF CONDUIT AND WIRE TO THE LCU.

CWBS 4329 AN AVERAGE CONTINGENCY OF 35% WAS APPLIED TO THE VENTILATION BUILDING SAFETY CLASS 2 INSTRUMENTATION DUE TO THE LACK OF DESIGN DETAIL FOR SAFETY CLASS 2 INSTRUMENTS AND UNDETERMINED CONDUIT AND WIRE ROUTING TO THE LCUS.

CWBS 43AA	CHEMICAL MAKEUP	FOR AN EXPLANATION OF CONTINGENCIES ASSOCIATED WITH THESE
43BB	S & S PUMPS	CWBS'S PLEASE REFER TO THE KEH DOCUMENTS WHICH ARE REFERENCED
43CC	COLLECTION TANK	IN THE ESTIMATE BASIS (ITEM M-4).

CWBS 44SD A 45% CONTINGENCY WAS APPLIED TO THE SHIFT DIFFERENTIAL DUE TO UNKNOWNS CONCERING MANPOWER REQUIRED TO COMPLETE THE CONSTRUCTION WORK WITHIN THE SCHEDULED TIME FRAME.

CBWS 4400 A 30% CONTINGENCY WAS APPLIED TO THE WEATHER ENCLOSURE HVAC DUE TO THE LIMITED DESIGN DETAIL AVAILABLE AT THIS TIME. ASSUMPTIONS WERE MADE FOR SIZING AND ROUTING OF DUCTWORK.

CWBS 43SD A 45% CONTINGENCY WAS APPLIED TO THE SHIFT DIFFERENTIAL DUE TO UNKNOWNS CONCERING MANPOWER REQUIRED TO COMPLETE THE CONSTRUCTION WORK WITHIN THE SCHEDULED TIME FRAME.

CWBS 4511 A 25% CONTINGENCY WAS APPLIED TO THE TANK GOVERNMENT FURNISHED EQUIPMENT BECAUSE THE MIXING PUMPS ARE CURRENTLY IN THE DEVELOPMENT STAGE.

CWBS 4521 A 20% CONTINGENCY WAS APPLIED TO THE VENTILATION BUILDING GOVERNMENT FURNISHED EQUIPMENT (GFE) DUE TO UNCERTAINTIES CONCERNING THE COST TO MODIFY THE EQUIPMENT FOR REMOTE MAINTAINABILITY.

CWBS 4522 A 20% CONTINGENCY WAS APPLIED TO THE HEPA FILTERS AND HOUSINGS BASED ON CFM REQUIREMENTS. ANY CHANGES IN CFM WILL EFFECT THESE COSTS.

CWBS 4525 A 20% CONTINGENCY WAS APPLIED TO THE CHILLER PROCUREMENT DUE TO THE MINIMAL DETAIL AVAILABLE AT THIS TIME.

CWBS 4530 A 30% CONTINGENCY WAS APPLIED TO THE PROCUREMENT OF THE GENERATOR SETS DUE TO THE LACK OF DETAIL DESIGN.

CWBS 4621 A 40% CONTINGENCY WAS APPLIED TO THE CONSTRUCTION MANAGEMENT COSTS DUE TO THE PRELIMINARY STATUS OF THE CONSTRUCTION SCHEDULE.

AVERAGE TOTAL ESTIMATED CONSTRUCTION CONTINGENCY 31%

900 OTHER PROJECT COSTS

CWBS 2000, 5000, 6000 A 10% CONTINGENCY WAS APPLIED TO ALL OTHER PROJECT COSTS AT THE DIRECTION OF THE OPERATING CONTRACTOR.

CWBS 3100 NO CONTINGENCY HAS BEEN APPLIED TO THE CONCEPTUAL OR THE ADVANCED CONCEPTUAL DESIGN COSTS AT THE DIRECTION OF THE OPERATING CONTRACTOR.

AVERAGE OTHER PROJECT COSTS CONTINGENCY 5%

AVERAGE TOTAL PROJECT COST CONTINGENCY 28%

9513319.0108

** KAISER ENGINEERS INTERACTIVE ESTIMATING **
MULTI-FUNCTION WASTE TANK FACILITY
CONCEPTUAL ESTIMATE
KEHR07 - ONSITE INDIRECT COSTS BY WBS

WBS	DESCRIPTION	ESTIMATE SUBTOTAL	CONTRACT %	ADMINISTRATION TOTAL	BID PACK PREP.	OTHER INDIRECTS	TOTAL INDIRECTS
1000	PROJECT MANAGEMENT O/C	9920000	0.00	0	0	0	0
2000	TECHNOLOGY	300000	0.00	0	0	0	0
3100	CONCEPTUAL DESIGN & ACD	8900000	0.00	0	0	0	0
3201	PLANNING	96720	0.00	0	0	0	0
3211	SITE WORK	63478	0.00	0	0	0	0
3212	UTILITIES	140134	0.00	0	0	0	0
3221	PROCESS TANKS	198155	0.00	0	0	0	0
3222	VAULTS AND PITS	125944	0.00	0	0	0	0
3231	WEATHER ENCLOSURE	144124	0.00	0	0	0	0
3232	VENTILATION BUILDING	787086	0.00	0	0	0	0
3233	OTHER STRUCTURES	112120	0.00	0	0	0	0
3241	PRIMARY VENTILATION SYSTEM	252150	0.00	0	0	0	0
3242	ANNULUS VENTILATION SYSTEM	110375	0.00	0	0	0	0
3243	INSTRUMENTATION AND CONTROLS	1218600	0.00	0	0	0	0
3244	POWER DISTRIBUTION SYSTEM	148276	0.00	0	0	0	0
3245	PROCESS PIPING	1119575	0.00	0	0	0	0
3251	TITLE II ENGINEERING ESTIMATE	120510	0.00	0	0	0	0
3291	PROJECT MANAGEMENT	2818400	0.00	0	0	0	0
3292	QUALITY ASSURANCE	10400	0.00	0	0	0	0
3293	PROJECT CONTROLS	624440	0.00	0	0	0	0
3294	CHIEF DESIGN ENGINEER OFFICE	345200	0.00	0	0	0	0
3295	CONTRACT ADMINISTRATION	100340	0.00	0	0	0	0
3296	ENVIRONMENTAL, HEALTH AND SAFETY	10400	0.00	0	0	0	0
3297	CONSTRUCTION TECHNICAL SERVICES	69240	0.00	0	0	0	0
32AA	CHEMICAL MAKEUP	89000	0.00	0	0	0	0
32BB	SLURRY & S. PUMPS	84924	0.00	0	0	0	0
32CC	COLLECTION TANK	217280	0.00	0	0	0	0
3301	PLANNING	55280	0.00	0	0	0	0
3311	SITE WORK	138919	0.00	0	0	0	0
3312	UTILITIES	350661	0.00	0	0	0	0
3321	PROCESS TANKS	668450	0.00	0	0	0	0
3322	VAULTS AND PITS	1082416	0.00	0	0	0	0
3331	WEATHER ENCLOSURE	199991	0.00	0	0	0	0
3332	VENTILATION BUILDING	3456681	0.00	0	0	0	0
3333	OTHER STRUCTURES	279253	0.00	0	0	0	0
3341	PRIMARY VENTILATION SYSTEM	378860	0.00	0	0	0	0
3342	ANNULUS VENTILATION SYSTEM	165775	0.00	0	0	0	0
3343	INSTRUMENTATION AND CONTROLS	2363780	0.00	0	0	0	0
3344	POWER DISTRIBUTION SYSTEM	494950	0.00	0	0	0	0
3345	PROCESS PIPING	4298330	0.00	0	0	0	0
3351	E/I DURING CONSTRUCTION ESTIMATE	103440	0.00	0	0	0	0
3391	PROJECT MANAGEMENT	5197400	0.00	0	0	0	0
3392	QUALITY ASSURANCE	41600	0.00	0	0	0	0
3393	PROJECT CONTROLS	2324402	0.00	0	0	0	0
3394	CHIEF DESIGN ENGINEER OFFICE	1859850	0.00	0	0	0	0
3395	CONTRACT ADMINISTRATION	481400	0.00	0	0	0	0
3396	ENVIRONMENTAL, HEALTH AND SAFETY	41600	0.00	0	0	0	0

WBS	DESCRIPTION	ESTIMATE SUBTOTAL	CONTRACT %	ADMINISTRATION TOTAL	BID PACK PREP.	OTHER INDIRECTS	TOTAL INDIRECTS
3397	CONSTRUCTION TECHNICAL SERVICES	487320	0.00	0	0	0	0
33AA	CHEMICAL MAKEUP	268000	0.00	0	0	0	0
33BB	SLURRY & S. PUMPS	254773	0.00	0	0	0	0
33CC	COLLECTION TANK	651770	0.00	0	0	0	0
3410	PLANNING	113380	0.00	0	0	0	0
3420	ENGINEERING DURING CONSTRUCTION	1684810	0.00	0	0	0	0
3430	ACCEPTANCE INSPECTION	3633333	0.00	0	0	0	0
3440	PROJECT MANAGEMENT	2868000	0.00	0	0	0	0
3450	QUALITY ASSURANCE	143000	0.00	0	0	0	0
3460	PROJECT CONTROLS	1136000	0.00	0	0	0	0
3470	CHIEF DESIGN ENGINEER OFFICE	1040000	0.00	0	0	0	0
3480	CONTRACT ADMINISTRATION	928000	0.00	0	0	0	0
3490	ENVIRONMENTAL, HEALTH & SAFETY	143000	0.00	0	0	0	0
34AA	CHEMICAL MAKEUP	156000	0.00	0	0	0	0
34BB	SLURRY & S. PUMPS	148618	0.00	0	0	0	0
34CC	COLLECTION TANK	380170	0.00	0	0	0	0
4111	UTILITIES	3192244	3.00	95768	0	0	95768
4112	CONSTRUCTION FENCE	53250	3.00	1598	0	0	1598
4113	ROAD CONSTRUCTION	114920	3.00	3447	0	0	3447
4114	SITE LEVELING	242859	3.00	7286	0	0	7286
4115	STABILIZATION	123910	3.00	3717	0	0	3717
4121	TANK & RAMP EXCAVATION	834873	3.00	25046	0	0	25046
4122	VENT BUILDING EXCAVATION	18400	3.00	552	0	0	552
4131	TANK FOUNDATION	826418	3.00	24792	0	0	24792
4211	TANK DETAIL DESIGN	1200000	3.00	36000	0	0	36000
4212	TANK ENGR/INSPEC.	600000	3.00	18000	0	0	18000
4221	REFRACTORY	600000	3.00	18000	0	0	18000
4222	INNER SHELL	10204000	3.00	306120	0	0	306120
4223	OUTER SHELL	6213600	3.00	186408	0	0	186408
4224	CONCRETE ENCASEMENT	2358500	3.00	70755	0	0	70755
4225	RISERS	6137309	3.00	184119	0	0	184119
4226	ANNULUS PIPING	75054	3.00	2252	0	0	2252
4311	TANK FARM PITS	5534229	3.00	166031	0	0	166031
4312	TANK FARM MECH UTILITIES	232689	3.00	6980	0	0	6980
4313	PROCESS MECH SYSTEM	19468189	1.92	372860	0	0	372860
4314	TANK FARM ELECT POWER - SC3	2637993	3.00	79139	0	0	79139
4316	SC3 - TANK FARM INSTRUMENTATION	647849	3.00	19436	0	0	19436
4317	SC2 - TANK FARM INSTRUMENTATION	5455738	3.00	163674	0	0	163674
4318	TANK BACKFILL	927783	3.00	27834	0	0	27834
4319	GAS SAMPLING BUILDING	204161	3.00	6124	0	0	6124
4321	VENTILATION BLDG STRUCTURE	21009571	3.00	630291	0	0	630291
4322	PROCESS PIPING	13372123	1.82	242795	0	0	242795
4323	PROCESS HVAC	4039404	3.00	121181	0	0	121181
4324	BUILDING HVAC	3199304	3.00	95978	0	0	95978
4325	BUILDING PIPING	1218287	3.00	36549	0	0	36549
4326	VENT BLDG NORMAL PWR - SC3	2323408	3.00	69702	0	0	69702
4327	SC2 - VENT BLDG EM POWER	1422229	3.00	42667	0	0	42667

** KAISER ENGINEERS INTERACTIVE ESTIMATING **
MULTI-FUNCTION WASTE TANK FACILITY
CONCEPTUAL ESTIMATE
KEHR07 - ONSITE INDIRECT COSTS BY WBS

WBS	DESCRIPTION	ESTIMATE SUBTOTAL	CONTRACT %	ADMINISTRATION TOTAL	BID PACK PREP.	OTHER INDIRECTS	TOTAL INDIRECTS
4328	VENT BLDG SC3 - INSTRUMENT.	1636733	3.00	49102	0	0	49102
4329	VENT BLDG - SC2 INSTRUMENT.	7312300	3.00	219368	0	0	219368
43AA	CHEMICAL MAKEUP	2452602	3.00	73577	0	0	73577
43BB	SLURRY & S. PUMPS	2338087	3.00	70143	0	0	70143
43CC	COLLECTION TANK	6410617	3.00	192319	0	0	192319
43SD	SHIFT DIFFERENTIAL	6663369	3.00	199901	0	0	199901
4400	WEATHER ENCLOSURE BLDG	6076392	3.00	182292	0	0	182292
44SD	SHIFT DIFFERENTIAL	284628	3.00	8539	0	0	8539
4511	TANK EQUIPMENT (GFE)	21859146	0.00	0	0	0	0
4521	VENT BLDG. EQUIPMENT (GFE)	2753652	0.00	0	0	0	0
4522	PROCESS HVAC PROCUREMENT	1112747	0.00	0	0	0	0
4523	BUILDING HVAC PROCUREMENT	921344	0.00	0	0	0	0
4525	BUILDING PIPING PROCUREMENT	97825	0.00	0	0	0	0
4530	ELECTRICAL GENERATOR SETS	216883	0.00	0	0	0	0
4610	CONST. SUPPORT FACILITIES	500000	0.00	0	0	0	0
4621	CONST. MANAGEMENT (ONSITE E/C)	17595680	0.00	0	0	0	0
4630	OPER. CONTR. CONST.	10000	0.00	0	0	0	0
5000	STARTUP / OPERATIONS	2625000	0.00	0	0	0	0
6000	REGULATORY / COMPLIANCE	2850000	0.00	0	0	0	0
PROJECT TOTAL		264,351,382		4,060,342	0	0	4,060,342

ENGINEERING STATEMENT OF WORK

FOR

TITLE I (PRELIMINARY) DESIGN

PROJECT: W-236A, MULTI-FUNCTION WASTE TANK FACILITY

PREPARED BY: KAISER ENGINEERS HANFORD COMPANY
J. D. CLOUD - PROJECT MANAGER

DATE: FEBRUARY 1992

1. OBJECTIVE

To prepare the preliminary design for Project W-236A, Multi-Function Waste Tank Facility. The engineering work performed during Title I will utilize the design criteria that have been prepared for the project as a design basis. Sufficient design will be performed during the Title I phase to firmly fix the project scope and features of the project and further develop costs and schedules. Title I design will generally include:

a. preliminary tradeoff studies
b. evaluation of alternative design approaches
c. further definition of project design criteria
d. expansion of conceptual design drawings
e. further development of outline specifications
f. identification of procurement specifications for early procurement
g. development of more accurate cost estimates
h. further evaluations and selection of energy conservation measures
i. preparation of Title I design summary

Specifically, the deliverables and activities that will be prepared and performed during Title I design are described in Section 4, Deliverables by Contractor's Work Breakdown Structure (CWBS).

2. SCOPE

The scope of work for Title I design is to provide preliminary design for the Multi-Function Waste Tank Facility. This facility will provide four one million gallon (1 Mgal) double-shell, underground tanks and associated facilities. These tanks will provide safe, environmentally acceptable storage for wastes generated during single-shell and double-shell tank remediation/retrieval activities. A portion of the facility will be utilized for waste staging and/or storage in support of pretreatment and the Hanford Waste Vitrification Plant (HWVP).

3. BASIS

3.1 The minimum requirements for Title I design shall be as delineated in the following document which will constitute the technical baseline for Project W-236A:

- Multi-Function Waste Tank Facility Functional Design Criteria, WHC-SD-W236-FDC-001 Rev. 0, June 1992.

3.2 This Engineering Statement of Work and Engineering Estimate were prepared considering that the Title I design will be performed by the on-site architect-engineering firm.

3.3 This Engineering Statement of Work and Engineering Estimate were prepared considering the scope of work as it was described and conceptualized in February 1992 - (Functional Design Criteria (FDC) unapproved and Conceptual Design Report (CDR) 90% complete), and revised in June 1992 to reflect an addition of work scope which was originally contained within the Advanced Conceptual Design (ACD) and receipt of approved FDC (3.1 above).

3.4 The cost of engineering to perform the Title I design is detailed in the attached engineering cost estimate summary. The engineering costs are arranged by CWBS in accordance with the Project Summary Work Breakdown Structure provided by the Operating Contractor.

3.5 The schedule for Title I design is as follows:

Start Title I design	-	1 April 1993
Complete Title I design	-	1 April 1994
Duration	-	12 months

4.0 DELIVERABLES BY CONTRACTOR'S WORK BREAKDOWN STRUCTURE (CWBS)

DELIVERABLE SUMMARY

Following is a summary of Title I design deliverables. The numbers of deliverables are approximate and are based on the information contained in Section 3 (Basis) and detailed discipline work planning sheets.

Architectural Drawings	23*
Civil Drawings	9
Structural Drawings	4
Piping Drawings (incl. Mechanisms and Fire Prot.)	10
P & ID's	105*
HVAC Drawings	22*
Flow Diagrams	24*
Electrical Drawings (incl. Communications and Cath. Prot.)	59*
Instrumentation Drawings	7*
IFD's	43*
Process Flow Diagrams	8*
	314
Procurement Specifications	9
Studies and Reports	60

Shielding, Seismic, Structural, Embedments, Containment, Leak Detection, Monitoring, Sampling, Energy Conservation, Controls, Equipment Selection, Code Reviews, Remote Handling, Geotechnical, Environmental, etc.

TOTAL DRAWINGS	314
TOTAL PROCUREMENT SPECS	9
TOTAL STUDIES AND REPORTS	60
TITLE I DESIGN SUMMARY REPORT	1

* includes deliverables originally contained in ACD (CWBS 11.31.63) and moved to Title I during rebaseline on 6-5-92

CWBS 3.2.0.1 PLANNING

- Mobilization by on-site A-E
- Preparation of planning sheets, detailed CWBS, engineering estimates, and detailed working schedules for Title I design
- Preparation of detailed Project Management Plan

  - Note: Because of resource loading of certain disciplines, the planning hours for the following disciplines are contained in their respective cost accounts.

Project Management	3.2.9.1
Quality Assurance	3.2.9.2
Project Controls	3.2.9.3
Chief Design Engineer Office	3.2.9.4
Contract Administration	3.2.9.5
Environmental, Health & Safety	3.2.9.6

CWBS 3.2.1.1 SITE WORK

ARCHITECTURAL

- Preliminary Site Layout Drawings - 2
- Design Summary Report

CIVIL

- Preliminary Drawing List - 1
- Preliminary Site Plan - 4
- Preliminary Excavation Plan - 1
- Procurement Spec Geotechnical - 1
- Outline Spec
- Design Summary Report

ENVIRONMENTAL (PROCESS)

- Input to Civil Plans
- Environmental Review
- Design Summary Report

CWBS 3.2.1.2 UTILITIES

CIVIL

- Utilities Plan - 3
- Outline Spec
- Design Summary Report

MECHANICAL (PIPING)

- Steam Line Evaluation
- Outline Spec
- Design Summary Report

ELECTRICAL

- Preliminary Site Electrical Plan - 1
- Preliminary Site Pole Line Plan - 1
- Outline Spec
- Design Summary Report
- Prepare Geo-Tech Survey (Cathodic Prot)
- Preliminary Cathodic Prot Plot Plan - 6
- Preliminary Cathodic Prot Details - 5
- Outline Spec
- Design Summary Report

ENVIRONMENTAL (PROCESS)

- Sanitary Sewer Review
- Fuel Oil/Transformer Oil Containment Review
- Cross Connection Review
- Environmental Review
- Design Summary Report

CWBS 3.2.2.1 PROCESS TANKS

STRUCTURAL

- Tank Dome Reinforcement Study
- Weldable Reinforcement Study
- Insulating Concrete Study
- Outline Spec
- Design Summary Report

MECHANICAL (PIPING)

- Tank Studies
- Outline Spec
- Design Summary Report

SPECIALTY ENGINEERING

- Preliminary Stress Analysis (primary tank)
- Preliminary Structural Analysis (pri, sec., & conc.)
- Design Summary Report

ENVIRONMENTAL (PROCESS)

- Environmental Review
- Outline Spec
- Design Summary Report

CWBS 3.2.2.2 VAULTS AND PITS

STRUCTURAL

- Pit Seals - 1
- Typical Pit - 1
- Outline Spec
- Design Summary Report

MECHANICAL (HVAC)

- Flow Diagram - 1
- Pit Layout - 3*
- Control Logic Diagram - 2*
- Outline Spec
- Design Summary Report

ELECTRICAL

- Pit Connection Diagrams - 12
- Outline Spec
- Design Summary Report

ENVIRONMENTAL (PROCESS)

- Environmental Review
- Outline Spec
- Design Summary Report

CWBS 3.2.3.1 WEATHER ENCLOSURE

ARCHITECTURAL

- Floor Plan - 1
- Sections - 1
- Elevations - 1
- Outline Spec
- Design Summary Report

STRUCTURAL

- Foundation Study - 1
- Stack Study - 1
- Misc Structural Studies - 2
- Outline Spec
- Design Summary Report

MECHANICAL (HVAC)

- Flow Diagram - 1
- Input to Arch plans
- Energy Conservation Report - 1
- Outline Spec
- Design Summary Report

MECHANICAL (FIRE PROTECTION)

- Design Basis Fire Analysis Report - 1
- Layout Drawing - 1
- Outline Spec
- Design Summary Report

ELECTRICAL

- Electrical Plan - 1
- Lighting Plan - 1
- Outline Spec
- Design Summary Report

ENVIRONMENTAL (PROCESS)

- Environmental Review
- Outline Spec
- Design Summary Report

CWBS 3.2.3.2 VENTILATION BUILDING

ARCHITECTURAL

- Layout Studies - Misc.
- Floor Plans - 6*
- Sections - 6*
- Elevations - 3*
- Energy Conservation Report - 1
- Outline Spec
- Design Summary Report

STRUCTURAL

- Seismic Anchor Drawing - 1
- Framing Drawing - 1
- Embedment Study - 1
- Stack Study - 1
- Outline Spec
- Design Summary Report

MECHANICAL (PIPING)

- Sizing calculations
  - Cooling towers (2)
  - Chiller (1)
  - Compressed Air System (1)
  - Pumps
  - Diesel Fuel System
- Misc piping studies (2)
- Outline Spec
- Design Summary Report

MECHANICAL (HVAC)

- Building Flow Diagram - 3
- Cell Flow Diagram - 4*
- Sampling Center Flow Diagram - 3*
- Chilled Water Flow Diagram - 2*
- Vent Zone Plan - 2
- Equipment Layout - 2*
- Mechanical Room Layout (7 rooms) - 3*
- Control Logic Diagram - 1
- Energy Conservation Report
- Outline Spec
- Design Summary Report

MECHANICAL (FIRE PROTECTION)

- Zone Layout Drawings - 4
- Fire Protection Study - 1
- Outline Spec
- Design Summary Report

MECHANICAL (MECHANISMS)

- Manipulator Study - 1
- Manipulator Drawing - 1
- Window Drawing - 1
- Outline Spec
- Design Summary Report

ELECTRICAL

- Electrical Plan - 4*
- Lighting Plan - 4*
- Control Room Plan - 4*
- Outline Spec
- Design Summary Report
- Communications Block Diagram - 1
- Details - 5*
- Outline Spec
- Design Summary Report

ENVIRONMENTAL (PROCESS)

- Environmental review
- Outline Spec
- Design Summary Report

CWBS 3.2.3.3 OTHER STRUCTURES

ARCHITECTURAL

- Layout studies - misc.
- Floor Plan - 1
- Sections - 1
- Elevations - 1
- Energy Conservation Report - 1
- Outline Spec
- Design Summary Report

STRUCTURAL

- Foundation study - 1
- Outline Spec
- Design Summary Report

ELECTRICAL

- Electrical Plan - 1
- Lighting Plan - 1
- Outline Spec
- Design Summary Report

ENVIRONMENTAL (PROCESS)

- Environmental Review
- Outline Spec
- Design Summary Report

CWBS 3.2.4.1 PRIMARY VENTILATION SYSTEM

MECHANICAL (HVAC)

- Primary Ventilation Flow Diagram - 9*
- Airflow calcs
- Air Dilution calcs
- Energy Conservation Report
- Control Logic Diagram - 1
- Outline Specs
- Design Summary Report

ENVIRONMENTAL (PROCESS)

- Mass Balance Diagrams - 4
- Environmental Review
- Outline Spec
- Design Summary Report

CWBS 3.2.4.2. ANNULUS VENTILATION SYSTEM

MECHANICAL (HVAC)

- Annulus Ventilation flow diagram - 6*
- Airflow calcs
- Energy Conservation Report
- Outline Spec
- Design Summary Report

ENVIRONMENTAL (PROCESS)

- Environmental review
- Design Summary Report

CWBS 3.2.4.3 INSTRUMENTATION AND CONTROLS

INSTRUMENTATION

- DCS Block Diagram - 3*
- SCADA Interface Diagram - 2
- CASS Interface Diagram - 2
- Control Studies - 5
- P & ID's (Process - 105)*
- Flow Diagrams (HVAC - 24)*
- IFD'S - 43*
- I/O Lists - 340
- Outline Spec
- Design Summary Report

ENVIRONMENTAL (PROCESS)

- Process Flow Diagrams - 8*
- P & ID/Flow Diagram review
- Environmental review
- Outline Spec
- Design Summary Report

CWBS 3.2.4.4 POWER DISTRIBUTION SYSTEM

ELECTRICAL

- Preliminary Substation Plan - 1
- Preliminary Electrical Site Plan - 2
- Preliminary One-Line Diagram (Normal) - 5
- Preliminary One-Line Diagram (Backup) - 2
- Power Distribution Plan - 1
- Energy Conservation Report
- Fault Current Analysis
- Procurement Specs (early procurement)
    - Substation
    - MCC's
    - Generators
    - Transfer Switches
    - UPS's
    - Heat Trace System

- Outline Spec
- Design Summary Report

ENVIRONMENTAL (PROCESS)

- Septic System Elect. Req. input
- Environmental Review
- Design Summary Report

CWBS 3.2.4.5 PROCESS PIPING

MECHANICAL (PIPING)

- P & ID (misc) - 14*
- P & ID Tanks - 16
- P & ID Farm - 15*
- P & ID Cond Cell - 17
- P & ID HEME Cell - 15
- P & ID Seal Pot - 4
- P & ID Oper Gallery - 8
- P & ID Cooling Tower - 4
- P & ID Chiller - 8
- P & ID Sampling Center - 2
- P & ID Air Compressor - 1
- P & ID Drain Lines - 1
- Hydraulic Diagram - 2
- Sizing Calculations
  - Condenser - 3
  - Blade Eliminator - 1
- Piping Studies - 4
- Line List - 1
- Outline Specs
- Design Summary Report

SPECIALTY ENGINEERING

- Process development logic
- Preliminary shielding
- Design Summary Report

ENVIRONMENTAL (PROCESS)

- Environmental review
- Outline Spec
- Design Summary Report

CWBS 3.2.5.1 TITLE II ENGINEERING ESTIMATE

- Preparation of detailed planning sheets, detailed CWBS, engineering estimates, and detailed working schedules for Title II design
- Update of Project Management Plan

- Note: Because of resource loading of certain disciplines, the planning hours for the following disciplines are contained in their respective cost accounts:

Project Management	3.2.9.1
Quality Assurance	3.2.9.2
Project Controls	3.2.9.3
Chief Design Engineer Office	3.2.9.4
Contract Administration	3.2.9.5
Environmental, Health & Safety	3.2.9.6

CWBS 3.2.9.1 PROJECT MANAGEMENT

PROJECT MANAGEMENT

- Full time Project Manager (8 months only because of overlap of ACD and Title II)
- Full time Deputy Project Manager (8 months only because of overlap of ACD and Title II)
- 3 full time Project Engineers
- 2 full time Secretaries (8 months only because of overlap of ACD and Title II)

Other costs within this cost account include:

- Graphics support
  - allowance of $10,000
- Reproduction/Communications
  - allowance of $20,000
- Photography
  - allowance of $5,000
- Computers
  - 20 Engineering Work Stations @ $12,000 each
  - 30 Desk Computers @ $6000 each
  - Maintenance contract @ $100,000
  - CADD support @ $300,000

- Consultants
  - allowance of $750,000
- A-E Subcontracts
  - allowance of $500,000
- Travel
  - PM 2 trips @ $3,000 each
  - CDE 8 trips @ $3,000 each
  - Engineer 14 trips @ $3,000 each
  - Miscellaneous 3 trips @ $1,000 each

CWBS 3.2.9.2 QUALITY ASSURANCE

QUALITY ASSURANCE ENGINEER

- Provide quality assurance support as required in the form of evaluations, audits, and surveillances to verify compliance with QA program and project specific requirements.

CWBS 3.2.9.3 PROJECT CONTROLS

PROJECT CONTROLS

- Full time Project Control Manager (8 months only because of overlap of ACD and Title II)
- Full time Project Control Engineer

ESTIMATING

- Provide estimating support for duration of Title I design
- Provide TEC estimate at end of Title I design
- Provide trending analysis
- Participate in ICE review

WORD PROCESSING

- Full time word processing support

RECORDS MANAGEMENT

- Full time records management and configuration control support

TECHNICAL PUBLICATIONS EDITOR

- Editor to edit and publish:
  - 60 studies and reports
  - 1 energy conservation report
  - 1 design summary report

SPECIFICATIONS

- Spec writer to compile and edit outline specifications

CWBS 3.2.9.4 CHIEF DESIGN ENGINEER OFFICE

CHIEF DESIGN ENGINEER (DESIGN MANAGEMENT)

- Full time Chief Design Engineer (8 months only because of overlap of ACD and Title II)
- Full time Lead Engineer
- 1 Full time clerical (8 months only because of overlap of ACD and Title II)

QUALITY ENGINEERING

- Full time QE Engineer (8 months only because of overlap of ACD and Title II)

SAFETY REVIEW

- Provide safety review of all design (OSHA/WSHA)

CWBS 3.2.9.5 CONTRACT ADMINISTRATION

- Full time Contract Administrator to:
  - prepare procurement plan
  - place and administer A-E and consultant contracts
  - interface directly with procurement department
  - review all drawings and specs for contractibility
  - provide detail plans for each major procurement contract
  - conduct market research and surveys

CWBS 3.2.9.6 ENVIRONMENTAL, HEALTH AND SAFETY

- Provide environmental, health, and safety support as required to assure compliance with current environmental, safety, and health regulations and standards

CWBS 3.2.9.7 CONSTRUCTION TECHNICAL SERVICES

ACCEPTANCE INSPECTION

- Provide input for AI estimates

CM ADMINISTRATION

- Provide support for constructibility reviews, construction consultation, and construction estimates

CONSTRUCTION ENGINEERING

- Provide support for constructibility reviews, construction consultation, and construction estimates

ENGINEERING STATEMENT OF WORK

FOR

TITLE II (DEFINITIVE) DESIGN

PROJECT: W-236A, MULTI-FUNCTION WASTE TANK FACILITY

PREPARED BY: KAISER ENGINEERS HANFORD COMPANY
J. D. CLOUD - PROJECT MANAGER

DATE: FEBRUARY 1992

1. OBJECTIVE

To prepare the definitive design for Project W-236A, Multi-Function Waste Tank Facility. The engineering work performed during Title II will utilize the approved Title I design and design criteria that have been prepared for the project as a design basis. Design performed during Title II phase will produce construction drawings and specifications and will allow completion of detailed project costs and schedules. Title II design will generally include:

a. redesign of work resulting from changes to preliminary design
b. development of final drawings and specifications for procurement and construction
c. preparation of detailed procurement plans
d. development of detailed estimates of construction costs, procurement schedules, construction schedules, methods of performance, and identification of work packages

Specifically, the deliverables and activities that will be prepared and performed during Title II design are described in Section 4, Deliverables by Contractor's Work Breakdown Structure (CWBS).

2. SCOPE

The scope of work for Title II design is to provide definitive design for the Multi-Function Waste Tank Facility. This facility will provide four one million gallon (1 Mgal) double-shell, underground tanks and associated facilities. These tanks will provide safe, environmentally acceptable storage for wastes generated during single-shell and double-shell tank remediation/retrieval activities. A portion of the facility will be utilized for waste staging and/or storage in support of pretreatment and the Hanford Waste Vitrification Plant (HWVP).

3. BASIS

3.1 The minimum requirements for Title II design shall be as delineated in the following document which will constitute the technical baseline for Project W-236A:

- Multi-Function Waste Tank Facility
  Functional Design Criteria
  WHC-SD-W236-FDC-001 Rev. 0, June 1992

3.2 This Engineering Statement of Work and Engineering Estimate were prepared considering that the Title II design will be performed by the on-site architect-engineering firm.

3.3 This Engineering Statement of Work and Engineering Estimate were prepared considering the scope of work as it was described and conceptualized in February 1992 - (Functional Design Criteria (FDC) unapproved and Conceptual Design Report (CDR) 90% complete) and revised in June 1992 upon receipt of approved FDC (3.1 above).

3.4 The cost of engineering to perform the Title II design is detailed in the attached engineering cost estimate summary. The engineering costs are arranged by CWBS in accordance with the Project Summary Work Breakdown Structure provided by the Operating Contractor.

3.5 The schedule for Title II design is as follows:

Start Title II design	-	1 February 1994
Complete Title II design	-	1 January 1996
Duration	-	23 months

4.0 DELIVERABLES BY CONTRACTOR'S WORK BREAKDOWN STRUCTURE (CWBS)

DELIVERABLE SUMMARY

Following is a summary of Title II design deliverables. The numbers of deliverables are approximate and are based on the information contained in Section 3 (Basis) and detailed discipline work planning sheets.

Architectural Drawings	37
Civil Drawings	25
Structural Drawings	141
Piping Drawings (incl Mechanisms and Fire Prot.)	554
HVAC Drawings	92
Electrical Drawings (incl Communications and Cath. Prot.)	191
Instrumentation Drawings	78
Logic Diagrams	110
Loop Diagrams (DCS)	80
	1308
Procurement Specifications	58
Construction Specification	10
Tank Design/Construct (DC) Specification	1
TOTAL ISOMETRIC SKETCHES	2500
TOTAL DRAWINGS	1308
TOTAL PROCUREMENT SPECS	58
TOTAL CONSTRUCTION SPECS	10
TOTAL DESIGN/CONSTRUCT SPECS	1

CWBS 3.3.0.1 PLANNING

- Preparation of planning sheets, detailed CWBS, engineering estimates, and detailed working schedules for Title II design
- Update of detailed Project Management Plan

- Note: Because of resource loading of certain disciplines, the planning hours for the following disciplines are contained in their respective cost accounts.

Project Management	3.3.9.1
Quality Assurance	3.3.9.2
Project Controls	3.3.9.3
Chief Design Engineer Office	3.3.9.4
Contract Administration	3.3.9.5
Environment, Health & Safety	3.3.9.6

CWBS 3.3.1.1 SITE WORK

ARCHITECTURAL

- Site Plan - 2
- Details - 2
- Construction Spec Input

CIVIL

- Drawing List - 1
- Site Plans - 4
- Grading Plans - 2
- Roads and Drainage Plans - 3
- Road Profile - 1
- Road Sections - 1
- Excavation Plan - 1
- Excavation Sections and Details - 1
- Construction Spec Input

ENVIRONMENTAL (PROCESS)

- Input to Civil Plans and Details
- Environmental Review

CWBS 3.3.1.2 UTILITIES

CIVIL

- Utilities Plans - 2
- Raw Water Plan and Profile - 1
- Sections and Details - 1
- Sanitary Water Plan and Profile - 1
- Sections and Details - 1
- Sewer Plan and Profile - 1
- Sections and Details - 1
- Construction Spec Input

MECHANICAL (PIPING)

- Steam Line Plan - 1
- Steam Line Sections and Details - 3

- Stress and Support Calculations
- Isometric - 1
- Construction Spec Input

ELECTRICAL

- Electrical Site Plan - 2
- Site Prep Diagrams and Details - 3
- Pole Line Details - 3
- Construction Spec Input
- Cathodic Protection Calculations
- Cathodic Protection Plans - 6
- Detail Sheets - 5
- Construction Spec Input

ENVIRONMENTAL (PROCESS)

- Sanitary Sewer Calculations
- Septic Tank Drawing - 1
- Disposal Field Drawing - 1
- Sanitary Sewer Details - 1
- SNS and SW reports to WDOE - 2
- Environmental Review
- Construction Spec Input

CWBS 3.3.2.1 PROCESS TANKS

STRUCTURAL

- Foundation Plan and Sections - 2
- Insulating Concrete Plan and Sections - 2
- Tank Dome Reinforcing Plans - 2
- Tank Dome Reinforcing Details - 1
- Haunch Reinforcing Drawing - 1
- Tank Section and Haunch Details - 2
- Construction Spec Input

MECHANICAL (PIPING)

- Tank Section - 1
- Tank Penetrations - 4
- Penetration and Riser Details - 1
- Tank Interior Restraints - 2
- Leak Detection Drain Drawings - 3
- Tank Design Spec - 1
- Construction Spec Input
- Stress Analysis

SPECIALTY ENGINEERING

- Heat Transfer Analysis
- Heat Transfer Report - 1
- Structural Analysis
- Structural Analysis Report - 1

- Stress Analysis (Primary)

  - thermal
  - buckling
  - earthquake
  - code
  - sustained load

- Stress Analysis Report - 1
- Stress Analysis (Secondary)

  - thermal
  - earthquake
  - code
  - sustained load

- Stress Analysis Report - 1
- Shielding above tank

ENVIRONMENTAL (PROCESS)

- Environmental Review

CWBS 3.3.2.2 VAULTS AND PITS

STRUCTURAL

- Valve Pit Plans and Details - 4
- Transfer Pit - 1
- Annulus Pit - 1
- Sampling Pit - 1
- Mix/Pump Pits - 4
- Drain Pits - 2
- Primary Air Inlet Pit - 1
- Exhaust Air Pit - 1
- Leak Detection Pit - 1
- Cross over Pit - 1
- Detail Drawings - 6
- Stairs and Platforms - 1
- Seismic Anchorage Drawings - 20
- Construction Spec Input

MECHANICAL (PIPING)

- Piping Valve Pit - 3
- Piping Transfer Pit - 4

- Piping Annulus Pit - 2
- Piping T/C Pit - 4
- Piping Sampling Pit - 2
- Piping Mixing Pit - 2
- Piping Corrosion Sample Pit - 2
- Piping Drain Pit - 2
- Piping Pump Pit - 2
- Piping Primary Inlet Pit - 2
- Piping Annulus Outlet Pit - 2
- Piping Leak Detection Pit - 2
- Piping Crossover Pit - 2
- Piping Drain Collection Pit - 2
- Pit Gasket Details - 13
- Arrangement Pit Drawings - 13
- Painting Diagrams - 7
- Construction Spec Input

MECHANICAL (HVAC)

- Ventilation Plans - 5
- Ventilation Sections and Details - 4
- Hangers - 2
- Equipment Schedule - 1
- Construction Spec Input

ELECTRICAL

- Pin Connection Diagrams - 6
- Pin Connection Details - 6
- Construction Spec Input

SPECIALTY ENGINEERING

- Shielding Calculations for 20 Pits

ENVIRONMENTAL (PROCESS)

- Environmental review

CWBS 3.3.3.1 WEATHER ENCLOSURE

ARCHITECTURAL

- Reference Plan - 1
- Gas Sampling Center - 1
- Procurement Specification - 1
- Construction Spec Input

STRUCTURAL

- Foundation Plans - 2
- Foundation Sections and Details - 1
- Flush Pit - 1

- Stacks
- Wind and Seismic Calculations
- Construction Spec Input

MECHANICAL (HVAC)

- Weather Enclosure Plan - 1
- Heat System - 1
- Equipment Schedule
- Construction Spec Input

MECHANICAL (FIRE PROTECTION)

- Layout Drawings - 3
- Equipment Schedules - 2
- Construction Spec Input

ELECTRICAL

- Electrical Plan - 1
- Lighting Plan - 1
- Construction Spec Input

ENVIRONMENTAL (PROCESS)

- Environmental Review

CWBS 3.3.3.2 VENTILATION BUILDING

ARCHITECTURAL

- Reference Plan - 1
- Floor Plans - 4
- Airlock Plans - 1
- Interior Elevations - 1
- Doors and Windows - 2
- Roof Plans and Details - 2
- Ceiling Plans - 1
- Exterior Elevations - 1
- Wall Sections - 1
- Building Sections - 1
- Casework and Details - 2
- Miscellaneous Details - 2
- Control Room Plans - 2
- Construction Spec Input
- Energy Report - 1

STRUCTURAL

- Structural Key Plan - 1
- Structural Notes - 1
- Foundation Plans (13 zones) - 13
- 1st Floor Structural Drawings - 13

- 2nd Floor and Roof Structural - 25
- Cell Wall Structural - 12
- Sections and Details - 7
- Cover Block Details - 2
- Equipment Foundations - 3
- Stair Details - 2
- Stack - 1
- Seismic Calculations
- Seismic Report - 1
- Construction Spec Input

MECHANICAL (PIPING)

- Pump Room Plans - 1
- Sections and Details - 6
- Pump Room Support Plan - 1
- Details - 2
- Evap Cooling Tower Plan - 1
- Sections and Details - 4
- Chillers Plan - 1
- Section and Details - 4
- Fuel Oil Plan - 1
- Details - 1
- Gas Bottle Plan - 1
- Details - 1
- Compressor Plan - 1
- Details - 1
- Jumper Arrangement Drawings - 18
- Procurement Specifications - 9
- Stress calculations
- Final calculations
- Isometrics (pump calc/stress) - 4
- Piping Isometrics - 800
- Construction Spec Input

MECHANICAL (HVAC)

- Ventilation Plans - 24
- Sections and Details - 16
- Plumbing Plans - 4
- Heating and Chilled Water - 4
- Equipment Schedules
- Hanger calculations
- Construction Spec Input
- Procurement Specifications - 4

MECHANICAL (FIRE PROTECTION)

- Zone Plans - 4
- Sections - 4
- Details - 3
- Equipment Schedules
- Construction Spec Input
- Procurement Specifications - 1

MECHANICAL (MECHANISMS)

- Manipulator and Window Drawings - 2
- Window Vendor Drawing - 1
- Procurement Specifications - 2
- Construction Spec Input

ELECTRICAL

- Electrical Plans - 2
- Lighting Plans - 3
- Control Room Plan and Details - 2
- Construction Spec Input
- Communications Plans
  - PAX - 4
  - HLAN - 4
  - PAGING - 1
- Wire Run List - 1
- Construction Spec Input
- Procurement Specification - 3

SPECIALTY ENGINEERING

- Shielding calculations
  - 10 Cells
  - Operating gallery
  - Pipe Trench
  - Primary Exhaust HEPA
  - 4 cells to HEPA crossover
  - Solid laydown
  - Liquid sampling system
  - Pneumatic transfer system

ENVIRONMENTAL (PROCESS)

- Environmental Review
- Compliance Support

CWBS 3.3.3.3 OTHER STRUCTURES

ARCHITECTURAL

- Floor Plan - 1
- Details - 2
- Construction Spec Input

STRUCTURAL

- Foundation Plan - 1
- Section and Details - 1
- Seismic and Wind Calculations
- Construction Spec Input

MECHANICAL (PIPING)

- Stress Analysis
- Procurement specifications - 2
- Piping Drawing - 1
- Section and Details - 1
- Construction Spec Input

MECHANICAL (HVAC)

- HVAC Plan - 1
- Sections and Details - 1
- Heat and Chilled Water Plans - 1
- Equipment Schedules
- Hanger calculations
- Construction Spec Input

ELECTRICAL

- Electrical Plan - 1
- Lighting Plan - 1
- Construction Spec Input

ENVIRONMENTAL (PROCESS)

- Cross connection Evaluation
- Environmental Review

CWBS 3.3.4.1 PRIMARY VENTILATION SYSTEM

MECHANICAL (HVAC)

- Ventilation Plans - 10
- Sections and Details - 7
- Equipment Schedules
- Hanger calculations
- Procurement specifications - 4
- Construction Spec Input

ENVIRONMENTAL (PROCESS)

- Mass Balance Diagrams - 4
- Environmental Review
- Compliance Support

CWBS 3.3.4.2 ANNULUS VENTILATION SYSTEM

MECHANICAL (HVAC)

- Ventilation Plans - 5
- Sections and Details - 4
- Equipment Schedules
- Hanger calculations
- Procurement specifications - 3
- Construction Spec Input

ENVIRONMENTAL (PROCESS)

- Environmental Review
- Compliance Support

CWBS 3.3.4.3 INSTRUMENTATION AND CONTROLS

ELECTRICAL

- Wire Run Lists - 68
- Construction Spec Input

INSTRUMENTATION

- Control Room Layout - 1
- Logic Diagrams - 110
- Loop Diagrams (6000 points)
- Installation Plans and Details - 76
- Sample Room Layout - 1
- Procurement Specifications - 15
- Data Sheets
- Construction Spec Input

ENVIRONMENTAL (PROCESS)

- Environmental Review

CWBS 3.3.4.4 POWER DISTRIBUTION SYSTEM

ELECTRICAL

- Substation Plan - 1
- Electrical Site Plan - 2
- Fence Lighting Details - 1
- One-Line Diagrams - 7
- Power Distribution Plans and Details - 8

- Elementary Diagrams - 15
- Panelboard Schedules - 6
- Heat Trace Plan and Details - 4
- Leak Detection Plan and Details - 3
- Miscellaneous Electrical Details - 6
- Criticality Alarm Plan and Details - 2
- Evacuation Alarm Plan and Details - 1
- Wire Run List - 2
- Procurement Specifications (final) - 6
  - Substation
  - MCC'S
  - Generators
  - Transfer Switches
  - UPS's
  - Heat Trace System
- Construction Spec Input

ENVIRONMENTAL (PROCESS)

- Environmental Review

CWBS 3.3.4.5 PROCESS PIPING

MECHANICAL (PIPING)

- Piping Isometrics - 1700
- Piping Plans - 6
- Sections and Details - 4
- Tank Plans - 4
- Details - 4
- Pump Arrangements - 11
- Piping Support Plans - 6
- Expansion Void Details - 6
- Support Plans Tank - 4
- Support Details - 3
- Jumper Assembly Drawings - 39
- Miscellaneous Piping Details - 5
- Miscellaneous Jumper Details - 5
- Concrete Shielding
- Remote Flange Details - 4
- Dummy Pump Head Detail - 1
- Pit Drain Seal Assembly - 2
- Riser Details - 6
- Remote Gasket Details - 3
- HPT Upper/Lower Plan - 16
- Seal Pot - 2
- Sections and Details - 8
- Cell Plans - 16
- Cell Sections and Details - 68
- Operating Gallery Plans - 8
- Sections and Details - 8

- HPT Support Plans - 8
- Support Details - 6
- Operating Gallery Support Plans - 8
- Support Details - 4
- Liquid Sampling Center Plan - 1
- Sections and Details - 4
- Seal Pot Details - 5
- Condenser Piping - 6
- HEME Piping - 4
- Cell Jumper Assemblies - 80
- Seal Pot Jumper Assemblies - 8
- Gas Sampling Plan - 1
- Gas Sampling Details - 2
- Pneumatic Transfer Details - 2
- Blade Eliminator Details - 2
- Cell Plan (Recirculation) - 8
- Procurement Specifications - 8
- Final Calculations
- Stress Analysis

  - Jumpers
  - Encased Process Piping
  - Hot Pipe Trench
  - Hangers Hot Pipe Trench
  - Seal Pot Analysis
  - Tank Riser Analysis
  - Hanger/Support Analysis

- Construction Spec Input

SPECIALTY ENGINEERING

- Encased UG Piping (25 configurations) - Stress
- Gas Sampling System - Stress

ENVIRONMENTAL (PROCESS)

- Environmental Review

CWBS 3.3.5.1 E & I DURING CONSTRUCTION ESTIMATE

- Preparation of detailed planning sheets, detailed CWBS, engineering estimates, and detailed working schedules for Engineering and Inspection during construction.

  - Note: Because of resource loading of certain disciplines the planning hours for the following disciplines are contained in their respective cost accounts:

Project Management	3.3.9.1
Quality Assurance	3.3.9.2
Project Controls	3.3.9.3
Chief Design Engineer Office	3.3.9.4
Contract Administration	3.3.9.5
Environmental, Health & Safety	3.3.9.6

CWBS 3.3.9.1 PROJECT MANAGEMENT

PROJECT MANAGEMENT

- Full time Project Manager
- Full time Deputy Project Manager
- 4 full time Project Engineers
- 2 full time secretaries

Other costs within this cost account include:

- Graphics support
  - allowance of $20,000
- Reproduction/Communications
  - allowance of $40,000
- Photography
  - allowance of $5,000
- Computers
  - 75 Engineering Work Stations @ $12,000 each
  - 75 Desk Computers @ $6,000 each
  - Maintenance contract @ $200,000
  - CADD support @ $700,000
- Consultants
  - allowance of $750,000
- Travel
  - PM 6 trips @ $3,000 each
  - CDE 16 trips @ $3,000 each
  - Engineers 26 trips @ $3,000 each
  - Miscellaneous 6 trips @ $1,000 each

CWBS 3.3.9.2 QUALITY ASSURANCE

QUALITY ASSURANCE ENGINEER

- Provide quality assurance support as required in the form of evaluations, audits, and surveillances to verify compliance with QA program and project specific requirements.

CWBS 3.3.9.3 PROJECT CONTROLS

PROJECT CONTROLS

- Full time Project Control Manager
- 2 full time Project Control Engineers

ESTIMATING

- Provide estimating support for duration of Title II design
- 5 Fair Cost Estimates
- Final TEC Estimate
- Provide trending analysis for duration of Title II design
- Participate in ICE review

WORD PROCESSING

- 3 full time personnel for work processing support

RECORDS MANAGEMENT

- 2 full time document control clerks to provide document control and configuration management support

TECHNICAL PUBLICATIONS EDITOR

- Full time technical publications editor to edit and publish approximately 10 reports

SPECIFICATIONS

- 1 full time and 1 one half time specification writers to compile and edit the following specifications:

  - 10 construction specifications
  - 58 procurement specifications
  - 1 tank design/construct specification

CWBS 3.3.9.4 CHIEF DESIGN ENGINEER OFFICE

CHIEF DESIGN ENGINEER (DESIGN MANAGEMENT)

- Full time Chief Design Engineer
- 3 full time Lead Engineers
- 1 full time clerical support

QUALITY ENGINEERING

- 2 full time QE Engineers

SAFETY REVIEW

- Provide safety review of all design (OSHA/WSHA)

CWBS 3.3.9.5 CONTRACT ADMINISTRATION

- 2 full time Contract Administrators to:

  - prepare and implement procurement plans
  - place and administer consulting contracts

- interface directly with procurement department
- review all drawings and specifications for contractibility
- provide detailed procurement strategies for all fixed-price construction contracts
- provide support for long-lead and early procurement activities
- conduct market research and surveys
- prepare bid packages for construction contracts

CWBS 3.3.9.6 ENVIRONMENTAL, HEALTH AND SAFETY

- Provide environmental, health and safety support as required to assure compliance with current environmental, safety, and health regulations and standards

CWBS 3.3.9.7 CONSTRUCTION TECHNICAL SERVICES

ACCEPTANCE INSPECTION

- Provide input for detailed and final AI estimate

CF ADMINISTRATION

- Provide support for final constructibility reviews and construction consultation

CM ADMINISTRATION

- Provide support for final constructibility reviews, construction consultation, and construction estimates

CONSTRUCTION ENGINEERING

- Provide support for final constructibility reviews, construction consultation, and construction estimates

ENGINEERING STATEMENT OF WORK

FOR

TITLE III (FIELD ENGINEERING & INSPECTION)

PROJECT: W-236A, MULTI-FUNCTION WASTE TANK FACILITY

PREPARED BY: KAISER ENGINEERS HANFORD COMPANY
J. D. CLOUD - PROJECT MANAGER

DATE: FEBRUARY 1992

1. OBJECTIVE

To provide acceptance inspection and engineering during construction for Project W-236A, Multi-Function Waste Tank Facility. Title III will generally include:

a. Verification of all contractor and vendor submittals
b. Verification of all contractor and vendor shop drawings
c. Preparation of all Engineering Change Notices (ECN)
d. Preparation of all Non-Conformance Reports (NCR)
e. Preparation of cost estimates to track changes
f. Status and track all construction/procurement progress
g. Prepare "as built" record drawings and specifications
h. Inspect construction workmanship, materials and equipment for conformance to approved drawings and specifications
i. Provide acceptance inspection services for the government

Specifically, the activities that will be performed during Title III are described in Section 4, Activities by Contractor's Work Breakdown Structure (CWBS).

2. SCOPE

The scope of work for Title III is to provide engineering and acceptance inspection during construction for the Multi-Function Waste Tank Facility. This facility will provide four one million gallon (1 Mgal)

double-shell, underground tanks and associated facilities. These tanks will provide safe, environmentally acceptable storage for wastes generated during single-shell and double-shell tank remediation/retrieval activities. A portion of the facility will be utilized for waste staging and/or storage in support of pretreatment and the Hanford Waste Vitrification Plant (HWVP).

3. BASIS

3.1 The minimum requirements for Title III shall be as delineated in the following document which will constitute the technical baseline for Project W-236A and the construction drawings and specifications.

- Multi-Function Waste Tank Facility Functional Design Criteria, WHC-SD-W236-FDC-001 Rev. 0, June 1992.

3.2 This Engineering Statement of Work and Engineering Estimate were prepared considering that Title III will be performed by the on-site architect-engineering firm.

3.3 This Engineering Statement of Work and Engineering Estimate were prepared considering the scope of work as it was described and conceptualized in February 1992 - (Functional Design Criteria (FDC) unapproved and Conceptual Design Report (CDR) 90% complete) and revised in June 1992 upon receipt of approved FDC (3.1 above).

3.4 The cost of engineering to perform Title III is detailed in the attached engineering cost estimate summary. The engineering costs are arranged by CWBS in accordance with the Project Summary Work Breakdown Structure provided by the Operating Contractor.

3.5 The schedule for Title III is as follows:

Start Title III	-	1 July 1995
Complete Title III	-	31 December 1999
Duration	-	54 months

4. ACTIVITIES BY CONTRACTOR'S WORK BREAKDOWN STRUCTURE (CWBS)

CWBS 3.4.1 PLANNING

- Preparation of planning sheets, detailed CWBS, engineering estimates, and detailed schedules for Title III.

- Note: Because of resource loading of certain disciplines, the planning hours for the following disciplines are contained in their respective cost accounts.

Project Management	3.4.4
Quality Assurance	3.4.5

Project Controls	3.4.6
Chief Design Engineer Office	3.4.7
Contract Administration	3.4.8
Environmental, Health & Safety	3.4.9

CWBS 3.4.2 ENGINEERING DURING CONSTRUCTION (GENERAL ENGINEERING)

- Review and disposition submittals (2000 each)
- Prepare and disposition Engineering Change Notices (ECN) - 2 per drawing (3088 each)
- Prepare and disposition ECN's - 5 per specification (390 each)
- Disposition Non-Conformance Reports - 1 per drawing (1544 each)
- Disposition Non-Conformance Reports - 3 per specification (234 each)
- General engineering support during construction
- Prepare "as-built" drawings and specifications

CWBS 3.4.3 ACCEPTANCE INSPECTION

- Supervision
- Clerical support
- Civil Inspection
- Mechanical Inspection
- Electrical Inspection
- ATP Inspection
- Audit Support
- Deficiency Reporting
- Punchlist Activity
- Closeout

CWBS 3.4.4 PROJECT MANAGEMENT

PROJECT MANAGEMENT

- Full time Project Manager (48 months only because of overlap of Title II)
- Full time staff Project Engineer (48 months only because of overlap of Title II)
- 2 full time secretaries (48 months only because of overlap of Title II)

Other costs within this cost account include:

- Reproduction/Communications
  - allowance of $30,000
- Photography
  - allowance of $20,000

- Computers
  - Maintenance contract @ $500,000
- Consultants/Lab Testing
  - allowance of $500,000
- Travel/vehicles
  - 50 trips @ $3000 each
  - Vehicles @ $100,000 total

CWBS 3.4.5 QUALITY ASSURANCE

QUALITY ASSURANCE ENGINEER

- Provide quality assurance support as required in the form of evaluation, audits, and surveillances to verify compliance with QA program and project specific requirements.

CWBS 3.4.6 PROJECT CONTROLS

PROJECT CONTROLS

- Full time Project Control Manager (48 months only because of overlap of Title II)

ESTIMATING

- Provide estimating support for duration of construction
- Provide trending analysis for duration of construction
- Participate in ICE reviews

RECORDS MANAGEMENT

- Full time document control clerk to provide document control and configuration management support

CWBS 3.4.7 CHIEF DESIGN ENGINEER OFFICE

CHIEF DESIGN ENGINEER (ENGINEERING MANAGEMENT)

- Full time Chief Design Engineer (48 months only because of overlap of Title II)

QUALITY ENGINEERING

- Provide quality engineering review of engineering work

SAFETY REVIEW

- Provide safety review

CWBS 3.4.8 CONTRACT ADMINISTRATION

- Full time Contract Administrator to:
  - prepare and implement procurement plans
  - prepare bid packages for construction contracts
  - place and administer construction contracts
  - interface with procurement department
  - review all drawings and specifications for contractibility
  - provide detailed procurement strategies for all fixed-price construction contracts
  - provide support for long-lead and early procurement activities

CWBS 3.4.9 ENVIRONMENTAL, HEALTH AND SAFETY

- Provide environmental, health and safety support as required to assure compliance with current environmental, safety, and health regulations and standards.

OPERATING CONTRACTOR STATEMENT OF WORK

PROJECT: W-236A, MULTI-FUNCTION WASTE TANK FACILITY

PREPARED BY: WESTINGHOUSE HANFORD COMPANY
R. L. FRITZ - PROJECT MANAGER

DATE: JUNE 1992

1. OBJECTIVES

The operating contractor shall provide project integration of all activities including planning, scheduling, coordination of technical direction and field activities, and project management to ensure that the following objectives are met.

A. DESIGN

Design shall be accomplished by the onsite Architect-Engineer (A-E) according to the cost and schedule shown in the approved schedule/estimate.

B. CONSTRUCTION

Construction shall be accomplished by fixed price contractor and the onsite construction contractor according to the cost and schedule shown in the approved schedule/estimate.

C. START-UP

Start-up activities including preparation of procedures, operational testing, operational readiness review, and review of all operational related activities shall be performed by the operating contractor.

2. PROJECT MANAGEMENT AND SUPPORT

The operating contractor shall provide management and technical direction and assistance in the following areas:

- Project Management - ($14,080K)
  - Project Management
  - Operating Contractor Reviews

- Reporting
- Site Coordination

- Technology - ($365K)

- Conceptual Design - ($8,900K)

  - Conceptual Design
  - Advanced Conceptual Design

- Start-up/Operations - ($3,750K)

- Regulatory/Compliance - ($3,980K)

  - Permitting
  - QA/Safety Documentation
  - Environmental Documentation

A detailed description of all interfaces and responsibilities of the project participants will be provided in the Project Management Plan.

Such activities as RPT support, travel, independent reviews, presentations, etc. are planned for and funded through Project Management.

APPENDIX D

Conceptual Project Schedule

THIS PAGE INTENTIONALLY
LEFT BLANK

9513319.0130

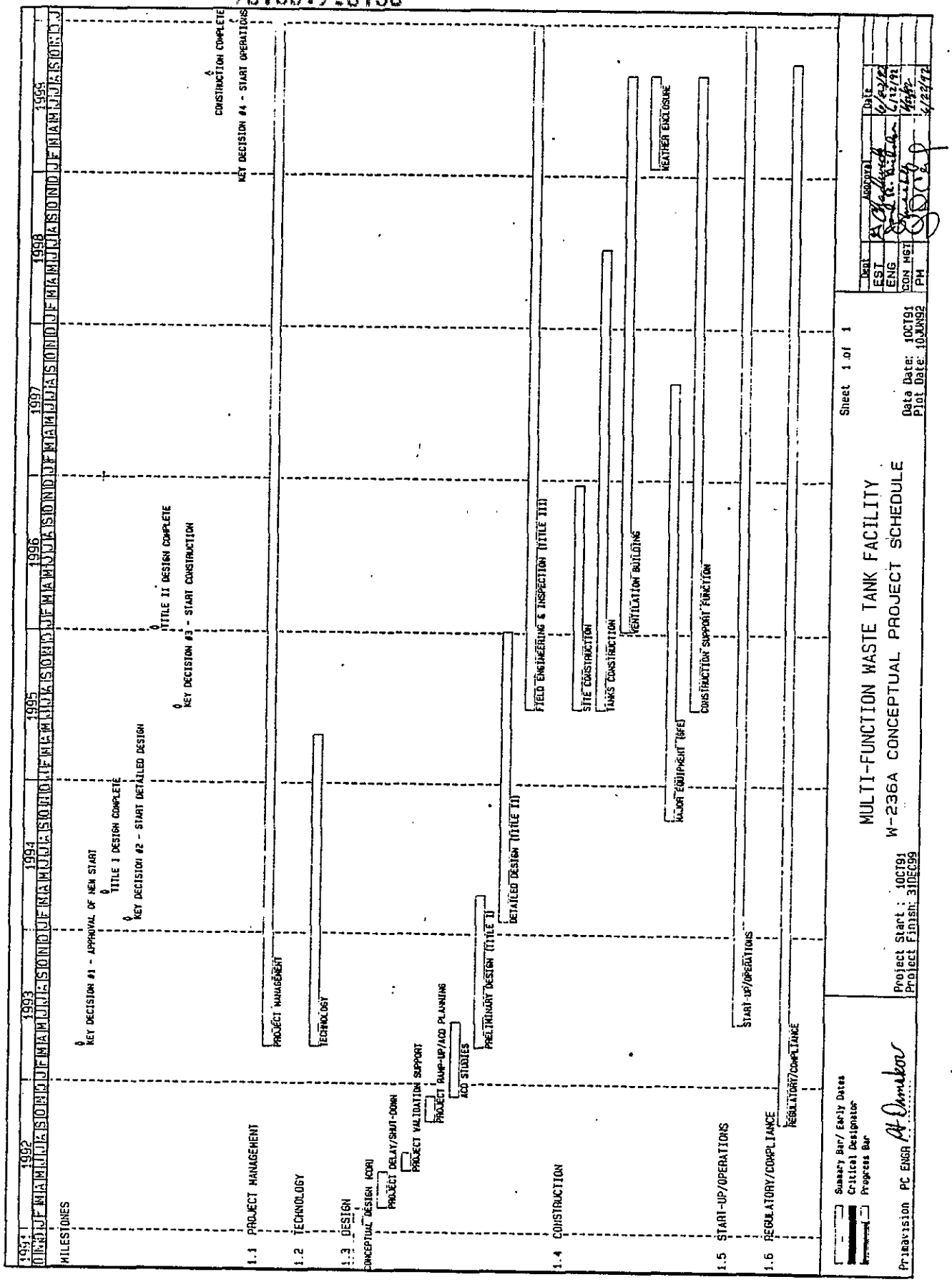

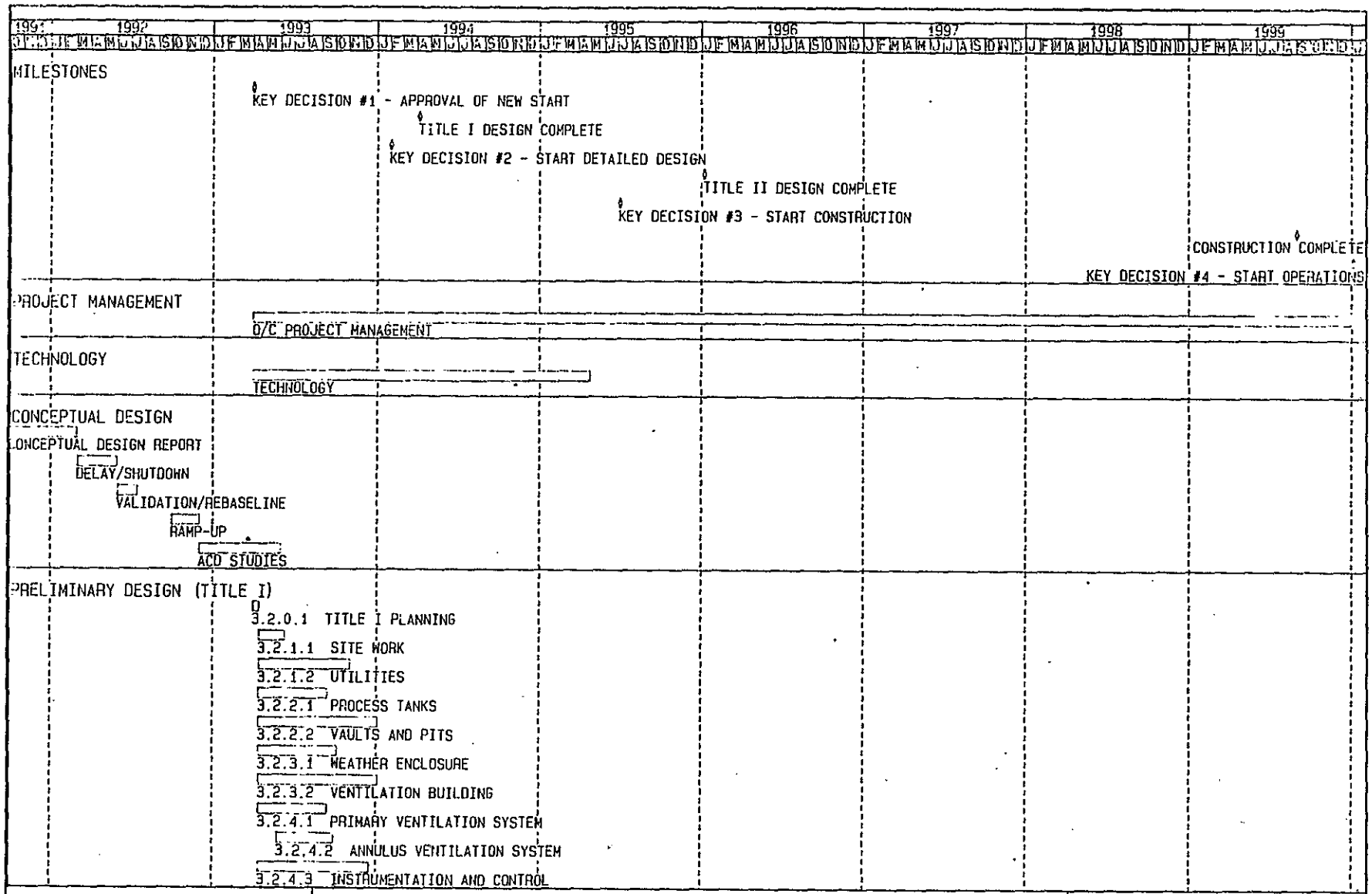
1991 1992 1993 1994 1995 1996 1997 1998 1999
MILESTONES
KEY DECISION #1 - APPROVAL OF NEW START
TITLE I DESIGN COMPLETE
KEY DECISION #2 - START DETAILED DESIGN
TITLE II DESIGN COMPLETE
KEY DECISION #3 - START CONSTRUCTION
CONSTRUCTION COMPLETE
KEY DECISION #4 - START OPERATIONS
PROJECT MANAGEMENT
O/C PROJECT MANAGEMENT
TECHNOLOGY
TECHNOLOGY
CONCEPTUAL DESIGN
CONCEPTUAL DESIGN REPORT
DELAY/SHUTDOWN
VALIDATION/REBASELINE
RAMP-UP
ACD STUDIES
PRELIMINARY DESIGN (TITLE I)
3.2.0.1 TITLE I PLANNING
3.2.1.1 SITE WORK
3.2.1.2 UTILITIES
3.2.2.1 PROCESS TANKS
3.2.2.2 VAULTS AND PITS
3.2.3.1 WEATHER ENCLOSURE
3.2.3.2 VENTILATION BUILDING
3.2.4.1 PRIMARY VENTILATION SYSTEM
3.2.4.2 ANNULUS VENTILATION SYSTEM
3.2.4.3 INSTRUMENTATION AND CONTROL
Summary Bar/ Early Dates
Critical Designator
Progress Bar
Primavision PC ENGR
Project Start : 10CT91
Project Finish: 31DEC99
MULTI-FUNCTION WASTE TANK FACILITY
W-236A CPS BACKUP SCHEDULE
Sheet 1 of 4
Data Date: 10CT91
Plot Date: 18JUN92
Dept
Approval
Date
APPROVED ORIGINAL ON FILE

9513319.0131

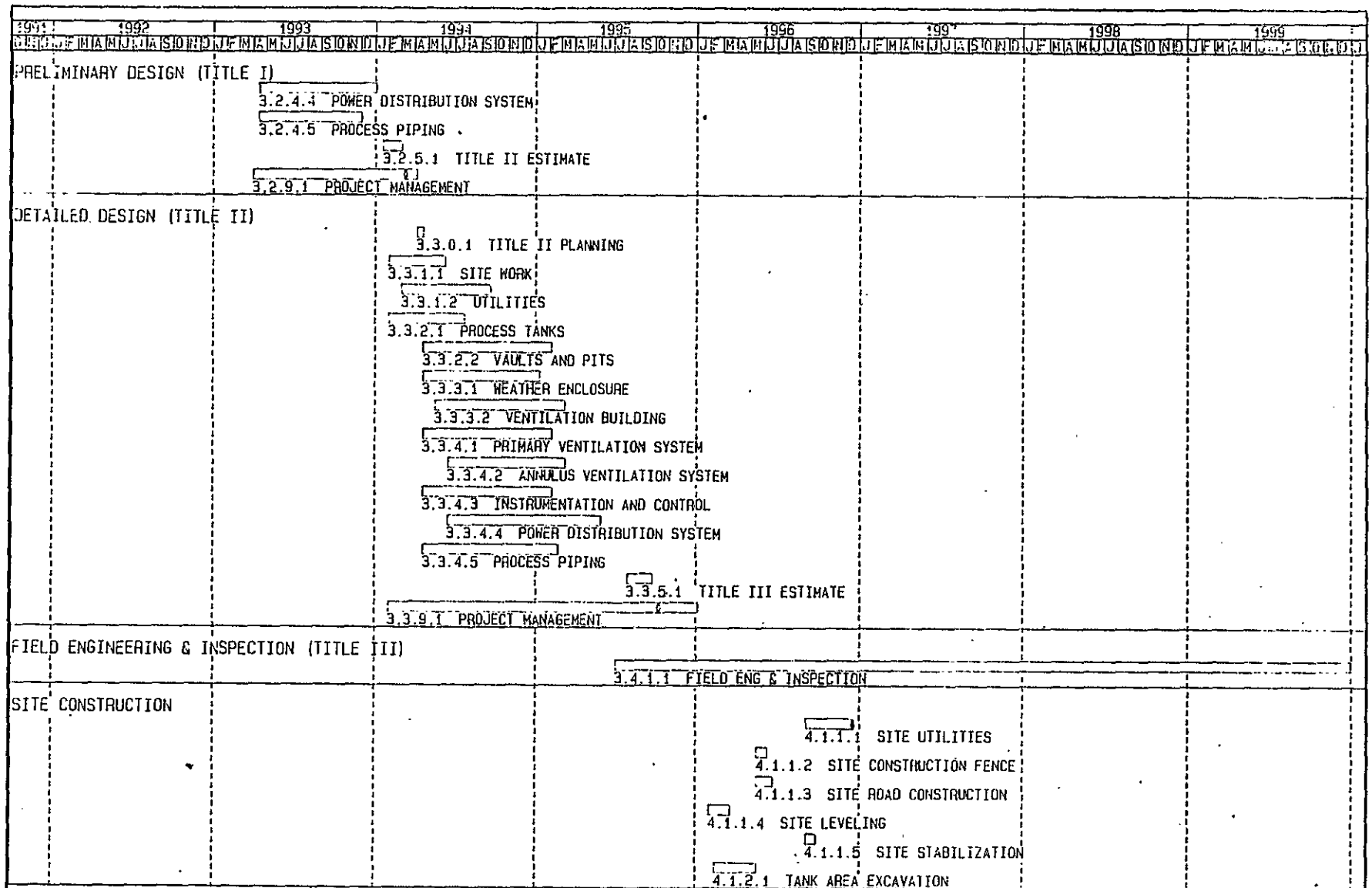

Summary Bar/ Early Dates
Critical Designator
Progress Bar

Primavision PC ENGR

Sheet 2 of 4

MULTI-FUNCTION WASTE TANK FACILITY
W-236A CPS BACKUP SCHEDULE

Project Start : 10CT91
Project Finish: 31DEC99

Data Date: 10CT91
Plot Date: 18JUN92

Dept.	Approval	Date
APPROVED ORIGINAL ON FILE		

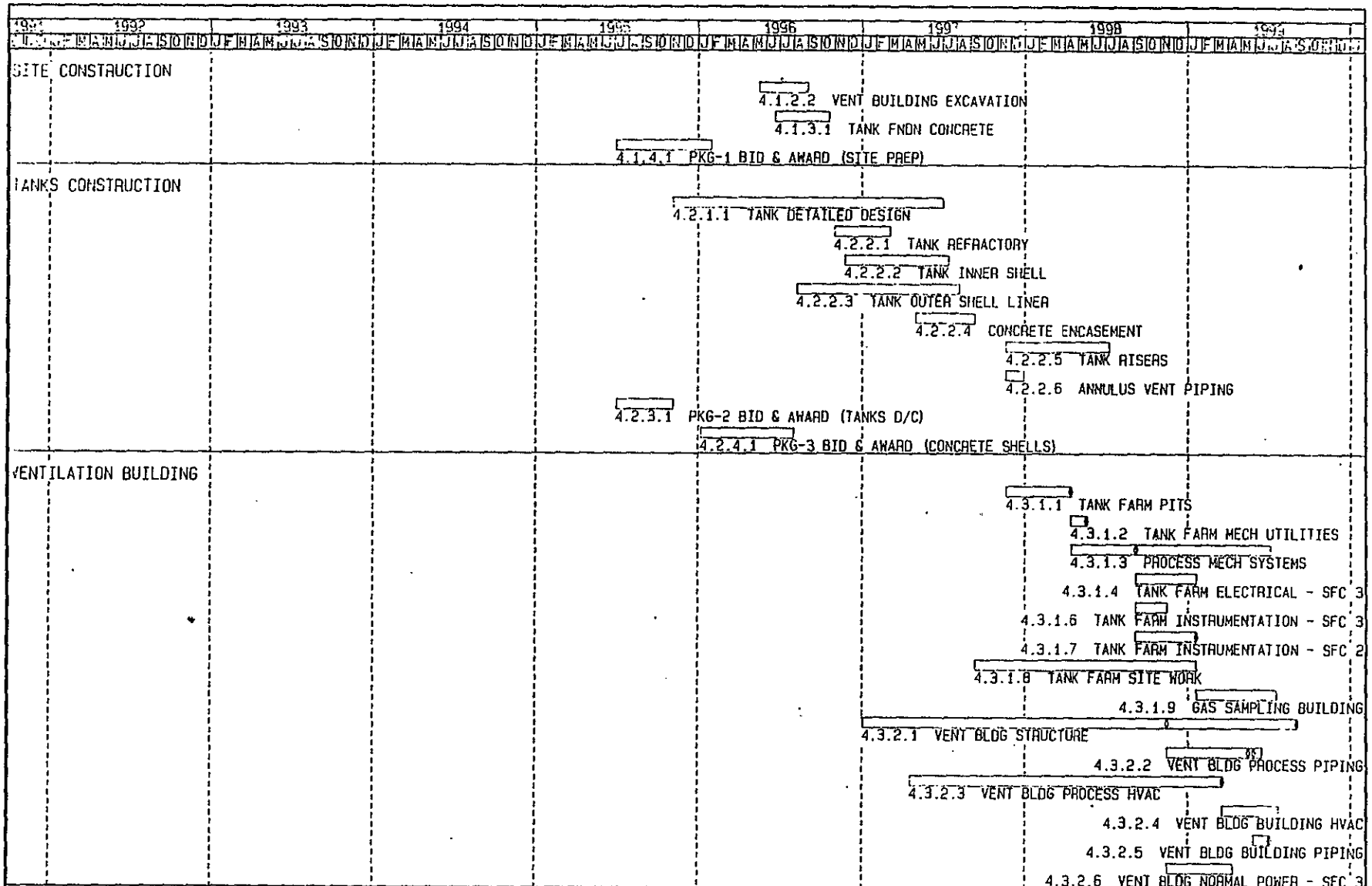
1991 1992 1993 1994 1995 1996 1997 1998 1999
SITE CONSTRUCTION
4.1.2.2 VENT BUILDING EXCAVATION
4.1.3.1 TANK FNDN CONCRETE
4.1.4.1 PKG-1 BID & AWARD (SITE PREP)
TANKS CONSTRUCTION
4.2.1.1 TANK DETAILED DESIGN
4.2.2.1 TANK REFRACTORY
4.2.2.2 TANK INNER SHELL
4.2.2.3 TANK OUTER SHELL LINER
4.2.2.4 CONCRETE ENCASEMENT
4.2.2.5 TANK RISERS
4.2.2.6 ANNULUS VENT PIPING
4.2.3.1 PKG-2 BID & AWARD (TANKS D/C)
4.2.4.1 PKG-3 BID & AWARD (CONCRETE SHELLS)
VENTILATION BUILDING
4.3.1.1 TANK FARM PITS
4.3.1.2 TANK FARM MECH UTILITIES
4.3.1.3 PROCESS MECH SYSTEMS
4.3.1.4 TANK FARM ELECTRICAL - SFC 3
4.3.1.6 TANK FARM INSTRUMENTATION - SFC 3
4.3.1.7 TANK FARM INSTRUMENTATION - SFC 2
4.3.1.8 TANK FARM SITE WORK
4.3.1.9 GAS SAMPLING BUILDING
4.3.2.1 VENT BLDG STRUCTURE
4.3.2.2 VENT BLDG PROCESS PIPING
4.3.2.3 VENT BLDG PROCESS HVAC
4.3.2.4 VENT BLDG BUILDING HVAC
4.3.2.5 VENT BLDG BUILDING PIPING
4.3.2.6 VENT BLDG NORMAL POWER - SFC 3
Summary Bar/ Early Dates
Critical Designator
Progress Bar
Primavision PC ENGR
Sheet 3 of 4
MULTI-FUNCTION WASTE TANK FACILITY
W-236A CPS BACKUP SCHEDULE
Project Start : 10CT91
Project Finish: 31DEC99
Data Date: 10CT91
Plot Date: 18JUN92
Dept
Approval
Date
APPROVED ORIGINAL ON FILE

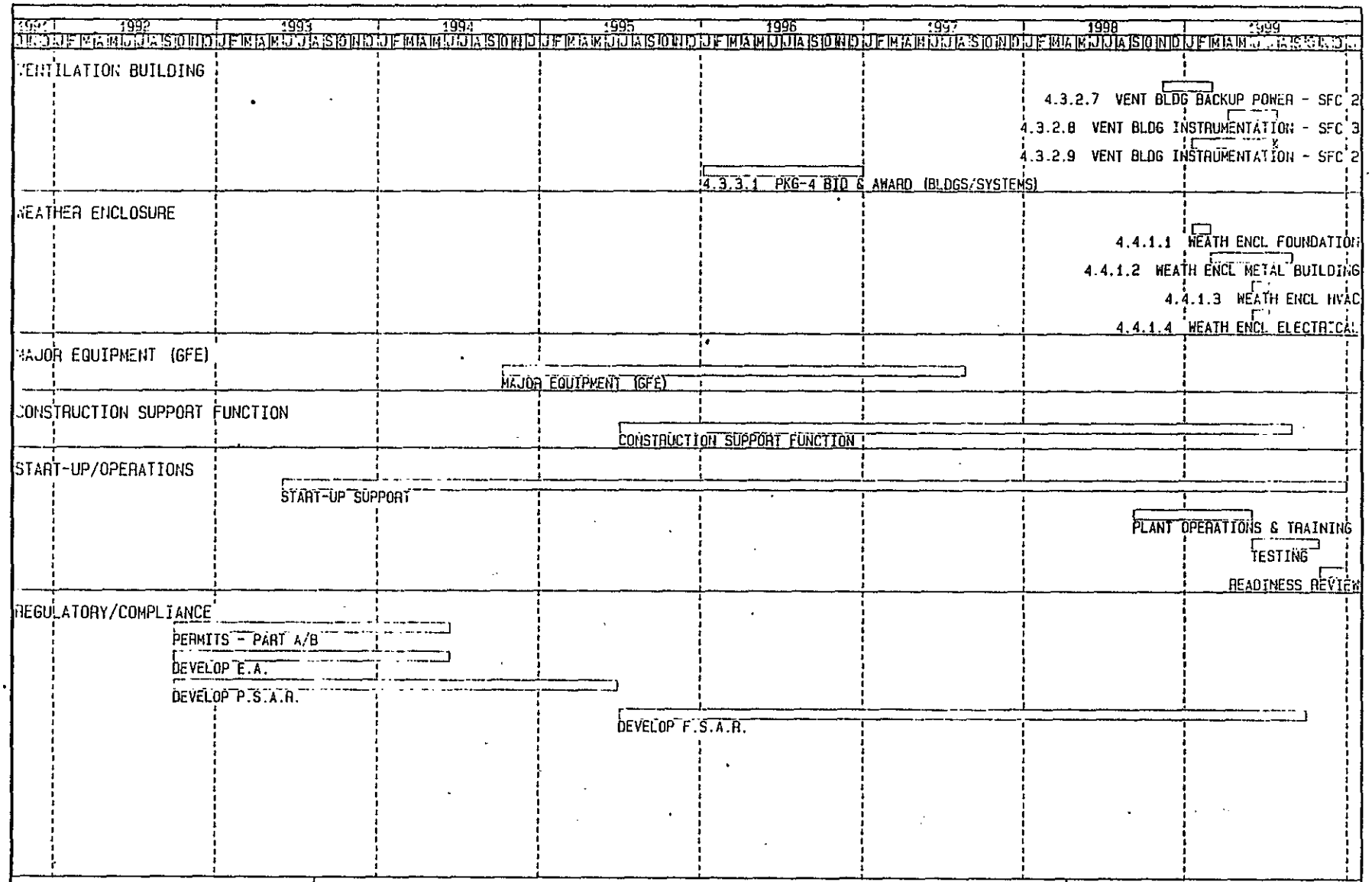

9513319.0132

WHC-SD-W236-CDR-001, Rev. 0

W-236A CONCEPTUAL PROJECT SCHEDULE

SCHEDULE BASIS:

1. Key Decision documentation to be provided concurrently with start of new activities.

2. Expense/Capital funds available to support schedule.

3. DOE-RL and DOE-HQ reviews and approval performed concurrently.

4. No $25 million procurement cap.

5. Engineering activities performed on a 5-day work week.

6. Construction activities performed on a 6-day work week.

7. Ventilation Building and Weather Enclosure construction activities require two shifts during entire construction duration.

8. Accelerated permitting activities and/or waivers.

APPENDIX E

Outline Specification

THIS PAGE INTENTIONALLY
LEFT BLANK

APPENDIX E
OUTLINE SPECIFICATION
TABLE OF CONTENTS

DIVISION 2 - SITEWORK

Section 02200 Earthwork E-4
Section 02512 Hot-Laid Asphaltic Concrete Paving E-4
Section 02650 Piped Utilities E-4
Section 02668 Fire Water Systems E-5
Section 02740 Septic Systems E-5
Section 02831 Chain Link Fences and Gates E-5

DIVISION 3 - CONCRETE

Section 03300 Cast-in Place Concrete E-6

DIVISION 4 - MASONRY

Section 04570 Castable Refractories E-7

DIVISION 5 - METALS

Section 05120 Structural Steel E-7
Section 05500 Metal Fabrications E-7
Section 05555 Stainless Steel Pit Liner E-8
Section 05556 Stainless Steel Stack E-9

DIVISION 7 - THERMAL AND MOISTURE PROTECTION

Section 07200 Insulation E-9
Section 07212 Rigid Insulation E-10
Section 07240 Exterior Insulation and Finish Systems E-10
Section 07270 Firestopping E-10
Section 07410 Manufactured Roof and Wall Panels E-10
Section 07525 Modified Bituminous Sheet Roofing E-10
Section 07600 Flashing and Sheet Metal E-10
Section 07920 Sealants and Calking E-11

DIVISION 8 - DOORS AND WINDOWS

Section 08100 Metal Doors and Frames E-11
Section 08300 Special Doors E-11
Section 08331 Overhead Coiling Doors E-11
Section 08400 Entrances and Storefronts E-11
Section 08710 Door Hardware E-12
Section 08900 Glazed Curtain Walls E-12

DIVISION 9 - FINISHES

Section 09250 Gypsum Board E-12
Section 09310 Ceramic Tile E-12
Section 09500 Acoustical Treatment E-12
Section 09650 Resilient Flooring E-13
Section 09680 Carpet E-13
Section 09805 Special Protective Coating E-13
Section 09900 Painting E-13

DIVISION 10 -SPECIALTIES

Section 10160 Metal Toilet Compartments E-13
Section 10270 Access Flooring E-13
Section 10400 Identifying Devices E-14
Section 10500 Lockers E-14
Section 10520 Fire Protection Specialties E-14
Section 10800 Toilet and Bath Accessories E-14

DIVISION 11 - EQUIPMENT

Section 11550 Remote Handling Equipment E-15

DIVISION 13 - SPECIAL CONSTRUCTION

Section 13090 Radiation Protection E-15
Section 13120 Pre-Engineered Structures E-15
Section 13440 Instrumentation E-15
A. MICON-VIEW Distributed Control System E-15
B. Safety Class 3 I & C Equipment E-16
C. Safety Class 2 I & C Equipment E-18

DIVISION 14 - CONVEYING SYSTEMS

Section 14200 Elevators E-19
Section 14600 Hoists and Cranes E-20
Section 14840 Powered Scaffolding E-20

DIVISION 15 - MECHANICAL

Section 15300 Fire Sprinkler Systems E-20
Section 15400 Plumbing Fixtures E-21
A. Plumbing Fixtures E-21
B. Sanitary Water Piping E-22
C. Sanitary Sewer and Sewer Vent E-22
Section 15493 Chemical Process Piping Systems E-23
A. Process and Service Piping E-23
B. Equipment E-24
C. Waste Tanks E-28

Section 15500 Heating, Ventilating, and Air Conditioning E-29
A. Annulus Exhaust System Equipment (Safety Class 3) E-29
B. Primary Exhaust System Equipment (Safety Class 2) E-30
C. Ventilation Facility E-31
D. Weather Enclosure E-35

DIVISION 16 - ELECTRICAL

Section 16300 Medium Voltage Distribution E-36
Section 16400 Service and Distribution E-36
Section 16720 Alarm and Detection Systems E-38

PIPE CODES

Pipe Code M-1 . . . . . E-39
Pipe Code M-2 . . . . . E-40
Pipe Code M-5 . . . . . E-41
Pipe Code M-7 . . . . . E-43
Pipe Code M-9 . . . . . E-45
Pipe Code M-13 . . . . . E-46
Pipe Code M-20 . . . . . E-47
Pipe Code M-24 . . . . . E-48
Pipe Code M-26a E-49
Pipe Code M-26b E-50
Pipe Code M-27 . . . . . E-51
Pipe Code M-35 . . . . . E-52
Pipe Code M-40 . . . . . E-53

OUTLINE SPECIFICATION

DIVISION 2 - SITEWORK

Section 02200 Earthwork

1. Loadbearing backfill, compacted.

2. Sand cushion for underground pipe, compacted.

3. Plastic sheet marker for buried piping.

4. Soil compaction testing.

5. Quality Assurance (QA) requirements for installation, inspection, and testing of soils per ASME NQA-2, part 2.5 for Safety Class 1 and 2 foundations.

Section 02512 Hot-Laid Asphaltic Concrete Paving

Roadway and Weather Enclosure floor construction and materials will meet the requirements of the Washington State Department of Transportation (WSDOT) M41-10 Standard Specification for Road, Bridge, and Municipal Construction.

1. Base course: WSDOT M41-10, Section 9-03.9(3).

2. Leveling course: WSDOT M41-10, Section 9-03.9(3).

3. Asphalt material: WSDOT M41-10, Sections 9-02.1(2) and 9-02.1(4).

   a. Paving asphalt: AR-4000-W.

   b. Aggregate: WSDOT M41-10, Section 9-03.8, Class B.

4. Sampling and testing of asphalt concrete pavement.

Section 02650 Piped Utilities

1. Sanitary water: Polyvinyl chloride (PVC), American Water Works Association (AWWA) C900, SDR 18 (Pressure Class 150) or cast iron, AWWA C110 and C151. For pipe size less than 4 inches, PVC, American Society of Mechanical Engineers (ASTM) D 2241, SDR 26, Type PVC 1120; fittings, Schedule 40, ASTM D 2466.

2. Install, flush, and test in accordance with AWWA C600.

3. Disinfect in accordance with Hanford Plant Standard (HPS), HPS-111-M.

Section 02668 Fire Water Systems

1. Raw water pipe: PVC, AWWA C900, SDR 18 (pressure Class 150) with cement-lined ductile or gray-iron fittings, AWWA C110 and C151.

2. Post-indicator valve: 6 inch, similar to Kennedy valve with Potter Model PIVSU-A supervisory switch.

3. Fire hydrant: 6 inch, meeting AWWA C502.

4. Hydrant connection valve: 6 inch, meeting AWWA C500.

5. Thrust restraints in accordance with National Fire Protection Association (NFPA) 24.

6. Flush and test in accordance with NFPA 24.

Section 02740 Septic Systems

1. Septic tanks: Minimum 2 compartment with minimum fluid capacity of 3000 gallons. Precast or cast-in-place concrete.

2. Dosing chamber: 6-foot diameter precast manhole section with standard base, and cover.

3. Dosing pump: 3-horsepower, 3-phase, 208 V, submersible duplex sewer pumps.

4. Pipe: PVC meeting ASTM D 3034 or D 2729.

Section 02831 Chain Link Fences and Gates

1. Fabric: 2 inch diamond mesh, No. 11 wire gage, Federal Specification (FS) RR-F-191/1.

2. Line posts: FS RR-F-191/3, pipe section 2.375 inch outside diameter, 3.65 pounds per linear foot or equal strength.

3. End posts: FS RR-F-191/3, 2.875 inch outside diameter, 5.79 pounds per linear foot or equal strength.

4. Gate posts: FS RR-F-191/3, 4 inch outside diameter, 9.11 pounds per linear foot or equal strength.

5. Extension arms: FS RR-F-191/4.

6. Tension wires: FS RR-F-191/4.

7. Barbed wire: ASTM A 121.

8. Gate frames: FS RR-F-191/2, 1.90 inch outside diameter, 2.72 pounds per linear foot or equal strength; braced, welded, and hot-dip galvanized.

9. Concrete, minimum strength - 2000 psi at 28 days.

DIVISION 3 - CONCRETE

Section 03300 Cast-In-Place Concrete

Concrete construction will be in accordance with American Concrete Institute (ACI) 301 and for Safety Class 2, ACI 349.

1. Concrete, minimum strength:

Safety Class 2 and 3 structures		
Tank dome and walls	-	5000 psi at 28 days
Tank foundation	-	4500 psi at 28 days
Other structures	-	4000 psi at 28 days
Safety Class 4 structures	-	3000 psi at 28 days

2. Reinforcing steel bars: ASTM A 615, deformed, Grade 60; certified material test reports required for reinforcing steel, reinforcing steel mechanical couplers, and waterstops for Safety Class 2 facilities.

3. Mechanical couplers: Cadweld T Series sleeves with filler metal splices as manufactured by ERICO Products Co., or bar grip couplers as manufactured by Dayton Barsplice, Inc., certified material test reports required for mechanical couplers.

4. Welded wire fabric: ASTM A 185.

5. Nonshrink grout, nonmetallic type.

6. Concrete forms: Wood, steel, plywood, or similar.

7. Sampling and testing of concrete per ACI.

8. Tolerances per ACI 117.

9. Examination and testing of reinforcing steel mechanical couplers.

10. Concrete reinforcing steel couplers for Safety Class 2 will be procured from qualified suppliers or designated as commercial grade items.

11. Welding and visual examination per AWS D1.1, AWS D1.3, and AWS D1.4. Visual examination will be performed by Certified Welding Inspectors (CWI).

12. QA requirements for installation, inspection, and testing of structural concrete per ASME NQA-2, part 2.5 for Safety Class 2 concrete.

DIVISION 4 - MASONRY

Section 04570 Castable Refractories

1. Conform to the requirements of ASTM C 401 for physical and insulating properties. Litecrete 60M produced by North American Refractories Co. Install in accordance with manufacturer's procedures.

2. Sampling and testing of castable refractories.

3. Castable refractories will be procured from qualified suppliers or designated as commercial grade items.

DIVISION 5 - METALS

Section 05120 Structural Steel

1. Structural steel: Fabricated and erected in accordance with the American Institute of Steel Construction, Inc (AISC).

2. Rolled steel shapes and plates: ASTM A 36.

3. Steel bars and rods: ASTM A 36.

4. Bolts: ASTM A 325, Grade A or B.

5. Nuts: ASTM A 563, Grade A, heavy hex.

6. Washers: ASTM F 436.

7. Welding and visual examination per AWS D1.1 and AWS D1.3. Visual examination will be performed by CWI.

8. QA requirements for installation, inspection, and testing of structural steel per ASME NQA-2, part 2.5 for Safety Class 2 steel.

Section 05500 Metal Fabrications

1. Fabricate in accordance with industry standards, except all-metal embedments in Safety Class 2 structures will be full-penetration welds in accordance with the AWS codes.

2. Rolled steel shapes: ASTM A 36.

3. Steel plate: ASTM A 36 or A 283.

4. Galvanized steel sheet: ASTM A 526.

5. Steel bars and rods: ASTM A 36.

6. Pipe: ASTM A 53, Schedule 40, Grade B.

7. Aluminum pipe: ASTM B 241 or B 429, Alloy 6061-T6.

8. Bolts: ASTM A 307, Grade A or B.

9. Nuts: ASTM A 563, Grade A, heavy hex.

10. Expansion anchors: Hilti "Kwik-Bolt II" or HSL.

11. Weld studs: ASTM A 108; Nelson Stud Welding Co, Type H4L.

12. Steel checker plate: Four-way safety plate, medium pattern, manufactured by Inland Steel Co.

13. Aluminum tread plate: ASTM B 632, Alloy 6061-T6.

14. Steel grating: Hot-dip galvanized, FS RR-G-661, Type I, pressure locked with end banding bars.

15. Manhole frames and covers for traffic boxes and manholes: Heavy-duty ductile iron, ASTM A 536, Grade 65-45-12.

16. Metal fabrications used in Safety Class 2 structures will be procured from a qualified supplier or designated as commercial grade items.

17. Welding and visual examination per AWS D1.1 and AWS D1.3. Visual examination will be performed by CWI.

18. Certified material test reports required for Safety Class 2 material.

19. QA requirements for installation, inspection, and testing of structural steel per ASME NQA-2, part 2.5 for Safety Class 2 metal fabrications.

Section 05555 Stainless Steel Pit Liner

1. Stainless steel plate, sheet, and strip: ASTM A 240, Type 304L, No. 4 finish conforming to ASTM A 480 for exposed surfaces.

2. Stainless steel bars and shapes: ASTM A 276, Type 304L.

3. Filler metal: AWS A5.4 (E 308L-15 or 16), or AWS A5.9 (ER 308L). Include a certified material test report for tests required in applicable material specification of ASME Section II, Part C.

4. Material designated as Safety Class 2 to be procured from a qualified supplier or designated as commercial grade items.

5. Certified material test reports required.

6. Welding and visual examination per AWS D9.1. Visual examination will be performed by CWIs.

Section 05556 Stainless Steel Stack

1. Stainless steel plate, sheet, and strip: ASTM A 240, Type 304L, No. 4 finish conforming to ASTM A 480 for exposed surfaces.

2. Stainless steel bars and shapes: ASTM A 276, Type 304L.

3. Filler metal: AWS A5.4 (E 308L-15 or 16), or AWS A5.9 (ER 308L). Include a certified material test report for tests required in applicable material specification of ASME Section II, Part C.

4. Material designated as Safety Class 2 to be procured from a qualified supplier or designated as commercial grade items.

5. Certified material test reports required.

6. Welding and visual examination per AWS D9.1 and AWS D10.4. Visual examination will be performed by CWIs.

DIVISION 7 - THERMAL AND MOISTURE PROTECTION

Section 07200 Insulation

1. Roof batt insulation: Type III R-30 fiberglass blanket with reinforced high density polyethylene facing having a flame spread index of 25 or less and a smoke density of 50 or less meeting the requirements of ASTM E 84 test standards. Thermal Design/Simple Saver System.

2. Blow-in insulation: Cellulose type, in thickness required for R-19 rating. Insulation shall have a flame spread index of 25 or less and a smoke density of 50 or less in accordance with ASTM E 84 test standards.

3. Wall insulation: Fiberglass blanket with no facing meeting the requirements of ASTM C 665, Type I. R-11 (Weather Enclosure) and R-19 (Ventilation Building, second floor).

4. Sound attenuation: Uncoated, 2 inch semi-rigid mineral fiber blankets, ASTM C 665, Type I.

Section 07212 Rigid Insulation

1. Built-up roof insulation: Combination rigid polyisocyanurate and perlite insulation board having an R-value of 16 minimum, Manville/FES Core C-6.

2. Concrete roof insulation: Extruded polystyrene foam with tongue and groove edge condition in thickness meeting an R-value of 16. Styrofoam brand insulation/blue board.

3. Perimeter insulation: Polystyrene foam board, 2 inches thick, ASTM C 578, Type IV. Styrofoam brand insulation/blue board.

Section 07240 Exterior Insulation and Finish Systems

1. Insulation board: Expanded polystyrene, 2 inch (R-8) flame spread 25 or less, one pound per cubic foot average density; ASTM C 578, Type 1. Reinforcing mesh applied over insulation in areas where finish could be damaged. Dryvit System Inc.

2. Quarzputz finish: Concrete color, smooth texture; Dryvit System, Inc.

Section 07270 Firestopping

1. Penetration sealant: Fire and smoke stop, non-sag, one component sealant, zero flame spread, 3200 F melting point meeting ASTM E 814 and Underwriters Laboratory, Inc. (UL) 1479. Tremco/Fyre shield.

Section 07410 Manufactured Roof and Wall Panels

1. Preformed Metal Standing Seam Roofing: 24 gauge standing seam roof panels conforming to ASTM A 446 grade D with a minimum yield strength of 50,000 psi.
   Coating: Zincalume per ASTM A 792.
   Profile: 24 inch self-locking. ASC Pacific/Weather Seam 24.

Section 07525 Modified Bituminous Sheet Roofing

1. Modified bitumen roofing: Elastomeric coating; blend of asphalt and SBS (styrene butadiene styrene) rubber. Reinforcement; combination of fiberglass and polyester mats. Manville/Dynakap FR.

Section 07600 Flashing and Sheet Metal

1. Flashing, scuppers, and downspouts: Galvanized metal, 24 gage.

Section 07920 Sealants and Calking

1. Sealant: Polysulfide, nonstaining primer.

2. Backer rod: Closed-cell polyethylene foam.

3. Expansion joint filler: Premolded bituminous.

4. Sealants and calking used in Safety Class 2 applications to be procured from a qualified supplier or designated as commercial grade items.

5. Inspection and documentation commensurate with Safety Class 2.

DIVISION 8 - DOORS AND WINDOWS

Section 08100 Metal Doors and Frames

1. Doors: Hollow-metal, Grade II heavy duty, SDI-100.

2. Frames: Hollow metal, 16 gage.

Section 08300 Special Doors

1. Missile-resistant door opening assembly: Complete door, frame, and hardware assembly meeting University of California Research Laboratory (UCRL) 15910 missile penetration criteria. Peelle Company/LR Series.

2. Inspection and documentation commensurate with Safety Class 2.

Section 08331 Overhead Coiling Doors

1. Roll-up doors: Insulated where used for exterior installation, motor operated with manual pull chain. 20 gauge in sizes indicated on drawings. Cookson/FMWI

Section 08400 Entrances and Storefronts

1. Entrance door system: Energy-efficient aluminum entrance system with fluorocarbon paint finish. Kawneer/Insulclad 260 Thermal.

2. Window frame system: Thermally efficient aluminum frame system with fluorocarbon paint finish. Kawneer/ Isoglaze 450T.

Section 08710 Door Hardware

1. Panic hardware for exit doors only.

2. Push/pull hardware for changeroom vestibule doors as well as doors separating blues and SWP changerooms for both mens and women.

3. Heavy-duty mortise locksets for exterior doors.

4. Doors will be self-closing.

5. Weather stripping and automatic door bottoms for exterior doors.

6. Electrical locking system.

Section 08900 Glazed Curtain Walls

1. Translucent insulated wall panels: Translucent reinforced fiberglass sheets forming a 2-3/4 inch thick structural composite sandwich panel having a R value of 6 (U = 0.167). Kalwall Translucent Wall Systems.

DIVISION 9 - FINISHES

Section 09250 Gypsum Board

1. Gypsum board: Standard 5/8 inch, skim coat, tape and sand for smooth non-textured finish. Water-resistant board in restroom/shower areas only.

2. Metal studs: Galvanized 25 gage.

Section 09310 Ceramic Tile

1. Ceramic tile: Standard for walls and floors in changeroom shower/restroom areas, except for decontamination shower units. Walls; 4 inch by 4 inch glazed units. Floors; 2 inch by 2 inch ceramic mosaic. American Olean Tile/Ceramic Mosaics and glazed wall tile.

Section 09500 Acoustical Treatment

1. Acoustical panels: Standard 2 by 2 panels in white and maximum of 4 colors, suspended with standard "T" grid support. Exception: Lobby, receptionist/secretary, lunchroom, and waiting area shall have the same panels with a recessed shadowline edge condition. USG Interiors Inc./ High-NRC OMNI fissured.

Section 09650 Resilient Flooring

1. Sheet vinyl: FS L-F-475A, Type II, Grade A, 0.085 gage, installation to include feature strips. Congoleum/Marathon.

2. Vinyl composition tile (VCT): FS SS-T-312B (1), Type IV, Comp 1, Size: 12-inch x 12-inch, Gauge: 1/8-inch. Armstrong/Stonetex.

3. Static dissipative VCT: 12 inch by 12 inch, 1/8 inch gage, FS SS-T-312B(1), Type IV, Comp. L. Class 2. VCT to minimize the generation and maximize the dissipation of static charges for use in static sensitive areas. Armstrong/Exelon SDT.

Section 09680 Carpet

1. Carpet: Tufted, level loop, with 20 pound tuft bind. Face yarn, continuous filament nylon with permanent static control, in 28 ounce weight. Total weight with jute or polypropylene backing, 60 ounces minimum.

Section 09805 Special Protective Coating

1. Coating: High Build Vinyl Type. Ameron/Amercoat 33.

Section 09900 Painting

1. Exterior: Gloss enamel for exterior metal surfaces.

2. Interior: Semigloss enamel for interior ferrous metals, doors, frames, and gypsum wallboard partitions. Three-coat application.

DIVISION 10 - SPECIALTIES

Section 10160 Metal Toilet Compartments

1. Toilet partitions and doors: Standard baked enamel floor attached steel partitions. Accurate/Concord.

Section 10270 Access Flooring

1. Computer access floor system: 16 inch by 16 inch by 1 inch snap-on stringer-gravity held panels. Static loads; 1200 pound. Concentrated load; 0.1 inch maximum top surface reflection. Maximum; ultimate load 3200 pounds. Tate Access Flooring, Series 900 CRN.

Section 10400 Identifying Devices

1. Provide the following signs.

TYPE OF SIGN	SIZE	NO REQ'D	REPRESENTATIVE PRODUCT
EXTERIOR			
Non-illuminated entry signs	2'-6" x 8'-0"	4	Andco/400 Series
Site signs (post and panel)	3'-6" x 3'-6"	20	Andco/PP22 Series
Cell identification signs	3'-0" x 2'-0"	64	Andco/100 Series
INTERIOR			
Interior directory	3'-0" x 2'-0"	3	Andco/4500D Series
Alternating message signs	12" x 12"	20	Andco/AMS 1400-4
T-bracket signs	16" x 8"	20	Andco/T-B301 Series
Standard room sign	12" x 12"	100	Andco/1050-4 Series

Section 10500 Lockers

1. Clothes lockers: Standard 12 inch by 15 inch single-tier, metal. Republic/QSL.

2. Locker Room Benches: 9 1/2-inch wide by 1 1/4-inch thick maple bench with 18-inch high steel pedestals. Lengths as shown on plan.

Section 10520 Fire Protection Specialties

1. Extinguisher: As supplied by Westinghouse Hanford Company.

2. Cabinet: 20 gage, semi-recessed with inside dimensions of 12 inch wide by 27 inch high by 7-1/2 inch diameter. JL Industries/Panorama 1036C70 Series.

Section 10800 Toilet and Bath Accessories

1. Restroom: Standard accessories and hardware.

2. Janitor closet: Standard accessories and hardware.

DIVISION 11 - EQUIPMENT

Section 11550 Remote Handling Equipment

1. Master-slave manipulators: Central Research Laboratories, Model 8.

DIVISION 13 - SPECIAL CONSTRUCTION

Section 13090 Radiation Protection

1. Shielded Cask, Central Research Laboratories Model Padirac with 4-inch cast lead shielding.

2. Appurtenances:

   a. Two rail mounted carts.

   b. Two shielded slide valves with motorized jack screw lifts for cells.

   c. Two double door assemblies complete with linear and rotary actuators for remote operation.

   d. Two shielded cover assemblies.

   e. Two lifting tongs.

3. Electrification: 120 V, single-phase, 60 Hz.

4. Controls: 120 V, single-phase, 60 Hz maximum. All controls to be provided for jack screws and actuators.

Section 13120 Pre-Engineered Structures

1. Weather Enclosure: Prefabricated 300 foot free-span structure housing the entire tank farm area. Behlen/S-Span System.

Section 13440 Instrumentation

A. MICON-VIEW Distributed Control System consisting of the following:

1. Control consoles including workstation computers, cathode-ray tubes (CRTs), printers, local area network (LAN) interfaces, software packages and uninterruptible power supplies. (SC-3)

2. LCUs including control modules, input/output (I/O) modules, racks, power supplies, and local operator interface units. (SC-2, National Electric Manufacturers Association (NEMA) 4 enclosures)

The following I/O count is approximate and includes 50 percent design spares:

Digital inputs:	4,500
Digital outputs:	3,400
Analog inputs:	3,850
Analog outputs:	250
Total	12,000

3. Redundant Data Highway (fiber distributed data interface)

B. SAFETY CLASS 3 INSTRUMENTATION AND CONTROL (I&C) EQUIPMENT

1. Smart electronic differential pressure or level transmitter: Bailey Controls, Type BCN with 4-20 mA output.

2. Smart electronic pressure transmitter: Bailey Controls, Type BCN with 4-20 mA output.

3. Pressure control valve: Fisher Controls, 1 inch, Model 92B steam pressure regulator.

4. Pressure control valve: Cashco, 4 inch, Type 8300 water pressure regulator.

5. Pressure indicator: Ashcroft, Type 1009.

6. Differential pressure indicator: Dwyer Instruments, Inc., Model 2000 Magnehelic.

7. Level sensor and level indicating transmitter: Fluid Components, Inc., assembly with digital display and 4-20 mA output, Model CL86.

8. Level gage: Penberthy direct reading liquid level gage.

9. Level gage: Robertshaw Controls Company, Model 185/189.

10. Magnetic flowmeter: Fischer and Porter, Model 10D1475 Mini-mag with 4-20 mA output.

11. Vortex flowmeter: Foxboro, Model E83F with 4-20 mA output.

12. Control valve: Keystone Valve USA, Inc., NEMA 4, continuous duty, manual override, limit switches, 4-20 mA input signal for modulating control ball valve.

13. Flow indicator: Fischer and Porter, Series 10A6130 variable area flowmeter.

14. Airflow sensor and flow transmitter: Kurz Instruments, smart thermal mass flow sensor/transmitter, Model 450 with digital display, 4-20 mA output ADAM smart transmitter.

15. Temperature sensor: Conax resistance temperature detector (RTD), Model RTD 44.

16. Temperature control valve: Robertshaw Controls Company, Model RT-70B self-actuated temperature regulator.

17. Speed sensor and indicating speed transmitter: Bentley Nevada speed sensor transducer with 4-20 mA output indicating speed transmitter.

18. Moisture sensor and moisture transmitter: Sensor - Honeywell Model SSP128A. Transmitter - Honeywell Model SSP145A.

19. Solenoid valve: Two-way; ASCO half-inch Model 8223
    Three-way; ASCO half-inch Model 8300

20. Radiation detector pig and associated electronics: Pig - Nuclear Research Corp., Model 4P1-3. Detector - Canberra beta-gamma detector. Electronics - Canberra Model 2005, 3002, 2021, 2037A, and 2040.

21. Tritium analyzer: Berthold, Model LB110 with associated electronics.

22. Nitric oxide analyzer: Beckman Industries, Model 955 counting gas - P10 gas and N2 gas.

23. Control valve: Valtek, self draining globe valve, diaphragm operated.

24. Space radiation system: Victoreen Model 877 detector with Victoreen Model 876A monitor.

25. Radiation continuous air monitor: Eberline, monitor with vacuum pump, Models AMS-3 and RAP-1.

26. Building ventilation exhaust monitor:

    a. Probe: Kurz Instruments, Model IK-EVA 4200D system with manifold assembly; dual sampling rakes; 4 velocity sensors; one temperature sensor; with 4-20 mA outputs.

    b. Electronics: Kurz Instruments, Model 151R signal conditioner; 191R power supply; 7500 mass flow controller; 142 velocity profiler; 132RM output module; and the 101RM flow totalizer.

c. The following equipment is to be supplied with the cabinet and attached accordingly.

1) Cabinet: Kurz Instruments, Model 193C.

2) The stack sampling electronics: Two strobe lights and horn.

3) Internal temperature high/low sensor and relay.

4) Vacuum pumps for sampling: Eberline, Model RAP-1.

5) Beta/gamma air particulate monitor: Eberline, Model AMS-3.

27. Area radiation system: Nuclear Measurement Corp., Model No. GA-CM-42-1-02-S-13.

28. Gas Chromatograph: Continuous gas analyzer system with a computer work station, gas sampling system, gas chromatograph, and accessories - Baker 6800 system with Microsensor Technology Inc. Model M200 gas chromatograph.

C. SAFETY CLASS 2 I&C EQUIPMENT

1. Leak detection element and electronics: Fluid Components, Inc., Model 8-66 with dual switch points.

2. Pressure transmitter: Rosemount, Model 1153, Series D.

3. Differential pressure or level transmitter: Rosemount, Model 1153, Series D.

4. Vibration sensor and electronics: Bently Nevada accelerometer.

5. Speed sensor and indicating speed transmitter: Bentley Nevada speed sensor transducer with 4-20 mA output indicating speed transmitter.

6. Temperature sensor and temperature transmitter: Sensor - Moore Industries, SEN Series RTD, 100 ohm platinum. Transmitter - Moore Industry, Model EP-RVX.

7. Temperature sensor: Moore Industry, SEN Series RTD, 100 ohm platinum.

8. Flow indicator: Fischer and Porter, Series 10A6130 variable area flowmeter.

9. Primary and annulus ventilation exhaust stack monitors.

   a. Probe: Kurz Instruments, Model IK-EVA 4200D system with manifold assembly; dual sampling rakes; 4 velocity sensors; one temperature sensor; with 4-20 mA outputs.

   b. Electronics: Kurz Instruments, Model 151R signal conditioner; 191R power supply; 7500 mass flow controller; 142 velocity profiler; 132RM output module; and the 101RM flow totalizer.

   c. The following equipment is to be supplied with the cabinet and attached accordingly.

      1) Cabinet: Kurz Instruments, Model 193C.

      2) The stack sampling electronics: Two strobe lights and horn.

      3) Internal temperature high/low sensor and relay.

      4) Vacuum pumps for sampling, Eberline, Model RAP-1.

      5) Beta/gamma air particulate monitor, Eberline, Model AMS-3.

10. Leak detection radiation monitor: Scintillation probe, Canberra with electronics.

11. Corrosion probe and monitor: Masco/Rohnback, Cocasco Model RCS-8 with Model 3000 corrosometer probe.

12. Thermocouple: Single, chromel-alumel, 1/8 inch diameter, stainless steel sheath, Claude S. Gordon Company.

13. Thermocouple: Dual, chromel-alumel, 1/4 inch diameter, stainless steel sheath, Claude S. Gordon Company.

14. High-efficiency particulate air (HEPA) filters radiation system (radiation element and analyzer): Nuclear Measurement Corp, Model No. GA-6M-5-2-1-3-0-0-3-2.

DIVISION 14 - CONVEYING SYSTEMS

Section 14200 Elevators

1. Hydraulic, hospital style, passenger/service elevator with 4000 pound capacity. Elevator cab dimensions; 5'-8" wide by 8'-8" deep with 4 foot door opening width. Passenger entrance, two-speed slide, Montgomery/4000 single entrance.

Section 14600 Hoists and Cranes

1. Capacity: 2-tons (4,000 lbs), Monorail Manufacturers Association (MMA) Service Class C, moderate service, ASME B30.11.

2. Bridge: Underrunning; approximately 10'-8" span, single speed drives.

3. Trolley: Underrunning, single speed drive.

4. Hoist: 2-ton capacity, 15 foot lift, wire rope hoist; true vertical lift (dual reeving).

5. Controls: Pendant control from floor with master switch (power on-off), bridge motion (East, West); trolley motion (North, South); hoist motion (up, down).

6. Electrification: 480 V, 3-phase, 60 Hz; festooned conductors; motor starters; limit relays, etc. to be crane mounted; control power 110 V, single-phase, 60 Hz maximum.

7. Finish: Two-part corrosion resistant epoxy paint; one coat primer, two coats finish.

Section 14840 Powered Scaffolding

1. Two wire-powered scaffolding for wipe down of Weather Enclosure interior walls surfaces.

2. Scaffolding system components: Wall carriage; parapet mounted style pipe track supported from I-beam column structure; drum hoist with both power and manual operation; aluminum stage with handrails; noise minimizing carriage support wheels; operational control units. Swing State Inc., City of Industry, California.

DIVISION 15 - MECHANICAL

Section 15300 Fire Sprinkler System

1. Sprinkler system components: Current products of the manufacturer and UL listed or Factory Mutual (FM) approved for their intended use.

2. System feeds: From 5 feet outside building to the point of attachment of the system riser inside the building; cement lined ductile-iron pipe in conformance with AWWA standards.

3. Riser components: Reliable alarm check valve with standard trim including retard chamber, fire department connection, inspector test connection, flow alarm pressure switch, 2 inch

system main drain valve, water motor alarm gong, and a water strainer located at the base of the riser.

4. Sprinkler heads: Nominal 1/2 inch diameter orifices, rated for ordinary temperature classification unless otherwise noted.

5. On-off sprinkler heads are required in the communications room.

6. Pipes and fittings: Meeting the requirements of NFPA 13; Schedule 40 steel pipe with threaded or grooved type (rubber gasketed) fittings.

7. Flexible couplings: Bolted sleeve type with rubber sealing rings for use on grooved end piping.

8. Fire department connection: Standard brass or bronze body furnished with self-closing double clappers.

Section 15400 Plumbing Fixtures

A. PLUMBING FIXTURES

1. Water closet

a. Bowl: (Floor mounted) (Wall hung) siphon jet vitreous china closet bowl with elongated rim.

b. Flush valve: Exposed chrome plated, diaphragm type with oscillating handle, escutcheon, bumper, integral screwdriver stop and vacuum breaker.

c. Seat: 5 ply, solid (black) (white) plastic, open front, extended back, less cover, complete with self-sustaining hinge.

2. Urinal

a. Urinal: Vitreous china wall hung, wash-out urinal with shields, integral trap, integral flushing rim, removable stainless steel strainer.

b. Flush valve: Exposed chrome plated, diaphragm type with oscillating handle, escutcheon, integral screwdriver stop, vacuum breaker.

3. Lavatory

a. Lavatory: Self-rimming counter top 19 by 16 inches minimum porcelain on steel lavatory with drillings on 4 inch centers, overflow, seal of putty, calking, or concealed vinyl gasket.

b. Trim: Chrome plated combination supply fitting with indirect lift waste, aerator, indexed 5 rib handles.

4. Cabinet shower

a. Cabinet: 32 by 32 by 75 inch high cabinet with stone texture receptor, soap dish, curtain rod with snap hooks, heavy plastic curtain and removable chrome plated strainer.

b. Trim: Concealed shower supply with indexed rib handles, bent shower arm with adjustable spray ball joint shower head and escutcheon.

5. Electric water cooler: Wall mounted air cooled self contained refrigerated type with a one piece stainless steel top, a bubbler, an adjustable temperature control, and an automatic stream regulator.

6. Service or mop sinks

a. Bowl: 36 by 24 by 10 inch deep white molded stone, floor mounted sink with 1 inch wide shoulders, stainless steel strainer.

b. Trim: Exposed wall type supply with cross handles, spount wall brace, vacuum breaker, hose and spout, strainers, eccentric adjustable inlets, integral screwdriver stops with covering caps and adjustable threaded wall flanges, 5 feet of 1/2 inch plain end reinforced rubber hose, hose clamp, mop hanger.

B. SANITARY WATER PIPING: (Domestic hot and cold potable water service, 115 psig and 200 F temperature.)

1. Inside building: Type K hard copper with copper alloy solder fittings. Solder: Lead free ASTM B 32 Alloy Grade S65.

2. Valves, strainers, unions: Brass, screwed connections with unions.

3. At flanged connections of equipment, glass filled teflon gasket, 1/16 inch thick and flange with face to match equipment flange.

C. SANITARY SEWER AND SEWER VENT

1. Aboveground 2 inch and smaller

a. Pipe: Schedule 40 galvanized steel, ASTM A 53, Type E or S, Grade B.

b. Joints: Threaded, sealed with sealant tape.

c. Fittings

1) Waste piping: Black cast iron, ANSI B16.12.

2) Vent piping: Class 125, cast iron, threaded in accordance with ASME B16.4.

2. Aboveground 2-1/2 inch and larger

a. Pipe: Hubless cast iron sanitary system in accordance with CISPI 301.

b. Joints: Sealing sleeve with shield and clamp in accordance with CISPI 301.

3. Underground all sizes

a. Pipe: Service weight cast iron soil pipe in accordance with ASTM A 74.

b. Joints: Hubless cast iron in accordance with UPC, Section 802.

c. Fittings: Service weight cast iron soil fittings in accordance with ASTM A 74.

Section 15493 Chemical Process Piping Systems

A. PROCESS AND SERVICE PIPING

1. All process piping will meet the requirements for design, materials, fabrication, erection, testing, and inspection as prescribed by ASME B31.3. Material requirements, piping categories (ASME B31.3 categories), inspection/testing, nondestructive examination (NDE) and material documentation requirements are listed on the pipe code descriptions. Valves will be consistent with the ratings of the fittings.

2. The following piping systems will be installed to withstand natural forces requirements for nonreactor facilities as specified in UCRL 15910.

a. Moderate Hazard (Safety Class 2)

Primary ventilation piping (M-9)
Primary ventilation piping encasement (M-26a and M-26b)
Drain piping (M-27)
Drain piping encasement (M-26a and M-26b)
Sample piping (M-9)
Sample piping encasement (M-26b)
Process waste piping (M-9)

Diesel fuel oil piping (M-20)
Process waste encasement (M-26a and M-26b)
Instrument air (M-7)

b. Low Hazard/Important (Safety Class 3)

Piping not identified above.

3. Install a cathodic protection system on all buried metallic process, instrument air, raw water, drain, and ventilation piping.

4. Carbon steel piping that will be exposed to earth backfill will have a factory-applied protective coating in accordance with AWWA C203.

5. Flush piping after installation. Pneumatically flush the instrument air line. Flush all other piping with water.

6. Identify all exposed piping as to fluid carried and direction of flow as specified in HPS-111-M.

7. Install an encasement pipe at bends to provide expansion void for thermal expansion and seismic movement.

B. EQUIPMENT

1. Instrument air package capable of providing 130 scfm of instrument quality air at 20 psig:

a. Two liquid-cooled, double-acting, oil-free air compressors, approximately 50 horsepower each, complete with alternator, 100 gallon receiver tank, filters, aftercoolers, and automatic regenerating dryers, all mounted on a skid, ready for installation indoors on a concrete slab. Joy WGOL9 series oil-free compressors, Model 9 x 7.

b. Two closed-circuit liquid coolers complete with automatic mixing valves, expansion tank, and pumps, to provide complete cooling for the compressors and after-coolers. Coolers will be installed in the Weather Enclosure on top of the Air Compressor Room. HiRoss Model WAC24 closed-circuit air-cooled liquid coolers.

2. Condensers:

a. Eight stainless steel shell-in-tube heat exchangers; four, 4-pass approximately 10 feet long by 2 feet diameter with a tube surface area of approximately 399 ft^2, and four 4-pass approximately 9 feet long by 1 foot diameter with a tube surface area of approximately 116 ft^2.

b. Condensers will be mounted on a support structure, complete with piping to remote connector nozzles and flanges, with the nozzles and flanges located off a datum point to within 1/16 of an inch.

c. Safety Class 2 equipment.

3. Evaporative cooling towers

a. Eight closed-circuit industrial fluid coolers for installation outdoors on a concrete slab, equipped with capacity control dampers, extended surface coils constructed to ASME Section VIII, Division 1, pan water heaters, air inlet screens and automatic controls.

b. Eight sand filters, one for each tower, located outdoors by the towers.

c. BAC Industrial Cooler (8) Model F1443-N and (1) Model F1743-L, each with PEP Model CL-16/150 sand filter.

d. Safety Class 3 equipment.

4. Cooling Tower Pumps

a. Eight endsuction pump, carbon steel construction complying with American Petroleum Institute (API) 610, 6th Edition, complete with 3 horsepower motor and coupling, mounted on a baseplate. Gould Model 3700 stainless steel, 3 x 6-7.

b. Safety Class 3 Equipment.

5. Water softener

a. Four water softeners for indoor installation, capable of providing 30 gallons per minute flow, with 10,000 grain minimum capacity. Culligan model Hiflo I HA60 Duplex.

b. Safety Class 3 equipment.

6. Cooling water pumps

a. Eight end suction pump, carbon steel construction, complying with API 610 6th Edition, compete with 15 horsepower motor and coupling, mounted on a baseplate, for installation indoors on a concrete slab. Gould Model 3700 stainless steel, 3 x 6 - 7.

b. Safety Class 3 equipment.

7. Chillers

   a. Eight closed-circuit packaged chillers will be located in the Ventilation Building. Each chiller will be completely packaged and include compressor, cooler, condenser, and all automatic controls. Each unit will be approximately 8 feet long by 6 feet wide by 6 feet high. Dunham-Bush Model IPWM 050.

   b. Safety Class 3 equipment.

8. Chilled water pumps

   a. Eight end suction pump, carbon steel construction, complying with API 610 6th Edition, complete with 1 horsepower motor and coupling, mounted on a baseplate, for installation indoors on a concrete slab. Gould Model 3700, stainless steel, 1-1/2 x 3 - 7.

   b. Safety Class 3 equipment.

9. Diesel fuel storage tank system: One UL labeled, 1,000 gallon single-wall carbon-steel. The tank, 4 feet in diameter 10 feet long with saddle supports, will be installed in a separate concrete vault.

   a. One diesel fuel transfer pump will transfer diesel fuel to the diesel generator.

   b. Safety Class 2 equipment.

10. Liquid Sampler

   a. Thirteen automatic liquid samplers will be located in 2 sample room hot cells. The samplers will extract material from three sample lines from each of the 4 tanks and a sample from the catch tank for the sampling facility. Isolock Model M-4KT-8 with AES-24 sample, bottle mounting adaptor for 1000 ml bottle and Model ESSP-2 automatic time base composite cycle control.

   b. Safety Class 2 equipment.

11. Caustic Tank with Pump

   a. One 100 gallon capacity stainless steel (304L) tank, 32 inch diameter by 30 inches tall and stainless steel portable rotary, sealess corrosives pumps for drums, McMaster-Carr No. 4316K25.

   b. Safety Class 3 equipment.

12. Decon Tanks with Pumps

    a. Three 100 gallon capacity stainless steel (304L) tanks, 32 inch diameter by 30 inches tall, and stainless steel portable rotary sealess corrosives pumps for drums, McMaster-Carr No. 4316K25.

    b. Safety Class 3 equipment.

13. Catch Tank

    a. One 1000 gallon capacity stainless steel (304L) tank, 6 ft diameter by 5 ft high with mounting flanges for an agitator, sample pump, transfer pump and instrumentation penetrations. The tank will be designed, fabricated, and code stamped in accordance with ASME Section VIII, Division 1. Pump, Goulds Model 3171, all 316 stainless steel construction for wetted surfaces, group 5, 1 x 1-1/2-8, 3500 rpm, Agitator: Chemineer Model 3CTN-0.7 top entry turbine with mechanical seal, 316 stainless steel, 3/4 horsepower motor, 155 rpm, high-efficiency Type HE3 turbine.

    b. Safety Class 2 for tank structure and Safety Class 3 for pumps and agitator.

14. Booster pump

    a. One end suction pump, stainless steel wetted parts complying with API 610, complete with 2 horsepower motor and coupling, mounted on a baseplate for installation indoors on a concrete slab. Kontro Model HC3EH2, with 2-inch suction and 1-1/2-inch discharge.

    b. Safety Class 3 equipment.

15. Mixing jacket cooling tower pump

    a. One end-suction pump, carbon steel construction complying with API 610, complete with 10 horsepower motor and coupling, mounted on a baseplate. Gould Model 3700, stainless steel, 2x4-7.

C. WASTE TANKS

Each tank is comprised of 2 concentric structures; a primary tank separated from a concrete structure and a secondary liner by an annular space on the sides and a layer of insulating concrete (Section 04570 Castable Refractory) on the bottom.

1. Primary tank

   a. Capacity: 1.16 million gallons, 75 foot diameter.

   b. Fluid contained: Liquid wastes, Sp. G. = 2.0.

   c. Design code: ASME Section III, Division 1, NC.

   d. Material: UNS No. S30403, 304L stainless steel.

   e. Stress relief, if required, to be performed in accordance with ASME Section III, Division 1, NC.

   f. Fabrication, erection, inspection, testing: ASME Section III, Division 1, NC, as modified for containment of radioactive materials.

   g. Visual weld examination will be performed by a CWI.

   h. Materials will be procured from a qualified supplier as required by ASME Section III and additional NQA-1 Program requirements.

2. Secondary liner

   a. Size: 80 foot diameter.

   b. Material:

      - Two tanks: ASTM A 537, Class 1 with supplementary requirements S12 of ASTM A 20.

      - Two tanks: UNS No. S30403, 304L stainless steel.

   c. Fabrication, erection, inspection, testing: ASME Section VIII, Division 2.

   d. Visual weld examination will be performed by a CWI.

   e. Materials will be procured from a qualified supplier or designated as commercial grade items.

Section 15500 Heating, Ventilating, and Air Conditioning

Certified material test reports or commercial grade item tests required for material used in the fabrication of the Safety Class 2 system components which are wetted by the process exhaust.

A. ANNULUS EXHAUST SYSTEM EQUIPMENT (Safety Class 3)

1. Exhaust fans: Centrifugal, 1100 cubic feet per minute at 15 in H_2O static pressure, 7-1/2 horsepower. Fans will be rated in accordance with AMCA 210. Motors will be furnished in accordance with NEMA MG-1.

2. HEPA filter housings will be a one high by one wide bag-in/bag-out arrangement with a capacity of 1100 cubic feet per minute. Filter train will consist of 2 HEPA filter banks in series with HEPA filter test sections located in between. HEPA filter housing will be capable of meeting test requirements of ASME N510. Housings will meet requirements of ASME N509.

3. HEPA filters will meet the requirements of HPS-159-M.

4. Heating coils at the exhaust fans will be fin-tubular construction, 20 kW, 460 V, 3-phase, 60 Hz with proportional solid-state controllers that hold a constant temperature rise with varying air flows. Heating element to flange penetrations will be sealed, meeting the pressure-decay test requirements of ASME N510. Heating coils at the air intake stations will be 20 kW, single-stage control with a downstream temperature controller and alarm. Heating coils will meet the requirements of ASME N509.

5. Air intake stations will have HEPA filter housings and will be one high by two wide similar to type described in Item 2. Prefilters will be 80 percent ASHRAE 52 rated.

6. Exhaust ductwork above grade and located in the Ventilation Building and will be in accordance with ASME N509/N510 and fabricated from Type 304L stainless steel, welded. Miscellaneous equipment supports will be fabricated from ASTM A 36 carbon steel welded. Carbon steel will be primed and painted. Valves/dampers will be in accordance with ASME N509. Automatic operators will be electric power to open fail closed. Manual valves will have gear operators.

7. Local differential pressure indicators: Dwyer Series 2000.

8. Local temperature indicators, bimetallic dial type, mounted in wells welded to piping and ductwork systems.

B. PRIMARY EXHAUST SYSTEM EQUIPMENT (Safety Class 2)

1. Exhaust fans: Centrifugal, industrial exhausters, 300 scfm at 40 inch water column, 10 horsepower, NEMA MG-1 motor.

2. HEPA filter housings: Bag-in/bag-out, one high by one wide, 1000 cubic feet per minute, similar to the type described in Item A.2.

3. High-efficiency gas adsorber (HEGA), housing: Similar to HEPA except for V-bed carbon adsorbers.

4. HEPA filters: HPS-159-M.

5. Heating coils: Five kW, 460 V, 3-phase, 60 Hz, similar to the type described in Item A.4.

6. High-efficiency mist eliminator (HEME): Brinks style filter element 2 foot diameter by 3 feet long in stainless steel vessel, remote service Monsanto or Koch.

7. High-efficiency metal fiber (HEMF) filter: The HEMF filter housing will be a vertical cylindrical vessel measuring 24 inch diameter by approximately 10 feet overall height, including an allowance for support legs. The top head is flanged and can be removed remotely. A tubesheet mounted between these head flanges supports the internal elements, and separates the upstream and downstream compartments of the housing. There are a total of 4 filter element bundles welded to the tubesheet, each consisting of 2 elements welded end-to-end. Each individual element measures 6 inches diameter by 16 inches in length, and contains 16 square feet of pleated sintered metal media, rated 99.97 percent DOP.

8. Exhaust ductwork above grade from tie-in point outside of pipe trench and will be in accordance with ASME N509/N510 and fabricated from Type 304L stainless steel, welded. Miscellaneous equipment supports will be fabricated from carbon steel, welded, ASTM A 36. Carbon steel will be primed and painted. Valves/dampers will be in accordance with ASME N509. Automatic operators will be electric, fail-safe system with manual override. Manual valves will have gear operators.

9. Recirculating fans: Centrifugal, industrial exhausters, 1200 scfm at 15 inch water column. Fan housing, wheel and other parts wetted by airstream will be stainless steel construction. Fan will be extra heavy construction which will include extra heavy housing and wheel. Shaft will be oversized and oversized bearings will have average L-10 life of 150,000 hours. Fan will have stuffing box shaft seal, flanged inlet and outlet and all joints and seams of housing welded to reduce in-leakage. Fan arrangement will be

Number 8. Fan motor will be 10 horsepower, totally enclosed, fan-cooled (TEFC) NEMA B design in accordance with NEMA MG1 for TEFC motors. Insulation will be Class H, minimum. Bearings will be extra heavy, with grease chambers incorporating heavy duty shaft seals to prevent grease from entering the motor. Grease for bearing will be radiation resistant grease.

10. Air/Liquid separator: Separator will be line type, welded stainless steel construction. Separator will be capable of removing 99 percent of all liquid and solid entrainment where the particle size exceeds ten microns. Separator will have 14 inch flanged connections.

11. Local differential pressure indicators: Dwyer Series 2000.

12. Local temperature indicators: Bimetallic dial type, mounted in wells welded to piping and ductwork systems.

C. VENTILATION FACILITY

1. Supply air units: Built-up units, centrifugal fans, 80 percent ASHRAE filters, steam heating coils, cooling coils or rigid media air coolers.

   a. Fans: Centrifugal type, rated in accordance with AMCA 210 with spring-mounted structural bases, motors 460 V, 3-phase, 60 Hz, furnished in accordance with NEMA MG-1.

      1) 14,000 cfm at 5 in H_2O static pressure, 20 horsepower.

      2) 21,000 cfm at 5 in H_2O static pressure, 30 horsepower.

      3) 8000 cfm at 5 in H_2O static pressure, 15 horsepower.

      4) 9000 cfm at 5 in H_2O static pressure, 15 horsepower.

      5) 10,000 cfm at 10 in H_2O static pressure, 40 horsepower.

      6) 2500 cfm at 5 in H_2O static pressure, 5 horsepower.

   b. Steam heating coils: Two rows, copper tubes, aluminum fins, certified in accordance with Air-Conditioning and Refrigeration Institute (ARI) 410.

c. Chilled water cooling coils: Six row, copper tubes, aluminum fins, certified in accordance with ARI 410.

d. Filters: ASHRAE 52 rated, non-supported pocket type extended surface filters with galvanized steel holding frame, UL listed Class 2.

e. Rigid media air cooler: Evaporative cooler section, 12 inch deep, UL approved Class 2 evaporative media with pump, fill and level controls.

2. Supply, Return Duct Work and Accessories:

a. Supply and return ductwork (Ventilation Zones 2, 3, and 4): ASTM A 527 galvanized steel, fabricated in accordance with Sheet Metal and Air Conditioning Contractors National Association, Inc (SMACNA) heating, ventilating and air-conditioning (HVAC) Duct Construction Standards, Metal and Flexible.

b. Supply diffusers: Multidirectional, square or rectangular, aluminum construction with opposed blade dampers for T-bar, gypsum board or open ceilings.

c. Duct insulation: One inch thick, Manville flexible, 800 series spin-glass fiberglass, 1.6 pcf density with AP facing to be installed on exterior surface of all duct not located in conditioned space.

d. Fire dampers: UL listed, 1-1/2 hour fire-resistance rating, with factory sleeve, Air Balance Inc, No. 119ALX.

e. Supply/return dampers: Galvanized steel with blade seals, side seals, axle shaft seals.

f. Duct and equipment supports fabricated from ASTM A 36, carbon steel.

g. Outdoor duct insulation: Two inch thick fiberglass, 6.0 pcf; Pabcote No. 127 cement; H. B. Foster UL listed adhesive; asphalt-coated glass fabric and Manville Insulkote ET weather protective coating.

3. Exhaust System

a. HEPA filter trains: Prefilter, followed by 2 HEPA filter banks in series with HEPA filter test sections located in between. HEPA filter housing, bag-in/bag-out, capable of meeting requirements of ASME N510/N509, HEPA filters, in accordance with HPS-159-M, prefilters, 80 percent ASHRAE 52 rated, suitable for bag-in/bag-out operation, UL Class 1.

1) 4 high x 3 wide array. (6 required)

2) 4 high x 3 wide array. (2 required Safety Class 2)

3) 2 high x 1 wide array. (2 required)

4) 3 high x 1 wide array. (Safety Class 2)

b. Exhaust duct (Ventilation Zones 2 and 3): ASTM A 240, Type 304L stainless steel, welded longitudinal seams and flanged transverse joints fabricated in accordance with ASME N509. Tested in accordance with ASME N510. Bars and shapes used as stiffeners and flanges will be ASTM A 276, Type 304L.

c. Exhaust grilles: Aluminum egg crate, 1/2 by 1/2 by 1/2 inches with opposed blade damper.

d. Isolation valves: Butterfly valve, epoxy coated cast iron body, stainless steel stem and disc, EPDM seat, manual operator, or electric operator.

e. Exhaust duct dampers (Ventilation Zone 2 and 3): Low leakage, stainless steel, in accordance with ASME N509/N510.

f. Fans: Centrifugal type, rated in accordance with AMCA 210 with spring-mounted structural bases, motors, 460 V, 3-phase, 60 Hz, furnished in accordance with NEMA MG-1.

1) 15,000 cfm at 12 in H_2O static pressure, 50 horsepower.

2) 37,000 cfm at 12 in H_2O static pressure, 100 horsepower.

3) 3,200 cfm at 15 in H_2O static pressure, 15 horsepower. Safety Class 2.

4) 12,000 cfm at 12 in H_2O static pressure, 40 horsepower. Safety Class 2.

5) 2,000 cfm at 12 in H_2O static pressure, 15 horsepower.

4. Chilled water, steam heating system

   a. Chillers: Factory assembled air cooled chiller consisting of cabinet evaporator, compressors, condenser cells, condenser fans, and controls. 460 V, 3-phase, 60 Hz, 75 ton capacity.

   b. Chilled water pumps: Horizontal, centrifugal, end suction, direct drive, 7-1/2 horsepower, 460 V, 3-phase, 60 Hz motor.

   c. Chilled water, steam piping.

      1) Pipe 1/2 inch and larger: Carbon steel, Schedule 40, ASTM A 106, Grade B.

      2) Fittings for chilled water pipe 1-1/2 inch and smaller: Class 150, malleable iron, threaded, ASME B16.3.

      3) Fittings for chilled water pipe, 2 inch and larger: Wrought steel, ASTM A 234, Grade WPB, wall thickness to match pipe; buttwelding, ASME B16.9.

      4) Flanges, 2 inch and larger: Class 150, ASTM A 105; raised-face welding neck or slip on, ASME B16.5; bore to match pipe interior diameter.

      5) Bolting: Carbon steel, heavy hex series bolts, ASTM A 307, Grade B; heavy hex nuts, ASTM A 563, Grade A.

      6) Gaskets: Glass-filled teflon, 1/16 inch thick.

      7) Valves, 1-1/2 inch and smaller: Class 150, bronze body, threaded ends.

      8) Valves, 2 inch and larger: Class 150, bronze or cast iron body, flanged ends.

      9) Insulation for indoor piping: 2 inches thick, fiberglass pipe insulation with jacket.

      10) Insulation for outdoor piping: 2 inches thick, fiberglass pipe insulation with metal jacket.

      11) Fittings for steam pipe 2-1/2 inch or smaller: 3000 psi forged steel, ASTM A 105.

      12) Fittings for steam pipe 3 inch and larger: wrought steel butt welding in accordance with ASME B16.9 and ASTM A 234.

5. Miscellaneous Equipment

   a. Computer Room air-conditioning units: Glycol cooled, electric infrared humidifier, electric reheat, 7.5 ton nominal, 460 V, 3-phase, 60 Hz, with dry cooler. Safety Class 2.

   b. Computer room ventilation unit: HEPA filter bank with HEPA filter test sections, electric heating coil and centrifugal fan. Safety Class 2.

   c. Restroom and backup electrical room exhaust fans: Power roof ventilators, 1 horsepower, 460 V, 3-phase, 60 Hz.

   d. Local differential pressure indicators: Dwyer Series 2000.

   e. Communication room air-conditioning units: Glycol-cooled, electric infrared humidifier, electric reheat, 3 ton nominal, 460 V, 3-phase, 60 Hz, with dry cooler.

D. WEATHER ENCLOSURE

1. Supply air units: Built-up units, centrifugal fans, 80 percent ASHRAE filters, steam heating coils, cooling coils or rigid media air coolers.

   a. Fans: Centrifugal type, rated in accordance with AMCA 210 with spring-mounted structural bases, motors 460 V, 3-phase, 60 Hz furnished in accordance with NEMA MG-1. 50,000 cfm at 5 in H_2O static pressure, 60 horsepower.

   b. Steam heating coils: Two rows, copper tubes, aluminum fins, certified in accordance with ARI 410.

   c. Filters: ASHRAE 52 rated, non-supported pocket type extended surface filters with galvanized steel holding frame, UL listed, Class 2.

   d. Rigid media air cooler: Evaporative cooler section, 12 inch deep, UL approved, Class 2 evaporative media with pump fill and level controls.

2. Supply, Return Duct Work and Accessories

   a. Supply and return ductwork: ASTM A 527 galvanized steel, fabricated in accordance with SMACNA HVAC duct construction standard, metal and flexible.

   b. Supply diffusers: Drum louver type, aluminum construction for long throw.

c. Supply/return dampers: Galvanized steel with blade seals, side seals, axle shaft seals.

d. Duct and equipment supports fabricated from ASTM A 36, carbon steel.

3. Wall Fan: Panel mounted type, V-belt arrangement, motorized back draft damper, 12,500 cfm, 460 V, 3-phase, 60 Hz, 3 horsepower motor.

DIVISION 16 - ELECTRICAL

Section 16300 **Medium Voltage Distribution**

1. 13.8 kV aerial line conductors: 3-477 kcmil ACSR.

2. Fence lighting conductors: Rated 600 V, No. 6 self-supporting aluminum aerial drop cable.

3. Lightning arresters: Distribution valve type, rated 15 kV, 95 BIL.

4. Distribution cutouts: 15 kV, fused.

5. Poles: Class 2, butt-treated Western Red Cedar.

6. Underground conduit: Rigid steel or PVC in concrete duct bank.

7. Underground primary cable: Rated 15 kV shielded cross-linked polyethylene or ethylene-propylene insulated copper conductor, 3-No. 2.

8. Substations: Double-ended, with 2 outdoor transformers, padmounted, 3,750 kVA, 13.8 kV-480Y/277 V ac, 3-phase, with integral primary protection, provision for adding fans, and with full capacity taps. Substations to have air-filled terminal compartments for incoming 13.8 kV lines and have manually-operated, drawout-type air circuit breakers.

Section 16400 **Service and Distribution**

1. General

a. Conduit below grade: PVC coated rigid steel.

b. Exposed conduit: Rigid steel, intermediate metal conduit (IMC), or electrical-metallic tubing (EMT).

c. Conduit concealed in concrete: Rigid steel or IMC.

d. Connections to motors and lighting fixtures will be flexible metal conduit.

e. Telephone conduit: One inch (minimum) between telephone outlet boxes and the telephone cabinet.

f. 600-V conductors: Type THHN/THWN or XHHW.

2. Indoor transformers: 480-208Y/120 V ac, 3-phase, indoor, dry type.

3. Indoor switchboards: Free standing, NEMA 1 enclosure, rated as shown on the drawings. Cable entry at bottom. Furnished with molded case circuit breakers rated as shown on the drawings.

4. Motor control centers: Free standing, NEMA 1 enclosure, rated as shown on Drawings, combination-type starters with fused disconnects or circuit breakers horsepower rated for 600 V, 3-phase service. Safety Class 2 or Safety Class 3.

5. Emergency generator: Diesel engine-driven ac generator rated for continuous service at 600 kW, 480Y/277 V ac, 3-phase, 4-wire, 60 Hz, Safety Class 2.

6. Uninterruptible power supplies: Continuous on-line units rated as shown on the drawings. Each power supply will consist of a dc power supply, inverter and bank of sealed, maintenance free batteries. When normal power is present, it will provide power input to the dc power supply, which will in turn provide dc power to the inverter. When normal power is not present, power input to the inverter will be provided by the battery bank. The units will be furnished with a bypass switch for maintenance purposes. Safety Class 2.

7. Automatic transfer switches: 480Y/277 V ac, 3-phase, 4-pole, rated for continuous service at 1000 amperes, Safety Class 2.

8. Distribution panelboards: Bolt-on type circuit breakers with thermal magnetic trips. NEMA Type 1 enclosures.

9. Grounding and bonding requirements: A HPS ground grid will be installed for each building and the substation. Ground plates will be installed for connection of appropriate equipment. Steel columns of buildings will be connected to the ground grid. Separate grounding systems will be provided for the DCS and for lightning protection.

10. Lighting

a. Exterior: Low-pressure sodium fixture with photocell control.

b. Interior: One foot by 4 foot industrial type fluorescent fixture, 120 or 277 V ac, with 2 lamps.

c. Weather Enclosure: High-pressure sodium, 1000 watt, high-bay.

11. Receptacles: 120 V ac convenience receptacles and 480 V ac welding receptacles.

12. Lightning protection air terminals: Copper, Class I or Class II in accordance with NFPA 78.

13. Underground bus duct: Copper, 3000, 2000, and 800-ampere rating at 480 volts, as required.

Section 16720 Alarm and Detection Systems

1. Fire alarm control panel (FACP): Local energy type with Class B initiating circuits to activate auxiliary functions. Sixty hour battery standby capability is required. The system will incorporate programming to allow selective HVAC shutdown. The FACP will transmit all alarm zones and a common trouble alarm to the radio fire alarm reporter (RFAR). The RFAR will transmit signals to the fire department.

2. Double action manual pull station will be located at all required emergency exits.

3. 24 V electronic strobe chimes will be strategically located throughout the facility for alarm purposes.

4. All alarm detection devices will be of the type that detect products of combustion in radiation zones.

PIPE CODE M-1

Service: Steam	Max. Operating Pressure: 225 psig	Max. Operating Temp: 420 F

Sizes	1-1/2" & smaller	3/4 to 1-1/2"	2" to 10"	12" and larger
Pipe	Schedule 80	Schedule 40	Schedule 40	0.375 wall
Wall Thickness	ASTM A 106, Grade B			
Nipples	Same schedule as pipe, close or butt not permitted		None	
Fittings	3000 lb forged steel per ASTM A 105, screwed per ANSI B16.11*		Wrought steel, seamless, ASTM A 234 Grade WPB, buttwelding per ASME B16.9. Wall thickness to match pipe.	
Unions	3000 lb forged steel, screwed. Steel to steel seat. Crane Co. No. 252H or equal. (No buried unions.)		None	
Flanges	None		300 lb forged steel, ASTM A 105 raised face, weld neck per ASME B16.5. Slip-on sizes 8" and larger where shown on Drawings. Use flat face where mating to flat face flanges.	
Bolting	None		Carbon steel, heavy hex series bolts, ASTM A 307, Grade B, and heavy hex nuts, ASTM A 563, Grade B.	
Gaskets	None		Compressed synthetic fiber gaskets, 100% asbestos free, Klinger C4401 1/16" thick. Use full face gaskets with flat face flanges.	

*For underground lines use wrought steel buttwelding per ASME B16.9, material per ASTM A 234. Wall thickness to match pipe.

INSTALLATION: ASME B31.3, Normal Services.

NDE REQUIREMENTS: No requirements in addition to ASME B31.3, Normal Service. (Radiograph 5 percent of all buttwelds or perform in-process examination.)

PIPE CODE M-2

Service:	Max. Operating Pressure:	Max. Operating Temp:
Steam (STM) - 90 psig	100 psig	420 F

Sizes	1/2" and Smaller	3/4" through 1-1/2"	2" and Larger
Pipe	ASTM A 106, Grade B	ASTM A 106, Grade B	ASTM A 106, Grade B
Wall Thickness	Schedule 80	Schedule 40	Schedule 40
Nipples	Same schedule as pipe, close or butt not permitted		None
Fittings	3000 lb forged steel, ASTM A 105, threaded in accordance with ANSI B16.11.		Wrought steel, buttwelding in accordance with ASME B16.9 and ASTM A 234 seamless, Grade WPB, wall thickness to match pipe.
Unions	3000 lb forged steel, ASTM A 105, threaded steel to steel seat. (No buried unions.)		
Flanges	Class 150 forged steel, ASTM A 105, raised face, weld neck, in accordance with ASME 16.5. Use flat face where mating to flat face flanges. Bore to match pipe ID.		
Bolting	Carbon steel heavy hex series bolts, ASTM A 307, Grade B, and heavy hex nuts, ASTM A 563, Grade B.		
Gaskets	Compressed synthetic fiber gasket, 100% asbestos free, Klinger C4401 1/16" thick. Use full face gaskets with flat face flanges.		

INSTALLATION: ASME B31.3, Normal Service.

NDE REQUIREMENTS: No testing in addition to ASME B31.3, Normal Service. (Radiograph 5 percent of all buttwelds or perform in-process examination.)

PIPE CODE M-5

Service:	Max. Operating Pressure:	Max. Operating Temp:
Chemical Injection (CI)	150 psig	120 F
Make-up Water (MW)	150 psig	120 F
Raw Water (RW)	150 psig	120 F
Evap Water (EW)	75 psig	180 F
Chilled Water (CHW)	75 psig	180 F
Sanitary Water (SW)	150 psig	120 F
Filtered Water (FW)	150 psig	120 F

Sizes	1-1/2" and smaller	2" and larger
Pipe	ASTM A 106, Grade B	
Wall Thickness	Schedule 40	
Fittings	150 lb Malleable iron, screwed, ASME B16.3. *	Wrought carbon steel, ASTM A 234, Grade WPB, seamless buttwelding per ASME B16.9. Schedule to match pipe.
Unions	150 lb malleable iron, screwed, bronze-to-iron	None
Flanges	None	150 lb forged steel, ASTM A 105 raised face, weld neck per ASME B16.5. 8" and larger, use slip-on flanges. Use flat face where mating to flat face flanges.
Bolting	None	Carbon steel, heavy hex series bolts, ASTM A 307, Grade B, and heavy hex nuts, ASTM A 563, Grade B.
Gaskets	None	Nonasbestos sheet, 1/16" thick, Garlock Bluegard Style 3000. Use full face with flat face flanges.

PIPE CODE M-5 (Continued)

NDE REQUIREMENTS:

- No requirements additional to ASME B31.3. For piping embedded in cell walls or installed in cell areas, radiograph 20 percent of all buttwelds (girth and longitudinal) and full penetrations on branch connections and procure through qualified suppliers, with CMTRs or as commercial grade items (CMTRs required).

- For underground lines or piping embedded in cell walls or installed in cell area, use wrought steel buttwelding, ASME B16.9; material, ASTM A 234, Grade WPB, wall thickness to match pipe.

PIPE CODE M-7

Service:	Max. Operating Pressure:	Max. Operating Temp:
Instrument Air (IA)	100 psig	100 F

Sizes	2" and smaller	2-1/2" and larger
Pipe	ASTM A 106, Grade B	
Wall Thickness	Schedule 40	
Fittings	3000 lb forged steel, ASTM A 105, threaded in accordance with ANSI B16.11	Wrought carbon steel, ASTM A 234, Grade WPB, seamless buttwelding per ASME B16.9. Schedule to match pipe.
Unions	3000 lb forged steel, ASTM A 105, threaded, steel to steel seat (no buried unions)	None
Flanges	None	150 lb forged steel, ASTM A 105 raised face, weld neck ASME B16.5. Use flat face where mating to flat face flanges.
Bolting	None	Carbon steel, heavy hex series bolts, ASTM A 307, Grade B, and heavy hex nuts, ASTM A 563, Grade B.
Gaskets	None	Nonasbestos sheet, 1/16" thick, Garlock bluegard style 3000. Use full face with flat face flanges.

PIPE CODE M-7 (Continued)

INSTALLATION: ASME B31.3, Normal Service.

NDE REQUIREMENTS: No requirements additional to ASME B31.3. For piping embedded in cell walls or installed in cell areas, radiograph 20 percent of all buttwelds (girth and longitudinal) and full penetrations on branch connections.

OTHER: Procure through qualified suppliers with CMTRs or as commercial grade items.

* For underground lines or piping embedded in cell walls or installed in cell area, use wrought steel buttwelding, ASME B16.9; material, ASTM A 234, Grade WPB, wall thickness to match pipe.

PIPE CODE M-9

Service:	Max. Operating Pressure:	Max. Operating Temp:
Drain	50 psig	300 F
Sample	100 psig	340 F
Process Waste	400 psig	340 F
Primary Vessel Vent Lines	+60/-20" water	212 F
Cell and Pit Vent Lines	-10" water	120 F

Sizes	: 10" and smaller	: 12 " and larger
Pipe	: Stainless steel, ASTM A 312, Grade TP 304L, seamless	
Wall Thickness	: Schedule 40	: Standard Weight
Fittings	: Stainless steel, seamless, buttwelding in accordance ASME B16.9 and ASTM A 403, Grade WP 304L, wall thickness to match pipe	
Flanges	: 150 lb forged stainless steel, ASTM A 182, Grade F 304L, weld neck per ASME B16.5. Bore to match pipe ID.	
Bolting	: Alloy steel bolts per ASTM A 193, Grade B8, and heavy hex nuts per ASTM A 194, Grade 8F.	
Gaskets	: Nonasbestos sheet, I/16" thick, Garlock bluegard Style 3000. Use full face gasket with flat face flanges.	

INSTALLATION: ASME B31.3, Category M

NDE REQUIREMENTS: No requirements in addition to ASME B31.3, except radiograph 100 percent of all buttwelds.

OTHER:

- Procure through qualified suppliers with CMTRs or as commercial grade items.
- Sensitive leak test required for all weld joints.

PIPE CODE M-13

Service:	Max. Operating Pressure:	Max. Operating Temp:
Condensate Return	60 psig	212 F
Condensate	60 psig	212 F

Sizes	: All
Pipe	: Carbon steel per ASTM A 106, Grade B.
Wall Thickness	: Schedule 80 :
Fittings	: Wrought carbon steel, ASTM A 234, Grade WPB, seamless : buttwelding per ASME B16.9. Schedule to match pipe.
Flanges	: 150 lb forged steel, ASTM A 105 raised face, weld neck : ASME B16.5. Use flat face where mating to flat face : face flanges.
Bolting	: Alloy steel hex series bolts and nuts, bolts in accordance : with ASTM A 193, Grade B8, and nuts in accordance : with ASTM A 194, Grade 8F.
Gaskets	: Nonasbestos sheet, 1/16" thick, Garlock Bluegard : Style 3000. Use full face with flat face flanges.

INSTALLATION: ASME B31.3, Normal Service

NDE REQUIREMENTS: No testing in addition to ASME B31.3, Normal Service (Radiograph 5 percent of all buttwelds or perform in-process examination.)

PIPE CODE M-20

Service:	Max. Operating Pressure:	Max. Operating Temp:
Diesel Fuel Oil Supply	20 psig	120 F

Sizes	: 1/2" through 1-1/2"	: 2" and greater
Pipe	: ASTM A 106, Grade B	: ASTM A 106 : Grade B
Wall Thickness	: Schedule 40 :	
Fittings	: 3000 lb forged steel, ASTM A 105, threaded in : accordance with ASME B16.11.	
Unions	: 300 lb malleable iron in accordance with ASTM A 197, : threaded in accordance with ANSI B16.39, brass seat.	
Bolts and Nuts	: Carbon steel heavy hex series bolts, ASTM A 307, Grade B, : and heavy hex nuts, ASTM A 563, Grade B.	
Gaskets	: Garlock Style 3300, neoprene compressed non-asbestos : 1/8" thick. Use full face gasket with flat face flanges.	
Flanges	: 150 lb forged steel, threaded ASTM A 105, in accordance : with ASME B16.5. Use flat face flanges when mating with : flat face flanges.	

INSTALLATION: ASME B31.3, Normal Service.

NDE REQUIREMENTS: No testing in addition to ANSI B31.3, Normal Service.

OTHER: Procure through qualified suppliers with CMTRs or as commercial grade items.

PIPE CODE M-24

Service:	Max. Operating Pressure:	Max. Operating Temp:
Drain	20 psig	200 F
Process Waste	200 psig	200 F

Sizes	: 1" through 6"	: 8" and larger
Pipe	: ASTM A 106, Grade B	
Wall Thickness	: Schedule 40	: Standard weight
Fittings	: Wrought carbon steel, ASTM A 234, Grade WPB, seamless buttwelding per ASME B16.9. Schedule to match pipe.	
Flanges	: 150 lb forged steel, ASTM A 105 raised face, weld neck ASME B16.5. 8" and larger, use slip-on flanges. Use flat face where mating to flat face flanges.	
Bolting	: Carbon steel heavy hex series bolts, ASTM A 307, Grade B, and heavy hex nuts, ASTM A 563, Grade B.	
Gaskets	: Solid neoprene rubber, Durometer 55/65. 1/8" thick. Use full face gasket with flat face flanges.	

INSTALLATION: ASME B31.3, Normal Service

NDE REQUIREMENTS: No testing additional to ASME B31.3, Normal Service. (Radiograph 5 percent of all buttwelds or perform in-process examination.)

PIPE CODE M-26a

Service:	Max. Operating Pressure:	Max. Operating Temp:
Process Line Encasement	Same As Process Line Being Encased	Same as Process Line Being Encased

Sizes	: 10" and smaller	: 12" and larger
Pipe	: ASTM A 106, Grade B	
Wall Thickness	: Schedule 40	: Standard weight
Fittings	: Wrought carbon steel, ASTM A 234, A 234, Grade WPB, seamless buttwelding per ASME B16.9. Schedule to match pipe	
Flanges	: 150 lb forged steel, ASTM A 105, raised face, weld neck per ASME B16.5. 8" and larger, use slip-on flanges. Use flat face where mating to flat face.	
Bolting	: Carbon steel, heavy hex series bolts, ASTM A 307, Grade B and heavy hex nuts, ASTM A 563, Grade B.	
Gaskets	: Solid neoprene rubber, Durometer 55/65. 1/8" thick. Use full face gasket with flat face flanges.	

INSTALLATION: ASME B31.3, Category M

NDE REQUIREMENTS: No testing additional to ASME B31.3. Radiograph 20 percent of all buttwelds.

SENSITIVE: Leak test requirements for all weld joints.

OTHER: Procure through qualified suppliers with CMTRs or as commercial grade items.

PIPE CODE M-26b

Service:	Max. Operating Pressure:	Max. Operating Temp:
Process Line Encasement	Same As Process Line Being Encased	Same as Process Line Being Encased

Sizes	: 10" and smaller	: 12" and larger
Pipe	: Stainless steel, ASTM A 312, Grade TP 304L, seamless	
Wall Thickness	: Schedule 40	: Standard weight
Fittings	: Stainless steel, seamless, buttwelding in accordance ASME B16.9 and ASTM A 403, Grade WP 304L, wall thickness to match pipe	
Flanges	: 150 lb forged stainless steel, ASTM A 182, Grade F 304L, weld neck per ASME B16.5. Bore to match pipe ID.	
Bolting	: Alloy steel bolts per ASTM A 193, Grade B8, and heavy hex nuts per ASTM A 194, Grade 8F.	
Gaskets	: Nonasbestos sheet, 1/16" thick, Garlock bluegard Style 3000. Use full face gasket with flat face flanges.	

INSTALLATION: ASME B31.3, Category M

NDE REQUIREMENTS: No requirements in addition to ASME B31.3, except radiograph 20 percent of all buttwelds.

OTHER:

- Procure through qualified suppliers with CMTRs or as commercial grade items.
- Sensitive leak test required for all weld joints.

PIPE CODE M-27

Service:	Max. Operating Pressure:	Max. Operating Temp:
Drain	20 psig	200 F

Sizes	: All
Pipe	: Stainless steel, ASTM A 312, Grade TP 304L, seamless
Wall Thickness	: Schedule 40
Fittings	: Stainless steel, seamless, buttwelding in accordance with ASME B16.9 and ASTM A 403, Grade WP 304L, wall thickness to match pipe
Flanges	: 150 lb forged stainless steel, ASTM A 182, Type F 304L, raised face, weld neck per ASME B16.5.
Bolting	: Alloy steel hex series bolts and nuts, bolts in accordance with ASTM A 193, Grade B8, and nuts in accordance with ASTM A 194, Grade 8F.
Gaskets	: Nonasbestos sheet, 1/16" thick, Garlock bluegard Style 3000. Use full face with flat face flanges.

INSTALLATION: ASME B31.3, Category M.

NDE REQUIREMENTS:

- No testing additional to ASME B31.3, Category M, except radiograph 100 percent of all buttwelds.
- Sensitive leak test required for all weld joints.

OTHER: Procure through qualified suppliers with CMTRs or as commercial grade items.

PIPE CODE M-35

Service:	Max. Operating Pressure:	Max. Operating Temp:
Flush	150 psig	120 F

Sizes	: 1/2" through 1-1/2"
Pipe Grade	: ASTM A 106, Grade B
Wall Thickness	: Schedule 40
Fittings	: Wrought carbon steel per ASTM A 234 WPB, buttwelding : per ASME B16.9. Same schedule as pipe.
Flanges	: 150 lb forged steel, ASTM A 105 welding neck per : ASME B16.5. Use slip-on flanges where shown on Drawings. : Slip-on flanges will be double welded. Use flat face : where mating to flat face flanges.
Bolting	: Carbon steel, heavy hex series bolts, ASTM A 307, Grade B, : and heavy hex nuts, ASTM A 563, Grade B.
Gaskets	: Compressed synthetic fiber gasket, 100% asbestos free : Klinger C4401 1/16" thick. Use full face gaskets with : flat face flanges.

INSTALLATION: ASME B31.3, Normal Service.

NDE REQUIREMENTS: No testing in addition to ASME B31.3, Normal Service. (Radiograph 5 percent of all buttwelds or perform in-process examination.)

PIPE CODE M-40

Service:	Max. Operating Pressure:	Max. Operating Temp:
Annulus Exhaust	Atmospheric/-20" water	212 F

Sizes	: All
Pipe	: ASTM A 106, Grade B
Wall Thickness	: Schedule 20
Fittings	: Wrought carbon steel, ASTM A 234, Grade WPB, seamless buttwelding per ASME B16.9. Schedule to match pipe.
Flanges	: 150 lb forged steel, ASTM A 105 raised face, weld neck, ASME B16.5. 8" and larger, use slip-on flanges. Use flat face where mating to flat face flanges.
Bolting	: Carbon steel heavy hex series bolts, ASTM A 307, Grade B, and heavy hex nuts, ASTM A 563, Grade B.
Gaskets	: Solid neoprene rubber, Durometer 55/65. 1/8" thick. Use full face gasket with flat face flanges.

ANNULUS EXHAUST

- INSTALLATION: ASME B31.3, Normal Service
- NDE REQUIREMENTS: No testing in addition to ASME B31.3, Normal Service. (Radiograph 5 percent of all buttwelds or perform in-process examination.)

APPENDIX F

Energy Conservation Report and Analysis

ENERGY CONSERVATION REPORT AND ANALYSIS

PROJECT W-236

Building Description

The Ventilation Building will be a two-story, cast-in-place, reinforced concrete structure with a concrete deck roof, except a portion of the building will have a steel roof. The building, with approximately 123,000 ft^2 floor area, will have four primary sections:

- Cells and pipe trenches containing equipment for heat removal and air cleaning.
- Equipment Rooms containing heating, ventilating, and air-conditioning (HVAC) supply and exhaust equipment.
- Liquid Sampling Room containing hot cells with sampling equipment.
- Administrative section with offices, lunchroom, and changeroom.

Energy conservation guidelines specified in U.S. Department of Energy (DOE) Order 6430.1A, will be applied in the design of the building. The energy saving features that will be incorporated in the design are indicated below.

Heating, Ventilating, and Air-Conditioning Heat Recovery

Building air will be recirculated where possible. A run-around heat recovery system will be installed to transfer heat from the exhaust systems to the supply systems. Other heat recovery systems will be analyzed during Title I design.

Solar System

Industry experience indicates that solar heating systems are not economically viable at present. Installation of solar water heating systems will be analyzed during Title I design.

Insulation

Exterior walls of the building will be provided with a finish-insulation system. A rigid insulation board will be installed on the concrete roof deck. Batt insulation will be installed on the steel roof. The thermal transmittance values (U values) used in the design of the insulation will be lower than the values specified in DOE Order 6430.1A.

Temperature Controls

The building will be divided into temperature control zones that are supplied by central supply air units. Equipment Room temperatures will not be maintained for comfort. Areas controlled for personnel comfort will be maintained at 72°F winter and 78°F summer.

Automatic and Supervisory Control Features

An energy monitoring and control system has been proposed in the conceptual design. The system will be evaluated by life cycle cost analysis during the Title I design.

Total Annual Energy Usage

Building energy consumption has not been estimated in the conceptual design. Analysis of the energy consumption, energy conservation features, and energy source alternatives will be performed during the Title I design.

APPENDIX G

Preliminary Safety Evaluation

(Prepared by WHC under separate cover.)

APPENDIX H

Economic Analysis and Life Cycle Cost Analysis

Economic analyses and life cycle cost analyses for alternate tank configurations and the Weather Enclosure have been prepared under separate covers.

APPENDIX I

Physically Handicapped Assessment

(Provided by WHC)

ACCOMMODATIONS OF PHYSICALLY HANDICAPPED

PROJECT NO. W-236

PROJECT TITLE Multi-Function Waste Tank Facility

LOCATION 200E (area) BUILDING 243E

Prepared By Victor J. Cruz Title Project Engineer

Date 1/21/92

Type of Project:

- [X] New Building (or Building Addition)
- [ ] Building Alteration
- [ ] Site Development (Grading, Walks, Parking Lots)
- [ ] Other

Application of Standard:

NSI 117.1 (R 1971) "American Standard Specifications for Making Buildings and Facilities Accessible to nd Usable by the Physically Handicapped."

- [ ] All Standards
- [X] Limited Application (indicate in comments section)

Exceptions:

DOE Order 6430.1A, "General Design Criteria," General Requirements 0101-4, Handicapped Provisions.

- [ ] Not intended for occupancy or use by the handicapped
- [ ] Alteration not involving existing stairs, doors, elevators, toilets, etc.
- [ ] Not structurally possible

General Comments:

Accessibility and usability will be limited to office and restroom areas only. In other areas of the tank facility, a handicapped individual could be hindered from an expeditious evacuation if an unexpected life-threatening event were to occur.

APPENDIX J

Plant Forces Work Review

(Provided by WHC)

WHC	Westinghouse Hanford Company P.O. Box 1970, Richland, WA 99352 PLANT FORCES WORK REVIEW	Plant Forces Work Review No. WHC-022-92	Date 1/23/92

Title	Project Work Order or A.R. No.	Area	Bldg. No.
Multi-Function Waste Tank Facility	W-236	200E	243-E

REQUESTER FILL IN

Description of Work:

The completion of this storage facility will allow continued long term waste storage in a safe, environmentally sound manner which will be compliant with all appropriate U.S. Department of Energy Field Office, Richland (RL), state, and federal regulations. The additional storage capacity is required to support the long-term cleanup mission at Hanford.

This facility will consist of four double-shell waste tanks, a support facility containing all essential support systems, interface piping and sampling systems, and a weather protection enclosure over the entire Tank Farm. Additional safe, environmentally acceptable storage capacity is required to handle wastes generated during single-shell and double-shell tank remediation/retrieval activities.

These activities are required to address current safety issues, future safety related remediation/retrieval efforts, and planned retrieval demonstrations. In addition, a portion of the facility will be utilized for waste staging and/or storage in support of the Hanford Waste Vitrification Plant (HWVP) and pretreatment.

Estimated Cost of Work:

*1.	Procured Equipment	$ 31,000,000.
*2.	Materials or Equipment Purchased for Shop Fabrication	$ 0.
*3.	Job-Site Material	$ 45,000,000.
4.	Shop Labor	$ 0.
5.	Job-Site Labor	$ 56,000,000.
6.	Other Costs (design, field inspection, and contingency allowance)	$108,000,000.
7.	General Overhead	$ 0.
	Total Job	$240,000,000.

*Include estimated fair value of material or equipment acquired on site

Requester's Signature B.A. Kendall Date 01-09-92

Name, MSIN and Phone No. B.A. Kendall, B4-66, 2-0593

WHC

Reviewed By:

Area Work Review Agent _____ Date _____

Company Work Review Agent Gary Maxwell Date 1-29-92

DOE

The following determination has been made regarding applicability of the Davis-Bacon Act, as amended, to the work described above:

Applicable [✓] Not Applicable [ ] for Chairman RL-Labor Standards Board [signature] Date 2/7/92

A-6400-018 (9/90) (EF) GEF070
Plant Forces Work Review

APPENDIX K

Drawings

THIS PAGE INTENTIONALLY
LEFT BLANK

PROJECT TITLE:

W-236 MULTI-FUNCTION WASTE TANK FACILITY

FOR:

WESTINGHOUSE HANFORD COMPANY

BY:

KAISER ENGINEERS HANFORD

WHC-SD-W236-CDR-001 MULTI-FUNCTION WASTE TANK FACILITY

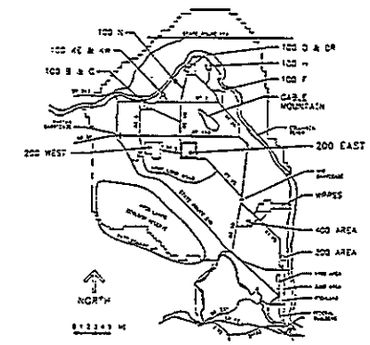

HANFORD AREA MAP

DRAWING LIST

DRAWING LIST

DRAWING NO.		INDEX NO.	TITLE
SK-2-58740		0000	DRAWING LIST
SK-2-58769		0300	PIPING/HVAC/INSTM- LEGEND AND SYMBOLS

CIVIL

DRAWING NO.		INDEX NO.	TITLE
SK-2-58741		0110	CIVIL SITE PLAN EXCAVATION
SK-2-58742		0110	CIVIL SITE PLAN

ARCHITECTURAL

DRAWING NO.		INDEX NO.	TITLE
SK-2-58743		0800	ARCHITECTURAL FIRST FLOOR PLAN
SK-2-58744		0800	ARCHITECTURAL SECOND FLOOR PLAN
SK-2-58745		0800	ARCHITECTURAL WEATHER ENCLOSURE PLAN
SK-2-58746		0801	ARCHITECTURAL ELEVATIONS
SK-2-58747		0801	ARCHITECTURAL SECTIONS
SK-2-58748		0800/0801	ARCHITECTURAL SECTION AND PLANS
SK-2-58749	SH 1	0801	ARCHITECTURAL EQUIPMENT LAYOUT
	SH 2	0801	ARCHITECTURAL EQUIPMENT LAYOUT

PIPING & VESSELS

DRAWING NO.		INDEX NO.	TITLE
SK-2-58750		7001	PIPING ENGINEERING DIAGRAM VALVE PIT
SK-2-58751		7001	PIPING ENGINEERING FLOW DIAGRAM TANK 101
SK-2-58752		7001	PIPING ENGINEERING FLOW DIAGRAM TANK 102
SK-2-58753		7001	PIPING ENGINEERING FLOW DIAGRAM TANK 103
SK-2-58754		7001	PIPING ENGINEERING FLOW DIAGRAM TANK 104
SK-2-58755	SH 1	7001	PIPING MISCELLANEOUS DETAILS TANK FARM
	SH 2	7001	PIPING MISCELLANEOUS DETAILS TANK FARM
SK-2-58756	SH 1	7001	PIPING ENGINEERING FLOW DIAGRAM HEAT REMOVAL SYSTEM
	SH 2	7001	PIPING ENGINEERING FLOW DIAGRAM HEAT REMOVAL SYSTEM
	SH 3	7001	PIPING ENGINEERING FLOW DIAGRAM HEAT REMOVAL SYSTEM
SK-2-58757		7001	PIPING HYDRAULIC DIAGRAM

HEATING, VENTILATION AND AIR CONDITIONING

DRAWING NO.		INDEX NO.	TITLE
SK-2-58760	SH 1	8900	HVAC TANK VENTILATION SYSTEM
SK-2-58761	SH 1	8900	HVAC ZONES 2 AND 3 VENTILATION SYSTEMS
	SH 2	8900	HVAC ZONE 4 VENTILATION SYSTEMS
SK-2-58762	SH 1	8900	HVAC CELL VENT AND SAMPLING CENTER SYSTEMS
SK-2-58763	SH 1	8900	HVAC PIT VENTILATION SYSTEM
SK-2-58764	SH 1	8900	HVAC ZONE VENTILATION DIAGRAM

ELECTRICAL

DRAWING NO.		INDEX NO.	TITLE
SK-2-58765	SH 1	7201	ELECTRICAL ONE LINE DIAGRAM NORMAL POWER
	SH 2	7201	ELECTRICAL ONE LINE DIAGRAM NORMAL POWER
	SH 3	7201	ELECTRICAL ONE LINE DIAGRAM NORMAL POWER
	SH 4	7201	ELECTRICAL ONE LINE DIAGRAM NORMAL POWER
	SH 5	7201	ELECTRICAL ONE LINE DIAGRAM NORMAL POWER
	SH 6	7201	ELECTRICAL ONE LINE DIAGRAM NORMAL POWER
	SH 7	7201	ELECTRICAL ONE LINE DIAGRAM NORMAL POWER
	SH 8	7201	ELECTRICAL ONE LINE DIAGRAM BACKUP POWER
	SH 9	7201	ELECTRICAL ONE LINE DIAGRAM BACKUP POWER
SK-2-58766		7100	ELECTRICAL PLAN WEATHER ENCLOSURE

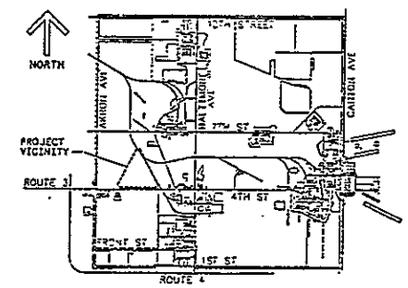

VICINITY MAP

0 2000 4000

SCALE IN FEET

DOES NOT CONTAIN CLASSIFIED OR UNCLASSIFIED CONTROLLED NUCLEAR INFORMATION

N/A

Reviewing Official/ADC
Kaiser Engineers Hanford Company

Date

CONCEPTUAL

RM CLAY	U.S. DEPARTMENT OF ENERGY RICHLAND OPERATIONS OFFICE KAISER ENGINEERS HANFORD COMPANY
	DRAWING LIST
	W-236 MULTI-FUNCTION WASTE TANK FACILITY
F 243E 0000	SK-2-58740 0
NONE	

PLOT SCALE: 1=1 KDHCAD K1

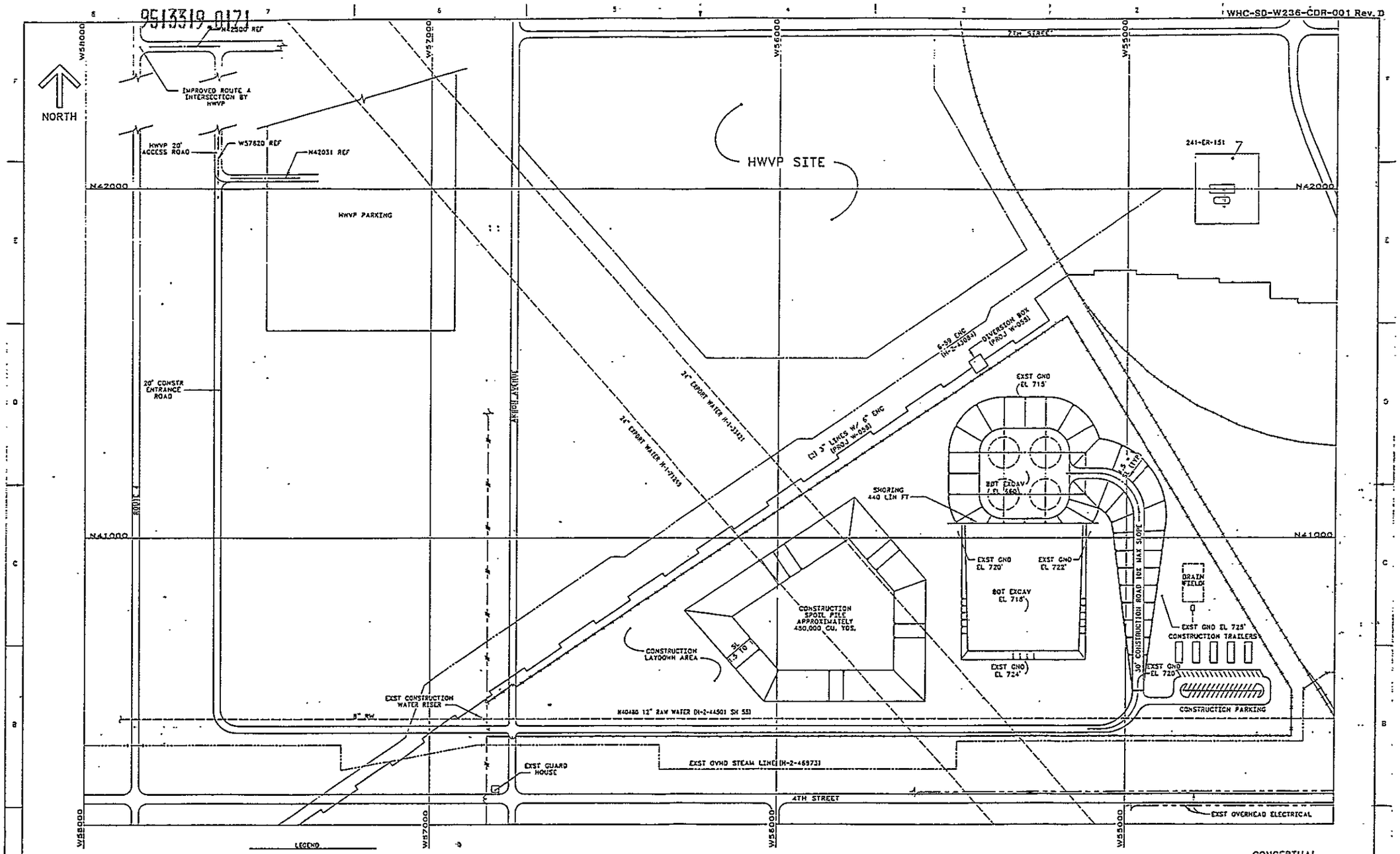

LEGEND

- EXST RR
- EXST UTILITIES
- EXST UNDERGROUND UTILITIES
- NEW CONSTR
- CONSTR FENCE
- EXST FENCE

DOES NOT CONTAIN CLASSIFIED OR UNCLASSIFIED CONTROLLED NUCLEAR INFORMATION

N/A

Reviewing Organization
Fluor Daniel Hanford Company

Date

SCALE:
100' 0 100' 200'
1" = 100'

DRAWING TRACEABILITY LIST			
NUMBER	TITLE	NUMBER	TITLE
		REFERENCES	

REVISIONS			
NO.	DESCRIPTION	DATE	FOR APPROVALS

CAD FILE: SC587414 CAD CODE: 2J05CAC02:11 0:XW

CONCEPTUAL

DRAWN: RW CLAY | DATE | SURVEY LEVEL: TBD

U.S. DEPARTMENT OF ENERGY
RICHLAND OPERATIONS OFFICE
KAISER ENGINEERS HANFORD COMPANY

CIVIL
SITE PLAN - EXCAVATION

PROJECT: W-236 MULTI-FUNCTION WASTE TK FACIL

F | 2436 | 0110 | SK-2-58741 | 0

WHC | SHOWN | 59:259 | KENCAIN

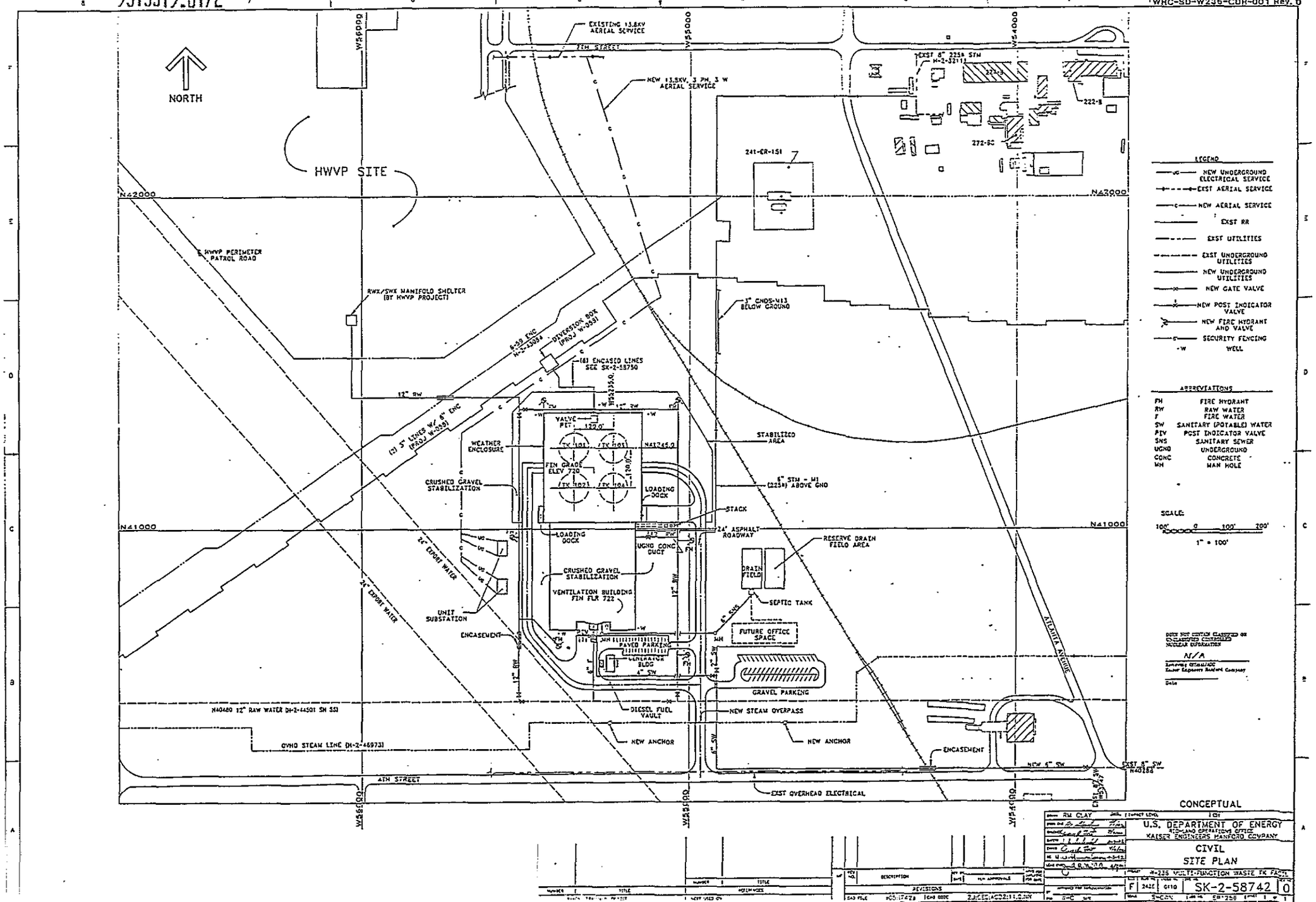
NORTH
HWVP SITE
EXISTING 13.8KV AERIAL SERVICE
7TH STREET
NEW 13.8KV, 3 PH, 3 W AERIAL SERVICE
EXST 8" 225# STM H-2-32111
222-B
272-BC
241-ER-151
N42000
N41000
HWVP PERIMETER PATROL ROAD
RWX/SWX MANIFOLD SHELTER (BY HWVP PROJECT)
DIVERSION BOX (PROJ W-059)
6-59 ENC H-2-43084
(6) ENCASED LINES SEE SK-2-58750
3" CNDS-M13 BELOW GROUND
12" RW
(2) 3" LINES W/ 6" ENC (PROJ W-059)
VALVE PIT
WEATHER ENCLOSURE
FIN GRADE ELEV 720
CRUSHED GRAVEL STABILIZATION
LOADING DOCK
STACK
STABILIZED AREA
6" STM - M1 (225#) ABOVE GND
24" ASPHALT ROADWAY
RESERVE DRAIN FIELD AREA
UGND CONC DUCT
DRAIN FIELD
SEPTIC TANK
VENTILATION BUILDING FIN FLR 722
24" EXPORT WATER
UNIT SUBSTATION
ENCASEMENT
PAVED PARKING
GENERATOR BLDG
FUTURE OFFICE SPACE
GRAVEL PARKING
DIESEL FUEL VAULT
NEW STEAM OVERPASS
NEW ANCHOR
N40480 12" RAW WATER (H-2-44501 SH 55)
OVHD STEAM LINE (H-2-46973)
4TH STREET
EXST OVERHEAD ELECTRICAL
ATLANTA AVENUE
EXST 8" SW N40288
W56000
W55000
W54000
LEGEND
NEW UNDERGROUND ELECTRICAL SERVICE
EXST AERIAL SERVICE
NEW AERIAL SERVICE
EXST RR
EXST UTILITIES
EXST UNDERGROUND UTILITIES
NEW UNDERGROUND UTILITIES
NEW GATE VALVE
NEW POST INDICATOR VALVE
NEW FIRE HYDRANT AND VALVE
SECURITY FENCING
WELL
ABBREVIATIONS
FH FIRE HYDRANT
RW RAW WATER
F FIRE WATER
SW SANITARY (POTABLE) WATER
PIV POST INDICATOR VALVE
SNS SANITARY SEWER
UGND UNDERGROUND
CONC CONCRETE
MH MAN HOLE
SCALE:
1" = 100'
N/A
CONCEPTUAL
RM CLAY
U.S. DEPARTMENT OF ENERGY
RICHLAND OPERATIONS OFFICE
KAISER ENGINEERS HANFORD COMPANY
CIVIL
SITE PLAN
W-236 MULTI-FUNCTION WASTE TK FACIL
SK-2-58742
0

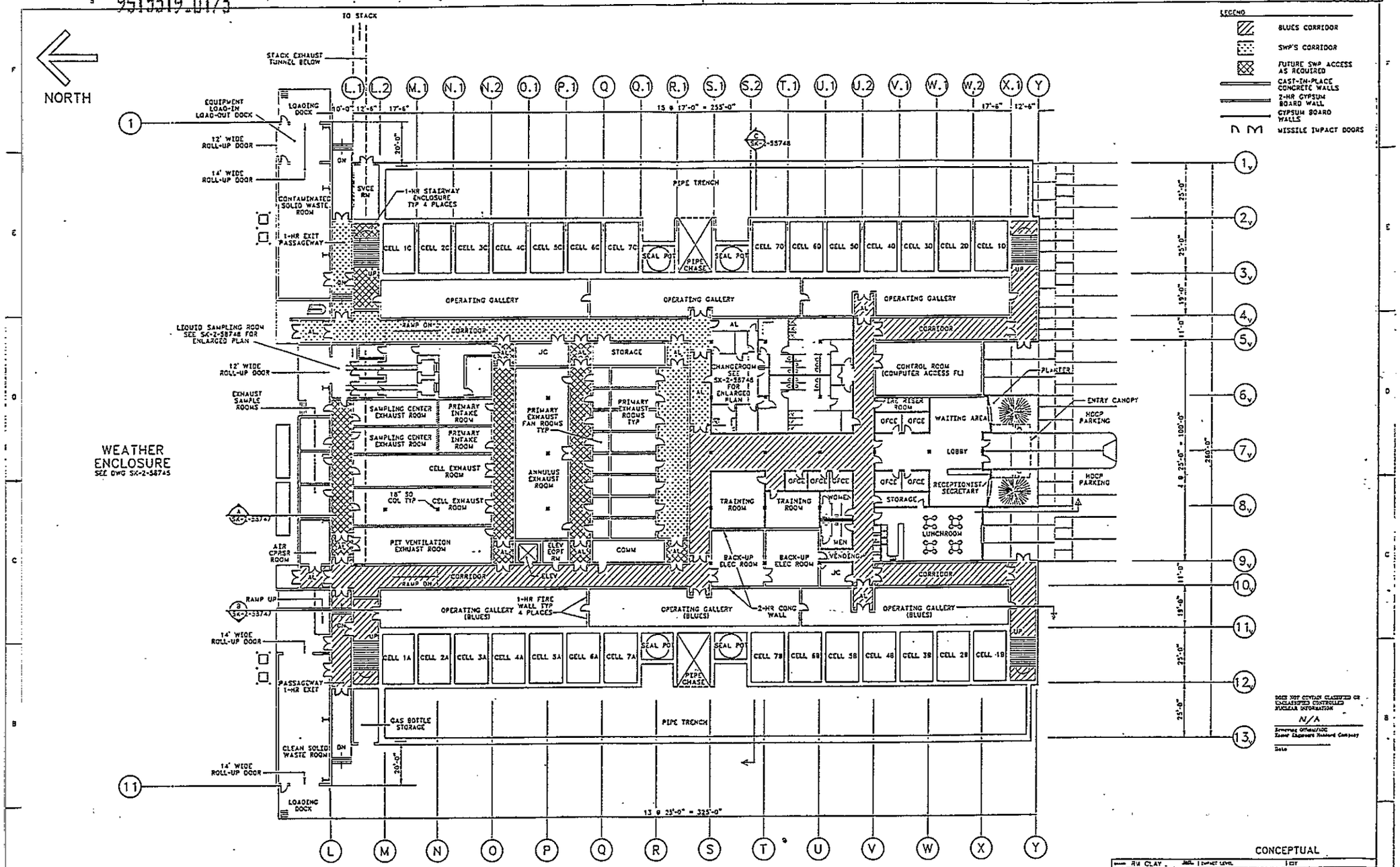

FIRST FLOOR PLAN

SCALE: 1/16" = 1'-0"

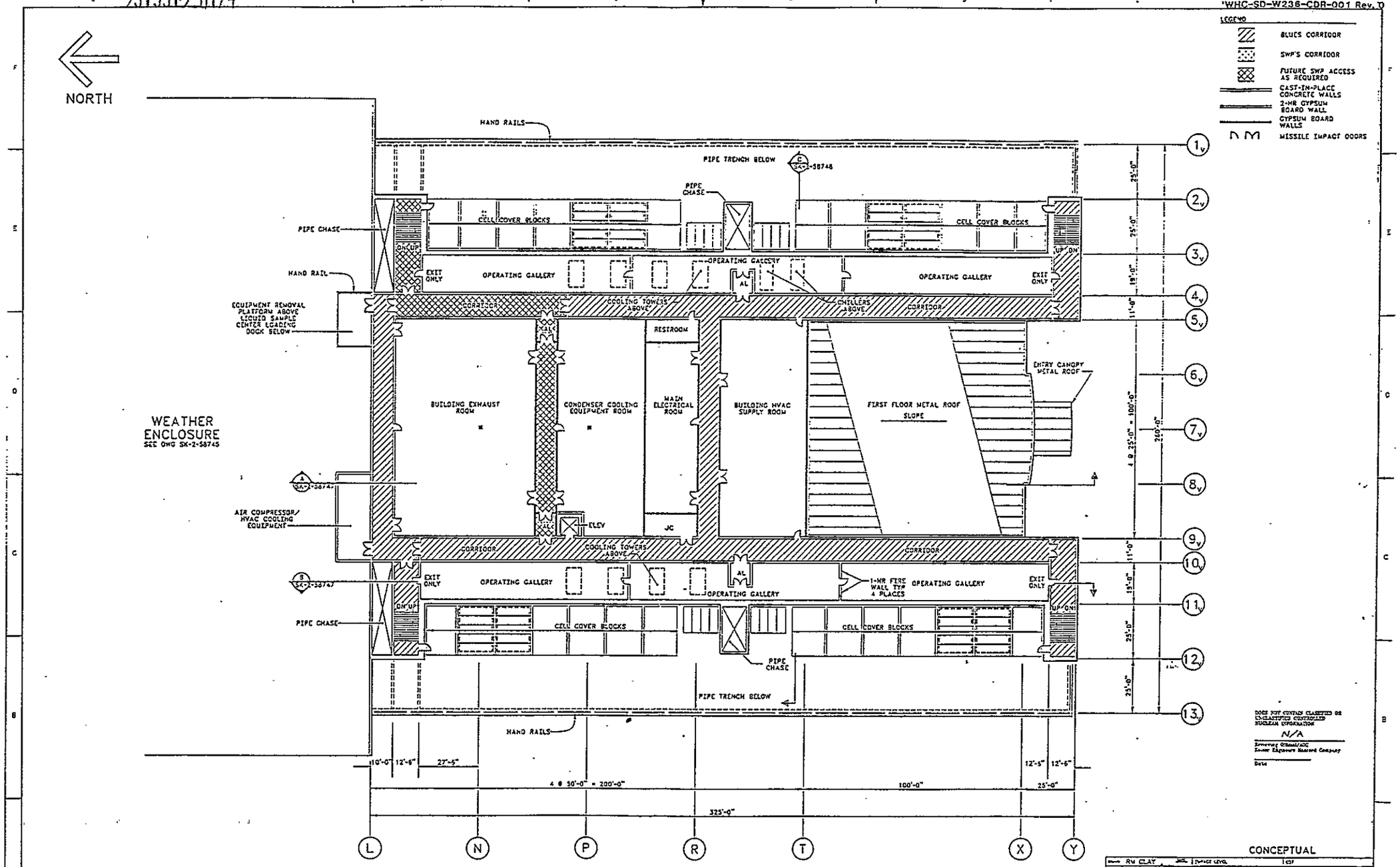

SECOND FLOOR PLAN

SCALE: 1/16" = 1'-0"

30' 20' 10' 0 30'

DOES NOT CONTAIN CLASSIFIED OR UNCLASSIFIED CONTROLLED NUCLEAR INFORMATION

N/A

Reviewing Official/ADC
Kaiser Engineers Hanford Company

Date

CONCEPTUAL

U.S. DEPARTMENT OF ENERGY
RICHLAND OPERATIONS OFFICE
KAISER ENGINEERS HANFORD COMPANY

ARCHITECTURAL
SECOND FLOOR PLAN

W-236 MULTI-FUNCTION WASTE TK FACIL

F | 2436 | 0800 | SK-2-58744 | 0

SHOWN | ER1259 | 1 of 1

SK-2-58740 DRAWING LIST

REVISIONS

PLOT SCALE: 1=100 | KENCHAN | K5

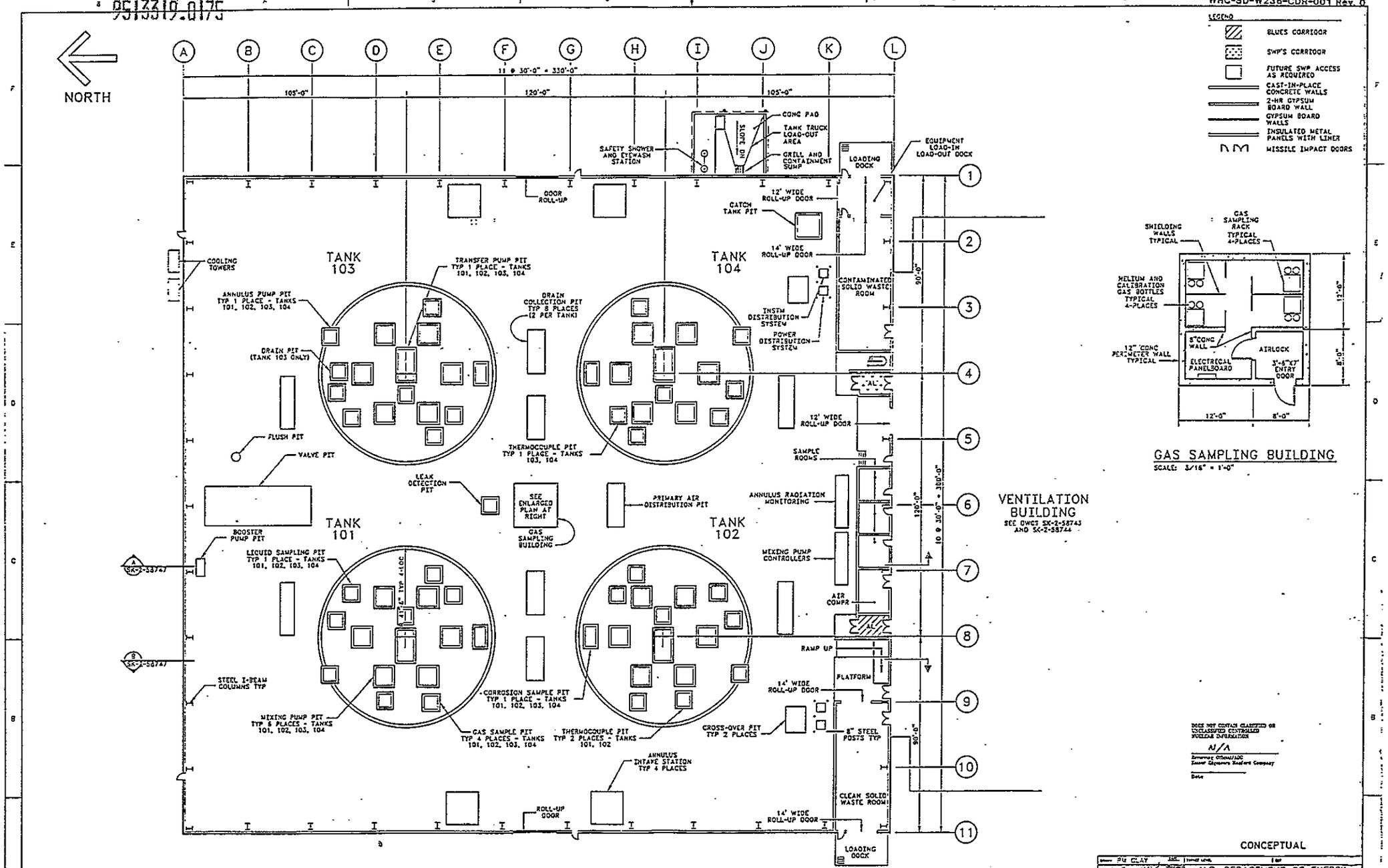
NORTH
A B C D E F G H I J K L
11 @ 30'-0" = 330'-0"
105'-0"
120'-0"
105'-0"
CONC PAD
TANK TRUCK LOAD-OUT AREA
GRILL AND CONTAINMENT SUMP
SLOPE UP
SAFETY SHOWER AND EYEWASH STATION
LOADING DOCK
EQUIPMENT LOAD-IN LOAD-OUT DOCK
DOOR ROLL-UP
12' WIDE ROLL-UP DOOR
CATCH TANK PIT
14' WIDE ROLL-UP DOOR
COOLING TOWERS
TANK 103
TANK 104
TRANSFER PUMP PIT TYP 1 PLACE - TANKS 101, 102, 103, 104
ANNULUS PUMP PIT TYP 1 PLACE - TANKS 101, 102, 103, 104
DRAIN COLLECTION PIT TYP 8 PLACES (2 PER TANK)
DRAIN PIT (TANK 103 ONLY)
CONTAMINATED SOLID WASTE ROOM
INSTM DISTRIBUTION SYSTEM
POWER DISTRIBUTION SYSTEM
FLUSH PIT
VALVE PIT
THERMOCOUPLE PIT TYP 1 PLACE - TANKS 103, 104
12' WIDE ROLL-UP DOOR
SAMPLE ROOMS
LEAK DETECTION PIT
SEE ENLARGED PLAN AT RIGHT
GAS SAMPLING BUILDING
PRIMARY AIR DISTRIBUTION PIT
ANNULUS RADIATION MONITORING
VENTILATION BUILDING
SEE DWGS SK-2-58743 AND SK-2-58744
TANK 101
TANK 102
BOOSTER PUMP PIT
LIQUID SAMPLING PIT TYP 1 PLACE - TANKS 101, 102, 103, 104
MIXING PUMP CONTROLLERS
AIR COMPR
RAMP UP
PLATFORM
STEEL I-BEAM COLUMNS TYP
CORROSION SAMPLE PIT TYP 1 PLACE - TANKS 101, 102, 103, 104
14' WIDE ROLL-UP DOOR
MIXING PUMP PIT TYP 6 PLACES - TANKS 101, 102, 103, 104
GAS SAMPLE PIT TYP 4 PLACES - TANKS 101, 102, 103, 104
THERMOCOUPLE PIT TYP 2 PLACES - TANKS 101, 102
CROSS-OVER PIT TYP 2 PLACES
8" STEEL POSTS TYP
ANNULUS INTAKE STATION TYP 4 PLACES
CLEAN SOLID WASTE ROOM
ROLL-UP DOOR
14' WIDE ROLL-UP DOOR
LOADING DOCK
90'-0"
300'-0"
10 @ 30'-0" = 300'-0"
120'-0"
90'-0"
1 2 3 4 5 6 7 8 9 10 11
A SK-2-58743
B SK-2-58743
LEGEND
BLUES CORRIDOR
SWP'S CORRIDOR
FUTURE SWP ACCESS AS REQUIRED
CAST-IN-PLACE CONCRETE WALLS
2-HR GYPSUM BOARD WALL
GYPSUM BOARD WALLS
INSULATED METAL PANELS WITH LINER
MISSILE IMPACT DOORS
SHIELDING WALLS TYPICAL
GAS SAMPLING RACK TYPICAL 4-PLACES
HELIUM AND CALIBRATION GAS BOTTLES TYPICAL 4-PLACES
12" CONC PERIMETER WALL TYPICAL
8" CONC WALL
AIRLOCK
ELECTRICAL PANELBOARD
3'-6"X7' ENTRY DOOR
12'-0"
8'-0"
12'-0"
8'-0"
GAS SAMPLING BUILDING
SCALE: 3/16" = 1'-0"
WEATHER ENCLOSURE
SCALE: 1/16" = 1'-0"
30' 20' 10' 0 30'
DOES NOT CONTAIN CLASSIFIED OR UNCLASSIFIED CONTROLLED NUCLEAR INFORMATION
N/A
CONCEPTUAL
U.S. DEPARTMENT OF ENERGY
RICHLAND OPERATIONS OFFICE
KAISER ENGINEERS HANFORD COMPANY
ARCHITECTURAL
WEATHER ENCLOSURE PLAN
SK-2-58745 0
REVISIONS
PLOT SCALE: 1=192 KEHCAD KG

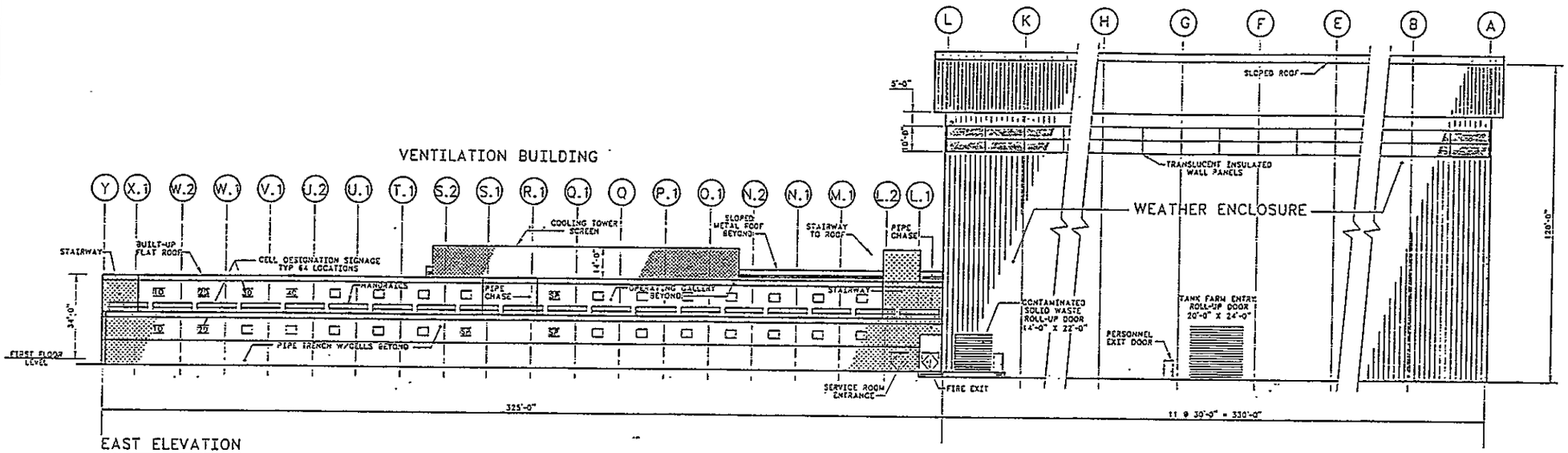

EAST ELEVATION

SCALE: 1/16" =1'-0"

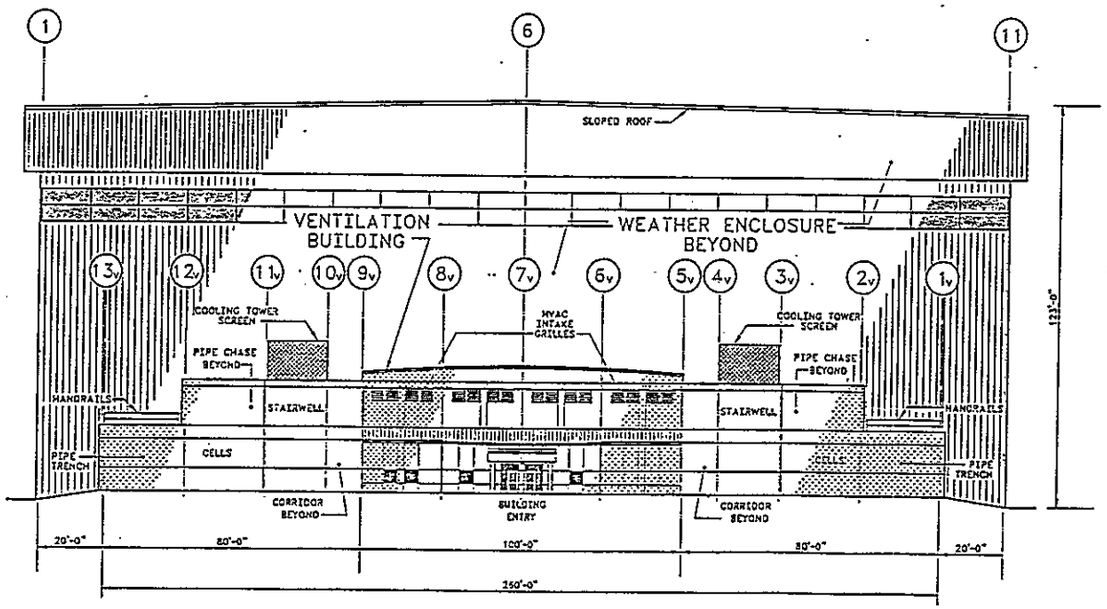

SOUTH ELEVATION

SCALE: 1/16" =1'-0"

30' 20' 10' 0 30'

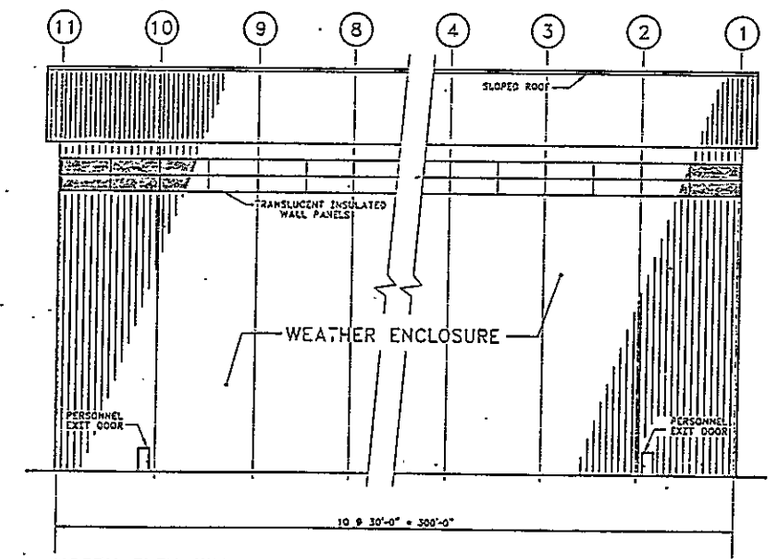

NORTH ELEVATION

SCALE: 1/16" =1'-0"

DOES NOT CONTAIN CLASSIFIED OR UNCLASSIFIED CONTROLLED NUCLEAR INFORMATION

N/A

Signature Office of ADC
Bechtel Engineering Business Company

Date

CONCEPTUAL

DRAWN CLAY/LARSON

U.S. DEPARTMENT OF ENERGY
RICHLAND OPERATIONS OFFICE
KAISER ENGINEERS HANFORD COMPANY

ARCHITECTURAL ELEVATIONS

PROJECT W-236 MULTI-FUNCTION WASTE TANK FACILITY

F 2-36 0001 SK-2-58746 0

S-CON EN1259

SK-2-58740 DRAWING LIST

NUMBER	TITLE

DRAWING FRAGMENTS LIST

NUMBER	TITLE

REVISIONS

REV NO.	DESCRIPTION	REV BY DATE	PER APPROVALS	CHANGE NOTICE NO.

CAD FILE x058746a CAD CODE 2JUSED ACCD:11.0

PLOT SCALE: 1:1

9513319.0177

WHC-SD-W236-CDR-001 Rev. 0

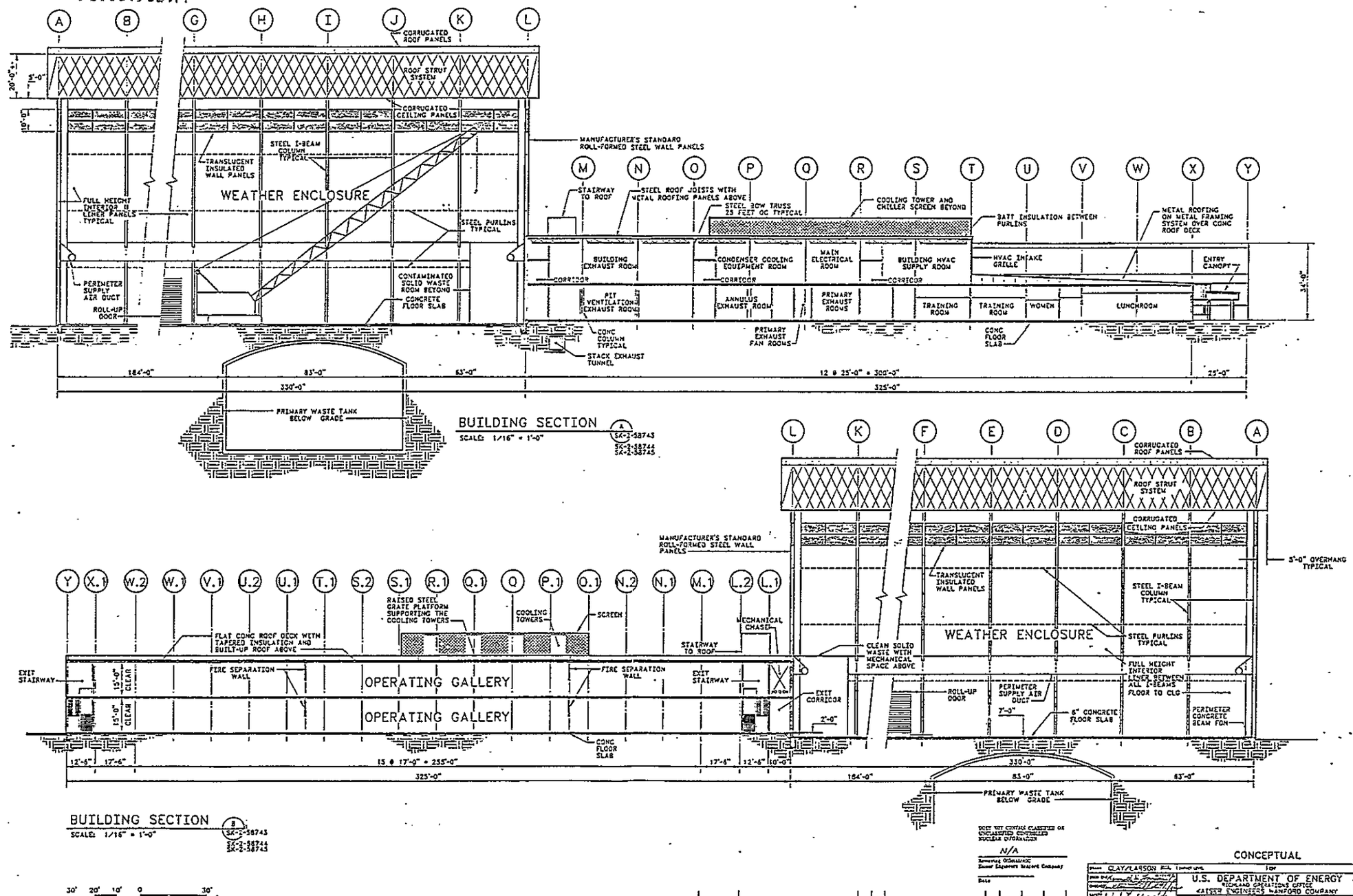

DOES NOT CONTAIN CLASSIFIED OR UNCLASSIFIED CONTROLLED NUCLEAR INFORMATION

N/A

Reviewing Organization
Kaiser Engineers Hanford Company

Date

CONCEPTUAL

CLAY/LARSON

U.S. DEPARTMENT OF ENERGY
RICHLAND OPERATIONS OFFICE
KAISER ENGINEERS HANFORD COMPANY

ARCHITECTURAL SECTIONS

W-236 MULTI-FUNCTION WASTE TANK FACILITY

F 2436 0801 SK-2-58747 0

SCALE 1/16" = 1'-0" ER1259 SHEET 1 OF 1

PLOT SCALE: 1=100 KIMCAD K8

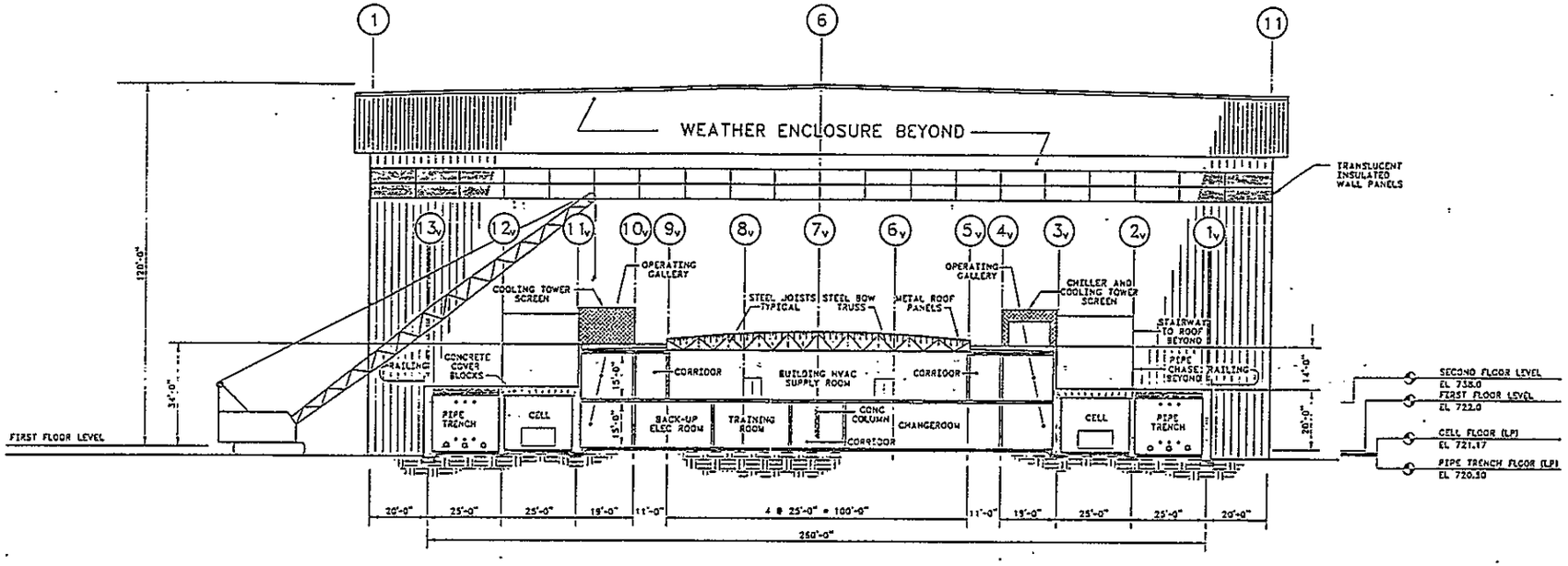

BUILDING SECTION
SCALE: 1/16" = 1'-0"
SK-2-58743
SK-2-58744

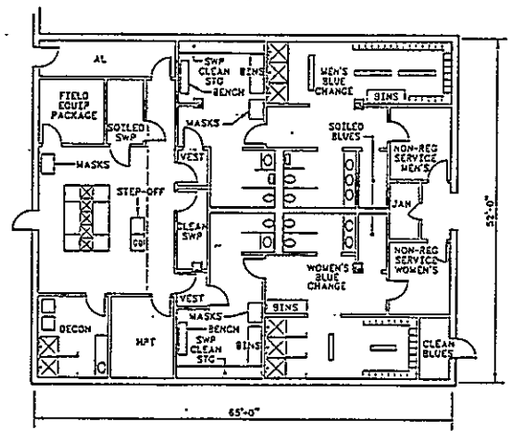

ENLARGED CHANGEROOM PLAN
SCALE: 1/4" = 1'-0"

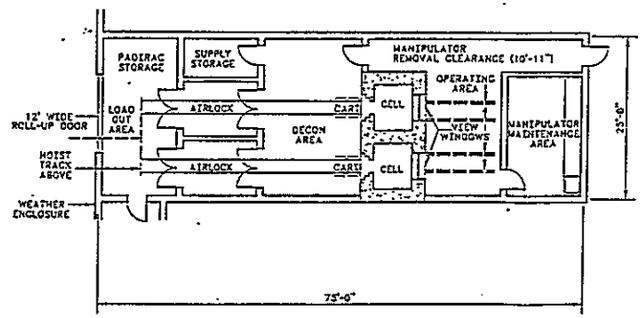

ENLARGED LIQUID SAMPLING ROOM PLAN
SCALE: 1/4" = 1'-0"

DOES NOT CONTAIN CLASSIFIED OR UNCLASSIFIED CONTROLLED NUCLEAR INFORMATION
N/A
Reviewing Official/ADC
Kaiser Engineers Hanford Company
Date

CONCEPTUAL

CLAY/LARSON

U.S. DEPARTMENT OF ENERGY
RICHLAND OPERATIONS OFFICE
KAISER ENGINEERS HANFORD COMPANY

ARCHITECTURAL
SECTION AND PLANS

W-235 MULTI-FUNCTION WASTE TANK FACILITY

F 2435 SK-2-58748 0

SHOWN ER1259 1 of 1

SK-2-58740 DRAWING LIST

REVISIONS

CAD FILE 058748a CAD CODE 2J:QCC:AC02:11.0:NN

K9

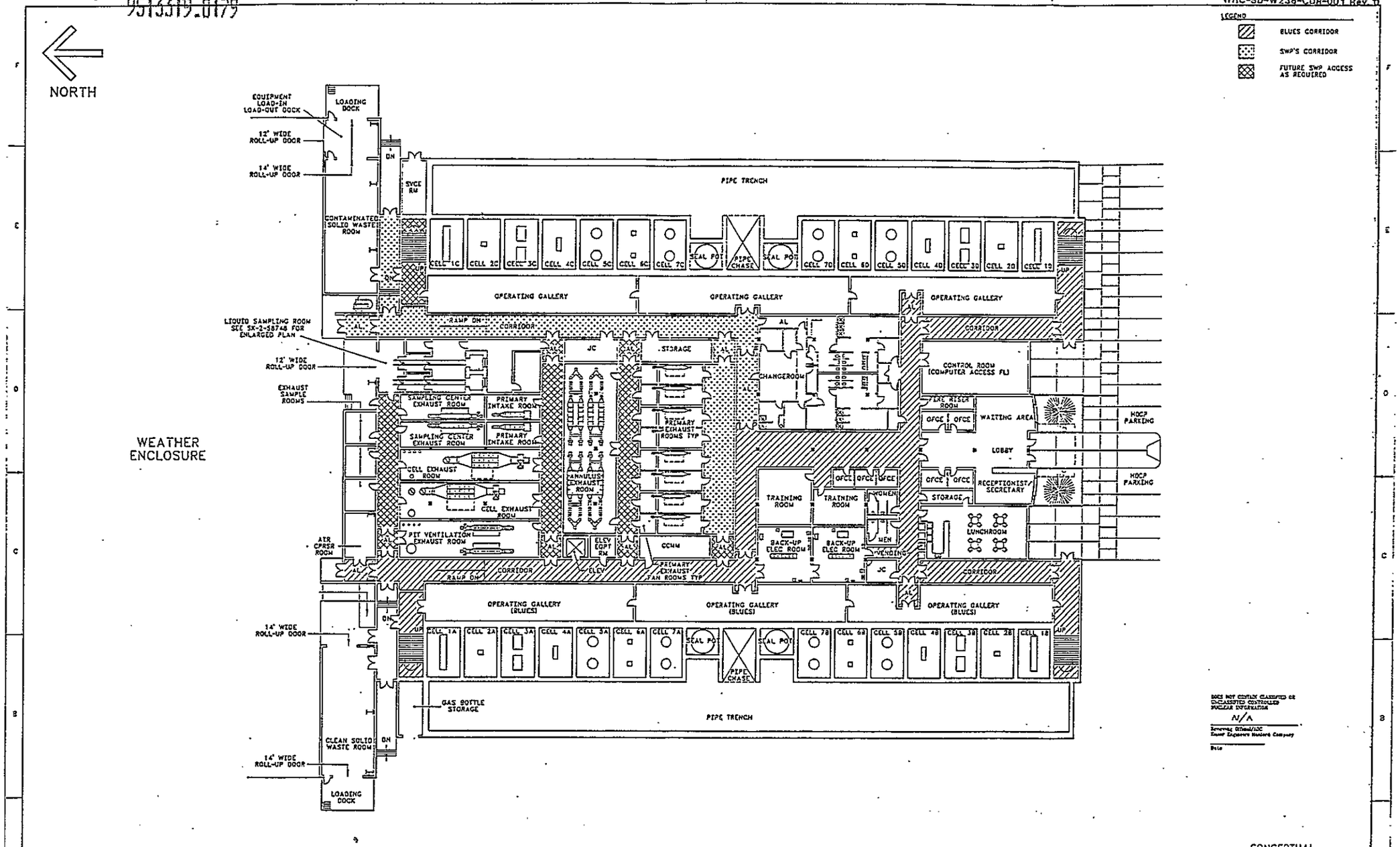

FIRST FLOOR EQUIPMENT LAYOUT PLAN

SCALE: 1/16" = 1'-0"

30' 20' 10' 0 30'

DOES NOT CONTAIN CLASSIFIED OR UNCLASSIFIED CONTROLLED NUCLEAR INFORMATION

N/A

Reviewing Official/UCI
Kaiser Engineers Hanford Company

Date

CONCEPTUAL

DRAWN RM CLAY

U.S. DEPARTMENT OF ENERGY
RICHLAND OPERATIONS OFFICE
KAISER ENGINEERS HANFORD COMPANY

ARCHITECTURAL
EQUIPMENT LAYOUT

W-236 MULTI-FUNCTION WASTE TK FACIL

F 2432 0861 SK-2-58749 0

SHOWN 691299

REVISIONS

DRAWING TRANSMITTAL LIST

NOT USED ON

DRAWING LIST

CAD FILE W058749 CAD CODE 2J:DEC.ACC2:11.0:AN

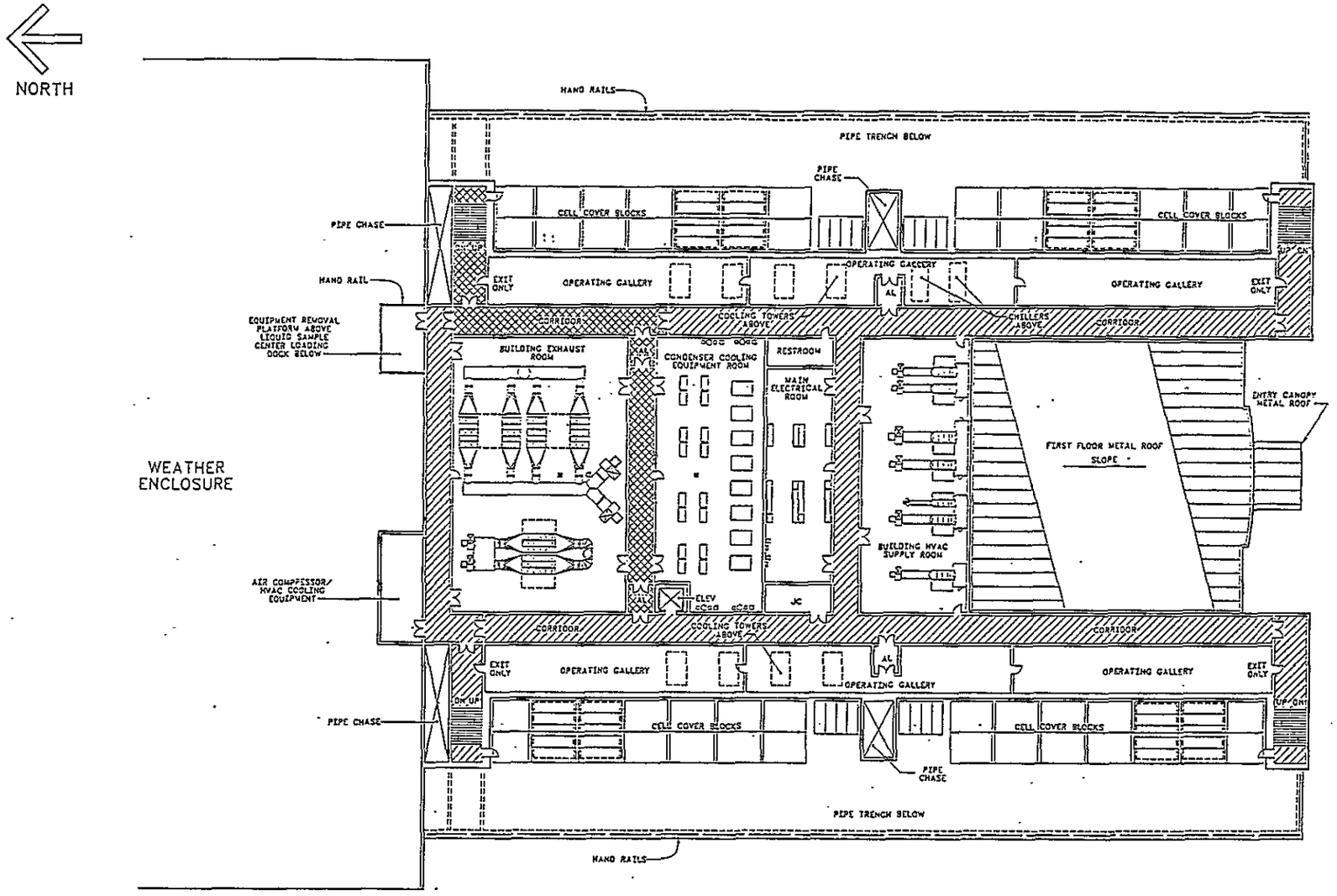

LEGEND

- BLUES CORRIDOR
- SWP'S CORRIDOR
- FUTURE SWP ACCESS AS REQUIRED

DOES NOT CONTAIN CLASSIFIED OR UNCLASSIFIED CONTROLLED NUCLEAR INFORMATION

N/A

Reviewing Official/ADC
Kaiser Engineers Hanford Company

Date

SECOND FLOOR EQUIPMENT LAYOUT PLAN

SCALE: 1/16" = 1'-0"

30' 20' 10' 0 30'

CONCEPTUAL

DRAWN RW CLAY	DATE 12 JANUARY LEVEL 1 ESF
U.S. DEPARTMENT OF ENERGY RICHLAND OPERATIONS OFFICE KAISER ENGINEERS HANFORD COMPANY	
ARCHITECTURAL EQUIPMENT LAYOUT	
PROJECT W-236 MULTI-FUNCTION WASTE TX FACIL	
F 2432 6801	SK-2-58749 0
SCALE SHOWN	DWG NO. ER1259 SHEET 2 of 2

SK-2-58749 DRAWING LIST

NUMBER	TITLE	REFERENCES

DRAWING TRACEABILITY LIST — NEXT USED ON

REV NO.	DESCRIPTION	REV BY DATE	REV APPROVALS	CHECKED DATE

REVISIONS

CAD FILE r0587493 CAD CODE ZJ:DES:SC02:11.DWG

2 PLOT SCALE: 1=1

9513319.0181

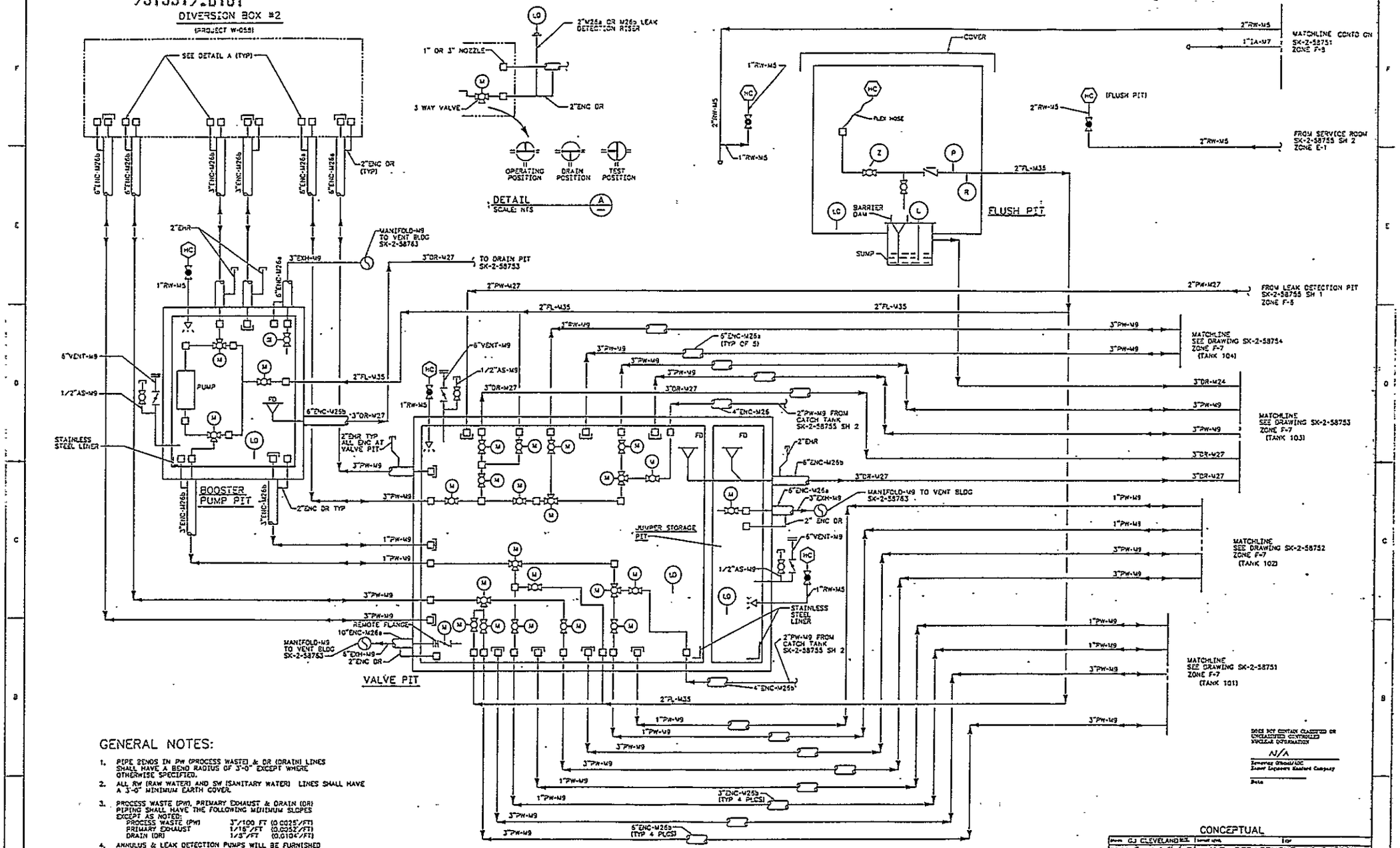

GENERAL NOTES:

1. PIPE BENDS IN PW (PROCESS WASTE) & DR (DRAIN) LINES SHALL HAVE A BEND RADIUS OF 3'-0" EXCEPT WHERE OTHERWISE SPECIFIED.
2. ALL RW (RAW WATER) AND SW (SANITARY WATER) LINES SHALL HAVE A 3'-0" MINIMUM EARTH COVER.
3. PROCESS WASTE (PW), PRIMARY EXHAUST & DRAIN (DR) PIPING SHALL HAVE THE FOLLOWING MINIMUM SLOPES EXCEPT AS NOTED:

PROCESS WASTE (PW)	3"/100 FT	(0.0025"/FT)
PRIMARY EXHAUST	1/16"/FT	(0.0052"/FT)
DRAIN (DR)	1/8"/FT	(0.0104"/FT)

4. ANNULUS & LEAK DETECTION PUMPS WILL BE FURNISHED BY OPERATING CONTRACTOR.
5. FOR LEGEND SEE SK-2-58769.
6. THE ELECTRICAL POWER AND INSTRUMENT SIGNALS TO REMOTE JUMPERS AND PUMPS SHALL BE PROVIDED BY REMOTE JUMPERS. POWER AND SIGNALS ARE TO BE IN SEPARATE JUMPERS.
7. FOR TYPICAL PIT DETAIL SEE SK-2-58755.

DOES NOT CONTAIN CLASSIFIED OR UNCLASSIFIED CONTROLLED NUCLEAR INFORMATION

N/A

Reviewing Official/ADC
Kaiser Engineers Hanford Company

Date

CONCEPTUAL

SK-2-58740 DRAWING LIST

GJ CLEVELAND

U.S. DEPARTMENT OF ENERGY
RICHLAND OPERATIONS OFFICE
KAISER ENGINEERS HANFORD COMPANY

PIPING
ENGINEERING FLOW DIAGRAM
VALVE PIT

W-236 MULTI-FUNCTION WASTE TANK FACILITY

F 2436 7001 SK-2-58750 0

NONE ER1259 SHEET 1 OF 1

X0558750A ZJ:IBM-ACD2:11.0:NN

PLOT SCALE: 1=1 KEHCAD K12

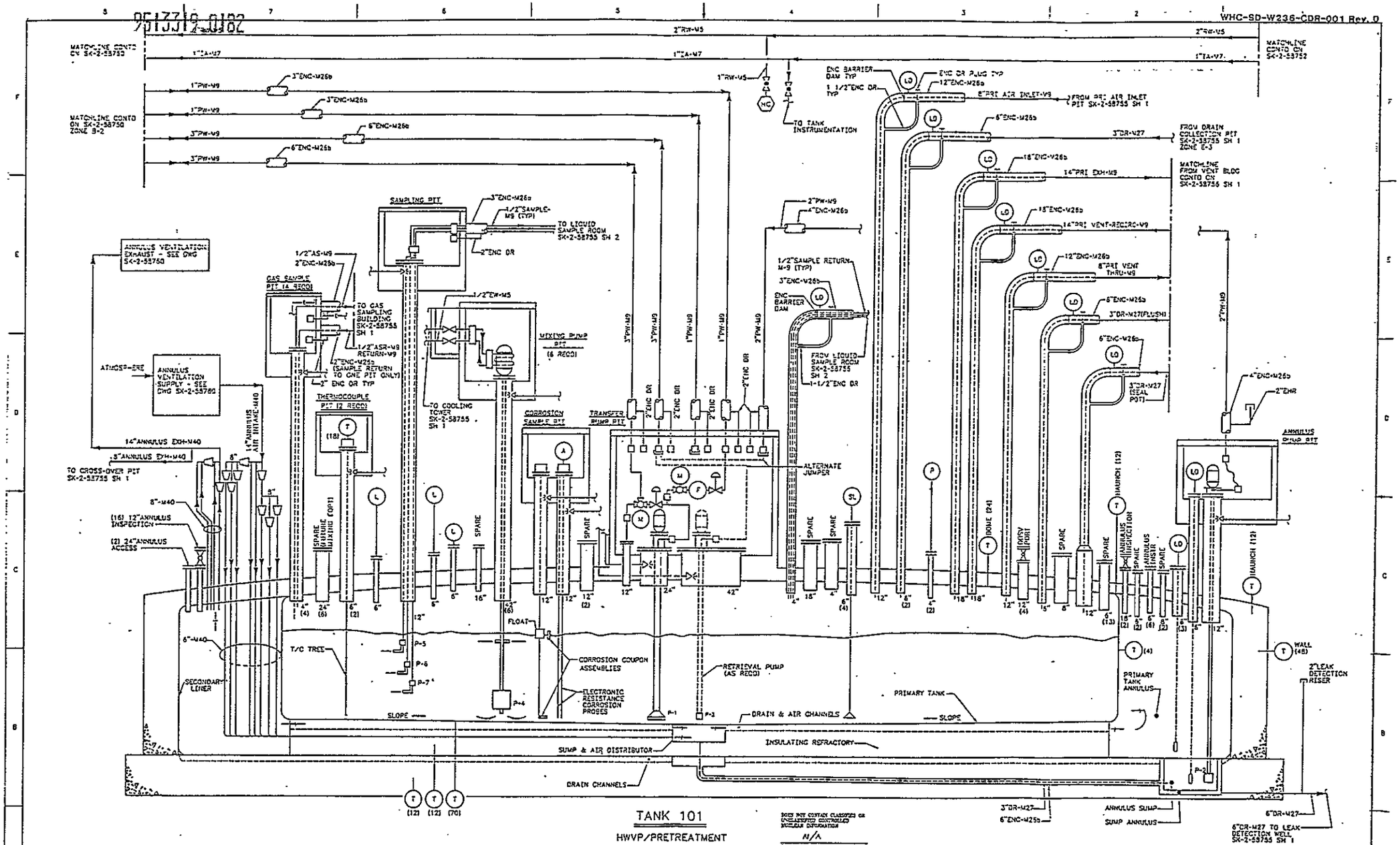

TANK 101

HWVP/PRETREATMENT

NOTES:

1. FOR GENERAL NOTES SEE SK-2-58750.
2. FOR LEGEND SEE SK-2-58769.
3. FOR TYPICAL PIT DETAIL SEE SK-2-58755 SH 1.

CONCEPTUAL

U.S. DEPARTMENT OF ENERGY
RICHLAND OPERATIONS OFFICE
KAISER ENGINEERS HANFORD COMPANY

PIPING
ENGINEERING FLOW DIAGRAM
TANK 101

HWVP-236 MULTI-FUNCTION WASTE TANK FACILITY

F 2-4-92 SK-2-58751 0

9513319.0183

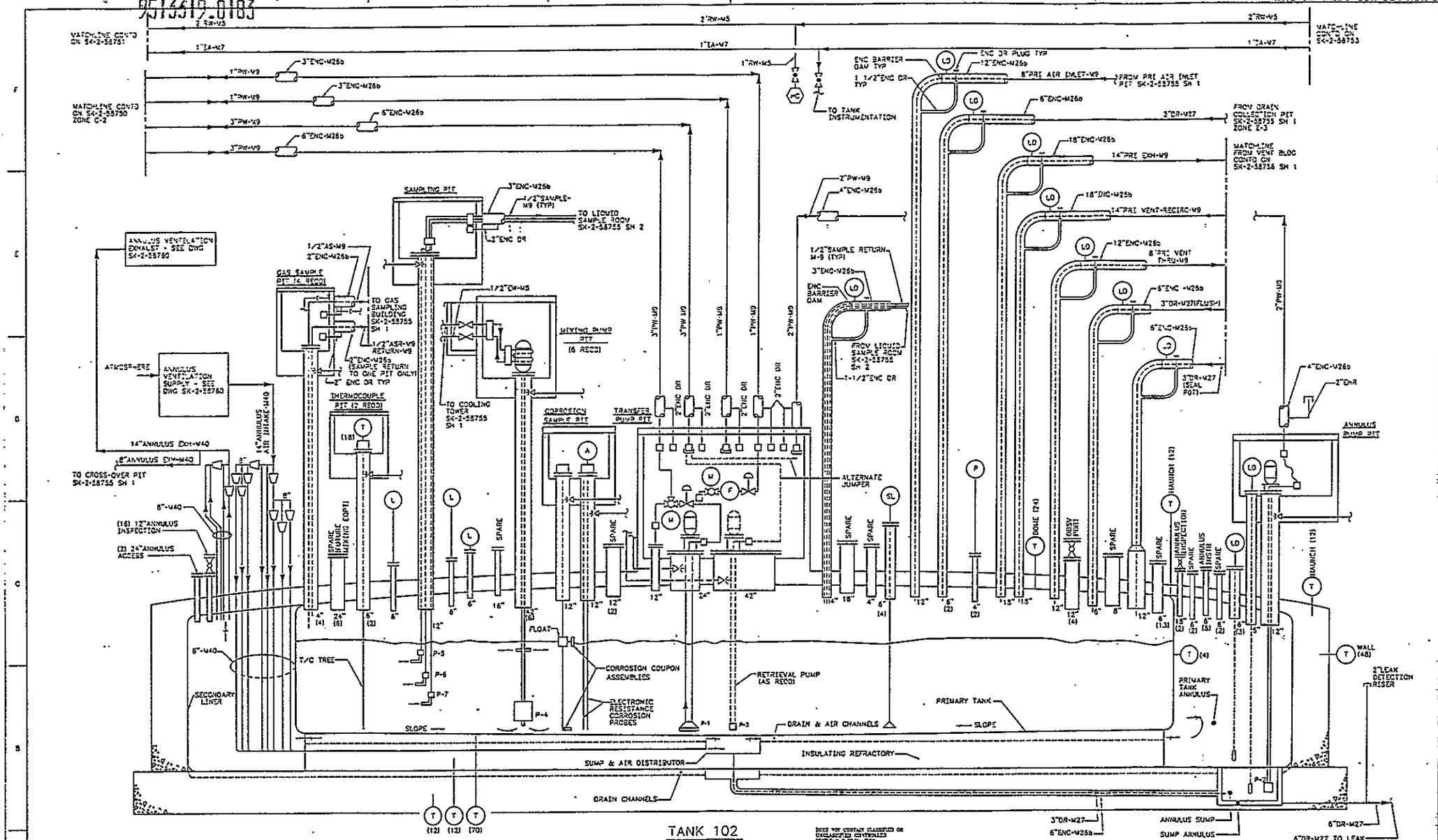

TANK 102

HWVP/PRETREATMENT

NOTES:

1. FOR GENERAL NOTES SEE SK-2-58750.
2. FOR LEGEND SEE SK-2-58769.
3. FOR TYPICAL PIT DETAIL SEE SK-2-58755 SH 1.

CONCEPTUAL

U.S. DEPARTMENT OF ENERGY
RICHLAND OPERATIONS OFFICE
KAISER ENGINEERS HANFORD COMPANY

PIPING
ENGINEERING FLOW DIAGRAM
TANK 102

W-236 MULTI-FUNCTION WASTE TANK FACILITY

SK-2-58752 | 0

SK-2-58740 DRAWING LIST

PLOT SCALE: 1=1 KEHCAD K14

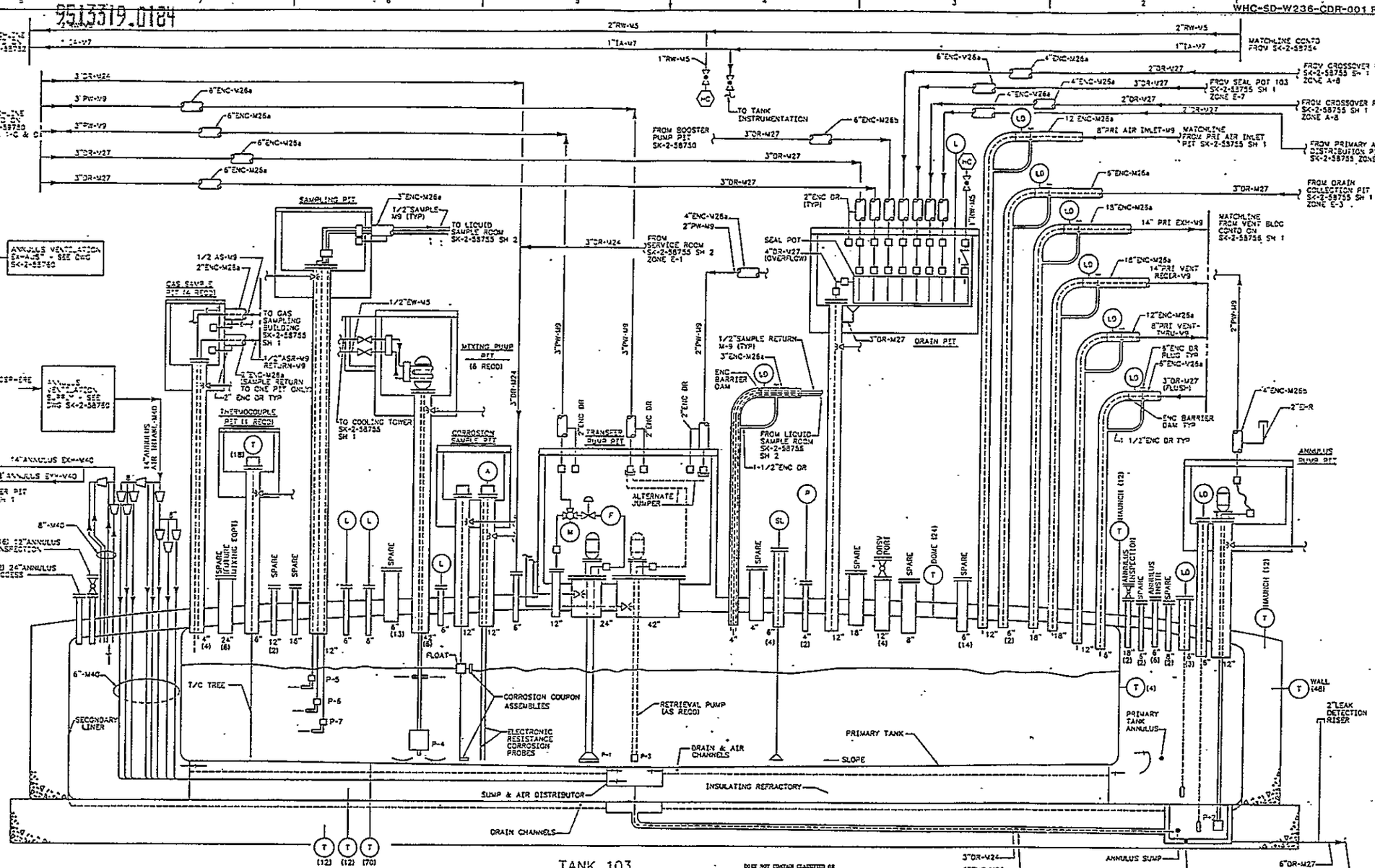

TANK 103

SINGLE AND DOUBLE-SHELL TANK
REMEDIATION/RETRIEVAL WASTE

DOES NOT CONTAIN CLASSIFIED OR UNCLASSIFIED CONTROLLED NUCLEAR INFORMATION

N/A

Reviewing Official/ADC
Kaiser Engineers Hanford Company

Date

NOTES:

1. FOR GENERAL NOTES SEE SK-2-58750.
2. FOR LEGEND SEE SK-2-58769.
3. FOR TYPICAL PIT DETAIL SEE SK-2-58755 SH 1.

CONCEPTUAL

GJ CLEVELAND

U.S. DEPARTMENT OF ENERGY
RICHLAND OPERATIONS OFFICE
KAISER ENGINEERS HANFORD COMPANY

PIPING
ENGINEERING FLOW DIAGRAM
TANK 103

SK-2-58740 DRAWING LIST

W-236 MULTI-FUNCTION WASTE TANK FACILITY

F 2436 7001 SK-2-58753 0

SCALE NONE ER1259 SHEET 1 OF 1

PLOT SCALE: 1=1 KEHCAD K15

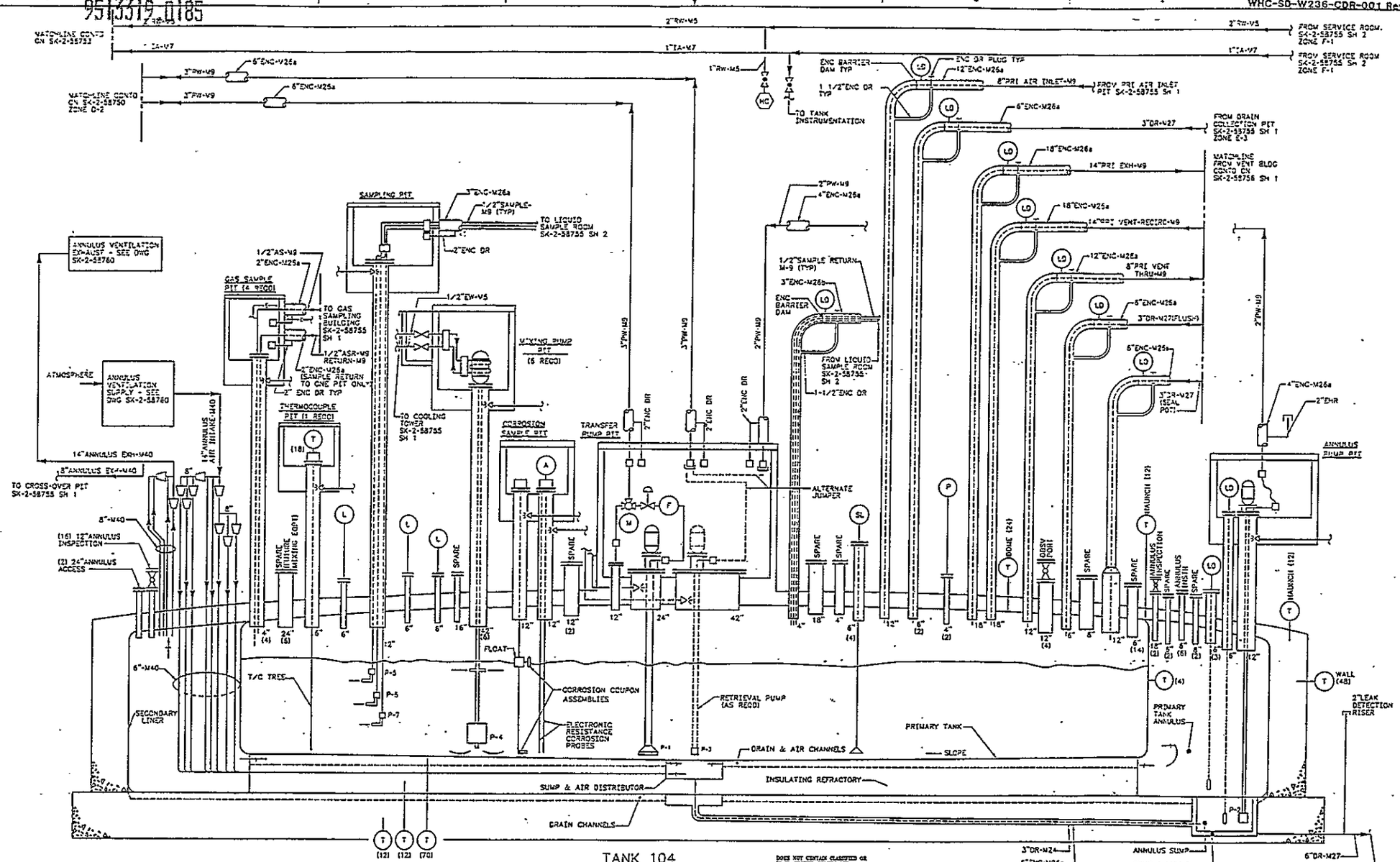

TANK 104

SINGLE AND DOUBLE-SHELL TANK REMEDIATION/RETRIEVAL WASTE

DOES NOT CONTAIN CLASSIFIED OR UNCLASSIFIED CONTROLLED NUCLEAR INFORMATION

N/A

Expires Otherwise
Xenon Engineers Hanford Company

Date

NOTES:

1. FOR GENERAL NOTES SSEE SK-2-58750.
2. FOR LEGEND SEE SK-2-58769.
3. FOR TYPICAL PIT DETAIL SEE SK-2-58755 SH 1.

CONCEPTUAL

Drawn GJ CLEVELAND	Scale NOT
	U.S. DEPARTMENT OF ENERGY RICHLAND OPERATIONS OFFICE KAISER ENGINEERS HANFORD COMPANY
	PIPING ENGINEERING FLOW DIAGRAM TANK 104
	Project W-236 MULTI-FUNCTION WASTE TANK FACILITY
	F 24-32E 7001 SK-2-58754 0
	Size NONE File No. ER1259 Sheet 1 of 1

SK-2-58754 DRAWING LIST

Number	Title	Revision

Number	Title	Revision

Rev No	Date	Description	Approved

Sub File XCS8754A Sub Date 24 SEP 1992 12:17:00 AM

Type WHC Date

Approved for Construction

By

Approved for Construction Date

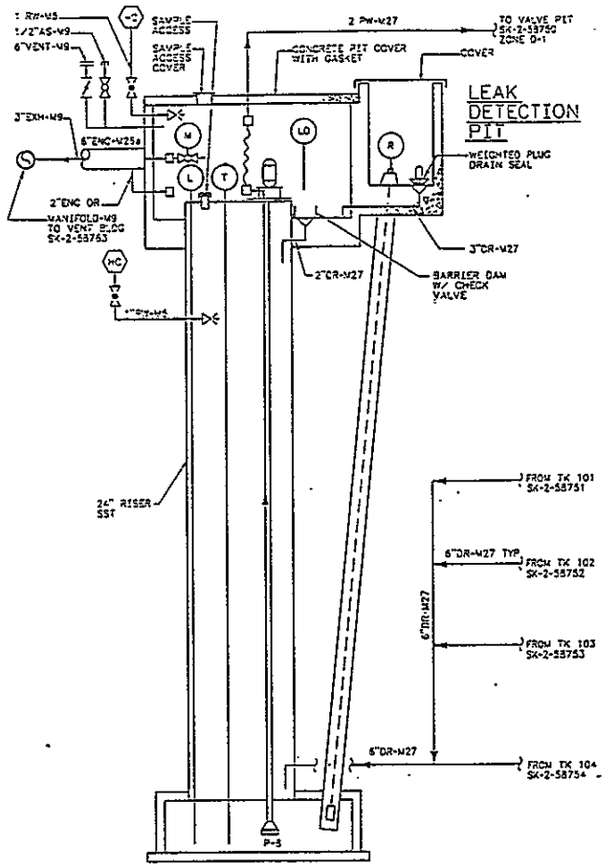

LEAK DETECTION PIT

LEAK DETECTION WELL
(ONE REQD)

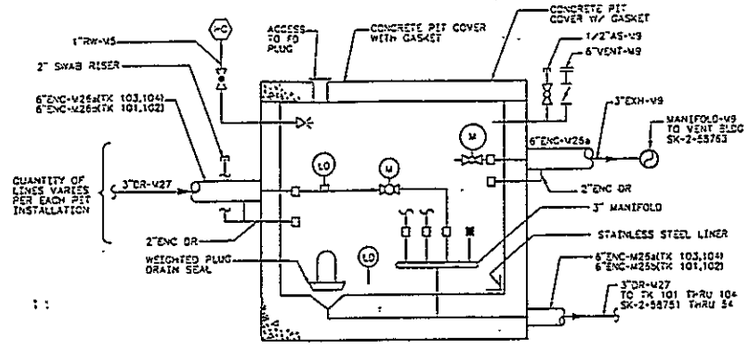

DRAIN COLLECTION PIT
(2 REQD EACH TANK)

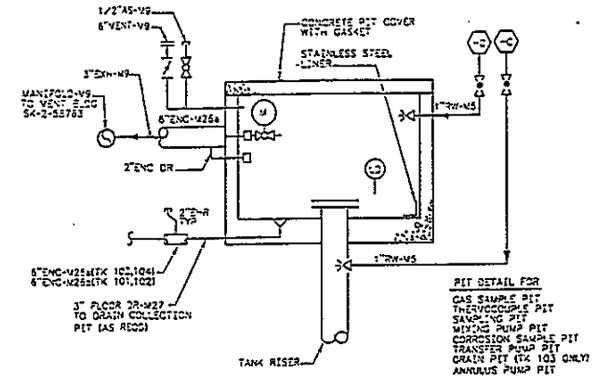

TYPICAL PIT DETAIL

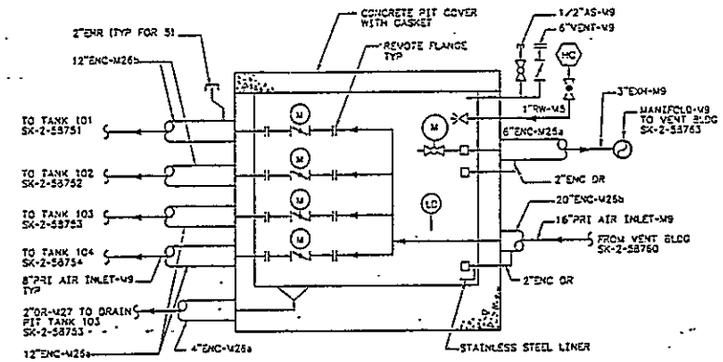

PRIMARY AIR DISTRIBUTION PIT
(ONE REQD)

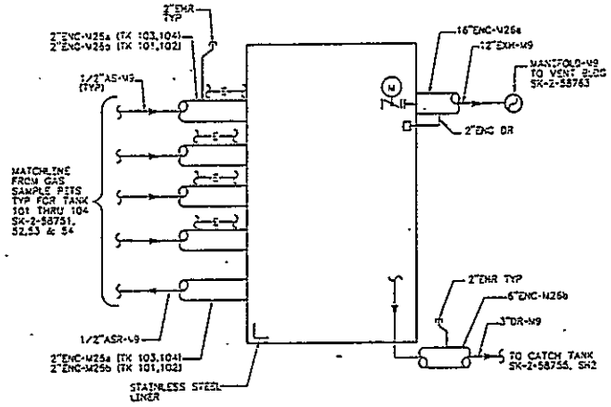

GAS SAMPLING BUILDING

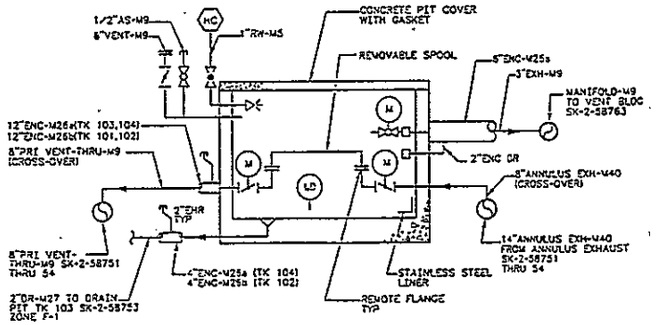

CROSS-OVER PIT
(2 REQD, 2 LINES IN EACH PIT)

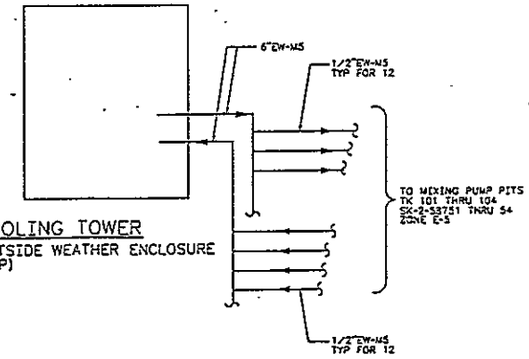

COOLING TOWER
OUTSIDE WEATHER ENCLOSURE
(TYP)

NOTES:

1. FOR GENERAL NOTES SEE SK-2-58750.
2. FOR LEGEND SEE SK-2-58759.

DOES NOT CONTAIN CLASSIFIED OR UNCLASSIFIED CONTROLLED NUCLEAR INFORMATION

N/A

Reviewer (Cleveland) Kaiser Engineers Hanford Company

Date

CONCEPTUAL

SK-2-58747 DRAWING LIST

GJ CLEVELAND			U.S. DEPARTMENT OF ENERGY RICHLAND OPERATIONS OFFICE KAISER ENGINEERS HANFORD COMPANY
			PIPING MISC DETAILS TANK FARM
			WASTE-236 MULTI-FUNCTION WASTE TANK FACILITY
F	243E	7051	SK-2-58755 0
SCALE	NONE		ER1259 SHEET 1 OF 2

X0587554 2 NOV-ACD2.11 DINN

2 PLOT SCALE: 1=1 KDHCAD 1 K17

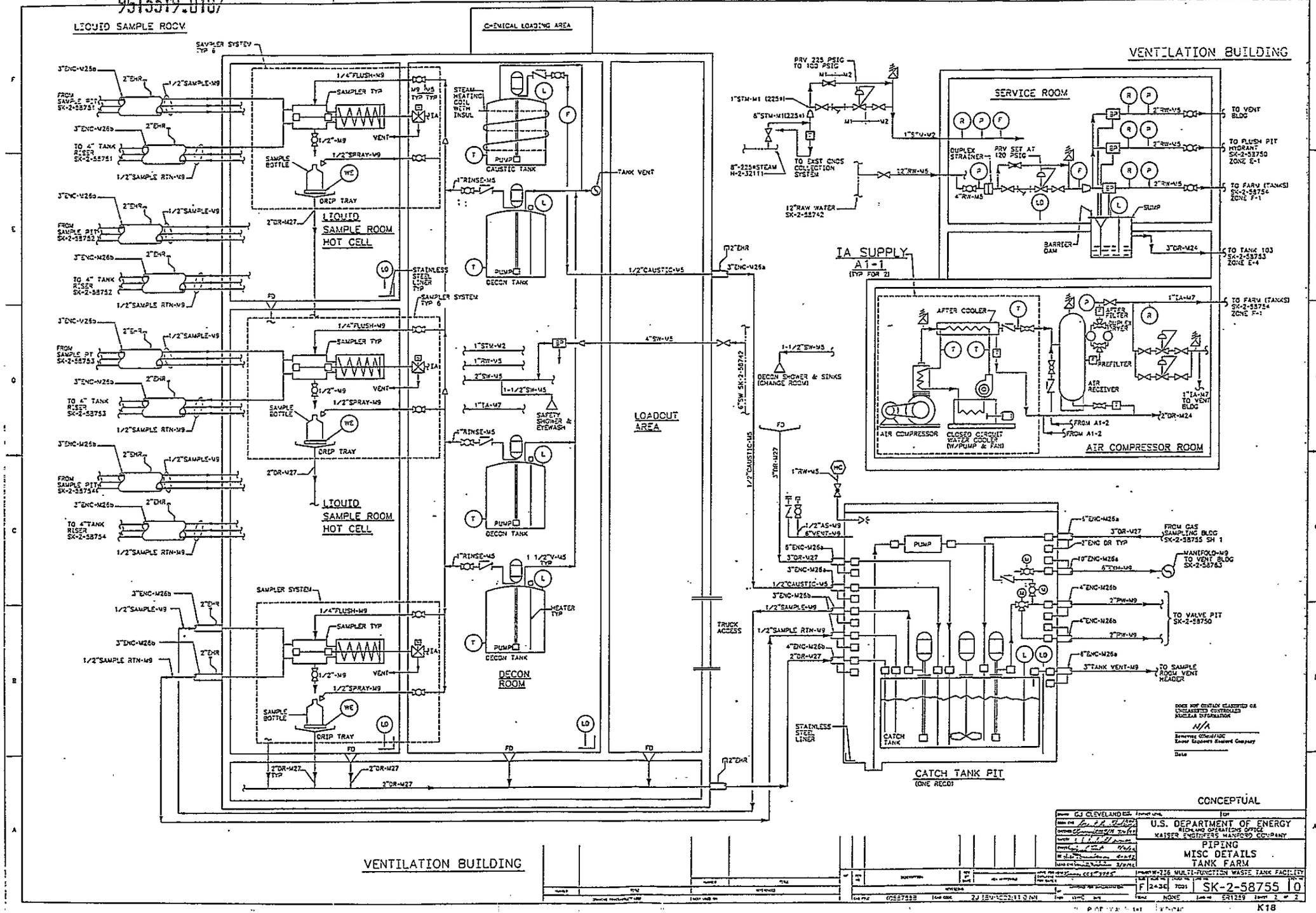
LIQUID SAMPLE ROOM
CHEMICAL LOADING AREA
VENTILATION BUILDING
SERVICE ROOM
LIQUID SAMPLE ROOM HOT CELL
LIQUID SAMPLE ROOM HOT CELL
DECON ROOM
LOADOUT AREA
IA SUPPLY A1-1 (TYP FOR 2)
AIR COMPRESSOR ROOM
CATCH TANK PIT (ONE REQD)
VENTILATION BUILDING
CONCEPTUAL
U.S. DEPARTMENT OF ENERGY
RICHLAND OPERATIONS OFFICE
KAISER ENGINEERS HANFORD COMPANY
PIPING
MISC DETAILS
TANK FARM
SK-2-58755 0

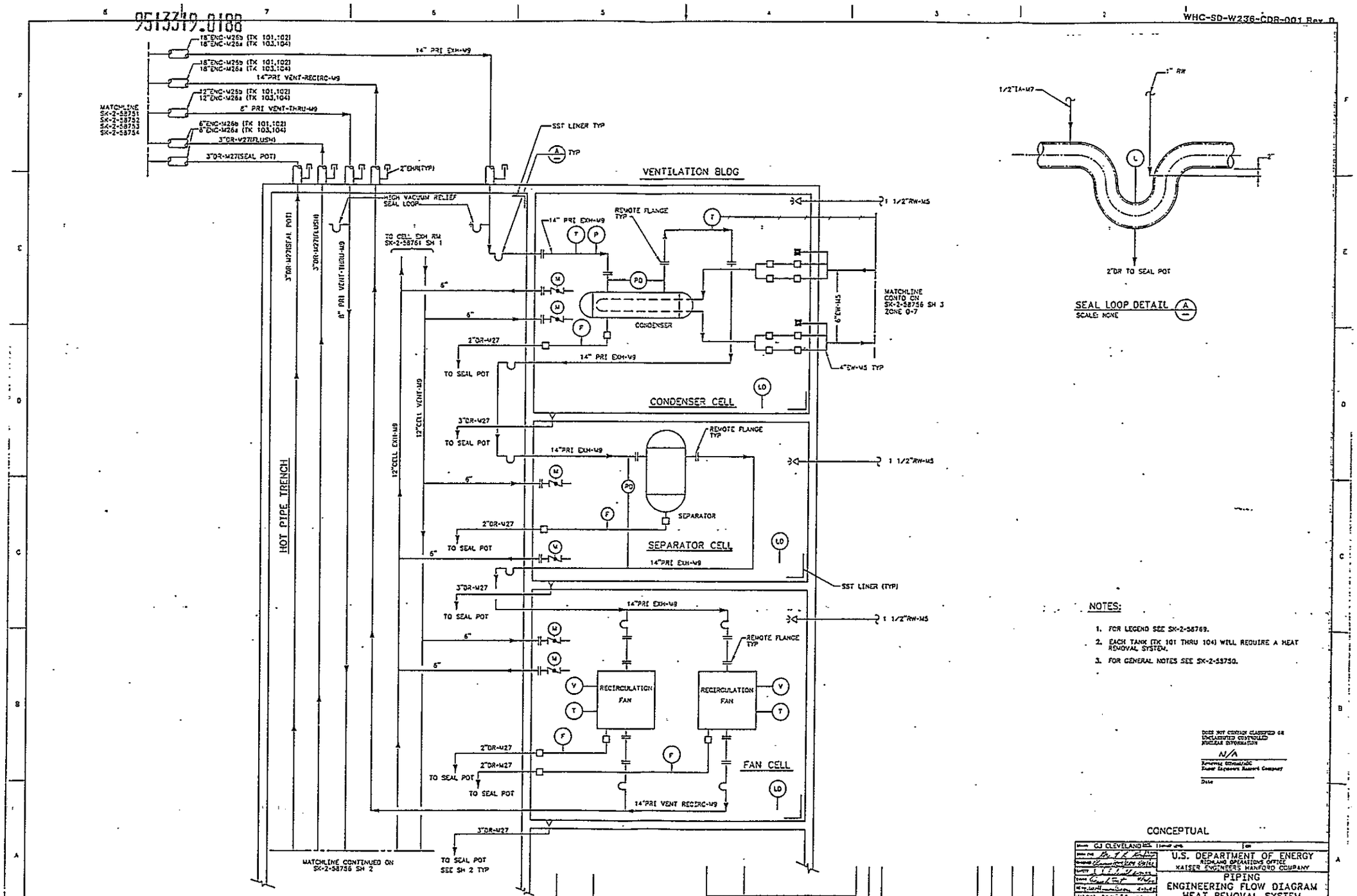

NOTES:

1. FOR LEGEND SEE SK-2-58769.
2. EACH TANK (TK 101 THRU 104) WILL REQUIRE A HEAT REMOVAL SYSTEM.
3. FOR GENERAL NOTES SEE SK-2-58750.

DOES NOT CONTAIN CLASSIFIED OR UNCLASSIFIED CONTROLLED NUCLEAR INFORMATION

N/A

Reviewer Signature/Date
Kaiser Engineers Hanford Company

Date

CONCEPTUAL

DRAWN CJ CLEVELAND	U.S. DEPARTMENT OF ENERGY RICHLAND OPERATIONS OFFICE KAISER ENGINEERS HANFORD COMPANY
	PIPING ENGINEERING FLOW DIAGRAM HEAT REMOVAL SYSTEM
	W-236 MULTI-FUNCTION WASTE TANK FACILITY
F 24-32 7031	SK-2-58756 0
SCALE NONE	EAI259 SHEET 1 OF 3

SK-2-58740 DRAWING LIST

NUMBER	TITLE	REFERENCED

REV NO	DESCRIPTION	REV APPROVALS	APPROVAL DATE

DWG FILE	TCS8756A
DWG NAME	2JHEBVAADD2-11.DWN

2 PLOT SCALE: 1=1 KEHCAD 1 K19

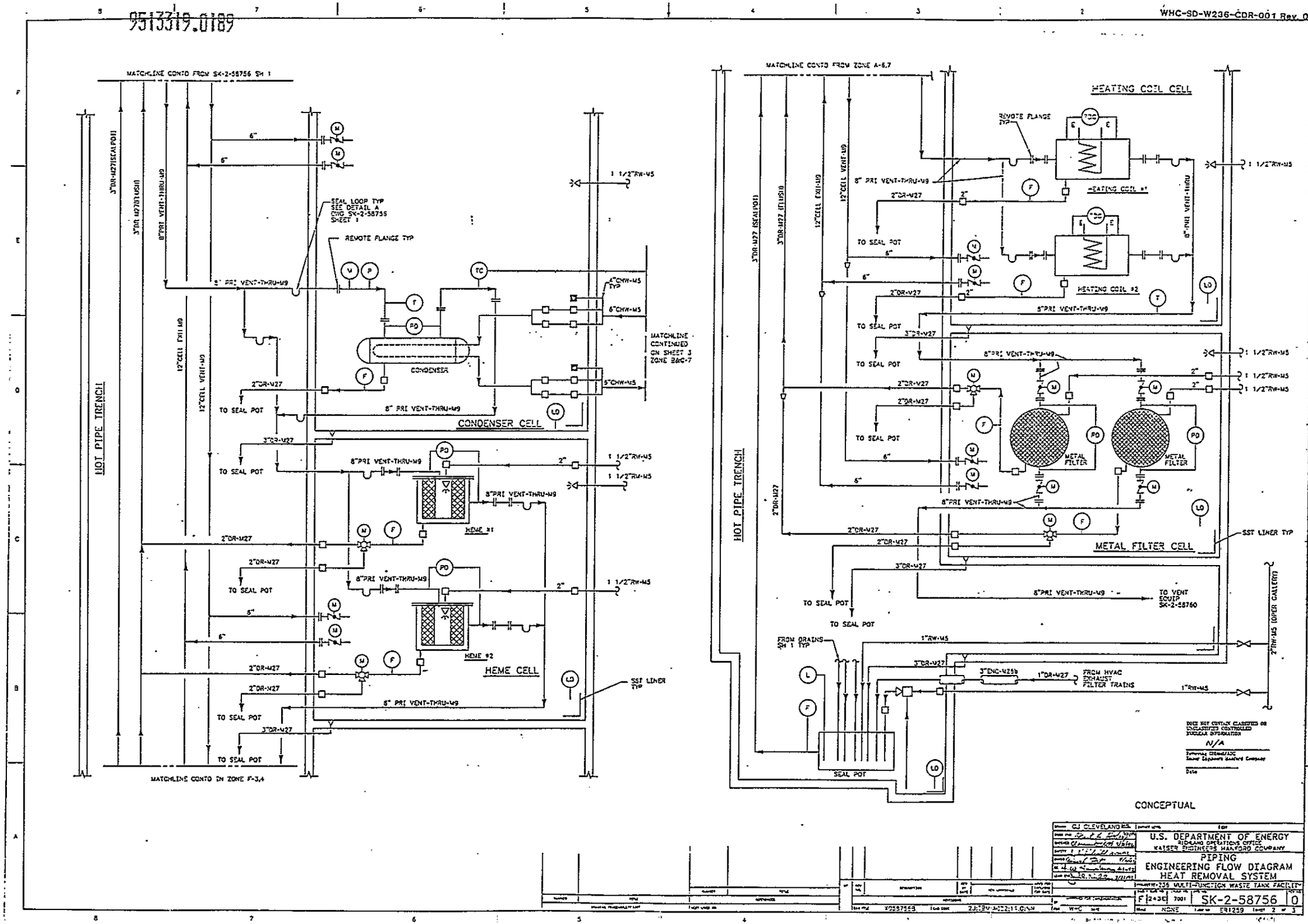
MATCHLINE CONTD FROM SK-2-58756 SH 1
HOT PIPE TRENCH
SEAL LOOP TYP SEE DETAIL A CWG SK-2-58755 SHEET 1
REMOTE FLANGE TYP
8" PRI VENT-THRU-M9
CONDENSER
CONDENSER CELL
HEME #1
HEME #2
HEME CELL
TO SEAL POT
SST LINER TYP
MATCHLINE CONTINUED ON SHEET 3 ZONE B&C-7
MATCHLINE CONTD IN ZONE F-3,4
MATCHLINE CONTD FROM ZONE A-6,7
HEATING COIL CELL
HEATING COIL #1
HEATING COIL #2
METAL FILTER
METAL FILTER CELL
TO VENT EQUIP SK-2-58760
FROM DRAINS SH 1 TYP
FROM HVAC EXHAUST FILTER TRAINS
SEAL POT
N/A
CONCEPTUAL
U.S. DEPARTMENT OF ENERGY
RICHLAND OPERATIONS OFFICE
KAISER ENGINEERS HANFORD COMPANY
PIPING
ENGINEERING FLOW DIAGRAM
HEAT REMOVAL SYSTEM
W-236 MULTI-FUNCTION WASTE TANK FACILITY
SK-2-58756
0

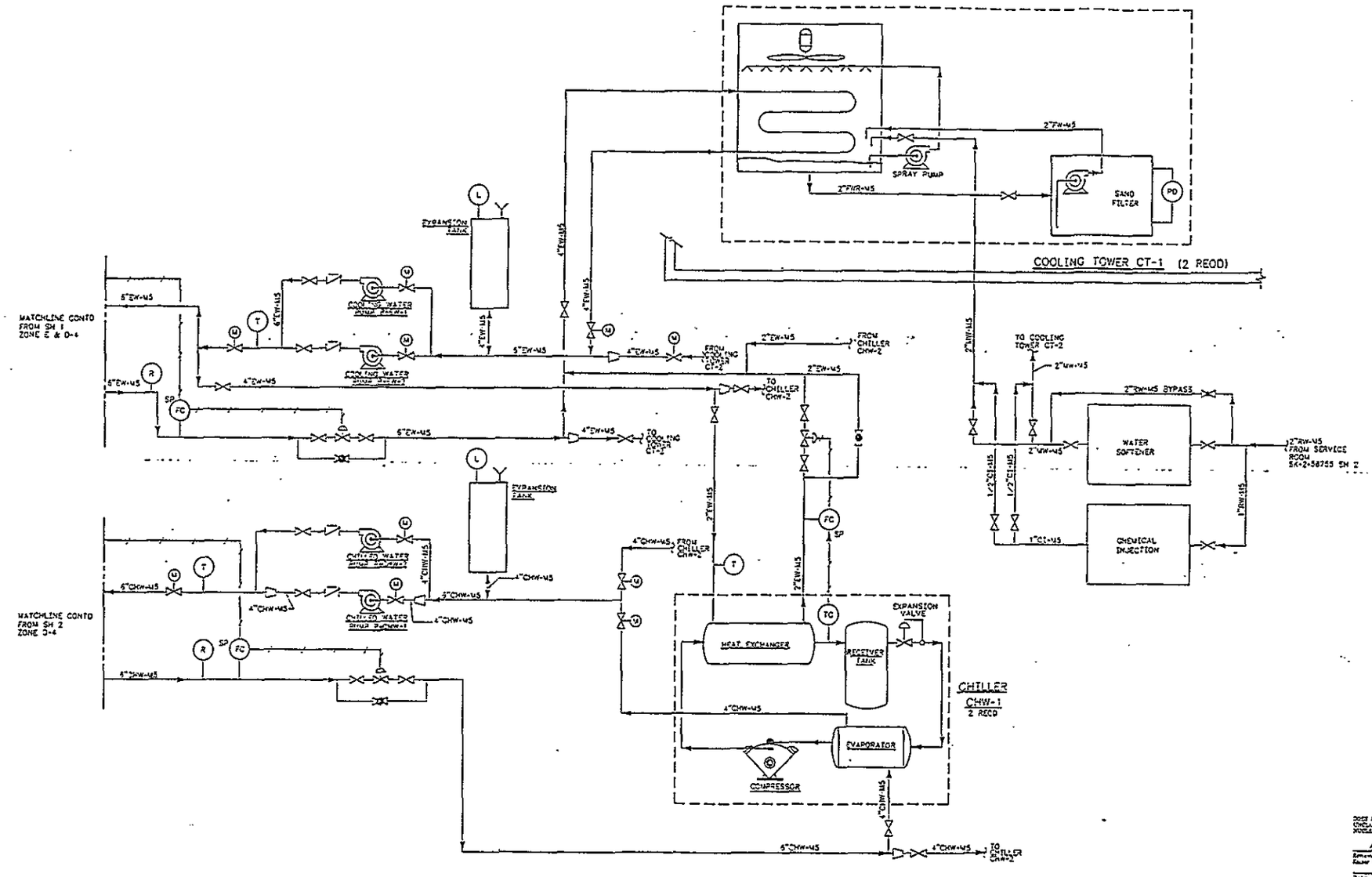

CONCEPTUAL

GJ CLEVELAND

U.S. DEPARTMENT OF ENERGY
RICHLAND OPERATIONS OFFICE
WASTE ENGINEERS MANFORD COMPANY

PIPING
ENGINEERING FLOW DIAGRAM
HEAT REMOVAL SYSTEM

W-236 MULTI-FUNCTION WASTE TANK FACILITY

F 2430 7001 | SK-2-58756 | 0

NONE | ER1259 | 1 of 1

PLOT SCALE: 1=1 | KE-CAD | K21

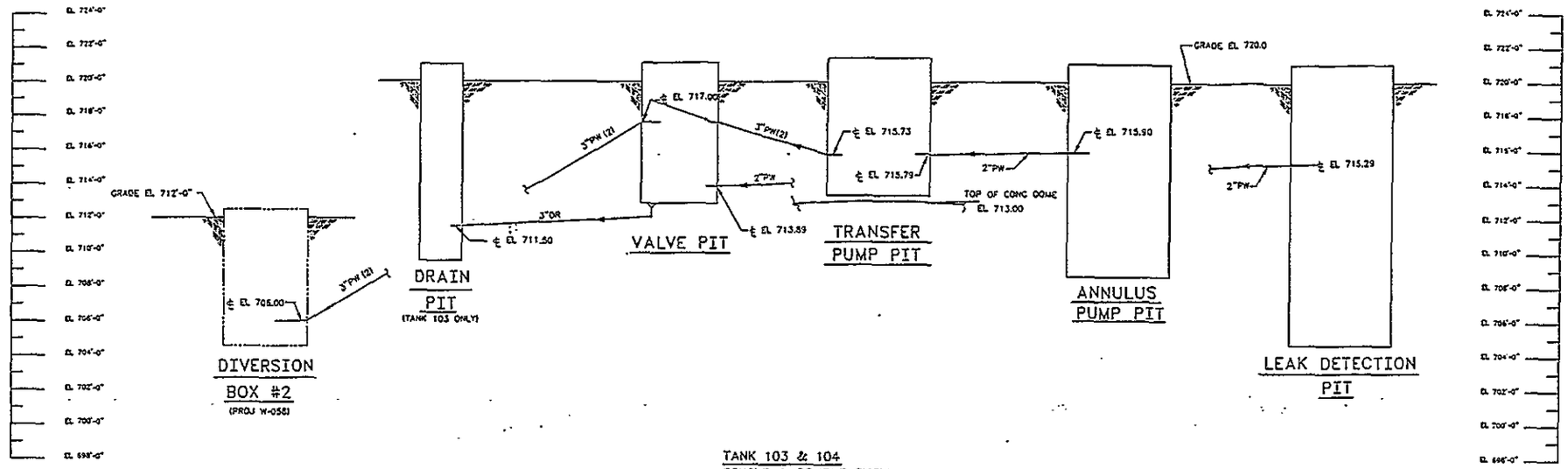

TANK 103 & 104
SINGLE & DOUBLE SHELL
TANK REMEDIATION/RETRIEVAL
WASTES

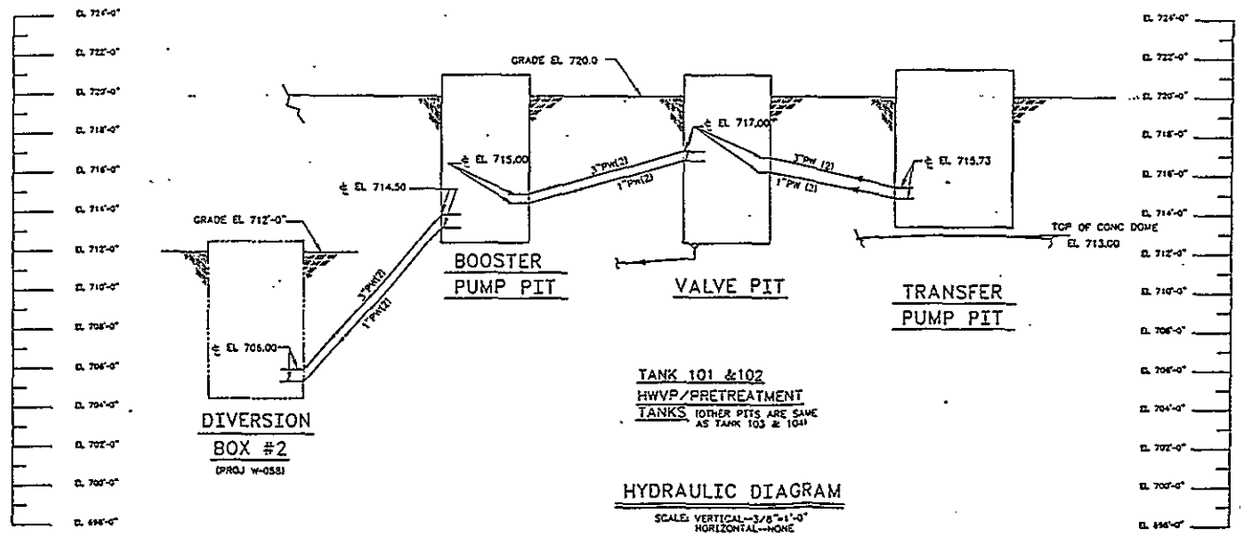

TANK 101 &102
HWVP/PRETREATMENT
TANKS (OTHER PITS ARE SAME AS TANK 103 & 104)

HYDRAULIC DIAGRAM

SCALE: VERTICAL--3/8"=1'-0"
HORIZONTAL--NONE

NOTES:

1. + FOR GENERAL NOTES SEE SK-2-58750

DOES NOT CONTAIN CLASSIFIED OR UNCLASSIFIED CONTROLLED NUCLEAR INFORMATION

N/A

Reviewing Official/UCC
Bechtel Engineers Hanford Company

Date

CONCEPTUAL

Drawn	G J CLEVELAND
Checked	
Approved	
Approved	
Approved	
Approved	

U.S. DEPARTMENT OF ENERGY
RICHLAND OPERATIONS OFFICE
KAISER ENGINEERS HANFORD COMPANY

PIPING
HYDRAULIC DIAGRAM

WH-236 MULTI-FUNCTION WASTE TANK FACILITY

F	2-43C	7001	SK-2-58757	0

SHOWN | CR1259 | SHEET 1 OF 1

SK-2-58740 DRAWING LIST

X0S8757A | 2J:[BH4C07:11 D-NN | WHC

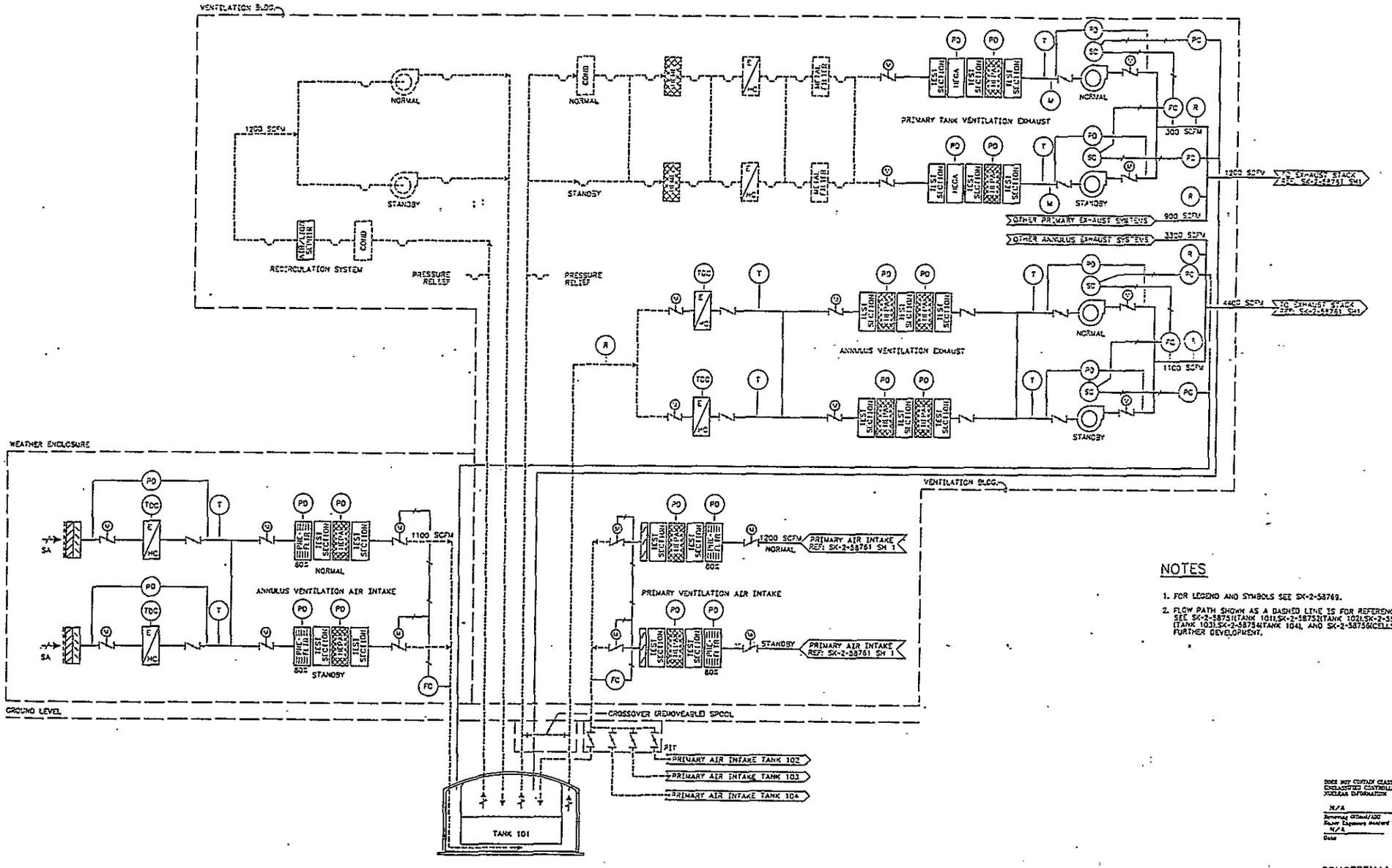

TANK VENTILATION SYSTEM

(TYPICAL FOR EACH OF FOUR TANKS)

NOTES

1. FOR LEGEND AND SYMBOLS SEE SK-2-58769.
2. FLOW PATH SHOWN AS A DASHED LINE IS FOR REFERENCE ONLY. SEE SK-2-58751(TANK 101),SK-2-58752(TANK 102),SK-2-58753 (TANK 103),SK-2-58754(TANK 104), AND SK-2-58756(CELLS) FOR FURTHER DEVELOPMENT.

DOES NOT CONTAIN CLASSIFIED OR UNCLASSIFIED CONTROLLED NUCLEAR INFORMATION

N/A

N/A

CONCEPTUAL

U.S. DEPARTMENT OF ENERGY
RICHLAND OPERATIONS OFFICE
WAISER ENGINEERS HANFORD COMPANY

HVAC
TANK VENTILATION SYSTEM

SK-2-58760 | 0

SK-2-58740 DRAWING LIST

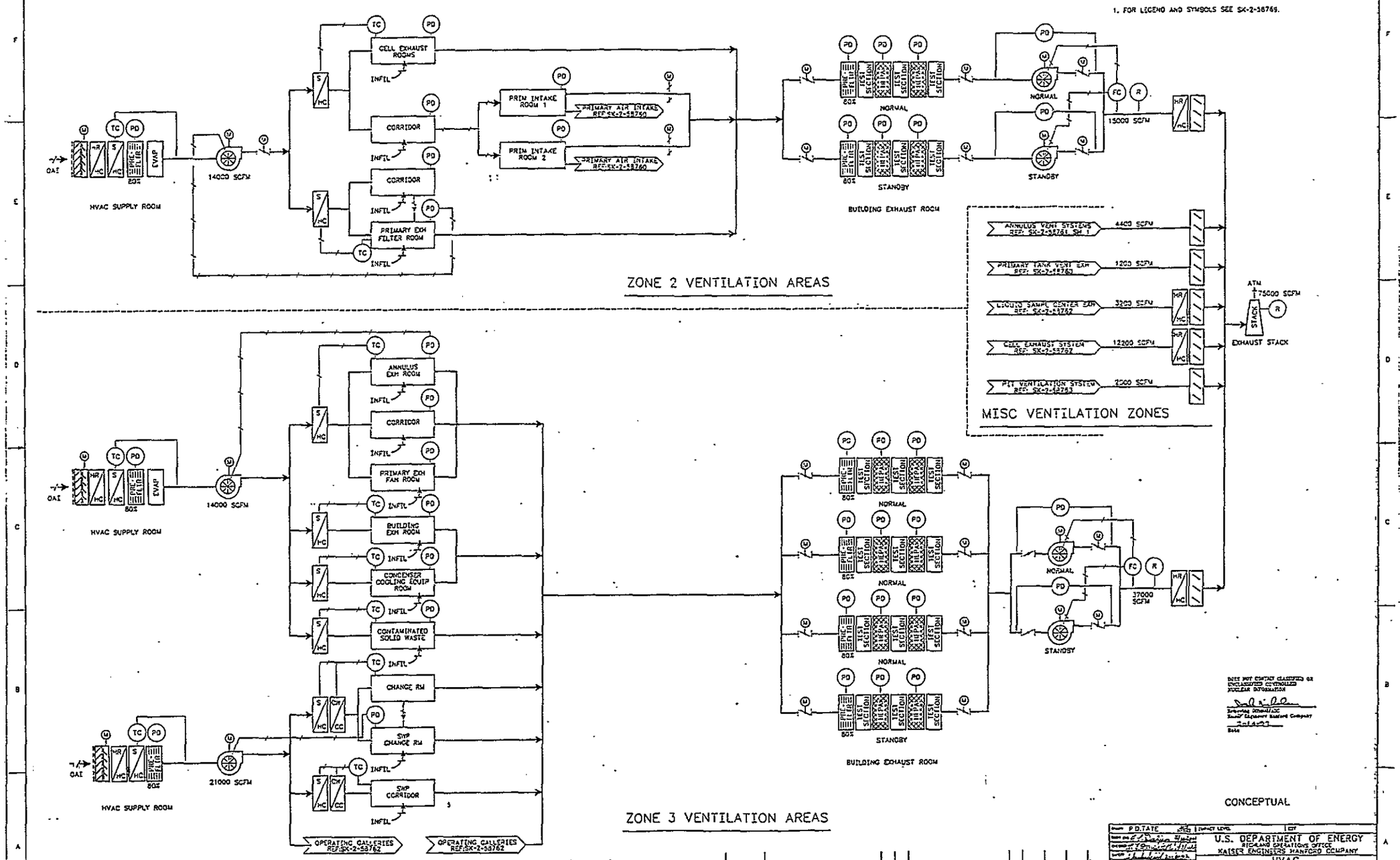
NOTES
1. FOR LEGEND AND SYMBOLS SEE SK-2-58769.
HVAC SUPPLY ROOM
14000 SCFM
CELL EXHAUST ROOMS
CORRIDOR
PRIMARY EXH FILTER ROOM
PRIM INTAKE ROOM 1
PRIM INTAKE ROOM 2
PRIMARY AIR INTAKE REF:SK-2-58760
NORMAL
STANDBY
BUILDING EXHAUST ROOM
15000 SCFM
ZONE 2 VENTILATION AREAS
ANNULUS VENT SYSTEMS REF: SK-2-58761 SH 1
4400 SCFM
PRIMARY TANK VENT EXH REF: SK-2-58763
1200 SCFM
LIQUID SAMPL CENTER EXH REF: SK-2-58762
3200 SCFM
CELL EXHAUST SYSTEM REF: SK-2-58762
12200 SCFM
PIT VENTILATION SYSTEM REF: SK-2-58763
2000 SCFM
MISC VENTILATION ZONES
ATM
75000 SCFM
STACK
EXHAUST STACK
ANNULUS EXH ROOM
PRIMARY EXH FAN ROOM
BUILDING EXH ROOM
CONDENSER COOLING EQUIP ROOM
CONTAMINATED SOLID WASTE
CHANGE RM
SWP CHANGE RM
SWP CORRIDOR
21000 SCFM
OPERATING GALLERIES REF:SK-2-58762
37000 SCFM
ZONE 3 VENTILATION AREAS
CONCEPTUAL
U.S. DEPARTMENT OF ENERGY
RICHLAND OPERATIONS OFFICE
KAISER ENGINEERS HANFORD COMPANY
HVAC
ZONES 2&3 VENTILATION SYSTEMS
W-236 MULTI-FUNCTION WASTE TANK FACIL
SK-2-58761
SK-2-58740 DRAWING LIST
REVISIONS

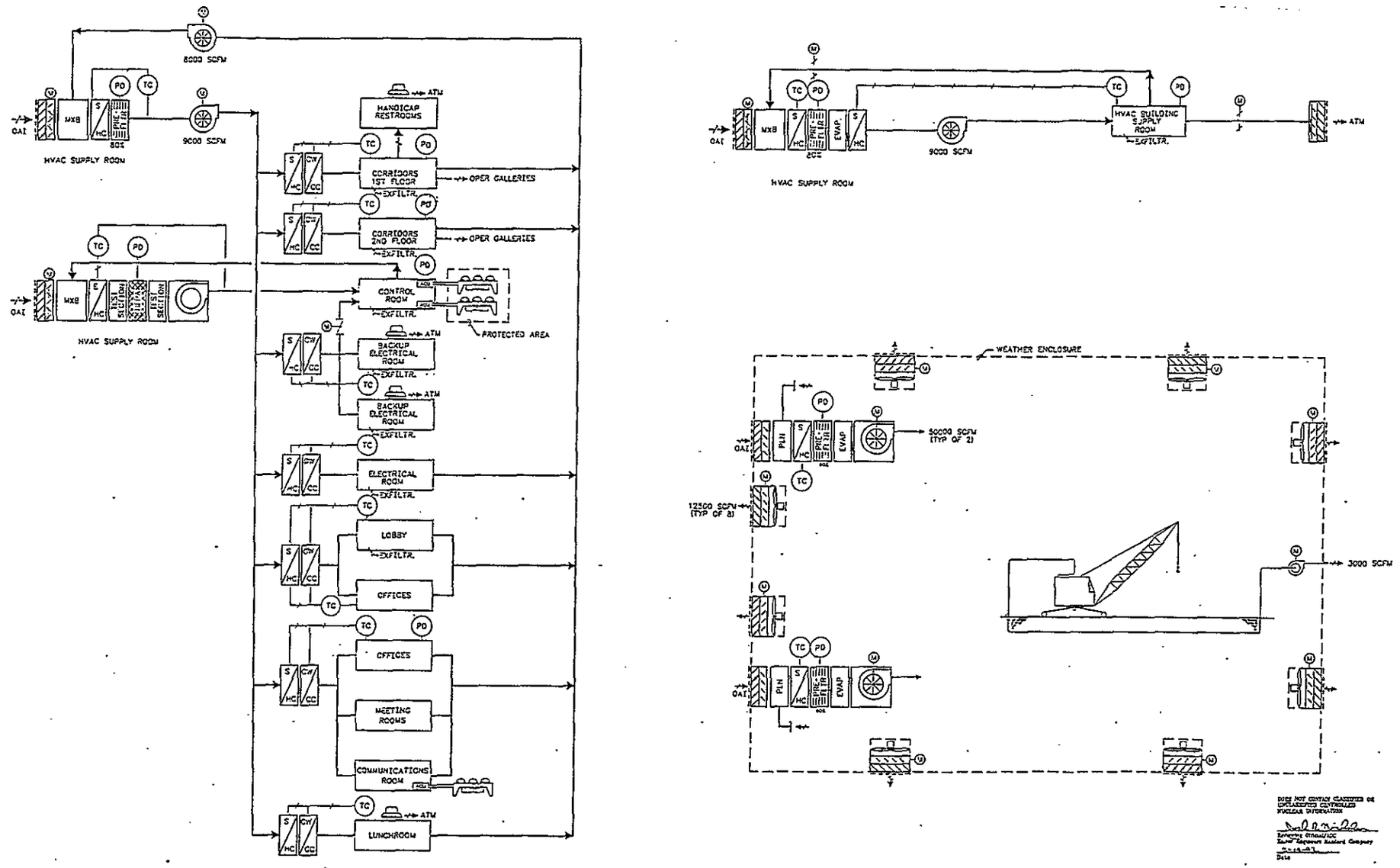

DOES NOT CONTAIN CLASSIFIED OR UNCLASSIFIED CONTROLLED NUCLEAR INFORMATION

Reviewing Official/IOC
Kaiser Engineers Hanford Company

Date

CONCEPTUAL

P.D.TATE	U.S. DEPARTMENT OF ENERGY RICHLAND OPERATIONS OFFICE KAISER ENGINEERS HANFORD COMPANY
	HVAC ZONE 4 VENTILATION SYSTEM
	W-236 MULTI-FUNCTION WASTE TANK FACIL
	F 2432 8900 SK-2-58761 0

SK-2-58740 DRAWING LIST

REVISIONS

X0587619 ZJ.DEC.ACDZ.11.0.NN

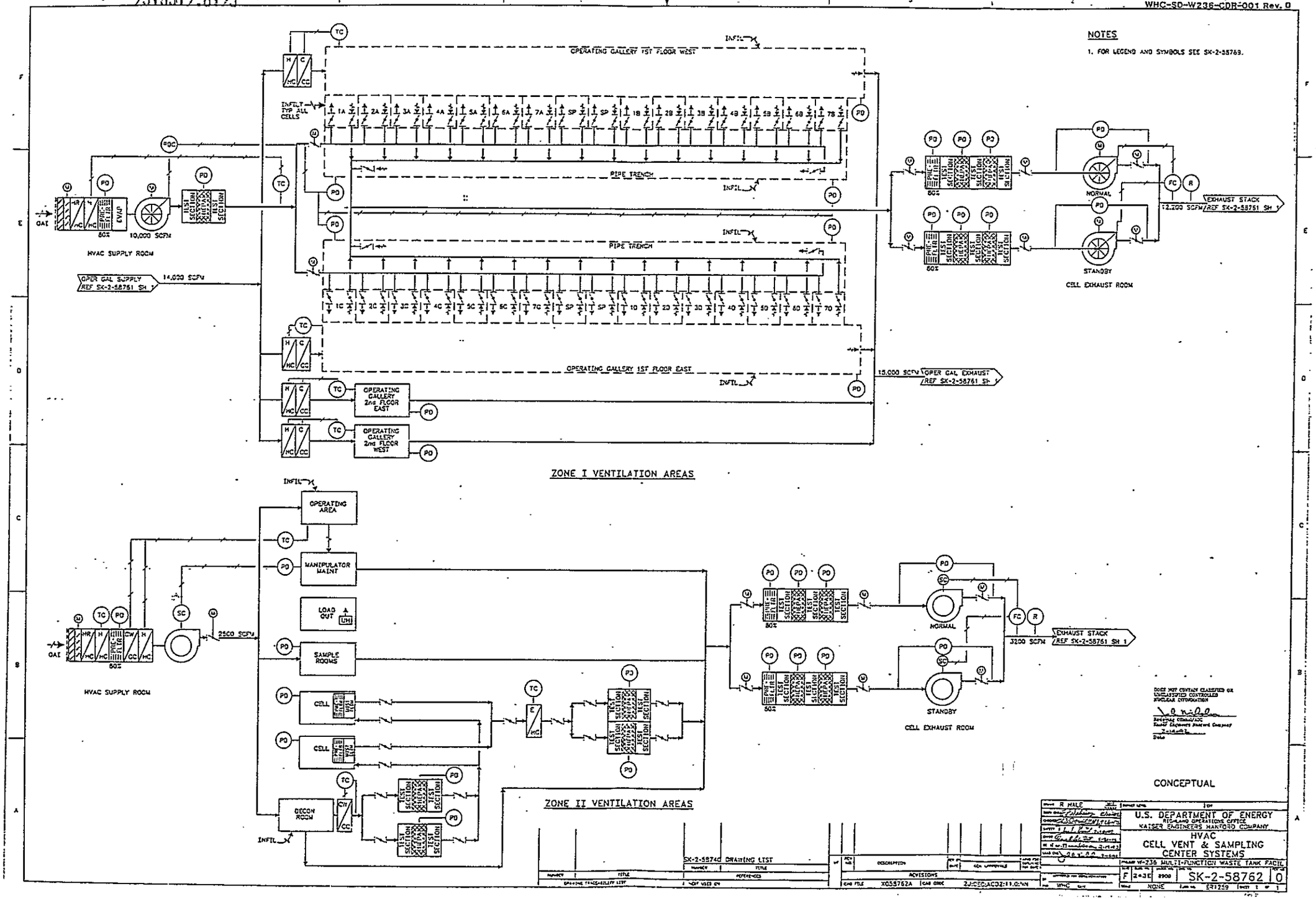
NOTES
1. FOR LEGEND AND SYMBOLS SEE SK-2-58769.
OPERATING GALLERY 1ST FLOOR WEST
INFIL
INFILT TYP ALL CELLS
PIPE TRENCH
OPERATING GALLERY 1ST FLOOR EAST
OPERATING GALLERY 2nd FLOOR EAST
OPERATING GALLERY 2nd FLOOR WEST
OAI
HVAC SUPPLY ROOM
10,000 SCFM
OPER GAL SUPPLY REF SK-2-58751 SH 1
14,000 SCFM
15,000 SCFM
OPER GAL EXHAUST REF SK-2-58751 SH 1
NORMAL
STANDBY
CELL EXHAUST ROOM
12,200 SCFM
EXHAUST STACK REF SK-2-58751 SH 1
ZONE I VENTILATION AREAS
OPERATING AREA
MANIPULATOR MAINT
LOAD OUT
SAMPLE ROOMS
CELL
DECON ROOM
2500 SCFM
3200 SCFM
ZONE II VENTILATION AREAS
CONCEPTUAL
U.S. DEPARTMENT OF ENERGY
RICHLAND OPERATIONS OFFICE
KAISER ENGINEERS HANFORD COMPANY
HVAC
CELL VENT & SAMPLING
CENTER SYSTEMS
SK-2-58762
0

NOTES

1. FOR LEGEND AND SYMBOLS SEE SK-2-58769

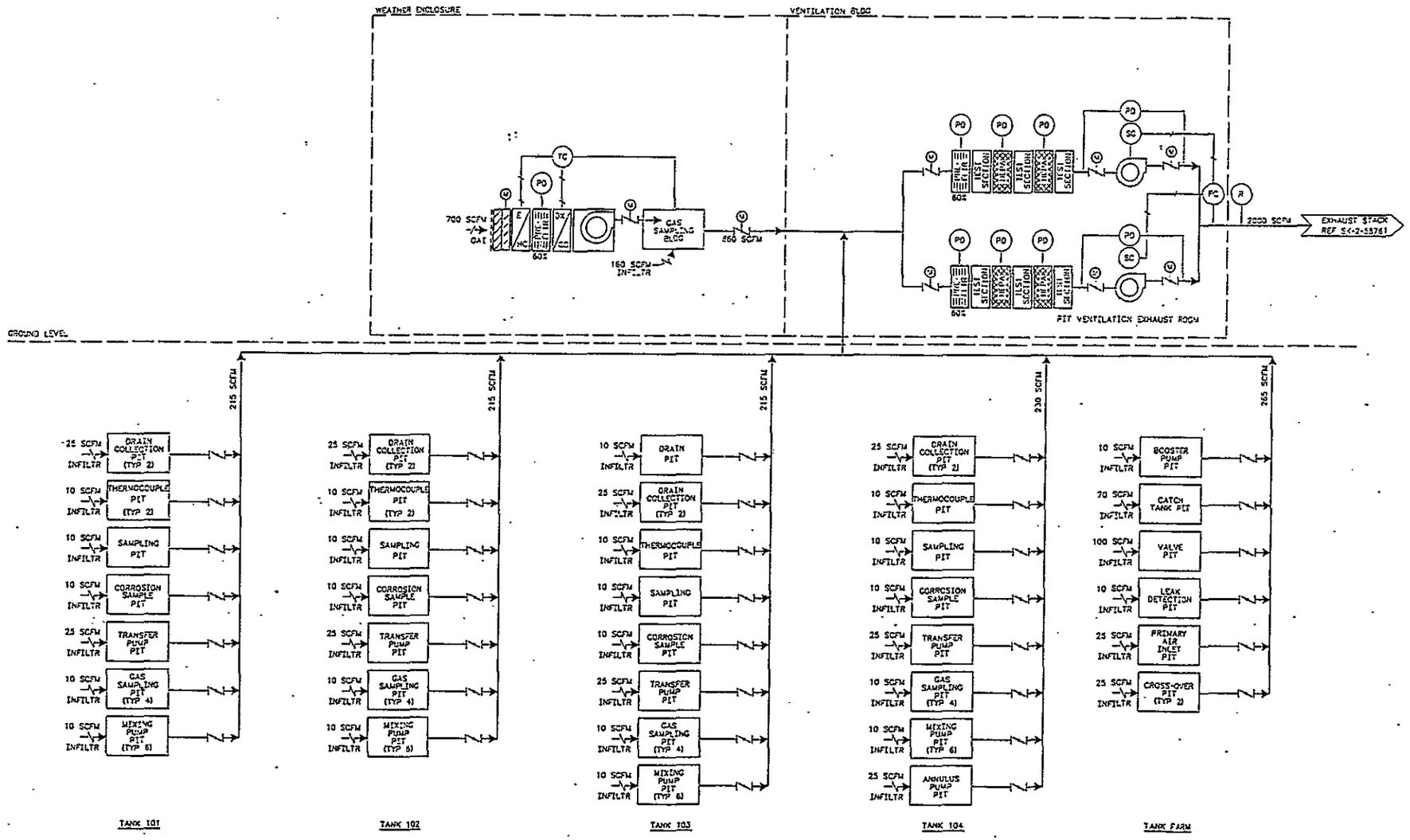

DOES NOT CONTAIN CLASSIFIED OR UNCLASSIFIED CONTROLLED NUCLEAR INFORMATION

N/A

Reviewing Official/ADC
Kaiser Engineers Hanford Company
N/A
Date

CONCEPTUAL

R HALE			
		U.S. DEPARTMENT OF ENERGY RICHLAND OPERATIONS OFFICE KAISER ENGINEERS HANFORD COMPANY	
		HVAC PIT VENTILATION SYSTEM	
		W-236 MULTI-FUNCTION WASTE TANK FACIL	
		F 2-3E 8900	SK-2-58763 0
		NONE	ER 1259

SK-2-58740 DRAWING LIST

XCS2763A

2JOSC 5002183.0.NN

WHC

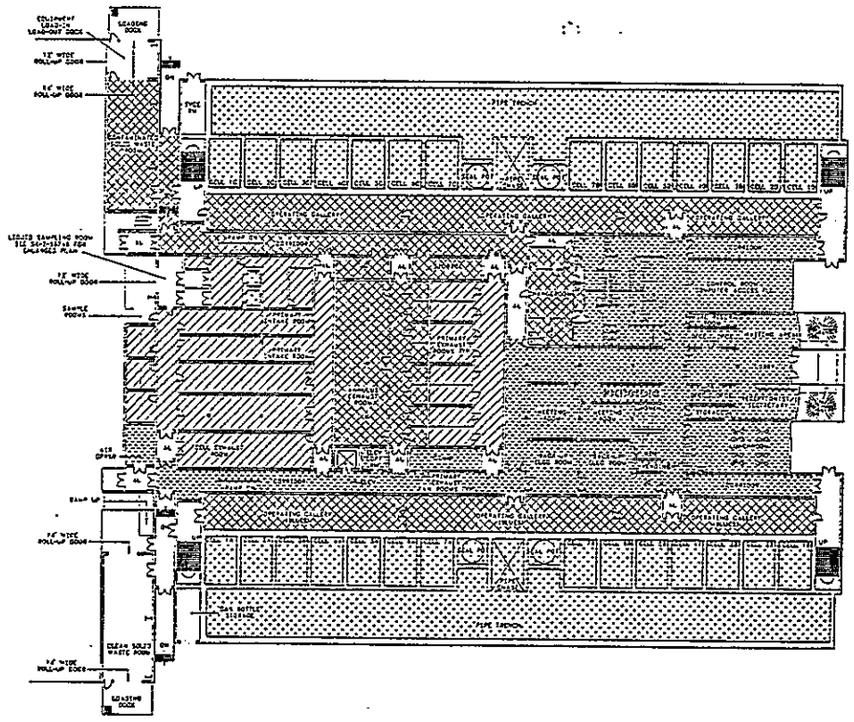

FIRST FLOOR PLAN

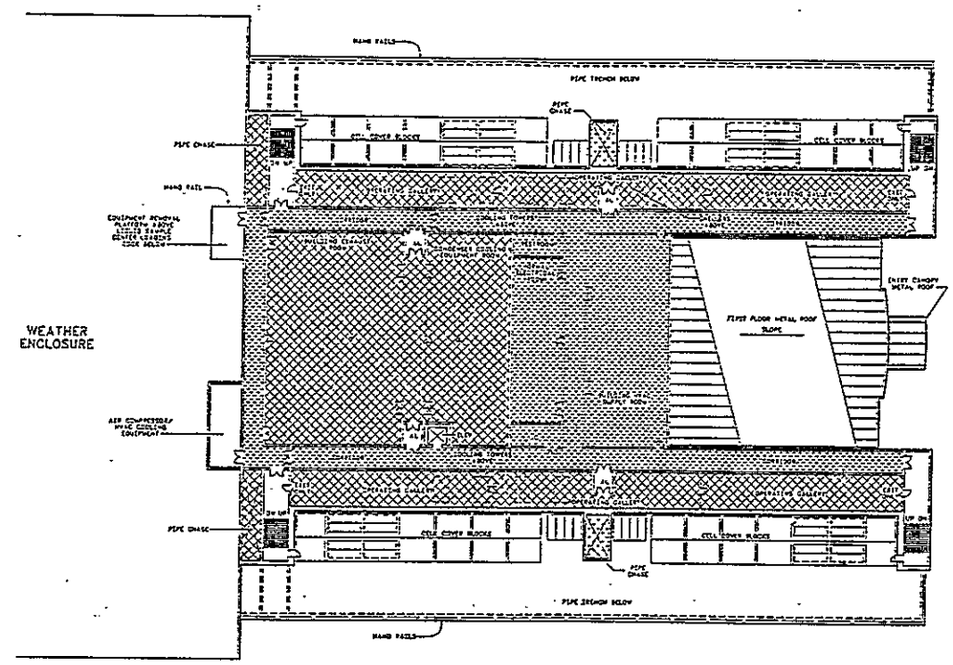

SECOND FLOOR PLAN

VENTILATION ZONES:

- ZONE 1
- ZONE 2
- ZONE 3
- ZONE 4
- AIRLOCK OR UNCONTROLLED SPACE

DOES NOT CONTAIN CLASSIFIED OR UNCLASSIFIED CONTROLLED NUCLEAR INFORMATION

N/A
Reviewing Official/ADC
Kaiser Engineers Hanford Company
N/A
Date

CONCEPTUAL

DRAWN RN CLAY	U.S. DEPARTMENT OF ENERGY RICHLAND OPERATIONS OFFICE KAISER ENGINEERS HANFORD COMPANY
	HVAC VENTILATION ZONE DIAGRAM
	W-236 MULTI-FUNCTION WASTE TANK FACIL
F 2435	SK-2-58764 0
NOT TO SCALE	

REVISIONS

CAD FILE X058764A CAD CODE 2.0DEC.4C02.11.DWN

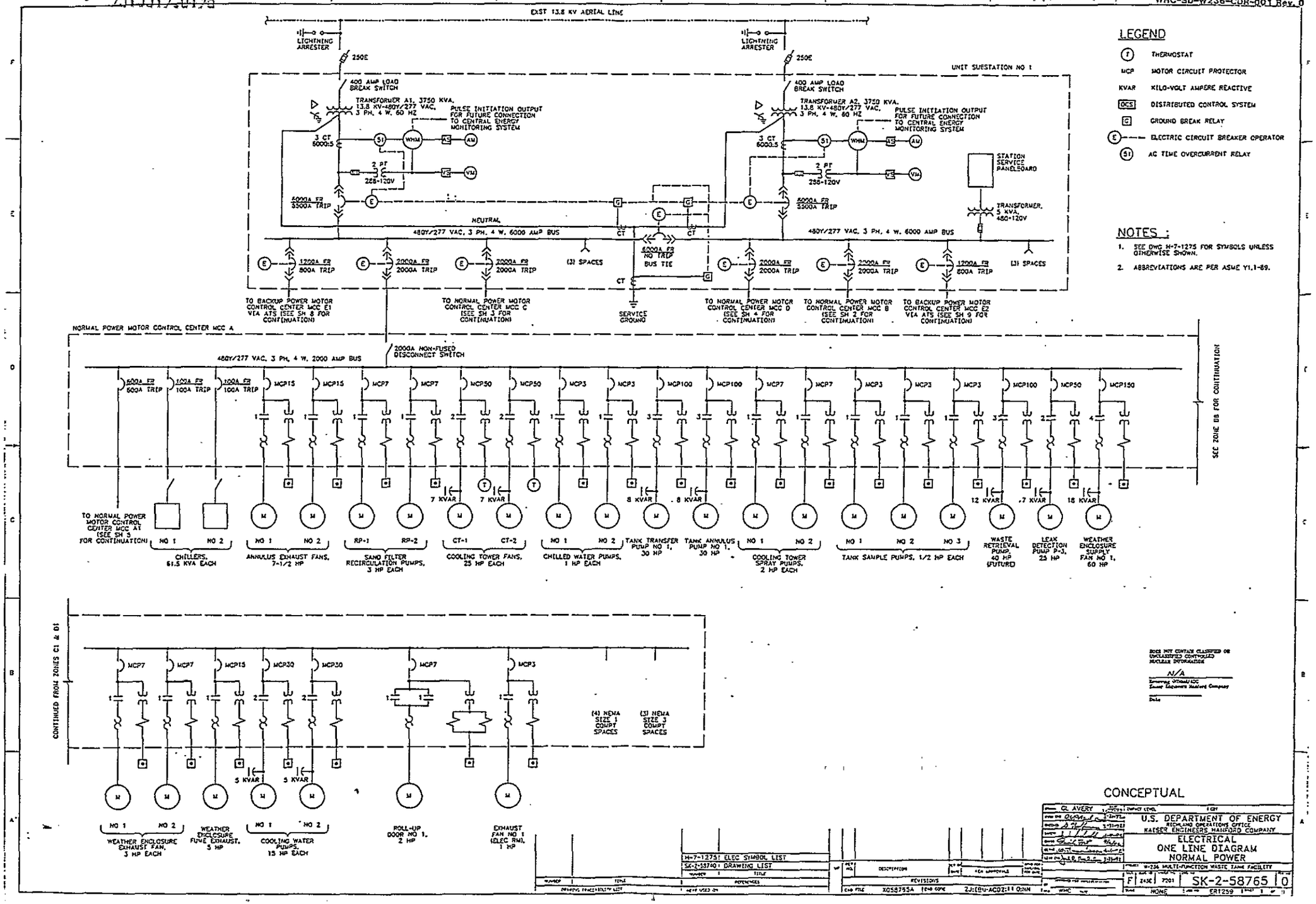
EXST 13.8 KV AERIAL LINE
LIGHTNING ARRESTER
250E
UNIT SUBSTATION NO 1
400 AMP LOAD BREAK SWITCH
TRANSFORMER A1, 3750 KVA, 13.8 KV-480Y/277 VAC, 3 PH, 4 W, 60 HZ
TRANSFORMER A2, 3750 KVA, 13.8 KV-480Y/277 VAC, 3 PH, 4 W, 60 HZ
PULSE INITIATION OUTPUT FOR FUTURE CONNECTION TO CENTRAL ENERGY MONITORING SYSTEM
3 CT 6000:5
2 PT 288-120V
6000A FR 5500A TRIP
STATION SERVICE PANELBOARD
TRANSFORMER, 5 KVA, 480-120V
NEUTRAL
480Y/277 VAC, 3 PH, 4 W, 6000 AMP BUS
6000A FR NO TRIP BUS TIE
1200A FR 800A TRIP
2000A FR 2000A TRIP
(3) SPACES
TO BACKUP POWER MOTOR CONTROL CENTER MCC E1 VIA ATS (SEE SH 8 FOR CONTINUATION)
TO NORMAL POWER MOTOR CONTROL CENTER MCC C (SEE SH 3 FOR CONTINUATION)
SERVICE GROUND
TO NORMAL POWER MOTOR CONTROL CENTER MCC D (SEE SH 4 FOR CONTINUATION)
TO NORMAL POWER MOTOR CONTROL CENTER MCC B (SEE SH 2 FOR CONTINUATION)
TO BACKUP POWER MOTOR CONTROL CENTER MCC E2 VIA ATS (SEE SH 9 FOR CONTINUATION)
NORMAL POWER MOTOR CONTROL CENTER MCC A
2000A NON-FUSED DISCONNECT SWITCH
480Y/277 VAC, 3 PH, 4 W, 2000 AMP BUS
600A FR 600A TRIP
100A FR 100A TRIP
MCP15
MCP7
MCP50
MCP3
MCP100
MCP150
7 KVAR
8 KVAR
12 KVAR
18 KVAR
SEE ZONE BB FOR CONTINUATION
TO NORMAL POWER MOTOR CONTROL CENTER MCC A1 (SEE SH 5 FOR CONTINUATION)
NO 1
NO 2
CHILLERS, 61.5 KVA EACH
ANNULUS EXHAUST FANS, 7-1/2 HP
RP-1
RP-2
SAND FILTER RECIRCULATION PUMPS, 3 HP EACH
CT-1
CT-2
COOLING TOWER FANS, 25 HP EACH
CHILLED WATER PUMPS, 1 HP EACH
TANK TRANSFER PUMP NO 1, 30 HP
TANK ANNULUS PUMP NO 1, 30 HP
COOLING TOWER SPRAY PUMPS, 2 HP EACH
NO 3
TANK SAMPLE PUMPS, 1/2 HP EACH
WASTE RETRIEVAL PUMP, 40 HP (FUTURE)
LEAK DETECTION PUMP P-3, 25 HP
WEATHER ENCLOSURE SUPPLY FAN NO 1, 60 HP
CONTINUED FROM ZONES C1 & D1
MCP30
(4) NEMA SIZE 1 COMPT SPACES
(3) NEMA SIZE 3 COMPT SPACES
5 KVAR
WEATHER ENCLOSURE EXHAUST FAN, 3 HP EACH
WEATHER ENCLOSURE FUME EXHAUST, 5 HP
COOLING WATER PUMPS, 15 HP EACH
ROLL-UP DOOR NO 1, 2 HP
EXHAUST FAN NO 1 (ELEC RM), 1 HP
LEGEND
THERMOSTAT
MCP MOTOR CIRCUIT PROTECTOR
KVAR KILO-VOLT AMPERE REACTIVE
DCS DISTRIBUTED CONTROL SYSTEM
G GROUND BREAK RELAY
E ELECTRIC CIRCUIT BREAKER OPERATOR
51 AC TIME OVERCURRENT RELAY
NOTES :
1. SEE DWG H-7-1275 FOR SYMBOLS UNLESS OTHERWISE SHOWN.
2. ABBREVIATIONS ARE PER ASME Y1.1-89.
DOES NOT CONTAIN CLASSIFIED OR UNCLASSIFIED CONTROLLED NUCLEAR INFORMATION
N/A
CONCEPTUAL
H-7-1275: ELEC SYMBOL LIST
SK-2-58740: DRAWING LIST
U.S. DEPARTMENT OF ENERGY
RICHLAND OPERATIONS OFFICE
KAISER ENGINEERS HANFORD COMPANY
ELECTRICAL
ONE LINE DIAGRAM
NORMAL POWER
W-236 MULTI-FUNCTION WASTE TANK FACILITY
SK-2-58765
0
NONE
ER1259

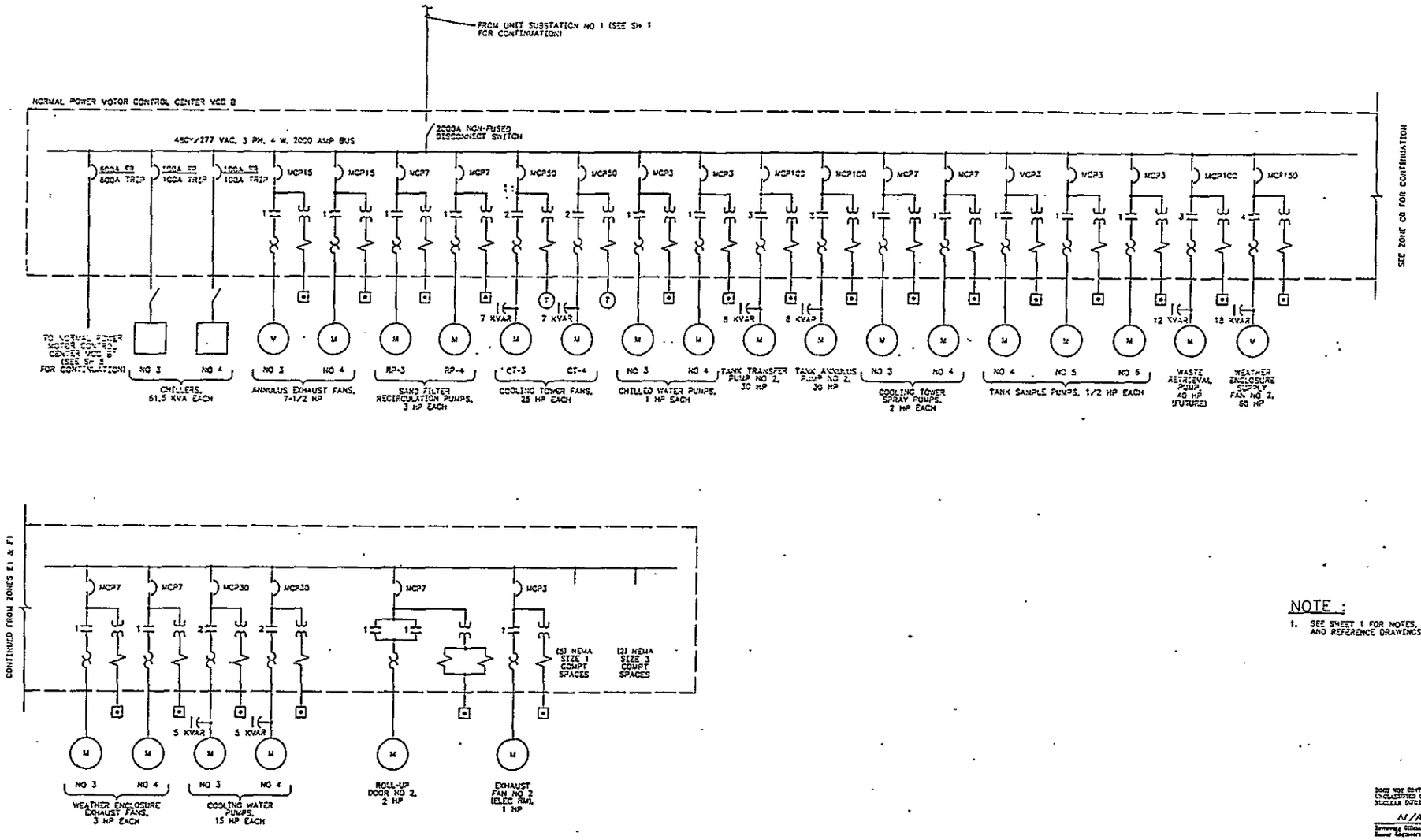

NOTE :

1. SEE SHEET 1 FOR NOTES, LEGEND AND REFERENCE DRAWINGS.

DOES NOT CONTAIN CLASSIFIED OR UNCLASSIFIED CONTROLLED NUCLEAR INFORMATION

N/A

Reviewing Official/ADC
Kaiser Engineers Hanford Company

Date

CONCEPTUAL

DRAWN GL AVERY	IMPACT LEVEL 1 CAT
	U.S. DEPARTMENT OF ENERGY RICHLAND OPERATIONS OFFICE KAISER ENGINEERS HANFORD COMPANY
	ELECTRICAL ONE LINE DIAGRAM NORMAL POWER
	W-236 MULTI-FUNCTION WASTE TANK FACILITY
	F 2436 7231 SK-2-58765 0

NUMBER	TITLE	NUMBER	TITLE	REFERENCES
DRAWING TRANSMITTAL LIST				

NO	DESCRIPTION	BY	DATE	NON APPROVALS	APPROVED FOR CONSTRUCTION
	REVISIONS				

DWG FILE X0587655 CAD DESK 2:23:31PM 02:11:01 1994

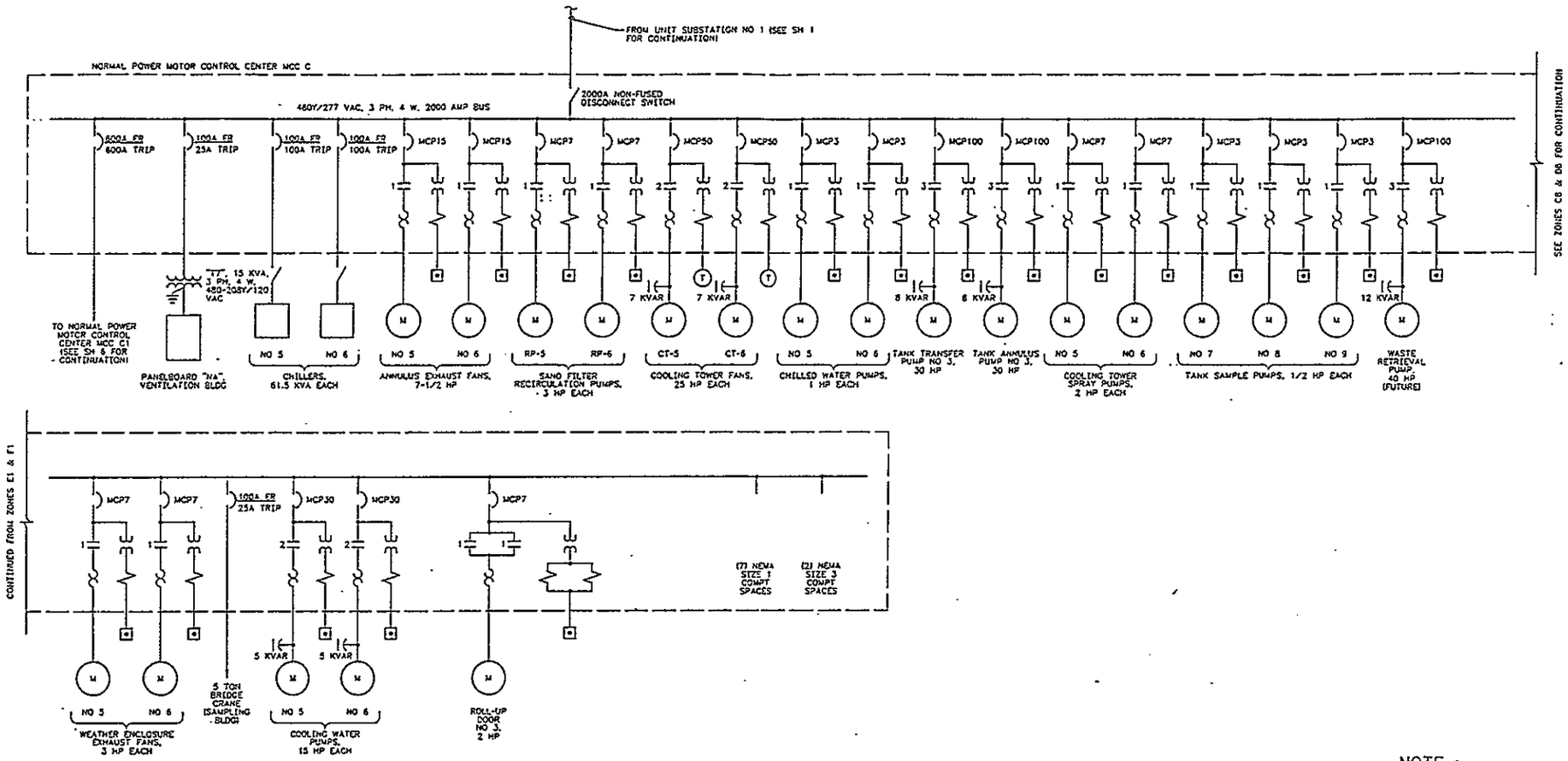

NOTE :

1. SEE SHEET 1 FOR NOTES, LEGEND AND REFERENCE DRAWINGS.

DOES NOT CONTAIN CLASSIFIED OR UNCLASSIFIED CONTROLLED NUCLEAR INFORMATION

N/A

Reviewing Official/UCI
Kaiser Engineers Hanford Company

Date

CONCEPTUAL

DRAWN	GL AVERY		
CHECKED			

U.S. DEPARTMENT OF ENERGY
RICHLAND OPERATIONS OFFICE
KAISER ENGINEERS HANFORD COMPANY

ELECTRICAL
ONE LINE DIAGRAM
NORMAL POWER

PROJECT W-236 MULTI-FUNCTION WASTE TANK FACILITY

SIZE	CODE IDENT NO	DRAWING NO	REV
F	24.3E	7201	SK-2-58765	0

SCALE NONE | CONTRACT NO ER1259 | SHEET 3 OF 9

NUMBER	TITLE	NUMBER	TITLE
DRAWING TRACEABILITY LIST		NEXT USED ON	REFERENCES

NO	DESCRIPTION	DATE	APPROVALS
REVISIONS			

CAD FILE X058765C CAD CODE 2JHIEW:AC02:11 0:00M

W-C

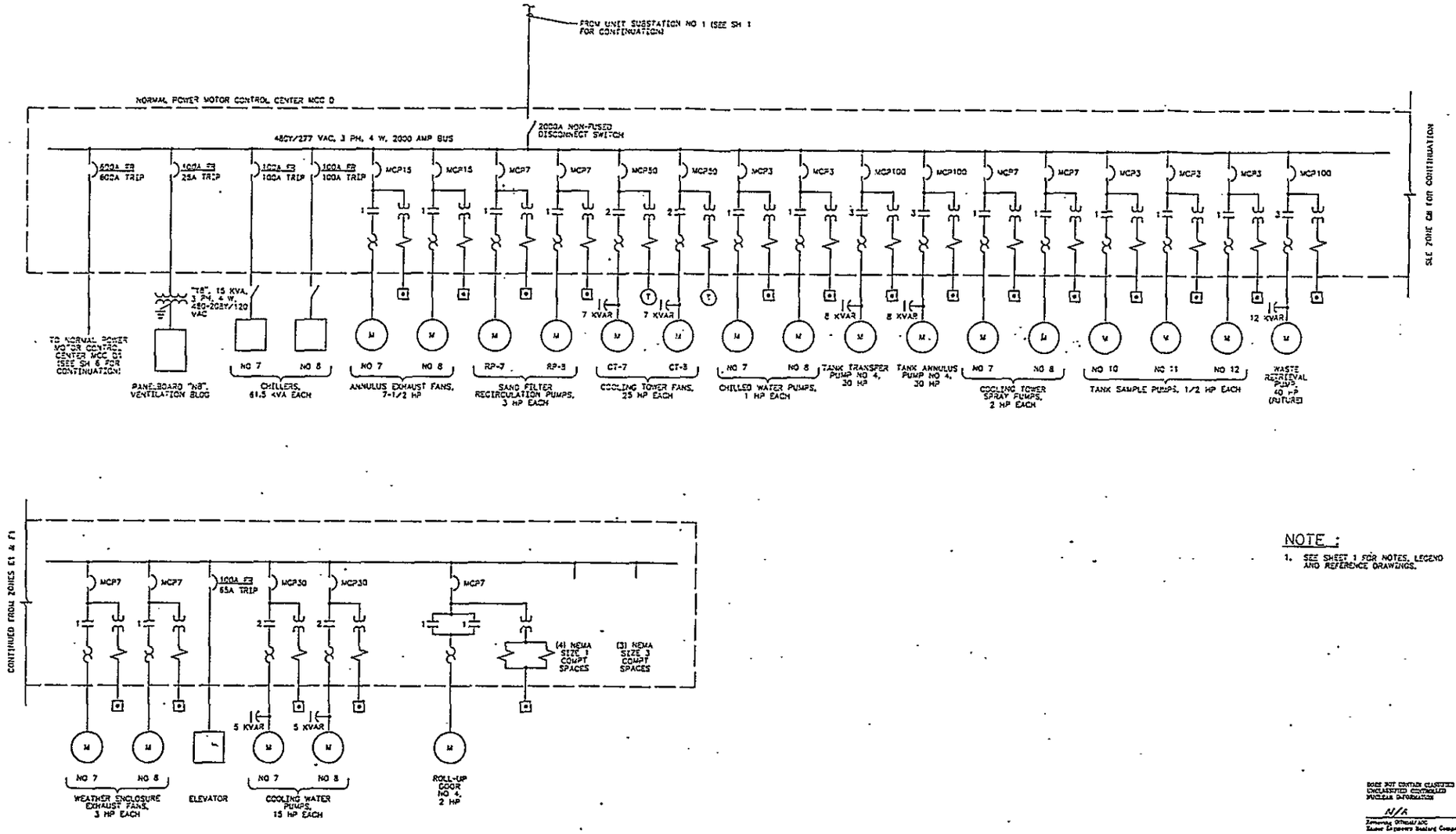

NOTE :

1. SEE SHEET 1 FOR NOTES, LEGEND AND REFERENCE DRAWINGS.

DOES NOT CONTAIN CLASSIFIED OR UNCLASSIFIED CONTROLLED NUCLEAR INFORMATION

N/A

Authorizing Official/ADC
Kaiser Engineers Hanford Company

Date

CONCEPTUAL

DRAWN GL AVERY	DATE 1-27-92
DRAWN BY	DATE 3-11-92
DESIGNED	DATE 3-11-92
DATE	
DATE	
DATE	
DATE	
DATE	

DATE LEVEL 1 OF 1

U.S. DEPARTMENT OF ENERGY
RICHLAND OPERATIONS OFFICE
KAISER ENGINEERS HANFORD COMPANY

ELECTRICAL
ONE LINE DIAGRAM
NORMAL POWER

PROJECT W-236 MULTI-FUNCTION WASTE TANK FACILITY

DWG SIZE	DWG NO	SHEET NO	REVISION
F	24JE	7201	SK-2-58765	0

SCALE NONE | SHEET NO. E91259 | SHEET 8 OF 9

NUMBER	TITLE	NUMBER	TITLE
DRAWING TRACEABILITY LIST		REFERENCES	

1. NEXT USED ON

NO	REV NO	DESCRIPTION	TYPE OF CHANGE	REV APPROVALS	DATE	APPROVED FOR CONSTRUCTION
REVISIONS						

CAD FILE X0587653 CAD CODE 2JUL91ACD2.11 C.NN

APPROVED FOR CONSTRUCTION

BY

DATE

WHC

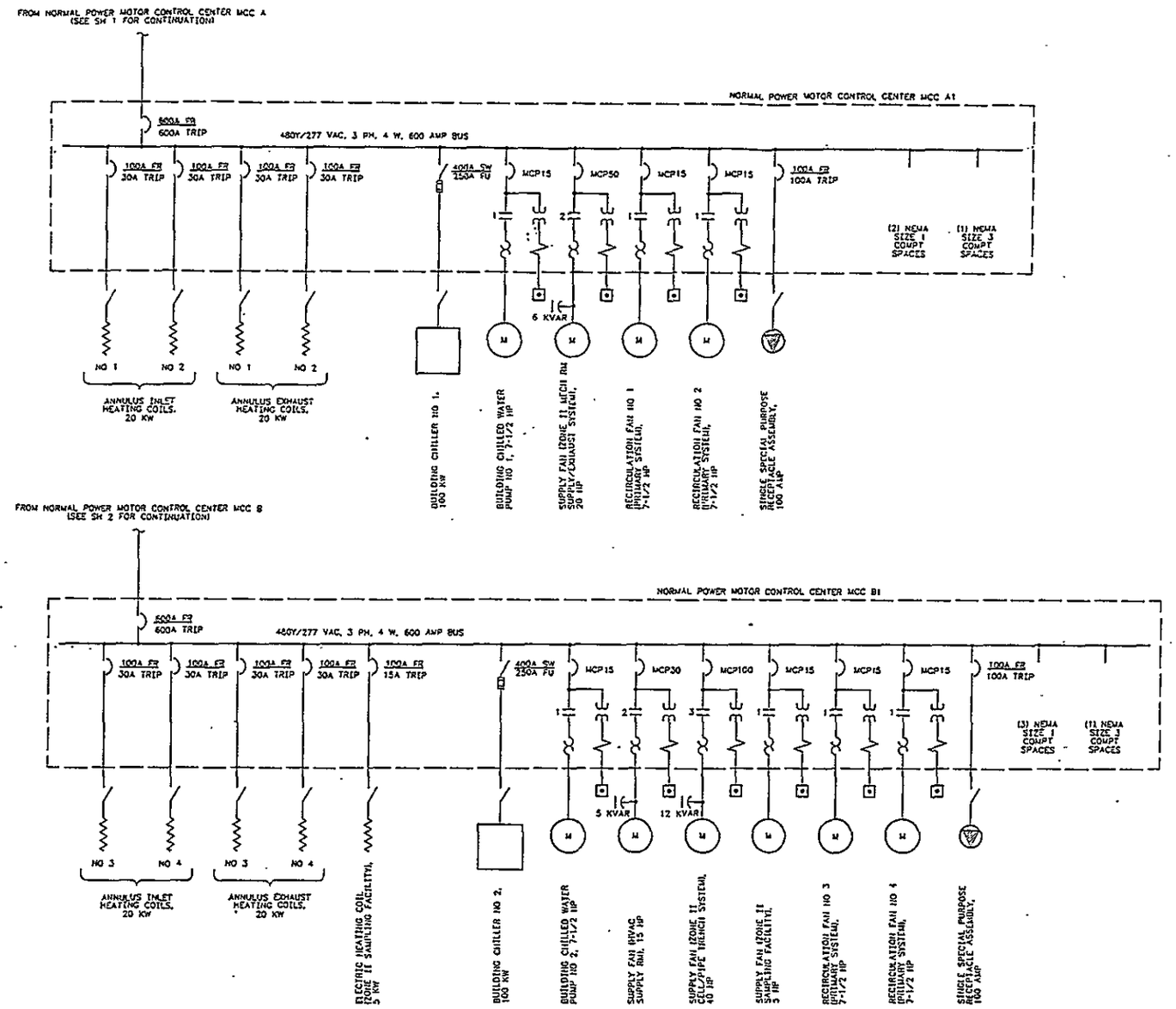

NOTE :

1. SEE SHEET 1 FOR NOTES, LEGEND AND REFERENCE DRAWINGS.

DOES NOT CONTAIN CLASSIFIED OR UNCLASSIFIED CONTROLLED NUCLEAR INFORMATION

N/A

Reviewing Official/IDC
Kaiser Engineers Hanford Company

Date

CONCEPTUAL

GL AVERY

U.S. DEPARTMENT OF ENERGY
RICHLAND OPERATIONS OFFICE
KAISER ENGINEERS HANFORD COMPANY

ELECTRICAL
ONE LINE DIAGRAM
NORMAL POWER

W-236 MULTI-FUNCTION WASTE TANK FACILITY

F | 2430 | 7201 | SK-2-58765 | 0

NONE

REVISIONS

X058765E

ZJ:TEM:ACD2:11 0:MN

9513319.0203

WHC-SD-W236-CDR-001 Rev. 0

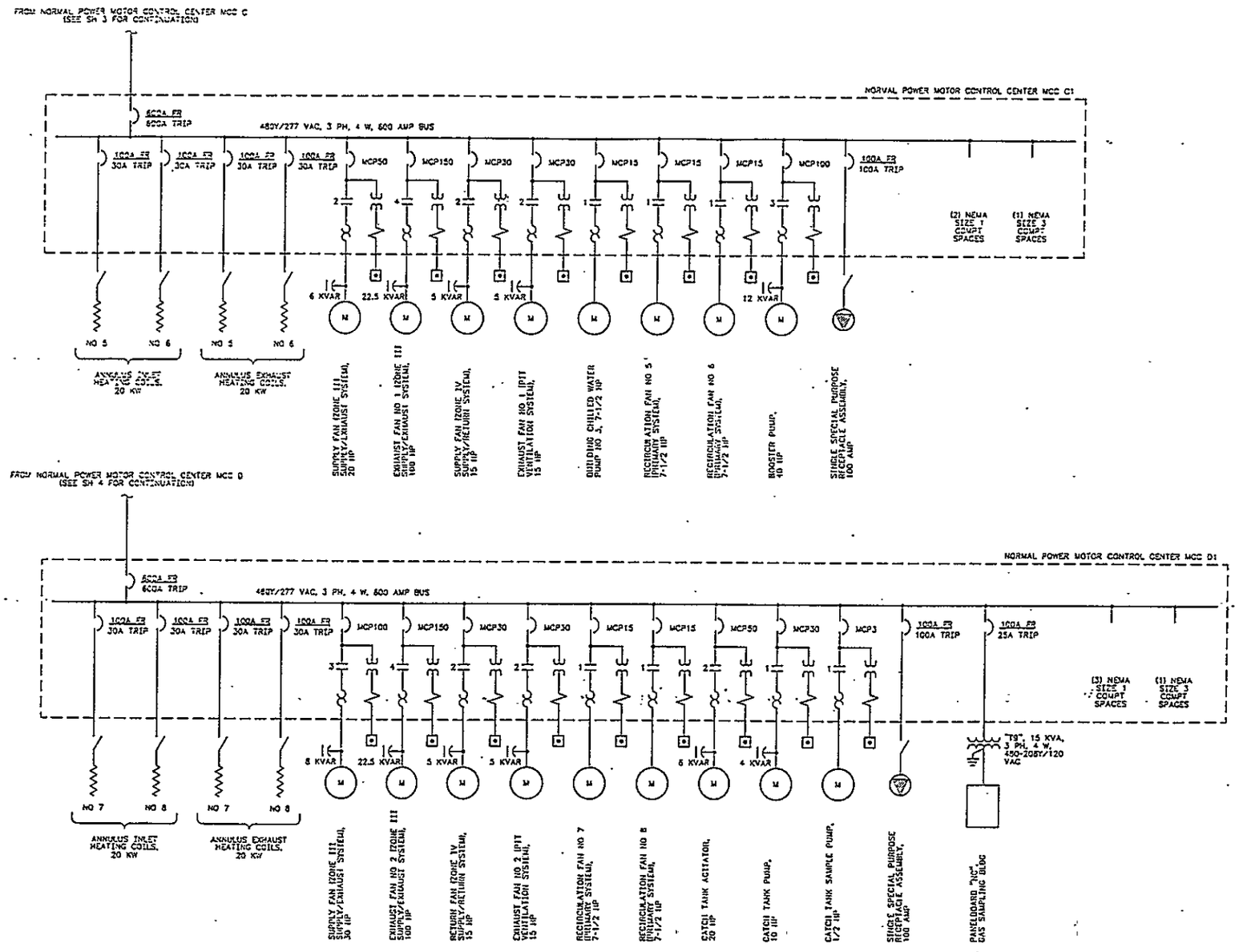

NOTE :

1. SEE SHEET 1 FOR NOTES, LEGEND AND REFERENCE DRAWINGS.

DOES NOT CONTAIN CLASSIFIED OR UNCLASSIFIED CONTROLLED NUCLEAR INFORMATION

N/A

Reviewing Official/ADC
Kaiser Engineers Hanford Company

Date

CONCEPTUAL

GL AVERY

U.S. DEPARTMENT OF ENERGY
RICHLAND OPERATIONS OFFICE
KAISER ENGINEERS HANFORD COMPANY

ELECTRICAL
ONE LINE DIAGRAM
NORMAL POWER

W-236 MULTI-FUNCTION WASTE TANK FACILITY

F 243C 7201 SK-2-58765 0

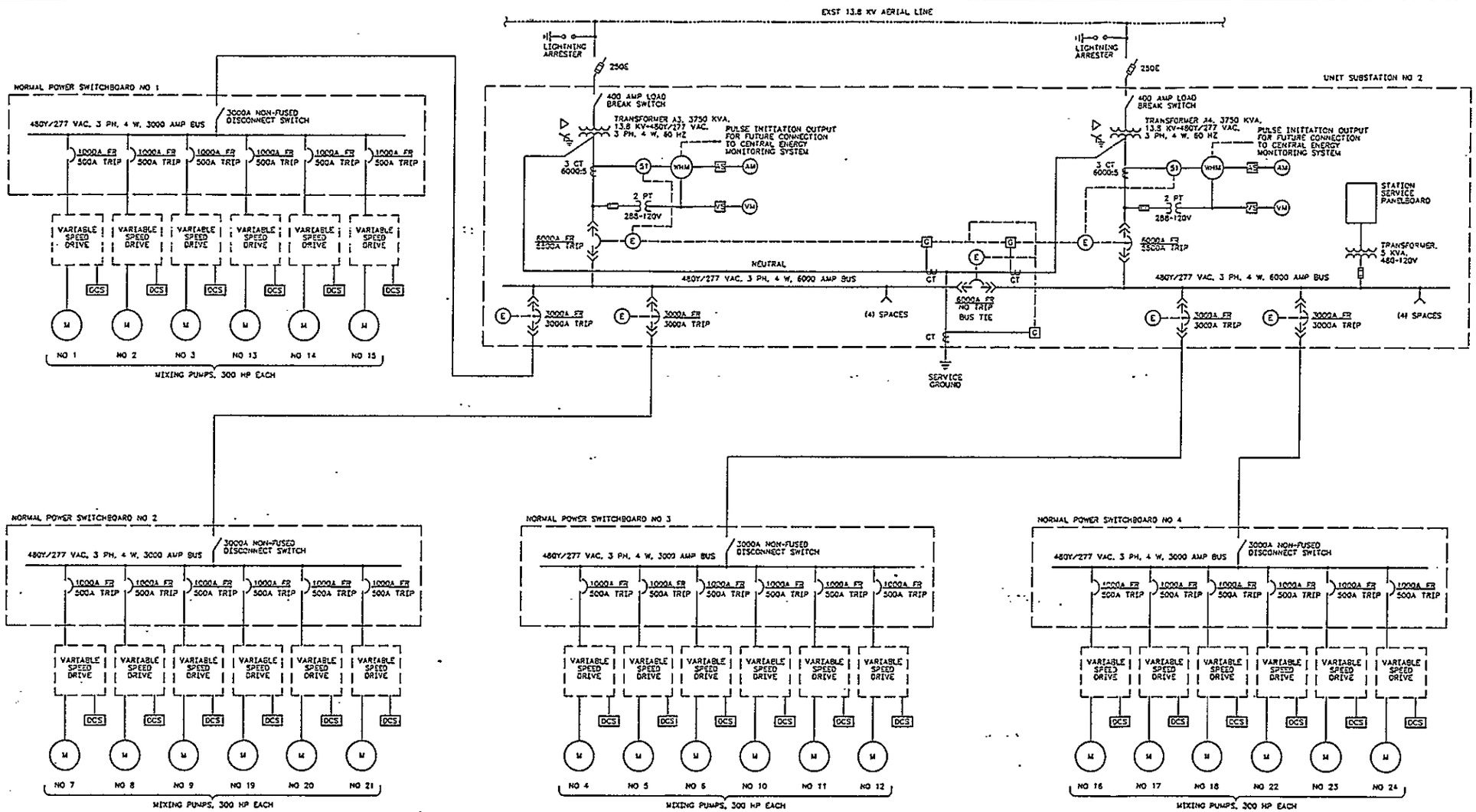

NOTE :

1. SEE SHEET 1 FOR NOTES, LEGEND AND REFERENCE DRAWINGS.

DOES NOT CONTAIN CLASSIFIED OR UNCLASSIFIED CONTROLLED NUCLEAR INFORMATION

N/A

Reviewing Official/UCNI
Kaiser Engineers Hanford Company

Date

CONCEPTUAL

DRAWN GL AVERY	DATE	DIRECT LEVEL	EDV
CHECKED			
		U.S. DEPARTMENT OF ENERGY RICHLAND OPERATIONS OFFICE KAISER ENGINEERS HANFORD COMPANY	
		ELECTRICAL ONE LINE DIAGRAM NORMAL POWER	
		PROJECT W-236 MULTI-FUNCTION WASTE TANK FACILITY	
		F 243E 7201	SK-2-58765 0
		SCALE NONE	ERT259 SHEET 7 OF 9

NUMBER	TITLE	NUMBER	TITLE
DRAWING SPACE/FACILITY LIST		NEXT USED ON	REFERENCES

REV NO.	DESCRIPTION	DATE	REV APPROVALS	DATE	REV APPROVALS
	REVISIONS				

CAD FILE X058765G CAD CODE 2J:12M AC02:11.0:NN

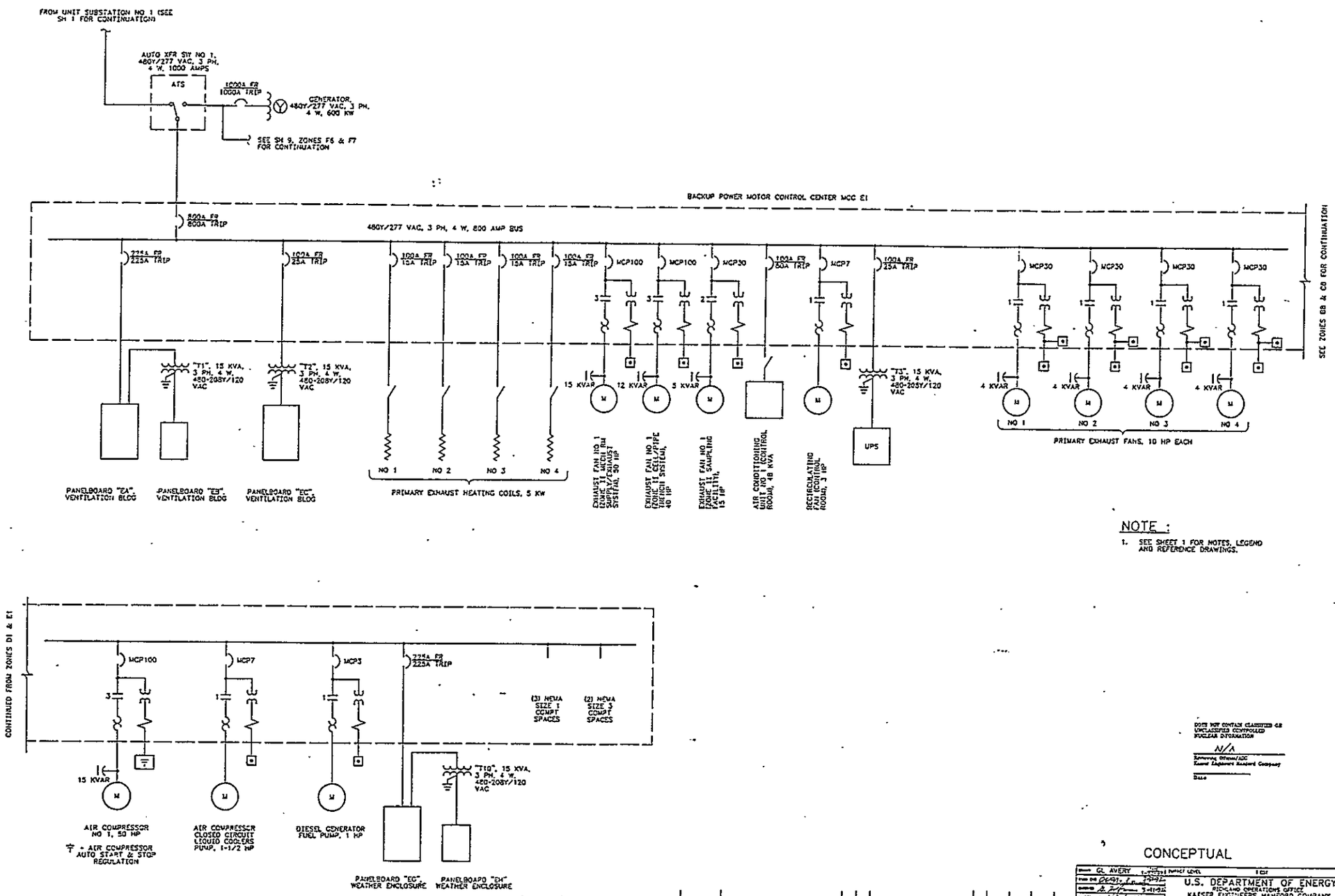

NOTE :

1. SEE SHEET 1 FOR NOTES, LEGEND AND REFERENCE DRAWINGS.

DOES NOT CONTAIN CLASSIFIED OR UNCLASSIFIED CONTROLLED NUCLEAR INFORMATION

N/A

Reviewing Official/ADC
Kaiser Engineers Hanford Company

Date

CONCEPTUAL

GL AVERY

U.S. DEPARTMENT OF ENERGY
RICHLAND OPERATIONS OFFICE
KAISER ENGINEERS HANFORD COMPANY

ELECTRICAL
ONE LINE DIAGRAM
BACKUP POWER

W-236 MULTI-FUNCTION WASTE TANK FACILITY

F | 2436 | 7201 | SK-2-58765 | 0

REVISIONS

X058765H

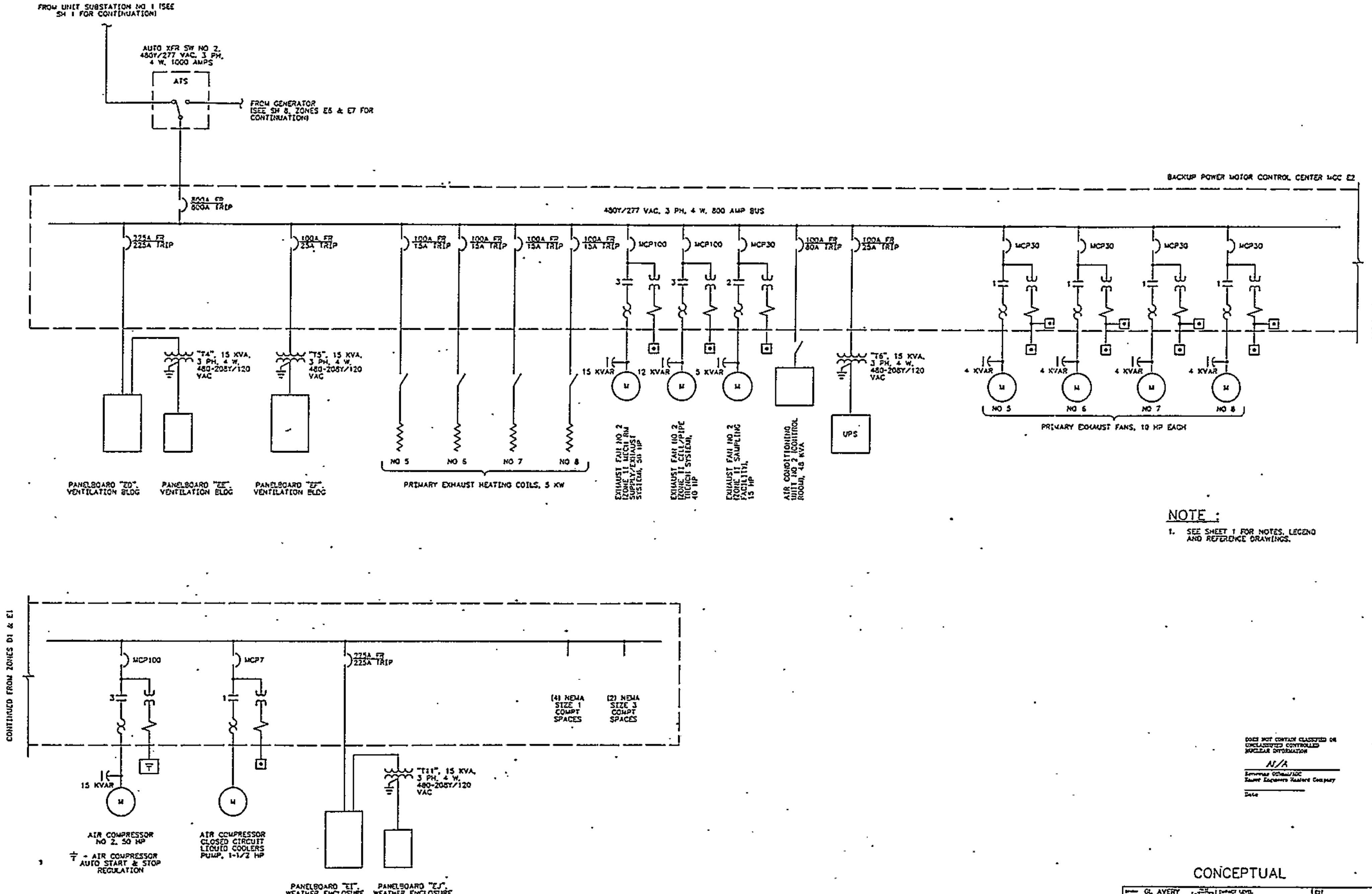

DOES NOT CONTAIN CLASSIFIED OR UNCLASSIFIED CONTROLLED NUCLEAR INFORMATION

N/A

CONCEPTUAL

GL AVERY

U.S. DEPARTMENT OF ENERGY
RICHLAND OPERATIONS OFFICE
KAISER ENGINEERS HANFORD COMPANY

ELECTRICAL
ONE LINE DIAGRAM
BACKUP POWER

W-236 MULTI-FUNCTION WASTE TANK FACILITY

F | SK-2-58765 | 0

REVISIONS

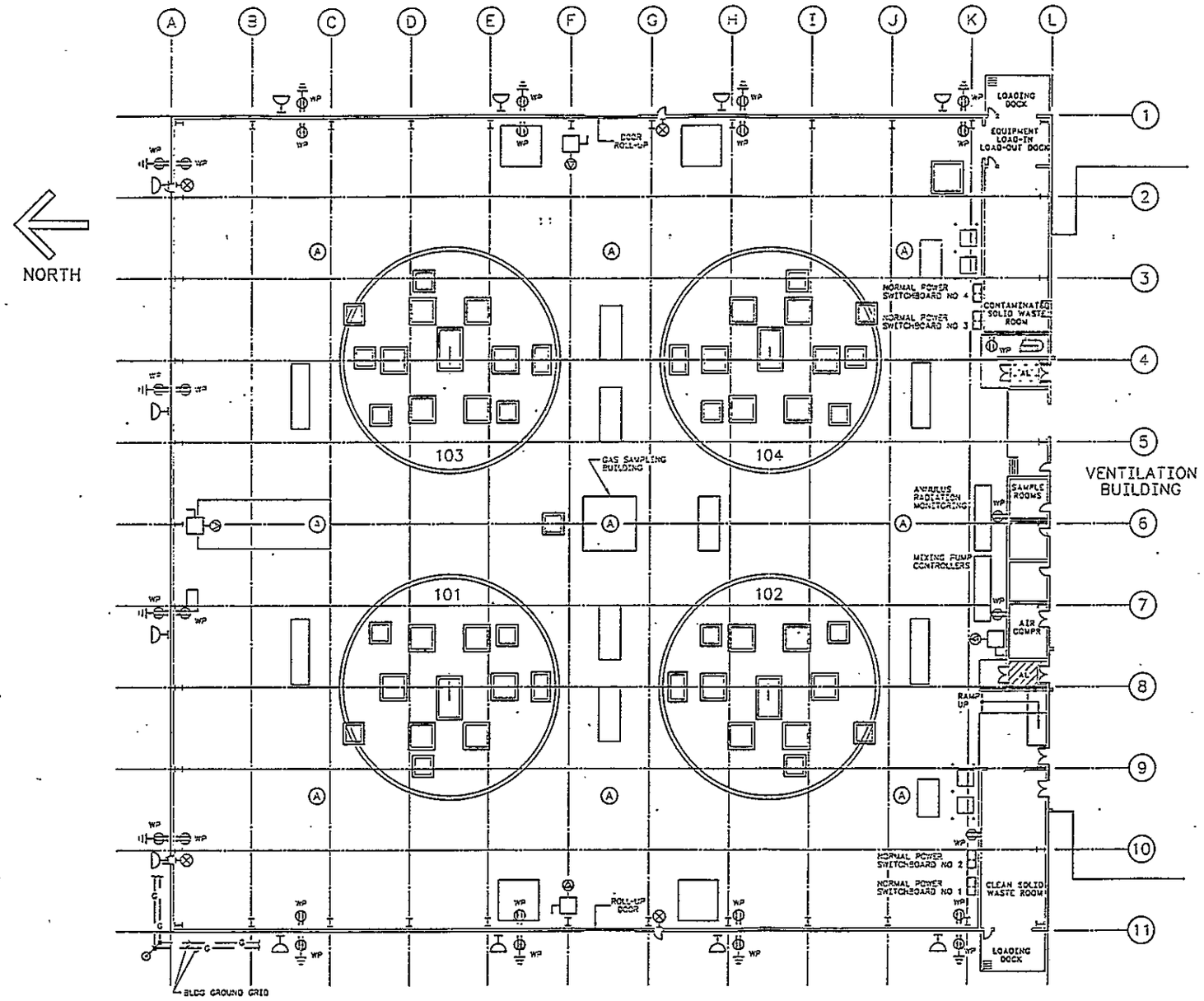

PLAN - WEATHER ENCLOSURE

SCALE: 1/16" = 1'-0"

SYMBOL LIST

SYMBOL	DESCRIPTION
WP	DUPLEX RECEPTACLE, 20 AMP, 125 VOLT, 3 WIRE, STRAIGHT BLADE, NEMA TYPE 5-20R (HOUSE IN SPRING COVER WEATHERPROOF ENCLOSURE)
WP	DUPLEX RECEPTACLE, GROUND FAULT INTERRUPTING TYPE, 20 AMP, 125 VOLT, 3 WIRE, STRAIGHT BLADE, NEMA TYPE 5-20R (HOUSE IN SPRING COVER WEATHERPROOF ENCLOSURE)
	SINGLE RECEPTACLE AND DISCONNECT SWITCH ASSEMBLY, 100 AMP, 600 VOLT, 3 WIRE, 4 POLE, INTERLOCKED SAFETY FEATURE
A	HIGH PRESSURE SODIUM LIGHTING FIXTURE, 277 VOLT, 1000 WATTS, CEILING MOUNTED
	LOW PRESSURE SODIUM FLOODLIGHTING UNIT, 277 VOLT, 35 WATTS, WALL MOUNTED
	EXIT LIGHTING FIXTURE, 120 VOLT, 50 WATTS, WALL MOUNTED

DOES NOT CONTAIN CLASSIFIED OR UNCLASSIFIED CONTROLLED NUCLEAR INFORMATION

N/A

Reviewing Officer/ADC
Kaiser Engineers Hanford Company

Date

CONCEPTUAL

GL AVERY

U.S. DEPARTMENT OF ENERGY
RICHLAND OPERATIONS OFFICE
KAISER ENGINEERS HANFORD COMPANY

ELECTRICAL
PLAN
WEATHER ENCLOSURE

PROJECT W-235 MULTI-FUNCTION WASTE TANK FACILITY

F 2436 7100 SK-2-58766 0

SK-2-58740 DRAWING LIST

REVISIONS

XC5U756A

9513319.0208

GRAPHIC SYMBOL

- BP — BACKFLOW PREVENTER
- BLIND FLANGE
- UNDEFINED SIGNAL
- ELECTRICAL OR HIDDEN OR FUTURE OR FLOW PATH REFERENCE
- E — ELECTRICAL HEAT TRACE
- FLANGED CONNECTION
- REDUCER
- SPRAY NOZZLE
- WELD CAP
- SCREWED CAP
- FLEXIBLE JUMPER
- OR — REMOTE NOZZLE OR CONNECTOR
- REMOTE NOZZLE W/ PROCESS LINE BLANK
- REMOTE NOZZLE W/ BLANK CONNECTOR
- STRAINER
- BALL VALVE
- BUTTERFLY VALVE
- CHECK VALVE
- DIAPHRAGM OPERATED VALVE
- GATE VALVE
- GLOBE VALVE
- 3-WAY BALL VALVE
- M — MOTOR OPERATED VALVE W/ POSITION SWITCHES
- M — MOTOR OPERATED DAMPER
- RELIEF VALVE
- (#) — INDICATES QUANTITY REQD
- S — SOLENOID OPERATED VALVE
- PRESSURE REDUCING VALVE (PRV)
- T — TRAP
- F — FILTER
- HC — HOSE CONNECTION
- INSTRUMENT
- ELECTRIC MOTOR
- JET
- CENTRIFUGAL PUMP
- AGITATOR

- CW/CC — CHILLED WATER COOLING COIL
- S/HC — STEAM HEATING COIL
- E/HC — ELECTRIC HEATING COIL
- PRE-FILTR X% — PRE-FILTER WITH % OF EFFICIENCY
- POST-FILTR X% — POST-FILTER WITH % OF EFFICIENCY
- HEPA — HIGH EFFICIENCY PARTICULATE AIR FILTER
- HEME — HIGH EFFICIENCY MOISTURE ELIMINATOR
- TEST SECTION — DOP TEST SECTION
- SUPPLY AIR INTAKE/LOUVER/DAMPER
- MIST ELIMIN — MIST ELIMINATOR
- COND — CONDENSER
- AIR/LIQD SEPARTR — AIR/LIQUID SEPARATOR
- DMSTR — DEMISTER
- HEGA — HIGH EFFICIENCY GAS ADSORBER

- VENTILATOR
- CENTRIFUGAL FAN
- CENTRIFUGAL FAN WITH INLET VANES
- BACKDRAFT DAMPER
- STACK — EXHAUST STACK TO ATMOSPHERE
- INFILTRATION OR EXFILTRATION
- LEAK DETECTION ELEMENT
- RADIATION ELEMENT

ABBREVIATIONS

A	ANALYSIS
ACU	AIR CONDITIONING UNIT
AS	AIR SAMPLE
ASR	AIR SAMPLE RETURN
CC	COOLING COIL
CHW	CHILLED WATER
CI	CHEMICAL INJECTION
CNDS	CONDENSATE
DR	DRAIN
E	ELECTRIC
EHR	ENCASEMENT HYDROTEST RISER
ENC	ENCASEMENT
EW	EVAPORATIVE WATER
EXH	EXHAUST
F	FLOW
FC	FLOW CONTROL
FD	FLOOR DRAIN
FL	FLUSH
HC	HEATING COIL
HEME	HIGH EFFICIENCY MIST ELIMINATOR
HWVP	HANFORD WASTE VITRIFICATION PLANT
IA	INSTRUMENT AIR
L	LEVEL
LD	LEAK DETECTION
M	MOISTURE
MW	MAKE-UP WATER
OAI	OUTSIDE AIR INTAKE
P-X	PUMP
P	PRESSURE
PC	PRESSURE CONTROL
PD	PRESSURE DIFFERENTIAL
PRV	PRESSURE REDUCING VALVE
PW	PROCESS WASTE
R	RADIATION
RW	RAW WATER
SA	SUPPLY AIR
SC	SPEED CONTROL
SCFM	STANDARD CUBIC FEET PER MINUTE
SL	SLUDGE LEVEL
SP	SET POINT
STM	STEAM
SW	SANITARY WATER
T	TEMPERATURE
TC	TEMPERATURE CONTROL
TDC	TEMPERATURE DIFFERENTIAL CONTROL
V	VIBRATION
WE	WEIGHT ELEMENT (STRAIN GAUGE PAD SCALE)
WT	WEIGHT TRANSMITTER
Z	POSITION

DOES NOT CONTAIN CLASSIFIED OR UNCLASSIFIED CONTROLLED NUCLEAR INFORMATION

N/A

Reviewing Official/ADC
Kaiser Engineers Hanford Company

Date

CONCEPTUAL

GL AVERY

U.S. DEPARTMENT OF ENERGY
RICHLAND OPERATIONS OFFICE
KAISER ENGINEERS HANFORD COMPANY

PIPING/HVAC/INSTM
LEGEND & SYMBOLS

W-236 MULTI-FUNCTION WASTE TANK FACILITY

F 2430 0000 SK-2-58769 0

SK-2-58740 DRAWING LIST

REVISIONS

THIS PAGE INTENTIONALLY
LEFT BLANK

9513319.0209

Date Received: JUL 20 1992

INFORMATION RELEASE REQUEST

Reference: WHC-CM-3-4

Complete for all Types of Release

Purpose

[] Speech or Presentation
- [] Full Paper
- [] Summary
- [] Abstract
- [] Visual Aid

(Check only one suffix)

[] Speakers Bureau
[] Poster Session
[] Videotape

[] Reference
[] Technical Report
[] Thesis or Dissertation
[] Manual
[] Brochure/Flier
[] Software/Database
[] Controlled Document
[X] Other

ID Number (include revision, volume, etc.)
WHC-SD-W236-CDR-001, Rev 0

List attachments.
N/A

Date Release Required
N/A

Title Project W-236, "Multi-Function Waste Tank Facility," Conceptual Design Criteria

Unclassified Category UC-

Impact Level 1

New or novel (patentable) subject matter? [X] No [] Yes
If "Yes", has disclosure been submitted by WHC or other company?
[] No [] Yes Disclosure No(s).

Information received from others in confidence, such as proprietary data, trade secrets, and/or inventions?
[X] No [] Yes (Identify)

Copyrights? [X] No [] Yes
If "Yes", has written permission been granted?
[] No [] Yes (Attach Permission)

Trademarks?
[X] No [] Yes (Identify)

Complete for Speech or Presentation

Title of Conference or Meeting

Group or Society Sponsoring

Date(s) of Conference or Meeting

City/State

Will proceedings be published? [] Yes [] No
Will material be handed out? [] Yes [] No

Title of Journal

CHECKLIST FOR SIGNATORIES

Review Required per WHC-CM-3-4	Yes	No	Reviewer - Signature Indicates Approval: Name (printed)	Signature	Date
Classification/Unclassified Controlled Nuclear Information	[]	[X]			
Patent - General Counsel	[]	[X]			
Legal - General Counsel	[]	[X]			
Applied Technology/Export Controlled Information or International Program	[]	[X]			
WHC Program/Project	[]	[X]			
Communications	[]	[X]			
RL Program/Project	[]	[X]			
Publication Services	[]	[X]			
Other Program/Project	[]	[X]			

Information conforms to all applicable requirements. The above information is certified to be correct.

	Yes	No
References Available to Intended Audience	[]	[X]
Transmit to DOE-HQ/Office of Scientific and Technical Information	[]	[X]

Author/Requestor (Printed/Signature) Date
B. A. Kendall B.A. Kell 7/7/92

Intended Audience
[X] Internal [X] Sponsor [] External

Responsible Manager (Printed/Signature) Date
V. R. Dronen 7/7/92

INFORMATION RELEASE ADMINISTRATION APPROVAL STAMP

Stamp is required before release. Release is contingent upon resolution of mandatory comments.

Date Cancelled

Date Disapproved

SD-7600-062 (08/91) WEF074

Part 1

9513319.0210 ORIGINAL

Date Received: 8-27-92

INFORMATION RELEASE REQUEST

Reference: WHC-CM-3-4

Complete for all Types of Release

Purpose

- [] Speech or Presentation
  - [] Full Paper
  - [] Summary
  - [] Abstract
  - [] Visual Aid
  - (Check only one suffix)
- [] Speakers Bureau
- [] Poster Session
- [] Videotape
- [] Reference
- [] Technical Report
- [] Thesis or Dissertation
- [] Manual
- [] Brochure/Flier
- [] Software/Database
- [] Controlled Document
- [X] Other

ID Number (include revision, volume, etc.): WHC-SD-W236-CDR-001, Rev 0

List attachments: N/A

Date Release Required: N/A

Title: Project W-236, "Multi-Function Waste Tank Facility," Conceptual Design Criteria

Unclassified Category: UC-

Impact Level: 1

New or novel (patentable) subject matter? [X] No [] Yes
If "Yes", has disclosure been submitted by WHC or other company?
[] No [] Yes Disclosure No(s).

Information received from others in confidence, such as proprietary data, trade secrets, and/or inventions?
[X] No [] Yes (Identify)

Copyrights? [X] No [] Yes
If "Yes", has written permission been granted?
[] No [] Yes (Attach Permission)

Trademarks?
[X] No [] Yes (Identify)

Complete for Speech or Presentation

Title of Conference or Meeting

Group or Society Sponsoring

Date(s) of Conference or Meeting

City/State

Will proceedings be published? [] Yes [] No
Will material be handed out? [] Yes [] No

Title of Journal

CHECKLIST FOR SIGNATORIES

Review Required per WHC-CM-3-4	Yes	No	Reviewer - Signature Indicates Approval: Name (printed)	Signature	Date
Classification/Unclassified Controlled Nuclear Information	[]	[X]			
Patent - General Counsel	[X]	[]	SW BERGLIN	SW Berglin	8/27/92
Legal - General Counsel	[X]	[]			
Applied Technology/Export Controlled Information or International Program	[]	[X]			
WHC Program/Project	[X]	[]	WC Miller	WC Miller	9/2/92
Communications	[]	[X]			
RL Program/Project	[]	[X]			
Publication Services	[]	[X]			
Other Program/Project	[]	[X]			

Information conforms to all applicable requirements. The above information is certified to be correct.

	Yes	No
References Available to Intended Audience	[]	[X]
Transmit to DOE-HQ/Office of Scientific and Technical Information	[]	[X]

Author/Requestor (Printed/Signature): B. A. Kendall B.A. Kendall Date: 8-26-92

Intended Audience: [] Internal [] Sponsor [X] External

Responsible Manager (Printed/Signature): V. R. Dronen R.L. Fritz Date: 8-26-92

INFORMATION RELEASE ADMINISTRATION APPROVAL STAMP

Stamp is required before release. Release is contingent upon resolution of mandatory comments.

APPROVED FOR RELEASE OFFICIAL DOCUMENT EW Date 9/8/92

Date Cancelled

Date Disapproved

9513319.0211

WHC-SD-W236-CDR-001, Rev. 0

ID Number

Lead Author	Phone	MSIN	Other Author(s) or Requestor
B. A. Kendall	2-0593	B4-66	N/A
Project or Program	**Lead Org Code**		**Sponsor Agency (DOE, DOT, NRC, USGS, etc.)**
Project W-236, Multi-Function Waste Tank Facility	W24720		DOE
Editor	**Phone**	**MSIN**	**DOE/HQ Program (DP, EH, EM, NE, etc.)**
N/A	--	--	DOE-EM

Mandatory Comments (Only mandatory comments are to be documented. All other comments should be made on a copy of the information submitted for review and returned to the author.)	Reviewer Name & Signature	Date	Resolution	Reviewer Name & Signature	Date

Legends/Notices/Markings (required per WHC-CM-3-4 or guidance organization.) (Reviewer initials)

	Affix Yes	Affix No		Affix Yes	Affix No
Applied Technology	[ ]	[X]	Predecisional Information	[ ]	[X]
Business-Sensitive Information	[ ]	[X]	Programmatic Notice		
Computer Software Notice	[ ]	[X]	Proprietary Information	[ ]	[X]
Copyright License Notice	[ ]	[X]	Purpose and Use	[ ]	[X] AWB
Export Controlled Information	[ ]	[X]	Thesis/Dissertation	[ ]	[X]
Legal Disclaimer	AWB ~~[ ]~~	~~[X]~~ AWB	Trademark Disclaimer	[ ]	[X]
Limited Disclosure	[ ]	[X]	Unclassified Controlled Nuclear Information/Official Use Only	[ ]	[X]
Patent Status	[ ]	[X] AWB			

Responsible Manager (Printed/Signature)

Additional Information Not procurement sensitive per B. A. Kendall [signature] 8/27/92

BD-7600-062 (08/91) WEF074

Part 2

INSTRUCTIONS FOR INFORMATION RELEASE REQUEST SIGNATORIES

This list provides the instructions for each reviewer. It is meant to be used as a checklist and requires no signatures. The list is not all-inclusive but covers the key areas needing review. Areas needing further review or other areas needing review should be indicated under comments.

AUTHOR/REQUESTOR

- [X] Project or program manager concurs with the issuance of this report.
- [ ] Reference citations are necessary, correct and appropriate for the intended audience and will be publicly available at the time the document is published.
- [ ] If a journal article, the reference style agrees with guidance from the client or journal publisher.
- [ ] Contributions from authors of other organizations indicated in the comment section of this form.
- [X] Document is responsive to the client's scope of work.
- [X] Client approved this for release.
- [X] Document reports or reflects quality technical work.
- [ ] Scientific methodology used is logical and reasonable.
- [X] Inferences and conclusions are soundly based.

RESPONSIBLE MANAGER

Indicated at the bottom of the comment section of this form that General Counsel's office should review this document with particular attention to:

- [ ] An invention (reported or unreported)
- [ ] New software developed at WHC
- [ ] Sensitive subject matter (policies, issues, concerns)
- [ ] Copyrighted information
- [ ] Trademark information
- [ ] Proprietary information.

If the funding for the program represented by the document is from the Assistant Secretary for Nuclear Energy (NE), and public clearance or limited clearance for foreign exchange (sponsor-limited) is requested, the following information is required:

- [ ] Information generation dates
- [ ] Prior dissemination to DOE contractors
- [ ] Prior dissemination under international agreements
- [ ] Substantive value for international exchange
- [ ] Justification for release of information.

AUTHORIZED DERIVATIVE CLASSIFIER

Document reviewed for (and indicated on the front of the form) the presence of the following:

- [ ] Classified information
- [ ] Unclassified Controlled Nuclear Information (UCNI)

GENERAL COUNSEL REVIEWER

Document reviewed for (and indicated on the front of the form) the presence of the following:

- [ ] Previously reported or as yet unreported patentable subject matter
- [ ] Copyrighted material
- [ ] Trademarks
- [ ] Proprietary information
- [ ] Product comparisons
- [ ] Inventions
- [ ] New software developments
- [ ] Information meets environmental compliance.

COMMUNICATIONS DEPARTMENT REVIEWER

- [ ] This document contains no unresolved company policy issue.
- [ ] WHC logotype is used correctly.

WHC AND RL TECHNICAL PROGRAM REVIEWER

Document reviewed for (and indicated on the front of the form) the presence of the following:

- [ ] Applied Technology information
- [ ] Limited Disclosure information (foreign exchange)
- [ ] Distribution list discussed with the client
- [ ] Others who should review this document before release indicated in the comment section of this form.

PUBLICATIONS SERVICES REVIEWER

- [ ] Structure and format of the document are appropriate for the subject matter and comply with company standards.
- [ ] Restrictive legends, markings, and notices are affixed as appropriate.
- [ ] Required elements are included, such as disclaimer, cover, distribution list, approvals, etc.

INFORMATION RELEASE ADMINISTRATION

- [ ] All reviews are complete and this publication or presentation is approved for release (after resolution of mandatory comments).