START

Department of Energy
Richland Field Office
P.O. Box 550
Richland, Washington 99352

91
0025516
Incoming:9300902

93-RPB-068

DEC 3 1 1992

Mr. David B. Jansen, P.E.
Hanford Project Manager
State of Washington
Department of Ecology
P.O. Box 47600
Olympia, Washington 98504-7600

Dear Mr. Jansen:

STATE WASTE DISCHARGE PERMIT APPLICATION FOR 400 AREA SECONDARY COOLING WATER

Section 5, Table 3, of the State of Washington Department of Ecology (Ecology) Consent Order DE 91NM-177, requires submittal of a Washington Administrative Code 173-216 (State Waste Discharge) permit application for the 400 Area Secondary Cooling Water by December 1992. The enclosed document, "State Waste Discharge Permit Application for Industrial Discharge to Land, 400 Area Secondary Cooling Water," is submitted to fulfill this milestone.

Should you have any questions regarding this submittal, please contact me or Mr. S. D. Stites of my staff on (509) 376-8566.

Sincerely,

James D. Bauer

James D. Bauer, Acting Program Manager
Office of Environmental Assurance,
Permits, and Policy

EAP:SDS

Enclosure:
SWDP Application

cc w/encl:
M. Selby, Ecology

cc w/o encl:
P. T. Day, EPA
G. W. Jackson, WHC
R. E. Lerch, WHC
T. M. Michelena, Ecology
D. C. Nylander, Ecology
R. W. Oldham, WHC
G. T. Tebb, Ecology
T. B. Veneziano, WHC

JAN 1993
RECEIVED
EDMC

STATE WASTE DISCHARGE PERMIT APPLICATION FOR INDUSTRIAL DISCHARGE TO LAND

400 AREA SECONDARY COOLING WATER

Prepared for:

Department of Energy - Richland Operations
P.O. Box 1970
Richland, Washington 99352

STATE WASTE DISCHARGE PERMIT APPLICATION FOR INDUSTRIAL DISCHARGES TO LAND

WASHINGTON STATE DEPARTMENT OF ECOLOGY

For Office Use Only

Date Application Received		Date Fee Paid		Application/ Permit No.	
Date Application Accepted				Facility No.	
Temporary Permit Effective Date				Temporary Permit Expiration Date	

This application is for a waste discharge permit as required in accordance with provisions of Chapter 90.48 RCW and Chapter 173-216 WAC. Additional information may be required. Information previously submitted and applicable to this application should be referenced in the appropriate section.

SECTION A. GENERAL INFORMATION

1. Company Name: U.S. Department of Energy (operated by Westinghouse Hanford Co.)

2. Mailing Address: P.O. Box 1970
   Street
   Richland, Washington 99352
   City/State Zip

3. Facility Address: 400 Area - Hanford Site (see Attachment A)
   Street
   City/State Zip

4. Person to contact who is familiar with the information contained in this application:
   G. B. Griffin — FFTF Operations Manager — (509) 376-0604
   Name — Title — Telephone

5. Check One:
   [X] Existing Discharge
   [ ] Proposed Discharge
   Anticipated, date of discharge: _____

I certify under penalty of law that this document and all attachments were prepared under my direction or supervision in accordance with a system designed to assure that qualified personnel properly gather and evaluate the information submitted. Based on my inquiry of the person or persons who manage the system, or those persons directly responsible for gathering the information, the information submitted is, to the best of my knowledge and belief, true, accurate, and complete. I am aware that there are significant penalties for submitting false information, including the possibility of a fine and/or imprisonment for knowing violations.

Signature* _____ Date _____ Title _____

Seal if applicable

Printed Name _____

*Applications must be signed by either the owner, the principal executive officer or a duly authorized representative.

SECTION B. PRODUCT OR SERVICE INFORMATION

1. Briefly describe all manufacturing processes and products, and/or service activities. Provide the applicable Standard Industrial Classification (SIC) Code(s) for each activity.

   SIC No(s): N/A

   Description: See Attachment B and Attachment C

2. Include a production schematic flow diagram of the process and service activities described above on a separate sheet.

   See Attachment B

3. List raw materials and products: N/A

RAW MATERIALS	
Type	Quantity
PRODUCTS	

Facility: 400 Area Secondary Cooling Water

SECTION C. PLANT OPERATIONAL CHARACTERISTICS

1. Identify the waste stream for each of the production processes or activities described in Section B.1. Assign an identification number.

Process	Waste Stream Name	Batch or Continuous Process	Waste Stream ID #
Auxiliary Systems	400 Area Secondary Cooling	Continuous	23H
Cooling Water	Water		

2. On a separate sheet, describe in detail the treatment and disposal of all wastewaters as decribed above. Include a schematic flow diagram for all wastewater treatment and disposal systems. See Attachment C
3. Indicate treatment provided to each waste stream identified above.

No Treatment Performed

Waste Stream(s) ID #	Treatment	Waste Stream(s) ID #	Treatment
	Air flotation		pH correction
	Centrifuge		Ozonation
	Chemical precipitation		Reverse osmosis
	Chlorination		Screen
	Cyclone		Sedimentation
	Filtration		Septic tank
	Flow equalization		Solvent separation
	Grease or oil separation		Bio. treatment, type:
	Grease trap		Rainwater diversion or storage
	Grit removal		Other chem. treatment, type:
	Ion exchange		Other phys. treatment, type:

4. Describe any planned wastewater treatment improvements or changes in wastewater disposal methods:

Some floor and equipment drains in the Maintenance and Storage Facility and Fuels and Materials Examination Facility are planned to be either plugged or a dike will be constructed around them.

5. If production processes are subject to seasonal variations, provide the following information. Write "Yes" for each month each waste stream is produced.

Waste Stream ID#	MONTHS											
	J	F	M	A	M	J	J	A	S	O	N	D
23H*					Yes	Yes	Yes	Yes	Yes			

6. Shift Information:

a. Number of shifts per work day: 3

b. Number of work days per week: 7

c. Average number of work days per year: 365

d. Maximum number of work days per year: 365

e. Number of employees per shift: Shift start times

1st	350	1st	0730 hrs
2nd	20	2nd	1530 hrs
3rd	18	3rd	2330 hrs

7. List all incidental materials like oil, paint, grease, solvents, soaps, cleaners, that are used or stored on-site. (Use additional sheets, if necessary.)

Material/Quantity Stored See Attachment D

8. Describe any water recycling or material reclaiming processes:

The water used in the cooling towers is recycled through the system 2.5 times or until the conductivity reading is too high (1200 umhos). The chemical containers for the cooling tower treatment are rinsed out and the rinsate is added to the cooling tower sump.

FFTF recycles some lubricants for heating oil.

9. Does this facility have:
   - Spill Control and Containment Plan (per 40 CFR 112)? ☒ Yes ☐ No
   - Emergency Response Plan (per WAC 173-303-350)? ☒ Yes ☐ No
   - Runoff, spillage, or leak control plan (per WAC 173-216-110(f))? ☒ Yes ☐ No

SECTION D. WATER CONSUMPTION AND WATER LOSS

1. Water source(s):

   ☐ Public System (Specify) _____

   ☒ Private Well ☐ Surface Water

   a. Water Right Permit Number: N/A

   b. Legal Description:

   NE 1/4S, SW 1/4S, 18 Section, 11N TWN, 28E R

2. a. Indicate total water use: Gallons per day (average) 150,000

   Gallons per day (maximum) 277,400

   b. Is water metered? ☒ Yes ☐ No

3. Attach a line drawing showing the water flow through the facility. Indicate source of intake water, operations contributing wastewater to the effluent, and treatment units labeled to correspond to the more detailed descriptions in Item C. Construct a water balance on the line drawing by showing average flows between intakes, operations, treatment units, and outfalls. If a water balance cannot be determined (*e.g., for certain mining activities*), provide a pictorial description of the nature and amount of any sources of water and any collection or treatment measures.

   See Attachment E

SECTION E. WASTEWATER INFORMATION

1. Provide measurements for the parameters listed below, unless waived by the permitting authority. All analytical methods used to meet these requirements shall, unless approved otherwise in writing by Ecology, conform to the Guidelines Establishing Test Procedures for the Analysis of Pollutants Contained in 40 CFR Part 136.

Parameter/CAS No.	Concentrations Measured	Analytical Method	Detection Limit
pH J*	8.8 pH units	150.1	0.010 pH units
Conductivity J*	639 umhos/cm	120.1	1.0 umhos/cm
Total Dissolved Solids	536 ug/l	160.1	5.0 ug/l
Total Suspended Solids	16.0 ug/l	160.2	5.0 ug/l
BOD (5 day)	4.0 mg/l	307	2.0 mg/l
COD	30.0 ug/l	410.1	5.0 ug/l
Ammonia-N	0.10 mg/l	350.1	0.10 mg/l
TKN-N	1.06 mg/l	calculated est.	0.10 mg/l
Nitrate-N	0.96 mg-N/l	353.1	0.10 mg-N/l
Ortho-phosphate-P	2.5 mg/l	300.0	0.25 mg/l
Total-phosphate-P	0.86 mg/l	365.2	0.40 mg/l
Total Oil & Grease	5.5 mg/l	9070	5.0 mg/l
Calcium/7740-70-2	63,000 ug/l	200.7	5000 ug/l
Magnesium/7439-95-4	18,800 ug/l	200.7	5000 ug/l
Sodium/7440-23-5	72,700 ug/l	200.7	5000 ug/l
Potassium/7440-09-7	16,600 ug/l	200.7	5000 ug/l
Chloride	26.6 mg/l	300.0	5.0 mg/l
Sulfate	77.1 mg/l	300.0	2.5 mg/l
Fluoride	0.61 mg/l	300.0	0.50 mg/l
Cadmium/7440-43-9	7.0 ug/l	200.7	7.0 ug/l
Chromium/7440-49-3	10.0 ug/l	200.7	10.0 ug/l
Lead/7439-92-1	5.4 ug/l	239.1	3.0 ug/l
Mercury/7439-97-6	0.20 ug/l	245.1	0.20 ug/l
Selenium/7782-49-2	50.0 ug/l	270.1	50.0 ug/l
Silver/7440-22-4	10.0 ug/l	200.7	10.0 ug/l
Copper/7440-50-8	25.0 ug/l	200.7	25.0 ug/l
Iron/7439-89-6	178 ug/l	200.7	100.0 ug/l
Manganese	31.4 ug/l	200.7	15.0 ug/l
Zinc/7440-66-6	550 ug/l	200.7	20.0 ug/l
Barium/7440-39-3	200 ug/l	200.7	200 ug/l
Total Coliform	8 total/100 ml	SM 9221B	2.0 total/100 ml

*This data has been validated. The (J) validation flag means sample is estimated positive.

See Attachment J and Attachment C

Facility: 400 Area Secondary Cooling Water

2. Wastewater characteristics for toxic pollutants.

The intent of this question is to determine which chemicals are or might be present in the process water or wastewater. For each chemical listed below:

a. Use the letter **A** in the **ABST** column if the chemical is not likely to be present because it is not used in the production process or used on site.

b. Use the letter **S** in the **ABST** column if the chemical may be present because it is used on site, but the chemical is not used in the production process.

c. Use the letter **P** in the **PRST** column if the chemical is likely to be present because it is used in the production process, but the effluent has not been tested.

d. Use the letter **K** in the **PRST** column if the effluent has been tested and found to be present.

Attach the analytical results.

Analytical Results
Wastewater Characterization for Toxic Pollutants

ABST	PRST	CONSTITUENT/CAS No.	ABST	PRST	CONSTITUENT/CAS No.
A		Acrylamide/79-06-1	A		1,2 Dichloropropane/78-87-5
A		Acrylonitrile/107-13-1	A		1,3 Dichloropropene/542-75-6
A		Aldrin/309-00-2	A		Dichlorvos/62-73-7
A		Aniline/62-53-3	A		Dieldrin/60-57-1
A		Aramite/140-57-8	A		3,3' Dimethoxybenzidine/119-90-4
A		Arsenic/7440-38-2	A		3,3 Dimethylbenzidine/119-93-7
A		Azobenzene/103-33-3	A		1,2 Dimethylhydrazine/540-73-8
S		Benzene/71-43-2	A		2,4 Dinitrotoluene/121-14-2
A		Benzidine/92-87-5	A		2,6 Dinitrotoluene/606-20-2
A		Benzo(a)pyrene/50-32-8	A		1,4 Dioxane/123-91-1
A		Benzotrichloride/98-07-7	A		1,2 Diphenylhydrazine/122-66-7
A		Benzyl chloride/100-44-7	A		Endrin/72-20-8
A		Bis(chloroethyl)ether/111-44-4	A		Epichlorohydrin/106-89-8
A		Bis(chloromethyl)ether/542-88-1	A		Ethyl acrylate/140-88-5
A		Bis(2-ethylhexyl) phthalate/ 117-81-7	A		Ethylene dibromide/106-93-4
	K	Bromodichloromethane/75-27-4	A		Ethylene thioureae/96-45-7
A		Bromoform/75-25-2	A		Folpet/133-07-3
A		Carbazole/86-74-8	A		Furmecyclox/60568-05-0

Facility: 400 Area Secondary Cooling Water

ABST / PRST	CONSTITUENT/CAS No.	ABST / PRST	CONSTITUENT/CAS No.
A	Carbon tetrachloride/56-23-5	A	Heptachlor/76-44-8
A	Chlordane/57-74-9	A	Heptachlor epoxide/1024-57-3
A	Chlorodibromomethane/124-48-1	A	Hexachlorobenzene/118-74-1
A	Chloroform/67-66-3	A	Hexachlorocyclohexane (alpha)/ 319-84-6
A	Chlorthalonil/1897-45-6	A	Hexachlorocyclohexane (tech.)/ 608-73-1
A	2,4-D/94-75-7	A	Hexachlorodibenzo-p-dioxin, mix/ 19408-74-3
A	DDT/50-29-3	A	Hydrazine/hydrazine sulfate/ 302-01-2
A	Diallate/2303-16-4	A	Lindane/58-89-9
A	1,2 Dibromoethane/106-93-4	A	2 Methylaniline/100-61-8
A	1,4 Dichlorobenzene/106-46-7	A	2 Methylaniline hydrochloride/ 636-21-5
A	3,3' Dichlorobenzidine/91-94-1	A	4,4' Methylene bis(N,N-dimethyl)aniline/101-61-1
A	1,1 Dichloroethane/75-34-3	S	Methylene chloride (dichloromethane)/75-09-2
A	1,2 Dichloroethane/107-06-2	A	Mirex/2385-85-5
A	Nitrofurazone/59-87-0	A	O-phenylenediamine/106-50-3
A	N-nitrosodiethanolamine/ 1116-54-7	A	Propylene oxide/75-56-9
A	N-nitrosodiethylamine/55-18-5	A	2,3,7,8-Tetrachlorodibenzo-p-dioxin/ 1746-01-6
A	N-nitrosodimethylamine/62-75-9	A	Tetrachloroethylene/127-18-4
A	N-nitrosodiphenylamine/86-30-6	A	2,4 Toluenediamine/95-80-7
A	N-nitroso-di-n-propylamine/ 621-64-7	A	o-Toluidine/95-53-4
A	N-nitrosopyrrolidine/930-55-2	A	Toxaphene/8001-35-2
A	N-nitroso-di-n-butylamine/ 924-16-3	A	Trichloroethylene/79-01-6
A	N-nitroso-n-methylethylamine/ 10595-95-6	A	2,4,6-Trichlorophenol/88-06-2
A	PAH/NA	A	Trimethyl phosphate/512-56-1
A	PBBs/NA	A	Vinyl chloride/75-01-4
S	PCBs/1336-36-3		

Facility: 400 Area Secondary Cooling Water

SECTION F. STORMWATER

1. Do you have a stormwater NPDES permit? ☐ Yes ☒ No

2. Have you applied for a stormwater NPDES permit? ☐ Yes ☒ No

3. Are you covered or have you applied for coverage under a general or group stormwater permit? ☒ Yes ☐ No

4. Describe the size of the stormwater collection area.
   a. UnpavedArea 5,840,000 sq. ft.
   b. PavedArea 975,000 sq. ft.
   c. OtherCollectionAreas(Roofs) 753,000 sq. ft.

5. Describe the stormwater management systems.

Stormwater is disposed to the ground via roof drain downcomers and dry well. There is no sheet flow which comes out of the 400 Area.

6. Attach a map showing stormwater drainage/collection areas, disposal areas and discharge points.

See Attachment F

SECTION G. OTHER INFORMATION

1. Describe liquid wastes or sludges being generated that are not disposed of in the waste stream(s).

   Waste lubricant oil

   Low level radioactive waste

2. Describe storage areas for raw materials, products, and wastes.

   The radioactive liquid waste is discharged to below ground 5,000 gallon tanks. When the tanks are full, the liquid waste is transferred via railcar to the 204 AR Facility in the 200 West Area.

3. Have you designated your wastes according to the procedures of Dangerous Waste Regulations, Chapter 173-303 WAC? ☒ Yes ☐ No

4. Waste hauled off-site by: ☐ Wastehauler; ☒ Self; ☐ Other (identify) _____

Name	Name
Address	Address
City/State	City/State
Telephone	Telephone

5. Have you filed a SARA Title 313 disclosure? ☒ Yes ☐ No

Facility: 400 Area Secondary Cooling Water

SECTION H. SITE ASSESSMENT

1. Give the legal description of the land treatment site(s). Give the acreage of each land treatment site(s). Attach a copy of the contract(s) authorizing use of land for treatment.

   SE 1/4, NW 1/4, Sec. 18. T11N, R28F (46-26'-23 9" Lat., 119 21' 23 1" Long)

   0.23 acres (10,000 sq. feet).

2. List all environmental control permits or approvals needed for this project; for example, septic tank permits, sludge application permits, or air emissions permits.

   Hanford Site Radioactive Air Emissions Permit FF-01

3. Attach a topographic map with contour intervals used by USGS. Show the following on this map: See Attachment G
   a. Location and name of internal and adjacent streets
   b. Surface water drainage systems
   c. Water supply and other wells within 500 feet of the site
   d. Surface water diversions within 500 feet of the site
   e. Chemical and product handling and storage facilities
   f. Infiltration sources, such as drainfields, lagoons, dry wells, and abandoned wells within 500 feet of the site
   g. Wastewater and cooling water discharge points with ID numbers (See Section C.1)
   h. Other activities and land uses with 1/4 mile of the site

4. Identify all wells within 500 feet of the site. Attach well logs when available and any available water quality data.

   500 feet from percolation ponds - 699-2-7. Within 400 Area

   499-S0-8, 499-S0-7, 499-S1-8L, 499-S1-8J

   See Attachment H

5. Describe soils on the site using information from local soil survey reports. (Submit on separate sheet.)

   See Attachment I

6. Describe the regional geology and hydrogeology within one mile of the site. (Submit on separate sheet.) See Attachment I

7. List the names and addresses of contractors or consultants who provided information and cite sources of information by title and author.

See Attachment K

END — END — END

ATTACHMENT A

Hanford Reservation Site Map
Section A - Item 3

9 1 1 2 2 0 2 1 6 5 4

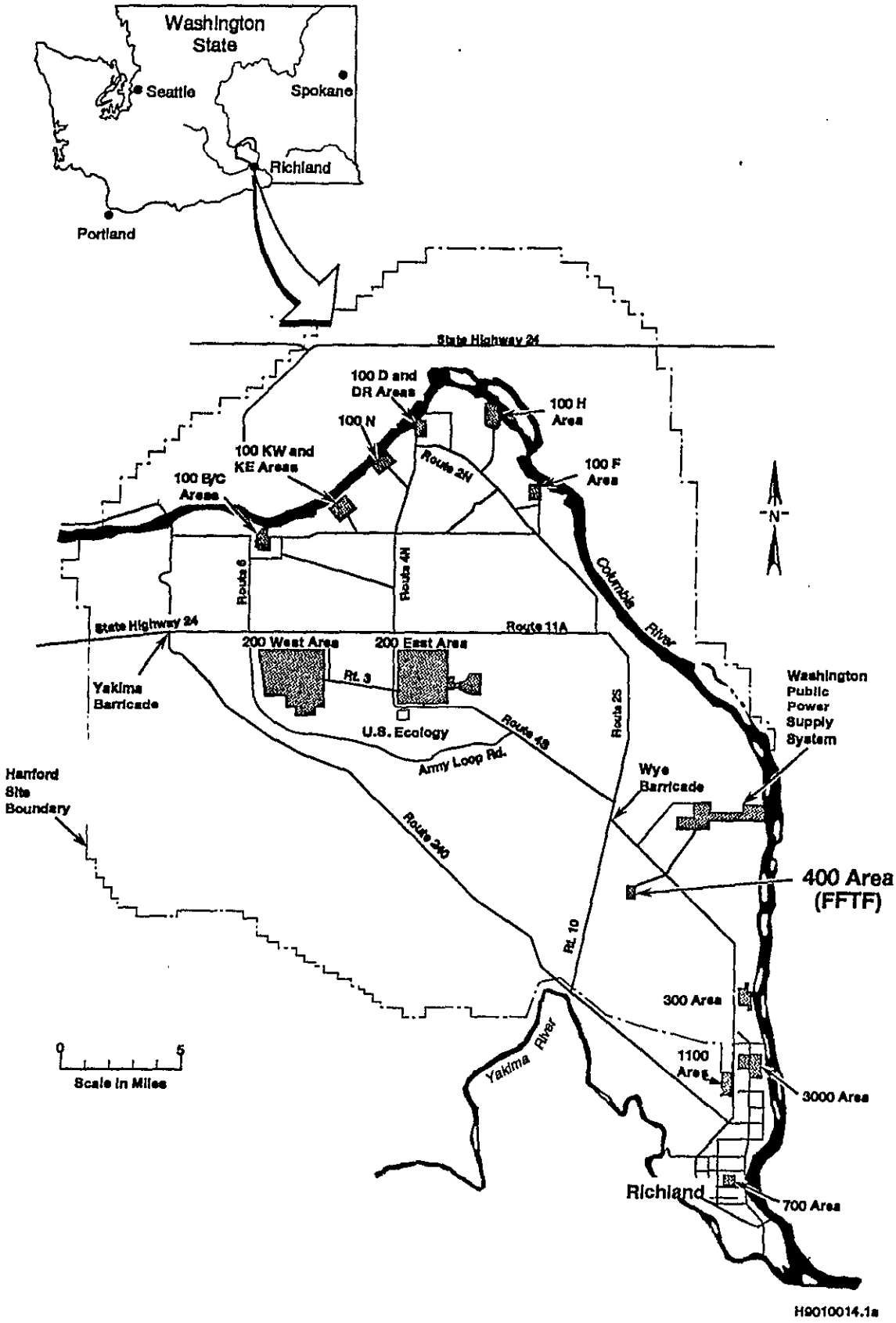

Hanford Site Map with 400 Area Location

ATTACHMENT B

400 AREA FACILITIES
Section B - Item 1

ATTACHMENT B

The 400 Area Secondary Cooling Water waste stream is located in the 400 Area. The 400 Area contains the Fast Flux Test Facility (FFTF) and a number of buildings which support the FFTF operation (Figure 1). The FFTF is a sodium-cooled test reactor used for nuclear research (HEDL-400, 1980). There is no designated SIC Code for nuclear research. There are four facilities in the 400 Area which contribute to the 400 Area Secondary Cooling Water (400 Area Process Sewer). The four contributors are described below:

1. FAST FLUX TEST FACILITY (FFTF)

The FFTF is a sodium-cooled test reactor used for nuclear research. The reactor's high neutron flux level and neutron energies allow accelerated testing of fuels and materials. The reactor operated from 1980 to April 1, 1990, when it was ordered into standby status by the Department of Energy. The reactor may be started in 1996 for the manufacture of Pu-238. Materials used in the reactor would not significantly change for this production.

The process which contributes to the 400 Area Secondary Cooling Water is the auxiliary system cooling towers. The cooling towers reduce the heat generated in the equipment supporting the FFTF auxiliary systems, such as the heating, ventilation, and air conditioning (HVAC). There is no contact between the piping of the cooling towers and that of any radioactive liquid discharge, wastes or nuclear materials in the reactor. Adjacent to the cooling tower pad is a building which contains the water treatment equipment, water quality monitoring instrumentation, and the process control for blowdown valves associated with the cooling towers. This system is adjacent to the facility's reactor containment and service buildings within the 400 Area Protected Area.

2. FUELS AND MATERIALS EXAMINATION FACILITY (FMEF)

The FMEF was designed and constructed as a secure, multistoried structure with the capability to handle low and high exposure radioactive materials. Due to program and funding changes, most of the specialized equipment has never been installed and radioactive material has never been introduced to the facility. The facility is used for administrative personnel offices at this time.

The processes which contribute to the 400 Area Secondary Cooling Water are the auxiliary systems cooling towers, floor drains, and equipment drains from the FMEF. The FMEF cooling towers are used to cool the auxiliary systems of the FMEF in the same manner as the FFTF cooling towers. The cooling system at the FMEF is also a non-contact cooling water system.

3. MAINTENANCE AND STORAGE FACILITY (MASF)

The MASF facility, located in the 400 Area Protected Area, consists of a main building and a two story service wing. The purpose of this facility is to provide maintenance, repair, and storage facilities for radioactive or specialized maintenance equipment used in support of the FFTF. The MASF currently functions for its intended purposes.

The contributors to the 400 Area Secondary Cooling Water are floor and equipment drains.

4. 481-A WATER PUMPHOUSE

The 481-A Water Pumphouse was constructed to provide space for a diesel fire pump and two sanitary water pumps. An equipment drain associated with sanitary water pump packing leakage contributes to the 400 Area Secondary Cooling Water.

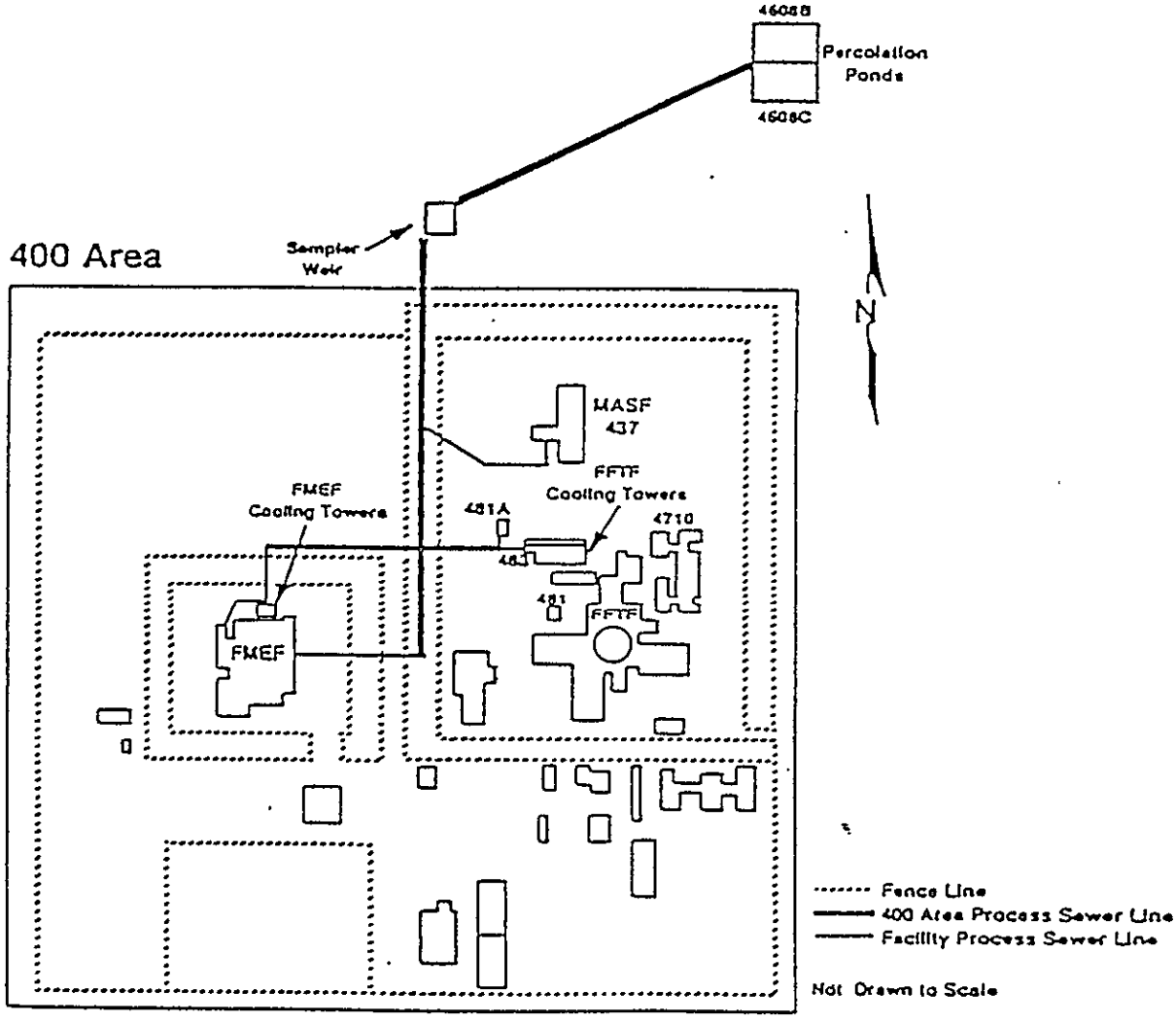

Figure 1. 400 Area and 400 Area Secondary Cooling Water (400 Area Process Sewer) Schematic Map

ATTACHMENT C

400 Area Secondary Cooling Water
Effluent Stream Description
Section C - Item 2

ATTACHMENT C

The 400 Area Secondary Cooling Water has 74 potential points of entry, which are listed in the 400 Area Secondary Cooling Water Sampling and Analysis Plan (SAP) (WHC, 1992a). Of the 74, there are nine routine contributors, which contribute greater than 99% of the wastewater. The 400 Area Secondary Cooling Water is composed of 85% cooling water from FFTF and FMEF cooling towers, and 15% from the FMEF, MASF, and 481-A Pumphouse equipment and floor drains, and auxiliary cooling systems. There are 65 infrequent contributors to the effluent stream: 59 in FMEF, 3 in MASF, and 3 in 481-A Pumphouse. These infrequent contributors consist of electric water coolers (drinking fountains), sinks, floor drains and equipment drains.

The 400 Area Secondary Cooling Water system (400 Area Process Sewer) consists of a 12 inch main pipe, located approximately in the center of the 400 Area. Five-6 inch pipes discharge process water from the four facilities into the main pipe; two pipes from the FMEF and one pipe from the other three facilities. The main pipe discharges to the 400 Area Percolation ponds, which are located approximately 2000 ft north-northeast of the 400 Area's northern fence line (Fig. 1). A sample weir, located just north of the northern fence line, monitors the 400 Area Secondary Cooling water for pH and conductivity. A composite sample is also collected monthly at the sample weir.

As noted above, the cooling tower operations account for 85% of the 400 Area Cooling Water effluent. The cooling tower operations at FFTF (Fig. 2) and FMEF are essentially the same, but differ in their demand. The FMEF cooling towers are drained from October to March. The FFTF and FMEF cooling towers are non-contact cooling water systems. The cooling towers at both facilities are galvanized steel closed loop evaporation cooling towers. The cooling systems circulate a 40% ethylene glycol solution from the buildings through cooling coils in the cooling towers. Water is sprayed over the coils as air is blown up through the cooling towers by fans. The evaporation of the spray water provides the cooling effect which is transferred through the cooling coils to the recirculated ethylene glycol solution. The eight cooling towers at FFTF and the three cooling towers at FMEF each have a sump capacity of 2,000 gallons. The water going through the cooling towers is chemically treated to control: 1) biological growth within the tower, and 2) to protect the tower from the effects of scale formation.

Biological growth within the towers is controlled by adding a biocide (Dearborn 702)[1] and a microbiocide (sodium hypochlorite) to the cooling tower water. The control is accomplished by adding the biocide (Dearborn 702) to the sump water at a 25 ppm concentration on a regular basis. The biocide is added to the FFTF cooling water continuously through a metering pump into the makeup water. At FMEF, the biocide is added daily through a metered pump into a recirculated stream of water from each cooling tower sump. The microbiocide (sodium hypochlorite) is added weekly to the system at FMEF in the same manner as described above. At FFTF, the microbiocide is added manually to "shock" the tower only when maintenance requires personnel to physically enter the cooling towers. This is normally done during the spring and summer months. The concentration of the microbiocide in the FFTF cooling towers during shock treatment is 5 ppm and 0.6-0.8 ppm during operations using only the biocide (Dearborn 702).

Scale formation protection is required due to the increasing concentration of naturally occurring salts (typically calcium carbonate) resulting from the evaporation process of the cooling towers. The electrical conductivity of the water in the sumps is monitored at FFTF and FMEF to protect the system. When the conductivity approaches 1200 micromhos, automatic valves open to discharge the water. Discharging the sump water allows fresh water to enter the system. Discharge is continued until enough fresh water has been added to the system to bring the conductivity down to approximately 900 micrmhos.

A scale inhibitor (Dearborn 878) is added to the towers to a concentration of between 50 ppm and 75 ppm in order to prevent the formation of scale. Scale concentration control at FFTF is accomplished by metering the chemical into the makeup water at a rate of approximately 40 ppm. Evaporation in the towers helps bring the concentration to the desired range mentioned above. At FMEF, control is accomplished by metering the chemical directly into the tower when the conductivity control system opens the valve which blows down the sump water. A chemical analysis is performed in the field by the operator to ensure a proper balance is maintained between addition to and discharges from the cooling towers.

The chemical testing for scale inhibitor concentration involves the use of the following Dearborn Products:

Dearborn Code 595	Hydrochloric Acid Solution
Dearborn Code 904	Thorium nitrate Solution
Dearborn Code 550	Sodium Thiosulfate/Borate Solution
Dearborn Code 562	Xylenol Orange Indicator
Dearborn Code 899	Beryllium Sulfate Solution

The resultant solution from the test (approximately 50 ml per test) is not designated a dangerous waste since the beryllium concentration (0.00095%) is <0.01%, the reportable concentration level. Trace quantities of these products enter the 400 Area Secondary Cooling Water from washing gloves, glassware, equipment and hands after each test via sinks in the cooling tower water treatment building.

The FMEF facility has 63 potential points of entry, 59 of which are inactive or infrequently used. The four routine contributors from the FMEF are two from the FMEF cooling towers, one from the Entry Wing computer room air conditioning unit, and one from the pressure relief valve drain of the process water supply system in the Mechanical Equipment Room (Fig. 3). At this time, the majority of the infrequent points of entry are to be plugged, or rubber dikes are being installed around the floor and equipment drains. The points of entry would not come in contact with any radioactive material if it was introduced to the facility. Thirty-two of the 59 infrequent points of entry at the FMEF discharge to the Liquid Retention System. The Liquid Retention System is composed of two 6,000 gallon tanks. The effluent is held in the tanks, where samples can be taken to determine if there is a potential for contaminants to have been introduced to the water. At present, the FMEF Liquid Retention System releases effluent to the 400 Area Secondary Cooling Water randomly once or twice a year when a tank is full.

The MASF (Fig. 4) has one routine contributor to the 400 Area Secondary Cooling Water, which is cooling water from the Process Equipment Room air compressor. The three infrequent contributors are floor drains. The floor drain located between the Decon 1 Area and the Craft Decontamination and Maintenance Facility (CDMF) (Fig. 4) will either be plugged or a dike will be constructed around it because it does not have a designated use.

The 481-A Pumphouse (Fig. 5) has one routine contributor and three infrequent contributors. The routine contributor is a drain associated with the leaky fire water pump. The other floor drains have moats constructed around them. A moat around the diesel fuel tank has been proposed and is to be constructed in the near future.

Potentially hazardous or dangerous materials are stored away from points of entry. The majority of the points of entry, as mentioned above, are infrequently used and account for $<1\%$ of the 400 Area Secondary Cooling Water waste stream.

The 400 Area Secondary Cooling Water is not treated prior to discharge to the percolation ponds. The BAT/AKART report (WHC, 1992b) confirms that the effluent is not a dangerous waste. The BAT/AKART report (WHC, 1992b) also recommends that the effluent stream remain discharging to the 400 Area percolation ponds in its current status.

1. Dearborn is the company that currently has the contract for supplying the chemicals for water treatment and testing at FFTF. This contract periodically comes up for rebid. There is the possibility, if a new contract is awarded, that wherever Dearborn is mentioned in this application an equivalent chemical brand could be used.

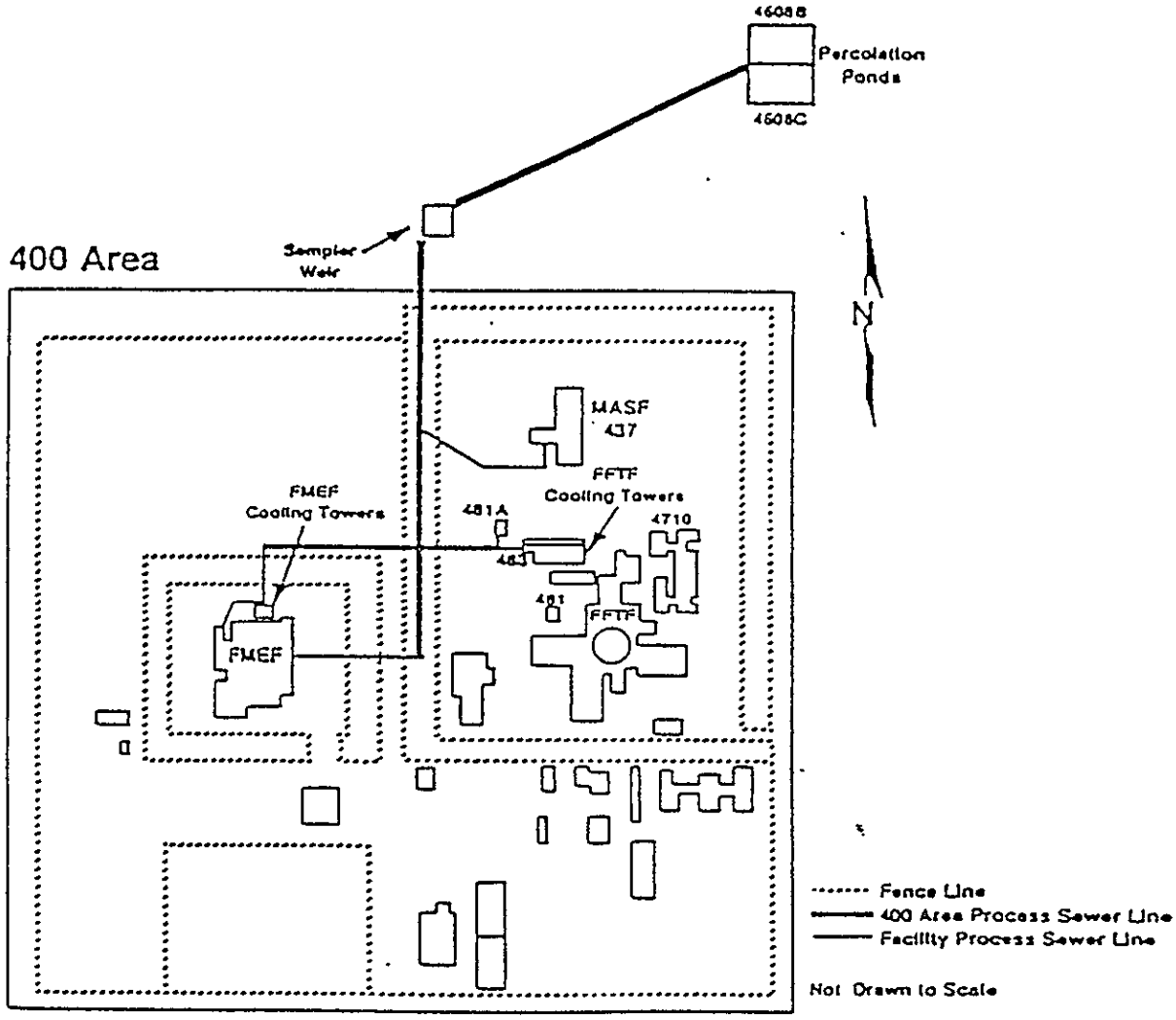

Figure 1. Schematic Map of the 400 Area Secondary Cooling Water (400 Area Process Sewer)

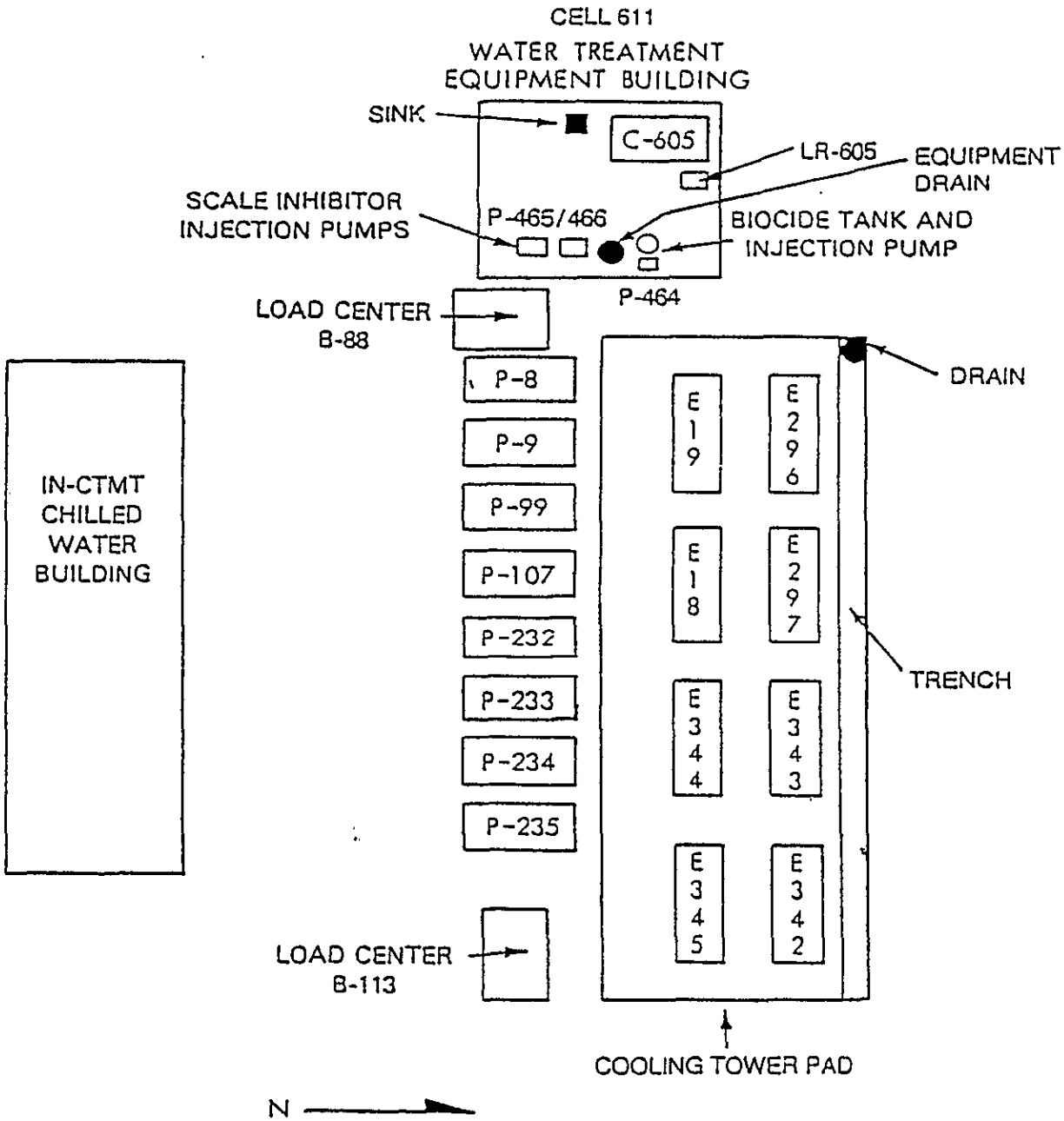

Figure 2. Location of the FFTF cooling tower contributors to the 400 Area Secondary Cooling Water (WHC, 1990).

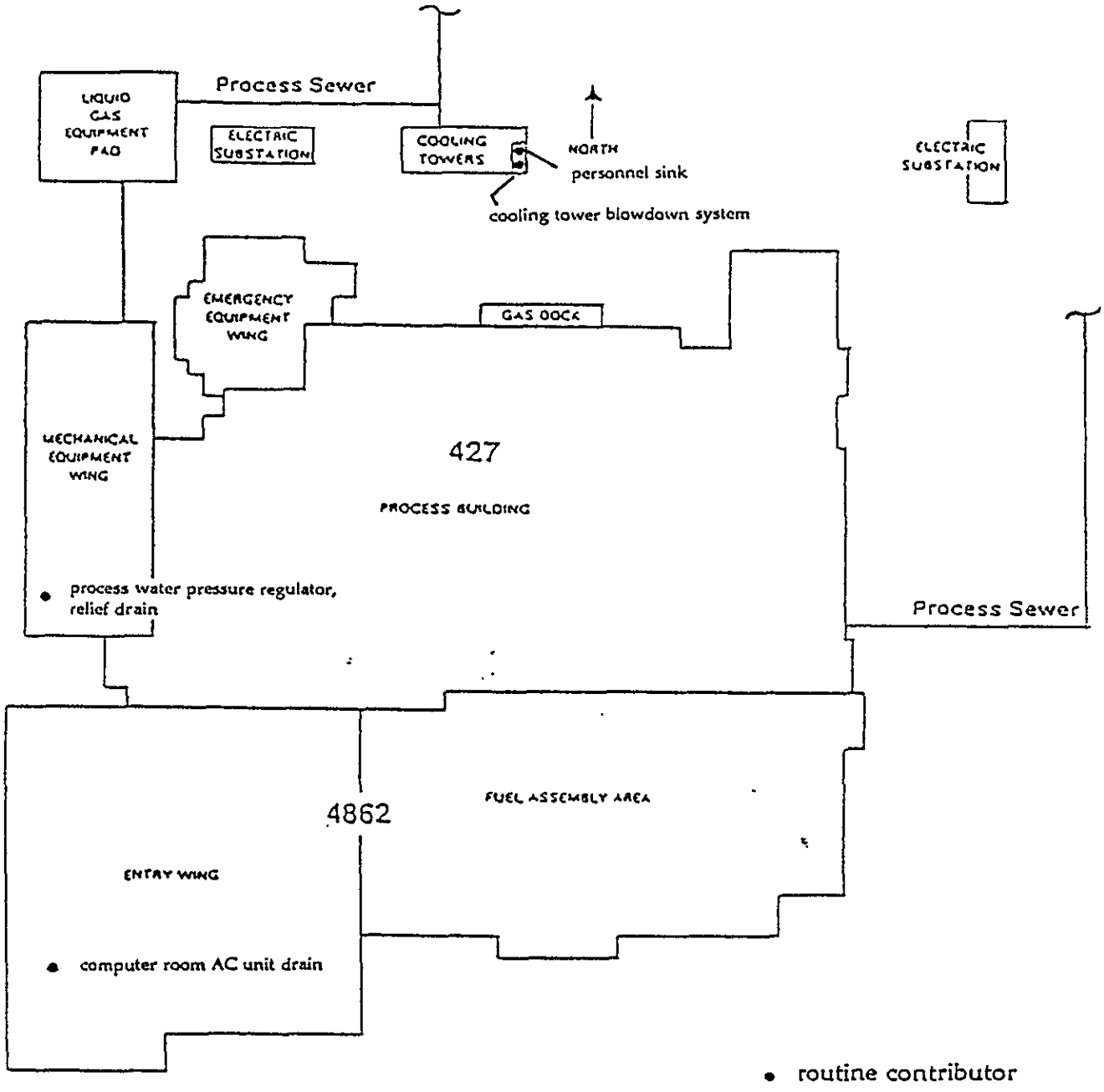

Figure 3. Location of the FMEF facility's routine contributors to the 400 Area Secondary Cooling Water. (WHC, 1990).

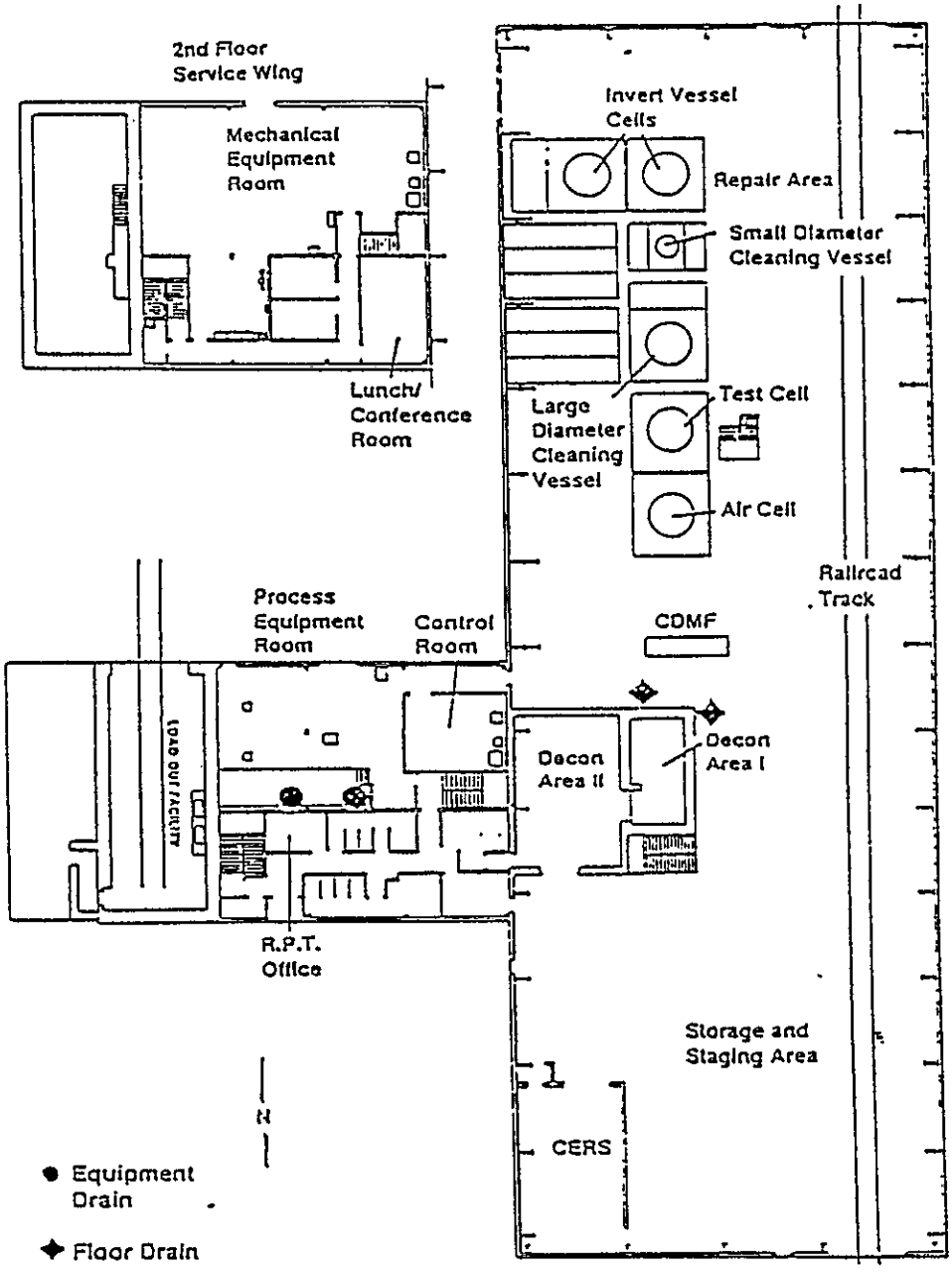

Figure 4. Location of the MASF facility's contributors to the 400 Area Secondary Cooling Water (WHC, 1990).

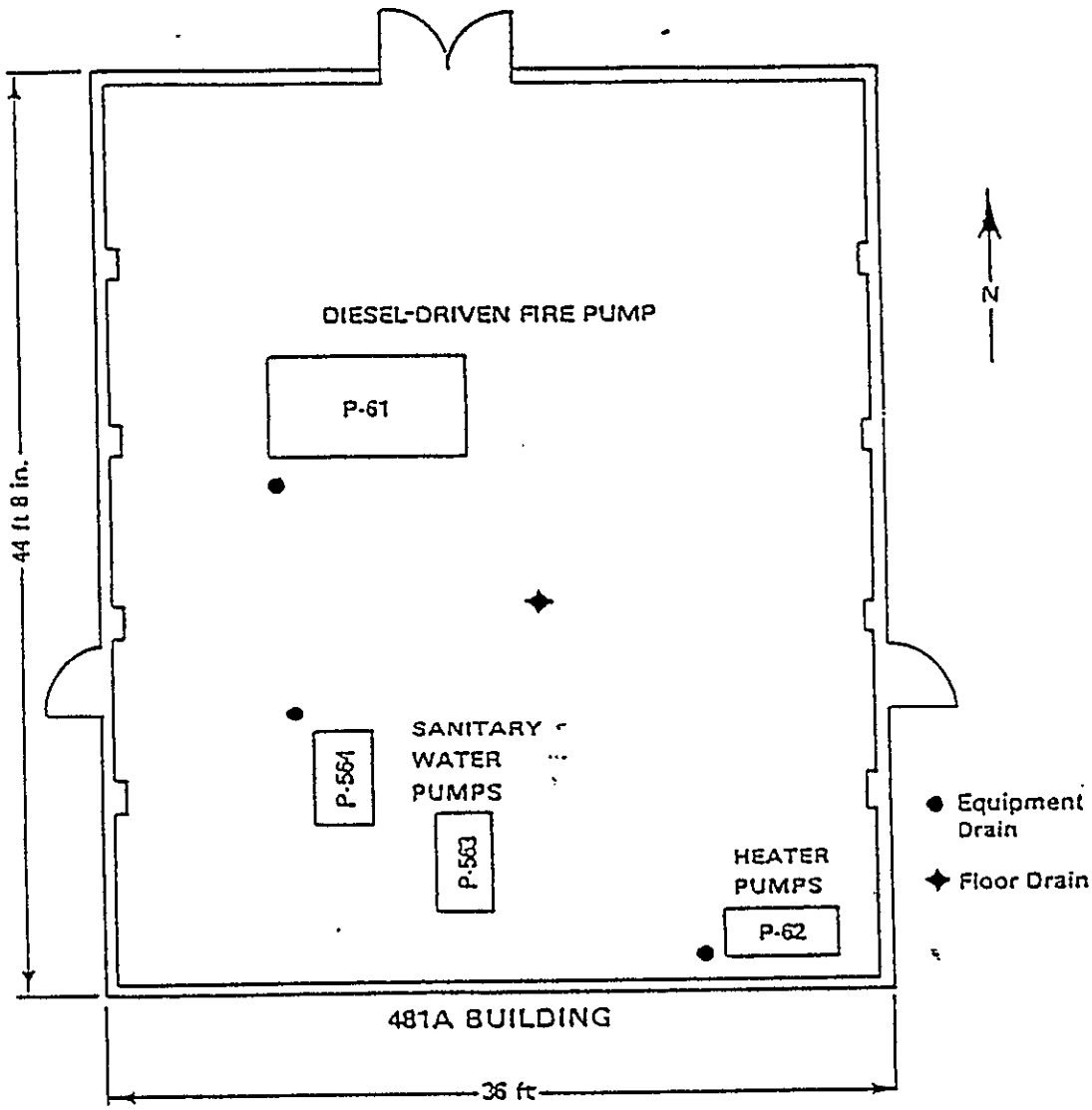

Figure 5. Location of the 481-A Pumphouse contributors to the 400 Area Secondary Cooling Water (WHC, 1990)

ATTACHMENT D

Materials Stored On Site
Section C - Item 7

9 3 1 3 9 6 1 5 6 9

ATTACHMENT D

MATERIALS STORED ON SITE

MATERIAL	QUANTITY*
Mineral Oil	28963 G
Nitrogen	20372 C
Polychlorinated Biphenyls	100259 L
Ammonium Hydroxide	21 L
Dearborn 727	15 L
Dearborn 878	108 G
Dearborn 702	703 G
Diesel Fuel	5509 G
Ethylene Glycol	13329 G
Firemate 8808	0
Hydraulic Oil	15 G
Lubricating Oil	1705 G
Silica Gel	1356 L
Zeolite	0
Acetylene	3640 C
Stargon	1560 C
Trichlorofluoromethane	450 G
Acetone	6 G
Air	1398 C
Argon	11712 C
Carbon Dioxide	6 C
Chevron Thinner 325	520 G
Helium	21682 C
Isopropyl Alcohol	2 G

MATERIALS STORED ON SITE (CONT.)

Kerosene	900 G
Machine Oil	644 G
Methane	0
Motor Oil	0
Oxygen	4263 C
Propane	50 L
Lead	7623 L
1,1,1-Trichloroethane	6 G
Unleaded Gasoline	60 G
Phenoline 305 Finish	798 G
Chlorodifluoromethane	16000 C
Gas Mix, Hear 75/25	1520 C
Hydrogen	1164 C
Ammonia	55 G
Diethylene Glycol Mono ethyl ether	18 G
Silicon	110 L
Sodium	150 L
Freon 12	10 L
Freon 22	100 L
Ammonium Nitrate	5210 L
Sodium Hypochlorite	28 G
Grease	210 G
Sulfuric Acid, 100%	384 G

* G = gallons
L = liters
C = cubic feet

ATTACHMENT E

400 Area Secondary Cooling Water Flow Charts
Section D - Item 3

9 1 1 2 9 6 2 0 5 7 2

400 AREA WATER BALANCE

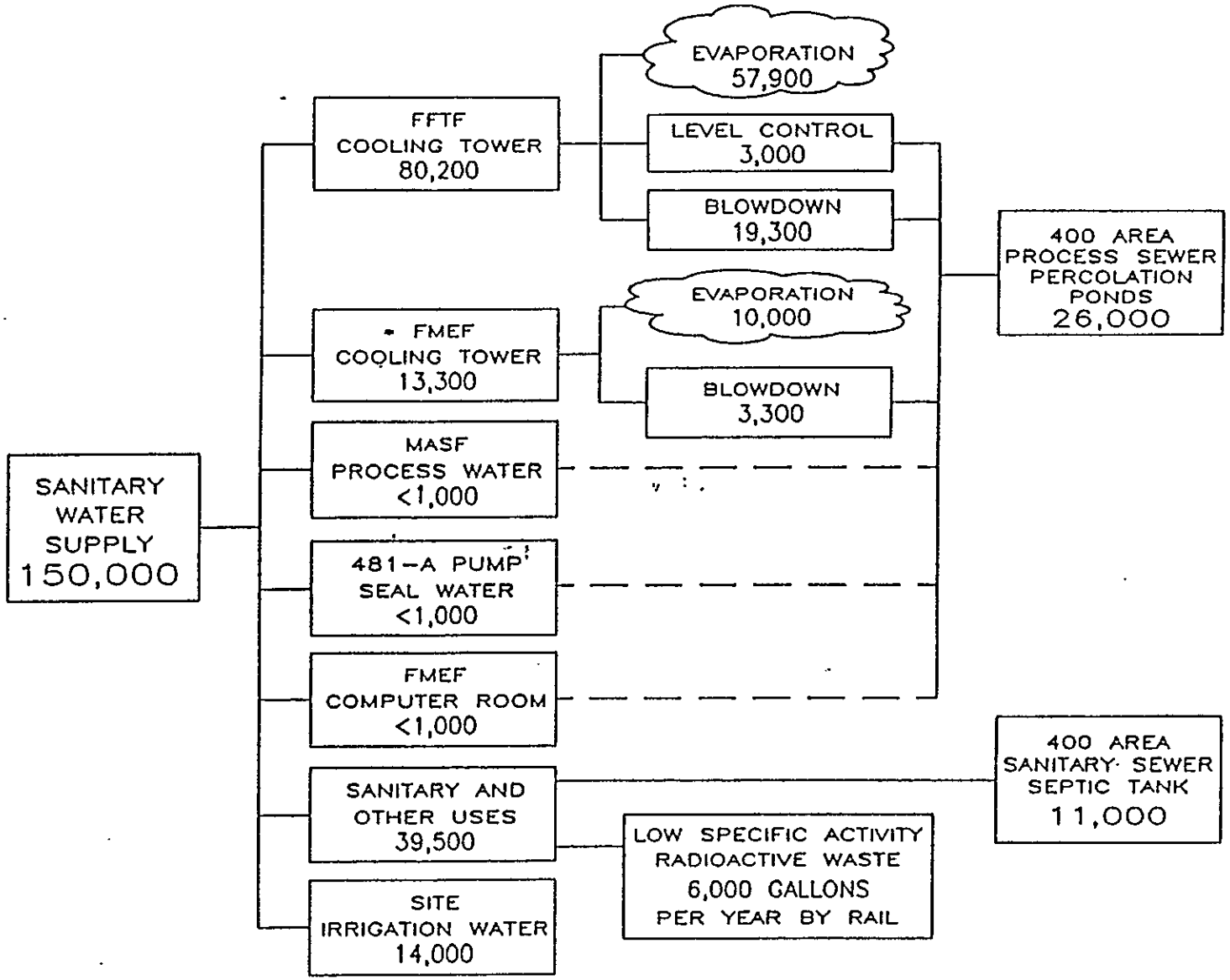

FIGURE 1: AVERAGE ANNUAL DAILY FLOW RATES (GPD)

* FMEF COOLING TOWERS OPERATED MAY THROUGH SEPTEMBER.

Dashed lines indicate no intermediate activity prior to going to the Process Sewer.

400 AREA WATER BALANCE

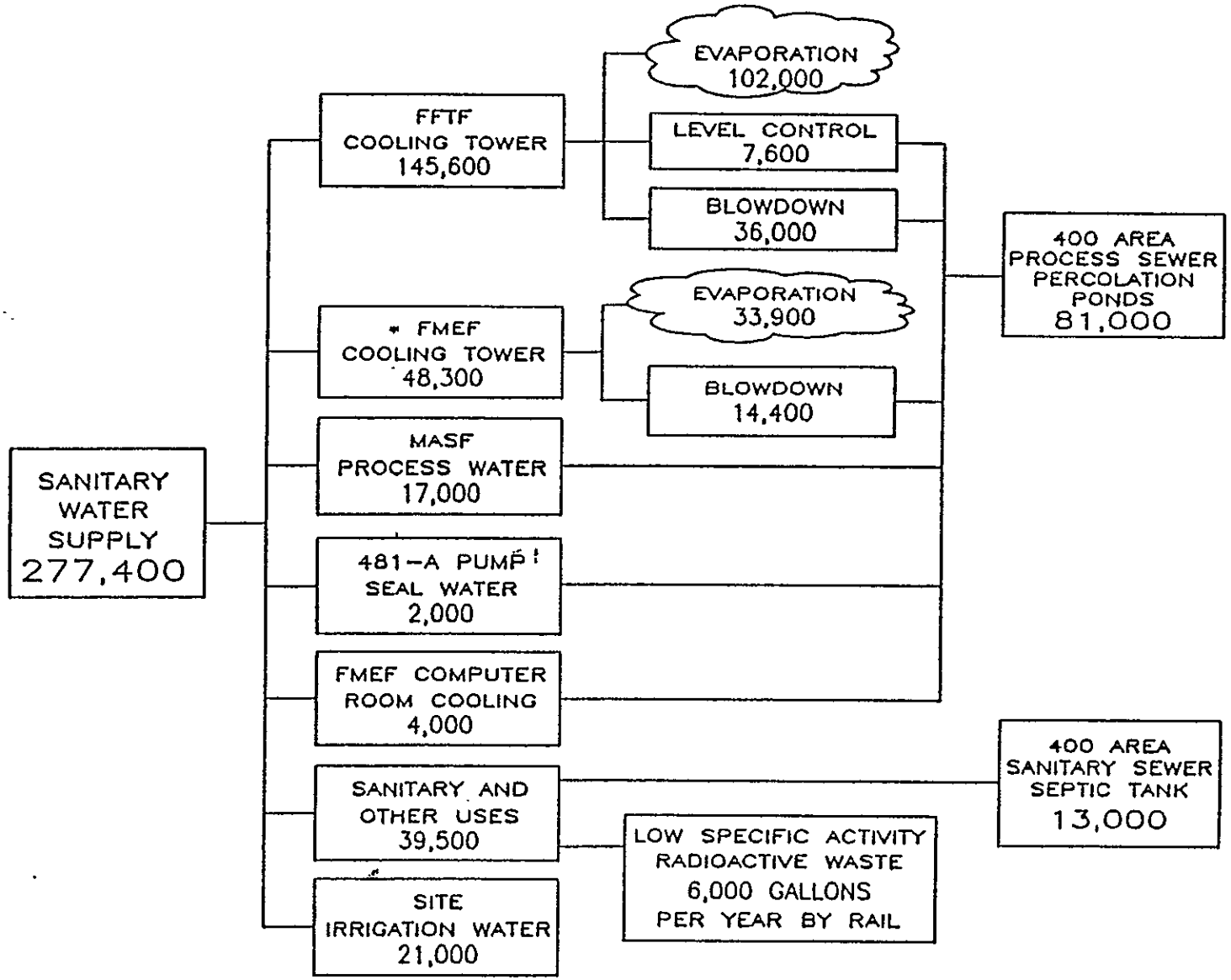

FIGURE 2: PEAK DAILY FLOW RATES (GPD)

* FMEF COOLING TOWERS OPERATED MAY THROUGH SEPTEMBER.

ATTACHMENT F

Stormwater Disposal Map
Section F - Item 6

9 5 1 2 9 6 2 1 3 7 5

400 Area Secondary Cooling Water
Attachment F

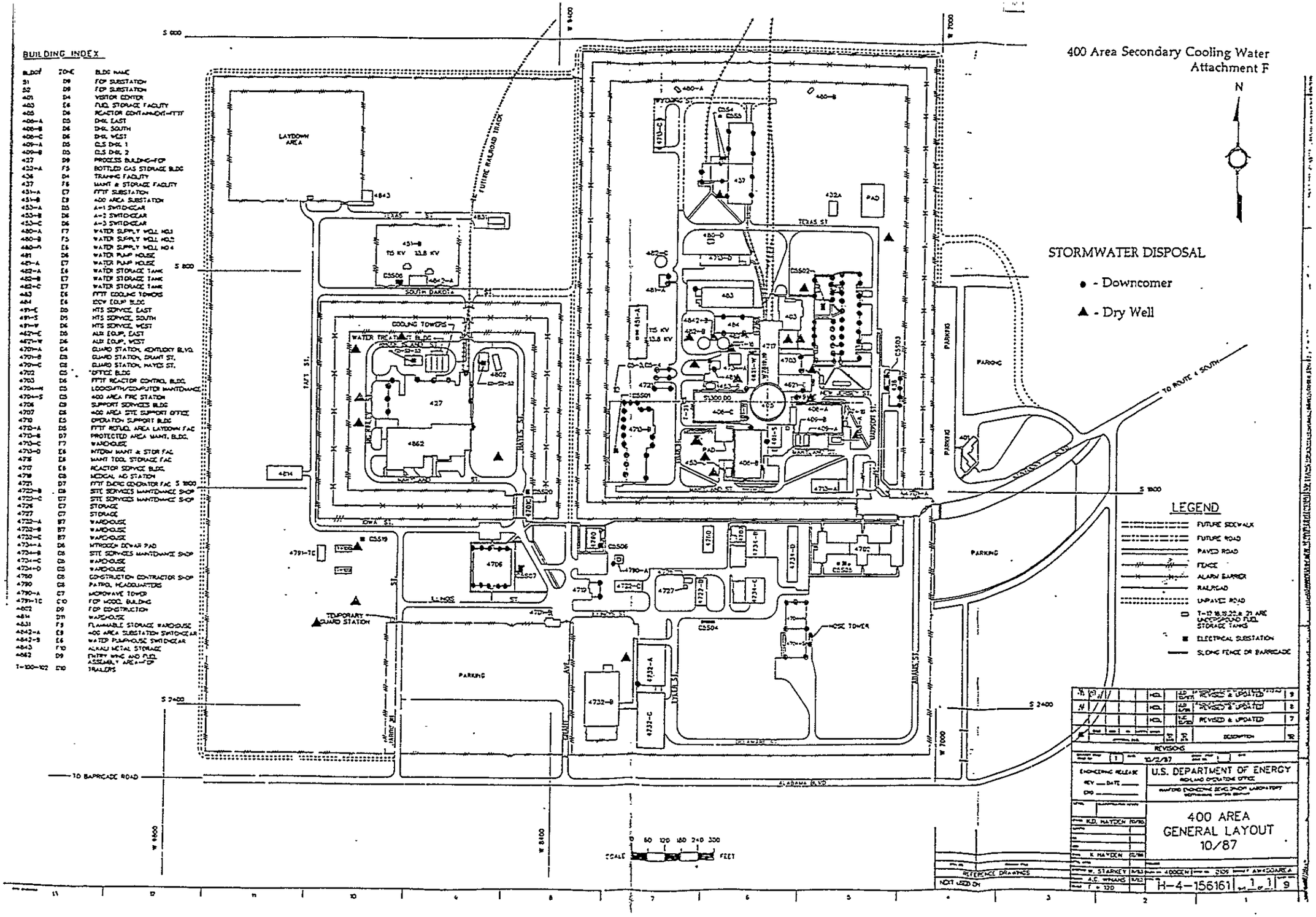

ATTACHMENT G

400 Area Topographic Maps
Section H - Item 3

9 3 1 2 6 3 7 7

ATTACHMENT G

There are two sets of maps in this attachment. The first set of maps, numbered H-13-000401 and H-13-000402, is a topographic map of the 400 Area. The features shown on this map are the street names, water supply locations, drywells and the stormwater discharge downcomers. The second map is the Wooded Island, WA 7.5 minute quadrangle map. This map shows the locations of the 400 Area percolation ponds and the monitoring well associated with the ponds.

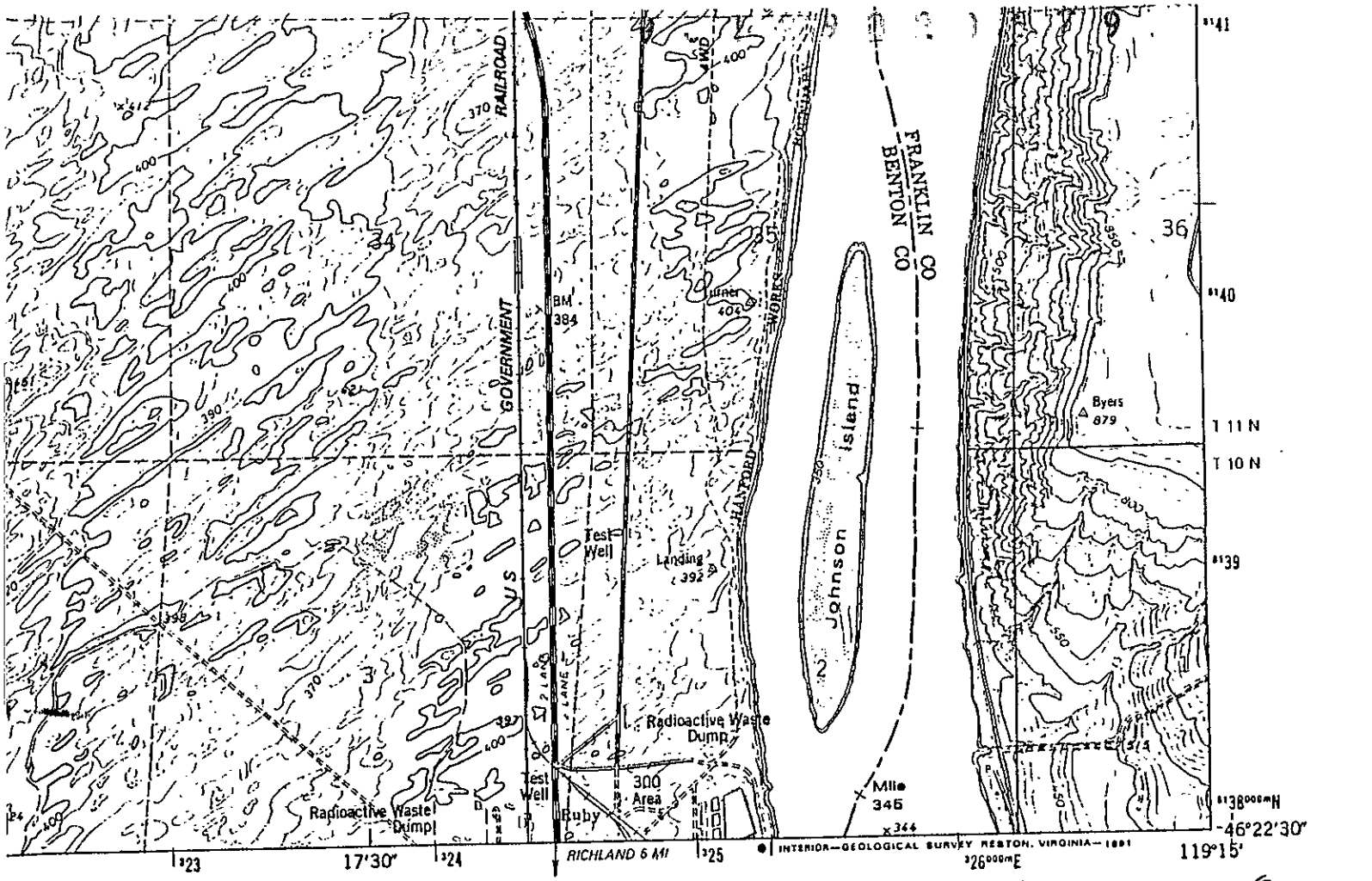

00

1 MILE

4000 5000 6000 7000 FEET

1 KILOMETER

10 FEET
. DATUM OF 1929

QUADRANGLE LOCATION

ROAD CLASSIFICATION

Primary highway, hard surface

Light-duty road, hard or improved surface

Secondary highway, hard surface

Unimproved road

Interstate Route

U. S. Route

State Route

WOODED ISLAND, WASH.

46119-D3-TF-024

1978

DMA 2176 IV NE-SERIES V891

MAP ACCURACY STANDARDS
ORADO 80225, OR RESTON, VIRGINIA 22092
SYMBOLS IS AVAILABLE ON REQUEST

9 1 1 2 2 1 5 3 0

ERS

750 1000 FEET

GENERAL NOTES

1. THIS MAP IS BASED ON AERIAL PHOTOGRAPHY FLOWN 8/20/88. THE TOPOGRAPHIC MAP WAS PREPARED BY GEONEX,INC. AND CERTIFIED TO MEET NATIONAL MAP ACCURACY STANDARDS. OFFICIAL COPIES OF THE GEONEX MAPS THAT SHOW THE CERTIFICATE ARE LOCATED IN THE WESTINGHOUSE ENGINEERING FILES AS DRAWING NUMBERS H-4-72048 SHEETS 1 AND 2. THE NAMES OF PHYSICAL FEATURES AND THE TITLE BLOCK OF THE H-13-0000401 AND H-13-000402 MAPS WERE ADDED BY WESTINGHOUSE HANFORD COMPANY.

2. WASHINGTON COORDINATE SYSTEM: THE OFFICIAL STATE PLANE COORDINATE SYSTEM AS DEFINED BY THE REVISED CODE OF WASHINGTON (RCW). THE HANFORD SITE LIES WITHIN THE WASHINGTON COORDINATE SYSTEM, SOUTH ZONE. THIS GRID COVERS THE ENTIRE SITE AND USES X (EASTINGS) AND Y (NORTHINGS) COORDINATES.

   HORIZONTAL DATUM: NAD-83 LAMBERT PROJECTION

   VERTICAL DATUM: NATIONAL GEODETIC SURVEY DATUM AS PROVIDED BY KAISER ENGINEERS - HANFORD.

   COORDINATES ARE SHOWN AS METERS.
   CONTOURS ARE SHOWN AS 1/3 METERS.

3. HANFORD PLANT GRID: A LOCAL GRID SYSTEM WITH ITS INITIAL POINT NORTHEAST OF THE 400 AREA. IT COVERS 200-E AND 200-W AS WELL AS GENERAL SITE WORK SUCH AS WELLS AND BURIAL GROUNDS. COORDINATES ARE SHOWN AS FEET. IT IS ROTATED FROM NORTH AND IS ON A SLIGHTLY DIFFERENT SCALE THAN LAMBERT.

SUPERSEDES DRAWING H-4-72048
REV 1 PER ECN 145785

OFFICIAL RELEASE
DATE NOV 07 1991

REF NUMBER	TITLE
H-4-72046 SHEET 1	400 AREA TOPOGRAPHIC MAP
H-4-72046 SHEET 2	400 AREA TOPOGRAPHIC MAP

REFERENCES

NEXT USED ON H-13-000401

REVISIONS

CADFILE N000402A CADCODE 1E10MAC02:10 0-N

DRAWN B.R. KAPPI 8-29-91
CHECKED 8-29-91
DATE APVD 2-5-91
10/30/91

U.S. DEPARTMENT OF ENERGY
Richland Operations Office
Westinghouse Hanford Company

400 AREA TOPOGRAPHIC MAP

SIZE	BLDG NO	CODE NO	DWG NO	REV
F	400G	0103	H-13-000402	0

SCALE 1:2000 SHEET 1 OF 1

H-13-000402

C

A

4 3 2 1

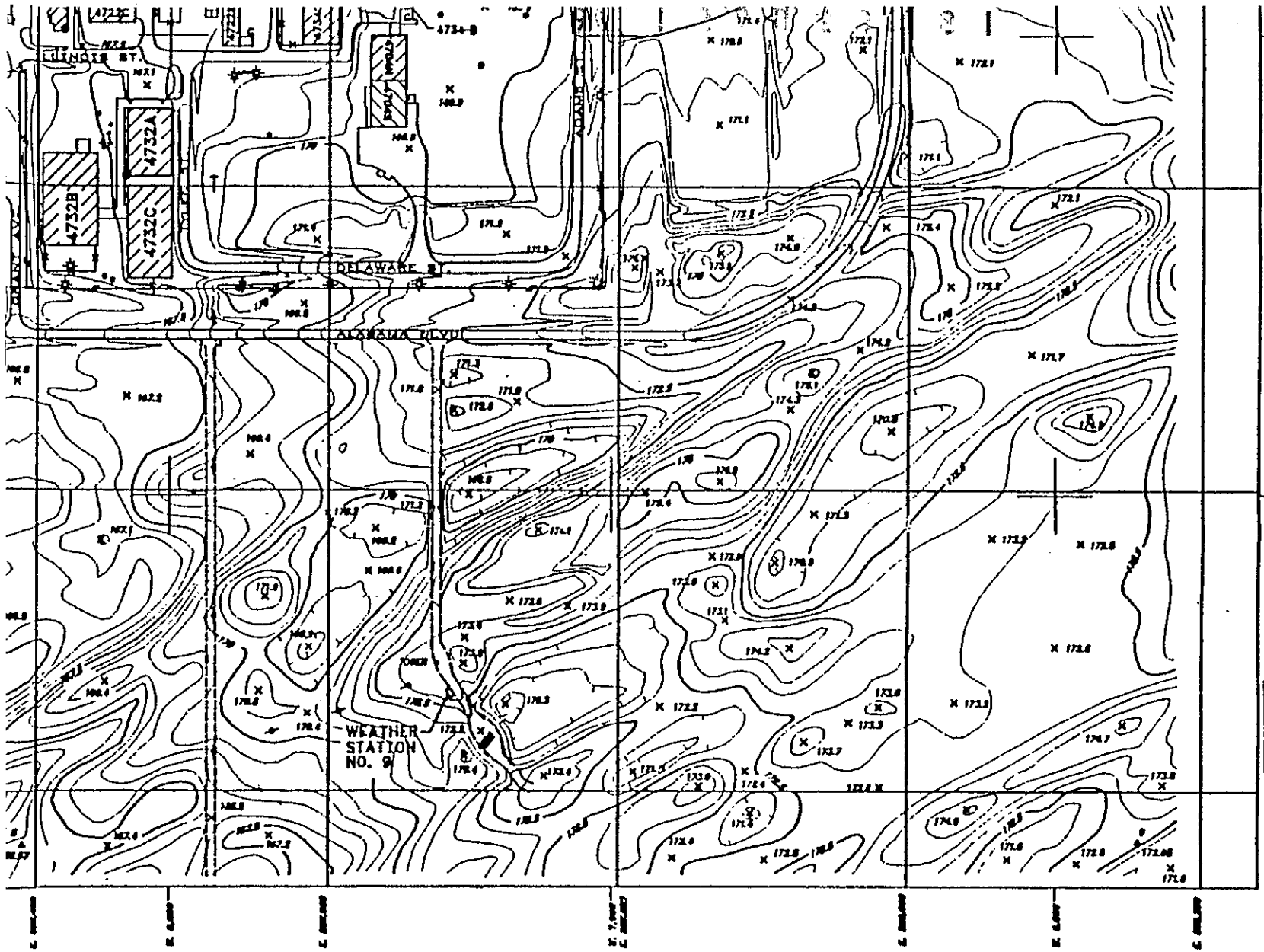

SEE DWG. H-13-000402 FOR NOTES AND LEGEND

SUPERSEDES DRAWING H-4-72047
REV 1 PER ECN 145785

H-4-72047 SHEET 1	400 AREA TOPOGRAPHIC MAP
H-4-15203 SHEET 1-13	400 AREA LAYOUT
H-4-72046 SHEET 1	400 AREA TOPOGRAPHIC MAP
H-4-72046 SHEET 2	400 AREA TOPOGRAPHIC MAP
REF NUMBER	TITLE

REFERENCES

REVISIONS

NEXT USED ON H-13-000403 | CADFILE N000401A | CADCOMP 11-12-1991 10:0:M

DRAWN	B.R. KAMPPI	8-18-91
DESIGNED		9-3-91
APPR APVD		9-3-91
APPR APVD		11/20/91
QA		
APPROVED		
APPROVED		
APPROVED		
APVD FOR IMPLEMENTATION		
BY		

U.S. DEPARTMENT OF ENERGY
Richland Operations Office
Westinghouse Hanford Company

400 AREA TOPOGRAPHIC MAP

SIZE	PLAN NO	SHEET NO	DWG NO	REV
F	4006	0183	H-13-000401	0

SCALE 1:2000 | SHEET 1 OF 1

DWG FINAL ☐ DATE | DWG FINAL ☐ DATE 9-26-91

124413

H-13-000401

ATTACHMENT H

Well Logs
Section H - Item 4

9 3 1 3 9 6 2 1 6 3 2

ATTACHMENT H

Well logs for the following well are attached:

499-S1-8J

9 3 1 2 9 6 2 1 6 3 3

WELL LOG	BY: Gary Bulture DATE: 12/17/84	RIG 9 Tuweqo	WELL NO. #4 [illegible] DEPTH: TO	SUBMITTAL NO.	PROJECT: CONTRACT: DAS 1710

TOTAL CASING LENGTH	DEPTH	DRILL METHOD	WET/DRY SAMPLE	LITHOLOGIC DESCRIPTION % Each Grain Size, Color, Roundness, Caliche, etc.	TIME	DRILLING COMMENTS
				moved & set up Rig		
					Bins time	

400 Area Secondary Cooling Water
Attachment H

9 3 1 1 9 0 1 1 1 3 5

WELL LOG		BY: Craig Butler DATE: 12/20/84	RIG: Invego	WELL NO. #4 DEPTH: - TO 19'	SUBMITTAL NO.	PROJECT: CONTRACT: J15 1710
TOTAL CASING LENGTH	DEPTH	DRILL METHOD	WET/DRY SAMPLE	LITHOLOGIC DESCRIPTION % Each Grain Size, Color, Roundness, Caliche, etc.	TIME	DRILLING COMMENTS
5'	5'	H	W	Fine to Coarse tan sand + silt		
10'	10'	"	"	same as 5' sample		
15'	15'	"	"	Med to Coarse sand + some silts		
					Shift time	

WELL LOG		BY Gary Bulton DATE 12/21/84		RIG Longyear 9	WELL NO. 4 DEPTH 19' TO 38'	NO.	CONTRACT SAS 1712
TOTAL CASING LENGTH	DEPTH	DRILL METHOD	WET/DRY SAMPLE	LITHOLOGIC DESCRIPTION % Each Grain Size, Color, Roundness, Caliche, etc.		TIME	DRILLING COMMENTS
20'	20	H	D	F to M tan sand			
25'	25'	"	"	same			
30	30'	"	"	F to C tan + gray sand			
35'	35'	"	"	same as 30' sample			
						Short time	

400 Area Secondary Cooling Water

Attachment 1

EXHIBIT 4.18

9 3 1 2 9 0 2 0 6 9 7 V-0749-0008

WELL LOG		BY: [illegible] DATE: 12/24/94		RIG: Orange	WELL NO. #4 DEPTH: 35' TO 60'	SUBMITTAL NO.	PROJECT: CONTRACT: SAS 1710
TOTAL CASING LENGTH	DEPTH	DRILL METHOD	WET/DRY SAMPLE	LITHOLOGIC DESCRIPTION X Each Grain Size, Color, Roundness, Caliche, etc.		TIME	DRILLING COMMENTS
40	40'	D	Dry	(F to C) tan-gray sand changed		to drive barrel	
45'	45'	"	"	SAME			
50'	50'	"	"	SAME			
55'	55'	"	"	SAME			
60'	60'	"	"	SAME			
						Bhrs	

WELL LOG	BY: [illegible] DATE: 12/22/84	RIG: 9 Ingersoll	WELL NO. 2-1 DEPTH: 60' TO 81'	SUBMITTAL NO. 8	PROJECT: CONTRACT: JAJ 176

TOTAL CASING LENGTH	DEPTH	DRILL METHOD	WET/DRY SAMPLE	LITHOLOGIC DESCRIPTION % Each Grain Size, Color, Roundness, Caliche, etc.	TIME	DRILLING COMMENTS
60'	60'	CD	Dry	Some F to M+C Tan sand		
65'	65'	"	"	Same		
70'	70'	"	"	Sam		
75'	75	"	"	M to C Black + tan sand		
80'	80'	"	"	Same as 75' sample		
					Shift time	

400 Area Secondary Cooling Water
Attachment H

V-0749-0008 /

9 1 2 0 0 1 1 9 9

WELL LOG	BY: Gary Bellina DATE: 7/25/94	RIG: Omega	WELL NO. #4 DEPTH: 51' TO 105'	SUBMITTAL NO.	PROJECT: CONTRACT: JAJ710

TOTAL CASING LENGTH	DEPTH	DRILL METHOD	WET/DRY SAMPLE	LITHOLOGIC DESCRIPTION % Each Grain Size, Color, Roundness, Caliche, etc.	TIME	DRILLING COMMENTS
85'	85'	"	Dry	m to c Black + tan sands		
90'	90'	"	"	SAME		
95'	95'	"	"	SAME		
100'	100'	"	"	SAME		
105'	105'	"	"	SAME		
					Stop	time

WELL LOG

BY: [illegible]
DATE: 12/31/[illegible]

RIG: 9
Dawson

WELL NO.: [illegible]
DEPTH: 105' TO 116'

SUBMITTAL NO.: 0

PROJECT:
CONTRACT: JA5121

TOTAL CASING LENGTH	DEPTH	DRILL METHOD	WET/DRY SAMPLE	LITHOLOGIC DESCRIPTION % Each Grain Size, Color, Roundness, Caliche, etc.	TIME	DRILLING COMMENTS
[illegible]'	110'	Ø	Dry	m to c tan + black sand		
[illegible]'	115'	"		SAME		
				picked up 17'8" of 14" casing + replaced stockade ring		
					Bic time	

400 Area Secondary Cooling Water
Attachment 14

WELL LOG		BY: [illegible] DATE: 1/2/55		RIG: Chicago	WELL NO. #4 DEPTH: 116' TO 126'	SUBMITTAL NO.	PROJECT: CONTRACT: DA-5174
TOTAL CASING LENGTH	DEPTH	DRILL METHOD	WET/DRY SAMPLE	LITHOLOGIC DESCRIPTION % Each Grain Size, Color, Roundness, Caliche, etc.		TIME	DRILLING COMMENTS
120'	120'	D	Dry	F to C tan + Black sand + silt			
125'	125'	"	"	Same			
						Shift	time

WELL LOG		BY: [illegible] DATE: 1/3/85		RIG 9 Cascade	WELL NO. [illegible] DEPTH: 126' TO 135'	SUBMITTAL NO.	PROJECT: CONTRACT: JAJMU
TOTAL CASING LENGTH	DEPTH	DRILL METHOD	WET/DRY SAMPLE	LITHOLOGIC DESCRIPTION % Each Grain Size, Color, Roundness, Caliche, etc.		TIME	DRILLING COMMENTS
130'	130'	D	Dry	F to C Black + tan sand + some silt			
135'	135'	"	"	Same as 130' sample			
						Stop time	

400 Area Secondary Cooling Water
Attachment H

9 1 1 2 9 0 2 1 3 9 3

WELL LOG		BY: [illegible] DATE: 11/4/85		RIG Chicago	WELL NO. 1 DEPTH: 135' TO 145'	SUBMITTAL NO.	PROJECT: CONTRACT:
TOTAL CASING LENGTH	DEPTH	DRILL METHOD	WET/DRY SAMPLE	LITHOLOGIC DESCRIPTION % Each Grain Size, Color, Roundness, Caliche, etc.		TIME	DRILLING COMMENTS
135'	135'	D C	(Dry) to F	sand tan + Black sand to 136'			
140'	140'	Hard ha	ls (Wet)	mix F to C Black sand + silt + some small gravel			
145'	145'	"	"	same as 140' sample			
				drilled 10' + picked up 11' of 14"		at 1228	
						This time	

WELL LOG	BY: Gary Perkins DATE: 4/7/85	RIG Omega	WELL NO. 4/9 0 2 1 4 DEPTH: 145' TO 155'	SUBMITTAL NO.	PROJECT: CONTRACT: DAJ 17B

...L. ...NG ...TH	DEPTH	DRILL METHOD	WET/DRY SAMPLE	LITHOLOGIC DESCRIPTION % Each Grain Size, Color, Roundness, Caliche, etc.	TIME	DRILLING COMMENTS
...5'	145'	H	Wet	F to C tan + Black sand + silt		
...'	150	"	"	SAME		
...5'	155'	"	"	SAME		
				Item # 1 10'		
				Item # 3 10'	Sha	time

400 Area Secondary Cooling Water
Attachment H

9 3 1 8 5 0 2 0 6.9 5

V-0749-0008

WELL LOG		BY: [illegible] DATE: 7/5/95	RIG: Chicago	WELL NO. #4 DEPTH: 155' TO 165'	SUBMITTAL NO.	PROJECT: CONTRACT: SAJ 1710
TOTAL CASING LENGTH	DEPTH	DRILL METHOD	WET/DRY SAMPLE	LITHOLOGIC DESCRIPTION % Each Grain Size, Color, Roundness, Caliche, etc.	TIME	DRILLING COMMENTS
155'	165'	H	Wet	F to C tan & Black sand & silt		
165'	165'	"	"	SAME		
				Item #1 10'		
				Item #3 2'		
					Shes	time

WELL LOG	BY: [illegible]	RIG 9	WELL NO. 4 2 1 6 9	SUBMITTAL NO.	PROJECT:
	DATE: 1/10/85	Omega	DEPTH: 165' TO 165'		CONTRACT: 5A5171R

TOTAL CASING LENGTH	DEPTH	DRILL METHOD	WET/DRY SAMPLE	LITHOLOGIC DESCRIPTION % Each Grain Size, Color, Roundness, Caliche, etc.	TIME	DRILLING COMMENTS
				set 60' of 10" casing, liner set to 160'		
				Item # 4 60' 10" casing		

400 Area Secondary Cooling Water
Attachment 14

9 1 1 2 9 0 2 1 5 0 7

WELL LOG		BY: Gary Ruttus DATE: 4/3/95		RIG: Omaha	WELL NO. #4 DEPTH: 165' TO 165'	SUBMITTAL NO.	PROJECT: CONTRACT: JAJ 1710
TOTAL CASING LENGTH	DEPTH	DRILL METHOD	WET/DRY SAMPLE	LITHOLOGIC DESCRIPTION % Each Grain Size, Color, Roundness, Caliche, etc.		TIME	DRILLING COMMENTS
				Set 100' of 10" casing			
				Item # 4 100' 10" casing			
						Shift time	

WELL LOG

BY: [illegible]
DATE: 1/11/85

RIG 9

WELL NO. #4
DEPTH: 165' TO 175'

SUBMITTAL NO.

PROJECT:
CONTRACT: SAS 176

TAL. ING GTH	DEPTH	DRILL METHOD	WET/DRY SAMPLE	LITHOLOGIC DESCRIPTION % Each Grain Size, Color, Roundness, Caliche, etc.	TIME	DRILLING COMMENTS
0'	170'	H	W	Sand silt & small gravel		
5'	175'	"	"	Sand		
				Fm #4 10'		
					Shift time	

400 Area Secondary Cooling Water
Attachment H

9 3 1 2 9 0 2 1 3 9 9

V-0749-0008

WELL LOG		BY: Ivan Bailey DATE: 4/19/85	RIG Omega	WELL NO. #4 DEPTH: 175' TO 183'	SUBMITTAL NO.	PROJECT: CONTRACT: TA-5170

TOTAL CASING LENGTH	DEPTH	DRILL METHOD	WET/DRY SAMPLE	LITHOLOGIC DESCRIPTION % Each Grain Size, Color, Roundness, Caliche, etc.	TIME	DRILLING COMMENTS
183'	183'	H	Wet	Black sand + gravel		
183'				Some water in + standing @ 179'		
				Item #4 5'		
					Shift time	

WELL LOG		BY: [illegible] DATE: 11/15/95	RIG 9 3 Tamco	WELL NO. #8 DEPTH: 133' TO 195'	SUBMITTAL NO.	PROJECT CONTRACT: DA5196
TOTAL CASING LENGTH	DEPTH	DRILL METHOD	WET/DRY SAMPLE	LITHOLOGIC DESCRIPTION % Each Grain Size, Color, Roundness, Caliche, etc.	TIME	DRILLING COMMENTS
135'	135'	H	Wet	black sand & gravel		
190'	190'	"	"	SAME		
195'	195'	"	"	SAME		
				Item #4 10'		
					Blue	time
				not able to drill open hole	from	133' to 195'

400 Area Secondary Cooling Water
Attachment H

9 3 1 3 9 0 2 4 7 0 1 V-0749-0000

WELL LOG		BY: Chris Butler DATE: 9/6/95		RIG Cougar	WELL NO. #4 DEPTH: 195' TO 202'	SUBMITTAL NO.	PROJECT: CONTRACT: JA51716
TOTAL CASING LENGTH	DEPTH	DRILL METHOD	WET/DRY SAMPLE	LITHOLOGIC DESCRIPTION % Each Grain Size, Color, Roundness, Caliche, etc.		TIME	DRILLING COMMENTS
202'	202'	H	wet	sand silt & gravel upper Ringold (tan)			
				making good water			
				open hole 4' to 6' ahead of casing			
				Item # 4 7'			
						Skip time	

WELL LOG		BY: Greg Sutton DATE: 11/7/84		RIG Chicago 3	DEPTH: 202' TO 211' n 2	NO.	PROJECT: CONTRACT: SA5120
TOTAL CASING LENGTH	DEPTH	DRILL METHOD	WET/DRY SAMPLE	LITHOLOGIC DESCRIPTION % Each Grain Size, Color, Roundness, Caliche, etc.		TIME	DRILLING COMMENTS
205'	205'	H	Wet	Ringold sand silt + gravels			
210'	210'	"	"	Same			
				drill 10' Ahead of casing		water	still comes in
				Item #4 9'			
						Shut	

Benton Secondary Cooling Water
Attachment H

WELL LOG		BY: Jerry Bulkins DATE: 1/18/84		RIG: Nimrod	WELL NO. #9 DEPTH: 211' TO 216'	SUBMITTAL NO.	PROJECT CONTRACT: JAS 1716
TOTAL CASING LENGTH	DEPTH	DRILL METHOD	WET/DRY SAMPLE	LITHOLOGIC DESCRIPTION % Each Grain Size, Color, Roundness, Caliche, etc.		TIME	DRILLING COMMENTS
215'	215'	H	wet	(Ringold) sand silt + gravels			
				hole open from 210' to 216'			
				Rig brake down (main clutch)			
				Item #4 ~~6~~ 5'		7hrs time	

EXHIBIT "A"

WELL LOG	BY: Jay Bullock DATE: 1/21/89	RIG 9 Omnegas	WELL NO: #40 2 1 7 0 DEPTH: 216' TO 216'	SUBMITTAL NO. 4	PROJECT: CONTRACT: JAJ1710

TOTAL CASING LENGTH	DEPTH	DRILL METHOD	WET/DRY SAMPLE	LITHOLOGIC DESCRIPTION % Each Grain Size, Color, Roundness, Caliche, etc.	TIME	DRILLING COMMENTS
				Rig Broke Down had to pull Jack shaft out & get Repairs		
					6hrs. time.	

400 Area Secondary Cooling Water
Attachment H

V-0749-0008

9 5 1 2 9 0 2 1 7 0 5

WELL LOG		BY: Gary Bustin		RIG	WELL NO. #4	SUBMITTAL NO.	PROJECT:
		DATE: 11-4-95			DEPTH: 216' TO 220'		CONTRACT: JAS1712
TOTAL CASING LENGTH	DEPTH	DRILL METHOD	WET/DRY SAMPLE	LITHOLOGIC DESCRIPTION % Each Grain Size, Color, Roundness, Caliche, etc.		TIME	DRILLING COMMENTS
				installed new Jack shaft &		Back	to drilling all 1:20 Pm.
210'	220'	H	W	hand Ringold (dark gray)			
				drilled 10' ahead of casing			
				Item #4 1'		Short time.	
				Item #5 3'			

WELL LOG		BY: Gary Bustine DATE: 1/23/85	RIG 9 Chicago	WELL NO. 40 [illegible] 7 0 DEPTH: 220' TO 231'	SUBMITTAL NO. 8	PROJECT: CONTRACT: JAJ1710
TOTAL CASING LENGTH	DEPTH	DRILL METHOD	WET/DRY SAMPLE	LITHOLOGIC DESCRIPTION % Each Grain Size, Color, Roundness, Caliche, etc.	TIME	DRILLING COMMENTS
210'	225'	H	wet	hard Ringold (dark gray)		
220'	230'	"	"	Same		
				(hole is making extra mud from 210' to 231')		
				Item #5		
					Stop time	

EXHIBIT "A"

400 Area Secondary Cooling Water
Attachment H

9 5 1 2 9 0 9 , 1 7 0 7 V-0749-0008

WELL LOG		BY: Gene Burkhart DATE: 4/25/85		RIG: Dowsage	WELL NO. #4 DEPTH: 231' TO 239'	SUBMITTAL NO.	PROJECT: CONTRACT: JA5/742
TOTAL CASING LENGTH	DEPTH	DRILL METHOD	WET/DRY SAMPLE	LITHOLOGIC DESCRIPTION X Each Grain Size, Color, Roundness, Caliche, etc.		TIME	DRILLING COMMENTS
230'	235'	H	W	Hard Ringold (dark Gray)			
						6½ hrs	drilling
				Item # 5 7'		1½ hr	bail test
				bail test		Sho	time
				Casing set at 230'			
				hole open to 237'			
				15 to 20 gal per min with		10" drop in water	
				Item # 9 1½ hrs time bail test + back to Drilling			

WELL LOG		BY: [illegible] DATE: 1/29/94		RIG Chango	WELL NO. #4 DEPTH: 238' TO 243'	SUBMITTAL NO.	PROJECT: CONTRACT: DA 51716
TOTAL CASING LENGTH	DEPTH	DRILL METHOD	WET/DRY SAMPLE	LITHOLOGIC DESCRIPTION % Each Grain Size, Color, Roundness, Caliche, etc.		TIME	DRILLING COMMENTS
				After bail test heaving sand + mud problems			
				Cased hole off to 238' + back to Drilling			
40'	240'	H	W	Ringold sand silt + extra mud.			
				lost time for bail test 5hrs time			
				Item #9 5hrs time			
				Item #5 5'			
						5hrs time	

400 Area Secondary Cooling Water
Attachment H

9 5 1 3 9 0 2 0 7 0 9 V-0749-0008

WELL LOG		BY: [illegible] DATE: 7/30/95		RIG Omega	WELL NO. #4 DEPTH: 243' TO 250'	SUBMITTAL NO.	PROJECT: CONTRACT: TA51710
TOTAL CASING LENGTH	DEPTH	DRILL METHOD	WET/DRY SAMPLE	LITHOLOGIC DESCRIPTION X Each Grain Size, Color, Roundness, Caliche, etc.		TIME	DRILLING COMMENTS
240'	243'	H	W	Hard Ringold sand silt + gravels			
250'	250'	"	"	SAME			
				drilled 11' ahead of casing			
				extra mud comming in hole all day			
				Item #5 7'			
						Shift time	

WELL LOG		BY: Jim Butler DATE: 2/1/85		RIG: Cruzeo	WELL NO. #4 DEPTH: 261' TO 268'	SUBMITTAL NO.	PROJECT: CONTRACT: JAJ1712
TOTAL CASING LENGTH	DEPTH	DRILL METHOD	WET/DRY SAMPLE	LITHOLOGIC DESCRIPTION % Each Grain Size, Color, Roundness, Caliche, etc.		TIME	DRILLING COMMENTS
26.0'	26.5'	H	W	sand silt & gravels Ringold			
				extra mud in hole not (normal)			
				Item # 5 7'			
						Coke time	

400 Area Secondary Cooling Water
Attachment H

WELL LOG		BY: Gary Burkhart	RIG	WELL NO. #4	SUBMITTAL NO.	PROJECT:
		DATE: 7/4/85	Omega	DEPTH: 268' TO 275'		CONTRACT: JAJ 1760

TOTAL CASING LENGTH	DEPTH	DRILL METHOD	WET/DRY SAMPLE	LITHOLOGIC DESCRIPTION X Each Grain Size, Color, Roundness, Caliche, etc.	TIME	DRILLING COMMENTS
270'	270'	H	W	sand silt + gravels		
270'	275'	"	"	same		
				extra mud caming in bad at 272'		
				bail test 4hrs time at 271' (made good water)		
				Item # 5 7'		
				Item # 9 4hrs time (to test)	8hrs time	
				(+ clean hole back out)		

EXHIBIT "A"

WELL LOG		BY: Jerry Bielland	RIG 9	WELL NO: 4 2 7 1	SUBMITTAL NO.	PROJECT:
		DATE: 7/7/85	Omega	DEPTH: 293' TO 295'		CONTRACT: JA5120

TOTAL CASING LENGTH	DEPTH	DRILL METHOD	WET/DRY SAMPLE	LITHOLOGIC DESCRIPTION % Each Grain Size, Color, Roundness, Caliche, etc.	TIME	DRILLING COMMENTS
30'	295'	H	W	sand silt + good gravels Ringell		
				(welder broke down)		pipe driving very hard 295'to 280'
					6hrs time	

400 Area Secondary Cooling Water
Attachment H

9 3 1 9 9 0 2 9 7 1 3 V-0749-0008

WELL LOG		BY: Greg Bickford DATE: 5/11/54		RIG: Chevron	WELL NO. #4 DEPTH: 295' TO 302'	SUBMITTAL NO.	PROJECT: CONTRACT: SA5170
TOTAL CASING LENGTH	DEPTH	DRILL METHOD	WET/DRY SAMPLE	LITHOLOGIC DESCRIPTION % Each Grain Size, Color, Roundness, Caliche, etc.		TIME	DRILLING COMMENTS
280'	300'	H	Wet	sand silt + gravels Rinsed			
				casing driving hard from 280' to 290'			
				open hole 15' ahead of casing			
						8hrs time	

EXHIBIT "A"

WELL LOG		BY: [illegible]	RIG 9	WELL NO: #4[illegible]7[illegible]4	SUBMITTAL NO.	PROJECT:
		DATE: 7/15/85	Cowan	DEPTH: 302' TO 309'		CONTRACT: JA5170

TOTAL CASING LENGTH	DEPTH	DRILL METHOD	WET/DRY SAMPLE	LITHOLOGIC DESCRIPTION % Each Grain Size, Color, Roundness, Caliche, etc.	TIME	DRILLING COMMENTS
290'	305'	H	Wet	Sand silt + gravel Ringold		
				Casing driving hard from 290' to 300'		
					Shift time	

EXHIBIT "A"

400 Area Secondary Cooling Water
Attachment H

9 1 0 0 0 7 1 5 V-0749-0008

WELL LOG		BY: [illegible]	RIG: Omega	WELL NO. 24	SUBMITTAL NO.	PROJECT:
		DATE: 2/16/85		DEPTH: 309 TO 315'		CONTRACT: SAJ1710

TOTAL CASING LENGTH	DEPTH	DRILL METHOD	WET/DRY SAMPLE	LITHOLOGIC DESCRIPTION X Each Grain Size, Color, Roundness, Caliche, etc.	TIME	DRILLING COMMENTS
300'	310'	H	W	Sand silt + gravel Rinsold		
310'	315'	"	"	Same		
				Casing driving hard from	300' to	310'
				hard Rinsold to 315'		
					Sand	time

EXHIBIT "A"

WELL LOG		BY: Jerry Burkhart DATE: 2/15/85		RIG: Omega	WELL NO: 291	SUBMITTAL NO.	PROJECT: CONTRACT: XJ17D
					DEPTH: 315' TO 323'		
TOTAL CASING LENGTH	DEPTH	DRILL METHOD	WET/DRY SAMPLE	LITHOLOGIC DESCRIPTION % Each Grain Size, Color, Roundness, Caliche, etc.		TIME	DRILLING COMMENTS
310'	320'	H	wet	sand silt & gravels hard		Ringold	
						Shoe time	

400 Area Secondary Cooling Water
Attachment H

DRILL LOG	BY Gerry Bickers	RIG 9	WELL NUMBER #4	COMPUTER NUMBER 7	PROJECT OR WORK ORDER NO.
	DATE 2/18/85	Omega	DEPTH 323' to 329'		SUBCONTRACT NO. SAJ170

TOTAL CASING	DEPTH	DRILL METHOD	WET/DRY SAMPLE	LITHOLOGIC DESCRIPTION % EACH GRAIN SIZE, COLOR, ROUNDNESS, CALICHE, ETC.	TIME	DRILLING COMMENTS
~~325'~~						
310'	325'	H	wet	sand silt + gravels. Hard Ringold		
				cased hole from 310' to 320' (casing driving hard)		
					Blue time	

REMARKS:

WELL LOG		BY: [illegible] DATE: 7/20/83		RIG: Omega	WELL NO. #4 DEPTH: 379' TO 349'	SUBMITTAL NO.	PROJECT: CONTRACT: SAJ176
TOTAL CASING LENGTH	DEPTH	DRILL METHOD	WET/DRY SAMPLE	LITHOLOGIC DESCRIPTION % Each Grain Size, Color, Roundness, Caliche, etc.		TIME	DRILLING COMMENTS
320'	330'	H	Wet	sand silt + gravels Rinsed			
	335'	"	"	334 to 335 starting into dark gray clay + gravels			
	340'	"	"	dark gray clay + some gravels			
	345'	"	"	same as 340'			
						Shift time	

400 Area Secondary Cooling Water
Attachment H

9 0 1 2 3 0 2 7 1 9 V-0749-0000

WELL LOG		BY: Gary Bullins DATE: 2/21		RIG: Omega	WELL NO. #4 DEPTH: 349 TO 357	SUBMITTAL NO.	PROJECT: CONTRACT: DA5710
TOTAL CASING LENGTH	DEPTH	DRILL METHOD	WET/DRY SAMPLE	LITHOLOGIC DESCRIPTION % Each Grain Size, Color, Roundness, Caliche, etc.		TIME	DRILLING COMMENTS
320'	350'	H	wet	dark gray clay some sand + gravel's			
320'	355'	"	"	same			
320'	357'	"	"	hole falling in above stop to install casing			
				cased hole from 320' to 340'			
						This time	

EXHIBIT "A"

WELL LOG		BY: Gary Bullion DATE: 7/28/85	RIG 9 Omega	WELL NO. #40 2 7 2 DEPTH: 357' TO 365'	SUBMITTAL NO.	PROJECT: CONTRACT: SAI 120
TOTAL CASING LENGTH	DEPTH	DRILL METHOD	WET/DRY SAMPLE	LITHOLOGIC DESCRIPTION % Each Grain Size, Color, Roundness, Caliche, etc.	TIME	DRILLING COMMENTS
				Cleaned hole back to 357', (caving) (problems + mud)		
				Cased hole from 340' to 350'		
50'	360'	H	wet	back into cemented gravel, clay, + sand from 357' to 360'		
350'	365'	H	wet	cemented gravel + silt + some sand		
					Shift time	

EXHIBIT "A"

400 Area Secondary Cooling Water
Attachment H

9 3 1 2 9 0 3 1 7 2 | V-0749-0008

WELL LOG		BY: [illegible] DATE: 12-5-85		RIG: Omega	WELL NO. #4 DEPTH: 365' TO 375'	SUBMITTAL NO.	PROJECT: CONTRACT: JA5170
TOTAL CASING LENGTH	DEPTH	DRILL METHOD	WET/DRY SAMPLE	LITHOLOGIC DESCRIPTION % Each Grain Size, Color, Roundness, Caliche, etc.		TIME	DRILLING COMMENTS
				cased hole from 350' to 360'			
360'	370'	H	Wet	sand silt & gravels (Cemented)			
360'	375'	"	"	same			
				took water sample At 365'			
						8hrs time	

EXHIBIT "A"

WELL LOG		BY [illegible] DATE: 2/26/88	RIG 9 3 Omega	WELL NO. [illegible] DEPTH: 375' TO 385'		SUBMITTAL NO.	PROJECT: CONTRACT: JAJ1710
TOTAL CASING LENGTH	DEPTH	DRILL METHOD	WET/DRY SAMPLE	LITHOLOGIC DESCRIPTION % Each Grain Size, Color, Roundness, Caliche, etc.		TIME	DRILLING COMMENTS
				Casing at 360'			
360'	380'	H	Wet	sand silt + gravel			
360'	385'	H	Wet	cobbles gravel + dark gray clay		(Hard to drill)	
						Bhs time	

400 Area Secondary Cooling Water
Attachment H.

EXHIBIT "A"

9 5 1 2 9 0 2 1 7 2 3 V-0749-0000

WELL LOG		BY: James Butler	RIG	WELL NO. #4	SUBMITTAL NO.	PROJECT:
		DATE: 9/17/85	Chuckar	DEPTH: 355' TO 400'		CONTRACT: DAT 710

TOTAL CASING LENGTH	DEPTH	DRILL METHOD	WET/DRY SAMPLE	LITHOLOGIC DESCRIPTION % Each Grain Size, Color, Roundness, Caliche, etc.	TIME	DRILLING COMMENTS
360'	390'	H	Wet	gravel + dark gray clay (cemented)		
"	395'	"	"	SAME AS 390'		
"	400'	"	"	SAME AS 390'		
					Shift time	

ATTACHMENT I

Geology and Hydrogeology of the 400 Area
Section H - Items 5 & 6

9 5 1 2 9 0 0 2 7 2 4

ATTACHMENT I

Hydrogeology of the 400 Area is summarized in Groundwater Impact Assessment Report for the 400 Area Ponds: WHC-EP-0587. The geologic strata consist of approximately 600 feet of fluvial, lacustrine and glaciofluvial sediments which overlie the Columbia River Basalt Group. These sediments are divided into the Miocene-Pliocene Ringold Formation and the Pleistocene Hanford Formation. A thin veneer of eolian silt and sand covers the area.

The Columbia River Basalt Group is approximately 600 feet below the ground surface. The uppermost basalt flow consists of an upper flow breccia and a lower hard, dense basalt. The Ringold Formation is approximately 450 feet thick. The Ringold Formation consists of interstratified clay, silt, sand, and gravel and is described in more detail in Geology and Hydrology of the Hanford Site: A Standard Text for Use in Westinghouse Hanford Company Documents and Reports, WHC-SD-ER-TI-003 and Revised Stratigraphy for the Ringold Formation, Hanford Site, South Central Washington, WHC-SD-EN-EE-004. The Hanford formation is up to 150 feet thick in the area, and consists of a sand-dominated facies, which is primarily a dense, laminated, fine to coarse sand with little silt. The near surface soils at the 400 Area are composed of very dense, laminated fine to medium sand with little silt.

The unconfined aquifer in the 400 Area is at approximately 390 feet above mean sea level. Groundwater flows generally to the east-southeast.

Included in this attachment are a soil map and description of soil types, from the report Soil Survey Hanford Project in Benton County Washington: BNWL 243, April, 1966.

Attachment I
"modified from
BNWL-243"

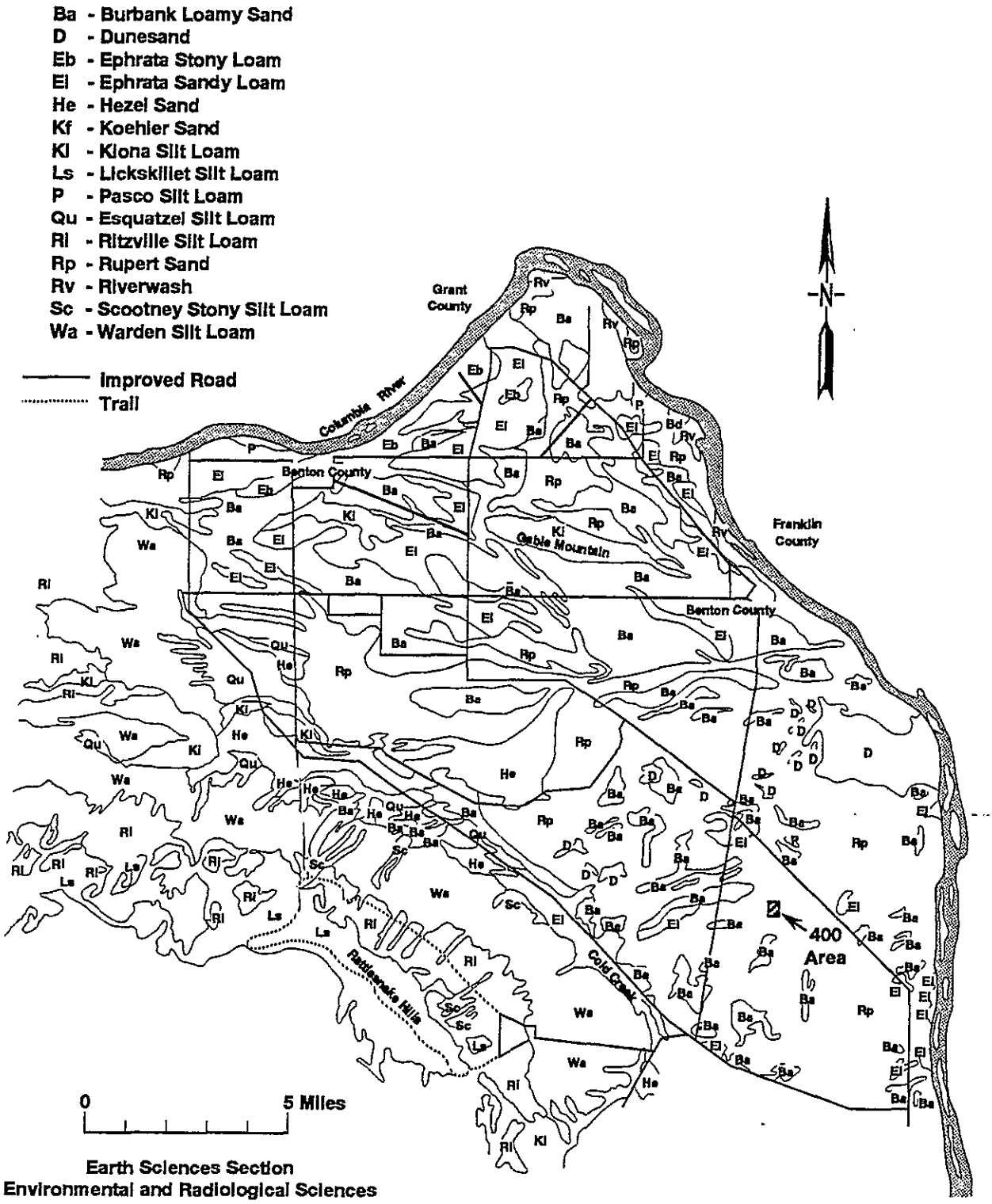

Earth Sciences Section
Environmental and Radiological Sciences
March, 1966

H9212001.1

Attachment I

Correlation Table

Current Classification		1919 Soil Survey	
Symbol	Soil Type	Symbol	Soil Type
Ri	Ritzville silt loam	Rs, R, Rl	Ritzville sand, very fine sand and loam
Rp	Rupert sand	Ws, Wf	Winchester sand, fine sand
Kf	Koehler sand	Kf	Koehler fine sand
Ba	Burbank loamy sand	Es, Bs, Bf, Ef	Ephrata sand, Beverly fine sand, very fine sand
He	Hezel sand	Qf, Qs, Qt	Quincy sand
El	Ephrata sandy loam	Ef	Ephrata sandy loam, fine sandy loam
Ls	Lickskillet silt loam	S	Scabland; elevation 2,000 ft.
Eb	Ephrata stony loam	S	Scabland glacial deposits near Columbia River
Ki	Kiona silt loam	S	Scabland; elevation 2,000 ft.
Wa	Warden silt loam	So, Sl, Ss	Sagemoor fine sand very fine sand, silt loam
Sc	Scootney stony silt loam	Sf	Stacy stony silt loam
P	Pasco silt loam	P, Pc	Pasco fine sandy loam, clay
Qu	Esquatzel silt loam	Ey, Eo	Esquatzel fine sandy loam, silt loam
Rv	Riverwash	Rv	Riverwash
D	Dune sand	D	Dune sand

Attachment I

Approximate Classification of Hanford Soils
Engineering and Higher Categories

Soil Type	Classification			
	Soils and Men 1938	7th Approximation	Unified	A.A.S.H.O.
Ritzville silt loam	Brown intergrade to Regosol	Andic Aridic Haplustoll	ML	A-4
Rupert sand	Regosol	Typic Torripsamment	Surface SM Subsoil SP to SM	A-4
Hezel sand	Regosol	Typic Torrifluvent	Surface SM Subsoil ML	A-2 A-4
Koehler sand	Regosol	Mollic Durorthid	SM	A-2
Burbank loamy sand	Regosol	Typic Torripsamment	Surface SM Subsoil GM to GP	A-2
Ephrata sandy loam	Sierozem integrade to Regosol	Andic Mollic Camborthid	Surface SM to ML Subsoil ML	A-2 to A-4 A-4 to A-1
Lickskillet silt loam	Lithosol	Lithic Haplustoll	ML to GM	A-4 to A-1
Kiona silt loam	Sierozem integrade to Regosol	Andic Mollic Camborthid	GM	A-1
Warden silt loam	Sierozem integrade to Regosol	Andic Mollic Camborthid	SM to ML	A-2 to A-4
Scootney stony silt	Sierozen integrade to Regosol	Andic Mollic Camborthid	SM to ML	A-2 to A-4
Ephrata sandy loam	Sierozem integrade to Regosol	Mollandeptic Camborthid	Surface SM-ML Subsoil ML	A-2 to A-4 A-4 to A-1
Pasco silt loam	Alluvial	Andic Cumulic Haplaquoll	SM to ML	A-4
Esquatzel silt loam	Alluvial	Andic Cumulic Haplaquoll	SM to ML	A-4
Riverwash	Miscellaneous	Not soil	GP	A-1
Dune sand	Miscellaneous	Not soil	SP to SW	A-3

Attachment I

Capability Classification

Soil Type	Dryland	Irrigated
Ritzville silt loam	III-VII	I-IV
Rupert sand	VII	IV
Koehler sand	VII	IV
Burbank loamy sand	VII	IV
Hezel sand	VII	IV
Ephrata sandy loam	VI	II-IV
Lickskillet silt loam	VI & VII	---
Ephrata stony loam	VI	---
Kiona silt loam	VI	---
Warden silt loam	IV	I-IV
Scootney stony silty loam	VI	---
Pasco silt loam	IV	III
Esquatzel silt loam	III	I
Riverwash	VIII	---
Dune sand	VIII	---

ATTACHMENT J

Wastewater Information
Section E

ATTACHMENT J
SECTION E : WASTEWATER INFORMATION

Ortho Phosphate : Result was determined by Phosphate (PO4), EPA method 300.0.

Total Phosphate : Result was determined by Phosphate as Phosphorous, EPA method 365.2.

Nitrate-N : This result is actually Nitrate-Nitrite-N (NO3-NO2-N). This determination is the total inorganic nitrogen present in the sample. Nitrate-N result is actually expected to be lower than the NO3-NO2-N result provided.

TKN-N : This result was estimated by adding Ammonia as N with NO3-NO2-N. Since TKN is a measure of all nitrogen present in the sample, this estimate is a close approximation to the actual result. This estimate was used because current labs on contract do not perform TKN-N.

Ammonia-N : This result is truly Ammonia-N EPA method 350.1.

Please note the following units:
mg/l is ppm
ug/l is ppb

ATTACHMENT K

REFERENCES
Section H - Item 7

ATTACHMENT K

REFERENCES

Bechtel, 1971a, Final Geology Report for the Fast Flux Test Facility: BR-5853-C-005, Bechtel Power Corporation, San Francisco, CA.

Bechtel, 1971b, Final Soil Investigation Report for the Fast Flux Test Facility, Richland, Washington for the United States Atomic Energy Commission: HEDL-BC-6041, Bechtel Power Corporation, San Francisco, CA.

Blume & Associates, 1970, Seismic and Geologic Siting Evaluation, Fast Flux Test Facility near Richland ,Washington: JABE-WADCO-01, John A. Blume & Associates, San Francisco, CA.

Delaney, C.D., K. A. Lindsey, and S. P. Reidel, 1991, Geology and Hydrology of the Hanford Site: A Standard Text for Use in Westinghouse Hanford Company Documents and Reports, WHC-SD-ER-TI-003, Westinghouse Hanford Company, Richland, WA.

Hajek, B. F., April, 1966, Soil Survey Hanford Project in Benton County Washington, BNWL-243, Battelle Northwest Laboratory, Richland, WA.

HEDL-400, December, 1980, A Summary Description of the Fast Flux Test Facility, Hanford Engineering Development Laboratory, Richland, WA.

Lindsey, K. A., 1991, Revised Stratigraphy for the Ringold Formation, Hanford Site, South Central Washington, WHC-SD-EN-EE-004, Westinghouse Hanford Company, Richland, WA.

WHC, 1990, 400 Area Secondary Cooling Water Stream-Specific Report: WHC-EP-0342, Addendum 28, Westinghouse Hanford Company, Richland, WA.

WHC, 1991, Groundwater Maps of the Hanford Site, June 1991: WHC-EP-0394-3, Westinghouse Hanford Company, Richland, WA.

WHC, 1992a, 400 Area Secondary Cooling Water Sampling and Analysis Plan: WHC-SD-FF-PLN-002, Westinghouse Hanford Company, Richland, WA.

WHC, 1992b, Project W-252, Phase II Liquid Effluent Engineering Report: WHC-SD-W252-ER-001, Rev. 0, Westinghouse Hanford Company, Richland, WA.

WHC, 1992, Groundwater Impact Assessment Report for the 400 Area Ponds: WHC-EP-0587, Westinghouse Hanford Company, Richland, WA.

CORRESPONDENCE DISTRIBUTION COVERSHEET

Author	Addressee	Correspondence No.
J. D. Bauer, RL (J. R. Rosser, WHC)	D. B. Jansen, Ecology	Incoming:9300902 XRef:9259157D

Subject: STATE WASTE DISCHARGE PERMIT APPLICATION FOR 400 AREA SECONDARY COOLING WATER.

INTERNAL DISTRIBUTION

Approval	Date	Name	Location	w/att
		Correspondence Control	A3-01	
		L. E. Borneman	B2-35	
		G. D. Carpenter	H6-20	
		A. J. Diliberto	R1-48	
		C. K. DiSibio	B3-15	
		C. J. Geier	H6-21	
		G. B. Griffin	N2-34	
		G. W. Jackson, Assignee	H6-20	
		D. E. Kelley	R1-48	
		R. J. Landon	H6-22	
		R. E. Lerch	B3-63	
		P. J. Mackey	B3-15	
		H. E. McGuire, Level 1	B3-63	
		P. C. Miller	N2-04	
		R. W. Oldham	H6-25	
		S. M. Price	H6-25	
		J. R. Rosser	H6-25	
		D. J. Sommer	R1-48	
		D. R. Speer	R1-48	
		D. J. Swaim	N2-51	
		J. E. Turnbaugh	H6-25	
		T. B. Veneziano	L4-96	
		J. D. Williams	R1-48	
		EDMC	H6-08	
		JRR/File/LB	H6-25	