0029333 607

**U.S. DEPARTMENT OF ENERGY**
Hanford Waste Vitrification Plant
Richland, Washington
DOE Contract DE-AC06-86RL10838

**FLUOR DANIEL, INC.**
Advanced Technology Division
Fluor Contract 8457

2 of 2

# TECHNICAL SPECIFICATIONS
# CONSTRUCTION OFFICE AND WAREHOUSE BUILDING
# (B-595-C-A120)

**"APPROVED FOR CONSTRUCTION"**

9413154.0453

REVISION NO. 0
SAFETY CLASS 4 (Ref)
ISSUE DATE

APPROVED BY:

| | | |
|---|---|---|
| E. R. Jacobs | Project Package Engineer | 4-27-92 Date |
| J. L. Smets | Baseline Engineering Manager | 4-27-92 Date |
| J. L. Smets | Systems Engineering Manager | 4-27-92 Date |
| A. K. Yee | Independent Safety Manager | 4-28-92 Date |
| J. G. Kelly | Q. A. Manager | 4-28-92 Date |
| R. S. Poulter | Project Director | 28 APR 92 Date |

# CONSTRUCTION OFFICE AND WAREHOUSE BUILDINGS (B-595-C-A120)

## TABLE OF CONTENTS TECHNICAL SPECIFICATIONS

**DIVISION 1 - GENERAL REQUIREMENTS**

| Section | Title |
|---|---|
| 01730 | Operation and Maintenance Data |

**DIVISION 2 - SITE WORK**

| Section | Title |
|---|---|
| 02101 | Site Improvements for Construction Support Facilities |

**DIVISION 13 - SPECIAL CONSTRUCTION**

| Section | Title |
|---|---|
| 13121 | GFE Warehouse/Receiving and Storage Building |
| 13123 | Operations Annex Building |

**DIVISION 16 - ELECTRICAL**

| Section | Title |
|---|---|
| 16440 | Cathodic Protection System (Sacrificial Anode) |

# SECTION 01730
# OPERATION AND MAINTENANCE DATA

## PART 1 GENERAL

### 1.1 SUBMISSION OF OPERATION AND MAINTENANCE DATA

Submit operation and maintenance (O&M) data which is specifically applicable to this contract and a complete and concise depiction of the provided equipment or product. Data containing extraneous information to be sorted through to find applicable instructions will not be accepted. Present information in sufficient detail to clearly explain user O&M requirements at the system, equipment, component, and subassembly level. Include an index preceding each submittal. Submit the following in accordance with the Vendor Drawing and Data Requirements section of the Order/ Subcontract.

1.1.1 Package Content

For each product, system, or piece of equipment requiring submission of O&M data, submit the package required in the individual technical section. Package content shall be as required in the Paragraph 1.3, "Schedule of Operations and Maintenance Data Packages."

### 1.2 TYPES OF INFORMATION REQUIRED IN O&M DATA PACKAGES

1.2.1 Operating Instructions

Include specific instructions, procedures, and illustrations for the following phases of operation:

1.2.1.1 Safety Precautions

List personnel hazards and equipment or product safety precautions for all operating conditions.

1.2.1.2 Operator Prestart

Include requirements to set up and prepare each system for use.

1.2.1.3 Start-Up, Shutdown, and Post-Shutdown Procedures

Include a control sequence for each of these operations.

1.2.1.4 Normal Operations

Include control diagrams with data to explain operation and control of systems and specific equipment.

1.2.1.5 Emergency Operations

Include emergency procedures for equipment malfunctions to permit a short period of continued operation or to shut down the equipment to prevent further damage to systems and equipment. Include emergency shutdown instructions for fire, explosion, spills, or other foreseeable contingencies. Provide guidance on emergency operations of all utility systems including valve locations and portions of systems controlled.

1.2.1.6 Operator Service Requirements

Include instructions for services to be performed by the operator such as lubrication, adjustments, and inspection.

1.2.1.7 Environmental Conditions

Include a list of environmental conditions (temperature, humidity, and other relevant data) which are best suited for each product or piece of equipment and describe conditions under which equipment should not be allowed to run.

1.2.2 Preventive Maintenance

Include the following information for preventive and scheduled maintenance to minimize corrective maintenance and repair.

1.2.2.1 Lubrication Data

Include lubrication data, other than instructions for lubrication in accordance with Paragraph 1.2.1.6, Operator Service Requirements.

1.2.2.2 Preventive Maintenance Plan and Schedule

Include manufacturer's schedule for routine preventive maintenance, inspections, tests and adjustments required to ensure proper and economical operation and to minimize corrective maintenance and repair. Provide manufacturer's projection of preventive maintenance man-hours on a daily, weekly, monthly, and annual basis.

1.2.3 Corrective Maintenance

Include manufacturer's recommendations on procedures and instructions for correcting problems and making repairs.

1.2.3.1 Troubleshooting Guides and Diagnostic Techniques

Include step-by-step procedures to promptly isolate the cause of typical malfunctions. Describe clearly why the checkout is performed and what conditions are to be sought. Identify tests or inspections and test equipment required to determine whether parts and equipment may be reused or require replacement.

1.2.3.2 Wiring Diagrams and Control Diagrams

Wiring diagrams and control diagrams shall be point-to-point drawings of wiring and control circuits including factory-field interfaces. Provide a complete and accurate depiction of the actual job specific wiring and control work. On diagrams number electrical and electronic wiring and pneumatic control tubing and the terminals for each type, identically to actual installation numbering.

1.2.3.3 Maintenance and Repair Procedures

Include instructions and list tools required to restore product or equipment to proper condition or operating standards.

1.2.3.4 Removal and Replacement Instructions

Include step-by-step procedures and list required tools and supplies for removal, replacement, disassembly, and assembly of components, assemblies, subassemblies, accessories, and attachments. Provide tolerances, dimensions, settings and adjustments required. Instructions shall include a combination of text and illustrations.

1.2.3.5 Spare Parts and Supply Lists

Include lists of spare parts and supplies required for maintenance and repair to ensure continued service or operation without unreasonable delays.

1.2.3.6 Corrective Maintenance Man-Hours

Include manufacturer's projection of corrective maintenance man-hours. Corrective maintenance that requires participation of the equipment manufacturer shall be identified and tabulated separately.

1.2.4 Appendices

Provide information specified in the preceding paragraphs pertinent to the maintenance or operation of the product or equipment. Include the following:

1.2.4.1 Parts Identification

Provide identification and coverage for all parts of each component, assembly, subassembly, and accessory of the end items subject to replacement. Include special hardware requirements, such as requirement to use high-strength bolts and nuts. Identify parts by make, model, serial number, and source of supply to allow reordering without further identification. Provide clear and legible illustrations, drawings, and exploded views to enable easy identification of the items. When illustrations omit the part numbers and description, both the illustrations and separate listing shall show the index, reference, or key number which will cross-reference the illustrated part to the listed part. Parts shown in the listings shall be grouped by components, assemblies, and subassemblies.

A. Manufacturer's Standard Commercial Practice: The parts data may cover more than one model or series of equipment, components, assemblies, subassemblies, attachments, or accessories, such as a master parts catalog, in accordance with the manufacturer's standard commercial practice.

B. Other Than Manufacturer's Standard Commercial Practice (MSCP): End item manufacturer may add a cross-reference to implement components' assemblies and parts requirements when implementation in manual form varies significantly from the style, format, and method of manufacturer's standard commercial practice. Use the format in the following example:

| End Item Manufacturer's Alphanumeric Sequence | Actual Manufacturer's Name and MSCP | Actual Manufacturer Part No. |
|---|---|---|
| 100001 | John Doe & Co. 00000 | 2000002 |

1.2.4.2 Warranty Information

List and explain the various warranties and include the servicing and technical precautions prescribed by the manufacturers or contract documents to keep warranties in force.

1.2.4.3 Personnel Training Requirements

Provide information available from the manufacturers to use in training designated personnel to operate and maintain the equipment and systems properly.

1.2.4.4 Testing Equipment and Special Tool Information

Include information on test equipment required to perform specified tests and on special tools needed for the operation, maintenance, and repair of components.

## 1.3 SCHEDULE OF OPERATION AND MAINTENANCE DATA PACKAGES

Furnish the O&M data packages specified in individual technical sections. The required information for each O&M data package is as follows:

1.3.1 Data Package

A. Operating instructions

B. Safety precautions

C. Operation prestart

D. Start-up, shutdown, and post shutdown

E. Normal operations

F. Emergency operations

G. Operator Service Requirements

H. Environmental conditions

I. Preventative maintenance

J. Lubrication data

K. Preventive maintenance plan and schedule

L. Corrective maintenance

M. Troubleshooting guides and diagnostic techniques

N. Wiring diagrams and control diagrams

O. Maintenance and repair procedures and manhour requirements

P. Removal and replacement instructions

Q. Spare parts and supply list

R. Parts identification

S. Warranty information

T. Personnel training requirements

U. Testing equipment and special tool information

**PART 2 PRODUCTS**

(Not Used)

**PART 3 EXECUTION**

(Not Used)

**END OF SECTION**

# SECTION 02101
# SITE IMPROVEMENTS FOR CONSTRUCTION SUPPORT FACILITIES

## PART 1 GENERAL

### 1.1 SUMMARY

#### 1.1.1 Purpose

This section covers the minimum engineering and construction requirements for the site improvements which support the Operations Annex Building, GFE Warehouse/Receiving and Storage Building as shown on the Contract Drawings.

#### 1.1.2 Scope

The Seller has full responsibility for construction, survey control, inspection and coordination of all improvements and applicable design requirements called out on the Contract Drawings and specified herein, and to ensure that all codes, specifications, standards, safety procedures and documents applicable to this section and referenced herein are totally complied with.

#### 1.1.3 General Requirements

Seller is to construct new concrete curb, gutter, sidewalk, asphaltic concrete paving, concrete paving, aggregate base, crushed rock surfacing, lined drainage ditches, rip rap outlet protection, sidewalk culvert, striping, signage, sanitary sewer system, sanitary water system, firewater system including hydrants and post indicator valves, fencing, electrical distribution systems, and all appurtenances as indicated on the Contract Drawings and specifications. Seller shall install sanitary water lines and firewater lines from points of connection shown on plans to tie in points at building, such points to be determined by Seller. The site is to be rough graded by others prior to start of construction, however, it is the contractors responsibility to provide remedial grading to ensure that proper subgrade, sub-base and/or pad elevations are achieved.

### 1.2 REFERENCES

The publications listed below form a part of this specification to the extent referenced. The publications are referred to in the text by the basic designation only.

AMERICAN CONCRETE INSTITUTE (ACI)

| | |
|---|---|
| ACI 301 | 1989 Specification for Structural Concrete for Buildings |
| ACI 305R | 1989 Hot Weather Concreting |
| ACI 306R | 1988 Cold Weather Concreting |
| ACI 506.2 | 1990 Specification for Materials, Proportioning and Application of Shotcrete |

AMERICAN PETROLEUM INSTITUTE (API)

| | |
|---|---|
| API STANDARD 600 | 1991 Steel Gate Valves, Flanged and Buttwelding Ends |

AMERICAN SOCIETY OF CIVIL ENGINEERS (ASCE)

| | |
|---|---|
| ASCE MANUAL No. 37 | 1991 Design and Construction of Sanitary and Storm Sewers |

AMERICAN SOCIETY OF MECHANICAL ENGINEERS/
AMERICAN NATIONAL STANDARD INSTITUTE (ASME/ANSI)

| | |
|---|---|
| ASME/ANSI B16.1 | 1989 Cast Iron Pipe Flanges and Flanged Fittings, Class 25, 125, 250 and 800 |
| ASME/ANSI B16.5 | 1988 Pipe Flanges and Flanged Fittings |
| ANSI B16.21 | 1978 Nonmetallic Gaskets for Pipe Flanges |
| ASME B31.1 | 1989 Power Piping, Including Addendum "a" |
| ASME B31.3 | 1990 Chemical Plant and Petroleum Refinery Piping, Including Addenda "a" and "b" |
| ANSI Z53.1 | 1979 Safety Color Code for Marking Physical Hazards |

AMERICAN SOCIETY FOR TESTING AND MATERIALS (ASTM)

| | |
|---|---|
| ASTM A36 | 1990 Standard Specification for Structural Steel |
| ASTM A53 | 1990 (Rev B) Standard Specification for Pipe, Steel, Black and Hot-Dipped, Zinc-Coated Welded and Seamless |

| | |
|---|---|
| ASTM A90 | 1987 Standard Test Method for Weight of Coating on Zinc-Coated (Galvanized) Iron or Steel Articles |
| ASTM A105/A105M | 1990 Standard Specification for Forgings, Carbon Steel, for Piping Components |
| ASTM A123 | 1989 Standard Specification for Zinc (Hot-Dip Galvanized) Coatings on Iron and Steel Products |
| ASTM A153 | 1982 Standard Specification for Zinc Coating (Hot-Dip) on Iron and Steel Hardware |
| ASTM A185 | 1990 Standard Specification for Steel Welded Wire Fabric, Plain, for Concrete Reinforcement |
| ASTM A240 | 1991 Standard Specification for Heat-Resisting Chromium and Chromium-Nickel Stainless Steel Plate, Sheet and Strip for Pressure Vessels |
| ASTM A276 | 1990 Standard Specification for Stainless and Heat-Resisting Steel Bars and Shapes |
| ASTM A307 | 1990 Standard Specification for Carbon Steel Bolts and Studs 60,000 Psi Tensile Strength |
| ASTM A392 | 1991 Standard Specification Zinc-Coated for Steel Chain-Link Fence Fabric |
| ASTM A446 | 1989 Standard Specification for Steel Sheet, Zinc Coated (Galvanized) by the Hot-Dip Process, Structural (Physical) |
| ASTM A475 | 1989 Standard Specification for Zinc-Coated Steel Wire Strand |
| ASTM A525 | 1991 (Rev A) Standard Specification for General Requirements for Steel Sheet, Zinc Coated (Galvanized) by the Hot-Dip Process |
| ASTM A536 | 1984 Standard Specification for Ductile Iron Castings |
| ASTM A563 | 1991 Standard Specification for Carbon and Alloy Steel Nuts |

| | |
|---|---|
| ASTM A615 | 1990 Standard Specification for Deformed and Plain Billet-Steel Bars for Concrete Reinforcement |
| ASTM B3 | 1990 Standard Specification for Soft or Annealed Copper Wire |
| ASTM B8 | 1990 Standard Specification for Concentrically-Stranded Copper Conductors, Hard, Medium-Hard, or Soft |
| ASTM C31 | 1990(A) Standard Practice for Making and Curing Concrete Test Specimens in the Field |
| ASTM C33 | 1990 Standard Specification for Concrete Aggregates |
| ASTM C39 | 1986 Standard Test Method for Strength of Cylinder Concrete Specimens |
| ASTM C76 | 1989 Standard Specification for Reinforced Concrete Culvert, Storm Drain and Sewer Pipe |
| ASTM C94 | 1990 Standard Specification for Ready-Mixed Concrete |
| ASTM C143 | 1990 Standard Test Method for Slump of Hydraulic Cement Concrete |
| ASTM C150 | 1989 Standard Specification for Portland Cement |
| ASTM C171 | 1986 Standard Specification for Sheet Materials for Curing Concrete |
| ASTM C172 | 1990 Standard Practice for Sampling Fresh Mixed Concrete |
| ASTM C173 | 1978 Standard Test Method for Air Content of Freshly Mixed Concrete by Volumetric Method |
| ASTM C231 | 1991 Standard Test Method for Air Content of Freshly Mixed Concrete by the Pressure Method |
| ASTM C260 | 1986 Standard Specification for Air-Entraining Admixtures for Concrete |

| | |
|---|---|
| ASTM C443 | 1990 Standard Specification for Joints for Circular Concrete Sewer and Culvert Pipe, Using Rubber Gaskets |
| ASTM D75 | 1987 Standard Practice for Sampling Aggregates |
| ASTM D994 | 1982 Standard Specification for Preformed Expansion Joint Filler for Concrete (Bituminous Type) |
| ASTM D1190 | 1980 Standard Specification for Concrete Joint Sealer, Hot Poured, Elastic Type |
| ASTM D1556 | 1990 Standard Test Method for Density of Soil in Place by the Sand-Cone Method |
| ASTM D1557 | 1978 (R 1990) Standard Test Method for Moisture-Density Relations of Soils and Soil-Aggregate Mixtures Using a 10 lb (4.54 kg) Rammer and 18 inch (457 mm) Drop |
| ASTM D1751 | 1983 Standard Specification for Preformed Expansion Joint Filler for Concrete Paving and Structural Construction (Nonextruding and Resilient Bituminous Types) |
| ASTM D2167 | 1984 (Reapproved 1990) Standard Test Method for Density and Unit Weight of Soil in Place by Rubber Balloon Method |
| ASTM D2419 | 1974 (R 1979) Standard Test Method for Sand Equivalent Value of Soils and Fine Aggregate |
| ASTM D2628 | 1991 Standard Specification for Preformed Polychloroprene Elastomeric Joint Seals for Concrete Pavements |
| ASTM D2774 | 1972 (R 1983) Standard Specification for Underground Installation of Thermoplastic Pressure Piping |
| ASTM D2922 | 1981 (R 1990) Standard Test Methods for Density of Soil-Aggregate in Place by Nuclear Methods (Shallow Depth) |
| ASTM D3034 | 1989 Standard Specification for Type PSM Poly (Vinyl Chloride) (PVC) Sewer Pipe and Fittings |

| | |
|---|---|
| ASTM D3035 | 1989 (Rev A) Standard Specification for Polyethylene (PE) Plastic Pipe (SDR-PR) Based on Controlled Outside Diameter |
| ASTM D3212 | 1989 Standard Specification for Joints for Drain and Sewer Plastic Pipes Using Flexible Elastomeric Seals |
| ASTM D3261 | 1990 Standard Specification for Butt Heat Fusion Polyethylene (PE) Plastic Fittings for Polyethylene (PE) Plastic Pipe and Tubing |
| ASTM F477 | 1990 Standard Specification for Elastomeric Seals (Gaskets) for Joining Plastic Pipe |
| ASTM F1083 | 1990 Standard Specification for Pipe, Steel, Hot-Dipped Zinc-Coated (Galvanized), Welded, for Fence Structures |

AMERICAN WELDING SOCIETY (AWS)

| | |
|---|---|
| AWS D1.1 | 1990 Structural Welding Code |

AMERICAN WATER WORKS ASSOCIATION (AWWA)

| | |
|---|---|
| AWWA C500 | 1986 Gate Valves for Water and Sewerage Systems |
| AWWA C509 | 1987 Resilient-Seated Gate Valves for Water and Sewerage Systems |
| AWWA C651 | 1986 Standard for Disinfecting Water Mains, Including Addendum - January 1990 |

FACTORY MUTUAL (FM)

| | |
|---|---|
| FM 1610 | 1978 Approval Standard Plastic Pipe and Fittings for Underground Fire Protection Service |
| FM Data Sheet 3-10 | 1981 (March) Installation and Maintenance of Private Fire Service Mains and Their Appurtenances |

FEDERAL SPECIFICATIONS (FS)

| | |
|---|---|
| FED Spec. TT-E-489H | 1988 Enamel, Alkyd, Gloss, Low VOC Content |
| FED Spec. TT-P-645B | 1990 Primer, Paint, Zinc-Molybdate, Alkyd Type |

NATIONAL ELECTRICAL MANUFACTURER'S ASSOCIATION (NEMA)

| | |
|---|---|
| NEMA WC7 | 1988 Cross-Linked Thermosetting Polyethylene-Insulated Wire and Cable for the Transmission and Distribution of Electrical Energy |

NATIONAL FIRE PROTECTION ASSOCIATION (NFPA)

| | |
|---|---|
| NFPA 24 | 1987 Standard for Installation of Private Service Fire Mains and Their Appurtenances |
| NFPA 70 | 1990 National Electrical Code |
| NFPA 1963 | 1985 Standard for Screw Threads and Gaskets for Fire Hose Connections |

PIPE FABRICATION INSTITUTE (PFI)

| | |
|---|---|
| PFI ES-3 | 1990 Fabrication Tolerances |

UNDERWRITERS LABORATORIES, INC. (UL)

| | |
|---|---|
| UL 44 | 1983 Standard for Safety Rubber-Insulated Wires and Cables, Twelfth Edition |
| UL 246 | 1987 Hydrants for Fire-Protection Service |
| UL 262 | 1988 Gate Valves for Fire-Protection Service |
| UL 467 | 1984 Grounding and Bonding Equipment |
| UL 651 | 1989 Standard for Schedule 40 and 80 Rigid PVC Conduit |
| UL 1277 | 1989 UL Standard for Safety Electrical Power and Control Tray Cables with Optional Optical-Fiber Members, 2nd Edition |
| UL 1581 | 1983 Standard for Safety Reference Standard for Electrical Wires, Cables, and Flexible Cords, 1st Edition |

UNI-BELL PLASTIC PIPE ASSOCIATION (UBPPA)

| | |
|---|---|
| UBPPA UNI-B-3 | 1988 Installation of Polyvinyl Chloride (PVC) Pressure Pipe |
| UBPPA UNI-B-5 | 1982 Installation of Polyvinyl Chloride (PVC) Sewer Pipe |

WASHINGTON STATE DEPARTMENT OF TRANSPORTATION (WSDOT)

| | |
|---|---|
| WSDOT M41-10 | 1988 Standard Specifications for Road, Bridge, and Municipal Construction |

1.3 **RELATED REQUIREMENTS**

| | | |
|---|---|---|
| 1.3.1 | Specification Section 13121 | GFE Warehouse/Receiving and Storage Building |
| 1.3.2 | Specification Section 13123 | Operations Annex Building (OAB) |
| 1.3.3 | Specification Section 16640 | Cathodic Protection System (Sacrificial Anode) |

1.3.4 Soils and Geotechnical Report

A soils and geotechnical report by Dames and Moore entitled "Report of Geotechnical Investigation Proposed Hanford Waste Vitrification Plant Hanford, Washington" for Kaiser Engineers, Job No. 10805-383-016, November 15, 1989, along with supplemental reports dated July 28, 1990 and July 24, 1991 have been prepared for the construction of facilities associated with the Hanford Waste Vitrification Plant project. Copies of these reports are available for review from the Buyer for background information only.

1.4 **DEFINITIONS**

The following terms, were used in the Specifications or Contract Drawings, shall be defined as follows:

1.4.1 Existing - Improvements and site conditions shown on the Contract Drawings or Specifications, which are existing based on topographic and "as-built" data, provided by the Owner, prior to the start of any construction on the Hanford Waste Vitrification Plant project.

1.4.2 By Others - Work shown on the Contract Drawings or Specifications, which is to be constructed in other contracts prior to, in conjunction with and/or after the execution of this contract.

1.4.3 Contract Drawings - "Hanford Waste Vitrification Plant" CWBS No. A120 package.

1.5 **SYSTEM DESCRIPTION**

(Not Used)

1.6 **DESIGN CRITERIA**

The following criteria shall be used for items or systems designed by the Seller.

1.6.1 Site Utilities

1.6.1.1 Water Systems

The minimum depth of earth cover over underground pipes shall be 42 inches.

1.6.1.2 Site Firewater System

The site firewater (FWX) piping system shall be designed for Safety Class 1 Design Basis Earthquake (DBE) having the following characteristics.

Peak horizontal ground acceleration = 0.2g
Maximum velocity = 9.6 inches per second
Maximum ground displacement = 7.2 inches

The Seller may use ASCE publication No. ISBN 0-87262-368-8 entitled "Seismic Response of Buried Pipes and Structural Components" 1983 to determine the seismic response.

**Firewater System Piping:**

| | |
|---|---|
| General Material: | Nonmetallic (Polyethylene), per PART 2 PRODUCTS. |
| Temperature Limit: | 100°F |
| Maximum Pressure: | 150 Psig |
| Corrosion Allowance: | None |
| Construction: | All Sizes Butt Fusion/Flanged |

The firewater system shall comply with all requirements of NFPA 24, this specification section and the Contract Drawings.

A. Above Grade Facilities

Gate valves with post indicators and fire hydrants shall have post barricades installed in accordance with the Contract Drawings.

1.6.1.3 Site Sanitary Water System

The site domestic sanitary water (SWX) piping system shall be designed for the following conditions:

**Sanitary Water System Piping:**

| | |
|---|---|
| General Material: | Nonmetallic (Polyethylene), per PART 2 PRODUCTS. |
| Temperature Limit: | 120°F |
| Maximum Pressure: | 125 Psig |
| Corrosion Allowance: | None |
| Construction: | All Sizes Butt Fusion/Flanged |

1.6.1.4 Site Sanitary Sewer System

The site sanitary sewer system shall be designed in accordance with ASCE Manual No. 37 and will consist of polyvinyl chloride (PVC) pipe, as specified in PART 2 herein.

A. Sewer Cleanouts

Sewer cleanouts shall be constructed on each lateral connection from the building at approximately 5 feet from building face and at locations where the sewer lateral has a change of direction of greater than 15 degrees from a straight alignment.

B. Sewer Manholes

Manholes located within areas being regraded inside the limits of construction shall be adjusted to the new finished grade in paved areas and shall be adjusted to 6 inches above finished grade in unpaved areas.

1.6.2 Exterior Electrical

Exterior electrical conductors shall be direct burial cables. The location and routing of the direct burial cables shall be coordinated with the Buyer.

1.6.2.1 Feeder size and circuit breaker trip setting shall be based on load and in accordance with NFPA 70.

## 1.7 SUBMITTALS

Submit the following in accordance with the Vendor Drawing and Data Requirements section of the Order/Subcontract.

### 1.7.1 Submittal List

| SUBMITTAL ITEM | SUBMITTAL TYPE | SECTION PARAGRAPH REFERENCES |
|---|---|---|
| Fencing Components | Shop Drawing | 1.7.2.1 |
| "As-Built" Drawings | Engineering Drawing | 1.7.5 |
| Sanitary Sewer - Pipe, Fittings and Cleanouts | Certification of Conformance | 2.1.1.1, 2.1.1.2 |
| Water Valve - Pressure Test | Test Report | 2.1.2.1.B.1) |
| Water System - Piping, Fittings, and Valves | Certificate of Conformance | 2.1.2.2, 2.1.2.3 |
| Fire Hydrants | Certificate of Conformance | 2.1.2.2.H |
| Aggregate Base and Crushed Rock Tests | Certificate of Conformance | 2.1.4.4 |
| Concrete Mix Design | Mix Design and Tests | 2.1.5.1, 2.1.5.2 |
| Concrete and Admixture Materials | Certificate of Conformance | 2.1.5.1, 2.1.5.2 |
| Shotcrete and Admixture Materials | Certificate of Conformance | 2.1.5.3 |
| Shotcrete Mix Design, Slump Test Results and Application Procedures | Report | 2.1.5.3 |
| Reinforcement Materials | Certificate of Conformance | 2.1.5.4 |
| Expansion Joint Materials | Certificate of Conformance | 2.1.5.5 |
| Joint Sealant Materials | Certificate of Conformance | 2.1.5.6 |
| Asphalt Concrete Materials | Certificate of Conformance | 2.1.6.10 |
| Asphalt Concrete Mix Design | Report | 2.1.6.11 |
| Fence Materials and Gate | Manufacturers Installation Instructions | 2.1.7 |
| Fencing Materials | Certificate of Conformance | 2.1.7 |
| Reinforced Concrete Pipe | Certificate of Conformance | 2.1.9.1 |
| Electrical 600 Volt Power Cable Materials | Certificate of Conformance | 2.1.14.2 |
| Soil Moisture Density Relationship | Report [1] | 3.2.1.4.A |
| Flange Bolt Torque Procedure | Procedure | 3.2.15.4 |

| SUBMITTAL ITEM | SUBMITTAL TYPE | SECTION PARAGRAPH REFERENCES |
|---|---|---|
| Earthwork Field Density Test | Report (1) | 3.3.2 |
| Aggregate Base and Crushed Rock Field Sampling and Testing | Report (1) | 3.3.3.1 |
| Aggregate Base Field Density Test | Report (1) | 3.3.3.2 |
| Asphalt Concrete Field Density Test | Report (1) | 3.3.4.1 |
| Concrete Slump Tests | Report (1) | 3.3.5.4 |
| Concrete Air Content Tests | Report (1) | 3.3.5.5 |
| Concrete Compression Tests | Report (1) | 3.3.5.8 |
| Shotcrete Field Tests | Report (1) | 3.3.6.1 |
| Water System Hydrostatic Pressure Test Procedure | Procedure | 3.3.7.1.F |
| Water System Pressure Test | Report | 3.3.7.5 |
| Firewater Test Plan | Procedure | 3.3.7.7 |
| Electrical Cable Continuity and Insulation Resistance | Report | 3.3.8 |
| Sanitary Sewer Test | Report | 3.3.9 |
| Sanitary Water Cleaning Report | Report | 3.4.2.2 |

(1) Tests and submittals by Buyer

1.7.2 Shop Drawings

1.7.2.1 Fencing

Show all fencing components, details of fencing and accessories. These drawings or catalog cuts shall be accompanied by a layout drawing showing spacing of posts and location of gate, corner, end, and pull posts and bracing system.

1.7.3 Product Data

Submit catalog cuts for fittings, joints, couplings, valves or other data published by the manufacturer, to demonstrate conformance to the specification requirements, catalog figure numbers alone will not be acceptable.

1.7.4 Test Requirements

1.7.4.1 Factory Acceptance Tests (FAT)

Documentation for all tests and certifications shall conform to the requirements of PART 2 PRODUCTS of this specification section.

1.7.4.2 Field Testing

Documentation for all tests and certifications shall conform to the requirements of PART 3 EXECUTION of this specification section.

1.7.4.3 Certificates

Seller shall provide Certificates of Conformance for all pressure containing parts.

1.7.5 "As Built" Drawings

Prepare and submit "As Built" construction survey records which will include: Underground utility routing and utility interface location and elevations, grading contours and control elevations, and other field revisions or modification to the Contract Drawings. The drawings, calculations and specifications shall be prepared and stamped by professional engineers registered in the State of Washington.

1.7.6 Any modifications and/or deviations from the grading and drainage as shown on the Contract Drawings will require the Seller to prepare and submit a change request for the Buyer's written approval prior to implementing the change request.

## PART 2 PRODUCTS

### 2.1 MATERIALS/EQUIPMENT

2.1.1 Sanitary Sewer Materials

2.1.1.1 PVC Sewer Pipe and Fittings

PVC sewer pipe and fittings shall conform to ASTM D3034 and minimum wall thickness for SDR 35 in Table 1. Joints shall conform to ASTM D3212 and gaskets shall conform to ASTM F477.

2.1.1.2 Sewer Cleanout

Sewer cleanout risers shall be the same diameter and material as the sewer pipe laterals. Two 45-degree elbows shall connect the riser to the lateral and the top of the cleanout shall have a cast-iron frame and cover with the letter "S" cast into the cover.

2.1.2 Water System Materials

2.1.2.1 General Requirements for Water System Piping Materials

All pressure piping components, fabrication, erection, and testing except as otherwise qualified herein, shall be in accordance with the requirements of ASME B31.1 for sanitary water systems and NFPA 24 for firewater systems.

A. Field Pressure Testing Materials

1) Test Water Requirements

Water shall be potable grade.

2) Pressure Test Blinds

Plain 1/4 inch thick carbon steel test blanks made from ASTM A36/A36M plate with 1/16 inch thick non-asbestos gaskets shall be used for blanking raised face flanges for sizes up to 12 inch NPS.

B. Components

1) All gate valves shall have a backseat bushing that allows the valve to be repacked under pressure. All valves shall be pressure tested by the manufacturer in accordance with the national standard or code governing the valve design. A pressure test report shall be submitted.

2) Nonmetallic components or parts (i.e., gaskets, stem packing, seals, etc.) shall not contain asbestos.

2.1.2.2 Firewater System Materials

A. Pipe

4" - 12" Seamless Polyethylene (PE) conforming to ASTM D3035, PE 3408. Rated for 200 psig @ 73°F. To be joined by butt fusion connections. FM

approved as conforming to FM 1610, and so labeled. Plexco PE-3408 Class 200 or equal. (See Paragraph 2.1.2.2.J, Note 4)

B. Fittings (ells, tees, caps, reducers, and flange adapters)

4" - 12" Polyethylene (PE) conforming to ASTM D3261, PE 3408, Rated for 200 psig @ 73°F. To be joined by butt fusion connections. FM approved as conforming to FM 1610, and so labeled. Plexco PE-3408 Class 200 or equal. (See Paragraph 2.1.2.2.J, Note 4)

C. Gate Valves

4" - 12" Class 150 flat face flanged, ductile iron, Factory Mutual approved or UL labeled as conforming to UL 262, with UL labeled adjustable post indicators. American Darling CRS-82 with post indicator or equal. (See Paragraph 2.1.2.2.J, Note 1)

Painting for post indicators shall conform to the requirements indicated in Paragraph 2.1.2.2.H.

1) Thrust Blocks

Thrust blocks for firewater systems shall conform to NFPA 24 Section 8-6.2.7, Table A-8.6.2.8 and Paragraph 2.1.5.2 herein.

D. Branch Construction

Use reducing tees within the manufacturer's size range. Use reducing tees and reducers where reducing tees are not within the manufacturer's size range.

E. Flanges

4" - 12" Class 150 lap joint type, carbon steel ASTM A105/A105M, ASME/ANSI B16.5.

4" - 12" Class 150 flat-face blind flange, carbon steel ASTM A105/A105M, ASME/ANSI B16.5.

F. Gaskets

4" - 12" Class 150 ring type, red rubber 1/8 inch thick, ANSI B16.21. Sepco No. 20 or equal.

G. Bolts

Galvanized machine bolt, heavy hex head, ASTM A307 Grade B, with one galvanized heavy hex nut, ASTM A563, Grade A.

H. Fire Hydrants

Dry barrel type with ductile iron base and barrel, Factory Mutual approved or UL labeled as conforming to UL 246, 6 inch Class 125 flat face flanged inlet, with two 2-1/2 inch hose connections, one 4-1/2 inch pumper connection, all with NFPA 1963 national standard hose threads, all capped with chain attached caps. Standard 1-1/2 inch point to flat pentagon operating nuts, rotating counter clockwise to open. Furnish each hydrant with an operating wrench. Paint one coat primer to FED SPEC TT-P-645B, and two coats finish red enamel to FED SPEC TT-E-489H, Class A. American Darling B62B-BB or equal. (See Paragraph 2.1.2.2.J, Notes 2 and 3)

I. Thread Compound

For Flange Bolt - Never-Seez Regular Grade or equal.

J. Notes for Firewater System Piping

1) The height of valve indicator posts and extension stems for each location shall be determined by the Seller based on actual jobsite valve bury depths.

2) The lower barrel height of fire hydrants for each location shall be determined by the Seller based on actual jobsite fire hydrant bury depths.

3) The top or head of the fire hydrants shall be painted with green enamel and a sign reading RAW WATER - DO NOT DRINK (3 inch high lettering) shall be mounted on the hydrants.

4) Where FM approved pipe and/or fittings are not available due to size and/or type of component, the material and pressure rating shall be the same as specified herein (excluding FM approval) with the additional requirement that the Standard Dimension Ratio (SDR) shall not be greater than SDR 9.

2.1.2.3 Sanitary Water System Materials

A. Pipe

3/4" - 12" Seamless Polyethylene (PE) conforming to ASTM D3035, SDR 11, PE 3408. Rated for 160 psig @ 73°F. To be joined by butt fusion connections. Phillips Driscopipe 8600 or equal.

B. Fittings (ells, tees, caps, reducers, and flange adapters)

3/4" - 12" Seamless molded Polyethylene (PE) conforming to ASTM D3261, PE 3408, SDR 9.3 or 11. Rated for 160 psig @ 73°F. To be joined by butt fusion connections. Phillips Driscopipe 8600 or equal. (See Paragraph 2.1.2.3.I, Note 2)

C. Gate Valves

2" - 3" Class 150 ductile iron flanged gate valve, non-rising stem, conforming to AWWA C500, with asbestos-free packing material, bronze gate, and standard AWWA operating nut. American Darling CRS-52 or equal.

4" - 12" Class 150 ductile iron flanged gate valve, non-rising stem, conforming to AWWA C509, with asbestos-free packing material, bronze gate, and standard AWWA operating nut. American Darling CRS-82 or equal.

D. Branch Construction

Use reducing tees within the manufacturer's size range. Use reducing tees and reducers where not within the manufacturer's size range.

E. Flanges

3/4" - 12" Class 150 back-up type, convoluted design, ductile iron ASTM A536 Grade 60/40/12 to 60/40/18, to mate with ANSI B16.1 flanges. Improved Piping Products or equal. (Use as back-up flange with polyethylene Flange Adapter.)

3/4" - 12" Class 150 flat-face blind flange, carbon steel ASTM A105/A105M, ASME/ANSI B16.5.

F. Gaskets

Class 150 ring type, red rubber, 1/8 inch thick, ANSI B16.21. Sepco No. 20 or equal.

G. Bolts

Galvanized machine bolt, heavy hex head, ASTM A307 Grade B, with one galvanized heavy hex nut. ASTM A563, Grade A.

H. Thread Compound

For Flange Bolt - Never-Seez Regular Grade or equal.

I. Note for Sanitary Water System Piping

1) Fabricated fittings rated for 160 psig or greater @ 73°F, and made from PE 3408 pipe are acceptable substitutes where seamless molded fittings are not available due to size and/or type of fitting.

2.1.3 Utility Bedding and Backfill Materials

2.1.3.1 Backfill materials shall be the originally excavated onsite material or imported granular earth material, unless such material is determined to be unsuitable due to presence of vegetation, excessive moisture, refuse or other deleterious substances.

2.1.3.2 Sand used for backfill shall be a natural sand, graded from fine to coarse, not lumpy or frozen, with 100 percent passing a No. 4 sieve and 0 to 5 percent passing a No. 200 sieve. The sand shall be free from organic material, slag, cinders, ashes, and other refuse.

2.1.3.3 Fine gravel used for backfill shall be a natural gravel having particles in a reasonable uniform combination with 100 percent passing a 3/4 inch sieve and 0 to 5 percent passing a No. 4 sieve. The gravel shall be free from organic material, slag, cinders, ashes, and other refuse.

2.1.3.4 Notwithstanding the above requirements, gradation and particle size of imported granular fill material shall be controlled such that the laboratory and field testing required under Paragraphs 3.2.2.9 and 3.3.2 herein can be performed in accordance with the specified ASTM test methods.

2.1.3.5 Bedding materials shall conform to either the provisions of Paragraph 2.1.3.2 or 2.1.3.3 herein.

2.1.3.6 Buried Warning and Identification Tape

A. Tape shall be an alkali-resistant polyethylene plastic tape manufactured specifically for warning and identification of buried utility lines.

B. Tape shall be provided in rolls, 6 inches wide with minimum thickness of 0.004 inch and shall have a minimum strength of 1750 psi lengthwise and 150 psi crosswise.

C. The tape shall be manufactured with integral wires, foil backing or other means to enable detection by a metal detector when the tape is buried up to 3 feet deep.

D. The metallic core of the tape shall be encased in a protective jacket provided with other means to protect it from corrosion.

E. Tape shall be as specified in Table 1 below and shall be imprinted in bold black letters continuously and repeatedly over entire tape length.

TABLE 1

TAPE COLOR

| | |
|---|---|
| Yellow: | Electric |
| Red: | Gas, Oil, Dangerous Materials |
| Orange: | Telephone, Telegraph, Security and Fire Communications |
| Blue: | Water Systems (raw, sanitary, and fire) |
| Green: | Sewer Systems |

F. Warning and identification shall be "CAUTION BURIED (Intended Service) LINE BELOW" or similar wording.

G. Code and letter coloring shall be permanent, unaffected by moisture and other substances contained in trench backfill material.

2.1.4 Aggregate Base and Crushed Rock Materials

2.1.4.1 Aggregate Base Course

Material for the aggregates base course shall conform to WSDOT M41-10, Section 9-03.10, Aggregate for Gravel Base. In addition, the material shall conform to the gradation requirements provided in Table 2 herein.

2.1.4.2 Crushed Rock Surfacing

Material for the crushed rock surfacing shall consist of crushed, processed or naturally occurring pit-run gravel. The material shall be free from trash and vegetation and shall conform to the gradation requirements provided in Table 2 and as approved by the Buyer.

**TABLE 2**

GRADATION REQUIREMENTS

| SIEVE DESIGNATION | PERCENT PASSING BY WEIGHT | |
|---|---|---|
| | Aggregate Base Course | Crushed Rock Surfacing |
| 1-1/2 inch square | 100 | 100 |
| 3/4 inch square | 50-85 | - |
| 1/4 inch square | 35-65 | 50 max. |
| No. 4 mesh | 25-45 | - |
| No. 40 mesh | 10-25 | - |
| No. 200 mesh | 0 to 5 max. | 0 to 5 max. |

2.1.4.3 Gravel

Gravel used for fire hydrant drains shall conform to the provisions of WSDOT M41-10, Section 9-03.1(3)B Grading No. 5.

2.1.4.4 Conformance Testing

For each type of material provided the Seller shall take at least one sample from the source material. The sample shall be taken in accordance with ASTM D75.

The sample shall then be tested to demonstrate conformance to the specified requirements. Testing shall be performed in accordance to the procedures specified in WSDOT M41-10, Section 9-03.15, Test Methods for Aggregates.

In addition, the moisture density relationship shall be determined in accordance with ASTM D1557 for each type of material provided.

A new sample shall be taken and tested whenever the source of the material is changed or the tests show unacceptable deficiencies or variations from specified requirements.

2.1.5 Concrete Materials

2.1.5.1 Structural concrete for foundations, pavement and drainage structures including inlets, headwalls and sidewalk culverts shall have a minimum compressive strength of 4000 psi at 28 days. Cement shall conform to ASTM C150 Type I or II. Maximum size of coarse aggregate shall be 1 inch. Concrete shall meet the requirements of ASTM C94, Option A. The slump at point of delivery shall be between 1.5 to 3 inches. Provide an air entraining admixture in accordance with ASTM C260. Total air content shall be as specified in ASTM C94, Table 3 for "moderate exposure." Submit proposed mix design and supporting compressive strength test data.

2.1.5.2 Non-structural concrete for sidewalks, curbs and gutters, fire-water system thrust blocks, fence and guard post foundations shall have a minimum compressive strength of 2500 psi at 28 days. Cement shall conform to ASTM C150 Type I or II. Maximum size of coarse aggregate shall be 1 inch. Concrete shall meet the requirements of ASTM C94, Option A. The slump at point of delivery shall be between 1.5 to 3 inches. Provide an air entraining admixture in accordance with ASTM C260. Total air content shall be as specified in ASTM C94, Table 3 for "moderate exposure." Use 4 sacks of cement minimum per cubic yard of concrete. Submit proposed mix design and supporting compressive strength test data.

2.1.5.3 Shotcrete for concrete lined ditches shall have a minimum compressive strength of 3000 psi at 28 days. Materials, proportioning and aggregate gradation shall conform to the requirements of ACI 506.2. Cement shall conform to ASTM C150, Type I or II. Slump shall be between 1.5 and 3 inches and air entrainment shall be between 5 to 8 percent. Submit proposed mix design, supporting test data and application procedures.

2.1.5.4 Reinforcement

A. Reinforcing steel shall conform to ASTM A615, Grade 60, deformed steel bars.

B. Welded wire fabric shall conform to ASTM A185, fabricated in flat sheets.

2.1.5.5 Preformed Expansion joint fillers shall conform to ASTM D994, D1751, or D2628 (Tex-Mastic Asphalt by J&P Petroleum Products, Inc., Sonoflex by Sonneborn of Rexnord Chemical Products, Inc., or an approved equal).

2.1.5.6 Poured joint sealant shall conform to ASTM D1190 (Eucolastic by Euclid Chemical Corporation, Hotpour by J&P Petroleum Products, Inc., or an approved equal).

2.1.6 Asphalt Concrete Materials

2.1.6.1 Asphalt Cement: WSDOT M41-10, Section 9-02.1(4), Viscosity Grade AR-4000W

2.1.6.2 Aggregate for Asphaltic Concrete Paving: WSDOT M41-10, Section 9-03.8(3)B, Class B

2.1.6.3 Blending Sand: WSDOT M41-10, Section 9-03.8(4)

2.1.6.4 Mineral Filler: WSDOT M41-10, Section 9-03.8(5)

2.1.6.5 Prime Coat: WSDOT M41-10, Section 9-02.1(2), MC-250

2.1.6.6 Tack Coat: WSDOT M41-10, Section 9-02.1(6), CRS-1

2.1.6.7 Coal Tar Pitch Emulsion: WSDOT M41-10, Section 9-02.1(9)

2.1.6.8 Aggregates for Coal Tar Pitch Seal: WSDOT M41-10, Section 9-03.7

2.1.6.9 Header boards shall be 2 inch by 4 inch redwood construction grade.

2.1.6.10 Conformance Testing: WSDOT M41-10, Section 9-03.8(2). All tests shall be performed in accordance to the procedures specified in WSDOT M41-10, Section 9-03.15.

2.1.6.11 Asphalt Paving Mix

The proportions of materials for the mix design shall be in accordance with WSDOT M41-10, Section 9-03.8(6), Class B except that the asphalt percentage of total mixture shall not be less than 4.5 percent nor more than 7.5 percent. Recycled asphalt materials shall not be used in the asphalt pavement mix.

2.1.7 Fence Materials

Seller shall submit manufacturers installation instructions for the following fence materials and gates.

2.1.7.1 Coating

All fence parts including fasteners shall have a firmly adhering zinc coating of uniform thickness. The minimum average weight of coating per square foot of coated surface shall be not less than 1.2 ounces (2 mils) on all fence material except pipe for posts and braces which shall receive 1.8 ounces (3 mils). The minimum average weight of coating on fasteners shall be in accordance with Table 1 of ASTM A153. The weight of zinc coating shall be determined in accordance with ASTM A90. The coating shall be applied to all parts after fabrication.

2.1.7.2 Fabric

Fence fabric shall be 2 inch woven diamond mesh, chain-link, of standard commercial grade galvanized steel wire. Wire shall be 9 gauge having a minimum tensile strength of 75000 psi and conforming to ASTM A392, Class 1.

The top and bottom selvages of the fabric shall have a twisted and barbed finish. The wire shall be barbed by cutting the wire at an angle, producing sharp points. The total height of the fabric shall be 7 feet, plus or minus 1 inch.

2.1.7.3 Posts

All posts shall be fitted with a ball top or similar fitting to shed water.

A. Line Posts

Line posts shall be galvanized steel 2 inch diameter Schedule 40 pipe conforming to ASTM F1083.

B. Terminal and Gate Posts

End posts, corner posts, and pull posts shall be galvanized steel 2.5 inch diameter Schedule 40 pipe conforming to ASTM F1083.

1) Gate posts shall be galvanized steel Schedule 40 pipe conforming to ASTM F1083 and sized according to the following chart:

| Gate Opening Single Swing | Gate Opening Double Swing | Post Nominal Diameter |
|---|---|---|
| Up to 6 ft. | Up to 12 ft. | 2.5 inch |
| Over 6 ft. to 13 ft. | Over 12 ft. to 26 ft. | 3.5 inch |

2.1.7.4 Tension Wires

The top and bottom tension wires shall be 7 gauge steel wire, galvanized, standard commercial grade steel having a minimum tensile strength of 75,000 psi.

2.1.7.5 Post Braces

Horizontal steel pipe braces for corner and pull posts shall be galvanized steel pipe 1.5 inch diameter Schedule 40 conforming to ASTM F1083.

Diagonal truss bracing for corner and pull posts shall be galvanized steel rods 3/8 inch diameter with turnbuckles.

2.1.7.6 Fabric Ties

Fence fabric shall be fastened to line posts with minimum 9 gauge wire ties and to tension wires with minimum 11 gauge wire ties. Wire ties may be either aluminum or galvanized steel wire which shall not fracture when bent 180 degrees on a mandrel having the same diameter as the wire.

2.1.7.7 Miscellaneous Fittings

All other fittings used in the construction of the fence shall be malleable iron, cast iron, or pressed steel and shall be galvanized in accordance with ASTM A153.

2.1.7.8 Gates

Gate frames shall be fabricated from 1.5 inch diameter Schedule 40 galvanized steel pipe conforming to ASTM F1083. All open ends of pipe members in gate frames shall be fitted with a pipe plug. Gate frame corner fittings, if used, shall be of malleable iron. If gate frames are of welded construction they shall be galvanized after fabrication. All gate frames shall be rigidly braced to prevent sagging, buckling, and weaving.

A. Fabric for gates shall be the same as specified for the fence in Paragraph 2.1.7.2.

B. Hinges shall be of heavy pattern zinc-coated steel of adequate strength for the gate with large bearing surfaces for clamping in position. The hinges shall allow the gate to swing a minimum of 180 degrees, and shall not twist or turn under action of the gate. The gate shall be capable of being opened and closed easily by one person.

C. Latches, stops and keepers shall be zinc-coated steel and be provided for all gates. Latches shall have a plunger bar arranged to engage the center stop except for single gates less than 8 feet wide, where a forked latch may be provided. Latches shall be arranged for padlocking (accessible from both sides of gate). Center stops shall consist of a device, set in concrete, to engage the plunger bar. Keepers shall be provided and set in concrete to secure the free end of the gate when in the full open position. Details of a typical gate and gate hardware are shown on Attachment B of this specification.

D. All miscellaneous fittings used in the construction of gates shall be of malleable iron, cast iron, or pressed steel, and shall be galvanized after fabrication in accordance with ASTM A153.

E. Padlocks

Provide a padlock for each gate opening and provide chains that secure the gate to each end post without hindering gate operation. All padlocks shall be keyed alike. Padlocks shall be 2 inch hardened steel locks with removable cores (Corbin Model 82863AH or Buyer approved equal) and zero bitted keyways.

2.1.7.9 Grounding Materials

A. Underground Grounding Cables

Grounding cables shall be 7 strand, low carbon grade steel. Coating shall be Class B zinc in accordance with ASTM A475. The main grounding cables and interconnecting runs between ground systems shall be 5/8 inch diameter cable. Branch cables shall be 1/2 inch diameter cable minimum.

B. Grounding Rods

Ground rods shall be 5/8 inch diameter by 8 feet galvanized steel. Joslyn Number J5328 or equal.

C. Exothermic Welds

All ground connections shall be Exothermic type, CADWELD or equal.

D. Ground Clamps

Ground clamps shall be bronze or Everdur and shall be in accordance with UL 467.

E. Flexible Braid

Flexible braid shall be tinned copper Burndy Type BD18N or equal.

F. PVC Conduit

PVC conduit shall be Schedule 40 in accordance with UL 651.

2.1.8 Rock Rip Rap Materials

Rock rip rap shall be classified as Hand Placed Rip Rap conforming to WSDOT M41-10 Section 9-13.2 and shall be constructed over filter blanket material conforming to WSDOT M41-10 Section 9-03.4(2) 1/4 inch to 0 inch material gradation.

2.1.9 Storm Drain System Materials

2.1.9.1 Reinforced Concrete Pipe (RCP)

A. RCP Class and Wall shall be based on Seller design of GFE Warehouse Dock and shall also conform to the requirements of ASTM C76.

B. Joint material for RCP shall be rubber gasket conforming to the requirements of ASTM C443 or "tongue and groove" type filled with cement mortar.

2.1.9.2 Pipe Bedding and Backfill

A. Bedding materials shall be gravel conforming to the requirements of WSDOT M41-10 Section 9-03.12(3).

B. Backfill shall conform to the provisions of Paragraph 2.1.3.

2.1.9.3 Sidewalk Culvert Plates and Fasteners

A. Sidewalk culvert top plates shall be fabricated from carbon steel, checkered, skid-resistant floor plate material, with a nominal thickness as shown on the Contract Drawings excluding the height of the checkered pattern. The plates shall have a minimum yield strength of 33,000 psi.

B. Steel plate stiffener angles, as indicated on the Contract Drawings, shall be ASTM A36 steel and welded per AWS D1.1. Culvert top plates shall be galvanized after fabrication in accordance with ASTM A123 with a minimum weight of zinc coating of 2 ounces per square foot of coated surface.

C. Plate fasteners and rod anchors shall be of the size, type and dimensions as indicated on the Contract Drawings, and shall be stainless steel Type 304 or 304L per ASTM A240 or ASTM A276, as appropriate.

2.1.10 Pavement Marking Materials

Pavement markings shall conform to WSDOT M41-10 Paragraph 8-22.2.

2.1.11 Traffic and Handicap Sign Materials

2.1.11.1 All signs shall conform to WSDOT M41-10, Sections 9-28.1 and 9-28.1(1).

2.1.11.2 Signs shall be constructed of sheet aluminum conforming to WSDOT M41-10, Section 9-28.2, with hardware conforming to Section 9-28.2(1).

2.1.11.3 Stop Sign Supports

A. Supports for stop signs shall be steel pipe posts 3 inch diameter, Schedule 40, conforming to the provisions of ASTM A53.

B. Each pipe shall be closed at the top with a cap of iron, rubber or plastic material.

C. Posts shall be fabricated of black steel pipe and hot-dip galvanized in accordance with ASTM A53.

D. Concrete for sign post supports shall conform to the provisions of Paragraph 2.1.5.2.

2.1.11.4 Other Sign Supports

A. Supports for signs other than stop signs shall be of square-shaped steel tubing.

B. The size of square tubing shall be 2.5 inch by 2.5 inch with 7/16 inch diameter perforations at 1 inch on centers on all four sides.

C. The steel for the tubing shall conform to the provisions of ASTM A446 and galvanized according to ASTM A525.

D. Concrete for sign post supports shall conform to the provisions of Paragraph 2.1.5.2.

2.1.12 Post Barricades

2.1.12.1 Posts shall be concrete filled 4 inch diameter, Schedule 40, conforming to the provisions of ASTM A53.

A. Paint the posts in accordance with colors defined in ANSI Z53.1.

B. Provide and install at the top of each post 2 - 3 inch bands of No. 3270 silver adhesive-coated reflective sheeting, "Scotchlite," as manufactured by 3M Company or equal. Band shall be located as indicated on the Contract Drawings.

2.1.13 Capillary Water Barrier Materials (Beneath Building Floor Slabs)

2.1.13.1 Granular fill for capillary water barriers, where required by Seller's design, shall be a clean, coarse grained crushed stone, uncrushed gravel, or crushed gravel conforming to the following gradation: 90 to 100 percent passing the 3/4 inch sieve and zero to five percent passing the No. 4 sieve, and with a sand equivalent of not less than 50 when tested in accordance with ASTM D2419.

2.1.13.2 Filter material for capillary water barrier shall conform to the provisions for Class 2 fine aggregate of WSDOT M41-10, Section 9-03.1(2).

2.1.14 Electrical Materials

2.1.14.1 Wood Boards

Boards for protecting underground direct buried cable(s) shall be preservative treated with an approved product, one inch thick by eight inches wide (nominal).

2.1.14.2 600 Volt Power Cable

A. General Requirements

1) Cable supplied shall be new and shall be the product of an established manufacturer normally engaged in the production of cable with a minimum of 5 years documented experience in the manufacture of cable.

2) Cable on each reel shall be continuous. Factory splices or factory repairs are not acceptable in individual conductors. Cable shall be free of abrasions and/or abnormalities.

B. Multiconductor Direct Burial Cable

1) General Requirements

Cables shall have a 600 volt rating. They shall be Type TC multiconductor cable suitable for direct burial in accordance with NFPA 70 (NEC) Articles 340 and 310, UL 1277 and UL 1581. All cables shall include an insulated ground wire. Okonite X-Olene-Okoseal Type TC cable or equal.

2) Conductor

Conductors shall be uncoated, annealed, bare copper wire in accordance with ASTM B3 and shall be Class B, concentric stranded in accordance with Part 2 of NEMA WC7 and ASTM B8.

3) Conductor Insulation

The conductor insulation shall be flame-retardant, cross-linked- polyethylene compound, Type XHHW in accordance with NEMA WC7 and UL 44.

Nominal insulation thickness and maximum wire diameter shall be as follows:

| Conductor Size (AWG) | Number of Conductors | Minimum Insulation Thickness Mils | Grdg Cond Size (AWG) | Nominal Cable O.D. Inches |
|---|---|---|---|---|
| 10 | 4 | 30 | 1# 10 | .63 |
| 8 | 4 | 45 | 1# 10 | .72 |
| 6 | 4 | 45 | 1# 8 | .81 |
| 4 | 4 | 45 | 1# 6 | .97 |
| 2 | 4 | 45 | 1# 6 | 1.11 |
| 1 | 4 | 55 | 1# 6 | 1.25 |
| 1/0 | 4 | 55 | 1# 6 | 1.35 |
| 2/0 | 4 | 55 | 1# 4 | 1.46 |
| 4/0 | 4 | 55 | 1# 4 | 1.78 |
| 250 | 4 | 65 | 1# 3 | 1.94 |
| 350 | 4 | 65 | 1# 3 | 2.19 |
| 500 | 4 | 65 | 1# 2 | 2.5 |

4) Jacket

Overall jacket shall be polyvinyl chloride complying with UL 1277 and UL 1581 and shall be sunlight resistant and suitable for direct burial.

5) Conductor Identification

Conductors shall be color coded by pigmented insulation as indicated below:

a. Grounded neutral - Gray

b. Grounding conductor - Green

c. Phase "A" conductor - Brown

d. Phase "B" conductor - Orange

e. Phase "C" conductor - Yellow

2.1.14.3 Underground Cable Markers

Route markers shall be galvanized steel with a 3 inch steel helix welded to a 7/16 inch diameter rod. Attached to the rod shall be a 2 inch by 3/4 inch by 30 inch 10 gauge steel stake with a 4 inch by 7 inch steel identification plate mounted near the top. The designation "Cable" or "Duct Bank" with a directional arrow shall be marked on face plate. AB Chance Catalog No. C554-0183.

## 2.2 FABRICATION AND MANUFACTURE

### 2.2.1 Water System Piping Fabrication

#### 2.2.1.1 Shop Assembly

A. Welding

Bonding and welding for nonmetallic piping shall be in accordance with ASME B31.3.

B. Flanges

Flange bolt holes are to be oriented as follows unless otherwise indicated on the Drawings.

1) Flange face vertical - bolt holes to straddle vertical centerline.

2) Flange face horizontal - bolt holes to straddle the normal piping layout grid lines.

2.2.1.2 Fabrication Dimensional Tolerances

Piping fabrication tolerances shall be in accordance with PFI ES-3.

2.2.2 Water System Packaging and Shipping

2.2.2.1 Preparation for shipment shall conform to the manufacturer's standard, and as a minimum shall provide protection against corrosion and damage from normal handling and storage.

2.2.2.2 Minimum preparation shall include the following:

A. Flange faces shall be protected with a wood, metal or plastic flange protector. A nonmetallic gasket shall be furnished and placed between the flanges and the protector when a metallic flange protector is used.

B. All pipe ends shall be protected by means of a plastic or metallic plug or cap.

C. Valves shall be prepared for shipment in such a manner to avoid damage or atmospheric corrosion to the inside or outside surface, or parts, during storage or while in transit. Gate valves shall be shipped in the closed position. Use API 600 as a minimum standard of acceptance.

## PART 3 EXECUTION

### 3.1 PREPARATION

3.1.1 Inspect materials delivered to site for damage; store with minimum of handling; store materials in accordance with product manufacturers recommendations.

3.1.2 Verify existing site conditions depicted on the Contract Drawings including: underground and overhead utilities, grading, pavement, drainage structures and construction tie-in interface locations and elevations.

3.1.3 Supply and set survey stakes to provide for strict and accurate vertical and horizontal control of the work from monuments and benchmarks provided by the Buyer. Provisions shall be taken to protect the monuments and benchmarks from damage.

3.1.4 Prior to Excavation

3.1.4.1 Obtain permission to excavate from the Buyer.

3.1.4.2 Determine the lines, grades and elevations for the installation of slabs at grade, foundations, underground utilities and appurtenances as shown on the Contract Drawings.

3.1.4.3 Determine the depth of excavation required for the installation of foundations, underground utilities and appurtenances as shown on the Contract Drawings.

3.1.4.4 Locate and identify all underground utilities and tie-in points within the work area.

3.1.4.5 Existing crushed rock surfacing shall be removed as required and stockpiled in a location approved by the Buyer.

3.1.4.6 Grade the top perimeter of the excavation to prevent surface water from draining into the excavation.

3.1.5 Prior to Backfilling

3.1.5.1 Obtain permission to backfill from the Buyer.

3.1.5.2 All excavations shall be cleaned of trash and debris.

3.1.5.3 All exposed and excavated surfaces shall be compacted with machine or hand operated compactors and in accordance with the compaction requirements of Paragraph 3.2.1.4.

3.1.5.4 At locations beneath slabs at grade, foundations and appurtenances, do not begin backfill operations until after the subgrade has been inspected and approved by the Buyer.

3.1.5.5 Backfilling operations over and adjacent to foundations, drainage structures and appurtenances may not begin until the below grade construction has been inspected and accepted by the Buyer.

3.1.5.6 Backfilling operations over foundations and appurtenances may not begin until the concrete has cured for at least 7 days and the forms have been removed. In addition, do not backfill against subsurface concrete walls until the walls have reached their specified 28 day compressive strength as demonstrated by compression testing of molded concrete cylinders.

3.1.5.7 Backfilling operations for utility trenches shall not begin until the installed utilities have undergone all required tests and inspections and have been accepted by the Buyer.

## 3.2 INSTALLATION, APPLICATION AND ERECTION

### 3.2.1 Grading

#### 3.2.1.1 General

A. Grading shall not be performed when the ambient temperature is below 35°F or when underlying materials are frozen or contain frost.

B. Grading shall be performed to the lines and grades indicated on the Contract Drawings.

C. Finished Conditions

All areas covered by the project, including cut and fill sections and adjacent transition areas, shall be uniformly smooth-graded. The finished surface shall be smooth, compacted, and free from irregular surface changes. The degree of finish shall be that ordinarily obtainable from blade-grader operations.

D. Tolerances

Subgrade elevations for pavement areas, crushed rock surface areas, and trapezoidal drainage ditches shall not vary by more than plus or minus 0.10 feet above or below the elevations shown on the Contract Drawings.

#### 3.2.1.2 Cut

A. Unsuitable General Fill Materials

Cut materials, as determined by the Buyer, due to presence of vegetation, excessive moisture, refuse or other deleterious substances, shall be unsuitable for use as fill. Material which has been determined to be unsuitable for fill material, or material which has been disturbed by the Seller's operations or softened by exposure to the elements and water and surplus material shall be disposed of as directed by the Buyer.

B. Suitable General Fill Materials

Cut materials determined to be suitable for fill, shall be transported to and placed in fill areas. Where sufficient material is not available from cut sections, the Seller shall obtain fill material from a source designated by the Buyer.

C. Cuts which are carried below the depths indicated, without specific instructions from the Buyer, shall be properly filled and compacted to the required elevation by the Seller.

D. Cuts for the lined trapezoidal drainage ditches shall be made to the cross sections and grades indicated on the Contract Drawings. All roots, rock, and foreign matter in the sides and bottom of the ditch shall be removed or trimmed to conform to the slope, grade, and shape of the section indicated on the Contract Drawings. Care shall be taken not to excavate the ditch below the grades indicated. Over excavation shall be corrected as indicated in Paragraph 3.2.1.2.C.

E. In cut areas, the grade beneath the pavement areas shall be over-excavated to a depth of at least 12 inches below the required elevation. The exposed surface shall be scarified to a minimum depth of 6 inches, moisture conditioned and compacted in accordance with Paragraph 3.2.1.4. The excavation shall then be backfilled in accordance with Paragraph 3.2.1.3.D and compacted in accordance with Paragraph 3.2.1.4. Any areas failing to meet compaction requirements shall be recompacted and retested. If required compaction cannot be obtained, the material shall be removed, replaced, recompacted and tested.

F. In order to achieve a compacted surface at cut areas the Seller shall make an initial cut slightly higher than the finished elevation. The cut shall be scarified and compacted in accordance with Paragraph 3.2.1.3, then the final grading shall be performed to the required elevation.

3.2.1.3 General Fill

A. Before placing general fill material, the existing grade shall be scarified to depth of not less than 6 inches, moisture conditioned and compacted to requirements specified in Paragraph 3.2.1.4.

B. Ground surfaces which are sloped more than one vertical to four horizontal on which fill is to be placed shall be plowed, stepped or broken up in such a manner that the fill will bond with the existing surface.

C. Fill and embankments shall be constructed to the lines and grades indicated on the Contract Drawings. The completed fill shall conform to the typical sections indicated or meet the particular requirements specified on the Contract Drawings.

D. In general, fill material shall be placed in maximum loose lifts of 8 inches and be compacted per Paragraph 3.2.1.4. However, the maximum loose lift may be increased to 12 inches when a compactive effort equivalent to a self propelled smooth drum vibratory roller with a minimum weight of 15,000 pounds operating at a minimum frequency of 1750 vibrations per minute is provided. At least four passes shall be made by the compactor on each loose lift. Each lift shall be completed, compacted and tested before the next lift is placed.

E. Fill material shall be moisture conditioned to within plus or minus 2 percent of its optimum moisture content as determined in Paragraph 3.2.1.4.A. Disking may be required to obtain the required moisture content since water applied at the surface may not penetrate the full depth of the lift.

3.2.1.4 Compaction

A. The moisture density relationship shall be determined by the Buyer for each type of fill material used in accordance with ASTM D1557. The optimum moisture content for the onsite soil is estimated to be 10 percent.

B. Existing surface and fills for general grading shall be compacted to 90 percent of the maximum dry density as determined by ASTM D1557. The top 12 inches below the required roadway and pavement subgrade elevation shall be compacted to 92 percent of its maximum dry density.

C. Fill and cut areas under building slabs and foundations shall be compacted to 95 percent of the maximum dry density as determined by ASTM D1557, to a distance of 5 feet beyond the building footprint limit. A minimum of four passes shall be made before testing.

3.2.2 Excavation and Backfill for Foundations, Slabs at Grade, Appurtenances, and Utility Trenches

3.2.2.1 Excavation - General

A. All excavations shall be in accordance with Washington Administrative Code (WAC), Chapter 296-155, Section 650-664, "Excavation, Trenching and Shoring." The side slopes at all excavations shall not be steeper than 1.8 horizontal to 1 vertical unless shoring is provided.

B. Precautions shall be taken as not damage existing underground utilities.

C. Excavation shall be by the open-cut method.

D. Keep all excavations free of water, ice, and debris.

E. An imaginary 45° line extending downward and outward from the bottom corner of any existing foundation shall not intersect any intended excavation for adjacent foundations or utilities, unless noted otherwise on the Contract Drawings.

F. When freezing temperatures are expected, do not excavate to the full depth indicated on the Contract Drawings unless the bottom of the excavation is adequately protected from frost.

G. Excess excavated material meeting the requirements of Paragraph 2.1.3 shall be stockpiled at a location designated by the Buyer for later use as backfill material.

Material excavated for the installation of underground utilities which have been determined suitable for backfill may be stockpiled in an orderly manner at a distance from the banks of the trench equal to 1/2 the depth of the excavation, but no closer than 2 feet.

H. Surplus material and material determined to be unsuitable for backfill or general fill shall be disposed in an area designated by the Buyer.

I. Tolerances

All excavation and backfill shall be made to the dimensions and elevations shown on the Contract Drawings plus or minus 0.1 foot.

3.2.2.2 Excavation for Foundations and Slabs at Grade

A. Requirements specified in Paragraph 3.2.2.1 herein shall apply. Additional requirements shall be as specified below.

B. The excavation shall be made to the size and depth required to install the concrete foundations and slabs at grade. For building foundations and floor slabs excavate the entire area to bottom of foundations and compact the exposed surface in accordance with Paragraph 3.2.1.4 prior to construction of foundations and backfilling.

C. The excavation shall extend a sufficient distance from concrete walls and footings to allow the placement and removal of forms and inspection except where the concrete is to be deposited directly against excavated surfaces or shoring.

3.2.2.3 Excavation for Appurtenances

A. Requirements specified in Paragraph 3.2.2.1 herein shall apply. Additional requirements shall be as specified hereinafter.

B. Excavations for sewer cleanouts, water system valves, fire hydrants and other appurtenances shall be of sufficient width and depth to install these items as shown on the Contract Drawings.

C. Compact the bottom of the excavation in accordance with Paragraph 3.1.5.3.

3.2.2.4 Excavation for Utility Trenches

A. Requirements specified in Paragraph 3.2.2.1 herein shall apply. Additional requirements shall be as specified below.

B. Excavate trenches to a width and depth required to install underground utilities shown on the Contract Drawings.

C. Accurately grade the bottoms of trenches to provide uniform bearing and support for underground utilities and compact in accordance with Paragraph 3.2.2.8, except where it is necessary to excavate holes for bell or for proper sealing of joints. Excavate pipe trenches to at least 3 inches and not more than 6 inches below the bottom of pipe elevation.

D. Backfill overexcavations with thoroughly tamped bedding materials per Paragraph 2.1.3.5. Whenever unsuitable soil as defined in Paragraph 3.2.1.2.A that is incapable of properly supporting the utility is encountered in the bottom of the trench, remove such soil to the depth required and replace to the proper grade with bedding materials per Paragraph 2.1.3.5.

E. Pipe bedding shall be rounded so that at least the bottom quadrant of the pipe shall rest firmly for the full length of the barrel as proper pipe jointing operations will permit.

3.2.2.5 Dewatering

A. Excavate in such a manner that the work area will be effectively drained. Drainage shall be by gravity whenever possible; utilize additional means when necessary, including pumping and bailing.

B. Divert and/or pump out, bail or otherwise remove any water which may accumulate in the excavations and perform all necessary work to keep them free from water while construction under this contract is being completed.

C. Obtain approval from the Buyer for discharge of water removed by any means.

3.2.2.6 Backfilling - General

A. Backfill material shall meet the requirements specified in Paragraph 2.1.3 herein.

B. Jetting of backfill is not permitted.

C. Backfill material shall be placed in maximum loose lifts of 8 inches and compacted in accordance with Paragraph 3.2.2.9.B.

D. Backfill material shall be moisture conditioned to within plus or minus 2 percent of its optimum moisture content as determined in Paragraph 3.2.2.9.A. Disking may be required to obtain the required moisture content since water applied to the surface will not penetrate the full depth of the lift.

E. Do not operate heavy equipment for spreading and compacting backfill within 5 feet of below-grade walls. The fill within this 5 foot strip shall be placed in maximum loose lifts of 6 inches and be compacted with a vibrating plate compactor, or drum compactor with a total static weight not exceeding 3000 pounds.

F. Backfill shall be placed to the lines and contours matching the adjacent grade.

G. After the backfilling and compaction operations have been completed, replace the crushed rock surfacing and compact in accordance with Paragraph 3.2.5.5.

3.2.2.7 Backfilling for Foundations, Slabs at Grade and Appurtenances

A. Requirements specified in Paragraph 3.2.2.6 herein shall apply.

B. Proof roll all surfaces beneath slabs at grade.

C. Place capillary water barrier materials under building floor slabs as required by the Seller's design compacting in accordance with the requirements for crushed rock surfacing of Paragraph 3.2.5.5.

3.2.2.8 Backfilling of Utility Trenches

A. Requirements specified in Paragraph 3.2.2.6 herein shall apply. Additional requirements shall be as specified below.

B. Where utilities are coated for protection against corrosion, perform backfilling and tamping in such a manner that the coating will not be damaged.

C. Direct burial cables shall be bedded in a cushion of sand not less than 3 inches on all sides. Direct burial conduit shall be buried directly in earth with backfill materials conforming to Paragraph 2.1.3.1. Other utilities shall be installed on 3 inches of bedding materials conforming to Paragraph 2.1.3.5.

D. From the top of the bedding material to a depth of not less than two feet over sewers, direct burial wires, conduit, cables and underground piping; and not less than one foot over other utilities, backfill in maximum loose lifts of 6 inches and compact in accordance with Paragraph 3.2.2.9.B. Compaction shall be achieved through the use of hand tamping or a power operated hand vibrating compactor such as a vibrating plate compactor or drum compactor with a total static weight not exceeding 3000 pounds.

E. Deposit backfill material in the trench for its full width on each side of the underground utilities and appurtenances simultaneously. Use special care in placing this portion of the backfill so as to avoid damage or movement of the utility.

F. When pressure testing of underground pipe is required the trench shall not be backfilled to more than 2 feet above the top of pipe until the pressure tests have been performed. The joints and couplings shall be left uncovered during the pressure test. Upon the satisfactory completion of the test backfill operations may resume.

G. Place buried warning and identification tape conforming to Paragraph 2.1.3.6 to identify the presence of underground utilities at a depth of 18 inches below finished grade or as shown on the Contract Drawings.

H. Place the remainder of the backfill material in maximum loose lifts of 8 inches and compact in accordance with Paragraph 3.2.2.9.B.

I. Backfilling for plastic pipe shall conform to the recommendations of ASTM D2774 for sanitary water line and FM Data Sheet 3-10 for fire water lines.

3.2.2.9 Compaction of Backfill

A. The moisture density relationship, as determined in accordance with ASTM D1557, shall be developed by the Buyer for each type of soil used for backfill. The optimum moisture content for the onsite soil is estimated to be 10 percent.

B. Compact each lift to 90 percent of its maximum dry density as determined in Paragraph 3.2.2.9.A. Backfill placed under foundations and equipment slabs at grade shall be compacted to 95 percent of its maximum dry density.

3.2.3 Sanitary Sewer

3.2.3.1 Earthwork

Earthwork requirements for excavation and backfill, including bedding for pipe trenches shall be in accordance with Paragraph 3.2.2.

3.2.3.2 Pipe Laying and Jointing

Inspect each pipe and fitting before and after installation; replace those found defective and remove from site. Provide proper equipment for lowering sections of pipe into trenches. Lay pipe with the bell ends in the upgrade direction. Adjust spigots in bells to provide a uniform space all around. Blocking or wedging between bells and spigots will not be permitted. At the end of each work day, close open ends of pipe temporarily.

3.2.3.3 Installation of PVC Plastic Piping

Install pipe and fittings in accordance with the requirements of UBPPA UNI-B-5 and Contract Drawings. Joints with gaskets shall be made in accordance with the requirements of UBPPA UNI-B-3 for assembly of joints. Joints to other pipe materials shall be in accordance with the recommendations of the plastic pipe manufacturer.

3.2.3.4 Existing Manholes

Frames and covers for existing manholes in paved areas shall be adjusted to the finished grades indicated on the Contract Drawings. Manholes located in unpaved locations shall be set 6± inches above the finished grade within these areas. Structures located within pavement areas shall not be adjusted to final grade until the adjacent paving has been completed. Frames and covers, in paved areas, required to be adjusted more than 3 inches, shall be removed to the new subgrade before paving, with the opening covered with a steel plate to facilitate paving. After the paving has been completed, pavement and base materials adjacent to the frame and cover shall be removed, backfilling against the frame with concrete to within 1-1/2 inches of the finished pavement surface. After making final adjustment of the frame and cover to finished grade, fill the remaining 1-1/2 inches with the asphalt concrete weaving surface mixture to match the surrounding pavement. Manholes required to be lowered below the level of the existing grade rings shall be removed to an approximate depth of 3.5 feet below finished grade and shall then be reconstructed to the proper finished grade.

3.2.4 Storm Sewer

3.2.4.1 Earthwork

Earthwork requirements for excavation and backfill, including bedding for pipe trenches shall be in accordance with Paragraph 3.2.2.

3.2.4.2 Pipe Laying and Jointing

Inspect each pipe and fitting before and after installation; replace those found defective and remove from site. Provide proper equipment for lowering sections of pipe into trenches. Lay pipe in accordance with WSDOT M41-10 Paragraph 7-02.3(1).

3.2.4.3 Installation of RCP

Install pipe and fittings in accordance with the requirements of WSDOT M41-10, Paragraphs 7-02.3(1) and 7-02.3(1)A and Contract Drawings. Joints shall be made in accordance with the requirements of WSDOT M41-10, either Paragraph 7-02.3(1)A1 or 7-02.3(1)A2 for assembly of joints. Joints to other pipe materials shall be in accordance with the recommendations of the manufacturer.

3.2.4.4 Rock Rip Rap

Install filter blanket and rock riprap, conforming to Paragraph 2.1.8, in accordance with WSDOT M41-10, Sections 8-15.3(7) and 8-15.3(3).

3.2.5 Aggregate Base and Crushed Rock Surfacing

3.2.5.1 Do not install any materials when the surface temperature is below 35°F or when rainfall or other weather conditions will detrimentally affect the quality of the finished product.

3.2.5.2 Do not install any materials when the underlying subgrade contains frozen materials.

3.2.5.3 Spread the aggregate base course material and crushed rock surfacing in layers over the prepared subgrade to achieve a total compacted thickness as shown on the Contract Drawings. When a compacted layer of 6 inches or less is specified, the material may be placed in a single layer; when a compacted thickness of more than 6 inches is required, no layer shall exceed 6 inches nor be less than 3 inches when compacted.

3.2.5.4 Level and contour crushed rock surfaces to the elevations and gradients shown on the Contract Drawings.

3.2.5.5 Compact each layer of the aggregate base course material to not less than 95 percent of its maximum dry density determined in accordance with Paragraph 2.1.4.3. Add water as required to obtain the specified compaction. If excess water is apparent, remove material and aerate to reduce moisture content. Each layer of crushed rock surfacing shall be compacted by at least two passes of a vibratory compactor approved by Buyer.

3.2.5.6 Final elevations at the roads shall not vary by more than 0.02 feet above nor more than 0.02 feet below the elevations indicated on the Contract Drawings. Elsewhere the final elevations shall be within plus or minus 0.10 feet from the elevations indicated on the Contract Drawings.

3.2.6 Asphaltic Concrete Paving

3.2.6.1 Prime coat and tack coat shall not be placed when the ground temperature is lower than 50°F.

3.2.6.2 Asphaltic concrete paving shall not be placed on any wet surface or when the average surface temperature is less than 35°F or when weather conditions otherwise prevent the proper handling or finishing of the bituminous mixtures.

3.2.6.3 Asphaltic concrete paving shall be installed in accordance with WSDOT M41-10, Section 5-04.3 except that the following portions shall not apply.

Section 5-04.3(5)C, 5-04.3(5)D, 5-04.3(15), 5-04.3(17) through 5-04.3(21).

In addition, redwood header boards, conforming to Paragraph 2.1.6.9 shall be installed at the locations indicated on the Contract Drawings. 2 inch by 2 inch header board stakes shall be placed at 4 foot maximum spacing.

3.2.7 Seal Coat

3.2.7.1 The seal coat shall only be installed in dry weather and only when the ambient temperature is 60°F or above.

3.2.7.2 The seal coat shall consist of a coal tar pitch emulsion seal coat installed in accordance with WSDOT M41-10, Section 5-03 except that Sections 5-03.4 and 5-03.5 shall not apply.

3.2.8 Site Concrete

3.2.8.1 Site concrete for drainage structures, and non-structural concrete per Paragraph 2.1.5, shall be constructed in accordance with the Contract Drawings and this specification section.

3.2.8.2 Concrete formwork, finishing, placing, curing and protection shall be in conformance with ACI 301.

A. Concrete placement in temperatures below 40°F shall conform to the provisions of ACI 306R.

B. Concrete placement in temperatures above 90°F shall conform to the provisions of ACI 305R.

C. Sidewalks shall be constructed in accordance with WSDOT M41-10, Section 8-14.3.

3.2.9 Shotcrete

3.2.9.1 Shotcrete for trapezoidal drainage channels shall be constructed in accordance with the Contract Drawings and this specification section.

3.2.9.2 Shotcrete batching and mixing, placement, joints, surface repairs, finishing and curing shall be in conformance with ACI 506.2.

A. Shotcrete placement in temperatures below 40°F and above 90°F shall be in conformance to Paragraphs 3.2.8.2.A and 3.2.8.2.B.

3.2.10 Fence

3.2.10.1 Setting Posts

A. All posts shall be set in concrete, plumb and true to line. Additional construction details are shown on Attachment A of this specification. All posts shall be set with the top (exclusive of ball caps) 7 feet above finish surface. Maximum spacing of line posts shall be 10 feet on center.

B. Holes for setting line posts shall be 12 inches diameter; and holes for pull and corner posts shall be 16 inches diameter except 24 inch diameter holes shall be used for 8 inch diameter gate posts. The hole diameter can deviate minus zero and plus 2 inches from the above specified values.

C. The line posts adjacent to the terminal posts (brace posts) shall be set at the spacing required to make the horizontal braces fit properly. A pull post shall be set at each break in the fence line grade exceeding 15 degrees.

D. All posts shall be set plumb and firmly supported to prevent movement or deflection until the concrete has thoroughly set (24 hours minimum) before performing other work on the posts.

3.2.10.2 Bracing Posts

All gate, corner (angle 30 degrees and larger) and terminal posts shall be braced horizontally with steel pipe using brace attachments, and shall be braced diagonally using steel rods with truss attachments in accordance with the Buyer approved manufacturer's recommendations and as shown on Attachment A. Pull posts shall be provided and braced at intervals not to exceed 500 feet length of straight fence.

3.2.10.3 Tension Wires

A. Top and bottom tension wires shall be installed to stabilize wire fabric. The top tension wire shall be installed through 1/4 inch holes drilled in each post 2±1/2 inches below the top of the post.

B. Bottom tension wires shall be installed through 1/4 inch holes in each post 3±1/2 inches above finished surface.

3.2.10.4 Attaching and Stretching Fabric

A. Stretcher bars shall be threaded through end loops of each section of fabric and tied to the end, break-in-grade and corner posts with the stretcher bar bands spaced not more than 15 inches on center.

B. The fabric shall be fastened to the line posts with ties conforming to Paragraph 2.1.7.6 and spaced not more than 14 inches on centers. The topmost tie shall be as near the top of the fabric as possible and the lowest tie as near the bottom of the fabric as possible.

C. The fabric shall be tied to the top and bottom tension wires with ties conforming to Paragraph 2.1.7.6 and spaced not more than 24 inches on centers.

D. The fence fabric shall be stretched taut.

E. The barbed ends of the barbed top fabric shall extend approximately two to three inches above the top tension wire. Each barb shall be straightened as needed in order to present an unbroken line above and below the tension wire.

F. The bottom of the fabric shall extend to within 2 inches of the finish surface.

3.2.10.5 Installation of Gates

A. Gates shall be installed in accordance with the contract drawings, this specification and the drawing on Attachment B. Gates shall be installed in good alignment, and shall swing and latch properly. The gate hinges shall be so adjusted that the gates swing inward and outward at an angle of 180 degrees or more. Gate hinges shall be installed to permit a maximum 2 inches from finish surface to bottom of gate.

B. Gate fabric shall be installed on gate frames with tension bands spaced at a maximum 15 inches center vertically and horizontally.

3.2.10.6 Bolt Heads

All bolt heads shall be located on the inside of the fence enclosing the area.

3.2.10.7 Grounding

Fences shall be grounded at gates and at posts where indicated on the Contract Drawings.

3.2.10.8 Repair of Damaged Zinc Coatings

A. Damages caused by welding, cutting, drilling and rough handling during shipping and erection shall be repaired using one or a combination of the following methods:

1) Zinc Based Solders - Zinc alloy solder composed of zinc-cadmium or zinc-tin-lead alloy having a melting point in the range of 450°F through 530°F. The solders can be in a rod, stick or powder form.

2) Organic Zinc Rich Coating - Polyamide cured epoxy for use on steel surfaces. The dry film shall contain a minimum of 94 percent zinc dust by weight.

B. Repairs shall be made on clean and dry surfaces. Remove oil, grease, burnt residue weld spatter, and other contaminants from the surface to be repaired prior to making repairs. Follow the manufacturer's instructions for application.

C. Regardless of the method used, one application of the zinc coating shall provide a dry film thickness of 2.0 to 3.0 mils.

3.2.11 Pavement Markings and Signage

3.2.11.1 Pavement markings and signage shall be installed at the location and in accordance to the Contract Drawings and these specifications. Stop bar and "STOP" traffic lettering shall also conform to WSDOT M41-10, Paragraph 8-22.1.

A. Pavement markings shall be installed in conformance with WSDOT M41-10, Paragraphs 8-22.3(2) through 8-22.3(6).

B. Roadway and other signage, indicated on the Contract Drawings, shall have posts per Paragraph 2.1.12.3 set in accordance with Paragraph 3.2.10.1, with post holes 12 inches in diameter, with signs attached to the post with fasteners conforming to WSDOT M41-10 9-28.2(1).

3.2.12 Post Barricades

3.2.12.1 Post barricades for fire hydrants and post indicators for gate valves shall be installed at the locations indicated on the Contract Drawings.

3.2.12.2 Posts shall be set in concrete, plumb and true to line, with holes 16 inches in diameter.

3.2.13 Capillary Water Barriers (Beneath Building Floor Slabs)

3.2.13.1 Granular materials per Paragraph 2.1.13, where required by Seller's design, shall be placed on compacted building pad grades in accordance with Paragraph 3.2.5.5.

3.2.13.2 Granular water barrier materials shall be placed in 4 inch maximum lifts, and compacted with a minimum of two passes with a hand-operated plate type vibratory compactor or "proof-rolled" with a minimum of two roller passes.

3.2.14 Electrical

3.2.14.1 All wiring and connections shall be tested for continuity before fixtures, devices and equipment are connected.

3.2.14.2 Earthwork

Earthwork requirements for excavation and backfill shall be in accordance with Paragraph 3.2.2.

3.2.14.3 Direct burial cable shall be protected by 1 by 8 inch boards. Boards shall be treated with an approved factory applied preservative. Marking tape shall be placed over boards and buried approximately one foot below grade.

3.2.14.4 Underground Cable Marker

Install underground cable/duct marker with arrow parallel to and facing underground run. Arrows shall point from the source to the point of utilization. Markers shall be placed one foot from the edge of the underground run and placed at 150 foot intervals on straight runs. At each turning point or tee, one marker shall be placed for each direction the cable or duct takes at that point.

3.2.14.5 Minimum burial depth for direct burial cable is 2 feet 6 inches below finished grade.

3.2.15 Water Systems

3.2.15.1 Earthwork

Earthwork requirements for excavation and backfill shall be in accordance with Paragraph 3.2.2 and the recommendations of ASTM D2774, and FM Data Sheet 3-10.

3.2.15.2 All field fabrication shall conform to the requirements of Paragraph 2.2.1. Installation and erection tolerance shall ± 1/2 inch.

3.2.15.3 All piping shall be routed in accordance with the Contract Drawings.

3.2.15.4 All flange bolts shall be lubricated with anti-seize compound of as specified in Paragraphs 2.1.2.2.I and 2.1.2.3.H before tightening. Bolt torque procedures shall be in accordance with the gasket manufacturer's recommendations. Misalignment shall not be corrected by pulling up cocked flanged joints. The Seller shall submit gasket manufacturer's suggested bolt torque procedures including recommended torques and alignment procedures.

3.2.15.5 Piping shall be examined before and after erection to ensure that all foreign matter has been removed from interior surfaces as well as the bore of the piping.

3.2.15.6 Installation of nonmetallic piping shall conform to the recommendations of ASTM D2774. Installation of underground fire water mains shall conform to FM Data Sheet 3-10.

3.2.15.7 Seller shall protect polyethylene piping from overheating due to sunlight as required during installation.

3.2.15.8 The Seller shall provide the necessary materials and install locking devices (with padlock and two keys) for valves that are to be L.O. (locked open) or L.C. (locked closed). All locks shall be common keyed for a given size valve.

3.2.15.9 Fitting make-up is not dimensioned on the drawings.

3.2.15.10 All buried valves and buried portions of hydrants shall be protected per Section 16640.

3.2.15.11 Thrust blocks shall be placed at all turns, branch connections, and risers.

3.2.15.12 Fire hydrants shall be installed with the hydrant bury placed on a concrete block and the hydrant's drain outlet surrounded with gravel drainage material conforming to the requirements of Paragraph 2.1.4.3.

3.2.15.13 Existing water valve boxes and valve box frames and covers, located in unpaved areas, shall be set 0.1 foot higher than the adjacent graded surface. Seller shall cut and install a new 8 inch diameter SDR 35 PVC valve box adjustment sleeve, when required. The adjustment sleeve shall rest on the buried valve top flange, located to place the valve box centered and plumb over the valve's operating nut. A new 6 inch thick 24 inch diameter concrete collar, with the concrete conforming to Paragraph 2.1.5.2, shall be poured around the valve box to set it in place.

## 3.3 FIELD QUALITY CONTROL

### 3.3.1 General

3.3.1.1 The Buyer shall be responsible for field tests required per Paragraphs 3.3.2, 3.3.3, 3.3.4, 3.3.5, 3.3.6 and 3.3.9 to determine that the work is performed in accordance with this specification and the Contract Drawings. The Seller shall support and coordinate its work with Buyer's testing activities.

3.3.1.2 The Seller shall be responsible for field tests required per Paragraphs 3.3.7 and 3.3.8 to determine that the work is performed in accordance with this specification and the Contract Drawings. The Buyer's representative shall be given two (2) working days prior notification, at the time and date of any testing to be performed.

### 3.3.2 Earthwork

3.3.2.1 Backfill

A. Field density tests shall be performed in accordance with ASTM D1556, ASTM D2167 or ASTM D2922. When tests are performed by the Nuclear Method per ASTM D2922 at least 20 percent of the tests shall be performed in accordance with ASTM D1556 or ASTM D2167.

B. Field density tests are required for each method of compaction utilized and for each type of fill material used.

C. The minimum number of field density tests shall be as follows:

1) Each 3000 square feet of compacted fill with a minimum of one test per layer per day for each type of fill compacted.

2) Adjacent to the concrete headwalls; 1 test, per lift, per 3000 square feet of area with a minimum of one test at each installation.

3) Trenches; 1 test, per lift, per 200 lineal feet of trench.

D. Any areas failing to meet compaction requirements shall be recompacted and retested. If required compaction cannot be obtained, the material shall be removed, replaced, recompacted and tested.

3.3.3 Aggregate Base and Crushed Rock Surfacing

3.3.3.1 Sampling

For each type of aggregate base course material, random samples shall be taken for each 3000 square feet of compacted lift, but not less than one random sample per day. Take samples in accordance with ASTM D75. Tests are not required for the crushed rock surfacing.

Each sample shall be placed in a clean container, securely fastened to prevent loss of material and tagged with the following information:

Sample No.:
Date:
Name of Sampler:
Type of material sampled:
Location where sample was taken:

3.3.3.2 Testing

Test each sample without delay. Make gradation tests for each sample in accordance with the procedures specified in WSDOT M41-10 Section 9-03.15 for a Sieve Analysis of Fine and Course Aggregates. Materials not meeting specified gradation requirements shall be removed and replaced by the Seller.

A. Aggregate Base

Field density tests shall be performed in accordance with ASTM D1556 or ASTM D2922. For each type of material one test shall be performed for each 3000 square feet of compacted area, but not less than one test per day. When tests are performed by the Nuclear Method per ASTM D2922 at least 20 percent of the tests shall be with ASTM D1556.

3.3.4 Asphaltic Concrete Pavement

3.3.4.1 Field density tests shall be performed in accordance with WSDOT M41-10, Section 5-04.3(10)B.

3.3.5 Concrete Testing

3.3.5.1 Sampling and testing of concrete shall be in accordance with ACI 301, Chapter 16, except as modified by the supplemental requirements herein.

3.3.5.2 The responsibilities and duties of the Seller are as defined in ACI 301, Section 16.7.

3.3.5.3 Concrete test samples shall be taken at or near the point of final deposit.

3.3.5.4 Concrete slump tests shall meet the requirements of ASTM C143. Perform a slump test concurrently with the preparation of molded test cylinders.

3.3.5.5 Concrete air content tests shall meet the requirements of ASTM C173 or C231. Perform air content tests concurrently with the preparation of molded test cylinders.

3.3.5.6 Molded cylinders for compression tests shall be prepared in sets of three meeting the requirements of ASTM C31. Composite samples shall be secured in accordance with ASTM C172. Each sample shall be obtained from a different batch of concrete on a random basis. Curing shall meet the requirements of ASTM C31 for the standard 7 day and 28 day tests.

3.3.5.7 The minimum sampling frequency shall be one set for each 100 cubic yards or fraction thereof per day for each mix design.

3.3.5.8 Compression testing of cylinders shall meet the requirements of ASTM C39. Test each set of three cylinders as follows:

A. One cylinder at 7 days.

B. The remaining cylinders at 28 days.

C. The acceptance test results shall be the average of the two specimens tested at 28 days per ACI 301, Paragraph 16.3.4.3. Acceptance of concrete shall be per ACI 301, Paragraph 17.2.

3.3.6 Shotcrete

3.3.6.1 Field tests shall be in accordance with Section 1.6.3 of ACI 506.2. Additional field tests shall be made whenever the nozzeleman is changed. The test method specified in Section 1.6.3.2 of ACI 506.2 shall be used.

3.3.7 Water Systems

3.3.7.1 Pressure Tests

A. The minimum test pressure is the lowest allowable test pressure gauge reading (the calculated test pressure plus the additional pressure resulting from the static head of the test fluid above the test gauge).

B. The maximum test pressure shall be the greater of:

1) 1.1 times (1.1x) the minimum test pressure

2) 20 psi greater than the minimum test pressure.

C. Prior to initial operation, all installed piping shall be tested except where otherwise qualified by this specification.

D. The Buyer's Representative shall be given two working days prior to notification of the time and date of any testing to be performed.

E. The Seller shall be responsible for installing vents and drains required for testing purposes. All vents and drains installed for the purpose of testing, flushing, or purging shall be plugged and seal welded after test completion.

F. The Seller shall prepare and submit a hydrostatic test procedure for Buyer approval, including test diagrams, and test report format.

3.3.7.2 Pressure Testing of Piping

A. All pressure testing shall be per ASME B31.1 for sanitary water systems and NFPA 24 for firewater systems.

B. The alternate initial service tests as allowed in ASME B31.1 shall not be utilized.

3.3.7.3 Limits of Pressure Test

The Seller shall install temporary flanges and blind flanges at the A120 package boundaries for test purposes. After test completion and approval, these flanges shall be removed and the piping welded to the existing system.

3.3.7.4 Test Preparation for Pressure Piping

A. Temporary test blinds shall be installed between flanges where necessary to isolate piping systems, vessels, and equipment. However, where permanent operational blinds are installed, they may be used for pressure testing. Temporary test blinds shall be removed after successful completion and acceptance of tests.

B. All joints, including welds, are to be left exposed for examination during the test.

C. Pressure test gauges shall be calibrated at 90 day intervals or following damage to the gauge (i.e., dropping, over-pressurizing, etc.). The calibration shall be made using a dead weight tester with calibration records traceable to the National Institute of Standards and Technology. Gauge shall be tagged with the dates of the last and next calibrations. The date of gauge calibration shall be recorded by the Seller. In the event that a pressure gauge is found during calibration to be reading higher than the actual pressure, all tests made with that gauge since the last time it was calibrated shall be considered nonconforming and will require retesting if it cannot be determined that the test pressure utilized was sufficiently high to conform to the required minimum pressure.

D. The Seller shall take necessary precautions to prevent plastic piping from bowing in trenches as a result of expansion and/or internal pressure, during hydrotesting.

E. The Seller shall furnish the pumps, gauges, measuring devices, temporary plug valves, and other miscellaneous equipment necessary for testing.

F. The test fluid media, pressure, minimum duration and acceptance criteria shall be in accordance with the applicable code or standard referenced in Paragraph 3.3.7.2.A. The following additional requirements shall be included:

1) The test pressure shall be applied and maintained for at least five minutes prior to start of minimum test duration to assure that the pressure has equalized.

2) Systems required to be pressure tested per ASME B31.1 shall have the test pressure maintained for a time sufficient to examine all joints and connections for leakage, but in any case not less than ten minutes. The acceptance criteria for these systems is zero leakage.

3) If unacceptable leaks are found, then

a. their locations shall be marked;

b. the test pressure shall be gradually released;

c. the piping shall be drained;

d. appropriate repairs or replacement shall be made;

e. and the pressure testing shall be repeated until acceptable results have been achieved.

3.3.7.5 Test Records

The Seller shall prepare and submit to the Buyer in accordance with Paragraph 1.7.1 test reports for all piping systems requiring tests. The test reports shall contain, as a minimum, the following data:

A. Job Title and Contract Number

B. Date of Test

C. Contract Drawing and Line Numbers Identification of Piping Systems

D. Type of Test, i.e., Hydrostatic, Pneumatic

E. Pressure Applied, Material Temperature, and Length of Time at Test Pressure

F. Test Results

G. Test By

H. Signature of Seller Test Supervisor

I. Comments, if any

J. Gauge Identification and Dates of Last and Next Calibration

K. Signature or Stamp of the Buyer's Representative

3.3.7.6 System Component Acceptance Test

After completion of the Hydrostatic and Pneumatic tests and at such times as the Buyer may direct, an acceptance test shall be performed for approval and acceptance. The test shall be performed in the presence of the Buyer's representative and shall consist of the following:

All valves in the system shall be fully opened and then fully closed to ensure proper operation of valve mechanism.

3.3.7.7 Firewater Systems are designed to withstand Safety Class 1 Design Basis Earthquake (DBE) conditions. Therefore, the Seller shall develop and implement a plan to check and verify that all Firewater Systems (FWX) are erected and tested in accordance with this specification and the Contract Drawings. The plan shall address, but not be limited to backfill, bedding, fusion, pipelines and workmanship.

3.3.8 Electrical Testing

3.3.8.1 Power Cable Tests

Continuity Test

A. Test for continuity, correctness of wiring and verify correct identification on all insulated conductors installed and tested for continuity and correctness of wiring on all ASCR conductors installed.

B. Test shall be made with an ohmmeter.

3.3.8.2 Insulation Resistance Test

A. All conductors shall be given an "Insulation Resistance Test" using a Megohmmeter.

B. Test shall be made with the lugs in place and conductors disconnected at the equipment. Test shall be made between one conductor and ground with the other conductors grounded. Each conductor shall be tested in the same manner. The voltage shall be applied and readings taken every minute until three equal and consecutive readings are obtained.

C. Disconnected wires shall be safety tagged. Disconnect devices (circuit breakers, switches, etc.) will be safety tagged and locked open.

D. Test voltages and minimum acceptable insulation resistance shall be as follows:

| Insulation Voltage | Test Voltage | Min. Insulation Resistance |
|---|---|---|
| 600 volt ac | 1000 Vdc | 10 megohms |

3.3.9 Sanitary Sewer Test

3.3.9.1 Sanitary sewer laterals shall be tested from the manhole point of connection shown on the Contract Drawings to the pipe joint nearest the building. Test methods shall conform to WSDOT, Sections 7-17.3(4) A, B, E, and F.

## 3.4 CLEANING

3.4.1 General

Upon completion of work, the Seller shall remove all waste and surplus material resulting from his operations and leave the site clean.

3.4.2 Water Systems

3.4.2.1 Disinfection

All lines in sanitary water service (Service Code SWX) shall be disinfected in accordance with AWWA C651.

3.4.2.2 Cleaning Reports

All visual examinations and disinfections shall be documented in a test report to be submitted to the Buyer.

## 3.5 PROTECTION

Measures shall be taken to protect existing facilities such as benchmarks, aboveground electrical, underground utilities, roadway pavement and other items identified on the Contract Drawings and by the Buyer. All material shall be adequately protected and stored. Plastic pipes, joints and gasket material shall be stored in shade and out of direct sunlight. Do not store material directly on ground.

**END OF SECTION**

# ATTACHMENT A

## CHAIN LINK FENCE DETAILS

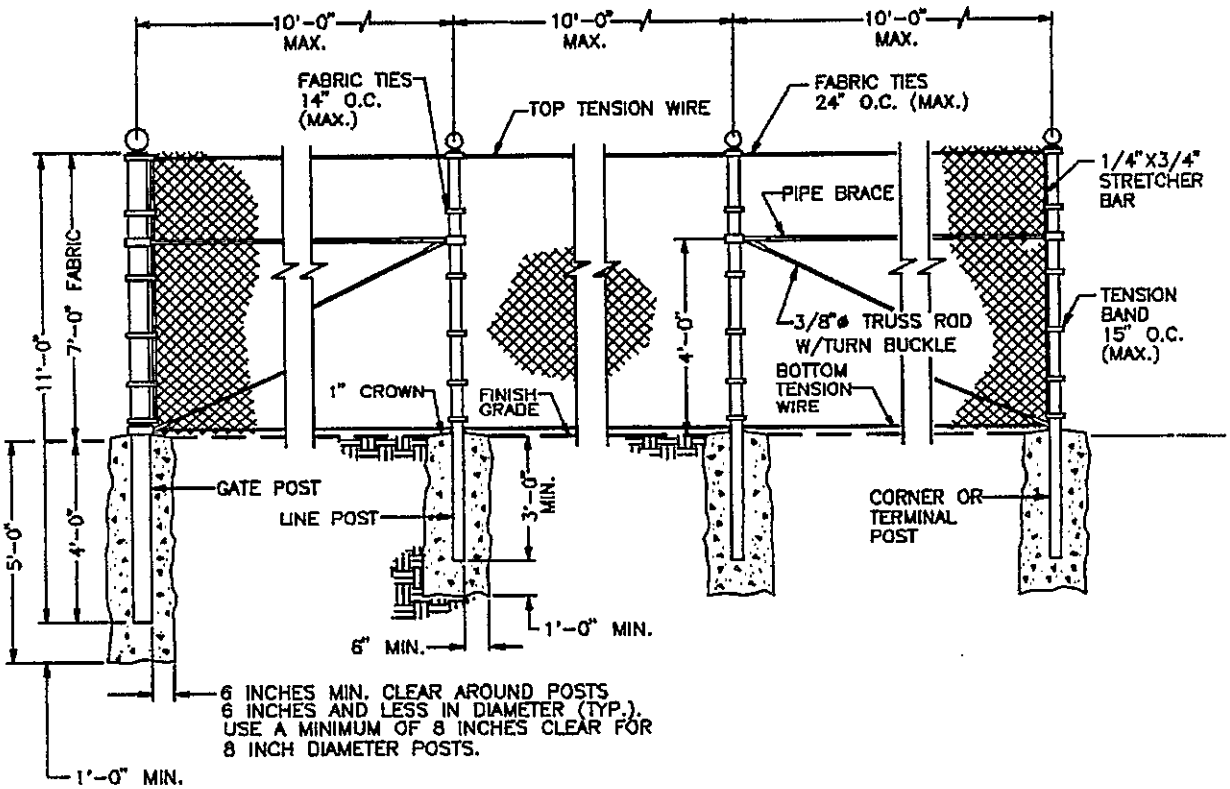


NOTE: Use 24 inch diameter for 8 inch gate post.

## ATTACHMENT B

## CHAIN LINK FENCE GATE AND TYPICAL FITTINGS

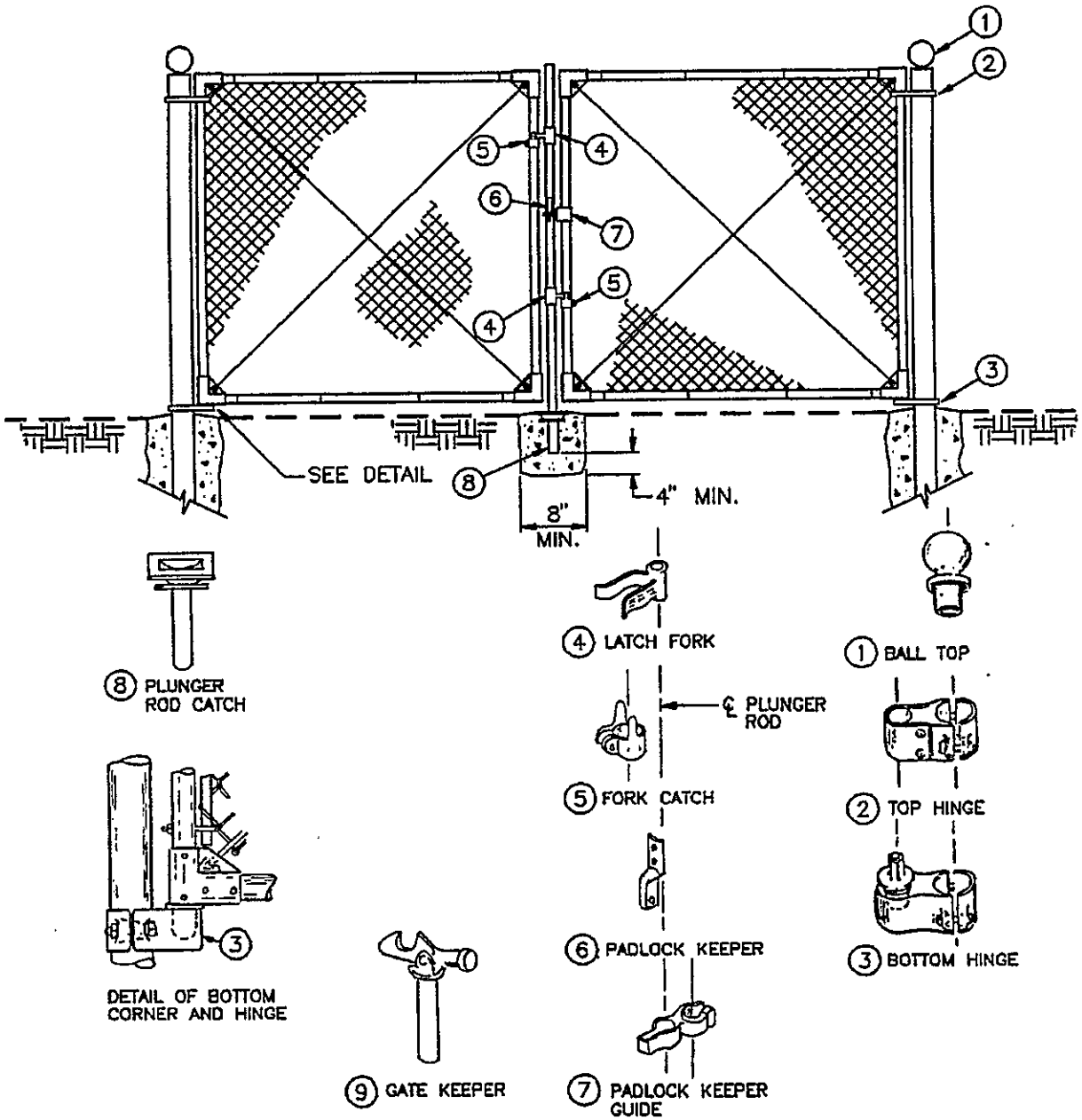

**U.S. DEPARTMENT OF ENERGY**
Hanford Waste Vitrification Plant
Richland, Washington
DOE Contract DE-AC06-86RL10838

**FLUOR DANIEL, INC.**
Advanced Technology Division
Fluor Contract 8457

Rev. 0

# SPECIFICATION 13121

# GFE WAREHOUSE/RECEIVING AND STORAGE BUILDING

# (B-595-C-A120)

# SECTION 13121
# GFE WAREHOUSE/RECEIVING AND STORAGE BUILDING

## TABLE OF CONTENTS

| SECTION | | PAGE |
|---|---|---|
| **PART 1** | **GENERAL** | 1 |
| 1.1 | SUMMARY | 1 |
| 1.2 | REFERENCES | 2 |
| 1.3 | RELATED REQUIREMENTS | 19 |
| 1.4 | DESIGN CRITERIA | 19 |
| 1.5 | SUBMITTALS | 40 |
| **PART 2** | **PRODUCTS** | 41 |
| 2.1 | GENERAL | 41 |
| 2.2 | SITEWORK | 42 |
| 2.3 | CONCRETE | 42 |
| 2.4 | MASONRY | 43 |
| 2.5 | METALS | 43 |
| 2.6 | WOOD AND PLASTICS | 44 |
| 2.7 | THERMAL AND MOISTURE PROTECTION | 44 |
| 2.8 | DOORS AND WINDOWS | 50 |
| 2.9 | FINISHES | 57 |
| 2.10 | SPECIALTIES | 63 |
| 2.11 | EQUIPMENT | 69 |
| 2.12 | FURNISHINGS | 71 |
| 2.13 | SPECIAL CONSTRUCTION | 71 |
| 2.14 | CONVEYING SYSTEMS | 71 |
| 2.15 | MECHANICAL | 71 |
| 2.16 | ELECTRICAL | 82 |
| **PART 3** | **EXECUTION** | 88 |

**ATTACHMENTS**


| ATTACHMENT | TITLE |
|---|---|
| ATTACHMENT A | (NOT USED) |
| ATTACHMENT B | CONDUIT, CABLE TRAY AND WIRE IDENTIFICATION |
| ATTACHMENT C | STANDARD SPECIFICATION FOR IDENTIFICATION OF PIPING SYSTEMS |
| ATTACHMENT D | (NOT USED) |
| ATTACHMENT E | PREPARATION AND CONTROL OF ENGINEERING AND FABRICATION DRAWINGS |
| ATTACHMENT F | (NOT USED) |
| ATTACHMENT G | (NOT USED) |
| ATTACHMENT H | REQUIRED MINIMUM INSULATION VALUES |
| ATTACHMENT J | (NOT USED) |
| ATTACHMENT K | ENERGY CONSERVATION |
| ATTACHMENT L | MECHANICAL INSULATION |
| ATTACHMENT M | PLUMBING/SERVICE PIPING |
| ATTACHMENT N | HEATING, VENTILATING AND AIR CONDITIONING SYSTEMS |
| ATTACHMENT P | REFRIGERATION |
| ATTACHMENT Q | CONTROLS |
| ATTACHMENT R | SAFETY CLASS ITEMS |
| ATTACHMENT S | (NOT USED) |
| ATTACHMENT T | HEALTH AND SAFETY |
| ATTACHMENT U | FIRE PROTECTION |
| ATTACHMENT V | QUALITY ASSURANCE |

# SECTION 13121
# GFE WAREHOUSE/RECEIVING AND STORAGE BUILDING

## PART 1 GENERAL

### 1.1 SUMMARY

#### 1.1.1 Purpose

The specifications and drawings cover the minimum requirements for designing and constructing a pre-engineered, prefabricated, steel framed, metal clad, one story GFE Warehouse/Receiving and Storage Building including foundation, structural system, all interior construction, electrical, plumbing, HVAC, and fire sprinkler systems; and to establish a level of quality and performance for design, material, durability, and workmanship.

#### 1.1.2 Scope

This specification is not intended to specify all details of design and construction. The Seller has full responsibility for the design, engineering, erection, and complete and total construction of the building and foundation, and to ensure that all codes, specifications, standards, and documents applicable to this performance specification and referenced herein are complied with in total.

#### 1.1.3 General Requirements

The Seller is to design and construct a new, one story, pre-engineered, prefabricated, steel framed, metal building to be located in the 200 East Area of the Hanford Project, north of Richland, Washington.

The building will be erected upon a reinforced concrete foundation. The first floor concrete-slab-on-grade shall be placed on a free-draining aggregate base overlying a compacted subgrade. The building envelope will comprise metal siding and a metal roof. Roof and walls will be insulated, and will have liner panels. Motorized, overhead coiling doors are typically 14 feet high by 14 feet wide. Personnel doors are typically 7 feet high metal flush doors. Partitions consist of gypsum wallboard on metal studs. Ceilings are generally open to the roof structure. Office and toilets have gypsum wallboard ceilings supported by a suspended, metal grid. Interior finishes typically include sealed concrete, vinyl composition tile, vinyl bases, ceramic tile, and paint. Specialties include toilet room compartments

and accessories, and loading dock equipment. Furnishings are not considered.

1.1.4 Soils and Geotechnical Report

A soils and geotechnical report prepared by Dames and Moore entitled:

"Report of Geotechnical Investigation Proposed Hanford Waste Vitrification Plant Hanford, Washington" for Kaiser Engineers, Job No. 10805-383-016, November 15, 1989, along with supplemental reports dated July 28, 1990 and July 24, 1991 has been prepared for the construction of facilities associated with the Hanford Waste Vitrification Plant project. Copies of these reports are available for review from the Buyer for background information only.

## 1.2 REFERENCES

The publications listed below form a part of this specification to the extent referenced. The publications are referred to in the text by the basic designation only.

AIR CONDITIONING AND REFRIGERATION INSTITUTE (ARI)

| | |
|---|---|
| ARI 210 | 1981 Standard for Unitary Air Conditioning Equipment |
| ARI 410 | 1987 Forced-Circulation Air Cooling and Air-Heating Coils |
| ARI 430 | 1989 Control Station Air Handling Units |
| ARI 450 | 1987 Water Cooled Refrigerant Condensers |
| ARI 460 | 1987 Remote Mechanical Draft Air Cooled Refrigerant Condensers |
| ARI 520 | 1990 Positive Displacement Refrigeration Compressors, Compressor Units and Condensing Units |
| ARI 850 | 1984 Standard for Commercial and Industrial Air Filter Equipment |
| ARI 1010 | 1984 Drinking Fountains and Self-Contained, Mechanically-Refrigerated Drinking Water Coolers |

AIR MOVEMENT AND CONTROL ASSOCIATION (AMCA)

| | |
|---|---|
| AMCA Publication 99 | 1986 Standards Handbook |
| AMCA Standard 201 | 1973 AMCA Fan Application Manual - Fans and Systems |
| AMCA Standard 210 | 1974 Laboratory Methods of Testing Fans for Rating Purposes |
| AMCA Publication 261 | Directory of Products Licensed to Bear the AMCA Certified Rating Seal |
| AMCA Standard 300 | 1985 (Rev. 1987) Reverberant Room Method for Sound Testing of Fans |
| AMCA Standard 500 | 1989 Test Methods for Louvers, Dampers and Shutters |

AMERICAN CONCRETE INSTITUTE (ACI)

| | |
|---|---|
| ACI 318/318R-89 | 1989 Building Code Requirements for Reinforced Concrete and Commentary |

AMERICAN CONFERENCE OF GOVERNMENT INDUSTRIAL HYGIENISTS (ACGIH)

| | |
|---|---|
| ACGIH 0019 | 1990 TLVs: Threshold Limit Values |

AMERICAN INSTITUTE OF STEEL CONSTRUCTION (AISC)

| | |
|---|---|
| AISC M016 | 1989 Manual for Steel Construction (Ninth Edition) |

AMERICAN IRON AND STEEL INSTITUTE (AISI)

| | |
|---|---|
| | 1987 Designer's Handbook Series, Design Guidelines for the Selection and Use of Stainless Steel |

AMERICAN NATIONAL STANDARDS INSTITUTE (ANSI)

| | |
|---|---|
| ANSI A13.1 | 1981 Scheme for the Identification of Piping Systems |
| ANSI A117.1 | 1986 Making Buildings and Facilities Accessible to, and Usable by, the Physically Handicapped |
| ANSI A137.1 | 1988 Ceramic Tile (TCA) |

| | |
|---|---|
| ANSI/BHMA A156.1-156.21 | 1984-1990 Miscellaneous Hardware Specifications |
| ANSI C2 | 1990 National Electrical Safety Code |
| ANSI C78.1C | 1978 Fluorescent Lamps (1985 Supplement) |
| ANSI C78.38 | 1984 Standard for Electric Lamps - High-Intensity Discharge Lamps - Method of Designation |
| ANSI C78.41 | 1987 Standard for Electric Lamps - Low Pressure Sodium Lamps |
| ANSI C82.1 | 1985 Standard for Ballasts for Fluorescent Lamps - Specifications |
| ANSI C82.4 | 1985 Standard for Ballasts for High-Intensity Discharge and Low Pressure Sodium Lamps (Multiple Supply Type) |
| ANSI C82.9 | 1988 Standard for High-Intensity Discharge and Low Pressure Sodium Lamps, Ballasts and Transformers - Definitions |
| ANSI C84.1 | 1989 Standard for Electric Power Systems and Equipment - Voltage Ratings (60 Hertz) |
| ANSI Y1.1 | 1989 Abbreviations for Use on Drawings and in Text |
| ANSI Y14.1 | 1980 Drawing Sheet Size and Format |
| ANSI Y14.2M | 1979 Line Conventions and Lettering |
| ANSI 14.36 | 1978 Surface Texture Symbols |
| ANSI Y32.2 | 1975 (See IEEE 315 and 315A) |
| ANSI Y32.2.4 | 1949 (Revised 1988) Graphical Symbols for Heating, Ventilating, and Air Conditioning |
| ANSI Y32.2.6 | 1950 (Revised 1984) Graphical Symbols for Heat-Power Apparatus |
| ANSI Y32.4 | 1977 (Revised 1987) Graphic Symbols for Plumbing Fixtures for Diagrams Used in Architecture and Building Construction |

| | |
|---|---|
| ANSI Y32.9 | 1972 (Revised 1988) Graphic Symbols for Electrical Wiring and Layout Diagrams Used in Architecture and Building Construction |
| ANSI Z9.2 | The Design and Operation of Local Exhaust Systems |
| ANSI Z97.1 | 1989 Safety Glazing Materials Used in Buildings - Safety Performance Specifications and Methods of Test |
| ANSI Z358.1 | 1990 Emergency Eyewash and Shower Equipment |
| ANSI/SDI-100 | (See also SDI-100) 1985 Standard Steel Doors and Frames |
| ANSI/ISA S5.1 | 1984 Instrumentation Symbols and Definitions |
| ANSI/ISA S5.2 | 1976 Binary Logic Diagrams for Process Operations |
| ANSI/ISA S5.5 | 1982 Graphic Symbols for Distributed Control/Shared Display Instrumentation, Logic and Control Systems |
| ANSI/IEEE 730 | 1984 Standard Instrumentation, Logic and Control Systems |
| ANSI/IEEE 828 | 1983 Standard for Software Configuration |
| ANSI/IEEE 983 | 1986 Guide for Software Quality Assurance |
| ANSI/IEEE 1012 | 1986 Standard for Software Verification and Validation Plans |
| ANSI | Other ANSI Standards as Required by DOE 6430.1A and Other Hanford Plant Standards |

AMERICAN SOCIETY FOR TESTING AND MATERIALS (ASTM)

| | |
|---|---|
| ASTM A36 | 1989 Standard Specification for Structural Steel |
| ASTM A53 | 1990 Standard Specification for Pipe, Steel, Black and Hot-Dipped, Zinc-Coated Welded and Seamless |

| | |
|---|---|
| ASTM A74 | 1987 Standard Specification for Cast Iron Soil Pipe and Fittings |
| ASTM A105/A105M | 1990 Standard Specification for Forgings, Carbon Steel, for Piping Components |
| ASTM A123 | 1989 (Rev. A) Standard Specification for Zinc (Hot-Dip Galvanized) Coatings on Iron and Steel Products |
| ASTM A153 | 1982 (R 1987) Standard Specification for Zinc Coating (Hot-Dip) on Iron and Steel Hardware |
| ASTM A167 | 1990 Standard Specification for Stainless and Heat-Resisting Chromium-Nickel Steel Plate, Sheet, and Strip |
| ASTM A185 | 1990 Standard Specification for Steel Welded Wire Fabric, Plain, for Concrete Reinforcement |
| ASTM A197 | 1987 Standard Specification for Cupola Malleable Iron |
| ASTM A307 | 1990 Standard Specification for Carbon Steel Bolts and Studs, 60,000 psi Tensile Strength |
| ASTM A325 | 1990 Standard Specification for High-Strength Bolts for Structural Steel Joints |
| ASTM A366/A366M | 1985 Standard Specification for Steel Sheet, Carbon, Cold-Rolled, Commercial Quality |
| ASTM A385 | 1980 (R 1986) Standard Practice for Providing High-Quality Zinc Coatings (Hot-Dip) |
| ASTM A446 | 1989 Standard Specification for Sheet Steel, Zinc-Coated (Galvanized) by the Hot-Dip Process, Structural (Physical) Quality |
| ASTM A500 | 1989 Standard Specification for Cold-Formed Welded and Seamless Carbon Steel Structural Tubing in Rounds and Shapes |

| | |
|---|---|
| ASTM A525 | 1990 General Requirements for Steel Sheet, Zinc-Coated (Galvanized) by the Hot-Dip Process |
| ASTM A526/A526M | 1990 Standard Specification for Steel Sheet, Zinc-Coated (Galvanized) by the Hot-Dip Process, Commercial Quality |
| ASTM A527/A527M | 1990 Standard Specification for Steel Sheet, Zinc-Coated (Galvanized) by the Hot-Dip Process, Lock Forming Quality |
| ASTM A563 | 1990 Standard Specification for Carbon and Alloy Steel Nuts |
| ASTM A568 | 1990 (Rev. A) Standard Specification for Steel, Sheet, Carbon and High-Strength, Low-Alloy, Hot-Rolled and Cold-Rolled, General Requirements |
| ASTM A591/A591M | 1989 Standard Specification for Steel Sheet |
| ASTM A615 | 1990 Standard Specification for Deformed and Plain Billet-Steel Bars for Concrete Reinforcement |
| ASTM B1 | 1985 Standard Specification for Hard-Drawn Copper Wire |
| ASTM B8 | 1986 Standard Specification for Concentric-Lay-Stranded Copper Conductors, Hard, Medium-Hard or Soft |
| ASTM B32 | 1989 Standard Specification for Solder Metal |
| ASTM B88 | 1989 (Rev. A) Standard Specification for Seamless Copper Water Tube |
| ASTM B456 | 1985 Electrodeposited Coatings of Copper Plus Nickel Plus Chromium and Nickel Plus Chromium, Specification for |
| ASTM C36 | 1985 Standard Specification for Gypsum Wallboard |
| ASTM C241 | 1990 Standard Test Method for Abrasion Resistance of Stone Subjected to Foot Traffic |

| | |
|---|---|
| ASTM C473 | 1987 (Rev. A) Standard Test Methods for Physical Testing of Gypsum Board Products and Gypsum Lath |
| ASTM C475 | 1989 Standard Specification for Joint Compound and Joint Tape for Finishing Gypsum Board |
| ASTM C552 | 1988 Standard Specification for Cellular Glass Thermal Insulation |
| ASTM C564 | 1988 Standard Specification for Rubber Gaskets for Cast Iron Soil Pipe and Fittings |
| ASTM C578 | 1987 (Rev. A) Standard Specification for Preformed, Cellular Polystyrene Thermal Insulation |
| ASTM C630 | 1990 Standard Specification for Water Resistant Gypsum Backing Board |
| ASTM C635 | 1987 Metal Suspension System for Acoustical Tile and Lay-in Panel Ceilings |
| ASTM C636 | 1986 Standard Practice for Installation of Metal Ceiling Suspension Systems for Acoustical Tile and Lay-in Panels |
| ASTM C645 | 1988 Standard Specification for Non-Load (Axial) Bearing Steel Studs, Runners (Track), and Rigid Furring Channels for Screw Application of Gypsum Board |
| ASTM C665 | 1988 Standard Specification for Mineral Fiber Blanket Thermal Insulation for Light Frame Construction and Manufactured Housing |
| ASTM C920 | 1987 Standard Specification for Elastomeric Joint Sealants |
| ASTM C1036 | 1990 Standard Specification for Flat Glass |
| ASTM C1048 | 1990 Standard Specification for Heat Treated Flat Glass |

| | |
|---|---|
| ASTM C1071 E1 | 1986 Standard Specification for Thermal and Acoustical Insulation (Mineral Fiber, Duct Lining Material) |
| ASTM D1557 | 1978 Standard Test Methods for Moisture-Density Relations of Soils and Soil-Aggregate Mixtures Using 10 Pound (4.54 kg) Rammer and 18 Inch (457 mm) Drop |
| ASTM D2000 | 1990 Standard Classification System for Rubber Products in Automotive Applications |
| ASTM D2092 | 1986 Standard Practice for Preparation of Zinc-Coated (Galvanized) Steel Surfaces for Painting |
| ASTM D2103 | 1986 Standard Specification for Polyethylene Film and Sheeting |
| ASTM D4397 EA-84 | 1984 (R 1989) Standard Specification for Polyethylene Sheeting for Construction, Industrial, and Agricultural Applications |
| ASTM E84 | 1989 (Rev. A) Standard Test Method for Surface Burning Characteristics of Building Materials |
| ASTM E1264 | 1990 Standard Classification for Acoustical Ceiling Products |
| ASTM F1066 | 1987 Vinyl Composition Floor Tile |
| ASTM G46 | 1976 Standard Practice for Examination and Evaluation of Pitting and Corrosion |

AMERICAN SOCIETY OF CIVIL ENGINEERS (ASCE)

| | |
|---|---|
| ASCE 7-88 | 1988 Edition (Published 1990) Minimum Design Loads for Buildings and Other Structures |

AMERICAN SOCIETY OF HEATING, REFRIGERATION AND AIR CONDITIONING ENGINEERS (ASHRAE)

| | |
|---|---|
| ASHRAE Handbook | 1987 ASHRAE Handbook HVAC Systems and Application |
| ASHRAE Handbook | 1989 ASHRAE Handbook Fundamentals (Inch-Pound Edition) |

| | |
|---|---|
| ASHRAE Handbook | 1988 ASHRAE Handbook Equipment; Errata 1989 Additions and Corrections, 1990 Additions and Corrections, 1991 |
| ASHRAE Handbook | 1990 ASHRAE Handbook Refrigeration Systems and Applications, I-P Edition, Additions and Corrections, 1991 |
| ASHRAE Manual | 1983 Design of Smoke Control Systems for Buildings |
| ASHRAE Manual | 1984 Simplified Energy Analysis Using the Modified Bin Method |
| ASHRAE 15 | 1989 Safety Code for Mechanical Refrigeration |
| ASHRAE 20 | 1970 Method of Testing for Rating Remote Mechanical - Draft Air Cooled Refrigerant Condensers |
| ASHRAE 24 | 1989 Method of Testing for Rating Liquid Coolers |
| ASHRAE 51 | 1985 Laboratory Methods of Testing Fans for Rating (AMCA Standard 210-85) |
| ASHRAE 52 | 1976 ASHRAE Method of Testing Air Cleaning Devices Used in General Ventilation for Removing Particulate Matter |
| ASHRAE 55 | 1981 Thermal Environmental Conditions for Human Occupancy |
| ASHRAE 62 | 1989 Ventilation for Acceptable Indoor Air Quality |
| ASHRAE 90.1 | 1989 Energy Efficient Design of New Buildings Except Low-Rise Residential Buildings |
| ASHRAE GRP 158 | 1979 Development of Heating and Cooling Load Calculations Manual |

AMERICAN SOCIETY OF MECHANICAL ENGINEERS (ASME)

| | |
|---|---|
| ASME | 1989 Boiler and Pressure Vessel Codes, Section VIII Rules for Construction of Pressure Vessels |
| ASME B16 SERIES | Pipework and Fittings ASME B16.1-89 to ASME B16.47-90 |
| ASME B16.18 | 1980 Cast Copper and Copper Alloy Solder Joint Pressure Fittings |
| ASME B31.1 | 1989 Power Piping Addenda B31.1A - 1989 |
| ASME B16.22 | 1980 Wrought Copper and Copper Alloy Solder Joint Pressure Fittings |
| ASME MH14.1 | 1987 Loading Dock Levelers and Dock Boards |

AMERICAN SOCIETY OF PLUMBING ENGINEERS (ASPE)

1988 Data Book

AMERICAN WATERWORKS ASSOCIATION, INC. (AWWA)

| | |
|---|---|
| AWWA C651 | 1986 Standard for Disinfecting Water Mains |

AMERICAN WELDING SOCIETY (AWS)

| | |
|---|---|
| D1.1 | 1990 Structural Welding Code |

ASSOCIATED AIR BALANCE COUNCIL (AABC)

| | |
|---|---|
| AABC | Volume A-89 National Standard for Testing and Balancing HVAC Systems |

BUILDERS HARDWARE MANUFACTURERS ASSOCIATION, INC. (BHMA)

(See ANSI/BHMA 156.1-156.21)

CAST IRON SOIL PIPE INSTITUTE (CISPI)

| | |
|---|---|
| CISPI 301 | 1985 Cast Iron Soil Pipe and Fittings for Hubless Cast Iron Sanitary Systems |
| CISPI 310 | 1985 Patented Joints for Use in Connection with Hubless Cast Iron Sanitary Systems |

CODE OF FEDERAL REGULATIONS (CFR)

| | |
|---|---|
| 10 CFR 436 | Code of Federal Regulations, Title 10, Part 436 |
| 29 CFR 1910 | Code of Federal Regulations Title 29 Particularly Chapter XVII, Part 1910, Subpart 132, 133, 134 |

COOLING TOWER INSTITUTE (CTI)

| | |
|---|---|
| CTI ATC 105 | 1990 Acceptance Test Code for Water-Cooling Towers |

FEDERAL SPECIFICATIONS (FS)

| | |
|---|---|
| FS-HH-I-545 | (Superseded by ASTM C1071 E1) |
| FS-HH-I-551 | (Superseded by ASTM C552) |
| FS-HH-I-558 | 1976 Insulation Blocks, Boards, Blankets, Felt, Sleeving (Pipe and Tube Covering) and Pipe Fitting Covering, Thermal (Mineral Fiber Industrial Type) [Rev. B, Amendment 3] |
| NBS Handbook 135 | 1987 Life Cycle Costing Manual for the Federal Energy Management Program |

FEDERAL STANDARDS (FED-STD)

| | |
|---|---|
| FED-STD 595B | 1989 Colors Used in Government Procurement |

ILLUMINATING ENGINEERING SOCIETY (IES)

| | |
|---|---|
| IES Handbook | 1987 Illuminating Engineering Society Handbook |

INTERNATIONAL ASSOCIATION OF PLUMBING AND MECHANICAL OFFICIALS (IAPMO)

| | |
|---|---|
| UPC | 1988 Uniform Plumbing Code |

INTERNATIONAL CONFERENCE OF BUILDING OFFICIALS (ICBO)

| | |
|---|---|
| UBC | 1988 Uniform Building Code |
| UFC | 1988 Uniform Fire Code |
| UMC | 1988 Uniform Mechanical Code |

INTERNATIONAL ELECTRICAL AND ELECTRONICS ENGINEERS (IEEE)

| | |
|---|---|
| IEEE 142 | 1982 Recommended Practice for Grounding of Industrial and Commercial Power Systems |
| IEEE 315 | 1975 (Revised 1989) Graphic Symbols for Electrical and Electronics Diagrams (Including Reference Designation Class Designation Letters) |
| IEEE 315A | 1986 Supplement to Graphic Symbols for Electrical and Electronics Diagrams |

MANUFACTURERS STANDARDIZATION SOCIETY
OF THE VALVE AND FITTINGS INDUSTRY (MSS)

| | |
|---|---|
| MSS SP-58 | 1988 Pipe Hangers and Supports - Materials, Design and Manufacture |
| MSS SP-69 | 1983 Pipe Hangers and Supports - Selection and Application |

MARBLE INSTITUTE OF AMERICA (MIA)

1990 Dimensional Stone Industry Design Manual

NATIONAL ELECTRICAL MANUFACTURING ASSOCIATION (NEMA)

| | |
|---|---|
| NEMA 250 | 1985 Enclosures for Electrical Equipment (1000 Volts Maximum) |
| NEMA ICS2 | 1988 General Control Devices, Controllers and Assemblies |
| NEMA ICS6 | 1988 Enclosures for Industrial Control and Systems |
| NEMA MG1 | 1987 Motors and Generators |
| NEMA PB-1 | 1990 Panelboards |
| NEMA PB-2 | 1984 Dead-Front Distribution Switchboards |

NATIONAL FIRE PROTECTION ASSOCIATION (NFPA)

| | |
|---|---|
| NFPA 10 | 1988 Portable Fire Extinguishers |

| | |
|---|---|
| NFPA 11 | 1988 Standard for Low Expansion Foam and Combined Agent Systems |
| NFPA 11A | 1988 Standard for Medium and High Expansion Foam Systems |
| NFPA 12 | 1989 Standard on Carbon Dioxide Extinguishing Systems |
| NFPA 13 | 1991 Installation of Sprinkler Systems |
| NFPA 15 | 1990 Standard for Water Spray Fixed Systems for Fire Protection |
| NFPA 16 | 1991 Standard on Deluge Foam-Water Sprinkler and Foam-Water Spray Systems |
| NFPA 16A | 1988 Recommended Practice for the Installation of Closed-Head Foam-Water Sprinkler Systems |
| NFPA 17 | 1990 Dry Chemical Extinguishing Systems |
| NFPA 20 | 1990 Standard for the Installation of Centrifugal Fire Pumps |
| NFPA 22 | 1987 Standard for Water Tanks for Private Fire Protection |
| NFPA 24 | 1987 Standard for the Installation of Private Fire Service Mains and Their Appurtenances |
| NFPA 45 | 1991 Standard on Fire Protection for Laboratories Using Chemicals |
| NFPA 70 | 1990 National Electrical Code |
| NFPA 71 | 1989 Standard for the Installation, Maintenance, and Use of Signaling Systems for Central Station Service |
| NFPA 72 | 1990 Standard for the Installation, Maintenance, and Use of Protective Signaling Systems (Revision and Consolidation of 72A, 72B, 72C, 72D, and 72F) |
| NFPA 72E | 1990 Standard on Automatic Fire Detectors |

| | |
|---|---|
| NFPA 72G | 1989 Guide for the Installation, Maintenance, and Use of Notification Appliances for Protective Signaling Systems |
| NFPA 72H | 1988 Guide for Testing Procedures for Local, Auxiliary, Remote Station, and Proprietary Signaling Systems |
| NFPA 90A | 1989 Standard for the Installation of Air Conditioning and Ventilation Systems |
| NFPA 90B | 1989 Standard for the Installation of Warm Air Heating and Air Conditioning and Ventilation Systems |
| NFPA 91 | 1990 Standard for the Installation of Blower and Exhaust Systems for Dust, Stock and Vapor Removal or Conveying |
| NFPA 96 | 1991 Standard for the Installation of Equipment for the Removal of Smoke and Grease-Laden Vapors from Commercial Cooling Equipment |
| NFPA 101 | 1988 Code for Safety to Life from Fire in Buildings and Structures |
| NFPA 255 | 1990 Standard Method of Test of Surface Burning Characteristics of Building Materials |
| NFPA 1410 | 1988 Training Standard on Initial Fire Attack |
| NFPA Vol. 1-16 | Volumes 1 Through 16, Primarily Volume 9 as Specified in HPS |

PLUMBING AND DRAINAGE INSTITUTE (PDI)

| | |
|---|---|
| PDI WH 201 | 1977 Water Hammer Arrestors Standard |

SHEET METAL AND AIR CONDITIONING CONTRACTORS NATIONAL ASSOCIATION, INC. (SMACNA)

| | |
|---|---|
| SMACNA | 1983 HVAC Systems Testing, Adjusting and Balancing (First Edition) |
| SMACNA | 1987 Architectural Sheet Metal Manual, 4th Edition |

| | |
|---|---|
| SMACNA | 1990 HVAC Systems Duct Design (Third Edition) |
| SMACNA | 1985 HVAC Duct Construction Standards, Metal and Flexible, First Edition |
| SMACNA | 1985 HVAC Air Duct Leakage Test Manual |
| SMACNA | 1978 Energy Recovery Equipment and Systems Manual |
| SMACNA | 1984 Energy Conservation Guide Lines |
| SMACNA | 1986 Fire, Smoke, and Radiation Damper Installation Guide for HVAC Systems |
| SMACNA | 1975 Accepted Industry Practice for Industrial Duct Construction |
| SMACNA | 1974 Thermoplastic Duct (PVC) Construction Manual |
| SMACNA | 1983 HVAC Systems Testing, Adjusting and Balancing |
| SMACNA | 1991 Seismic Restraints |

STEEL DECK INSTITUTE (SDI)

| | |
|---|---|
| SDI | 1990 Steel Deck Institute Diaphragm Design Manual, 2nd Edition |
| SDI | 1989 Design Manual for Composite Decks, Form Decks and Roof Decks, Publication No. 27 |

STEEL DOOR INSTITUTE (SDI)

(See also ANSI/SDI-100)

| | |
|---|---|
| SDI-100 | 1985 Standard Steel Doors and Frames |

THERMAL INSULATION MANUFACTURERS ASSOCIATION (TIMA)

| | |
|---|---|
| TIMA T302A | 1988 TIMA Energy Saving Guide (Recommended Thickness for Pipe and Equipment Insulation) |

TILE COUNCIL OF AMERICA (TCA)

| | |
|---|---|
| | 1988 Handbook for Ceramic Tile Installation |

UNDERWRITERS LABORATORIES (UL)

| | |
|---|---|
| UL 6 | 1983 Rigid Metal Conduit |
| UL 44 | 1983 Rubber-Insulated Wires and Cables, 12th Edition, January 29, 1990, Bulletin July 6, 1990, Bulletin July 10, 1990 |
| UL 50 | 1990 Cabinets and Boxes |
| UL 67 | 1988 Panelboards |
| UL 207 | 1986 UL Standard for Safety Refrigerant-Containing Components and Accessories, Nonelectrical Fifth Edition, October 3, 1989 |
| UL 489 | 1986 Molded Case Circuit Breakers and Circuit Breaker Enclosures |
| UL 723 | 1983 UL Standard for Safety Test for Surface Burning Characteristics of Building Materials Sixth Edition; April 28, 1987 |
| UL 891 | 1990 Dead-Front Switch, 8th Edition |
| UL 900 | 1987 Safety Standard for Air Filter Units |
| UL 924 | 1990 Emergency Lighting and Power Equipment, 6th Edition |
| UL 943 | 1990 Ground Fault Circuit Interrupters, 2nd Edition |
| UL 1029 | 1990 High-Intensity-Discharge Lamp Ballasts |
| UL 1242 | 1983 Intermediate Metal Conduit |
| UL 1561 | 1991 Dry-Type General Purpose and Power Transformers |

| | |
|---|---|
| UL 1572 | 1984 High Intensity Discharge Lighting Fixtures, Second Edition, May 30, 1990, Errata - August 1990 |

U.S. DEPARTMENT OF ENERGY - HEADQUARTERS (DOE)
Telephone: (202) 586-9642

| | |
|---|---|
| DOE Order 4330.2C | 1988 In-House Energy Management |
| DOE Order 4700.1 | 1987 Project Management System |
| DOE Order 5480.1B | 1986 Environmental Safety and Health Programs for DOE Operations |
| DOE Order 5480.7 | 1980 Fire Protection, Revised 1987 (Attachment U) |
| DOE Order 5480.10 | 1985 Contractor Industrial Hygiene Program |
| DOE Order 5481.1B | 1986 Safety Analysis and Review System (SARS) |
| DOE Order 5500.1B | 1992 Emergency Management System |
| DOE Order 5500.3A | 1992 Reactor and Nonreactor Facility Emergency Planning Preparedness and Response Program for DOE Operations |
| DOE Order 5700.6C | 1991 Quality Assurance |
| DOE Order 6430.1A | 1989 General Design Criteria: |
| | Section 0110-5 (Attachment T) - Health and Safety |
| | Section 0110-12 (Attachment K) - Energy Conservation |
| | Section 0140 (Attachment V) - Quality Assurance |
| | Section 1300-3.2 (Attachment R) - Safety Class Items |
| | Section 1525 (Attachment L) - Mechanical Insulation |
| | Section 1530 (Attachment L) - Fire Protection |

Section 1540 (Attachment M) - Plumbing/ Service Piping

Section 1550 (Attachment N) - Heating, Ventilating and Air Conditioning Systems

Section 1565 (Attachment P) - Refrigeration

Section 1595 (Attachment Q) - Controls

U.S. DEPARTMENTS OF THE ARMY AND THE AIR FORCE

| | |
|---|---|
| AFM 88-29 | Engineering Weather Data |
| TM-5-815-2 (AFM 88-36) | Energy Monitoring and Control Systems |

U.S. NAVAL FACILITIES ENGINEERING COMMAND

| | |
|---|---|
| NCEL UG-0010 | User Guide for Single Building Controllers |

WESTERN WOOD PRODUCTS ASSOCIATION (WWPA)

| | |
|---|---|
| WWPA G-5-88 (plus supplements) | 1988 Grading Rules for Western Lumber |

1.3 **RELATED REQUIREMENTS**

| | |
|---|---|
| Specification Section 01730 | Operation and Maintenance Data |
| Specification Section 02101 | Site Improvements for Construction Support Facilities |

1.4 **DESIGN CRITERIA**

1.4.1 Architectural

The Architectural design of the building shall meet the following criteria:

1.4.1.1 Codes and Specifications

A. Uniform Building Code (UBC)

B. NFPA 101

C. Uniform Fire Code (UFC)

D. 29 CFR Part 1910 (Subpart D) for Handrails, Stair Treads and Ladders

E. ANSI A117.1

1.4.1.2 Design Criteria

A. Thermal Resistance Value (R-Value)

| | |
|---|---|
| Roof | R-18.52 (Minimum) |
| Walls | R-12.5 (Minimum): (R-13.55 at 72°F, see Attachment H) |
| Floors (Perimeter) | R-6 (Minimum) Vertical insulation for at least 36 inches of foundation or R = 14 (minimum) horizontal insulation for at least 36 inches on underside of slab on grade (see Section 2.7.2.1 of this specification for more construction details) |

The whole building(s) shall comply with ASHRAE Standard 90.1 and the above minima. However, individual values may have to be increased to accommodate other items like windows or doors that do not comply with the prescriptive design approach. Also use heating degree-days method to determine the minimum values, Tables I and II of Attachment H, which may supersede the above minimum values.

B. Wall Assembly

Siding assemblies shall be designed to resist the wind loading as specified in Paragraph 1.4.2.2. Inward and outward design wind pressures shall be determined from ASCE 7-88.

C. Roof Assembly

Roofing, insulation and liner shall be designed to resist an uplift due to wind suction pressure as specified in Paragraph 1.4.2.2.

D. Floors, walls, roof, and doors in the GFE Warehouse shall be insulated and have vapor barriers on both sides of the insulation to prevent condensation internally, externally, or within the construction in all weather and internal design conditions.

E. The building shall be designed to eliminate mobility barriers, making the building accessible to and usable by

the physically handicapped; conforming to ANSI Standard A117.1.

1.4.2 Structural

Structural engineering and design of the building shall meet the following requirements:

1.4.2.1 Codes and Specifications

The following codes, standards and specifications shall be used for the purposes listed below. Modifications applicable to this project are described below.

A. UBC

Earthquake Loads
Impact Loads
Rain Loads (Ponding)
Building Design
Concrete Anchorage

B. ASCE 7-88 (Formerly ANSI A58.1-82)

Dead Loads
Live Loads
Snow Loads
Wind Loads

C. ACI 318

Concrete Design

D. AISC - Manual for Steel Construction (Ninth Edition)

Steel Design
Steel Fabrication
Steel Erection

E. SDI - Diaphragm Design Manual and Manual for Composite Decks, Form Decks and Roof Decks

Floor and Roof Deck Design

1.4.2.2 Design Loads

Loads and forces used for design shall be as defined in ASCE 7-88, UBC Chapter 23, and as specified below. The buildings are classified as Category I per ASCE 7-88, Table 1 for purpose of determining wind and snow loads.

The unit weights of materials and construction assemblies for buildings and other structures shall be those given in ASCE 7-88. Where unit weights are neither established in that standard nor determined by test or analysis, the weights shall be determined from data in manufacturers' drawings or catalogs.

A. Snow Loads

Ground snow load shall be 15 psf. Minimum snow load on roofs shall be 20 psf. The effects of snow drifts shall be considered.

B. Wind Loads

Basic wind speed at standard height of 33 feet shall be 70 mph. The wind loads shall be based on terrain Exposure "C."

C. Earthquake Loads

Building and structures, components and equipment supports and anchorage shall be designed to resist earthquake forces calculated in accordance with UBC Chapter 23 utilizing the following site specific information:

| | |
|---|---|
| Seismic Zone | = 2B |
| Importance Factor I | = 1.0 |
| Site Coefficient S | = 1.2 |

D. Allowance for Partition Loads

The minimum allowance for the weights of partitions, where partitions are likely to be rearranged or relocated, shall be as follows:

- For partition weights of 150 plf or less, an equivalent uniform dead load of 20 psf shall be used.
- For partition weights above 150 plf, the actual linear loads shall be used.
- Partitions that are likely to be rearranged or relocated should be calculated as live loads for load factor design.

1.4.2.3 Load Combinations

Loads shall be combined in accordance with UBC and ASCE 7-88 Section 2.3 when using allowable stress design and Section 2.4 when using strength design method.

1.4.2.4 Foundations

Foundation design shall meet the requirements of the UBC and the soil parameters given herein.

1.4.2.4.1 Soil Properties

The soil bulk density may be assumed as 110 pcf and angle of internal friction equal to 35 degrees.

1.4.2.4.2 Water Table

The water table is about 310 feet below-grade and, therefore, will not be a consideration.

1.4.2.4.3 Frost Depth

The design frost depth is 30 inches below finished grade.

1.4.2.4.4 Foundation Depth

The minimum depth to the bottom of foundations will be 2'-6" below finished grade.

1.4.2.4.5 Minimum Footing Size

Minimum footing width shall be 2 feet 6 inches. The footings will be sized to provide a minimum stability ratio against overturning and sliding of 1.5 for all lateral load conditions.

1.4.2.4.6 Allowable Soil Bearing

The allowable net soil bearing pressure shall not exceed 2.5 ksf, except a 33 percent increase is permitted when considering wind or seismic load.

1.4.2.4.7 Settlements

The settlements will be elastic in nature, and will occur essentially simultaneous with the application of loads. No long term settlements are anticipated.

The estimated elastic settlement of footings for 2.5 ksf net bearing pressure is expected not to exceed 1/2 inch. To prevent differential settlement, size building footings to provide uniform bearing pressure.

1.4.2.4.8 Lateral Earth Pressure

Lateral earth pressure against yielding walls shall be determined using the coefficient of active earth pressure, (Ka) equal to 0.27. For rigid (unyielding) walls the at-rest earth pressure coefficient, (Ko) equal to 0.43 shall be used. Lateral pressure due to surcharge loads where occurring shall also be considered. Yielding walls are those where displacement at top exceeds 0.001 times the wall height.

1.4.2.4.9 Lateral Force Resistance

Lateral loads may be resisted by a combination of passive pressure and friction. The coefficient of passive earth pressure, (Kp) is equal to 2.5. The coefficient of friction ($\mu$) between soil and footing may be taken as 0.42. One-half of the passive resistance shall be used when combining with friction to determine resistance. The upper 1 foot of soil shall be neglected when determining passive resistance.

1.4.2.4.10 Excavation and Backfill

The excavated soil or imported granular fill material approved by the Buyer may be used as structural backfill around foundations and under floor slab. Backfill shall be compacted to 95 percent of its maximum density as determined by ASTM D1557 methods. Excavation and backfill requirements will be similar to those specified in Specification Section 02101, Site Improvements for Construction Support Facilities.

1.4.3 Heating, Ventilating and Air Conditioning

1.4.3.1 General

The design and installation of the heating, ventilating and air conditioning system shall be in accordance with DOE 6430.1A modified as shown in Attachments; Section 0110-12: Energy Conservation (Attachment K), Section 1525: Mechanical Insulation (Attachment L), Section 1530: Fire Protection (Attachment L), Section 1540: Plumbing/Service Piping (Attachment M), Section 1550: Heating, Ventilating and Air Conditioning Systems (Attachment N), Section 1565: Refrigeration (Attachment P), and Section 1595: Controls (Attachment Q), Section 1300-3.2: Safety Class Items (Attachment R), Section 0110-5: Health and Safety (Attachment T), and Section 0140: Quality Assurance (Attachment V).

The design, equipment and materials used together with the installation shall be on the basis of a 20 year life expectancy.

Reference is also made to Attachment H, which specifies some of the specific design, material and equipment required at the site.

Attention is specifically drawn to the following areas of the Attachments but not limited to these:

- The HVAC system shall comply with, but not be limited to, the following sections in DOE 6430.1A:

  | | |
  |---|---|
  | 0110-12.7 | Building Analysis Procedures (Attachment K) |
  | 0110-12.7.1 | LCC Analysis Procedures (Attachment K) |
  | 0110-12.7.2 | Use of Computer or Other Energy Analysis Techniques (Attachment K) |
  | 0110-12.8 | Energy Conservation Report Requirement (Attachment K) |
  | 1550 | Heating, Ventilating and Air Conditioning Systems (Attachment N) |
  | 1595 | Controls (Attachment Q) |

  In the Controls Section 1595 (Attachment Q) particular attention is drawn to the Zoning (1595-2).

- Automatic controls shall be provided to shut off heating or cooling to any individual zone.

- Interior zones shall not be combined with external zones.

- Interior space zones shall be placed on separate air handling systems from external, if cost effective. External space zones shall be selected for each individual exposure.

- Each HVAC system shall have a separate thermostat for space temperature regulation and a separate humidistat if humidity control is provided.

- No zone shall contain more than a single building floor regardless of floor space.

Attention is also drawn to the following items in the Control Section 1595 (Attachment Q):

- Simultaneous heating and cooling shall not be used to control comfort conditions within a space by heating or re-cooling supply air or by concurrent operation of independent heating and cooling systems serving a common zone except as indicated in Section 1595-5.

- Economizer cycle control systems shall be used with separate supply and extract fans. See Section 1595-6.2. Automatic

control dampers shall be low leak type. See Section 1595-6.3.

- All control equipment shall be easily accessible. One temperature control panel shall be provided for each system, complete with panel-face mounted indicators, switches, pilot lights and tags. All control interlocks shall be through HOA switches.

- Automatic control setback and shutdown devices with manual override feature shall be provided for all HVAC systems. See Section 1595-3.

- Energy Management Systems (DCC) (DCS) shall be considered for control of the HVAC systems. See Sections 1595-3 and 1595-10 and 0110-12.6 (Attachment K). EMSs are being used on other buildings within the complex.

The HVAC systems used shall be in accordance with Section 1565 (Attachment P) for Refrigeration and CFC and related items.

Reference is made within the Sections 0110-12, 1525, 1530, 1540, 1555, 1565, and 1595 (Attachments K, L, M, N, P, and Q, respectively) to other design criteria documents, references and specifications. Attention is drawn to the following documents listed below but are not limited to these. The Seller is strongly advised to read these and all related publications. No excuses will be accepted due to lack of knowledge of these or other related publications.

ASHRAE Handbook: 1987 ASHRAE Handbook HVAC Systems and Application

ASHRAE Handbook: 1989 ASHRAE Handbook Fundamentals (Inch Pound Edition)

ASHRAE Handbook: 1990 ASHRAE Handbook Refrigeration Systems and Applications I-P Edition, Additions and Corrections, 1991

ASHRAE 55

ASHRAE 90.1

ASHRAE GRP 158

ASHRAE 62

DOE Order 5480.1B

SMACNA: Energy Recovery Equipment and Systems Manual

SMACNA: 1985 HVAC Duct Construction Standards - Metal and Flexible, First Edition

SMACNA: 1990 HVAC Systems Duct Design (Third Edition)

1.4.3.2 HVAC System Design Criteria

1.4.3.2.1 Geographical Site Design Conditions

| | |
|---|---|
| Location | Hanford, Washington |
| Altitude | 714 feet above sea level |
| Latitude | 46° North |
| Longitude | 119° West |

1.4.3.2.2 Attachments K, L, M, N, P, and Q (Sections 0110-12, 1525, 1530, 1540, 1550, 1565 and 1595, respectively) General Design Criteria.

1.4.3.2.3 Outdoor Design Conditions

| | Type of Area | Winter | Summer |
|---|---|---|---|
| 1) | GFE Warehouse/Receiving Storage Areas | 9°F db | 101°F db and 68°F wb |
| 2) | Office Areas & Toilets | 12°F db | 98°F db and 66°F wb |
| 3) | Extreme weather conditions | -27°F db | 121°F db and 75° wb |
| 4) | Outdoor summer dry bulb daily range | 30°F | |
| 5) | Wind velocity - winter and summer | 15 mph for 'U' value calculations | |
| 6) | Average infiltration wind velocity | 25 mph (0.3 inches differential pressure) | |
| 7) | Ground temperature at 10 feet below grade | 55°F | |

8) ASHRAE Standard 90.1 and the annual heating degree days shall be used for determining the minimum thermal resistance per Tables I and II of Attachment H

9) Sand storms with particulate air concentrations for less than 10 micrometers in diameter were recorded at 1695.0 micrograms per cubic meter.

1.4.3.2.4 Indoor Design Conditions

| | Type of Area | Summer | Winter | R.H. |
|---|---|---|---|---|
| 1) | GFE Warehouse (Climate Controlled) | 80°F Max | 65°F Min | Max. 85 gr/lb at design conditions of 101°F db and 68°F wb and Min. 20% |
| 2) | Receiving/Storage Areas | 85°F | 65°F | Max. 85 gr/lb at summer design conditions; r.h. not controlled in winter |
| 3) | Office Areas | 78°F | 72°F | 50% r.h. at maximum summer design condition; r.h. not controlled in winter |
| 4) | Men and Women's Toilet | 78°F | 70°F | Not controlled |

1.4.3.2.5 Anticipated Occupant Densities and Degree of Activity

As recommended by ASHRAE Standards and Manuals to suit areas or as specified in Architectural sections of this specification.

1.4.3.2.6 Ventilation Air

The minimum outside air to be delivered relatively equally to all areas shall be to ASHRAE Standard 62.

1.4.3.2.7 Infiltration

Infiltration for heating and cooling loads shall be calculated according to the methods provided by ASHRAE Publication GRP 158 and ASHRAE Fundamental Handbook and ASHRAE 90.1 and the recommendations of the manufacturers of the building materials, plus the building construction methods used.

1.4.3.2.8 Thermal Transmission Values ('U' Values)

The building construction shall be to ASHRAE Standard 90.1 and Table 8A-27 for energy usage compliance but shall be superseded by the annual heating degree-days method for determining the minimum thermal resistance per Tables I and II of Attachment H.

1.4.3.2.9 Air Circulation

An absolute minimum air circulation rate of 1.0 cfm/SF shall be provided for the winter in the Warehouse/Receiving and Storage areas. The air circulation in the winter shall be designed to limit the thermal stratification to less than 7°F from floor to the underside of the roof.

The maximum cooling air temperature differential supply to room shall be 20°F. The hot air from vertical discharge unit heater(s) must throw down to floor level (see the particular manufacturer literature for vertical hot air thrown from high level). Unit heaters shall be located as high as possible to provide maximum storage space and circulate air during the winter months even when the heating elements are not in use. This is required as an economy feature and also to minimize hot air stratification. The whole floor area shall be heated and cooled with no dead spots.

1.4.3.2.10 Safety Factor

A minimum 10 percent safety factor shall be added to the calculated design total cooling requirements. A minimum of 20 percent safety factor shall be added to the calculated design total heating requirement.

1.4.3.2.11 Noise and Vibration Levels

A. Shall comply with ASHRAE 1987 Systems and Application Handbook (table, 2 pg. 52.4, table, 27 pg. 52.31) requirements.

B. Figure 5, Page 52.3 ASHRAE 1987 Systems and Application Handbook will be used for Room Criterion Calculations.

1.4.3.2.12 Energy Conservation

The building envelope shall meet with the minimum prescriptive energy conservation requirements of ASHRAE Standard 90.1 and Table 8A-27 and the criteria in Sections 0110-12.3 and 0110-12.4 (Attachment K) but may be superseded by Tables I and II of Attachment H.

The Life Cycle Cost (LCC) Analysis shall be performed to determine the most economical HVAC system according to the procedures described in Section 0110-12.7 and 0110-12.8 (Attachment K). The HVAC system to be used shall also comply with all the other details of this specification.

The systems shall be zoned to save energy costs for different occupied areas.

The control diagrams shall use ANSI/ISA, S5.1, S5.2, and S5.5 Symbols and Definitions, plus ANSI/IEEE 730, 828, 983 and 1012, Standards for Software.

1.4.3.2.13 Odor Control

All toilets shall be designed for a minimum extraction rate of 2.0 cfm/SF.

1.4.3.2.14 Fire and Smoke

Systems shall be designed to be started and stopped as required by Local/State/National Codes and requirements and Sections 1530 and 1595-6.5 (Attachments L and Q, respectively). Provision shall be made for automatic smoke ventilation in the event of fire as necessary to comply with Local/State/National requirements and Section 1595-6.5 (Attachment Q) and NFPA 90A and NFPA 90B.

Fire and smoke dampers and barriers shall be provided where necessary to comply with Local/State and NFPA 90A and NFPA 90B requirements.

1.4.3.2.15 Operating Times/Frost Protection/Maximum Summer Conditions

The areas/rooms shall be designed to operate at the following times: Frost thermostats shall be provided where necessary to protect the systems and all services within the buildings from frost damage down to -27°F outside temperature. All air cooling systems must operate with outside temperatures up to 115°F. All outside water carrying pipes shall be electrically

trace heated and insulated for temperatures down to -27°F. Other pipes shall be electrically trace heated where necessary to prevent freezing.

The areas/rooms shall operate at the following times:

| Type of Area | Time Operated |
|---|---|
| Warehouse | Three - 8 hour shifts |
| Receiving Storage | Two - 8 hour shifts |
| Offices | Two - 8 hour shifts |
| Toilets | Three - 8 hour shifts |

1.4.3.2.16 Filtration Requirements (Disposable)

Supply air will be filtered with units rated at 55 percent to 65 (minimum) percent efficiencies (atmospheric dust spot) in accordance with ASHRAE 52. Outside intake air inlets will be located above grade to minimize dust loading to the filters.

The Design Engineer shall calculate both the particulate and volatile levels in all indoor areas to meet the minimum requirements of ASHRAE 62. These calculations may indicate that higher particulate efficiencies than the minimum stated above and also the use of filters and activated carbon filters to remove volatile gases are both necessary. Sand storms occur in Hanford, Washington and consideration should be given to installing inertia pre-filters to lengthen the life of the higher efficiency filters.

1.4.3.2.17 Equipment Location

Air cooling systems equipment (like adiabatic washers) or air conditioning equipment shall be located at ground level on concrete pads outside the building. Unit heaters shall be located as high as possible to optimize space requirements and economize on energy usage.

1.4.3.2.18 Lighting

Recessed lighting fixtures shall be used where necessary to produce draft free air distribution at the occupied level (in sedentary areas), or where necessary to achieve the air distribution required.

1.4.3.2.19 Condensation

Condensation on all windows and skylights shall be prevented at all internal and external temperature and humidity conditions by using double glazed units where necessary. Reference and calculation to determine the 'critical temperature' of any surface shall be based on the methods detailed in ASHRAE Handbook (Fundamentals) chapters 20, 21 and 22.

Condensation within any building structure or building material shall be prevented at all internal and external temperature and humidity conditions by the use of 'water vapor retarders.' Reference and calculations to determine this condition shall be based on the methods detailed in ASHRAE Handbook (Fundamentals) Chapters 20, 21 and 22.

Thermal bridging which will cause condensation within or on the surface of any building structure or building component shall be prevented at all internal and external temperature and humidity conditions by the design and construction methods used by the Seller. Reference and calculations to determine this (these) condition(s) shall be based on the methods detailed in ASHRAE Handbook (Fundamentals) Chapters 20, 21 and 22.

All the above calculations will be required to be seen by the Buyer before construction starts.

1.4.4 Electrical

The electrical design shall include all applicable elements as defined in this document for the following systems:

A. Lighting, interior and exterior

B. Grounding

C. Electrical distribution

D. Telephone

E. Public Address

1.4.4.1 Access and Working Space

Provide access to and working space about electrical equipment to permit safe operation and maintenance of such equipment. Access and working space shall be in accordance with Article 110 of NFPA 70.

1.4.4.2 Energy Conservation

1.4.4.2.1 Electrical distribution systems shall be designed to conserve energy and comply with ASHRAE Standard 90.1. Provide energy efficient electrical equipment on a life cycle cost analysis basis and select equipment locations to minimize electrical system energy losses.

1.4.4.2.2 Energy conservation measures shall include:

A. Use of high efficiency light sources

B. Use of high power factor ballasts in accordance with ANSI C82.9 or ANSI C82.1

C. Use of high power factor motors, 0.95 or above

1.4.4.3 Spare Capacity

Electrical distribution switchboards and panelboards shall be sized such that their main bus will be 75 percent loaded after calculation of their design load in accordance with the NFPA 70. Electrical distribution panels shall be provided with 20 percent spare circuit breakers for future load.

1.4.4.4 General Design Considerations

The electrical design shall conform to the requirements of:

| | | |
|---|---|---|
| A. | ANSI C2 | National Electrical Safety Code |
| B. | NFPA 70 | National Electrical Code |

1.4.4.5 System Voltage Levels

The following voltage levels shall be utilized as indicated:

| System Voltage | Applications |
|---|---|
| 480V, 3 phase, 4 wire, 60 Hz | Incoming power source |
| 480V, 3 phase, 4 wire, 60 Hz | Power distribution and utilization |
| 480/277V, 3 phase, 4 wire, 60 Hz | General lighting |
| 208/120V, 3 phase, 4 wire, 60 Hz | Convenience receptacles |

System and equipment voltage ratings shall comply with ANSI C84.1.

1.4.4.6 System Voltage Drop Criteria

The allowable voltage drop in the cables during normal operation in accordance with NFPA 70.

In all cases involving motor starting, the voltage at the motor terminals must be sufficient to ensure proper breakaway and acceleration of the motor. In general, the allowable voltage drop at motor terminals shall not exceed 15 percent.

1.4.4.7 Basis for Selection of Equipment and Feeder Ratings

1.4.4.7.1 Voltage levels, insulation levels, continuous current ratings, interrupting capacities and circuit protection shall be selected and coordinated in accordance with the recommendations of the National Electrical Code and this specification.

1.4.4.7.2 Feeders to distribution transformers and lighting and distribution panelboards shall be sized to match the rating of the associated equipment.

1.4.4.7.3 Equipment short circuit ratings shall be coordinated to the 30 kA RMS symmetrical available fault duty at the warehouse service entrance.

1.4.4.8 Electrical System Protection

1.4.4.8.1 Protective devices such as circuit breakers, fuses, breaker trip units and overload devices, shall be selected and applied to minimize damage to the electrical system and to limit the extent and duration of service interruptions due to overload or fault conditions.

1.4.4.8.2 A coordination and selectivity study shall be performed to coordinate upstream and downstream overcurrent protection devices in a series circuit, so that the protective device closest to the fault will selectively trip to isolate the fault. The coordination and selectivity study shall make use of time versus current curves on standard log-log paper to illustrate coordination of the selected protective devices. The coordination and selectivity study shall include breaker curves and set-point, fuse curves, cable damage curves, transformer inrush and damage points, motor inrush and overload curves and ground fault curves. The coordination and selectivity study shall begin with the overcurrent protection device at the 480 volt service entrance switchboard and continue downstream to the branch circuit protective devices.

1.4.4.9 Environmental and Operating Conditions

1.4.4.9.1 Electrical equipment and material shall be suitable for continuous operation at the following ambient temperatures:

| Area | Design Ambient Temperature Range |
|---|---|
| Outdoors | 110°F maximum, -20°F minimum |
| Indoors - general | 104°F maximum |

1.4.4.9.2 Electrical enclosures shall be in accordance with NEMA 250 and UL 50, and shall be suitable for the environmental conditions encountered:

| Area | Enclosure |
|---|---|
| Outdoor - general | NEMA 4, Weatherproof |
| Indoor - general | NEMA 1, General purpose |

1.4.4.10 Equipment and Material Quality

1.4.4.10.1 Electrical equipment and materials shall be specified to be UL tested, with the UL label attached. Where there are no UL listed products of the type specified, then testing and certification by another nationally recognized testing agency or other means to determine the suitability for its intended application shall be obtained by Seller.

1.4.4.10.2 Electrical equipment, components and materials shall be new, readily available and of proven design for the intended application.

1.4.4.11 Equipment Identification

1.4.4.11.1 Major items of electrical equipment shall be identified by equipment numbers. Equipment to be so numbered includes:

A. Disconnect Switches

B. Transformers

C. Distribution Panels

D. Lighting Panels

E. Motor Control

1.4.4.11.2 The electrical equipment numbering system shall be as follows:

XX - 32 T - X XX X

- X — Designation for similar or standby (1 alpha)
- XX — Sequential equipment number (2 digits)
- X — Prime equipment number (1 digit)
- T — Subsystem designation (1 alpha)
- 32 — System designation (2 digits)
- XX — Equipment category (2 alpha)

Equipment Category

| | |
|---|---|
| DA - AC Distribution Panel | MT - Motor |
| DD - Disconnect Switch | SB - Switchboard |
| LX - Lighting Panel | XT - Transformer |

1.4.4.11.3 Equipment and device nameplates shall be made of laminated plastic and shall have black lettering on white background. Nameplates shall be permanently attached to equipment with screws.

1.4.4.12 Conduit and Wire Identification

1.4.4.12.1 See Attachment "B" for conduit and wire identification on construction drawings and in the field.

1.4.4.12.2 Conductors for 208Y/120 volt, three-phase systems shall be color coded as follows:

A. Grounded neutral - White

B. Grounding conductor - Green or bare

C. Phase "A" conductor - Black

D. Phase "B" conductor - Red

E. Phase "C" conductor - Blue

1.4.4.12.3 Conductors for 480Y/277 volt, three-phase systems shall be color coded as follows:

A. Grounded neutral - Gray

B. Grounding conductor - Green or bare

C. Phase "A" conductor - Brown

D. Phase "B" conductor - Orange

E. Phase "C" conductor - Yellow

1.4.4.12.4 Lighting fixture wire shall be color coded as follows:

A. Grounded conductor - White insulation or white braid

B. Ungrounded conductor - Black insulation or white braid with black tracer

1.4.4.12.5 Insulated conductors intended solely for grounding purposes will be identified by a continuous green color insulation.

1.4.4.12.6 Grounded neutral conductors No. 2 AWG and smaller shall have white or gray insulation. Grounded conductors larger than No. 2 AWG shall also have white or gray insulation or shall be identified at all terminal and junction points and splices by wrapping with white or gray, self-adhesive, vinyl plastic electrical tape.

1.4.4.12.7 Control wiring conductors shall have black insulation. Multi-conductor control cables shall have individual conductors numbered for identification, e.g., 1, 2, 3, etc.

1.4.4.12.8 Color coding and identification of wiring supplied by equipment Vendors shall be the Vendor's standard.

1.4.4.13 Calculations and Analyses

The following calculations and analyses shall be performed by Seller during the design phase of the project:

A. Building and system load analysis

B. System short circuit

C. Equipment heat dissipation

D. Voltage drop

E. Illumination levels

1.4.4.14 Electrical Power Systems

1.4.4.14.1 Incoming Power

Seller shall provide power to the GFE Warehouse/Receiving and Storage buildings from the 480/277 volt construction power

switchboard number SB-32T-004, as shown on the drawings. Incoming power shall be routed underground via 600 volt direct burial cable or underground conduit and wire from the load side of the distribution feeder breaker provided at switchboard number SB-32T-004 to the service entrance equipment of each structure. Supply circuit breaker size shall be based on feeder design load calculations provided by the Seller. Conduit sleeves used for cable entrance to the buildings shall be shown on the Seller's drawings and shall be located by dimension and elevation.

1.4.4.14.2 480/277 Volt Power Distribution System

A. 480/277 volt power distribution shall originate at the 480/277 volt service entrance switchboard. Power shall be distributed from the service entrance switchboard via distribution circuit breakers and feeders to lighting panels, distribution transformers, 480 volt power distribution panels and other individual 480 volt loads as determined during design development.

B. Power distribution panels shall be located in electrical closets.

1.4.4.14.3 208/120 Volt Power Distribution System

A. 208/120 volt power distribution shall originate at the secondary side of the individual 480-208/120 volt power distribution transformers. 208/120 volt power shall be distributed from panelboards via circuit breakers and branch circuits to convenience outlets and equipment loads.

B. Power distribution transformers and panelboards shall be located in electrical closets.

1.4.4.15 Telephone System

Seller shall provide telephone service to the GFE Warehouse/ Receiving and Storage Building from the telephone interface cabinet as shown on the Contract Drawings.

1.4.4.16 Public Address System

Seller shall provide conduit and backboxes as specified in this section for future installation of the public address system by others.

1.4.5 Plumbing Systems

The plumbing systems design shall conform or meet the following criteria:

1.4.5.1 Codes and Regulations

A. All fixtures, equipment, materials shall be in conformance to the Uniform Plumbing Code.

B. Seismic bracing shall be provided in conformance with requirements of SMACNA 1991 Seismic Restraints.

1.4.6 Fire Protection Requirements

The GFE Warehouse/Receiving and Storage building shall be fully sprinklered with an automatic wet pipe system in accordance with the requirements of NFPA 13. All sprinkler systems are required to be hydraulically designed. The sprinkler contractor shall verify pressure and flow requirements, and provide connection to the underground fire water system shown on the drawings.

The GFE Warehouse/Receiving and Storage building shall be designed to meet the most restrictive requirements for life safety in accordance with the requirements of DOE Orders 6430.1A, 5480.7 and NFPA 101.

A fire alarm system shall be provided to monitor the alarm and supervisory signals from the wet pipe sprinkler system and transmit any other necessary signals required by NFPA 72 to the site's Radio Master Box system. All fire alarm equipment shall be in accordance with the requirements of NFPA 72 and 70.

A fire alarm panel shall be provided, installed, and wired in accordance with the requirements of NFPA 70, NFPA 72, NFPA 13, and the Contract Drawings. The fire alarm panel shall include all of the following features:

A. Local alarms for the automatic sprinkler waterflow pressure switch.

B. Trouble signals for all devices and circuits as required by NFPA 13 and NFPA 72.

C. Emergency battery backup for system operation.

D. Electrical supervision of all circuits as required by NFPA 72.

E. Output contacts and terminals for connection to the Hanford Radio Master Box System, including waterflow alarm, trouble, and supervisory signals.

Fire extinguishers shall be provided in accordance with NFPA 10.

## 1.5 SUBMITTALS

Submit the following in accordance with the Vendor Drawing and Data Requirements section of the Order/Subcontract:

### 1.5.1 Drawings, Calculations, and Specifications

Prepare and submit to Buyer for review and approval by Engineer (Fluor Daniel) engineering/construction drawings, calculations, and construction specifications (CSI format) for the following:

Architectural
Structural
HVAC
Electrical
Fire Protection
Plumbing

The structural design drawings shall indicate the design criteria, the structural materials and their strengths with applicable materials standards, the design loads including loads that can occur during construction, and the allowable foundation loads that were used in the design.

### 1.5.2 Qualifications

The drawings, calculations and specifications shall be prepared and stamped by professional architects/engineers registered in the State of Washington.

### 1.5.3 Manufacturer's Literature

Material and equipment data shall be submitted for all items to be incorporated in the Work, including manufacturer's catalog cuts, specifications, performance characteristics and other descriptive data in sufficient detail to verify compliance with contract requirements.

### 1.5.4 Certifications

Submit documents signed by authorized individuals certifying the degree to which the materials supplied meets the specific requirements of the specification (Certificate of Conformance).

1.5.5 Installation, Operating, and Maintenance Instructions

Detailed installation, operating, and maintenance instructions shall be submitted in accordance with Specification Section 01730, Operation and Maintenance Data.

1.5.6 Color Charts and Samples

Submit manufacturer's standard color charts and samples of all interior materials and products, for color selection by Buyer.

## PART 2 PRODUCTS

### 2.1 GENERAL

2.1.1 Scope

Whenever possible throughout this specification, the minimum acceptable quality of workmanship and materials has been defined by reference to recognized industry or government standard, or description of required attributes and performance.

2.1.2 Proprietary Names

Wherever proprietary names are used to identify products of a particular manufacturer, they are used for the purpose of establishing minimum acceptable standards of quality of materials, finish, or workmanship, and are not intended to exclude from consideration comparable products of other manufacturers. Products of other manufacturers will be permitted, subject to authorization by the Buyer.

2.1.3 "Or Equal"

Where the phrase "or equal" occurs in the specifications, the use of alternative material which is of equal quality and of the required characteristics for the purpose intended will be permitted, subject to authorization by the Buyer.

2.1.4 Colors

Where not otherwise specifically indicated on the drawings or in the specifications, colors, patterns, and textures shall be selected by the Buyer from manufacturer's standard samples.

2.1.5 Galvanic Corrosion

Where permanent contact by dissimilar metals cannot be avoided, the metals at the contact area will be painted with zinc chromate followed by one coat of a non-leaded paint (such as aluminum paint) or of a heavy bodied bituminous paint. When the dissimilar metals cannot be painted, a strip of plastic, neoprene, or a similar insulator will be used in place of paint.

2.2 **SITEWORK**

2.2.1 Concrete Splashblocks

Prefabricated, reinforced, precast concrete splashblocks shall be installed at all downspout discharge points. They shall be 30 inches in length, 18 inches in width, and at least one inch thick. Concrete compressive strength shall be 3,000 psi at 28 days. Steel reinforcing shall conform to ASTM A615, Grade 60, Number 4. The upper surface of the splashblock shall have an indentation which slopes downwards towards, and has sidewalls flared outward towards the discharge end. The rear end wall shall be at least three inches higher than the minimum thickness of the splashblock. Side and rear walls shall be at least one inch thick.

2.3 **CONCRETE**

2.3.1 Design Concrete Compressive Strength at 28 Days

$f'_c$ = 4000 psi

2.3.2 Concrete Reinforcement

2.3.2.1 Reinforcing Steel

ASTM A615, Grade 60

2.3.2.2 Welded Wire Fabric

ASTM A185

2.3.3 Cast-in-Place Anchors and Inserts

2.3.3.1 Anchor Bolts

ASTM A307, Type C

2.3.4 Grout

Non-shrink cement based

2.3.5 Concrete Sealer/Hardener

A dry shake, non-metallic surface hardener using size-graded hard quartz aggregate of natural configuration. The aggregate shall have 0.0 percent absorption. The plasticizer and water reducing admixture used as components of the product shall be formulated, manufactured, and processed by the dry shake manufacturer. A monomolecular film evaporative retardant shall be manufactured by the manufacturer of the surface hardener. Application rate shall be 1.0 pound per square foot. ["Mastercron" by Master Builders, Inc., Cleveland, Ohio.]

2.4 **MASONRY**

(Not Used)

2.5 **METALS**

2.5.1 Structural Steel Framing

2.5.1.1 Structural Steel

ASTM A36

2.5.1.2 Structural Pipe

ASTM A53, Type E or S, Grade B

2.5.1.3 Structural Tubing

ASTM A500, Grade B

2.5.1.4 High Strength Bolts

ASTM A325

2.5.1.5 Unfinished Bolts

ASTM A307

2.5.1.6 Nuts

ASTM A563

2.5.1.7 Welding Electrodes

E70XX in accordance with AWS D1.1

2.5.2 Pipe and Tube Rails

2.5.2.1 Railings and Handrails

Fabricate from structural steel pipe, minimum 1-1/2 inches O.D., heated and bent smoothly without distortion. Miter, weld and grind smooth where exposed. Vertical posts spaced evenly at 6 feet O.C. maximum. Horizontal rails shall be spaced at 12 inches O.C. maximum. Handrail brackets shall be #387 by Julius Blum & Co., Inc. (Carlstadt, NJ), or equal. Railings must withstand a horizontal concentrated 200 pound load with a top rail height of 42 inches. Railings, handrails, and brackets to be shop primed and field painted. Exterior railings shall be galvanized.

2.5.3 Nosings

Safety nosings shall be an abrasive surfaced cast iron furnished with factory applied shop coat of black asphaltum rust deterrent paint. They shall be a minimum of 5/8 inches thick, 4 inches wide, and 6 inches less than the overall width of the stair. Safety nosings shall be installed in poured concrete exterior stairs. Anchors shall be of the steel wing type reaching a depth of at least 1-1/2 inches. Pattern of abrasive surface shall be cross-hatched.

2.6 **WOOD AND PLASTICS**

2.6.1 Rough Carpentry

2.6.1.1 Nonstress Graded Members

Blocking and other nonstress graded members shall conform to "Grading Rules for Western Lumber" published by the Western Wood Products Association. Provide Douglas Fir, Utility Grade. Members used in exterior applications shall be pressure treated with salt preservatives.

2.7 **THERMAL AND MOISTURE PROTECTION**

2.7.1 Vapor Barriers (Water Vapor Retarders)

6 mil polyethylene sheet conforming to ASTM D2103 or ASTM D4397 EA-84. Install in continuous sheets, lapping joints 6" minimum and shall be placed on top of granular fill per Specification Section 02101, Site Improvements for Construction Support Facilities.

In GFE Warehouse, vapor barrier shall be installed on both sides of wall and roof insulation.

2.7.2 Insulation

2.7.2.1 Perimeter Insulation

Extruded, rigid, cellular thermal insulation with closed cells and integral high density skin, complying with ASTM C578, 5-year aged r-values of 5 at 75°F; Type IV, 1.6 pcf density, 25 psi compressive strength, 0.3 percent water absorption. Adhesive, fasteners, and protection board as recommended by the insulation manufacturer.

2.7.2.2 Wall and Roof Insulation

Fiberglass wool batts, foil-faced in Receiving and Storage Building, unfaced in GFE Warehouse; conforming to ASTM C665, Type III, Class B. Thickness as required to meet R-values stipulated in 1.3.1.2.

2.7.3 Preformed Metal Roofing and Siding

2.7.3.1 Material

Steel conforming to ASTM A446 Grade A with minimum yield strength of 33,000 psi and thickness not less than 22 gauge; galvanized in conformance to ASTM A525 Class G-90 (1.25 oz.).

2.7.3.2 Profile

Smooth surface exterior wall panels in 12 inch modules with 1-1/2 inch deep interlocking ribs and concealed fasteners. Oil-canning shall be kept to an absolute minimum.

V-ribbed exterior roof panels in 12 inch modules with 1-1/2 inch deep interlocking ribs and concealed fasteners. Oil-canning shall be kept to an absolute minimum.

Interior liner panels in 24 inch modules with one intermediate groove/rib, 1-1/2 inch deep interlocking ribs and concealed fasteners. Oil-canning shall be kept to an absolute minimum.

2.7.3.3 Factory Applied Finish

Exterior wall and roof panels will receive 0.8 mil polyvinylidene fluoride ($PVF_2$), Kynar-500, 70 percent resin finish coat applied over a 0.2 mil baked-on epoxy base primer to a total film thickness of 1.0 mil. Color as indicated on the drawings.

Interior liner panels shall be shop primed and painted in the field in accordance with the paint schedule.

2.7.3.4 Subgirts

May be hat or zee shaped from galvanized steel in 18 or 16 gauge. Subgirts shall be located at each structural support and at intermediate locations as required to meet design loads.

2.7.3.5 Flashing

Shall be formed from the same material and in the same finish as the attached wall panel.

2.7.3.6 Fasteners

Shall be electrolytically compatible self-tapping #14B or self-drilling #12 for sheet-to-support as required by the support thickness, and #14 self-tapping AB point or lap self-drilling fasteners for sheet-to-sheet attachment. For subgirt attachment, pre-drill hole for either fastener.

2.7.3.7 Closures

Shall be made from closed cell pre-molded neoprene or polyethylene foam or metal.

2.7.3.8 Dissimilar Metals

Preformed metal siding system will not include dissimilar or electrolytically incompatible metals.

2.7.3.9 Sealant

Low modulus, one-component, moisture curing, modified polyurethane joint sealant conforming to ASTM C920 and suitable for gun application.

[DYMONIC by Tremco, Cleveland, Ohio]

2.7.3.10 Sealant Tape

Void filling, 100 percent solids butyl based extruded sealant tape.

[MBT-35 by Tremco, Cleveland, Ohio]

2.7.4 Sheet Metal Flashing and Trim

2.7.4.1 Sheet metal flashing and trim shall conform to the Architectural Sheet Metal Manual published by the Sheet Metal and Air Conditioning Contractors National Association, Inc. (SMACNA).

2.7.4.2 Galvanized Steel

Galvanized steel sheet shall conform to ASTM A526, regular coating, designation Z90. Minimum thickness as recommended by SMACNA.

2.7.4.3 Fasteners

Shall be the same metal or a metal compatible with the materials joined.

2.7.4.4 Solder Materials

Solder and flux shall meet ASTM B32. Solder shall have lead content less than 0.2 percent.

2.7.4.5 Sealing Compound

Fast cure, non-sag, two component polyurethane sealant conforming to ASTM C920 and suitable for gun application.

[FC-2 by Tremco, Cleveland, Ohio]

2.7.4.6 Gutters

Gutter design shall be in accordance with the Architectural Sheet Metal Manual, Plate 1, and Plate 2, Style F.

Gutters shall be pitched to drain at not more than 1/16 inch per foot.

Gutter supports shall be in accordance with the Architectural Sheet Metal Manual, Plate 20, Figure A.

Outlet tubes with flanges shall be riveted and soldered to gutters; tubes shall be extended 3 inches into downspouts.

A downspout strainer shall be inserted into each outlet tube.

Gutter expansion joints shall be provided at a spacing of not more than 32 feet on center in accordance with the Architectural Sheet Metal Manual, Plate 6.

2.7.4.7 Downspouts

Downspouts shall be provided on outside walls from gutters.

Downspouts shall be joined to the gutters at outlet tubes and joined to each other by telescoping end joints 1-1/2 inches into the lower section.

Downspout hangers shall be fabricated from the same material as downspouts. One hanger will be provided at the top and bottom of each downspout section.

Elbows shall be installed where downspouts terminate on splashblocks.

Downspouts shall conform to the Architectural Sheet Metal Manual, Plate 32, Figure B; Plate 33, Figure E; and Plate 35, Figure G.

2.7.5 Unit Skylights

2.7.5.1 Acrylic Domes

Factory assembled units consisting of two sealed domes of acrylic plastic, 0.078" extruded aluminum frame with polyurethane thermal break to prevent condensation on interior portions of aluminum frame, and 0.062" extruded aluminum dome retaining angle. The skylights are to be completely sealed with neoprene gaskets and isobutylene/isoprene between domes and frame members, with no weep holes, to prevent infiltration and exfiltration. Insulated curbs shall be constructed of 0.030" corrosion resistant aluminum inner and outer walls connected at the top and bottom by polyvinyl-chloride (PVC) thermal barriers. Insulation material between walls to be 1 inch thick fiberglass.

[Model TLA by Naturalite, Inc., Garland, Texas]

2.7.6 Sealants

2.7.6.1 Quality

Sealants shall conform to ASTM C920.

2.7.6.2 Grade

As recommended by manufacturer for particular condition of installation (location, joint shape, ambient temperature, and similar conditions) to achieve the best possible overall performance.

2.7.6.3 Joint Fillers

Flexible, compressible, closed-cell polyethylene of no less than 100 psi compression deflection (25 percent), except provide higher compression deflection strength as necessary to withstand installation forces and provide proper support for sealants. Surface water absorption of not more than 0.1 pounds per square foot.

2.7.6.4 Backer Rod

Compressible rod stock of polyethylene foam, butyl rubber foam, neoprene foam, or other flexible, permanent, durable, nonabsorbent material, 33 percent to 50 percent larger than joint as recommended for compatibility with sealant by sealant manufacturer.

2.7.6.5 Bond-Breaker Tape

Polyethylene tape or other plastic tape as recommended by sealant manufacturer for preventing bond between sealant and joint filler or other materials at back of joint. Provide self-adhesive tape where applicable.

2.7.6.6 Sealant Types, and Schedule

Sealant types referenced are products of Tremco, Cleveland, Ohio.

2.7.6.6.1 Exterior Locations

Horizontal surfaces: Multi-component epoxidized polyurethane; Type M, Grade NS, Class 25. [DYMERIC]

Perimeter of exterior openings: Low modulus, one-component, moisture curing, modified polyurethane; Type S, Grade NS, Class 25. [DYMONIC]

All other exterior building applications except as otherwise noted: Low modulus, high performance, one-part, moisture curing, architectural grade, silicone sealant; Type S, Grade NS, Class 25. [SPECTREM 1]

2.7.6.6.2 Interior Locations

Perimeter of toilet room fixtures: One-part acrylic terpolymer, white, non-sag. [MONO]

All other interior locations: Medium modulus, neutral cure, high performance silicone sealant; Type S, Grade NS, Class 25. [SPECTREM 2]

2.7.6.7 Colors

As selected from manufacturer's standard samples.

## 2.8 DOORS AND WINDOWS

### 2.8.1 Metal Doors and Frames

Shall conform to requirements of ANSI/SDI-100.

#### 2.8.1.1 Steel Doors - Exterior

Grade II - Heavy Duty; Model 3 - Seamless, hollow steel construction, insulated, thermal break.

#### 2.8.1.2 Steel Doors - Interior

Grade I - Standard Duty; Model 3 - Seamless, hollow steel construction.

#### 2.8.1.3 Steel Frames

Knockdown type for interior assemblies; welded type for exterior openings. Welded type shall have corners mitered and ground smooth.

#### 2.8.1.4 Related Items

Frame anchors, floor anchors, and other items shall conform to requirements of ANSI/SDI-100.

#### 2.8.1.5 Finish

Shop primed in accordance with ANSI/SDI-100; field finished in accordance with Finish Schedule.

### 2.8.2 Overhead Coiling Doors

Designed and reinforced to withstand wind loading specified in 1.3.2.2.

#### 2.8.2.1 Construction

Interlocking cold-rolled slats shall be fabricated from steel sheets conforming to ASTM A446, Grade A; and galvanized in accordance with ASTM A525, G90. Slats to be continuous without splices for the width of the door. Profile to be flat with a depth not less than 0.625 inch, a center-to-center width not more than 2.75 inches, and not less than 0.0478 inch uncoated thickness.

2.8.2.2 Bottom Bar

Pair of angles not less than 2" by 2" by 0.188 inches; ASTM A36 steel, galvanized in accordance with ASTM A525, G90.

2.8.2.3 Wind Locks

Cast steel, galvanized in accordance with ASTM A525, G90. Provided on every other curtain slat.

2.8.2.4 Insulation

Polyurethane foam in slats. Provide thermal break.

2.8.2.5 Weatherstripping

Minimum 1/8 inch thick neoprene rubber conforming to ASTM D2000.

2.8.2.6 Hardware

Jamb guides and door operating equipment supports shall be fabricated from ASTM A36 steel shapes galvanized in accordance with ASTM A525, G90. Fasteners shall conform to ASTM A307, Grade A, galvanized per ASTM A153, Table 1.

Locks and latches, lifting handles, and other hardware items shall be galvanized steel. Locks and cylinders shall conform to standards established by the Buyer.

2.8.2.7 Counterbalancing Mechanism

Adjustable, steel, helical torsion spring mounted around a steel shaft in a spring barrel and connected to the door curtain with barrel rings.

2.8.2.8 Hoods

Fabricated from steel sheets conforming to ASTM A446, Grade A; galvanized in accordance with ASTM A525, G90. Reinforced to prevent hood deflection. Minimum thickness to be 0.0299 inch.

2.8.2.9 Operation

Doors are scheduled for electric operation. Provide a compact operator designed and built by the door manufacturer. The motor shall have sufficient power to operate the door at an approximate speed of 1 foot per second. The unit shall be controlled by a momentary contact 3 button pushbutton station marked "OPEN,"

"CLOSE," and "STOP," and an automatic screw-type limit switch that will break the circuit at the termination of travel. A NEMA Type 12 enclosure is required.

An emergency hand chain operator that does not affect the timing of the limit switch shall be provided to operate the door in case of power failure or the removal of motor for inspection or servicing. An efficient overload protective device that will break the power circuit and eliminate any possible damage to motor windings shall be both heat and current sensing, and installed integrally with the unit. The motor shall be 1/2 HP-460/3/60; the starter shall be Size 1, dustproof combination with circuit breaker. Equip the bottom of the door with a safety edge and an automatic reversing switch that reverses the door when an obstruction is encountered during the downward travel.

2.8.2.10 Finish

Hot dipped galvanized, with a high-grade, pure zinc coating, 1.25 ounces per square foot of flat metal, conforming to ASTM A525, G90. Galvanized surfaces shall be provided with a phosphate coating for paint adhesion. Other surfaces of door parts shall be primed with 1 shop coat of rust-inhibiting primer.

2.8.3 Finish Hardware

2.8.3.1 Scope

Provide finish hardware for each opening of suitable strength and proper design to meet applicable codes and to provide intended service and installation. Provide hardware items not definitely specified but required for completion of the work, of type, quality and finish suitable to service and installation required, and comparable to adjacent hardware.

2.8.3.2 Quality

Finish hardware shall conform to requirements of ANSI/BHMA A156.

2.8.3.3 Finishes

Hardware shall receive the following finishes unless otherwise noted:

Exterior openings: US32D, satin stainless steel (ANSI/BHMA 630).

Interior openings: US26D, satin chrome (ANSI/BHMA 652 on steel and 626 on brass or bronze).

2.8.3.4 Fasteners

Finished to match hardware items fastened. Type, size, and quantity proper for each hardware item.

2.8.3.5 Butt Hinges

Five knuckle. Exterior doors shall be stainless steel and have nonrising and nonremovable pins. Interior doors shall be plated steel. Butts on all doors shall have ball bearings; except interior doors less than 36 inches in width, which will have plain bearings. All doors shall have a minimum of three hinges. Hinges shall have leaves of sufficient width to clear the trim but not less than 4-1/2" x 4-1/2."

[Hager Hinge Co., St. Louis, MO]

2.8.3.6 Closers

Closers shall be the surface-mounted, overhead type and shall be the product of a single manufacturer. Parallel-arm closers shall be used for outswinging exterior doors, doors under 7 feet in height, and when special conditions require parallel-arm operation.

Closers shall be liquid-controlled, rack-and-pinion construction with cast cases and a spindle not less than 9/16 inch in diameter.

Closer arms shall be fabricated from forged steel or ductile iron. Ductile iron arms shall be provided for parallel-arm closer operation. Exposed arms of closers shall have a sprayed-on finish matching the lockset or exit-hardware finish.

Hold-open devices shall be provided on closers except those for toilet room doors, and exterior doors.

Brackets, reinforcing plates, and accessory fittings shall be provided by the closer manufacturer.

[LCN Closers, Princeton, IL]

2.8.3.7 Locksets and Latchsets

Shall have plain design, wrought trim, and shall be the product of a single manufacturer.

Shall have standardized fronts, cases, and strikes so that varying functions will be interchangeable and will require only one mortise for their installation. Locks and latches shall have

beveled bronze fronts, bronze bolts and strikes, brass hubs, and cases with the finish specified. Locks shall have cylinders with 6 pin tumblers.

Locksets and lock cylinders shall be keyed in accordance with Buyer's requirements.

Locksets and latchsets shall be lever actuated, cylinder bored type conforming to ANSI 156.2, Series 4000, Grade 1.

[Corbin Mortise Lock 8789L2 with removable core 59A1]

2.8.3.8 Pull and Push Plates

Shall be wrought brass, bronze, or aluminum finished as specified.

Pull plates shall have plate not less than 14" by 3-1/2" by 0.050 inch thick; grip center-to-center 6 inches.

Push plates shall be not less than 14" by 3-1/2" by 0.050 inch thick.

[Builders Brass Works Corp., Los Angeles, CA]

2.8.3.9 Exit Device

Shall be listed by UL and bear the UL label.

Shall be the product of a single manufacturer. Construction shall be of heavy wrought steel, with exposed parts in stainless steel. Crossbar shall be oval seamless tubing.

Exit device shall be mortise type with 3/4" latchbolt throw. No dogging. Exterior trim shall be by the manufacturer of the exit device.

[1500 Series by Yale Security, Inc., Charlotte, NC]

2.8.3.10 Silencers

Model 20 by H. B. Ives, Wallingford, Connecticut. Three each for single doors.

2.8.3.11 Door Stops

Wall mounted door stops shall be provided where practicable. Where impossible to install wall-mounted stops, floor mounted stops shall be provided.

Wall mounted stops: Model 409-1/2 by H. B. Ives, Wallingford, Connecticut.

Floor mounted stops: Model 436 and 438 by H. B. Ives, Wallingford, Connecticut.

2.8.3.12 Automatic Door Bottom

Shall be an automatically operating assembly composed of a rubber seal, a metal seal housing, and an automatic operating device mounted on the bottom of the door. The device shall be designed to seal the space between the bottom of the door and the finished floor when closed and to retract immediately when the door is opened to provide a sill clearance of approximately 1/4 inch.

The door-bottom housing shall be surface mounted, extruded, anodized aluminum, 1/2 inch wide by 2-1/8 inches deep by the full width of the door and attached to the door with countersunk screws.

[Model 330A by National Guard Products, Inc., Memphis, Tennessee]

2.8.3.13 Weatherstripping

Shall consist of a 1/8 inch thick by 1-3/8 inches high neoprene strip housed in an extruded, anodized aluminum housing approximately 0.070 inch thick by 1-1/4 inches high by the full width of the door and attached to the door frame with countersunk screws.

[Model 139 by Zero International, Inc., Bronx, NY]

2.8.3.14 Mop Plates and Kick Plates

Shall be 0.050 inch thick stainless steel, wrought brass, or aluminum; bevel edge; finished as specified. Width of mop and kick plates shall be 2 inches less than the width of the door. Height of mop plates shall be 6 inches; height of kick plates shall be 10 inches. Attachment by countersunk screws.

2.8.3.15 Thresholds and Saddles

Aluminum thresholds shall be provided for the full width of the opening at exterior doors. Thresholds shall be mill-finish aluminum 6063-T5 alloy, corrugated, with vinyl inserts. Thresholds shall not exceed 1/2" in total height.

[Model 2005AV by Pemko Enterprises, Inc., Huntington Beach, CA]

Aluminum saddles shall be provided for the full width of openings at locations where concrete meets other flooring material (except at toilet rooms). Saddles shall be mill-finish aluminum 6063-T5 alloy, 2-1/2 inches wide by 1/4 inch high.

[Model S225A by Pemko Enterprises, Inc., Huntington Beach, CA]

2.8.3.16 Generalized Hardware Schedule

HW-1 Exterior Doors

Hinges
Closer
Lockset
Exit Device
Automatic Door Bottom
Weatherstripping
Silencers
Threshold
Door Stop
Kick Plate

HW-2 Interior Doors

Hinges
Closer
Lockset/Latchset
Silencers
Door Stop
Mop Plate

HW-3 Interior Doors - Toilet Rooms

Hinges
Closer
Pull and Push Plates
Silencers
Door Stop
Mop Plate
(See Tile specification section for threshold)

2.8.4 Glass and Glazing

2.8.4.1 Standards

Glass and glazing materials shall conform to ANSI Z97.1, ASTM C1036, and ASTM C1048.

2.8.4.2 Fully Tempered Safety Glass

Type I, Class 1, Quality q3.

Shall be used in doors and adjacent fixed panels. Glass shall be factory-cut to suit each opening; edges shall be clean cut.

Nominal thickness will be 1/4 inch.

2.8.4.3 Glazing Methods

Glazing gaskets shall be neoprene, EPDM, or silicone rubber. Setting blocks shall be 80-90 durometer hardness neoprene or vinyl. Spacers shall be 40-50 durometer hardness neoprene or vinyl.

2.8.4.4 Installation

Glass shall be totally dry-glazed.

2.9 **FINISHES**

2.9.1 Gypsum Board System

2.9.1.1 General Requirements

Gypsum wallboard shall conform to ASTM C36 of grade and form as specified for each type of board. Wallboard shall be 48 inches wide by not less than 5/8 inch thick, and a maximum practical length for end use.

2.9.1.2 Regular Gypsum Wallboard

Grade R, Form A; 5/8 inch thick.

2.9.1.3 Water Resistant Backing Board

Backing board for use with ceramic tile or other nonabsorbent wall treatments shall be moisture resistant, 5/8 inch thick; and shall meet the requirements of ASTM C630 when tested in accordance with ASTM C473.

2.9.1.4 Ceiling

Board for drywall ceilings in toilet rooms shall be 5/8 inch thick, water resistant backing board.

Board for drywall ceilings in areas other than those noted above shall be 5/8 inch, regular gypsum wallboard.

2.9.1.5 Joint Materials

Joint tape shall be plain or perforated material conforming to ASTM C475. Joint compound shall be an adhesive conforming to ASTM C475.

2.9.1.6 Fasteners

Fasteners for components of wallboard system shall be of size and type recommended by the wallboard manufacturer.

2.9.1.7 Ceiling Suspension System

The gypsum wallboard furring suspension system will have furring runners and furring tees which shall be 1-1/2 inches high double web 0.020 steel with a protective coating and a 1-3/8 inches wide capped flange face. All cross tees shall be 1-1/2 inches high double web 0.020 steel with a protective coating and 15/16 inch wide capped flange face. Wall track shall be 1-1/2 - 1-5/8 inches inside diameter 0.020 electrogalvanized steel with 15/16 - 1 inch wide top and bottom flange faces.

Furring runners shall be installed 48 inches on center, and be directly suspended by not less than 12 gauge galvanized steel wire.

[System 640 and 650 by Chicago Metallic Corporation, Chicago, Illinois]

2.9.1.8 Steel Stud Framing

Steel studs, floor and ceiling runners, angle runners, and furring channels shall be electrogalvanized, cold-rolled steel conforming to ASTM C645 ordinary zinc coated (commercial).

Metal studs shall be formed, zinc-coated sections of channel shape, of 26 gauge minimum thickness, and of width not less than 3-5/8 inches. The stud flanges that come in contact with gypsum wallboard shall be a minimum of 1-1/4 inches wide, with a 1/4 inch stiffening lip with turned or folded edges. Holes shall be regularly punched in studs to facilitate installation of electrical wiring, conduit, or horizontal bracing.

Floor and ceiling runners shall be not less than 26 gauge steel before galvanizing, with 1-1/4 inch flanges, sized to nest with steel stud.

Angle runners shall be 1-3/8 inches by 7/8 inch and not less than 22 gauge before galvanizing.

2.9.1.9 Metal Accessories

Corner beads shall be 30 gauge minimum, hot-dip galvanized steel, with 1-1/4 by 1-1/4 inch flanges and a 1/8 inch beaded corner. They shall be formed to an angle of 90 degrees.

Casing trim shall be 28 gauge nominal thickness, hot-dip galvanized steel channel, depth as required for wallboard, with attached tape flange.

2.9.2 Ceramic Tile

2.9.2.1 General Requirements

Shall conform to ANSI A137.1.

2.9.2.2 Wall Tile

Standard grade, bright glazed, 4-1/4" x 4-1/4" x 5/16"; cushion edge; with spacer lug construction.

2.9.2.3 Trim

Shall be of the same material and size as ceramic wall tile. Corners and caps to be bullnosed. Bases to be square top and coved. Trim shapes shall be provided at external and internal corners; at head, jamb, and sills of openings, and at tops of wainscots.

2.9.2.4 Floor Tile

Standard grade, unglazed, impervious porcelain-type ceramic mosaic tile. Water absorption shall not exceed 0.5 percent. Tile shall be 1" x 1" x 1/4"; cushion edge; factory mounted on sheets.

2.9.2.5 Marble Thresholds

Marble shall be Marble Institute of America (MIA), Group A, not less than 7/8 inch thick, profile, hone finish, with abrasion resistance not less than 12.0 when tested in accordance with ASTM C241.

2.9.2.6 Installation

Shall be in accordance with the Handbook for Ceramic Tile Installation published by the Tile Council of America.

Interior Walls: Specification W241.

Interior Floors: Specification F112.

Expansion Joints: Specification EJ171.

2.9.3 Acoustical Ceilings

2.9.3.1 Suspension System

Suspension system runners and moldings shall be fabricated from steel sheets conforming to ASTM A366 with Class C zinc coating conforming to ASTM A591.

Main runners shall be bulb-tee sections, double-web type. Web height shall be not less than 1-1/2 inch, and the bottom flange shall be not less than 15/16 inch. Webs shall be drilled or grooved to receive cross runner end tabs and main runner splices. The structural classification shall be intermediate duty in accordance with ASTM C635.

Cross runners shall be tee sections with web height not less than 15/16 inch. The bottom flange width shall be the same as that of the main runners. Cross runners shall have web ends designed for tab-lock attachment to adjoining cross runners through the web of the main runner to provide alignment with a minimum of torsional movement and lateral displacement.

Antibreather splines, hold-down clips, main runner connectors, and other accessories required to complete the ceiling installation shall be provided.

Wall moldings shall be angle shape sections not less than 0.0209 inch thick. Height of moldings shall be as required to accommodate the main runner. The exposed leg width of the moldings shall be the same as the flange width of the runners. Corner caps shall be one-piece, shop-fabricated units extending at least 12 inches on each side of the corner, and shall be butt joined to the adjacent wall molding with concealed fastenings.

Finish of exposed-to-view surfaces shall be baked polyester paint; color as selected.

Hanger wire shall be 12 gauge steel conforming to ASTM C636.

2.9.3.2 Acoustic Tiles

Tiles shall be prefabricated, mineral-composition type, not more than 25 flame spread index class, and 0.75 or more light reflectance grade, conforming to ASTM E84 and ASTM E1264.

Tiles shall be nominal 24 by 48 inches by not less than 5/8 inch thick; lay-in type.

Tiles shall have square trimmed and butt edges.

Finish of exposed-to-view surfaces shall be a factory applied white vinyl latex paint.

Pattern of tile surface shall be fissured.

2.9.4 Resilient Flooring

2.9.4.1 Vinyl Composition Tile

Shall conform to ASTM F1066, Composition 1, Class 2; 12" x 12" x 1/8."

2.9.4.2 Resilient Base

Provide a 4" high by 1/8" thick vinyl base; coved topset type. The base shall be complete with preformed external and internal corners with returns of not less than 2-1/2 inches.

2.9.5 Painting

2.9.5.1 Shop Priming of Steel

Tnemec Series 10 Lead and Chromate Free Alkyd Primer, 2.0 mils. Color: red.

2.9.5.2 Architectural Painting

Products shall be of the same manufacturer for each coating system and for each type of surface.

All surfaces exposed to view will be painted except for:

Factory finished surfaces;

Concealed spaces, concealed pipes and ducts;

Exterior concrete surfaces;

Nonferrous metal and stainless steel surfaces;

Acoustic tile;

Concrete floors;

Structural steel concealed by interior building finish, except where subject to high humidity conditions;

Surfaces scheduled to receive other finishes (e.g., tile, etc.).

Application rate and dry film thickness for each coat shall not be less than manufacturer's recommendations for the surface being painted.

Coating manufacturer's requirements, including application procedures, shall be a part of this specification and shall be followed in detail.

2.9.5.3 Schedule

Products referenced are by Tnemec Company, Inc., Kansas City, Missouri.

All colors as selected from manufacturer's standard samples and in accordance with FED-STD 595B.

Exterior Galvanized Steel

Primer: Series 66 HB Epoxy Polyamide, 4.0 mils

Finish Coat: Series 73 Gloss Polyurethane, 2.0 mils

Exterior Ferrous Metal

Primer: Series 65 Epoxy Polyamide Primer, 3.0 mils

Intermediate: Series 66 HB Epoxy Polyamide, 4.0 mils

Finish Coat: Series 73 Gloss Polyurethane, 2.0 mils

Interior Primed Ferrous Metal

Primer: Shop applied

Intermediate: Series 59 Modified Alkyd Primer, 2.0 mils

Finish Coat: Series 66 Epoxy Polyamide, 2.0 mils

Interior Overhead Steel Deck

One Coat: Series 15 Dry Fall Alkyd Enamel White, 2.0 mils

Interior Galvanized Ductwork and Pipe

Two Coats: Series 6 Flat Acrylic Emulsion, 2.0 mils

Interior Gypsum Wallboard

Primer: Series 51 Vinyl-Acrylic Latex Dry Wall Sealer, applied to seal and smooth, 1.0 mils

Intermediate: Series 6 Acrylic Emulsion, 2.0 mils

Finish Coat: Series 7 Semi-Gloss Acrylic Emulsion, 2.0 mils

## 2.10 SPECIALTIES

### 2.10.1 Toilet Partitions and Urinal Screens

#### 2.10.1.1 General Requirements

Toilet partitions, urinal screens, and associated hardware shall be the products of a single manufacturer.

#### 2.10.1.2 Materials

Galvanized steel sheet shall be cold-rolled, stretcher-level, commercial quality material conforming to ASTM A526 with zinc coating conforming to ASTM A525, G90. The surface preparation of material for painting shall conform to ASTM D2092, Method A.

Sound deadening shall consist of treated kraft paper honeycomb cores with a cell size of not more than 1 inch. The resin-material content shall weigh not less than 11 percent of the finished core weight. Expanded cores shall be faced on both sides with kraft paper.

Partition panels and doors shall be not less than 1 inch thick with face sheets not less than 0.0635 inch thick.

Partition panels, doors, screens, and pilasters required for the project shall be fabricated from galvanized-steel face sheets with formed edges. Face sheets shall be pressure-laminated to the sound-deadening core with edges sealed with a continuous locking strip and corners mitered and welded. Welds shall be ground smooth. Concealed reinforcement shall be provided for installation of hardware, fittings, and accessories. The surface of face sheets shall be smooth and free from wave, warp, or buckle.

Before application of an enamel coating system, galvanized-steel surfaces shall be solvent-cleaned to remove processing compounds, oils, and other contaminants harmful to coating-system adhesion.

After cleaning, the surfaces shall be coated with a metal-pretreatment phosphate coating. After pretreatment, exposed galvanized-steel surfaces shall be finished with a baked-enamel coating system as specified.

The enamel coating system shall consist of a factory-applied baked acrylic enamel coating system. The coating system shall be a durable, washable, stain-resistant, mar-resistant finish.

Steel anchoring devices and fasteners shall be hot-dipped galvanized after fabrication in conformance to ASTM A385 and ASTM A123. Galvanized anchoring devices shall be concealed. Exposed fasteners shall have one-way heads.

Hardware and fittings will be corrosion-resistant steel conforming to ASTM A167, Type 302 or 304. "ZAMAC" is not acceptable. Finish shall be No. 4. Exposed fasteners shall match finish of hardware and fittings.

Wall brackets shall be two-ear panel brackets, T-style, 1 inch stock. Panel-to-pilaster brackets shall be stirrup style.

Door hinges shall be self-lubricating, cutout-insert type with spring-action cam return movement.

Doors shall be equipped with door bumpers fabricated from solid aluminum casting and tipped with solid rubber; attached to door with stainless steel screws; projection: 3-3/4 inches.

2.10.1.3 Ceiling Hung Partitions

Pilasters shall be not less than 1-1/4 inches thick with face sheets not less than 0.0635 inch thick. The anchoring device at the top of the pilaster shall be welded to the reinforced face sheets and shall have not less than two 3/8 inch round threaded rods, lock washers, and leveling-adjustment nuts. Anchoring device shall be designed to transmit the strain and loading on the pilaster directly to the structural support above without putting strain or loading on the finished ceiling. The trim piece at the top of the pilaster shall be 3 inches high and fabricated from not less than 0.030 inch thick stainless steel.

2.10.1.4 Urinal Screens

Screens shall be fabricated from the same types of panels as the toilet partitions. Fittings and fasteners shall be corrosion-resistant steel. Screens shall be wall hung with mounting brackets.

2.10.1.5 Installation

Partitions shall be installed rigid, straight, plumb, and level, with the panels centered between the fixtures. Panels shall be secured to pilasters with brackets matching the wall brackets.

Panels shall be secured to ceramic tile on gypsum wallboard/metal stud walls or gypsum wallboard/metal stud walls with toggle bolts using not less than 1/4-20 screws of the length required for the wall thickness. Toggle bolts shall have a load-carrying strength of not less than 600 pounds per anchor.

2.10.2 Fire Protection Specialties

2.10.2.1 Fire Extinguishers

Fire extinguishers shall be dry-chemical type. The extinguisher shell shall be enameled steel, red in color. Extinguisher shall be not less than 10 pounds and shall have forged brass valve, fusible plug, safety release, antifreeze, and a pressure gauge.

Halon will not be permitted.

2.10.2.2 Mounting Brackets

Fabricated from corrosion-resistant steel and shall be spring-clip type.

2.10.2.3 Installation

The installation shall comply with requirements of NFPA 10 and shall conform to the manufacturer's recommendations. Extinguishers shall be fully charged and ready for operation upon installation.

2.10.3 Toilet Room Accessories

2.10.3.1 Materials

Corrosion-resistant steel shall conform to AISI, Type 304. The exposed surfaces shall have a No. 4 finish, unless otherwise specified.

Brass shall be cast.

Steel sheet shall conform to ASTM A366 and ASTM A568. Surface preparation and pretreatment shall be provided as required for the subsequent finish.

Galvanized-steel sheet shall be hot-dipped, minimum spangle, conforming to ASTM A526, with not less than a 1.25 ounce zinc coating in accordance with ASTM A525. The surface preparation for painting shall conform to ASTM D2092, Method A.

2.10.3.2 Coatings

Chromium coating shall be nickel and chromium electrodeposited on brass, conforming to ASTM B456. The coating shall have a satin finish unless otherwise specified.

2.10.3.3 Mirror Glass

Mirror glass shall be Type 1, Class 1, quality q1, 1/4 inch thick polished plate glass with silvering, copper backing, and protective coating, in accordance with ASTM C1036.

2.10.3.4 Mounting Devices and Fasteners

Mounting devices and fasteners shall be hot-dip coated galvanized steel, in conformance with ASTM A385 and ASTM A123.

2.10.3.5 Paper Towel Dispensers

Recessed dispensers shall be sized to dispense not less than 400 C-fold paper towels with an interchangeable paper drop. The dispenser shall be fabricated to be recessed in a 4 inches nominal-depth wall opening. The cabinet and door shall be fabricated from not less than 0.031 inch thick corrosion-resistant steel of all welded construction and no mitered corners. The door shall be hung with a full-length corrosion-resistant steel piano hinge and secured with a tumbler lock.

2.10.3.6 Waste Receptacle

Recessed receptacles shall be not less than 0.031 inch thick corrosion resistant steel with joints continuously welded. The flange shall be fabricated from one piece seamless construction with no mitered corners. The door shall be hung with a full-length corrosion-resistant steel piano hinge and secured with a tumbler lock. The removable waste container shall have a capacity of not less than 1.2 cubic feet.

2.10.3.7 Toilet Tissue Dispenser

Surface-mounted multiroll dispensers shall be fabricated to accommodate and dispense not less than two 4-1/2 by 4-1/2 inches core tissue rolls. The dispenser shall be fabricated from not less than 0.031 inch thick corrosion-resistant steel. The flange shall be fabricated from one-piece seamless construction. The

door shall be bottom hung with a continuous piano hinge and secured with a tumbler lock. A slot shall be provided in the face of the door to monitor for refill. The spare roll shall be accessible to the patron after the first roll is empty by pushing a release bar.

2.10.3.8 Feminine Napkin Dispenser

Surface-mounted dispensers shall be sized for not less than 30 napkins and 27 tampons. The dispenser door shall be fabricated from not less than 0.050 inch thick corrosion-resistant steel with returned edges for rigidity. The door shall be hung with a full-length corrosion-resistant steel piano hinge and secured with a tumbler lock. The door shall be embossed with the word NAPKIN. The dispenser cabinet shall be fabricated from not less than 0.031 inch thick corrosion-resistant steel with welded construction. The dispenser shall operate with double-coin mechanism. A separate lock shall be provided for the coin box.

2.10.3.9 Feminine Napkin Disposal

Surface-mounted disposal shall be fabricated from not less than 0.031 inch thick corrosion-resistant steel. The container shall be seamless construction with a piano-hinged bottom panel for disposal service. A compartment welded to the bottom side of the container shall be provided for deodorant crystals. The disposal cover shall be equipped with a corrosion-resistant steel bar handle and a full-length piano hinge. The cover shall be weighted or equipped with a spring device so that the cover will close tightly against the container.

2.10.3.10 Liquid Soap Dispenser

The liquid-soap dispenser shall be chrome-plated brass with not less than a 3-1/2 inch spout-to-shank dimension and not less than a 12 ounce plastic soap container refillable by removing the push button cap or head assembly.

2.10.3.11 Mirrors

Framed mirrors shall be fabricated to the size 24" wide by 36" high. The mirror frame shall be fabricated from not less than 0.031 inch thick corrosion-resistant steel with corners mitered, welded, and ground smooth and a face width of not less than 5/8 inch. The backing sheet shall be fabricated from not less than 0.0396 inch thick galvanized steel secured to the frame with concealed screws. Edges and back of the mirror glass shall be protected with continuous wood fill strips and moisture-proof shock-absorbing back padding. Concealed galvanized-steel wall

hanger of the size required for the mirror size shall be provided. The mirror shall be hung and locked in place with not less than two vandal-resistant locking screws per mirror.

2.10.3.12 Grab Bars

Bars shall be fabricated from not less than 0.049 inch thick, 1-1/4 inch outside diameter seamless corrosion-resistant steel tubing. Wall flanges shall be fabricated for a concealed installation from not less than 0.094 inch thick corrosion-resistant steel not less than 3 inches in diameter. Flanges shall be fully welded to the grab bar. A concealed mounting plate shall be fabricated from corrosion-resistant or galvanized steel. Secure flanges to the mounting plate with not less than four corrosion-resistant steel vandal-resistant setscrews. Exposed surfaces shall have a nonslip finish. The nonslip finish shall have a peened or light knurled finish.

2.10.3.13 Installation

Concealed mounting devices and fasteners for accessories shall be fabricated from the same materials as the accessories or from galvanized steel. Exposed mounting devices and fasteners shall be finished to match the accessories. Fasteners shall be the theft-resistant type.

Accessories except grab bars, shall be secured to the supporting substrates with anchors of the types indicated by the following substrate construction:

Tile On Gypsum-Board Wall

Accessories shall be secured with toggle bolts using not less than No. 10-24 screws of the length required for the finish thickness.

Gypsum Board

Accessories shall be secured with toggle bolts or expansion sleeve screws. Toggle bolts shall be not less than No. 10-24 screws of the length required for the finish thickness. Expansion-sleeve screws shall be not less than No. 6-32 screws or No. 10-24 screws of the lengths required for the finish thickness.

Metal Partitions

Accessories shall be secured with T-nuts and through-bolts not less than No. 10-24 of the lengths required for the partition thickness.

2.10.3.14 Grab Bar Anchors

An embedded plate anchor shall be used for hollow partitions and solid gypsum partitions.

Embedded plate anchors shall be fabricated from not less than 0.125 inch thick plates with the width and length of the bar. Plate shall be U-clamped to the partition studs or channels. Embedded plates shall be secured to the studs or channels on each side of the grab-bar support. The bar back plate shall be secured to the anchor plate with not less than two No. 10-24 screws of the length required for the thickness.

2.10.3.15 Generalized Toilet Room Accessories Schedule

Men's Toilet

Paper Towel Dispenser
Waste Receptacle
Toilet Tissue Dispenser
Liquid Soap Dispenser
Mirror
Grab Bars

Women's Toilet

Same as Men's Toilet, with the addition of:

Feminine Napkin Dispenser
Feminine Napkin Disposal

2.11 **EQUIPMENT**

2.11.1 Loading Dock Equipment

2.11.1.1 Rated Capacity

Minimum 20,000 pounds roll over capacity.

2.11.1.2 Dock Levelers

ASME MH14.1. Make provision in the design of the loading ramp for maintenance access to the under structure and the lifting mechanism. Provide a steel tread plate lip and platform, hinged and supported from beneath by a steel framework that contains a lifting, positioning, and lowering assembly. Ensure the platform surface flush with the surrounding floor surface of the loading dock when not in service. Provide an integral positive restraint when the dock leveler is in the maintenance position.

2.11.1.3 Dock Leveler Height Adjustment

Provide a ramp whose incline can be adjusted to suit the height of the freight carrier. Allow the loading ramp a minimum of 24 inches of vertical adjustment; 12 inches above and 12 inches below the platform height.

2.11.1.4 Dock Leveler Extension and Retraction

Extend non-fixed end of the dock leveler from a retracted position behind the line of the loading dock platform bumpers to at least 12 inches beyond the forward edge of the dock platform bumpers so as to rest on the bed of the freight carrier.

2.11.1.5 Electro-Hydraulic System

Provide velocity fuse, ball check valve, or other device to automatically prevent a drop of more than 4 inches of the lip should the freight carrier move away from the dock leaving the lip unsupported. Activate this device with a static, dynamic, or impact load exceeding 10 percent of the rated load on the lip and ramp.

Provide a separate and complete system for each dock leveler. Include an electric motor, motor drive, hydraulic pump, hydraulic ram, pressure relief valve, fluid reservoir, strainer, filter, hydraulic control-valve cylinders, hose, piping, fittings, and hydraulic fluid. Electrical requirements: NFPA 70, NEMA ICS 2, NEMA ICS 6 and NEMA MG 1.

2.11.1.6 Electro-Hydraulic Control

Provide dock leveler with a pushbutton station to activate motor, pump, and valves.

2.11.1.7 Toe Guards or Skirts

Provide sides or edges, except front and rear edges, of the ramps which rise above the surrounding loading dock with sheet carbon steel skirts or toe guards.

2.11.1.8 Dock Truck or Trailer Restraining Device

Self-aligning device which shall engage the ICC bar of the truck/trailer with a positive restraining force of not less than 18,000 pounds. Manually control activation and deactivation from inside the building.

2.11.1.9 Dock Bumpers

Provide bumpers capable of sustaining repeated impacts from trucks or trailers without damage to the dock, dock levelers, or bumpers.

Provide ramp and load dock face with laminated rubber, tire-fabric, or equivalent dock bumpers recommended by the dock leveler manufacturer.

2.11.1.10 Hydraulic Rail Ramps

Rail ramps shall be hydraulically lifted and manually moved along a ramp rail mounted to the edge of the loading dock. The rail ramps shall be supported on support arms connected to a roller assembly which is part of the ramp rail system. The capacity shall be not less than 20,000 pounds. Ramp width shall be not less than 6 feet. Ramp length shall be 66 inches less than the distance between the dock face and the railroad track centerline. Construction shall be similar to dock levelers. Rail ramps shall be stored in a vertical position when not in use.

2.12 **FURNISHINGS**

(Not Used)

2.13 **SPECIAL CONSTRUCTION**

(Not Used)

2.14 **CONVEYING SYSTEMS**

(Not Used)

2.15 **MECHANICAL**

2.15.1 Heating, Ventilating and Air Conditioning

2.15.1.1 General

Selection of equipment shall be based on the LCC analysis procedures outlined in Attachment K, Section 0110-12.7 and 0110-12.8 and Attachment H (computer analysis technique approved by the DOE Energy Management Coordinator). Electricity, at $0.0294 (2.94 cents) per kW hour is currently available and shall be used in LCC analysis. Escalation in costs shall be as specified in NBS Handbook 135 which contains current factors and escalation rates. The equipment used shall be of the construction described in the Attachments L, M, N, P, Q, R, T, U, and V. Pipe identification shall be as shown in Attachment C. The following reference is made to some sections of the Attachments specified

above to indicate the quality of materials, construction, standards, etc. but are not limited to these particular references:

| | |
|---|---|
| 1550-1 (Attachment N) | General Sizing and Design Criteria: In considering maintenance cost, cognisance must be given to the equipment, materials, products, etc. used in, or to be used in, the other buildings within the overall site perimeter fences administered by the DOE at HWVP Richland, Washington. |
| 1550-2 (Attachment N) | Heating, ventilating and air conditioning systems selection |
| 1550-2.1.1 (Attachment N) | General including LCC analysis (Section 0110-127 ASHRAE Fundamental Handbook, etc. 1550-1.6, Energy Conservation - Waste Heat Recovery System shall be considered) |
| 1550-2.1.2 (Attachment N) | Condensers/Condensing Unit. No equipment should be located on the roof but on pads beside the building. See Section 1550-2.1.3 |
| 1550-2.4 (Attachment N) | Air handling and air distribution systems including Air Handling Units (1550-2.5.2), Fans/Motors (1550-2.5.3), Coils (1550-2.5.4), Air Cleaning Devices (1550-2.5.5) and Ductwork Systems (1550-2.5.6). |
| 1550-3 (Attachment N) | Testing, adjusting and balancing including AABC Volume A-82 and ASHRAE Systems Handbook. |

2.15.1.2 Product and Testing Specification

Reference is made within the Attachments H, L, M, N, P, Q, R, T, U, and V, to other product documents, references, and specification and attention is drawing to the following documents list below but are not limited to these. The Seller is strongly advised to read these and all related publications. No excuses will be accepted due to lack of knowledge of these or other related publications.

AABC Vol. A-82

ARI 210

ARI 410

ARI 460

ARI 520

ARI 850

AMCA 99

AMCA 201

AMCA 210

AMCA 261

AMCA 300

AMCA 500

ANSI A117.1

ANSI C2

ANSI Z9.2

ASTM A36

ASTM A53

ASTM A105

ASTM A527/A527M

ASTM G46

ASHRAE Handbook: 1988 ASHRAE Handbook Equipment; 1989 Additions and Corrections, 1990 Additions and Corrections, 1991

ASHRAE 20

ASHRAE 51

ASHRAE 15

ASHRAE 52

ASME B16 SERIES

ASME B31.1

UMC

SMACNA: 1983 HVAC Systems Testing, Adjusting and Balancing (First Edition)

SMACNA: 1985 HVAC Duct Construction Standards, Metal and Flexible, First Edition

SMACNA: 1985 HVAC Air Duct Leakage Test Manual

SMACNA: 1978 Energy Recovery Equipment and Systems Manual

SMACNA: 1984 Energy Conservation Guide Lines

SMACNA: 1986 Fire, Smoke, and Radiation Damper Installation Guide for HVAC Systems

UL 900

29 CFR 1910

FS-HH-I-545

FS-HH-I-551

FS-HH-I-558

NFPA 90A

NFPA 90B

NFPA Vol. 1-16

2.15.2 Plumbing Materials

All fixtures, equipment and materials shall be new, free from defects, and of the brand and quality specified, or equal.

2.15.2.1 Pipe and Fittings

2.15.2.1.1 Sanitary Waste and Vent Systems

A. Below Ground

1) Pipe

Service weight cast iron hub and plain end soil pipe conforming to ASTM A74, or NO-HUB cast iron soil pipe

conforming to CISPI 301, factory coated inside and out with coal tar enamel.

2) Fittings

Service weight cast iron hub and plain end soil pipe conforming to ASTM A74, or NO-HUB cast iron soil pipe conforming to CISPI 301, factory coated inside and out with coal tar enamel.

3) Gaskets

Neoprene compression gaskets conforming to ASTM C564, or NO-HUB stainless steel coupling with neoprene inner sleeve, conforming to CISPI 310.

B. Above Ground

1) Pipe

NO-HUB cast iron soil pipe conforming to CISPI 301, factory coated inside and out with coal tar enamel.

2) Fittings

NO-HUB cast iron soil pipe conforming to CISPI 301, factory coated inside and out with coal tar enamel.

3) Couplings

NO-HUB stainless steel coupling with neoprene inner sleeve conforming to CISPI 310.

2.15.2.1.2 Domestic Hot and Cold Water Systems

A. Below Ground

1) Pipe

Type "K" seamless hard drawn copper tubing conforming to ASTM B88.

2) Fittings

Seamless wrought copper solder joint fittings conforming to ASME B16.22.

3) Solder

"Sil-fos" 15 percent silver brazing alloy.

B. Above Ground

1) Pipe

Type "L" seamless hard drawn copper tubing conforming to ASTM B88.

2) Fittings

Seamless wrought copper solder joint fittings conforming to ASME B16.22 or cast copper solder joint fittings conforming to ASME B16.18.

3) Solder

1-1/2 inches and smaller: 95-5 tin-antimony lead free solder.

2 inches and larger: "Sil-fos" 15 percent silver brazing alloy.

2.15.2.1.3 Condensate Drains

A. Pipe

Galvanized carbon steel, Schedule 40, conforming to ASTM A53, or type "L" seamless hard drawn copper tubing conforming to ASTM B88.

B. Fittings

150# galvanized threaded malleable iron conforming to ASTM A197, or seamless wrought copper solder joint conforming to ASME B16.22.

2.15.2.1.4 Unions

Wrought copper conforming to ASME B16.22 or cast copper conforming to ASME B16.18 with ground joint seat and solder joint ends or 300# black or galvanized threaded malleable iron with bronze to iron ground joint set.

2.15.2.1.5 Flanges

Cast copper conforming to ASME B16.18, 125# with solder joint end.

2.15.2.1.6 Dielectric Connectors

2 inches and smaller: 250# threaded insulating union, gasket for service as required, Watts or Epco.

2-1/2 inches and larger: 175# threaded insulating flange set, gasket for service as required, Watts or Epco.

2.15.2.2 Valves

2.15.2.2.1 Domestic Water Systems

| TYPE | SIZE | DESCRIPTION | MANUFACTURER |
|---|---|---|---|
| Gate | All | 150# bronze, rising stem, screwed bonnet, solid wedge disc with screwed ends. | Crane #431<br>Powell #514 |
| Globe | All | 150# bronze, rising stem, plug disc, union bonnet, screwed ends. | Crane #14-1/2P<br>Powell #2600 |
| Check | All | 200# bronze, screwed cap, swing type with regrindable disc and screwed ends. | Crane #36<br>Powell #560 |
| Ball | All | 400# bronze, hard chrome plated ball, screwed ends. | Watts #B-6000<br>Apollo #70-100 |
| Drain | All | 200# bronze, wedge disc, stuffing box, female I.P.S. inlet and male hose thread outlet. | Crane #451<br>Powell #503HS |
| Water Pressure Regulator | All | 300# bronze body and bronze "Y" strainer. | Wilkins #500YSBR<br>Watts #223 |

2.15.2.3 Plumbing Fixtures and Trim

2.15.2.3.1 Water Closet (WC-1)

American Standard #2477.016 "Afwall," white vitreous china wall hung siphon jet bowl, complete with Sloan Royal #110-3 YBYO flush valve, Olsonite #95-CC-SS white, open front seat with self-sustaining check hinge, and Smith, Wade or Zurn carrier and drainage fitting suitable for the application. Furnish #F-72-A1 trap primer on flush valve where required. Mounting height to comply with ANSI A117.1.

2.15.2.3.2 Urinal (U-1)

American Standard #6540.017 "Allbrook," white vitreous china wash-out action with Sloan Royal #180-1.5-YB flush valve and wall hanger. Mounting height to comply with ANSI A117.1.

2.15.2.3.3 Lavatory (L-1)

American Standard #0355.012 "Lucerne," 20 inches by 18 inches white vitreous china, complete with #2385.078 lever handle mixing faucet, #2411.015 grid drain, chrome plated brass L.A. pattern P-trap, loose key angle stops with flexible risers, 0.5 GPM flow restrictors, and Smith #723 support with concealed arms.

2.15.2.3.4 Electric Water Cooler

Haws #HWCA8 wall mounted, barrier-free, satin finish stainless steel cabinet and receptor, chrome plated bubbler, hot water dispenser with 1-1/2 quart brass tank, 500 watt metal sheath heater and self-closing cup filler with push lever, 7.5 gph, 1/5 HP, 120V, 60 Hz, 1 phase.

2.15.2.3.5 Electric Water Heaters

Water Heater (Instantaneous)

Chronomite "instant-Flow" point-of-use water heater with thermostatic control, sized to provide supply of 140°F water, per ASPE Data Book, Chapter 4: Service Hot Water Systems.

2.15.2.4 Floor Drains

2.15.2.4.1 Floor Drain (FD-1): For Use in Toilet Rooms

Smith #2005-AP cast iron body with clamping collar, 5 inch diameter adjustable nickel bronze strainer and trap primer connection.

2.15.2.4.2 Floor Drain (FD-2): For Use in Other Than Toilet Rooms

Smith #2120Y cast iron body with flashing collar and cast iron tractor grate.

2.15.2.5 Floor Sink (FS-1)

Smith #3150-C-12, 12 inch square by 8 inch deep acid resisting enameled cast iron receptor with flange and clamping collar, dome bottom strainer and 1/2 grate.

2.15.2.6 Cleanouts

2.15.2.6.1 Exterior

Smith #4253 with XH cast iron top in concrete areas.

2.15.2.6.2 Floors

A. Smith #4023 with round nickel-bronze top in finished room floors.

B. Smith #4223 with round cast iron top in unfinished room floors.

C. "Flush-with-floor" type cleanouts, with adjustable watertight covers and integral anchoring flange with clamping collar where waterproofing membrane is used.

2.15.2.6.3 Finished Walls

Smith #4532 with round chrome plated or stainless steel access plate and screw.

2.15.2.7 Access Boxes: For Concealed Valves and Water Hammer Arresters

2.15.2.7.1 Walls

A. Smith #4730 with polished chrome plate face in tile walls.

B. Smith #4760-AKL or #4765-AKL with bonderized prime-coated steel face and with Allen lock in walls of other finished rooms.

2.15.2.7.2 Ceilings

Acorn #8211-3-AKL bonderized prime-coated steel face with Allen lock.

2.15.2.7.3 Floors

A. Smith #4910 with XH plain aluminum or nickel-bronze nonskid top.

B. Smith #4920 for floors covered with vinyl reinforced or pure vinyl tile.

2.15.2.8 Traps

For lavatories and sinks, except service sinks: Adjustable cast brass traps with brass nuts, less cleanout.

2.15.2.9 Water Hammer Arresters

Smith #5000 Series, stainless steel in conformance with PDI WH-201.

2.15.2.10 Trap Primer

2.15.2.10.1 In-Line Mounted

Smith #2699, bronze body with vacuum breaker and thread ends.

2.15.2.10.2 Flush Valve Mounted

Sloan #F-72-A1.

2.15.2.11 Backflow Preventer

Reduced pressure principle backflow preventers.

2.15.2.11.1 1-1/2 inch and smaller: Cla-Val #RP-2 or Watts #909S.

2.15.2.11.2 2 inch and larger: Cla-Val #RP-1 or Watts #909S.

2.15.2.12 Hose Bibbs

2.15.2.12.1 Chicago Faucet #293 3/4 inch sill cocks with removable tee handle and #E27 vacuum breaker.

2.15.2.12.2 In finished spaces: Chromium plated bibbs.

2.15.2.12.3 In unfinished spaces: Rough cast bronze bibbs.

2.15.2.13 Sleeves

2.15.2.13.1 Where pipes pass through concrete, or stud walls, or pass through ceilings, use rust-proof sleeve of the size required.

2.15.2.13.2 Where pipes pass through fire rated walls, floors or ceilings, use ProSet "Firestop Penetrators" or approved equal.

2.15.2.14 Insulation

2.15.2.14.1 Domestic Hot and Cold Water

A. All domestic hot and cold water piping shall be insulated with asbestos-free Owens-Corning Fiberglas 25 ASJ/SSL-II heavy density insulation with kraft reinforced foil all service vapor barrier jacket and double pressure sealing adhesive for the longitudinal joint.

B. All fittings, flanges and valves shall be insulated with mitered segments of Owens-Corning 25 ASJ/SSL-II heavy density insulation. Use pre-molded insulation covers on fittings and valves.

Pipe Insulation Thickness Schedule

| TEMPERATURE | PIPE SIZE | | |
|---|---|---|---|
| (Degrees F) | 1" and Smaller | 1-1/4" to 2" | 2-1/2" and Larger |
| Ambient to 150 | 1/2" | 1" | 1" |
| 150 to 200 | 1" | 1-1/2" | 2-1/2" |

2.15.2.14.2 Handicapped Insulation

Armstrong "Armaflex II" insulation with paint coating on hot water supply, tailpiece, and trap at lavatories for handicapped persons.

2.15.2.15 Pipe Wrapping

10 mil thick self-adhesive polyethylene tape, Scotchwrap 50 or approved equal.

2.15.2.16 Pipe Supports

In conformance with MSS SP-58 and MSS SP-69.

2.15.2.17 Valve Tags

2 Inch diameter, 20 gauge stainless steel disc for each main branch shutoff valve or cock with 1/8 inch continuous steel ring fastener.

2.15.2.18 Pipe Identification

Snap on markers and banding in conformance with HPS-111-M.

2.15.2.19 Disinfection of Domestic Water System

Use disinfectant method AWWA C651.

## 2.16 ELECTRICAL

### 2.16.1 Service Entrance Switchboard

2.16.1.1 Service entrance switchboards shall be suitable for 480/277 volt, three phase, four wire service and shall be provided with a ground bus, and a solid neutral bus.

2.16.1.2 Service entrance switchboard shall comply with NFPA 70, Articles 230 and 384 and UL 891. All components and devices in the switchboard shall be UL listed.

2.16.1.3 Switchboard shall meet the requirements of NEMA Standards PB-2 and 250, and UL 891, and shall be dead-front, circuit breaker type, with an underground pull section, main breaker compartment, customer metering compartment and distribution section. Circuit breakers shall be bolt-in type with minimum trip rating of 20 amperes and interrupting rating suitable for the available short circuit current, in accordance with UL 489.

2.16.1.4 Metering shall consist of a voltmeter for phase-to-phase and phase-to-neutral voltage measurements and an ammeter for measuring phase currents.

### 2.16.2 Panelboards

2.16.2.1 Lighting and power panelboards shall be in accordance with UL 67, NEMA 250 and PB1, and NFPA 70, Article 384. Panelboards shall be dead-front, circuit breaker type, with a ground bus and a solid neutral bus. Circuit breakers shall be bolt-in type with minimum trip rating of 20 amperes and interrupting rating suitable for the available short circuit current in accordance with UL 489. Each panel shall be supplied with a circuit directory.

2.16.2.2 Panelboards shall be suitable for 208Y/120 volt, three phase, four wire or 480Y/277 volt, three phase, four wire service.

2.16.2.3 Panelboards shall be listed by Underwriters Laboratory and bear the UL label.

### 2.16.3 Distribution Transformers

2.16.3.1 Distribution transformers shall be indoor, dry-type in accordance with UL 1561, with 480 volt delta-connected primaries. Secondaries shall be 208Y/120 volt, three phase, with the neutral solidly grounded. Each transformer shall have four 2-1/2 percent full capacity primary taps, two above and two below rated nominal voltage.

2.16.3.2 The ratings of distribution transformers will be standardized at 15, 30, 45 and 75 kVA.

2.16.3.3 Whenever possible, transformers shall be located adjacent to their associated panelboards.

2.16.4 Lighting

2.16.4.1 Exterior lighting

2.16.4.1.1 Building exterior lights shall be provided for personnel entrances/exits, walkways and roll-up doors.

2.16.4.1.2 Building exterior lights shall be operated at 277 volts from a 480/277 volt, three phase, four wire supply.

2.16.4.1.3 Low pressure sodium lighting shall be used for exterior lighting.

2.16.4.1.4 Illumination levels shall comply with IES Handbook illuminance values for building exteriors.

2.16.4.1.5 The exterior lighting system shall be controlled by photocells.

2.16.4.1.6 Low pressure sodium fixtures shall have high power factor ballasts in accordance with ANSI C82.9 integral with the fixture.

2.16.4.1.7 Fixtures for outdoor lighting shall be labeled "Suitable for Wet Locations" in accordance with NFPA 70, Article 410-4 and shall meet the requirements of UL 50 for rain-tight enclosures.

2.16.4.1.8 Low pressure sodium lamps shall be in accordance with ANSI C78.41.

2.16.4.2 Interior Lighting

2.16.4.2.1 Interior lighting shall consist of the following systems:

A. Normal lighting consisting of general lighting, to provide a uniform level of illumination throughout the work area.

B. Standby lighting for approximately 10 percent of the HID lighting sources, to maintain a minimal amount of light until the HID lamps restrike after a momentary power interruption.

C. Emergency lighting to provide illumination for access/egress lighting, including exit signs, when the normal power system is inoperative. This system shall be supplied by means of individual battery pack fixtures with signal lights and test buttons, and shall comply with NFPA 101 and NFPA 70, Article 700.

2.16.4.2.2 Indoor lighting shall be operated at 277 volts from a 480/277 volt, three phase, four wire supply.

2.16.4.2.3 High pressure sodium lighting shall be used throughout the Warehouse/Receiving and Storage buildings. Fluorescent lighting shall be used in office and restrooms.

2.16.4.2.4 Illumination levels shall comply with the following:

| Area and Task | Foot Candles at 30" Above Floor |
|---|---|
| General area | 30 |
| Office | 75 |
| Restroom | 30 |
| Emergency Egress/Access lighting | per NFPA 101 |

2.16.4.2.5 Lighting shall be controlled by local switches in office and restrooms. Lighting in large areas shall be controlled by means of circuit breakers in area lighting panels located near the main entrance point.

2.16.4.2.6 Fluorescent lamps shall be 40 watt FW40CW/RS, T-12 in accordance with ANSI C78.1C. Ballasts shall be high power in accordance with ANSI C82.1.

2.16.4.2.7 High pressure sodium lighting fixtures for open bay areas shall be industrial low or medium bay pendant type, with integral ballasts and shall comply with UL 1572.

2.16.4.2.8 High pressure sodium lamp ballasts shall be high power factor in accordance with ANSI C82.9, ANSI C82.4 and UL 1029.

2.16.4.2.9 High pressure sodium lamps shall be in accordance with ANSI C78.38.

2.16.4.2.10 Standby lighting for HID fixtures shall be integral with fixture and shall be automatic via use of internal relay control to energize a tungsten halogen lamp. High pressure sodium fixtures with the standby lighting feature shall have ballasts that are provided with a 120 volt tap for tungsten halogen lamp operation.

2.16.4.2.11 Exit signs shall be tritium filled, self-luminous type. Fixture shall be tamper proof with a 10 year life expectancy.

2.16.4.2.12 Emergency lighting fixtures shall be heavy duty industrial emergency lighting units, with 90 minute, 12 volt, maintenance-free battery, automatic charger, test switch and charge monitor light, dual lamp heads, and shall be in accordance with UL 924.

2.16.4.2.13 Emergency lighting fixtures shall be operated at 277 volts from a 480/277 volt, three phase, four wire supply.

2.16.5 Convenience Receptacles

2.16.5.1 Convenience receptacles shall be provided throughout the facility as required for specific services and for general maintenance.

2.16.5.2 Convenience receptacles shall be general grade, NEMA 5-20R, two-pole, three-wire, grounded type, rated 20 amperes at 120 Vac.

2.16.5.3 Maximum spacing of receptacles along walls and on columns shall be 48 feet.

2.16.5.4 A maximum of six duplex receptacles shall be connected to one 20 ampere branch circuit. Branch circuit loading shall be calculated in accordance with NFPA 70, Article 220-3.

2.16.5.5 Ground fault circuit interrupter receptacles shall be provided as specified in NFPA 70, Article 210-8 and shall be in accordance with UL 943.

2.16.5.6 Mounting height for the receptacles shall be 3'-6" from the floor to the bottom of the receptacle throughout the warehouse. Provide a minimum of 2 receptacles in the office mounted 1 foot from the floor to the centerline of the receptacle.

2.16.6 Power Receptacles

2.16.6.1 Provide one 480 and one 208 volt power receptacle in each corner of the building.

2.16.6.2 Receptacles shall be 480 or 208 volt, three phase, three wire, four pole. Ampere rating shall be based on equipment to be served.

2.16.6.3 The fourth pole of each receptacle shall be connected to the facility grounding system through a separate ground wire.

2.16.7 Control Stations and Switches

2.16.7.1 Control stations shall be heavy duty, industrial grade.

2.16.7.2 Snap switches shall be suitable for use at their rated voltage as follows:

2.16.7.2.1 Resistive and inductive loads, including electric discharge lamps, not exceeding the ampere rating of the switch.

2.16.7.2.2 Tungsten filament lamp loads not exceeding the ampere rating of the switch.

2.16.7.2.3 Motor loads not exceeding 80 percent of the ampere rating of the switch.

2.16.8 Raceway Systems

2.16.8.1 General Raceway Requirements

Electrical wiring shall be enclosed in adequately sized raceway systems. The maximum fill of any conduit or raceway shall not exceed the limits established in NFPA 70.

2.16.8.2 Underground Installation

2.16.8.2.1 Provide rigid steel conduit encased in concrete for permanent power, telephone and LAN circuit entry into the warehouse. Extend stub-outs 6 feet beyond the boundary of the warehouse. Rigid steel conduit shall be in accordance with UL 6. Stub-outs shall be shown on Seller's drawings and shall be located by dimension and elevation.

2.16.8.3 Aboveground Conduit and Raceway

2.16.8.3.1 Aboveground conduit shall be intermediate metal conduit (IMC) in accordance with UL 1242. The minimum conduit size shall be 3/4 inch.

2.16.8.4 Conduit subject to exposure to corrosive liquids, solutions or environment shall be PVC coated or stainless steel as required.

2.16.9 Wire and Cable

2.16.9.1 Single Insulated or Bare Conductors

2.16.9.1.1 Conductors for interior electrical systems shall be copper.

2.16.9.1.2 Conductors for power and lighting circuits shall not be smaller than No. 12 AWG. Conductors for control circuits shall not be smaller than No. 14 AWG. No. 10, 12 and 14 AWG conductors shall be solid and No. 8 AWG conductors and larger shall be stranded.

2.16.9.1.3 Conductors for power and lighting circuits shall be rated 600 volts type THW, XHHW or THWN in accordance with NFPA 70, Article 310 and UL 44. Insulation for 90°C cable shall be type RHH, THHW or THHN.

2.16.9.1.4 Bonding and grounding conductors shall be ASTM B1 solid copper for No. 8 AWG and smaller and ASTM B8 Class B stranded copper for No. 6 AWG and larger. Bonding and grounding conductors shall be type THW, XHHW or THWN.

2.16.10 Grounding

2.16.10.1 Grounding System

A grounding system shall be provided to:

A. Ensure safety to personnel and equipment in case of electrical equipment failure.

B. Provide connection to ground for transformers, and other power system neutrals.

C. Provide a low impedance path for ground fault currents to assure prompt and consistent action of protective devices.

2.16.10.2 Grounding Materials and Methods

The grounding system shall conform to NFPA 70, Article 250 and IEEE 142.

2.16.10.2.1 Raceway systems shall not be used as the ground path. Separate ground conductors shall be provided.

2.16.10.2.2 Building ground grid shall consist of a 5/8 inch galvanized steel cable loop within the soil outside the building perimeter and 2/0 AWG copper cables within the building slab.

2.16.10.2.3 Metal enclosures shall be grounded with #2 AWG copper wire taps off the building ground grid.

2.16.10.2.4 Two 5/8 inch galvanized steel pigtails shall be provided for connection to the permanent site ground grid by others.

2.16.11 Motor Starters

Motors between 1/2 and 300 horsepower shall be 480 volt, 3 phase. Combination motor starters shall be provided for 480 volt, 3 phase motors. Combination fused starters are not acceptable. The combination starter assembly shall have a minimum short circuit rating of 30k amperes, RMS symmetrical. Where motor starters

are in individual electrical enclosures, each starter shall include a 480-120 volt control power transformer. Where multiple starters and other control devices are contained in one electrical enclosure, a common control power transformer is permitted. Motor starter circuit breakers shall be motor circuit protector. Motor starters may be individual or motor control center mounted.

2.16.12 Telephone

2.16.12.1 The office shall be provided with a minimum of 2 combination telephone receptacles. Open storage area shall be provided with a minimum of 2 telephone receptacles.

2.16.12.2 Conduit capacity shall be provided for telephone installation. Conduit shall be routed from individual receptacles to the ceiling space.

2.16.12.3 Public Address System

Provide 3/4 inch conduit and 4 inch square backboxes for the future public address system to cover all spaces.

**PART 3 EXECUTION**

(Not Used)

**END OF SECTION**

# ATTACHMENT A

(RESERVED)

THIS PAGE INTENTIONALLY
LEFT BLANK

# ATTACHMENT B

## CONDUIT, CABLE TRAY AND WIRE IDENTIFICATION

**POWER/CONTROL**

---

**INSTRUMENTATION AND COMMUNICATIONS**

## ATTACHMENT B

## CONDUIT, CABLE TRAY AND WIRE IDENTIFICATION

**LIGHTING AND HEAT TRACING**

**ALTERNATIVE LIGHTING AND HEAT TRACING**
(LUMP SUM CONTRACTS)

# ATTACHMENT B

## CONDUIT, CABLE TRAY AND WIRE IDENTIFICATION

**TABLE NO. 1 CONDUIT OR CABLE**

| | | |
|---|---|---|
| A | - | Shutdown and Control (24 Vdc) |
| C | - | Control, Alarm, Shutdown (120ac) |
| D | - | 125V D.C. Circuits and Shutdown |
| E | - | Exciter Leads |
| F | - | Fire Alarm |
| K | - | Communication |
| M | - | Metering CT Leads |
| P | - | Power 600V and Below |
| Q | - | Power Above 600V |
| R | - | Resistance Temperature Detector (RTD) |
| X | - | Electronic Circuits (10-Soma, 4-Zona, 1-5MA |
| Y | - | Thermocouples |

**TABLE NO. 2 TRAY, CONDUIT OR CABLE SYSTEM NUMBER**

| | | |
|---|---|---|
| 31 | - | Primary Elect. |
| 32 | - | Normal Elect. Distribution |
| 33 | - | Standby Elect. Distribution |
| 35 | - | DC |
| 36 | - | Emergency Elect Distribution |
| 65 | - | Communication |

**TABLE NO. 3 TRAY USE LEGEND**

| | | |
|---|---|---|
| IT | - | Instrument |
| TT | - | Thermocouple |
| CT | - | Control, Communication |
| HT | - | High Voltage Above 600V |
| LT | - | Low Voltage 600V and Below |
| OT | - | 24Vdc Circuits |

**FIRE ALARM**

# ATTACHMENT A

(Not Used)

9413594.0615

## ATTACHMENT B

## CONDUIT, CABLE TRAY AND WIRE IDENTIFICATION

**POWER/CONTROL**

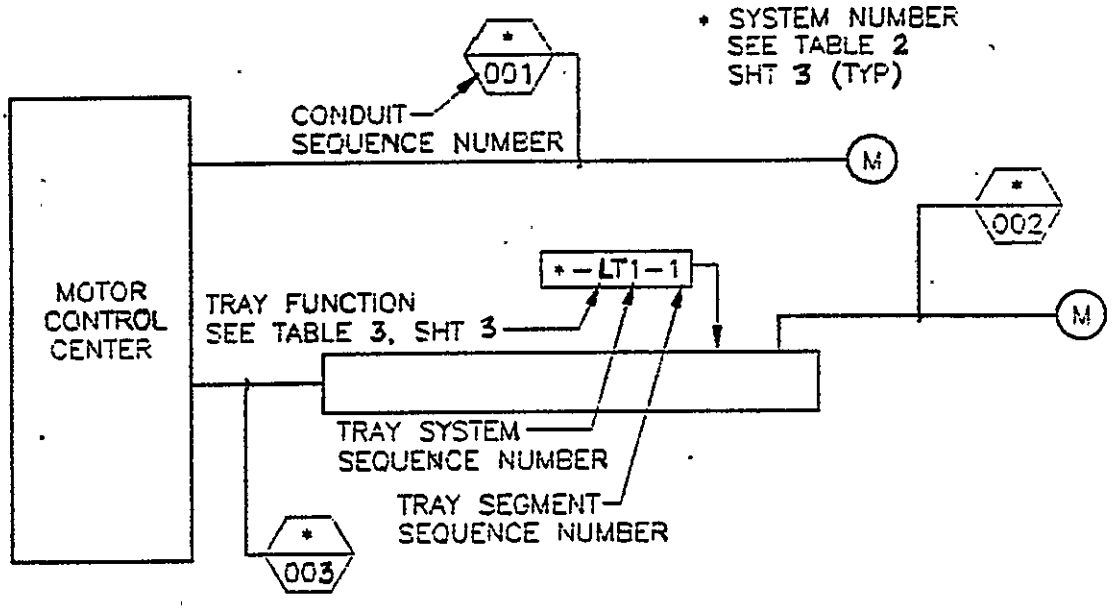


**INSTRUMENTATION AND COMMUNICATIONS**

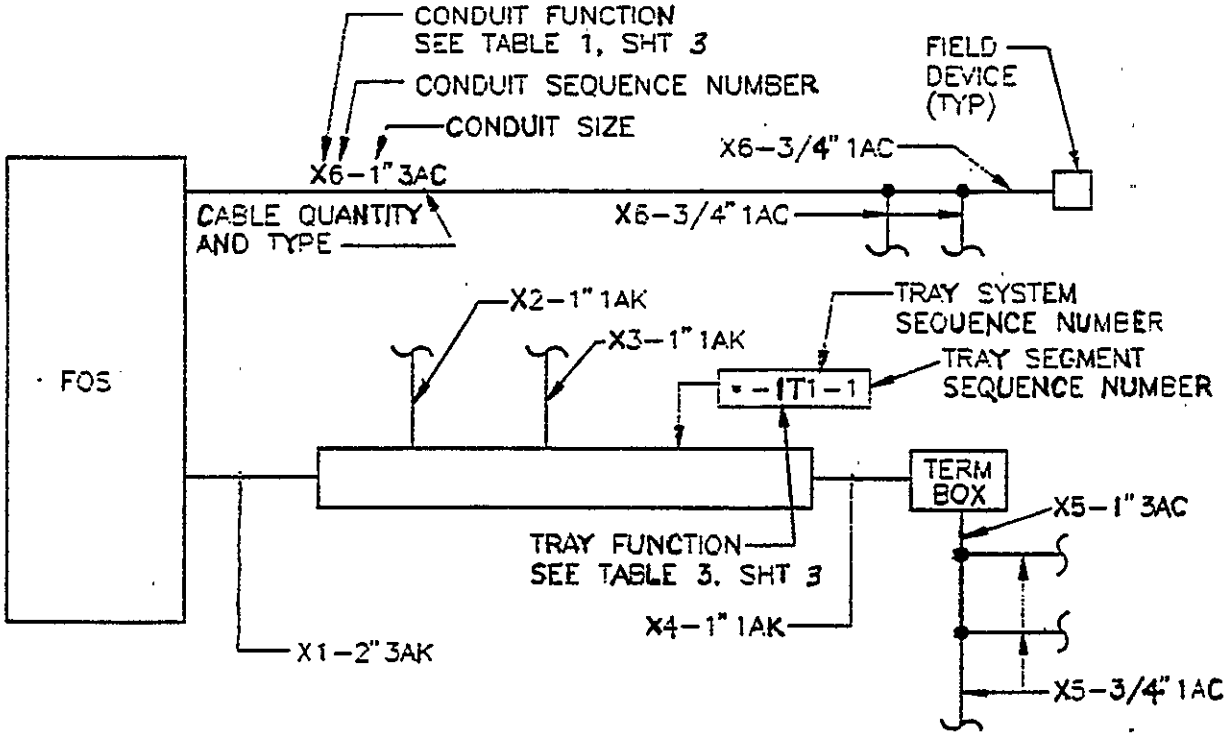


ATTACHMENT B

## ATTACHMENT B

## CONDUIT, CABLE TRAY AND WIRE IDENTIFICATION

### LIGHTING AND HEAT TRACING

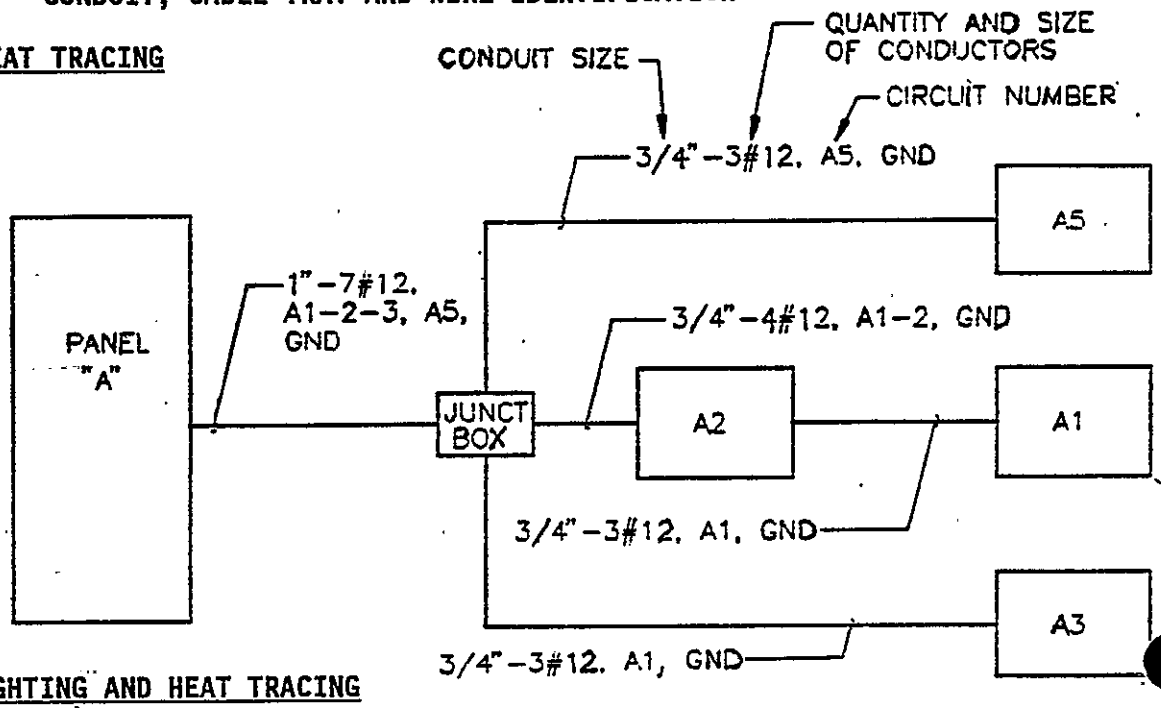


### ALTERNATIVE LIGHTING AND HEAT TRACING
(LUMP SUM CONTRACTS)

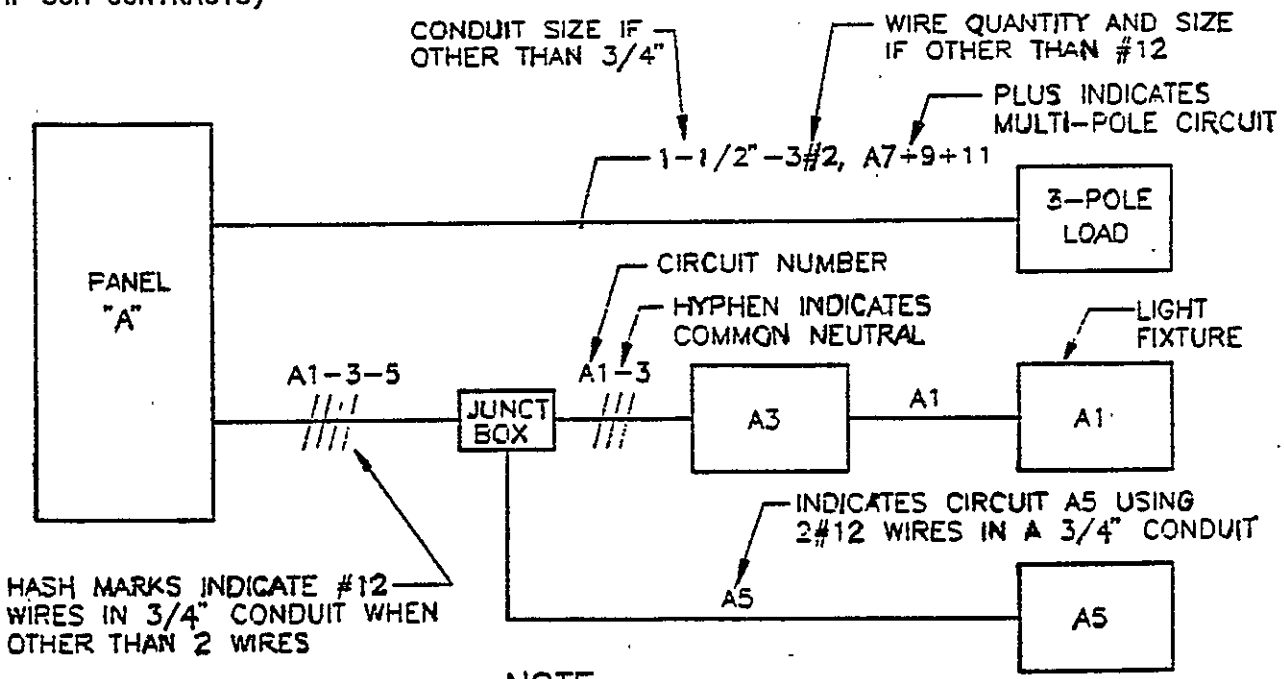


NOTE:
GROUND WIRE AND CONDUIT SHALL BE SIZED ACCORDING TO THE NATIONAL ELECTRICAL CODE

# ATTACHMENT B

## CONDUIT, CABLE TRAY AND WIRE IDENTIFICATION

**TABLE NO. 1 CONDUIT OR CABLE**

| | | |
|---|---|---|
| A | - | Shutdown and Control (24 Vdc) |
| C | - | Control, Alarm, Shutdown (120ac) |
| D | - | 125V D.C. Circuits and Shutdown |
| E | - | Exciter Leads |
| F | - | Fire Alarm |
| K | - | Communication |
| M | - | Metering CT Leads |
| P | - | Power 600V and Below |
| Q | - | Power Above 600V |
| R | - | Resistance Temperature Detector (RTD) |
| X | - | Electronic Circuits (10-Soma, 4-Zona, 1-5MA |
| Y | - | Thermocouples |

**TABLE NO. 2 TRAY, CONDUIT OR CABLE SYSTEM NUMBER**

| | | |
|---|---|---|
| 31 | - | Primary Elect. |
| 32 | - | Normal Elect. Distribution |
| 33 | - | Standby Elect. Distribution |
| 35 | - | DC |
| 36 | - | Emergency Elect Distribution |
| 65 | - | Communication |

**TABLE NO. 3 TRAY USE LEGEND**

| | | |
|---|---|---|
| IT | - | Instrument |
| TT | - | Thermocouple |
| CT | - | Control, Communication |
| HT | - | High Voltage Above 600V |
| LT | - | Low Voltage 600V and Below |
| OT | - | 24Vdc Circuits |

**FIRE ALARM**

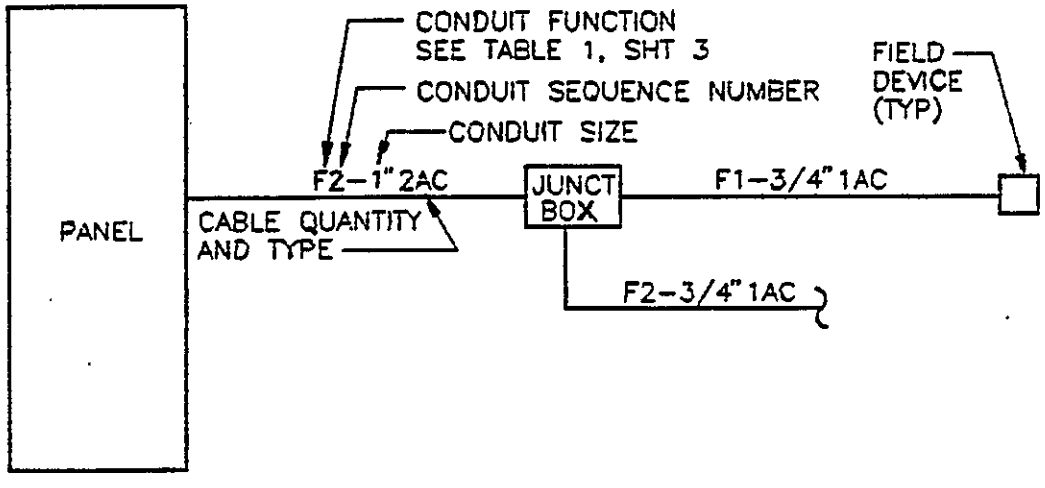

THIS PAGE INTENTIONALLY
LEFT BLANK

# ATTACHMENT C

## STANDARD SPECIFICATION FOR IDENTIFICATION OF PIPING SYSTEMS

1.0 **GENERAL**

The identification of piping systems shall be in accordance with American Standard Scheme for the Identification of Piping Systems, ANSI A13.1, as supplemented herein.

2.0 **LOCATION**

2.0.1 Except as provided below, identification shall be located adjacent to outlets, valves, flanges, unions, changes-in-direction, where pipes pass through walls, floors, or ceilings, and along an uninterrupted length of pipe at maximum intervals of 50 feet. Each line or branch in a room shall have at least one identification.

2.0.2 Where a number of outlets, valves, flanges, unions, or changes of direction make identification at each item impracticable, they may be spaced at approximately 6 foot intervals, preferably adjacent to valves.

2.0.3 For WATER SPRINKLER FIRE PROTECTION SYSTEMS, only feed mains, cross mains, and risers 3-inch nominal diameter and larger shall be identified. Line identification shall be located at test and drain valves; on each side of partitions, floors, and ceilings; and along uninterrupted lengths of pipe at maximum intervals of 50 feet. For other types of fire protection systems, identification shall be located as specified in Paragraph 2.A.

2.0.4 Legend shall be located on the pipe so that it can be read easily from the operator's normal viewing position. Labels shall be placed on the readily visible lower quadrant of overhead pipes, and on an upper quadrant of pipes below normal eye level. Above ceilings, labels shall be placed in locations most readily visible from access positions.

3.0 **LEGEND**

3.0.1 Positive identification of a piping system content shall be by lettered legend giving the name of the content in full or abbreviated form. Legends may also be as specified on drawings or in other specifications.

3.0.2 Abbreviation of words in the legend may be used only where unavoidable due to space limitations.

3.0.3 The legend shall include the nominal operating pressure for steam, compressed air, and, when specified, the pressure or temperature for other materials.

3.0.4 Legend for refrigerant shall include the number of the refrigerant; for example, Refrigerant 12.

3.0.5 An arrow indicating the direction of flow shall be placed near the legend on pipes normally having a flow in one direction only. The color and size of the arrow shall be consistent with the color and size of the legend letters.

3.0.6 Legend shall be located on or adjacent to the classification color band.

4.0 **APPROVED LABELS**

4.0.1 Legend and color classification may be accomplished by the use of approved labels conforming to this Standard Specification and which are suitable for the temperature of the surface to which they are to be applied. Approved labels include the following:

ALL-TEMPERATURE PIPE MARKERS
W.H. Brady Company
727 West Glendale Avenue
Milwaukee, Wisconsin 53201

4.0.2 Single-word labels may be combined to form complete legends. Individual letter labels shall not be so combined.

4.0.3 Labels shall be installed after painting is complete.

5.0 **CLASSIFICATION COLOR**

5.0.1 When use of classification colors is specified, they shall conform to Table I.

**TABLE I**

| CLASSIFICATION | BAND OR LABEL COLOR | LEGEND/ ARROW COLOR | APPROXIMATE COLOR NO. PER FEDERAL STD. NO. 595 |
|---|---|---|---|
| Fire Protection | Red | White (17875) | 11105 (red) |
| Dangerous | Yellow | Black (17038) | 13655 (yellow) |
| Safe | Green | Black (17038) | 14260 (green) |
| Life Support | Blue | White (17875) | 15102 (blue) |

5.0.2 Classification colors for commonly used materials shall conform to Table II, following:

**TABLE II**
**CLASSIFICATION COLORS FOR COMMONLY USED MATERIALS**

| MATERIAL | COLOR | MATERIAL | COLOR |
|---|---|---|---|
| Acetylene | Yellow | Nitrogen-Hydrogen, Mixed | Yellow |
| Air | Green* | Oil, Fuel | Yellow |
| Air, Breathing | Blue | Oil, Hydraulic | Yellow |
| Ammonia | Yellow | Oil, Tempering | Green# |
| Argon | Green* | Oxalic Acid | Yellow |
| Boiler Blow-Off | Yellow | Oxygen | Yellow |
| Boiler Feed Water | Yellow | Phosphoric Acid | Yellow |
| Brine, Sodium Chloride | Green# | Propane | Yellow |
| Butane | Yellow | Sewer, Chemical Waste | Yellow |
| Carbon Dioxide, Fire | Red | Sewer, Contaminated | Yellow |
| Carbon Dioxide, Process | Yellow | Sewer, Sanitary | Yellow |
| Carbon Tetrachloride | Yellow | Sodium Carbonate | Green# |
| Chemical Feed, Phosphate | Yellow | Sodium Dichromate | Green# |
| Chemical Feed, Sulphite | Yellow | Sodium Hydroxide | Yellow |
| Chlorine | Yellow | Sodium Silicate | Green# |
| Condensate | Yellow | Sodium Thiosulfate | Yellow |
| Refrigerant | Green* | Steam | Yellow |
| Gasoline | Yellow | Sulfur Dioxide | Yellow |
| Glycol, Ethylene | Green# | Sulfuric Acid | Yellow |
| Helium | Green* | Vacuum, Air Sampling | Yellow |
| Hydrochloric Acid | Yellow | Vacuum, Laboratory | Yellow |
| Hydrofluoric Acid | Yellow | Vacuum, Process | Yellow |
| Hydrofluoric Acid Gas | Yellow | Water, Distilled | Green# |
| Hydrogen | Yellow | Water, Fire Protection | Red |
| Hydrogen Iodide | Yellow | Water, Hydraulic | Green# |
| Methane | Yellow | Water, Process | Green# |
| Mixed Acid | Yellow | Water, Raw | Green# |
| Nitric Acid | Yellow | Water, Safety Shower | Green |
| Nitrogen | Green* | Water, Sanitary | Green# |
| | | Water, Hot Sanitary | Yellow |

* Yellow for pressure above 30 psig
\# Yellow for pressure above 125 psig

# ATTACHMENT D

(Not Used)

9413154.0622

# ATTACHMENT E

## PREPARATION AND CONTROL OF ENGINEERING AND FABRICATION DRAWINGS

1.0 **DRAWING CATEGORIES**

1.0.1 **General**

1.0.1.1 Drawings fall under two categories: the "SK and "H" series drawings. These series consist of conceptual, modification, prototype, construction, fabrication and non-fabrication drawings, which in turn include different types of drawings (e.g., arrangement, assembly, detail, schematic, wiring diagram, block diagram, flow diagrams, installation, layout, plot plan, P&ID, loop sheets, envelope, altered item, etc.). This list of drawing types is not restrictive and other types not identified may be used if necessary.

1.0.1.2 "SK" or "H" drawing numbers shall be issued and controlled by the Records Storage/Retrieval and Microfilming Group.

1.0.1.3 "SK" or "H" designation shall be assigned by the originator in accordance with these criteria.

1.0.2 **H- Series Drawings**

H- series drawings shall be prepared to depict permanent installation of facilities, hardware and equipment. These drawings are permanent records, and as such they may be subject to as-built requirements upon completion of construction or fabrication.

1.0.3 **SK- Series Drawings**

1.0.3.1 SK- series drawings shall be prepared as temporary drawings and shall depict:

a. experimental equipment

b. limited use test equipment

c. limited use interface information (i.e., Conceptual Designs, etc.)

d. short-term application (i.e., temporary changes in design to facilities, hardware and/or equipment)

e. design criteria to equipment vendors

1.0.3.2 SK- series drawings shall not be used for permanent records. If the SK- is used for a prototype which is incorporated into a permanent facility, it shall be "As-Built" and renumbered as an H-drawing (see Section 12.0).

NOTE: SK numbers shall NOT be changed to H numbers by changing the SK to H; complete new numbers are assigned.

1.0.3.3 SK drawings used for conceptual designs or to convey design criteria to equipment vendors shall be identified as conceptual or Vendor Information using 1/4-inch lettering immediately above the title block.

1.0.4 Drawings depicting the final design of vendor supplied equipment may be required by procurement documents to be assigned H- series numbers and to be prepared in accordance with these criteria. Such drawings not assigned H- series numbers may utilize the vendor's numbering system and shall be certified by the vendor as "As-Built" and shall be assigned a vendor information (VI) number and shall reside in the VI file maintained by the Record Storage/Retrieval and Microfilming Group.

## 2.0 DRAWING SIZE

2.0.1 Five standard sheet sizes, listed below, shall be used for drawings in accordance with ANSI Y14.1. The "F" size drawing is the preferred size.

| Size | Dimensions in Inches |
|---|---|
| A | 8-1/2 x 11 |
| B | 11 x 17 |
| C | 17 x 22 |
| D | 22 x 34 |
| F | 28 x 40 |

## 3.0 DRAWING MATERIAL

3.0.1 CAD drawing material shall be 3-mil minimum drafting film, matte on one side, or 100% rag vellum, 17 pound minimum.

## 4.0 DRAWING ARRANGEMENT

4.0.1 The general drawing arrangement shall conform to ANSI Y14.1, except for the location of the parts list or list of materials and the revision block. Additional spaces have been reserved for Hanford unique items.

4.0.2 All drawings, including continuation sheets (multiple sheet) shall have a complete title block (see Section 7.0. Title Block).

4.0.3 Drawing components, when required, shall be arranged as shown in Figure 1 and as defined in these criteria.

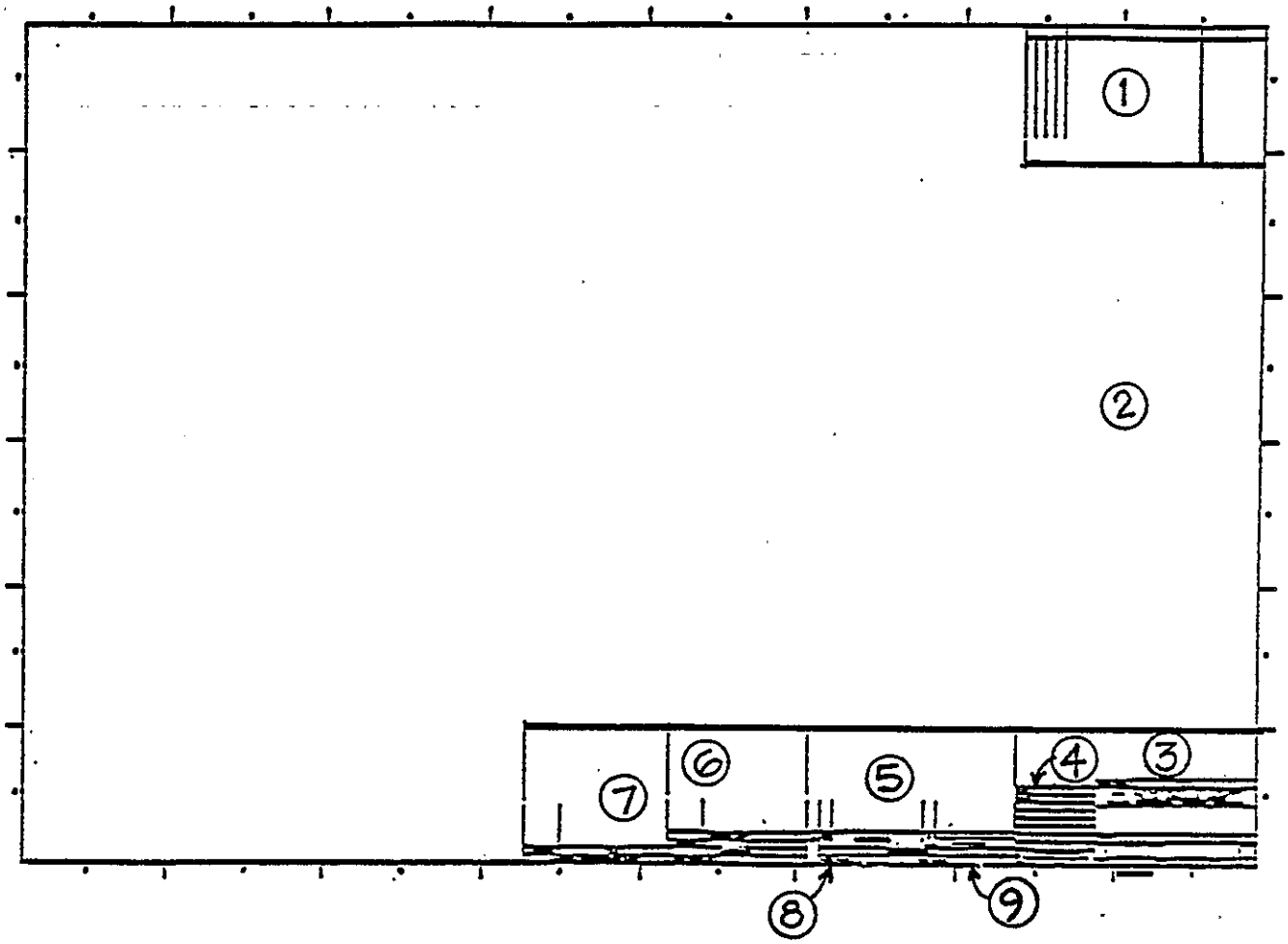


Figure 1. Drawing Arrangement

4.0.3.1 **Parts List or List of Material**

Parts lists or lists of material shall be utilized on fabrication and assembly drawings, when appropriate. Parts lists may be arranged according to individual contractor procedures and Section 11.0. Suggested width of Parts Lists having one quantity column is 7-1/2 inches; added columns may be used as necessary.

4.0.3.2 **General Notes**

Location indicated is the preferred position, but another location may be used if parts list or drawing geometry extend into this area. On multiple sheet drawings general notes start on Sheet 1 but may be continued on subsequent sheets.

4.0.3.3 **Drawings Status Marking (Optional)**

This space is reserved for tracking drawing status from initiation to release in accordance with individual contractor procedures.

4.0.3.4 **Title Block**

The title block shall be sized and configured as indicated in Section 7.0, Title Block.

4.0.3.5 **Revisions**

The revision block is sized and configured as indicated in Section 8.0, Revisions.

4.0.3.6 **References**

See Section 9.0, Reference Block.

4.0.3.7 **Drawing Traceability (Optional)**

A drawing traceability list is utilized according to individual contractor procedure and shall be configured as indicated in Section 10.0, Drawing Traceability List.

4.0.3.8 **Cadfile**

The Computer Aided Design File (CADFILE) designator is a unique file identification code which is assigned to each CAD data set to allow cross-referencing of CAD plots to specific data sets. The CADFILE designator shall be placed on all CAD data sets prior to plotting and shall be located according to Section 4.0 of these criteria. The designator shall consist of eight (8) characters and shall be formatted as indicated below. Nine (9) characters are permitted for drawings with numbers containing six (6) digits when two alpha characters are required to designate the sheet number and when the drawing is generated on equipment that allows a nine character file name.

| | | |
|---|---|---|
| EXAMPLES: | H-2-27918, SH7 | H-5-498, SH 32 |
| | B027918G - OK CADFILE | E00498JA - OK CADFILE |
| | B27918G - BAD CADFILE | E0498JA - BAD CADFILE |
| | H-4-176541, SH 28 | |
| | D176541EA - | OK CADFILE on systems with 9- character capacity |
| | D176541E - | BADCADFILE cannot be done on systems imposing an 8-character limit. |

<u>WARNING!!!</u> DATA SETS WITH 9-CHARACTER CADFILE NUMBERS <u>ARE NOT TRANSFERABLE</u> TO SYSTEMS WITH 8-CHARACTER LIMIT.

CADFILE designators shall be established in accordance with the following convention:

X XXXXXX X

**SHEET NUMBER** Sheet Numbers 1 through 23 are identified by a single alpha character corresponding to the sheet number in the first number column of the Drawing Sheet Identification Convention matrix below. A second alpha character is required to identify Sheets 24 through 529. This two-letter identifier is established by locating the sheet number in the matrix, establishing the first letter from the vertical alpha on the left and the second letter from the horizontal alpha at the top. This left identifier will be used on all systems for drawings having numbers of 5 or less digits. File naming limitations (8 characters) imposed by some systems make it impossible to identify drawings with 6-digit numbers and 24 or more sheets using this system. If more than 23 sheets are required for a drawing with a 6-digit number on systems so limited, additional drawing numbers shall be utilized.

**DRAWING NUMBER** (Minus area designator, i.e., H-2, etc.) The drawing number generally includes six (6) digits. Leading zeros are used when a drawing number is less than 6 digits. An exception is made when the drawing number is 5 digits and the drawing consists of more than 23 sheets. In this case the sheet number code consists of 2 alpha characters and the drawing number may be 5 digits.

**AREA DESIGNATOR** The area designator is an alpha character assigned based on the first 2 or 3 characters of the drawing number used to identify a drawing with a particular area or facility. Area designators are assigned from the following:

| Alpha Character | Area Designator |
|---|---|
| A | H-1 |
| B | H-2 |
| C | H-3 |
| D | H-4 |
| E | H-5 |
| F | H-6 |
| G | H-7 |
| H | (Reserved) |
| I | Not Used |
| J | H-8 |
| K | H-9 |

| Alpha Character | Area Designator |
|---|---|
| L | H-11 |
| M | H-12 |
| N | SK-12 |
| O | Not Used |
| P | SK-11 |
| Q | SK-8 |
| R | SK-7 |
| S | Not Used |
| T | SK-6 |
| U | SK-5 |
| V | SK-4 |
| W | SK-3 |
| X | SK-2 |
| Y | SK-1 |
| Z | Reserved for non-released standard Hanford data sets |

U.S. DEPARTMENT OF ENERGY
Hanford Waste Vitrification Plant
Richland, Washington
DOE Contract DE-AC06-86RL10838

# DRAWING SHEET IDENTIFICATION CONVENTION MATRIX

| | | A | B | C | D | E | F | G | H | J | K | L | M | N | P | R | S | T | U | V | W | X | Y |
|---|---|---|---|---|---|---|---|---|---|---|---|---|---|---|---|---|---|---|---|---|---|---|---|
| A. | 1 | 24 | 47 | 70 | 93 | 116 | 139 | 162 | 185 | 208 | 231 | 254 | 277 | 300 | 323 | 346 | 369 | 392 | 415 | 438 | 461 | 484 | 507 |
| B. | 2 | 25 | 48 | 71 | 94 | 117 | 140 | 163 | 186 | 209 | 232 | 255 | 278 | 301 | 324 | 347 | 370 | 393 | 416 | 439 | 462 | 485 | 508 |
| C. | 3 | 26 | 49 | 72 | 95 | 118 | 141 | 164 | 187 | 210 | 233 | 256 | 279 | 302 | 325 | 348 | 371 | 394 | 417 | 440 | 463 | 486 | 509 |
| D. | 4 | 27 | 50 | 73 | 96 | 119 | 142 | 165 | 188 | 211 | 234 | 257 | 280 | 303 | 326 | 349 | 372 | 395 | 418 | 441 | 464 | 487 | 510 |
| E. | 5 | 28 | 51 | 74 | 97 | 120 | 143 | 166 | 189 | 212 | 235 | 258 | 281 | 304 | 327 | 350 | 373 | 396 | 419 | 442 | 465 | 488 | 511 |
| F. | 6 | 29 | 52 | 75 | 98 | 121 | 144 | 167 | 190 | 213 | 236 | 259 | 282 | 305 | 328 | 351 | 374 | 397 | 420 | 443 | 466 | 489 | 512 |
| G. | 7 | 30 | 53 | 76 | 99 | 122 | 145 | 168 | 191 | 214 | 237 | 260 | 283 | 306 | 329 | 352 | 375 | 398 | 421 | 444 | 467 | 490 | 513 |
| H. | 8 | 31 | 54 | 77 | 100 | 123 | 146 | 169 | 192 | 215 | 238 | 261 | 284 | 307 | 330 | 353 | 376 | 399 | 422 | 445 | 468 | 491 | 514 |
| J. | 9 | 32 | 55 | 78 | 101 | 124 | 147 | 170 | 193 | 216 | 239 | 262 | 285 | 308 | 331 | 354 | 377 | 400 | 423 | 446 | 469 | 492 | 515 |
| K. | 10 | 33 | 56 | 79 | 102 | 125 | 148 | 171 | 194 | 217 | 240 | 263 | 286 | 309 | 332 | 355 | 378 | 401 | 424 | 447 | 470 | 493 | 516 |
| L. | 11 | 34 | 57 | 80 | 103 | 126 | 149 | 172 | 195 | 218 | 241 | 264 | 287 | 310 | 333 | 356 | 379 | 402 | 425 | 448 | 471 | 494 | 517 |
| M. | 12 | 35 | 58 | 81 | 104 | 127 | 150 | 173 | 196 | 219 | 242 | 265 | 288 | 311 | 334 | 357 | 380 | 403 | 426 | 449 | 472 | 495 | 518 |
| N. | 13 | 36 | 59 | 82 | 105 | 128 | 151 | 175 | 197 | 220 | 243 | 266 | 289 | 312 | 335 | 358 | 381 | 404 | 427 | 450 | 473 | 496 | 519 |
| P. | 14 | 37 | 60 | 83 | 106 | 129 | 152 | 175 | 198 | 221 | 244 | 267 | 290 | 313 | 336 | 359 | 382 | 405 | 428 | 451 | 474 | 497 | 520 |
| R. | 15 | 38 | 61 | 84 | 107 | 130 | 153 | 176 | 199 | 222 | 245 | 268 | 291 | 314 | 337 | 360 | 383 | 406 | 429 | 452 | 475 | 498 | 521 |
| S. | 16 | 39 | 62 | 85 | 108 | 131 | 154 | 177 | 200 | 223 | 246 | 269 | 292 | 315 | 338 | 361 | 384 | 407 | 430 | 453 | 476 | 499 | 522 |
| T. | 17 | 40 | 63 | 86 | 109 | 132 | 155 | 178 | 201 | 224 | 247 | 270 | 293 | 316 | 339 | 362 | 385 | 408 | 431 | 454 | 477 | 500 | 523 |
| U. | 18 | 41 | 64 | 87 | 110 | 133 | 156 | 179 | 202 | 225 | 248 | 271 | 294 | 317 | 340 | 363 | 386 | 409 | 432 | 455 | 478 | 501 | 524 |
| V. | 19 | 42 | 65 | 88 | 111 | 134 | 157 | 180 | 203 | 226 | 249 | 272 | 295 | 318 | 341 | 364 | 387 | 410 | 433 | 456 | 479 | 502 | 525 |
| W. | 20 | 43 | 66 | 89 | 112 | 135 | 158 | 181 | 204 | 227 | 250 | 273 | 296 | 319 | 342 | 365 | 388 | 411 | 434 | 457 | 480 | 503 | 526 |
| X. | 21 | 44 | 67 | 90 | 113 | 136 | 159 | 182 | 205 | 228 | 251 | 274 | 297 | 320 | 343 | 366 | 389 | 412 | 435 | 458 | 481 | 504 | 527 |
| Y. | 22 | 45 | 68 | 91 | 114 | 137 | 160 | 183 | 206 | 229 | 252 | 275 | 298 | 321 | 344 | 367 | 390 | 413 | 436 | 459 | 482 | 505 | 528 |
| Z. | 23 | 46 | 69 | 92 | 115 | 138 | 161 | 184 | 207 | 230 | 253 | 276 | 299 | 322 | 345 | 368 | 391 | 414 | 437 | 460 | 483 | 506 | 529 |

FLUOR DANIEL, INC.
Advanced Technology Division
Fluor Contract 8457

## 4.0.3.9 CAD CODE

The CAD Code shall be placed on each CAD data set near the CAD file before the CAD drawing is plotted and will be referred to by CAD Operations personnel to control the migration of CAD datasets across systems used at Hanford. The CAD Code will contain the following information: The contractor and area, type of hardware, type of graphic software, and the revision of graphic software with a colon (:) used to distinguish each field of information. The format shall be as follows:

XX : XXX : XXXX : X . XXX : XX

**Revision of Graphic Software**

- Number of characters as required

**Type of Graphic Software**

- 4 Characters Max
- ACDX (AutoCAD)
- DDMX (Calma)
- EGSX (Hewlett Packard)
- GEOX (Calma GEODRAW)
- M1OX (Hewlett Packard)
- M3OX (Hewlett Packard)
- (FUTURE)

**Font Designator**

- The font set designation shall be two (2) characters.
- 1st character shall be the line font designator
- 2nd character shall be the text font designator.
- The font set designator shall be as follows:

  S = Standard (vendor supplied)
  N = Nonstandard (contractor supplied)

Fourth character shall be a "2" or "3" to indicate 2 or 3 dimensional drawing generation.

**Type of Hardware**

- 3 Characters Max.
- APL (Apollo)
- DEC (VAX)
- HP (Hewlett Packard)
- IBM (Including IBM Compatible)
- (FUTURE)

**Contractor and Area of Current Residence**

1 - Operations Engineering Contractor
2 - Engineer/Construction Contractor
3 - Research and Development Contractor
4 - Site Computer Services Contractor
5 - Fixed Price Contractor

A - 100 Area
B - 200E Area
C - 200W Area
D - 300 Area
E - 400 Area
F - 600 Area
G - 700 Area
H - 800 Area
J - 1100 Area
K - 3000 Area
L - Offsite

## 5.0 DRAFTING PRACTICE

5.0.1 Drafting practices shall be in accordance with ANSI Y14 series or other industry accepted drafting practices and the requirements of these criteria.

5.0.2 Abbreviations shall conform to ANSI Y1.1 except for the cases where commonly accepted industry or specific discipline usage dictates a deviation from ANSI Y1.1. Common abbreviations, such as TYP and REF, may be used at all times. Unusual abbreviations shall be used only when space is limited. Hanford Site specific abbreviations and acronyms shall be clearly defined on the design media.

5.0.3 Symbols shall conform to ANSI Y14.36, Y32.2, Y32.2.4, Y32.2.6, Y32.4, and Y32.9.

5.0.4 Drawings shall be prepared so that prints are legible when reduced on microfilm and then re-enlarged. As an example, parallel lines shall be spaced at least 1/16-inch apart to maintain distinction.

5.0.5 Where 20 or more drawings are prepared for a single project, a list of all drawings shall be made on a separate sheet showing the drawing number, index number(s) and drawing title. The drawing list shall be the first drawing in the project set. For between 10 and 20 drawings, a list shall be placed on the first drawing of the set. For multisheet drawings, the number of sheets shall be shown without repeating the rest of the information (e.g., H-I-12345, 6SH). Building numbers shall be included in drawing list when more than one building is involved in the project.

5.0.6 Lettering shall be all upper case gothic except where lower case is standard (e.g., Na, Km, g). Letters and figures shall be at least 1/8-inch high; see ANSI Y14.2M for recommended shape.

5.0.7 If typing is utilized on the drawings, it shall be all upper case of a bold, Gothic style and lines of type shall be a minimum of 1-1/2 spacing. In no case shall type be used with letter height of less than 0.1-inch.

5.0.8 A north arrow shall be placed on all maps, plans, layouts and other drawings where applicable. North shall generally be oriented to the top or left side of the sheet. All plans on a given set of drawings should be oriented the same and should match the existing plant drawing orientation.

5.0.9 The grid system used shall be identified on Site drawings. The coordinate grid system is assumed to be Hanford grid unless noted otherwise on the drawing.

5.0.10 Each drawing shall, as a minimum, show the project number, where applicable, and the names of the originator and the checker. The exception would be illustrations or figures in documents such as a Functional Design Criteria, an Engineering Study or an Engineering Change Notice.

5.0.11 Prior to submittal to another authority for approval, each drawing shall be independently checked and shall be approved by the responsible engineer. Each sheet shall be treated individually for checking and approval purposes, for the initial release, and for revisions.

5.0.12 Preprinted drafting film may be supplied to offsite companies. For large jobs, the offsite company may be permitted to use drafting film with the company name preprinted in the title block. Offsite companies using plant supplied drafting film shall place the name of their firm in the title block, replacing the existing company name.

6.0 **COMPUTER AIDED DRAFTING**

6.0.1 **Identifier**

The CAD-generated drawings shall have CADFILE and CADCODE identifiers. These identifiers shall be located below the revision block and within the border lines of the drawing. The location of the CADFILE and CADCODE identifiers is shown as Items 8 and 9 in Figure 1, Section 4.0.

6.0.2 Manual Modifications or Revisions of CAD-Generated Drawings

6.0.2.1 Manual changes or alterations to a CAD-generated drawing should be avoided. If an issued CAD-generated drawing is changed or altered manually, the CAD data set(s) shall be updated in accordance with normal contractor procedures. Obtaining approval signatures is not considered a change or alteration.

6.0.2.2 Drawings manually changed or altered shall have a single horizontal line drawn through the CADFILE and CADCODE identifiers. This signifies that the drawing has been manually updated and the data set(s) may not be up-to-date.

6.0.2.3 If data set(s) are lost or no longer exist and will not be replaced, the CADFILE and CADCODE identifiers shall be removed from the vault retained drawing(s) at the next manual revision.

## 7.0 TITLE BLOCK

7.0.1 Title blocks are to be in conformance with ANSI Y14.1. Contents identified in the title block shall be modified to accommodate Hanford requirements and individual contractor approval procedures. (See Figure 2 for typical title block).

7.0.2 Information shall be entered in the numbered blocks as follows:

| | | | | | | |
|---|---|---|---|---|---|---|
| | | IMPACT LEVEL [10] | | | EDT | |
| DRAWN [13] DATE | | [1] | U.S. DEPARTMENT OF ENERGY<br>Richland Operations Office<br>(C O M P A N Y N A M E) | | | |
| CHECKED [14] | | | | | | |
| [15] | | [2] | | | | |
| | | | | | | |
| | | PROJECT [3] | | | | |
| | | SIZE F | BLDG NO. [4] | INDEX NO. [5] | DRAWING NO. [6] | REV NO. [7] |
| APPROVED FOR IMPLEMENTATION<br>BY<br>FOR [16] DATE | | SCALE [8] | | JOB NO. [9] | SHEET [11] OF [12] | |

Figure 2. Title Block

1. **FIRM NAME**

2. **DRAWING TITLE**

   a. The title is to be brief but clearly identify the subject matter.

   b. The title is not to include the project or building number and includes the area number only for area-wide presentations.

   c. The total number of characters including spaces shall not exceed 60.

   d. Height of the lettering in the title shall be approximately 3/16- to 1/4-inch.

   e. The title shall be arranged in one, two or possibly three lines centered in the block. All sheets, of multiple sheet drawings, shall have the same title, except that the last line of the title may differ to describe the contents of each sheet.

f. The same title shall not be used on more than one drawing of a given project unless different buildings are involved. If drawing content is the same for two or more sheets, a multisheet drawing is appropriate.

3. **PROJECT (where applicable)**

The official project title preceded by the project number shall be utilized where applicable. Smaller jobs may have "project titles" assigned. Project titles shall be identified on all drawings in a set. Abbreviations may be used.

4. **BUILDING NUMBER**

Numbers for new facilities are maintained by Records Storage/Retrieval and Microfilm Group. Building numbers shall be assigned prior to drawing approval. Where applicable a drawing may show two or more building references. The references shall be separated by a slash (e.g., 405/409).

5. **INDEX NUMBERS**

Index numbers are listed in Section 15.0. A number shall be used for each major category and is required on each drawing. Nonessential numbers are not shown (e.g., 0801 and 0802 are not shown along with 0800 on a single drawing). Numbers shall be assigned to accurately represent drawing content. Multiple index numbers shall be separated by a slash (e.g., 3900/7301).

Offsite A-E/s obtain building index numbers from the appropriate contractor's Project Manager or Engineer.

6. **DRAWING NUMBER**

The drawing number shall be 1/4-to 3/8-inch high. Numbers are obtained from Records Storage/Retrieval and Microfilm Group.

7. **REV**

Current revision number shall be used. 0 shall be used for initial release.

8. **SCALE**

When the entire drawing is to the same scale, the scale shall be shown in this block. The word SHOWN shall be used where more than one scale appears on the sheet. The word NONE shall be used where a scale is not applicable (schematics, flow diagrams, etc.).

9. **JOB NO (OPTIONAL)**

The job number is assigned in accordance with individual contractor procedures to identify drawings prepared for a common effort or project. May be utilized to identify a funding source.

10. **IMPACT LEVEL (OPTIONAL)**

May be utilized to identify impact level of equipment or facility presented in accordance with individual company procedure.

11. **SHEET**

For single sheet drawings, a "1" shall be entered. For multisheet drawings, the sheets shall be numbered in sequence starting with 1.

12. **OF**

Enter total number of sheets. For single sheet drawings, a 1 shall be entered.

13. **DRAWN**

The initials and surname of the originator shall be written or printed in an individualistic style as long as they are legible.

14. **CHECKED**

The initials and surname of the checker shall be written and shall be legible

15. **APPROVALS**

Used for typical company internal approval. The content may be modified. The signatures shall include the initials and surname and must be legible. Approval signatures on CAD Generated Drawings may be placed adjacent to or above pre-printed names, where applicable.

16. **APPROVED FOR IMPLEMENTATION (AS APPLICABLE)**

The authorizing organization's identification shall be entered (normally an Operating Contractor) following his signature. This signature provides authorization to proceed with construction, procurement, or fabrication.

17. **ENGINEERING RELEASE (AS APPLICABLE)**

An authorized document number used to identify the formal release of a drawing.

8.0 **REVISIONS**

8.0.1 A revision block shall be sized in accordance with Figure 3 and located in accordance with Figure 1. Content may be modified according to individual contractor procedures.

| | | | | | | | |
|---|---|---|---|---|---|---|---|
| MF | REV NO. | DESCRIPTION | REV BY DATE | APPROVALS | | | |
| | REVISIONS | | | | | | |
| CADFILE | | | CADCODE | | | | |

SEE FIGURE 1 ITEM 8 SEE FIGURE 1 ITEM 9

Figure 3. Revision Block

8.0.2 Each new revision shall be listed in numerical sequence. Only Released (issued) drawings can be revised and each subsequent revision shall be released and microfilmed before another revision can be made. Latest revision number shall also be shown (see Figure 2).

8.0.3 A concise description of each revision shall be written in the past tense or the authorizing document noted. Each item shall be preceded by a lower case letter in parenthesis and ended with a drawing coordinate or zone (Z) number to facilitate location. Revisions of a general or self-explanatory nature need not have zone or prefix numbers. If a revision is made by an authorizing document, the revision description shall show the document number (ECN, EO, DC, etc.). Conservation of space is essential, therefore ANSI abbreviations shall be normally used to the best advantage.

8.0.4 **Revision Triangle and Cloud**

8.0.4.1 If individual contractor procedures require identification of the location of the revision, a triangle with 3/8-inch sides, containing the current revision number shall be drawn as close as possible to the drawing change. The number shall include the lower case letter when applicable (e.g., 1a or 2). To further assist in locating revisions on complex drawings, the revised

area may be encircled by a "cloud" drawn on the back of the drawing.

8.0.4.2 During a subsequent revision, the "cloud" shall be removed, but the triangle may remain. Triangles from prior revision shall be deleted.

8.0.4.3 The revision triangle shall not be used where the possibility of confusion with drawing symbols is likely. It is never used in the title block.

8.0.5 "As-Built" revisions reflect the actual completed installation as obtained from field inspection or appropriate contractor documentation. The statement "as-built" is entered in the description column.

8.0.6 "General" revisions shall be used on plant key maps, or other reference type drawings and drawings with extensive revisions. It is not required to delineate the changes and, therefore, revision triangles are not shown on the drawing. Current revision approval requires signature approval by appropriate authorities. Initials may be used in place of signatures provided that they are handwritten by the person approving the revision.

8.0.7 Approvals shall be per individual contractor procedure. CAD developed drawings require all previous approval signatures to be printed in the appropriate spaces.

8.0.8 The letter "M" shall be stamped to the left of the Rev column by Records Storage/Retrieval and Microfilming Group to signify that the drawing has been microfilmed for the current revision.

8.0.9 Previously approved and microfilmed revisions may be removed from the drawing when additional space is required. The removal of the revisions shall be noted in the current revision description (i.e., Removed previous revisions 1 through 5, etc.).

9.0 **REFERENCE BLOCK**

9.0.1 This block shall be used to list reference documents necessary for the completion of the work depicted on the drawing.

9.0.2 For Conceptual or Preliminary Design drawings, the reference documents used in preparation may be listed (Figure 4).

| (1) | (2) |
|---|---|
| NUMBER | TITLE |
| **REFERENCES** | |
| **NEXT USED ON** | (3) |

Figure 4. Reference Block

9.0.3 For Definitive Design drawings, only the reference documents required by the construction/fabrication contractors shall be listed. National consensus standards shall not be listed. Existing equipment shall be referenced by VI (previously identified as CVI or BPF) number when such exists.

1. Number

   The identifying number of the reference document shall be entered in this column.

2. Title

   The actual, abbreviated or condensed title of the reference document shall be entered in this space.

3. Next Used On

   This space is provided for those cases where it is applicable to link together certain drawings such as subassembly, detail and installation drawings. Drawings shall be linked by referencing the next level or generation up (i.e., a subassembly drawing will list the number of the assembly or installation drawing). Drawing list numbers shall not be placed in this space.

## 10.0 DRAWING TRACEABILITY LIST

Existing drawings which are modified by the work depicted on a drawing are entered into the drawing traceability list (see Figure 5). These drawings are not required for the construction or fabrication and are not included in the reference drawing list.

| | |
|---|---|
| NUMBER | TITLE |
| DRAWING TRACEABILITY LIST | |

Figure 5. Drawing Traceability List

## 11.0 PARTS LIST

11.0.1 Parts List and configuration shall be governed by individual company practices.

11.0.2 The Parts List shall contain all material and separable components on the drawing. The individual pieces of weldments, or other nonseparable assemblies, are not normally numbered separately.

11.0.3 Effort should be made to arrange the Parts List in a numerical order of importance (i.e., assembly, subassembly, detailed parts, catalog items, etc.). It is not necessary to rearrange the Parts List merely to add an additional entry.

11.0.4 Each arrangement, assembly, subassembly and detail shall have a separate and different part number. Parts that are not physically and functionally interchangeable shall have different part numbers.

11.0.5 Quantities shall be counted accurately and shown in customary trade units.

11.0.6 AR (as required) shall be used where the quantity is not known or where the quantity could vary.

11.0.7 A generic name of the item shall be listed first with supplemental descriptive words following. The description of an item shall be as complete as possible, and in accordance with

accepted industry standards. If the item can be completely described in the parts list, it shall be placed there. Where the description is too lengthy to fit into that space, it shall be placed near the detail or in the NOTES, and referenced in the description column (e.g., SEE DETAIL FOR DESCRIPTION). The complete description shall be stated in one place only, not split in two or more locations.

## 12.0 CLASSIFIED AND SENSITIVE DRAWINGS

When classified or sensitive information is to be contained on any version of a drawing, an Authorized Derivative Classifier (ADC) shall review and determine the Classification Level (Top Secret, Secret, or Confidential) and the Category (Restricted Data, Formerly Restricted Data, National Security Information) of the drawing. Classification questions should be referred to the Classification Office. The originating organization shall mark the drawing to reflect the Classification Level and Category; contact the Classified Files or Document Control organization to establish accountability as required; and, protect the document in accordance with security and document handling requirements.

## 13.0 SUPERSEDED, VOIDED DRAWINGS AND TITLE BLOCK CHANGES

13.0.1 When official approved "H" or "SK" series drawings are superseded, voided or when a building, index or drawing number is changed, a Drawing Number Change Notice (Form BD-9300-051, Figure 6) shall be completed. The completed form is to accompany the drawing(s) that have been changed in accordance with these criteria and sent to Records Storage/Retrieval and Microfilming Group. All drawings involved must accompany the form after having been prepared as follows:

A. Superseded by a drawing with a different drawing number.

1. For the superseded drawing - Print SUPERSEDED BY DWG _____ near the title block using 1/4-inch high letters. Sign name and date below note. (Superseded drawings are removed from the active data base.)

2. For the new drawing - Complete the title block as for any new drawing. Add note near title block -- SUPERSEDES DWG _____ in 1/4-inch high letters. Complete Form BD-9300-051, Drawing Change Notice, Figure 6.

B. Superseding an approved drawing with a drawing of the same drawing number.

(NOTE: A CAD revised drawing which replaces the CAD original tracing is not superseding a drawing with a drawing of the same number for the purpose of this requirement and thus no form BD-9300-015 is required).

1. For the new drawing - Use the same drawing number and title. Print all original signatures and dates, such as draftsman, checker and approval signatures as appear on the superseded drawing. Add next higher revision number and omit all previous revisions. Add revision note (e.g., REDRAWN, GENERAL CHANGE OF DELINEATION or, REDRAWN DUE TO CONDITION OF ORIGINAL). Add signature of draftsman and date. Complete Form BD-9300-051, Figure 6.

C. Superseding a preliminary (unapproved) drawing with a drawing of the same drawing number.

1. For the superseded drawing - Destroy the original.

2. For the new drawing - Complete title block as for any new drawing. Form BD-9300-051 not required.

D. Voided Drawings

1. For the voided drawing - Print VOID near the title block. Sign name and date below. Complete Form BD-9300-051 (08-87), Figure 6. Deliver the original tracing with the completed form to Record Storage/Retrieval and Microfilming Group. (Voided drawings are removed from the active data base.)

The following change(s) made to:

☐ Drawing Number _____ Sht. _____
Date_____ Rev. No. _____ is VOIDED

Reasons for Voiding_____ Sht. _____
Date _____ Rev No. _____

☐ Drawing Number _____ Sht. _____
Date_____ Rev. No. _____
is superseded by
Drawing Number _____ Sht. _____ Date_____
Rev. No. _____ (New Original)

☐ Drawing Number _____ Sht. _____
Date_____ Rev. No. _____
Has been changed on
same original to
Drawing Number _____ Sht. _____ Date_____
Rev. No. _____ (New Original)

☐ Drawing Number _____ Change Index
_____ To _____

Change Index _____
To _____

☐ Drawing Number _____ Title Changed
To_____ To _____

| By | Authorized By | Contractor | Date |
|---|---|---|---|
| | | | |

Figure 6. Drawing Change Notice

E. Changed Drawing Numbers, Index Numbers or Building Numbers

Obtain new number. Remove the old number and add new number. Add the next higher revision number indicating the previous number in the description. Complete Form BD-9300-051, Figure 6. In addition, when a drawing number is changed, print FORMERLY DWG ___Old No.)___ in the vicinity of the title block using 1/4- inch high letters.

F. Changed Title

When it is necessary to change the title of an approved drawing, apply all rules applicable to drawing titles, add next higher revision number indicating previous title in the description and complete Form BD-9300-051, Figure 6. The completed form accompanies the revised original when it is submitted to Records Storage/Retrieval and Microfilming Group.

## 14.0 DRAWING CONTROL

14.0.1 Approved drawings shall be transmitted to Records Storage/Retrieval and Microfilming Group for reproduction, distribution, microfilming and storage.

14.0.2 The record copy of all engineering drawings is the silver halide microfilm aperture card. The original engineering drawing is a lifetime retainable document and requires special handling for retention and protection.

14.0.3 A list of persons authorized to retrieve approved drawings is provided to Record Storage/Retrieval and Microfilming Group by the respective company managements.

14.0.4 For DOE-RL managed projects, the DOE-RL Project Engineer shall approve the release of the design drawings for construction, by approving the operating contractor's document which releases the design drawings to Record Storage/Retrieval and Microfilming.

## 15.0 DRAWING INDEX NUMBERING SYSTEM

### 15.1 GENERAL

The Drawing Index is a system of numerical digits to identify drawings for storage and retrieval. The drawing file is maintained by Record Storage/Retrieval and Microfilming Group, Federal Building, Room 356, Richland, Washington. All drawings for work shall be indexed in accordance with this system and the number shown on the Title block of drawings before drawings are released and before reproduction.

### 15.2 INDEX SYSTEM

The complete index number comprises 4 or 6 numerical digits: Two for the primary subject, 00 to 99; two for the secondary subject, 01 to 99, and two for the tertiary subject, 01 to 99. Thus an index number might be 0804 - Architectural Equipment Location, or 590315 - Instrumentation System, Wiring Diagrams, Safety Circuits.

15.2.1 Primary Subject

| | | |
|---|---|---|
| 00 | - | Listing or Index |
| 01 through 07 | - | Civil |
| 08 through 14 | - | Architectural and Structural |
| 15 through 58 | - | Mechanical |
| 59 through 64 | - | Instrumentation |
| 65 | - | Electronics |
| 70 | - | Flow Diagrams |
| 71 through 81 | - | Electrical |
| 82 | - | Insulation and Heat Tracing |
| 83 | - | Blank |
| 84 through 88 | - | Piping |
| 89 | - | Heating, Ventilating, and Exhaust |
| 90 | - | Air Conditioning systems |
| 99 | - | Miscellaneous Equipment not Identifiable or Related to Assembled Equipment |

15.2.2 The primary subjects are further divided into details or secondary subjects, e.g., 0804, Architectural Equipment Locations, or 7005, Piping and Instrument Diagram-CLS. The 04 and 05 digits are added to denote the details.

15.2.3 The tertiary subjects, containing two digits, are used only in conjunction with the primary subjects, 49, 50, 59, 60, and 85 to indicate the type of drawing.

The complete 6-digit index number for a drawing showing a wiring diagram for safety circuits would be:

Instrumentation

Wiring Diagram

Safety Circuits

59 03 15

The number is written as 590315.

15.2.4 In some instances a drawing may contain two or more index categories, e.g., Cranes (3900) and Electrical Power Plans (7301), or it may apply to two buildings, e.g., 0405 and 4621E. In these instances, both index numbers and both building numbers shall be placed in the Title Block. For example:

0405/4621E 3900/7301

15.2.5 Spare numbers are retained throughout the primary, secondary, and tertiary subject for future expansion. They are not to be used without approval of Record Storage/Retrieval and Microfilming Group.

15.2.6 Additional index numbers will be assigned by Record Storage/ Retrieval and Microfilming Group as required.

15.2.7 The following pages of Section 15.0 are a listing of the index by subject (alphabetical index) and by number.

## ALPHABETICAL INDEX FOR ENGINEERING DRAWINGS

| | |
|---|---|
| Accelerator - Instruments | 60--50 |
| Acidity - Instruments | 6016 |
| Acids, Steam, Air, Gas, Overhead Lines, Piping - Civil | 0300 |
| Acids, Steam, Air, Gas, Underground Lines - Civil | 0306 |
| Acids, Steam, Air, Gas, Outside Lines - Civil | 0308 |
| Air Conditioning Systems - Plans, Sections, Details - Air Conditioning | 9000 |
| Airport Runways, Roads, Walks, Parking Areas, Fences-Details and Profiles - Civil | 0200 |
| Alarm - Instrumentation | 60--43 |
| All Facilities Built into Pile for Testing Purposes - Mechanical | 2301 |
| All Test Equipment Where Operation of Pile is Essential to Operation of Test - Mechanical | 2300 |
| Alpha - Instrumentation | 60--51 |
| Aluminum Component Preparation Caps and Can Cleaning Machine, Methanol Still, Detrex Trichlor Still, Trays, Baskets, Racks - Mechanical | 490104 |
| Aluminum Uranium Fuel Elements and Related Components - Caps, Spires, Cans, Sleeves, Cores, Hollow Pieces, or Perfs, Dummies, Spaces, Wafers, Self-Supports - Mechanical | 490010 |
| Amplifier - Instrumentation | 60--52 |
| Analyzer - Instrumentation | 60--53 |
| Aqueous Make-Up - Instrumentation | 59--21 |
| Architectural-Elevations, Sections and Details-Miscellaneous Steel for Stairs, Railings, etc. - Architectural | 0801 |
| Architectural - Other (includes schedules, architectural equipment details, such as bins, signs, cabinets, laboratory equipment, etc.) - Architectural | 0802 |

| | |
|---|---|
| Architectural Doors-Shielding-Windows - Architectural | 0803 |
| Architectural Equipment Locations - Architectural | 0804 |
| Architectural-Plans-May Include Other 0800 Category - Architectural | 0800 |
| Area Electrical Key Maps - Civil | 0102 |
| Argon Systems - Instrumentation | 59--46 |
| Baskets, Tubes, Containers, and Component Parts - Mechanical | 500304 |
| Billet Core Preparation - Mechanical | 490110 |
| Biological and Thermal Shield T/C System - Instrumentation | 59--16 |
| Block Outs, Sleeves, Plans, and Details - Electrical | 7101 |
| Boring, Rock - Civil | 0600 |
| Burial Grounds Sodium Disposal Area - Civil | 0404 |
| Cable Schedules - Instrumentation | 5904 |
| Calculator - Instrumentation | 60--54 |
| Calculator-Power - Instrumentation | 59--14 |
| Calibrator - Instrumentation | 60--55 |
| Camera - Instrumentation | 60--56 |
| Canning Cycle Control, Flex-O-Timer, Valves, etc. - Mechanical | 490206 |
| Canning Furnace and Equipment-Canning Jacks, Canning Baskets, Tongs, Shields, Tools - Mechanical | 490204 |
| Capsule, Storage for Strontium - Mechanical | 4920 |
| Capsule, Storage for Cesium - Mechanical | 4921 |
| Cathodic Protection-Plans, Elevations, Sections, and Details - Electrical | 7801 |
| Cathodic Protection-Wiring Diagrams (elementary, connection and inter-connection) Block Diagrams - Electrical | 7802 |
| Cathodic Protection-Junction Pull Boxes, Ducts - Electrical | 7806 |

| | |
|---|---|
| Cell Equipment Fastened to Cell for Mounting Vessels, Nozzles, Dunnage, Y Pads, etc. - Mechanical | 2800 |
| Ceramic Fuel Elements and Related Components - Mechanical | 490030 |
| Chambers - Instrumentation | 60--57 |
| Charging Machines - Mechanical | 2400 |
| Checkers - Instrumentation | 60--58 |
| Chemical Storage - Instrumentation | 59--30 |
| Chemical Tanks and Piping - Mechanical | 490118 |
| Coextrusion Component and Billet Assembly - Mechanical | 490220 |
| Columns, Tanks, Dissolvers, Heat Exchangers, Vessels (no moving parts) - Mechanical | 2500 |
| Communication-Junction Pull Boxes, Ducts (this series includes sound powered telephone and central station system telephones) - Electrical | 7606 |
| Communications-Panel Schedules, Equipment, and Devices - Electrical | 7604 |
| Communications-Plans, Elevations, Sections, and Details - Electrical | 7601 |
| Communications-Station Schedules - Electrical | 7607 |
| Communications-Wiring Diagrams (elementary, connections and interconnections) Block Diagrams - Electrical | 7602 |
| Communications-Wire Run Lists, Conduit, Wire Schedules, Cables - Electrical | 7605 |
| Component Electronic or Ultrasonic Testing-Transformation Tests, Sort Tester, etc. - Mechanical | 490304 |
| Component Mechanical Inspection-Pickle Inspection, Statistical Sampling, Recovered Core Inspection, Gauges - Mechanical | 490302 |
| Component of a Mixture - Instrumentation | 6020 |
| Composite-Overhead and Underground Piping - Civil | 0305 |
| Concrete Structural-Plans - Architectural | 0900 |

| | |
|---|---|
| Concrete Structural-Elevations, Sections, and Details - Architectural | 0901 |
| Concrete Structural-Shop, Reinforcing and Pour Drawings - Architectural | 0902 |
| Concrete Structural-Penetrations, Sleeve and Blockout - Architectural | 0903 |
| Concrete Structural-Penetrations, Embedment Schedules - Architectural | 0904 |
| Concrete Structural-Demolition - Architectural | 0905 |
| Conductivity - Instrumentation | 6008 |
| Containers for Disposal of Contaminated Equipment (does not include metal handling buckets and shipping casks) - Mechanical | 2302 |
| Control Rod, Absorber, Drive, Disconnect - Mechanical | 1907 |
| Control Rods - Mechanical | 1905 |
| Control Rods-Assembly Tooling and Handling Equipment - Mechanical | 1906 |
| Control Room and Miscellaneous Instrumentation - Instrumentation | 59--44 |
| Control System-Poison - Mechanical | 1902 |
| Control System-Horizontal Rods-Mechanical | 1900 |
| Control System-Vertical Rods - Mechanical | 1901 |
| Controller - Instrumentation | 60--41 |
| Core Preparation-Pickle Machine-Etch Machine, Nickel Plating - Mechanical | 490102 |
| Counters - Instrumentation | 60--59 |
| Cranes (all types) - Mechanical | 3900 |
| Criticality Monitoring Systems - Electrical | 7900 |
| Density - Instrumentation | 6005 |
| Differential Pressure - Instrumentation | 6015 |
| Digital Data Handling and Display, System 91 - Instrumentation | 59-61 |

| | |
|---|---|
| Discharging and Manipulator for Rear Face Work - Mechanical | 2401 |
| Dissolver Cells - Instrumentation | 59--19 |
| Dissolvers, Heat Exchangers, Vessels, Columns, Tanks (no moving parts) - Mechanical | 2500 |
| Duplex Furnace and Equipment-Ajax Induction Furnaces, Duplex Agitators, Agitator Baskets, Loader Shields, Tools - Mechanical | 490202 |
| Electrical Control-Junction Pull Boxes, Ducts (this series includes remote signaling door bells, buzzers, annunciators) - Electrical | 7506 |
| Electrical - Miscellaneous | 9902 |
| Electrical Control-Control Panel Arrangements, Signal Plans, Elevations, Sections, and Details - Electrical | 7501 |
| Electrical Control-Wiring Diagrams (elementary, connection and inter-connection) Block Diagrams - Electrical | 7502 |
| Electrical Control-Timing Charts - Electrical | 7503 |
| Electrical Control-Panel Schedules - Electrical | 7504 |
| Electrical Control-Wire Run Lists, Conduit, Cable and Wire Schedules - Electrical | 7505 |
| Electrical Control-Relay and Switch Schedules - Electrical | 7507 |
| Electrical Control-Control Equipment and Devices - Electrical | 7508 |
| Electrical Only-Cable Schedules - Electrical | 8005 |
| Electrical Only-Pole Line Details, Sag Curves - Electrical | 8003 |
| Electrical Only-Pole Schedules - Electrical | 8004 |
| Electrical Only-Transformer Schedules (this series includes all electrical maps other than the "Civil" map series) - Electrical | 8009 |
| Electrical Only-Wiring Diagrams (elementary, connection and inter-connection) Area One-Line Diagram - Electrical | 8002 |
| Electrical-Outside Lines - Civil | 0107 |
| Electrical-General, Wiring Requirements, Electrical | 7100 |

| | |
|---|---|
| Electrical Utilities Transmission and Distribution Operating Drawings - Electrical | 8000 |
| Electrical-Maps, Plot Plans, Plans and Profiles, Plans, Elevations, Sections, and Details (includes substation structures) - Electrical | 8001 |
| Electronics-General - Electronics | 6500 |
| Electronics-Drill and Trim - Electronics | 6505 |
| Elevators - Mechanical | 3901 |
| Emergency Power Generation Equipment (mechanical) - Mechanical | 4050 |
| Engineering Diagrams - Flow Diagrams | 7001 |
| Equipment Arrangements - Instrumentation | 5907 |
| Equipment Located in Hoods, Caves, Enclosure Where Operation is Remote - Mechanical | 4705 |
| Equipment Requirements - Instrumentation | 5906 |
| Equipment Support, Storage Racks, Hand Trucks, Tables, etc. - Mechanical | 500306 |
| Ex-Vessel Irradiated Fuel Handling Equipment - Mechanical | 2452 |
| Excavation and Finishing Grading - Civil | 0111 |
| Experimental Test Facilities Excluding Fuel Specimens - Mechanical | 2303 |
| Extractors - Instrumentation | 59--34 |
| Equipment Outline and Interface Requirement - Mechanical | 1575 |
| - Instrumentation | 5975 |
| - Electrical | 7575 |
| - Piping | 8575 |
| Extrusion Presses, Containers, Dies, and Tools - Mechanical | 490222 |
| Fences, Airport Runways, Roads, Walks, Parking Areas-Details and Profiles - Civil | 0200 |
| Fire Alarm and Telephone-Outside Lines - Civil | 0108 |
| Fire Alarm-Panel Schedules - Electrical | 7704 |

| | |
|---|---|
| Fire Alarm-Junction Pull Boxes, Ducts - Electrical | 7706 |
| Fire Alarm Plans, Elevations, Sections, and Details - Electrical | 7701 |
| Fire Alarm-Wire Run Lists, Conduit, Cable and Wire Schedules - Electrical | 7705 |
| Fire Alarm-Wiring Diagrams (elementary, connection, and inter-connection) Block Diagrams - Electrical | 7702 |
| Fire Protection Sodium Systems - Mechanical | 3000 |
| Flow - Instrumentation | 6002 |
| Flow and Temperature Monitor Data Logging System - Instrumentation | 59--40 |
| Flux Monitor System 95 - Instrumentation | 59--78 |
| Fuel Closed Loop In-Reactor Assembly - Mechanical | 4925 |
| Fuel Driver Assembly - Mechanical | 4922 |
| Fuel Element Production-Component Supporting Facilities (not for new drawings) - Mechanical | 4906 |
| Fuel Element Production-Special Items-Stampers, Tables, Bins Mechanical Counters - Mechanical | 4907 |
| Fuel Element Testing, Bond and Pen Tester, Autoclave Test, Bubble Tester - Mechanical | 490308 |
| Fuel Element Inspection-Radiography Inspection, Final Inspection Station, Weld Inspection, Length, Brace and Contour Inspection, Film Developing Equipment - Mechanical | 490306 |
| Fuel Element Production-General - Mechanical | 4900 |
| Fuel Element Production-Cleaning and Preparation - Mechanical | 4901 |
| Fuel Element Production-Testing and Inspection - Mechanical | 4903 |
| Fuel Element Production-Component Salvage and Recover: Scrap Recovery - Mechanical | 4904 |
| Fuel Element Production-Component Testing (not for new drawings) - Mechanical | 4905 |
| Fuel Failure Monitoring System 94 - Instrumentation | 59--77 |

| | |
|---|---|
| Fuel Handling-Irradiated (transfer, etc.) - Mechanical | 2450 |
| Fuel Material Open Test Assembly - Mechanical | 4931 |
| Fuel Monitor - Instrumentation | 59--07 |
| Fuel Oil Storage and Lines - Civil | 0307 |
| Fuel Open Test Assembly - Mechanical | 4934 |
| Fuel Special Purpose Assembly - Mechanical | 4929 |
| Fuels Development - Mechanical | 5003 |
| Fuel Element Production-Fuel Element Assembly Equipment - Mechanical | 4902 |
| Gas, Acids, Steam, Air, Overhead Lines-Piping - Civil | 0300 |
| Gas, Acids, Steam, Air Underground Lines - Civil | 0306 |
| Gas, Acids, Steam, Air Outside Lines - Civil | 0308 |
| Gas Seal Tools - Mechanical | 2901 |
| Gas Storage Tanks - Mechanical | 2504 |
| Gases and Water-Outside Lines - Civil | 0104 |
| General - Instrumentation | 60--39 |
| General-Maps - Civil | 0109 |
| Guard Vessel-Exterior Shields and Other Cavity Components - Mechanical | 1553 |
| Heat Exchangers, Vessels, Columns, Tanks, Dissolvers, (no moving parts) - Mechanical | 2500 |
| Heating and Ventilating Equipment Location - Heating, Venting, Exhaust | 8901 |
| Heating and Ventilating Schedules, Notes - Heating, Venting, Exhaust | 8902 |
| Helium Systems - Instrumentation | 59--47 |
| Hoods, Caves, Enclosures (remote operated equipment) - Mechanical | 4700 |

| | |
|---|---|
| Humidity - Instrumentation | 6006 |
| Impact Wrenches - Mechanical | 4500 |
| In-Vessel Fuel Handling Equipment - Mechanical | 2451 |
| Indicator - Instrumentation | 60--42 |
| Indicator Controller Alarm - Instrumentation | 60--45 |
| Indices - Electrical | 7109 |
| Instrument - Miscellaneous | 9903 |
| Instrument Engineering Diagrams - Flow Diagrams | 7002 |
| Instrumentation Aux. Liquid Metal System, SDD No. 81 - Instrumentation | 59--57 |
| Instrumentation Closed Loop, SDD No. 61 - Instrumentation | 59--56 |
| Instrumentation-General, Index, Notes, Listings - Instrumentation | 5900 |
| Instrumentation Heating and Venting, SDD No. 25 - Instrumentation | 59--51 |
| Instrumentation Heat Transport System, SDD No. 51 - Instrumentation | 59--55 |
| Instrumentation Inert Gas Receiving and Processing, SDD No. 82 - Instrumentation | 59--58 |
| Instrumentation Impurity Monitoring and Analysis, SDD No. 85 - Instrumentation | 59--59 |
| Instrumentation Plant Fire Protection, SDD No. 25 - Instrumentation | 59--52 |
| Instrumentation Radioactive Waste, SDD No. 24 - Instrumentation | 59--50 |
| Instrumentation Reactor Containment, SDD No. 27 - Instrumentation | 59--53 |
| Instrumentation Reactor SDD No. 31 - Instrumentation | 59--54 |
| Instrumentation Reactor Plant Control, SDD No. 90 - Instrumentation | 59--60 |
| Instrumentation Service Piping, SDD No. 23 - Instrumentation | 59--49 |
| Instruments-General - Instrumentation | 6000 |

| | |
|---|---|
| Interface - Instrumentation | 6017 |
| Integrator - Instrumentation | 60--46 |
| Internal Structural Component Including Reactor Head - Mechanical | 1551 |
| Internals, Nonstructural Items Excluding Controls and Fuels Associated Equipment - Mechanical | 1552 |
| Junction Pull Boxes, Ducts - Electrical | 7906 |
| Key Area Maps - Civil | 0101 |
| Laboratory Apparatus - Mechanical | 4800 |
| Layout or Plot Plans-General Facility - Civil | 0110 |
| Level - Instrumentation | 6003 |
| Lighting-Junction Pull Boxes, Ducts - Electrical | 7406 |
| Lighting-Panel, Schedules - Electrical | 7404 |
| Lighting-Plans, Elevations, Sections, and Details - Electrical | 7401 |
| Lighting-Wire Run Lists, Conduit, Cable and Wire Schedules - Electrical | 7405 |
| Lighting-Wiring Diagrams (elementary, connections and interconnections) - Electrical | 7402 |
| Logic Diagram - Flow Diagrams | 7003 |
| Machines and Equipment (noncontaminated zones) Shop or General Purpose - Mechanical | 2700 |
| Machines and Equipment-Contaminated Zones - Mechanical | 4750 |
| Machines, Mechanisms, and Dies for Forming, Fabricating or Assembling - Mechanical | 500301 |
| Machines-Process: Agitators, Pumps, Scales, Pulse Generators (moving parts) - Mechanical | 2600 |
| Machining, Forming, Including Tooling-Acme Gridley Cut-Off Lathes: Monarch Lathe - Mechanical | 490210 |
| Main Data-Logging System - Instrumentation | 59--41 |

| | |
|---|---|
| Manipulators - Mechanical | 4702 |
| Maps-Area Key - Civil | 0101 |
| Maps-Electrical, Plot Plans, Plans and Profiles, Plans, Elevations, Sections, and Details (includes substation structures) - Electrical | 8001 |
| Maps-General - Civil | 0109 |
| Maps-Project Key - Civil | 0100 |
| Maps-Area Electrical Key - Civil | 0102 |
| Material Handling Equipment-Conveyors, Pallets, Monorail Systems, Casks, Buckets - Mechanical | 3902 |
| Material Lists-General - Electrical | 7108 |
| Mechanical - Miscellaneous | 9901 |
| Mechanical Equipment for Treatment of Water (other than piping) - Mechanical | 4300 |
| Mechanisms for Testing, Inspection, Calibration, etc. - Mechanical | 500302 |
| Metal Solution Feed Preparation - Instrumentation | 59--20 |
| Metallurgical Test Materials, Destructive and Nondestructive Mechanical | 4727 |
| Miscellaneous Equipment Pieces or Parts-Not Identifiable as Electrical, Instrument, or Mechanical Category; Unrelated to the Assembled Equipment - Miscellaneous | 9900 |
| Miscellaneous Survey Data-Columbia River Data, Civil Data - Civil | 0501 |
| Moderator-Other than Graphite - Mechanical | 1600 |
| Moderator-Graphite - Mechanical | 1601 |
| Moisture - Instrumentation | 6007 |
| Moisture Detection - Instrumentation | 59--45 |
| Motor Vehicles and Modifications - Mechanical | 4101 |
| Nose and Cutoff Preparation - Mechanical | 490114 |

| | |
|---|---|
| Open Test Assembly-Post Irradiation - Mechanical | 4933 |
| Open Test Assembly-Tooling - Mechanical | 4935 |
| Open Test Assembly-Materials - Mechanical | 4936 |
| Off-Gas Treatment - Instrumentation | 59--33 |
| One-Line Diagrams - Electrical | 7201 |
| Optical - Instrumentation | 59--38 |
| Optical Systems and Devices (including TV devices) - Mechanical | 5000 |
| Other - Mechanical | 490116 |
| Other Fuel Elements, as Cluster - Mechanical | 490050 |
| Other, Including Triple Dip, Hot Press, Heat Treatment, Hydraulic Press, Heavy-Duty Resistance Furnaces - Mechanical | 490224 |
| Outside Catch Tanks - Instrumentation | 59--31 |
| Outside Lines - Electrical - Civil | 0107 |
| Outside Lines-Sewers and Piping - Civil | 0105 |
| Outside Lines-Steam, Air, Gas, and Acids - Civil | 0308 |
| Outside Lines-Telephone and Fire Alarm - Civil | 0108 |
| Outside Lines-Water and Gases - Civil | 0104 |
| Overhead Lines-Piping-Including Steam, Air, Gas, and Acids - Civil | 0300 |
| Overhead Piping Steam Condensate Air and Chemicals - Civil | 0106 |
| Overhead and Underground Piping Composite - Civil | 0305 |
| Panel Schedules - Electrical | 7904 |
| Panel Schedules, Wire Run Lists - Instrumentation | 5902 |
| Parking Area, Fences, Airport Runways, Roads, Walks-Details and Profiles - Civil | 0200 |
| Partition - Instrumentation | 59--25 |
| Penetration, Loader, Baskets - Mechanical | 490108 |

| | |
|---|---|
| Periscopes - Mechanical | 5002 |
| Personnel Radiation Monitor - Instrumentation | 59--05 |
| Pile Motion - Instrumentation | 59--13 |
| Piping and Mechanical Sections B1-2-3-4 - Piping | 855302 |
| Piping and Sewers-Outside Lines - Civil | 0105 |
| Piping-Steam-All Others - Piping | 8502 |
| Piping-Fire Extinguishing Gas, Vapor, Chemical or Powder - Piping | 8515 |
| Piping and Instrument Diagram - Flow Diagrams | 7004 |
| Piping and Instrument Diagram CLS - Flow Diagrams | 7005 |
| Piping-Jumpers - Piping | 8405 |
| Piping and Mechanical Sections A1-2-3 - Piping | 855301 |
| Piping and Mechanical Sections C1-2-3-4-5-6-7-8-9 - Piping | 855303 |
| Piping and Mechanical Sections D1-2-3-4-5-6 - Piping | 855304 |
| Piping and Mechanical Sections E1-2 - Piping | 855305 |
| Piping and Mechanical Sections F1-2 - Piping | 855306 |
| Piping and Mechanical Sections G1-2-3 - Piping | 855307 |
| Piping and Mechanical Sections H1-2-3-4-5-6-7 - Piping | 855308 |
| Piping and Mechanical Sections J1-2 - Piping | 855309 |
| Piping and Mechanical Sections K1-2-3-4-5-6-7 - Piping | 855310 |
| Piping and Mechanical Sections L1-2-3 - Piping | 855311 |
| Piping NA Reactor Primary - Piping | 8550 |
| Piping-Process-All Other to Include: Buried or Exposed Inside Piping, Wash Down, Fog Spray, Solvent Blend, Slug Storage, Hot Shop, Utility Outlets Relative to Process Piping: Also Jets, Valves, Miscellaneous Process Piping - Piping | 8407 |
| Piping-Process Water-Front or Rear Face - Piping | 8401 |

| | |
|---|---|
| Piping-Service (includes Grouped Services, viz., Water, Air Steam Drains, etc.; Show on the Same Drawing) - Piping | 8510 |
| Piping-Acids and Chemicals - Piping | 8503 |
| Piping-Cell Arrangements (includes Diversion Boxes and Trenches) - Piping | 8404 |
| Piping-Compressed Air - Piping | 8505 |
| Piping-Cover Gas, Argon - Piping | 8519 |
| Piping-Demineralized and Distilled Water - Piping | 8513 |
| Piping-Drains and Waste Inside-Other than Process - Piping | 8509 |
| Piping-Fuel Oil - Piping | 8514 |
| Piping-Gas Decay and Disposal - Piping | 8504 |
| Piping-Hangers, Support, Anchors, Guards - Piping | 8511 |
| Piping-Heating and Cooling Water - Piping | 8516 |
| Piping-Heating and Cooling NA and NAK, Insulating Requirements - Piping | 8517 |
| Piping-Heating and Cooling Gas - Piping | 8518 |
| Piping-Hydraulic - Piping | 8512 |
| Piping-Isometric - Piping | 8548 |
| Piping-NA All Other - Piping | 8554 |
| Piping-NA Closed Loop - Piping | 8553 |
| Piping-NA Piping Components, Traps, Cold, Freeze and Vapor - Piping | 8556 |
| Piping-NA Receiving and Processing - Piping | 8552 |
| Piping-NAK Reactor Secondary - Piping | 8551 |
| Piping-Process Water - Piping | 8400 |
| Piping-Process Water-Foundation Cooling, Shielding, Horizontal Rods, Risers, and Crossheaders - Piping | 8402 |

| | |
|---|---|
| Piping-Process Water-Valve Pits or Tunnels - Piping | 8403 |
| Piping-Process-Operating or Sample Galleries - Piping | 8406 |
| Piping-Propane - Piping | 8520 |
| Piping-Radioactive Liquid Waste (water) - Piping | 8409 |
| Piping-Reference Drawings - Piping | 8576 |
| Piping-Refrigeration, Argon - Piping | 8507 |
| Piping-Special Loop - Piping | 8555 |
| Piping-Sprinkler Systems - Piping | 8508 |
| Piping-Steam Radiators, Coils, and Condensate - Piping | 8501 |
| Piping-Vacuum - Piping | 8506 |
| Piping-Water Drains and Waste (noncontaminated) - Piping | 8408 |
| Piping-Water-Other than Process - Piping | 8500 |
| Plans, Elevations, Sections, and Details - Electrical | 7901 |
| Plans, Sections, Elevations, and Details (including conduit and tubing) - Instrumentation | 5901 |
| Plant Protection System 99 - Instrumentation | 59--80 |
| Plutonium Decontamination - Instrumentation | 59--26 |
| Plutonium Fuel Elements and Related Components - Mechanical | 490040 |
| Poison Column and Associated Items - Mechanical | 2250 |
| Power House Equipment (associated with steam generation) - Mechanical | 4000 |
| Power Plant Controls - Instrumentation | 59--18 |
| Power-Electrical Equipment (motor, heaters, etc.) - Electrical | 7308 |
| Power-Ground Junction, Pull Boxes, Ducts, Raceways - Electrical | 7306 |
| Power-Lightning Protection - Electrical | 7309 |

| | |
|---|---|
| Power-Motor Control Centers, Switchgear, Transformers and Control Panels - Electrical | 7303 |
| Power-Motor and Control Station Schedules - Electrical | 7307 |
| Power-Panel Schedules - Electrical | 7304 |
| Power-Plans, Elevations, Sections, and Details (including grounding, block diagrams, and engineering diagrams) - Electrical | 7301 |
| Power-Wire Run Lists, Conduit, Cable, Wire Schedules - Electrical | 7305 |
| Power-Wiring Diagrams (elementary, connection and interconnection) - Electrical | 7302 |
| Precycle - Instrumentation | 59--24 |
| Pressure - Instrumentation | 6004 |
| Pressure Monitor - Instrumentation | 59--08 |
| Primary Elements - Instrumentation | 60--49 |
| Primary and Secondary Loop Instrumentation - Instrumentation | 59--43 |
| Process Flow Diagrams - Flow Diagrams | 7000 |
| Process Gas - Instrumentation | 59--12 |
| Process Monitoring and Control Containment System 93-1 - Instrumentation | 59--63 |
| Process Monitoring and Control Heat Transport System 93-2 - Instrumentation | 59--64 |
| Process Monitoring and Control Closed Loop System 93-3 - Instrumentation | 59--65 |
| Process Monitoring and Control Service Piping System 93-4 - Instrumentation | 59--66 |
| Process Monitoring and Control Radioactive Waste System 93-5 - Instrumentation | 59--67 |
| Process Monitoring and Control Heating and Vent System 93-6 - Instrumentation | 59--68 |
| Process Monitoring and Control Fire Protection System 93-7 - Instrumentation | 59--69 |

| | |
|---|---|
| Process Monitoring and Control Inert Gas Receiving and Process System 93-8 - Instrumentation | 59--70 |
| Process Monitoring and Control Aux. Liquid Metal System 93-10 - Instrumentation | 59--71 |
| Process Monitoring and Control Refueling System 93-11 - Instrumentation | 59--72 |
| Process Monitoring and Control Maintenance System 93-12 - Instrumentation | 59--73 |
| Process Monitoring and Control Leak Detection System 93-13 - Instrumentation | 59--74 |
| Process Monitoring and Control Annunciator System 93-14 - Instrumentation | 59--75 |
| Process Monitoring and Control Piping and Equipment Electrical Heating System 93-15 - Instrumentation | 59--76 |
| Process Radiation Monitor - Instrumentation | 59--04 |
| Process Tubes - Mechanical | 2200 |
| Process Water - Instrumentation | 59--11 |
| Process Water Monitor and Sampling - Instrumentation | 59--10 |
| Production of Power Reactor - Mechanical | 1501 |
| Products of Combustion Detectors - Instrumentation | 59--48 |
| Project Key Map - Civil | 0100 |
| Quench Machines, Tanks, and Equipment - Mechanical | 490208 |
| Radiation - Instrumentation | 6014 |
| Radiation Dose Rates - Mechanical | 1802 |
| Radiation Monitoring System 96 - Instrumentation | 59--79 |
| Railroad Equipment and Rolling Stock Including Cask Car - Mechanical | 4100 |
| Railroad Structures and Details - Civil | 0202 |
| Railroads-Plans, Details, and Profiles - Civil | 0201 |

| | |
|---|---|
| Reactor Capsules-Metallurgical Tests - Mechanical | 4706 |
| Reactor Control Rod and Drive Mechanism - Mechanical | 1504 |
| Reactor Core Restraints - Mechanical | 1506 |
| Reactor Ex-Vessel Fuel Handling Equipment - Mechanical | 1510 |
| Reactor Fuel Transfer - Mechanical | 1502 |
| Reactor Gas Seal, Including Boots, Strips, etc. - Mechanical | 2900 |
| Reactor In-Vessel Handling and Drive Mechanism - Mechanical | 1505 |
| Reactor In-Vessel Storage Module - Mechanical | 1507 |
| Reactor Inner Shield - Mechanical | 1509 |
| Reactor Instrument Tree and Drive Mechanism - Mechanical | 1503 |
| Reactor Outer Shield - Mechanical | 1508 |
| Reactor and Vessel Instrumentation System 92 - Instrumentation | 59--62 |
| Reactor Vessels-Arrangement Plans, Elevations, and Sections - Mechanical | 1550 |
| Recorder - Instrumentation | 60--40 |
| Recorder-Controller Alarm - Instrumentation | 60--44 |
| Recovered Acid Storage - Instrumentation | 59--28 |
| Reflector Assembly - Mechanical | 4937 |
| Remotely Operated Connectors - Mechanical | 4501 |
| Roads, Walks, Parking Area, Fences, and Airport Runways-Details and Profiles - Civil | 0200 |
| Rock, Boring - Civil | 0600 |
| Rod Control System - Instrumentation | 59--42 |
| Rods Safety (SR) - Mechanical | 1909 |
| Rods Scram (CR) - Mechanical | 1911 |
| Safety Circuits - Instrumentation | 59--15 |

| | |
|---|---|
| Samplers Process, Air, Stack Gas, etc. - Mechanical | 4600 |
| Schematic Diagrams - Instrumentation | 5908 |
| Scope - Miscellaneous | 99--01 |
| Seismoscope - Instrumentation | 59--37 |
| Self-Actuated Regulating Valve - Instrumentation | 60--47 |
| Sewer Lines-Process - Civil | 0304 |
| Sewer Lines-Sanitary - Civil | 0303 |
| Sewer and Piping Outside Lines - Civil | 0105 |
| Shielding-Thermal - Mechanical | 1801 |
| Shielding-Biological - Mechanical | 1800 |
| Shipping Containers-Boxes, Pallets - Mechanical | 5010 |
| Sleeve Preparation-Sleeve Cleaning Machine, Baskets - Mechanical | 490108 |
| Sodium Disposal Area Burial Grounds - Civil | 0404 |
| Sodium Processing Tanks - Mechanical | 2505 |
| Sodium Storage Tanks - Mechanical | 2501 |
| Sodium Systems - Instrumentation | 59--39 |
| Solvent Treatment - Instrumentation | 59--22 |
| Sound - Instrumentation | 6019 |
| Special Tools - Miscellaneous | 99--03 |
| Special Tools, Wrenches, etc. - Mechanical | 500303 |
| Specific Gravity - Instrumentation | 6012 |
| Speed - Instrumentation | 5009 |
| Stack Sampling - Instrumentation | 59--35 |
| Steam, Air, Gas, and Acids Outside Lines - Civil | 0308 |
| Steam, Air, Gas, and Acids Overhead Lines Piping - Civil | 0300 |

| | |
|---|---|
| Steam, Air, Gas, and Acids Underground Lines - Civil | 0306 |
| Steel Structural-Other Stop Logs, Underwater Doors, Trap Gates, Special Nonshield Doors, Allowable Floor Load Data - Architectural | 1100 |
| Steel Structural-Plans, Details, Schedules, Equipment Supports, Platforms - Architectural | 1000 |
| Steel Structural-Shop or Fabrication Drawings - Architectural | 1001 |
| Steel Structural-Penetrations - Architectural | 1002 |
| Steel Structural-Bench Marks and Control - Architectural | 1101 |
| Studies-General - Electrical | 7107 |
| Tank Farms - Instrumentation | 59--32 |
| Tanks, Dissolvers, Heat Exchangers, Vessels, Columns (no moving parts) - Mechanical | 2500 |
| Telephone and Fire Alarm Outside Lines - Civil | 0108 |
| Temperature - Instrumentation System | 59--09 |
| Temperature - Instrumentation General | 6001 |
| Test Hole Facilities - Instrumentation | 59--36 |
| Test or Special Purpose Reactor - Mechanical | 1500 |
| Testing Equipment-Destructive - Mechanical | 4703 |
| Testing Equipment-Nondestructive - Mechanical | 4704 |
| Third Safety System-Ball 3X - Mechanical | 2100 |
| Tools and Equipment for Decontamination - Mechanical | 2204 |
| Tools and Equipment for Horizontal Control Rods and Vertical Safety Rods Renovation - Mechanical | 1903 |
| Tools and Equipment for Overboring Program - Mechanical | 2205 |
| Tools and Equipment Includes Tool Dolly - Mechanical | 2201 |
| Tools and Equipment for Process Tube Growth Correction - Mechanical | 2202 |

| | |
|---|---|
| Tools and Equipment Necessary to Operate Equipment in Hoods, Caves, and Enclosures - Mechanical | 4701 |
| Topography - Civil | 0103 |
| Transmitters - Instrumentation | 60--48 |
| Tubing Run List - Instrumentation | 5905 |
| Underground and Overhead Piping-Composite - Civil | 0305 |
| Underground Lines, Steam, Air, Gas, and Acids - Civil | 0306 |
| Underground Process Water-Piping - Civil | 0302 |
| Underground Sanitary Water-Piping - Civil | 0301 |
| Underwater Monitor - Instrumentation | 59--06 |
| UNH Storage - Instrumentation | 59--29 |
| Uranium Decontamination - Instrumentation | 59--27 |
| Vacuum Chambers and Component Parts and Equipment - Mechanical | 500305 |
| Vendor Information - Miscellaneous | 99--02 |
| Ventilation Controls - Instrumentation | 59--17 |
| Ventilation Exhaust and Heating System-Plans, Section, Details - Heating, Venting, Exhaust | 8900 |
| Vessels, Columns, Tanks, Dissolvers, Heat Exchangers (no moving parts) - Mechanical | 2500 |
| Vibration - Instrumentation | 6018 |
| Viewing Windows and Ports - Mechanical | 5001 |
| Viscosity - Instrumentation | 6010 |
| Walks, Parking Areas, Fences, and Airport Runways, Roads-Details and Profiles - Civil | 0200 |
| Waste Disposal Systems-Sanitary: Septic Tanks, Tile Fields, Sewage Disposal Plant, Open Ditches, and Surface Drainage and Storm Drainage - Civil | 0400 |

| | |
|---|---|
| Waste Disposal Systems and Burial Grounds-Process: Cribs, Scavenging Impounding Areas, and Waste Facility Maps - Civil | 0401 |
| Waste Line Encasements - Diversion Boxes and Related Components - Civil | 0403 |
| Waste Storage-Tank Farms (including all drawings, except electrical and instrumentation and jumpers) - Civil | 0402 |
| Waste Storage Process Underground Tanks - Civil | 0405 |
| Waste Storage Tanks Contaminated Waste - Mechanical | 2502 |
| Waste Treatment - Instrumentation | 59--23 |
| Water and Gases Outside Lines - Civil | 0104 |
| Weight - Instrumentation | 6011 |
| Weight Factor - Instrumentation | 6013 |
| Welders, Buffers and Controls, Collects, Vacuum Welders - Mechanical | 490212 |
| Wells, Well Fields-Irrigation Ditches and Water Supply - Civil | 0500 |
| Wire Run Lists, Conduit, Cable and Wire Schedules, - Electrical | 7905 |
| Wiring Diagrams Elementary Connection and Inter-Connection Block Diagrams - Electrical | 7902 |
| Wiring Diagrams-Connections and Inter-Connections Elementary - Instrumentation | 5903 |
| Zircaloy Component Preparation - Mechanical | 490112 |
| Zircaloy Uranium Fuel Elements, Billets, and Related Components - Cores, Copper or Zircaloy Components, End Caps or Plates, Brazing Rings, Self-Supports, Mixers, Perf, Dummies - Mechanical | 490020 |

## NUMERICAL INDEX FOR ENGINEERING DRAWINGS

| | |
|---|---|
| 0000 | Drawing List |
| **Civil** | |
| 0100 | Project Key Map |
| 0101 | Area Key Maps |
| 0102 | Area Electrical Key Maps |
| 0103 | Topography |
| 0104 | Outside Lines-Water and Gases |
| 0105 | Outside Lines-Sewers and Piping |
| 0106 | Overhead Piping, Steam Condensate, Air, and Chemicals |
| 0107 | Outside Lines-Electrical |
| 0108 | Outside Lines-Telephone and Fire Alarm |
| 0109 | General Maps |
| 0110 | Layout or Plot Plans-General Facility |
| 0111 | Excavation and Finishing Grading |
| 0200 | Roads, Walks, Parking Areas, Fences, and Airport Runways-Details and Profiles |
| 0201 | Railroads-Plans, Details, and Profiles |
| 0202 | Railroad Structures and Details |
| 0300 | Overhead Lines-Piping-Including Steam, Air, Gas, and Acids |
| 0301 | Underground Sanitary Water-Piping |
| 0302 | Underground Process Water-Piping |
| 0303 | Sewer Lines-Sanitary |
| 0304 | Sewer Lines-Process |
| 0305 | Composite of Overhead and Underground Piping |
| 0306 | Underground Lines, Steam, Air, Gas, and Acids |

**Civil** (Continued)

| | |
|---|---|
| 0307 | Fuel Oil Storage and Lines |
| 0308 | Outside Lines-Steam, Air, Gas, and Acids |
| 0400 | Waste Disposal System-Sanitary: Septic Tanks, Tile Fields, Sewage Disposal Plant, Open Ditches, and Surface Drainage and Storm Drainage |
| 0401 | Waste Disposal Systems and Burial Grounds-Process: Cribs, Scavenging Impounding Areas and Waste Facility Maps |
| 0402 | Waste Storage-Tank Farms (including all drawings, except electrical and instrumentation and jumpers) |
| 0403 | Waste Line Encasements-Diversion Boxes and Related Components |
| 0404 | Sodium Disposal Area-Burial Grounds |
| 0405 | Waste Storage Process Underground Tanks |
| 0500 | Wells, Well Fields-Irrigation Ditches and Water Supply |
| 0501 | Miscellaneous Survey Data-Columbia River Data, Civil Data |
| 0600 | Rock Boring |

**Architectural and Structural**

| | |
|---|---|
| 0800 | Architectural-Plans-May include other 0800 Category |
| 0801 | Architectural-Elevations, Sections and Details-Miscellaneous Steel for Stairs, Railings, etc. |
| 0802 | Architectural-Other (includes schedules, architectural equipment details, such as bins, signs, cabinets, laboratory equipment, etc.) |
| 0803 | Architectural Doors-Shielding-Windows |
| 0804 | Architectural-Equipment Locations |
| 0900 | Concrete Structural-Plans |
| 0901 | Concrete Structural-Elevations, Sections, and Details |

**Architectural and Structural** (Continued)

| | |
|---|---|
| 0902 | Concrete Structural-Shop, Reinforcing and Pour Drawings |
| 0903 | Concrete Structural-Penetrations, Sleeve and Blockout |
| 0904 | Concrete Structural-Penetrations, Embedment Schedules |
| 0905 | Concrete Structural-Demolition |
| 1000 | Steel Structural-Plans, Details, Schedules, Equipment Supports, Platforms |
| 1001 | Steel Structural-Shop or Fabrication Drawings |
| 1002 | Steel Structural-Penetrations |
| 1100 | Steel Structural-Other Stop Logs, Underwater Doors, Trap Gates, Special Nonshield Doors, Allowable Floor Load Data |
| 1101 | Steel Structural-Bench Marks and Control |

**Mechanical**

| | |
|---|---|
| 1500 | Test or Special Purpose Reactor |
| 1501 | Production or Power Reactor |
| 1502 | Reactor Fuel Transfer |
| 1503 | Reactor Instrument Tree and Drive Mechanism |
| 1504 | Reactor Control Rod and Drive Mechanism |
| 1505 | Reactor In-Vessel Handling and Drive Mechanism |
| 1506 | Reactor Core Restraints |
| 1507 | Reactor In-Vessel Storage Model |
| 1508 | Reactor Outer Shield |
| 1509 | Reactor Inner Shield |
| 1510 | Reactor Ex-Vessel Fuel Handling Equipment |
| 1550 | Reactor Vessels-Arrangements Plans, Elevations, and Sections |
| 1551 | Internal Structural Components Including Reactor Head |

**Mechanical** (Continued)

| | |
|---|---|
| 1552 | Internals, Nonstructural Items Excluding Controls and Fuel Associated Equipment |
| 1553 | Guard Vessel-Exterior Shields and Other Cavity Components |
| 1575 | Equipment Outline and Interface Requirement |
| 1600 | Moderator-Other than Graphite |
| 1601 | Moderator-Graphite |
| 1800 | Shielding-Biological |
| 1801 | Shielding-Thermal |
| 1802 | Radiation Dose Rates |
| 1900 | Control Systems-Horizontal Rods |
| 1901 | Control System-Vertical Rods |
| 1902 | Control System-Poison |
| 1903 | Tools and Equipment for Horizontal Control Rods and Vertical Safety Rods Renovation |
| 1905 | Control Rods |
| 1906 | Control Rods, Assembly Tooling and Handling Equipment |
| 1907 | Control Rod, Absorber, Drive, Disconnect |
| 1909 | Rods Safety (SR) |
| 1911 | Rods Scram (CR) |
| 2100 | Third Safety System-Ball 3X |
| 2200 | Process Tubes (This will cover all phases or process tubes from entry of water from common header to exit of water to common discharge header also tubes from point charging machine connects to the point that fuel is discharged). |
| 2201 | Tools and Equipment (necessary for installation or removal of process tubes and their associated parts. Includes tool dolly). |
| 2202 | Tools and Equipment for Process Tube Growth Correction |

**Mechanical** (Continued)

| | |
|---|---|
| 2204 | Tools and Equipment for Decontamination |
| 2205 | Tools and Equipment for Overboring Program |
| 2250 | Poison Column and Associated Items |
| 2300 | All Test Equipment Where Operation of Pile is Essential to Operation of Test |
| 2301 | All Facilities Build into Pile for Testing Purposes |
| 2302 | Containers for Disposal of Contaminated Equipment (does not include metal handling buckets and shipping casks) |
| 2303 | Experimental Test Facilities Excluding Fuel Specimens |
| 2400 | Charging Machines |
| 2401 | Discharging and Manipulator for Rear Face Work |
| 2450 | Fuel Handling-Irradiated (Transfer, etc.) |
| 2451 | In-Vessel Fuel Handling Equipment |
| 2452 | Ex-Vessel Irradiated Fuel Handling Equipment |
| 2500 | Vessels, Columns, Tanks, Dissolvers, Heat Exchangers (no moving parts) |
| 2501 | Sodium Storage Tanks |
| 2502 | Waste Storage Tanks (contaminated waste) |
| 2504 | Gas Storage Tanks |
| 2505 | Sodium Processing Tanks |
| 2600 | Machines-Process: Agitators, Pumps, Scales, Pulse Generators (moving parts) |
| 2700 | Machines and Equipment (noncontaminated zones) Shop or General Purpose |
| 2800 | Cell Equipment Fastened to Cell for Mounting Vessels, Nozzles, Dunnage, Y Pads, etc. |
| 2900 | Reactor Gas Seal, Including Boots, Strips, etc. |

**Mechanical** (Continued)

| | |
|---|---|
| 2901 | Gas Seal Tools |
| 3000 | Fire Protection Sodium Systems |
| 3900 | Cranes (all types) |
| 3901 | Elevators |
| 3902 | Material Handling Equipment such as Conveyors, Pallets, Monorail Systems, Casks, Buckets |
| 4000 | Power House Equipment (associated with steam generation) |
| 4050 | Emergency Power Generation Equipment (Mechanical) |
| 4100 | Railroad Equipment and Rolling Stock (including cask car) |
| 4101 | Motor Vehicles and Modifications |
| 4300 | Mechanical Equipment for Treatment of Water (other than piping) |
| 4500 | Impact Wrenches |
| 4501 | Remotely Operated Connectors |
| 4600 | Samplers (process, air, stack, gas, etc.) |
| 4700 | Hoods, Caves, Enclosures (remotely operated equipment) |
| 4701 | Tools and Equipment Necessary to Operate Equipment in Hoods, Caves, and Enclosures |
| 4702 | Manipulators |
| 4703 | Testing Equipment-Destructive |
| 4704 | Testing Equipment-Nondestructive |
| 4705 | Equipment Located in Hoods, Caves, Enclosure where Operation is Remote |
| 4706 | Reactor Capsules-Metallurgical Tests |
| 4727 | Metallurgical Test Materials, Destructive and Nondestructive |
| 4750 | Machines and Equipment-Contaminated Zones |

**Mechanical** (Continued)

4800 Laboratory Apparatus

4900 Fuel Element Production-General

- 4900010 Aluminum Uranium Fuel Elements and Related Components-Caps, Spires, Cans, Sleeves, Cores, Hollow Pieces, or Perfs, Dummies, Spaces, Wafers, Self-Supports
- 490020 Zircaloy-Uranium Fuel Elements, Billets, and Related Components-Cores, Copper or Zircaloy Components, End Caps or Plates, Brazing Rings, Self-Supports, Mixers, Perf, Dummies
- 490030 Ceramic Fuel Elements and Related Components
- 490040 Plutonium Fuel Elements and Related Components
- 490050 Other Fuel Elements, as Cluster

4901 Fuel Element Production-Cleaning and Preparation

- 490102 Core Preparation-Pickle Machine-Etch Machine, Nickel Plating
- 490104 Aluminum Component Preparation-Caps and Can Cleaning Machine, Methanol Still, Detrex Trichlor Still, Trays, Baskets, Racks
- 490106 Sleeve Preparation-Sleeve Cleaning Machine, Baskets
- 490108 Penetration, Loader, Baskets
- 490110 Billet Core Preparation
- 490112 Zircaloy Component Preparation
- 490114 Nose and Cutoff Preparation
- 490116 Other
- 490118 Chemical Tanks and Piping

4902 Fuel Element Production-Fuel Element Assembly Equipment

- 490202 Duplex Furnace and Equipment-Ajax Induction Furnaces, Duplex Agitators, Agitator Baskets, Loader Shields, Tools

**Mechanical** (Continued)

| | | |
|---|---|---|
| | 490204 | Canning Furnace and Equipment-Canning Jacks, Canning Baskets, Tongs, Shields, Tools |
| | 490206 | Canning Cycle Control, Flex-O-Timer, Valves, etc. |
| | 490208 | Quench Machines, Tanks, and Equipment |
| | 490210 | Machining, Forming, Including Tooling-Acme Gridley Cut-Off Lathes: Monarch Lathe |
| | 490212 | Welders, Buffers and Controls, Collects, Vacuum Welders |
| | 490220 | Coextrusion Component and Billet Assembly |
| | 490222 | Extrusion Presses, Containers, Dies, and Tools |
| | 490224 | Other, Including Triple Dip, Hot Press, Heat Treatment, Hydraulic Press, Hevi-Duty Resistance Furnaces |
| 4903 | Fuel Element Production-Testing and Inspection | |
| | 490302 | Component Mechanical Inspection-Pickle Inspection, Statistical Sampling, Recovered Core Inspection, Gages |
| | 490304 | Component Electronic or Ultrasonic Testing-Transformation Test, Sort Tester, etc. |
| | 490306 | Fuel Element Inspection-Radiography Inspection, Final Inspection Station, Weld Inspection, Length, Braze and Contour Inspection, Film Developing Equipment |
| | 490308 | Fuel Element Testing, Bond and Pen Tester, Autoclave Test, Bubble Tester |
| 4904 | Fuel Element Production-Component Salvage and Recover: Scrap Recovery | |
| 4905 | Fuel Element Production-Component Testing (not for new drawings) | |
| 4906 | Fuel Element Production-Component Supporting Facilities (not for new drawings) | |
| 4907 | Fuel Element Production-Special Items-Stampers; Tables; Bins; Mechanical Counters | |

**Mechanical** (Continued)

| | |
|---|---|
| 4920 | Capsule, Storage for Strontium |
| 4921 | Capsule, Storage for Cesium |
| 4922 | Fuel Driver Assembly |
| 4925 | Fuel Closed Loop In-Reactor Assembly |
| 4928 | Fuel Special Purpose Assembly |
| 4931 | Fuel Material Open Test Assembly |
| 4933 | Post Irradiation Open Test Assembly |
| 4934 | Fuel Open Test Assembly |
| 4935 | Open Test Assemblies-Tooling |
| 4936 | Materials Open Test Assembly |
| 4937 | Reflector Assembly |
| 5000 | Optical Systems and Devices (including TV devices) |
| 5001 | Viewing Windows and Ports |
| 5002 | Periscopes |
| 5003 | Fuels Development |
| | 500301 Machines, Mechanisms, and Dies for Forming, Fabricating, or Assembling |
| | 500302 Mechanisms for Testing, Inspection, Calibration, etc. |
| | 500303 Special Tools, Wrenches, etc. |
| | 500304 Baskets, Tubes, Containers, and Component Parts |
| | 500305 Vacuum Chambers and Component Parts and Equipment |
| | 500306 Equipment Support, Storage Racks, Hand Trucks, Tables, etc. |
| 5010 | Shipping Containers, Boxes, Pallets Conforming to DOT and RDT Regulations |

**Instrumentation System**

| | |
|---|---|
| 5900 | Instrumentation-General, Index, Notes, Listings |
| 5901 | Plans, Sections, Elevations, and Details (including conduit and tubing) |
| 5902 | Panel Schedules, Wire Run Lists |
| 5903 | Wiring Diagrams (connections and inter-connections), Elementary |
| 5904 | Cable Schedules |
| 5905 | Tubing Run List |
| 5906 | Equipment Requirements |
| 5907 | Equipment Arrangements |
| 5908 | Schematic Diagrams |

**Sub-Subject**

| | |
|---|---|
| 04 | Process Radiation Monitor |
| 05 | Personnel Radiation Monitor |
| 06 | Underwater Monitor |
| 07 | Fuel Monitor |
| 08 | Pressure Monitor |
| 09 | Temperature |
| 10 | Process Water Monitor and Sampling |
| 11 | Process Water |
| 12 | Process Gas |
| 13 | Pile Motion |
| 14 | Calculator (Power) |
| 15 | Safety Circuits |
| 16 | Biological and Thermal Shield T/C System |

**Instrumentation System** (Continued)

**Sub-Subject** (Continued)

17 Ventilation Controls

18 Power Plant Controls

19 Dissolver Cells

20 Metal Solution Feed Preparation

21 Aqueous Make-Up

22 Solvent Treatment

23 Waste Treatment

24 Precycle

25 Partition

26 Plutonium Decontamination

27 Uranium Decontamination

28 Recovered Acid Storage

29 UNH Storage

30 Chemical Storage

31 Outside Catch Tanks

32 Tank Farms

33 Off-Gas Treatment

34 Extractors

35 Stack Sampling

36 Test Hole Facilities

37 Seismoscope

**Instrumentation System** (Continued)

**Sub-Subject** (Continued)

38 Optical

39 Sodium Systems

40 Flow and Temperature Monitor Data Logging System

41 Main Data-Logging System

42 Rod Control System

43 Primary and Secondary Loop Instrumentation

44 Control Room and Miscellaneous Instrumentation

45 Moisture Detection

46 Argon Systems

47 Helium Systems

48 Products of Combustion Detectors

49 Instrumentation Service Piping, SDD No. 23

50 Instrumentation Radioactive Waste, SDD No. 24

51 Instrumentation Heating and Venting, SDD No. 25

52 Instrumentation Plant Fire Protection, SDD No. 26

53 Instrumentation Reactor Containment, SDD No. 27

54 Instrumentation Reactor, SDD No. 31

55 Instrumentation Heat Transport System, SDD No. 51

56 Instrumentation Closed Loop, SDD No. 61

57 Instrumentation Aux. Liquid Metal System, SDD No. 81

58 Instrumentation Inert Gas Receiving and Processing, SDD No. 82

59 Instrumentation Impurity Monitoring and Analysis, SDD No. 85

**Instrumentation System** (Continued)

**Sub-Subject** (Continued)

60 Instrumentation Reactor Plant Control, SDD No. 90

61 Digital Data Handling and Display, System 91

62 Reactor and Vessel Instrumentation, System 92

63 Process Monitoring and Control Containment System 93-1

64 Process Monitoring and Control Heat Transport System 93-2

65 Process Monitoring and Control Closed Loop System 93-3

66 Process Monitoring and Control Service Piping, System 93-4

67 Process Monitoring and Control Radioactive Waste System 93-5

68 Process Monitoring and Control Heating and Vent System 93-6

69 Process Monitoring and Control Fire Protection System 93-7

70 Process Monitoring and Control Inert Gas Receiving and Processing System 93-8

71 Process Monitoring and Control Aux. Liquid Metal System 93-10

72 Process Monitoring and Control Refueling System 93-11

73 Process Monitoring and Control Maintenance System 93-12

74 Process Monitoring and Control Leak Detection System 93-13

75 Process Monitoring and Control Annunciator System 93-14

76 Process Monitoring and Control Piping and Equipment Electrical Heating System 93-15

77 Fuel Failure Monitoring System 94

78 Flux Monitor System 95

79 Radiation Monitoring System 96

80 Plant Protection System 99

**Instrumentation System** (Continued)

**Sub-Subject** (Continued)

| | |
|---|---|
| 5975 | Equipment Outline and Interface Requirement |

**Instruments - General**

| | |
|---|---|
| 6000 | Instruments-General |
| 6001 | Temperature |
| 6002 | Flow |
| 6003 | Level |
| 6004 | Pressure |
| 6005 | Density |
| 6006 | Humidity |
| 6007 | Moisture |
| 6008 | Conductivity |
| 6009 | Speed |
| 6010 | Viscosity |
| 6011 | Weight |
| 6012 | Specific Gravity |
| 6013 | Weight Factor |
| 6014 | Radiation |
| 6015 | Differential Pressure |
| 6016 | Acidity |
| 6017 | Interface |
| 6018 | Vibration |
| 6019 | Sound |
| 6020 | Component of a Mixture |

**Instruments - General** (Continued)

| **Sub-Subject** | |
|---|---|
| 39 | General |
| 40 | Recorder |
| 41 | Controller |
| 42 | Indicator |
| 43 | Alarm |
| 44 | Recorder Controller Alarm |
| 45 | Indicator Controller Alarm |
| 46 | Integrator |
| 47 | Self-Actuated Regulating Valve |
| 48 | Transmitters |
| 49 | Primary Elements |
| 50 | Accelerator |
| 51 | Alpha |
| 52 | Amplifier |
| 53 | Analyzer |
| 54 | Calculator |
| 55 | Calibrator |
| 56 | Camera |
| 57 | Chambers |
| 58 | Checkers |
| 59 | Counters |
| 60 | Probes |

**Electronics - General**

6500 Electronics-General (Wave Type-Includes Radio, TV, Microwave and Laser)

6501 Electronics-Plans, Elevations, Sections, and Details

6502 Electronics-Wiring Diagrams (elementary, connection, and interconnections)

6503 Electronics-Transmitters, Amplifiers, Receivers, and Control Consoles

6504 Electronic-Wave Guides and Antennas

6505 Electronic-Drill and Trim

6506

**Flow Diagrams**

7000 Process Flow Diagrams

7001 Engineering Diagrams

7002 Instrument Engineering Diagrams

7003 Logic Diagram

7004 Piping and Instrument Diagram

7005 Piping and Instrument Diagram CLS

**Electrical**

Numerical Subject Series: 73, 74, 75, 76, and 77 (Cover Inside Building - Electrical)

78 and 80 (Cover Outside Building - Electrical)

7100 Electrical-General, Wiring Requirements

(This series includes drawings of a composite nature. A drawing which shows a complete installation for a facility.)

7101 Block Outs, Sleeves, Plans, and Details

7107 Studies-General

**Electrical** (Continued)

| | |
|---|---|
| 7108 | Material Lists-General |
| 7109 | Indices |
| 7201 | One-Line Diagrams |
| 7301 | Power-Plans, Elevations, Sections, and Details (including grounding, block diagrams, and engineering diagrams) |
| 7302 | Power-Wiring Diagrams (elementary, connection, and inter-connection) |
| 7303 | Power-Motor Control Centers, Switchgear, Transformers, and Control Panels |
| 7304 | Power-Panel Schedules |
| 7305 | Power-Wire Run Lists, Conduit, Cable, Wire Schedules, and Tray Schedules |
| 7306 | Power-Grounding Junction, Pull Boxes, Ducts, Raceways |
| 7307 | Power-Motor and Control Station Schedules |
| 7308 | Power-Electrical Equipment (motors, heaters, etc.) |
| 7309 | Power-Lightning Protection |
| 7401 | Lighting-Plans, Elevations, Sections, and Details |
| 7402 | Lighting-Wiring Diagrams (elementary, connections, and inter-connections) |
| 7404 | Lighting-Panel, Schedules |
| 7405 | Lighting-Wire Run Lists, Conduit, Cable and Wire Schedules |
| 7406 | Lighting-Junction Pull Boxes, Ducts |
| 7501 | Electrical Control-Control Panel Arrangements, Signal Plans, Elevations, Sections, and Details |
| 7502 | Electrical Control-Wiring Diagrams (elementary, connection, and inter-connection) Block Diagrams |
| 7503 | Electrical Control-Timing Charts |

**Electrical** (Continued)

| | |
|---|---|
| 7504 | Electrical Control-Panel Schedules |
| 7505 | Electrical Control-Wire Run Lists, Conduit, Cable and Wire Schedules |
| 7506 | Electrical Control-Junction Pull Boxes, Ducts (This series includes remote signaling door bells, buzzers, annunciators.) |
| 7507 | Electrical Control-Relay and Switch Schedules |
| 7508 | Electrical Control-Control Equipment and Devices |
| 7575 | Equipment Outline and Interface Requirement |
| 7601 | Communications-Plans, Elevations, Sections, and Details |
| 7602 | Communications-Wiring Diagrams (elementary, connections, and inter-connection) Block Diagrams |
| 7604 | Communications-Panel Schedules, Equipment, and Devices |
| 7605 | Communications-Wire Run Lists, Conduit, Wire Schedules, Cables |
| 7606 | Communications-Junction Pull Boxes, Ducts (This series includes sound powered telephone and central station system telephones.) |
| 7607 | Communications-Station Schedules |
| 7701 | Fire Alarm-Plans, Elevations, Sections, and Details |
| 7702 | Fire Alarm-Wiring Diagrams (elementary, connection, and inter-connection) Block Diagrams |
| 7704 | Fire Alarm-Panel Schedules |
| 7705 | Fire Alarm-Wire Run Lists, Conduit, Cable and Wire Schedules |
| 7706 | Fire Alarm-Junction Pull Boxes, Ducts |
| 7801 | Cathodic Protection-Plans, Elevations, Sections and Details |
| 7802 | Cathodic Protection-Wiring Diagrams (elementary, connection, and inter-connection) Block Diagrams |
| 7806 | Cathodic Protection-Junction Pull Boxes, Ducts |

**Electrical** (Continued)

| | |
|---|---|
| 7900 | Criticality Monitoring Systems |
| 7901 | Plans, Elevations, Sections, and Details |
| 7902 | Wiring Diagrams (elementary, connection, and inter-connection) Block Diagrams |
| 7904 | Panel Schedules |
| 7905 | Wire Run Lists, Conduit, Cable and Wire Schedules |
| 7906 | Junction Pull Boxes, Ducts |
| 8000 | Electrical Utilities Transmission and Distribution Operating Drawings (including switching diagrams and distribution maps) |
| 8001 | Electrical-Maps, Plot Plans, Plans and Profiles, Plans, Elevations, Sections, and Details (includes substation structures) |
| 8002 | Electrical Only-Wiring Diagrams (elementary, connection, and inter-connection) Area One-Line Diagram |
| 8003 | Electrical Only-Pole Line Details, Sag Curves |
| 8004 | Electrical Only-Pole Schedules |
| 8005 | Electrical Only-Cable Schedules |
| 8009 | Electrical Only-Transformer Schedules (this series includes all electrical maps other than the "Civil" map series) |

**Insulation and Heat Tracing**

| | |
|---|---|
| 8200 | Insulation and Heat Tracing Reference Designs |
| 8201 | Insulation and Heater Arrangements |
| 8202 | Insulation Arrangements |
| 8203 | Heater Applications-Piping |
| 8204 | Heater Applications-Equipment |
| 8205 | Heater Schedules |
| 8206 | Insulation Schedules |

**Piping**

| | |
|---|---|
| 8400 | Piping-Process Water |
| 8401 | Piping-Process Water-Front or Rear Face |
| 8402 | Piping-Process Water-Foundation Cooling, Shielding, Horizontal Rods, Risers, and Crossheaders |
| 8403 | Piping-Process Water-Valve Pits or Tunnels |
| 8404 | Piping-Cell Arrangements (includes diversion boxes and trenches) |
| 8405 | Piping-Jumpers |
| 8406 | Piping-Process-Operating or Sample Galleries |
| 8407 | Piping-Process-All other to Include: Buried or Exposed Inside Piping, Wash Down, Fog Spray, Solvent Blend, Slug Storage, Hot Shop, Utility Outlets Relative to Process Piping: Also Jets, Valves, Miscellaneous Process Piping |
| 8408 | Piping-Water Drain and Waste (noncontaminated) |
| 8409 | Piping-Radioactive Liquid Waste (water) |
| 8500 | Piping-Water-Other than Process |
| 8501 | Piping-Steam Radiators, Coils, and Condensate |
| 8502 | Piping-Steam-All Others |
| 8503 | Piping-Acids and Chemicals |
| 8504 | Piping-Gas Decay and Disposal |
| 8505 | Piping-Compressed Air |
| 8506 | Piping-Vacuum |
| 8507 | Piping-Refrigeration, Argon |
| 8508 | Piping-Sprinkler Systems |
| 8509 | Piping-Drains and Waste Inside-Other than Process |

**Piping** (Continued)

| | |
|---|---|
| 8510 | Piping-Service (includes grouped services, viz., water, air, steam, drains, etc.; show on the same drawing) |
| 8511 | Piping-Hangers, Support, Anchors, Guards |
| 8512 | Piping-Hydraulic |
| 8513 | Piping-Demineralized and Distilled Water |
| 8514 | Piping-Fuel Oil |
| 8515 | Piping-Fire Extinguishing Gas, Vapor, Chemical, or Powder |
| 8516 | Piping-Heating and Cooling Water |
| 8517 | Piping-Heating and Cooling NA and NAK, Insulating Requirements |
| 8518 | Piping-Heating and Cooling Gas |
| 8519 | Piping-Cover Gas, Argon |
| 8520 | Piping-Propane |
| 8548 | Piping-Isometric |
| 8550 | Piping-NA Reactor Primary |
| 8551 | Piping-NAK Reactor Secondary |
| 8552 | Piping-NA Receiving and Processing |
| 8553 | Piping-NA Closed Loop |
| | 855301 Piping and Mechanical Sections A1-2-3 |
| | 855302 Piping and Mechanical Sections B1-2-3-4 |
| | 855303 Piping and Mechanical Sections C1-2-3-4-5-6-7-8-9 |
| | 855304 Piping and Mechanical Sections D1-2-3-4-5-6 |
| | 855305 Piping and Mechanical Sections E1-2 |
| | 855306 Piping and Mechanical Sections F1-2 |

**Piping** (Continued)

| | | |
|---|---|---|
| | 855307 | Piping and Mechanical Sections G1-2-3 |
| | 855308 | Piping and Mechanical Sections H1-2-3-4-5-6-7 |
| | 855309 | Piping and Mechanical Sections J1-2 |
| | 855310 | Piping and Mechanical Sections K1-2-3-4-5-6-7 |
| | 855311 | Piping and Mechanical Sections L1-2-3 |
| 8554 | Piping-NA all Other | |
| 8555 | Piping-Special Loop | |
| 8556 | Piping-NA Piping Components, Traps, Cold, Freeze, and Vapor | |
| 8557 | Piping-Equipment Outline and Interface Requirements | |
| 8576 | Piping-Reference Drawings | |

**Heating, Venting, Exhaust**

| | |
|---|---|
| 8900 | Ventilation Exhaust and Heating System-Plans, Section, Details |
| 8901 | Heating and Ventilating Equipment Location |
| 8902 | Heating and Ventilating Schedules, Notes |

**Air Conditioning Systems**

| | |
|---|---|
| 9000 | Air Conditioning Systems-Plans, Sections, Details |

**Miscellaneous**

| | |
|---|---|
| 9900 | Miscellaneous Equipment Pieces or Parts-Not Identifiable as Electrical, Instrument or Mechanical Category; Unrelated to the Assembled Equipment |
| 9901 | Mechanical |
| 9902 | Electrical |
| 9903 | Instrument |

**Sub-Subject**

01 Scope

02 Vendor Information

03 Special Tools

# ATTACHMENT F

(Not Used)

9413154.0492

# ATTACHMENT G

(Not Used)

9413514.0693

THIS PAGE INTENTIONALLY
LEFT BLANK

# ATTACHMENT H

## REQUIRED MINIMUM INSULATION VALUES

### TABLE I
INTERIOR (°)

| | STORAGE | WAREHOUSE | SHOP-KITCHEN | RESTROOM | PERSONNEL COMFORT | CHANGE ROOM | |
|---|---|---|---|---|---|---|---|
| ROOF | 50 | 55 | 65 | 68 | 72 | 75 | |
| LABORATORY | | | 16.00 | 16.86 | 18.00 | 18.86 | "R" |
| PROCESS INDUSTRIAL | | | 0.0625 | 0.0593 | 0.0556 | 0.0530 | "U" |
| PERSONNEL COMFORT | 10.86 | 12.29 | 14.86 | 16.00 | 17.14 | 17.71 | "R" |
| ONLY | 0.0921 | 0.0814 | 0.0673 | 0.0625 | 0.0583 | 0.0565 | "U" |

### TABLE II
INTERIOR (°F)

| | STORAGE | WAREHOUSE | SHOP-KITCHEN | RESTROOM | PERSONNEL COMFORT | CHANGE ROOM | |
|---|---|---|---|---|---|---|---|
| WALLS | 50 | 55 | 65 | 68 | 72 | 75 | |
| LABORATORY | | | 12.64 | 13.32 | 14.22 | 14.90 | "R" |
| PROCESS INDUSTRIAL | | | 0.0791 | 0.0751 | 0.0703 | 0.0671 | "U" |
| PERSONNEL COMFORT | 8.58 | 9.71 | 11.97 | 12.64 | 13.55 | 14.22 | "R" |
| ONLY | 0.1166 | 0.1030 | 0.0836 | 0.0791 | 0.0738 | 0.0703 | "U" |

## 1.0 DESIGN CALCULATIONS

1.0.1 General design calculations and load estimating procedures shall be based on data in the ASHRAE Handbook of Fundamentals and Tables I and II of page Attachment H-1.

1.0.1.1 **Heating**

The location annual heating degree-days shall be used for determining the minimum thermal resistance, per Tables I and II of page Attachment H-1.

1.0.1.2 **Cooling**

The opaque wall maximum "U" factor shall be determined by a method as presented in the ASHRAE Handbook of Fundamentals. The roof maximum "U" factor shall be determined by the heating criteria. (1.0.1.1, above.)

## 2.0 FEDERAL SPECIFICATIONS (FS)

- HH-I-545 Insulation, Thermal Aid and Acoustical (Mineral Fiber, Duct Lining Material)
- HH-I-551 Insulation Block and Boards, Thermal (Cellular Glass)
- HH-I-558 Insulation, Blocks, Boards, Blankets, Felt, Sleeving (Pipe and Tube Covering) and Pipe Fitting Covering, Thermal (Mineral Fiber, Industrial Type)

## 3.0 OUTSIDE AIR INTAKES

Outside air intakes should be located as high as possible above grade and preferably on north or east walls. Where the outside air intake is below 10 feet above grade, a low velocity "drop-out" area shall be considered inside the structure.

## 4.0 INSULATION

See Tables I and II, page Attachment H-1.

## 5.0 EQUIPMENT SELECTION

5.0.1 **Fans**

5.0.1.1 Fans shall be rated per the AMCA Standard and carry their seal of approval.

5.0.1.2 Each fan-motor-drive assembly shall be assembled at the factory and balanced at operating speed. Test results shall be furnished with the Certified Vendor Information Data. (Not required for small utility fans.)

5.0.1.3 Fan shall be selected at approximately its point of maximum mechanical efficiency. (This is an area of stable operation and best minimizes changes in operating conditions.)

5.0.1.4 The minimum motor size shall be specified and should be conservatively rated with considerations of non-standard air conditions and high ambient temperatures.

5.0.1.5 V-belt drives shall be selected for 120% of rating plus the addition of one extra belt.

5.0.1.6 Axial flow fans require close attention to noise considerations and should not generally be used.

5.0.2 **Filters**

5.0.2.1 General

A permanently installed means for measuring the differential pressure across each filter stage shall be provided in all filter assemblies 5000 CFM or larger, or where specified. With proper valving and piping, one gage may service several adjacent stages.

5.0.2.2 Filter Banks

Access doors of convenient size shall be provided in the casing and as great a working depth as possible shall be provided for servicing. (Minimum of 3 feet is recommended.)

5.0.3 **Coils**

5.0.3.1 General

5.0.3.1.1 Casings shall be designed to provide a uniform air velocity across the face of the coil.

5.0.3.1.2 Casings and piping shall be designed to allow for expansion and contraction to prevent stresses at the coil connections.

5.0.3.1.3 Stacked coils shall be supported individually in a structural framework to facilitate individual coil removal without disturbing adjacent coils.

5.0.3.2 Cooling Coils

5.0.3.2.1 Provisions shall be made for collecting and removing moisture condensed on cooling coils. Entrained water shall be prevented from being carried down the ductwork.

5.0.3.2.2 On direct expansion coils, control shall be provided to prevent the condensed moisture from freezing. Most problems occur at light load.

5.0.3.2.3 Maximum face velocity shall be 600 FPM for personnel comfort and 450 FPM for technical or complex application. See Attachment N, Section 1550-2.5.4 for more details.

5.0.4 **Controls**

5.0.4.1 All heating, ventilating and air-conditioning systems require control. This control shall be automatic unless otherwise specified.

5.0.4.2 Flow controllers should be considered for applications such as laboratories with exhaust hoods where different modes of operation can affect flow conditions.

5.0.4.3 Differential pressure controllers, dampers, and variable volume/pressure fans should be considered when it is necessary to maintain spaces at different static pressures.

5.0.4.4 Automatic temperature devices for personal comfort shall have a minimum control range between 67°F and 81°F within the parameters indicated in ASHRAE 55 and normally 72°F to 78°F as indicated in Attachment N, Section 1550-1.2.2.

5.0.5 **Refrigeration Systems**

The cooling capacity in BTUH of a refrigeration system should be specified in addition to the capacity of the individual components and the responsibility for performance shall rest on one contractor.

6.0 **BALANCING**

6.0.1 The balancing of the air handling system shall be accomplished in such a manner that each space is receiving its designed air supply and proper differential pressures are established between zones.

For balancing procedures reference the SMACNA balancing manual or industrial ventilation manual.

6.0.2 Air flow rates should not be restricted to less than the nearest 5 CFM for small flows and 10 CFM for larger flows. A plus or minus 5% variation from desired individual outlet air flow rates is considered a very good balance job, the system design shall accommodate these variations.

# ATTACHMENT J

(Not Used)

9413154.0697

# ATTACHMENT K

## 0110-12 ENERGY CONSERVATION

### 0110-12.1 Coverage

For purposes of this section, the term "building" shall mean new commercial, industrial, or residential buildings, or new building additions, unless otherwise stated. The term "Federal Building" means any building, structure, or facility that is constructed, renovated, leased, or purchased, in whole or in part for use by the United States, which includes a heating system, a cooling system, or both.

These criteria shall be applied in the planning and design of new buildings and building additions including their operating systems and energy using equipment.

These criteria shall be applied with the following objectives:

- Minimizing consumption of nonrenewable energy sources on the basis of LCC effectiveness
- Encouraging the use of renewable energy sources

Employee health, safety and environment (including indoor air quality) shall not be compromised in achieving energy efficiency.

### 0110-12.2 General

For new construction, DOE facilities shall be designed to comply with the requirements of ASHRAE Standard 90.1/Attachment H.

DOE has designated ASHRAE Standard 90.1 as the minimum efficiency standard for new Federal Buildings with the following two exceptions:

- That the DOE LCC methodology shall be used (rather than the ASHRAE methodology)
- That this standard shall not limit further reduction in energy use where such reductions can be achieved on the basis of LCC analysis

The building envelope shall meet the minimum prescriptive energy conservation requirements of ASHRAE Standard 90.1/Attachment H and the criteria in Section 0110-12.3, Building Envelope Thermal Transmittance Values, and Section 0110-12.4, Building Envelope Air Leakage Criteria. The mechanical system shall meet the minimum prescriptive energy conservation requirements of ASHRAE Standard 90.1/Attachment H and the requirements of Attachments H, K, L, M, N, P, Q, R, T, U, and V of this specification, and electrical requirements of this specification.

Relative to electrical distribution systems, utilization equipment rated greater than 1,000 W and lighting equipment with an inductive reactance load component shall have a power factor of not less than 85 percent under rated load conditions. Utilization equipment with a power factor of less than 90 percent shall be corrected to at least 90 percent under rated load conditions. Power-factor corrective devices, installed to comply with this criterion, shall be switched with the utilization equipment, except where this results in an unsafe condition or interferes with the intended operation of the equipment.

Energy conservation alternatives for measures exceeding the minimum requirements of ASHRAE Standard 90.1/Attachment H shall be considered for any building described in Section 0110-12.1, Coverage, according to the procedures outlined in Section 0110-12.7, Building Analysis Procedures, with the objective of obtaining the greatest opportunities for energy conservation for the subject building.

Analysis of the building to determine energy conservation features and energy source alternatives shall be accomplished in the preliminary design (Title I) phase. The conceptual design phase cost estimates shall include adequate funding to cover energy conservation alternatives. Determination shall be made before the completion of the preliminary (Title I) design phase as to which energy conservation alternatives shall be incorporated into the building design based on LCC.

The building energy conservation analysis or waiver thereof shall be reported and documented according to the procedures outlined in Section 0110-12.8, Energy Conservation Report Requirements.

HVAC design shall comply with ASHRAE Standard 62.

**0110-12.3 Building Envelope Thermal Transmittance Values**

The following building envelope criteria shall be the minimum values to be used in the architectural design of new buildings.

As a minimum requirement, the thermal transmittance values ("U" values) and overall maximum allowable combined transmittance values as determined from ASHRAE Standard 90 or Attachment H, whichever is more stringent, shall be used as basic building envelope criteria. Lower thermal transmittance values shall be considered by LCC analysis as discussed in Section 0110-12.7, Building Analysis Procedures. However, other criteria in this specification may supersede ASHRAE Standard 90.1.

Buildings with solar energy sources, high internal heat loads, or other special requirements shall be considered according to the procedures given in ASHRAE Standard 90.1 in order to determine if deviations from the maximum allowable thermal transmittance values would actually result in less annual energy consumption.

### 0110-12.4 Building Envelope Air Leakage Criteria

Building envelope air leakage through walls, window, and doors shall comply with ASHRAE Standard 90, and other criteria of this specification which supplement or supersede ASHRAE Standard 90.1.

### 0110-12.5 Use of Renewable Energy Systems

#### 0110-12.5.1 Active Solar Systems

The DOE Energy Management Coordinator shall determine whether the use of active solar systems shall be considered for a building. The application of active solar systems shall be considered based on LCC. Geographical location, site solar access, conventional fuel availability, and load characteristics are major factors in determining when an active solar system shall be considered. Active solar systems shall be considered when it is determined they can be LCC effective.

#### 0110-12.5.2 Passive Solar Techniques and Daylighting Techniques

The application of passive solar techniques including passive space heating, passive cooling, and daylighting shall be considered for all building projects as directed by the DOE Energy Management Coordinator. Passive solar techniques shall be used wherever they are determined to be technically feasible and economically justifiable.

#### 0110-12.5.3 Other Renewable Systems

The DOE Energy Management Coordinator shall determine whether other renewable energy sources such as photovoltaics, wind, geothermal, or other sources shall be considered.

### 0110-12.6 Energy Management Systems

Criteria and methodology for the design of an EMS shall comply with TM 5-815-2.

Methodology for estimating the energy conservation performance of an EMS shall comply with NCEL UG-0010.

Implementation and installation of an EMS, a micro EMS (single-building controller) or an interface to an existing EMS, shall be considered in the preliminary (Title 1) design phase for all building projects. Energy management systems shall be evaluated by LCC analysis.

### 0110-12.7 Building Analysis Procedures

#### 0110-12.7.1 LCC Analysis Procedures

LCC analysis shall be used to compare the total life-cycle value of various building parameters and systems based on initial cost, annual maintenance costs, and annual operating costs. Furthermore, the present value of future

benefits and costs shall be calculated for the various energy conservation alternatives. This analysis shall then form a basis for selecting the optimum building systems for any specific use. LCC analysis shall comply with 10 CFR 436, as amended.

LCC analysis shall use energy costs obtained from the most current four successive quarters as reported in the Quarterly Energy Conservation Report for the site. The annual supplement of NBS Handbook 135, which contains current factors and escalation rates for energy, shall be used for the LCC analysis.

**0110-12.7.2 Use of Computer or Other Energy Analysis Techniques**

Total energy consumption in a building shall be defined to include both building energy consumption and process energy consumption.

Building energy consumption shall be defined as the energy that is used primarily for heating, ventilation, cooling, domestic water heating, energy distribution and lighting. Process energy consumption shall be defined as energy used in a process, production or research program. A "base-case" annual building energy consumption shall be determined by the methods described in Section 0110-12.7.3, Design Analysis Procedures. Energy analysis of building energy conservation alternatives shall be compared to the "base-case" building.

If the estimated annual total building energy consumption as indicated in the DOE project criteria is expected to exceed 500 million BTU, or the building is larger than 10,000 gross square feet, the evaluation of the "base-case" energy consumption and the analysis of energy conservation alternatives shall be performed using a computer analysis technique approved by the DOE Energy Management Coordinator. If the estimated total building annual energy consumption is not expected to exceed 500 million BTU, the design professional can use either a computerized analysis or a manual analysis method using ASHRAE's Simplified Energy Analysis using the modified bin method to evaluate the energy conservation alternatives and the "base-case" design energy consumption for the building.

The computerized energy analysis shall be made part of the "Energy Conservation Report" as discussed in Section 0110-12.8, Energy Conservation Report Requirements. Energy analysis need not be included in a formal report if the usage is less than 500 million BTU/year.

**0110-12.7.3 Design Analysis Procedures**

The energy use of building systems shall be considered at the start of the building design planning process because selection of fundamental building features, such as form, orientation, window/wall ratio, building envelope construction, lighting system types, and HVAC system types have the greatest effect on energy consumption.

Energy consumption characteristics of different building features shall be defined to identify the building energy-consuming systems with the greatest

potential for reduction in energy consumption. Systems that shall be considered are lighting, heating , cooling, energy (media) distribution, domestic water heating, and ventilation. Factors that affect these systems, such as building thermal transmittance values, infiltration and ventilation rates, occupancies, building orientation, shading, HVAC system design, and lighting system design shall be optimized. The most effective design solutions shall be identified using LCC analysis.

Energy consumption characteristics of process energy systems shall also be analyzed and the optimum parameters selected.

A "base-case" annual energy consumption for the building shall be determined as described in Part 1 below. This "base-case' annual energy consumption shall be reported in accordance with Section 0110-12.8, Energy Conservation Report Requirements.

Part I — "Base-Case" Building Annual Energy Consumption

1. New Buildings

A. The "base-case" energy usage shall be defined as the energy the building would consume resulting from only the implementation of the energy conservation requirements of ASHRAE Standard 90.1/Attachment H. The "base-case" energy usage shall define the fraction of the building's energy consumption attributable to lighting, cooling, heating, domestic water heating, energy distribution, and ventilation. The "base-case" energy usage shall also define the energy required for process functions. The base-case energy use shall be determined by simulating the "base-case" building through use of energy analysis techniques as discussed in Section 0110-12.7.2, Use of Computer or Other Energy Analysis Techniques. Project criteria shall indicate process energy requirements and related information.

B. The "base-case" building energy analysis shall include input of all building envelope characteristics, including U-values, areas, building orientation, shading features, window/wall/roof thermal characteristics, and infiltration characteristics. The analysis shall include input of all building internal characteristics including lighting demand and usage schedules, occupancy demand and schedules, equipment and miscellaneous heat gains, building usage schedules, and ventilation rates and schedules. The analysis shall include calculations of the building's heat gains and heat losses and total block heating and cooling loads using all the above listed characteristics and local weather data obtained from AFM 88-29, Chapter 6, bin weather data, or hour-by-hour weather data. The heating and cooling loads shall include the delineation of the portions associated with solar, transmission, ventilation, and internal components.

C. After the thermal heating and cooling loads are calculated, the "base-case" building energy analysis shall indicate the selection of the HVAC system to be applied to the building to offset the heat gains and heat losses. The "base-case" HVAC systems shall meet the requirements of

ASHRAE Standard 90/Attachment H and the other design requirements as described in Attachments L, M, N, P, and Q. The energy analysis shall simulate a full year's performance of the systems based on the thermal loads, full and part load efficiencies of HVAC equipment, demand and usage schedules of energy distribution equipment (fans, pumps, auxiliary burdens, etc.) and demand and usage schedules for domestic water heating. Domestic hot water usage shall be calculated according to the methods described in the ASHRAE Systems Handbook. Process energy usage analysis and optimization of the selection of process equipment shall be evaluated separately according to DOE project criteria.

Part II — Evaluation of Energy Conservation Alternatives

Once the "base-case" building energy usage simulation has been determined, the following steps shall be performed in the building energy usage analysis:

1. Evaluate building envelope energy conservation opportunities by analyzing the effects of modifications to "base-case" thermal transmittance values, fenestration areas, building orientation, building exposure to weather conditions, and building shading characteristics or the use of possible solar technologies.

2. Either evaluate the energy effectiveness of various different mechanical/electrical environmental systems by simulating the energy usage of each of these systems using a constant thermal load "base-case" and comparing the results, or evaluate energy conservation modifications to the "base-case" HVAC system. Again, life-cycle evaluation of mechanical/electrical environmental systems shall be performed using efficiencies exceeding the minimum HVAC system or lighting system requirements of ASHRAE Standard 90.1/Attachment H.

3. Evaluate energy conservation alternatives to systems or compare energy usage between systems in an ordered sequence so that energy consequences of one modification over another are included.

4. Evaluate energy conservation modifications to the "base-case" domestic water heating.

5. If potentially feasible, based on fossil fuel types, availability, and costs, DOE project criteria shall direct the design professional to evaluate cogeneration alternatives. After all system comparisons are evaluated for energy savings, evaluate energy sources based on energy cost to the building. Select fuels and energy sources in conformance with DOE 4330.2C. Discussion of fuel source availability shall be included in the "Energy Conservation Report."

6. LCC analysis shall be performed using typical cost values provided in DOE project criteria and the incremental energy costs determined from Items 1-5 above according to the methods discussed in Section 0110-12.7.1, LCC Analysis Procedures, to determine the optimum energy conservation alternatives.

**0010-12.7.4 Waivers of Design Analysis Requirements**

Comparative analysis of building envelope, lighting, or HVAC systems can be modified given the following conditions:

- No further comparative analysis of building thermal envelope modifications is required if the building orientation or building construction features are pre-determined and cannot be modified because of special site, safety, or programming considerations. The building still must meet minimum building envelope standards required by ASHRAE Standard 90.1/Attachment H.

- No further comparative analysis between HVAC systems is required if the type of HVAC system is unique to the building or process and cannot be modified due to rigid temperature control, humidity control, air movement requirements, or special programming. The pre-selected system shall still be evaluated for all possible energy conservation modifications available to that particular system.

- No further comparative analysis is required if selections of overall HVAC systems or ancillary sub-systems or equipment are available that by empirical observation clearly consume the least energy and that can be shown through simple cost estimation to have no significant additional first cost and no significant annual maintenance costs over other HVAC systems. A description of these findings shall be in accordance with Section 0110-12.8, Energy Conservation Report Requirements.

Waivers of design analysis of this type must be submitted for approval to the DOE Energy Management Coordinator. Unusual limiting considerations concerning the building envelope, the HVAC systems, the lighting systems, or other systems that allow for waiver of comparative analysis shall be discussed in the "Energy Conservation Report."

**0110-12.8 Energy Conservation Report Requirements**

**0010-12.8.1 General**

An "Energy Conservation Report" (summary evaluation) shall be developed for each new building and building addition where *total* energy consumption is expected to exceed 500 million BTU per year or the building is larger than 10,000 gross square feet.

For projects or retrofits of existing buildings where *total* energy consumption is less than 500 million BTU per year, an "Energy Conservation Report" shall be developed at the discretion of the DOE Energy Management Coordinator.

The report shall be included as part of the preliminary (Title I) design, where final selections of energy conservation features or renewable energy sources are made.

The report shall contain the results of the annual energy consumption calculations for the "base-case" building and the results of the energy

analysis and LCC analysis of energy conservation alternatives as listed below. If parts of this analysis are waived, an explanation shall be included in the report. The report shall:

1. Identify the methods used for simulating building energy consumption and the methods of LCC analysis (e.g., dynamic computer analysis, static computer analysis, or manual calculations) used to consider alternative building systems and the use of renewable energy sources.

2. Describe the "base-case" building, including:

   - Building envelope parameters, including U-values, types of fenestration, and percent of gross wall area occupied by fenestration, and orientation

   - Building heating and air-conditioning systems, including types of mechanical refrigeration systems, types of heating systems, types of energy distribution systems, types of automatic temperature controls, types of ventilation systems, and any health and safety requirements that the ventilation system design must satisfy.

   - Types of building lighting systems and controls

   - Building domestic water heating systems

   - Process energy consumption systems, if any

3. Provide backup data to indicate that criteria of ASHRAE Standard 90.1 have been met or exceeded for "base-case" new buildings.

4. Estimate total energy consumption of the "base-case" building, separately identifying building energy consumption and process energy consumption, including:

   - BTU/year by types of energy source (e.g., at point of use electricity, natural gas)

   - Total BTU/year for entire building

   - Total BTU/gross-square-foot/year

   - Total BTU/month and per year and kWh/month and per year for each energy usage category (e.g., lighting, pumps, fans, refrigeration, heating, and domestic water heating)

5. Describe the major energy conservation modifications to the "base-case" building selected, such as modifications to the building envelope, including "U" values, types of fenestration and percentage of glass in the gross wall area and addition of active or passive solar energy features; modifications to the types of heating and air-conditioning systems, including ventilation, refrigeration, heating and automatic

temperature control systems; modification to building systems lighting levels and controls; and all other major modifications considered.

6. Estimate total energy consumption of the "modified" building for each type of proposed energy conservation modification or combination of modifications, separately identifying building energy consumption and process energy consumption. Use the same format as required for the "base-case" building.

7. Estimate energy savings from incorporation of each major energy conservation feature and provide LCC analysis for the addition of each major energy conservation feature.

8. If analyses of active solar systems or use of other renewable energy sources are required by the DOE Energy Management Coordinator, provide the results of the analyses, including backup data for LCC analysis.

9. Discuss the types of permanent metering for energy inputs to the building, types of submetering for process energy use, and compatibility with existing or projected energy management systems. Estimate the total cost for metering and submetering provisions.

**0110-12.8.2 Distribution of "Energy Conservation Reports"**

For buildings that are expected to exceed 500 million BTU per year in total energy consumption or buildings larger than 10,000 square feet, DOE field organizations shall provide one coy of the "Energy Conservation Report" from the Title I design documentation to the In-house Energy Management Branch, Office of Project and Facilities Management, DOE Headquarters, for review and comment. This report should be submitted immediately on completion of Title I. Reconciliation of Headquarters comments shall be incorporated into Title II design by the design professional and responses to comments provided to Headquarters by DOE field organizations.

DOE field organizations shall include a completed summary form in its "Energy Conservation Report" submission to DOE Headquarters with the following information: 1) site; 2) building; 3) TEC ($M); 4) design/construction status; 5) energy type; 6) building energy consumption (MBTU/yr); 7) process energy consumption (MBTU/yr); 8) total energy consumption (MBTU/yr); 9) metering provided; 10) gross square feet (GSF); 11) BTU/GSF per year; 12) LCC method; 13) major energy conservation features; and 14) LCC.

THIS PAGE INTENTIONALLY
LEFT BLANK

# ATTACHMENT L

## 1525 MECHANICAL INSULATION

### 1525-1 APPLICABILITY

Insulation shall be considered for equipment, ductwork, piping, flue pipe, and breeching to minimize energy loss, to prevent condensation, and to provide safe surface temperatures.

All insulation material, media used to apply insulation, and jacketing material shall have a maximum flame spread of not more than 25 fuel-contributed and smoke-developed ratings of not over 50 when tested using UL 723 Test Methods. Exception to the smoke-developed rating of 50 shall be made for exterior underground piping and exterior above-ground piping beyond 15 feet from buildings or individual supports (stanchions).

Asbestos or asbestos-containing materials shall not be used.

### 1525-2 MINIMIZATION OF ENERGY LOSS

ASHRAE Standard 90.1 shall be the basis for determining insulation thickness in HVAC systems, service water heaters, and recirculation piping in buildings.

Insulation thickness for exterior and underground distribution systems and equipment shall be based on the TIMA Economic Thickness Manual.

### 1525-3 CONDENSATION PREVENTION

Insulation material, thickness, and jacketing shall be designed to provide an exterior skin surface temperature greater than the minimum anticipated ambient dew point.

### 1525-4 SAFE SURFACE TEMPERATURES

Insulation shall be provided on hot and cold generation equipment, ductwork, piping, flues or breeching, using a material, thickness, and surface treatment that will maintain the surface temperature between 30°F and 125°F for highly conductive (metal) surfaces or between 32°F and 150°F for nonconductive surfaces.

## 1530 FIRE PROTECTION

### 1530-1 GENERAL

Fire protection systems shall comply with DOE 5480.7 (Attachment U).

## 1530-2 IMPROVED RISK CONCEPT FOR FIRE PROTECTION SYSTEMS

### 1530-2.1 General

Fire protection design shall incorporate an "improved risk" level of fire protection as directed in DOE 5480.7 (Attachment U) as well as Section 0110-5, (Attachment T) Health and Safety.

### 1530-2.2 Vital Programs

Fire protection systems for vital programs shall incorporate a "higher standard of protection" than the "improved risk" level as directed by DOE 5480.7 (Attachment U).

### 1530-2.3 Maximum Possible Fire Loss

#### 1530-2.3.1 General

The "improved risk" level of protection requires that the "maximum possible fire loss" shall be the basis for determining the need to provide automatic fire suppression systems and for additional fire protection systems and features. "Maximum possible fire loss" is defined in DOE 5480.7 (Attachment U). Criteria I through V as discussed in DOE 5480.7 (Attachment U) correspond with Section 1530-2.3.2, Criterion I, through Section 1530-2.3.6, Criterion V. The application of these criteria shall be considered by an experienced fire protection engineer.

#### 1530-2.3.2 Criterion I

Whenever the maximum possible fire loss exceeds $1 million, automatic fire suppression systems shall be provided.

#### 1530-2.3.3 Criterion II

The need for automatic fire suppression systems shall be considered when the maximum possible fire loss is below $1 million.

Some examples of situations where automatic fire suppression systems may be warranted for potential fire losses below $1 million are:

- Facilities that contain critical or long-procurement-time construction items
- A temporary-use trailer used as a control center for a vital one-time activity
- A facility with high public visibility or sensitivity
- Electric power transformers with combustible contents that, if damaged, could result in an extended shut-down of the facilities they serve

- Facilities in which a fire could result in the accidental release of toxic or hazardous materials or emissions
- Cooling towers of combustible construction
- Facilities that can be easily protected by extending automatic sprinkler systems from an adjacent protected facility at a low incremental cost
- Facilities in which a fire could damage more important adjacent facilities
- Facilities that may warrant automatic fire suppression systems in the future
- Facilities where required for protection of human life

**1530-2.3.4 Criterion III**

Automatic fire suppression systems are not required if all of the following conditions are satisfied:

- The maximum possible fire loss is less than $250,000
- There is no hazard to human life
- There is no danger of a fire resulting in release of toxic or hazardous material or emissions
- Important operations or program missions will not suffer unacceptable delays as a result of fire. See DOE 5480.7 (Attachment U) for qualification criteria.

**1530-2.3.5 Criterion IV**

Whenever the maximum possible fire loss exceeds $25 million, the area shall be subdivided with free-standing fire rated walls or suitable redundant fire protection systems to limit the credible loss to less than $25 million even in the event the primary system fails. In no case shall the maximum loss potential exceed the $75 million loss limit established in DOE 5480.7 (Attachment U); failure-proof systems such as physical separations shall be provided to prevent this possibility.

Response capability of on-site fire departments and availability of adequate water quantity and pressure at well-located hydrants may be the principal basic method of redundant fire protection for most DOE facilities, but automatic redundant protection systems may be needed to meet or exceed "improved risk" levels of protection for some facilities.

Redundant fire protection systems may include dual water supplies to sprinkler systems, dual piping risers, or valving systems such that adequate redundancy in water supply to the sprinkler heads is provided to cover maintenance or emergency outages of either of the water supply systems; or, may include

multiple types of automatic fire suppression systems (e.g., water sprinklers and carbon dioxide).

Some DOE sites or facilities must rely on local (e.g., city or county) fire department response capability for redundant protection. The fire department capability to reduce loss due to a well-developed fire shall be considered in terms of the following factors:

- Location of fire station(s) with respect to the facility to be protected
- Staffing of stations (e.g., continuously or "on-call" volunteer)
- Ability to perform initial fire attack as outlined in NFPA 1410
- Method(s) of fire department notification or alarm reception
- Familiarity of station staff with the DOE facility, and training in preparation for effective response to an alarm at the DOE facility
- Degree of commitment that fire department(s) make to respond to fire emergencies in DOE facilities. This factor shall be emphasized.

  Portable fire extinguishers, interior fire hose systems, or interior fire detection and alarm systems do not meet the definition of a redundant fire protection system.

**1530-2.3.6 Criterion V**

The need for redundant fire protection systems or methods, or for supplementing existing redundant fire protection capability, shall be considered on a case-by-case basis when the maximum fire loss potential is below $25 million. Factors to be considered include:

- Fire department response capability
- Hazards involved in the operation
- Operating and program-mission effect of interruption and delays due to fire

## 1530-3 WATER FLOW AND PRESSURE REQUIREMENTS FOR FIRE PROTECTION

### 1530-3.1 General

Total volume, pressure, and design flow rate of water necessary to provide fire protection for facilities shall be determined by the methods described in the following paragraphs. All sprinkler or other automatic fire suppression system components shall be UL- or FM-approved for the particular application chosen.

### 1530-3.2 Occupancy Hazard Classification

NFPA 13 shall be used to determine the Occupancy Hazard Classification for any facility. Light hazard occupancy rules are prohibited.

### 1530-3.3 Water Demands for Sprinklered Facilities

#### 1530-3.3.1 Schedule-Designed Sprinkler Systems

For systems designed using pipe schedule methods, NFPA 13 shall be used for calculating water demand in the absence of specific requirements provided by the cognizant DOE fire protection authorities based on unusual occupancies or special hazards.

Precautions shall be taken to ensure that adequate residual pressure exists at full demand flow rate to fulfill the density and coverage requirements for schedule-designed systems. If water supply or pressure is marginal the pressure loss from the base of the riser to the most remote head should be calculated to confirm that the schedule designed-system will meet requirements, or the system shall be hydraulically designed.

#### 1530-3.3.2 Hydraulically Designed Sprinkler Systems

NFPA 13 shall be used to determine water supply requirements for hose streams (gpm) and duration (min). Density curves presented in NFPA 13 shall be used for calculating sprinkler demand for hydraulically designed systems. For hazard classifications not covered in NFPA 13 and certain other special occupancies or hazards, design density and area of coverage shall be as specified by other more appropriate standards referenced in NFPA 13 or project-specific requirements as determined by the cognizant DOE fire protection engineer. For ordinary hazard occupancies and above, hose stream requirements shall be a minimum of 500 gpm regardless of the hose stream demands listed in the above references unless otherwise specified by the DOE project criteria.

Determination of adequacy of water supply shall be made on the basis of actual flow test data gathered using the methods in NFPA 13, Appendix B.

#### 1530-3.3.3 Fire Hydrant Demand

Where reliance is placed on fire department response, either for protection of unsprinklered buildings or where the fire department will serve as redundant (backup) protection, as a general rule the water supply should be adequate to supply at least 0.03 gpm per cubic foot of fuel (building and contents) in the largest fire area (for high-BTU-content fuels, convert to equivalent ordinary BTU loads). This water supply should be available at 20 psig residual pressure at the hydrants.

## 1530-4 AUTOMATIC SPRINKLER PROTECTION

### 1530-4.1 General

All sprinkler systems shall comply with NFPA 13.

### 1530-4.2 Types of Sprinkler Systems

#### 1530-4.2.1 Wet Pipe

Sprinkler systems shall normally be wet pipe using pipe schedule sizes listed in NFPA 13 for ordinary installations. Hydraulic designs shall be considered for all systems. The system shall be hydraulically designed where residual pressure is marginal, water application rate is high, response time is critical, or special risks are involved.

#### 1530-4.2.2 Dry Pipe

In unheated areas or other areas subject to freezing temperatures, dry pipe systems shall be provided. Because of the time delays associated with release of the air in the system, water demands for dry pipe systems shall be computed over areas 30 percent greater than for comparable wet pipe systems. Where the unheated area is small it may be cost effective to install an antifreeze system or small dry pipe system supplied from the wet pipe system in the main heated area.

#### 1530-4.2.3 Preaction

A preaction system shall be used where it is particularly important to prevent the accidental discharge of water. Need for a preaction system shall be based on review and by recommendation of a professional fire protection engineer. The detection system chosen to activate the preaction valve shall have high reliability and a separate alarm/supervisory signal to indicate status. The detection system must be designed to be more sensitive than the closed sprinklers in the preaction system, but should not be so sensitive as to cause false alarms and unnecessary actuation of the preaction valve.

#### 1530-4.2.4 Deluge

For extra hazard areas and specific hard-to-extinguish fuels such as explosives and pyrophoric metals, a deluge system with open sprinkler heads may be used to wet down the entire protected area simultaneously. Deluge systems shall comply with NFPA 13. If quick response is required, deluge system piping may be primed with water. The nozzles must be provided with blow-off caps for water-filled deluge systems.

#### 1530-4.2.5 Self Restoring

Self-restoring sprinkler systems, such as the on-off multicycle system or systems using individual on-off sprinkler heads, shall be considered where the water from sprinklers will become contaminated by contact with room contents,

where there is a concern for water damage, or where water supply or storage volume is marginal.

**1530-4.2.6 Quick-Response**

Where there are high-value concentrations (values per square foot), quick-response sprinklers shall be considered in lieu of conventional sprinklers.

**1530-5 SPECIAL PROTECTION SYSTEMS**

**1530-5.1 General**

Special protection systems may be used to extinguish or control fire in easily ignited, fast-burning substances such as flammable liquids, some gases, and chemicals. They shall also be used to protect ordinary combustibles in certain high-value occupancies especially susceptible to damage. Special protection systems supplement automatic sprinklers as described by NFPA and shall not be used to substitute for them except where water is not available for sprinkler protection. The added expense of the supplementary system shall be supported by documented justification.

The selection of a particular special suppression system shall be based on:

- The effectiveness of that system or agent for the type of hazard
- The damage likely to be caused by the extinguishing agent, including cleanup and down time

**1530-5.2 Types of Special Suppression Systems**

**1530-5.2.1 Water Spray**

Installation of water spray systems shall comply with NFPA 15.

**1530-5.2.2 Carbon Dioxide**

Agent quantity requirements and installation procedures shall comply with NFPA 12.

**1530-5.2.3 Dry Chemical**

Systems shall comply with NFPA 17.

**1530-5.2.4 Foam**

Foam systems shall comply with NFPA 11, NFPA 11A, NFPA 16, and NFPA 16A.

**1530-6 (RESERVED)**

**1530-7 PORTABLE FIRE EXTINGUISHERS**

Portable fire extinguishers shall comply with NFPA 10.

## 1530-8 FIRE DETECTION AND ALARM SYSTEMS

### 1530-8.1 General

All fire detection and alarm devices shall have UL-listed components or be FM-approved. Devices and systems shall comply with NFPA 71, NFPA 72A, NFPA 72B, NFPA 72C, NFPA 72D, NFPA 72E, NFPA 72F, NFPA 72G and NFPA 72H as applicable.

### 1530-8.2 Alarm Systems

#### 1530-8.2.1 General

Fire alarm systems shall have the following basic features:

- Transmission of signals to the DOE facility fire department alarm center and other constantly attended locations in accordance with the appropriate NFPA Signaling Systems Standard
- Local alarms for the building or zone in alarm
- Trouble signals as required by the appropriate NFPA Signaling Systems Standard
- Emergency battery backup for system operation
- Electric supervision of all circuits as required by the appropriate NFPA standard
- Supervisory devices for all critical functions (valve position switches, water level, temperature)
- Capability of annunciating at least three separate conditions: 1) a fire alarm, 2) a supervisory alarm, and 3) a trouble signal indicating a fault in either of the first two. Annunciation of each condition shall be separate and distinct from the other two.

Fire alarm systems for new DOE buildings shall be compatible with those for the DOE complex where the new building is to be located.

#### 1530-8.2.2 Alarm Actuating Devices

- Alarms that respond to flow of water shall be provided wherever a sprinkler system is installed and shall comply with requirements of the NFPA standard for the type of signaling system used.
- A manual fire notification method such as manual fire alarm boxes shall be provided and located in accordance with the appropriate NFPA standard
- Combined watch reporting and fire alarm systems, if used, shall be in accordance with the appropriate NFPA standard

## 1530-8.3 Automatic Fire Detection Systems

### 1530-8.3.1 General

Automatic detection systems may be used to supplement or to actuate extinguishing systems. Automatic fire detectors shall comply with NFPA 72E. Detector spacing shall be in accordance with NFPA 72E, Appendices A, B and C.

### 1530-8.3.2 Heat-Actuated Detectors

Heat-actuated detectors are appropriate when any of the following conditions exist:

- Speed of detection is not the prime consideration
- The space is small or confined and rapid heat build-up is expected
- Ambient conditions do not allow the use of other detection devices

### 1530-8.3.3 Flame-Actuated Detectors

Flame-actuated detectors are appropriate when rapid detection is of prime importance in high hazard areas, such as:

- Fuel-loading platforms
- Industrial process areas
- Hyperbaric chambers
- High ceiling areas
- Atmospheres where explosions or very rapid fires may occur

Since this type of device must "see" the flame to operate, the number of devices and their aiming must be carefully engineered. False trips from extraneous radiation sources are also possible. For the above reasons use of this type of device shall require coordination among the fire protection engineer, DOE project manager, and the equipment manufacturer.

### 1530-8.3.4 Smoke Detectors

Smoke detectors shall be installed in all areas where required by the appropriate NFPA standard or by the cognizant DOE fire protection authority. Smoke detectors shall be of a type operating on one of the principles described in NFPA 72E. A mixture of detector types may be appropriate. Location and required spacing of smoke detectors shall be determined by the methods of NFPA 72E and its Appendix C. Spacing shall be based on threshold fire size, fire growth rate, and ceiling height as described in these standards.

## 1530-9 WATER STORAGE AND DISTRIBUTION

Wherever practical, dedicated fire water storage and distribution systems shall be used. If a dedicated fire water supply system cannot be provided, the fire protection water supply shall assure availability regardless of simultaneous process and domestic water usage.

Where automatic sprinkler systems or standpipes are fed from a potable water system, approved check valves shall be installed in sprinkler lead-ins to preclude the introduction of pollutants from systems or recirculation of stagnant water that would contaminate the domestic water system. Underground fire water mains or combined fire and domestic water mains, including valves, hydrants, and fittings, shall be installed, flushed, sterilized, and tested in accordance with NFPA 24 and Section 0260, Piped Utility Materials. Water storage tanks shall comply with NFPA 22. Fire pumps shall comply with NFPA 20. Water storage shall be sufficient to meet the density, pressure, and duration requirements of NFPA 13.

Whenever feasible, all water distribution systems shall be of the looped grid type providing two-way flow with sectional valving arranged to provide alternate water flow paths to any point in the system.

Fire mains (except those supplying a single hydrant or extensions of existing smaller mains) shall be at last 8 inches. Mains shall be sized to supply the largest fire demand plus the largest domestic and process demand with consideration for residual sprinkler system pressure requirements.

Sprinkler supply lead-ins should be at least 6 inches, except lead-ins of 4 inches may be used for very small sprinkler systems when substantiated by hydraulic calculations. In no case shall the lead-in be smaller than the sprinkler riser.

Where combined fire and domestic-process water systems are used, the supplies to each building shall be arranged and valved so that the domestic and process systems can be shut down without shutting off the fire system supply.

Sprinkler risers should be located at an exterior wall. Sprinkler supply lead-ins should run under buildings the minimum distance possible. Where a riser must be located in a potentially contaminated area, consideration should be given to locating the riser exterior to the building in a heated enclosure.

Outside control valves that can be locked open shall be provided on each supply lead-in, located if possible a minimum distance of 40 feet from the building. PIVs should be used where possible. If site conditions preclude the use of PIVs, such as where they would be subject to mechanical damage and cannot be properly guarded, OS&Y valves in pits may be used.

Key-operated buried valves shall not be used for sprinkler control valves. In no case shall there be more than one valve controlling a sprinkler supply lead-in.

All lead-ins shall be connected with the sprinkler system at the base of the riser. Alarm valves shall be located as close as practical to the building entry point. Hydrants shall be provided so that hose lays from hydrants to all exterior portions of a protected building are no more than 300 feet. Hydrants shall not be closer to buildings than 50 feet.

THIS PAGE INTENTIONALLY
LEFT BLANK

# ATTACHMENT M

## 1540 PLUMBING/SERVICE PIPING

### 1540-1 PLUMBING

#### 1540-1.1 General

These criteria apply to interior plumbing systems (fixtures, supply, drain, waste and vent piping, service water heating system, safety devices, and appurtenances) up to 5 feet beyond the building exterior wall.

Domestic water shall be supplied by a separate service line and not be a combined fire protection and potable water service or a combined process water and potable water system within the building.

Plumbing shall comply with the Uniform Plumbing Code, ASHRAE Handbooks, and ASHRAE Standard 90.1.

Design criteria for special systems related to the facility process or research requirements shall be provided by the cognizant DOE authority.

Penetrations of piping through security barriers shall be minimized. Such penetrations more than 96 square inches in area and more than 6 inches in minimum dimension shall provide a penetration delay equal to that required for the security barrier. The physical attributes and intended service of the piping and the axial configuration of the barrier penetration shall be considered when evaluating that penetration delay.

#### 1540-1.2 Fixtures

Fixtures and appurtenances shall be suitable for use by handicapped persons. Self-contained mechanical-refrigerated coolers shall be provided wherever a need for drinking fountains exists. Ratings shall be based on ARI 1010. Electrical equipment shall be UL listed.

#### 1540-1.3 Piping

##### 1540-1.3.1 Supply

Type K copper tubing shall be used below grade. Type L copper tubing shall be used above grade. CPVC and PB plastic pipe and tubing may be used in lieu of copper tubing above grade where not subject to impact damage or otherwise prohibited by DOE project criteria.

Fittings for Type K shall be flared brass, solder-type bronze or wrought copper. Fittings for plastic pipe and tubing shall be solvent cemented or shall use other forms of joining (such as electric heat fusion) at the direction of the cognizant DOE authority or shall use Schedule 80 threaded. No lead solder shall be used for copper pipe in potable water systems.

Stop valves shall be provided at each fixture. Accessible shut-off valves shall be provided at branches serving floors or fixture batteries for isolation, or at risers serving multiple floors. Shut-off valves shall be provided to isolate equipment, valves, or appurtenances for ease of maintenance.

Accessible drain valves shall be provided to drain the entire system. Manual air vents shall be provided at high points in the system.

Provision for expansion compensation shall be included where thermal expansion and contraction cause piping systems to move. The movement shall be accommodated by using the inherent flexibility of the piping system as laid out, by loops, by manufactured expansion joints, or by couplings.

Accessible manufactured water hammer arresters shall be provided. Dielectric connections shall be made between ferrous and non-ferrous metallic pipe.

Where domestic or fire water service lines enter buildings, suitable flexibility shall be provided to protect against differential settlement or seismic activity in accordance with the UPC or NFPA 13, respectively.

**1540-1.3.2 Drain, Waste and Vent**

Underground lines shall be service weight cast iron soil pipe hub-type (with gasket); hubless cast iron soil pipe may be used in locations where piping is accessible. Aboveground (above grade) lines that are 1-1/2 inch in diameter and larger shall be either hubless or hub-type (with gasket) service weight cast iron soil pipe. Lines 1-1/2 inch through 6 inch in diameter may be ABS or PVC plastic pipe where allowed by DOE project criteria. Pipe and fittings shall be joined using solvent cement or elastomeric seals. Lines smaller than 1-1/2 inch in diameter shall be either 1) Type L copper with solder-type bronze or wrought copper fittings or 2) galvanized steel with galvanized malleable iron recessed threaded and coupled fittings. Cast iron soil pipe fittings and connections shall comply with CISPI guidelines.

Provisions for expansion compensation shall be included as above.

**1540-1.4 Service Water Heating Equipment**

The service water heating system shall provide flow within 10 seconds of approximately 110°F at the most remote outlet from generation equipment, except where this is deemed unnecessary by the cognizant DOE authority.

Booster heaters shall be provided where sanitizing for dishwashing or where a temperature above the normal water heater outlet temperature is required.

Generation equipment and system selection shall be based on LCC analysis and available energy sources.

### 1540-1.5 Safety Devices

Tempering valves shall be the fail-safe pressure balance type.

As directed by project criteria, emergency eye washes, emergency showers, or combination emergency eye wash-showers shall be provided in areas where corrosive or other skin or eye irritant chemicals are stored, handled, used or dispensed. Equipment shall comply with ANSI Z358.1 and be serviced by the potable water system.

Hot water generation equipment shall be provided with ASME code-stamped tanks, when of sufficient capacity, water temperature, or hot input rate to be within the jurisdiction of the ASME Boiler and Pressure Vessel Code. Approved relief devices, combination temperature-pressure or separate units, depending on the application, shall be provided.

Backflow preventers and air gaps shall be used to prevent cross-connection (contamination) of potable water supplies. Vacuum breakers (to prevent back-siphonage) shall be used only in conjunction with administrative controls.

### 1540-1.6 Appurtenances

#### 1540-1.6.1 Pressure Modification

Pressure-reducing valves shall be provided where service pressure at fixtures or devices exceeds the normal operating range recommended by the manufacturer.

Wherever a pressure-reducing valve's failure may cause equipment damage or unsafe conditions, a pressure-relief valve shall be provided downstream of the reducing valve.

A means to increase the system water pressure shall be provided when incoming water service pressure will provide less than the minimum operating flow and pressure recommended by the manufacturer.

The basic pressure-boosting system should be a manufactured package composed of an ASME-rated hydropneumatic, non-rechargeable tank, multiple alternating pumps, and low-flow/demand tank operation (without pump). Manufactured packages shall include all required operational and safety features.

THIS PAGE INTENTIONALLY
LEFT BLANK

# ATTACHMENT N

## 1550 HEATING, VENTILATING AND AIR-CONDITIONING SYSTEMS

## 1550-1 GENERAL SIZING AND DESIGN CRITERIA

### 1550-1.1 General Selection Procedures for HVAC Systems

The design professional shall evaluate building HVAC systems and sub-systems and select major HVAC equipment components based on a consideration of health and safety requirements, initial costs, operating costs, and maintenance costs according to the procedures listed in 0110-12.7 (Attachment K), Building Design Analysis.

HVAC equipment shall be sized to satisfy the building heating and cooling load requirements and to meet all general equipment design and selection criteria contained in the ASHRAE Fundamentals Handbook, ASHRAE Equipment Handbook, ASHRAE Systems Handbook, ASHRAE Applications Handbook, and ASHRAE Refrigeration Handbook. Calculations and equipment selection shall be made according to the procedures given in ASHRAE GRP 158 and appropriate chapters of the ASHRAE Fundamentals Handbook.

### 1550-1.2 Heat Gain and Heat Loss Calculations

#### 1550-1.2.1 Building Envelope Thermal Transmittance ("U") Values

See Section 0110-12.3 (Attachment K), Building Envelope Thermal Transmittance Values, for criteria to be applied in building planning and design.

#### 1550-1.2.2 Inside Design Temperature and Relative Humidities

Environmental design temperatures and relative humidities for special space uses other than those listed here shall be designated in the project criteria. The design professional shall verify that the recommended design values are within the criteria bounds of ASHRAE Standard 55 and that the values are within energy conservation criteria guidelines as stated in Section 0110-12 (Attachment K), Energy Conservation. The design professional shall alert the cognizant DOE authority if the recommended DOE design values will result in energy inefficiency or occupant discomfort.

When space cooling is required, the inside design temperature to maintain personnel comfort shall be 78°F dry bulb unless otherwise indicated by project criteria. The design relative humidity shall be 50 percent. Summer humidification shall not be provided for personnel comfort. Cooling systems shall be designed to maintain space relative humidity conditions through the normal cooling process and should not have controls to limit the maximum relative humidity unless project specific criteria dictate.

See Section 1550-1.4, Use of Evaporative/Adiabatic Cooling, for inside design temperature and humidity conditions applicable for adiabatic cooling systems.

The inside wintertime design temperature for personnel comfort shall be 72°F dry bulb unless otherwise indicated here or directed by the project criteria. The following design temperatures shall be used for the space usages indicated in Table 1550-1.2.2.

**Table 1550-1.2.2 Inside Design Temperatures**

| Temperature (°F db) | Space |
|---|---|
| As indicated by DOE project criteria | Storage (unoccupied) |
| 55 | Storage (occupied) |
| 50 | Warehouses |
| 60 | Kitchens |
| 65 | Laundries |
| 65 | Shops (high work activity) |
| 70 | Toilets |
| 75 | Change Rooms (heating only when occupied) |

Except where it can be substantiated from recordings or engineering computations that the inside relative humidity will be less than 30 percent, winter humidification for personnel comfort and health shall not be provided. Where such conditions have been substantiated, a design relative humidity of 30 percent shall be used in establishing minimum humidification equipment requirements.

**1550-1.2.3 (Not Used)**

**1550-1.2.4 Weather Data**

Weather data for use in connection with HVAC shall be obtained from one or more of the following:

- Local weather station
- AFM 88-29
- Climatic Conditions for the United States, ASHRAE Fundamentals Handbook.
- National Climatic Data Center, NOAA, Federal Building, Asheville, North Carolina 28801

**1550-1.3 Heating and Air-Conditioning Equipment Sizing and Performance**

The capacity of central heating, refrigeration, and ventilation equipment shall be sized for the peak block building or the maximum simultaneous zone heating and cooling design loads and in accordance with the ASHRAE Fundamentals Handbook. The equipment shall not be sized for future additional

capacity nor redundancy unless indicated in DOE project criteria. Individual zone equipment shall be sized according to the peak zone load. The requirements of ASHRAE Standard 62 concerning minimum outside air requirements shall also be considered during the sizing process.

All HVAC equipment shall meet the performance and efficiency standards of ASHRAE Standard 90.1, Section 6.

Thermal storage systems shall be considered according to the requirements of 0110-12.7, Building Design Analysis, when required by DOE project criteria.

Safety factors shall also be added as indicated elsewhere in the specification.

**1550-1.4 Use of Evaporative/Adiabatic Cooling**

In locations where a wide variation exists between the dry and wet bulb temperatures for extended periods of time, evaporative/adiabatic cooling shall be considered for the applications listed below. Selection of cooler types shall depend on the system configuration, user experience, and LCC analysis. All evaporative coolers shall maintain a positive water-bleed and water-makeup system for control of mineral buildup.

Applications that shall be considered include warehouses, shops not requiring close (plus or minus 5°F) temperature control, non-residential size kitchens, makeup air ventilation units, and mechanical equipment spaces.

Air duct design, number and location of coolers, and relief of the higher rate of air supply to the atmosphere shall be considered to ensure a satisfactory operating system. Multi-stage evaporative cooling systems shall also be considered.

For shops and similar large open bay areas, the heating and cooling systems shall not be combined except where it is economically or operationally justified. Two-speed fan operation shall be used: fast speed and higher cfm air flow rate during the cooling cycle and slow speed and lower cfm air flow rate during the heating cycle. Where the difference between heating and cooling air flow requirements is too great to allow for adequate air outlet device performance at the lower air flow requirement, separate heating and cooling systems shall be provided.

Indoor design dry bulb temperatures for spaces air-conditioned by adiabatic cooling systems shall be as specified by project-specific criteria. Design operating efficiency of adiabatic cooling equipment shall be a minimum of 70 percent. System-installed capacity shall be based on the conditioned space peak design cooling load. An arbitrary air-change rate for design air flow shall not be used. Adiabatic cooler specifications shall be stated in terms of the air capacity and the entering ambient dry and wet bulb temperatures and leaving dry bulb temperature.

## 1550-1.5 Ventilation-Exhaust Systems Design Requirements

### 1550-1.5.1 General

The design professional shall select ventilation-exhaust systems for the effective removal of noxious odors, hazardous gases, vapors, fumes, dusts, mists, and excessive heat and for the provision of fresh air to occupants. The design criteria contained in this section shall be followed in determining the required air quantity and quality for ventilation and exhaust systems. Further design criteria are contained in Section 1550-2.5, Air Handling and Air Distribution Systems; Section 1550-99, Special Facilities; Section 1550-3, Testing, Adjusting and Balancing; Section 1595-6, Control of Air Handling Systems; NFPA 90A; and NFPA 91.

The use of exhaust stack(s) shall be considered to provide dispersion and preclude exhaust-to-intake return of air to this or an adjacent facility. Local weather and site conditions along with guidance found in ASHRAE Fundamentals shall be used to determine requirements.

### 1550-1.5.2 Outdoor Air Quality

Outdoor air shall be used to provide makeup air, dilute non-toxic contaminants and provide acceptable indoor air quality in spaces served by ventilation systems. The outdoor air shall meet the quality required by ASHRAE Standard 62. DOE project criteria shall include test data on ambient air quality. If the outdoor air does not meet the ambient air quality standards for particulates, gases, or other contaminants, it shall be treated to remove particles and gases and vapors as required to meet the minimum ambient air quality standards.

### 1550-1.5.3 Personnel Ventilation Air Requirements

The outdoor air shall be provided in the quantities indicated for conditioned offices and other occupied spaces in ASHRAE Standard 62. Outdoor air in addition to the quantities required by ASHRAE Standard 62 shall be provided when required to balance a building's or space's exhaust air rate or to maintain the building or space under a positive pressure. Proper ventilation rates shall be demonstrated by calculation if natural ventilation or infiltration is used as the outdoor air introduction method.

Special attention shall be given to design of ventilation systems where smoking will be allowed. For these spaces, the outside air ventilation rate designated for smoking areas by ASHRAE Standard 62 shall be provided or the appropriate air cleaning used.

### 1550-1.5.4 Recirculation

When air is supplied to a space, the portion of the total supply air that exceeds the required outdoor air quantity shall be recirculated through the ventilation system except from areas in which recirculation is specifically prohibited. If the indoor air quality does not meet or exceed the limits

given in ASHRAE Standard 62, the recirculated air must be treated and monitored.

Areas from which air shall not be recirculated include areas that produce or emit dust particles, heat, odors, fumes, spray, gases, smoke, or other contaminants that cannot be sufficiently treated and could be potentially injurious to health and safety of personnel or are potentially damaging to equipment. These areas shall be 100-percent exhausted. Project criteria shall indicate other areas of non-recirculation.

Ventilation and exhaust air systems serving these areas or other special areas shall meet all the deliverable-air quantity requirements of ASHRAE Standard 62 and any other specific equipment requirements as discussed in Section 1550-2.5, Air Handling and Air Distribution Systems, and Section 1550-99, Special Facilities.

Rest rooms, janitor's closets, garbage rooms, and other malodorous spaces shall be exhausted at a rate of not less than 2 cfm per square foot or as specified in ASHRAE Standard 62, whichever is the more stringent, regardless of any other calculated ventilation requirements. Space ventilation air from adjacent spaces should be used as the ventilation supply air for the 100-percent exhausted spaces, as long as:

Ventilation by this method does not violate any requirements of NFPA 90A, NFPA 101, or special space pressurization requirements

The air supplied is not potentially more hazardous than the air from the space exhausted

**1550-1.5.5 Industrial Ventilation Requirements**

Industrial-type facilities shall be provided with ventilation (supply and exhaust) systems as required for heat exposure control, or dilution ventilation. Ventilation air shall be provided in the quantities required to maintain OSHA air quality limits, all the PELs established by 29 CFR 1910 and all ACGIH TLVs. Design air quantities and transport velocities shall be calculated according to the calculation methods prescribed by the ASHRAE Systems Handbook, the ASHRAE Applications Handbook, the ACGIH Industrial Ventilation Manual, 29 CFR 1910. Makeup air shall be tempered.

**1550-1.5.6 Local Exhaust Systems**

DOE project-specific criteria shall provide information on the source, quantity, and type of contaminants. Local exhaust systems shall be designed to maintain the required capture air velocities for source contaminant control. Air quantities and transport shall be calculated based on the calculation methods prescribed by the ASHRAE Systems Handbook, the ASHRAE Applications Handbook and the ACGIH Industrial Ventilation Manual. Further design criteria for local exhaust systems are contained in Section 1550-2.5, Air Handling and Air Distribution Systems, and Section 1550-99, Special Facilities.

### 1550-1.5.7 Equipment Room Ventilation

Mechanical and electrical equipment rooms shall be exhausted so that room temperature does not exceed NEMA equipment ratings. DOE project criteria shall provide the space temperature limit criterion. Where mechanical ventilation cannot maintain a satisfactory environment, evaporative cooling systems or other mechanical cooling systems shall be provided. Exhaust air openings should be located adjacent to heat-producing equipment to minimize ambient thermal loads.

Thermostatic controls shall be used to operate the ventilation or exhaust systems as discussed in Section 1595, Controls.

Equipment rooms containing refrigeration equipment shall be ventilated in accordance with ASHRAE Standard 15.

Combustion air for fuel-burning appliances and equipment shall be provided to all equipment rooms with this type of equipment in accordance with the Uniform Mechanical Code.

### 1550-1.6 Energy Conservation—Waste Heat Recovery Systems

Specific energy-efficient features and waste heat recovery systems for all types of heating, ventilating, and air-conditioning equipment shall be considered according to the methods prescribed in Section 0110-12.7 (Attachment K), Building Analysis Procedures, and in Section 1550-1.1, General Selection Procedures for HVAC Systems. Special consideration shall be given to energy conservation systems if they affect health and safety, for example, corrosiveness of exhaust air to heat recovery coils.

Energy conservation-waste heat recovery systems shall be considered and designed according to the procedures outlined in specific chapters of the ASHRAE Fundamentals Handbook, the ASHRAE Systems Handbook, the ASHRAE Applications Handbook, ASHRAE Equipment Handbook, ASHRAE Refrigeration Handbook, and the SMACNA Energy Recovery Equipment and Systems Manual.

The following types of heat-recovery systems shall be considered for incorporation into the building HVAC system design where applicable:

Use of rotary heat exchanger, heat pipe, or coil run-around systems for heating and air conditioning air handling systems with more than 4000 CFM of outside ventilation exhaust air

Recovery of rejected heat from the condenser systems of central station cooling equipment for use in heating the remainder of the building when the central station cooling equipment must operate during the heating season to cool computer rooms, high internal heat gain areas, or process requirements

Use of thermal heat from the condenser systems of kitchen or other continuously operated refrigeration equipment for space heating or domestic

hot water heating when the rejected heat from the equipment is greater than 35,000 BTUh

Use of a free cooling system using cooling tower water (water side economizer) when air-side economizer systems are not feasible

Use of a heat pump run-around loop

These evaluations shall be included in the "Energy Conservation Report" detailed in Section 0110-12.8, Energy Conservation Report Requirements (Attachment K).

## 1550-2 HEATING VENTILATING AND AIR-CONDITIONING SYSTEMS SELECTION

### 1550-2.1 Central Station Cooling Equipment and Systems

#### 1550-2.1.1 General

Selection of central station cooling systems shall be based on the LCC analysis procedures outlined in Section 0110-12.7 (Attachment K), Building Analysis Procedures. Size, selection and design shall be based on ASHRAE Fundamentals Handbook, ASHRAE Systems Handbook, ASHRAE Applications Handbook, and ASHRAE Equipment Handbook. Refrigeration equipment shall comply with ARI 520, ARI 550, and ARI 590.

Central chilled water plants shall be considered where two or more adjacent buildings are to be air-conditioned. The number and size of central station cooling units shall be based on the annual estimated partial-load operation of the plant to assure the most economical operation.

DOE project design criteria shall provide direction on installed standby chiller capacity. The design professional shall consider the use of multiple chillers for all chilled water loads greater than 400 tons. Wherever possible, the central station chilled water equipment shall be designed into the chilled water distribution systems as part of a primary-secondary loop system maintaining chilled water inlet temperature below a maximum predetermined value, preferably with the central station cooling equipment as a secondary portion of the loop.

Temperature-critical areas, as determined by project criteria, such as laboratories and computer centers, shall be provided with independent refrigeration systems with backup systems if involved with vital programs. The design professional shall consider use of off-peak cooling systems in areas having high electric peak demand charges.

#### 1550-2.1.2 Water Chillers

The selection of either centrifugal, reciprocating, helical, rotary-screw, absorption, or steam-powered chillers shall be considered based on coefficients of performance at full load and part-load conditions using the LCC methods as described in Section 0110-12.7 (Attachment K), Building

Analysis Procedures. The LCC analysis shall also consider chilled water and condenser water system pumping energy burdens as part of the evaluation. Compression refrigeration machines shall be designed with the safety controls, relief valves, and rupture disks noted below and in compliance with the procedures prescribed by ASHRAE Standard 15 and UL 207. Controls shall at a minimum include:

- High discharge refrigerant pressure cutout switch
- Low evaporator refrigerant pressure or temperature cutout switch
- High and low oil pressure switches
- Chilled water flow interlock switch
- Condenser water flow interlock switch (on water cooled equipment)
- Chilled water low temperature cutout switch

Centrifugal compressors shall be designed to operate with inlet vane control or variable speed control for capacity modulation. Units shall be capable of modulating to 20 percent of design capacity without surge. Reciprocating compressors shall be designed for capacity control by cylinder unloading. Design using hot gas bypass control of compressors for capacity modulation shall not be used except when capacity modulation is required below 10 percent of rated load. Compressor motors for refrigeration equipment shall be selected in compliance with all requirements of NFPA 70.

Absorption refrigeration machines shall at a minimum be provided with the following safety controls:

- Condenser water flow switch
- Chilled water flow switch
- Evaporation refrigerant level switch
- Generator high temperature limit switch (gas-fired units)
- Generator shell bursting disc (high temperature water or steam)
- Concentration limit controls

Liquid coolers (evaporators) shall be designed to meet design pressure, material, welding, and relief requirements of ASHRAE Standard 15 and ASME Boiler and Pressure Vessel Code, Section VIII. The design professional shall select evaporators according to the requirements of ASHRAE Standard 24.

The design professional shall select chilled water system temperature controls according to procedures described in Section 1595-7, Control of Chilled Water and Hot Water Solution Systems.

### 1550-2.1.3 Condensers/Condensing Units

Water cooled condensers shall comply with ASHRAE Standard 15 and ASME Boiler and Pressure Vessel Code, Section VIII. The design professional shall select condensers based on the cooling factors recommended in ARI 450. Water-cooled condenser shell and tube types shall be designed and specified with removable heads, if available, to allow tube cleaning.

Air-cooled condensers and condensing units shall meet the standards, rating, and testing requirements of ARI 460 and ASHRAE Standard 20. Unless project-specific criteria dictate otherwise, these units shall not be located on roofs. The design professional shall locate air-cooled condenser intakes away from any obstructions that will restrict the air flow and from locations that receive peak solar heat gain. Air-cooled equipment shall be located away from noise-sensitive areas, and air-cooled condensers shall have refrigerant low head pressure control to maintain satisfactory operation during light loading.

### 1550-2.1.4 Cooling Towers

The design professional shall locate and place cooling towers to avoid problems with water and deposition of water treatment chemicals. Unless project-specific criteria dictate otherwise, towers shall not be located on roofs. Cooling towers shall have ample clearance from any obstructions that would restrict air flow, cause recirculation of discharge air, or inhibit maintenance.

The design professional shall specify cooling tower acceptance and factory rating tests conducted in accordance with CTI Bulletin ATC-105.

An automatic-controlled water bleed shall be designed for all cooling towers. A cooling tower water treatment program should be selected by a specialist. Cooling tower components shall be selected to prolong cooling tower life by use of neoprene-fiberglass fill and one of following:

- Chemical treatment of tower members constructed of wood to form a coating insoluble in water
- Pressure treatment of the tower members constructed of wood with chemicals that are toxic to the organisms that cause wood decay
- Use of noncorroding ceramic, plastic, and metal components instead of wood

Cooling towers shall be specified with sump water heating systems if they will operate during freezing weather conditions.

### 1550-2.2 Electric Heating

Fully modulating electric heating shall be used or other forms of indirect heating shall be considered like heat recovery or release cycle heat pumps, etc.

### 1550-2.3 Water Distribution Systems

#### 1550-2.3.1 General

The design professional shall select chilled water, hot water, condenser water, boiler feed, condensate return systems designed for economical pipe sizes based on allowable pressure drop, flow rate, and pump selection criteria as prescribed by the ASHRAE Fundamentals Handbook, ASHRAE Equipment Handbook, and ASHRAE Systems Handbook, ASHRAE Applications Handbook. Insulation shall be provided on all water distribution piping and system components. Strainers shall be provided at the suction side of each pump and each control valve. The design professional shall specify flexible connectors to be installed on the suction and discharge piping of base-mounted end suction type pumps.

Check valves and balancing valves or combination check-shut-off-balance valves shall be installed in the discharge piping of all pumps operating in parallel pumping systems. Balancing valves shall be installed in the discharge piping of solitary pump systems.

Service valves shall be installed in the suction and discharge piping of all major pieces of equipment. Balancing valves shall be provided in the discharge piping of all coils, and central station cooling equipment.

Air elimination pressure control, venting, and automatic filling system (with backflow prevention) shall be provided for each hot water and chilled water distribution system, including provision of water treatment injection if required.

Expansion or compression tanks and fill piping connections shall be located on the suction side of the distribution system pump or pumps. Expansion tanks and air separation devices shall be sized according to the methods in the ASHRAE Systems Handbook and specified in accordance with the requirements of ASME B31.1. Gauge glasses, drain valves and vent valves shall be provided for all expansion tank systems.

Water treatment design information for chilled water, hot water, and boiler feed water systems shall be provided by a specialist based on project criteria (tested water condition).

#### 1550-2.3.2 Pumps and Pumping Systems

Pumps for chilled water, hot water, condenser water, boiler feed-water and condensate systems shall be of the centrifugal type selected based on criteria in ASHRAE Handbooks. Materials, types of seals, bearings, wear rings, shafts and other features shall be selected based on specific system requirements and

economic evaluation. The design professional shall consider the use of primary-secondary type pumping systems and high-efficiency motors for pumps for all hot and chilled water distribution systems.

On systems where system pumping horsepower requirements are greater than 20 bhp, the design professional shall consider the use of variable speed drives or parallel pumping arrangement.

Standby pumps shall be provided for all systems as dictated by project-specific criteria.

**1550-2.3.3 Piping, Fittings and Accessories**

Piping size shall comply with Section 1550-2.3.1, General. Selection of materials, installation of piping, fittings, valves, and accessories, as well as methods of joining and suspending piping systems, shall be based on pressure requirements, pipe size, and type of service as recommended by ASHRAE Equipment Handbook and ASME B16 series, ASTM G46 and ASME B31.1. The design professional shall calculate and design for expansion of piping systems. Chilled water, heating water, and condenser water piping shall be Schedule 40 piping with flanged, screwed, grooved-end or welded fittings depending on pipe sizes and operating conditions. Boiler feed water and condensate piping shall be Schedule 80 black steel with appropriate fittings depending on pipe sizes.

**1550-2.4 Steam Distribution Systems**

All steam piping shall comply with ASME B31.1 and be a minimum of Schedule 40 black steel. Fittings, valves, and accessories shall be selected based on pipe size and temperature pressure conditions.

1550-2.5 **Air Handling and Air Distribution Systems**

1550-2.5.1 **General**

The design professional shall consider and design air handling equipment and air distribution systems sized to optimize both initial cost and air handling system operating and maintenance costs according to the procedures outlined here and in Section 0110-12.7, Building Analysis Procedures.

The design professional shall provide all air handling system equipment (fans, terminal units, handling units, etc.) with vibration isolators and flexible ductwork connectors to minimize transmission of vibration and noise. Systems shall satisfy the NC levels recommended for various types of spaces and vibration criteria as listed in the ASHRAE Handbooks. Where air handling equipment and air distribution systems cannot meet these requirements, sound attenuation devices shall be installed in the air handling systems.

Air flow diagrams shall be developed and provided in the preliminary design phase unless waived by the DOE project criteria. These diagrams shall be provided for each air handling and air distribution system, and shall include capacities and locations of fans, coils, filters, terminal devices, and other

major air distribution system equipment, as well as air flows and air pressures and space pressure differentials.

Air flow velocities shall be designed to minimize settling of entrained particles as outlined in ACGIH Industrial Ventilation Manual.

Air handling and air distribution systems shall meet the energy conservation requirements for transport energy in ASHRAE Standard 90.1. Controls for air handling and air distribution equipment shall comply with Section 1595-6, Control of Air Handling Systems. Supply and or air intakes shall be located a minimum of 10 feet from any exhaust opening.

**1550-2.5.2 Air Handling Units**

The design professional shall select packaged air handling units complete with filters, coils, mixing boxes, fan section, and other accessories or built-up air handling units based on an evaluation and the requirements of NFPA 90A, AMCA Publication 261, and ARI 430.

**1550-2.5.3 Fans/Motors**

Fans shall be designed and specified to assure stable, nonpulsing aerodynamic operation in range of operation over varying speeds. Air handling units and fans in sizes over 1 hp use belt drives. Fans with motors of 10 hp or less shall be designed with adjustable motor pulley sheaves to assist in air balancing of systems. Fans with motors greater than 10 hp or less shall use fixed (non-adjustable) drives that can be adjusted by substituting fixed motor sheaves of different diameters. Supply air handling units and return air fans in variable-air-volume systems shall control capacity through the use of variable-speed drives, inlet vanes or scroll bypass dampers. All fans shall comply with AMCA Standard 210, ASHRAE Standard 51, and ASHRAE Equipment Handbook.

Fans shall be located within the ductwork system according to the requirements of AMCA Publication 201 and ACGIH Industrial Ventilation Manual. The design professional shall consider the use of variable-speed drives on fans in variable-air-volume systems where the supply fans are larger than 5 BHP. Motors shall be sized according to properly calculated BHP fan requirements and shall not use oversized fans and motors to meet future capacity needs unless so directed by DOE project criteria.

The design professional shall consider the selection of fan construction materials based on corrosion resistance and cost. Spark-resistant construction shall be used where required by NFPA.

All fans and accessories shall be designed and specified to meet all smoke and flame spread requirements of NFPA 255.

### 1550-2.5.4 Coils

Heating and cooling coils shall comply with ARI 410. Heating or cooling coil selection shall not conflict with ASHRAE Fundamentals Handbook or ASHRAE Equipment Handbook. The design professional shall specify that coil manufacturers certify coil performance by ARI certification or provide written certification from a nationally recognized independent testing firm that will verify coil performance to be in accordance with ARI 410.

Heating and cooling coils shall be specified of materials appropriate for corrosive atmosphere in which they are contained.

Cooling coils shall be designed with a maximum face velocity of 600 fpm. Coils designed with face velocities exceeding 450 fpm shall be specified with provisions to prevent condensate carryover, or use moisture eliminators. Coils shall be specified with drain feature.

Recirculating air systems with outside air winter design temperatures below freezing shall be designed with a preheat coil located either in the outside air intake or in the mixed air stream upstream of the cooling coil, unless the theoretical mixed air temperature is calculated to be above 35°F. In this case, the preheat coils may be omitted if adequate baffling is provided to guarantee positive mixing of the return and outdoor air. Preheating coils shall be specified and designed to maintain discharge air temperature without modulation of the steam or hot water flow through use of modulating face and bypass dampers. Steam modulation may be used for control of steam coils in moderate climates where proven to be reliable without concern of coil freeze-up.

### 1550-2.5.5 Air Cleaning Devices

**General**

Air cleaning equipment for ductwork installation shall be easily removable, serviceable, and maintainable. Air cleaning equipment shall have face velocities as recommended by the filter manufacturer and the design manuals recommended above to achieve maximum efficiency minimum pressure drop.

Filters shall be constructed of noncombustible materials meeting the requirements for UL 900 Class I. Air filters shall be located on the suction side of fans and coils and in other special locations as required for air treatment. Air-filter pressure drop gauges of the diaphragm-actuated, dial-type (preferred) or the inclined manometer type shall be located on all filter assemblies.

**Filters for Air Handling Systems Serving Inhabited Spaces**

Filters include air filter devices and air filter media used in building environmental air handling systems for removing particulate matter from atmospheric air. These filters shall be specified to meet minimum efficiencies required by the ASHRAE Dust Spot method using atmospheric dust

for medium-efficiency applications. Filters shall be specified and installed for use as pre-filters, medium-efficiency filters, or high-efficiency filters. These filters shall comply with ARI 850.

High-efficiency filters and assemblies shall comply with DOE project criteria. Electronic air cleaners and extended dry-surface filters shall be considered for use as high-efficiency filters. Pre-filters are normally provided, being either pre-filter or medium-efficiency filters depending on the upstream air particle size distribution.

**Air-Cleaning Devices for Special Applications**

Filters include dry type dust collectors, wet collectors, centrifugal collectors, adsorbers, absorbers, oxidizers, and chemical treatment filters that are used primarily in industrial and process-type applications associated with air or gases that have heavy dust loadings in exhaust systems or stack gas effluents. Filters shall be designed according to the requirements given in DOE project criteria, ASHRAE Equipment Handbook, and ACGIH Industrial Ventilation Manual.

**1550-2.5.6 Ductwork Systems**

Ductwork systems shall be designed for efficient distribution of air to and from the conditioned spaces with consideration of noise, available space, maintenance, air quality and quantity, and an optimum balance between expenditure of fan energy (annual operating cost) and duct size (initial investment).

Ductwork systems shall be designed to meet the leakage rate requirements of SMACNA HVAC Air Duct Leakage Test Manual.

Ductwork, accessories, and support systems shall be designed to comply with ASHRAE Fundamentals Handbook, SMACNA Standards, ACGIH Industrial Ventilation Manual, and NFPA 45.

Ductwork shall also be designed to comply with NFPA 90A, including specification and installation of smoke and fire dampers at fire wall penetrations and smoke pressurization/containment dampers as required for smoke pressurization/evacuation systems. Fire dampers shall not be used on exhaust system ducting if it is required to maintain confinement of hazardous materials during and after a fire event.

Exhaust ductwork shall comply with NFPA 91. Ductwork for kitchen exhaust systems shall comply with NFPA 96.

Ductwork shall be designed to resist corrosive contaminants if present. Ductwork that handles air exhausted from shower rooms, dishwashing areas, or other areas causing condensation on the duct interior shall be of aluminum construction, have welded joints and seams, and have drainage at low points.

Ductwork thermal insulation shall comply with ASHRAE Standard 90.1. Ductwork shall be acoustically insulated to meet acceptable noise criteria.

Ductwork systems shall have testing and balancing dampers and accessories specified and led as discussed in Section 1550-3.2, Testing and Balancing Devices. The design professional shall specify automatic controls for ductwork systems and provide them in required locations as discussed in Section 1595, Control of Air Handling Systems.

Penetrations of ductwork through security barriers shall be minimized. Such penetrations more than 96 square inches in area and more than 6 inches in minimum dimension shall provide a penetration delay equal to that required for the security barrier. The physical attributes and intended service of the ductwork and the axial configuration of the barrier penetration shall be considered when considering that penetration delay.

**Table 1550-3.2a Required Balancing Devices for Air Distribution Systems**

| System Components | Required System Devices |
|---|---|
| Diffusers, grilles, registers | Round butterfly or square/rectangular opposed blade volume damper, either integral with device or in spin-in take offs |
| Branch ductwork runs | Rectangular/square or round (with more than one opposed blade damper and terminal device). Sealed test hole for pitot tube traverse |
| Fan discharge ductwork | Sealed test holes for pitot tube traverse. Sealed test hole for static pressure measurements |
| Fan suction ductwork | Sealed test hole for static pressure measurement |
| Cooling coil suction and discharge airstreams | Duct-mounted airstream thermometer |
| Heating coil suction and discharge airstreams | Duct-mounted airstream thermometer |
| Mixed air plenum airstream | Duct-mounted airstream thermometer |

## 1550-3 TESTING, ADJUSTING AND BALANCING

### 1550-3.1 System Performance Tests

The design professional shall specify system performance tests for mechanical air distribution and HVAC water distribution systems to verify compliance with DOE project criteria These tests shall be performed by an independent AABC testing organization in accordance with the guidelines contained in ASHRAE

Systems Handbook and AABC Volume A-82 or by others as dictated in project-specific criteria.

**1550-3.2 Testing and Balancing Devices**

HVAC air and water distribution systems shall be provided with permanently installed calibrated testing and balancing devices and access as needed to accurately measure and adjust water flows or air flows, pressures, or temperatures as required. The design professional shall provide as a minimum the balancing devices in Table 1550-3.2a and Table 1550-3.2b. Test devices shall be located and installed according to AABC Volume A-82.

**1550-3.3 General Guidelines**

Test and measuring locations shall be noted on construction drawings. The use of duct mounted air flow monitoring stations shall be considered where limited duct space or configuration restrict the use of pitot tube traverse procedures or where especially sensitive measuring requirements are dictated by the DOE project criteria.

**1550-99 SPECIAL FACILITIES**

**1550-99.0 Nonreactor Nuclear Facilities-General**

**1550-99.0.1 General Ventilation**

These criteria cover ventilation systems, or portions of them, that are classified as safety class items in accordance with Section 1300-3.2, Safety Class Items (Attachment R). Safety class ventilation systems are generally designed to operate in conjunction with physical barriers to form a confinement system to limit the release of hazardous material to the environment and to prevent or minimize the spread of contamination within the facility.

Ventilation and air-conditioning systems designed to provide a comfortable working environment and whose functions are not necessary to provide confinement are generally not designed as safety class systems.

Ventilation systems shall be designed to provide a continuous airflow pattern from the environment into the building and then from noncontaminated areas of the building to potentially contaminated areas and then to normally contaminated areas. Thus, the airflow is toward areas of higher hazardous material contamination. Dampers shall be located so that cross-contamination will not occur in case of a localized release of material.

Electronic air cleaners shall not be used in systems recirculating air.

**Table 1550-3.2b Required Balancing Devices for Water and Steam Distribution Systems**

| System Components (Water) | Required System Devices |
|---|---|
| Pump suction and discharge piping | Manifold pressure gauge with pressure taps |
| Pump discharge piping | Flow measuring device (type depending on accuracy required) |
| Chiller evaporator water suction and discharge piping | Thermometer/test well and pressure gauge and gaugecock |
| Chiller condenser water suction and discharge piping | Same devices as required for chiller evaporator piping |
| Boiler or heat exchanger suction and discharge piping | Same devices as required for chiller evaporator piping. Note: Simple, easy-to-install, state-of-the-art equipment such as magnetic vanes should also be considered. |
| Heating or cooling coil (AHU) suction and discharge piping | Thermometer/test well; pressure gauge/pressure tap |
| Heating or cooling coil (AHU) discharge piping | Presettable calibrated balancing valve with integral pressure test ports |
| Reheat coil, fan coil unit, unit heater, ports and finned tube radiation, convector: 1) discharge piping; 2) suction piping | 1) Presettable calibrated balancing valve with integral pressure test ports; 2) temperature test; 3) pressure tap |
| Three-way control valves (each port) suction and discharge piping | Pressure tap |
| **System Component (Steam)** | **Required System Devices** |
| Boiler discharge piping | Flow measuring device (orifice or venturi type) |

Ventilation system balancing shall be specified to ensure that the building air pressure is always negative with respect to the outside atmosphere.

Portions of ventilation systems that provide required functions following a seismic event shall be designed to be functional following a DBE.

The use of downdraft ventilation within occupied process areas shall be considered as a means to reduce the potential inhalation of contamination.

The failure of ventilation systems not designed as safety class systems shall not prevent other facility safety class systems from performing their required safety functions.

Hydrogen gas storage areas and process areas that use hydrogen shall have provisions for sufficient ventilation to ensure that under all conditions (normal operations, anticipated operational occurrences, and DBA conditions), the hydrogen concentration in the air will never exceed 4 percent by volume.

Gas storage areas and process areas that use hazardous materials shall have ventilation systems designed to ensure that the hazardous material concentrations do not exceed the limits referenced in DOE 5480.10 and are ALARA in the workplace environment. Effective loss-of-ventilation alarms shall be provided in all of these areas.

Components of ventilation systems that require electric power to perform their safety functions shall be considered safety class loads.

Adequate instrumentation and controls shall be provided to assess ventilation system performance and allow the necessary control of system operation.

Equipment in ventilation systems shall be appropriately qualified to ensure reliable operation during normal operating conditions, anticipated operational occurrences, and during and following a DBE.

## 1550-99.8 Telecommunications, Alarm, and ADP Centers and Radio Repeater Stations

### 1550-99.8.1 General

These criteria shall apply to telephone switching centers, teletype, data and facsimile centers, computer or ADP centers, radio control centers, security alarm control centers, and radio repeater stations.

Heat recovery options for utilization of the heat produced by equipment such as rectifier-charger bays, radio and microwave transmitters, and ADP equipment to conserve energy in the heating season shall be considered on the basis of LCC as described in 0110-12.7.1 (Attachment K). The ventilation design shall also consider directly exhausting heat gains from this equipment during the cooling season to minimize air-conditioning requirements.

**1550-99.8.2 Air-Conditioning and Ventilating Systems**

Air-conditioning systems for telecommunications, alarm, and automatic data processing centers shall comply with NFPA 90A and shall be completely separate and independent from other air distribution systems. Initial equipment heat loads for telecommunications and computer rooms shall be increased by 25 percent or to satisfy a five-year growth forecast (whichever is greater) in sizing the systems. Noncombustible duct construction materials shall be specified. Air ducts serving other spaces shall be designed to bypass these areas or shall be encased in a fire resistant enclosure with suitable fire doors and dampers as required by NFPA 90A.

Operating and equipment areas that contain dust-sensitive equipment shall be designed with a ventilation system that will maintain positive pressures and is provided with HEPA filtration systems.

**Telephone Switching Centers**

Where switchboard or console operators are seated higher than other employees within the room, the air-conditioning system shall be designed to minimize temperature imbalances between the working levels for employee comfort.

Power control boards, rectifiers, storage batteries, battery chargers, ringing machines and tone generators shall be located in rooms separate from the switching equipment and shall be provided with separate exhaust systems. Power equipment room ventilation systems shall be designed to maintain a positive air pressure in the equipment area.

**Storage Battery Areas**

Storage battery areas shall be ventilated according to NFPA 70, and ASHRAE Handbooks. Where storage batteries are to be located in the same room with telecommunications or alarm equipment, in lieu of providing a separate (and separately ventilated) battery room, the design professional shall consider the adequacy of the normal room ventilation system and the need for supplemental or emergency backup ventilation during scheduled or emergency shutdown of the central ventilation system.

**Security Alarm Control Centers**

HVAC systems shall be designed with air filtration features to protect against infiltration of aerosol and gas incapacitating agents.

**Radio Repeater Stations**

HVAC systems shall be designed to use heat gains from equipment for maintaining the operating room ambient temperature at not less than 40°F during the heating season. Auxiliary heaters shall be provided with adequate capacity to maintain an inside temperature of at least 70°F in the operating room at design outdoor winter conditions assuming a power outage to the radio

equipment. Auxiliary heaters shall maintain temperature in the emergency engine-generator room at not less than 40°F.

Exhaust fans shall provide sufficient ventilation during the cooling season to maintain the internal station temperatures required for equipment operation. The primary ventilating air system shall be designed with a backup system. Air-conditioning and dehumidification equipment shall be designed to meet environmental control requirements if an exhaust system cannot do so.

Air intakes equipped with replaceable glass-fiber type filters shall be located to provide makeup air for the heat exhaust system. A separate exhaust or air-conditioning system shall be provided for the engine-generator room to provide cooling in accordance with the manufacturer's recommendations.

# ATTACHMENT P

## 1565 REFRIGERATION

### 1565-1 CHLOROFLUORCARBON (CFC) LIMITATION AS A REFRIGERANT

#### 1565-1.1 Coverage

These criteria provide guidance to reduce DOE dependence on regulated CFCs as refrigerants in HVAC systems. CFC-22 is the only refrigerant in common use for HVAC systems not subject to international regulation due to environmental concerns (ozone depletion). Production of regulated CFCs (CFC-11, CFC-12, CFC-113, CFC-114, CFC-115, and, indirectly, refrigerant mixtures of those regulated CFCs such as CFC-500, CFC-501, and CFC-502) will be reduced 50 percent by 1993, with corresponding reduction of availability and increase in cost. Requirements to recycle and recover these regulated CFCs is expected in the near future. Continued installation of HVAC systems using regulated CFCs is unacceptable from operational and environmental viewpoints and shall be minimized to the maximum extent feasible.

Alternatives to CFC-11 and CFC-12 are being developed for use in existing equipment and future new equipment; however, significant technical problems have yet to be overcome. As technically proven alternative refrigerants become commercially available, these criteria will be updated to include their application. With present technology, the only feasible course to reduce DOE HVAC dependence on regulated CFCs is to limit new equipment to unregulated CFCs (CFC-22) where feasible and replace the existing inventory with equipment designed for CFC-22 as existing units fail.

#### 1565-1.2 Effective Date

These criteria are to be implemented as of the date of this Order (4/6/89). Application is as follows:

- Projects in planning or programming and those in Title I design or less: Comply with these criteria.
- Projects in Title II design and those under construction: Implement where technically and economically feasible.

#### 1565-1.3 Implementation

These criteria require immediate implementation to reduce DOE dependence on regulated CFCs to a minimum. The limitation of refrigerants to CFC-22 will be reviewed and relaxed to include alternative environmentally acceptable refrigerants as they become available. These criteria limit the use of CFCs in DOE design and construction and operations and maintenance programs to nonregulated compounds as follows:

- New mechanical refrigeration equipment: Use CFC-22 as the refrigerant where feasible.

- Repair-by-replacement projects involving the complete refrigerant side of existing equipment: The replacement equipment shall use CFC-22 as the refrigerant.

**1565-1.4 Exceptions**

- New absorption equipment or replacing existing equipment with absorption equipment

- Equipment in size ranges where CFC-22 equipment is not commercially available by a minimum of two suppliers with adequate operational experience. All available equipment types (reciprocating, helical screw, and centrifugal) shall be considered before making this decision.

- Repair projects involving partial replacement of the refrigerant side of a system, such as compressor or coil replacement only can use the existing refrigerant.

# ATTACHMENT Q

## 1595 CONTROLS

### 1595-1 GENERAL

This section covers safety and operating controls, automatic temperature and humidity controls, energy monitoring and (central supervisory) control systems, energy conservation requirements for controls, and zoning requirements and restrictions.

Specific safety control system requirements for individual types of equipment are discussed in Section 1550, Heating, Ventilating and Air-Conditioning Systems (Attachment N).

Special control requirements shall be indicated in DOE project-specific criteria. Selection of control system types and associated equipment, shall be based on the most economical and maintainable system.

Control systems shall be designed to use the closed-loop feedback method of control. Open-loop systems shall not be used. Proportional-type control shall be used for all control systems; other type control systems shall be used as needed according to the degree of control required.

All control equipment shall be easily accessible. One temperature control panel shall be provided for each system, complete with panel-face-mounted indicators, switches, pilot lights, and tags. All control interlocks shall be through HOA switches.

Control air compressors shall be duplex non-lubricated type with oil lubricated crankcase and distance piece. Air shall be filtered and dried using refrigerated air dryers for dew point of 15°F.

Copper piping shall be used for high pressure air in inaccessible locations (plastic piping may be used if installed in conduit). Air leakage shall not exceed 5 percent of pressure in 24 hours. Transmitters shall be capable of field calibration and thermometers or pressure gauges shall be provided at transmitters. All controllers and thermostats shall be pilot-bleed type.

### 1595-2 ZONING

Zoning for automatic control of space temperatures, static pressures, humidities, ventilation, smoke and fire detection, security, and lighting shall satisfy health and safety requirements as indicated in DOE project criteria, NFPA 101, space operational and occupancy requirements, and zoning exposure with relation to building size, orientation and configuration.

Zoning requirements are as follows:

- Each HVAC system shall have a separate thermostat for space temperature regulation and a separate humidistat if humidity control is provided.
- No zone shall contain more than a single building floor regardless of floor space.
- Automatic controls shall be provided to shut off heating or cooling to any individual zone.
- Interior zones shall not be combined with external zones.
- Interior space zones shall be placed on separate air handling systems from external, if cost effective. External space zones shall be selected for each individual exposure.
- For office facilities and similar occupancies, each major orientation shall be zoned to have no more than 2,000 square feet of floor area with exterior exposure, and no more than 3,000 square feet of floor area with no exterior exposure.

**1595-3 CONTROL SETBACK AND SHUTOFF DEVICES**

With the exception of research, process, or other environmentally sensitive spaces identified by DOE project criteria as requiring constant year-round temperature or humidity control, automatic control setback and shutdown devices with manual override feature shall be provided for all HVAC systems. Use of separate or dual setting thermostats, switches, time clocks, or connections for on/off control through EMSs shall be considered for control of air-conditioning to raise cooling setpoint with humidity override during summer unoccupied periods and to control the heating setpoint during winter unoccupied periods.

**1595-4 HUMIDITY CONTROL**

Summer and winter space or zone humidity control shall be provided only on a space-by-space or zone-by-zone basis and not for the entire central ventilation system unless required for project-specific humidity requirements as stated in the DOE project criteria. No controls shall be provided to dehumidify spaces to below 50-percent relative space humidity or to humidify spaces to greater than 30-percent relative space humidity unless required on a project-specific basis.

**1595-5 SIMULTANEOUS HEATING AND COOLING**

Simultaneous heating and cooling shall not be used to control comfort conditions within a space by reheating or recooling supply air or by concurrent operation of independent heating and cooling systems serving a common zone except under the following conditions.

- Renewable energy sources are used to control temperature or humidity.
- Project-specific temperature, humidity, or ventilation conditions require simultaneous heating or cooling to prevent space relative humidity from rising above special-space relative humidity requirements.
- Project-specific building construction constraints as determined in DOE project criteria prohibit installation of other types of HVAC systems.

Where simultaneous heating and cooling must be used, the temperature and humidity controls shall be designed to limit energy consumption by the methods given in ASHRAE Standard 90.1.

## 1595-6 CONTROL OF AIR HANDLING SYSTEMS

### 1595-6.1 Mechanical Ventilation Control

All supply, return, and exhaust ventilation systems shall be equipped with automatic and manual control of fan operation to shut off the fan when ventilation is not required. These systems shall also be provided with manual gravity-operated or automatic control of dampers for outside air intake and exhaust or relief to prevent introduction of outside air when ventilation is not required. Systems that circulate air shall be provided with minimum outdoor air damper position control to assure that the minimum outdoor air quantity is being introduced to the system. Automatic dampers should fail open for return air and fail closed for outside air.

### 1595-6.2 Outdoor Air Cooling Control (Economizer Cycle)

All air handling systems that recirculate air and are used for space cooling shall be designed to automatically use outside air quantities up to 100 percent of the fan system capacity for cooling the space, with the exceptions noted in ASHRAE Standard 90.1. Economizer cycle control shall not be used for air handling systems where introduction of the additional outside air would actually increase energy consumption.

The economizer-cycle control system shall have a reset feature.

The economizer cycle control system shall be designed with a relief air control cycle to positively relieve the supply air from the space by sequencing return or relief fans or dampers to maintain a constant room static pressure. Systems using the economizer-cycle should be provided with adequate air filtration to handle the quality of the outside air.

### 1595-6.3 Automatic Control Dampers

Automatic air control dampers shall be specified to be the low-leakage type with a maximum leakage of 6 CFM/square foot at maximum system velocity of 1500 FPM and 1-inch pressure differential. The dampers shall be opposed-blade type for modulating control, but may be parallel-blade type for two-position control. Dampers shall be sized for at least 20 percent of the total ductwork

resistance pressure drop. Return air dampers shall never be sized less than 1500 FPM. Pilot positioners and operators shall be out of airstream.

**1595-6.4 Variable-Air-Volume System Fan Control**

Variable-air-volume systems shall be designed with control devices to sense ductwork static air pressure and velocity air pressure and control supply fan airflow and static pressure output through modulation of variable inlet vanes, mechanical speed drive controls, or variable frequency electric drive controls. These control systems shall have a minimum of one static pressure sensor mounted in ductwork downstream of the fan and one static pressure controller to vary fan output either through inlet vane, damper, belt modulator, or speed control. Exhaust fans, supply fans, and return or relief fans shall have control devices that interface the operation of the fans to "track" air volumes and maintain fixed minimum outdoor air ventilation requirements.

**1595-6.5 Fire and Smoke Detection and Protection Controls**

Engineered smoke pressurization and evacuation systems shall comply with the following:

- NFPA 90A
- NFPA 72E
- ASHRAE Manual, Design of Smoke Control Systems for Buildings
- ASHRAE Systems Handbook

All air handling systems shall be provided with the smoke and fire protection controls required by NFPA 101.

All supply, return, relief, and exhaust air ventilation systems shall have interlock controls that interface with fire and smoke detection system controls and either turn off or selectively operate fans and dampers to prevent the spread of smoke and fire throughout the buildings. These controls shall comply with NFPA 90A.

Special exhaust systems shall be designed to include fire and smoke safety controls as required by NFPA 91. Kitchen exhaust ductwork systems shall be designed to include all fire and smoke safety controls as required by NFPA 96.

**1595-6.6 Gas-Fired Air Handling Unit Control**

Gas-fired air handling units shall be specified with operating limit, safety controls, and combustion control systems.

Gas burner and combustion controls shall comply with FM Loss Prevention Data Sheets and be listed in the FM Approval Guide. Gas-fired air handling units

shall be specified with controls to lock out the gas supply in the following conditions:

- Main or pilot flame failure
- Unsafe discharge temperature (high-limit)
- High or low gas pressure
- No proof of air flow over heat exchanger
- Combustion air loss
- Loss of control system actuating energy

## 1595-7 CONTROL OF CHILLED WATER AND HOT WATER DISTRIBUTION SYSTEMS

### 1595-7.1 Zone Control/Distribution System Control

Each zone or air handling system shall be designed with individual terminal unit valved control. Use of either two-way or three-way valves shall be considered based on part-load pump performance requirements and potential pump bhp savings. If the pumping system brake horsepower is greater than 20 bhp, an LCC analysis of variable speed pumping control shall be performed.

Water systems that vary the load to the terminal devices by varying water flow rates using two-way control valves shall be provided with differential pressure controls to reduce system pressure build-up and save energy. These controls shall either signal control valves to route water flow around terminal devices, signal variable-speed pumping controls to reduce pump speed, or turn off one or several pumps working in parallel or series.

### 1595-7.2 Control Valve Selection

Temperature control valves shall be either two-way or three-way, two-position or proportioning-type valves. Valves controlling modulation shall be equal-percentage proportioning valves. Control valves shall be sized for a 5 psi pressure differential across the valve or a pressure differential of 50 percent of the combined branch piping and coil pressure drop, whichever is greater. Selection of valve sizes shall be based on flow coefficient "$C_v$" capacities, where "$C_v$" is defined as the flow of water in gallons per minute divided by the square root of the pressure drop in psi. Control valves shall use either pneumatic, electric, electronic, or self-contained controllers. Valves in cooling and heating systems shall be fail-safe. Valve operators shall be selected to close against pump shutoff head for two-way valves, and one-half pump shut off head for three-way valves.

Setpoints shall be selected to maintain either a fixed space temperature or a fixed coil-discharge temperature, with the discharge temperature setpoint reset by space temperature requirements.

### 1595-7.3 Two-Pipe and Three-Pipe Combination Heating and Cooling Systems

Fan coil terminal devices with one coil shall have their control valves operated by a room or coil discharge temperature thermostat that can change from summer to winter operation. Air handling units with heating and cooling coils shall have their control valves controlled by normal sequences of operation, but shall be provided with two-position control valves in the piping entering each coil to prevent hot water from entering the cooling coil and chilled water from entering the heating coil and to sequence on/off summer and winter operation.

If the two-or three-pipe water distribution system is not provided with heat exchangers to isolate the boilers and chillers from the distribution system, a control system using three-way control valves to control and route water around the source devices shall be designed to prevent hot water from entering the chiller and cold water from entering the boiler during the changeover periods from heating to cooling seasons.

### 1595-7.4 Load Control for Hot Water Systems

The temperature of hot water for building heating systems shall be controlled by a supply temperature sensor that modulates the boiler operating controls. The supply delivery temperature shall be reset based on the temperature outside, lowering the delivery temperature as the outdoor air temperature rises and raising the delivery temperature as the outdoor air temperature falls.

### 1595-7.5 Load Control for Chilled Water Systems

Central station cooling equipment producing chilled water shall be controlled by a signal from a sensor mounted in the return chilled water piping or the leaving chilled water piping that modulates the chiller to control capacity.

Central station cooling equipment shall be provided with controls to limit the current draw of the cooling equipment in periods of high electrical demand.

## 1595-8 COOLING TOWER AND WATER-COOLED CONDENSER SYSTEM CONTROLS

Cooling tower fans shall be designed with two-speed on/off controls to reduce power consumption and maintain condenser water temperature. Bypass valve control shall be provided if required to mix cooling tower water with condenser water to maintain the temperature of entering condenser water at the low limit. Condenser water temperature or flow shall be controlled from condenser head pressure for reciprocating chillers. The design shall provide basin temperature sensing devices, and if cooling tower is operated during freezing conditions, hot water or steam control valves and additional control system components to maintain cooler tower sump water temperatures above freezing.

## 1595-9 CONTROL OF STEAM SYSTEMS

### 1595-9.1 Zone Control

Each zone air handler, heating coil, and individual terminal unit shall be controlled using two-way control valves that actuate either electrically, pneumatically, or through use of self-contained liquid or wax-filled sensing elements. These control valves shall modulate the steam flow to the coil or terminal unit based on space temperature or coil discharge temperature preset by zone temperature requirements.

### 1595-9.2 Control Valve Selection

Steam pressure and temperature control valves shall be selected according to the requirements in ASHRAE handbooks.

### 1595-9.3 Load Control for Steam Systems

Intermittent flow controls commonly called "heat timers" shall be evaluated by LCC analysis for incorporation into all space heating steam systems to cycle steam on and off from the source system based on zone indoor temperature requirements, outdoor air temperatures, and space occupancy requirements.

## 1595-10 ENERGY MANAGEMENT SYSTEMS

Central EMSs shall be provided where justified by LCC analysis. If cost effective, an EMS shall be combined with integral fire and smoke detection supervisory systems and lighting control systems. An EMS shall be specified with the capability to connect to additional building utility systems. When an EMS is contemplated for the future, other building system controls and instrumentation shall be selected that will allow for simple future interfacing.

See Section 0110-12.6 (Attachment K), Energy Management Systems.

## 1595-11 ENERGY METERING

The design professional shall design permanent metering in accordance with 10 CFR 435 for each type of nonprocess energy supplied to and consumed by new buildings and facilities owned and leased by DOE except for the following cases:

- Energy supplied to buildings and facilities where the total energy consumption is not expected to exceed 500 million BTU per year. See Section 0110-12.7 (Attachment K), Building Analysis Procedures.
- A type of energy supply that is estimated to be 10 percent or less of the total energy input to the building
- Renewable energy sources or recovered waste heat

Permanent submetering shall be considered and implemented for each type of process energy consumed in new buildings and facilities owned and leased by DOE if indicated in DOE project criteria.

Interface with an existing EMS shall be determined by DOE project criteria.

# ATTACHMENT R

## SAFETY CLASS ITEMS

### 1300-3.2 Safety Class Items

Safety class items are systems, components, and structures, including portions of process systems, whose failure could adversely affect the environment or the safety and health of the public or DOE employees. Specifically, safety class items are those systems, components, and structures with the following characteristics:

- Those required to maintain operating parameters within the safety limits specified in the OSRs during normal operations and anticipated operational occurrences
- Those required to achieve and maintain the facility in a safety shutdown condition
- Those that control the safety class items described above

Safety class items shall be subject to appropriately higher-quality design, fabrication, and industrial test standards and codes such as those specified in References (Section 1.2 of this specification), to increase the reliability of the item and allow credit to be taken for its capabilities in a safety analysis. Safety class items shall be designed to the ASME Boiler and Pressure Vessel Code (Section III, Class II) or to other comparable safety-related codes and standards that are appropriate for the system being designed.

Safety class and non-safety class items shall comply with Section 0140, Quality Assurance (Attachment V). The design of systems, components and structures that are not safety class items shall, as a minimum, be subject to conventional industrial design standards, codes, and quality standards. Failure of these items shall not adversely affect the environment or the safety and health of the public. In addition, their failure shall not prevent safety class items from performing their required functions.

# ATTACHMENT S

(Not Used)

# ATTACHMENT T

# HEALTH AND SAFETY

## 0110-5 HEALTH AND SAFETY

### 0010-5.1 Performance Objectives

Health and safety performance objectives to be achieved in the design of DOE facilities include:

- Protection of the public and all personnel from injury and from exposure to toxic materials, radiation, and other hazards in accordance with DOE requirements and allowable limits
- Protection of private and public property against damage resulting from DOE operations
- Continuation of operations by minimizing accident potential
- Limitation of loss or damage to Federal property, including losses associated with the inability to readily decontaminate or decommission facilities for other subsequent uses

Specific project design criteria in the areas of emergency preparedness and emergency management shall be developed with the advice and assistance of DOE organizations responsible for DOE emergency management/emergency preparedness programs. Such criteria shall comply with:

- DOE 5500.1B
- DOE 5500.3A

### 0110-5.2 Safety Analysis

All DOE facilities shall be evaluated for potential risks to the operators, the public, and the environment. DOE 5481.1B contains criteria for determining the level of reporting required based on facility functions and potential accident risks. Safety analysis report timing, content, and format criteria and approval provisions are contained in DOE 5481.1B. This section contains a brief summary of the basic requirements of 5481.1B.

The preliminary safety analysis shall be initiated during the conceptual design phase of the project and further developed during preliminary (Title I) design and detailed (Title II) design phases. In most cases, these analyses are included in the project planning and design documentation (e.g., in conceptual design reports, Title I design reports). Facility design and construction features identified as a result of the PSAR shall be factored into the conceptual design before establishing the project cost estimate and requesting Congressional authorization for design and construction. The PSAR

shall be completed and approved prior to the start of construction (including site preparation), consistent with DOE 4700.1.

The Final Safety Analysis Report (FSAR) shall be developed during the construction phase of the project and shall be completed and approved prior to the initiation of facility operations. The FSAR shall be updated as appropriate to reflect changes affecting safety that are made to the facility during its lifetime.

Areas to be addressed in the safety analysis include, but are not necessarily limited to, the following:

- Form, type, and amount of hazardous materials (nuclear or other) to be stored, handled, or processed
- Principal hazards and risks that can be encountered in facility operation, including potential accidents and predicted consequences of fire, explosion, radiation, toxic exposure, structural failure, wind, flood, earthquake, tornado, operating error, failure of essential operating equipment, and failure of safety systems
- Selected design basis accidents such as DBF, DBW, DBE, DBT, OBA, and DBFL. These shall be postulated and quantified, including the rationale for selection.
- Principal design, construction, and operating features selected for preventing accidents or reducing risks to acceptable levels, including the safety margins used

**0010-5.3 Emergency Preparedness Planning**

Each facility that has potential on-site or off-site effects during normal or abnormal operations shall have an Emergency Plan prepared which shall be incorporated with the Site Emergency Preparedness Plan.

# ATTACHMENT U

# FIRE PROTECTION

## 1.0 PURPOSE

To establish requirements for an "improved risk" level of fire protection sufficient to attain Department of Energy (DOE) objectives. A higher standard of protection may be justified in certain instances for the purpose of national security, program continuity, or protection of the public.

## 2.0 OBJECTIVES

a. to ensure that no threats to the public health or welfare will result from fire;

b. that there are no undue hazards to employees from fire;

c. that vital DOE programs will not suffer unacceptable delays as a result of fire; and

d. that property damage will be held to manageable levels.

## 3.0 DEFINITIONS

### 3.1 Improved Risk

The term involves the use and application of judgement and thus does not lend itself to a precise, fixed definition applicable in all locations and situations. It has the same meaning and intent as is commonly understood when this or the term, "Highly Protected Risk," is used in the insurance industry. Generally, an improved risk property is one that would qualify for complete insurance coverage by the Factory Mutual System, the Industrial Risk Insurers, and other industrial insurance companies that limit their insurance underwriting to the best protected class of industrial risk. Essential elements of a program complying with the improved risk concept are included in this directive. This term also implies that qualified fire protection engineering judgement has been used to obtain the highest economically justifiable level of industrial loss prevention. The most evident characteristic of an improved risk property is the existence of reliable, automatic fire extinguishing systems throughout all buildings of combustible construction or content where the building is vital to operational continuity or may experience a large property loss from fire in the absence of an automatic extinguishing system.

### 3.2 National Security

Those aspects of national security that could be affected adversely by fire, explosion, or other catastrophes.

### 3.3 Protection of the Public Health and Welfare

Control of fire, explosion, or effects of hazards to minimize potential injury to the public and damage to property not owned by the Department.

### 3.4 Property

All Government-owned or leased property for which the Department has responsibility, except:

3.4.1 Property furnished under contract requiring contractor assumption of the risk of loss or damage to Government-furnished property.

3.4.2 Property covered by a private insurance policy specifying the Department of Energy as the beneficiary.

### 3.5 Fire Protection

Protection from a broad range of fire risks normally included in the analysis conducted by fire protection engineers. These include some aspects of related perils such as explosion, windstorm, earthquake, lightning, and water damage. Fire prevention programs are a necessary part of fire protection programs.

### 3.6 Maximum Credible Loss

The maximum loss that could occur from a combination of events resulting from a single fire. Considerable judgement is required to evaluate the full range of potential losses, but in general, readily conceivable fires in sensitive areas are considered. Examples are power wiring failures in cable trays, flammable liquid spills, and high-value parts storage areas or combustible exposures to sensitive machines. Any installed fire protection systems are assumed to function as designed. Due to the uncertainties of predicting human action, the effect of emergency response is generally omitted except for post-fire actions such as salvage work, shutting down water systems, and restoring production.

### 3.7 Maximum Possible Fire Loss

The maximum possible loss that cold occur in a single fire area assuming the failure of both automatic and manual fire extinguishing actions.

### 3.8 Property Loss

The dollar cost of restoring damaged facilities or equipment to their original condition, whether or not such restoration actually occurs. In determining loss, the estimated damage to the building and contents shall include replacement cost, less salvage value, plus the cost of decontamination and cleanup. Effects upon program continuity, auxiliary costs of fire extinguishment, and consequent effects on related areas should be included if the effects can be determined.

### 3.9 Consultant Fire Protection Survey Program

The program under which fire protection surveys of principal DOE facilities are conducted for the Office of Operational Safety by fire protection engineers of selected contractors administered by this organization.

### 3.10 Fire Protection System

Any system designed to control or extinguish fires or to limit the extent of fire damage. These include:

3.10.1 Automatic suppression systems such as sprinklers or carbon dioxide systems.

3.10.2 Watchmen or automatic detection systems, water supplies, plus a fire department.

3.10.3 Walls and doors.

3.10.4 Building separation with credit for water supplies plus a fire department

## 4.0 RESPONSIBILITIES AND AUTHORITIES

### 4.1 The Director of Operational Safety (EH-34)

4.1.1 Develops fire protection requirements for programs and facilities and coordinates the development of design criteria with the Director of Projects and Facilities Management (MA-22) and other appropriate Headquarters organizations to assure the consistency of such criteria with the requirements of applicable codes and standards.

4.1.2 Evaluates and appraises the adequacy of Field Element fire protection programs and provides assistance to all Departmental Elements on all aspects of fire protection.

4.1.3 Administers the consultant fire protection survey program, issues survey reports to applicable Departmental Elements, and reviews programs for handling recommendations resulting from the surveys.

### 4.2 Program Senior Officials

4.2.1 Review proposed fire protection programs for that property under their responsibility.

4.2.2 Review field requests for exemptions from DOE criteria with EH-34 and MA-22 when requests require approval.

4.2.3 Review field implementation of the recommendations resulting from the consultant fire protection survey program. The Office of Operational Safety will act as the primary point of contact for the survey program

and will distribute survey reports to Headquarters and field organizations as applicable.

4.2.4 For DOE facilities not subordinate to a field organization, the procedures of Paragraph 4.3 shall be followed.

**4.3 Heads of Field Organizations**

4.3.1 Provide and maintain an improved risk level of fire protection adequate to meet the objectives of Paragraph 2.0 for all physical property or material that represents an investment by the Department.

4.3.2 Provide and maintain a higher standard of fire protection than required to meet the improved risk requirements in instances when justified for purposes of national security, program continuity, or protection of the public.

4.3.3 Submit requests for exemptions to EH-34 for those facilities where, in the judgement of the Head of the Field Organization, compliance with Paragraph 2.0 above is not feasible.

4.3.4 Establish and maintain a system to assure that the intent of all DOE fire protection standards is incorporated in the plans and specifications for all new buildings and for major modifications of existing buildings.

4.3.5 Assist the Office of Operational Safety in coordination the consultant fire protection team survey at those facilities included in the survey program, establish action plans for compliance with recommendations resulting from the surveys, and forward compliance plans, exemption requests, and other requested data to EH-34.

4.3.6 Establish and maintain lists of facilities for which they have fire protection appraisal responsibility and designate for each the minimum frequency at which fire protection appraisals will be made. This list shall include facilities at which:

4.3.6.1 Property is valued at $1,000,000 or more. (All values in this paragraph are based on Factory Mutual System's Industrial Cost Trends of 1-87, using a 1-19-87 multiplier of 1.0. Post-1987 escalated values may be based on Factory Mutual or similar indexes.)

4.3.6.2 Property valued at less than $1,000,000 is located but where a fire protection appraisal is deemed to be justified.

4.3.6.3 A credible loss could delay a vital program in excess of 3 months or a significant component of a program in excess of 6 months.

4.3.7 Conduct fire protection appraisals of facilities for which they have responsibility.

4.3.8 Provide loss prevention advice and assistance to contractors in need of assistance or who do not have their own professional staff assistance.

4.3.9 Submit to the EH-34 an annual summary covering the fire protection program and loss experience of the previous year.

## 5.0 DELEGATION OF "AUTHORITY HAVING JURISDICTION"

For those fire protection standards specifying alternative means of compliance subject to "the authority having jurisdiction," this authority is the applicable Departmental Element.

## 6.0 COMPLIANCE WITH IMPROVED RISK OBJECTIVES

### 6.1 Threats to the Public Health or Welfare and Hazardous to Life

6.1.1 Department of Energy buildings comply with the intent of the Life Safety Code and with specific requirements of 29 CFR Part 1910 applicable to exits and fire protection features.

6.1.2 The potential for fast spreading fires is controlled by severe restrictions on the ratings of interior finish materials for flame spread and smoke development and by compartmentation of hazardous materials.

6.1.2.1 Materials of unusual fire characteristics such as exposed urethane foams and materials developing large quantities of toxic products of combustion shall be prohibited for interior finish.

6.1.2.2 Hazardous materials, such as flammable liquids and explosives, shall be severely restricted in quantity and handled in conformance with all applicable codes. Special protection features suitable to the hazard should be installed and limits imposed on the number of people who must be exposed to the hazard.

6.1.2.3 Where noncompliance with some Life Safety Code provisions may be required for public safety, in some containment structures, additional protective systems and personnel limits should be maintained.

6.1.3 The facility containment systems are designed to preclude an offsite release of hazardous amounts of toxic materials under maximum credible fire conditions.

6.1.4 Exhaust and ventilation systems, including filters, are protected or isolated from the effects of a credible fire to the extent that hazardous amounts of toxic materials or combustion products will not escape.

6.1.5 Natural or artificial means of controlling liquid runoffs from a credible fire are provided so that contaminated or polluting liquids

will not escape the site, including potentially contaminated water resulting from firefighting operations.

## 6.2 Unacceptable Program Delays

The objective of no unacceptable impairment of a vital program can be considered to have been attained when:

6.2.1 The maximum credible fire will not result in the loss of uses of a vital facility for a period longer than that specified as acceptable to the applicable Program Senior Official.

6.2.2 In the absence of a defined acceptable shutdown period, the maximum credible fire will not result in the interruption of a vital program (weapons production, uranium enrichment) for a period in excess of 3 months, or a significant part of a program (major accelerator, single diffusion plant) for a period in excess of 6 months.

## 6.3 Property Damage Limitation

The objective of limiting property loss can be considered to have been attained when fire protection systems are provided as follows:

6.3.1 When the maximum possible property loss is in the range of $1-25 million, an automatic fire protection system is provided that will limit the probable loss to the lower figure.

6.3.2 When the maximum possible property loss is in the range of $25-50 million, a redundant protection system is provided that, even in the failure of the primary system, should limit the loss to the lower figure.

6.3.3 When the maximum possible property loss exceeds $50 million, redundant systems are provided as in Subparagraphs 6.3.1 and 6.3.2, above, and a failure-proof type of fire protection system, such as blank walls or physical separation, is provided to limit the maximum property loss to $75 million.

## 6.4 Higher Standard of Protection

A higher standard of protection, usually including some form of automatic protection, is described in Paragraph 1.0 as being justified when certain considerations, beyond those mentioned in Paragraphs 6.1, 6.2 and 6.3, above, play a major role in the management decision process. The specific level at which an automatic protection system should be installed requires qualified fire protection engineering judgement. In general, the probable loss should be limited to $250,000 in such cases. The following points should be considered in evaluating the need for automatic fire extinguishing systems:

### 6.4.1 Importance

Vital property may require protection without regard to the dollar loss potential. For example, it may be desirable to protect a low-value or temporary storage shed when it may contain critical or long procurement time construction items. In illustration, a trailer may have a temporary protection system when it is used as a control center for a vital, one-time event. Particularly high public visibility or sensitivity may also be justification for protection of otherwise low-value property.

### 6.4.2 Effect on Production

Protection costs may be high in relation to the value protected but still warranted, as in the case of cooling towers and electrical switchgear, where loss of the unit could result in the shutdown of other facilities.

### 6.4.3 Cost Versus Benefit Ratios

A building such as a lumber or paint shed may be of low value and importance but may be easily protected by extending sprinklers from an adjoining protected building at a low incremental cost.

### 6.4.4 Exposure

Constructions heads or trailers may warrant protection when they must be installed in or adjacent to more important facilities.

### 6.4.5 Future Conditions

Even when the above conditions are not applicable protection may still be warranted when conditions are extrapolated to the future. For example, a storage building may be of low value when designed, but normal escalation of content value may indicate it would need protection in a few years, in which case it would be more effective to install the protection as part of the original construction. Similarly, evaluation of office or low hazard laboratory occupancies may indicate that the hazard or combustible loading of similar facilities increases consistently with time, justifying protection at an early phase. Provision of automatic protection in the initial construction also allows more flexibility for future modifications. For example, conversion to a higher hazard occupancy may be prohibited due to a lack of appropriate built-in protection.

## 7.0 ESSENTIAL ELEMENTS OF AN IMPROVED RISK FACILITY

7.1 An improved risk facility is characterized by a sufficiently high level of fire protection to fulfill requirements for insurability by the Factory Mutual System, Industrial Risk Insurers, or other private industrial fire insurance companies that limit their underwriting to the best protected class of industrial risks. A basic requirement is the provision of automatic fire extinguishing systems in all areas subject to serious property damage or business interruption losses as

a result of fire. Above all other requirements, to qualify for an improved risk rating, it is necessary that strong, tangible evidence be available attesting to existence of continuing sincere interest by management and employees in minimizing losses from fire and related perils.

7.2 DOE facilities qualifying as improved risk will incorporate the following physical improvements and internal programs, and maintain records for appraisal of the programs:

7.2.1 Review of plans prior to contemplated construction to assure adequacy of fire risk appraisal and protection, and follow up review to ensure that fire protection features are provided where necessary to comply with Paragraph 6.0 above.

7.2.2 Regular self-inspections, tests, fire loss potential reviews and appraisals to identify the nature, location, and severity of fire risks (injuries, dollar loss, programmatic interruption, release of toxic and radioactive materials) as well as to determine adequacy of fire loss control devices and activities.

7.2.3 Periodic audits by outside fire protection authorities such as contractor facility appraisals by field fire protection engineers.

7.2.4 Plans, procedures, devices; and trained personnel adequate to permit controlling any credible fire emergency that may arise on the facility.

7.2.5 Limitation by physical means (e.g., geographic isolation, fire-walls, firedoors, draft barriers) of areas that can be directly damaged in the event of a single fire.

7.2.6 Quality construction which in most cases is defined as fire resistive or noncombustible type buildings with segregation or isolation of particularly hazardous operations.

7.2.7 Enclosures of adequate fire resistant construction for stairways, elevators, ducts, and other openings coupled with fixed or manual devices (such as self-closing doors or dampers, draft stops, or water curtains) to control or limit both vertical and horizontal fire spread potentials.

7.2.8 Protection of special hazards by isolation, segregation, or use of special fire control systems (e.g., automatic sprinklers, inert gas flooding, explosion suppression) together with devices (e.g., relief valves, filters, roof hatches, scuppers, blast walls) for limiting or controlling damage potentials of fire, hazardous smoke, gases, and water runoff, or other occurrences, that may reasonably be anticipated during a fire emergency.

7.2.9 Adequate, reliable fire protection water supplies and distribution systems coupled with adequate hydrants, inside standpipes, and other devices to facilitate utilization of such water during fire emergencies.

7.2.10 Adequate automatic and manual means for detecting and reporting incident fires including, but not limited to, watchman service.

7.2.11 Automatic sprinkler protection for all combustible construction or occupancies where potential losses exceed Departmental criteria.

7.3 Improved risk facilities shall be appraised periodically by the appropriate organization in sufficient depth to establish that:

7.3.1 The programs described in Subparagraph 7.2 above are being conducted.

7.3.2 Loss potentials, including programmatic effects, have been determined and appropriate protection system shave been provided to reduce the effects to the acceptable lees in Paragraph 2.0 or an exemption from these requirements has been obtained.

7.3.3 Effective action has been taken to comply with previous recommendations, initiate corrective actions on previously identified deficiencies, and reduce the adverse effects of noncompliance in areas where compliance has not yet been achieved or where exemptions have been allowed.

7.3.4 Losses, impairments, and unusual incidents are investigated and analyzed in sufficient depth to identify causes, economical and effective corrective methods, and areas where similar problems may exist or where additional studies may be required.

7.4 In addition to internal, Headquarters, and field appraisals, improved risks are generally characterized as those also surveyed by independent third party interests. For major facilities, this service is provided by consultant fire protection survey program.

7.5 Periodic fire protection appraisals of each facility shall be initiated by qualified fire protection engineering personnel as soon as practicable after listing of the facility by the Department. The appraisals shall include the items under Subparagraph 7.3, above.

7.6 In addition to performing periodic appraisals, the appraising office will maintain a continuous surveillance of improved risk facilities by:

7.6.1 Assuring that plans, proposals, loss reports, investigation report, and other applicable materials are reviewed by knowledgeable personnel in sufficient depth to determine that the facility is maintaining the review and protection programs described in Subparagraph 7.2, above.

7.6.2 Providing technical assistance and advice as requested by the contractor and as deemed necessary by the field organization.

7.6.3 Assuring that facility management is kept advised of requirements, programs, and applicable information generated by Headquarters, or other agencies, and that information developed by the facility or by other facilities with mutual interests, is disseminated among the interested parties.

## 8.0 CONSULTANT FIRE PROTECTION SURVEY PROGRAM

8.1 Consultant fire protection team surveys will be conducted periodically at facilities determined to be of major importance to the DOE mission. Major improved risk survey groups have been contracted to conduct surveys of the improved risk status of Department facilities.

8.1.1 A survey shall be conducted at each facility containing more than $25,000,000 in replacement value of Government property.

8.1.2 Following the initial survey, a resurvey shall be made at each facility at approximately 5-year intervals.

8.1.3 Reports of the surveys shall be submitted to EH-34 for review and distribution to the appropriate contractors through the appropriate DOE element.

8.2 For each survey, Heads of DOE Elements:

8.2.1 Shall designate a coordinator to assist the team in obtaining logistical support, facility access, and technical information as determined necessary by the Office of Operational Safety.

8.2.2 Shall review the contractor's compliance efforts and forward compliance data as requested by EH-34.

8.2.3 May omit any appraisal that would coincide with the period in which the consultant fire protection team survey is being conducted.

8.3 Following each survey, the appropriate organization will be requested to submit an action plan.

8.3.1 Action plans are submitted directly to the Office of Operational Safety.

8.3.2 Initial action plans are requested in the transmittal letter accompanying the final report of the survey and will be due at the next scheduled update.

8.3.3 Action plans will be reviewed by EH-34 and revised status reports will be requested approximately once a year for those sites requiring prolonged corrective actions.

8.4 Output data from the action plans shall be furnished yearly to appropriate Departmental Elements for budgeting and planning purposes.

THIS PAGE INTENTIONALLY
LEFT BLANK

# ATTACHMENT V

## QUALITY ASSURANCE

Facility design shall be conducted under QA requirements to ensure that the established program and project quality objectives are satisfied. A QA program shall be developed and implemented in compliance with DOE 5700.6C and using the elements of DOE 4700.1.

Control mechanisms shall be established to ensure that: (1) design inputs are correctly translated into design documents in a timely manner; (2) organizational and physical interfaces are identified and controlled; (3) changes to design are controlled in a manner commensurate with the original design; (4) the design is independently verified to be adequate; (5) documentation and records of the design and design verification processes are maintained in accordance with the QA program.

QA encompasses all those planned and systematic actions and controls necessary to provide adequate confidence that a structure, system, or component will perform satisfactorily in service. QA includes *quality control*, which includes actions needed to ensure that the physical characteristics of a material, structure, component, or system meet predetermined requirements.

An adequate QA program provides the following assurances:

- Organizational interfaces are identified and controlled.
- The design is independently verified to be adequate.
- A document control system is in place.
- A change control system is in place.

The QA program shall include quality control functions in the following areas:

- The design will satisfy program and project requirements.
- The prepared drawings and construction specifications adequately incorporate QA, design, and codes and standards requirements and are available in a timely manner.
- Construction can be performed in accordance with design.
- Tests, reviews, or inspections confirm the adequacy of design and quality of construction and manufactured components, where appropriate.
- Lock and tag systems are provided for turnover acceptance, maintenance, and system outages.

As a part of the QA program, architectural and engineering portions of design should be closely coordinated and *functionally analyzed* during the conceptual, preliminary (Title I), and detailed (Title II) design phases to avoid conflicts that could result in costly changes during construction. Prior to initiating Title I and Title II design, QA requirements shall be established for the project systems, subsystems, and components. The following shall be determined:

- What the facility is to accomplish
- The range of operating conditions
- The required degree of reliability
- The intended useful life
- How it can be maintained, repaired, or replaced

Wherever possible, design shall reflect experience gained on similar projects or similar types of construction.

Provisions shall be made for review and checking design calculations, drawings, and construction specifications by qualified personnel other than those responsible for the original design.

Deviations from specified standards shall be identified and procedures established to ensure their control.

To the extent practicable, and particularly in the case of innovative design, the design should be independently reviewed by competent consultants in construction or manufacturing techniques to confirm the practicability of construction or manufacture.

**U.S. DEPARTMENT OF ENERGY**
Hanford Waste Vitrification Plant
Richland, Washington
DOE Contract DE-AC06-86RL10838

**FLUOR DANIEL, INC.**
Advanced Technology Division
Fluor Contract 8457

# SPECIFICATION 13123

# OPERATIONS ANNEX BUILDING

# (OAB)

# (B-595-C-A120)

# SECTION 13123
# OPERATIONS ANNEX BUILDING
# (OAB)

## TABLE OF CONTENTS


| SECTION | | PAGE |
|---|---|---|
| **PART 1** | **GENERAL** | 1 |
| 1.1 | SUMMARY | 1 |
| 1.2 | REFERENCES | 2 |
| 1.3 | RELATED REQUIREMENTS | 22 |
| 1.4 | DESIGN CRITERIA | 23 |
| 1.5 | SUBMITTALS | 48 |
| **PART 2** | **PRODUCTS** | 49 |
| 2.1 | GENERAL | 49 |
| 2.2 | SITEWORK | 50 |
| 2.3 | CONCRETE | 50 |
| 2.4 | MASONRY | 51 |
| 2.5 | METALS | 51 |
| 2.6 | WOOD AND PLASTICS | 54 |
| 2.7 | THERMAL AND MOISTURE PROTECTION | 56 |
| 2.8 | DOORS AND WINDOWS | 62 |
| 2.9 | FINISHES | 73 |
| 2.10 | SPECIALTIES | 81 |
| 2.11 | EQUIPMENT | 94 |
| 2.12 | FURNISHINGS | 96 |
| 2.13 | SPECIAL CONSTRUCTION | 98 |
| 2.14 | CONVEYING SYSTEMS | 98 |
| 2.15 | MECHANICAL | 99 |
| 2.16 | ELECTRICAL | 113 |
| **PART 3** | **EXECUTION** | 120 |

**ATTACHMENTS**

| ATTACHMENT | TITLE |
|---|---|
| ATTACHMENT A | (NOT USED) |
| ATTACHMENT B | CONDUIT, CABLE TRAY AND WIRE IDENTIFICATION |
| ATTACHMENT C | STANDARD SPECIFICATION FOR IDENTIFICATION OF PIPING SYSTEMS |
| ATTACHMENT D | (NOT USED) |
| ATTACHMENT E | PREPARATION AND CONTROL OF ENGINEERING AND FABRICATION DRAWINGS |
| ATTACHMENT F | (NOT USED) |
| ATTACHMENT G | (NOT USED) |
| ATTACHMENT H | REQUIRED MINIMUM INSULATION VALUES |
| ATTACHMENT J | (NOT USED) |
| ATTACHMENT K | ENERGY CONSERVATION |
| ATTACHMENT L | MECHANICAL INSULATION |
| ATTACHMENT M | PLUMBING/SERVICE PIPING |
| ATTACHMENT N | HEATING, VENTILATING AND AIR CONDITIONING SYSTEMS |
| ATTACHMENT P | REFRIGERATION |
| ATTACHMENT Q | CONTROLS |
| ATTACHMENT R | SAFETY CLASS ITEMS |
| ATTACHMENT S | (NOT USED) |
| ATTACHMENT T | HEALTH AND SAFETY |
| ATTACHMENT U | FIRE PROTECTION |
| ATTACHMENT V | QUALITY ASSURANCE |

THIS PAGE INTENTIONALLY
LEFT BLANK

# SECTION 13123
# OPERATIONS ANNEX BUILDING
# (OAB)

## PART 1 GENERAL

### 1.1 SUMMARY

#### 1.1.1 Purpose

The specifications and drawings cover the minimum requirements for designing and constructing a steel framed, metal clad, two story Operations Annex Building (OAB) including foundation, structural system, all interior construction, conveying, electrical, plumbing, HVAC, and fire sprinkler systems, and to establish a level of quality and performance for design, material, durability, and workmanship.

#### 1.1.2 Scope

This specification is not intended to specify all details of design and construction. The Seller has full responsibility for the design, engineering, erection, and complete and total construction of the building and foundation, and to ensure that all codes, specifications, standards, and documents applicable to this performance specification and referenced herein are complied with in total.

#### 1.1.3 General Requirements

The Seller is to design and construct a new, two story, steel framed building to be located in the 200 East Area of the Hanford Project, north of Richland, Washington. The building will be erected upon a reinforced concrete foundation. The first floor concrete-slab-on-grade shall be placed on a free-draining aggregate base overlying a compacted subgrade. The building envelope will comprise metal siding and a membrane roof surmounting a metal deck over metal framing. Roof and walls will be insulated. Window openings shall be framed with aluminum storefront components, and personnel doors are typically 7 feet high metal flush doors. Partitions consist of gypsum wall board on metal studs. Rated partitions are indicated on the drawings. Ceilings generally comprise 2 by 4 lay-in panels supported by an exposed, suspended, metal grid. Interior finishes typically include vinyl composition tile, carpet, vinyl bases, ceramic and quarry tile, vinyl wall covering, and paint. Specialties include toilet room

compartments and accessories, and loading dock equipment. Furnishings, except for window treatment, are not considered. A personnel elevator shall be provided.

1.1.4 Soils and Geotechnical Report

A soils and geotechnical report prepared by Dames & Moore entitled:

"Report of Geotechnical Investigation Proposed Hanford Waste Vitrification Plant Hanford, Washington" for Kaiser Engineers, Job No. 10805-383-016, November 15, 1989, along with supplemental reports dated July 28, 1990 and July 24, 1991 has been prepared for the construction of facilities associated with the Hanford Waste Vitrification Plant project. Copies of these reports are available for review from the Buyer for background information only.

## 1.2 REFERENCES

The publications listed below form a part of this specification to the extent referenced. The publications are referred to in the text by the basic designation only.

AIR CONDITIONING AND REFRIGERATION INSTITUTE (ARI)

| | |
|---|---|
| ARI 210 | 1981 Standard for Unitary Air Conditioning Equipment |
| ARI 410 | 1987 Forced-Circulation Air Cooling and Air-Heating Coils |
| ARI 430 | 1989 Control Station Air Handling Units |
| ARI 450 | 1987 Water Cooled Refrigerant Condensers |
| ARI 460 | 1987 Remote Mechanical Draft Air Cooled Refrigerant Condensers |
| ARI 520 | 1990 Positive Displacement Refrigeration Compressors, Compressor Units and Condensing Units |
| ARI 550 | 1990 Centrifugal or Rotary Screw Water Chilling Packages |

| | |
|---|---|
| ARI 590 | 1986 Reciprocating Water Chilling Packages |
| ARI 850 | 1984 Standard for Commercial and Industrial Air Filter Equipment |
| ARI 1010 | 1984 Drinking Fountains and Self-Contained, Mechanically-Refrigerated Drinking Water Coolers |

AIR MOVEMENT AND CONTROL ASSOCIATION (AMCA)

| | |
|---|---|
| AMCA Publication 99 | 1986 Standards Handbook |
| AMCA Standard 201 | 1973 AMCA Fan Application Manual - Fans and Systems |
| AMCA Standard 210 | 1974 Laboratory Methods of Testing Fans for Rating Purposes |
| AMCA Publication 261 | Directory of Products Licensed to Bear the AMCA Certified Rating Seal |
| AMCA Standard 300 | 1985 (Rev. 1987) Reverberant Room Method for Sound Testing of Fans |
| AMCA Standard 500 | 1989 Test Methods for Louvers, Dampers and Shutters |

AMERICAN CONCRETE INSTITUTE (ACI)

| | |
|---|---|
| ACI 318/318R-89 | 1989 Building Code Requirements for Reinforced Concrete and Commentary |

AMERICAN CONFERENCE OF GOVERNMENT INDUSTRIAL HYGIENISTS

| | |
|---|---|
| ACGIH Industrial Ventilation Manual | 1988 American Conference of Government Industrial Hygienists Industrial Ventilation Manual: 20th Edition |
| ACGIH 0019 | 1990 TLVs: Threshold Limit Values |

AMERICAN INSTITUTE OF STEEL CONSTRUCTION (AISC)

| | |
|---|---|
| AISC M016 | 1989 Manual for Steel Construction (Ninth Edition) |

AMERICAN IRON AND STEEL INSTITUTE (AISI)

| | |
|---|---|
| | 1987 Designer's Handbook Series, Design Guidelines for the Selection and Use of Stainless Steel |

AMERICAN NATIONAL STANDARDS INSTITUTE (ANSI)

| | |
|---|---|
| ANSI A2.2 | [Same as ASTM E152] |
| ANSI A13.1 | 1981 Scheme for the Identification of Piping Systems |
| ANSI A17.1 | 1987 Safety Code for Elevators and Escalators |
| ANSI A117.1 | 1986 Making Buildings and Facilities Accessible to, and Usable by, the Physically Handicapped |
| ANSI A137.1 | 1988 Ceramic Tile (TCA) |
| ANSI/BHMA A156.1-156.21 | 1984-1990 Miscellaneous Hardware Specifications |
| ANSI A208.1 | 1979 Mat-Formed Wood Particleboard (R 1986) |
| ANSI C2 | 1990 National Electrical Safety Code |
| ANSI C78.1C | 1978 Fluorescent Lamps (1985 Supplement) |
| ANSI C78.38 | 1984 Standard for Electric Lamps - High-Intensity Discharge Lamps - Method of Designation |
| ANSI C78.41 | 1987 Standard for Electric Lamps - Low Pressure Sodium Lamps |
| ANSI C82.1 | 1985 Standard for Ballasts for Fluorescent Lamps - Specifications |
| ANSI C82.9 | 1988 Standard for High-Intensity Discharge and Low Pressure Sodium Lamps, Ballasts and Transformers - Definitions |
| ANSI C84.1 | 1989 Standard for Electric Power Systems and Equipment - Voltage Ratings (60 Hertz) |

| | |
|---|---|
| ANSI Y1.1 | 1989 Abbreviations for Use on Drawings and in Text |
| ANSI Y14.1 | 1980 Drawing Sheet Size and Format |
| ANSI Y14.2M | 1979 Line Conventions and Lettering |
| ANSI 14.36 | 1978 Surface Texture Symbols |
| ANSI Y32.2 | 1975 (See IEEE 315 and 315A) |
| ANSI Y32.2.4 | 1949 (Revised 1988) Graphical Symbols for Heating, Ventilating, and Air Conditioning |
| ANSI Y32.2.6 | 1950 (Revised 1984) Graphical Symbols for Heat-Power Apparatus |
| ANSI Y32.4 | 1977 (Revised 1987) Graphic Symbols for Plumbing Fixtures for Diagrams Used in Architecture and Building Construction |
| ANSI Y32.9 | 1972 (Revised 1988) Graphic Symbols for Electrical Wiring and Layout Diagrams Used in Architecture and Building Construction |
| ANSI Z9.2 | 1979 The Design and Operation of Local Exhaust Systems |
| ANSI Z97.1 | 1989 Safety Glazing Materials Used in Buildings - Safety Performance Specifications and Methods of Test |
| ANSI Z358.1 | 1990 Emergency Eyewash and Shower Equipment |
| ANSI/SDI-100 | (See also SDI-100) 1985 Standard Steel Doors and Frames |
| ANSI/IEEE 730 | 1984 IEEE Standard for Software Quality Assurance Plans |
| ANSI/IEEE 828 | 1983 Standard for Software Configuration |
| ANSI/IEEE 983 | 1986 Guide for Software Quality Assurance |
| ANSI/IEEE 1012 | 1986 Standard for Software Verification and Validation Plans |

| | |
|---|---|
| ANSI/S 5.1 (ISA) | 1984 Instrumentation Symbols and Identification |
| ANSI/S 5.2 (ISA) | 1976 Binary Logic diagrams for Process Operations (R 1981) |
| ANSI/S 5.5 (ISA) | 1985 Graphic Symbols for Process Display |
| ANSI | Other ANSI Standards as Required by DOE 6430.1A and Hanford Plant Standards |

AMERICAN PLYWOOD ASSOCIATION (APA)

| | |
|---|---|
| E30 | 1987 APA Design/Construction Guide, Residential and Commercial |

AMERICAN SOCIETY FOR TESTING AND MATERIALS (ASTM)

| | |
|---|---|
| ASTM A36 | 1989 Standard Specification for Structural Steel |
| ASTM A53 | 1990 Standard Specification for Pipe, Steel, Black and Hot-Dipped, Zinc-Coated Welded and Seamless |
| ASTM A74 | 1987 Standard Specification for Cast Iron Soil Pipe and Fittings |
| ASTM A105/A105M | 1990 Standard Specification for Forgings, Carbon Steel, for Piping Components |
| ASTM A123 | 1989 (Rev. A) Standard Specification for Zinc (Hot-Dip Galvanized) Coatings on Iron and Steel Products |
| ASTM A153 | 1982 (R 1987) Standard Specification for Zinc Coating (Hot-Dip) on Iron and Steel Hardware |
| ASTM A167 | 1990 Standard Specification for Stainless and Heat-Resisting Chromium-Nickel Steel Plate, Sheet, and Strip |
| ASTM A185 | 1990 Standard Specification for Steel Welded Wire Fabric, Plain, for Concrete Reinforcement |
| ASTM A197 | 1987 Standard Specification for Cupola Malleable Iron |

| | |
|---|---|
| ASTM A307 | 1990 Standard Specification for Carbon Steel Bolts and Studs, 60,000 psi Tensile Strength |
| ASTM A325 | 1990 Standard Specification for High-Strength Bolts for Structural Steel Joints |
| ASTM A366/A366M | 1985 Standard Specification for Steel Sheet, Carbon, Cold-Rolled, Commercial Quality |
| ASTM A385 | 1980 (R 1986) Standard Practice for Providing High-Quality Zinc Coatings (Hot-Dip) |
| ASTM A446 | 1989 Standard Specification for Sheet Steel, Zinc-Coated (Galvanized) by the Hot-Dip Process, Structural (Physical) Quality |
| ASTM A500 | 1989 Standard Specification for Cold-Formed Welded and Seamless Carbon Steel Structural Tubing in Rounds and Shapes |
| ASTM A513 | 1990 Standard Specification for Electric-Resistance-Welded Carbon and Alloy Steel Mechanical Tubing |
| ASTM A525 | 1991 General Requirements for Steel Sheet, Zinc-Coated (Galvanized) by the Hot-Dip Process |
| ASTM A526/A526M | 1990 Standard Specification for Steel Sheet, Zinc-Coated (Galvanized) by the Hot-Dip Process, Commercial Quality |
| ASTM A527/A527M | 1990 Standard Specification for Steel Sheet, Zinc-Coated (Galvanized) by the Hot-Dip Process, Lock Forming Quality |
| ASTM A563 | 1990 Standard Specification for Carbon and Alloy Steel Nuts |
| ASTM A568 | 1990 (Rev. A) Standard Specification for Steel, Sheet, Carbon and High-Strength, Low-Alloy, Hot-Rolled and Cold-Rolled, General Requirements |

| | |
|---|---|
| ASTM A591/A591M | 1989 Standard Specification for Steel Sheet, Electrolytic Zinc-Coated, for Light Coating Mass Applications |
| ASTM A615 | 1990 Standard Specification for Deformed and Plain Billet-Steel Bars for Concrete Reinforcement |
| ASTM A786/A786M | 1989 Standard Specification for Rolled Steel Floor Plates |
| ASTM A792 | 1989 Standard Specification for Steel Sheet, Aluminum-Zinc Alloy-Coated by the Hot-Dip Process, General Requirements |
| ASTM B1 | 1985 Standard Specification for Hard-Drawn Copper Wire |
| ASTM B8 | 1986 Standard Specification for Concentric-Lay-Stranded Copper Conductors, Hard, Medium-Hard or Soft |
| ASTM B32 | 1989 Standard Specification for Solder Metal |
| ASTM B88 | 1989 (Rev. A) Standard Specification for Seamless Copper Water Tube |
| ASTM B456 | 1985 Electrodeposited Coatings of Copper Plus Nickel Plus Chromium and Nickel Plus Chromium, Specification for |
| ASTM C36 | 1985 Standard Specification for Gypsum Wallboard |
| ASTM C241 | 1990 Standard Test Method for Abrasion Resistance of Stone Subjected to Foot Traffic |
| ASTM C473 | 1987 (Rev. A) Standard Test Methods for Physical Testing of Gypsum Board Products and Gypsum Lath |
| ASTM C475 | 1989 Standard Specification for Joint Compound and Joint Tape for Finishing Gypsum Board |
| ASTM C552 | 1988 Standard Specification for Cellular Glass Thermal Insulation |

| | |
|---|---|
| ASTM C564 | 1988 Standard Specification for Rubber Gaskets for Cast Iron Soil Pipe and Fittings |
| ASTM C578 | 1987 (Rev. A) Standard Specification for Preformed, Cellular Polystyrene Thermal Insulation |
| ASTM C630 | 1990 Standard Specification for Water Resistant Gypsum Backing Board |
| ASTM C635 | 1987 Metal Suspension System for Acoustical Tile and Lay-in Panel Ceilings |
| ASTM C636 | 1986 Standard Practice for Installation of Metal Ceiling Suspension Systems for Acoustical Tile and Lay-in Panels |
| ASTM C645 | 1988 Standard Specification for Non-Load (Axial) Bearing Steel Studs, Runners (Track), and Rigid Furring Channels for Screw Application of Gypsum Board |
| ASTM C665 | 1988 Standard Specification for Mineral Fiber Blanket Thermal Insulation for Light Frame Construction and Manufactured Housing |
| ASTM C920 | 1987 Standard Specification for Elastomeric Joint Sealants |
| ASTM C1036 | 1990 Standard Specification for Flat Glass |
| ASTM C1048 | 1990 Standard Specification for Heat Treated Flat Glass |
| ASTM C1050 | 1985 Standard Specification for Rigid Cellular Polystyrene-Cellulosic Fiber Composite Roof Insulation |
| ASTM C1071 E1 | 1986 Standard Specification for Thermal and Acoustical Insulation (Mineral Fiber, Duct Lining Material) |
| ASTM D256 | 1990 Standard Test Methods for Impact Resistance of Plastics and Electrical Insulating Materials |

| | |
|---|---|
| ASTM D635 | 1988 Standard Test Method for Rate of Burning and/or Extent and Time of Burning of Self-Supporting Plastics in a Horizontal Position |
| ASTM D1557 | 1978 Standard Test Methods for Moisture-Density Relations of Soils and Soil-Aggregate Mixtures Using 10 Pound (4.54 kg) Rammer and 18 Inch (457 mm) Drop |
| ASTM D2000 | 1990 Standard Classification System for Rubber Products in Automotive Applications |
| ASTM D2092 | 1986 Standard Practice for Preparation of Zinc-Coated (Galvanized) Steel Surfaces for Painting |
| ASTM D2103 | 1986 Standard Specification for Polyethylene Film and Sheeting |
| ASTM D2178 | 1989 Standard Specification for Asphalt Glass Felt Used in Roofing and Waterproofing |
| ASTM D3253 | 1981 Standard Specification for Vulcanized Rubber Sheeting for Pond, Canal, and Reservoir Lining |
| ASTM D4060 | 1984 Abrasion Resistance of Organic Coatings by the Taber Abraser, Test Method for |
| ASTM D4397 EA-84 | 1984 (R 1989) Standard Specification for Polyethylene Sheeting for Construction, Industrial, and Agricultural Applications |
| ASTM D4541 | 1985 (R 1989) Standard Test Method for Pull-Off Strength of Coatings Using Portable Adhesion Testers |
| ASTM D4585 | 1987 Standard Practice for Testing Water Resistance of Coatings Using Controlled Condensation |
| ASTM E84 | 1989 (Rev. A) Standard Test Method for Surface Burning Characteristics of Building Materials |

| | |
|---|---|
| ASTM E90 | 1990 Standard Test Method for Laboratory Measurement of Airborne Sound Transmission Loss of Building Partitions |
| ASTM E136 | 1982 Standard Test Method for Behavior of Materials in a Vertical Tube Furnace at 750 Degrees C |
| ASTM E152 | 1981 (Rev. A) Standard Methods of Fire Tests of Door Assemblies |
| ASTM E1264 | 1990 Standard Classification for Acoustical Ceiling Products |
| ASTM F1066 | 1987 Vinyl Composition Floor Tile |
| ASTM G14 | 1988 Standard Test Method for Impact Resistance of Pipeline Coatings (Falling Weight Test) |
| ASTM G46 | 1976 Standard Practice for Examination and Evaluation of Pitting and Corrosion |

AMERICAN SOCIETY OF CIVIL ENGINEERS (ASCE)

| | |
|---|---|
| ASCE 7-88 | 1988 Edition (Published 1990) Minimum Design Loads for Buildings and Other Structures |

AMERICAN SOCIETY OF HEATING, REFRIGERATION AND AIR CONDITIONING ENGINEERS (ASHRAE)

| | |
|---|---|
| ASHRAE Handbook | 1987 ASHRAE Handbook HVAC Systems and Application |
| ASHRAE Handbook | 1989 ASHRAE Handbook Fundamentals (Inch-Pound Edition) |
| ASHRAE Handbook | 1988 ASHRAE Handbook Equipment; Errata-<br>1989 Additions and Corrections<br>1990 Additions and Corrections 1991 |
| ASHRAE Handbook | 1990 ASHRAE Handbook Refrigeration Systems and Applications, I-P Edition, Additions and Corrections, 1991 |
| ASHRAE Manual | 1983 Design of Smoke Control Systems for Buildings |

| | |
|---|---|
| ASHRAE Manual | 1984 Simplified Energy Analysis Using the Modified Bin Method |
| ASHRAE 15 | 1989 Safety Code for Mechanical Refrigeration |
| ASHRAE 20 | 1970 Method of Testing for Rating Remote Mechanical - Draft Air Cooled Refrigerant Condensing |
| ASHRAE 24 | 1989 Methods of Testing for Rating Liquid Coolers |
| ASHRAE 51 | 1985 Laboratory Methods of Testing Fans for Rating (AMCA Std. 210-85) |
| ASHRAE 52 | 1976 ASHRAE Method of Testing Air Cleaning Devices Used in General Ventilation for Removing Particulate Matter |
| ASHRAE 55 | 1981 Thermal Environmental Conditions for Human Occupancy |
| ASHRAE 62 | 1989 Ventilation for Acceptable Indoor Air Quality |
| ASHRAE 90.1 | 1989 Energy Efficient Design of New Buildings Except Low-Rise Residential Buildings |
| ASHRAE GRP 158 | 1979 Development of Heating and Cooling Load Calculations Manual |

AMERICAN SOCIETY OF MECHANICAL ENGINEERS (ASME)

| | |
|---|---|
| ASME | 1989 Boiler and Pressure Vessel Codes, Section VIII Rules for Construction of Pressure Vessels |
| ASME B16 Series | Pipework and Fittings ASME B16.1-89 to ASME B16.47-90 |
| ASME B16.18 | 1980 Cast Copper and Copper Alloy Solder Joint Pressure Fittings |
| ASME B16.22 | 1980 Wrought Copper and Copper Alloy Solder Joint Pressure Fittings |

| | |
|---|---|
| ASME B31.1 | 1989 Power Piping, Addenda B31.1A-1989 |
| ASME MH14.1 | 1987 Loading Dock Levelers and Dock Boards |

AMERICAN SOCIETY OF PLUMBING ENGINEERS (ASPE)

| | |
|---|---|
| | 1988 Data Book |

AMERICAN WATERWORKS ASSOCIATION, INC. (AWWA)

| | |
|---|---|
| AWWA C651 | 1986 Standard for Disinfecting Water Mains |

AMERICAN WELDING SOCIETY (AWS)

| | |
|---|---|
| D1.1 | 1990 Structural Welding Code |

ASSOCIATED AIR BALANCE COUNCIL (AABC)

| | |
|---|---|
| AABC Vol A-82 | 1982 National Standard for Testing and Balancing HVAC Systems |

BUILDERS HARDWARE MANUFACTURERS ASSOCIATION, INC. (BHMA)

(See ANSI/BHMA 156.1-156.21)

CARPET AND RUG INSTITUTE (CRI)

| | |
|---|---|
| CRI 104 | 1988 Installation of Textile Floorcovering Materials, Standard Practice for |

CAST IRON SOIL PIPE INSTITUTE (CISPI)

| | |
|---|---|
| CISPI 301 | 1985 Cast Iron Soil Pipe and Fittings for Hubless Cast Iron Sanitary Systems |
| CISPI 310 | 1985 Patented Joints for Use in Connection with Hubless Cast Iron Sanitary Systems |

CODE OF FEDERAL REGULATIONS (CFR)

| | |
|---|---|
| 10 CFR 436 | Code of Federal Regulations, Title 10, Part 436 |
| 29 CFR 1910 | Code of Federal Regulations, Title 29, Part 1910 |

COOLING TOWER INSTITUTE (CTI)

| | |
|---|---|
| CTI ATC 105 | 1990 Acceptance Test Code for Water-Cooling Towers |

FACTORY MUTUAL RESEARCH CORPORATION (FM)

| | |
|---|---|
| | 1991 Factory Mutual Approval Guide, as supplemented |
| DATA 7-50 | 1991 FMRC Loss Prevention Data Sheet |

FEDERAL SPECIFICATION (FS)

| | |
|---|---|
| FS-HH-I-545 | (Superseded by ASTM C1071 E1) |
| FS-HH-I-551 | (Superseded by ASTM C552) |
| FS-HH-I-558 | 1976 Insulation Blocks, Boards, Blankets, Felt, Sleeving (Pipe and Tube Covering) and Pipe Fitting Covering, Thermal (Mineral Fiber, Industrial Type) [Rev. B, Amendment 3] |
| NBS Handbook 135 | 1987 Life Cycle Costing Manual for the Federal Energy Management Program |

FEDERAL STANDARDS (FED-STD)

| | |
|---|---|
| FED-STD 595B | 1989 Colors Used in Government Procurement |

ILLUMINATING ENGINEERING SOCIETY (IES)

| | |
|---|---|
| IES Handbook | 1987 Illuminating Engineering Society Handbook |

INSTRUMENT SOCIETY OF AMERICA

| | |
|---|---|
| | (See also ANSI/S) |
| ISA S5.1 | 1984 Instrumentation Symbols and Identification |
| ISA S5.2 | 1976 Binary Logic Diagrams for Process Operations |
| ISA S5.5 | 1985 Graphic Symbols for Process Displays |

INTERNATIONAL ASSOCIATION OF PLUMBING AND MECHANICAL OFFICIALS (IAPMO)

| | |
|---|---|
| UPC | 1988 Uniform Plumbing Code |

INTERNATIONAL CONFERENCE OF BUILDING OFFICIALS (ICBO)

| | |
|---|---|
| UBC | 1988 Uniform Building Code |
| UFC | 1988 Uniform Fire Code |
| UMC | 1988 Uniform Mechanical Code |

INTERNATIONAL ELECTRICAL AND ELECTRONICS ENGINEERS (IEEE)

| | |
|---|---|
| IEEE 142 | 1982 Recommended Practice for Grounding of Industrial and Commercial Power Systems |
| IEEE 315 | 1975 (Revised 1989) Graphic Symbols for Electrical and Electronics Diagrams (Including Reference Designation Class Designation Letters) |
| IEEE 315A | 1986 Supplement to Graphic Symbols for Electrical and Electronics Diagrams |

MANUFACTURERS STANDARDIZATION SOCIETY OF THE VALVE AND FITTINGS INDUSTRY (MSS)

| | |
|---|---|
| MSS SP-58 | 1988 Pipe Hangers and Supports - Materials, Design and Manufacture |
| MSS SP-69 | 1983 Pipe Hangers and Supports - Selection and Application |

MARBLE INSTITUTE OF AMERICA (MIA)

1990 Dimensional Stone Industry Design Manual

NATIONAL ASSOCIATION OF ARCHITECTURAL METAL MANUFACTURERS (NAAMM)

1988 Metal Stairs Manual, 4th Edition

NATIONAL ELECTRICAL MANUFACTURING ASSOCIATION (NEMA)

| | |
|---|---|
| NEMA 250 | 1985 Enclosures for Electrical Equipment (1000 Volts Maximum) |
| NEMA ICS2 | 1988 General Control Devices, Controllers and Assemblies |
| NEMA ICS6 | 1988 Enclosures for Industrial Control and Systems |
| NEMA LD-3 | 1988 Decorative Laminate Plastic |
| NEMA MG1 | 1987 Motors and Generators |
| NEMA PB-1 | 1990 Panelboards |
| NEMA PB-2 | 1984 Dead-Front Distribution Switchboards |

NATIONAL FIRE PROTECTION ASSOCIATION (NFPA)

| | |
|---|---|
| NFPA 10 | 1988 Portable Fire Extinguishers |
| NFPA 11 | 1988 Standard for Low Expansion Foam and Combined Agent Systems |
| NFPA 11A | 1988 Standard for Medium and High Expansion Foam Systems |
| NFPA 12 | 1989 Standard on Carbon Dioxide Extinguishing Systems |
| NFPA 13 | 1991 Installation of Sprinkler Systems |
| NFPA 15 | 1990 Standard for Water Spray Fixed Systems for Fire Protection |
| NFPA 16 | 1991 Standard on Deluge Foam-Water Sprinkler and Foam-Water Spray Systems |
| NFPA 16A | 1988 Recommended Practice for the Installation of Closed-Head Foam-Water Sprinkler Systems |
| NFPA 17 | 1990 Dry Chemical Extinguishing Systems |
| NFPA 20 | 1990 Standard for the Installation of Centrifugal Fire Pumps |

| | |
|---|---|
| NFPA 22 | 1987 Standard for Water Tanks for Private Fire Protection |
| NFPA 24 | 1987 Standard for the Installation of Private Fire Service Mains and Their Appurtenances |
| NFPA 45 | 1991 Standard on Fire Protection for Laboratories Using Chemicals |
| NFPA 51 | 1987 Standard for the Design and Installation of Oxygen-Fuel Gas Systems for Welding, Cutting and Allied Processes |
| NFPA 70 | 1990 National Electrical Code |
| NFPA 71 | 1989 Standard for the Installation, Maintenance, and Use of Signaling Systems for Central Station Service |
| NFPA 72 | 1990 Standard for the Installation, Maintenance, and Use of Protective Signaling Systems (Revision and Consolidation of 72A, 72B, 72C, 72D, and 72F) |
| NFPA 72E | 1990 Standard on Automatic Fire Detectors |
| NFPA 72G | 1989 Guide for the Installation, Maintenance, and Use of Notification Appliances for Protective Signaling Systems |
| NFPA 72H | 1988 Guide for Testing Procedures for Local, Auxiliary, Remote Station, and Proprietary Signaling Systems |
| NFPA 75 | 1989 Protection of Electronic Computer/ Data Processing Equipment |
| NFPA 90A | 1989 Standard for the Installation of Air Conditioning and Ventilating Systems |
| NFPA 90B | 1989 Standard for the Installation of Warm Air Heating and Air Conditioning Systems |

| | |
|---|---|
| NFPA 91 | 1990 Standard for the Installation of Blower and Exhaust Systems for Dust, Stock and Vapor Removal or Conveying |
| NFPA 96 | 1991 Standard for the Installation of Equipment for the Removal of Smoke and Grease-Laden Vapors from Commercial Cooling Equipment |
| NFPA 101 | 1988 Code for Safety to Life from Fire in Buildings and Structures |
| NFPA 252 | 1990 Standard Methods of Fire Tests of Door Assemblies |
| NFPA 255 | 1990 Standard Method of Test of Surface Burning Characteristics of Building Materials |
| NFPA 1410 | 1988 Training Standard on Initial Fire Attack |
| NFPA Vols. 1-16 | Vols. 1-16, Primarily Vol. 9 as specified by HPS |

PLUMBING AND DRAINAGE INSTITUTE (PDI)

| | |
|---|---|
| PDI WH 201 | 1977 Water Hammer Arrestors Standard |

SHEET METAL AND AIR CONDITIONING CONTRACTORS NATIONAL ASSOCIATION, INC. (SMACNA)

| | |
|---|---|
| SMACNA | 1983 HVAC Systems Testing, Adjusting and Balancing (First Edition) |
| SMACNA | 1987 Architectural Sheet Metal Manual, Fourth Edition |
| SMACNA | 1990 HVAC Systems Duct Design (Third Edition) |
| SMACNA | 1985 HVAC Duct Construction Standards, Metal and Flexible, First Edition |
| SMACNA | 1985 HVAC Air Duct Leakage Test Manual |
| SMACNA | 1978 Energy Recovery Equipment and System Manual |

| | |
|---|---|
| SMACNA | 1984 Energy Conservation Guide Lines |
| SMACNA | 1975 Accepted Industry Practice for Industrial Duct Construction |
| SMACNA | 1974 Thermoplastic Duct (PVC) Construction Manual |
| SMACNA | 1983 Systems Testing, Adjusting and Balancing |
| SMACNA | 1991 Seismic Restraints |
| SMACNA | 1986 Fire Smoke and Radiation Damper Installation Guide for HVAC Systems |

STEEL DECK INSTITUTE (SDI)

| | |
|---|---|
| SDI | 1989 Design Manual for Composite Decks, Form Decks and Roof Decks, Publication No. 27 |

STEEL DOOR INSTITUTE (SDI)

(See also ANSI/SDI-100)

| | |
|---|---|
| SDI-100 | 1985 Standard Steel Doors and Frames |

STEEL JOIST INSTITUTE (SJI)

1990 Standard Specifications, Load Tables, and Weight Tables for Steel Joists and Joist Girders

1990 Recommended Code of Standard Practice for Steel Joists and Joist Girders

THE ALUMINUM ASSOCIATION, INC. (AA)

| | |
|---|---|
| AA 45-80 | 1980 Designation System for Aluminum Finishes |

THERMAL INSULATION MANUFACTURERS ASSOCIATION (TIMA)

| | |
|---|---|
| TIMA T302A | 1988 TIMA Energy Saving Guide (Recommended Thickness for Pipe and Equipment Insulation) |

TILE COUNCIL OF AMERICA (TCA)

| | |
|---|---|
| | 1988 Handbook for Ceramic Tile Installation |

UNDERWRITERS LABORATORIES (UL)

| | |
|---|---|
| UL 6 | 1983 Rigid Metal Conduit |
| UL 10(b) | 1986 Fire Tests of Door Assemblies, 7th Edition, June 26, 1990; Bulletin, September 27, 1989 |
| UL 44 | 1983 Rubber-Insulated Wires and Cables, 12th Edition, January 29, 1990, Bulletin July 6, 1990, Bulletin July 10, 1990 |
| UL 50 | 1990 Cabinets and Boxes |
| UL 67 | 1988 Panelboards |
| UL 98 | 1987 Standard for Enclosed and Dead-Front Switches |
| UL 207 | 1986 UL Standard for Safety Refrigerant-Containing Components and Accessories, Nonelectrical Fifth Edition, October 3, 1989 |
| UL 489 | 1986 Molded Case Circuit Breakers and Circuit Breaker Enclosures |
| UL 723 | 1983 UL Standard for Safety Test for Surface Burning Characteristics of Building Materials Sixth Edition; April 28, 1987 |
| UL 790 | 1983 Test for Fire Resistance of Roof Covering Materials, Fifth Edition |
| UL 891 | 1990 Dead-Front Switch, 8th Edition |
| UL 900 | 1987 Safety Standard for Air Filter Units |
| UL 924 | 1990 Emergency Lighting and Power Equipment, 6th Edition |
| UL 943 | 1990 Ground Fault Circuit Interrupters, 2nd Edition |

| | |
|---|---|
| UL 1029 | 1990 High-Intensity-Discharge Lamp Ballasts |
| UL 1242 | 1983 Intermediate Metal Conduit |
| UL 1561 | 1991 Dry-Type General Purpose and Power Transformers |
| UL 1572 | 1984 High Intensity Discharge Lighting Fixtures, Second Edition, May 30, 1990, Errata - August 1990 |

U.S. DEPARTMENT OF ENERGY - HEADQUARTERS (DOE)
Telephone: (202) 586-9642

| | |
|---|---|
| DOE Order 4330.2C | 1988 In-House Energy Management |
| DOE Order 4700.1 | 1987 Project Management System |
| DOE Order 5480.1B | 1986 Environmental Safety and Health Programs for DOE Operations |
| DOE Order 5480.7 | 1980 Fire Protection, Revised 1987 (Attachment U) |
| DOE Order 5480.10 | 1985 Contractor Industrial Hygiene Program |
| DOE Order 5481.1B | 1986 Safety Analysis and Review System (SARS) |
| DOE Order 5500.1B | 1992 Emergency Management System |
| DOE Order 5500.3A | 1992 Reactor and Nonreactor Facility Emergency Planning Preparedness and Response Program for DOE Operations |
| DOE Order 5700.6C | 1991 Quality Assurance |
| DOE Order 6430.1A | 1989 General Design Criteria: |
| | Section 0110-5 (Attachment T) - Health and Safety |
| | Section 0110-12 (Attachment K) - Energy Conservation |
| | Section 0140 (Attachment V) - Quality Assurance |

Section 1300-3.2 (Attachment R) - Safety Class Items

Section 1525 (Attachment L) - Mechanical Insulation

Section 1530 (Attachment L) - Fire Protection

Section 1540 (Attachment M) - Plumbing/Service Piping

Section 1550 (Attachment N) - Heating, Ventilating and Air Conditioning Systems

Section 1565 (Attachment P) - Refrigeration

Section 1595 (Attachment Q) - Controls

U.S. DEPARTMENTS OF THE ARMY AND THE AIR FORCE

| | |
|---|---|
| AFM 88-29 | Engineering Weather Data |
| TM-5-815-2 (AFM 88-36) | Energy Monitoring and Control Systems |

U.S. NAVAL FACILITIES ENGINEERING COMMAND

| | |
|---|---|
| NCEL UG-0010 | User Guide for Single Building Controllers |

WESTERN WOOD PRODUCTS ASSOCIATION (WWPA)

| | |
|---|---|
| WWPA G-5-88 | 1988 Grading Rules for Western Lumber (plus supplements) |

WOODWORK INSTITUTE OF CALIFORNIA (WIC)

1989 Manual of Millwork

## 1.3 RELATED REQUIREMENTS

| | |
|---|---|
| Specification Section 01730 | Operation and Maintenance Data |
| Specification Section 02101 | Site Improvements for Construction Support Facilities |

## 1.4 DESIGN CRITERIA

### 1.4.1 Architectural

The Architectural design of the building shall meet the following criteria:

#### 1.4.1.1 Codes and Specifications

A. Uniform Building Code (UBC)

B. NFPA 101 - Life Safety

C. Uniform Fire Code (UFC)

D. ANSI A117.1

E. 29 CFR 1910 (Subpart D) for Handrails, Stair Treads and Ladders.

#### 1.4.1.2 Design Criteria

A. Thermal Resistance Value (R-Value)

| | |
|---|---|
| Roof | R-18.52 (Minimum) |
| Walls | R-12.5 (Minimum): (R-13.55 at 72°F, see Attachment H) |
| Floors (Perimeter) | R-6 (Minimum) Vertical insulation for at least 36 inches of foundation or R = 14 (minimum) horizontal insulation for at least 36 inches on underside of slab on grade (see Section 2.7.2.1 of this specification for more construction details) |

The "WHOLE" building shall comply with ASHRAE Standard 90.1 and the above minima, Individual values may have to be increased to accommodated other items like, windows or doors that do not comply with the prescriptive design approach. Also use heating degree-day method to determine minimum values together with Tables I and II of Attachment H, which may supersede the above minimum values.

B. Wall Assembly

Siding assemblies shall be designed to resist the wind loading as specified in Paragraph 1.4.2.2. Inward and

outward design wind pressures shall be determined from ASCE 7-88.

C. Roof Assembly

Roofing, insulation and fasteners shall be designed to resist an uplift due to wind suction pressure. The complete roof covering assembly shall have UL 790 Class A classification, or Factory Mutual Class 1 rating.

D. Insulation and vapor barriers shall be incorporated in the design of the Computer Room to prevent the occurrence of condensation under all conditions.

E. Separate gas bottle storage areas shall be provided for oxygen and flammable gases (e.g., acetylene). Such storage areas will be designed in accordance with applicable provisions of the Uniform Fire Code. (Minimum Temperature: -20°F).

F. The building shall be designed to eliminate mobility barriers, making the building accessible to and usable by the physically handicapped; conforming to ANSI Standard A117.1.

1.4.2 Structural

Structural engineering and design of the building shall meet the following requirements:

1.4.2.1 Codes and Specifications

The following codes, standards and specifications shall be used for the purposes listed below. Modifications applicable to this project are described below.

A. UBC

Earthquake Loads
Impact Loads
Rain Loads (Ponding)
Building Design
Concrete Anchorage

B. ASCE 7-88 (Formerly ANSI A58.1-82)

Dead Loads
Live Loads
Snow Loads
Wind Loads

C. ACI 318

Concrete Design

D. AISC - Manual for Steel Construction (Ninth Edition)

Steel Design
Steel Fabrication
Steel Erection

E. SDI - Diaphragm Design Manual and Manual for Composite Decks, Form Decks and Roof Decks

Floor and Roof Deck Design

1.4.2.2 Design Loads

Loads and forces used for design shall be as defined in ASCE 7-88, UBC Chapter 23, and as specified below. The building is classified as Category I per ASCE 7-88, Table 1 for purpose of determining wind and snow loads.

The unit weights of materials and construction assemblies for buildings and other structures shall be those given in ASCE 7-88. Where unit weights are neither established in that standard nor determined by test or analysis, the weights shall be determined from data in manufacturers' drawings or catalogs.

A. Snow Loads

Ground snow load shall be 15 psf. Minimum snow load on roofs shall be 20 psf. The effects of snow drifts shall be considered.

B. Wind Loads

Basic wind speed at standard height of 33 feet shall be 70 mph. The wind loads shall be based on terrain Exposure "C."

C. Earthquake Loads

Building, structures, components and equipment supports and their anchorage shall be designed to resist earthquake forces calculated in accordance with UBC Chapter 23 utilizing the following site specific information:

Seismic Zone = 2B
Importance Factor I = 1.25
Site Coefficient S = 1.2

D. Allowance for Partition Loads

The minimum allowance for the weights of partitions, where partitions are likely to be rearranged or relocated, shall be as follows:

- For partition weights of 150 plf or less, an equivalent uniform dead load of 20 psf shall be used.
- For partition weights above 150 plf, the actual linear loads shall be used.
- Partitions that are likely to be rearranged or relocated should be calculated as live loads for load factor design.

1.4.2.3 Load Combinations

Loads shall be combined in accordance with UBC and ASCE 7-88 Section 2.3 when using allowable stress design and Section 2.4 when using strength design method.

1.4.2.4 Foundations

Foundation design shall meet the requirements of the UBC and the soil parameters given herein.

1.4.2.4.1 Soil Properties

The soil bulk density may be assumed as 110 pcf and angle of internal friction equal to 35 degrees.

1.4.2.4.2 Water Table

The water table is about 310 feet below-grade and, therefore, will not be a consideration.

1.4.2.4.3 Frost Depth

The design frost depth is 30 inches below finished grade.

1.4.2.4.4 Foundation Depth

The minimum depth to the bottom of foundations will be 2'-6" below finished grade.

1.4.2.4.5 Minimum Footing Size

Minimum footing width shall be 2 feet 6 inches. The footings will be sized to provide a minimum stability ratio against overturning and sliding of 1.5 for all lateral load conditions.

1.4.2.4.6 Allowable Soil Bearing

The allowable net soil bearing pressure shall not exceed 2.5 ksf, except a 33 percent increase is permitted when considering wind or seismic load.

1.4.2.4.7 Settlements

The settlements will be elastic in nature, and will occur essentially simultaneous with the application of loads. No long term settlements are anticipated.

The estimated elastic settlement of footings for 2.5 ksf net bearing pressure is expected not to exceed 1/2 inch. To prevent differential settlement, size building footings to provide uniform bearing pressure.

1.4.2.4.8 Lateral Earth Pressure

Lateral earth pressure against yielding walls shall be determined using the coefficient of active earth pressure, (Ka) equal to 0.27. For rigid (unyielding) walls the at-rest earth pressure coefficient, (Ko) equal to 0.43 shall be used. Lateral pressure due to surcharge loads where occurring shall also be considered. Yielding walls are those where displacement at top exceeds 0.001 times the wall height.

1.4.2.4.9 Lateral Force Resistance

Lateral loads may be resisted by a combination of passive pressure and friction. The coefficient of passive earth pressure, (Kp) is equal to 2.5. The coefficient of friction ($\mu$) between soil and footing may be taken as 0.42. One-half of the passive

resistance shall be used when combining with friction to determine resistance. The upper 1 foot of soil shall be neglected when determining passive resistance.

1.4.2.4.10 Excavation and Backfill

The excavated soil or imported granular fill material approved by the Buyer may be used as structural backfill around foundations and under floor slab. Backfill shall be compacted to 95 percent of its maximum density as determined by ASTM D1557 methods. Excavation and backfill requirements will be similar to those specified in Specification Section 02101, Site Improvements for Construction Support Facilities.

1.4.3 Heating Ventilating and Air Conditioning

1.4.3.1 General

The design and installation of the heating, ventilating and air conditioning system shall be in accordance with DOE 6430.1A modified as shown in Attachments; Section 0110-12: Energy Conservation (Attachment K), Section 1525: Mechanical Insulation (Attachment L), Section 1530: Fire Protection (Attachment L), Section 1540: Plumbing/Service Piping (Attachment M), Section 1550: Heating, Ventilating and Air Conditioning Systems (Attachment N), Section 1565: Refrigeration (Attachment P), and Section 1595: Controls (Attachment Q).

The design, equipment and materials used together with the installation shall be on the basis of a 20 year life expectancy.

Reference is also made to Attachment H, which specifies some of the specific design, material and equipment required at the site.

Attention is specifically drawn to the following areas of the Attachments but not limited to these:

- The HVAC system shall comply with, but not be limited to, the following sections in the Attachments:

| | |
|---|---|
| 0110-12.7 | Building Analysis Procedures (Attachment K) |
| 0110-12.7.1 | LCC Analysis Procedures (Attachment K) |
| 0110-12.7.2 | Use of Computer or other Energy Analysis Techniques (Attachment K) |

| | |
|---|---|
| 0110-12.8 | Energy Conservation Report Requirements (Attachment K) |
| 1550 | Heating, Ventilating and Air Conditioning Systems (Attachment N) |
| 1595 | Controls (Attachment Q) |

- In the Controls Section 1595 (Attachment Q) particular attention is drawn to the Zoning (1595-2).
- Automatic controls shall be provided to shut off heating or cooling to any individual zone.
- Interior zones shall not be combined with external zones.
- Interior space zones shall be placed on separate air handling systems from external, if cost effective. External space zones shall be selected for each individual exposure.
- For office facilities and similar occupancies, each major orientation shall be zoned to have no more than 2,000 square feet of floor area with exterior exposure, and no more than 3,000 square feet of floor area with interior exposure.
- Each HVAC system shall have a separate thermostat for space temperature regulation and a separate humidistat if humidity control is provided.
- No zone shall contain more than a single building floor regardless of floor space.

Attention is also drawn to the following items in Controls Section 1595 of DOE 6430.1A (Attachment Q):

- Simultaneous heating and cooling shall not be used to control comfort conditions within a space by heating or recooling supply air or by concurrent operation of independent heating and cooling systems serving a common zone except as indicated in Section 1595-5.
- Economizer cycle control system shall be used with separate supply and extract fans. See Section 1595-6.2. Automatic control dampers shall be low leak type. See Section 1595-6.3.

- All control equipment shall be easily accessible. One temperature control panel shall be provided for each system, complete with panel-face mounted indicators, switches, pilot lights and tags. All control interlocks shall be through HOA switches.

- With the exception of computer or control rooms (requiring 24 hour operation), automatic control setback and shutdown devices with manual override feature shall be provided for all HVAC systems. See Section 1595-3.

- Energy Management Systems (DCC) (DCS) shall be considered for control of the HVAC systems. See Sections 1595-3 and 1595-10 and 0110-12.6 (Attachment K). EMSs are being used on other buildings within the complex.

The selection of central cooling station cooling system shall be based on the LCC analysis procedure outlined in Section 0110-12.7 (Attachment K) and Section 1550-2 (Attachment N).

The HVAC systems used shall be in compliance with Section 1565 (Attachment P) for Refrigeration and CFC and related items.

Reference is made within the Attachments K, L, M, N, P and Q (Sections 0110-12, 1525, 1530, 1540, 1550, 1565 and 1595, respectively) to other design criteria, documents, references and specifications. Attention is drawn to the following documents listed below but are not limited to these. The Seller is strongly advised to read these and all related publications. No excuses will be accepted due to lack of knowledge of these or other related publications.

ACGIH Industrial Ventilation Manual

ASHRAE Handbook: 1987 ASHRAE Handbook HVAC Systems and Application

ASHRAE Handbook: 1989 ASHRAE Handbook Fundamentals (Inch Pound Edition)

ASHRAE Handbook: 1990 ASHRAE Handbook Refrigeration Systems and Applications I-P Edition, Additions and Corrections, 1991

ASHRAE 90.1

ASHRAE 55

ASHRAE 62

29 CFR 1910

DOE Order 5480.1B

NFPA 90A

NFPA 91

NFPA 96

NFPA 101

SMACNA: 1985 HVAC Duct Construction Standards - Metal and Flexible

SMACNA: 1978 Energy Recovery Equipment and System Manual

SMACNA: 1990 HVAC Systems Duct Design (Third Edition)

1.4.3.2 HVAC System Design Criteria

1.4.3.2.1 Geographical Site Design Conditions

Location Hanford, Washington

Altitude 714 feet above sea level

Latitude 46° North

Longitude 119° West

1.4.3.2.2 Attachments K, L, M, N, P and Q (Sections 0110-12, 1523, 1530, 1540, 1550, 1565 and 1595, respectively) General Design Criteria.

1.4.3.2.3 Outdoor Design Conditions

| | Type of Area | Winter | Summer |
|---|---|---|---|
| 1) | Receiving and Storage, Computer and Control Areas, Telecommunications Room, Mechanical/Electrical Room, Reprographics, Spare Parts, Electrical Instruments Shop, Clean Maintenance Shop, Tool Store, and Spare Parts | 9°F db | 101°F db and 68°F wb |
| 2) | Locker Rooms, Toilets, Office Areas, Mailroom, Lunch Room, Class Rooms, Conference Room and Files | 12°F db | 98°F db and 66°F wb |
| 3) | Outdoor summer dry bulb daily range 30°F | | |
| 4) | Extreme weather conditions | -27°F | 115°F db and 75°F wb |
| 5) | Wind velocity - winter and summer | 15 mph for 'U' value calculation | |
| 6) | Average infiltration wind velocity | 25 mph (0.3 inches differential pressure) | |
| 7) | Ground temperature at 10 feet below grade: 55°F | | |
| 8) | ASHRAE Standard 90.1 and the annual heating degree-days shall be used for determining the minimum thermal resistance per Tables I and II of Attachment H. | | |
| 9) | Sand storms with particulate air concentrations for less than 10 micrometers in diameter were recorded at 1695.0 micrograms per cubic meter. | | |

1.4.3.2.4 Indoor Design Conditions

| | Type of Area | Summer | Winter | R.H. |
|---|---|---|---|---|
| 1) | Computer and Control Area and Telecommunication Room | 72°F ± 2°F | 72°F ± 2°F | 45% ± 10% |
| 2) | Mechanical/Electrical Rooms | 85°F Max | 65°F Min | Not controlled |

| | Type of Area | Summer | Winter | R.H. |
|---|---|---|---|---|
| 3) | Office Areas/Mailroom/ Electrical and Instrument Shop/Class Rooms/Conference/Lunch Rooms/Lockers/Model Room | 78°F Max | 72°F Min | 50% R.H. at maximum summer design condition. R.H. not controlled in winter |
| 4) | Clean Maintenance Shop/Tool Store/ Reprographics/Spare Parts/Files | 78°F Max | 65°F Min | 50% R.H. at maximum summer design condition. R.H. not controlled in winter |
| 5) | Men and Women Toilets | 78°F Max | 70°F Min | Not controlled |
| 7) | Raw Material and Canister Receiving and Storage Areas | 104°F | 55°F | Not controlled |

1.4.3.2.5 Anticipated Occupant Densities and Degree of Activity

As recommended by ASHRAE Standards and Manuals to suit areas or as specified in Architectural sections of this specification.

1.4.3.2.6 Ventilation Air

The minimum outside air to be delivered equally to all areas shall be to ASHRAE Standard 62.

1.4.3.2.7 Infiltration

Infiltration for heating and cooling loads shall be calculated according to the methods provided by ASHRAE Publication GRP 158 and ASHRAE Fundamental Handbook and ASHRAE 90.1 and the recommendations of the manufacturers of the building materials, plus the building construction methods used.

1.4.3.2.8 Thermal Transmission Values ('U' Values)

The building construction shall be to ASHRAE Standard 90.1 but shall be superseded by the annual heating degree-days method for determining the minimum thermal resistance per Tables I and II of Attachment H.

1.4.3.2.9 Air Circulation

An minimum design air circulation rate of 1.0 cfm/SF shall be used. The only exception to this is the Receiving and Storage areas with heights of less than 11'-0" where it can be reduced to 0.8 cfm/SF providing air stratification of more than 0.5°F for each foot of height does not occur (this particularly applies to the winter heating mode). If stratification occurs, the air circulation rates shall be increased. The unit heaters shall circulate air during the winter months, even when the heating elements are not in use, in order to prevent air stratification.

The maximum cooling air temperature differential supply to room shall be 20°F. Thermal stratification from floor to underside of roof to be less than 5.5°F during the winter period.

The whole floor area shall be heated and cooled with no dead spots.

1.4.3.2.10 Safety Factor

A minimum 10 percent safety factor shall be added to the calculated design tested cooling requirements. A minimum of 20 percent safety factor shall be added to the calculated design total heating requirement.

A minimum 25 percent expansion factor shall be added to the total cooling requirements in the computer and control area, telecommunication rooms, etc., in compliance with Section 1550-99-8-2 (Attachment N).

1.4.3.2.11 Noise and Vibration Levels

A. Shall comply with ASHRAE 1987 Systems and Application Handbook (Table 2, page 52.4 and Table 27 page 52.31) requirements.

B. Figure 5, Page 52.3 ASHRAE 1987 Systems and Application Handbook will be used for Room Criterion Calculations.

1.4.3.2.12 Energy Conservation

The building envelope shall meet with the minimum prescriptive energy conservation requirements of ASHRAE Standard 90.1 and the criteria in Sections 0110-12.3 and 0110-12.4 (Attachment K) and details of this specification, plus the annual heating degree-days method, plus Tables I and II of Attachment N.

A Life Cycle Cost (LCC) Analysis shall be performed to determine the most economical HVAC system according to the procedures described in Section 0110-12.7 and 0110-12.8 (Attachment K) and this specification.

The control diagrams shall use ANSI/ISA, ISA S5.1, S5.2, and S5.5 Symbols and Definitions, plus ANSI/IEEE 730/828/983/1012 Standards for Software.

1.4.3.2.13 Odor Control

The Lunch Room, Reprographics and Toilet areas shall have 100 percent exhaust air and be kept under a slightly negative pressure to the surrounding areas to prevent smells permeating to other areas. Any other area likely to produce objectionable smells shall be 100 percent exhausted to atmosphere and kept under a slightly negative pressure to the surrounding areas.

All toilets shall be designed for a minimum extraction rate of 2.0 cfm/SF.

1.4.3.2.14 Fire and Smoke

Systems shall be started and stopped as required by Local/State/National Codes and requirements and Attachments L and Q (Sections 1530 and 1595-6.5, respectively). Corridor stairs and escape routes shall be maintained under a slightly positive pressure in relation to other areas in order to minimize the spread of smoke from individual offices/areas and assist occupants to escape from the building during a fire/smoke situation by keeping escape routes free of smoke. An engineered smoke control system shall be designed and installed in the OAB Building in accordance with NFPA 90A and NFPA 101.

Fire and smoke dampers and barriers shall be provided where necessary to comply with Local/State/requirements and NFPA 90A, NFPA 90B and NFPA 101.

The welding extract system shall be designed and installed in accordance with NFPA 91 and ACGIH Industrial Ventilation Manual.

1.4.3.2.15 Operating Times/Frost Protection/Maximum Summer Conditions

The areas/rooms shall be designed to operate at the following times: Frost thermostats shall be provided where necessary to protect the systems and all services within the buildings from frost damage down to -27°F outside temperature. All air conditioning systems must operate satisfactorily with outside temperatures up to 115°F. All outside water carrying pipes shall

be electrically trace heated and insulated when necessary to prevent freezing for temperatures down to -27°F. Other internal piping shall be electrically trace heated and insulated where necessary to prevent freezing.

The areas/rooms shall operate at the following times:

| Type of Area | Time Operated |
|---|---|
| Receiving/Storage | Two - 8 hour shifts |
| First Floor Offices | Two - 8 hour shifts |
| Second Floor Offices | Two - 8 hour shifts |
| Lunch Room | Three - 8 hour shifts |
| Mechanical/Electrical Room | Three - 8 hour shifts |
| Toilets and Lockers | Three - 8 hour shifts |
| Control Room/Computer Room | Three - 8 hour shifts |

1.4.3.2.16 Filtration Requirements (Disposable)

Supply air will be filtered with units rated at the efficiencies list below (atmospheric dust spot) in accordance with ASHRAE-52. Outside intake air inlets will be located suitably above grade to minimize dust loading to the filters.

| Type of Area | Percent Efficiency |
|---|---|
| Receiving/Storage Area | 55% to 65% (Minimum) |
| Control and Computer Areas | 55% to 65% (Minimum) |
| All Other Areas | 55% to 65% (Minimum) |

The Design Engineer shall calculate both the particulate and volatile levels in all indoor areas to meet the minimum requirements of ASHRAE 62. These calculations may indicate that higher particulate efficiencies than the minimum stated above and also the use of filters and activated carbon filters to remove volatile gases are both necessary. Sand storms occur in Hanford, Washington and consideration should be given to installing inertia pre-filters to lengthen the life of the higher efficiency filters.

1.4.3.2.17 Equipment Location

Air cooling systems (like adiabatic washers) or air conditioning equipment shall be located at ground level on concrete pads outside the building (see Section 1550-2.1.3 [Attachment N] for details of Condensers). Unit Heaters shall be located as high as possible to optimize storage space and economize on energy usage.

The Seller shall coordinate the location and the adequacy of any equipment room spaces and equipment loading spaces shown on the drawings.

1.4.3.2.18 Lighting

Recessed lighting fixtures shall be used where necessary (like offices etc.) to produce draft free air distribution at the occupied level.

1.4.3.2.19 Condensation

Condensation on all windows shall be prevented at all internal and external temperature and humidity conditions by using double glazed windows where necessary. This particularly applies to lunch rooms, conference rooms, computer rooms, special high humidity storage rooms/areas or any other area/room where condensation could occur. Reference and calculation to determine the 'critical temperature' of any surface shall be based on the methods detailed in ASHRAE Handbook (Fundamentals) chapters 20, 21 and 22.

Condensation within any building structure or building material shall be prevented at all internal and external temperature and humidity, conditions by the use of 'water vapor retarders' and extra insulation. Reference and calculations to determine this condition shall be based on the methods detailed in ASHRAE Handbook (Fundamentals) Chapters 20, 21 and 22.

Thermal bridging which will cause condensation within or on the surface of any building structure or building component or material shall be prevented at all internal and external temperature and humidity conditions by the design and construction methods used by the Seller. Reference and calculations to determine this (these) condition(s) shall be based on the methods detailed in ASHRAE Handbook (Fundamentals) Chapters 20, 21 and 22.

All the above calculations will be required to be seen by the Buyer before construction starts.

1.4.3.2.20 Welding Extract

The welding extract system shall be designed as specified in ACGIH Industrial Ventilation Manual (generally Pages 8-2, 10-57, and 10-58) and NFPA 91. The system shall be designed for welding carbon steel or stainless steel pipes, valves and equipment. The extraction rate shall be designed to cope with 7 lbs/hr of 1/4 inch diameter "Rod" for each welding machine and also the welding bench all being used simultaneously. High level extract

shall also be provided to suit an enclosed area (the "Total" extract volume for the enclosed welding area being based on an average "Rod" use of 8 lbs/hr. Welding exhaust air filtration shall comply with the State of Washington air quality requirements. Easy and safe access shall be provided to the extract system for maintenance. Metal chips from lathes and drills etc. will be collected manually.

1.4.4 Electrical

The electrical design shall include all applicable elements as defined in this document for the following systems:

A. Lighting, interior and exterior

B. Grounding

C. Electrical distribution

D. Telephone

E. Data communications

F. Public address

1.4.4.1 Access and Working Space

Provide access to and working space about electrical equipment to permit safe operation and maintenance of such equipment. Access and working space shall be in accordance with Article 110 of NFPA 70.

1.4.4.2 Energy Conservation

1.4.4.2.1 Electrical distribution systems shall be designed to conserve energy and comply with ASHRAE Standard 90.1. Provide energy efficient electrical equipment on a life cycle cost analysis basis and select equipment locations to minimize electrical system energy losses.

1.4.4.2.2 Energy conservation measures shall include:

A. Use of high efficiency light sources

B. Use of high power factor ballasts in accordance with ANSI C82.9 or ANSI C82.1

C. Use of high power factor motors, 0.95 or above

1.4.4.3 Spare Capacity

Electrical distribution switchboards and panelboards shall be sized such that their main bus will be 75 percent loaded after calculation of their design load in accordance with NFPA 70. Electrical distribution panels shall be provided with 20 percent spare circuit breakers for future load.

1.4.4.4 General Design Considerations

The electrical design shall conform to the requirements of:

A. ANSI C2 National Electrical Safety Code

B. NFPA 70 National Electrical Code

1.4.4.5 System Voltage Levels

The following voltage levels shall be utilized as indicated:

| System Voltage | Applications |
|---|---|
| 480V, 3 phase, 4 wire, 60 Hz | Incoming power source |
| 480V, 3 phase, 4 wire, 60 Hz | Power distribution and utilization |
| 480/277V, 3 phase, 4 wire, 60 Hz | General lighting |
| 208/120V, 3 phase, 4 wire, 60 Hz | Convenience receptacles |

System and equipment voltage ratings shall comply with ANSI C84.1.

1.4.4.6 System Voltage Drop Criteria

The allowable voltage drop in the cables during normal operation shall be in accordance with NFPA 70.

1.4.4.7 Basis for Selection of Equipment and Feeder Ratings

1.4.4.7.1 Voltage levels, insulation levels, continuous current ratings, interrupting capacities and circuit protection shall be selected and coordinated in accordance with the recommendations of the National Electrical Code and this specification.

1.4.4.7.2 Feeders to distribution transformers and lighting and distribution panelboards shall be sized to match the rating of the associated equipment.

1.4.4.7.3 Equipment short circuit rating shall be coordinated to the 30 kA RMS symmetrical available fault duty at the OAB service entrance.

1.4.4.8 Electrical System Protection

1.4.4.8.1 Protective devices such as circuit breakers, fuses, breaker trip units and overload devices, shall be selected and applied to minimize damage to the electrical system and to limit the extent and duration of service interruptions due to overload or fault conditions.

1.4.4.8.2 A coordination and selectivity study shall be performed to coordinate upstream and downstream overcurrent protection devices in a series circuit, so that the protective device closest to the fault will selectively trip to isolate the fault. The coordination and selectivity study shall make use of time versus current curves on standard log-log paper to illustrate coordination of the selected protective devices. The coordination and selectivity study shall include breaker curves and set-point, fuse curves, cable damage curves, transformer inrush and damage points, motor inrush and overload curves and ground fault curves. The coordination and selectivity study shall begin with the overcurrent protection device at the 480 volt service entrance switchboard and continue downstream to the branch circuit protective devices.

1.4.4.9 Environmental and Operating Conditions

1.4.4.9.1 Electrical equipment and material shall be suitable for continuous operation at the following ambient temperatures:

| Area | Design Ambient Temperature Range |
|---|---|
| Outdoors | 110°F maximum, -20°F minimum |
| Indoors - general | 104°F maximum |

1.4.4.9.2 Electrical enclosures shall be in accordance with NEMA 250 and UL 50, and shall be suitable for the environmental conditions encountered:

| Area | Enclosure |
|---|---|
| Outdoor - general | NEMA 4, Weatherproof |
| Indoor - general | NEMA 1, General purpose |

1.4.4.10 Equipment and Material Quality

1.4.4.10.1 Electrical equipment and materials shall be specified to be UL tested, with the UL label attached. Where there are no UL listed products of the type specified, then testing and certification by another nationally recognized testing agency or other means to determine the suitability for its intended application shall be obtained by Seller.

1.4.4.10.2 Electrical equipment, components and materials shall be new, readily available and of proven design for the intended application.

1.4.4.11 Equipment Identification

1.4.4.11.1 Major items of electrical equipment shall be identified by equipment numbers. Equipment to be so numbered includes:

A. Disconnect Switches

B. Transformers

C. Distribution Panels

D. Lighting Panels

E. Motor Control

1.4.4.11.2 The electrical equipment numbering system shall be as follows:

XX - 32 T - X XX X

- X — Designation for similar or standby (1 alpha)
- XX — Sequential equipment number (2 digits)
- X — Prime equipment number (1 digit)
- T — Subsystem designation (1 alpha)
- 32 — System designation (2 digits)
- XX — Equipment category (2 alpha)

Equipment Category

DA - AC Distribution Panel
DD - Disconnect Switch
LX - Lighting Panel
MT - Motor

SB - Switchboard
XT - Transformer

1.4.4.11.3 Equipment and device nameplates shall be made of laminated plastic and shall have black lettering on white background. Nameplates shall be permanently attached to equipment with screws.

1.4.4.12 Conduit and Wire Identification

1.4.4.12.1 See Attachment "B" for conduit and wire identification on construction drawings and in the field.

1.4.4.12.2 Conductors for 208Y/120 volt, three-phase systems shall be color coded as follows:

| | | |
|---|---|---|
| A. | Grounded neutral | - White |
| B. | Grounding conductor | - Green or bare |
| C. | Phase "A" conductor | - Black |
| D. | Phase "B" conductor | - Red |
| E. | Phase "C" conductor | - Blue |

1.4.4.12.3 Conductors for 480Y/277 volt, three-phase systems shall be color coded as follows:

| | | |
|---|---|---|
| A. | Grounded neutral | - Gray |
| B. | Grounding conductor | - Green or bare |
| C. | Phase "A" conductor | - Brown |
| D. | Phase "B" conductor | - Orange |
| E. | Phase "C" conductor | - Yellow |

1.4.4.12.4 Lighting fixture wire shall be color coded as follows:

| | | |
|---|---|---|
| A. | Grounded conductor | - White insulation or white braid |
| B. | Ungrounded conductor | - Black insulation or white braid with black tracer |

1.4.4.12.5 Insulated conductors intended solely for grounding purposes will be identified by a continuous green color insulation.

1.4.4.12.6 Grounded neutral conductors No. 2 AWG and smaller shall have white or gray insulation. Grounded conductors larger than No. 2 AWG shall also have white or gray insulation or shall be identified at all terminal and junction points and splices by wrapping with white or gray, self-adhesive, vinyl plastic electrical tape.

1.4.4.12.7 Control wiring conductors shall have black insulation. Multi-conductor control cables shall have individual conductors numbered for identification, e.g., 1, 2, 3, etc.

1.4.4.12.8 Color coding and identification of wiring supplied by equipment Vendors shall be the Vendor's standard.

1.4.4.13 Calculations and Analyses

The following calculations and analyses shall be performed by Seller during the design phase of the project:

A. Building and system load analysis

B. System short circuit

C. Equipment heat dissipation

D. Voltage drop

E. Illumination levels

1.4.4.14 Electrical Power Systems

1.4.4.14.1 Incoming Power

The Seller shall provide power to OAB from the 480/277 volt construction power switchboard number SB-32T-004, as shown on the drawings. Incoming power shall be routed underground via 600 volt direct burial cable or underground conduit and wire from the load side of the distribution feeder breaker provided at switchboard number SB-32T-004 to the service entrance equipment. Service entrance equipment shall be located in an electrical closet. Supply circuit breaker size shall be based on feeder design load calculations provided by the Seller. Conduit sleeves used for cable entrance to the building shall be shown on Seller's drawings and shall be located by dimension and elevation.

1.4.4.14.2 480/277 Volt Power Distribution System

A. 480/277 volt power distribution shall originate at the 480/277 volt service entrance switchboard. Power shall be distributed from the service entrance switchboard via distribution circuit breakers and feeders to lighting

panels, distribution transformers, 480 volt power distribution panels and other individual 480 volt loads as determined during design development.

B. Power distribution panels shall be located in electrical closets.

1.4.4.14.3 208/120 Volt Power Distribution System

A. 208/120 volt power distribution shall originate at the secondary side of the individual 480-208/120 volt power distribution transformers. 208/120 volt power shall be distributed from panelboards via circuit breakers and branch circuits to convenience outlets and equipment loads.

B. Power distribution transformers and panelboards shall be located in electrical closets.

1.4.4.15 Provide (2) isolated distribution systems fed from the 480V/3Ph/4W service entrance switchboard in the Operations Annex Building (OAB). The purpose in isolating these two specific systems from the OAB main distribution is to eliminate potential harmonic distortion between the Electric Welding equipment and the Test Bench, as well as isolating both systems from the building distribution. This shall be accomplished as follows:

1.4.4.15.1 Provide (1) 480V/3Ph/4W distribution panel fed via an isolation transformer for electric welding machines and all 480V equipment in Room 22. This transformer and panel shall be located in Room 22. All feeders to individual equipment shall terminate at a fusible disconnect switch, wall mounted adjacent to the equipment being served. Where equipment is not located adjacent to a wall, the feeder and disconnect shall be supported from the roof structure and extended down adjacent to the equipment by strut or other approved means. All electrical equipment sizes, feeder and overcurrent sizes shall be coordinated after final Shop equipment selection.

1.4.4.15.2 Provide (1) 480V/3Ph/4W distribution panel fed via an isolation transformer for all 480V equipment located in Room 21. A branch circuit shall be extended from this distribution panel via a 480-208/120 volt dry type transformer to a 208/120 volt distribution panel. The 208/120 volt panel shall feed all 208/120 volt loads in Room 21, as well as all 208/120 volt loads in Room 22. The isolation and step down transformers and both distribution panels shall be located in Room 21. All feeders to individual equipment items shall terminate at a fusible disconnect switch, wall mounted adjacent to the equipment being served. The power service to the electrical test bench and work stations shall be

as specified below. All electrical equipment sizes, feeder and overcurrent protection sizes shall be coordinated after final Shop equipment selection.

1.4.4.15.3 At the Electrical Test Bench, provide a two circuit "plugmold" multi outlet strip with duplex convenience receptacles pre-mounted on 12 inch centers. The receptacles shall be connected so that adjacent receptacles are not on the same branch circuit breaker. Length and mounting of "plugmold" shall be determined after Test Bench selection has been made. One 30 amp, 208 volt single phase and one 30 amp, 480 volt three phase receptacle shall be provided at the Test Bench.

Receptacle configuration shall be determined by the Buyer.

1.4.4.15.4 At the Work Stations, provide a two circuit "plugmold" multi outlet strip with duplex convenience receptacles pre-mounted on 12 inch centers. The receptacles shall be connected so that adjacent receptacles are not on the same branch circuit breaker. Length and mounting of "plugmold" shall be determined after Work Station selection has been made. All Work Stations shall be fed via overhead circuit.

1.4.4.15.5 Provide one 480V, 60A, 3Φ fusible disconnect switch for each welding machine. Provide one 240V, 30A, 1Φ fusible disconnect switch for other shop loads.

1.4.4.16 Telephone System

Seller shall provide telephone service to the OAB from the telephone interface cabinet as located on the Contract Drawings.

1.4.4.17 Data Communications System

Seller shall provide conduit and receptacles as specified in this section for future installation of the data network by others.

1.4.4.18 Public Address System

Seller shall provide conduit and backboxes as specified in this section for future installation of the public address system by others.

1.4.5 Plumbing Systems

The plumbing systems design shall conform or meet the following criteria with connections to the utilities as shown on the drawings.

1.4.5.1 Codes and Regulations

A. All fixtures, equipment and material shall be in conformance to the Uniform Plumbing Code.

B. Seismic bracing shall be provided in conformance with requirements of SMACNA 1991 Seismic Restraints.

C. Roof drainage system shall be designed for a maximum rain fall of 1 inch per hour.

1.4.6 Fire Protection Requirements

The Operations Annex Building (OAB) shall be fully sprinklered with an automatic wet pipe system in accordance with the requirements of NFPA 13. All sprinkler systems are required to be hydraulically designed. The sprinkler contractor shall verify pressure and flow requirements, and provide connection to the underground fire water system shown on the drawings.

A Preaction Sprinkler System shall be provided in the Computer Room in accordance with the following requirements:

The preaction system shall employ automatic sprinklers attached to a dry-pipe sprinkler system, with a supplemental electric fire detection system in the same area. Activation of the fire detection system shall deenergize all electrical and electronic power in the room/zone and open the deluge valve. This permits water to flow into the sprinkler piping system and to be discharged only from those sprinklers that have been triggered by heat over the fire.

Loss of supervisory pressure from the system piping as a result of damaged sprinkler or leaking piping shall signal a trouble alarm indicating impairment of the system, not allowing the deluge valve to open.

The system may be equipped with automatic air supply controls and air supervisory devices with appropriate trouble alarms. Accessory items, such as dry-pipe valve accelerators (which will increase the speed of system operation), and pressure switches (which are used to activate electric alarms), also may be used to enhance the system.

All fire detection equipment considered for HWVP designs must conform with the requirements of the following:

NFPA 72E-1990 - Automatic Fire Detectors (NFPA 1990)

NFPA 75 - Protection of Electronic Computer/Data Processing Equipment (NFPA 1989)

NFPA 13 - Installation of Sprinkler Systems (NFPA 1989).

Detectors required for the preaction sprinkler system include the following:

For the preaction system, specify "RELIABLE"-type deluge valves that have external reset levels.

The preaction system must activate via any single zone smoke detector (photoelectric type).

Automatic on/off-type sprinkler heads may not be used in conjunction with the preaction system.

Pendent type sprinklers and escutcheon plates shall be provided in office areas with finished ceilings.

The OAB shall be designed to meet the most restrictive requirements for life safety in accordance with the requirements of DOE Order's 6430.1A (Attachment L), 5480.7 (Attachment U) and NFPA 101. All fire rated walls, floors, roofs and ceiling assemblies shall be tested and rated by Underwriter's Laboratories, Factory Mutual, or other accredited national testing laboratory.

A fire alarm system shall be provided to monitor the alarm and supervisory signals from the wet pipe sprinkler system and transmit any other necessary signals required by NFPA 72 to the site's Radio Master Box system. All fire alarm equipment shall be in accordance with the requirements of NFPA 72 and 70.

A fire alarm panel shall be provided, installed, and wired in accordance with the requirements of NFPA 70, NFPA 72, NFPA 13, and the Contract Drawings. The fire alarm panel shall include all of the following features:

A. Local alarms for the automatic sprinkler waterflow pressure switch.

B. Trouble signals for all devices and circuits as required by NFPA 13 and NFPA 72.

C. Emergency battery backup for system operation.

D. Electrical supervision of all circuits as required by NFPA 72.

E. Output contacts and terminals for connection to the Hanford Radio Master Box System, including waterflow alarm, trouble, and supervisory signals.

Fire extinguishers shall be provided in accordance with the requirements of NFPA 10.

Fuel gas storage rooms 50 and 50A shall be 1-hour rated in accordance with NFPA 51 and FMRC Data Sheet 7-50.

## 1.5 SUBMITTALS

Submit the following in accordance with the Vendor Drawing and Data Requirements section of the Order/Subcontract:

### 1.5.1 Drawings, Calculations, and Specifications

Prepare and submit to Buyer for review and approval by Engineer (Fluor Daniel) engineering/construction drawings, calculations, construction specifications (CSI format) for the following:

Architectural
Structural
HVAC
Electrical
Fire Protection
Plumbing

The structural design drawings shall indicate the design criteria, the structural materials and their strengths with applicable materials standards, the design loads including loads that can occur during construction, and the allowable foundation loads that were used in the design.

### 1.5.2 Qualifications

The drawings, calculations and specifications shall be prepared and stamped by professional architects/engineers registered in the State of Washington.

### 1.5.3 Manufacturer's Literature

Material and equipment data shall be submitted for all items to be incorporated in the work, including manufacturer's catalog cuts, specifications, performance characteristics and other descriptive data in sufficient detail to verify compliance with Contract requirements.

1.5.4 Certifications

Submit documents signed by authorized individuals certifying the degree to which the materials supplied meets the specific requirements of this specification (Certificate of Conformance).

1.5.5 Installation, Operating, and Maintenance Instructions

Detailed installation, operating, and maintenance instructions shall be submitted in accordance with Specification Section 01730, Operation and Maintenance Data.

1.5.6 Color Charts and Samples

Submit manufacturer's standard color charts and samples of all interior materials and products for color selection by Buyer.

## PART 2 PRODUCTS

### 2.1 GENERAL

2.1.1 Scope

Whenever possible throughout this specification, the minimum acceptable quality of workmanship and materials has been defined by reference to recognized industry or government standard, or description of required attributes and performance.

2.1.2 Proprietary Names

Whenever proprietary names are used to identify products of a particular manufacturer, they are used for the purpose of establishing minimum acceptable standards of quality of materials, finish, or workmanship, and are not intended to exclude from consideration comparable products of other manufacturers. Products of other manufacturers will be permitted, subject to authorization by the Buyer.

2.1.3 "Or Equal"

Where the phrase "or equal" occurs in the specifications, the use of alternative material which is of equal quality and of the required characteristics for the purpose intended will be permitted, subject to authorization by the Buyer.

2.1.4 Colors

Where not otherwise specifically indicated on the drawings or in the specifications, colors, patterns, and textures shall be selected by the Buyer from manufacturer's standard samples.

2.1.5 Galvanic Corrosion

Where permanent contact by dissimilar metals cannot be avoided, the metals at the contact area will be painted with zinc chromate followed by one coat of a non-leaded paint (such as aluminum paint) or of a heavy-bodied bituminous paint. When the dissimilar metals cannot be painted, a strip of plastic, neoprene, or a similar insulator will be used in place of paint.

2.2 **SITEWORK**

2.2.1 Concrete Splashblocks

Prefabricated, reinforced, precast concrete splashblocks shall be installed at all roof drainage discharge points. They shall be 30 inches in length, 18 inches in width, and at least one inch thick. Concrete compressive strength shall be 3,000 psi at 28 days. Steel reinforcing shall conform to ASTM A615, Grade 60, Number 4. The upper surface of the splashblock shall have an indentation which slopes downwards towards, and has sidewalls flared outward towards the discharge end. The rear end wall shall be at least three inches higher than the minimum thickness of the splashblock. Side and rear walls shall be at least one inch thick.

2.3 **CONCRETE**

2.3.1 Design Concrete Compressive Strength at 28 Days

$f'_c$ = 4,000 psi

2.3.2 Concrete Reinforcement

2.3.2.1 Reinforcing Steel

ASTM A615, Grade 60

2.3.2.2 Welded Wire Fabric

ASTM A185

2.3.3 Cast-in-Place Anchors and Inserts

2.3.3.1 Anchor Bolts

ASTM A307, Type C

2.3.4 Grout

Nonshrink cement based

2.3.5 Concrete Sealer/Hardener

A dry shake, nonmetallic surface hardener using size-graded hard quartz aggregate of natural configuration. The aggregate shall have 0.0 percent absorption. The plasticizer and water reducing admixture used as components of the product shall be formulated, manufactured, and processed by the dry shake manufacturer. A monomolecular film evaporative retardant shall be manufactured by the manufacturer of the surface hardener. Application rate shall be 1.0 pound per square foot. ["Mastercron" by Master Builders, Inc., Cleveland, Ohio.]

2.4 **MASONRY**

(Not Used)

2.5 **METALS**

2.5.1 Structural Steel Framing

2.5.1.1 Structural Steel

ASTM A36

2.5.1.2 Structural Pipe

ASTM A53, Type E or S, Grade B

2.5.1.3 Structural Tubing

ASTM A500, Grade B

2.5.1.4 High Strength Bolts

ASTM A325

2.5.1.5 Unfinished Bolts

ASTM A307

2.5.1.6 Nuts

ASTM A563

2.5.1.7 Welding Electrodes

E70XX in accordance with AWS D1.1

2.5.2 Metal Joists

The materials, design, detailing, and fabrication of open-web steel joists, joist girders, and accessories if used shall conform to the applicable Steel Joist Institute (SJI) Standard Specifications and Recommended Code of Standard Practice for Steel Joists and Joist Girders. The material must be suitable for welding.

2.5.3 Metal Decking

Metal decking for roof and floor shall be intermediate rib type, ribs spaced not over 6 inches on center. The material, design, and detailing shall conform to Steel Deck Institute (SDI) Design Manual for Composite Decks, Form Decks, and Roof Decks. Panel configuration shall meet the Factory Mutual requirements. All decking and accessories shall be galvanized.

2.5.4 Ladders and Rungs

Fabricate from structural steel shapes conforming to ASTM A36. Rungs to be 3/4 inch diameter rods at 12 inches O.C. (maximum). Stringers to be 3 inch by 3/8 inch bars spaced not less than 18 inches apart (face to face). Ladder attached to floor and wall with steel brackets. Ladder and brackets to be shop primed and painted in the field. Ladder will comply with applicable provisions of OSHA 29 CFR 1910, Subpart D.

2.5.5 Pipe and Tube Rails

2.5.5.1 Railings and Handrails

Fabricate from structural steel pipe, minimum 1-1/2 inch O.D., heated and bent smoothly without distortion; from steel tubing of not less than 1-1/2 inches O.D., with gray iron casting caps. Steel tubing shall be electric-resistance-welded carbon steel mechanical tubing conforming to ASTM A513, or it may be cold-formed welded or seamless structural steel tubing conforming to ASTM A500, Grade A, B, or C; or ASTM A53, Type E or S, Grade B. Miter, weld and grind smooth where exposed. Vertical posts spaced evenly at 6 feet O.C. maximum. Horizontal rails shall be spaced at 12 inches O.C. maximum. Handrail brackets shall be #387 by

Julius Blum and Company, Inc. (Carlstadt, NJ), or equal. Railings must withstand a horizontal concentrated 200 pound load with a top rail height of 42 inches. Railings, handrails, and brackets to be shop primed and field painted. Exterior railings shall be galvanized.

2.5.6 Architectural Metalwork

2.5.6.1 Metal Column Covers

Column covers shall be custom formed from 0.125 inch or 0.080 inch thick solid aluminum 3003-H14 or 5005-H34 AQ (anodizing quality). All fastenings will be concealed. Column covers shall be fabricated in two sections with a vertical hairline joint. Finish to be full strength Kynar 500, 70 percent resin coating. Color shall match color of building metal siding unless otherwise noted.

2.5.7 Metal Pan Stairs

Metal pan stairs shall be fabricated and installed in accordance with the Metal Stairs Manual of the National Association of Architectural Metal Manufacturers, and governing codes. Stringers and framing shall conform to ASTM A36. Treads and risers shall be fabricated from 14 gauge hot rolled steel, with a depth for 1-1/2 inch concrete fill treads. Landings shall be fabricated from 10 gauge, 1-1/2 inch deep galvanized metal deck for 1-1/2 inch concrete fill. Stairs shall be shop primed and field painted. Surfaces exposed to traffic shall be further finished in accordance with the Finish Schedule.

2.5.8 Steel Stairs

Steel framing, hangers, columns, struts, clips, brackets, bearing plates, and other components shall be provided as required for the support of steel stairs and platforms.

Stringers shall be structural steel channels or structural steel plates or a combination thereof. Exposed ends of stringers shall be closed.

Platform shall consist of structural steel channel headers and miscellaneous framing members. Headers shall be bolted to stringers. Framing members shall be bolted to stringers and headers.

Steel floor plate shall be carbon steel plate having raised figure at regular intervals on the surface conforming to ASTM A786, and pattern shall be No. 4.

Treads shall be formed of 1/4 inch thick steel floor plate with nosing and resistance welded carbon steel mechanical tubing conforming to ASTM A513, welded to stringers. Treads shall be secured to brackets with welds.

Platforms shall be steel floor plate. Nosing matching that on steel floor plate treads shall be provided at landings.

Exterior stairs, including platforms, railings, and other ferrous metal components shall be galvanized.

Welding shall be used for joining pieces together, unless otherwise specified. Bolts or similar fastenings shall not appear on finish surfaces. Joints shall be true and tight and connections between parts light-proof tight. Welds shall be continuous and ground smooth.

Stair work shall be erected to line, plumb, square, true, and level. Runs shall register level with floor and platform levels.

2.5.9 Nosings

Safety nosings shall be an abrasive surfaced cast iron furnished with factory applied shop coat of black asphaltum rust deterrent paint. They shall be a minimum of 5/8 inches thick, 4 inches wide, and 6 inches less than the overall width of the stair. Safety nosings shall be installed in poured concrete exterior stairs. Anchors shall be of the steel wing type reaching a depth of at least 1-1/2 inches. Pattern of abrasive surface shall be cross-hatched.

## 2.6 WOOD AND PLASTICS

### 2.6.1 Rough Carpentry

#### 2.6.1.1 Dimension Lumber

Graded in accordance with "Grading Rules for Western Lumber" published by the Western Wood Products Association: Construction Grade; Douglas Fir, Western Larch, Douglas Fir - South, Western Hemlock; S4S; kiln dried to 19 percent maximum moisture content.

#### 2.6.1.2 Plywood

American Plywood Association BB-INT except that at countertop sinks where plywood is used, plywood shall be AC-EXT. Plywood exposed and subject to painting shall be AB-INT. Minimum thickness shall be 3/4 inch when used as core material (e.g., countertops).

2.6.1.3 Particleboard

Particleboard shall meet the requirements of ANSI A208.1, Table I, Grade 1-M3.

2.6.1.4 Fasteners

Size and type appropriate to draw members tightly and securely together. Stainless steel or aluminum alloy for rough carpentry exposed to moist conditions.

2.6.1.5 Nonstress Graded Members

Blocking, nailers, sleepers, grounds, cant strips, roof opening curbs, and other nonstress graded members shall conform to "Grading Rules for Western Lumber" published by the Western Wood Products Association. Provide Douglas Fir, Utility Grade. Members used in roofing or exterior applications shall be pressure treated with salt preservatives.

2.6.2 Finish Carpentry and Millwork

2.6.2.1 Lumber

Interior hardwood complying with Woodwork Institute of California requirements for Custom Grade. Moisture content shall not exceed 12 percent for members up to 2 inch nominal thickness, and shall not exceed 19 percent for members thicker than 2 inches up to 4 inches nominal thickness.

2.6.2.2 Casework

Woodwork Institute of California Custom Grade. Frameless construction. Flush overlay. Exposed surfaces finished with high pressure laminate. Semi-exposed surfaces shall match exposed surfaces except that color may be different. Backsplashes (at countertops) shall be square butt joined.

2.6.2.3 Cabinet Hardware

Selected by manufacturer of casework, and shall be furnished and installed as required to provide a complete casework installation. Exposed hardware shall be US26D (BHMA 622) finish.

2.6.3 High Pressure Laminated Plastic

2.6.3.1 Horizontal Applications

NEMA LD-3, General Purpose GP 50, nominal thickness 0.048 inch.

2.6.3.2 Vertical Applications

NEMA LD-3, General Purpose GP 18, nominal thickness 0.028 inch.

2.6.3.3 Adhesive

As recommended by high pressure laminated plastic manufacturer.

## 2.7 THERMAL AND MOISTURE PROTECTION

2.7.1 Vapor Barriers (Water Vapor Retarders)

6 mil polyethylene sheet conforming to ASTM D2103 or ASTM D4397 EA-84. Install in continuous sheets, lapping joints 6 inches minimum, and shall be placed on top of granular fill per Specification Section 02101, Site Improvements for Construction Support Facilities.

2.7.2 Insulation

2.7.2.1 Perimeter Insulation

Extruded, rigid, cellular thermal insulation with closed cells and integral high density skin, complying with ASTM C578, 5 year aged R-values of 5 at 75°F; Type IV, 1.6 pcf density, 25 psi compressive strength, 0.3 percent water absorption. Adhesive, fasteners, and protection board as recommended by the insulation manufacturer.

2.7.2.2 Wall Insulation

Fiberglass wool, batts, foil-faced, conforming to ASTM C665, Type III, Class B. Thickness as required to meet R-values stipulated in 1.3.1.2.

2.7.2.3 Sound Attenuation Batt Insulation

Unfaced, fiberglass wool batts conforming to ASTM C665, Type I, and ASTM E136. Minimum thickness shall be 3-1/2 inches.

2.7.2.4 Roof Insulation

Expanded polystyrene with factory-laminated, cellulosic fiber (hardboard) composite roof insulation conforming to ASTM C1050, to meet R-Values stipulated in 1.3.1.2.

2.7.3 Preformed Metal Siding

2.7.3.1 Material

Steel conforming to ASTM A446 Grade A with minimum yield strength of 33,000 psi and thickness not less than 22 gauge; galvanized in conformance to ASTM A525 Class G-90 (1.25 ounce).

2.7.3.2 Profile

Smooth surface panels in 12 inch modules with 1-1/2 inch deep interlocking ribs and concealed fasteners. Oil-canning shall be kept to an absolute minimum.

2.7.3.3 Factory Applied Finish

All panels will receive 0.8 mil Polyvinylidene Fluoride ($PVF_2$), Kynar-500, 70 percent resin finish coat applied over a 0.2 mil baked-on epoxy base primer to a total film thickness of 1.0 mil. Color as indicated on the drawings.

2.7.3.4 Subgirts

May be hat or zee shaped from galvanized steel in 18 or 16 gauge. Subgirts shall be located at each structural support and at intermediate locations as required to meet design loads.

2.7.3.5 Flashing

Shall be formed from the same material and in the same finish as the attached wall panel.

2.7.3.6 Fasteners

Shall be electrolytically compatible self-tapping #14B or self-drilling #12 for sheet-to-support as required by the support thickness, and #14 self-tapping AB point or lap self-drilling fasteners for sheet-to-sheet attachment. For subgirt attachment, pre-drill hole for either fastener.

2.7.3.7 Closures

Shall be made from closed cell pre-molded neoprene or polyethylene foam or metal.

2.7.3.8 Soffits

Soffit panels shall be identical to the wall panels.

2.7.3.9 Dissimilar Metals

Preformed metal siding system will not include dissimilar or electrolytically incompatible metals.

2.7.3.10 Sealant

Low modulus, one-component, moisture curing, modified polyurethane joint sealant conforming to ASTM C920 and suitable for gun application. [DYMONIC by Tremco, Cleveland, OH]

2.7.3.11 Sealant Tape

Void filling, 100 percent solids butyl based extruded sealant tape. [MBT-35 by Tremco, Cleveland, OH]

2.7.4 Adhered Membrane Roofing System

2.7.4.1 Design Criteria

Roofing system shall meet requirements for a Factory Mutual FM-1 or an Underwriters Laboratories UL Class A rating.

2.7.4.2 Elastomeric Sheet

Membrane shall be 0.060 inch thick, white-on-black EPDM (terpolymer of ethylene, propylene and diene) compounded elastomer meeting ASTM D3253. Length and width shall be as recommended by job conditions. EPDM membrane to be fully adhered to an underlayment acceptable to the membrane manufacturer.

2.7.4.3 Insulation

Roof insulation will be acceptable to the manufacturer of the EPDM membrane and must be demonstrably successful as part of an adhered roofing system.

2.7.4.4 Vapor Retarder

Two plies of glass felts complying with ASTM D2178, Type IV.

2.7.4.5 Related Materials

Bonding adhesive, splicing cement, splice cleaner, lap sealant, water cut-off mastic, pipe flashing, pourable sealer, rubber fastening strips, and lay flat tubing shall be by the manufacturer of the roofing membrane.

2.7.4.6 Roof Drain

Furnished by the membrane manufacturer.

2.7.4.7 Walkway Pads and Bonding Adhesive

Furnished by the membrane manufacturer.

2.7.4.8 Flashing

EPDM flashing furnished by the membrane manufacturer.

[Design "A" by Carlisle Syntec Systems, Carlisle, PA]

2.7.5 Sheet Metal Flashing and Trim

2.7.5.1 Sheet metal flashing and trim shall conform to the Architectural Sheet Metal Manual published by the Sheet Metal and Air Conditioning Contractors National Association, Inc. (SMACNA).

2.7.5.2 Galvanized Steel

Galvanized steel sheet shall conform to ASTM A526, regular coating, designation Z90. Minimum thickness as recommended by SMACNA.

2.7.5.3 Fasteners

Shall be the same metal or a metal compatible with the materials joined.

2.7.5.4 Solder Materials

Solder and flux shall meet ASTM B32. Solder shall have lead content less than 0.2 percent.

2.7.5.5 Sealing Compound

Fast cure, non-sag, two component polyurethane sealant conforming to ASTM C920 and suitable for gun application. [FC-2 by Tremco, Cleveland, OH].

2.7.6 Prefabricated Roof Specialties

2.7.6.1 Metal Copings

Prefabricated metal copings shall be factory formed from 24 gauge steel conforming to ASTM A446 Class C, and galvanized in conformance to ASTM A792. Factory applied finish will be

identical to preformed metal siding. Lengths to be manufacturer's standard, and will utilize 6 inch wide splice plates for joining. Concealed compression cleats used for attachment. Washslope shall be built-in. Corners shall be mitered and welded. Joint waterproofing accomplished through use of coping manufacturer's gasket material.

2.7.6.2 Roof Expansion Joint Covers

Non-reinforced, foam-supported elastomeric bellows with a bifurcated waterproof attachment to metal flanges consisting of 26 gauge galvanized steel. EPDM bellows shall be white. Intersections and splices shall be made with materials by manufacturer of expansion joint covers.

2.7.7 Roof Accessories

2.7.7.1 Manufactured Curbs and Equipment Supports

Manufactured curbs and equipment supports shall be fabricated from 14 gauge galvanized steel with mitered and welded corner seams, integral base plate, pressure treated wood nailer, and insulated with 1-1/2 inch thick, rigid, fiberglass board insulation. Neoprene or rubber boots, stainless steel clamps, and other accessories will be as standard with manufacturer.

2.7.8 Sealants

2.7.8.1 Quality

Sealants shall conform to ASTM C920.

2.7.8.2 Grade

As recommended by manufacturer for particular condition of installation (location, joint shape, ambient temperature, and similar conditions) to achieve the best possible overall performance.

2.7.8.3 Joint Fillers

Flexible, compressible, closed-cell polyethylene of no less than 100 psi compression deflection (25 percent), except provide higher compression deflection strength as necessary to withstand installation forces and provide proper support for sealants. Surface water absorption of not more than 0.1 pounds per square foot.

2.7.8.4 Backer Rod

Compressible rod stock of polyethylene foam, butyl rubber foam, neoprene foam, or other flexible, permanent, durable, nonabsorbent material, 33 percent to 50 percent larger than joint as recommended for compatibility with sealant by sealant manufacturer.

2.7.8.5 Bond-Breaker Tape

Polyethylene tape or other plastic tape as recommended by sealant manufacturer for preventing bond between sealant and joint filler or other materials at back of joint. Provide self-adhesive tape where applicable.

2.7.8.6 Sealant Types and Schedule

Sealant types referenced are products of Tremco, Cleveland, OH.

2.7.8.6.1 Exterior Locations

Horizontal surfaces: Multicomponent epoxidized polyurethane; Type M, Grade NS, Class 25. [DYMERIC]

Perimeter of exterior openings, coping joints: Low modulus, one-component, moisture curing, modified polyurethane; Type S, Grade NS, Class 25. [DYMONIC]

All other exterior building applications except as otherwise noted: Low modulus, high performance, one-part, moisture curing, architectural grade, silicone sealant; Type S, Grade NS, Class 25. [SPECTREM 1]

2.7.8.6.2 Interior Locations

Perimeter of toilet room fixtures: One-part acrylic terpolymer; white, non-sag. [MONO]

All other interior locations: Medium modulus, neutral cure, high performance silicone sealant; Type S, Grade NS, Class 25. [SPECTREM 2].

2.7.8.7 Colors

As selected from manufacturer's standard samples.

2.7.9 Fireproofing

2.7.9.1 Fireproof Plaster

Shall be gypsum-vermiculite mix consisting of one part gypsum to two parts vermiculite. Plaster shall comply with UBC Table 43A.

Cohesion of the dry set material shall be such that the fireproofing coat will not crack or delaminate when the structural steel element is subjected to a downward deflection of 1/120 of the span.

Compressive strength shall be not less than 70 pounds per square inch.

When tested in accordance with ASTM E84, the set and dry material shall show the following characteristics:

| | |
|---|---|
| Flame Spread | 10 |
| Fuel Contributed | 5 |
| Smoke Developed | 0 |

2.7.9.2 Water

Shall be potable.

2.7.9.3 Installation

Pneumatic and in accordance with the material manufacturer's written recommendations.

Framing and furring shall be as recommended by the manufacturer for the installation of the fireproofing plaster thickness required.

2.8 **DOORS AND WINDOWS**

2.8.1 Metal Doors and Frames

Shall conform to requirements of ANSI/SDI-100.

2.8.1.1 Steel Doors - Exterior

Grade II - Heavy Duty; Model 3 - seamless, hollow steel construction, insulated.

2.8.1.2 Steel Doors - Interior

Grade I - Standard Duty; Model 3 - seamless, hollow steel construction. Provide 12 inch wide shelf at Dutch Doors.

2.8.1.3 Fire Doors and Frames

Meet ASTM E-152, UL 10(b), NFPA 252, or ANSI A2.2. Identify the assembly by labels of the agency accepted by the authority having jurisdiction. Indicate on the door label the applicable fire test rating.

2.8.1.4 Steel Frames

Knockdown type for interior, non-rated assemblies; welded type for rated and exterior openings. Welded type shall have corners mitered and ground smooth.

2.8.1.5 Related Items

Frame anchors, floor anchors, and other items shall conform to requirements of ANSI/SDI-100.

2.8.1.6 Finish

Shop primed in accordance with ANSI/SDI-100; field finished in accordance with Finish Schedule.

2.8.2 Overhead Coiling Doors

Designed and reinforced to withstand wind loading specified in 1.3.2.2.

2.8.2.1 Construction

Interlocking cold-rolled slats shall be fabricated from steel sheets conforming to ASTM A446, Grade A; and galvanized in accordance with ASTM A525, G90. Slats to be continuous without splices for the width of the door. Profile to be flat with a depth not less than 0.625 inch, a center-to-center width not more than 2.75 inches, and not less than 0.0478 inch uncoated thickness.

2.8.2.2 Bottom Bar

Pair of angles not less than 2 inch by 2 inch by 0.188 inches; ASTM A36 steel, galvanized in accordance with ASTM A525, G90.

2.8.2.3 Wind Locks

Cast steel, galvanized in accordance with ASTM A525, G90. Provided on every other curtain slat.

2.8.2.4 Insulation

Polyurethane foam in slats.

2.8.2.5 Weatherstripping

Minimum 1/8 inch thick neoprene rubber conforming to ASTM D2000.

2.8.2.6 Hardware

Jamb guides and door operating equipment supports shall be fabricated from ASTM A36 steel shapes galvanized in accordance with ASTM A525, G90. Fasteners shall conform to ASTM A307, Grade A, galvanized per ASTM A153, Table 1.

Locks and latches, lifting handles, and other hardware items shall be galvanized steel.

2.8.2.7 Counterbalancing Mechanism

Adjustable, steel, helical torsion spring mounted around a steel shaft in a spring barrel and connected to the door curtain with barrel rings.

2.8.2.8 Hoods

Fabricated from steel sheets conforming to ASTM A446, Grade A; galvanized in accordance with ASTM A525, G90. Reinforced to prevent hood deflection. Minimum thickness to be 0.0299 inch.

2.8.2.9 Operation

Doors are scheduled for electric operation. Provide a compact operator designed and built by the door manufacturer. The motor shall have sufficient power to operate the door at an approximate speed of 1 foot per second. The unit shall be controlled by a momentary contact 3 button pushbutton station marked "OPEN," "CLOSE," and "STOP," and an automatic screw-type limit switch that will break the circuit at the termination of travel. A NEMA Type 12 enclosure is required.

An emergency hand chain operator that does not affect the timing of the limit switch shall be provided to operate the door in case of power failure or the removal of motor for inspection or

service. An efficient overload protective device that will break the power circuit and eliminate any possible damage to motor windings shall be both heat and current sensing, and installed integrally with the unit. The motor shall be 1/2 HP-460/3/60; the starter shall be Size 1, dustproof combination with circuit breaker. Equip the bottom of the door with a safety edge and an automatic reversing switch that reverses the door when an obstruction is encountered during the downward travel.

2.8.2.10 Finish

Hot dipped galvanized, with a high-grade, pure zinc coating, 1.25 ounces per square foot of flat metal, conforming to ASTM A525, G90. Galvanized surfaces shall be provided with a phosphate coating for paint adhesion. Other surfaces of door parts shall be primed with 1 shop coat of rust-inhibiting primer.

2.8.3 Entrances and Storefronts

2.8.3.1 Narrow Stile Doors and Frames

Shall be AA-6063-T5 aluminum alloy. Major sections of door extrusions shall have a 0.125 inch nominal thickness. Door corners shall be mechanically joined with corner blocks, and welded. Glazed openings shall have square, snap-on glass stops. Door frames shall be 1-3/4 inch by 4-1/2 inch. Push/pull hardware, pivots, weatherstripping, closers, and locks by door manufacturer.

2.8.3.2 Flush Glaze Framing Sections

Shall be AA-6063-T5 aluminum alloy. The thermal barrier material shall be a pour and debridge polyurethane separation creating consistent thermal integrity. Depth of all frame members shall be 4 inches. Perimeter face members shall be 1-1/2 inches and intermediate mullions shall have a 2-3/8 inch face. Glazing gaskets shall be EPDM elastomeric and shall be dry set both sides of glass.

2.8.3.3 Finish

All exposed aluminum surfaces shall have an integral color; anodized finish shall be #35 black, conforming to AAM12C22A44.

2.8.4 Finish Hardware

2.8.4.1 Scope

Provide finish hardware for each opening of suitable strength and proper design to meet applicable codes and to provide intended service and installation. Provide hardware items not definitely specified but required for completion of the work; of type, quality and finish suitable to service and installation required, and comparable to adjacent hardware.

2.8.4.2 Quality

Finish hardware shall conform to requirements of ANSI/BHMA 156.

2.8.4.3 Finishes

Hardware shall receive the following finishes unless otherwise noted:

A. Exterior openings: US32D, satin stainless steel (ANSI/BHMA 630).

B. Interior openings: US26D, satin chrome (ANSI/BHMA 656 on steel and 626 on brass or bronze).

C. Aluminum entrance doors: dark "bronze" aluminum (ANSI/BHMA 313).

2.8.4.4 Fasteners

Finished to match hardware items fastened. Type, size, and quantity proper for each hardware item.

2.8.4.5 Butt Hinges

Five knuckle. Exterior doors shall be stainless steel and have nonrising and nonremovable pins. Interior doors shall be plated steel. Butts on all doors shall have ball bearings; except interior, non-rated doors less than 36 inches in width, which will have plain bearings. All doors shall have a minimum of three hinges. Hinges shall have leaves of sufficient width to clear the trim but not less than 4½" x 4½". [Hager Hinge Co., St. Louis, MO]

2.8.4.6 Closers

Closers shall be the surface - mounted, overhead type and shall be the product of a single manufacturer. Parallel-arm closers

shall be used for outswinging exterior doors, doors under 7 feet in height, and when special conditions require parallel-arm operation.

Closers shall be liquid-controlled, rack-and-pinion construction with cast cases and a spindle not less than 9/16 inch in diameter.

Closer arms shall be fabricated from forged steel or ductile iron. Ductile iron arms shall be provided for parallel-arm closer operation. Exposed arms of closers shall have a sprayed-on finish matching the lockset or exit-hardware finish.

Electromagnetic hold-opens shall be used on closer for fire-rated doors which require hold-open devices.

Hold-open devices shall be provided on closers except those for rated/labeled doors, toilet room doors, and exterior doors.

Brackets, reinforcing plates, and accessory fittings shall be provided by the closer manufacturer. [LCN Closers, Princeton, IL]

2.8.4.7 Locksets and Latchsets

Shall have plain design, wrought trim, and shall be the product of a single manufacturer.

Shall have standardized fronts, cases, and strikes so that varying functions will be interchangeable and will require only one mortise for their installation. Locks and latches shall have beveled bronze fronts, bronze bolts and strikes, brass hubs, and cases with the finish specified. Locks shall have cylinders with 5 pin tumblers.

Locksets and lock cylinders shall be keyed in accordance with Buyer's requirements.

Locksets and latchsets shall be lever actuated, cylinder bored type conforming to ANSI 156.2, Series 4000, Grade 1. For fire-rated doors, they shall be UL listed and labeled with a minimum latch-bolt throw of 3/4 inch. [Corbin Mortise Lock 8789L2 with removable core 59A1]

2.8.4.8 Pull and Push Plates

Shall be wrought brass, bronze, or aluminum finished as specified.

Pull plates shall have plate not less than 14 inches by 3-1/2 inches by 0.050 inch thick; grip center-to center 6 inches.

Push plates shall be not less than 14 inches by 3-1/2 inches by 0.050 inch thick. [Builders Brass Works Corp., Los Angeles, CA]

2.8.4.9 Exit Device

Shall be listed by UL and bear the UL label. Shall be the product of a single manufacturer. Construction shall be of heavy wrought steel, with exposed parts in stainless steel.

Exit device shall be mortise type with 3/4 inch latch bolt throw. No dogging. Night latch and thumbpiece shall be provided. Exterior trim shall be by the manufacturer of the exit device. [Von Duprin 3347NL-TP with Corbin removable core 59A1]

2.8.4.10 Dummy Trim

Dummy trim as used on inactive leaves of pairs of doors shall match the finish and be the product of the manufacturer of the lockset or latchset used on the active leaves.

2.8.4.11 Coordinator

Surface mounted, cam actuated device with nylon roller; complete with all accessories.

Model 469 by H.B. Ives, Wallingford, CT.

2.8.4.12 Flush Bolts

Model 457 or 458 by H.B. Ives, Wallingford, CT.

2.8.4.13 Dustproof Strikes

Model 489 by H.B. Ives, Wallingford, CT.

2.8.4.14 Astragal

Aluminum clips with neoprene strips; surface applied to both leaves of pairs of doors. Neoprene strips to overlap. Model 125 NGA by National Guard Products Inc., Memphis, TN.

2.8.4.15 Silencers

Model 20 by H.B. Ives, Wallingford, CT. Three each for single doors. Two each for pairs of doors.

2.8.4.16 Door Stops

Wall mounted door stops shall be provided where practicable. Where impossible to install wall-mounted stops, floor mounted stops shall be provided.

Wall mounted stops: Model 409-1/2 by H.B. Ives, Wallingford, CT.

Floor mounted stops: Model 436 and 438 by H.B. Ives, Wallingford, CT.

2.8.4.17 Automatic Door Bottom

Shall be an automatically operating assembly composed of a rubber seal, a metal seal housing, and an automatic operating device mounted on the bottom of the door. The device shall be designed to seal the space between the bottom of the door and the finished floor when closed and to retract immediately when the door is opened to provide a sill clearance of approximately 1/4 inch.

The door-bottom housing shall be surface mounted, extruded, anodized aluminum, 1/2 inch wide by 2-1/8 inches deep by the full width of the door and attached to the door with countersunk screws. [Model 330A by National Guard Products, Inc., Memphis, TN]

2.8.4.18 Weatherstripping

Shall consist of a 1/8 inch thick by 1-3/8 inches high neoprene strip housed in an extruded, anodized aluminum housing approximately 0.070 inch thick by 1-1/4 inches high by the full width of the door and attached to the door frame with countersunk screws. [Model 139 by Zero International, Inc., Bronx, NY]

2.8.4.19 Mop Plates, Kick Plates, and Armor Plates

Shall be 0.050 inch thick stainless steel, wrought brass, or aluminum; bevel edge; finished as specified. Width of mop, kick, and armor plates shall be 2 inches less than the width of the door. Height of mop plates shall be 6 inches; height of kick plates shall be 10 inches; height of armor plates shall be 42 inches. Attachment by countersunk screws.

2.8.4.20 Thresholds and Saddles

Aluminum thresholds shall be provided for the full width of the opening at exterior doors. Thresholds shall be mill-finish aluminum 6063-T5 alloy, corrugated, with vinyl inserts. Thresholds shall not exceed 1/2 inch in total height. [Model 2005 AV by Pemko Enterprises, Inc., Huntington Beach, CA]

Aluminum saddles shall be provided for the full width of openings at locations where carpet meets other flooring material (except at toilet rooms). Saddles shall be mill-finish aluminum 6063-T5 alloy, 2-1/2 inches wide by 1/4 inch high. [Model S225A by Pemko Enterprises, Inc., Huntington Beach, CA]

2.8.4.21 Dutch Door Bolt

Dutch Door bolt and mortise Strike: Model 054 by H.B. Ives, Wallingford, CT.

2.8.4.22 Generalized Hardware Schedule

**HW-1 Aluminum Entrance Doors**

Hardware for aluminum entrance doors shall be provided by the manufacturer of the door and will include pivots, closers, lock-sets and latchsets, exit devices, weatherstripping, automatic door bottoms, flush bolts, dustproof strikes, astragals, thresholds, and door stops.

**HW-2 Exterior Doors**

Hinges
Closer
Lockset
Exit Device
Automatic Door Bottom
Weatherstripping
Silencers
Threshold
Door Stop
Kick Plate

**HW-3 Exterior Doors - Pairs of Doors**

Hinges
Closer (one leaf only)
Lockset
Flushbolts
Dustproof Strike
Astragal
Automatic Door Bottom
Weatherstripping
Silencers
Threshold
Door Stops
Armor Plate

**HW-4 Interior Doors - Pairs of Doors - Rated**

Hinges
Closers (both leaves)
Lockset/Latchsets
Dummy Trim
Coordinator
Silencers
Flush bolts
Astragal
Door Stops
Armor plates (in Shop areas)

**HW-5 Interior Doors**

Hinges
Closer
Lockset/Latchsets
Silencers
Door Stop
Mop Plate (at non-carpeted floors)

**HW-6 Interior Doors - Toilet Rooms**

Hinges
Closer
Pull and Push Plates
Silencers
Door Stop
Mop Plate
(See Tile specification section for threshold)
Exit Device (for doors identified on drawings as "Emergency Exit")

**HW-7 Dutch Doors**

4 Hinges
Lockset
Silencers
Door Stops
Kickplate
Dutch Door Bolt
Mortise Strike

2.8.5 Glass and Glazing

2.8.5.1 Standards

Glass and glazing materials shall conform to ANSI Z97.1, ASTM C1036, and ASTM C1048.

2.8.5.2 Fully Tempered Safety Glass

Type I, Class 3, Quality q4.

Shall be used in aluminum entrance doors and adjacent fixed panels. Glass shall be factory-cut to suit each opening; edges shall be clean cut.

Nominal thickness will be 1/4 inch.

Tint shall match that of Tinted Glass (q.v.)

2.8.5.3 Tinted Glass

Type I, Class 3, Quality q3.

Edges shall be factory or shop clean-cut.

Nominal thickness will be 1/4 inch. Tint will be gray.

Windows in "Lunch Room and Personnel Staging" will be double-glazed units with nominal thickness of 1 inch (1/2 inch air space).

2.8.5.4 Spandrel Glass

Shall be 1/4 inch thick, heat strengthened float glass with a heat-fused ceramic backing.

Tint shall match that of Tinted Glass (q.v.).

2.8.5.5 Wire Glass

Wire glass for use in metal doors shall be Type II, Class 1, Form 1, Quality q8, Mesh m1.

Nominal thickness shall be 1/4 inch.

2.8.5.6 Glazing Materials

Glazing gaskets shall be neoprene, EPDM, or silicone rubber. Setting blocks shall be 80-90 durometer hardness neoprene or vinyl. Spacers shall be 40-50 durometer hardness neoprene or vinyl.

2.8.5.7 Installation

Glass shall be totally dry-glazed. Steel glazing channels shall be used for vision panels in metal doors.

## 2.9 FINISHES

### 2.9.1 Gypsum Board System

### 2.9.2 General Requirements

Gypsum wallboard shall conform to ASTM C36 of grade and form as specified for each type of board. Wallboard shall be 48 inches wide by not less than 5/8 inch thick, and a maximum practical length for end use.

#### 2.9.2.1 Regular Gypsum Wallboard

Grade R, Form A; 5/8 inch thick.

#### 2.9.2.2 Fire-Retardant Gypsum Wallboard

Grade X, Form C, insulated with bright, finished aluminum foil on back surface and shall be at least 5/8 inch thick.

Required for use in fire-rated areas shown on the drawings.

#### 2.9.2.3 Water Resistant Backing Board

Backing board for use with ceramic tile or other nonabsorbent wall treatments shall be moisture resistant, 5/8 inch thick; and shall meet the requirements of ASTM C630 when tested in accordance with ASTM C473.

#### 2.9.2.4 Ceiling

Board for drywall ceilings in rated areas shall be 5/8 inch thick, fire-retardant gypsum wallboard.

Board for drywall ceilings in toilet rooms and janitor closets shall be 5/8 inch thick, water resistant backing board.

Board for drywall ceilings in areas other than those noted above shall be 5/8 inch, regular gypsum wallboard.

#### 2.9.2.5 Joint Materials

Joint tape shall be plain or perforated material conforming to ASTM C475. Joint compound shall be an adhesive conforming to ASTM C475.

2.9.2.6 Fasteners

Fasteners for components of wallboard system shall be of size and type recommended by the wallboard manufacturer.

2.9.2.7 Ceiling Suspension System

The gypsum wallboard furring suspension system will have furring runners and furring tees which shall be 1-1/2 inches high double web 0.020 steel with a protective coating and a 1-3/8 inch wide capped flange face. All cross tees shall be 1-1/2 inches high double web 0.020 steel with a protective coating and a 15/16 inch wide capped flange face. Wall track shall be 1-1/2 by 1-5/8 inch inside diameter 0.020 electrogalvanized steel with 15/16 - 1 inch wide top and bottom flange faces.

Furring runners shall be installed 48 inches on center and be directly suspended by not less than 12 gauge galvanized steel wire. [System 640 and 650 by Chicago Metallic Corporation, Chicago, IL]

2.9.2.8 Steel Stud Framing

Steel studs, floor and ceiling runners, angle runners, and furring channels shall be electrogalvanized, cold-rolled steel conforming to ASTM C645 ordinary zinc coated (commercial).

Metal studs shall be formed, zinc-coated sections of channel shape, of 26 gauge minimum thickness, and of width not less than 3-5/8 inches. The stud flanges that come in contact with gypsum wallboard shall be a minimum of 1-1/4 inches wide, with a 1/4 inch stiffening lip with turned or folded edges. Holes shall be regularly punched in studs to facilitate installation of electrical wiring, conduit, or horizontal bracing.

Floor and ceiling runners shall be not less than 26 gauge steel before galvanizing, with 1-1/4 inch flanges, sized to nest with steel stud.

Angle runners shall be 1-3/8 inches by 7/8 inch and not less than 22 gauge before galvanizing.

Structural studs shall be 16 gauge.

2.9.2.9 Metal Accessories

Corner beads shall be 30 gauge minimum, not-dip galvanized steel, with 1-1/4 by 1-1/4 inch flanges and a 1/8 inch beaded corner. They shall be formed to an angle of 90 degrees.

Casing trim shall be 28 gauge nominal thickness, hot-dip galvanized steel channel, depth as required for wallboard, with attached tape flange.

Control joints shall be formed of casing bead trim and installed back-to back over separate framing or furring members. A space of 3/16 inch shall be maintained between opposite casing beads. Control joint caulking shall be as recommended by the drywall manufacturer.

2.9.3 Ceramic Tile

2.9.3.1 General Requirements

Shall conform to ANSI A137.1

2.9.3.2 Wall Tile

Standard grade, bright glazed, 4-1/4 inch by 4-1/4 inch by 5/16 inch; cushion edge; with spacer lug construction.

2.9.3.3 Trim

Shall be of the same material and size as ceramic wall tile. Corners and caps to be bullnosed. Bases to be square top and coved. Trim shapes shall be provided at external and internal corners; at head, jamb, and sills of openings, and at tops of wainscots.

2.9.3.4 Floor Tile

Standard grade, unglazed, impervious porcelain-type ceramic mosaic tile. Water absorption shall not exceed 0.5 percent. Tile shall be 1 inch by 1 inch by 1/4 inch; cushion edge; factory mounted on sheets.

2.9.3.5 Marble Thresholds

Marble shall be Marble Institute of America (MIA), Group A, not less than 7/8 inch thick, profile, hone finish, with abrasion resistance not less than 12.0 when tested in accordance with ASTM C241.

2.9.3.6 Installation

Shall be in accordance with the Handbook for Ceramic Tile Installation published by the Tile Council of America.

Interior Walls: Specification W241.

Interior Floors: Specification F112.

Expansion Joints: Specification EJ171.

2.9.4 Quarry Tile

2.9.4.1 General Requirements

Shall conform to ANSI A137.1

2.9.3.1 Floor Tile

Standard grade, unglazed, slip and stain resistant, 6 inch by 6 inch by 1/2 inch; cushion edge.

2.9.4.2 Trim

Size, color and shade to match floor tile. Use straight top cove throughout.

2.9.4.3 Installation

Shall be in accordance with the Handbook for Ceramic Tile Installation published by the Tile Council of America.

Floors: Specification F112.

Walls: Specification W243.

2.9.5 Acoustical Ceilings

2.9.5.1 Suspension System

Suspension system runners and moldings shall be fabricated from steel sheets conforming to ASTM A366 with Class C zinc coating conforming to ASTM A591.

Main runners shall be bulb-tee sections, double-web type. Web height shall be not less than 1-1/2 inch, and the bottom flange shall be not less than 15/16 inch. Webs shall be drilled or grooved to receive cross runner end tabs and main runner splices.

The structural classification shall be intermediate duty in accordance with ASTM C635.

Cross runners shall be tee sections with web height not less than 15/16 inch. The bottom flange width shall be the same as that of the main runners. Cross runners shall have web ends designed for tab-lock attachment to adjoining cross runners through the web of the main runner to provide alignment with a minimum of torsional movement and lateral displacement.

Anti-breather splines, hold-down clips, main runner connectors, and other accessories required to complete the ceiling installation shall be provided.

Wall moldings shall be angle shape sections not less than 0.0209 inch thick. Height of moldings shall be as required to accommodate the main runner. The exposed leg width of the moldings shall be the same as the flange width of the runners. Corner caps shall be one-piece, shop-fabricated units extending at least 12 inches on each side of the corner, and shall be butt joined to the adjacent wall molding with concealed fastenings.

Finish of exposed-to-view surfaces shall be baked polyester paint; color as selected.

Hanger wire shall be 12 gauge steel conforming to ASTM C636.

2.9.5.2 Acoustic Tiles

Tiles shall be prefabricated, mineral-composition type, not more than 25 flame spread index class, and 0.75 or more light reflectance grade, conforming to ASTM E84 and ASTM E1264.

Tiles shall be nominal 24 by 48 inches by not less than 5/8 inch thick; lay-in type.

Tiles shall have square trimmed and butt edges.

Finish of exposed-to-view surfaces shall be a factory applied white vinyl latex paint.

Pattern of tile surface shall be fissured.

2.9.6 Resilient Flooring

2.9.6.1 Vinyl Composition Tile

Shall conform to ASTM F1066. Composition 1, Class 2; 12 inch by 12 inch by 1/8 inch.

2.9.6.2 Resilient Base

Provide a 4 inch high by 1/8 inch thick vinyl base; straight where carpet occurs; coved top set type, otherwise. The base shall be complete with preformed external and internal corners with returns of not less that 2-1/2 inches.

2.9.6.3 Rubber Stair System

Products described are by Johnsonite, Middlefield, OH.

Rubber Stair Treads: Johnsonite Roundel Stair Treads, 3/16 inch thick with tapering thickness gauge of 0.210 inch to 0.113 inch. Square nosing; nose shall have depth of 1-7/8 inches. Color as selected.

Rubber stringers: Johnsonite Roundel Rubber Stringers, 0.080 gauge thickness by full width of stringers. Color to match treads.

Rubber risers: Johnsonite Roundel Rubber Risers, 1/8 inch gauge thickness by full height of stair riser. Color to match treads.

Rubber flooring at intermediate landings: Johnsonite Roundel Rubber Flooring Edge Tile, 23-3/4 inch by 23-3/4 inch by 3/16 inch; Johnsonite Rubber Cove Base, 4 inch high by 1/8 inch thick. Color to match treads.

Installation with adhesives recommended by Johnsonite.

2.9.7 Carpeting

Broadloom carpet shall be of domestic manufacture, first quality, from one dye lot, and will meet the following requirements:

| | |
|---|---|
| Type: | Tufted loop pile |
| Finished Pile Height: | 0.187 inch |
| Gauge: | 1/10 |
| Stitches per Inch: | 9 |
| Face Weight: | 26 oz. per square yard |
| Backing: | Primary = Woven polypropylene |
| Dye Method | Solution dyed |
| Total Weight: | 63 oz. per square yard |
| Weight Density Factor: | 150,000 |

Carpeting will be installed in accordance with CRI 104 and the carpet manufacturer's specifications. The type of installation required is: Direct Glue Down.

Colors as selected.

2.9.8 Special Coatings

2.9.8.1 Acid Resistant Coating

A premium quality, high-solids thermosetting vinyl ester coating with corrosion resistance to organic and inorganic acid solutions and capable of application with conventional spray equipment. Coating to be applied over a trowel - grade filler and surfacer with high bond strength and resistance to abrasion, impact, wet conditions, corrosive fumes, and chemical contact. Coating and filler/surfacer by same manufacturer. Minimum dry film thickness shall be 12.0 mils (minimum one coat primer and one coat Finish Coat). Finish Coat will be semi-gloss. Coating shall meet or exceed test requirements for adhesion (ASTM D4541), Humidity (ASTM D4585), impact (ASTM G14), and abrasion (ASTM D4060). [Series 120 Vinester by Tnemec Company, Inc., Kansas City, MO]

2.9.9 Painting

2.9.9.1 Shop Priming of Steel

Tnemec Series 10 Lead and Chromate Free Alkyd Primer, 2.0 mils. Color: red.

2.9.9.2 Architectural Painting

Products shall be of same manufacturer for each coating system and for each type of surface.

All surfaces exposed to view will be painted except for:

Factory finished surfaces;

Elevator and duct shafts, concealed spaces, concealed pipes and ducts;

Exterior concrete surfaces;

Nonferrous metal and stainless steel surfaces;

Acoustic tile;

Concrete floors;

Structural steel concealed by interior building finish, except where subject to high humidity conditions;

Surfaces scheduled to receive other finishes (e.g., tile, vinyl wall covering, plastic laminate, etc.), except stairs.

Application rate and dry film thickness for each coat shall not be less than manufacturer's recommendations for the surface being painted.

Coating manufacturer's requirements, including application procedures, shall be a part of this specification and shall be followed in detail.

2.9.9.3 Schedule

Products referenced are by Tnemec Company, Inc., Kansas City, MO.

All colors as selected from manufacturer's standard samples and in accordance with FED-STD 595B.

**Exterior Galvanized Steel**

| | |
|---|---|
| Primer: | Series 66 HB Epoxy Polyamide, 4.0 mils |
| Finish Coat: | Series 73 Gloss Polyurethane, 2.0 mils |

**Exterior Ferrous Metal**

| | |
|---|---|
| Primer: | Series 65 Epoxy Polyamide Primer, 3.0 mils |
| Intermediate: | Series 66 HB Epoxy Polyamide, 4.0 mils |
| Finish Coat: | Series 73 Gloss Polyurethane, 2.0 mils |

**Interior Primed Ferrous Metal**

| | |
|---|---|
| Primer: | Shop applied |
| Intermediate: | Series 59 Modified Alkyd primer, 2.0 mils |
| Finish Coat: | Series 66 Epoxy Polyamide, 2.0 mils |

**Interior Overhead Steel Deck**

| | |
|---|---|
| One Coat: | Series 15 Dry Fall Alkyd Enamel White, 2.0 mils |

**Interior Galvanized Ductwork and Pipe**

Two Coats: Series 6 Flat Acrylic Emulsion, 2.0 mils

**Interior Gypsum Wallboard**

Primer: Series 51 Vinyl-Acrylic Latex Dry Wall Sealer, applied to seal and smooth, 1.0 mils

Intermediate: Series 6 Acrylic Emulsion, 2.0 mils

Finish Coat: Series 7 Semi-Gloss Acrylic Emulsion, 2.0 mils

2.9.10 Vinyl Wall Covering

Minimum 13 oz. per square yard; integrally pigmented, opaque, semi-rigid vinyl film, factory laminated to a fiber scrim. Mildew inhibitors included in the product. Primer and adhesive materials shall be by the manufacturer of the wall covering, and shall be water based and non-hazardous. Colors and textures shall be as selected from manufacturer's standard samples. Installation will be in accordance with manufacturer's printed instructions.

2.10 **SPECIALTIES**

2.10.1 Markerboards

2.10.1.1 Markerboards

Markerboards shall be porcelain enamel writing surface mounted on 22 gauge steel. Writing surface will be not less than 0.0025 inch thick. Total finish thickness shall be not less than 0.004 inch. A grid consisting of 2 inch squares of a low contrast color shall be superimposed on the marker board surface by means of fused-on lining consisting of 1/16 inch lines. Extruded PVC channel trim shall be applied to the entire periphery of the finished marker board. Colors as selected from manufacturer's standard. Size: 72 inches wide by 48 inches high.

2.10.1.2 Accessories

Provide dry marker pens for each marker board; four of each standard color. Provide two dry marker erasers for each markerboard.

2.10.1.3 Fasteners and Installation

Per manufacturer's written recommendations.

2.10.2 Toilet Partitions, Urinal Screens, and Shower Stall Compartments

2.10.2.1 General Requirements

Toilet partitions, urinal screens, showers stall compartments, and associated hardware shall be the products of a single manufacturer.

2.10.2.2 Materials

Galvanized steel sheet shall be cold-rolled, stretcher-level, commercial quality material conforming to ASTM A526 with zinc coating conforming to ASTM A525, G90. The surface preparation of material for painting shall conform to ASTM D2092, Method A.

Sound deadening shall consist of treated kraft paper honeycomb cores with a cell size of not more than 1 inch. The resin-material content shall weigh not less than 11 percent of the finished core weight. Expanded cores shall be faced on both sides with kraft paper.

Partition panels and doors shall be not less than 1 inch thick with face sheets not less than 0.0635 inch thick.

Partition panels, doors, screens, and pilasters required for the project shall be fabricated from galvanized-steel face sheets with formed edges. Face sheets shall be pressure-laminated to the sound-deadening core with edges sealed with a continuous locking strip and corners mitered and welded. Welds shall be ground smooth. Concealed reinforcement shall be provided for installation of hardware, fittings, and accessories. The surface of face sheets shall be smooth and free from wave, warp, or buckle.

Before application of an enamel coating system, galvanized-steel surfaces shall be solvent-cleaned to remove processing compounds, oils, and other contaminants harmful to coating-system adhesion. After cleaning, the surfaces shall be coated with a metal-pretreatment phosphate coating. After pretreatment, exposed galvanized-steel surfaces shall be finished with a baked-enamel coating system as specified.

The enamel coating system shall consist of a factory-applied baked acrylic enamel coating system. The coating system shall be a durable, washable, stain-resistant, mar-resistant finish.

Steel anchoring devices and fasteners shall be hot-dipped galvanized after fabrication in conformance to ASTM A385 and ASTM A123. Galvanized anchoring devices shall be concealed. Exposed fasteners shall have one-way heads.

Hardware and fittings will be corrosion-resistant steel conforming to ASTM A167, Type 302 or 304. "ZAMAC" is not acceptable. Finish shall be No. 4. Exposed fasteners shall match finish of hardware and fittings.

Wall brackets shall be two-ear panel brackets, T-style, 1 inch stock. Panel-to-pilaster brackets shall be stirrup style.

Door hinges shall be self-lubricating, cutout-insert type with spring-action cam return movement.

Doors shall be equipped with door bumpers fabricated from solid aluminum casting and tipped with solid rubber; attached to door with stainless steel screws; projection: 3-3/4 inches.

2.10.2.3 Ceiling Hung Partitions

Pilasters shall be not less than 1-1/4 inches thick with face sheets not less than 0.0635 inch thick. The anchoring device at the top of the pilaster shall be welded to the reinforced face sheets and shall have not less than two 3/8 inch round threaded rods, lock washers, and leveling-adjustment nuts. Anchoring device shall be designed to transmit the strain and loading on the pilaster directly to the structural support above without putting strain or loading on the finished ceiling. The trim piece at the top of the pilaster shall be 3 inches high and fabricated from not less than 0.030 inch thick stainless steel.

2.10.2.4 Urinal Screens

Screens shall be fabricated from the same types of panels as the toilet partitions. Fittings and fasteners shall be corrosion-resistant steel. Screens shall be wall hung with mounting brackets.

2.10.2.5 Shower Stall Compartments

Shower stall compartments shall be fabricated from the same types of panels, pilasters, and fittings, and shall be by the same manufacturer as the toilet partitions.

2.10.2.6 Installation

Partitions shall be installed rigid, straight, plumb, and level, with the panels centered between the fixtures. Panels shall be secured to pilasters with brackets matching the wall brackets.

Panels shall be secured to ceramic tile on gypsum wallboard/metal stud walls or gypsum wallboard/metal stud walls with toggle bolts

using not less than 1/4-20 screws of the length required for the wall thickness. Toggle bolts shall have a load-carrying strength of not less than 600 pounds per anchor.

2.10.3 Louvers

2.10.3.1 Material

Louver frames and blades shall be galvanized steel conforming to ASTM A526 and A527, G90 zinc coating, mill phosphatized.

2.10.3.2 Type

Drainable, stationary louvers. Louvers shall be 6 inches deep and assembled entirely by welding. Blades and frames shall be 16 gauge.

2.10.3.3 Bird Screen

Galvanized steel 1/2 inch mesh, 16 gauge; in removable frame.

2.10.3.4 Finish

Factory finished after assembly with Kynar 500, 70 percent resin coating system. Color to match metal siding of building.

2.10.4 Corner Guards

Extruded, rigid polyvinyl chloride, chemical and stain resistant as per ASTM D256, and self-extinguishing as per ASTM D635. Minimum thickness: 0.078 inch; height: 60 inches. Installation by means of permanent, self-adhesive tape manufactured by corner guard manufacturer. Colors as selected from manufacturer's standard.

2.10.5 Access Floors

2.10.5.1 General Requirements

Access flooring will comply with the following:

Concentrated load of 1,250 psi with deflection not to exceed 0.062 of an inch with maximum 0.010 inch permanent deformation;

Rolling load of 500 psf with deflection not to exceed 0.010 of an inch;

Rated ultimate load of 4,500 pounds without failure.

2.10.5.2 Pedestals

Pedestals shall be steel head, carried by leveling nut, with approximately 1.5 inches of adjustment, in threaded steel column. Base not less than 4 inches square, and fail safe provision to prevent vibration displacement of leveling nut.

Vertical adjustment shall be by threaded rod with positive locking elevating to control pedestal head height.

Pedestal capacity shall be 5,000 pounds vertically without deformation.

Galvanized or painted components.

Conductive vinyl pedestal pads.

2.10.5.3 Floor Panels

Panels shall be 24 inches by 24 inches nominal size, interchangeable, machined square with dimensional tolerance of plus 0.000 inch and minus 0.005 of an inch, edge straightness tolerance of 0.0025 or more, and squareness tolerance (expressed as diagonal measurement difference) of 0.030 of an inch. Where cutouts are required, tolerances apply before vinyl edging; panels shall be supported on at least 3 sides, free from sharp edges and burrs, reinforced if necessary.

Perforated panels, with damper, interchangeable, and similar in construction and equal in strength to regular panels with a 25 percent open area; they shall deliver 385 CFM at 0.1000 inch static pressure with damper full open. Twenty-five percent of the total number of panels shall be perforated.

Protective trim edge shall be noncombustible.

Floor covering shall be nominal 0.125 inch thick melamine phenolic high-pressure plastic laminate. Install in 1 piece to panel size. Securely cement floor covering to panels.

Protect steel components by chemically cleaning and applying a baked enamel finish.

2.10.5.4 Resilient Base

As specified in 2.9.6.2

2.10.5.5 Accessories

Accessories, such as vertical closures, and cutouts shall be provided as required. Vertical closure shall be scribed to subfloor and sealed with mastic. Fabricated cutouts in floor panels for cable or pipe openings. Trim rubber edging and provide foam rubber pad sealing for protection of cables. Verify locations, numbers, and sizes of cutouts. If cutouts lessen panel effective strength, provide additional support where required.

2.10.5.6 Installation

Install floor system rigid, firm, and free from vibration, rocking, rattles squeaks, and other objectionable features.

Level access flooring to within 0.010 of an inch of true level over entire area and within 0.0625 of an inch in any 10 foot distance.

Provide positive electrical grounding of entire access flooring system.

Provide two (2) panel lifting tools.

2.10.6 Directories and Bulletin Boards

2.10.6.1 Directory

Model 227 by Nelson-Harkins Industries, Chicago, Illinois. Wall mounted. Frame height: 36 inches. Overall width 59-7/8 inches; 5 sections at 11 inches each. Namestrips: 11 inches, standard strip height, Helvetica Regular letters. Concealed hinges and locking device. Glass door with no seams in glass. Black Anodized finish.

2.10.6.2 Bulletin Boards

Wall mounted, glass enclosed, aluminum frame construction with cork background. Door equipped with setscrews and piano hinge. Frame height: 36 inches; overall width: 24 inches. Black Anodized finish.

2.10.7 Lockers and Benches

2.10.7.1 Lockers

Double-tier lockers, 15 inches wide, 18 inches deep, 72 inches high, without base; with sloped top, louvered doors, shelves, latching mechanism, door handles, and built in combination locks.

Combination locks will be master key controlled; three master keys shall be delivered in a key case . Coat hooks shall be chromium coated. Number plates shall be provided.

Lockers shall be fabricated from cold-rolled steel sheets conforming to ASTM A366 and A568, and galvanized in accordance with ASTM A525, G90. Body shall be minimum 24 gauge. Door and door frame shall be minimum 18 gauge.

Finish shall be baked-on enamel; colors as selected from manufacturer's standard.

Lockers shall be set atop a concrete base.

2.10.7.2 Benches

Benches shall be made from laminated maple, 9-1/2 inches in width and 1-1/4 inches full finished thickness. Pedestals shall consist of sturdy 1-1/4 inches O.D. tubing with 10 gauge steel flanges welded to each end. The overall height of the bench assembly is 17-1/2 inches. Attachment to the floor shall be in accordance with the manufacturer's recommendations.

2.10.8 Fire Protection Specialties

2.10.8.1 Fire Extinguishers

Fire extinguishers shall be dry-chemical type. The extinguisher shell shall be enameled steel, red in color. Extinguisher shall be not less than 10 pounds and shall have forged brass valve, fusible plug, safety release, antifreeze, and a pressure gauge.

Halon will not be permitted

2.10.8.2 Cabinets

Fabricated from corrosion-resistant steel and shall be semi-recessed type with full glass hinged front panel. Dimensions shall be of adequate size to accommodate the specified fire extinguishers.

2.10.8.3 Fire Hose Cabinets

Fabricated from corrosion-resistant steel and shall be semi-recessed type with full glass hinged front panel. Dimensions shall be of adequate size to accommodate fire hose and valve.

2.10.8.4 Installation

The installation shall comply with requirements of NFPA 10 and NFPA 14 and shall conform to the manufacturer's recommendations. Extinguishers shall be fully charged and ready for operation upon installation.

2.10.9 Operable Partitions

2.10.9.1 Operation

Shall consist of a series of manually operated flat panels. The panels shall be top supported, without floor guides, and shall be a series of panels hinged in pairs and center stacking.

2.10.9.2 Panel Construction

Shall be a nominal 2¾ inches thick by not more than 48 inches in width. Panel skins of class "A" flame spread rated material (ASTM E84) shall be both tackable and moisture resistant and assembled to a metal frame. Trim design shall not require or permit vertical trim on panel faces and shall, with astragal seals, provide a minimum "groove" appearance at vertical joints.

2.10.9.3 Panel Finish

Factory applied reinforced vinyl with woven backing. Colors as selected from manufacturer's standard.

2.10.9.4 Seals

Vertical seals between panels shall consist of steel tongue-and-groove astragals providing reversible panel operation and interlock a nominal 5 inches for panel stability plus light/sound seals. Bottom of panels shall be equipped with automatic operable bottom seal providing 1-inch operating clearance and shall automatically drop as panels are positioned.

2.10.9.5 Support System

Suspension system shall consist of a continuous channel shaped track selected from manufacturer's standard line. Track shall on individual panel units accommodate turns and intersections. All track intersections shall be welded. Paired panels shall have one 4-wheel steel ball bearing carrier per panel.

2.10.9.6 Acoustical Performance

STC 40 in accordance with ASTM E90.

2.10.9.7 Hardware and Accessories

All hardware and accessories shall be by manufacturer of operable partition.

Provide bulb seals.

2.10.9.8 Installation

In accordance with manufacturer's written recommendations.

[Model 202 by Modernfold, New Castle, IN]

2.10.10 Toilet Room Accessories

2.10.10.1 Materials

Corrosion-resistant steel shall conform to AISI, Type 304. The exposed surfaces shall have a No. 4 finish, unless otherwise specified.

Brass shall be cast.

Steel sheet shall conform to ASTM A366 and ASTM A568. Surface preparation and pretreatment shall be provided as required for the subsequent finish.

Galvanized-steel sheet shall be hot-dipped, minimum spangle, conforming to ASTM A526, with not less than a 1.25 ounce zinc coating in accordance with ASTM A525. The surface preparation for painting shall conform to ASTM D2092, Method A.

2.10.10.2 Coatings

Chromium coating shall be nickel and chromium electrodeposited on brass, conforming to ASTM B456. The coating shall have a satin finish unless otherwise specified.

2.10.10.3 Mirror Glass

Mirror glass shall be Type 1, Class 1, quality q1, 1/4 inch thick polished plate glass with silvering, copper backing, and protective coating, in accordance with ASTM C1036.

2.10.10.4 Mounting Devices and Fasteners

Mounting devices and fasteners shall be hot-dip coated galvanized steel in conformance with ASTM A385 and ASTM A123.

2.10.10.5 Paper Towel Dispensers

Recessed dispensers shall be sized to dispense not less than 400 C-fold paper towels with an interchangeable paper drop. The dispenser shall be fabricated to be recessed in a 4 inch nominal-depth wall opening. The cabinet and door shall be fabricated from not less than 0.031 inch thick corrosion-resistant steel of all welded construction and no mitered corners. The door shall be hung with a full length corrosion-resistant steel piano hinge and secured with a tumbler lock.

2.10.10.6 Waste Receptacle

Recessed receptacles shall be not less than 0.031 inch thick corrosion-resistant steel with joints continuously welded. The flange shall be fabricated from one piece seamless construction with no mitered corners. The door shall be hung with a full-length corrosion-resistant steel piano hinge and secured with a tumbler lock. The removable waste container shall have a capacity of not less than 1.2 cubic feet.

2.10.10.7 Toilet Tissue Dispenser

Surface-mounted multiroll dispensers shall be fabricated to accommodate and dispense not less than two 4-1/2 inch by 4-1/2 inches core tissue rolls. The dispenser shall be fabricated from not less than 0.031 inch thick corrosion-resistant steel. The flange shall be fabricated from one-piece seamless construction. The door shall be bottom hung with a continuous piano hinge and secured with a tumbler lock. A slot shall be provided in the face of the door to monitor for refill. The spare roll shall be accessible to the patron after the first roll is empty by pushing a release bar.

2.10.10.8 Feminine Napkin Dispenser

Surface-mounted dispensers shall be sized for not less than 30 napkins and 27 tampons. The dispenser door shall be fabricated from not less than 0.0050 inch thick corrosion-resistant steel with returned edges for rigidity. The door shall be hung with a full-length corrosion-resistant steel piano hinge and secured with a tumbler lock. The door shall be embossed with the word NAPKIN. The dispenser cabinet shall be fabricated from not less than 0.031 inch thick corrosion-resistant steel with welded construction. The dispenser shall operate with double-coin mechanism. A separate lock shall be provided for the coin box.

2.10.10.9 Feminine Napkin Disposal

Surface-mounted disposal shall be fabricated from not less than 0.031 inch thick corrosion-resistant steel. The container shall be seamless construction with a piano-hinged bottom panel for disposal service. A compartment welded to the bottom side of the container shall be provided for deodorant crystals. The disposal cover shall be equipped with a corrosion-resistant steel bar handle and a full-length piano hinge. The cover shall be weighted or equipped with a spring device so that the cover will close tightly against the container.

2.10.10.10 Liquid Soap Dispenser

The liquid-soap dispenser shall be chrome-plated brass with not less than a 3-1/2 inch spout-to-shank dimension and not less than 12 ounce plastic soap container refillable by removing the push button cap or head assembly.

2.10.10.11 Mirrors

Framed mirrors shall be fabricated to the size 14 inches wide by 36 inches high. The mirror frame shall be fabricated from not less than 0.031 inch thick corrosion-resistant steel with corners mitered, welded, and ground smooth and a face width of not less than 5/8 inch. The backing sheet shall be fabricated from not less than 0.0396 inch thick galvanized steel secured to the frame with concealed screws. Edges and back of the mirror glass shall be protected with continuous wood fill strips and moisture-proof shock absorbing back padding. Concealed galvanized-steel wall hanger of the size required for the mirror size shall be provided. The mirror shall be hung and locked in place with not less than two vandal-resistant locking screws per mirror.

2.10.10.12 Grab Bars

Bars shall be fabricated from not less than 0.049 inch thick, 1-1/4 inch outside diameter seamless corrosion-resistant steel tubing. Wall flanges shall be fabricated for a concealed installation from not less than 0.094 inch thick corrosion-resistant steel not less than 3 inches in diameter. Flanges shall be fully welded to the grab bar. A concealed mounting plate shall be fabricated from corrosion-resistant or galvanized steel. Secure flanges to the mounting plate with not less than four corrosion-resistant steel vandal-resistant set screws. Exposed surfaces shall have a nonslip finish. The nonslip finish shall have a peened or light knurled finish.

2.10.10.13 Shower Curtain Rod and Hooks

Rod shall be fabricated from not less than 0.035 inch thick, 1 inch outside diameter, seamless corrosion-resistant steel tubing. Support flanges shall be fabricated from not less than 0.125 inch thick corrosion-resistant steel not less than 3 inches in diameter. Provide shower-curtain hooks in sufficient quantity for installation of shower-curtain. (Shower curtain provided by others.)

2.10.10.14 Robe Hook

Hook shall be the double type fabricated from satin-finish chromium-plated brass. The projection from the back of the flange to the end of the hook shall be not less than 2 inches. The concealed mounting bracket shall be fabricated from solid brass. The hook shall be secured to the mounting bracket with a locking setscrew.

2.10.10.15 Mop and Broom Holder with Continuous Shelf

Holder and shelf shall be fabricated from Type 304 stainless steel, satin finish. The holder and shelf shall be fabricated from not less than 0.031 inch thick material with corners mitered, welded, and ground smooth. Anti-slip mop holders shall have spring loaded rubber cams that grip handles 7/8 inch to 1-1/4 inch in diameter and hold mops 3-1/4 inch from the face of the wall. Length shall be 48 inches, maximum. Shelf shall be 12 inches wide.

2.10.10.16 Installation

Concealed mounting devices and fasteners for accessories shall be fabricated form the same materials as the accessories or from galvanized steel. Exposed mounting devices and fasteners shall be finished to match the accessories. Fasteners shall be the theft-resistant type.

Accessories except grab bars be secured to the supporting substrates with anchors of the types indicated by the following substrate construction:

TILE ON GYPSUM BOARD WALL

Accessories shall be secured with toggle bolts using not less than No. 10-24 screws of the length required for the finish thickness.

GYPSUM BOARD

Accessories shall be secured with toggle bolts or expansion sleeve screws. Toggle bolts shall be not less than No. 10-24 screws of the length required for the finish thickness. Expansion-sleeve screws shall be not less than No. 6-32 screws or No. 10-24 screws of the lengths required for the finish thickness.

METAL PARTITIONS

Accessories shall be secured with T-nuts and through-bolts not less than No. 10-24 of the lengths required for the partition thickness.

2.10.10.17 Grab Bar Anchors

Embedded plate anchors shall be fabricated from not less than 0.125 inch thick plates with the width and length of the bar. Plate shall be U-clamped to the partition studs or channels. Embedded plates shall be U-clamped to the partition studs or channels on each side of the grab-bar support. The bar back plate shall be secured to the anchor plate with not less than two No. 10-24 screws of the length required for the thickness.

2.10.10.18 Generalized Toilet Room Accessories Schedule

<u>Room 12 - Men's Locker Room</u>

Paper Towel Dispenser at each lavatory
Waste Receptacle
Toilet Tissue Dispenser in each toilet stall
Liquid Soap Dispenser at each lavatory
Mirror at each lavatory
Grab Bars in each handicapped toilet stall and shower

<u>Room 13 - Women's Locker Room</u>

Same as Room 12, with the addition of:

Feminine Napkin Dispenser in each toilet stall
Feminine Napkin Disposal in each toilet stall
Shower Curtain Rod and Hooks at each shower
Robe Hook at each shower

Room 28 - Men's Toilet

Paper Towel Dispenser at each lavatory
Waste Receptacle
Toilet Tissue Dispenser in each toilet stall
Liquid Soap Dispenser at each lavatory
Mirror at each lavatory
Grab Bars in each handicapped toilet stall

Room 29- Women's Toilet

Same as Room 28, with the addition of:

Feminine Napkin Dispenser in each toilet stall
Feminine Napkin Disposal in each toilet stall

Room 30 - Janitor Closet

Mop and Broom Holder

## 2.11 EQUIPMENT

### 2.11.1 Projection Screens

Concealed-in-the-ceiling projection screens, 60 inches high by 60 inches wide, electrically operated 115 volt (60 Hz), 2.5 amp. Three wire quick reversal motor especially designed for the purpose, to be ball bearing and oiled for life. With automatic thermal overload cutout and integral interlocking gears. To have pre-set but accessible limit switches to automatically stop picture surface in the "up" and "down" positions. Stop action to be positive to prevent coasting. The roller to be of rigid metal, at least 5 inches in diameter and mounted on two cast aluminum brackets equipped with self-aligning bearings. Screen fabric to be flame retardant and mildew resistant fiberglass with glass beaded picture surface. (With 2 inch black masking borders.) Case to be of wood, with double top for extra rigidity and sound deadening. Motor compartment to be metal lined. A section of the bottom of the case shall be equipped with piano-type hinges and connected to the drive mechanism so that it opens and closes automatically with the lowering and raising of the screen surface. Balance of the bottom panel shall be pegged to manual opening to provide access. Hinges shall be mounted to allow matching of the bottom panel to the ceiling. Flush mounting. Case to be finished with a primer coat, ready to accept final finish by others. To be complete with three position control switch box with cover plate. Screen to be listed by Underwriters' Laboratories.

2.11.2 Loading Dock Equipment

2.11.2.1 Rated Capacity

Minimum 20,000 pounds roll over capacity.

2.11.2.2 Dock Levelers

ASME MH14.1. Make provision in the design of the loading ramp for maintenance access to the under structure and the lifting mechanism. Provide a steel tread plate lip and platform, hinged and supported from beneath by a steel framework that contains a lifting, positioning, and lowering assembly. Ensure the platform surface flush with the surrounding floor surface of the loading dock when not in service. Provide an integral positive restraint when the dock leveler is in the maintenance position.

2.11.2.3 Dock Leveler Height Adjustment

Provide a ramp whose incline can be adjusted to suit the height of the freight carrier. Allow the loading ramp a minimum of 24 inches of vertical adjustment; 12 inches above and 12 inches below the platform height.

2.11.2.4 Dock Leveler Extension and Retraction

Extend non-fixed end of the dock leveler from a retracted position behind the line of the loading dock platform bumpers to at least 12 inches beyond the forward edge of the dock platform bumpers so as to rest on the bed of the freight carrier.

2.11.2.5 Electro-Hydraulic System

Provide velocity fuse, ball check valve, or other device to automatically prevent a drop of more than 4 inches of the lip should the freight carrier move away from the dock leaving the lip unsupported. Activate this device with a static, dynamic, or impact load exceeding 10 percent of the rated load on the lip and ramp.

Provide a separate and complete system for each dock leveler. Include an electric motor, motor drive, hydraulic pump, hydraulic ram, pressure relief valve, fluid reservoir, strainer, filter, hydraulic control-valve cylinders, hose, piping, fittings, and hydraulic fluid. Electrical Requirements: NFPA 70, NEMA ICS 2, NEMA ICS 6 and NEMA MG 1.

2.11.2.6 Electro-Hydraulic Control

Provide dock leveler with a pushbutton station to activate motor, pump, and valves.

2.11.2.7 Toe Guards or Skirts

Provide sides or edges, except front and rear edges, of the ramps which rise above the surrounding loading dock with sheet carbon steel skirts or toe guards.

2.11.2.8 Dock Truck or Trailer Restraining Device

Self-aligning device which shall engage the ICC bar of the truck/trailer with a positive restraining force of not less than 18,000 pounds. Manually control activation and deactivation from inside the building.

2.11.2.9 Dock Bumpers

Provide bumpers capable of sustaining repeated impacts from trucks or trailers without damage to the dock, dock levelers, or bumpers.

Provide ramp and load dock face with laminated rubber, tire-fabric, or equivalent dock bumpers recommended by the dock leveler manufacturer.

2.12 **FURNISHINGS**

2.12.1 Blinds

2.12.1.1 Type

Vertical Louver Blinds

2.12.1.2 Headrail shall be of extruded aluminum alloy 1 inch high by 1-3/4 inches wide with wall thickness not less than 0.047 inch and with a clear anodized finish.

2.12.1.3 Carriers shall have two wheels of self-lubricating molded plastic and shall be mounted on individual plastic axles. Each track shall consist of a carrier of nominally 1-1/4 inches wide by 1/4 inch thick plastic housing for minimum stack, an integral stabilizer arm, and geared clutch system for overload protection. Carrier assembly shall positively lock the position of the symmetrically centered vanes to ensure a uniform appearance.

2.12.1.4 Vane hooks shall be of clear, high ultra-violet resistant polycarbonate. Vane hooks shall be field replaceable while headrail is installed.

2.12.1.5 Vanes shall be self-aligning with one full cycle of the control chain.

2.12.1.6 Traversing control shall consist of traversing cord loop traveling along smooth surfaces and silently around plastic pulleys on steel axles.

2.12.1.7 Cord weight shall be readily removable without detaching cord from headrail.

2.12.1.8 Installation brackets for overhead installations shall consist of spring-tempered steel with a front flange and rear tab to positively engage rails at top of headrail.

2.12.1.9 Vanes shall be magnesium alloy, 3-1/2 inches wide; non-perforated.

2.12.1.10 Vanes shall stack one-way draw, split draw, off-center draw, and center stack. Track shall have a stack release lever to allow all vanes to be moved aside for easy window cleaning. Light gap shall be no greater than 1/4 inch at control chain with a minimum vane overlap of 3/8 inch.

2.12.1.11 Colors as selected by the Buyer from the manufacturer's standard.

2.12.2 Entrance Grates

2.12.2.1 Frames

Frames shall be fabricated from extruded 6063-T5 alloy aluminum. All surfaces in contact with concrete shall be protected with a shop coat of primer.

2.12.2.2 Grates

Grates shall be fabricated from extruded 6061-T6 alloy aluminum and shall be designed to support a minimum of 200 pounds/square foot load. Grates shall have serrated aluminum treads. Rails to have pointed serrations running the full length. Tread rails shall be spaced and secured with keylock bars on 6 inch centers, both mechanically locked and welded in place for added strength.

2.12.2.3 Finish

Mill finish. [Frame Model 420, Grate Model 456 by Reese, Huntington Beach, CA]

2.13 **SPECIAL CONSTRUCTION**

(Not Used)

2.14 **CONVEYING SYSTEMS**

2.14.1 Passenger Elevator

2.14.1.1 General Requirements

Elevator shall comply with ANSI A17.1.

| | |
|---|---|
| Capacity | 4500 pounds |
| Speed | 200 fpm |
| Platform, size | 8'-0" wide by 6'-0" deep |
| Doors | 4'-0" wide by 7'-0" high, center opening with stainless steel finish |

2.14.1.2 Operation

Hydraulic

2.14.1.3 Options Included

Car controls, hall buttons, and phone shall be placed for easy access.

Tactile markings for operating switches, buttons, and hoistway door jambs.

Handrail in car.

Audible signals in car position indicator and lanterns.

Electric, ventilation fan.

Stainless steel jambs, transom, and sill.

Incandescent downlighting in baked enamel ceiling panels with polished stainless steel frame.

Walls finished with vertical panels of high pressure plastic laminate on plywood core.

Floor to be carpeted.

## 2.15 MECHANICAL

### 2.15.1 Heating, Ventilating and Air Conditioning

#### 2.15.1.1 General

Selection of equipment shall be based on the L.C.C. analysis procedure outlined in Section 0110-12.7 and Section 0110-12.8 (Attachment K) and Attachment H (Computer analysis technique approved by the DOE Energy Management Coordinator). Electricity, at $0.0294(2.94 cents) per kW hour is currently available and shall be used in LCC analysis. Escalation in costs shall be as specified in NBS Handbook 135 which contains current factors and escalation rates. The equipment and materials used shall be of the construction described in the Attachments Section 1525: Mechanical Insulation (Attachment L), Section 1530: Fire Protection (Attachment L), Section 1540: Plumbing/Service Piping (Attachment M), Section 1550: Heating, Ventilating and Air Conditioning Systems (Attachment N), Section 1565: Refrigeration (Attachment P), and Section 1595: Controls (Attachment Q), Safety Class Items (Attachment R), Health and Safety (Attachment T), Fire Protection (Attachment U), and Quality Assurance (Attachment V). Pipe identification shall be as shown in Attachment C. The following reference is made to some sections of the Attachments specified above to indicate the quality of materials, construction, standards, etc., but are not limited to these particular references:

| | |
|---|---|
| 1550-1 (Attachment N) | General Sizing and Design Criteria: In considering maintenance cost, cognisance must be given to the equipment, materials, products etc., used in, or to be used in, the other buildings, within the overall site perimeter fences administered by the DOE at HWVP Richland, Washington |
| 1550-2 (Attachment N) | Heating Ventilating and Air-Conditioning System Selection. |
| 1550-2.1.1 (Attachment N) | General. Including LCC analysis (Section 0110-12.7 ASHRAE Fundamental handbook etc., 1550-1.6 Energy Conservation - Waste Heat Recovery System shall be considered. |

| | |
|---|---|
| 1550-2.1.2 (Attachment N) | Water Chillers |
| 1550-2.1.2 (Attachment N) | Condensers/Condensing Unit<br><br>Note no equipment should be located on the roof but on pads beside the building Section 1550-2.1.3. |
| 1550-2.3 (Attachment N) | Water Distribution systems including pumps (1550-2.3.2), piping, fittings and accessories (1550-2.3.3) including expansion vessel and other types of services recommended by ASHRAE Equipment Handbook ASME B16 series ASTM G46 and ASME B31.1. |
| 1550-2.4 (Attachment N) | Air Handling and Air Distribution Systems including Air Handling Units (1550-2.5.2), Fans/Motors (1550-2.5.3), Coils (1550-2.5.4), Air Cleaning Devices (1550-2.5.5) and Ductwork Systems (1550-2.5.6). |
| 1550-3 (Attachment N) | Testing, Adjusting and Balancing including AABC Volume A-82 and ASHRAE Systems Handbook. |

The welding extract system shall be designed and constructed as recommended in ACGIH Industrial Ventilation Manual.

2.15.1.2 Product and Testing Specification

Reference is made within the Attachments L, M, N, P, Q, R, T, U, and V and Attachment H to other documents, references and specification and attention is drawn to the following documents listed below but are not limited to these. The Seller is strongly advised to read these and all related publications. No excuses will be accepted due to lack of knowledge of these or other related publications.

AABC Vol. A-82

ARI 210

ARI 410

ARI 460

ARI 520

ARI 550

ARI 590

ARI 850

AMCA 99

AMCA 201

AMCA 210

AMCA 261

AMCA 300

AMCA 500

ANSI C2

ANSI Z9.2

ASTM A36

ASTM A53

ASTM A105

ASTM A527/A527M

ASTM G46

ASHRAE Handbook: 1987 ASHRAE Handbook HVAC Systems and Applications

ASHRAE Handbook: 1988 ASHRAE Handbook Equipment; Errata-1989 Additions and Corrections -1990 Additions and Correction - 1991

ASHRAE 15

ASHRAE 20

ASHRAE 24

ASHRAE 51

ASHRAE 52

ASME B16 Series

ASME B31.1

UMC

SMACNA: 1983 HVAC Systems Testing, Adjusting and Balancing (First Edition)

SMACNA: 1985 HVAC Duct Construction Standards, Metal and Flexible, First Edition

SMACNA: 1985 Air Duct Leakage Test manual

SMACNA: 1978 Energy Recovery Equipment and System Manual

SMACNA: 1984 Energy Conservation Guidelines

SMACNA: 1986 Fire Smoke and Radiation Damper Installation Guide for HVAC Systems

UL 900

29 CFR 1910

FS-HH-I-545

FS-HH-I-551

FS-HH-I-558

NFPA 90A

NFPA 90B

NFPA 91

NFPA 96

NFPA Vols 1-16

2.15.2 Plumbing Materials

All fixtures, equipment and materials shall be new, free from defects, and of the brand and quality specified, or equal.

2.15.2.1 Pipe and Fittings

2.15.2.1.1 Sanitary Waste and Vent, and Roof Drainage System

A. Below Ground

1) Pipe

Service weight cast iron hub and plain end soil pipe conforming to ASTM A74, or NO-HUB cast iron soil pipe conforming to CISPI 301, factory coated inside and out with coal tar enamel.

2) Fittings

Service weight cast iron hub and plain end soil pipe conforming to ASTM A74, or NO-HUB cast iron soil pipe conforming to CISPI 301, factory coated inside and out with coal tar enamel.

3) Gaskets

Neoprene compression gaskets conforming to ASTM C564, or NO-HUB stainless steel coupling with neoprene inner sleeve, conforming to CISPI 310.

B. Above Ground

1) Pipe

NO-HUB cast iron soil pipe conforming to CISPI 301, factory coated inside and out with coal tar enamel.

2) Fittings

NO-HUB cast iron soil pipe conforming to CISPI 301, factory coated inside and out with coal tar enamel.

3) Couplings

NO-HUB stainless steel coupling with neoprene inner sleeve, conforming to CISPI 310.

2.15.2.1.2 Domestic Hot and Cold Water Systems

A. Below Ground

1) Pipe

Type "K" seamless hard drawn copper tubing conforming to ASTM B88.

2) Fittings

Seamless wrought copper solder joint fittings conforming to ASME B16.22.

3) Solder

"Sil-fos" 15 percent silver brazing alloy.

B. Above Ground

1) Pipe

Type "L" seamless hard drawn copper tubing conforming to ASTM B88.

2) Fittings

Seamless wrought copper solder joint fittings conforming to ASME B16.22 or cast copper solder joint fittings conforming to ASME B16.18.

3) Solder

1-1/2 inches and smaller: 95-5 tin-antimony lead free solder.

2 inches and larger: "Sil-fos" 15 percent silver brazing alloy.

2.15.2.1.3 Condensate Drains

A. Pipe

Galvanized carbon steel, Schedule 40, conforming to ASTM A53, or type "L" seamless hard drawn copper tubing conforming to ASTM B88.

B. Fittings

150# galvanized threaded malleable iron conforming to ASTM A197, or seamless wrought copper solder joint conforming to ASME B16.22.

2.15.2.1.4 Compressed Air Piping

A. Pipe

Carbon steel, ASTM A53, Grade B, Schedule 40, seamless or ERW.

B. Fittings

300# malleable iron threaded, ASTM A197.

2.15.2.1.5 Unions

Wrought copper conforming to ASME B16.22 or cast copper conforming to ASME B16.18 with ground joint seat and solder joint ends or 300# black or galvanized threaded malleable iron with bronze to iron ground joint seat.

2.15.2.1.6 Flanges

Cast copper conforming to ASME B16.18, 125# with solder joint end.

2.15.2.1.7 Dielectric Connectors

2 inches and smaller: 250# threaded insulating union, gasket for service as required, Watts or Epco.

2-1/2 inches and larger: 175# threaded insulating flange set, gasket for service as required, Watts or Epco.

2.15.2.2 Valves

2.15.2.2.1 Domestic Water Systems

| TYPE | SIZE | DESCRIPTION | MANUFACTURER |
|---|---|---|---|
| Gate | All | 150# bronze, rising stem, screwed bonnet, solid wedge disc with screwed ends. | Crane #431<br>Powell #514 |
| Globe | All | 150# bronze, rising stem, plug disc, union bonnet, screwed ends. | Crane #14-1/2P<br>Powell #2600 |

| TYPE | SIZE | DESCRIPTION | MANUFACTURER |
|---|---|---|---|
| Check | All | 200# bronze, screwed cap, swing type with regrindable disc and screwed ends. | Crane #36<br>Powell #560 |
| Ball | All | 400# bronze, hard chrome plated ball, screwed ends. | Watts #B-6000<br>Apollo #70-100 |
| Drain | All | 200# bronze, wedge disc, stuffing box, female I.P.S. inlet and male hose thread outlet. | Crane #451<br>Powell #503HS |
| Water Pressure Regulator | All | 300# bronze body and bronze "Y" strainer. | Wilkins #500YSBR<br>Watts #223 |

2.15.2.2.2 Compressed Air System

| TYPE | SIZE | DESCRIPTION | MANUFACTURER |
|---|---|---|---|
| Gate | All | 150# SWP, bronze body, thread ends, solid wedge disc, rising stem, union bonnet | Milwaukee #1151 |
| Globe | All | 150# SWP, bronze body, thread ends, composition disc, union bonnet | Milwaukee #590 |
| Check | All | 150# SWP, bronze body, thread ends, horizontal swing bronze swing seat, composition disc. | Milwaukee #510 |
| Ball | All | 150# SWP, bronze body, thread ends, 2 piece standard port, chrome plated brass ball, PTFE seats, lever operated | Milwaukee #BA100 |

2.15.2.3 Plumbing Fixtures and Trim

2.15.2.3.1 Water Closet (WC-1)

American Standard #2477.016 "Afwall," white vitreous china wall hung siphon jet bowl, complete with Sloan Royal #110-3 YBYO flush valve, Olsonite #95-CC-SS white, open front seat with self-sustaining check hinge, and Smith, Wade or Zurn carrier and

drainage fitting suitable for the application. Furnish #F-72-A1 trap primer on flush valve where required.

2.15.2.3.2 Water Closet (WC-2)

Same as (WC-1) above, except mounting height to comply with ANSI A117.1.

2.15.2.3.3 Urinal (U-1)

American Standard #6540.017 "Allbrook," white vitreous china wash-out action with Sloan Royal #180-1.5-YB flush valve and wall hanger.

2.15.2.3.4 Urinal (U-2)

Same as (U-1) above, except mounting height to comply with ANSI A117.1.

2.15.2.3.5 Lavatory (L-1): Countertop Mounting

American Standard #0476.028 "Aqualynn," self-rimming 20 inches by 17 inches oval vitreous china countertop lavatory, complete with #2385.078 lever handle mixing faucet, #2411.015 grid drain, chrome plated brass L.A. pattern P-trap, loose key angle stops with flexible risers, 0.5 gpm flow restrictors.

2.15.2.3.6 Lavatory (L-2): Wall Hung

American Standard #0355.012 "Lucerne," 20 inches by 18 inches white vitreous china, complete with #2385.078 lever handle mixing faucet, #2411.015 grid drain, chrome plated brass L.A. pattern P-trap, loose key angle stops with flexible risers, 0.5 gpm flow restrictors, and Smith #723 support with concealed arms.

2.15.2.3.7 Shower (SH-1): For Use in Handicap Shower Stall

Acorn "Zenith" Series, complete with "Safti-Therm" thermostatic mixing valve with triple duty check stops, "Close" adjustable ball joint shower head with 2.5 gpm flow control, supply elbow with vacuum breaker, hand shower with 60 inch stainless steel hose and mounting bracket, diverter valve, soap dish, padded vinyl folding seat, two wall stainless steel grab bar, stainless steel curtain rod and vinyl curtain.

2.15.2.3.8 Shower (SH-2): For use in Shower Stall

Acorn "Zenith" Series, complete with "Safti-Therm" thermostatic mixing valve with triple duty check stops, "Close" adjustable ball joint shower head with 2.5 gpm flow control, soap dish, stainless steel curtain rod and vinyl curtain.

2.15.2.3.9 Mop Sink (MS-1)

American Standard #7740.020 "Florwell," 28 inch by 28 inch acid-resisting enameled cast iron, with #7745.011 rim guard, Chicago #897 faucet with vacuum breaker, spout with hose end and bucket hook, wall brace and stops in shanks and #7721.038 drain with strainer and socket for 3 inch outlet.

2.15.2.3.10 Service Sink (SS-1)

American Standard #7695.018 "Akron," 24 inch by 20 inch acid-resisting enameled cast iron, with #47077.07 rim guard and wall hanger, with Chicago #305-VB-R rough chrome plated faucet with vacuum breaker and stops in shanks, and #7798.176 trap with strainer.

2.15.2.3.11 Electric Water Cooler (EWC-1)

Haws #HWCA8 wall mounted, barrier-free, satin finish stainless steel cabinet and receptor, chrome plated bubbler, hot water dispenser with 1-1/2 quart brass tank, 500 watt metal sheath heater and self-closing cup filler with push lever, 7.5 gph, 1/5 HP, 120V, 60 Hz, 1 phase.

2.15.2.3.12 Emergency Eyewash and Shower (EEW&S-1)

Haws #8330 all stainless steel emergency station with eyewash bowl with push flag operator, and deluge shower head with pull rod operated stay-open ball valve and sign.

2.15.2.3.13 Emergency Eyewash (EEW-1)

Haws #7060BT wall mounted stainless steel bowl with mountain bracket, twin heads, flag operated stay-open ball valve, sign and adjustable P-trap.

2.15.2.3.14 Sink (SK-1)

Elkay #DLR-1722 single compartment 18 gauge type 302 stainless steel self-rim, 17 inch by 22 inch, with #LK-99 strainer, #LK-4100 single lever faucet, stops, supplies and P-trap.

2.15.2.3.15 Sink (SK-2)

Elkay #DLR-3322 double compartment 18 gauge type 302 stainless steel self-rim, 33 inch by 22 inch, with #LK-99 strainers, #LK-4100 single lever faucet, stops, supplies and P-trap.

2.15.2.3.16 Sink (SK-3)

Elkay #DLR-3122 single compartment 18 gauge type 302 stainless steel self-rim, 31 inch by 22 inch, with #LK-99 strainer, #LK-4100 single lever faucet, stops, supplies and P-trap.

2.15.2.3.17 Electric Water Heaters

A. Water Heater (Storage Type)

A. O. Smith vertical or horizontal storage water heaters with thermostatic control, sized to provide supply of 140°F water per ASPE Data Book, Chapter 4: Service Hot Water Systems. Heaters to have glass lined steel storage tanks, meet ASHRAE 90A requirements, and shall be equipped with combination temperature and pressure relief valve.

B. Water Heater (Instantaneous)

Chronomite "Instant-Flow" point-of-use water heater with thermostatic control, sized to provide supply of 140°F water per ASPE Data Book, Chapter 4: Service Hot Water Systems.

2.15.2.3.18 Air Compressor

A. Air Compressor

Atlas Copco #15-LT 12-120H air cooled, automatic two stage, tank mounted duplex compressor complete with safety valve, automatic tank drain, motor starters, motor alternators, overload protection, regulators, pressure gauges, intake filter, belt guard, and automatic pressure switch, etc.

B. Receiver

Provide an ASME approved horizontal receiver, 120 gallon capacity.

2.15.2.4 Floor Drains

2.15.2.4.1 Floor Drain (FD-1): For use in Toilet Rooms

Smith #2005-AP cast iron body with clamping collar, 5 inch diameter adjustable nickel bronze strainer and trap primer connection.

2.15.2.4.2 Floor Drain (FD-2): For Use in Other Than Toilet Rooms

Smith #2120Y cast iron body with flashing collar and cast iron tractor grate.

2.15.2.4.3 Floor Drain (FD-3): For Use in Shower Area

Smith #2005-B cast iron body with clamping collar, 6 inch square adjustable nickel bronze strainer.

2.15.2.4.4 Floor Drain (FD-4): For Use in Shower Area

Smith #2005-W cast iron body with clamping collar and 6-3/4 inch by 6-3/4 inch adjustable nickel bronze angle grate.

2.15.2.5 Floor Sink (FS-1)

Smith #3150-C-12, 12 inch square by 8 inch deep acid-resisting enameled cast iron receptor with flange and clamping collar, dome bottom strainer and 1/2 grate.

2.15.2.6 Cleanouts

2.15.2.6.1 Exterior

Smith #4253 with XH cast iron top in concrete areas.

2.15.2.6.2 Floors

A. Smith #4023 with round nickel-bronze top in finished room floors.

B. Smith #4223 with round cast iron top in unfinished room floors.

C. "Flush-with-floor" type cleanouts, with adjustable watertight covers and integral anchoring flange with clamping collar where waterproofing membrane is used.

2.15.2.6.3 Finished Walls

Smith #4532 with round chrome plated or stainless steel access plate and screw.

2.15.2.7 Access Boxes: For Concealed Valves and Water Hammer Arresters

2.15.2.7.1 Walls

A. Smith #4730 with polished chrome plate face in tile walls.

B. Smith #4760-AKL or #4765-AKL with bonderized prime-coated steel face and with Allen lock in walls of other finished rooms.

2.15.2.7.2 Ceilings

Acorn #8211-3-AKL bonderized prime-coated steel face with Allen lock.

2.15.2.7.3 Floors

A. Smith #4910 with XH plain aluminum or nickel-bronze nonskid top.

B. Smith #4920 for floors covered with vinyl reinforced or pure vinyl tile.

2.15.2.8 Traps

For lavatories and sinks, except service sinks: Adjustable cast brass traps with brass nuts, less cleanout.

2.15.2.9 Water Hammer Arresters

Smith #5000 Series, stainless steel in conformance with PDI WH-201.

2.15.2.10 Trap Primer

2.15.2.10.1 In-Line Mounted

Smith #2699, bronze body with vacuum breaker and thread ends.

2.15.2.10.2 Flush Valve Mounted

Sloan #F-72-A1.

2.15.2.11 Backflow Preventer

Reduced pressure principle backflow preventers.

2.15.2.11.1 1-1/2 inch and smaller: Cla-Val #RP-2 or Watts #909S.

2.15.2.11.2 2 inch and larger: Cla-Val #RP-1 or Watts #909S.

2.15.2.12 Hose Bibbs

2.15.2.12.1 Chicago Faucet #293 3/4 inch sill cocks with removable tee handle and #E27 vacuum breaker.

2.15.2.12.2 In finished spaces: Chromium plated bibbs.

2.15.2.12.3 In unfinished spaces: Rough cast bronze bibbs.

2.15.2.13 Sleeves

2.15.2.13.1 Where pipes pass through concrete, or stud walls, or pass through ceilings, use rust-proof sleeve of the size required.

2.15.2.13.2 Where pipes pass through fire rated walls, floors or ceilings, use ProSet "Firestop Penetrators."

2.15.2.14 Insulation

2.15.2.14.1 Domestic Hot and Cold Water

A. All domestic hot and cold water pipes shall be insulated with asbestos-free Owens-Corning Fiberglas 25 ASJ/SSL-II heavy density insulation with kraft reinforced foil all service vapor barrier jacket and double pressure sealing adhesive for the longitudinal joint.

B. All fittings, flanges and valves shall be insulated with mitered segments of Owens-Corning 25 ASJ/SSL-II heavy density insulation. Use pre-molded insulation covers on fittings and valves.

Pipe Insulation Thickness Schedule

| TEMPERATURE | PIPE SIZE | | |
|---|---|---|---|
| (Degrees F) | 1" and Smaller | 1-1/4" to 2" | 2-1/2" and Larger |
| Ambient to 150 | 1/2" | 1" | 1" |
| 150 to 200 | 1" | 1-1/2" | 2-1/2" |

2.15.2.14.2 Roof Drain Piping and Drain Bodies

One inch thick Owens-Corning Fiberglas 25 ASJ/SSL-11 heavy density insulation on drain bodies and horizontal runs to prevent surface condensation.

2.15.2.14.3 Handicapped Insulation

Armstrong "Armaflex II" insulation with paint coating on hot water supply, tailpiece, and trap at lavatories for handicapped persons.

2.15.2.15 Pipe Wrapping

10 mil thick self-adhesive polyethylene tape, Scotchwrap 50 or approved equal.

2.15.2.16 Pipe Supports

In conformance with MSS SP-58 and MSS SP-69.

2.15.2.17 Valve Tags

2 Inch diameter, 20 gauge stainless steel disc for each main branch shutoff valve or cock with 1/8 inch continuous steel ring fastener.

2.15.2.18 Pipe Identification

Snap on markers and banding in conformance with HPS-111-M.

2.15.2.19 Disinfection of Domestic Water System

Use disinfectant method AWWA C651.

2.15.2.20 Other Materials

Furnish other materials, not specifically described but required for a complete and proper installation.

2.16 **ELECTRICAL**

2.16.1 Service Entrance Switchboard

2.16.1.1 Service entrance equipment shall be suitable for 480/277 volt, three phase, four wire service and shall be provided with a ground bus and a solid neutral bus.

2.16.1.2 Service entrance switchboard shall comply with NFPA 70, Articles 230 and 384, and UL 891. All components and devices in the switchboard shall be UL listed.

2.16.1.3 Switchboards shall meet the requirements of NEMA Standards PB-2 and 250, UL 891, and shall be dead-front, circuit breaker type, with an underground pull section, main breaker compartment, metering compartment and distribution section. Circuit breakers shall be bolt-in type with minimum trip rating of 20 amperes and interrupting rating suitable for the available short circuit current, in accordance with UL 489.

2.16.1.4 Metering shall consist of a voltmeter for phase-to-phase and phase-to-neutral voltage measurements and an ammeter for measuring phase currents.

2.16.2 Panelboards

2.16.2.1 Lighting and power panelboards shall be in accordance with UL 67, NEMA 250 and PB1, and NFPA 70, Article 384. Panelboards shall be dead-front, circuit breaker type, with a ground bus and a solid neutral bus. Circuit breakers shall be bolt-in type with minimum trip rating of 20 amperes and interrupting rating suitable for the available short circuit current in accordance with UL 489. Each panel shall be supplied with a circuit directory.

2.16.2.2 Panelboards shall be suitable for 208Y/120 volt, three phase, four wire or 480Y/277 volt, three phase, four wire service.

2.16.2.3 Panelboards shall be listed by Underwriters Laboratory and bear the UL label.

2.16.3 Distribution Transformers

2.16.3.1 Three Phase Transformer

Distribution transformers shall be indoor, dry-type in accordance with UL 1561, with 480 volt delta-connected primaries. Secondaries shall be 208Y/120 volt, three phase, with the neutral solidly grounded. Each transformer shall have four 2-1/2 percent full capacity primary taps, two above and two below rated nominal voltage.

2.16.3.2 The ratings of three phase distribution transformers shall be standardized at 15, 30, 45 and 75 kVA.

2.16.3.3 Whenever possible, transformers shall be located adjacent to their associated panelboards.

2.16.4 Lighting

2.16.4.1 Exterior lighting

2.16.4.1.1 Building exterior lights shall be provided for personnel entrances/exits and walkways.

2.16.4.1.2 Building exterior lights shall be operated at 277 volts from a 480/277 volt, three phase, four wire supply.

2.16.4.1.3 Low pressure sodium lighting shall be used for exterior lighting.

2.16.4.1.4 Illumination levels shall comply with IES Handbook illuminance values for building exteriors.

2.16.4.1.5 The exterior lighting system shall be controlled by photocells.

2.16.4.1.6 Low pressure sodium fixtures shall have high power factor ballasts in accordance with ANSI C82.9 integral with the fixture.

2.16.4.1.7 Fixtures for outdoor lighting shall be labeled "Suitable for Wet Locations" in accordance with NFPA 70, Article 410-4 and shall meet the requirements of UL 50 for rain-tight enclosures.

2.16.4.1.8 Low pressure sodium lamps shall be in accordance with ANSI C78.41.

2.16.4.2 Interior Lighting

2.16.4.2.1 Interior lighting shall consist of the following systems:

A. Normal lighting consisting of general lighting, to provide a uniform level of illumination throughout the work area.

B. Emergency lighting to provide illumination for access/egress lighting, including exit signs, when normal system is inoperative. This system shall be supplied by means of individual battery pack fixtures with signal lights and test buttons, and shall comply with NFPA 101 and NFPA 70, Article 700.

2.16.4.2.2 277 volt fluorescent fixtures shall be used throughout the OAB interior. High pressure sodium lighting shall be used in high bay storage areas.

2.16.4.2.3 Fluorescent lighting shall be installed to provide a minimum footcandle level as indicated below by area:

2.16.4.2.4 Illumination levels shall comply with the following:

| Room | Foot Candles At 30 inches Above Floor (Unless Noted Otherwise) |
|---|---|
| Class Room/Model Room/Office | 75 |
| Conference Room | 50 |
| Corridors and Stairways | 20 |
| Closets | 5 |
| Lunch/Restrooms | 30 |
| Maintenance | 50 |
| Warehouse/Storage | 15 |
| Dock | 20 at Dock Floor Elevation |

2.16.4.2.5 Fluorescent lamps shall be 40 watt F40CW/RS, T-12 in accordance with ANSI C78.1C. Ballasts shall be high power factor in accordance with ANSI C82.1.

2.16.4.2.6 Lighting shall be controlled by local switches. Conference rooms shall be controlled by multi-level switching to facilitate presentations.

2.16.4.2.7 Exit signs shall be tritium filled, self-luminous type. Fixture shall be tamper-proof with a 10 year life expectancy.

2.16.4.2.8 Emergency lighting fixtures shall be heavy duty industrial emergency lighting units, with 90 minute, 12 volt, maintenance-free battery, automatic charger, test switch and charge monitor light, dual lamp heads and shall be in accordance with UL 924.

2.16.4.2.9 Emergency lighting fixtures shall be operated at 277 volts from a 480/277 volt, three phase, four wire supply.

2.16.4.2.10 High pressure sodium lighting fixtures shall be industrial pendant type with integral ballasts and shall comply with UL 1572.

2.16.4.2.11 High pressure sodium lamp ballasts shall be high power factor in accordance with ANSI C82.9, ANSI C82.4, and UL 1029.

2.16.4.2.12 High pressure sodium lamps shall be in accordance with ANSI C78.38.

2.16.5 Receptacles

2.16.5.1 Convenience receptacles shall be general grade, NEMA 5-20R, two-pole, three-wire, grounded type, rated 20 amperes at 120 Vac.

2.16.5.2 Receptacles shall be provided for OAB equipment as required. Equipment locations to be verified.

2.16.5.3 Convenience receptacles shall be provided throughout the facility as required for specific services and for general maintenance. Each office and cubical shall be provided with two convenience receptacles.

2.16.5.4 Maximum spacing of receptacles along walls and on columns shall be 12 feet.

2.16.5.5 A maximum of six duplex receptacles shall be connected to one 20 ampere branch circuit. Branch circuit loading shall be calculated in accordance with NFPA 70, Article 220-3.

2.16.5.6 Mounting height for the receptacles shall be 12 inches from the floor to the centerline of the receptacle.

2.16.5.7 Ground fault circuit interrupter receptacles shall be provided as specified in NFPA 70, Article 210-8 and in accordance with UL 943.

2.16.5.8 Receptacles under computer floor shall be waterproof.

2.16.5.9 Open bay area office receptacles shall be fed from the ceiling using floor-to-ceiling channel poles.

2.16.6 Telephone and Data Communications

2.16.6.1 Each office shall be provided with a minimum of two combination telephone/LAN receptacles. Where two offices are adjoining, one receptacle shall be provided in each office on the common wall.

2.16.6.2 Conduit capacity shall be provided for telephone and LAN installation. Conduit shall be routed from individual receptacles to the ceiling space.

2.16.6.3 Open bay area offices shall be provided with a minimum of two combination telephone/LAN receptacles, fed from the ceiling using floor-to-ceiling channel poles.

2.16.6.4 Provide two (2) 4 foot by 8 foot telephone backboards for communication interface. Locate backboards in the OAB telephone equipment rooms.

2.16.6.5 The construction telephone interface cabinet, shown for reference on the Contract Drawings (Civil), is sized for the communication requirements of the OAB during construction.

2.16.6.6 Provide two (2) 120 volt circuits to the telephone equipment room. Provide a double duplex receptacle below each telephone backboard.

2.16.6.7 A minimum of one telephone receptacle shall be provided in all normally occupied rooms and work areas.

2.16.7 Public Address System

Provide 3/4 inch conduit and 4 inch square backboxes for the future public address system, to cover all spaces.

2.16.8 Raceway Systems

2.16.8.1 General Raceway Requirements

Electrical wiring shall be enclosed in adequately sized raceway systems. The maximum fill of any conduit or raceway shall not exceed the limits established in NFPA 70.

2.16.8.2 Underground Installation

Provide rigid steel conduit encased in concrete for permanent power, telephone and LAN circuit entry into the OAB. Extend stub-outs 6 feet beyond the boundary of the OAB. Rigid steel conduit shall be in accordance with UL 6. Stub-outs shall be shown on Seller's drawings and shall be located by dimension and elevation.

2.16.8.3 Aboveground Conduit and Raceway

Aboveground conduit shall be intermediate metal conduit (IMC) in accordance with UL 1242. The minimum conduit size shall be 3/4 inch.

2.16.9 Wire and Cable

2.16.9.1 Single Insulated or Bare Conductors

2.16.9.1.1 Conductors for electrical systems shall be copper.

2.16.9.1.2 Conductors for power and lighting circuits shall not be smaller than No. 12 AWG. Conductors for control circuits shall not be smaller than No. 14 AWG. No. 10, 12 and 14 AWG conductors shall be solid and No. 8 AWG conductors and larger shall be stranded.

2.16.9.1.3 Conductors for power and lighting circuits shall be rated 600 volts type THW, XHHW or THWN in accordance with NFPA 70, Article 310 and UL 44. Insulation for 90°C cable shall be type RHH, THHW or THHN. Cable insulation shall be rated for environment in which it is installed.

2.16.9.1.4 Bonding and grounding conductors shall be ASTM B1 solid copper for No. 8 AWG and smaller and ASTM B8 Class B stranded copper for No. 6 AWG and larger. Bonding and grounding conductors shall be type THW, XHHW or THWN.

2.16.10 Grounding

2.16.10.1 Grounding System

A grounding system shall be provided to:

A. Ensure safety to personnel and equipment in case of electrical equipment failure.

B. Provide connection to ground for transformers, and other power system neutrals.

C. Provide a low impedance path for ground fault currents to assure prompt and consistent action of protective devices.

2.16.10.2 Grounding Materials and Methods

The grounding system shall conform to NFPA 70, Article 250 and IEEE 142.

2.16.10.2.1 Raceway systems shall not be used as the ground path. Separate ground conductors shall be provided.

2.16.10.2.2 Building ground grid shall consist of a 5/8 inch galvanized steel cable loop within the soil outside the building perimeter and 2/0 AWG copper cables within the building slab.

2.16.10.2.3 Metal enclosures shall be grounded with #2 AWG copper wire taps off the building ground grid.

2.16.10.2.4 Two 5/8 inch galvanized steel pigtails shall be provided for connection to the permanent site ground grid by others.

2.16.11 Motor Starters

Motors between 1/2 and 300 horsepower shall be 480 volt, 3 phase. Combination motor starters shall be provided for 480 volt, 3 phase motors. Combination fused starters are not acceptable. The

combination starter assembly shall have a minimum short circuit rating of 30k amperes, RMS symmetrical. Where motor starters are in individual electrical enclosures, each starter shall include a 480-120 volt control power transformer. Where multiple starters and other control devices are contained in one electrical enclosure, a common control power transformer is permitted. Motor starter circuit breakers shall be motor circuit protector. Motor starters may be individual or motor control center mounted.

2.16.12 Disconnect Switches

Disconnect switches shall be fusible, 600/250 volt ac as required, 3 pole or 1 pole in a NEMA 12 surface mounted enclosure with ampere/fuse rating as required per equipment manufacturer's recommendation. Switches shall be in accordance with UL 98.

2.16.13 Shielded Isolation Transformers

2.16.13.1 Shielded isolation transformers shall be indoor, dry-type in accordance with UL 1561 with 480 volt delta-connected primaries. Secondaries shall be 480 volt wye-connected. Each transformer shall have four 2-1/2 percent full capacity primary taps, two above and two below rated nominal voltage. Transforms shall include electrostatic shield with ground wire.

2.16.13.2 The transformers shall be sized to isolate designated shop equipment.

2.16.13.3 Whenever possible, transformers shall be located adjacent to their loads.

**PART 3 EXECUTION**

(Not Used)

**END OF SECTION**

# ATTACHMENT A

(NOT USED)

9413151.0803

# ATTACHMENT F

(Not Used)

# ATTACHMENT G

(Not Used)

THIS PAGE INTENTIONALLY
LEFT BLANK

# ATTACHMENT H

## REQUIRED MINIMUM INSULATION VALUES

### TABLE I
INTERIOR (°)

| | STORAGE | WAREHOUSE | SHOP-KITCHEN | RESTROOM | PERSONNEL COMFORT | CHANGE ROOM | |
|---|---|---|---|---|---|---|---|
| ROOF | 50 | 55 | 65 | 68 | 72 | 75 | |
| LABORATORY | | | 16.00 | 16.86 | 18.00 | 18.86 | "R" |
| PROCESS INDUSTRIAL | | | 0.0625 | 0.0593 | 0.0556 | 0.0530 | "U" |
| PERSONNEL COMFORT | 10.86 | 12.29 | 14.86 | 16.00 | 17.14 | 17.71 | "R" |
| ONLY | 0.0921 | 0.0814 | 0.0673 | 0.0625 | 0.0583 | 0.0565 | "U" |

### TABLE II
INTERIOR (°F)

| | STORAGE | WAREHOUSE | SHOP-KITCHEN | RESTROOM | PERSONNEL COMFORT | CHANGE ROOM | |
|---|---|---|---|---|---|---|---|
| WALLS | 50 | 55 | 65 | 68 | 72 | 75 | |
| LABORATORY | | | 12.64 | 13.32 | 14.22 | 14.90 | "R" |
| PROCESS INDUSTRIAL | | | 0.0791 | 0.0751 | 0.0703 | 0.0671 | "U" |
| PERSONNEL COMFORT | 8.58 | 9.71 | 11.97 | 12.64 | 13.55 | 14.22 | "R" |
| ONLY | 0.1166 | 0.1030 | 0.0836 | 0.0791 | 0.0738 | 0.0703 | "U" |

## 1.0 DESIGN CALCULATIONS

1.0.1 General design calculations and load estimating procedures shall be based on data in the ASHRAE Handbook of Fundamentals and Tables I and II of page Attachment H-1.

1.0.1.1 **Heating**

The location annual heating degree-days shall be used for determining the minimum thermal resistance, per Tables I and II of page Attachment H-1.

1.0.1.2 **Cooling**

The opaque wall maximum "U" factor shall be determined by a method as presented in the ASHRAE Handbook of Fundamentals. The roof maximum "U" factor shall be determined by the heating criteria. (1.0.1.1, above.)

## 2.0 FEDERAL SPECIFICATIONS (FS)

- HH-I-545 Insulation, Thermal Aid and Acoustical (Mineral Fiber, Duct Lining Material)
- HH-I-551 Insulation Block and Boards, Thermal (Cellular Glass)
- HH-I-558 Insulation, Blocks, Boards, Blankets, Felt, Sleeving (Pipe and Tube Covering) and Pipe Fitting Covering, Thermal (Mineral Fiber, Industrial Type)

## 3.0 OUTSIDE AIR INTAKES

Outside air intakes should be located as high as possible above grade and preferably on north or east walls. Where the outside air intake is below 10 feet above grade, a low velocity "drop-out" area shall be considered inside the structure.

## 4.0 INSULATION

See Tables I and II, page Attachment H-1.

## 5.0 EQUIPMENT SELECTION

5.0.1 **Fans**

5.0.1.1 Fans shall be rated per the AMCA Standard and carry their seal of approval.

5.0.1.2 Each fan-motor-drive assembly shall be assembled at the factory and balanced at operating speed. Test results shall be furnished with the Certified Vendor Information Data. (Not required for small utility fans.)

5.0.1.3 Fan shall be selected at approximately its point of maximum mechanical efficiency. (This is an area of stable operation and best minimizes changes in operating conditions.)

5.0.1.4 The minimum motor size shall be specified and should be conservatively rated with considerations of non-standard air conditions and high ambient temperatures.

5.0.1.5 V-belt drives shall be selected for 120% of rating plus the addition of one extra belt.

5.0.1.6 Axial flow fans require close attention to noise considerations and should not generally be used.

5.0.2 **Filters**

5.0.2.1 General

A permanently installed means for measuring the differential pressure across each filter stage shall be provided in all filter assemblies 5000 CFM or larger, or where specified. With proper valving and piping, one gage may service several adjacent stages.

5.0.2.2 Filter Banks

Access doors of convenient size shall be provided in the casing and as great a working depth as possible shall be provided for servicing. (Minimum of 3 feet is recommended.)

5.0.3 **Coils**

5.0.3.1 General

5.0.3.1.1 Casings shall be designed to provide a uniform air velocity across the face of the coil.

5.0.3.1.2 Casings and piping shall be designed to allow for expansion and contraction to prevent stresses at the coil connections.

5.0.3.1.3 Stacked coils shall be supported individually in a structural framework to facilitate individual coil removal without disturbing adjacent coils.

5.0.3.2 Cooling Coils

5.0.3.2.1 Provisions shall be made for collecting and removing moisture condensed on cooling coils. Entrained water shall be prevented from being carried down the ductwork.

5.0.3.2.2 On direct expansion coils, control shall be provided to prevent the condensed moisture from freezing. Most problems occur at light load.

5.0.3.2.3 Maximum face velocity shall be 600 FPM for personnel comfort and 450 FPM for technical or complex application. See Attachment N, Section 1550-2.5.4 for more details.

5.0.4 **Controls**

5.0.4.1 All heating, ventilating and air-conditioning systems require control. This control shall be automatic unless otherwise specified.

5.0.4.2 Flow controllers should be considered for applications such as laboratories with exhaust hoods where different modes of operation can affect flow conditions.

5.0.4.3 Differential pressure controllers, dampers, and variable volume/pressure fans should be considered when it is necessary to maintain spaces at different static pressures.

5.0.4.4 Automatic temperature devices for personal comfort shall have a minimum control range between 67°F and 81°F within the parameters indicated in ASHRAE 55 and normally 72°F to 78°F as indicated in Attachment N, Section 1550-1.2.2.

5.0.5 **Refrigeration Systems**

The cooling capacity in BTUH of a refrigeration system should be specified in addition to the capacity of the individual components and the responsibility for performance shall rest on one contractor.

6.0 **BALANCING**

6.0.1 The balancing of the air handling system shall be accomplished in such a manner that each space is receiving its designed air supply and proper differential pressures are established between zones.

For balancing procedures reference the SMACNA balancing manual or industrial ventilation manual.

6.0.2 Air flow rates should not be restricted to less than the nearest 5 CFM for small flows and 10 CFM for larger flows. A plus or minus 5% variation from desired individual outlet air flow rates is considered a very good balance job, the system design shall accommodate these variations.

THIS PAGE INTENTIONALLY
LEFT BLANK

# ATTACHMENT B

## CONDUIT, CABLE TRAY AND WIRE IDENTIFICATION

**POWER/CONTROL**

---

**INSTRUMENTATION AND COMMUNICATIONS**

## ATTACHMENT B

## CONDUIT, CABLE TRAY AND WIRE IDENTIFICATION

**LIGHTING AND HEAT TRACING**

**ALTERNATIVE LIGHTING AND HEAT TRACING**
(LUMP SUM CONTRACTS)

# ATTACHMENT B

## CONDUIT, CABLE TRAY AND WIRE IDENTIFICATION

**TABLE NO. 1 CONDUIT OR CABLE**

| | | |
|---|---|---|
| A | - | Shutdown and Control (24 Vdc) |
| C | - | Control, Alarm, Shutdown (120ac) |
| D | - | 125V D.C. Circuits and Shutdown |
| E | - | Exciter Leads |
| F | - | Fire Alarm |
| K | - | Communication |
| M | - | Metering CT Leads |
| P | - | Power 600V and Below |
| Q | - | Power Above 600V |
| R | - | Resistance Temperature Detector (RTD) |
| X | - | Electronic Circuits (10-Soma, 4-Zona, 1-5MA |
| Y | - | Thermocouples |

**TABLE NO. 2 TRAY, CONDUIT OR CABLE SYSTEM NUMBER**

| | | |
|---|---|---|
| 31 | - | Primary Elect. |
| 32 | - | Normal Elect. Distribution |
| 33 | - | Standby Elect. Distribution |
| 35 | - | DC |
| 36 | - | Emergency Elect Distribution |
| 65 | - | Communication |

**TABLE NO. 3 TRAY USE LEGEND**

| | | |
|---|---|---|
| IT | - | Instrument |
| TT | - | Thermocouple |
| CT | - | Control, Communication |
| HT | - | High Voltage Above 600V |
| LT | - | Low Voltage 600V and Below |
| TO | - | 24Vdc Circuits |

**FIRE ALARM**

# ATTACHMENT A

(Not Used)

9413151.0904

## ATTACHMENT B

## CONDUIT, CABLE TRAY AND WIRE IDENTIFICATION

**POWER/CONTROL**

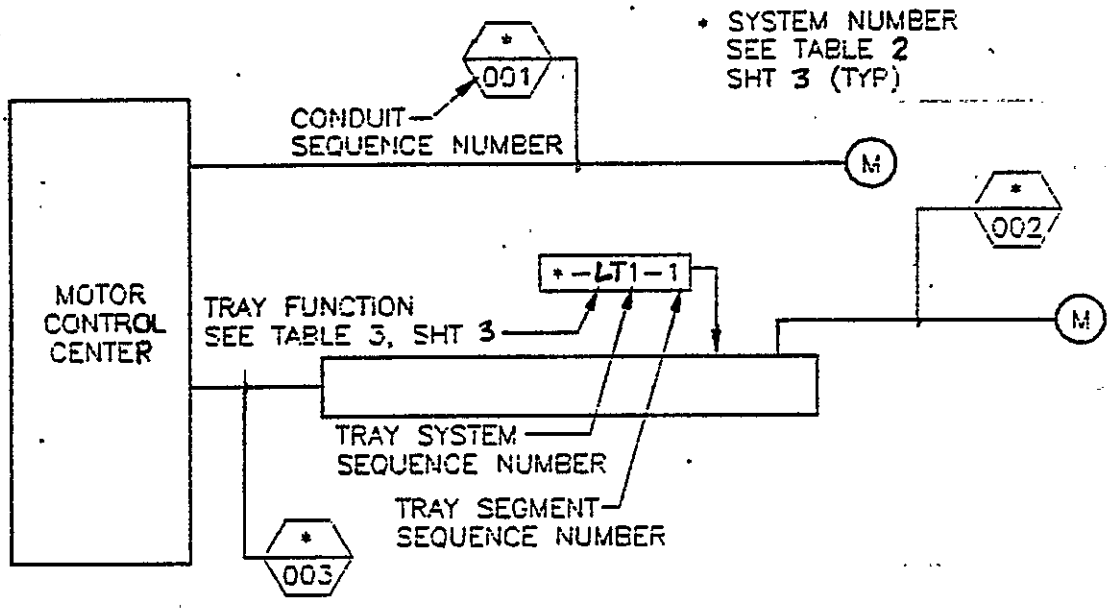


**INSTRUMENTATION AND COMMUNICATIONS**

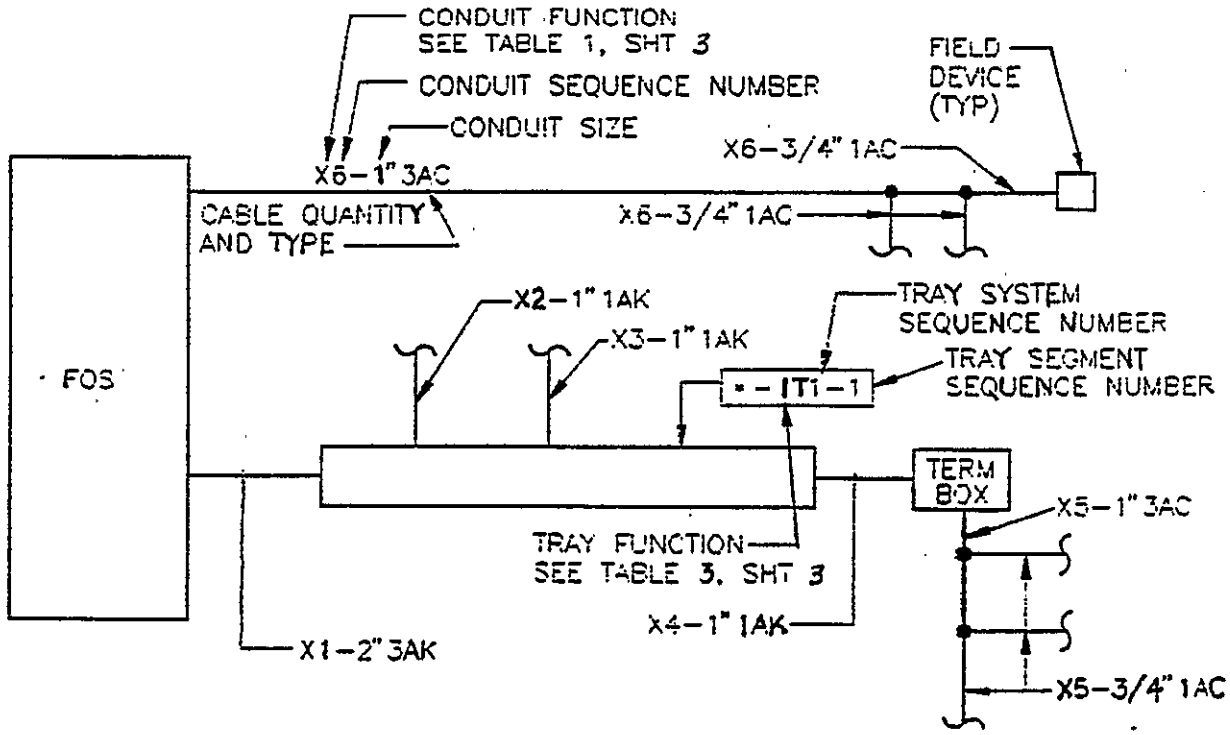


ATTACHMENT B

## ATTACHMENT B

## CONDUIT, CABLE TRAY AND WIRE IDENTIFICATION

**LIGHTING AND HEAT TRACING**

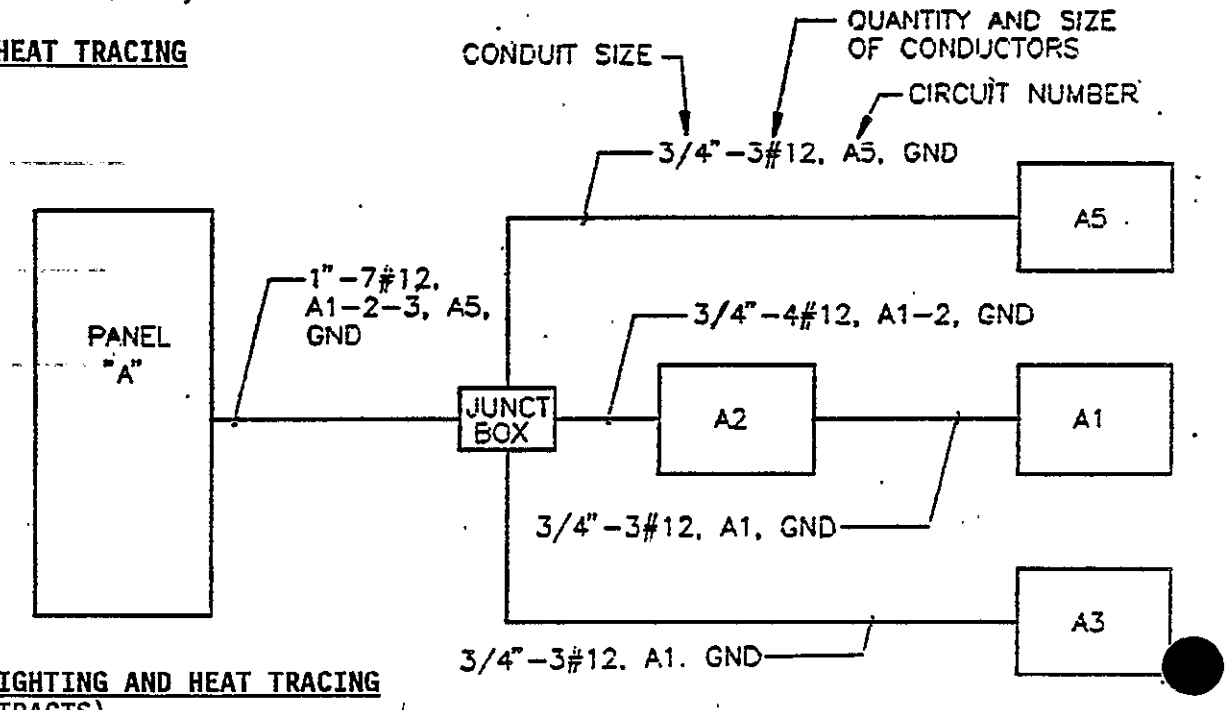


**ALTERNATIVE LIGHTING AND HEAT TRACING**
(LUMP SUM CONTRACTS)

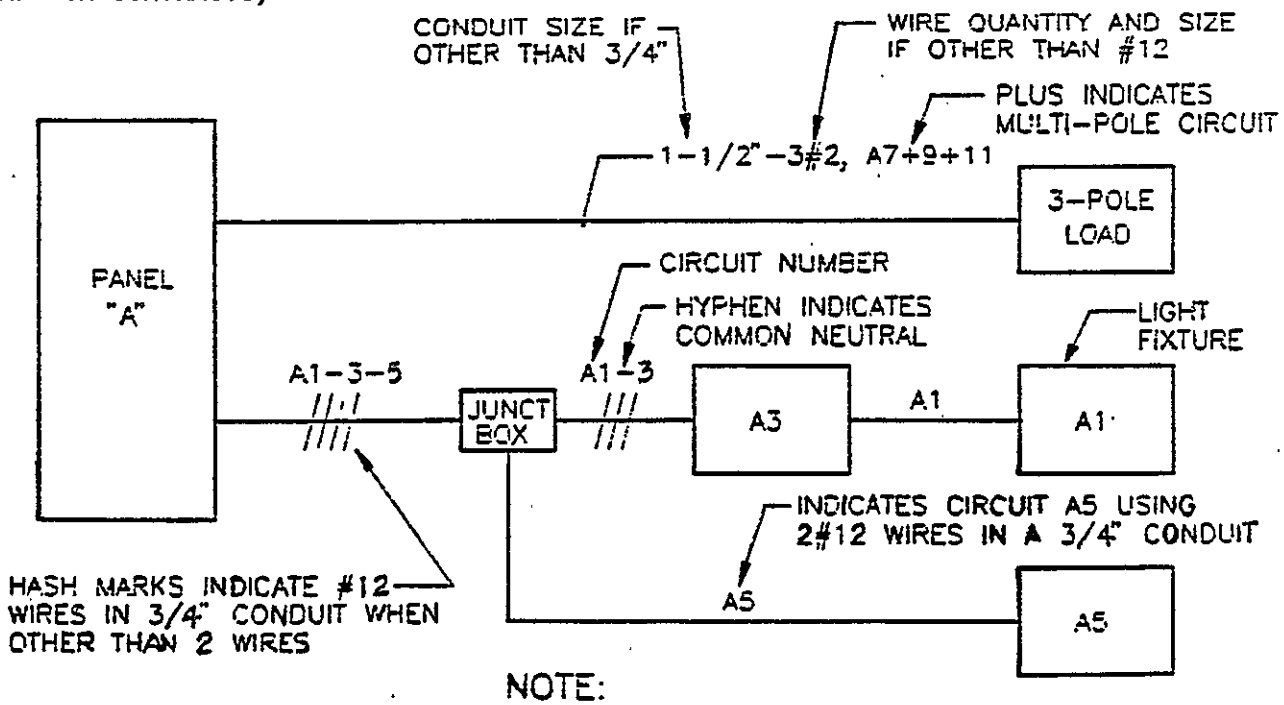


NOTE:
GROUND WIRE AND CONDUIT SHALL BE SIZED ACCORDING TO THE NATIONAL ELECTRICAL CODE

# ATTACHMENT B

## CONDUIT, CABLE TRAY AND WIRE IDENTIFICATION

### TABLE NO. 1 CONDUIT OR CABLE

| | | |
|---|---|---|
| A | - | Shutdown and Control (24 Vdc) |
| C | - | Control, Alarm, Shutdown (120ac) |
| D | - | 125V D.C. Circuits and Shutdown |
| E | - | Exciter Leads |
| F | - | Fire Alarm |
| K | - | Communication |
| M | - | Metering CT Leads |
| P | - | Power 600V and Below |
| Q | - | Power Above 600V |
| R | - | Resistance Temperature Detector (RTD) |
| X | - | Electronic Circuits (10-Soma, 4-Zona, 1-5MA |
| Y | - | Thermocouples |

### TABLE NO. 2 TRAY, CONDUIT OR CABLE SYSTEM NUMBER

| | | |
|---|---|---|
| 31 | - | Primary Elect. |
| 32 | - | Normal Elect. Distribution |
| 33 | - | Standby Elect. Distribution |
| 35 | - | DC |
| 36 | - | Emergency Elect Distribution |
| 65 | - | Communication |

### TABLE NO. 3 TRAY USE LEGEND

| | | |
|---|---|---|
| IT | - | Instrument |
| TT | - | Thermocouple |
| CT | - | Control, Communication |
| HT | - | High Voltage Above 600V |
| LT | - | Low Voltage 600V and Below |
| OT | - | 24Vdc Circuits |

**FIRE ALARM**

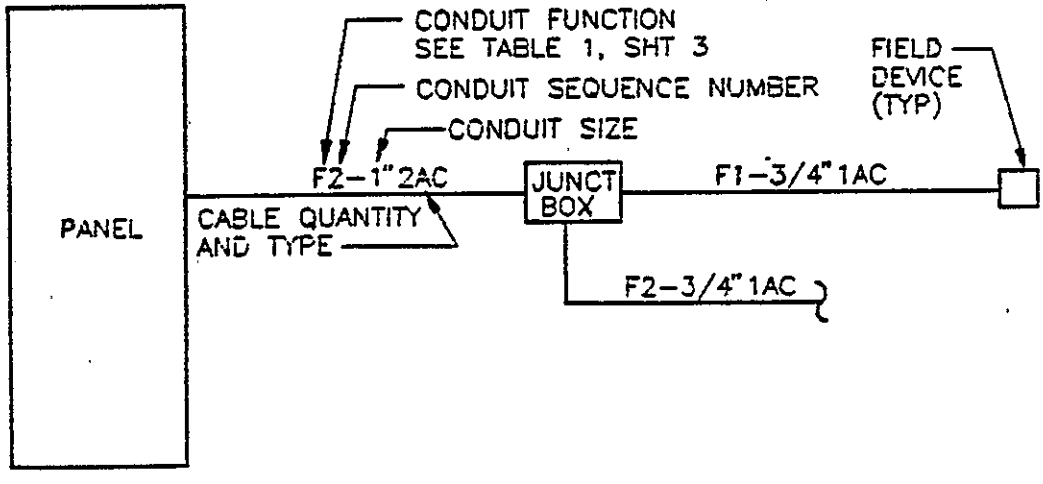

THIS PAGE INTENTIONALLY
LEFT BLANK

# ATTACHMENT C

## STANDARD SPECIFICATION FOR IDENTIFICATION OF PIPING SYSTEMS

1.0 **GENERAL**

The identification of piping systems shall be in accordance with American Standard Scheme for the Identification of Piping Systems, ANSI A13.1, as supplemented herein.

2.0 **LOCATION**

2.0.1 Except as provided below, identification shall be located adjacent to outlets, valves, flanges, unions, changes-in-direction, where pipes pass through walls, floors, or ceilings, and along an uninterrupted length of pipe at maximum intervals of 50 feet. Each line or branch in a room shall have at least one identification.

2.0.2 Where a number of outlets, valves, flanges, unions, or changes of direction make identification at each item impracticable, they may be spaced at approximately 6 foot intervals, preferably adjacent to valves.

2.0.3 For WATER SPRINKLER FIRE PROTECTION SYSTEMS, only feed mains, cross mains, and risers 3-inch nominal diameter and larger shall be identified. Line identification shall be located at test and drain valves; on each side of partitions, floors, and ceilings; and along uninterrupted lengths of pipe at maximum intervals of 50 feet. For other types of fire protection systems, identification shall be located as specified in Paragraph 2.A.

2.0.4 Legend shall be located on the pipe so that it can be read easily from the operator's normal viewing position. Labels shall be placed on the readily visible lower quadrant of overhead pipes, and on an upper quadrant of pipes below normal eye level. Above ceilings, labels shall be placed in locations most readily visible from access positions.

3.0 **LEGEND**

3.0.1 Positive identification of a piping system content shall be by lettered legend giving the name of the content in full or abbreviated form. Legends may also be as specified on drawings or in other specifications.

3.0.2 Abbreviation of words in the legend may be used only where unavoidable due to space limitations.

3.0.3 The legend shall include the nominal operating pressure for steam, compressed air, and, when specified, the pressure or temperature for other materials.

3.0.4 Legend for refrigerant shall include the number of the refrigerant; for example, Refrigerant 12.

3.0.5 An arrow indicating the direction of flow shall be placed near the legend on pipes normally having a flow in one direction only. The color and size of the arrow shall be consistent with the color and size of the legend letters.

3.0.6 Legend shall be located on or adjacent to the classification color band.

4.0 **APPROVED LABELS**

4.0.1 Legend and color classification may be accomplished by the use of approved labels conforming to this Standard Specification and which are suitable for the temperature of the surface to which they are to be applied. Approved labels include the following:

ALL-TEMPERATURE PIPE MARKERS
W.H. Brady Company
727 West Glendale Avenue
Milwaukee, Wisconsin 53201

4.0.2 Single-word labels may be combined to form complete legends. Individual letter labels shall not be so combined.

4.0.3 Labels shall be installed after painting is complete.

5.0 **CLASSIFICATION COLOR**

5.0.1 When use of classification colors is specified, they shall conform to Table I.

**TABLE I**

| CLASSIFICATION | BAND OR LABEL COLOR | LEGEND/ ARROW COLOR | APPROXIMATE COLOR NO. PER FEDERAL STD. NO. 595 |
|---|---|---|---|
| Fire Protection | Red | White (17875) | 11105 (red) |
| Dangerous | Yellow | Black (17038) | 13655 (yellow) |
| Safe | Green | Black (17038) | 14260 (green) |
| Life Support | Blue | White (17875) | 15102 (blue) |

5.0.2 Classification colors for commonly used materials shall conform to Table II, following:

**TABLE II**
**CLASSIFICATION COLORS FOR COMMONLY USED MATERIALS**

| MATERIAL | COLOR | MATERIAL | COLOR |
|---|---|---|---|
| Acetylene | Yellow | Nitrogen-Hydrogen, Mixed | Yellow |
| Air | Green* | Oil, Fuel | Yellow |
| Air, Breathing | Blue | Oil, Hydraulic | Yellow |
| Ammonia | Yellow | Oil, Tempering | Green# |
| Argon | Green* | Oxalic Acid | Yellow |
| Boiler Blow-Off | Yellow | Oxygen | Yellow |
| Boiler Feed Water | Yellow | Phosphoric Acid | Yellow |
| Brine, Sodium Chloride | Green# | Propane | Yellow |
| Butane | Yellow | Sewer, Chemical Waste | Yellow |
| Carbon Dioxide, Fire | Red | Sewer, Contaminated | Yellow |
| Carbon Dioxide, Process | Yellow | Sewer, Sanitary | Yellow |
| Carbon Tetrachloride | Yellow | Sodium Carbonate | Green# |
| Chemical Feed, Phosphate | Yellow | Sodium Dichromate | Green# |
| Chemical Feed, Sulphite | Yellow | Sodium Hydroxide | Yellow |
| Chlorine | Yellow | Sodium Silicate | Green# |
| Condensate | Yellow | Sodium Thiosulfate | Yellow |
| Refrigerant | Green* | Steam | Yellow |
| Gasoline | Yellow | Sulfur Dioxide | Yellow |
| Glycol, Ethylene | Green# | Sulfuric Acid | Yellow |
| Helium | Green* | Vacuum, Air Sampling | Yellow |
| Hydrochloric Acid | Yellow | Vacuum, Laboratory | Yellow |
| Hydrofluoric Acid | Yellow | Vacuum, Process | Yellow |
| Hydrofluoric Acid Gas | Yellow | Water, Distilled | Green# |
| Hydrogen | Yellow | Water, Fire Protection | Red |
| Hydrogen Iodide | Yellow | Water, Hydraulic | Green# |
| Methane | Yellow | Water, Process | Green# |
| Mixed Acid | Yellow | Water, Raw | Green# |
| Nitric Acid | Yellow | Water, Safety Shower | Green |
| Nitrogen | Green* | Water, Sanitary | Green# |
| | | Water, Hot Sanitary | Yellow |

* Yellow for pressure above 30 psig
\# Yellow for pressure above 125 psig

# ATTACHMENT D

(Not Used)

# ATTACHMENT E

## PREPARATION AND CONTROL OF ENGINEERING AND FABRICATION DRAWINGS

1.0 **DRAWING CATEGORIES**

1.0.1 **General**

1.0.1.1 Drawings fall under two categories: the "SK and "H" series drawings. These series consist of conceptual, modification, prototype, construction, fabrication and non-fabrication drawings, which in turn include different types of drawings (e.g., arrangement, assembly, detail, schematic, wiring diagram, block diagram, flow diagrams, installation, layout, plot plan, P&ID, loop sheets, envelope, altered item, etc.). This list of drawing types is not restrictive and other types not identified may be used if necessary.

1.0.1.2 "SK" or "H" drawing numbers shall be issued and controlled by the Records Storage/Retrieval and Microfilming Group.

1.0.1.3 "SK" or "H" designation shall be assigned by the originator in accordance with these criteria.

1.0.2 **H- Series Drawings**

H- series drawings shall be prepared to depict permanent installation of facilities, hardware and equipment. These drawings are permanent records, and as such they may be subject to as-built requirements upon completion of construction or fabrication.

1.0.3 **SK- Series Drawings**

1.0.3.1 SK- series drawings shall be prepared as temporary drawings and shall depict:

a. experimental equipment

b. limited use test equipment

c. limited use interface information (i.e., Conceptual Designs, etc.)

d. short-term application (i.e., temporary changes in design to facilities, hardware and/or equipment)

e. design criteria to equipment vendors

1.0.3.2 SK- series drawings shall not be used for permanent records. If the SK- is used for a prototype which is incorporated into a permanent facility, it shall be "As-Built" and renumbered as an H-drawing (see Section 12.0).

NOTE: SK numbers shall NOT be changed to H numbers by changing the SK to H; complete new numbers are assigned.

1.0.3.3 SK drawings used for conceptual designs or to convey design criteria to equipment vendors shall be identified as conceptual or Vendor Information using 1/4-inch lettering immediately above the title block.

1.0.4 Drawings depicting the final design of vendor supplied equipment may be required by procurement documents to be assigned H- series numbers and to be prepared in accordance with these criteria. Such drawings not assigned H- series numbers may utilize the vendor's numbering system and shall be certified by the vendor as "As-Built" and shall be assigned a vendor information (VI) number and shall reside in the VI file maintained by the Record Storage/Retrieval and Microfilming Group.

## 2.0 DRAWING SIZE

2.0.1 Five standard sheet sizes, listed below, shall be used for drawings in accordance with ANSI Y14.1. The "F" size drawing is the preferred size.

| Size | Dimensions in Inches |
|---|---|
| A | 8-1/2 x 11 |
| B | 11 x 17 |
| C | 17 x 22 |
| D | 22 x 34 |
| F | 28 x 40 |

## 3.0 DRAWING MATERIAL

3.0.1 CAD drawing material shall be 3-mil minimum drafting film, matte on one side, or 100% rag vellum, 17 pound minimum.

## 4.0 DRAWING ARRANGEMENT

4.0.1 The general drawing arrangement shall conform to ANSI Y14.1, except for the location of the parts list or list of materials and the revision block. Additional spaces have been reserved for Hanford unique items.

4.0.2 All drawings, including continuation sheets (multiple sheet) shall have a complete title block (see Section 7.0. Title Block).

4.0.3 Drawing components, when required, shall be arranged as shown in Figure 1 and as defined in these criteria.

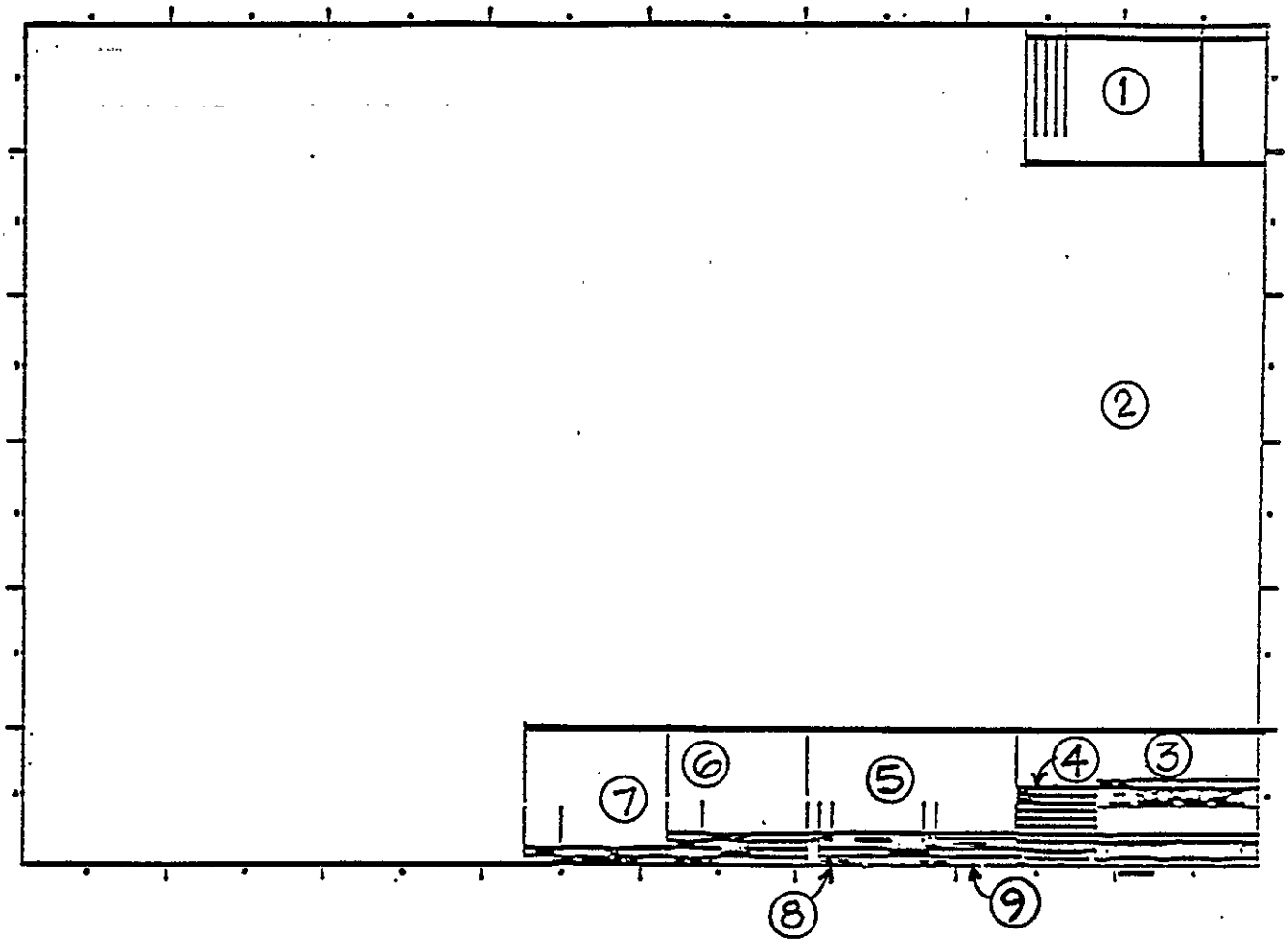


Figure 1. Drawing Arrangement

4.0.3.1 **Parts List or List of Material**

Parts lists or lists of material shall be utilized on fabrication and assembly drawings, when appropriate. Parts lists may be arranged according to individual contractor procedures and Section 11.0. Suggested width of Parts Lists having one quantity column is 7-1/2 inches; added columns may be used as necessary.

4.0.3.2 **General Notes**

Location indicated is the preferred position, but another location may be used if parts list or drawing geometry extend into this area. On multiple sheet drawings general notes start on Sheet 1 but may be continued on subsequent sheets.

4.0.3.3 **Drawings Status Marking (Optional)**

This space is reserved for tracking drawing status from initiation to release in accordance with individual contractor procedures.

4.0.3.4 **Title Block**

The title block shall be sized and configured as indicated in Section 7.0, Title Block.

4.0.3.5 **Revisions**

The revision block is sized and configured as indicated in Section 8.0, Revisions.

4.0.3.6 **References**

See Section 9.0, Reference Block.

4.0.3.7 **Drawing Traceability (Optional)**

A drawing traceability list is utilized according to individual contractor procedure and shall be configured as indicated in Section 10.0, Drawing Traceability List.

4.0.3.8 **Cadfile**

The Computer Aided Design File (CADFILE) designator is a unique file identification code which is assigned to each CAD data set to allow cross-referencing of CAD plots to specific data sets. The CADFILE designator shall be placed on all CAD data sets prior to plotting and shall be located according to Section 4.0 of these criteria. The designator shall consist of eight (8) characters and shall be formatted as indicated below. Nine (9) characters are permitted for drawings with numbers containing six (6) digits when two alpha characters are required to designate the sheet number and when the drawing is generated on equipment that allows a nine character file name.

| | | |
|---|---|---|
| EXAMPLES: | H-2-27918, SH7 | H-5-498, SH 32 |
| | B027918G - OK CADFILE | E00498JA - OK CADFILE |
| | B27918G - BAD CADFILE | E0498JA - BAD CADFILE |

H-4-176541, SH 28

| | | |
|---|---|---|
| D176541EA | - | OK CADFILE on systems with 9- character capacity |
| D176541E | - | BADCADFILE cannot be done on systems imposing an 8-character limit. |

<u>WARNING!!!</u> DATA SETS WITH 9-CHARACTER CADFILE NUMBERS <u>ARE NOT TRANSFERABLE</u> TO SYSTEMS WITH 8-CHARACTER LIMIT.

CADFILE designators shall be established in accordance with the following convention:

X XXXXXX X

**SHEET NUMBER** Sheet Numbers 1 through 23 are identified by a single alpha character corresponding to the sheet number in the first number column of the Drawing Sheet Identification Convention matrix below. A second alpha character is required to identify Sheets 24 through 529. This two-letter identifier is established by locating the sheet number in the matrix, establishing the first letter from the vertical alpha on the left and the second letter from the horizontal alpha at the top. This left identifier will be used on all systems for drawings having numbers of 5 or less digits. File naming limitations (8 characters) imposed by some systems make it impossible to identify drawings with 6-digit numbers and 24 or more sheets using this system. If more than 23 sheets are required for a drawing with a 6-digit number on systems so limited, additional drawing numbers shall be utilized.

**DRAWING NUMBER** (Minus area designator, i.e., H-2, etc.) The drawing number generally includes six (6) digits. Leading zeros are used when a drawing number is less than 6 digits. An exception is made when the drawing number is 5 digits and the drawing consists of more than 23 sheets. In this case the sheet number code consists of 2 alpha characters and the drawing number may be 5 digits.

**AREA DESIGNATOR** The area designator is an alpha character assigned based on the first 2 or 3 characters of the drawing number used to identify a drawing with a particular area or facility. Area designators are assigned from the following:

| Alpha Character | Area Designator |
|---|---|
| A | H-1 |
| B | H-2 |
| C | H-3 |
| D | H-4 |
| E | H-5 |
| F | H-6 |
| G | H-7 |
| H | (Reserved) |
| I | Not Used |
| J | H-8 |
| K | H-9 |

| Alpha Character | Area Designator |
|---|---|
| L | H-11 |
| M | H-12 |
| N | SK-12 |
| O | Not Used |
| P | SK-11 |
| Q | SK-8 |
| R | SK-7 |
| S | Not Used |
| T | SK-6 |
| U | SK-5 |
| V | SK-4 |
| W | SK-3 |
| X | SK-2 |
| Y | SK-1 |
| Z | Reserved for non-released standard Hanford data sets |

**U.S. DEPARTMENT OF ENERGY**
Hanford Waste Vitrification Plant
Richland, Washington
DOE Contract DE-AC06-86RL10838

**FLUOR DANIEL, INC.**
Advanced Technology Division
Fluor Contract 8457

# DRAWING SHEET IDENTIFICATION CONVENTION MATRIX

| | | A | B | C | D | E | F | G | H | J | K | L | M | N | P | R | S | T | U | V | W | X | Y |
|---|---|---|---|---|---|---|---|---|---|---|---|---|---|---|---|---|---|---|---|---|---|---|---|
| A. | 1 | 24 | 47 | 70 | 93 | 116 | 139 | 162 | 185 | 208 | 231 | 254 | 277 | 300 | 323 | 346 | 369 | 392 | 415 | 438 | 461 | 484 | 507 |
| B. | 2 | 25 | 48 | 71 | 94 | 117 | 140 | 163 | 186 | 209 | 232 | 255 | 278 | 301 | 324 | 347 | 370 | 393 | 416 | 439 | 462 | 485 | 508 |
| C. | 3 | 26 | 49 | 72 | 95 | 118 | 141 | 164 | 187 | 210 | 233 | 256 | 279 | 302 | 325 | 348 | 371 | 394 | 417 | 440 | 463 | 486 | 509 |
| D. | 4 | 27 | 50 | 73 | 96 | 119 | 142 | 165 | 188 | 211 | 234 | 257 | 280 | 303 | 326 | 349 | 372 | 395 | 418 | 441 | 464 | 487 | 510 |
| E. | 5 | 28 | 51 | 74 | 97 | 120 | 143 | 166 | 189 | 212 | 235 | 258 | 281 | 304 | 327 | 350 | 373 | 396 | 419 | 442 | 465 | 488 | 511 |
| F. | 6 | 29 | 52 | 75 | 98 | 121 | 144 | 167 | 190 | 213 | 236 | 259 | 282 | 305 | 328 | 351 | 374 | 397 | 420 | 443 | 466 | 489 | 512 |
| G. | 7 | 30 | 53 | 76 | 99 | 122 | 145 | 168 | 191 | 214 | 237 | 260 | 283 | 306 | 329 | 352 | 375 | 398 | 421 | 444 | 467 | 490 | 513 |
| H. | 8 | 31 | 54 | 77 | 100 | 123 | 146 | 169 | 192 | 215 | 238 | 261 | 284 | 307 | 330 | 353 | 376 | 399 | 422 | 445 | 468 | 491 | 514 |
| J. | 9 | 32 | 55 | 78 | 101 | 124 | 147 | 170 | 193 | 216 | 239 | 262 | 285 | 308 | 331 | 354 | 377 | 400 | 423 | 446 | 469 | 492 | 515 |
| K. | 10 | 33 | 56 | 79 | 102 | 125 | 148 | 171 | 194 | 217 | 240 | 263 | 286 | 309 | 332 | 355 | 378 | 401 | 424 | 447 | 470 | 493 | 516 |
| L. | 11 | 34 | 57 | 80 | 103 | 126 | 149 | 172 | 195 | 218 | 241 | 264 | 287 | 310 | 333 | 356 | 379 | 402 | 425 | 448 | 471 | 494 | 517 |
| M. | 12 | 35 | 58 | 81 | 104 | 127 | 150 | 173 | 196 | 219 | 242 | 265 | 288 | 311 | 334 | 357 | 380 | 403 | 426 | 449 | 472 | 495 | 518 |
| N. | 13 | 36 | 59 | 82 | 105 | 128 | 151 | 175 | 197 | 220 | 243 | 266 | 289 | 312 | 335 | 358 | 381 | 404 | 427 | 450 | 473 | 496 | 519 |
| P. | 14 | 37 | 60 | 83 | 106 | 129 | 152 | 175 | 198 | 221 | 244 | 267 | 290 | 313 | 336 | 359 | 382 | 405 | 428 | 451 | 474 | 497 | 520 |
| R. | 15 | 38 | 61 | 84 | 107 | 130 | 153 | 176 | 199 | 222 | 245 | 268 | 291 | 314 | 337 | 360 | 383 | 406 | 429 | 452 | 475 | 498 | 521 |
| S. | 16 | 39 | 62 | 85 | 108 | 131 | 154 | 177 | 200 | 223 | 246 | 269 | 292 | 315 | 338 | 361 | 384 | 407 | 430 | 453 | 476 | 499 | 522 |
| T. | 17 | 40 | 63 | 86 | 109 | 132 | 155 | 178 | 201 | 224 | 247 | 270 | 293 | 316 | 339 | 362 | 385 | 408 | 431 | 454 | 477 | 500 | 523 |
| U. | 18 | 41 | 64 | 87 | 110 | 133 | 156 | 179 | 202 | 225 | 248 | 271 | 294 | 317 | 340 | 363 | 386 | 409 | 432 | 455 | 478 | 501 | 524 |
| V. | 19 | 42 | 65 | 88 | 111 | 134 | 157 | 180 | 203 | 226 | 249 | 272 | 295 | 318 | 341 | 364 | 387 | 410 | 433 | 456 | 479 | 502 | 525 |
| W. | 20 | 43 | 66 | 89 | 112 | 135 | 158 | 181 | 204 | 227 | 250 | 273 | 296 | 319 | 342 | 365 | 388 | 411 | 434 | 457 | 480 | 503 | 526 |
| X. | 21 | 44 | 67 | 90 | 113 | 136 | 159 | 182 | 205 | 228 | 251 | 274 | 297 | 320 | 343 | 366 | 389 | 412 | 435 | 458 | 481 | 504 | 527 |
| Y. | 22 | 45 | 68 | 91 | 114 | 137 | 160 | 183 | 206 | 229 | 252 | 275 | 298 | 321 | 344 | 367 | 390 | 413 | 436 | 459 | 482 | 505 | 528 |
| Z. | 23 | 46 | 69 | 92 | 115 | 138 | 161 | 184 | 207 | 230 | 253 | 276 | 299 | 322 | 345 | 368 | 391 | 414 | 437 | 460 | 483 | 506 | 529 |

### 4.0.3.9 CAD CODE

The CAD Code shall be placed on each CAD data set near the CAD file before the CAD drawing is plotted and will be referred to by CAD Operations personnel to control the migration of CAD datasets across systems used at Hanford. The CAD Code will contain the following information: The contractor and area, type of hardware, type of graphic software, and the revision of graphic software with a colon (:) used to distinguish each field of information. The format shall be as follows:

XX : XXX : XXXX : X . XXX : XX

**Revision of Graphic Software**

- Number of characters as required

**Font Designator**

- The font set designation shall be two (2) characters.
- 1st character shall be the line font designator
- 2nd character shall be the text font designator.
- The font set designator shall be as follows:

  S = Standard (vendor supplied)
  N = Nonstandard (contractor supplied)

**Type of Graphic Software**

- 4 Characters Max
- ACDX (AutoCAD)
- DDMX (Calma)
- EGSX (Hewlett Packard)
- GEOX (Calma GEODRAW)
- M1OX (Hewlett Packard)
- M3OX (Hewlett Packard)
- (FUTURE)

Fourth character shall be a "2" or "3" to indicate 2 or 3 dimensional drawing generation.

**Type of Hardware**

- 3 Characters Max.
- APL (Apollo)
- DEC (VAX)
- HP (Hewlett Packard)
- IBM (Including IBM Compatible)
- (FUTURE)

**Contractor and Area of Current Residence**

1 - Operations Engineering Contractor
2 - Engineer/Construction Contractor
3 - Research and Development Contractor
4 - Site Computer Services Contractor
5 - Fixed Price Contractor

A - 100 Area
B - 200E Area
C - 200W Area
D - 300 Area
E - 400 Area
F - 600 Area
G - 700 Area
H - 800 Area
J - 1100 Area
K - 3000 Area
L - Offsite

## 5.0 DRAFTING PRACTICE

5.0.1 Drafting practices shall be in accordance with ANSI Y14 series or other industry accepted drafting practices and the requirements of these criteria.

5.0.2 Abbreviations shall conform to ANSI Y1.1 except for the cases where commonly accepted industry or specific discipline usage dictates a deviation from ANSI Y1.1. Common abbreviations, such as TYP and REF, may be used at all times. Unusual abbreviations shall be used only when space is limited. Hanford Site specific abbreviations and acronyms shall be clearly defined on the design media.

5.0.3 Symbols shall conform to ANSI Y14.36, Y32.2, Y32.2.4, Y32.2.6, Y32.4, and Y32.9.

5.0.4 Drawings shall be prepared so that prints are legible when reduced on microfilm and then re-enlarged. As an example, parallel lines shall be spaced at least 1/16-inch apart to maintain distinction.

5.0.5 Where 20 or more drawings are prepared for a single project, a list of all drawings shall be made on a separate sheet showing the drawing number, index number(s) and drawing title. The drawing list shall be the first drawing in the project set. For between 10 and 20 drawings, a list shall be placed on the first drawing of the set. For multisheet drawings, the number of sheets shall be shown without repeating the rest of the information (e.g., H-I-12345, 6SH). Building numbers shall be included in drawing list when more than one building is involved in the project.

5.0.6 Lettering shall be all upper case gothic except where lower case is standard (e.g., Na, Km, g). Letters and figures shall be at least 1/8-inch high; see ANSI Y14.2M for recommended shape.

5.0.7 If typing is utilized on the drawings, it shall be all upper case of a bold, Gothic style and lines of type shall be a minimum of 1-1/2 spacing. In no case shall type be used with letter height of less than 0.1-inch.

5.0.8 A north arrow shall be placed on all maps, plans, layouts and other drawings where applicable. North shall generally be oriented to the top or left side of the sheet. All plans on a given set of drawings should be oriented the same and should match the existing plant drawing orientation.

5.0.9 The grid system used shall be identified on Site drawings. The coordinate grid system is assumed to be Hanford grid unless noted otherwise on the drawing.

5.0.10 Each drawing shall, as a minimum, show the project number, where applicable, and the names of the originator and the checker. The exception would be illustrations or figures in documents such as a Functional Design Criteria, an Engineering Study or an Engineering Change Notice.

5.0.11 Prior to submittal to another authority for approval, each drawing shall be independently checked and shall be approved by the responsible engineer. Each sheet shall be treated individually for checking and approval purposes, for the initial release, and for revisions.

5.0.12 Preprinted drafting film may be supplied to offsite companies. For large jobs, the offsite company may be permitted to use drafting film with the company name preprinted in the title block. Offsite companies using plant supplied drafting film shall place the name of their firm in the title block, replacing the existing company name.

## 6.0 COMPUTER AIDED DRAFTING

### 6.0.1 Identifier

The CAD-generated drawings shall have CADFILE and CADCODE identifiers. These identifiers shall be located below the revision block and within the border lines of the drawing. The location of the CADFILE and CADCODE identifiers is shown as Items 8 and 9 in Figure 1, Section 4.0.

### 6.0.2 Manual Modifications or Revisions of CAD-Generated Drawings

6.0.2.1 Manual changes or alterations to a CAD-generated drawing should be avoided. If an issued CAD-generated drawing is changed or altered manually, the CAD data set(s) shall be updated in accordance with normal contractor procedures. Obtaining approval signatures is not considered a change or alteration.

6.0.2.2 Drawings manually changed or altered shall have a single horizontal line drawn through the CADFILE and CADCODE identifiers. This signifies that the drawing has been manually updated and the data set(s) may not be up-to-date.

6.0.2.3 If data set(s) are lost or no longer exist and will not be replaced, the CADFILE and CADCODE identifiers shall be removed from the vault retained drawing(s) at the next manual revision.

## 7.0 TITLE BLOCK

7.0.1 Title blocks are to be in conformance with ANSI Y14.1. Contents identified in the title block shall be modified to accommodate Hanford requirements and individual contractor approval procedures. (See Figure 2 for typical title block).

7.0.2 Information shall be entered in the numbered blocks as follows:

| | | | | | |
|---|---|---|---|---|---|
| | | IMPACT LEVEL [10] | | EDT | |
| DRAWN [13] DATE | | [1] U.S. DEPARTMENT OF ENERGY<br>Richland Operations Office<br>(C O M P A N Y N A M E) | | | |
| CHECKED [14] | | | | | |
| [15] | | [2] | | | |
| | | | | | |
| | | PROJECT [3] | | | |
| | | SIZE F | BLDG NO. [4] | INDEX NO. [5] | DRAWING NO. [6] | REV NO. [7] |
| APPROVED FOR IMPLEMENTATION<br>BY<br>FOR [16] DATE | | SCALE [8] | JOB NO. [9] | SHEET [11] OF [12] | |

Figure 2. Title Block

1. **FIRM NAME**

2. **DRAWING TITLE**

   a. The title is to be brief but clearly identify the subject matter.

   b. The title is not to include the project or building number and includes the area number only for area-wide presentations.

   c. The total number of characters including spaces shall not exceed 60.

   d. Height of the lettering in the title shall be approximately 3/16- to 1/4-inch.

   e. The title shall be arranged in one, two or possibly three lines centered in the block. All sheets, of multiple sheet drawings, shall have the same title, except that the last line of the title may differ to describe the contents of each sheet.

f. The same title shall not be used on more than one drawing of a given project unless different buildings are involved. If drawing content is the same for two or more sheets, a multisheet drawing is appropriate.

3. **PROJECT (where applicable)**

The official project title preceded by the project number shall be utilized where applicable. Smaller jobs may have "project titles" assigned. Project titles shall be identified on all drawings in a set. Abbreviations may be used.

4. **BUILDING NUMBER**

Numbers for new facilities are maintained by Records Storage/Retrieval and Microfilm Group. Building numbers shall be assigned prior to drawing approval. Where applicable a drawing may show two or more building references. The references shall be separated by a slash (e.g., 405/409).

5. **INDEX NUMBERS**

Index numbers are listed in Section 15.0. A number shall be used for each major category and is required on each drawing. Nonessential numbers are not shown (e.g., 0801 and 0802 are not shown along with 0800 on a single drawing). Numbers shall be assigned to accurately represent drawing content. Multiple index numbers shall be separated by a slash (e.g., 3900/7301).

Offsite A-E/s obtain building index numbers from the appropriate contractor's Project Manager or Engineer.

6. **DRAWING NUMBER**

The drawing number shall be 1/4-to 3/8-inch high. Numbers are obtained from Records Storage/Retrieval and Microfilm Group.

7. **REV**

Current revision number shall be used. 0 shall be used for initial release.

8. **SCALE**

When the entire drawing is to the same scale, the scale shall be shown in this block. The word SHOWN shall be used where more than one scale appears on the sheet. The word NONE shall be used where a scale is not applicable (schematics, flow diagrams, etc.).

9. **JOB NO (OPTIONAL)**

The job number is assigned in accordance with individual contractor procedures to identify drawings prepared for a common effort or project. May be utilized to identify a funding source.

10. **IMPACT LEVEL (OPTIONAL)**

May be utilized to identify impact level of equipment or facility presented in accordance with individual company procedure.

11. **SHEET**

For single sheet drawings, a "1" shall be entered. For multisheet drawings, the sheets shall be numbered in sequence starting with 1.

12. **OF**

Enter total number of sheets. For single sheet drawings, a 1 shall be entered.

13. **DRAWN**

The initials and surname of the originator shall be written or printed in an individualistic style as long as they are legible.

14. **CHECKED**

The initials and surname of the checker shall be written and shall be legible

15. **APPROVALS**

Used for typical company internal approval. The content may be modified. The signatures shall include the initials and surname and must be legible. Approval signatures on CAD Generated Drawings may be placed adjacent to or above pre-printed names, where applicable.

16. **APPROVED FOR IMPLEMENTATION (AS APPLICABLE)**

The authorizing organization's identification shall be entered (normally an Operating Contractor) following his signature. This signature provides authorization to proceed with construction, procurement, or fabrication.

17. **ENGINEERING RELEASE (AS APPLICABLE)**

An authorized document number used to identify the formal release of a drawing.

8.0 **REVISIONS**

8.0.1 A revision block shall be sized in accordance with Figure 3 and located in accordance with Figure 1. Content may be modified according to individual contractor procedures.

| | | | | | | | |
|---|---|---|---|---|---|---|---|
| | | | | | | | |
| MF | REV NO. | DESCRIPTION | REV BY DATE | APPROVALS | | | |
| | REVISIONS | | | | | | |
| CADFILE | | | CADCODE | | | | |

SEE FIGURE 1 ITEM 8 SEE FIGURE 1 ITEM 9

Figure 3. Revision Block

8.0.2 Each new revision shall be listed in numerical sequence. Only Released (issued) drawings can be revised and each subsequent revision shall be released and microfilmed before another revision can be made. Latest revision number shall also be shown (see Figure 2).

8.0.3 A concise description of each revision shall be written in the past tense or the authorizing document noted. Each item shall be preceded by a lower case letter in parenthesis and ended with a drawing coordinate or zone (Z) number to facilitate location. Revisions of a general or self-explanatory nature need not have zone or prefix numbers. If a revision is made by an authorizing document, the revision description shall show the document number (ECN, EO, DC, etc.). Conservation of space is essential, therefore ANSI abbreviations shall be normally used to the best advantage.

8.0.4 **Revision Triangle and Cloud**

8.0.4.1 If individual contractor procedures require identification of the location of the revision, a triangle with 3/8-inch sides, containing the current revision number shall be drawn as close as possible to the drawing change. The number shall include the lower case letter when applicable (e.g., 1a or 2). To further assist in locating revisions on complex drawings, the revised

area may be encircled by a "cloud" drawn on the back of the drawing.

8.0.4.2 During a subsequent revision, the "cloud" shall be removed, but the triangle may remain. Triangles from prior revision shall be deleted.

8.0.4.3 The revision triangle shall not be used where the possibility of confusion with drawing symbols is likely. It is never used in the title block.

8.0.5 "As-Built" revisions reflect the actual completed installation as obtained from field inspection or appropriate contractor documentation. The statement "as-built" is entered in the description column.

8.0.6 "General" revisions shall be used on plant key maps, or other reference type drawings and drawings with extensive revisions. It is not required to delineate the changes and, therefore, revision triangles are not shown on the drawing. Current revision approval requires signature approval by appropriate authorities. Initials may be used in place of signatures provided that they are handwritten by the person approving the revision.

8.0.7 Approvals shall be per individual contractor procedure. CAD developed drawings require all previous approval signatures to be printed in the appropriate spaces.

8.0.8 The letter "M" shall be stamped to the left of the Rev column by Records Storage/Retrieval and Microfilming Group to signify that the drawing has been microfilmed for the current revision.

8.0.9 Previously approved and microfilmed revisions may be removed from the drawing when additional space is required. The removal of the revisions shall be noted in the current revision description (i.e., Removed previous revisions 1 through 5, etc.).

9.0 **REFERENCE BLOCK**

9.0.1 This block shall be used to list reference documents necessary for the completion of the work depicted on the drawing.

9.0.2 For Conceptual or Preliminary Design drawings, the reference documents used in preparation may be listed (Figure 4).

| (1) | (2) |
|---|---|
| NUMBER | TITLE |
| **REFERENCES** | |
| **NEXT USED ON** | (3) |

Figure 4. Reference Block

9.0.3 For Definitive Design drawings, only the reference documents required by the construction/fabrication contractors shall be listed. National consensus standards shall not be listed. Existing equipment shall be referenced by VI (previously identified as CVI or BPF) number when such exists.

1. Number

   The identifying number of the reference document shall be entered in this column.

2. Title

   The actual, abbreviated or condensed title of the reference document shall be entered in this space.

3. Next Used On

   This space is provided for those cases where it is applicable to link together certain drawings such as subassembly, detail and installation drawings. Drawings shall be linked by referencing the next level or generation up (i.e., a subassembly drawing will list the number of the assembly or installation drawing). Drawing list numbers shall not be placed in this space.

## 10.0 DRAWING TRACEABILITY LIST

Existing drawings which are modified by the work depicted on a drawing are entered into the drawing traceability list (see Figure 5). These drawings are not required for the construction or fabrication and are not included in the reference drawing list.

| NUMBER | TITLE |
|---|---|
| DRAWING TRACEABILITY LIST | |

Figure 5. Drawing Traceability List

## 11.0 PARTS LIST

11.0.1 Parts List and configuration shall be governed by individual company practices.

11.0.2 The Parts List shall contain all material and separable components on the drawing. The individual pieces of weldments, or other nonseparable assemblies, are not normally numbered separately.

11.0.3 Effort should be made to arrange the Parts List in a numerical order of importance (i.e., assembly, subassembly, detailed parts, catalog items, etc.). It is not necessary to rearrange the Parts List merely to add an additional entry.

11.0.4 Each arrangement, assembly, subassembly and detail shall have a separate and different part number. Parts that are not physically and functionally interchangeable shall have different part numbers.

11.0.5 Quantities shall be counted accurately and shown in customary trade units.

11.0.6 AR (as required) shall be used where the quantity is not known or where the quantity could vary.

11.0.7 A generic name of the item shall be listed first with supplemental descriptive words following. The description of an item shall be as complete as possible, and in accordance with

accepted industry standards. If the item can be completely described in the parts list, it shall be placed there. Where the description is too lengthy to fit into that space, it shall be placed near the detail or in the NOTES, and referenced in the description column (e.g., SEE DETAIL FOR DESCRIPTION). The complete description shall be stated in one place only, not split in two or more locations.

## 12.0 CLASSIFIED AND SENSITIVE DRAWINGS

When classified or sensitive information is to be contained on any version of a drawing, an Authorized Derivative Classifier (ADC) shall review and determine the Classification Level (Top Secret, Secret, or Confidential) and the Category (Restricted Data, Formerly Restricted Data, National Security Information) of the drawing. Classification questions should be referred to the Classification Office. The originating organization shall mark the drawing to reflect the Classification Level and Category; contact the Classified Files or Document Control organization to establish accountability as required; and, protect the document in accordance with security and document handling requirements.

## 13.0 SUPERSEDED, VOIDED DRAWINGS AND TITLE BLOCK CHANGES

13.0.1 When official approved "H" or "SK" series drawings are superseded, voided or when a building, index or drawing number is changed, a Drawing Number Change Notice (Form BD-9300-051, Figure 6) shall be completed. The completed form is to accompany the drawing(s) that have been changed in accordance with these criteria and sent to Records Storage/Retrieval and Microfilming Group. All drawings involved must accompany the form after having been prepared as follows:

A. Superseded by a drawing with a different drawing number.

1. For the superseded drawing - Print SUPERSEDED BY DWG _____ near the title block using 1/4-inch high letters. Sign name and date below note. (Superseded drawings are removed from the active data base.)

2. For the new drawing - Complete the title block as for any new drawing. Add note near title block -- SUPERSEDES DWG _____ in 1/4-inch high letters. Complete Form BD-9300-051, Drawing Change Notice, Figure 6.

B. Superseding an approved drawing with a drawing of the same drawing number.

(NOTE: A CAD revised drawing which replaces the CAD original tracing is not superseding a drawing with a drawing of the same number for the purpose of this requirement and thus no form BD-9300-015 is required).

1. For the new drawing - Use the same drawing number and title. Print all original signatures and dates, such as draftsman, checker and approval signatures as appear on the superseded drawing. Add next higher revision number and omit all previous revisions. Add revision note (e.g., REDRAWN, GENERAL CHANGE OF DELINEATION or, REDRAWN DUE TO CONDITION OF ORIGINAL). Add signature of draftsman and date. Complete Form BD-9300-051, Figure 6.

C. Superseding a preliminary (unapproved) drawing with a drawing of the same drawing number.

1. For the superseded drawing - Destroy the original.

2. For the new drawing - Complete title block as for any new drawing. Form BD-9300-051 not required.

D. Voided Drawings

1. For the voided drawing - Print VOID near the title block. Sign name and date below. Complete Form BD-9300-051 (08-87), Figure 6. Deliver the original tracing with the completed form to Record Storage/Retrieval and Microfilming Group. (Voided drawings are removed from the active data base.)

The following change(s) made to:

☐ Drawing Number _____ Sht. _____
Date_____ Rev. No. _____ is VOIDED

Reasons for Voiding_____ Sht. _____
Date _____ Rev No. _____

☐ Drawing Number _____ Sht. _____
Date_____ Rev. No. _____
is superseded by
Drawing Number _____ Sht. _____ Date_____
Rev. No. _____ (New Original)

☐ Drawing Number _____ Sht. _____
Date_____ Rev. No. _____
Has been changed on
same original to
Drawing Number _____ Sht. _____ Date_____
Rev. No. _____ (New Original)

☐ Drawing Number _____ Change Index
_____ To _____

Change Index _____
To _____

☐ Drawing Number _____ Title Changed
To_____ To _____

| By | Authorized By | Contractor | Date |
|---|---|---|---|
| | | | |

Figure 6. Drawing Change Notice

E. Changed Drawing Numbers, Index Numbers or Building Numbers

Obtain new number. Remove the old number and add new number. Add the next higher revision number indicating the previous number in the description. Complete Form BD-9300-051, Figure 6. In addition, when a drawing number is changed, print FORMERLY DWG ___Old No.)___ in the vicinity of the title block using 1/4- inch high letters.

F. Changed Title

When it is necessary to change the title of an approved drawing, apply all rules applicable to drawing titles, add next higher revision number indicating previous title in the description and complete Form BD-9300-051, Figure 6. The completed form accompanies the revised original when it is submitted to Records Storage/Retrieval and Microfilming Group.

## 14.0 DRAWING CONTROL

14.0.1 Approved drawings shall be transmitted to Records Storage/Retrieval and Microfilming Group for reproduction, distribution, microfilming and storage.

14.0.2 The record copy of all engineering drawings is the silver halide microfilm aperture card. The original engineering drawing is a lifetime retainable document and requires special handling for retention and protection.

14.0.3 A list of persons authorized to retrieve approved drawings is provided to Record Storage/Retrieval and Microfilming Group by the respective company managements.

14.0.4 For DOE-RL managed projects, the DOE-RL Project Engineer shall approve the release of the design drawings for construction, by approving the operating contractor's document which releases the design drawings to Record Storage/Retrieval and Microfilming.

## 15.0 DRAWING INDEX NUMBERING SYSTEM

### 15.1 GENERAL

The Drawing Index is a system of numerical digits to identify drawings for storage and retrieval. The drawing file is maintained by Record Storage/Retrieval and Microfilming Group, Federal Building, Room 356, Richland, Washington. All drawings for work shall be indexed in accordance with this system and the number shown on the Title block of drawings before drawings are released and before reproduction.

### 15.2 INDEX SYSTEM

The complete index number comprises 4 or 6 numerical digits: Two for the primary subject, 00 to 99; two for the secondary subject, 01 to 99, and two for the tertiary subject, 01 to 99. Thus an index number might be 0804 - Architectural Equipment Location, or 590315 - Instrumentation System, Wiring Diagrams, Safety Circuits.

15.2.1 Primary Subject

| | | |
|---|---|---|
| 00 | - | Listing or Index |
| 01 through 07 | - | Civil |
| 08 through 14 | - | Architectural and Structural |
| 15 through 58 | - | Mechanical |
| 59 through 64 | - | Instrumentation |
| 65 | - | Electronics |
| 70 | - | Flow Diagrams |
| 71 through 81 | - | Electrical |
| 82 | - | Insulation and Heat Tracing |
| 83 | - | Blank |
| 84 through 88 | - | Piping |
| 89 | - | Heating, Ventilating, and Exhaust |
| 90 | - | Air Conditioning systems |
| 99 | - | Miscellaneous Equipment not Identifiable or Related to Assembled Equipment |

15.2.2 The primary subjects are further divided into details or secondary subjects, e.g., 0804, Architectural Equipment Locations, or 7005, Piping and Instrument Diagram-CLS. The 04 and 05 digits are added to denote the details.

15.2.3 The tertiary subjects, containing two digits, are used only in conjunction with the primary subjects, 49, 50, 59, 60, and 85 to indicate the type of drawing.

The complete 6-digit index number for a drawing showing a wiring diagram for safety circuits would be:

Instrumentation

Wiring Diagram

Safety Circuits

59 03 15

The number is written as 590315.

15.2.4 In some instances a drawing may contain two or more index categories, e.g., Cranes (3900) and Electrical Power Plans (7301), or it may apply to two buildings, e.g., 0405 and 4621E. In these instances, both index numbers and both building numbers shall be placed in the Title Block. For example:

0405/4621E 3900/7301

15.2.5 Spare numbers are retained throughout the primary, secondary, and tertiary subject for future expansion. They are not to be used without approval of Record Storage/Retrieval and Microfilming Group.

15.2.6 Additional index numbers will be assigned by Record Storage/ Retrieval and Microfilming Group as required.

15.2.7 The following pages of Section 15.0 are a listing of the index by subject (alphabetical index) and by number.

9113154.0945

## ALPHABETICAL INDEX FOR ENGINEERING DRAWINGS


| | |
|---|---|
| Accelerator - Instruments | 60--50 |
| Acidity - Instruments | 6016 |
| Acids, Steam, Air, Gas, Overhead Lines, Piping - Civil | 0300 |
| Acids, Steam, Air, Gas, Underground Lines - Civil | 0306 |
| Acids, Steam, Air, Gas, Outside Lines - Civil | 0308 |
| Air Conditioning Systems - Plans, Sections, Details - Air Conditioning | 9000 |
| Airport Runways, Roads, Walks, Parking Areas, Fences-Details and Profiles - Civil | 0200 |
| Alarm - Instrumentation | 60--43 |
| All Facilities Built into Pile for Testing Purposes - Mechanical | 2301 |
| All Test Equipment Where Operation of Pile is Essential to Operation of Test - Mechanical | 2300 |
| Alpha - Instrumentation | 60--51 |
| Aluminum Component Preparation Caps and Can Cleaning Machine, Methanol Still, Detrex Trichlor Still, Trays, Baskets, Racks - Mechanical | 490104 |
| Aluminum Uranium Fuel Elements and Related Components - Caps, Spires, Cans, Sleeves, Cores, Hollow Pieces, or Perfs, Dummies, Spaces, Wafers, Self-Supports - Mechanical | 490010 |
| Amplifier - Instrumentation | 60--52 |
| Analyzer - Instrumentation | 60--53 |
| Aqueous Make-Up - Instrumentation | 59--21 |
| Architectural-Elevations, Sections and Details-Miscellaneous Steel for Stairs, Railings, etc. - Architectural | 0801 |
| Architectural - Other (includes schedules, architectural equipment details, such as bins, signs, cabinets, laboratory equipment, etc.) - Architectural | 0802 |

| | |
|---|---|
| Architectural Doors-Shielding-Windows - Architectural | 0803 |
| Architectural Equipment Locations - Architectural | 0804 |
| Architectural-Plans-May Include Other 0800 Category - Architectural | 0800 |
| Area Electrical Key Maps - Civil | 0102 |
| Argon Systems - Instrumentation | 59--46 |
| Baskets, Tubes, Containers, and Component Parts - Mechanical | 500304 |
| Billet Core Preparation - Mechanical | 490110 |
| Biological and Thermal Shield T/C System - Instrumentation | 59--16 |
| Block Outs, Sleeves, Plans, and Details - Electrical | 7101 |
| Boring, Rock - Civil | 0600 |
| Burial Grounds Sodium Disposal Area - Civil | 0404 |
| Cable Schedules - Instrumentation | 5904 |
| Calculator - Instrumentation | 60--54 |
| Calculator-Power - Instrumentation | 59--14 |
| Calibrator - Instrumentation | 60--55 |
| Camera - Instrumentation | 60--56 |
| Canning Cycle Control, Flex-O-Timer, Valves, etc. - Mechanical | 490206 |
| Canning Furnace and Equipment-Canning Jacks, Canning Baskets, Tongs, Shields, Tools - Mechanical | 490204 |
| Capsule, Storage for Strontium - Mechanical | 4920 |
| Capsule, Storage for Cesium - Mechanical | 4921 |
| Cathodic Protection-Plans, Elevations, Sections, and Details - Electrical | 7801 |
| Cathodic Protection-Wiring Diagrams (elementary, connection and inter-connection) Block Diagrams - Electrical | 7802 |
| Cathodic Protection-Junction Pull Boxes, Ducts - Electrical | 7806 |

| | |
|---|---|
| Cell Equipment Fastened to Cell for Mounting Vessels, Nozzles, Dunnage, Y Pads, etc. - Mechanical | 2800 |
| Ceramic Fuel Elements and Related Components - Mechanical | 490030 |
| Chambers - Instrumentation | 60--57 |
| Charging Machines - Mechanical | 2400 |
| Checkers - Instrumentation | 60--58 |
| Chemical Storage - Instrumentation | 59--30 |
| Chemical Tanks and Piping - Mechanical | 490118 |
| Coextrusion Component and Billet Assembly - Mechanical | 490220 |
| Columns, Tanks, Dissolvers, Heat Exchangers, Vessels (no moving parts) - Mechanical | 2500 |
| Communication-Junction Pull Boxes, Ducts (this series includes sound powered telephone and central station system telephones) - Electrical | 7606 |
| Communications-Panel Schedules, Equipment, and Devices - Electrical | 7604 |
| Communications-Plans, Elevations, Sections, and Details - Electrical | 7601 |
| Communications-Station Schedules - Electrical | 7607 |
| Communications-Wiring Diagrams (elementary, connections and interconnections) Block Diagrams - Electrical | 7602 |
| Communications-Wire Run Lists, Conduit, Wire Schedules, Cables - Electrical | 7605 |
| Component Electronic or Ultrasonic Testing-Transformation Tests, Sort Tester, etc. - Mechanical | 490304 |
| Component Mechanical Inspection-Pickle Inspection, Statistical Sampling, Recovered Core Inspection, Gauges - Mechanical | 490302 |
| Component of a Mixture - Instrumentation | 6020 |
| Composite-Overhead and Underground Piping - Civil | 0305 |
| Concrete Structural-Plans - Architectural | 0900 |

| | |
|---|---|
| Concrete Structural-Elevations, Sections, and Details - Architectural | 0901 |
| Concrete Structural-Shop, Reinforcing and Pour Drawings - Architectural | 0902 |
| Concrete Structural-Penetrations, Sleeve and Blockout - Architectural | 0903 |
| Concrete Structural-Penetrations, Embedment Schedules - Architectural | 0904 |
| Concrete Structural-Demolition - Architectural | 0905 |
| Conductivity - Instrumentation | 6008 |
| Containers for Disposal of Contaminated Equipment (does not include metal handling buckets and shipping casks) - Mechanical | 2302 |
| Control Rod, Absorber, Drive, Disconnect - Mechanical | 1907 |
| Control Rods - Mechanical | 1905 |
| Control Rods-Assembly Tooling and Handling Equipment - Mechanical | 1906 |
| Control Room and Miscellaneous Instrumentation - Instrumentation | 59--44 |
| Control System-Poison - Mechanical | 1902 |
| Control System-Horizontal Rods-Mechanical | 1900 |
| Control System-Vertical Rods - Mechanical | 1901 |
| Controller - Instrumentation | 60--41 |
| Core Preparation-Pickle Machine-Etch Machine, Nickel Plating - Mechanical | 490102 |
| Counters - Instrumentation | 60--59 |
| Cranes (all types) - Mechanical | 3900 |
| Criticality Monitoring Systems - Electrical | 7900 |
| Density - Instrumentation | 6005 |
| Differential Pressure - Instrumentation | 6015 |
| Digital Data Handling and Display, System 91 - Instrumentation | 59-61 |

| | |
|---|---|
| Discharging and Manipulator for Rear Face Work - Mechanical | 2401 |
| Dissolver Cells - Instrumentation | 59--19 |
| Dissolvers, Heat Exchangers, Vessels, Columns, Tanks (no moving parts) - Mechanical | 2500 |
| Duplex Furnace and Equipment-Ajax Induction Furnaces, Duplex Agitators, Agitator Baskets, Loader Shields, Tools - Mechanical | 490202 |
| Electrical Control-Junction Pull Boxes, Ducts (this series includes remote signaling door bells, buzzers, annunciators) - Electrical | 7506 |
| Electrical - Miscellaneous | 9902 |
| Electrical Control-Control Panel Arrangements, Signal Plans, Elevations, Sections, and Details - Electrical | 7501 |
| Electrical Control-Wiring Diagrams (elementary, connection and inter-connection) Block Diagrams - Electrical | 7502 |
| Electrical Control-Timing Charts - Electrical | 7503 |
| Electrical Control-Panel Schedules - Electrical | 7504 |
| Electrical Control-Wire Run Lists, Conduit, Cable and Wire Schedules - Electrical | 7505 |
| Electrical Control-Relay and Switch Schedules - Electrical | 7507 |
| Electrical Control-Control Equipment and Devices - Electrical | 7508 |
| Electrical Only-Cable Schedules - Electrical | 8005 |
| Electrical Only-Pole Line Details, Sag Curves - Electrical | 8003 |
| Electrical Only-Pole Schedules - Electrical | 8004 |
| Electrical Only-Transformer Schedules (this series includes all electrical maps other than the "Civil" map series) - Electrical | 8009 |
| Electrical Only-Wiring Diagrams (elementary, connection and inter-connection) Area One-Line Diagram - Electrical | 8002 |
| Electrical-Outside Lines - Civil | 0107 |
| Electrical-General, Wiring Requirements, Electrical | 7100 |

| | |
|---|---|
| Electrical Utilities Transmission and Distribution Operating Drawings - Electrical | 8000 |
| Electrical-Maps, Plot Plans, Plans and Profiles, Plans, Elevations, Sections, and Details (includes substation structures) - Electrical | 8001 |
| Electronics-General - Electronics | 6500 |
| Electronics-Drill and Trim - Electronics | 6505 |
| Elevators - Mechanical | 3901 |
| Emergency Power Generation Equipment (mechanical) - Mechanical | 4050 |
| Engineering Diagrams - Flow Diagrams | 7001 |
| Equipment Arrangements - Instrumentation | 5907 |
| Equipment Located in Hoods, Caves, Enclosure Where Operation is Remote - Mechanical | 4705 |
| Equipment Requirements - Instrumentation | 5906 |
| Equipment Support, Storage Racks, Hand Trucks, Tables, etc. - Mechanical | 500306 |
| Ex-Vessel Irradiated Fuel Handling Equipment - Mechanical | 2452 |
| Excavation and Finishing Grading - Civil | 0111 |
| Experimental Test Facilities Excluding Fuel Specimens - Mechanical | 2303 |
| Extractors - Instrumentation | 59--34 |
| Equipment Outline and Interface Requirement - Mechanical | 1575 |
| - Instrumentation | 5975 |
| - Electrical | 7575 |
| - Piping | 8575 |
| Extrusion Presses, Containers, Dies, and Tools - Mechanical | 490222 |
| Fences, Airport Runways, Roads, Walks, Parking Areas-Details and Profiles - Civil | 0200 |
| Fire Alarm and Telephone-Outside Lines - Civil | 0108 |
| Fire Alarm-Panel Schedules - Electrical | 7704 |

| | |
|---|---|
| Fire Alarm-Junction Pull Boxes, Ducts - Electrical | 7706 |
| Fire Alarm Plans, Elevations, Sections, and Details - Electrical | 7701 |
| Fire Alarm-Wire Run Lists, Conduit, Cable and Wire Schedules - Electrical | 7705 |
| Fire Alarm-Wiring Diagrams (elementary, connection, and interconnection) Block Diagrams - Electrical | 7702 |
| Fire Protection Sodium Systems - Mechanical | 3000 |
| Flow - Instrumentation | 6002 |
| Flow and Temperature Monitor Data Logging System - Instrumentation | 59--40 |
| Flux Monitor System 95 - Instrumentation | 59--78 |
| Fuel Closed Loop In-Reactor Assembly - Mechanical | 4925 |
| Fuel Driver Assembly - Mechanical | 4922 |
| Fuel Element Production-Component Supporting Facilities (not for new drawings) - Mechanical | 4906 |
| Fuel Element Production-Special Items-Stampers, Tables, Bins Mechanical Counters - Mechanical | 4907 |
| Fuel Element Testing, Bond and Pen Tester, Autoclave Test, Bubble Tester - Mechanical | 490308 |
| Fuel Element Inspection-Radiography Inspection, Final Inspection Station, Weld Inspection, Length, Brace and Contour Inspection, Film Developing Equipment - Mechanical | 490306 |
| Fuel Element Production-General - Mechanical | 4900 |
| Fuel Element Production-Cleaning and Preparation - Mechanical | 4901 |
| Fuel Element Production-Testing and Inspection - Mechanical | 4903 |
| Fuel Element Production-Component Salvage and Recover: Scrap Recovery - Mechanical | 4904 |
| Fuel Element Production-Component Testing (not for new drawings) - Mechanical | 4905 |
| Fuel Failure Monitoring System 94 - Instrumentation | 59--77 |

| | |
|---|---|
| Fuel Handling-Irradiated (transfer, etc.) - Mechanical | 2450 |
| Fuel Material Open Test Assembly - Mechanical | 4931 |
| Fuel Monitor - Instrumentation | 59--07 |
| Fuel Oil Storage and Lines - Civil | 0307 |
| Fuel Open Test Assembly - Mechanical | 4934 |
| Fuel Special Purpose Assembly - Mechanical | 4929 |
| Fuels Development - Mechanical | 5003 |
| Fuel Element Production-Fuel Element Assembly Equipment - Mechanical | 4902 |
| Gas, Acids, Steam, Air, Overhead Lines-Piping - Civil | 0300 |
| Gas, Acids, Steam, Air Underground Lines - Civil | 0306 |
| Gas, Acids, Steam, Air Outside Lines - Civil | 0308 |
| Gas Seal Tools - Mechanical | 2901 |
| Gas Storage Tanks - Mechanical | 2504 |
| Gases and Water-Outside Lines - Civil | 0104 |
| General - Instrumentation | 60--39 |
| General-Maps - Civil | 0109 |
| Guard Vessel-Exterior Shields and Other Cavity Components - Mechanical | 1553 |
| Heat Exchangers, Vessels, Columns, Tanks, Dissolvers, (no moving parts) - Mechanical | 2500 |
| Heating and Ventilating Equipment Location - Heating, Venting, Exhaust | 8901 |
| Heating and Ventilating Schedules, Notes - Heating, Venting, Exhaust | 8902 |
| Helium Systems - Instrumentation | 59--47 |
| Hoods, Caves, Enclosures (remote operated equipment) - Mechanical | 4700 |

| | |
|---|---|
| Humidity - Instrumentation | 6006 |
| Impact Wrenches - Mechanical | 4500 |
| In-Vessel Fuel Handling Equipment - Mechanical | 2451 |
| Indicator - Instrumentation | 60--42 |
| Indicator Controller Alarm - Instrumentation | 60--45 |
| Indices - Electrical | 7109 |
| Instrument - Miscellaneous | 9903 |
| Instrument Engineering Diagrams - Flow Diagrams | 7002 |
| Instrumentation Aux. Liquid Metal System, SDD No. 81 - Instrumentation | 59--57 |
| Instrumentation Closed Loop, SDD No. 61 - Instrumentation | 59--56 |
| Instrumentation-General, Index, Notes, Listings - Instrumentation | 5900 |
| Instrumentation Heating and Venting, SDD No. 25 - Instrumentation | 59--51 |
| Instrumentation Heat Transport System, SDD No. 51 - Instrumentation | 59--55 |
| Instrumentation Inert Gas Receiving and Processing, SDD No. 82 - Instrumentation | 59--58 |
| Instrumentation Impurity Monitoring and Analysis, SDD No. 85 - Instrumentation | 59--59 |
| Instrumentation Plant Fire Protection, SDD No. 25 - Instrumentation | 59--52 |
| Instrumentation Radioactive Waste, SDD No. 24 - Instrumentation | 59--50 |
| Instrumentation Reactor Containment, SDD No. 27 - Instrumentation | 59--53 |
| Instrumentation Reactor SDD No. 31 - Instrumentation | 59--54 |
| Instrumentation Reactor Plant Control, SDD No. 90 - Instrumentation | 59--60 |
| Instrumentation Service Piping, SDD No. 23 - Instrumentation | 59--49 |
| Instruments-General - Instrumentation | 6000 |

| | |
|---|---|
| Interface - Instrumentation | 6017 |
| Integrator - Instrumentation | 60--46 |
| Internal Structural Component Including Reactor Head - Mechanical | 1551 |
| Internals, Nonstructural Items Excluding Controls and Fuels Associated Equipment - Mechanical | 1552 |
| Junction Pull Boxes, Ducts - Electrical | 7906 |
| Key Area Maps - Civil | 0101 |
| Laboratory Apparatus - Mechanical | 4800 |
| Layout or Plot Plans-General Facility - Civil | 0110 |
| Level - Instrumentation | 6003 |
| Lighting-Junction Pull Boxes, Ducts - Electrical | 7406 |
| Lighting-Panel, Schedules - Electrical | 7404 |
| Lighting-Plans, Elevations, Sections, and Details - Electrical | 7401 |
| Lighting-Wire Run Lists, Conduit, Cable and Wire Schedules - Electrical | 7405 |
| Lighting-Wiring Diagrams (elementary, connections and interconnections) - Electrical | 7402 |
| Logic Diagram - Flow Diagrams | 7003 |
| Machines and Equipment (noncontaminated zones) Shop or General Purpose - Mechanical | 2700 |
| Machines and Equipment-Contaminated Zones - Mechanical | 4750 |
| Machines, Mechanisms, and Dies for Forming, Fabricating or Assembling - Mechanical | 500301 |
| Machines-Process: Agitators, Pumps, Scales, Pulse Generators (moving parts) - Mechanical | 2600 |
| Machining, Forming, Including Tooling-Acme Gridley Cut-Off Lathes: Monarch Lathe - Mechanical | 490210 |
| Main Data-Logging System - Instrumentation | 59--41 |

| | |
|---|---|
| Manipulators - Mechanical | 4702 |
| Maps-Area Key - Civil | 0101 |
| Maps-Electrical, Plot Plans, Plans and Profiles, Plans, Elevations, Sections, and Details (includes substation structures) - Electrical | 8001 |
| Maps-General - Civil | 0109 |
| Maps-Project Key - Civil | 0100 |
| Maps-Area Electrical Key - Civil | 0102 |
| Material Handling Equipment-Conveyors, Pallets, Monorail Systems, Casks, Buckets - Mechanical | 3902 |
| Material Lists-General - Electrical | 7108 |
| Mechanical - Miscellaneous | 9901 |
| Mechanical Equipment for Treatment of Water (other than piping) - Mechanical | 4300 |
| Mechanisms for Testing, Inspection, Calibration, etc. - Mechanical | 500302 |
| Metal Solution Feed Preparation - Instrumentation | 59--20 |
| Metallurgical Test Materials, Destructive and Nondestructive Mechanical | 4727 |
| Miscellaneous Equipment Pieces or Parts-Not Identifiable as Electrical, Instrument, or Mechanical Category; Unrelated to the Assembled Equipment - Miscellaneous | 9900 |
| Miscellaneous Survey Data-Columbia River Data, Civil Data - Civil | 0501 |
| Moderator-Other than Graphite - Mechanical | 1600 |
| Moderator-Graphite - Mechanical | 1601 |
| Moisture - Instrumentation | 6007 |
| Moisture Detection - Instrumentation | 59--45 |
| Motor Vehicles and Modifications - Mechanical | 4101 |
| Nose and Cutoff Preparation - Mechanical | 490114 |

| | |
|---|---|
| Open Test Assembly-Post Irradiation - Mechanical | 4933 |
| Open Test Assembly-Tooling - Mechanical | 4935 |
| Open Test Assembly-Materials - Mechanical | 4936 |
| Off-Gas Treatment - Instrumentation | 59--33 |
| One-Line Diagrams - Electrical | 7201 |
| Optical - Instrumentation | 59--38 |
| Optical Systems and Devices (including TV devices) - Mechanical | 5000 |
| Other - Mechanical | 490116 |
| Other Fuel Elements, as Cluster - Mechanical | 490050 |
| Other, Including Triple Dip, Hot Press, Heat Treatment, Hydraulic Press, Heavy-Duty Resistance Furnaces - Mechanical | 490224 |
| Outside Catch Tanks - Instrumentation | 59--31 |
| Outside Lines - Electrical - Civil | 0107 |
| Outside Lines-Sewers and Piping - Civil | 0105 |
| Outside Lines-Steam, Air, Gas, and Acids - Civil | 0308 |
| Outside Lines-Telephone and Fire Alarm - Civil | 0108 |
| Outside Lines-Water and Gases - Civil | 0104 |
| Overhead Lines-Piping-Including Steam, Air, Gas, and Acids - Civil | 0300 |
| Overhead Piping Steam Condensate Air and Chemicals - Civil | 0106 |
| Overhead and Underground Piping Composite - Civil | 0305 |
| Panel Schedules - Electrical | 7904 |
| Panel Schedules, Wire Run Lists - Instrumentation | 5902 |
| Parking Area, Fences, Airport Runways, Roads, Walks-Details and Profiles - Civil | 0200 |
| Partition - Instrumentation | 59--25 |
| Penetration, Loader, Baskets - Mechanical | 490108 |

| | |
|---|---|
| Periscopes - Mechanical | 5002 |
| Personnel Radiation Monitor - Instrumentation | 59--05 |
| Pile Motion - Instrumentation | 59--13 |
| Piping and Mechanical Sections B1-2-3-4 - Piping | 855302 |
| Piping and Sewers-Outside Lines - Civil | 0105 |
| Piping-Steam-All Others - Piping | 8502 |
| Piping-Fire Extinguishing Gas, Vapor, Chemical or Powder - Piping | 8515 |
| Piping and Instrument Diagram - Flow Diagrams | 7004 |
| Piping and Instrument Diagram CLS - Flow Diagrams | 7005 |
| Piping-Jumpers - Piping | 8405 |
| Piping and Mechanical Sections A1-2-3 - Piping | 855301 |
| Piping and Mechanical Sections C1-2-3-4-5-6-7-8-9 - Piping | 855303 |
| Piping and Mechanical Sections D1-2-3-4-5-6 - Piping | 855304 |
| Piping and Mechanical Sections E1-2 - Piping | 855305 |
| Piping and Mechanical Sections F1-2 - Piping | 855306 |
| Piping and Mechanical Sections G1-2-3 - Piping | 855307 |
| Piping and Mechanical Sections H1-2-3-4-5-6-7 - Piping | 855308 |
| Piping and Mechanical Sections J1-2 - Piping | 855309 |
| Piping and Mechanical Sections K1-2-3-4-5-6-7 - Piping | 855310 |
| Piping and Mechanical Sections L1-2-3 - Piping | 855311 |
| Piping NA Reactor Primary - Piping | 8550 |
| Piping-Process-All Other to Include: Buried or Exposed Inside Piping, Wash Down, Fog Spray, Solvent Blend, Slug Storage, Hot Shop, Utility Outlets Relative to Process Piping: Also Jets, Valves, Miscellaneous Process Piping - Piping | 8407 |
| Piping-Process Water-Front or Rear Face - Piping | 8401 |

| | |
|---|---|
| Piping-Service (includes Grouped Services, viz., Water, Air Steam Drains, etc.; Show on the Same Drawing) - Piping | 8510 |
| Piping-Acids and Chemicals - Piping | 8503 |
| Piping-Cell Arrangements (includes Diversion Boxes and Trenches) - Piping | 8404 |
| Piping-Compressed Air - Piping | 8505 |
| Piping-Cover Gas, Argon - Piping | 8519 |
| Piping-Demineralized and Distilled Water - Piping | 8513 |
| Piping-Drains and Waste Inside-Other than Process - Piping | 8509 |
| Piping-Fuel Oil - Piping | 8514 |
| Piping-Gas Decay and Disposal - Piping | 8504 |
| Piping-Hangers, Support, Anchors, Guards - Piping | 8511 |
| Piping-Heating and Cooling Water - Piping | 8516 |
| Piping-Heating and Cooling NA and NAK, Insulating Requirements - Piping | 8517 |
| Piping-Heating and Cooling Gas - Piping | 8518 |
| Piping-Hydraulic - Piping | 8512 |
| Piping-Isometric - Piping | 8548 |
| Piping-NA All Other - Piping | 8554 |
| Piping-NA Closed Loop - Piping | 8553 |
| Piping-NA Piping Components, Traps, Cold, Freeze and Vapor - Piping | 8556 |
| Piping-NA Receiving and Processing - Piping | 8552 |
| Piping-NAK Reactor Secondary - Piping | 8551 |
| Piping-Process Water - Piping | 8400 |
| Piping-Process Water-Foundation Cooling, Shielding, Horizontal Rods, Risers, and Crossheaders - Piping | 8402 |

| | |
|---|---|
| Piping-Process Water-Valve Pits or Tunnels - Piping | 8403 |
| Piping-Process-Operating or Sample Galleries - Piping | 8406 |
| Piping-Propane - Piping | 8520 |
| Piping-Radioactive Liquid Waste (water) - Piping | 8409 |
| Piping-Reference Drawings - Piping | 8576 |
| Piping-Refrigeration, Argon - Piping | 8507 |
| Piping-Special Loop - Piping | 8555 |
| Piping-Sprinkler Systems - Piping | 8508 |
| Piping-Steam Radiators, Coils, and Condensate - Piping | 8501 |
| Piping-Vacuum - Piping | 8506 |
| Piping-Water Drains and Waste (noncontaminated) - Piping | 8408 |
| Piping-Water-Other than Process - Piping | 8500 |
| Plans, Elevations, Sections, and Details - Electrical | 7901 |
| Plans, Sections, Elevations, and Details (including conduit and tubing) - Instrumentation | 5901 |
| Plant Protection System 99 - Instrumentation | 59--80 |
| Plutonium Decontamination - Instrumentation | 59--26 |
| Plutonium Fuel Elements and Related Components - Mechanical | 490040 |
| Poison Column and Associated Items - Mechanical | 2250 |
| Power House Equipment (associated with steam generation) - Mechanical | 4000 |
| Power Plant Controls - Instrumentation | 59--18 |
| Power-Electrical Equipment (motor, heaters, etc.) - Electrical | 7308 |
| Power-Ground Junction, Pull Boxes, Ducts, Raceways - Electrical | 7306 |
| Power-Lightning Protection - Electrical | 7309 |

| | |
|---|---|
| Power-Motor Control Centers, Switchgear, Transformers and Control Panels - Electrical | 7303 |
| Power-Motor and Control Station Schedules - Electrical | 7307 |
| Power-Panel Schedules - Electrical | 7304 |
| Power-Plans, Elevations, Sections, and Details (including grounding, block diagrams, and engineering diagrams) - Electrical | 7301 |
| Power-Wire Run Lists, Conduit, Cable, Wire Schedules - Electrical | 7305 |
| Power-Wiring Diagrams (elementary, connection and interconnection) - Electrical | 7302 |
| Precycle - Instrumentation | 59--24 |
| Pressure - Instrumentation | 6004 |
| Pressure Monitor - Instrumentation | 59--08 |
| Primary Elements - Instrumentation | 60--49 |
| Primary and Secondary Loop Instrumentation - Instrumentation | 59--43 |
| Process Flow Diagrams - Flow Diagrams | 7000 |
| Process Gas - Instrumentation | 59--12 |
| Process Monitoring and Control Containment System 93-1 - Instrumentation | 59--63 |
| Process Monitoring and Control Heat Transport System 93-2 - Instrumentation | 59--64 |
| Process Monitoring and Control Closed Loop System 93-3 - Instrumentation | 59--65 |
| Process Monitoring and Control Service Piping System 93-4 - Instrumentation | 59--66 |
| Process Monitoring and Control Radioactive Waste System 93-5 - Instrumentation | 59--67 |
| Process Monitoring and Control Heating and Vent System 93-6 - Instrumentation | 59--68 |
| Process Monitoring and Control Fire Protection System 93-7 - Instrumentation | 59--69 |

| | |
|---|---|
| Process Monitoring and Control Inert Gas Receiving and Process System 93-8 - Instrumentation | 59--70 |
| Process Monitoring and Control Aux. Liquid Metal System 93-10 - Instrumentation | 59--71 |
| Process Monitoring and Control Refueling System 93-11 - Instrumentation | 59--72 |
| Process Monitoring and Control Maintenance System 93-12 - Instrumentation | 59--73 |
| Process Monitoring and Control Leak Detection System 93-13 - Instrumentation | 59--74 |
| Process Monitoring and Control Annunciator System 93-14 - Instrumentation | 59--75 |
| Process Monitoring and Control Piping and Equipment Electrical Heating System 93-15 - Instrumentation | 59--76 |
| Process Radiation Monitor - Instrumentation | 59--04 |
| Process Tubes - Mechanical | 2200 |
| Process Water - Instrumentation | 59--11 |
| Process Water Monitor and Sampling - Instrumentation | 59--10 |
| Production of Power Reactor - Mechanical | 1501 |
| Products of Combustion Detectors - Instrumentation | 59--48 |
| Project Key Map - Civil | 0100 |
| Quench Machines, Tanks, and Equipment - Mechanical | 490208 |
| Radiation - Instrumentation | 6014 |
| Radiation Dose Rates - Mechanical | 1802 |
| Radiation Monitoring System 96 - Instrumentation | 59--79 |
| Railroad Equipment and Rolling Stock Including Cask Car - Mechanical | 4100 |
| Railroad Structures and Details - Civil | 0202 |
| Railroads-Plans, Details, and Profiles - Civil | 0201 |

| | |
|---|---|
| Reactor Capsules-Metallurgical Tests - Mechanical | 4706 |
| Reactor Control Rod and Drive Mechanism - Mechanical | 1504 |
| Reactor Core Restraints - Mechanical | 1506 |
| Reactor Ex-Vessel Fuel Handling Equipment - Mechanical | 1510 |
| Reactor Fuel Transfer - Mechanical | 1502 |
| Reactor Gas Seal, Including Boots, Strips, etc. - Mechanical | 2900 |
| Reactor In-Vessel Handling and Drive Mechanism - Mechanical | 1505 |
| Reactor In-Vessel Storage Module - Mechanical | 1507 |
| Reactor Inner Shield - Mechanical | 1509 |
| Reactor Instrument Tree and Drive Mechanism - Mechanical | 1503 |
| Reactor Outer Shield - Mechanical | 1508 |
| Reactor and Vessel Instrumentation System 92 - Instrumentation | 59--62 |
| Reactor Vessels-Arrangement Plans, Elevations, and Sections - Mechanical | 1550 |
| Recorder - Instrumentation | 60--40 |
| Recorder-Controller Alarm - Instrumentation | 60--44 |
| Recovered Acid Storage - Instrumentation | 59--28 |
| Reflector Assembly - Mechanical | 4937 |
| Remotely Operated Connectors - Mechanical | 4501 |
| Roads, Walks, Parking Area, Fences, and Airport Runways-Details and Profiles - Civil | 0200 |
| Rock, Boring - Civil | 0600 |
| Rod Control System - Instrumentation | 59--42 |
| Rods Safety (SR) - Mechanical | 1909 |
| Rods Scram (CR) - Mechanical | 1911 |
| Safety Circuits - Instrumentation | 59--15 |

| | |
|---|---|
| Samplers Process, Air, Stack Gas, etc. - Mechanical | 4600 |
| Schematic Diagrams - Instrumentation | 5908 |
| Scope - Miscellaneous | 99--01 |
| Seismoscope - Instrumentation | 59--37 |
| Self-Actuated Regulating Valve - Instrumentation | 60--47 |
| Sewer Lines-Process - Civil | 0304 |
| Sewer Lines-Sanitary - Civil | 0303 |
| Sewer and Piping Outside Lines - Civil | 0105 |
| Shielding-Thermal - Mechanical | 1801 |
| Shielding-Biological - Mechanical | 1800 |
| Shipping Containers-Boxes, Pallets - Mechanical | 5010 |
| Sleeve Preparation-Sleeve Cleaning Machine, Baskets - Mechanical | 490108 |
| Sodium Disposal Area Burial Grounds - Civil | 0404 |
| Sodium Processing Tanks - Mechanical | 2505 |
| Sodium Storage Tanks - Mechanical | 2501 |
| Sodium Systems - Instrumentation | 59--39 |
| Solvent Treatment - Instrumentation | 59--22 |
| Sound - Instrumentation | 6019 |
| Special Tools - Miscellaneous | 99--03 |
| Special Tools, Wrenches, etc. - Mechanical | 500303 |
| Specific Gravity - Instrumentation | 6012 |
| Speed - Instrumentation | 5009 |
| Stack Sampling - Instrumentation | 59--35 |
| Steam, Air, Gas, and Acids Outside Lines - Civil | 0308 |
| Steam, Air, Gas, and Acids Overhead Lines Piping - Civil | 0300 |

| | |
|---|---|
| Steam, Air, Gas, and Acids Underground Lines - Civil | 0306 |
| Steel Structural-Other Stop Logs, Underwater Doors, Trap Gates, Special Nonshield Doors, Allowable Floor Load Data - Architectural | 1100 |
| Steel Structural-Plans, Details, Schedules, Equipment Supports, Platforms - Architectural | 1000 |
| Steel Structural-Shop or Fabrication Drawings - Architectural | 1001 |
| Steel Structural-Penetrations - Architectural | 1002 |
| Steel Structural-Bench Marks and Control - Architectural | 1101 |
| Studies-General - Electrical | 7107 |
| Tank Farms - Instrumentation | 59--32 |
| Tanks, Dissolvers, Heat Exchangers, Vessels, Columns (no moving parts) - Mechanical | 2500 |
| Telephone and Fire Alarm Outside Lines - Civil | 0108 |
| Temperature - Instrumentation System | 59--09 |
| Temperature - Instrumentation General | 6001 |
| Test Hole Facilities - Instrumentation | 59--36 |
| Test or Special Purpose Reactor - Mechanical | 1500 |
| Testing Equipment-Destructive - Mechanical | 4703 |
| Testing Equipment-Nondestructive - Mechanical | 4704 |
| Third Safety System-Ball 3X - Mechanical | 2100 |
| Tools and Equipment for Decontamination - Mechanical | 2204 |
| Tools and Equipment for Horizontal Control Rods and Vertical Safety Rods Renovation - Mechanical | 1903 |
| Tools and Equipment for Overboring Program - Mechanical | 2205 |
| Tools and Equipment Includes Tool Dolly - Mechanical | 2201 |
| Tools and Equipment for Process Tube Growth Correction - Mechanical | 2202 |

| | |
|---|---|
| Tools and Equipment Necessary to Operate Equipment in Hoods, Caves, and Enclosures - Mechanical | 4701 |
| Topography - Civil | 0103 |
| Transmitters - Instrumentation | 60--48 |
| Tubing Run List - Instrumentation | 5905 |
| Underground and Overhead Piping-Composite - Civil | 0305 |
| Underground Lines, Steam, Air, Gas, and Acids - Civil | 0306 |
| Underground Process Water-Piping - Civil | 0302 |
| Underground Sanitary Water-Piping - Civil | 0301 |
| Underwater Monitor - Instrumentation | 59--06 |
| UNH Storage - Instrumentation | 59--29 |
| Uranium Decontamination - Instrumentation | 59--27 |
| Vacuum Chambers and Component Parts and Equipment - Mechanical | 500305 |
| Vendor Information - Miscellaneous | 99--02 |
| Ventilation Controls - Instrumentation | 59--17 |
| Ventilation Exhaust and Heating System-Plans, Section, Details - Heating, Venting, Exhaust | 8900 |
| Vessels, Columns, Tanks, Dissolvers, Heat Exchangers (no moving parts) - Mechanical | 2500 |
| Vibration - Instrumentation | 6018 |
| Viewing Windows and Ports - Mechanical | 5001 |
| Viscosity - Instrumentation | 6010 |
| Walks, Parking Areas, Fences, and Airport Runways, Roads-Details and Profiles - Civil | 0200 |
| Waste Disposal Systems-Sanitary: Septic Tanks, Tile Fields, Sewage Disposal Plant, Open Ditches, and Surface Drainage and Storm Drainage - Civil | 0400 |

| | |
|---|---|
| Waste Disposal Systems and Burial Grounds-Process: Cribs, Scavenging Impounding Areas, and Waste Facility Maps - Civil | 0401 |
| Waste Line Encasements - Diversion Boxes and Related Components - Civil | 0403 |
| Waste Storage-Tank Farms (including all drawings, except electrical and instrumentation and jumpers) - Civil | 0402 |
| Waste Storage Process Underground Tanks - Civil | 0405 |
| Waste Storage Tanks Contaminated Waste - Mechanical | 2502 |
| Waste Treatment - Instrumentation | 59--23 |
| Water and Gases Outside Lines - Civil | 0104 |
| Weight - Instrumentation | 6011 |
| Weight Factor - Instrumentation | 6013 |
| Welders, Buffers and Controls, Collects, Vacuum Welders - Mechanical | 490212 |
| Wells, Well Fields-Irrigation Ditches and Water Supply - Civil | 0500 |
| Wire Run Lists, Conduit, Cable and Wire Schedules, - Electrical | 7905 |
| Wiring Diagrams Elementary Connection and Inter-Connection Block Diagrams - Electrical | 7902 |
| Wiring Diagrams-Connections and Inter-Connections Elementary - Instrumentation | 5903 |
| Zircaloy Component Preparation - Mechanical | 490112 |
| Zircaloy Uranium Fuel Elements, Billets, and Related Components - Cores, Copper or Zircaloy Components, End Caps or Plates, Brazing Rings, Self-Supports, Mixers, Perf, Dummies - Mechanical | 490020 |

# NUMERICAL INDEX FOR ENGINEERING DRAWINGS

| | |
|---|---|
| 0000 | Drawing List |
| **Civil** | |
| 0100 | Project Key Map |
| 0101 | Area Key Maps |
| 0102 | Area Electrical Key Maps |
| 0103 | Topography |
| 0104 | Outside Lines-Water and Gases |
| 0105 | Outside Lines-Sewers and Piping |
| 0106 | Overhead Piping, Steam Condensate, Air, and Chemicals |
| 0107 | Outside Lines-Electrical |
| 0108 | Outside Lines-Telephone and Fire Alarm |
| 0109 | General Maps |
| 0110 | Layout or Plot Plans-General Facility |
| 0111 | Excavation and Finishing Grading |
| 0200 | Roads, Walks, Parking Areas, Fences, and Airport Runways-Details and Profiles |
| 0201 | Railroads-Plans, Details, and Profiles |
| 0202 | Railroad Structures and Details |
| 0300 | Overhead Lines-Piping-Including Steam, Air, Gas, and Acids |
| 0301 | Underground Sanitary Water-Piping |
| 0302 | Underground Process Water-Piping |
| 0303 | Sewer Lines-Sanitary |
| 0304 | Sewer Lines-Process |
| 0305 | Composite of Overhead and Underground Piping |
| 0306 | Underground Lines, Steam, Air, Gas, and Acids |

**Civil** (Continued)

| | |
|---|---|
| 0307 | Fuel Oil Storage and Lines |
| 0308 | Outside Lines-Steam, Air, Gas, and Acids |
| 0400 | Waste Disposal System-Sanitary: Septic Tanks, Tile Fields, Sewage Disposal Plant, Open Ditches, and Surface Drainage and Storm Drainage |
| 0401 | Waste Disposal Systems and Burial Grounds-Process: Cribs, Scavenging Impounding Areas and Waste Facility Maps |
| 0402 | Waste Storage-Tank Farms (including all drawings, except electrical and instrumentation and jumpers) |
| 0403 | Waste Line Encasements-Diversion Boxes and Related Components |
| 0404 | Sodium Disposal Area-Burial Grounds |
| 0405 | Waste Storage Process Underground Tanks |
| 0500 | Wells, Well Fields-Irrigation Ditches and Water Supply |
| 0501 | Miscellaneous Survey Data-Columbia River Data, Civil Data |
| 0600 | Rock Boring |

**Architectural and Structural**

| | |
|---|---|
| 0800 | Architectural-Plans-May include other 0800 Category |
| 0801 | Architectural-Elevations, Sections and Details-Miscellaneous Steel for Stairs, Railings, etc. |
| 0802 | Architectural-Other (includes schedules, architectural equipment details, such as bins, signs, cabinets, laboratory equipment, etc.) |
| 0803 | Architectural Doors-Shielding-Windows |
| 0804 | Architectural-Equipment Locations |
| 0900 | Concrete Structural-Plans |
| 0901 | Concrete Structural-Elevations, Sections, and Details |

**Architectural and Structural** (Continued)

| | |
|---|---|
| 0902 | Concrete Structural-Shop, Reinforcing and Pour Drawings |
| 0903 | Concrete Structural-Penetrations, Sleeve and Blockout |
| 0904 | Concrete Structural-Penetrations, Embedment Schedules |
| 0905 | Concrete Structural-Demolition |
| 1000 | Steel Structural-Plans, Details, Schedules, Equipment Supports, Platforms |
| 1001 | Steel Structural-Shop or Fabrication Drawings |
| 1002 | Steel Structural-Penetrations |
| 1100 | Steel Structural-Other Stop Logs, Underwater Doors, Trap Gates, Special Nonshield Doors, Allowable Floor Load Data |
| 1101 | Steel Structural-Bench Marks and Control |

**Mechanical**

| | |
|---|---|
| 1500 | Test or Special Purpose Reactor |
| 1501 | Production or Power Reactor |
| 1502 | Reactor Fuel Transfer |
| 1503 | Reactor Instrument Tree and Drive Mechanism |
| 1504 | Reactor Control Rod and Drive Mechanism |
| 1505 | Reactor In-Vessel Handling and Drive Mechanism |
| 1506 | Reactor Core Restraints |
| 1507 | Reactor In-Vessel Storage Model |
| 1508 | Reactor Outer Shield |
| 1509 | Reactor Inner Shield |
| 1510 | Reactor Ex-Vessel Fuel Handling Equipment |
| 1550 | Reactor Vessels-Arrangements Plans, Elevations, and Sections |
| 1551 | Internal Structural Components Including Reactor Head |

**Mechanical** (Continued)

| | |
|---|---|
| 1552 | Internals, Nonstructural Items Excluding Controls and Fuel Associated Equipment |
| 1553 | Guard Vessel-Exterior Shields and Other Cavity Components |
| 1575 | Equipment Outline and Interface Requirement |
| 1600 | Moderator-Other than Graphite |
| 1601 | Moderator-Graphite |
| 1800 | Shielding-Biological |
| 1801 | Shielding-Thermal |
| 1802 | Radiation Dose Rates |
| 1900 | Control Systems-Horizontal Rods |
| 1901 | Control System-Vertical Rods |
| 1902 | Control System-Poison |
| 1903 | Tools and Equipment for Horizontal Control Rods and Vertical Safety Rods Renovation |
| 1905 | Control Rods |
| 1906 | Control Rods, Assembly Tooling and Handling Equipment |
| 1907 | Control Rod, Absorber, Drive, Disconnect |
| 1909 | Rods Safety (SR) |
| 1911 | Rods Scram (CR) |
| 2100 | Third Safety System-Ball 3X |
| 2200 | Process Tubes (This will cover all phases or process tubes from entry of water from common header to exit of water to common discharge header also tubes from point charging machine connects to the point that fuel is discharged). |
| 2201 | Tools and Equipment (necessary for installation or removal of process tubes and their associated parts. Includes tool dolly). |
| 2202 | Tools and Equipment for Process Tube Growth Correction |

**Mechanical** (Continued)

| | |
|---|---|
| 2204 | Tools and Equipment for Decontamination |
| 2205 | Tools and Equipment for Overboring Program |
| 2250 | Poison Column and Associated Items |
| 2300 | All Test Equipment Where Operation of Pile is Essential to Operation of Test |
| 2301 | All Facilities Build into Pile for Testing Purposes |
| 2302 | Containers for Disposal of Contaminated Equipment (does not include metal handling buckets and shipping casks) |
| 2303 | Experimental Test Facilities Excluding Fuel Specimens |
| 2400 | Charging Machines |
| 2401 | Discharging and Manipulator for Rear Face Work |
| 2450 | Fuel Handling-Irradiated (Transfer, etc.) |
| 2451 | In-Vessel Fuel Handling Equipment |
| 2452 | Ex-Vessel Irradiated Fuel Handling Equipment |
| 2500 | Vessels, Columns, Tanks, Dissolvers, Heat Exchangers (no moving parts) |
| 2501 | Sodium Storage Tanks |
| 2502 | Waste Storage Tanks (contaminated waste) |
| 2504 | Gas Storage Tanks |
| 2505 | Sodium Processing Tanks |
| 2600 | Machines-Process: Agitators, Pumps, Scales, Pulse Generators (moving parts) |
| 2700 | Machines and Equipment (noncontaminated zones) Shop or General Purpose |
| 2800 | Cell Equipment Fastened to Cell for Mounting Vessels, Nozzles, Dunnage, Y Pads, etc. |
| 2900 | Reactor Gas Seal, Including Boots, Strips, etc. |

**Mechanical** (Continued)

| | |
|---|---|
| 2901 | Gas Seal Tools |
| 3000 | Fire Protection Sodium Systems |
| 3900 | Cranes (all types) |
| 3901 | Elevators |
| 3902 | Material Handling Equipment such as Conveyors, Pallets, Monorail Systems, Casks, Buckets |
| 4000 | Power House Equipment (associated with steam generation) |
| 4050 | Emergency Power Generation Equipment (Mechanical) |
| 4100 | Railroad Equipment and Rolling Stock (including cask car) |
| 4101 | Motor Vehicles and Modifications |
| 4300 | Mechanical Equipment for Treatment of Water (other than piping) |
| 4500 | Impact Wrenches |
| 4501 | Remotely Operated Connectors |
| 4600 | Samplers (process, air, stack, gas, etc.) |
| 4700 | Hoods, Caves, Enclosures (remotely operated equipment) |
| 4701 | Tools and Equipment Necessary to Operate Equipment in Hoods, Caves, and Enclosures |
| 4702 | Manipulators |
| 4703 | Testing Equipment-Destructive |
| 4704 | Testing Equipment-Nondestructive |
| 4705 | Equipment Located in Hoods, Caves, Enclosure where Operation is Remote |
| 4706 | Reactor Capsules-Metallurgical Tests |
| 4727 | Metallurgical Test Materials, Destructive and Nondestructive |
| 4750 | Machines and Equipment-Contaminated Zones |

**Mechanical** (Continued)

| | | |
|---|---|---|
| 4800 | Laboratory Apparatus | |
| 4900 | Fuel Element Production-General | |
| | 4900010 | Aluminum Uranium Fuel Elements and Related Components-Caps, Spires, Cans, Sleeves, Cores, Hollow Pieces, or Perfs, Dummies, Spaces, Wafers, Self-Supports |
| | 490020 | Zircaloy-Uranium Fuel Elements, Billets, and Related Components-Cores, Copper or Zircaloy Components, End Caps or Plates, Brazing Rings, Self-Supports, Mixers, Perf, Dummies |
| | 490030 | Ceramic Fuel Elements and Related Components |
| | 490040 | Plutonium Fuel Elements and Related Components |
| | 490050 | Other Fuel Elements, as Cluster |
| 4901 | Fuel Element Production-Cleaning and Preparation | |
| | 490102 | Core Preparation-Pickle Machine-Etch Machine, Nickel Plating |
| | 490104 | Aluminum Component Preparation-Caps and Can Cleaning Machine, Methanol Still, Detrex Trichlor Still, Trays, Baskets, Racks |
| | 490106 | Sleeve Preparation-Sleeve Cleaning Machine, Baskets |
| | 490108 | Penetration, Loader, Baskets |
| | 490110 | Billet Core Preparation |
| | 490112 | Zircaloy Component Preparation |
| | 490114 | Nose and Cutoff Preparation |
| | 490116 | Other |
| | 490118 | Chemical Tanks and Piping |
| 4902 | Fuel Element Production-Fuel Element Assembly Equipment | |
| | 490202 | Duplex Furnace and Equipment-Ajax Induction Furnaces, Duplex Agitators, Agitator Baskets, Loader Shields, Tools |

**Mechanical** (Continued)

| | | |
|---|---|---|
| | 490204 | Canning Furnace and Equipment-Canning Jacks, Canning Baskets, Tongs, Shields, Tools |
| | 490206 | Canning Cycle Control, Flex-O-Timer, Valves, etc. |
| | 490208 | Quench Machines, Tanks, and Equipment |
| | 490210 | Machining, Forming, Including Tooling-Acme Gridley Cut-Off Lathes: Monarch Lathe |
| | 490212 | Welders, Buffers and Controls, Collects, Vacuum Welders |
| | 490220 | Coextrusion Component and Billet Assembly |
| | 490222 | Extrusion Presses, Containers, Dies, and Tools |
| | 490224 | Other, Including Triple Dip, Hot Press, Heat Treatment, Hydraulic Press, Hevi-Duty Resistance Furnaces |
| 4903 | Fuel Element Production-Testing and Inspection | |
| | 490302 | Component Mechanical Inspection-Pickle Inspection, Statistical Sampling, Recovered Core Inspection, Gages |
| | 490304 | Component Electronic or Ultrasonic Testing-Transformation Test, Sort Tester, etc. |
| | 490306 | Fuel Element Inspection-Radiography Inspection, Final Inspection Station, Weld Inspection, Length, Braze and Contour Inspection, Film Developing Equipment |
| | 490308 | Fuel Element Testing, Bond and Pen Tester, Autoclave Test, Bubble Tester |
| 4904 | Fuel Element Production-Component Salvage and Recover: Scrap Recovery | |
| 4905 | Fuel Element Production-Component Testing (not for new drawings) | |
| 4906 | Fuel Element Production-Component Supporting Facilities (not for new drawings) | |
| 4907 | Fuel Element Production-Special Items-Stampers; Tables; Bins; Mechanical Counters | |

**Mechanical** (Continued)

| | | | |
|---|---|---|---|
| 4920 | Capsule, Storage for Strontium | | |
| 4921 | Capsule, Storage for Cesium | | |
| 4922 | Fuel Driver Assembly | | |
| 4925 | Fuel Closed Loop In-Reactor Assembly | | |
| 4928 | Fuel Special Purpose Assembly | | |
| 4931 | Fuel Material Open Test Assembly | | |
| 4933 | Post Irradiation Open Test Assembly | | |
| 4934 | Fuel Open Test Assembly | | |
| 4935 | Open Test Assemblies-Tooling | | |
| 4936 | Materials Open Test Assembly | | |
| 4937 | Reflector Assembly | | |
| 5000 | Optical Systems and Devices (including TV devices) | | |
| 5001 | Viewing Windows and Ports | | |
| 5002 | Periscopes | | |
| 5003 | Fuels Development | | |
| | | 500301 | Machines, Mechanisms, and Dies for Forming, Fabricating, or Assembling |
| | | 500302 | Mechanisms for Testing, Inspection, Calibration, etc. |
| | | 500303 | Special Tools, Wrenches, etc. |
| | | 500304 | Baskets, Tubes, Containers, and Component Parts |
| | | 500305 | Vacuum Chambers and Component Parts and Equipment |
| | | 500306 | Equipment Support, Storage Racks, Hand Trucks, Tables, etc. |
| 5010 | Shipping Containers, Boxes, Pallets Conforming to DOT and RDT Regulations | | |

**Instrumentation System**

| | |
|---|---|
| 5900 | Instrumentation-General, Index, Notes, Listings |
| 5901 | Plans, Sections, Elevations, and Details (including conduit and tubing) |
| 5902 | Panel Schedules, Wire Run Lists |
| 5903 | Wiring Diagrams (connections and inter-connections), Elementary |
| 5904 | Cable Schedules |
| 5905 | Tubing Run List |
| 5906 | Equipment Requirements |
| 5907 | Equipment Arrangements |
| 5908 | Schematic Diagrams |

**Sub-Subject**

| | |
|---|---|
| 04 | Process Radiation Monitor |
| 05 | Personnel Radiation Monitor |
| 06 | Underwater Monitor |
| 07 | Fuel Monitor |
| 08 | Pressure Monitor |
| 09 | Temperature |
| 10 | Process Water Monitor and Sampling |
| 11 | Process Water |
| 12 | Process Gas |
| 13 | Pile Motion |
| 14 | Calculator (Power) |
| 15 | Safety Circuits |
| 16 | Biological and Thermal Shield T/C System |

**Instrumentation System** (Continued)

**Sub-Subject** (Continued)

17 Ventilation Controls

18 Power Plant Controls

19 Dissolver Cells

20 Metal Solution Feed Preparation

21 Aqueous Make-Up

22 Solvent Treatment

23 Waste Treatment

24 Precycle

25 Partition

26 Plutonium Decontamination

27 Uranium Decontamination

28 Recovered Acid Storage

29 UNH Storage

30 Chemical Storage

31 Outside Catch Tanks

32 Tank Farms

33 Off-Gas Treatment

34 Extractors

35 Stack Sampling

36 Test Hole Facilities

37 Seismoscope

**Instrumentation System** (Continued)

**Sub-Subject** (Continued)

38 Optical

39 Sodium Systems

40 Flow and Temperature Monitor Data Logging System

41 Main Data-Logging System

42 Rod Control System

43 Primary and Secondary Loop Instrumentation

44 Control Room and Miscellaneous Instrumentation

45 Moisture Detection

46 Argon Systems

47 Helium Systems

48 Products of Combustion Detectors

49 Instrumentation Service Piping, SDD No. 23

50 Instrumentation Radioactive Waste, SDD No. 24

51 Instrumentation Heating and Venting, SDD No. 25

52 Instrumentation Plant Fire Protection, SDD No. 26

53 Instrumentation Reactor Containment, SDD No. 27

54 Instrumentation Reactor, SDD No. 31

55 Instrumentation Heat Transport System, SDD No. 51

56 Instrumentation Closed Loop, SDD No. 61

57 Instrumentation Aux. Liquid Metal System, SDD No. 81

58 Instrumentation Inert Gas Receiving and Processing, SDD No. 82

59 Instrumentation Impurity Monitoring and Analysis, SDD No. 85

**Instrumentation System** (Continued)

**Sub-Subject** (Continued)

60 Instrumentation Reactor Plant Control, SDD No. 90

61 Digital Data Handling and Display, System 91

62 Reactor and Vessel Instrumentation, System 92

63 Process Monitoring and Control Containment System 93-1

64 Process Monitoring and Control Heat Transport System 93-2

65 Process Monitoring and Control Closed Loop System 93-3

66 Process Monitoring and Control Service Piping, System 93-4

67 Process Monitoring and Control Radioactive Waste System 93-5

68 Process Monitoring and Control Heating and Vent System 93-6

69 Process Monitoring and Control Fire Protection System 93-7

70 Process Monitoring and Control Inert Gas Receiving and Processing System 93-8

71 Process Monitoring and Control Aux. Liquid Metal System 93-10

72 Process Monitoring and Control Refueling System 93-11

73 Process Monitoring and Control Maintenance System 93-12

74 Process Monitoring and Control Leak Detection System 93-13

75 Process Monitoring and Control Annunciator System 93-14

76 Process Monitoring and Control Piping and Equipment Electrical Heating System 93-15

77 Fuel Failure Monitoring System 94

78 Flux Monitor System 95

79 Radiation Monitoring System 96

80 Plant Protection System 99

**Instrumentation System** (Continued)

**Sub-Subject** (Continued)

| | |
|---|---|
| 5975 | Equipment Outline and Interface Requirement |

**Instruments - General**

| | |
|---|---|
| 6000 | Instruments-General |
| 6001 | Temperature |
| 6002 | Flow |
| 6003 | Level |
| 6004 | Pressure |
| 6005 | Density |
| 6006 | Humidity |
| 6007 | Moisture |
| 6008 | Conductivity |
| 6009 | Speed |
| 6010 | Viscosity |
| 6011 | Weight |
| 6012 | Specific Gravity |
| 6013 | Weight Factor |
| 6014 | Radiation |
| 6015 | Differential Pressure |
| 6016 | Acidity |
| 6017 | Interface |
| 6018 | Vibration |
| 6019 | Sound |
| 6020 | Component of a Mixture |

**Instruments - General** (Continued)

| **Sub-Subject** | |
|---|---|
| 39 | General |
| 40 | Recorder |
| 41 | Controller |
| 42 | Indicator |
| 43 | Alarm |
| 44 | Recorder Controller Alarm |
| 45 | Indicator Controller Alarm |
| 46 | Integrator |
| 47 | Self-Actuated Regulating Valve |
| 48 | Transmitters |
| 49 | Primary Elements |
| 50 | Accelerator |
| 51 | Alpha |
| 52 | Amplifier |
| 53 | Analyzer |
| 54 | Calculator |
| 55 | Calibrator |
| 56 | Camera |
| 57 | Chambers |
| 58 | Checkers |
| 59 | Counters |
| 60 | Probes |

**Electronics - General**

6500 Electronics-General (Wave Type-Includes Radio, TV, Microwave and Laser)

6501 Electronics-Plans, Elevations, Sections, and Details

6502 Electronics-Wiring Diagrams (elementary, connection, and interconnections)

6503 Electronics-Transmitters, Amplifiers, Receivers, and Control Consoles

6504 Electronic-Wave Guides and Antennas

6505 Electronic-Drill and Trim

6506

**Flow Diagrams**

7000 Process Flow Diagrams

7001 Engineering Diagrams

7002 Instrument Engineering Diagrams

7003 Logic Diagram

7004 Piping and Instrument Diagram

7005 Piping and Instrument Diagram CLS

**Electrical**

Numerical Subject Series: 73, 74, 75, 76, and 77 (Cover Inside Building - Electrical)

78 and 80 (Cover Outside Building - Electrical)

7100 Electrical-General, Wiring Requirements

(This series includes drawings of a composite nature. A drawing which shows a complete installation for a facility.)

7101 Block Outs, Sleeves, Plans, and Details

7107 Studies-General

**Electrical** (Continued)

| | |
|---|---|
| 7108 | Material Lists-General |
| 7109 | Indices |
| 7201 | One-Line Diagrams |
| 7301 | Power-Plans, Elevations, Sections, and Details (including grounding, block diagrams, and engineering diagrams) |
| 7302 | Power-Wiring Diagrams (elementary, connection, and inter-connection) |
| 7303 | Power-Motor Control Centers, Switchgear, Transformers, and Control Panels |
| 7304 | Power-Panel Schedules |
| 7305 | Power-Wire Run Lists, Conduit, Cable, Wire Schedules, and Tray Schedules |
| 7306 | Power-Grounding Junction, Pull Boxes, Ducts, Raceways |
| 7307 | Power-Motor and Control Station Schedules |
| 7308 | Power-Electrical Equipment (motors, heaters, etc.) |
| 7309 | Power-Lightning Protection |
| 7401 | Lighting-Plans, Elevations, Sections, and Details |
| 7402 | Lighting-Wiring Diagrams (elementary, connections, and inter-connections) |
| 7404 | Lighting-Panel, Schedules |
| 7405 | Lighting-Wire Run Lists, Conduit, Cable and Wire Schedules |
| 7406 | Lighting-Junction Pull Boxes, Ducts |
| 7501 | Electrical Control-Control Panel Arrangements, Signal Plans, Elevations, Sections, and Details |
| 7502 | Electrical Control-Wiring Diagrams (elementary, connection, and inter-connection) Block Diagrams |
| 7503 | Electrical Control-Timing Charts |

**Electrical** (Continued)

| | |
|---|---|
| 7504 | Electrical Control-Panel Schedules |
| 7505 | Electrical Control-Wire Run Lists, Conduit, Cable and Wire Schedules |
| 7506 | Electrical Control-Junction Pull Boxes, Ducts (This series includes remote signaling door bells, buzzers, annunciators.) |
| 7507 | Electrical Control-Relay and Switch Schedules |
| 7508 | Electrical Control-Control Equipment and Devices |
| 7575 | Equipment Outline and Interface Requirement |
| 7601 | Communications-Plans, Elevations, Sections, and Details |
| 7602 | Communications-Wiring Diagrams (elementary, connections, and inter-connection) Block Diagrams |
| 7604 | Communications-Panel Schedules, Equipment, and Devices |
| 7605 | Communications-Wire Run Lists, Conduit, Wire Schedules, Cables |
| 7606 | Communications-Junction Pull Boxes, Ducts (This series includes sound powered telephone and central station system telephones.) |
| 7607 | Communications-Station Schedules |
| 7701 | Fire Alarm-Plans, Elevations, Sections, and Details |
| 7702 | Fire Alarm-Wiring Diagrams (elementary, connection, and inter-connection) Block Diagrams |
| 7704 | Fire Alarm-Panel Schedules |
| 7705 | Fire Alarm-Wire Run Lists, Conduit, Cable and Wire Schedules |
| 7706 | Fire Alarm-Junction Pull Boxes, Ducts |
| 7801 | Cathodic Protection-Plans, Elevations, Sections and Details |
| 7802 | Cathodic Protection-Wiring Diagrams (elementary, connection, and inter-connection) Block Diagrams |
| 7806 | Cathodic Protection-Junction Pull Boxes, Ducts |

**Electrical** (Continued)

| | |
|---|---|
| 7900 | Criticality Monitoring Systems |
| 7901 | Plans, Elevations, Sections, and Details |
| 7902 | Wiring Diagrams (elementary, connection, and inter-connection) Block Diagrams |
| 7904 | Panel Schedules |
| 7905 | Wire Run Lists, Conduit, Cable and Wire Schedules |
| 7906 | Junction Pull Boxes, Ducts |
| 8000 | Electrical Utilities Transmission and Distribution Operating Drawings (including switching diagrams and distribution maps) |
| 8001 | Electrical-Maps, Plot Plans, Plans and Profiles, Plans, Elevations, Sections, and Details (includes substation structures) |
| 8002 | Electrical Only-Wiring Diagrams (elementary, connection, and inter-connection) Area One-Line Diagram |
| 8003 | Electrical Only-Pole Line Details, Sag Curves |
| 8004 | Electrical Only-Pole Schedules |
| 8005 | Electrical Only-Cable Schedules |
| 8009 | Electrical Only-Transformer Schedules (this series includes all electrical maps other than the "Civil" map series) |

**Insulation and Heat Tracing**

| | |
|---|---|
| 8200 | Insulation and Heat Tracing Reference Designs |
| 8201 | Insulation and Heater Arrangements |
| 8202 | Insulation Arrangements |
| 8203 | Heater Applications-Piping |
| 8204 | Heater Applications-Equipment |
| 8205 | Heater Schedules |
| 8206 | Insulation Schedules |

**Piping**

| | |
|---|---|
| 8400 | Piping-Process Water |
| 8401 | Piping-Process Water-Front or Rear Face |
| 8402 | Piping-Process Water-Foundation Cooling, Shielding, Horizontal Rods, Risers, and Crossheaders |
| 8403 | Piping-Process Water-Valve Pits or Tunnels |
| 8404 | Piping-Cell Arrangements (includes diversion boxes and trenches) |
| 8405 | Piping-Jumpers |
| 8406 | Piping-Process-Operating or Sample Galleries |
| 8407 | Piping-Process-All other to Include: Buried or Exposed Inside Piping, Wash Down, Fog Spray, Solvent Blend, Slug Storage, Hot Shop, Utility Outlets Relative to Process Piping: Also Jets, Valves, Miscellaneous Process Piping |
| 8408 | Piping-Water Drain and Waste (noncontaminated) |
| 8409 | Piping-Radioactive Liquid Waste (water) |
| 8500 | Piping-Water-Other than Process |
| 8501 | Piping-Steam Radiators, Coils, and Condensate |
| 8502 | Piping-Steam-All Others |
| 8503 | Piping-Acids and Chemicals |
| 8504 | Piping-Gas Decay and Disposal |
| 8505 | Piping-Compressed Air |
| 8506 | Piping-Vacuum |
| 8507 | Piping-Refrigeration, Argon |
| 8508 | Piping-Sprinkler Systems |
| 8509 | Piping-Drains and Waste Inside-Other than Process |

**Piping** (Continued)

| | |
|---|---|
| 8510 | Piping-Service (includes grouped services, viz., water, air, steam, drains, etc.; show on the same drawing) |
| 8511 | Piping-Hangers, Support, Anchors, Guards |
| 8512 | Piping-Hydraulic |
| 8513 | Piping-Demineralized and Distilled Water |
| 8514 | Piping-Fuel Oil |
| 8515 | Piping-Fire Extinguishing Gas, Vapor, Chemical, or Powder |
| 8516 | Piping-Heating and Cooling Water |
| 8517 | Piping-Heating and Cooling NA and NAK, Insulating Requirements |
| 8518 | Piping-Heating and Cooling Gas |
| 8519 | Piping-Cover Gas, Argon |
| 8520 | Piping-Propane |
| 8548 | Piping-Isometric |
| 8550 | Piping-NA Reactor Primary |
| 8551 | Piping-NAK Reactor Secondary |
| 8552 | Piping-NA Receiving and Processing |
| 8553 | Piping-NA Closed Loop |
| | 855301 Piping and Mechanical Sections A1-2-3 |
| | 855302 Piping and Mechanical Sections B1-2-3-4 |
| | 855303 Piping and Mechanical Sections C1-2-3-4-5-6-7-8-9 |
| | 855304 Piping and Mechanical Sections D1-2-3-4-5-6 |
| | 855305 Piping and Mechanical Sections E1-2 |
| | 855306 Piping and Mechanical Sections F1-2 |

**Piping** (Continued)

| | | |
|---|---|---|
| | 855307 | Piping and Mechanical Sections G1-2-3 |
| | 855308 | Piping and Mechanical Sections H1-2-3-4-5-6-7 |
| | 855309 | Piping and Mechanical Sections J1-2 |
| | 855310 | Piping and Mechanical Sections K1-2-3-4-5-6-7 |
| | 855311 | Piping and Mechanical Sections L1-2-3 |
| 8554 | Piping-NA all Other | |
| 8555 | Piping-Special Loop | |
| 8556 | Piping-NA Piping Components, Traps, Cold, Freeze, and Vapor | |
| 8557 | Piping-Equipment Outline and Interface Requirements | |
| 8576 | Piping-Reference Drawings | |

**Heating, Venting, Exhaust**

| | |
|---|---|
| 8900 | Ventilation Exhaust and Heating System-Plans, Section, Details |
| 8901 | Heating and Ventilating Equipment Location |
| 8902 | Heating and Ventilating Schedules, Notes |

**Air Conditioning Systems**

| | |
|---|---|
| 9000 | Air Conditioning Systems-Plans, Sections, Details |

**Miscellaneous**

| | |
|---|---|
| 9900 | Miscellaneous Equipment Pieces or Parts-Not Identifiable as Electrical, Instrument or Mechanical Category; Unrelated to the Assembled Equipment |
| 9901 | Mechanical |
| 9902 | Electrical |
| 9903 | Instrument |

**Sub-Subject**

01 Scope

02 Vendor Information

03 Special Tools

# ATTACHMENT J

(Not Used)

# ATTACHMENT K

## 0110-12 ENERGY CONSERVATION

### 0110-12.1 Coverage

For purposes of this section, the term "building" shall mean new commercial, industrial, or residential buildings, or new building additions, unless otherwise stated. The term "Federal Building" means any building, structure, or facility that is constructed, renovated, leased, or purchased, in whole or in part for use by the United States, which includes a heating system, a cooling system, or both.

These criteria shall be applied in the planning and design of new buildings and building additions including their operating systems and energy using equipment.

These criteria shall be applied with the following objectives:

- Minimizing consumption of nonrenewable energy sources on the basis of LCC effectiveness
- Encouraging the use of renewable energy sources

Employee health, safety and environment (including indoor air quality) shall not be compromised in achieving energy efficiency.

### 0110-12.2 General

For new construction, DOE facilities shall be designed to comply with the requirements of ASHRAE Standard 90.1/Attachment H.

DOE has designated ASHRAE Standard 90.1 as the minimum efficiency standard for new Federal Buildings with the following two exceptions:

- That the DOE LCC methodology shall be used (rather than the ASHRAE methodology)
- That this standard shall not limit further reduction in energy use where such reductions can be achieved on the basis of LCC analysis

The building envelope shall meet the minimum prescriptive energy conservation requirements of ASHRAE Standard 90.1/Attachment H and the criteria in Section 0110-12.3, Building Envelope Thermal Transmittance Values, and Section 0110-12.4, Building Envelope Air Leakage Criteria. The mechanical system shall meet the minimum prescriptive energy conservation requirements of ASHRAE Standard 90.1/Attachment H and the requirements of Attachments H, K, L, M, N, P, Q, R, T, U, and V of this specification, and electrical requirements of this specification.

Relative to electrical distribution systems, utilization equipment rated greater than 1,000 W and lighting equipment with an inductive reactance load component shall have a power factor of not less than 85 percent under rated load conditions. Utilization equipment with a power factor of less than 90 percent shall be corrected to at least 90 percent under rated load conditions. Power-factor corrective devices, installed to comply with this criterion, shall be switched with the utilization equipment, except where this results in an unsafe condition or interferes with the intended operation of the equipment.

Energy conservation alternatives for measures exceeding the minimum requirements of ASHRAE Standard 90.1/Attachment H shall be considered for any building described in Section 0110-12.1, Coverage, according to the procedures outlined in Section 0110-12.7, Building Analysis Procedures, with the objective of obtaining the greatest opportunities for energy conservation for the subject building.

Analysis of the building to determine energy conservation features and energy source alternatives shall be accomplished in the preliminary design (Title I) phase. The conceptual design phase cost estimates shall include adequate funding to cover energy conservation alternatives. Determination shall be made before the completion of the preliminary (Title I) design phase as to which energy conservation alternatives shall be incorporated into the building design based on LCC.

The building energy conservation analysis or waiver thereof shall be reported and documented according to the procedures outlined in Section 0110-12.8, Energy Conservation Report Requirements.

HVAC design shall comply with ASHRAE Standard 62.

**0110-12.3 Building Envelope Thermal Transmittance Values**

The following building envelope criteria shall be the minimum values to be used in the architectural design of new buildings.

As a minimum requirement, the thermal transmittance values ("U" values) and overall maximum allowable combined transmittance values as determined from ASHRAE Standard 90 or Attachment H, whichever is more stringent, shall be used as basic building envelope criteria. Lower thermal transmittance values shall be considered by LCC analysis as discussed in Section 0110-12.7, Building Analysis Procedures. However, other criteria in this specification may supersede ASHRAE Standard 90.1.

Buildings with solar energy sources, high internal heat loads, or other special requirements shall be considered according to the procedures given in ASHRAE Standard 90.1 in order to determine if deviations from the maximum allowable thermal transmittance values would actually result in less annual energy consumption.

**0110-12.4 Building Envelope Air Leakage Criteria**

Building envelope air leakage through walls, window, and doors shall comply with ASHRAE Standard 90, and other criteria of this specification which supplement or supersede ASHRAE Standard 90.1.

**0110-12.5 Use of Renewable Energy Systems**

**0110-12.5.1 Active Solar Systems**

The DOE Energy Management Coordinator shall determine whether the use of active solar systems shall be considered for a building. The application of active solar systems shall be considered based on LCC. Geographical location, site solar access, conventional fuel availability, and load characteristics are major factors in determining when an active solar system shall be considered. Active solar systems shall be considered when it is determined they can be LCC effective.

**0110-12.5.2 Passive Solar Techniques and Daylighting Techniques**

The application of passive solar techniques including passive space heating, passive cooling, and daylighting shall be considered for all building projects as directed by the DOE Energy Management Coordinator. Passive solar techniques shall be used wherever they are determined to be technically feasible and economically justifiable.

**0110-12.5.3 Other Renewable Systems**

The DOE Energy Management Coordinator shall determine whether other renewable energy sources such as photovoltaics, wind, geothermal, or other sources shall be considered.

**0110-12.6 Energy Management Systems**

Criteria and methodology for the design of an EMS shall comply with TM 5-815-2.

Methodology for estimating the energy conservation performance of an EMS shall comply with NCEL UG-0010.

Implementation and installation of an EMS, a micro EMS (single-building controller) or an interface to an existing EMS, shall be considered in the preliminary (Title 1) design phase for all building projects. Energy management systems shall be evaluated by LCC analysis.

**0110-12.7 Building Analysis Procedures**

**0110-12.7.1 LCC Analysis Procedures**

LCC analysis shall be used to compare the total life-cycle value of various building parameters and systems based on initial cost, annual maintenance costs, and annual operating costs. Furthermore, the present value of future

benefits and costs shall be calculated for the various energy conservation alternatives. This analysis shall then form a basis for selecting the optimum building systems for any specific use. LCC analysis shall comply with 10 CFR 436, as amended.

LCC analysis shall use energy costs obtained from the most current four successive quarters as reported in the Quarterly Energy Conservation Report for the site. The annual supplement of NBS Handbook 135, which contains current factors and escalation rates for energy, shall be used for the LCC analysis.

**0110-12.7.2 Use of Computer or Other Energy Analysis Techniques**

Total energy consumption in a building shall be defined to include both building energy consumption and process energy consumption.

Building energy consumption shall be defined as the energy that is used primarily for heating, ventilation, cooling, domestic water heating, energy distribution and lighting. Process energy consumption shall be defined as energy used in a process, production or research program. A "base-case" annual building energy consumption shall be determined by the methods described in Section 0110-12.7.3, Design Analysis Procedures. Energy analysis of building energy conservation alternatives shall be compared to the "base-case" building.

If the estimated annual total building energy consumption as indicated in the DOE project criteria is expected to exceed 500 million BTU, or the building is larger than 10,000 gross square feet, the evaluation of the "base-case" energy consumption and the analysis of energy conservation alternatives shall be performed using a computer analysis technique approved by the DOE Energy Management Coordinator. If the estimated total building annual energy consumption is not expected to exceed 500 million BTU, the design professional can use either a computerized analysis or a manual analysis method using ASHRAE's Simplified Energy Analysis using the modified bin method to evaluate the energy conservation alternatives and the "base-case" design energy consumption for the building.

The computerized energy analysis shall be made part of the "Energy Conservation Report" as discussed in Section 0110-12.8, Energy Conservation Report Requirements. Energy analysis need not be included in a formal report if the usage is less than 500 million BTU/year.

**0110-12.7.3 Design Analysis Procedures**

The energy use of building systems shall be considered at the start of the building design planning process because selection of fundamental building features, such as form, orientation, window/wall ratio, building envelope construction, lighting system types, and HVAC system types have the greatest effect on energy consumption.

Energy consumption characteristics of different building features shall be defined to identify the building energy-consuming systems with the greatest

potential for reduction in energy consumption. Systems that shall be considered are lighting, heating , cooling, energy (media) distribution, domestic water heating, and ventilation. Factors that affect these systems, such as building thermal transmittance values, infiltration and ventilation rates, occupancies, building orientation, shading, HVAC system design, and lighting system design shall be optimized. The most effective design solutions shall be identified using LCC analysis.

Energy consumption characteristics of process energy systems shall also be analyzed and the optimum parameters selected.

A "base-case" annual energy consumption for the building shall be determined as described in Part 1 below. This "base-case' annual energy consumption shall be reported in accordance with Section 0110-12.8, Energy Conservation Report Requirements.

Part I — "Base-Case" Building Annual Energy Consumption

1. New Buildings

A. The "base-case" energy usage shall be defined as the energy the building would consume resulting from only the implementation of the energy conservation requirements of ASHRAE Standard 90.1/Attachment H. The "base-case" energy usage shall define the fraction of the building's energy consumption attributable to lighting, cooling, heating, domestic water heating, energy distribution, and ventilation. The "base-case" energy usage shall also define the energy required for process functions. The base-case energy use shall be determined by simulating the "base-case" building through use of energy analysis techniques as discussed in Section 0110-12.7.2, Use of Computer or Other Energy Analysis Techniques. Project criteria shall indicate process energy requirements and related information.

B. The "base-case" building energy analysis shall include input of all building envelope characteristics, including U-values, areas, building orientation, shading features, window/wall/roof thermal characteristics, and infiltration characteristics. The analysis shall include input of all building internal characteristics including lighting demand and usage schedules, occupancy demand and schedules, equipment and miscellaneous heat gains, building usage schedules, and ventilation rates and schedules. The analysis shall include calculations of the building's heat gains and heat losses and total block heating and cooling loads using all the above listed characteristics and local weather data obtained from AFM 88-29, Chapter 6, bin weather data, or hour-by-hour weather data. The heating and cooling loads shall include the delineation of the portions associated with solar, transmission, ventilation, and internal components.

C. After the thermal heating and cooling loads are calculated, the "base-case" building energy analysis shall indicate the selection of the HVAC system to be applied to the building to offset the heat gains and heat losses. The "base-case" HVAC systems shall meet the requirements of

ASHRAE Standard 90/Attachment H and the other design requirements as described in Attachments L, M, N, P, and Q. The energy analysis shall simulate a full year's performance of the systems based on the thermal loads, full and part load efficiencies of HVAC equipment, demand and usage schedules of energy distribution equipment (fans, pumps, auxiliary burdens, etc.) and demand and usage schedules for domestic water heating. Domestic hot water usage shall be calculated according to the methods described in the ASHRAE Systems Handbook. Process energy usage analysis and optimization of the selection of process equipment shall be evaluated separately according to DOE project criteria.

Part II — Evaluation of Energy Conservation Alternatives

Once the "base-case" building energy usage simulation has been determined, the following steps shall be performed in the building energy usage analysis:

1. Evaluate building envelope energy conservation opportunities by analyzing the effects of modifications to "base-case" thermal transmittance values, fenestration areas, building orientation, building exposure to weather conditions, and building shading characteristics or the use of possible solar technologies.

2. Either evaluate the energy effectiveness of various different mechanical/electrical environmental systems by simulating the energy usage of each of these systems using a constant thermal load "base-case" and comparing the results, or evaluate energy conservation modifications to the "base-case" HVAC system. Again, life-cycle evaluation of mechanical/electrical environmental systems shall be performed using efficiencies exceeding the minimum HVAC system or lighting system requirements of ASHRAE Standard 90.1/Attachment H.

3. Evaluate energy conservation alternatives to systems or compare energy usage between systems in an ordered sequence so that energy consequences of one modification over another are included.

4. Evaluate energy conservation modifications to the "base-case" domestic water heating.

5. If potentially feasible, based on fossil fuel types, availability, and costs, DOE project criteria shall direct the design professional to evaluate cogeneration alternatives. After all system comparisons are evaluated for energy savings, evaluate energy sources based on energy cost to the building. Select fuels and energy sources in conformance with DOE 4330.2C. Discussion of fuel source availability shall be included in the "Energy Conservation Report."

6. LCC analysis shall be performed using typical cost values provided in DOE project criteria and the incremental energy costs determined from Items 1-5 above according to the methods discussed in Section 0110-12.7.1, LCC Analysis Procedures, to determine the optimum energy conservation alternatives.

**0010-12.7.4 Waivers of Design Analysis Requirements**

Comparative analysis of building envelope, lighting, or HVAC systems can be modified given the following conditions:

- No further comparative analysis of building thermal envelope modifications is required if the building orientation or building construction features are pre-determined and cannot be modified because of special site, safety, or programming considerations. The building still must meet minimum building envelope standards required by ASHRAE Standard 90.1/Attachment H.

- No further comparative analysis between HVAC systems is required if the type of HVAC system is unique to the building or process and cannot be modified due to rigid temperature control, humidity control, air movement requirements, or special programming. The pre-selected system shall still be evaluated for all possible energy conservation modifications available to that particular system.

- No further comparative analysis is required if selections of overall HVAC systems or ancillary sub-systems or equipment are available that by empirical observation clearly consume the least energy and that can be shown through simple cost estimation to have no significant additional first cost and no significant annual maintenance costs over other HVAC systems. A description of these findings shall be in accordance with Section 0110-12.8, Energy Conservation Report Requirements.

Waivers of design analysis of this type must be submitted for approval to the DOE Energy Management Coordinator. Unusual limiting considerations concerning the building envelope, the HVAC systems, the lighting systems, or other systems that allow for waiver of comparative analysis shall be discussed in the "Energy Conservation Report."

**0110-12.8 Energy Conservation Report Requirements**

**0010-12.8.1 General**

An "Energy Conservation Report" (summary evaluation) shall be developed for each new building and building addition where *total* energy consumption is expected to exceed 500 million BTU per year or the building is larger than 10,000 gross square feet.

For projects or retrofits of existing buildings where *total* energy consumption is less than 500 million BTU per year, an "Energy Conservation Report" shall be developed at the discretion of the DOE Energy Management Coordinator.

The report shall be included as part of the preliminary (Title I) design, where final selections of energy conservation features or renewable energy sources are made.

The report shall contain the results of the annual energy consumption calculations for the "base-case" building and the results of the energy

analysis and LCC analysis of energy conservation alternatives as listed below. If parts of this analysis are waived, an explanation shall be included in the report. The report shall:

1. Identify the methods used for simulating building energy consumption and the methods of LCC analysis (e.g., dynamic computer analysis, static computer analysis, or manual calculations) used to consider alternative building systems and the use of renewable energy sources.

2. Describe the "base-case" building, including:

   - Building envelope parameters, including U-values, types of fenestration, and percent of gross wall area occupied by fenestration, and orientation

   - Building heating and air-conditioning systems, including types of mechanical refrigeration systems, types of heating systems, types of energy distribution systems, types of automatic temperature controls, types of ventilation systems, and any health and safety requirements that the ventilation system design must satisfy.

   - Types of building lighting systems and controls

   - Building domestic water heating systems

   - Process energy consumption systems, if any

3. Provide backup data to indicate that criteria of ASHRAE Standard 90.1 have been met or exceeded for "base-case" new buildings.

4. Estimate total energy consumption of the "base-case" building, separately identifying building energy consumption and process energy consumption, including:

   - BTU/year by types of energy source (e.g., at point of use electricity, natural gas)

   - Total BTU/year for entire building

   - Total BTU/gross-square-foot/year

   - Total BTU/month and per year and kWh/month and per year for each energy usage category (e.g., lighting, pumps, fans, refrigeration, heating, and domestic water heating)

5. Describe the major energy conservation modifications to the "base-case" building selected, such as modifications to the building envelope, including "U" values, types of fenestration and percentage of glass in the gross wall area and addition of active or passive solar energy features; modifications to the types of heating and air-conditioning systems, including ventilation, refrigeration, heating and automatic

temperature control systems; modification to building systems lighting levels and controls; and all other major modifications considered.

6. Estimate total energy consumption of the "modified" building for each type of proposed energy conservation modification or combination of modifications, separately identifying building energy consumption and process energy consumption. Use the same format as required for the "base-case" building.

7. Estimate energy savings from incorporation of each major energy conservation feature and provide LCC analysis for the addition of each major energy conservation feature.

8. If analyses of active solar systems or use of other renewable energy sources are required by the DOE Energy Management Coordinator, provide the results of the analyses, including backup data for LCC analysis.

9. Discuss the types of permanent metering for energy inputs to the building, types of submetering for process energy use, and compatibility with existing or projected energy management systems. Estimate the total cost for metering and submetering provisions.

**0110-12.8.2 Distribution of "Energy Conservation Reports"**

For buildings that are expected to exceed 500 million BTU per year in total energy consumption or buildings larger than 10,000 square feet, DOE field organizations shall provide one coy of the "Energy Conservation Report" from the Title I design documentation to the In-house Energy Management Branch, Office of Project and Facilities Management, DOE Headquarters, for review and comment. This report should be submitted immediately on completion of Title I. Reconciliation of Headquarters comments shall be incorporated into Title II design by the design professional and responses to comments provided to Headquarters by DOE field organizations.

DOE field organizations shall include a completed summary form in its "Energy Conservation Report" submission to DOE Headquarters with the following information: 1) site; 2) building; 3) TEC ($M); 4) design/construction status; 5) energy type; 6) building energy consumption (MBTU/yr); 7) process energy consumption (MBTU/yr); 8) total energy consumption (MBTU/yr); 9) metering provided; 10) gross square feet (GSF); 11) BTU/GSF per year; 12) LCC method; 13) major energy conservation features; and 14) LCC.

THIS PAGE INTENTIONALLY
LEFT BLANK

# ATTACHMENT L

## 1525 MECHANICAL INSULATION

### 1525-1 APPLICABILITY

Insulation shall be considered for equipment, ductwork, piping, flue pipe, and breeching to minimize energy loss, to prevent condensation, and to provide safe surface temperatures.

All insulation material, media used to apply insulation, and jacketing material shall have a maximum flame spread of not more than 25 fuel-contributed and smoke-developed ratings of not over 50 when tested using UL 723 Test Methods. Exception to the smoke-developed rating of 50 shall be made for exterior underground piping and exterior above-ground piping beyond 15 feet from buildings or individual supports (stanchions).

Asbestos or asbestos-containing materials shall not be used.

### 1525-2 MINIMIZATION OF ENERGY LOSS

ASHRAE Standard 90.1 shall be the basis for determining insulation thickness in HVAC systems, service water heaters, and recirculation piping in buildings.

Insulation thickness for exterior and underground distribution systems and equipment shall be based on the TIMA Economic Thickness Manual.

### 1525-3 CONDENSATION PREVENTION

Insulation material, thickness, and jacketing shall be designed to provide an exterior skin surface temperature greater than the minimum anticipated ambient dew point.

### 1525-4 SAFE SURFACE TEMPERATURES

Insulation shall be provided on hot and cold generation equipment, ductwork, piping, flues or breeching, using a material, thickness, and surface treatment that will maintain the surface temperature between 30°F and 125°F for highly conductive (metal) surfaces or between 32°F and 150°F for nonconductive surfaces.

## 1530 FIRE PROTECTION

### 1530-1 GENERAL

Fire protection systems shall comply with DOE 5480.7 (Attachment U).

## 1530-2 IMPROVED RISK CONCEPT FOR FIRE PROTECTION SYSTEMS

### 1530-2.1 General

Fire protection design shall incorporate an "improved risk" level of fire protection as directed in DOE 5480.7 (Attachment U) as well as Section 0110-5, (Attachment T) Health and Safety.

### 1530-2.2 Vital Programs

Fire protection systems for vital programs shall incorporate a "higher standard of protection" than the "improved risk" level as directed by DOE 5480.7 (Attachment U).

### 1530-2.3 Maximum Possible Fire Loss

#### 1530-2.3.1 General

The "improved risk" level of protection requires that the "maximum possible fire loss" shall be the basis for determining the need to provide automatic fire suppression systems and for additional fire protection systems and features. "Maximum possible fire loss" is defined in DOE 5480.7 (Attachment U). Criteria I through V as discussed in DOE 5480.7 (Attachment U) correspond with Section 1530-2.3.2, Criterion I, through Section 1530-2.3.6, Criterion V. The application of these criteria shall be considered by an experienced fire protection engineer.

#### 1530-2.3.2 Criterion I

Whenever the maximum possible fire loss exceeds $1 million, automatic fire suppression systems shall be provided.

#### 1530-2.3.3 Criterion II

The need for automatic fire suppression systems shall be considered when the maximum possible fire loss is below $1 million.

Some examples of situations where automatic fire suppression systems may be warranted for potential fire losses below $1 million are:

- Facilities that contain critical or long-procurement-time construction items
- A temporary-use trailer used as a control center for a vital one-time activity
- A facility with high public visibility or sensitivity
- Electric power transformers with combustible contents that, if damaged, could result in an extended shut-down of the facilities they serve

- Facilities in which a fire could result in the accidental release of toxic or hazardous materials or emissions
- Cooling towers of combustible construction
- Facilities that can be easily protected by extending automatic sprinkler systems from an adjacent protected facility at a low incremental cost
- Facilities in which a fire could damage more important adjacent facilities
- Facilities that may warrant automatic fire suppression systems in the future
- Facilities where required for protection of human life

**1530-2.3.4 Criterion III**

Automatic fire suppression systems are not required if all of the following conditions are satisfied:

- The maximum possible fire loss is less than $250,000
- There is no hazard to human life
- There is no danger of a fire resulting in release of toxic or hazardous material or emissions
- Important operations or program missions will not suffer unacceptable delays as a result of fire. See DOE 5480.7 (Attachment U) for qualification criteria.

**1530-2.3.5 Criterion IV**

Whenever the maximum possible fire loss exceeds $25 million, the area shall be subdivided with free-standing fire rated walls or suitable redundant fire protection systems to limit the credible loss to less than $25 million even in the event the primary system fails. In no case shall the maximum loss potential exceed the $75 million loss limit established in DOE 5480.7 (Attachment U); failure-proof systems such as physical separations shall be provided to prevent this possibility.

Response capability of on-site fire departments and availability of adequate water quantity and pressure at well-located hydrants may be the principal basic method of redundant fire protection for most DOE facilities, but automatic redundant protection systems may be needed to meet or exceed "improved risk" levels of protection for some facilities.

Redundant fire protection systems may include dual water supplies to sprinkler systems, dual piping risers, or valving systems such that adequate redundancy in water supply to the sprinkler heads is provided to cover maintenance or emergency outages of either of the water supply systems; or, may include

multiple types of automatic fire suppression systems (e.g., water sprinklers and carbon dioxide).

Some DOE sites or facilities must rely on local (e.g., city or county) fire department response capability for redundant protection. The fire department capability to reduce loss due to a well-developed fire shall be considered in terms of the following factors:

- Location of fire station(s) with respect to the facility to be protected
- Staffing of stations (e.g., continuously or "on-call" volunteer)
- Ability to perform initial fire attack as outlined in NFPA 1410
- Method(s) of fire department notification or alarm reception
- Familiarity of station staff with the DOE facility, and training in preparation for effective response to an alarm at the DOE facility
- Degree of commitment that fire department(s) make to respond to fire emergencies in DOE facilities. This factor shall be emphasized.

  Portable fire extinguishers, interior fire hose systems, or interior fire detection and alarm systems do not meet the definition of a redundant fire protection system.

**1530-2.3.6 Criterion V**

The need for redundant fire protection systems or methods, or for supplementing existing redundant fire protection capability, shall be considered on a case-by-case basis when the maximum fire loss potential is below $25 million. Factors to be considered include:

- Fire department response capability
- Hazards involved in the operation
- Operating and program-mission effect of interruption and delays due to fire

## 1530-3 WATER FLOW AND PRESSURE REQUIREMENTS FOR FIRE PROTECTION

### 1530-3.1 General

Total volume, pressure, and design flow rate of water necessary to provide fire protection for facilities shall be determined by the methods described in the following paragraphs. All sprinkler or other automatic fire suppression system components shall be UL- or FM-approved for the particular application chosen.

### 1530-3.2 Occupancy Hazard Classification

NFPA 13 shall be used to determine the Occupancy Hazard Classification for any facility. Light hazard occupancy rules are prohibited.

### 1530-3.3 Water Demands for Sprinklered Facilities

#### 1530-3.3.1 Schedule-Designed Sprinkler Systems

For systems designed using pipe schedule methods, NFPA 13 shall be used for calculating water demand in the absence of specific requirements provided by the cognizant DOE fire protection authorities based on unusual occupancies or special hazards.

Precautions shall be taken to ensure that adequate residual pressure exists at full demand flow rate to fulfill the density and coverage requirements for schedule-designed systems. If water supply or pressure is marginal the pressure loss from the base of the riser to the most remote head should be calculated to confirm that the schedule designed-system will meet requirements, or the system shall be hydraulically designed.

#### 1530-3.3.2 Hydraulically Designed Sprinkler Systems

NFPA 13 shall be used to determine water supply requirements for hose streams (gpm) and duration (min). Density curves presented in NFPA 13 shall be used for calculating sprinkler demand for hydraulically designed systems. For hazard classifications not covered in NFPA 13 and certain other special occupancies or hazards, design density and area of coverage shall be as specified by other more appropriate standards referenced in NFPA 13 or project-specific requirements as determined by the cognizant DOE fire protection engineer. For ordinary hazard occupancies and above, hose stream requirements shall be a minimum of 500 gpm regardless of the hose stream demands listed in the above references unless otherwise specified by the DOE project criteria.

Determination of adequacy of water supply shall be made on the basis of actual flow test data gathered using the methods in NFPA 13, Appendix B.

#### 1530-3.3.3 Fire Hydrant Demand

Where reliance is placed on fire department response, either for protection of unsprinklered buildings or where the fire department will serve as redundant (backup) protection, as a general rule the water supply should be adequate to supply at least 0.03 gpm per cubic foot of fuel (building and contents) in the largest fire area (for high-BTU-content fuels, convert to equivalent ordinary BTU loads). This water supply should be available at 20 psig residual pressure at the hydrants.

## 1530-4 AUTOMATIC SPRINKLER PROTECTION

### 1530-4.1 General

All sprinkler systems shall comply with NFPA 13.

### 1530-4.2 Types of Sprinkler Systems

#### 1530-4.2.1 Wet Pipe

Sprinkler systems shall normally be wet pipe using pipe schedule sizes listed in NFPA 13 for ordinary installations. Hydraulic designs shall be considered for all systems. The system shall be hydraulically designed where residual pressure is marginal, water application rate is high, response time is critical, or special risks are involved.

#### 1530-4.2.2 Dry Pipe

In unheated areas or other areas subject to freezing temperatures, dry pipe systems shall be provided. Because of the time delays associated with release of the air in the system, water demands for dry pipe systems shall be computed over areas 30 percent greater than for comparable wet pipe systems. Where the unheated area is small it may be cost effective to install an antifreeze system or small dry pipe system supplied from the wet pipe system in the main heated area.

#### 1530-4.2.3 Preaction

A preaction system shall be used where it is particularly important to prevent the accidental discharge of water. Need for a preaction system shall be based on review and by recommendation of a professional fire protection engineer. The detection system chosen to activate the preaction valve shall have high reliability and a separate alarm/supervisory signal to indicate status. The detection system must be designed to be more sensitive than the closed sprinklers in the preaction system, but should not be so sensitive as to cause false alarms and unnecessary actuation of the preaction valve.

#### 1530-4.2.4 Deluge

For extra hazard areas and specific hard-to-extinguish fuels such as explosives and pyrophoric metals, a deluge system with open sprinkler heads may be used to wet down the entire protected area simultaneously. Deluge systems shall comply with NFPA 13. If quick response is required, deluge system piping may be primed with water. The nozzles must be provided with blow-off caps for water-filled deluge systems.

#### 1530-4.2.5 Self Restoring

Self-restoring sprinkler systems, such as the on-off multicycle system or systems using individual on-off sprinkler heads, shall be considered where the water from sprinklers will become contaminated by contact with room contents,

where there is a concern for water damage, or where water supply or storage volume is marginal.

**1530-4.2.6 Quick-Response**

Where there are high-value concentrations (values per square foot), quick-response sprinklers shall be considered in lieu of conventional sprinklers.

**1530-5 SPECIAL PROTECTION SYSTEMS**

**1530-5.1 General**

Special protection systems may be used to extinguish or control fire in easily ignited, fast-burning substances such as flammable liquids, some gases, and chemicals. They shall also be used to protect ordinary combustibles in certain high-value occupancies especially susceptible to damage. Special protection systems supplement automatic sprinklers as described by NFPA and shall not be used to substitute for them except where water is not available for sprinkler protection. The added expense of the supplementary system shall be supported by documented justification.

The selection of a particular special suppression system shall be based on:

- The effectiveness of that system or agent for the type of hazard .
- The damage likely to be caused by the extinguishing agent, including cleanup and down time

**1530-5.2 Types of Special Suppression Systems**

**1530-5.2.1 Water Spray**

Installation of water spray systems shall comply with NFPA 15.

**1530-5.2.2 Carbon Dioxide**

Agent quantity requirements and installation procedures shall comply with NFPA 12.

**1530-5.2.3 Dry Chemical**

Systems shall comply with NFPA 17.

**1530-5.2.4 Foam**

Foam systems shall comply with NFPA 11, NFPA 11A, NFPA 16, and NFPA 16A.

**1530-6 (RESERVED)**

**1530-7 PORTABLE FIRE EXTINGUISHERS**

Portable fire extinguishers shall comply with NFPA 10.

## 1530-8 FIRE DETECTION AND ALARM SYSTEMS

### 1530-8.1 General

All fire detection and alarm devices shall have UL-listed components or be FM-approved. Devices and systems shall comply with NFPA 71, NFPA 72A, NFPA 72B, NFPA 72C, NFPA 72D, NFPA 72E, NFPA 72F, NFPA 72G and NFPA 72H as applicable.

### 1530-8.2 Alarm Systems

#### 1530-8.2.1 General

Fire alarm systems shall have the following basic features:

- Transmission of signals to the DOE facility fire department alarm center and other constantly attended locations in accordance with the appropriate NFPA Signaling Systems Standard
- Local alarms for the building or zone in alarm
- Trouble signals as required by the appropriate NFPA Signaling Systems Standard
- Emergency battery backup for system operation
- Electric supervision of all circuits as required by the appropriate NFPA standard
- Supervisory devices for all critical functions (valve position switches, water level, temperature)
- Capability of annunciating at least three separate conditions: 1) a fire alarm, 2) a supervisory alarm, and 3) a trouble signal indicating a fault in either of the first two. Annunciation of each condition shall be separate and distinct from the other two.

Fire alarm systems for new DOE buildings shall be compatible with those for the DOE complex where the new building is to be located.

#### 1530-8.2.2 Alarm Actuating Devices

- Alarms that respond to flow of water shall be provided wherever a sprinkler system is installed and shall comply with requirements of the NFPA standard for the type of signaling system used.
- A manual fire notification method such as manual fire alarm boxes shall be provided and located in accordance with the appropriate NFPA standard
- Combined watch reporting and fire alarm systems, if used, shall be in accordance with the appropriate NFPA standard

## 1530-8.3 Automatic Fire Detection Systems

### 1530-8.3.1 General

Automatic detection systems may be used to supplement or to actuate extinguishing systems. Automatic fire detectors shall comply with NFPA 72E. Detector spacing shall be in accordance with NFPA 72E, Appendices A, B and C.

### 1530-8.3.2 Heat-Actuated Detectors

Heat-actuated detectors are appropriate when any of the following conditions exist:

- Speed of detection is not the prime consideration
- The space is small or confined and rapid heat build-up is expected
- Ambient conditions do not allow the use of other detection devices

### 1530-8.3.3 Flame-Actuated Detectors

Flame-actuated detectors are appropriate when rapid detection is of prime importance in high hazard areas, such as:

- Fuel-loading platforms
- Industrial process areas
- Hyperbaric chambers
- High ceiling areas
- Atmospheres where explosions or very rapid fires may occur

Since this type of device must "see" the flame to operate, the number of devices and their aiming must be carefully engineered. False trips from extraneous radiation sources are also possible. For the above reasons use of this type of device shall require coordination among the fire protection engineer, DOE project manager, and the equipment manufacturer.

### 1530-8.3.4 Smoke Detectors

Smoke detectors shall be installed in all areas where required by the appropriate NFPA standard or by the cognizant DOE fire protection authority. Smoke detectors shall be of a type operating on one of the principles described in NFPA 72E. A mixture of detector types may be appropriate. Location and required spacing of smoke detectors shall be determined by the methods of NFPA 72E and its Appendix C. Spacing shall be based on threshold fire size, fire growth rate, and ceiling height as described in these standards.

## 1530-9 WATER STORAGE AND DISTRIBUTION

Wherever practical, dedicated fire water storage and distribution systems shall be used. If a dedicated fire water supply system cannot be provided, the fire protection water supply shall assure availability regardless of simultaneous process and domestic water usage.

Where automatic sprinkler systems or standpipes are fed from a potable water system, approved check valves shall be installed in sprinkler lead-ins to preclude the introduction of pollutants from systems or recirculation of stagnant water that would contaminate the domestic water system. Underground fire water mains or combined fire and domestic water mains, including valves, hydrants, and fittings, shall be installed, flushed, sterilized, and tested in accordance with NFPA 24 and Section 0260, Piped Utility Materials. Water storage tanks shall comply with NFPA 22. Fire pumps shall comply with NFPA 20. Water storage shall be sufficient to meet the density, pressure, and duration requirements of NFPA 13.

Whenever feasible, all water distribution systems shall be of the looped grid type providing two-way flow with sectional valving arranged to provide alternate water flow paths to any point in the system.

Fire mains (except those supplying a single hydrant or extensions of existing smaller mains) shall be at last 8 inches. Mains shall be sized to supply the largest fire demand plus the largest domestic and process demand with consideration for residual sprinkler system pressure requirements.

Sprinkler supply lead-ins should be at least 6 inches, except lead-ins of 4 inches may be used for very small sprinkler systems when substantiated by hydraulic calculations. In no case shall the lead-in be smaller than the sprinkler riser.

Where combined fire and domestic-process water systems are used, the supplies to each building shall be arranged and valved so that the domestic and process systems can be shut down without shutting off the fire system supply.

Sprinkler risers should be located at an exterior wall. Sprinkler supply lead-ins should run under buildings the minimum distance possible. Where a riser must be located in a potentially contaminated area, consideration should be given to locating the riser exterior to the building in a heated enclosure.

Outside control valves that can be locked open shall be provided on each supply lead-in, located if possible a minimum distance of 40 feet from the building. PIVs should be used where possible. If site conditions preclude the use of PIVs, such as where they would be subject to mechanical damage and cannot be properly guarded, OS&Y valves in pits may be used.

Key-operated buried valves shall not be used for sprinkler control valves. In no case shall there be more than one valve controlling a sprinkler supply lead-in.

All lead-ins shall be connected with the sprinkler system at the base of the riser. Alarm valves shall be located as close as practical to the building entry point. Hydrants shall be provided so that hose lays from hydrants to all exterior portions of a protected building are no more than 300 feet. Hydrants shall not be closer to buildings than 50 feet.

# ATTACHMENT M

## 1540 PLUMBING/SERVICE PIPING

### 1540-1 PLUMBING

#### 1540-1.1 General

These criteria apply to interior plumbing systems (fixtures, supply, drain, waste and vent piping, service water heating system, safety devices, and appurtenances) up to 5 feet beyond the building exterior wall.

Domestic water shall be supplied by a separate service line and not be a combined fire protection and potable water service or a combined process water and potable water system within the building.

Plumbing shall comply with the Uniform Plumbing Code, ASHRAE Handbooks, and ASHRAE Standard 90.1.

Design criteria for special systems related to the facility process or research requirements shall be provided by the cognizant DOE authority.

Penetrations of piping through security barriers shall be minimized. Such penetrations more than 96 square inches in area and more than 6 inches in minimum dimension shall provide a penetration delay equal to that required for the security barrier. The physical attributes and intended service of the piping and the axial configuration of the barrier penetration shall be considered when evaluating that penetration delay.

#### 1540-1.2 Fixtures

Fixtures and appurtenances shall be suitable for use by handicapped persons. Self-contained mechanical-refrigerated coolers shall be provided wherever a need for drinking fountains exists. Ratings shall be based on ARI 1010. Electrical equipment shall be UL listed.

#### 1540-1.3 Piping

##### 1540-1.3.1 Supply

Type K copper tubing shall be used below grade. Type L copper tubing shall be used above grade. CPVC and PB plastic pipe and tubing may be used in lieu of copper tubing above grade where not subject to impact damage or otherwise prohibited by DOE project criteria.

Fittings for Type K shall be flared brass, solder-type bronze or wrought copper. Fittings for plastic pipe and tubing shall be solvent cemented or shall use other forms of joining (such as electric heat fusion) at the direction of the cognizant DOE authority or shall use Schedule 80 threaded. No lead solder shall be used for copper pipe in potable water systems.

Stop valves shall be provided at each fixture. Accessible shut-off valves shall be provided at branches serving floors or fixture batteries for isolation, or at risers serving multiple floors. Shut-off valves shall be provided to isolate equipment, valves, or appurtenances for ease of maintenance.

Accessible drain valves shall be provided to drain the entire system. Manual air vents shall be provided at high points in the system.

Provision for expansion compensation shall be included where thermal expansion and contraction cause piping systems to move. The movement shall be accommodated by using the inherent flexibility of the piping system as laid out, by loops, by manufactured expansion joints, or by couplings.

Accessible manufactured water hammer arresters shall be provided. Dielectric connections shall be made between ferrous and non-ferrous metallic pipe.

Where domestic or fire water service lines enter buildings, suitable flexibility shall be provided to protect against differential settlement or seismic activity in accordance with the UPC or NFPA 13, respectively.

**1540-1.3.2 Drain, Waste and Vent**

Underground lines shall be service weight cast iron soil pipe hub-type (with gasket); hubless cast iron soil pipe may be used in locations where piping is accessible. Aboveground (above grade) lines that are 1-1/2 inch in diameter and larger shall be either hubless or hub-type (with gasket) service weight cast iron soil pipe. Lines 1-1/2 inch through 6 inch in diameter may be ABS or PVC plastic pipe where allowed by DOE project criteria. Pipe and fittings shall be joined using solvent cement or elastomeric seals. Lines smaller than 1-1/2 inch in diameter shall be either 1) Type L copper with solder-type bronze or wrought copper fittings or 2) galvanized steel with galvanized malleable iron recessed threaded and coupled fittings. Cast iron soil pipe fittings and connections shall comply with CISPI guidelines.

Provisions for expansion compensation shall be included as above.

**1540-1.4 Service Water Heating Equipment**

The service water heating system shall provide flow within 10 seconds of approximately 110°F at the most remote outlet from generation equipment, except where this is deemed unnecessary by the cognizant DOE authority.

Booster heaters shall be provided where sanitizing for dishwashing or where a temperature above the normal water heater outlet temperature is required.

Generation equipment and system selection shall be based on LCC analysis and available energy sources.

### 1540-1.5 Safety Devices

Tempering valves shall be the fail-safe pressure balance type.

As directed by project criteria, emergency eye washes, emergency showers, or combination emergency eye wash-showers shall be provided in areas where corrosive or other skin or eye irritant chemicals are stored, handled, used or dispensed. Equipment shall comply with ANSI Z358.1 and be serviced by the potable water system.

Hot water generation equipment shall be provided with ASME code-stamped tanks, when of sufficient capacity, water temperature, or hot input rate to be within the jurisdiction of the ASME Boiler and Pressure Vessel Code. Approved relief devices, combination temperature-pressure or separate units, depending on the application, shall be provided.

Backflow preventers and air gaps shall be used to prevent cross-connection (contamination) of potable water supplies. Vacuum breakers (to prevent back-siphonage) shall be used only in conjunction with administrative controls.

### 1540-1.6 Appurtenances

#### 1540-1.6.1 Pressure Modification

Pressure-reducing valves shall be provided where service pressure at fixtures or devices exceeds the normal operating range recommended by the manufacturer.

Wherever a pressure-reducing valve's failure may cause equipment damage or unsafe conditions, a pressure-relief valve shall be provided downstream of the reducing valve.

A means to increase the system water pressure shall be provided when incoming water service pressure will provide less than the minimum operating flow and pressure recommended by the manufacturer.

The basic pressure-boosting system should be a manufactured package composed of an ASME-rated hydropneumatic, non-rechargeable tank, multiple alternating pumps, and low-flow/demand tank operation (without pump). Manufactured packages shall include all required operational and safety features.

THIS PAGE INTENTIONALLY
LEFT BLANK

# ATTACHMENT N

## 1550 HEATING, VENTILATING AND AIR-CONDITIONING SYSTEMS

## 1550-1 GENERAL SIZING AND DESIGN CRITERIA

### 1550-1.1 General Selection Procedures for HVAC Systems

The design professional shall evaluate building HVAC systems and sub-systems and select major HVAC equipment components based on a consideration of health and safety requirements, initial costs, operating costs, and maintenance costs according to the procedures listed in 0110-12.7 (Attachment K), Building Design Analysis.

HVAC equipment shall be sized to satisfy the building heating and cooling load requirements and to meet all general equipment design and selection criteria contained in the ASHRAE Fundamentals Handbook, ASHRAE Equipment Handbook, ASHRAE Systems Handbook, ASHRAE Applications Handbook, and ASHRAE Refrigeration Handbook. Calculations and equipment selection shall be made according to the procedures given in ASHRAE GRP 158 and appropriate chapters of the ASHRAE Fundamentals Handbook.

### 1550-1.2 Heat Gain and Heat Loss Calculations

#### 1550-1.2.1 Building Envelope Thermal Transmittance ("U") Values

See Section 0110-12.3 (Attachment K), Building Envelope Thermal Transmittance Values, for criteria to be applied in building planning and design.

#### 1550-1.2.2 Inside Design Temperature and Relative Humidities

Environmental design temperatures and relative humidities for special space uses other than those listed here shall be designated in the project criteria. The design professional shall verify that the recommended design values are within the criteria bounds of ASHRAE Standard 55 and that the values are within energy conservation criteria guidelines as stated in Section 0110-12 (Attachment K), Energy Conservation. The design professional shall alert the cognizant DOE authority if the recommended DOE design values will result in energy inefficiency or occupant discomfort.

When space cooling is required, the inside design temperature to maintain personnel comfort shall be 78°F dry bulb unless otherwise indicated by project criteria. The design relative humidity shall be 50 percent. Summer humidification shall not be provided for personnel comfort. Cooling systems shall be designed to maintain space relative humidity conditions through the normal cooling process and should not have controls to limit the maximum relative humidity unless project specific criteria dictate.

See Section 1550-1.4, Use of Evaporative/Adiabatic Cooling, for inside design temperature and humidity conditions applicable for adiabatic cooling systems.

The inside wintertime design temperature for personnel comfort shall be 72°F dry bulb unless otherwise indicated here or directed by the project criteria. The following design temperatures shall be used for the space usages indicated in Table 1550-1.2.2.

**Table 1550-1.2.2 Inside Design Temperatures**

| Temperature (°F db) | Space |
|---|---|
| As indicated by DOE project criteria | Storage (unoccupied) |
| 55 | Storage (occupied) |
| 50 | Warehouses |
| 60 | Kitchens |
| 65 | Laundries |
| 65 | Shops (high work activity) |
| 70 | Toilets |
| 75 | Change Rooms (heating only when occupied) |

Except where it can be substantiated from recordings or engineering computations that the inside relative humidity will be less than 30 percent, winter humidification for personnel comfort and health shall not be provided. Where such conditions have been substantiated, a design relative humidity of 30 percent shall be used in establishing minimum humidification equipment requirements.

**1550-1.2.3 (Not Used)**

**1550-1.2.4 Weather Data**

Weather data for use in connection with HVAC shall be obtained from one or more of the following:

- Local weather station
- AFM 88-29
- Climatic Conditions for the United States, ASHRAE Fundamentals Handbook.
- National Climatic Data Center, NOAA, Federal Building, Asheville, North Carolina 28801

**1550-1.3 Heating and Air-Conditioning Equipment Sizing and Performance**

The capacity of central heating, refrigeration, and ventilation equipment shall be sized for the peak block building or the maximum simultaneous zone heating and cooling design loads and in accordance with the ASHRAE Fundamentals Handbook. The equipment shall not be sized for future additional



9413154.1006

THIS PAGE INTENTIONALLY
LEFT BLANK

capacity nor redundancy unless indicated in DOE project criteria. Individual zone equipment shall be sized according to the peak zone load. The requirements of ASHRAE Standard 62 concerning minimum outside air requirements shall also be considered during the sizing process.

All HVAC equipment shall meet the performance and efficiency standards of ASHRAE Standard 90.1, Section 6.

Thermal storage systems shall be considered according to the requirements of 0110-12.7, Building Design Analysis, when required by DOE project criteria.

Safety factors shall also be added as indicated elsewhere in the specification.

**1550-1.4 Use of Evaporative/Adiabatic Cooling**

In locations where a wide variation exists between the dry and wet bulb temperatures for extended periods of time, evaporative/adiabatic cooling shall be considered for the applications listed below. Selection of cooler types shall depend on the system configuration, user experience, and LCC analysis. All evaporative coolers shall maintain a positive water-bleed and water-makeup system for control of mineral buildup.

Applications that shall be considered include warehouses, shops not requiring close (plus or minus 5°F) temperature control, non-residential size kitchens, makeup air ventilation units, and mechanical equipment spaces.

Air duct design, number and location of coolers, and relief of the higher rate of air supply to the atmosphere shall be considered to ensure a satisfactory operating system. Multi-stage evaporative cooling systems shall also be considered.

For shops and similar large open bay areas, the heating and cooling systems shall not be combined except where it is economically or operationally justified. Two-speed fan operation shall be used: fast speed and higher cfm air flow rate during the cooling cycle and slow speed and lower cfm air flow rate during the heating cycle. Where the difference between heating and cooling air flow requirements is too great to allow for adequate air outlet device performance at the lower air flow requirement, separate heating and cooling systems shall be provided.

Indoor design dry bulb temperatures for spaces air-conditioned by adiabatic cooling systems shall be as specified by project-specific criteria. Design operating efficiency of adiabatic cooling equipment shall be a minimum of 70 percent. System-installed capacity shall be based on the conditioned space peak design cooling load. An arbitrary air-change rate for design air flow shall not be used. Adiabatic cooler specifications shall be stated in terms of the air capacity and the entering ambient dry and wet bulb temperatures and leaving dry bulb temperature.

## 1550-1.5 Ventilation-Exhaust Systems Design Requirements

### 1550-1.5.1 General

The design professional shall select ventilation-exhaust systems for the effective removal of noxious odors, hazardous gases, vapors, fumes, dusts, mists, and excessive heat and for the provision of fresh air to occupants. The design criteria contained in this section shall be followed in determining the required air quantity and quality for ventilation and exhaust systems. Further design criteria are contained in Section 1550-2.5, Air Handling and Air Distribution Systems; Section 1550-99, Special Facilities; Section 1550-3, Testing, Adjusting and Balancing; Section 1595-6, Control of Air Handling Systems; NFPA 90A; and NFPA 91.

The use of exhaust stack(s) shall be considered to provide dispersion and preclude exhaust-to-intake return of air to this or an adjacent facility. Local weather and site conditions along with guidance found in ASHRAE Fundamentals shall be used to determine requirements.

### 1550-1.5.2 Outdoor Air Quality

Outdoor air shall be used to provide makeup air, dilute non-toxic contaminants and provide acceptable indoor air quality in spaces served by ventilation systems. The outdoor air shall meet the quality required by ASHRAE Standard 62. DOE project criteria shall include test data on ambient air quality. If the outdoor air does not meet the ambient air quality standards for particulates, gases, or other contaminants, it shall be treated to remove particles and gases and vapors as required to meet the minimum ambient air quality standards.

### 1550-1.5.3 Personnel Ventilation Air Requirements

The outdoor air shall be provided in the quantities indicated for conditioned offices and other occupied spaces in ASHRAE Standard 62. Outdoor air in addition to the quantities required by ASHRAE Standard 62 shall be provided when required to balance a building's or space's exhaust air rate or to maintain the building or space under a positive pressure. Proper ventilation rates shall be demonstrated by calculation if natural ventilation or infiltration is used as the outdoor air introduction method.

Special attention shall be given to design of ventilation systems where smoking will be allowed. For these spaces, the outside air ventilation rate designated for smoking areas by ASHRAE Standard 62 shall be provided or the appropriate air cleaning used.

### 1550-1.5.4 Recirculation

When air is supplied to a space, the portion of the total supply air that exceeds the required outdoor air quantity shall be recirculated through the ventilation system except from areas in which recirculation is specifically prohibited. If the indoor air quality does not meet or exceed the limits

given in ASHRAE Standard 62, the recirculated air must be treated and monitored.

Areas from which air shall not be recirculated include areas that produce or emit dust particles, heat, odors, fumes, spray, gases, smoke, or other contaminants that cannot be sufficiently treated and could be potentially injurious to health and safety of personnel or are potentially damaging to equipment. These areas shall be 100-percent exhausted. Project criteria shall indicate other areas of non-recirculation.

Ventilation and exhaust air systems serving these areas or other special areas shall meet all the deliverable-air quantity requirements of ASHRAE Standard 62 and any other specific equipment requirements as discussed in Section 1550-2.5, Air Handling and Air Distribution Systems, and Section 1550-99, Special Facilities.

Rest rooms, janitor's closets, garbage rooms, and other malodorous spaces shall be exhausted at a rate of not less than 2 cfm per square foot or as specified in ASHRAE Standard 62, whichever is the more stringent, regardless of any other calculated ventilation requirements. Space ventilation air from adjacent spaces should be used as the ventilation supply air for the 100-percent exhausted spaces, as long as:

Ventilation by this method does not violate any requirements of NFPA 90A, NFPA 101, or special space pressurization requirements

The air supplied is not potentially more hazardous than the air from the space exhausted

**1550-1.5.5 Industrial Ventilation Requirements**

Industrial-type facilities shall be provided with ventilation (supply and exhaust) systems as required for heat exposure control, or dilution ventilation. Ventilation air shall be provided in the quantities required to maintain OSHA air quality limits, all the PELs established by 29 CFR 1910 and all ACGIH TLVs. Design air quantities and transport velocities shall be calculated according to the calculation methods prescribed by the ASHRAE Systems Handbook, the ASHRAE Applications Handbook, the ACGIH Industrial Ventilation Manual, 29 CFR 1910. Makeup air shall be tempered.

**1550-1.5.6 Local Exhaust Systems**

DOE project-specific criteria shall provide information on the source, quantity, and type of contaminants. Local exhaust systems shall be designed to maintain the required capture air velocities for source contaminant control. Air quantities and transport shall be calculated based on the calculation methods prescribed by the ASHRAE Systems Handbook, the ASHRAE Applications Handbook and the ACGIH Industrial Ventilation Manual. Further design criteria for local exhaust systems are contained in Section 1550-2.5, Air Handling and Air Distribution Systems, and Section 1550-99, Special Facilities.

### 1550-1.5.7 Equipment Room Ventilation

Mechanical and electrical equipment rooms shall be exhausted so that room temperature does not exceed NEMA equipment ratings. DOE project criteria shall provide the space temperature limit criterion. Where mechanical ventilation cannot maintain a satisfactory environment, evaporative cooling systems or other mechanical cooling systems shall be provided. Exhaust air openings should be located adjacent to heat-producing equipment to minimize ambient thermal loads.

Thermostatic controls shall be used to operate the ventilation or exhaust systems as discussed in Section 1595, Controls.

Equipment rooms containing refrigeration equipment shall be ventilated in accordance with ASHRAE Standard 15.

Combustion air for fuel-burning appliances and equipment shall be provided to all equipment rooms with this type of equipment in accordance with the Uniform Mechanical Code.

### 1550-1.6 Energy Conservation—Waste Heat Recovery Systems

Specific energy-efficient features and waste heat recovery systems for all types of heating, ventilating, and air-conditioning equipment shall be considered according to the methods prescribed in Section 0110-12.7 (Attachment K), Building Analysis Procedures, and in Section 1550-1.1, General Selection Procedures for HVAC Systems. Special consideration shall be given to energy conservation systems if they affect health and safety, for example, corrosiveness of exhaust air to heat recovery coils.

Energy conservation-waste heat recovery systems shall be considered and designed according to the procedures outlined in specific chapters of the ASHRAE Fundamentals Handbook, the ASHRAE Systems Handbook, the ASHRAE Applications Handbook, ASHRAE Equipment Handbook, ASHRAE Refrigeration Handbook, and the SMACNA Energy Recovery Equipment and Systems Manual.

The following types of heat-recovery systems shall be considered for incorporation into the building HVAC system design where applicable:

Use of rotary heat exchanger, heat pipe, or coil run-around systems for heating and air conditioning air handling systems with more than 4000 CFM of outside ventilation exhaust air

Recovery of rejected heat from the condenser systems of central station cooling equipment for use in heating the remainder of the building when the central station cooling equipment must operate during the heating season to cool computer rooms, high internal heat gain areas, or process requirements

Use of thermal heat from the condenser systems of kitchen or other continuously operated refrigeration equipment for space heating or domestic

hot water heating when the rejected heat from the equipment is greater than 35,000 BTUh

Use of a free cooling system using cooling tower water (water side economizer) when air-side economizer systems are not feasible

Use of a heat pump run-around loop

These evaluations shall be included in the "Energy Conservation Report" detailed in Section 0110-12.8, Energy Conservation Report Requirements (Attachment K).

## 1550-2 HEATING VENTILATING AND AIR-CONDITIONING SYSTEMS SELECTION

### 1550-2.1 Central Station Cooling Equipment and Systems

#### 1550-2.1.1 General

Selection of central station cooling systems shall be based on the LCC analysis procedures outlined in Section 0110-12.7 (Attachment K), Building Analysis Procedures. Size, selection and design shall be based on ASHRAE Fundamentals Handbook, ASHRAE Systems Handbook, ASHRAE Applications Handbook, and ASHRAE Equipment Handbook. Refrigeration equipment shall comply with ARI 520, ARI 550, and ARI 590.

Central chilled water plants shall be considered where two or more adjacent buildings are to be air-conditioned. The number and size of central station cooling units shall be based on the annual estimated partial-load operation of the plant to assure the most economical operation.

DOE project design criteria shall provide direction on installed standby chiller capacity. The design professional shall consider the use of multiple chillers for all chilled water loads greater than 400 tons. Wherever possible, the central station chilled water equipment shall be designed into the chilled water distribution systems as part of a primary-secondary loop system maintaining chilled water inlet temperature below a maximum predetermined value, preferably with the central station cooling equipment as a secondary portion of the loop.

Temperature-critical areas, as determined by project criteria, such as laboratories and computer centers, shall be provided with independent refrigeration systems with backup systems if involved with vital programs. The design professional shall consider use of off-peak cooling systems in areas having high electric peak demand charges.

#### 1550-2.1.2 Water Chillers

The selection of either centrifugal, reciprocating, helical, rotary-screw, absorption, or steam-powered chillers shall be considered based on coefficients of performance at full load and part-load conditions using the LCC methods as described in Section 0110-12.7 (Attachment K), Building

Analysis Procedures. The LCC analysis shall also consider chilled water and condenser water system pumping energy burdens as part of the evaluation. Compression refrigeration machines shall be designed with the safety controls, relief valves, and rupture disks noted below and in compliance with the procedures prescribed by ASHRAE Standard 15 and UL 207. Controls shall at a minimum include:

- High discharge refrigerant pressure cutout switch
- Low evaporator refrigerant pressure or temperature cutout switch
- High and low oil pressure switches
- Chilled water flow interlock switch
- Condenser water flow interlock switch (on water cooled equipment)
- Chilled water low temperature cutout switch

Centrifugal compressors shall be designed to operate with inlet vane control or variable speed control for capacity modulation. Units shall be capable of modulating to 20 percent of design capacity without surge. Reciprocating compressors shall be designed for capacity control by cylinder unloading. Design using hot gas bypass control of compressors for capacity modulation shall not be used except when capacity modulation is required below 10 percent of rated load. Compressor motors for refrigeration equipment shall be selected in compliance with all requirements of NFPA 70.

Absorption refrigeration machines shall at a minimum be provided with the following safety controls:

- Condenser water flow switch
- Chilled water flow switch
- Evaporation refrigerant level switch
- Generator high temperature limit switch (gas-fired units)
- Generator shell bursting disc (high temperature water or steam)
- Concentration limit controls

Liquid coolers (evaporators) shall be designed to meet design pressure, material, welding, and relief requirements of ASHRAE Standard 15 and ASME Boiler and Pressure Vessel Code, Section VIII. The design professional shall select evaporators according to the requirements of ASHRAE Standard 24.

The design professional shall select chilled water system temperature controls according to procedures described in Section 1595-7, Control of Chilled Water and Hot Water Solution Systems.

### 1550-2.1.3 Condensers/Condensing Units

Water cooled condensers shall comply with ASHRAE Standard 15 and ASME Boiler and Pressure Vessel Code, Section VIII. The design professional shall select condensers based on the cooling factors recommended in ARI 450. Water-cooled condenser shell and tube types shall be designed and specified with removable heads, if available, to allow tube cleaning.

Air-cooled condensers and condensing units shall meet the standards, rating, and testing requirements of ARI 460 and ASHRAE Standard 20. Unless project-specific criteria dictate otherwise, <u>these units shall not be located on roofs</u>. The design professional shall locate air-cooled condenser intakes away from any obstructions that will restrict the air flow and from locations that receive peak solar heat gain. Air-cooled equipment shall be located away from noise-sensitive areas, and air-cooled condensers shall have refrigerant low head pressure control to maintain satisfactory operation during light loading.

### 1550-2.1.4 Cooling Towers

The design professional shall locate and place cooling towers to avoid problems with water and deposition of water treatment chemicals. Unless project-specific criteria dictate otherwise, <u>towers shall not be located on roofs</u>. Cooling towers shall have ample clearance from any obstructions that would restrict air flow, cause recirculation of discharge air, or inhibit maintenance.

The design professional shall specify cooling tower acceptance and factory rating tests conducted in accordance with CTI Bulletin ATC-105.

An automatic-controlled water bleed shall be designed for all cooling towers. A cooling tower water treatment program should be selected by a specialist. Cooling tower components shall be selected to prolong cooling tower life by use of neoprene-fiberglass fill and one of following:

- Chemical treatment of tower members constructed of wood to form a coating insoluble in water
- Pressure treatment of the tower members constructed of wood with chemicals that are toxic to the organisms that cause wood decay
- Use of noncorroding ceramic, plastic, and metal components instead of wood

Cooling towers shall be specified with sump water heating systems if they will operate during freezing weather conditions.

### 1550-2.2 Electric Heating

Fully modulating electric heating shall be used or other forms of indirect heating shall be considered like heat recovery or release cycle heat pumps, etc.

### 1550-2.3 Water Distribution Systems

#### 1550-2.3.1 General

The design professional shall select chilled water, hot water, condenser water, boiler feed, condensate return systems designed for economical pipe sizes based on allowable pressure drop, flow rate, and pump selection criteria as prescribed by the ASHRAE Fundamentals Handbook, ASHRAE Equipment Handbook, and ASHRAE Systems Handbook, ASHRAE Applications Handbook. Insulation shall be provided on all water distribution piping and system components. Strainers shall be provided at the suction side of each pump and each control valve. The design professional shall specify flexible connectors to be installed on the suction and discharge piping of base-mounted end suction type pumps.

Check valves and balancing valves or combination check-shut-off-balance valves shall be installed in the discharge piping of all pumps operating in parallel pumping systems. Balancing valves shall be installed in the discharge piping of solitary pump systems.

Service valves shall be installed in the suction and discharge piping of all major pieces of equipment. Balancing valves shall be provided in the discharge piping of all coils, and central station cooling equipment.

Air elimination pressure control, venting, and automatic filling system (with backflow prevention) shall be provided for each hot water and chilled water distribution system, including provision of water treatment injection if required.

Expansion or compression tanks and fill piping connections shall be located on the suction side of the distribution system pump or pumps. Expansion tanks and air separation devices shall be sized according to the methods in the ASHRAE Systems Handbook and specified in accordance with the requirements of ASME B31.1. Gauge glasses, drain valves and vent valves shall be provided for all expansion tank systems.

Water treatment design information for chilled water, hot water, and boiler feed water systems shall be provided by a specialist based on project criteria (tested water condition).

#### 1550-2.3.2 Pumps and Pumping Systems

Pumps for chilled water, hot water, condenser water, boiler feed-water and condensate systems shall be of the centrifugal type selected based on criteria in ASHRAE Handbooks. Materials, types of seals, bearings, wear rings, shafts and other features shall be selected based on specific system requirements and

economic evaluation. The design professional shall consider the use of primary-secondary type pumping systems and high-efficiency motors for pumps for all hot and chilled water distribution systems.

On systems where system pumping horsepower requirements are greater than 20 bhp, the design professional shall consider the use of variable speed drives or parallel pumping arrangement.

Standby pumps shall be provided for all systems as dictated by project-specific criteria.

**1550-2.3.3 Piping, Fittings and Accessories**

Piping size shall comply with Section 1550-2.3.1, General. Selection of materials, installation of piping, fittings, valves, and accessories, as well as methods of joining and suspending piping systems, shall be based on pressure requirements, pipe size, and type of service as recommended by ASHRAE Equipment Handbook and ASME B16 series, ASTM G46 and ASME B31.1. The design professional shall calculate and design for expansion of piping systems. Chilled water, heating water, and condenser water piping shall be Schedule 40 piping with flanged, screwed, grooved-end or welded fittings depending on pipe sizes and operating conditions. Boiler feed water and condensate piping shall be Schedule 80 black steel with appropriate fittings depending on pipe sizes.

**1550-2.4 Steam Distribution Systems**

All steam piping shall comply with ASME B31.1 and be a minimum of Schedule 40 black steel. Fittings, valves, and accessories shall be selected based on pipe size and temperature pressure conditions.

1550-2.5 **Air Handling and Air Distribution Systems**

1550-2.5.1 **General**

The design professional shall consider and design air handling equipment and air distribution systems sized to optimize both initial cost and air handling system operating and maintenance costs according to the procedures outlined here and in Section 0110-12.7, Building Analysis Procedures.

The design professional shall provide all air handling system equipment (fans, terminal units, handling units, etc.) with vibration isolators and flexible ductwork connectors to minimize transmission of vibration and noise. Systems shall satisfy the NC levels recommended for various types of spaces and vibration criteria as listed in the ASHRAE Handbooks. Where air handling equipment and air distribution systems cannot meet these requirements, sound attenuation devices shall be installed in the air handling systems.

Air flow diagrams shall be developed and provided in the preliminary design phase unless waived by the DOE project criteria. These diagrams shall be provided for each air handling and air distribution system, and shall include capacities and locations of fans, coils, filters, terminal devices, and other

major air distribution system equipment, as well as air flows and air pressures and space pressure differentials.

Air flow velocities shall be designed to minimize settling of entrained particles as outlined in ACGIH Industrial Ventilation Manual.

Air handling and air distribution systems shall meet the energy conservation requirements for transport energy in ASHRAE Standard 90.1. Controls for air handling and air distribution equipment shall comply with Section 1595-6, Control of Air Handling Systems. Supply and or air intakes shall be located a minimum of 10 feet from any exhaust opening.

**1550-2.5.2 Air Handling Units**

The design professional shall select packaged air handling units complete with filters, coils, mixing boxes, fan section, and other accessories or built-up air handling units based on an evaluation and the requirements of NFPA 90A, AMCA Publication 261, and ARI 430.

**1550-2.5.3 Fans/Motors**

Fans shall be designed and specified to assure stable, nonpulsing aerodynamic operation in range of operation over varying speeds. Air handling units and fans in sizes over 1 hp use belt drives. Fans with motors of 10 hp or less shall be designed with adjustable motor pulley sheaves to assist in air balancing of systems. Fans with motors greater than 10 hp or less shall use fixed (non-adjustable) drives that can be adjusted by substituting fixed motor sheaves of different diameters. Supply air handling units and return air fans in variable-air-volume systems shall control capacity through the use of variable-speed drives, inlet vanes or scroll bypass dampers. All fans shall comply with AMCA Standard 210, ASHRAE Standard 51, and ASHRAE Equipment Handbook.

Fans shall be located within the ductwork system according to the requirements of AMCA Publication 201 and ACGIH Industrial Ventilation Manual. The design professional shall consider the use of variable-speed drives on fans in variable-air-volume systems where the supply fans are larger than 5 BHP. Motors shall be sized according to properly calculated BHP fan requirements and shall not use oversized fans and motors to meet future capacity needs unless so directed by DOE project criteria.

The design professional shall consider the selection of fan construction materials based on corrosion resistance and cost. Spark-resistant construction shall be used where required by NFPA.

All fans and accessories shall be designed and specified to meet all smoke and flame spread requirements of NFPA 255.

### 1550-2.5.4 Coils

Heating and cooling coils shall comply with ARI 410. Heating or cooling coil selection shall not conflict with ASHRAE Fundamentals Handbook or ASHRAE Equipment Handbook. The design professional shall specify that coil manufacturers certify coil performance by ARI certification or provide written certification from a nationally recognized independent testing firm that will verify coil performance to be in accordance with ARI 410.

Heating and cooling coils shall be specified of materials appropriate for corrosive atmosphere in which they are contained.

Cooling coils shall be designed with a maximum face velocity of 600 fpm. Coils designed with face velocities exceeding 450 fpm shall be specified with provisions to prevent condensate carryover, or use moisture eliminators. Coils shall be specified with drain feature.

Recirculating air systems with outside air winter design temperatures below freezing shall be designed with a preheat coil located either in the outside air intake or in the mixed air stream upstream of the cooling coil, unless the theoretical mixed air temperature is calculated to be above 35°F. In this case, the preheat coils may be omitted if adequate baffling is provided to guarantee positive mixing of the return and outdoor air. Preheating coils shall be specified and designed to maintain discharge air temperature without modulation of the steam or hot water flow through use of modulating face and bypass dampers. Steam modulation may be used for control of steam coils in moderate climates where proven to be reliable without concern of coil freeze-up.

### 1550-2.5.5 Air Cleaning Devices

**General**

Air cleaning equipment for ductwork installation shall be easily removable, serviceable, and maintainable. Air cleaning equipment shall have face velocities as recommended by the filter manufacturer and the design manuals recommended above to achieve maximum efficiency minimum pressure drop.

Filters shall be constructed of noncombustible materials meeting the requirements for UL 900 Class I. Air filters shall be located on the suction side of fans and coils and in other special locations as required for air treatment. Air-filter pressure drop gauges of the diaphragm-actuated, dial-type (preferred) or the inclined manometer type shall be located on all filter assemblies.

**Filters for Air Handling Systems Serving Inhabited Spaces**

Filters include air filter devices and air filter media used in building environmental air handling systems for removing particulate matter from atmospheric air. These filters shall be specified to meet minimum efficiencies required by the ASHRAE Dust Spot method using atmospheric dust

for medium-efficiency applications. Filters shall be specified and installed for use as pre-filters, medium-efficiency filters, or high-efficiency filters. These filters shall comply with ARI 850.

High-efficiency filters and assemblies shall comply with DOE project criteria. Electronic air cleaners and extended dry-surface filters shall be considered for use as high-efficiency filters. Pre-filters are normally provided, being either pre-filter or medium-efficiency filters depending on the upstream air particle size distribution.

**Air-Cleaning Devices for Special Applications**

Filters include dry type dust collectors, wet collectors, centrifugal collectors, adsorbers, absorbers, oxidizers, and chemical treatment filters that are used primarily in industrial and process-type applications associated with air or gases that have heavy dust loadings in exhaust systems or stack gas effluents. Filters shall be designed according to the requirements given in DOE project criteria, ASHRAE Equipment Handbook, and ACGIH Industrial Ventilation Manual.

**1550-2.5.6 Ductwork Systems**

Ductwork systems shall be designed for efficient distribution of air to and from the conditioned spaces with consideration of noise, available space, maintenance, air quality and quantity, and an optimum balance between expenditure of fan energy (annual operating cost) and duct size (initial investment).

Ductwork systems shall be designed to meet the leakage rate requirements of SMACNA HVAC Air Duct Leakage Test Manual.

Ductwork, accessories, and support systems shall be designed to comply with ASHRAE Fundamentals Handbook, SMACNA Standards, ACGIH Industrial Ventilation Manual, and NFPA 45.

Ductwork shall also be designed to comply with NFPA 90A, including specification and installation of smoke and fire dampers at fire wall penetrations and smoke pressurization/containment dampers as required for smoke pressurization/evacuation systems. Fire dampers shall not be used on exhaust system ducting if it is required to maintain confinement of hazardous materials during and after a fire event.

Exhaust ductwork shall comply with NFPA 91. Ductwork for kitchen exhaust systems shall comply with NFPA 96.

Ductwork shall be designed to resist corrosive contaminants if present. Ductwork that handles air exhausted from shower rooms, dishwashing areas, or other areas causing condensation on the duct interior shall be of aluminum construction, have welded joints and seams, and have drainage at low points.

Ductwork thermal insulation shall comply with ASHRAE Standard 90.1. Ductwork shall be acoustically insulated to meet acceptable noise criteria.

Ductwork systems shall have testing and balancing dampers and accessories specified and led as discussed in Section 1550-3.2, Testing and Balancing Devices. The design professional shall specify automatic controls for ductwork systems and provide them in required locations as discussed in Section 1595, Control of Air Handling Systems.

Penetrations of ductwork through security barriers shall be minimized. Such penetrations more than 96 square inches in area and more than 6 inches in minimum dimension shall provide a penetration delay equal to that required for the security barrier. The physical attributes and intended service of the ductwork and the axial configuration of the barrier penetration shall be considered when considering that penetration delay.

**Table 1550-3.2a Required Balancing Devices for Air Distribution Systems**

| System Components | Required System Devices |
|---|---|
| Diffusers, grilles, registers | Round butterfly or square/rectangular opposed blade volume damper, either integral with device or in spin-in take offs |
| Branch ductwork runs | Rectangular/square or round (with more than one opposed blade damper and terminal device). Sealed test hole for pitot tube traverse |
| Fan discharge ductwork | Sealed test holes for pitot tube traverse. Sealed test hole for static pressure measurements |
| Fan suction ductwork | Sealed test hole for static pressure measurement |
| Cooling coil suction and discharge airstreams | Duct-mounted airstream thermometer |
| Heating coil suction and discharge airstreams | Duct-mounted airstream thermometer |
| Mixed air plenum airstream | Duct-mounted airstream thermometer |

## 1550-3 TESTING, ADJUSTING AND BALANCING

### 1550-3.1 System Performance Tests

The design professional shall specify system performance tests for mechanical air distribution and HVAC water distribution systems to verify compliance with DOE project criteria These tests shall be performed by an independent AABC testing organization in accordance with the guidelines contained in ASHRAE

Systems Handbook and AABC Volume A-82 or by others as dictated in project-specific criteria.

**1550-3.2 Testing and Balancing Devices**

HVAC air and water distribution systems shall be provided with permanently installed calibrated testing and balancing devices and access as needed to accurately measure and adjust water flows or air flows, pressures, or temperatures as required. The design professional shall provide as a minimum the balancing devices in Table 1550-3.2a and Table 1550-3.2b. Test devices shall be located and installed according to AABC Volume A-82.

**1550-3.3 General Guidelines**

Test and measuring locations shall be noted on construction drawings. The use of duct mounted air flow monitoring stations shall be considered where limited duct space or configuration restrict the use of pitot tube traverse procedures or where especially sensitive measuring requirements are dictated by the DOE project criteria.

**1550-99 SPECIAL FACILITIES**

**1550-99.0 Nonreactor Nuclear Facilities-General**

**1550-99.0.1 General Ventilation**

These criteria cover ventilation systems, or portions of them, that are classified as safety class items in accordance with Section 1300-3.2, Safety Class Items (Attachment R). Safety class ventilation systems are generally designed to operate in conjunction with physical barriers to form a confinement system to limit the release of hazardous material to the environment and to prevent or minimize the spread of contamination within the facility.

Ventilation and air-conditioning systems designed to provide a comfortable working environment and whose functions are not necessary to provide confinement are generally not designed as safety class systems.

Ventilation systems shall be designed to provide a continuous airflow pattern from the environment into the building and then from noncontaminated areas of the building to potentially contaminated areas and then to normally contaminated areas. Thus, the airflow is toward areas of higher hazardous material contamination. Dampers shall be located so that cross-contamination will not occur in case of a localized release of material.

Electronic air cleaners shall not be used in systems recirculating air.

**Table 1550-3.2b Required Balancing Devices for Water and Steam Distribution Systems**

| System Components (Water) | Required System Devices |
|---|---|
| Pump suction and discharge piping | Manifold pressure gauge with pressure taps |
| Pump discharge piping | Flow measuring device (type depending on accuracy required) |
| Chiller evaporator water suction and discharge piping | Thermometer/test well and pressure gauge and gaugecock |
| Chiller condenser water suction and discharge piping | Same devices as required for chiller evaporator piping |
| Boiler or heat exchanger suction and discharge piping | Same devices as required for chiller evaporator piping. Note: Simple, easy-to-install, state-of-the-art equipment such as magnetic vanes should also be considered. |
| Heating or cooling coil (AHU) suction and discharge piping | Thermometer/test well; pressure gauge/pressure tap |
| Heating or cooling coil (AHU) discharge piping | Presettable calibrated balancing valve with integral pressure test ports |
| Reheat coil, fan coil unit, unit heater, ports and finned tube radiation, convector: 1) discharge piping; 2) suction piping | 1) Presettable calibrated balancing valve with integral pressure test ports; 2) temperature test; 3) pressure tap |
| Three-way control valves (each port) suction and discharge piping | Pressure tap |
| **System Component (Steam)** | **Required System Devices** |
| Boiler discharge piping | Flow measuring device (orifice or venturi type) |

Ventilation system balancing shall be specified to ensure that the building air pressure is always negative with respect to the outside atmosphere.

Portions of ventilation systems that provide required functions following a seismic event shall be designed to be functional following a DBE.

The use of downdraft ventilation within occupied process areas shall be considered as a means to reduce the potential inhalation of contamination.

The failure of ventilation systems not designed as safety class systems shall not prevent other facility safety class systems from performing their required safety functions.

Hydrogen gas storage areas and process areas that use hydrogen shall have provisions for sufficient ventilation to ensure that under all conditions (normal operations, anticipated operational occurrences, and DBA conditions), the hydrogen concentration in the air will never exceed 4 percent by volume.

Gas storage areas and process areas that use hazardous materials shall have ventilation systems designed to ensure that the hazardous material concentrations do not exceed the limits referenced in DOE 5480.10 and are ALARA in the workplace environment. Effective loss-of-ventilation alarms shall be provided in all of these areas.

Components of ventilation systems that require electric power to perform their safety functions shall be considered safety class loads.

Adequate instrumentation and controls shall be provided to assess ventilation system performance and allow the necessary control of system operation.

Equipment in ventilation systems shall be appropriately qualified to ensure reliable operation during normal operating conditions, anticipated operational occurrences, and during and following a DBE.

## 1550-99.8 Telecommunications, Alarm, and ADP Centers and Radio Repeater Stations

### 1550-99.8.1 General

These criteria shall apply to telephone switching centers, teletype, data and facsimile centers, computer or ADP centers, radio control centers, security alarm control centers, and radio repeater stations.

Heat recovery options for utilization of the heat produced by equipment such as rectifier-charger bays, radio and microwave transmitters, and ADP equipment to conserve energy in the heating season shall be considered on the basis of LCC as described in 0110-12.7.1 (Attachment K). The ventilation design shall also consider directly exhausting heat gains from this equipment during the cooling season to minimize air-conditioning requirements.

## 1550-99.8.2 Air-Conditioning and Ventilating Systems

Air-conditioning systems for telecommunications, alarm, and automatic data processing centers shall comply with NFPA 90A and shall be completely separate and independent from other air distribution systems. Initial equipment heat loads for telecommunications and computer rooms shall be increased by 25 percent or to satisfy a five-year growth forecast (whichever is greater) in sizing the systems. Noncombustible duct construction materials shall be specified. Air ducts serving other spaces shall be designed to bypass these areas or shall be encased in a fire resistant enclosure with suitable fire doors and dampers as required by NFPA 90A.

Operating and equipment areas that contain dust-sensitive equipment shall be designed with a ventilation system that will maintain positive pressures and is provided with HEPA filtration systems.

### Telephone Switching Centers

Where switchboard or console operators are seated higher than other employees within the room, the air-conditioning system shall be designed to minimize temperature imbalances between the working levels for employee comfort.

Power control boards, rectifiers, storage batteries, battery chargers, ringing machines and tone generators shall be located in rooms separate from the switching equipment and shall be provided with separate exhaust systems. Power equipment room ventilation systems shall be designed to maintain a positive air pressure in the equipment area.

### Storage Battery Areas

Storage battery areas shall be ventilated according to NFPA 70, and ASHRAE Handbooks. Where storage batteries are to be located in the same room with telecommunications or alarm equipment, in lieu of providing a separate (and separately ventilated) battery room, the design professional shall consider the adequacy of the normal room ventilation system and the need for supplemental or emergency backup ventilation during scheduled or emergency shutdown of the central ventilation system.

### Security Alarm Control Centers

HVAC systems shall be designed with air filtration features to protect against infiltration of aerosol and gas incapacitating agents.

### Radio Repeater Stations

HVAC systems shall be designed to use heat gains from equipment for maintaining the operating room ambient temperature at not less than 40°F during the heating season. Auxiliary heaters shall be provided with adequate capacity to maintain an inside temperature of at least 70°F in the operating room at design outdoor winter conditions assuming a power outage to the radio

equipment. Auxiliary heaters shall maintain temperature in the emergency engine-generator room at not less than 40°F.

Exhaust fans shall provide sufficient ventilation during the cooling season to maintain the internal station temperatures required for equipment operation. The primary ventilating air system shall be designed with a backup system. Air-conditioning and dehumidification equipment shall be designed to meet environmental control requirements if an exhaust system cannot do so.

Air intakes equipped with replaceable glass-fiber type filters shall be located to provide makeup air for the heat exhaust system. A separate exhaust or air-conditioning system shall be provided for the engine-generator room to provide cooling in accordance with the manufacturer's recommendations.

# ATTACHMENT P

## 1565 REFRIGERATION

## 1565-1 CHLOROFLUORCARBON (CFC) LIMITATION AS A REFRIGERANT

### 1565-1.1 Coverage

These criteria provide guidance to reduce DOE dependence on regulated CFCs as refrigerants in HVAC systems. CFC-22 is the only refrigerant in common use for HVAC systems not subject to international regulation due to environmental concerns (ozone depletion). Production of regulated CFCs (CFC-11, CFC-12, CFC-113, CFC-114, CFC-115, and, indirectly, refrigerant mixtures of those regulated CFCs such as CFC-500, CFC-501, and CFC-502) will be reduced 50 percent by 1993, with corresponding reduction of availability and increase in cost. Requirements to recycle and recover these regulated CFCs is expected in the near future. Continued installation of HVAC systems using regulated CFCs is unacceptable from operational and environmental viewpoints and shall be minimized to the maximum extent feasible.

Alternatives to CFC-11 and CFC-12 are being developed for use in existing equipment and future new equipment; however, significant technical problems have yet to be overcome. As technically proven alternative refrigerants become commercially available, these criteria will be updated to include their application. With present technology, the only feasible course to reduce DOE HVAC dependence on regulated CFCs is to limit new equipment to unregulated CFCs (CFC-22) where feasible and replace the existing inventory with equipment designed for CFC-22 as existing units fail.

### 1565-1.2 Effective Date

These criteria are to be implemented as of the date of this Order (4/6/89). Application is as follows:

- Projects in planning or programming and those in Title I design or less: Comply with these criteria.
- Projects in Title II design and those under construction: Implement where technically and economically feasible.

### 1565-1.3 Implementation

These criteria require immediate implementation to reduce DOE dependence on regulated CFCs to a minimum. The limitation of refrigerants to CFC-22 will be reviewed and relaxed to include alternative environmentally acceptable refrigerants as they become available. These criteria limit the use of CFCs in DOE design and construction and operations and maintenance programs to nonregulated compounds as follows:

- New mechanical refrigeration equipment: Use CFC-22 as the refrigerant where feasible.

- Repair-by-replacement projects involving the complete refrigerant side of existing equipment: The replacement equipment shall use CFC-22 as the refrigerant.

**1565-1.4 Exceptions**

- New absorption equipment or replacing existing equipment with absorption equipment

- Equipment in size ranges where CFC-22 equipment is not commercially available by a minimum of two suppliers with adequate operational experience. All available equipment types (reciprocating, helical screw, and centrifugal) shall be considered before making this decision.

- Repair projects involving partial replacement of the refrigerant side of a system, such as compressor or coil replacement only can use the existing refrigerant.

# ATTACHMENT Q

## 1595 CONTROLS

### 1595-1 GENERAL

This section covers safety and operating controls, automatic temperature and humidity controls, energy monitoring and (central supervisory) control systems, energy conservation requirements for controls, and zoning requirements and restrictions.

Specific safety control system requirements for individual types of equipment are discussed in Section 1550, Heating, Ventilating and Air-Conditioning Systems (Attachment N).

Special control requirements shall be indicated in DOE project-specific criteria. Selection of control system types and associated equipment, shall be based on the most economical and maintainable system.

Control systems shall be designed to use the closed-loop feedback method of control. Open-loop systems shall not be used. Proportional-type control shall be used for all control systems; other type control systems shall be used as needed according to the degree of control required.

All control equipment shall be easily accessible. One temperature control panel shall be provided for each system, complete with panel-face-mounted indicators, switches, pilot lights, and tags. All control interlocks shall be through HOA switches.

Control air compressors shall be duplex non-lubricated type with oil lubricated crankcase and distance piece. Air shall be filtered and dried using refrigerated air dryers for dew point of 15°F.

Copper piping shall be used for high pressure air in inaccessible locations (plastic piping may be used if installed in conduit). Air leakage shall not exceed 5 percent of pressure in 24 hours. Transmitters shall be capable of field calibration and thermometers or pressure gauges shall be provided at transmitters. All controllers and thermostats shall be pilot-bleed type.

### 1595-2 ZONING

Zoning for automatic control of space temperatures, static pressures, humidities, ventilation, smoke and fire detection, security, and lighting shall satisfy health and safety requirements as indicated in DOE project criteria, NFPA 101, space operational and occupancy requirements, and zoning exposure with relation to building size, orientation and configuration.

Zoning requirements are as follows:

- Each HVAC system shall have a separate thermostat for space temperature regulation and a separate humidistat if humidity control is provided.
- No zone shall contain more than a single building floor regardless of floor space.
- Automatic controls shall be provided to shut off heating or cooling to any individual zone.
- Interior zones shall not be combined with external zones.
- Interior space zones shall be placed on separate air handling systems from external, if cost effective. External space zones shall be selected for each individual exposure.
- For office facilities and similar occupancies, each major orientation shall be zoned to have no more than 2,000 square feet of floor area with exterior exposure, and no more than 3,000 square feet of floor area with no exterior exposure.

## 1595-3 CONTROL SETBACK AND SHUTOFF DEVICES

With the exception of research, process, or other environmentally sensitive spaces identified by DOE project criteria as requiring constant year-round temperature or humidity control, automatic control setback and shutdown devices with manual override feature shall be provided for all HVAC systems. Use of separate or dual setting thermostats, switches, time clocks, or connections for on/off control through EMSs shall be considered for control of air-conditioning to raise cooling setpoint with humidity override during summer unoccupied periods and to control the heating setpoint during winter unoccupied periods.

## 1595-4 HUMIDITY CONTROL

Summer and winter space or zone humidity control shall be provided only on a space-by-space or zone-by-zone basis and not for the entire central ventilation system unless required for project-specific humidity requirements as stated in the DOE project criteria. No controls shall be provided to dehumidify spaces to below 50-percent relative space humidity or to humidify spaces to greater than 30-percent relative space humidity unless required on a project-specific basis.

## 1595-5 SIMULTANEOUS HEATING AND COOLING

Simultaneous heating and cooling shall not be used to control comfort conditions within a space by reheating or recooling supply air or by concurrent operation of independent heating and cooling systems serving a common zone except under the following conditions.

- Renewable energy sources are used to control temperature or humidity.
- Project-specific temperature, humidity, or ventilation conditions require simultaneous heating or cooling to prevent space relative humidity from rising above special-space relative humidity requirements.
- Project-specific building construction constraints as determined in DOE project criteria prohibit installation of other types of HVAC systems.

Where simultaneous heating and cooling must be used, the temperature and humidity controls shall be designed to limit energy consumption by the methods given in ASHRAE Standard 90.1.

## 1595-6 CONTROL OF AIR HANDLING SYSTEMS

### 1595-6.1 Mechanical Ventilation Control

All supply, return, and exhaust ventilation systems shall be equipped with automatic and manual control of fan operation to shut off the fan when ventilation is not required. These systems shall also be provided with manual gravity-operated or automatic control of dampers for outside air intake and exhaust or relief to prevent introduction of outside air when ventilation is not required. Systems that circulate air shall be provided with minimum outdoor air damper position control to assure that the minimum outdoor air quantity is being introduced to the system. Automatic dampers should fail open for return air and fail closed for outside air.

### 1595-6.2 Outdoor Air Cooling Control (Economizer Cycle)

All air handling systems that recirculate air and are used for space cooling shall be designed to automatically use outside air quantities up to 100 percent of the fan system capacity for cooling the space, with the exceptions noted in ASHRAE Standard 90.1. Economizer cycle control shall not be used for air handling systems where introduction of the additional outside air would actually increase energy consumption.

The economizer-cycle control system shall have a reset feature.

The economizer cycle control system shall be designed with a relief air control cycle to positively relieve the supply air from the space by sequencing return or relief fans or dampers to maintain a constant room static pressure. Systems using the economizer-cycle should be provided with adequate air filtration to handle the quality of the outside air.

### 1595-6.3 Automatic Control Dampers

Automatic air control dampers shall be specified to be the low-leakage type with a maximum leakage of 6 CFM/square foot at maximum system velocity of 1500 FPM and 1-inch pressure differential. The dampers shall be opposed-blade type for modulating control, but may be parallel-blade type for two-position control. Dampers shall be sized for at least 20 percent of the total ductwork

resistance pressure drop. Return air dampers shall never be sized less than 1500 FPM. Pilot positioners and operators shall be out of airstream.

**1595-6.4 Variable-Air-Volume System Fan Control**

Variable-air-volume systems shall be designed with control devices to sense ductwork static air pressure and velocity air pressure and control supply fan airflow and static pressure output through modulation of variable inlet vanes, mechanical speed drive controls, or variable frequency electric drive controls. These control systems shall have a minimum of one static pressure sensor mounted in ductwork downstream of the fan and one static pressure controller to vary fan output either through inlet vane, damper, belt modulator, or speed control. Exhaust fans, supply fans, and return or relief fans shall have control devices that interface the operation of the fans to "track" air volumes and maintain fixed minimum outdoor air ventilation requirements.

**1595-6.5 Fire and Smoke Detection and Protection Controls**

Engineered smoke pressurization and evacuation systems shall comply with the following:

- NFPA 90A
- NFPA 72E
- ASHRAE Manual, Design of Smoke Control Systems for Buildings
- ASHRAE Systems Handbook

All air handling systems shall be provided with the smoke and fire protection controls required by NFPA 101.

All supply, return, relief, and exhaust air ventilation systems shall have interlock controls that interface with fire and smoke detection system controls and either turn off or selectively operate fans and dampers to prevent the spread of smoke and fire throughout the buildings. These controls shall comply with NFPA 90A.

Special exhaust systems shall be designed to include fire and smoke safety controls as required by NFPA 91. Kitchen exhaust ductwork systems shall be designed to include all fire and smoke safety controls as required by NFPA 96.

**1595-6.6 Gas-Fired Air Handling Unit Control**

Gas-fired air handling units shall be specified with operating limit, safety controls, and combustion control systems.

Gas burner and combustion controls shall comply with FM Loss Prevention Data Sheets and be listed in the FM Approval Guide. Gas-fired air handling units

shall be specified with controls to lock out the gas supply in the following conditions:

- Main or pilot flame failure
- Unsafe discharge temperature (high-limit)
- High or low gas pressure
- No proof of air flow over heat exchanger
- Combustion air loss
- Loss of control system actuating energy

## 1595-7 CONTROL OF CHILLED WATER AND HOT WATER DISTRIBUTION SYSTEMS

### 1595-7.1 Zone Control/Distribution System Control

Each zone or air handling system shall be designed with individual terminal unit valved control. Use of either two-way or three-way valves shall be considered based on part-load pump performance requirements and potential pump bhp savings. If the pumping system brake horsepower is greater than 20 bhp, an LCC analysis of variable speed pumping control shall be performed.

Water systems that vary the load to the terminal devices by varying water flow rates using two-way control valves shall be provided with differential pressure controls to reduce system pressure build-up and save energy. These controls shall either signal control valves to route water flow around terminal devices, signal variable-speed pumping controls to reduce pump speed, or turn off one or several pumps working in parallel or series.

### 1595-7.2 Control Valve Selection

Temperature control valves shall be either two-way or three-way, two-position or proportioning-type valves. Valves controlling modulation shall be equal-percentage proportioning valves. Control valves shall be sized for a 5 psi pressure differential across the valve or a pressure differential of 50 percent of the combined branch piping and coil pressure drop, whichever is greater. Selection of valve sizes shall be based on flow coefficient "$C_v$" capacities, where "$C_v$" is defined as the flow of water in gallons per minute divided by the square root of the pressure drop in psi. Control valves shall use either pneumatic, electric, electronic, or self-contained controllers. Valves in cooling and heating systems shall be fail-safe. Valve operators shall be selected to close against pump shutoff head for two-way valves, and one-half pump shut off head for three-way valves.

Setpoints shall be selected to maintain either a fixed space temperature or a fixed coil-discharge temperature, with the discharge temperature setpoint reset by space temperature requirements.

### 1595-7.3 Two-Pipe and Three-Pipe Combination Heating and Cooling Systems

Fan coil terminal devices with one coil shall have their control valves operated by a room or coil discharge temperature thermostat that can change from summer to winter operation. Air handling units with heating and cooling coils shall have their control valves controlled by normal sequences of operation, but shall be provided with two-position control valves in the piping entering each coil to prevent hot water from entering the cooling coil and chilled water from entering the heating coil and to sequence on/off summer and winter operation.

If the two-or three-pipe water distribution system is not provided with heat exchangers to isolate the boilers and chillers from the distribution system, a control system using three-way control valves to control and route water around the source devices shall be designed to prevent hot water from entering the chiller and cold water from entering the boiler during the changeover periods from heating to cooling seasons.

### 1595-7.4 Load Control for Hot Water Systems

The temperature of hot water for building heating systems shall be controlled by a supply temperature sensor that modulates the boiler operating controls. The supply delivery temperature shall be reset based on the temperature outside, lowering the delivery temperature as the outdoor air temperature rises and raising the delivery temperature as the outdoor air temperature falls.

### 1595-7.5 Load Control for Chilled Water Systems

Central station cooling equipment producing chilled water shall be controlled by a signal from a sensor mounted in the return chilled water piping or the leaving chilled water piping that modulates the chiller to control capacity.

Central station cooling equipment shall be provided with controls to limit the current draw of the cooling equipment in periods of high electrical demand.

## 1595-8 COOLING TOWER AND WATER-COOLED CONDENSER SYSTEM CONTROLS

Cooling tower fans shall be designed with two-speed on/off controls to reduce power consumption and maintain condenser water temperature. Bypass valve control shall be provided if required to mix cooling tower water with condenser water to maintain the temperature of entering condenser water at the low limit. Condenser water temperature or flow shall be controlled from condenser head pressure for reciprocating chillers. The design shall provide basin temperature sensing devices, and if cooling tower is operated during freezing conditions, hot water or steam control valves and additional control system components to maintain cooler tower sump water temperatures above freezing.

## 1595-9 CONTROL OF STEAM SYSTEMS

### 1595-9.1 Zone Control

Each zone air handler, heating coil, and individual terminal unit shall be controlled using two-way control valves that actuate either electrically, pneumatically, or through use of self-contained liquid or wax-filled sensing elements. These control valves shall modulate the steam flow to the coil or terminal unit based on space temperature or coil discharge temperature preset by zone temperature requirements.

### 1595-9.2 Control Valve Selection

Steam pressure and temperature control valves shall be selected according to the requirements in ASHRAE handbooks.

### 1595-9.3 Load Control for Steam Systems

Intermittent flow controls commonly called "heat timers" shall be evaluated by LCC analysis for incorporation into all space heating steam systems to cycle steam on and off from the source system based on zone indoor temperature requirements, outdoor air temperatures, and space occupancy requirements.

## 1595-10 ENERGY MANAGEMENT SYSTEMS

Central EMSs shall be provided where justified by LCC analysis. If cost effective, an EMS shall be combined with integral fire and smoke detection supervisory systems and lighting control systems. An EMS shall be specified with the capability to connect to additional building utility systems. When an EMS is contemplated for the future, other building system controls and instrumentation shall be selected that will allow for simple future interfacing.

See Section 0110-12.6 (Attachment K), Energy Management Systems.

## 1595-11 ENERGY METERING

The design professional shall design permanent metering in accordance with 10 CFR 435 for each type of nonprocess energy supplied to and consumed by new buildings and facilities owned and leased by DOE except for the following cases:

- Energy supplied to buildings and facilities where the total energy consumption is not expected to exceed 500 million BTU per year. See Section 0110-12.7 (Attachment K), Building Analysis Procedures.
- A type of energy supply that is estimated to be 10 percent or less of the total energy input to the building
- Renewable energy sources or recovered waste heat

Permanent submetering shall be considered and implemented for each type of process energy consumed in new buildings and facilities owned and leased by DOE if indicated in DOE project criteria.

Interface with an existing EMS shall be determined by DOE project criteria.

# ATTACHMENT R

## SAFETY CLASS ITEMS

### 1300-3.2 Safety Class Items

Safety class items are systems, components, and structures, including portions of process systems, whose failure could adversely affect the environment or the safety and health of the public or DOE employees. Specifically, safety class items are those systems, components, and structures with the following characteristics:

- Those required to maintain operating parameters within the safety limits specified in the OSRs during normal operations and anticipated operational occurrences
- Those required to achieve and maintain the facility in a safety shutdown condition
- Those that control the safety class items described above

Safety class items shall be subject to appropriately higher-quality design, fabrication, and industrial test standards and codes such as those specified in References (Section 1.2 of this specification), to increase the reliability of the item and allow credit to be taken for its capabilities in a safety analysis. Safety class items shall be designed to the ASME Boiler and Pressure Vessel Code (Section III, Class II) or to other comparable safety-related codes and standards that are appropriate for the system being designed.

Safety class and non-safety class items shall comply with Section 0140, Quality Assurance (Attachment V). The design of systems, components and structures that are not safety class items shall, as a minimum, be subject to conventional industrial design standards, codes, and quality standards. Failure of these items shall not adversely affect the environment or the safety and health of the public. In addition, their failure shall not prevent safety class items from performing their required functions.

# ATTACHMENT S

(Not Used)

# ATTACHMENT T

# HEALTH AND SAFETY

## 0110-5 HEALTH AND SAFETY

### 0010-5.1 Performance Objectives

Health and safety performance objectives to be achieved in the design of DOE facilities include:

- Protection of the public and all personnel from injury and from exposure to toxic materials, radiation, and other hazards in accordance with DOE requirements and allowable limits
- Protection of private and public property against damage resulting from DOE operations
- Continuation of operations by minimizing accident potential
- Limitation of loss or damage to Federal property, including losses associated with the inability to readily decontaminate or decommission facilities for other subsequent uses

Specific project design criteria in the areas of emergency preparedness and emergency management shall be developed with the advice and assistance of DOE organizations responsible for DOE emergency management/emergency preparedness programs. Such criteria shall comply with:

- DOE 5500.1B
- DOE 5500.3A

### 0110-5.2 Safety Analysis

All DOE facilities shall be evaluated for potential risks to the operators, the public, and the environment. DOE 5481.1B contains criteria for determining the level of reporting required based on facility functions and potential accident risks. Safety analysis report timing, content, and format criteria and approval provisions are contained in DOE 5481.1B. This section contains a brief summary of the basic requirements of 5481.1B.

The preliminary safety analysis shall be initiated during the conceptual design phase of the project and further developed during preliminary (Title I) design and detailed (Title II) design phases. In most cases, these analyses are included in the project planning and design documentation (e.g., in conceptual design reports, Title I design reports). Facility design and construction features identified as a result of the PSAR shall be factored into the conceptual design before establishing the project cost estimate and requesting Congressional authorization for design and construction. The PSAR

shall be completed and approved prior to the start of construction (including site preparation), consistent with DOE 4700.1.

The Final Safety Analysis Report (FSAR) shall be developed during the construction phase of the project and shall be completed and approved prior to the initiation of facility operations. The FSAR shall be updated as appropriate to reflect changes affecting safety that are made to the facility during its lifetime.

Areas to be addressed in the safety analysis include, but are not necessarily limited to, the following:

- Form, type, and amount of hazardous materials (nuclear or other) to be stored, handled, or processed
- Principal hazards and risks that can be encountered in facility operation, including potential accidents and predicted consequences of fire, explosion, radiation, toxic exposure, structural failure, wind, flood, earthquake, tornado, operating error, failure of essential operating equipment, and failure of safety systems
- Selected design basis accidents such as DBF, DBW, DBE, DBT, OBA, and DBFL. These shall be postulated and quantified, including the rationale for selection.
- Principal design, construction, and operating features selected for preventing accidents or reducing risks to acceptable levels, including the safety margins used

**0010-5.3 Emergency Preparedness Planning**

Each facility that has potential on-site or off-site effects during normal or abnormal operations shall have an Emergency Plan prepared which shall be incorporated with the Site Emergency Preparedness Plan.

# ATTACHMENT U

# FIRE PROTECTION

## 1.0 PURPOSE

To establish requirements for an "improved risk" level of fire protection sufficient to attain Department of Energy (DOE) objectives. A higher standard of protection may be justified in certain instances for the purpose of national security, program continuity, or protection of the public.

## 2.0 OBJECTIVES

a. to ensure that no threats to the public health or welfare will result from fire;

b. that there are no undue hazards to employees from fire;

c. that vital DOE programs will not suffer unacceptable delays as a result of fire; and

d. that property damage will be held to manageable levels.

## 3.0 DEFINITIONS

### 3.1 Improved Risk

The term involves the use and application of judgement and thus does not lend itself to a precise, fixed definition applicable in all locations and situations. It has the same meaning and intent as is commonly understood when this or the term, "Highly Protected Risk," is used in the insurance industry. Generally, an improved risk property is one that would qualify for complete insurance coverage by the Factory Mutual System, the Industrial Risk Insurers, and other industrial insurance companies that limit their insurance underwriting to the best protected class of industrial risk. Essential elements of a program complying with the improved risk concept are included in this directive. This term also implies that qualified fire protection engineering judgement has been used to obtain the highest economically justifiable level of industrial loss prevention. The most evident characteristic of an improved risk property is the existence of reliable, automatic fire extinguishing systems throughout all buildings of combustible construction or content where the building is vital to operational continuity or may experience a large property loss from fire in the absence of an automatic extinguishing system.

### 3.2 National Security

Those aspects of national security that could be affected adversely by fire, explosion, or other catastrophes.

### 3.3 Protection of the Public Health and Welfare

Control of fire, explosion, or effects of hazards to minimize potential injury to the public and damage to property not owned by the Department.

### 3.4 Property

All Government-owned or leased property for which the Department has responsibility, except:

3.4.1 Property furnished under contract requiring contractor assumption of the risk of loss or damage to Government-furnished property.

3.4.2 Property covered by a private insurance policy specifying the Department of Energy as the beneficiary.

### 3.5 Fire Protection

Protection from a broad range of fire risks normally included in the analysis conducted by fire protection engineers. These include some aspects of related perils such as explosion, windstorm, earthquake, lightning, and water damage. Fire prevention programs are a necessary part of fire protection programs.

### 3.6 Maximum Credible Loss

The maximum loss that could occur from a combination of events resulting from a single fire. Considerable judgement is required to evaluate the full range of potential losses, but in general, readily conceivable fires in sensitive areas are considered. Examples are power wiring failures in cable trays, flammable liquid spills, and high-value parts storage areas or combustible exposures to sensitive machines. Any installed fire protection systems are assumed to function as designed. Due to the uncertainties of predicting human action, the effect of emergency response is generally omitted except for post-fire actions such as salvage work, shutting down water systems, and restoring production.

### 3.7 Maximum Possible Fire Loss

The maximum possible loss that cold occur in a single fire area assuming the failure of both automatic and manual fire extinguishing actions.

### 3.8 Property Loss

The dollar cost of restoring damaged facilities or equipment to their original condition, whether or not such restoration actually occurs. In determining loss, the estimated damage to the building and contents shall include replacement cost, less salvage value, plus the cost of decontamination and cleanup. Effects upon program continuity, auxiliary costs of fire extinguishment, and consequent effects on related areas should be included if the effects can be determined.

### 3.9 Consultant Fire Protection Survey Program

The program under which fire protection surveys of principal DOE facilities are conducted for the Office of Operational Safety by fire protection engineers of selected contractors administered by this organization.

### 3.10 Fire Protection System

Any system designed to control or extinguish fires or to limit the extent of fire damage. These include:

3.10.1 Automatic suppression systems such as sprinklers or carbon dioxide systems.

3.10.2 Watchmen or automatic detection systems, water supplies, plus a fire department.

3.10.3 Walls and doors.

3.10.4 Building separation with credit for water supplies plus a fire department

## 4.0 RESPONSIBILITIES AND AUTHORITIES

### 4.1 The Director of Operational Safety (EH-34)

4.1.1 Develops fire protection requirements for programs and facilities and coordinates the development of design criteria with the Director of Projects and Facilities Management (MA-22) and other appropriate Headquarters organizations to assure the consistency of such criteria with the requirements of applicable codes and standards.

4.1.2 Evaluates and appraises the adequacy of Field Element fire protection programs and provides assistance to all Departmental Elements on all aspects of fire protection.

4.1.3 Administers the consultant fire protection survey program, issues survey reports to applicable Departmental Elements, and reviews programs for handling recommendations resulting from the surveys.

### 4.2 Program Senior Officials

4.2.1 Review proposed fire protection programs for that property under their responsibility.

4.2.2 Review field requests for exemptions from DOE criteria with EH-34 and MA-22 when requests require approval.

4.2.3 Review field implementation of the recommendations resulting from the consultant fire protection survey program. The Office of Operational Safety will act as the primary point of contact for the survey program

and will distribute survey reports to Headquarters and field organizations as applicable.

4.2.4 For DOE facilities not subordinate to a field organization, the procedures of Paragraph 4.3 shall be followed.

**4.3 Heads of Field Organizations**

4.3.1 Provide and maintain an improved risk level of fire protection adequate to meet the objectives of Paragraph 2.0 for all physical property or material that represents an investment by the Department.

4.3.2 Provide and maintain a higher standard of fire protection than required to meet the improved risk requirements in instances when justified for purposes of national security, program continuity, or protection of the public.

4.3.3 Submit requests for exemptions to EH-34 for those facilities where, in the judgement of the Head of the Field Organization, compliance with Paragraph 2.0 above is not feasible.

4.3.4 Establish and maintain a system to assure that the intent of all DOE fire protection standards is incorporated in the plans and specifications for all new buildings and for major modifications of existing buildings.

4.3.5 Assist the Office of Operational Safety in coordination the consultant fire protection team survey at those facilities included in the survey program, establish action plans for compliance with recommendations resulting from the surveys, and forward compliance plans, exemption requests, and other requested data to EH-34.

4.3.6 Establish and maintain lists of facilities for which they have fire protection appraisal responsibility and designate for each the minimum frequency at which fire protection appraisals will be made. This list shall include facilities at which:

4.3.6.1 Property is valued at $1,000,000 or more. (All values in this paragraph are based on Factory Mutual System's Industrial Cost Trends of 1-87, using a 1-19-87 multiplier of 1.0. Post-1987 escalated values may be based on Factory Mutual or similar indexes.)

4.3.6.2 Property valued at less than $1,000,000 is located but where a fire protection appraisal is deemed to be justified.

4.3.6.3 A credible loss could delay a vital program in excess of 3 months or a significant component of a program in excess of 6 months.

4.3.7 Conduct fire protection appraisals of facilities for which they have responsibility.

4.3.8 Provide loss prevention advice and assistance to contractors in need of assistance or who do not have their own professional staff assistance.

4.3.9 Submit to the EH-34 an annual summary covering the fire protection program and loss experience of the previous year.

## 5.0 DELEGATION OF "AUTHORITY HAVING JURISDICTION"

For those fire protection standards specifying alternative means of compliance subject to "the authority having jurisdiction," this authority is the applicable Departmental Element.

## 6.0 COMPLIANCE WITH IMPROVED RISK OBJECTIVES

### 6.1 Threats to the Public Health or Welfare and Hazardous to Life

6.1.1 Department of Energy buildings comply with the intent of the Life Safety Code and with specific requirements of 29 CFR Part 1910 applicable to exits and fire protection features.

6.1.2 The potential for fast spreading fires is controlled by severe restrictions on the ratings of interior finish materials for flame spread and smoke development and by compartmentation of hazardous materials.

6.1.2.1 Materials of unusual fire characteristics such as exposed urethane foams and materials developing large quantities of toxic products of combustion shall be prohibited for interior finish.

6.1.2.2 Hazardous materials, such as flammable liquids and explosives, shall be severely restricted in quantity and handled in conformance with all applicable codes. Special protection features suitable to the hazard should be installed and limits imposed on the number of people who must be exposed to the hazard.

6.1.2.3 Where noncompliance with some Life Safety Code provisions may be required for public safety, in some containment structures, additional protective systems and personnel limits should be maintained.

6.1.3 The facility containment systems are designed to preclude an offsite release of hazardous amounts of toxic materials under maximum credible fire conditions.

6.1.4 Exhaust and ventilation systems, including filters, are protected or isolated from the effects of a credible fire to the extent that hazardous amounts of toxic materials or combustion products will not escape.

6.1.5 Natural or artificial means of controlling liquid runoffs from a credible fire are provided so that contaminated or polluting liquids

will not escape the site, including potentially contaminated water resulting from firefighting operations.

## 6.2 Unacceptable Program Delays

The objective of no unacceptable impairment of a vital program can be considered to have been attained when:

6.2.1 The maximum credible fire will not result in the loss of uses of a vital facility for a period longer than that specified as acceptable to the applicable Program Senior Official.

6.2.2 In the absence of a defined acceptable shutdown period, the maximum credible fire will not result in the interruption of a vital program (weapons production, uranium enrichment) for a period in excess of 3 months, or a significant part of a program (major accelerator, single diffusion plant) for a period in excess of 6 months.

## 6.3 Property Damage Limitation

The objective of limiting property loss can be considered to have been attained when fire protection systems are provided as follows:

6.3.1 When the maximum possible property loss is in the range of $1-25 million, an automatic fire protection system is provided that will limit the probable loss to the lower figure.

6.3.2 When the maximum possible property loss is in the range of $25-50 million, a redundant protection system is provided that, even in the failure of the primary system, should limit the loss to the lower figure.

6.3.3 When the maximum possible property loss exceeds $50 million, redundant systems are provided as in Subparagraphs 6.3.1 and 6.3.2, above, and a failure-proof type of fire protection system, such as blank walls or physical separation, is provided to limit the maximum property loss to $75 million.

## 6.4 Higher Standard of Protection

A higher standard of protection, usually including some form of automatic protection, is described in Paragraph 1.0 as being justified when certain considerations, beyond those mentioned in Paragraphs 6.1, 6.2 and 6.3, above, play a major role in the management decision process. The specific level at which an automatic protection system should be installed requires qualified fire protection engineering judgement. In general, the probable loss should be limited to $250,000 in such cases. The following points should be considered in evaluating the need for automatic fire extinguishing systems:

### 6.4.1 Importance

Vital property may require protection without regard to the dollar loss potential. For example, it may be desirable to protect a low-value or temporary storage shed when it may contain critical or long procurement time construction items. In illustration, a trailer may have a temporary protection system when it is used as a control center for a vital, one-time event. Particularly high public visibility or sensitivity may also be justification for protection of otherwise low-value property.

### 6.4.2 Effect on Production

Protection costs may be high in relation to the value protected but still warranted, as in the case of cooling towers and electrical switchgear, where loss of the unit could result in the shutdown of other facilities.

### 6.4.3 Cost Versus Benefit Ratios

A building such as a lumber or paint shed may be of low value and importance but may be easily protected by extending sprinklers from an adjoining protected building at a low incremental cost.

### 6.4.4 Exposure

Constructions heads or trailers may warrant protection when they must be installed in or adjacent to more important facilities.

### 6.4.5 Future Conditions

Even when the above conditions are not applicable protection may still be warranted when conditions are extrapolated to the future. For example, a storage building may be of low value when designed, but normal escalation of content value may indicate it would need protection in a few years, in which case it would be more effective to install the protection as part of the original construction. Similarly, evaluation of office or low hazard laboratory occupancies may indicate that the hazard or combustible loading of similar facilities increases consistently with time, justifying protection at an early phase. Provision of automatic protection in the initial construction also allows more flexibility for future modifications. For example, conversion to a higher hazard occupancy may be prohibited due to a lack of appropriate built-in protection.

## 7.0 ESSENTIAL ELEMENTS OF AN IMPROVED RISK FACILITY

7.1 An improved risk facility is characterized by a sufficiently high level of fire protection to fulfill requirements for insurability by the Factory Mutual System, Industrial Risk Insurers, or other private industrial fire insurance companies that limit their underwriting to the best protected class of industrial risks. A basic requirement is the provision of automatic fire extinguishing systems in all areas subject to serious property damage or business interruption losses as

a result of fire. Above all other requirements, to qualify for an improved risk rating, it is necessary that strong, tangible evidence be available attesting to existence of continuing sincere interest by management and employees in minimizing losses from fire and related perils.

7.2 DOE facilities qualifying as improved risk will incorporate the following physical improvements and internal programs, and maintain records for appraisal of the programs:

7.2.1 Review of plans prior to contemplated construction to assure adequacy of fire risk appraisal and protection, and follow up review to ensure that fire protection features are provided where necessary to comply with Paragraph 6.0 above.

7.2.2 Regular self-inspections, tests, fire loss potential reviews and appraisals to identify the nature, location, and severity of fire risks (injuries, dollar loss, programmatic interruption, release of toxic and radioactive materials) as well as to determine adequacy of fire loss control devices and activities.

7.2.3 Periodic audits by outside fire protection authorities such as contractor facility appraisals by field fire protection engineers.

7.2.4 Plans, procedures, devices, and trained personnel adequate to permit controlling any credible fire emergency that may arise on the facility.

7.2.5 Limitation by physical means (e.g., geographic isolation, fire-walls, firedoors, draft barriers) of areas that can be directly damaged in the event of a single fire.

7.2.6 Quality construction which in most cases is defined as fire resistive or noncombustible type buildings with segregation or isolation of particularly hazardous operations.

7.2.7 Enclosures of adequate fire resistant construction for stairways, elevators, ducts, and other openings coupled with fixed or manual devices (such as self-closing doors or dampers, draft stops, or water curtains) to control or limit both vertical and horizontal fire spread potentials.

7.2.8 Protection of special hazards by isolation, segregation, or use of special fire control systems (e.g., automatic sprinklers, inert gas flooding, explosion suppression) together with devices (e.g., relief valves, filters, roof hatches, scuppers, blast walls) for limiting or controlling damage potentials of fire, hazardous smoke, gases, and water runoff, or other occurrences, that may reasonably be anticipated during a fire emergency.

7.2.9 Adequate, reliable fire protection water supplies and distribution systems coupled with adequate hydrants, inside standpipes, and other devices to facilitate utilization of such water during fire emergencies.

7.2.10 Adequate automatic and manual means for detecting and reporting incident fires including, but not limited to, watchman service.

7.2.11 Automatic sprinkler protection for all combustible construction or occupancies where potential losses exceed Departmental criteria.

7.3 Improved risk facilities shall be appraised periodically by the appropriate organization in sufficient depth to establish that:

7.3.1 The programs described in Subparagraph 7.2 above are being conducted.

7.3.2 Loss potentials, including programmatic effects, have been determined and appropriate protection system shave been provided to reduce the effects to the acceptable lees in Paragraph 2.0 or an exemption from these requirements has been obtained.

7.3.3 Effective action has been taken to comply with previous recommendations, initiate corrective actions on previously identified deficiencies, and reduce the adverse effects of noncompliance in areas where compliance has not yet been achieved or where exemptions have been allowed.

7.3.4 Losses, impairments, and unusual incidents are investigated and analyzed in sufficient depth to identify causes, economical and effective corrective methods, and areas where similar problems may exist or where additional studies may be required.

7.4 In addition to internal, Headquarters, and field appraisals, improved risks are generally characterized as those also surveyed by independent third party interests. For major facilities, this service is provided by consultant fire protection survey program.

7.5 Periodic fire protection appraisals of each facility shall be initiated by qualified fire protection engineering personnel as soon as practicable after listing of the facility by the Department. The appraisals shall include the items under Subparagraph 7.3, above.

7.6 In addition to performing periodic appraisals, the appraising office will maintain a continuous surveillance of improved risk facilities by:

7.6.1 Assuring that plans, proposals, loss reports, investigation report, and other applicable materials are reviewed by knowledgeable personnel in sufficient depth to determine that the facility is maintaining the review and protection programs described in Subparagraph 7.2, above.

7.6.2 Providing technical assistance and advice as requested by the contractor and as deemed necessary by the field organization.

7.6.3 Assuring that facility management is kept advised of requirements, programs, and applicable information generated by Headquarters, or other agencies, and that information developed by the facility or by other facilities with mutual interests, is disseminated among the interested parties.

## 8.0 CONSULTANT FIRE PROTECTION SURVEY PROGRAM

8.1 Consultant fire protection team surveys will be conducted periodically at facilities determined to be of major importance to the DOE mission. Major improved risk survey groups have been contracted to conduct surveys of the improved risk status of Department facilities.

8.1.1 A survey shall be conducted at each facility containing more than $25,000,000 in replacement value of Government property.

8.1.2 Following the initial survey, a resurvey shall be made at each facility at approximately 5-year intervals.

8.1.3 Reports of the surveys shall be submitted to EH-34 for review and distribution to the appropriate contractors through the appropriate DOE element.

8.2 For each survey, Heads of DOE Elements:

8.2.1 Shall designate a coordinator to assist the team in obtaining logistical support, facility access, and technical information as determined necessary by the Office of Operational Safety.

8.2.2 Shall review the contractor's compliance efforts and forward compliance data as requested by EH-34.

8.2.3 May omit any appraisal that would coincide with the period in which the consultant fire protection team survey is being conducted.

8.3 Following each survey, the appropriate organization will be requested to submit an action plan.

8.3.1 Action plans are submitted directly to the Office of Operational Safety.

8.3.2 Initial action plans are requested in the transmittal letter accompanying the final report of the survey and will be due at the next scheduled update.

8.3.3 Action plans will be reviewed by EH-34 and revised status reports will be requested approximately once a year for those sites requiring prolonged corrective actions.

8.4 Output data from the action plans shall be furnished yearly to appropriate Departmental Elements for budgeting and planning purposes.

THIS PAGE INTENTIONALLY
LEFT BLANK

# ATTACHMENT V

## QUALITY ASSURANCE

Facility design shall be conducted under QA requirements to ensure that the established program and project quality objectives are satisfied. A QA program shall be developed and implemented in compliance with DOE 5700.6C and using the elements of DOE 4700.1.

Control mechanisms shall be established to ensure that: (1) design inputs are correctly translated into design documents in a timely manner; (2) organizational and physical interfaces are identified and controlled; (3) changes to design are controlled in a manner commensurate with the original design; (4) the design is independently verified to be adequate; (5) documentation and records of the design and design verification processes are maintained in accordance with the QA program.

QA encompasses all those planned and systematic actions and controls necessary to provide adequate confidence that a structure, system, or component will perform satisfactorily in service. QA includes *quality control*, which includes actions needed to ensure that the physical characteristics of a material, structure, component, or system meet predetermined requirements.

An adequate QA program provides the following assurances:

- Organizational interfaces are identified and controlled.
- The design is independently verified to be adequate.
- A document control system is in place.
- A change control system is in place.

The QA program shall include quality control functions in the following areas:

- The design will satisfy program and project requirements.
- The prepared drawings and construction specifications adequately incorporate QA, design, and codes and standards requirements and are available in a timely manner.
- Construction can be performed in accordance with design.
- Tests, reviews, or inspections confirm the adequacy of design and quality of construction and manufactured components, where appropriate.
- Lock and tag systems are provided for turnover acceptance, maintenance, and system outages.

As a part of the QA program, architectural and engineering portions of design should be closely coordinated and *functionally analyzed* during the conceptual, preliminary (Title I), and detailed (Title II) design phases to avoid conflicts that could result in costly changes during construction. Prior to initiating Title I and Title II design, QA requirements shall be established for the project systems, subsystems, and components. The following shall be determined:

- What the facility is to accomplish
- The range of operating conditions
- The required degree of reliability
- The intended useful life
- How it can be maintained, repaired, or replaced

Wherever possible, design shall reflect experience gained on similar projects or similar types of construction.

Provisions shall be made for review and checking design calculations, drawings, and construction specifications by qualified personnel other than those responsible for the original design.

Deviations from specified standards shall be identified and procedures established to ensure their control.

To the extent practicable, and particularly in the case of innovative design, the design should be independently reviewed by competent consultants in construction or manufacturing techniques to confirm the practicability of construction or manufacture.

# SECTION 16640
# CATHODIC PROTECTION SYSTEM (SACRIFICIAL ANODE)

## PART 1 GENERAL

### 1.1 SUMMARY

This Specification covers the requirements for the purchasing, fabrication, installation, and testing of a cathodic protection system required for underground valves and fire hydrants.

### 1.2 REFERENCES

The publications listed below form a part of this specification to the extent referenced. The publications are referred to in the text by the basic designation only.

AMERICAN SOCIETY FOR TESTING AND MATERIALS (ASTM)

| | |
|---|---|
| ASTM B418 | 1988 Standard Specification for Cast and Wrought Galvanic Zinc Anodes |

NATIONAL ASSOCIATION OF CORROSION ENGINEERS (NACE)

| | |
|---|---|
| NACE RP0169 | 1983 Control of External Corrosion on Underground or Submerged Metallic Piping Systems |
| NACE RP0188 | 1988 Discontinuity (Holiday) Testing of Protective Coatings. |

NATIONAL ELECTRICAL MANUFACTURERS ASSOCIATION (NEMA)

| | |
|---|---|
| NEMA TC 2 | 1990 Electrical Plastic Tubing (EPT) and Conduit (EPC-40 and EPC-80) |

UNDERWRITERS LABORATORIES (UL)

| | |
|---|---|
| UL 510 | 1986 UL Standard for Safety Insulating Tape |

AMERICAN WATER WORKS ASSOCIATION (AWWA)

| | |
|---|---|
| AWWA C-209 | 1990 Cold-Applied Tape Coatings for the Exterior of Special Sections, Connections, and Fittings for Steel Water Pipelines |

1.3 **RELATED REQUIREMENTS**

Specification Section 02101 Site Improvements for Construction Support Facilities

1.4 **DEFINITIONS**

(Not Used)

1.5 **SYSTEM DESCRIPTION**

Cathodic protection is required on all buried underground valves and fire hydrants.

1.6 **SUBMITTALS**

Submit the following in accordance with the Vendor Drawing and Data Requirements section of the Order/Subcontract.

1.6.1 Product Data

Submit catalog cuts for the cathodic protection system, or any other data published by the manufacturer, to demonstrate conformance to the specification requirements.

1.6.2 Qualifications

Submit evidence of qualifications of the corrosion engineer in accordance with Paragraph 3.2.1.

1.6.3 Drawings

Detail drawings consisting of a complete list of equipment and material including manufacturer's descriptive and technical literature, catalog cuts, and installation instructions. Detail drawings shall contain complete wiring and schematic diagrams and any other details required to demonstrate that the system has been coordinated and will function properly as a unit.

1.6.4 Reports

Test reports in booklet form tabulating all field tests and measurements performed, upon completion and testing of the installed system.

1.7 **CLASSIFICATION OF SYSTEM AND COMPONENTS**

(Not Used)

1.8 **PROJECT OR SITE ENVIRONMENTAL CONDITIONS**

(Not Used)

## PART 2 PRODUCTS

### 2.1 MATERIALS AND EQUIPMENT

#### 2.1.1 Magnesium Anodes

Magnesium anodes shall be 29 inches long by 6-3/4 inches diameter packaged, corresponding to the applicable chemical composition listed in the following table:

PERCENT BY WEIGHT

| ELEMENT | % | ELEMENT | % |
|---|---|---|---|
| Aluminum | 5.0 - 7.0 | Zinc | 2.0 - 4.0 |
| Manganese | 0.15 Min. | Copper | 0.1 Max |
| Silicon | 0.30 Max | Iron | 0.003 Max |
| Nickel | 0.003 Max | Others | 0.30 Max. |
| | | Magnesium | Balance |

#### 2.1.2 Connecting Wire

Wire shall be No. 12 AWG solid copper wire, unspliced, complying with NFPA 70, Type THHN insulation. Connecting wires for magnesium anodes shall be factory installed with the place of emergence from the anode in a cavity sealed flush with a dielectric sealing compound.

#### 2.1.3 Artificial Backfill

Anodes shall be factory packaged with an artificial backfill in a water permeable fabric sack or cardboard container. Anodes shall be packaged on a vibrating platform to attain dense packing, and centering shall be assured by means of spacers.

Artificial backfill shall have the following composition:

| Material | Approximate Percent by Weight |
|---|---|
| Gypsum | 75 |
| Bentonite | 20 |
| Sodium Sulfate | 5 |
| Total | 100 |

## 2.2 FABRICATION

### 2.2.1 Electrical Wire

Wire shall be No. 12 AWG solid copper wire with NFPA 70, Type THHN insulation.

Color coding shall be as follows:

| | | |
|---|---|---|
| Anode Leads | - | Black |
| Negative Leads | - | Red |
| Test Leads | - | Blue |

### 2.2.2 Conduit

Nonmetallic conduit shall conform to NEMA TC 2.

### 2.2.3 Joint, Patch, Seal, and Repair Coating

A. Sealing and dielectric compound shall be a black, rubber based backed compound that is soft, permanently pliable, tacky, and moldable. Compound shall be applied as recommended by the manufacturer. ROYSTON "Handy Cap" or equal.

B. Valve coating compound shall be cold-applied non-coal-tar base mastic coating. ROYSTON 612XM or equal.

C. Valve reinforcing binder layer shall be a fiberglass wrap applied as recommended by the manufacturer. ROYSTON "GLAS-WRAP" or equal.

D. Fire hydrant base coating compound shall be cold-applied non-coal-tar base mastic coating. ROYSTON 612XM or equal. Hydrant lower barrel coating shall be cold-applied tape wrap in accordance with AWWA C209.

E. Pressure-sensitive vinyl plastic electrical tape shall conform to UL 510.

F. Flange protection shall be a precoated heat-shrinkable wraparound sleeve with a separate inner nylon support. Raychem "FLANGESEAL" or equal.

### 2.2.4 Test Stations

Test stations shall be complete with an insulated terminal block having the specified number of terminals, and shall be provided with a lockable cover. Cott or equal.

## PART 3 EXECUTION

### 3.1 PREPARATION

3.1.1 Joint, Seal, and Component Coating

A. Valve coating shall be non-coal-tar base mastic with a dry film thickness of 12 mils. Two coats shall be applied with the fiberglass reinforcing layer installed, on the bottom portion of the valve, between the first and second coat.

B. Fire hydrant base coating shall be two coats of a non-coal-tar base mastic of thickness and installation per Paragraph 3.1.1A

Fire hydrant lower barrel shall be tape wrapped in accordance with AWWA C209.

### 3.2 INSTALLATION

Unless otherwise indicated, all equipment shall be installed in accordance with the manufacturer's recommendations.

3.2.1 Services of Corrosion Engineer

The Seller shall obtain the services of a corrosion engineer to supervise and to inspect the installation of the cathodic protection system. Corrosion Engineer refers to a person, who, by reason of his knowledge of the physical sciences and the principles of engineering and mathematics, acquired by professional education and related practical experience, is qualified to engage in the practice of corrosion control on buried or submerged metallic piping systems and metallic tanks. Such person may be a licensed professional engineer or may be a person certified as being qualified by the National Association of Corrosion Engineers if such licensing or certification includes suitable experience in corrosion control on buried or submerged metallic piping systems and metallic tanks. The corrosion engineer shall ensure that the cathodic protection system is installed, tested, and placed into service in accordance with the requirements specified.

3.2.2 Anode Installation

3.2.2.1 Primary Design

A. Anodes of the size indicated shall be installed at the locations shown (See Attachment A). Locations may be changed to clear obstructions if approved. Anodes shall be installed as indicated in a dry condition after any

plastic or waterproof protective covering has been completely removed from the water permeable, permanent container housing the anode metal. The anode connecting wire shall not be used for lowering the anode into the hole. The annular space around the anode shall be backfilled with earth, with no greater than one inch sieve, in 6 inch layers and each layer shall be hand tamped. Care must be exercised not to strike the anode or connecting wire with the tamper. Approximately 5 gallons of water shall be applied to each filled hole after anode backfilling and tamping has been completed to a point about 6 inches above the anode.

After the water has been absorbed by the earth, backfilling shall be completed to the ground surface level.

B. Resistance wires shall not be used to reduce the current output of individual or group anodes.

C. Connections to valves and hydrants shall be made by exothermic weld methods and in locations as shown in Attachments A and B respectively.

3.2.3 Test Stations

Test stations shall be of the type and location shown, in Attachments A and B, and shall be conduit mounted.

3.2.4 Criteria of Protection

Criteria for determining the adequacy of protection on a buried valve, or fitting shall be in accordance with NACE RP0169 and shall be selected by the corrosion engineer as applicable. One of the following methods shall apply:

A. 850 mV Negative Voltage

A negative voltage of at least minus 0.85 volt as measured between the valves, fitting, buried portions of fire hydrants and a saturated copper-copper sulfate reference electrode contacting the earth directly over the valves, fitting, and buried portions of fire hydrants. Determination of this voltage shall be made with the cathodic system in operation.

B. 300 mV Negative Voltage

A negative voltage shift of at least 300 millivolts as measured between the valves, fitting, buried portions of fire hydrants and a saturated copper-copper sulfate reference electrode contacting the earth directly over

the valves, fitting, and buried portions of fire hydrants. Determination of this voltage shift shall be made with the protective current applied.

C. 100 mV Polarization Voltage

A minimum polarization voltage shift of 100 millivolts as measured between the valves, fitting, and buried portions of fire hydrants and a saturated copper-copper sulfate reference electrode contacting the earth directly over the valves, fitting, and buried portions of fire hydrants. This polarization voltage shift shall be determined by interrupting the protective current and measuring the polarization decay. When the protective current is interrupted, an immediate voltage shift will occur. The voltage reading, after the immediate shift, shall be used as the base reading from which to measure polarization decay.

3.2.5 Tests and Measures

3.2.5.1 Baseline Potentials

After backfill of the valves, fitting, and buried portions of fire hydrants and anodes is completed, but before the anodes are connected to the valves, fitting, and buried portions of fire hydrants, the static potential-to-soil of the valves, fitting, and buried portions of fire hydrants shall be measured. The locations of these measurements shall be identical to the locations specified for component-to-reference electrode potential measurements. The initial measurements shall be recorded.

3.2.5.2 Component-To-Reference Electrode Potential Measurements

Upon completion of the installation and with the entire cathodic protection system in operation, electrode potential measurements shall be made using a copper-copper sulfate reference electrode and a potentiometer-voltmeter, or a direct current voltmeter having an internal resistance (sensitivity) of not less than 100,000 ohms per volt and a full-scale of 1 or 2 volts. The locations of these measurements shall be identical to the locations used for the baseline potentials. The values obtained and the date, time, and locations of measurements shall be recorded.

3.2.5.3 Recording Measurements

All component-to-soil potential measurements including initial potentials where required shall be recorded.

3.3 **FIELD QUALITY CONTROL**

Coating Integrity

Valves which are coated with a mastic protective compound shall be tested for discontinuities in accordance with NACE RP0188.

3.4 **ADJUSTMENTS**

(Not Used)

3.5 **CLEANING**

(Not Used)

3.6 **PROTECTION**

(Not Used)

3.7 **DEMONSTRATION**

(Not Used)

3.8 **SCHEDULES**

(Not Used)

**END OF SECTION**

# ATTACHMENT A

## CATHODIC PROTECTION DETAILS (VALVES)

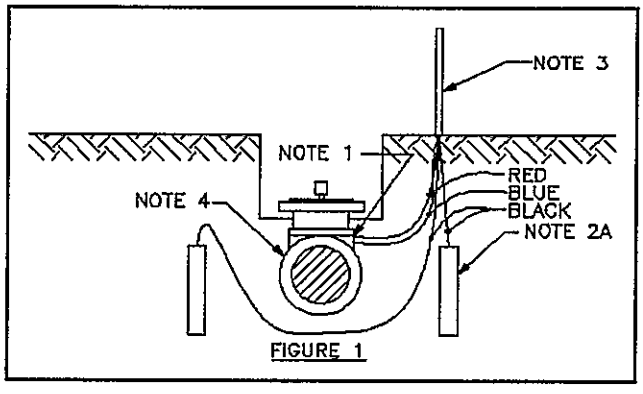


FIGURE 1

**NOTES:**

1. Connections to ferrous surfaces shall be made by exothermic weld methods done in compliance with manufacturers standards. CADWELD or equal.

   Area of anode lead wire attachment shall be repaired using ROYSTON "Handy Cap" or equal.

2. Anodes

   A. 17 pound magnesium anodes shall be installed as shown in Figure 1. The top of anode shall line up with the top of the valve/pipe. Distance between surface of anode and surface of pipe shall be 1'-2" ± 2". The nominal dimensions of the anode are 29" long by 6-3/4" diameter.

3. Test stations shall be located as shown, having a five terminal block, for underground valves. (Cott "BIG FINK" or equal.) The Anode leads and negative leads shall be connected by a copper buss.

   For valves which have a ferrous appendage protruding above ground (i.e. a post indicator), a three terminal block test station shall be used and all three terminals shall be connected by a copper buss. Cott "LITTLE FINK" or equal.

4. Flanges shall be covered with a heat-shrinkable material installed per manufacturers specifications. Raychem "FLANGESEAL" or equal.

# ATTACHMENT B

## CATHODIC PROTECTION DETAILS (HYDRANT)

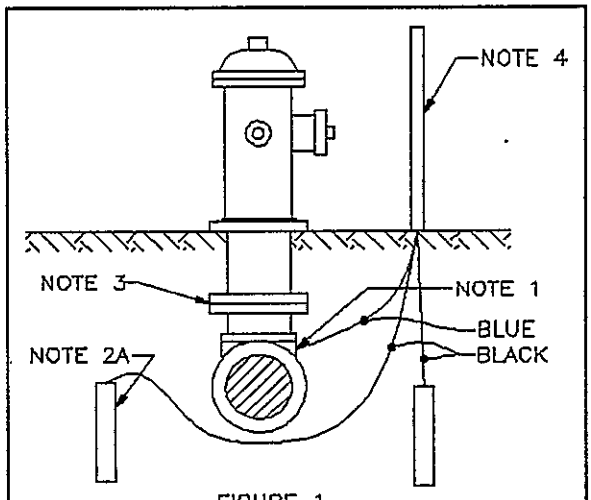


FIGURE 1

**NOTES:**

1. Connections to ferrous surfaces shall be made by exothermic weld methods done in compliance with manufacturers standards. CADWELD or equal. Area of anode lead wire attachment shall be repaired using ROYSTON "Handy Cap" or equal.

2. Anodes

   A. 17 pound magnesium anodes shall be installed as shown in Figure 1. The top of anode shall be buried 2'-0" ± 2" from the surface. Distance between surface of anode and surface of pipe shall be 1'-2" ± 2". The nominal dimensions of the anode are 29" long by 6-3/4" diameter.

3. Flanges shall be covered with a heat-shrinkable material installed per manufacturers specifications. Raychem "FLANGESEAL" or equal.

4. Test stations shall be located as shown per Figure 1, having a three terminal block connected by a copper buss. Cott "LITTLE FINK" or equal.