U.S. Department of Energy
Office of River Protection
P.O. Box 450
Richland, Washington 99352

0060098

03-ED-121

JUL 25 2003

Mr. Michael A. Wilson, Program Manager
Nuclear Waste Program
State of Washington
Department of Ecology
1315 W. Fourth Avenue
Kennewick, Washington 99336

RECEIVED
AUG 14 2003
EDMC

Dear Mr. Wilson:

MODIFICATION REQUEST FOR THE NON-RADIOACTIVE AIR EMISSIONS NOTICE OF CONSTRUCTION (NOC) PERMIT APPLICATION FOR THE HANFORD TANK WASTE TREATMENT AND IMMOBILIZATION PLANT (WTP)

Attached for your review and approval is a modified Non-radioactive Air Emissions NOC Permit Application for the Hanford Tank WTP, 24590-WTP-RPT-ENV-01-009, Revision 1. The NOC modification request is being submitted to inform the State of Washington Department of Ecology of design changes associated with the WTP. The design changes addressed in the NOC modification that impact non-radioactive air emissions include:

- Increasing the number of High-Level Waste Facility melters from one melter to two;
- Reducing the number of Low-Activity Waste Facility melters from three melters to two;
- Changing the number and size of the steam boilers and eliminating hot water boilers;
- Changing the number and size of the diesel generators and diesel fire pumps; and
- Changing the fuel used in the boilers, diesel generators, and diesel fire pumps from low sulfur fuel to ultra-low sulfur fuel.

Air emission estimates and air quality impact analyses were conducted to demonstrate that the Toxic Air Pollutant (TAP) emissions from the WTP sources will not exceed any of the acceptable source impact levels (ASIL) for the Class A or Class B TAPs, as required by Washington Administrative Code 173-460. Results of the analysis show that the WTP processes will not produce TAP emissions in excess of any Class A or Class B ASIL.

If you have any questions, please contact me, or your staff may contact Dennis W. Bowser, Environmental Division, (509) 373-2566.

Sincerely,

James E. Rasmussen

James E. Rasmussen, Director
Environmental Division

ED:DWB

Attachment

cc: See page 2

cc w/o attach:
B. G. Erlandson, BNI
R. Haggard, BNI
J. P. Henschel, BNI
J. Su-Coker, BNI
E. S. Aromi, CHG
C. J. Kemp, CHG
J. Cox, CTUIR
S. L. Dahl, Ecology
J. L. Hensley, Ecology (w/attach)
J. J. Lyon, Ecology
O. S. Wang, Ecology
J. A. Bates, FHI
W. E. Green, FHI (w/attach)
J. L. Hanson, INNOV
P. Sobotta, NPT
M. F. Jarvis, RL
A. W. Conklin, WDOH
R. Jim, YN
Administrative Record (w/attach)
Environmental Portal, LMSI

Attachment
03-ED-121

# Non-Radioactive Air Emission Notice of Construction Permit Application for Hanford Tank Waste Treatment and Immobilization Plant

ISSUED BY
RPP-WTP PDC
INIT DATE 7-16-03

Document title: **Nonradioactive Air Emission Notice of Construction Permit Application for Hanford Tank Waste Treatment and Immobilization Plant**

Contract number: DE-AC27-01RV14136

Department: Environmental and Nuclear Safety

Author(s): R Haggard

Principal author signature:

Document number: 24590-WTP-RPT-ENV-01-009, Rev 1

Checked by: B Erlandson

Checker signature:

Date of issue: 15 July 2003

Issue status: Approved

Approved by: P Peistrup

Approver's position: Environmental Manager

Approver signature:

River Protection Project
Waste Treatment Plant
2435 Stevens Center Place
Richland, WA 99352
United States of America
Tel: 509 371 2000

**DOE/ORP-2002-02, Rev 1**

# History Sheet

| Rev | Date | Reason for revision | Revised by |
|---|---|---|---|
| A | 15 October 2001 | Draft for Review | J Su-Coker |
| 0 | 31 January 2002 | Approved | J Su-Coker |
| 1 | 15 July 2003 | Total rewrite | R Haggard |

## Contents

Acronyms ..... iv
Executive Summary ..... vi
1 Introduction ..... 1-i
2 Regulatory Overview ..... 2-i
3 Responsible Manager and Construction Schedule ..... 3-i
4 Process Description ..... 4-i
5 Proposed Non-Radionuclide Controls ..... 5-i
6 Emissions Estimation and Air Impact Analysis ..... 6-i
7 References ..... 7-i

## Appendices

Appendix A State Environmental Policy Act Checklist ..... A-i
Appendix B Detailed Emissions Calculations ..... B-i
Appendix C ISCST3 Modeling Results ..... C-i

# Acronyms

| | |
|---|---|
| AHL | analytical hot cell laboratory |
| ARL | analytical radiological laboratory |
| ASIL | acceptable source impact level |
| BACT | best available control technology |
| BOF | balance of facilities |
| CAA | *Clean Air Act* |
| CARB | California Air Resources Board |
| CAS | Chemical Abstracts Service |
| CFR | Code of Federal Regulations |
| COPC | constituent of potential concern |
| DOE | US Department of Energy |
| DOE-RL | US Department of Energy - Richland Field Office |
| DST | double-shell tank |
| Ecology | Washington State Department of Ecology |
| EPA | US Environmental Protection Agency |
| GTAW | gas tungsten arc weld |
| HEME | high efficiency mist eliminator |
| HEPA | high efficiency particulate air filter |
| HLW | high-level waste |
| IHLW | immobilized high-level waste |
| ILAW | immobilized low-activity waste |
| ISCST3 | Industrial Source Complex-Short Term (an EPA air dispersion model) |
| ITS | important to safety |
| LAW | low-activity waste |
| LOSP | loss of site power |
| LSM | locally shielded melter |
| NITS | not important to safety |
| NOC | notice of construction |
| PJM | pulsed jet mixer |
| PSD | prevention of significant deterioration |
| PT | pretreatment |

| | |
|---|---|
| rad lab | radiological laboratory |
| RFD | reverse flow diverter |
| SBS | submerged bed scrubber |
| SCR | selective catalytic reduction |
| SEPA | *State* (of Washington) *Environmental Policy Act* |
| TAP | toxic air pollutant |
| T-BACT | best available control technology for toxic air pollutants |
| TPA | *Hanford Federal Facility Agreement and Consent Order*, also known as the Tri-Party Agreement |
| TRU | transuranic |
| TSD | treatment, storage, or disposal |
| TWRS | Tank Waste Remediation System |
| VOC | volatile organic compound |
| WAC | Washington Administrative Code |
| WESP | wet electrostatic precipitator |
| WTP | Hanford Tank Waste Treatment and Immobilization Plant |

# Executive Summary

An analysis of the potential toxic air pollutant (TAP) emissions from the Hanford Tank Waste Treatment and Immobilization Plant (WTP) has been conducted in accordance with Washington Administrative Code (WAC) 173-400-113 and 173-460. Under WAC 173-460-040, a notice of construction (NOC) permit application to the Washington State Department of Ecology (Ecology) is required prior to the construction of the WTP.

The original NOC, revision 0, was presented to Ecology to obtain air permit approval to start construction of the WTP. Ecology approval was granted on 8 July 2002. Ecology approval of the NOC allowed for full construction and operation of the WTP with a previous design consisting of 3 low-activity waste (LAW) facility melters and 1 high-level waste (HLW) facility melter (3 + 1 melter configuration). This application requests Ecology approval for a redesigned WTP that will include 2 LAW melters and 2 HLW melters (2 + 2 melter configuration). Ecology approval is also requested to proceed with the balance of facility design changes associated with the boilers, generators, and diesel fire pump engines. These facility modifications are described in section 4 entitled "Process Description."

The WTP will convert mixed wastes from the Hanford Site double-shell tank (DST) system to a solid vitrified form of borosilicate glass. The WTP is expected to have a life span of approximately 40 years, and is designed to produce a maximum of 56 metric tons per day of vitrified product. Additional details on the WTP processes are included in section 4.

Other items that are addressed under this NOC include:

- The proposed best available control technology for toxic air pollutants (T-BACT)
- The proposed best available control technology (BACT) for criteria pollutant emissions
- The estimated TAP and criteria pollutant emissions
- The results of ambient air quality analyses

The main source of the TAP and criteria pollutant emissions inventory for the WTP processes is the *Integrated Emissions Baseline Report for the Hanford Tank Waste Treatment and Immobilization Plant* (24590-WTP-RPT-PO-03-008, Rev 0). Additional TAP and criteria pollutant emission estimates for the ancillary facilities (for example, boilers and generators) were derived from *Compilation of Air Pollutant Emissions Factors AP-42, Fifth Edition, Volume I: Stationary Point and Area Sources* (EPA 1998) and data from the California Air Resources Board (CARB). The AP-42 calculations are provided in Appendix B. Section 6 presents results of the emission estimates.

Top-down T-BACT and BACT analyses have been performed for the emission sources at the WTP, based on the emission sources presented in section 6. Section 5 presents the results of the T-BACT and BACT analyses. The proposed controls for TAP and criteria pollutant emissions are also discussed in section 5.

An air quality analysis was conducted to demonstrate that the TAP emissions from the WTP will not exceed any of the acceptable source impact levels (ASILs) for the Class A or Class B TAPs, as identified under WAC 173-460. The results of the air quality analyses are provided in section 6. As indicated in section 6, the WTP processes will not result in emissions exceeding ASILs for Class A or Class B TAPs.

## Contents

1 Introduction ..... 1-1
1.1 Facility Location ..... 1-1
1.2 Organization of the Notice of Construction Application ..... 1-1

## Figures

Figure 1-1 Location of the WTP on the Hanford Site ..... 1-3

# 1 Introduction

This notice of construction (NOC) permit application is being modified to support design changes associated with the Hanford Tank Waste Treatment and Immobilization Plant (WTP), which will be located at the US Department of Energy's (DOE) Hanford Site near Richland, Washington, as shown in Figure 1-1. The original NOC, revision 0, was approved by the Washington State Department of Ecology (Ecology) on 8 July 2002. Ecology approval of the NOC allowed for full construction and operation of the WTP with a previous design consisting of 3 low-activity waste (LAW) facility melters and 1 high-level waste (HLW) facility melter (3 + 1 melter configuration). This application requests Ecology approval for a redesigned WTP that will include 2 LAW melters and 2 HLW melters (2 + 2 melter configuration). The modification is also requesting Ecology approval to proceed with the balance of facility design changes associated with the boilers, generators, and diesel fire pump engines. These facility modifications are described in section 4 entitled "Process Description".

The WTP will convert mixed wastes from the Hanford Site double-shell tank (DST) system to a solid vitrified form of borosilicate glass. The WTP is expected to have a life span of approximately 40 years, and is designed to produce a maximum of 56 metric tons per day of vitrified product.

This NOC is designed to evaluate potential toxic air pollutant (TAP) and criteria pollutant emissions from the WTP. Because the WTP emissions sources described in this NOC will exceed the Prevention of Significant Deterioration (PSD) significance threshold limits for both NOx and particulate matter, a separate PSD application (24590-WTP-RPT-ENV-01-007, Rev 1) was prepared and submitted to Ecology for approval. Information provided in this NOC includes the proposed best available control technology (BACT) for TAP and criteria pollutant emissions, process descriptions, and an air quality impact analysis that compares dispersion modeling results of the TAPs to the Washington State acceptable source impact levels (ASILs).

## 1.1 Facility Location

The location of the WTP is shown in Figure 1-1.

The WTP will be located at the DOE Hanford Site near Richland, Washington, which covers approximately 358,400 acres (560 square miles) of semi-arid land. The site is located northwest of Richland, on the Gable Butte. The latitude and longitude are 46$^0$ 33' 4"N and 119$^0$ 30' 9"W. The US Department of Energy-Richland Operations Office (DOE-RL) plans to utilize 120 acres for the construction and operation of the WTP.

## 1.2 Organization of the Notice of Construction Application

The purpose of this modified NOC is to provide information about the redesigned WTP and predicted TAP and criteria pollutant emissions necessary to satisfy Ecology requirements discussed in the Washington Administrative Code (WAC) 173-400 and 173-460. In order to gain approval for construction and operation of the WTP, the following information is addressed in this NOC:

- **Regulatory overview:** This section includes the alternatives considered for waste remediation and Washington State requirements for TAP and criteria pollutant emissions, control technology selection, and the NOC.

- **Process description:** This section includes the chemical and physical processes upstream of the emission units, and a listing of all proposed emission units and other emission contributors to the proposed WTP stationary source.
- **Best available control technology for TAPs and criteria pollutants:** This section includes a summary of the evaluation of control technology for TAP emissions from the WTP. A full best available control technology for toxic air pollutants (T-BACT) analysis is provided as a separate report (24590-WTP-RPT-ENV-01-005), and BACT analysis for NOx and particulate matter is also available in the Prevention of Significant Deterioration Permit Application (24590-WTP-RPT-ENV-01-007, Rev 1).
- **Emission rates and ASILs:** This section includes information about predicted uncontrolled and controlled TAPs and criteria pollutant emissions, a comparison with acceptable source impact levels, and an analysis of the dispersion modeling.

**Figure 1-1 Location of the WTP on the Hanford Site**

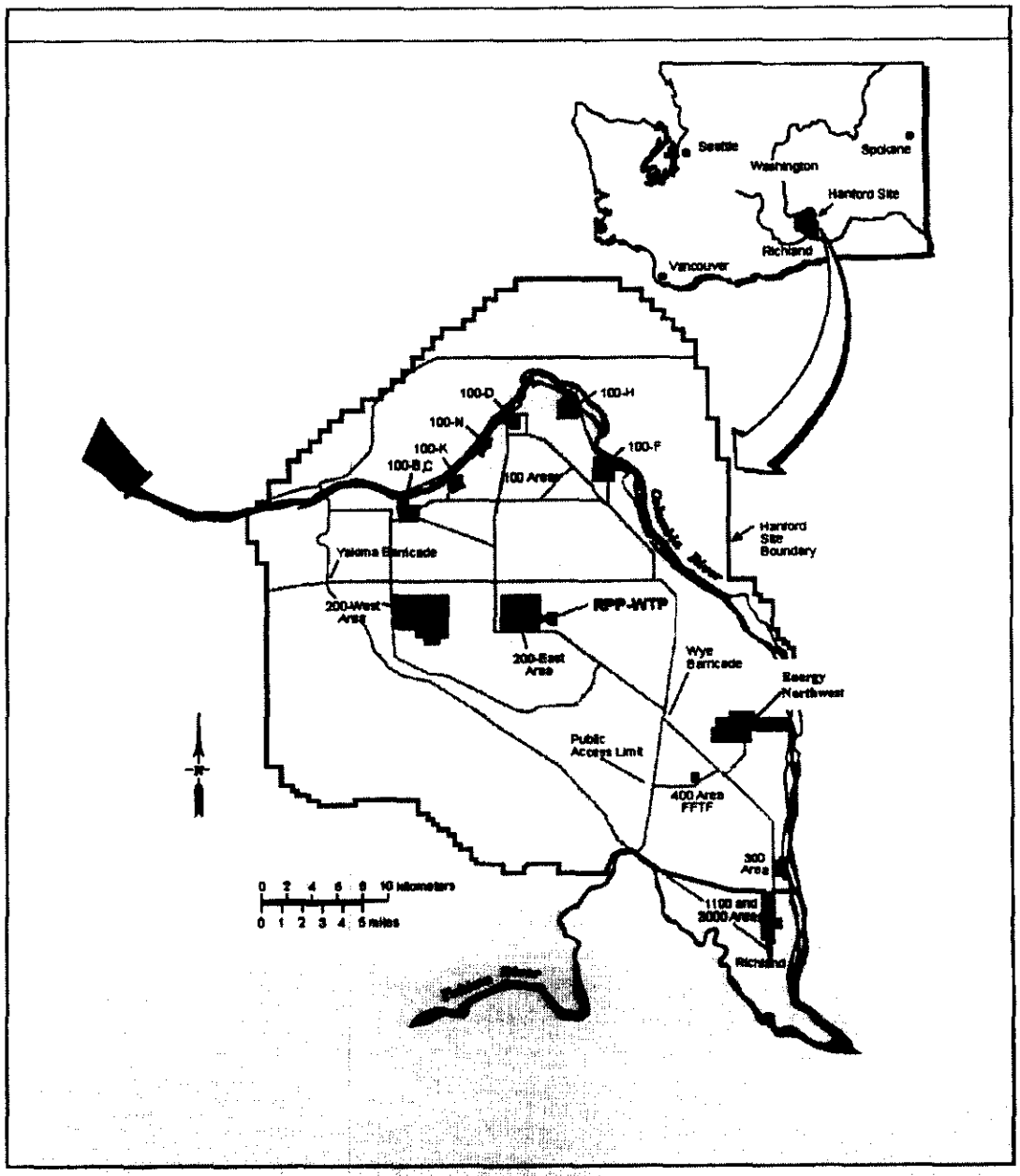


Best Available Copy

# Contents

**2 Regulatory Overview** ..... **2-1**

**2.1 National Environmental Policy Act Process** ..... **2-1**

**2.2 Regulatory Authority** ..... **2-1**

**2.3 Air Quality Standards** ..... **2-2**

2.3.1 Toxic Emissions from the Source ..... 2-2

2.3.2 Dispersion Modeling ..... 2-2

2.3.3 Ambient Impact ..... 2-2

# 2 Regulatory Overview

This section discusses the National Environmental Policy Act process and regulatory requirements for submitting a notice of construction (NOC) permit application for the Hanford Tank Waste Treatment and Immobilization Plant (WTP) under the Washington State Department of Ecology (Ecology) and the US Environmental Protection Agency (EPA) air pollution regulations. More specifically, this section describes the authority of both the federal government and Washington State to regulate both toxic air pollutants (TAPs) and criteria pollutants, and presents the NOC requirements. These requirements include utilizing the best available control technology for toxic air pollutants (T-BACT) and best available control technology (BACT) for criteria pollutants, and fulfilling the requirements for complying with air quality standards.

## 2.1 National Environmental Policy Act Process

The DOE and Ecology prepared the *Final Environmental Impact Statement for the Tank Waste Remediation System* (DOE and Ecology 1996) (also referred to in this document as the "final EIS"). This report analyzes the potential environmental consequences of several alternatives for the Hanford Site Tank Waste Remediation System (TWRS) in managing and disposing of radioactive, hazardous, and mixed waste.

The *Record of Decision for the Tank Waste Remediation System* (62 FR 8693) documents the selected alternative currently being implemented. More detailed information may be obtained from the final EIS.

## 2.2 Regulatory Authority

In Washington State, Ecology is responsible for establishing air quality standards to protect the public health (RCW 70.94.011). Facilities with new sources of TAPs and criteria pollutants are required to comply with general standards for ambient air protection and to obtain approval of projects prior to construction. This NOC was prepared in accordance with Ecology's new source review rules (WAC 173-400-110).

Ecology has the authority to regulate TAP and criteria pollutant emissions in Washington State (WAC 173-460 and 173-400). The federal *Clean Air Act of 1970* (CAA 1970) (also referred to in this document as the CAA) requires that new major stationary sources of air pollution, and major modifications to major stationary sources, must comply with state permitting requirements and emissions standards (CAA 118[a]). The Washington State legislature has delegated to Ecology the authority to regulate air emissions from all sources to ensure compliance with the CAA and the *Washington Clean Air Act* (RCW 70.94.331; WAC 173-400-010).

Ecology requires new sources that emit TAPs and criteria pollutants to apply for NOC approval (WAC 173-460-040).

Ecology requires that T-BACT and BACT be used in the construction of a new source or the modification of an existing source (WAC 173-460-040[4][c], WAC 173-460-060, WAC 173-400-113). Because the WTP is a new source in terms of the Ecology regulations, separate T-BACT (24590-WTP-RPT-ENV-01-005) and BACT (24590-WTP-RPT-ENV-01-007) analyses have been prepared based on appropriate state and federal standards and guidance.

## 2.3 Air Quality Standards

### 2.3.1 Toxic Emissions from the Source

The WTP will emit a number of TAPs that are regulated by Ecology. Ecology regulates 2 classes of air pollutants: Class A, which are carcinogenic, and Class B, which are acutely toxic. The Ecology rules establish acceptable source impact levels (ASILs), which are levels of acceptable increases in outdoor exposure for each of the regulated TAPs. In order to determine compliance with the ASILs, the controlled emissions of each TAP or mixture of toxic pollutants must be quantified for each source after all required control technologies have been used (WAC 173-460-050[1][a]).

### 2.3.2 Dispersion Modeling

Under the toxic air regulations, dispersion modeling is required to estimate the maximum incremental ambient impact of each Class A or B TAP from the source, and to compare the estimated incremental value with the ASILs enumerated in WAC 173-460-150 and WAC 173-460-160 (WAC 173-460-080[2]). The Ecology regulations require that dispersion modeling techniques be used in accordance with EPA guidance (40 CFR 51).

### 2.3.3 Ambient Impact

A new source that may discharge TAPs must demonstrate compliance with ambient air impact standards or ASILs. The requirement is met when the applicant demonstrates that the emissions from the source are "sufficiently low to protect human health and safety from potential carcinogenic or other toxic effects" (WAC 173-460-020). Under Ecology toxic air rules (WAC 173-460-080[1]), demonstration of compliance by performing an acceptable source impact level analysis is required. This analysis involves comparing the dispersion model's estimates of the maximum incremental ambient impact of each Class A or B TAP with the ASIL values in WAC 173-460-150 and WAC 173-460-160 (WAC 173-460-080[2][a] and [b]).

# Contents

3 Responsible Manager and Construction Schedule ..... 3-1
3.1 Responsible Manager ..... 3-1
3.2 Construction Schedule ..... 3-1

# 3 Responsible Manager and Construction Schedule

## 3.1 Responsible Manager

The US Department of Energy (DOE) plans to use approximately 120 acres (48 hectares) for the construction and operation of the Hanford Tank Waste Treatment and Immobilization Plant (WTP). The State (of Washington) Environmental Policy Act (SEPA) checklist for this notice of construction (NOC) permit application is provided in Appendix A.

The responsible manager of the WTP is:

**Responsible Manager:**

Mr. Roy J. Schepens

US Department of Energy, Office of River Protection

Post Office Box 450

Richland, WA 99352

(509) 376-6677

## 3.2 Construction Schedule

Construction of the WTP facility, as required by the *Hanford Federal Facility Agreement and Consent Order* (Ecology, EPA, and DOE 1998) (also referred to in this document as the "Tri-Party Agreement" or the "TPA"), began in 2002. Construction of pretreatment (PT) facilities is expected to be completed in 2008, with testing scheduled for 2007 to 2008, and operation beginning in 2011. Construction of the low-activity waste (LAW) vitrification plant is expected to be completed in 2007, with testing scheduled for 2006 to 2008, and operation beginning in 2011. Construction of the high-level waste (HLW) vitrification plant is expected to be completed in 2007, with testing scheduled for 2007 to 2008, and operation beginning in 2011. The WTP is designed to have a nominal lifetime of approximately 40 years.

# Contents

4 Process Description ..... 4-1

4.1 Process Overview ..... 4-1

4.2 Pretreatment Plant ..... 4-1
4.2.1 Waste Feed Receipt Process System ..... 4-2
4.2.2 Waste Feed Evaporation Process System ..... 4-2
4.2.3 Ultrafiltration Process System ..... 4-3
4.2.4 HLW Lag Storage and Blending Process System ..... 4-3
4.2.5 Cesium Ion Exchange Process System ..... 4-3
4.2.6 Cesium Nitric Acid Recovery Process System ..... 4-4
4.2.7 Treated LAW Evaporation Process System ..... 4-4
4.2.8 Summary of Pretreatment Emission Sources ..... 4-5

4.3 LAW Vitrification ..... 4-5
4.3.1 LAW Glass Former Feed System ..... 4-5
4.3.2 LAW Melter Feed System ..... 4-6
4.3.3 LAW Melters ..... 4-6
4.3.4 Immobilized Glass Container Decontamination and Monitoring ..... 4-9
4.3.5 LAW Vitrification Offgas Emissions ..... 4-9

4.4 HLW Vitrification Plant ..... 4-9
4.4.1 HLW Glass Former Feed System ..... 4-9
4.4.2 HLW Melter Feed System ..... 4-10
4.4.3 HLW Melters ..... 4-10
4.4.4 IHLW Canister Decontamination and Monitoring ..... 4-12
4.4.5 HLW Vitrification Offgas Emissions ..... 4-13

4.5 Analytical Laboratory ..... 4-13
4.5.1 C2 Ventilation System (Emission Unit LB-C2) ..... 4-13
4.5.2 C3 Ventilation System (Emission Unit LB-S1) ..... 4-14
4.5.3 C5 Ventilation System (Emission Unit LB-S2) ..... 4-15

4.6 WTP Building Ventilation Systems ..... 4-16

4.7 WTP Maintenance and Waste Management ..... 4-18
4.7.1 Pretreatment Plant ..... 4-18
4.7.2 LAW Vitrification Plant ..... 4-19
4.7.3 HLW Vitrification Plant ..... 4-20

4.8 Balance of Facilities ..... 4-22
4.8.1 Cooling Tower ..... 4-22
4.8.2 Diesel Generators ..... 4-22
4.8.3 Field Erected Tanks ..... 4-22
4.8.4 Fire Pump House and Fire Water Tanks ..... 4-23
4.8.5 Fuel Oil Pump House ..... 4-23
4.8.6 Glass Former Facility ..... 4-23
4.8.7 Out-of-Service Melter Storage Areas ..... 4-23
4.8.8 Steam Plant ..... 4-23
4.8.9 Water Treatment Building ..... 4-23
4.8.10 Wet Chemical Storage Building ..... 4-24
4.8.11 Other Balance of Facilities ..... 4-24

## Tables

Table 4-1 Analytical Laboratory Maintenance and Waste Management Activity Summary ..... 4-25

## Figures

Figure 4-1 WTP Site Layout ..... 4-26
Figure 4-2 Simplified Flow Diagram ..... 4-27
Figure 4-3 Pretreatment Simplified Flow Diagram ..... 4-28
Figure 4-4 Pretreatment Simplified Flow Diagram (Continued) ..... 4-29
Figure 4-5 LAW Vitrification Simplified Flow Diagram ..... 4-30
Figure 4-6 HLW Vitrification Simplified Flow Diagram ..... 4-31
Figure 4-7 Laboratory RLD System Simplified Flow Diagram ..... 4-32
Figure 4-8 Pretreatment Plant Emission Units ..... 4-33
Figure 4-9 LAW Vitrification Plant Emission Units ..... 4-34
Figure 4-10 HLW Vitrification Plant Emission Units ..... 4-35
Figure 4-11 Analytical Laboratory Ventilation System Diagram ..... 4-36
Figure 4-12 Analytical Laboratory Emission Unit Diagram ..... 4-37
Figure 4-13 WTP Emission Units Configuration - Top View ..... 4-38

# 4 Process Description

## 4.1 Process Overview

The Hanford Tank Waste Treatment and Immobilization Plant (WTP) is being constructed to store and treat mixed waste from the Hanford Site double-shell tank (DST) system. The layout of the WTP is shown in Figure 4-1. The WTP will consist of 3 main processes: pretreatment (PT), low-activity waste (LAW) vitrification, and high-level waste (HLW) vitrification. A simplified process flow diagram for the WTP is shown in Figure 4-2 and flow diagrams for each process facility are provided in Figure 4-3 through Figure 4-7. Tank waste is received in the PT facility, where it is separated into LAW and HLW feeds. The LAW feed consists primarily of the aqueous-phase supernatant containing soluble solids, but with most of the transuranic (TRU) radionuclides and cesium removed. The HLW feed is primarily an aqueous slurry with a higher solids content than the LAW feed. The constituents of potential concern are the same for both the LAW and HLW feed streams, but the HLW feed has a higher concentration of radionuclide constituents of potential concern.

Waste will be immobilized in the form of a glass matrix contained in stainless steel containers. Offgas generated by the PT and vitrification processes will be treated in independent offgas treatment systems. Typical offgas streams include process vessel ventilation air, melter offgas, and exhaust from fluidic transfer devices.

The treated offgases from PT, LAW, and HLW vitrification processes are vented to the atmosphere through emission units. Additionally, the process plants are provided with building ventilation systems. Treated building air is also vented through dedicated emission units. Graphic representations of the emissions sources and the associated emission units are shown in Figure 4-8 through Figure 4-12. At each process facility, the emission units, with the exception of the C2 air emission units, are contained within a single stack structure. The C2 emissions are vented through a separate stack. This configuration is depicted in Figure 4-13, which shows the WTP stacks and emission unit configuration.

The WTP will consist of 20 emission units. These include 5 from PT, 4 from the LAW vitrification facility , and 8 from the HLW vitrification facility. Additionally, the WTP will have an onsite analytical laboratory to support sampling and analysis activities that will utilize 3 emission units: LB-C2, LB-S1, and LB-S2. Emission units LB-S1 and LB-S2 are within the laboratory stack. The WTP will also include support systems and utilities required for the waste treatment processes. Those systems will be included in the various areas known as the balance of facilities (BOF).

The sections that follow describe the WTP processes.

## 4.2 Pretreatment Plant

The PT plant is designed to separate and prepare the LAW and HLW feeds for vitrification. After the receipt of the waste feed from the DST system unit, the waste feed evaporative separator vessels, which are forced-circulation vacuum evaporators, will concentrate the waste feed prior to ultrafiltration.

The evaporator offgas streams will be processed through condensers. The condensates will be collected and transferred to condensate tanks for discharge to the liquid effluent retention facility and for

subsequent treatment in the effluent treatment facility. The non-condensable gases will be routed to the PT process vessel ventilation treatment system.

The ultrafiltration system will remove entrained solids from the concentrated waste feed. For certain waste feed, strontium and transuranic (TRU) compounds will be precipitated by adding reagents to the waste feed prior to ultrafiltration. The precipitate containing strontium and TRU compounds will be concentrated and washed in the ultrafiltration system before being incorporated into the HLW feed. The liquid separated by the ultrafiltration step is the LAW feed, and the solid portion produced from the ultrafiltration step is the HLW feed.

The LAW feed will pass through the cesium ion exchange system to separate the cesium from the LAW feed. The cesium concentrate will be blended with the solids produced from ultrafiltration prior to transferring to the HLW vitrification plant. The eluant from the ion exchange system will be further concentrated through the LAW melter feed evaporation system. The operation of the LAW melter feed evaporator will be similar to that of the waste feed evaporator. The concentrated LAW feed will be transferred to the LAW vitrification plant.

Sections 4.2.1 through 4.2.7 describe the PT plant processes. Section 4.2.8 is a summary of emission sources from the PT processes.

### 4.2.1 Waste Feed Receipt Process System

The waste feed receipt process system will receive tank waste from Hanford's DST system and selected recycle streams from the PT waste process. The waste feed receipt process system will also facilitate sampling of the waste, will provide lag storage, and will transfer the waste feed for subsequent treatment within the PT plant. Waste feed that does not require pretreatment processing can be fed directly to the HLW blending vessel for HLW processing.

### 4.2.2 Waste Feed Evaporation Process System

The waste feed evaporation process system includes 2 evaporator trains arranged in parallel. The evaporator trains can be operated independently or at the same time, depending on the process needs.

The waste feed evaporator separator vessels will incorporate forced-circulation units operating under vacuum to reduce the operating temperature. Each of the waste feed evaporator feed vessels will have a pulse jet agitation system to provide mixing and to prevent the settling of entrained solids. The waste feed from the feed vessels will be pumped continuously to the evaporator.

The recirculation pump will maintain a high flow rate within the evaporation system. The recirculation pump will transfer the waste through the reboiler and back into the separator vessel. The recirculating waste stream will be prevented from boiling in the reboiler tubes by maintaining sufficient hydrostatic head to increase the boiling point above the temperature of the liquor in the reboiler.

As the liquid travels through a reboiler, the hydrostatic head will diminish and flash evaporation will occur as the flow enters the separator vessel. The liquid will continue to flash to equilibrium, and the vapor and liquid streams will be separated. The liquid stream will circulate in this closed loop and become more concentrated, while the vapor stream passes to the evaporator offgas system and then to the process vessel ventilation treatment system. The concentrated waste stream will be pumped out of the evaporator system to the ultrafiltration process system.

### 4.2.3 Ultrafiltration Process System

The ultrafiltration process system will separate the solids from the evaporator effluent. During this process, 2 streams are generated: a solids stream referred to as the HLW feed stream and an ultrafiltration permeate stream referred to as the LAW feed stream.

The ultrafiltration process system will receive waste feed in batch modes. Chemicals will be added to the waste mixture to separate the TRU elements and strontium, while heating and agitating the mixture if required.

The waste stream will then be fed to the ultrafilters, which are long bundles of permeable tubes. The liquids will pass through the permeable ultrafilter surface while the solids are retained. The ultrafiltration permeate is designated as the LAW feed stream, which will be further treated within the PT plant prior to being treated through the LAW vitrification systems. The concentrated solids stream is designated as HLW feed, which will be stored at the PT plant and blended with other HLW feed streams. This mixture will ultimately be processed through the HLW vitrification systems.

Due to waste processing, the permeability of the ultrafilters will diminish over time, and the filters will become clogged and require cleaning. Cleaning of the ultrafilter trains can be accomplished by back-flushing them with filter permeate and using chemical cleaning agents. Used back-flush water will be combined with the main ultrafiltration permeate in the ultrafilter permeate vessels. The filters' performance will be monitored to determine when cleaning is required. The permeate collection vessels are controlled by the process vessel ventilation system.

### 4.2.4 HLW Lag Storage and Blending Process System

The HLW lag storage and blending process system receives the HLW feed stream from the ultrafiltration process system. It provides lag storage for the high solids slurry and blends HLW vitrification feed prior to its processing in the HLW vitrification plant. The system also provides for the blending of cesium, recovered from the LAW treatment process, into the HLW feed stream prior to transfer to the HLW vitrification plant.

### 4.2.5 Cesium Ion Exchange Process System

The primary function of the cesium ion exchange process system is to remove cesium from the LAW feed stream. This will be accomplished using a series of ion exchange columns containing a resin that preferentially removes cesium. Regeneration of the cesium-loaded resin will be accomplished using diluted nitric acid. The cesium-loaded nitric acid will then be routed to the nitric acid recovery system, where the eluant will be recovered for reuse and the cesium concentrated for processing in the HLW vitrification plant.

The cesium ion exchange system uses 4 ion exchange columns to remove cesium from LAW. Three of the columns will operate in the loading cycle in a series (for example a lead, a lag, and a polish column). The fourth column will operate in parallel to the other columns, and will be eluted and regenerated, or have its spent ion exchange resin replaced. The column feeds will be rotated so that:

- The lead column is taken offline for elution, regeneration, and media replacement.
- The lag column becomes the lead column.

- The polish column becomes the lag column.
- The fresh column becomes the polish column.

The polishing column will be used in the loading cycle to ensure the removal of cesium to the level required.

The concentration of cesium in the treated LAW will be monitored. The loading operation will be rotated to a new column when the cesium concentration in the effluent of the lead column reaches approximately 50 % of the cesium concentration in the feed entering the lead column, or if any significant amount of cesium is detected in the effluent of the lag column or in the effluent of the polishing column. The eluate from the resin bed regeneration will be collected and transferred to the cesium eluant recovery system for recycling.

After a number of loading and regeneration cycles, the ion exchange column resin is expected to lose performance, and is termed *spent*. The number of cycles incurred before the column resin is spent depends on LAW feed constituents, operating temperatures, properties of the resin, radiation exposure, and LAW feed throughput rates. The spent resin will be converted into slurry with a recycled resin flush solution, and flushed out of the column for resin disposal. A slurry of fresh resin will then be added to the column as a bed replacement.

The resin flush solution and spent resin slurry is transferred to the spent resin collection vessels. Resin flush solution is decanted and recycled back to the waste feed evaporator separator vessels. When fresh resin slurry is added into the ion exchange columns, the excess water has to be taken out of the vessels. This stream is collected in the resin transport liquid collection vessel prior to being pumped into the waste feed evaporator vessels. Spent resin collection vessels are controlled by the process vessel ventilation system.

### 4.2.6 Cesium Nitric Acid Recovery Process System

The cesium nitric acid recovery process system will recover nitric acid, previously used for cesium ion exchange resin bed regeneration, for reuse. During the process of regenerating the cesium ion exchange resin beds, eluate composed of cesium-bearing nitric acid will be fed to the cesium evaporators operating under reduced pressure. This reduced pressure, maintained by steam ejectors, will increase the evaporation rate of the system. A closed-loop circulation stream will be fed from the evaporator to the steam-heated cesium concentrate reboiler and back to the evaporator. This heat input is the motive force for the evaporative process. The cesium concentrated in the evaporator will be routed to the eluate contingency storage tank for blending and incorporation into the HLW melter feed stream.

The cesium nitric acid recovery process system will only operate when a cesium ion exchange column is being regenerated. When the cesium ion exchange column is in normal operation, the nitric acid recovery system will be in a standby mode.

### 4.2.7 Treated LAW Evaporation Process System

The treated LAW evaporation process system is designed to further concentrate the treated LAW feed from the cesium ion exchange process system. This system will also process purge liquid from the LAW vitrification system submerged bed scrubbers.

The treated LAW evaporative separator will be a forced-circulation unit operating under vacuum to reduce the operating temperature. The treated LAW from the cesium ion exchange process system will be transferred to the treated LAW evaporation process system. Submerged bed scrubber purge liquor from LAW vitrification will be received and neutralized prior to evaporation.

The 2 feeds to the treated LAW evaporator separator will be pumped continuously to the suction side of the recirculation pump. The recirculation pump will maintain a high flow rate around the evaporation system. The recirculation pump will transfer the waste through the reboiler and back into the treated LAW evaporator separator. The recirculating waste stream is prevented from boiling in the reboiler tubes by maintaining sufficient hydrostatic head to increase the boiling point above the temperature of the liquor in the reboiler.

As the liquid travels through the reboiler, the hydrostatic head will diminish, and flash evaporation will occur as the flow enters the treated LAW evaporator separator. The liquid will continue to flash to equilibrium, and the vapor and liquid streams will be separated. The liquid stream will circulate in this closed loop (becoming more concentrated), while the vapor stream passes to the evaporator offgas system.

The concentrated waste stream will be pumped continuously out of the evaporator system. The concentrate offtake will be situated on the suction line of the recirculation pump. The concentrated waste stream will be stored and processed through the LAW vitrification plant.

### 4.2.8 Summary of Pretreatment Emission Sources

The PT plant consists of 5 separate emission units: PT-C2, PT-S1, PT-S2, PT-S3, and PT-S4 (see Figure 4-8). The emissions flowing to PT-C2, PT-S1, and PT-S2 are PT plant building ventilation air. The emissions flowing to PT-S3 consist of offgases from PT process vessels and evaporators. The emissions from the reverse flow diverter (RFD) and pulsed jet mixers (PJMs) are vented through emission unit PT-S4. The proposed emission controls are provided in section 5.

## 4.3 LAW Vitrification

The function of this system is to convert blended waste slurry and glass formers into molten glass. The LAW melter system design is based on operating 2 joule-heated ceramic melters and associated systems. Sections 4.3.1 through 4.3.4 describe the LAW vitrification processes. Section 4.3.5 is a summary of emission sources from the LAW vitrification processes.

### 4.3.1 LAW Glass Former Feed System

Treated LAW feed will be analyzed to determine the glass additive formulation for the conversion of the waste to glass. The glass additives specified in the formulation will be weighed and mixed with the treated LAW waste.

The glass former feed hoppers will receive blended glass formers and sucrose by dense-phase pneumatic conveyance from the glass former handling facility. Each feed hopper will be equipped with a pneumatic blending head at the base of the hopper to re-blend the glass former feed.

The feed hoppers will be equipped with filters to remove the dust from the air used for pneumatic conveying and blending. It is anticipated that a series of single-filter cartridges will be mounted on the

top of the hoppers. The filters will be cleaned by introducing compressed air through the cleaning nozzle to blow accumulated dust back into the hoppers.

The feed hoppers will be equipped with load cells to weigh the glass formers to confirm that all of the material in the upstream blending silo is conveyed to the feed hoppers, and to confirm that all of the glass formers are transferred out of the feed hoppers. After the re-blending cycle, the glass formers will be fed, by means of gravity, with a rotary feeder and blended with the waste in the LAW melter feed vessels.

### 4.3.2 LAW Melter Feed System

The LAW melter feed will be transferred to each melter at a constant rate with air displacement slurry pumps. The pumps transfer the slurry from the feed vessel to the melter, utilizing air as the motive force. The melter feed nozzles will be installed in the melter lid for the introduction of slurry over the melt pool cold cap. Each feed nozzle will be individually supplied from a separate pump to reduce the likelihood of a line plugging. The feed nozzles will be water cooled to prevent the feed from drying before it reaches the melter. Water flushes will be used to clear the feed lines as necessary.

The feed rate to the melter pool will be determined based on the average plenum temperature in the melter. The plenum temperature will be controlled in the range of between 300 °C and 500 °C. The plenum thermocouples will be used to monitor the plenum temperature and change the rate of feeding to the melter.

### 4.3.3 LAW Melters

Each LAW melter will have a single internal glass chamber with a rectangular surface area. The melters will be lined with refractory material designed to withstand corrosion by molten glass. The energy for the melt will be delivered by 3 sets of electrodes mounted on opposite walls of the glass pool. The glass will be discharged through either of 2 discharge chambers located within 1 of the long axis walls of the melter. The lid of the melter will be composed of a layer of refractory backed by a corrosion-resistant metal plate and support structure. The lid will also support the components that will be submerged in the melt pool and suspended in the melter plenum. The melter will be encased in an integral shielding and secondary containment enclosure.

**Melter Containment System**

The refractory will be part of the melter containment system and can be thought of as 2 separate sections. These sections will be the refractory in contact with the molten glass pool and the refractory surrounding the gas space above the glass pool, which is commonly referred to as the plenum. The glass pool refractory, in conjunction with active cooling provided by a water jacket, will provide glass containment, thermal insulation, and electrical isolation. The plenum refractory will be primarily designed to resist thermal shock, resist corrosion by offgases, and resist corrosion by splashed feed and glass.

The melter shell will consist of the lid and baseplate as well as the structure needed to support the lid and provide a gas barrier between the refractory and the enclosure. The melter shell will be designed to allow operation of the melter at a negative pressure with controlled air inleakage. A small purge will be provided for the annular space between the cooling panels and the shell to reduce the deposition of materials. This purge will be driven by a melter vacuum and vented to the building ventilation system. The controlled purge air inleakage to the spaces between the gas barrier and the refractory will reduce the deposition of corrosive materials carried by the offgas.

The LAW melters will operate under a cascaded ventilation system. The melter plenum pressure will be maintained at a vacuum with offgas system blowers and a controlled injection of air into the offgas line near the melter exhaust. This will ensure containment and avoid pressurization.

The melter shell will also contain a set of drains located in the baseplate: 1 in the space between the shell and the enclosure, and 1 between the shell and the glass pool refractory. The drains will prevent the backup of water in the event of a cooling water leak or the uncontrolled addition of water from other sources. Each drain will have a sealing mechanism to prevent the inward flow of air due to melter vacuum, and a leak detection system.

The LAW melter will be designed so that no additional shielding or contamination control will be required for normal operations. This will be accomplished by enclosing the melter assembly with welded steel plate. Shielding will be incorporated by increasing the cooling box bottom plate thickness. Access panels will be provided in the enclosure. When removed, these panels will allow access to the jack-bolts, electrodes, electrode thermocouples, and viewing cameras.

**Joule Heating**

The heat for melter startup will be provided by temporarily installed radiant electric heaters mounted through the lid of the melter. These heaters will melt the starter charge of glass former material sufficiently to make it ionically conductive between the melter's joule heating electrodes. When a conductive path is established, the melter is heated in a controlled manner by passing more and more current between the electrodes through the glass (a process known as joule heating). When the melter reaches the operating temperature, the startup heaters will be removed and slurry feeding will start.

The joule heating system will include the melter electrodes, melter electrode power supplies, melter glass pool thermocouples, and the melter electrode control system.

The electrode configuration for each LAW melter will consist of 3 pairs of plate electrodes mounted so that they are parallel to each other on the long axis of the melter. The electrodes will have forced-air cooled electrode extensions. The extensions will penetrate the side of the melter below the glass level to minimize the effects of thermal expansion and to minimize the potential for sulfate corrosion. Active cooling of the extensions and the use of a water cooling jacket will prevent the glass from migrating through the refractory package adjacent to the electrode extension penetrations. Power to the electrodes will be single-phase alternating current applied across opposing electrodes. The nominal glass melt pool temperature is 950 °C to 1250 °C. This will be measured with thermocouples in thermowells submerged into the pool at various locations. The power to the electrodes will be regulated to maintain the temperature at the nominal value.

**Glass Discharge System**

Each LAW melter will have 2 identical and independently operated glass discharge systems located adjacent to each other on a long side of the melter. The glass discharge system will include the melter glass level detectors, canister glass level detection system, riser, airlift lance, trough, and a heated discharge chamber.

The glass discharge from the melter will be initiated by injecting air or an inert gas at the bottom of the airlift riser. As the gas bubbles rise in the glass they will entrain glass in the riser and rise to the inlet of

the trough, where the air bubbles burst and the entrained glass flows into the trough. The glass will then flow, due to gravity, down the trough to the pour tip and into the waste container. The rate of glass discharge will be controlled by adjusting the rate at which the air and gas mixture is injected into the bottom of the riser.

The starting and stopping of the glass discharge will be based on the level of glass in the melter. It is desired that the glass level in the melt pool be maintained to within an approximate 2-inch band to reduce thermal stresses on the refractory. Glass discharge operations will be monitored using a camera system to observe the glass pour stream. The level in the waste container will also be monitored to prevent overfilling, using infrared thermal imaging and gamma level detectors.

**LAW Container Pour Handling System**

Each of the LAW melters will have 2 glass discharges that will operate independently. Each melter discharge will be provided with a glass pour cell, located under the melter cell, and the associated features for filling a container with the immobilized low-activity waste (ILAW). The melter will alternate filling containers in each pour cell. After a container is filled in 1 pour cell, the melter will begin filling the next container in the other pour cell, although containers can be filled in the same pour cell. Each pour cell will be physically isolated from the others for maintenance access. The container pour handling system will handle and position the product containers to be filled with ILAW. The major pieces of equipment include the container turntable, container elevator, transfer bogies, and monorail hoists.

**Container Turntable, Container Elevator, Glass Pour Seal Head**

A container turntable will be provided in each pour cell for handling containers. The turntable can accommodate 3 containers and rotates to position them at 3 stations: the container import/export station, the container pour station, and the container cooling station. At each container location in the turntable, there will be a lower overpack section that will locate the containers and provide support. The container elevator will raise the empty container and the lower overpack section up to the glass pour seal head for container filling. At the upper position, a lock bolt will be engaged to ensure the elevator's position during the container fill cycles. Containers remain in the overpack during the elevating and glass filling cycle.

After containers are filled and cooled, the turntable will rotate to the import and export station, where container changeout will occur. The cooled, full product containers will be removed from the turntable and replaced with empty containers. The turntable will be rotated to position the empty container at the fill station.

The container elevator will be equipped with features to provide a weight of the product container being supported. Weight will be used to verify that a container is present and that it is not full of glass. The weight must be between established minimum and maximum values in order for glass pouring to occur. Additionally, the weight can be used to ensure that a container has been or is being filled and to provide the rate of glass pouring. The elevator's weight measurement is not intended to give an accurate weight of the container; it is merely used to indicate the container's presence and condition.

The glass pour seal head will be the interface between the melter discharge and the product container during glass pouring. The seal head will consist of a metal bellows arrangement that is connected to the melter discharge, with the other end of the bellows open for connection to product containers.

The container will be filled using several pours. The pour process will occur more quickly than glass can be produced in the melter, resulting in lag time between pours. Rapid pouring will allow the molten glass to flow out to all edges of the container. After the last batch of glass has been poured, the container will remain in position to cool and contain the discharged glass. The elevator lock will then be retracted and the container lowered to the turntable. The turntable will again be rotated, placing the recently filled container at the cooling station. The container cooling process will continue while another container undergoes the fill cycle. Once cooled, the container will be rotated back to the import and export station, and the process will be repeated.

### 4.3.4 Immobilized Glass Container Decontamination and Monitoring

After the ILAW container has been cooled and sealed, it will be decontaminated using carbon dioxide pellet ($CO_2$) blasting. The $CO_2$ blasting gun will include an exhaust recovery hood to recover the effluent from the cleaning operation. Debris produced during decontamination will be collected with a local high efficiency particulate air (HEPA) filtration system. This gas stream will then be vented to the atmosphere through the LAW vitrification plant ventilation system.

The decontaminated glass containers will be swabbed and surveyed for loose radioactive surface contamination prior to transport. If contamination exceeds the target levels, the container will be reworked through the $CO_2$ decontamination process, or a fixative will be applied to the outer surface of the container prior to transport.

### 4.3.5 LAW Vitrification Offgas Emissions

The LAW vitrification plant consists of 4 separate emission units: LV-C2, LV-S1, LV-S2, and LV-S3 (see Figure 4-9). The emissions flowing to each emission unit include LV-C2, LV-S1, and LV-S2, which consist of offgases from plant building ventilation systems. These emission units will not produce nonradioactive air pollutant emissions.

The emissions flowing to LV-S3 consist of offgases from LAW melters and process vessels. It should be noted that the ILAW containers will be sealed, and non-radionuclide emissions are not expected. The proposed emission controls are provided in section 5.

## 4.4 HLW Vitrification Plant

The function of this system will be to convert blended waste slurry and glass formers into molten glass. Sections 4.4.1 through 4.4.4 describe the HLW vitrification process. Section 4.4.5 is a summary of the emission sources from the HLW vitrification process.

### 4.4.1 HLW Glass Former Feed System

Treated HLW feed will be analyzed to determine the glass additive formulation for the conversion of the waste to glass. The glass additives specified in the formulation will be weighed and mixed with the treated HLW waste.

The glass former feed hoppers will receive blended glass formers and sucrose by dense-phase pneumatic conveyance from the glass former handling facility. Each feed hopper will be equipped with a pneumatic blending head at the base of the hopper to re-blend the glass former feed.

The feed hoppers will be equipped with filters to remove the dust from the air used for pneumatic conveying and blending. It is anticipated that a series of single-filter cartridges will be mounted on the top of the hoppers. The filters will be cleaned by introducing compressed air through the cleaning nozzle to blow accumulated dust back into the hoppers.

The feed hoppers will be equipped with load cells to weigh the glass formers to confirm that all of the material in the upstream blending silo is conveyed to the feed hoppers, and to confirm that all of the glass formers are transferred out of the feed hoppers. After the re-blending cycle, the glass formers will be fed, by means of gravity, with a rotary feeder and blended with the waste in the HLW melter feed preparation vessels.

### 4.4.2 HLW Melter Feed System

The HLW melter feed will be transferred to each melter at a constant rate with air displacement slurry pumps. The pumps transfer the slurry from the feed vessel to the melter, utilizing air as the motive force. The melter feed nozzles will be installed in the melter lid for introduction of slurry over the melt pool cold cap. Each feed nozzle will be individually supplied from a separate pump to reduce the likelihood of a line plugging. The feed nozzles will be insulated with ceramics to prevent the feed from drying before it reaches the melter. Water flushes will be used to clear the feed lines as necessary.

The feed rate to the melter pool will be determined based on the average plenum temperature in the melter. The plenum temperature will be controlled in the range between 300 °C and 500 °C. The plenum thermocouples will be used to monitor the plenum temperature and change the rate of feeding to the melter.

### 4.4.3 HLW Melters

The HLW melters will each have a single internal glass chamber with a rectangular surface area. The melters will be lined with refractory material designed to withstand corrosion by molten glass. The energy for the melt will be delivered by 3 plate electrodes: 2 mounted on opposite sides of the melter and 1 on the bottom. The glass will be discharged through either of 2 discharge chambers located within 1 of the long axis walls of the melter. The steel casing for the melter area will be provided with water cooling to maintain a thermal gradient in the bricks, to provide for corrosion control, to prevent migration of glass through the bricks, and to reduce the heat load conducted to the process cell. The lids of the HLW melters will be sealed to the melter shells to provide gas containment. The lids will provide a support structure through which subcomponents can be mounted for submersion in the melt pool and suspension in the melter plenum. Penetrations, primarily on the lid, through the outer shell are sealed by appropriate fittings that allow for remote removal and replacement. The HLW melters will be remotely operated and maintained.

**Melter Containment System**

The refractory will be part of the melter containment system and can be thought of as 2 separate sections. These sections will be the refractory in contact with the molten glass pool and the refractory surrounding the gas space above the glass pool, which is commonly referred to as the plenum. The glass pool refractory, in conjunction with active cooling provided by a water jacket, will provide glass containment, thermal insulation, and electrical isolation. The plenum refractory will be primarily designed to resist thermal shock, resist corrosion by offgases, and resist corrosion by splashed feed and glass.

The melter shell will consist of the lid and baseplate, as well as the structure needed to support the lid. The melter shell is designed to allow operation of the melter at a negative pressure with controlled air inleakage. The controlled purge air inleakage to the spaces between the gas barrier and the refractory reduces the deposition of corrosive materials carried by the offgas. Because the melter will not have a secondary enclosure, purge air or controlled air inleakage will be introduced directly from the melter cave.

The HLW melters will be operated under a cascaded ventilation system. The melter plenum pressure will be maintained at a vacuum with offgas system blowers and controlled injection of air into the offgas line near the melter exhaust. This will ensure containment and prevent pressurization.

The melter shell will have a drain located in the baseplate between the shell and the glass pool refractory. The drain will prevent water from backing up in the event of a cooling water leak or the uncontrolled addition of water from other sources. The drain will have a sealing mechanism to prevent the inward flow of air due to melter vacuum, and a leak detection system.

**Melter Joule Heating System**

The heat for the HLW melters' startup will be provided by temporarily installed radiant electric heaters mounted through the lid of the melter. These heaters will melt the starter charge of glass former material sufficiently to make it ionically conductive between the melter's joule heating electrodes. When a conductive path is established, the melter will be heated in a controlled manner by passing more and more current between the electrodes through the glass (joule heating). Slurry feeding will start when the melter reaches its operating temperature.

The joule heating system will include the melter electrodes, electrode power supplies, melter glass pool thermocouples, and the electrode control system.

The electrode configuration for each HLW melter will consist of 3 plate electrodes: 2 mounted on opposite sides of the melter and 1 on the bottom. The electrodes will be cooled by forced air and have forced-air cooled electrode extensions. The extensions will penetrate the side of the melter below the glass level to minimize the effects of thermal expansion and to minimize the potential for sulfate corrosion. Active cooling of the extensions and the use of a water-cooling jacket will prevent the glass from migrating through the refractory package adjacent to the electrode extension penetrations. Power to the electrodes will be single-phase alternating current applied across opposing electrodes. The nominal glass melt pool temperature will be between 950 °C and 1250 °C. This will be measured with thermocouples in thermowells submerged into the pool at various locations. The power to the electrodes will be regulated to maintain the temperature at the nominal value.

**Glass Discharge System**

The HLW melters will each have 2 identical and independently operated glass discharge systems located adjacent to each other within one of the long axis walls of the melter. The glass discharge systems will include the melter glass level detectors, canister glass level detection system, riser, airlift lance, trough, and a heated discharge chamber.

The glass discharge from the melters will be initiated by injecting air or an inert gas at the bottom of the airlift riser. As the gas bubbles rise in the glass, they will entrain glass in the riser to the inlet of the trough, where the air bubbles burst and the entrained glass flows into the trough. The glass will then

gravity flow down the trough to the pour tip and into the waste container. The rate of glass discharge will be controlled by adjusting the rate at which the air and gas mixture is injected into the bottom of the riser.

The starting and stopping of the glass discharge will be based on the level of glass in the melter. It is desired that the glass level in the melt pool be maintained to within an approximate 1-inch band to reduce thermal stresses on the refractory. Glass discharge operations will be monitored using a camera system to observe the glass pour stream. The level in the waste canister will also be monitored to prevent overfilling, using infrared thermal imaging and gamma level detectors.

**Pour Tunnels**

The pour tunnels will be located south of the melter caves and run in the north-south direction. A bogie and rail system will extend further under the melter cave. The rails will be isolated from the melter cave with steel contamination control barriers. The bogie decontamination areas will be located south of the melter caves.

When a canister is required for filling of the immobilized high-level waste (IHLW), it will be taken out of the buffer rack in the canister handling cave, using the canister handling cave crane, and transferred above the appropriate pour tunnel hatch. The hatch will be opened and the canister handling cave crane will load the empty canister into the pour tunnel bogie. The grapple will be released and raised and the hatch will be closed. The bogie will travel north and be positioned under the pour spout. When the bogie is in position, the pour spout will be lowered onto the canister flange, and the canister will be filled with IHLW.

After the filling process is completed, the canister will remain at the pour spout for cooling to allow a *skin* to form over the glass, which provides a seal to prevent offgases from escaping. The pour spout will then be retracted and the bogie will be unlocked and moved back. The filled canister will be allowed to cool prior to its removal from the pour tunnel. The bogie will then be moved south in the pour tunnel until it is beneath the canister handling cave hatch. The hatch will be opened, the canister handling cave crane will remove the full canister, and the hatch will be closed. The filled canister will then be cooled in cooling racks in preparation for the sealing of the lid into place. A lid is then installed and welded at the weld station.

### 4.4.4 IHLW Canister Decontamination and Monitoring

After filling, the cooled and lidded IHLW canister will be decontaminated, swabbed, and monitored prior to transfer to the IHLW canister storage area.

A filled, cooled, and welded IHLW canister will be initially washed in a sealed area using medium-pressure demineralized water to remove any loose contamination. After it is washed with water, the canister will be decontaminated. A thin layer of steel will be chemically etched from the canister surface, using cerium (IV) ion in a diluted nitric acid solution. The canister will then be washed with nitric acid, followed by a second washing with demineralized water. The canister will remain in containment to dry while the decontamination fluids are pumped into a vessel, to which hydrogen peroxide is added to neutralize any remaining cerium ion. Potential emissions from the decontamination vessels will be treated through the HLW vessel vent offgas treatment system.

After the decontamination and drying process, the canister will be swabbed using an automated power manipulator. If the contamination is below acceptable radiological limits, the IHLW canister will be

transferred to the IHLW canister storage area. IHLW canisters that exceed the contamination limits will be returned to the decontamination and swabbing station for further processing.

### 4.4.5 HLW Vitrification Offgas Emissions

The HLW vitrification plant consists of 8 separate emission units which include IHLW-S1 (the IHLW canister storage area emission unit), HV-C2, HV-C2R (a new emission unit supporting a reagent storage area), HV-S1, HV-S2, HV-S3 A and HV-S3 B (the second melter emission unit), and HV-S4 (see Figure 4-10). The emissions flowing to the IHLW canister storage area emission unit, HV-C2, HV-C2R, HV-S1, and HV-S2 consist of offgases from plant building ventilation systems. These emission units will not produce nonradioactive air emissions. The emissions flowing to the HV-S3A and HV-S3B emission units consist of offgases from HLW melters and associated process vessels. The emissions from HLW RFD and PJMs are vented through HV-S4. It should be noted that the IHLW canisters will be sealed and nonradioactive emissions are not expected. The proposed emission controls are provided in section 5.

## 4.5 Analytical Laboratory

The analytical laboratory facility will be designed to incorporate the features and capability necessary to ensure efficient WTP operations and meet all appropriate requirements. The design will be validated with information from tank utilization modeling of the process tankage, and operational research modeling of the treatment process, as appropriate.

The WTP analytical laboratory will contain high activity and low activity laboratories. High activity samples will be managed in the analytical hot cell laboratory equipment system (AHL). Low activity samples will be managed and analyzed in the analytical radiological laboratory equipment system (rad labs). Methods and equipment selected for laboratory analyses will be conducted and used in accordance with applicable requirements.

The onsite analytical laboratory will have three emission units: LB-C2, LB-S1, and LB-S2 for C2, C3, and C5 systems, respectively. The building ventilation air associated with general laboratory work areas or offices will be vented through the C2 emission unit. The emissions from various radiological laboratory fume hoods will be vented through the C3 system, and the hot cells will be vented through the C5 emission units.

Figure 4-11 and Figure 4-12 depict the ventilation of each system and the flow of samples through the lab. System descriptions are summarized below.

### 4.5.1 C2 Ventilation System (Emission Unit LB-C2)

The building ventilation air associated with general laboratory work areas, mechanical rooms, the C2 maintenance shop, and laboratory offices will be vented through C2 emission unit (LB-C2). The C2 emission unit will not produce non-radioactive air emissions.

#### 4.5.1.1 Radioactive Liquid Waste Disposal System (RLD)

The floor drain collection vessel (C2 vessel) collects, contains, and transfers non-contaminated liquid effluent. This vessel collects effluent from radiological laboratory floor drains, eyewash, and safety shower equipment. The vessel also collects effluent from the C2 area floor drains located in areas such as the marshalling room, laboratory area corridors, hot cell bay area, and the filter room. Administrative

procedures and periodic sampling will be used to ensure that the liquid effluent going to this vessel is not contaminated. Although the floor drain collection vessel is identified as a part of the RLD system, it is not designed or permitted to manage radiological or dangerous wastes. If a spill or release were to occur that contaminated the C2 tank, the tank would be discharged to the laboratory area sink collection vessel and be triple washed with water prior to being returned to service. Figure 4-7 provides a process flow diagram of the laboratory RLD system.

Depending on process needs, the review of operating records, and analytical sampling results, effluent from the floor drain collection vessel could either be discharged to the laboratory area sink collection vessel or be diverted to the balance of facilities, nonradioactive liquid discharge system. The floor drain collection vessel is ventilated to the C2 ventilation system.

#### 4.5.1.2 C2 Laboratory Maintenance

The C2 shop provides space for the maintenance of equipment that is not expected to be radioactively contaminated such as electrical components, utilities systems components, and instruments, and is ventilated to the C2 ventilation system.

### 4.5.2 C3 Ventilation System (Emission Unit LB-S1)

The following subsections describe the emission sources to C3 emission unit (LB-S1).

#### 4.5.2.1 Analytical Radiological Laboratory Equipment System (Rad Labs)

The radiological laboratories (rad labs) are designed to support the preparation and analysis of low-to-moderately radioactive samples from the LAW vitrification plant. The rad labs also support the analyses of PT and HLW samples collected and diluted in the hot cell facility. Samples are manually transferred from the hot cell facility to the rad labs. The rad labs are capable of receiving manually transported low-to-moderate activity sample aliquots from the production facilities.

Specifically, the rad labs include the facilities and equipment required to support the following types of activities:

- Total organic and inorganic analyses
- Quantitation of metals and anions
- Organic quantitation
- Radionuclide separation and counting
- Sample receipt and (manual) transport
- X-ray fluorescence spectrometry and X-ray diffraction analysis
- Distillation/titration
- Ultraviolet and visible spectroscopy
- Fourier transformation infrared spectrometry (FT-IR)
- Preparation of glass samples for elemental analysis
- General physical properties analysis

#### 4.5.2.2 C3 Laboratory Maintenance

The analytical laboratory maintenance shop provides space for performing preventive and corrective maintenance on laboratory equipment. There are two shops, located in different potential radioactive contamination areas. The C3 shop allows decontamination, maintenance, and storage of contaminated equipment such as hot cell manipulators. The C3 maintenance shop is ventilated to the C3 ventilation system. Table 4-1 provides a list of maintenance activities to be performed in the laboratory maintenance shops.

#### 4.5.2.3 Radioactive Solid Waste Management

Solid and organic lab pack wastes from the rad lab areas are accumulated in the individual labs until they are transferred to the laboratory drum storage area for waste consolidation, volume reduction, and storage. Waste volume reduction is completed in the fully enclosed drum compaction units, which are ventilated to the C3 ventilation system. Lab pack activities are completed inside of a fume hood, which is ventilated to the C3 ventilation system. Liquid waste drums are managed on spill pallets and solid waste drums are managed on standard drum pallets in the drum storage area prior to transfer to a permitted TSD facility. The drum storage area is ventilated to the C2 ventilation system.

#### 4.5.2.4 Radioactive Liquid Waste Disposal

Liquid effluents from rad labs flow to the laboratory area sink drain collection vessel. Effluents collected in the C3 vessel include rad lab fume hood cupsink drains, lab sinks, health physics technician personnel decontamination showers and sinks, and the hot cell access area air lock floor drains. The laboratory area sink drain collection vessel and the hot cell drain collection vessel are transferred to the pretreatment plant for processing. The laboratory area sink drain collection vessel is ventilated to the C3 ventilation system.

### 4.5.3 C5 Ventilation System (Emission Unit LB-S2)

The following subsections describe the emission sources to C5 emission unit (LB-S2).

#### 4.5.3.1 Autosampling System (ASX)

The sampling will be performed by a computer-controlled autosampler system. A fixed volume of sample will be collected and transferred into a sample bottle or vial and then automatically transferred into a sample carrier. Sample carriers are then pneumatically transferred to either the laboratory hot cell or radiological laboratory depending on where the sample was collected. The ASX system is divided into two systems, a high-activity sampling system and a low activity sampling system. The high activity sampling system collects and pneumatically transfers samples from the PT and HLW vitrification plants to the receipt cell within the hot cell laboratory. Samples collected from the LAW vitrification plant are pneumatically transferred directly to the radiological laboratory. The emissions from this activity are vented through the C5 emission unit (LB-S2).

#### 4.5.3.2 Analytical Hot Cell Laboratory Equipment System (AHL)

The analytical hot cell laboratory equipment system is designed to provide sample preparation, dilution, and dissolution required to support the analyses of production samples collected at the pretreatment and HLW vitrification facilities. This series of hot cells is capable of accepting samples taken automatically from each of the production facilities (using pneumatic transport) and it is also capable of accepting

samples that are transported manually. Some of these samples are transported to the hot cells or to the rad labs either directly, after dilution, or after stripping off the radioactive content.

Specifically, the analytical hot cell laboratories will include facilities and equipment required to perform the following activities:

- Sample receipt and transport
- Dilution, fusion, and acid digestion required to prepare samples for subsequent analysis
- Extraction for organic analyses
- General physical properties analysis
- Waste collection and transport

#### 4.5.3.3 Radioactive Solid Waste Management

Small volumes of solid waste are accumulated in the hot cells until the quantity is sufficient to fill a waste drum. Waste from the individual hot cells is then transferred to a waste management cell where waste management, consolidation, and waste packaging activities are conducted. The waste cell contains tools and equipment to complete size reduction and container void fill. These solid wastes as well as organic lab pack wastes are transferred into waste drums using a bagless transfer system. Depending on waste type, the drums are filled with the appropriate volume of void fill/adsorbent material and closed. Ventilation flow from the hot cell area, including the waste cell, is routed to the C5 HEPA filtration system.

#### 4.5.3.4 Radioactive Liquid Waste Disposal

Liquid effluent collected from hot cell cupsinks, hot cell fume hood drains, ASX carrier decontamination, and the C3 maintenance glovebox drain, flow directly to the hot cell drain collection vessel. Effluent from the laboratory area sink collection vessel and the hot cell drain collection vessel are transferred to the pretreatment plant for processing or recycling. The hot cell drain collection vessel is ventilated to the C5 ventilation system.

## 4.6 WTP Building Ventilation Systems

The building air supply systems for the WTP process facilities (PT, LAW vitrification, and HLW vitrification plants) and the analytical laboratory will be divided into 4 numbered zones: C1 to C5 (C4 is not used). The higher number indicates greater contamination potential and, therefore, a requirement for a greater degree of control or restriction. A separate zoning system for the ventilation systems will be based on the system for classifying building areas for potential contamination. Zones classified as C5 will have the potential for the greatest contamination and will include the PT cells, melter cells, and glass pouring and cooling cells. All C5 zones will be operated remotely. Zones classified as C1 will be those areas that have no risk of contamination, such as equipment rooms and offices. Based on expected operation activities, criteria and toxic emissions are expected to be insignificant in the building ventilation systems.

Radiological confinement will be achieved by maintaining the lowest pressure in areas with the greatest contamination (such as C5 areas), by utilizing airflow cascading from least- to most-contaminated areas (such as C1 or C2 to C5 areas). The principle of a cascade system, in which air passes through more than

1 area, is that the number of separate ventilation streams is effectively reduced and, hence, the amount of air requiring treatment.

The confinement provided by physical barriers is enhanced by the ventilation system, which creates a pressure gradient and causes air to flow through engineered routes, from an area of lower contamination potential to an area of higher contamination potential.

**C1 Ventilation System**

Typically, the C1 areas will consist of offices, workshops, control rooms, and equipment rooms. Emissions are not expected from the C1 areas.

**C2 Ventilation System**

Typically, the C2 areas will consist of non-process operating areas, access corridors, control and instrumentation areas, and electrical rooms. Filtered and tempered air will be supplied to these areas by the C2 supply system, and will be cascaded into adjacent C3 areas or exhausted by the C2 exhaust system. C2 areas can normally be accessed in street clothes and do not require personal protective equipment.

**C3 Ventilation System**

Typically, the C3 areas will consist of filter plant rooms, workshops, maintenance areas, and monitoring areas. Access from a C2 area to a C3 area will be via a C2 and C3 sub-change room. Air will generally be drawn from C2 areas and cascaded through the C3 areas, into C5 areas. In general, air cascaded into the C3 areas will be from adjacent C2 and C3 sub-change rooms. In some areas, where higher flow may be required into C3 areas, C2 and C3 boundary walls will be provided with engineered transfer grilles equipped with backflow dampers.

If sufficient air cannot be cascaded into a C3 area, the dedicated C2 supply will have been provided with an actuated damper on the C2 supply duct, which will be closed in the event of a loss of C3 airflow. This system will shut down in the event of a failure of the C5 exhaust system.

**C5 Ventilation System**

In general, air cascaded into the C5 areas will be from adjacent C3 areas. If there is a requirement for engineered duct entries through the C3 boundary, they will be protected by backflow dampers and penetrations through the boundary will be sealed.

The PT plant C5 areas are designed so that the cell or cave perimeter provides radiation shielding as well as a confinement zone for ventilation purposes. C5 areas typically consist of a series of process cells where wastes will be stored and treated. The PT plant hot cell will house major pumps and valves and other process equipment.

The C5 areas in the LAW and HLW vitrification plants will consist of the following:

- Pour caves
- Transfer tunnel
- Buffer storage area

- C3 and C5 drain tank room
- Process cells

Air will be cascaded into the C5 areas and exhausted by the C5 exhaust system. Engineered duct entries (air in-bleeds) through the C5 confinement boundary will be protected by backflow isolation dampers, with penetrations through the boundary sealed.

## 4.7 WTP Maintenance and Waste Management

There will be maintenance and waste management areas at the WTP that will enable remote and hands-on maintenance and disposal of process equipment and miscellaneous secondary wastes. The following sections describe the anticipated activities that will occur in the maintenance and waste management areas. It should be noted that air in these areas will be vented through C3 or C5 air ventilation systems (see section 4.6). The proposed emission controls and emission rates are presented in sections 5 and 6.

### 4.7.1 Pretreatment Plant

The PT plant will include the following areas requiring maintenance and waste management activities:

- PT plant hot cell
- PT plant filter cave
- PT plant maintenance area

#### 4.7.1.1 Pretreatment Plant Hot Cell

The PT plant hot cell will be located in the central portion of the PT plant, and will extend nearly the entire length of the building. The emissions from this area will be vented through the C5 air ventilation system.

The process equipment will be remotely handled in case of failure and removed by an overhead crane or powered manipulator. Manipulators assist in the decontamination and remote repair of equipment. The cell also contains a crane and powered manipulator repair area. The failed equipment will be placed inside disposal boxes and transported through a series of air locks and shield doors, to a truck load out on the outside of the building.

Process equipment, such as pumps, valves, jumpers, and filters, are located in this area. Typical activities performed in this area will include the removal and staging of failed, remotely handled process equipment prior to its decontamination, repair, or packaging of waste for disposal. Jumpers connecting process equipment may leak waste when the jumper connection is broken. Although some decontamination capability will be present in the PT hot cell containment area, some quantities of waste, especially solids, will remain following decontamination.

#### 4.7.1.2 Pretreatment Plant Filter Cave

The PT plant filter cave will be located in the southeast portion of the plant. The emissions from this area will be vented through the C5 air ventilation system.

Typical activities performed in this area will include waste storage, size reduction, decontamination, and equipment repair. A crane will transport spent HEPA filters and high efficiency mist eliminator (HEME) filters to a size reduction station, and then place them inside a disposal container. The disposal container will then be transported, via cart, through an air lock and shield doors, and to a load out area for storage, pending final disposal.

#### 4.7.1.3 Pretreatment Plant Maintenance Area

The PT plant maintenance area will comprise the majority of the east end of the PT plant. The emissions from this area will be vented through the C3 air ventilation system.

Typical activities performed in this area will include equipment maintenance, including decontamination, size reduction, and packaging of spent equipment. This area will consist of the interim storage, lag storage, manipulator decontamination and repair, spent resin handling, waste packaging, tool cribs, sub-change, and filter overpack lidding rooms. This area will include hatches to import or export spent equipment. An overhead crane will facilitate the movement of equipment and the removal or placement of the spent equipment in the waste containers.

### 4.7.2 LAW Vitrification Plant

The LAW vitrification plant will include the following areas requiring maintenance and waste management activities:

- LAW locally shielded melter (LSM) gallery
- LAW vitrification plant C3 workshop
- LAW vitrification plant general waste collection areas

#### 4.7.2.1 LAW LSM Gallery

The LAW LSM gallery will house the LAW melters. This area will be located in the south end of the plant. The emissions from this area will be vented through the C3 air ventilation system.

In the event of a failure, the out-of-service melter will be prepared for export by being rinsed, disconnected from the process lines, and decontaminated. The melter will be lifted out of the area and covered to prevent a spread of contamination. The melter will be placed in an approved overpack container and staged for receipt. Once closed and secured, the overpack containing the melter will be delivered to the LAW out-of-service melter storage area. A similar process, in reverse, will be used for the introduction and installation of new LAW melters.

Melter consumable items will be removed through the top of the melter shielding. Melter consumable items will be those that require routine and non-routine maintenance, but that provide necessary functions to continue melter operations. The routine consumable items will be bubbler assemblies. New bubbler assemblies will be shipped to the facility and will be installed into the melter. Spent bubblers will be extracted from the melter and packaged whole for disposal.

Refractory thermocouples, airlifts, level detectors, feed nozzles, and film coolers will be considered non-routine and replaced on an as-needed basis, according to the appropriate procedures and with the appropriate equipment.

#### 4.7.2.2 LAW Vitrification Plant C3 Workshop

The LAW vitrification plant C3 workshop will be located in the northwestern portion of the LAW vitrification plant. The emissions from this workshop will be vented through the C3 air ventilation system.

Typical activities performed in this area will include the decontamination, size reduction, and packaging of spent equipment. A simple decontamination of components will be performed to allow contact handling. Waste streams generated within the workshop will be reduced in volume as necessary, by means of disassembly or other suitable means, to fit standard packaging such as drums or small boxes.

#### 4.7.2.3 LAW Vitrification Plant General Waste Collection Areas

The disposal of miscellaneous mixed waste streams created during operation will be accomplished by packaging at the point of generation. Localized collection points and disposal routes will be established at logical and optimal locations to accommodate maintenance and operations. Waste containers will be transferred to a staging area, where packages will be weighed, placarded, and decontaminated for non-fixed contamination, if needed, prior to their export and disposal.

### 4.7.3 HLW Vitrification Plant

The HLW vitrification plant will include the following areas requiring maintenance and waste management activities:

- HLW melter cave
- HLW vitrification plant C3 workshop
- HLW vitrification plant filter cave
- HLW vitrification plant drum transfer tunnel

#### 4.7.3.1 HLW Melter Cave

The HLW melter cave will be located in the central portion of the HLW vitrification plant. The emissions from this area will be vented through the C5 air ventilation system.

Typical activities performed in the melter cave will include the dismantling and packaging of spent consumables and also decontamination. The types of spent consumables will include waste recirculators, lid heaters, and thermocouples. When spent consumables are ready for change out, they will be placed on a consumable storage rack while awaiting size reduction. The consumables will be reduced in size by dismantling or cutting the spent equipment, or both. This process will be remotely conducted on tables in the melter cave. The spent consumables will be placed in baskets and lowered into containers in a transfer tunnel that passes under the HLW melter cave. Air locked cells will be used for packing or unpacking melters or their components.

In case of a HLW melter failure, the melter will be evaluated to see if it meets the receiving TSD waste acceptance criteria, particularly in terms of the radiological contamination in the HLW glass residue present in the melter, before it is placed in an overpack. The overpack will provide a shielded disposal canister for the spent melter. After the outside surfaces of the overpack have been checked for

radiological contamination and have been decontaminated as required, the out-of-service melter and its overpack will be moved through the melter air lock and placed on the transporter, to be moved out of the HLW vitrification plant through the roll-up doors. Decontamination of the overpack in the air lock, before it is exported, will be done manually, using moist cloths. Water spray will also be provided as a contingency.

#### 4.7.3.2 HLW Vitrification Plant C3 Workshop

The HLW vitrification plant C3 workshop will be located in the northeast side of the HLW vitrification plant. The emissions from this area will be vented through the C3 air ventilation system.

Typical waste management activities performed in this area will include the decontamination, size reduction, and packaging of spent equipment. Equipment will be contained in shielded casks or in a standard waste box when it is transported to the unit. In the workshop, the equipment will be decontaminated to enable hands-on maintenance. In the decontamination room, the crane and equipment will be decontaminated with a demineralized high pressure wash water spray. Nonorganic detergents or acid solvents may also be used, if needed. Spent equipment parts will be bagged and placed in standard waste containers or boxes for disposal. Size reduction may be performed to facilitate packaging. Other spent equipment will be packaged in drums or standard waste boxes.

#### 4.7.3.3 HLW Vitrification Plant Filter Cave

The HLW vitrification plant filter cave will be located in the northwest portion of the plant. The emissions from this area will be vented through the C5 air ventilation system.

The HLW vitrification plant filter cave will manage spent HEPA filters and HEMEs, using an overhead crane. Power manipulators and hoists will be used to facilitate the movement of equipment within the filter cave. A power manipulator will be used to interface directly with filter lids, dampers, and elements during the replacement of HEPA filters. Spent filters will be placed into a disposal basket at the filter compactor area. A 2-stage compact telescopic cylinder compresses the filter into the basket that is sized to fit inside a waste container on top of a drum transport bogie. The disposal container will then be transported, via cart, through an air lock and shield doors, and to a load out area for storage, pending final disposal. Spray wash nozzles located above the crane's locked position and a spray cabinet for the power manipulator will be used to ensure that the equipment is maintained in an uncontaminated state.

#### 4.7.3.4 HLW Vitrification Plant Drum Transfer Tunnel

The HLW vitrification plant drum transfer tunnel will stretch east to west, nearly the entire length of the HLW vitrification plant. The emissions from this area will be vented through the C3 air ventilation system.

Typical activities performed in this area will include size reduction, temporary waste storage, and packaging of failed and spent equipment. In both the filter cave and the melter cave, drums will be positioned under the filter cave and melter cave export wells, and the drum transfer bogie will be locked into position. The containment between the filter cave, melter cave, and the drum transfer tunnel will be maintained by an engineered air gap between the top of the drum and the underside of the export well. A loaded basket will be lowered into the drum. The drum will then be lowered and transferred to the drum lidding station, where the outer lid will be replaced and crimped onto the drum.

## 4.8 Balance of Facilities

The BOF will include, by definition, support systems and utilities required for the waste treatment processes within the PT, LAW vitrification, and HLW vitrification plants and the analytical laboratory. The BOF areas that have the potential to emit nonradioactive emissions are:

- Cooling tower facility
- Diesel generators
- Field erected tanks
- Fire water pump house and fire water tanks
- Glass former storage area
- Out-of-service melter storage areas
- Steam plant
- Water treatment plant
- Wet chemical storage area

### 4.8.1 Cooling Tower

The cooling tower will provide the heat sink for cooling loads generated in the WTP. A multi-cell, mechanical draft, counter flow, evaporative cooling tower will be used to provide the heat sink. The cooling water system is designed with intermediate loops in the process plants to prevent potential radioactive contamination of the cooling tower from the cooling water return.

### 4.8.2 Diesel Generators

This facility will comprise 3 diesel generators with horsepower ratings ranging between 3,950 and 5,530. The diesel generators provide an alternate electrical power supply to the BOF, the PT process facility, and the LAW and HLW vitrification facilities. The diesel-backed power serves process equipment and control systems requiring power during a loss of offsite electrical power conditions.

### 4.8.3 Field Erected Tanks

There will be several aboveground field erected tanks at the WTP, which include:

- Water treatment tanks for process, potable, demineralized, and raw water
- Diesel fuel oil storage tanks
- Nonradioactive and nondangerous liquid effluent tanks that store cooling tower blowdown, steam boiler blowdown, demineralizer and filter backwashes from the water treatment plant, and other miscellaneous nonradioactive sources from the process facilities.
- Fire water tanks that store fire water, which will deliver water to fire hydrants, standpipes, and fixed fire suppression systems

### 4.8.4 Fire Pump House and Fire Water Tanks

The fire pump house contains two diesel engine driven fire pump packages. Each are capable of supplying 100 % of the postulated fire flows. A diesel fuel day tank will be located inside the fire pump house. The fire water tanks will be located adjacent to the fire pump house. The fire water tanks will be used to store the fire water that will be delivered to fire hydrants, standpipes, and fixed fire suppression systems.

### 4.8.5 Fuel Oil Pump House

The fuel oil pump house contains fuel oil transfer pumps, diesel fuel unloading pumps, and the boiler fuel oil pumps. It provides weather protection for the pumps and associated equipment. It also provides a controlled environment for the equipment operation and maintenance, and also personnel access.

### 4.8.6 Glass Former Facility

A glass former facility will be designed to receive, store, weigh, blend, and transport glass former materials to the LAW and HLW vitrification plants. The glass former facility building provides an enclosed facility that contains the bulk glass former material receipt and unloading area and an outdoor pad for storage silos and material handling equipment. The material receipt and unload area houses a bulk bag material storage area, the bulk bag handling equipment (bulk bag loaders and unloaders), a vacuum unloader, a transporter, the air handling equipment (compressors, air dryers, and receivers that support the glass former handling and pneumatic transport), and an operations office. The outdoor storage area will contain the material storage silos, weight hoppers, transporters, blending silos, and blended glass former transporters. The storage silos and blending silos will have baghouses to minimize emissions during loading and unloading. Transfer of the glass formers between the weight hoppers, the blending silos, and the melter feed hoppers will occur through sealed, dense-phase pneumatic conveying. Since the Glass Former Facility emissions will be comprised of only particulate matter emissions, estimates of emissions can be found in the *Prevention of Significant Deterioration Permit Application* (24590-WTP-RPT-ENV-01-009, Rev 1).

### 4.8.7 Out-of-Service Melter Storage Areas

There will be 2 out-of-service melter storage areas. One of the storage areas will be used primarily to stage out-of-service LAW melters prior to their transfer to a permitted TSD facility. The melters will be packaged to meet appropriate transportation requirements at the process plants. The other storage area will be used primarily to manage out-of-service HLW melters that may require additional treatment prior to their transport to a permitted TSD.

### 4.8.8 Steam Plant

The steam plant facility will include a steam plant building and a boiler fuel oil tank area adjacent to the steam plant building. The steam plant will provide steam to the waste processing equipment in the PT, LAW, and HLW vitrification plants and provide heat to the WTP project HVAC systems.

### 4.8.9 Water Treatment Building

A water treatment building will be developed to provide process, potable, and demineralized water. The water treatment building will also be used to store typical water treatment chemicals, such as organic

phosphate and sulfuric acid. Other water treatment packages, such as the water softening unit and the demineralizer package, will be located within the water treatment building. A filtration unit for the incoming raw water supply may also be located inside the building, depending upon the type of filtration chosen.

### 4.8.10 Wet Chemical Storage Building

The wet chemical storage building will be located on the southwest side of the PT plant. This building will be used to store resin and reagents, such as nitric acid, strontium nitrate, sodium permanganate, sodium nitrite, and sodium hydroxide. The resins will be stored in an enclosed controlled environment. The remaining chemicals will be stored in tanks. Eyewashes and emergency showers will also be provided.

### 4.8.11 Other Balance of Facilities

The remaining BOF areas listed below do not produce air toxic or criteria pollutant emissions:

- Administration building
- Chiller and compressor plant
- Non-dangerous, nonradioactive liquid effluent tank area
- Switchgear buildings

**Table 4-1 Analytical Laboratory Maintenance and Waste Management Activity Summary**

| Task Description | Lab C3 Shop | IN-SITU Activities |
|---|---|---|
| Filter Change-out[a] | | X |
| Manipulator Repair[b] | X | X |
| Valve Maintenance | X | X |
| Pump Maintenance | X | X |
| Exhaust Fan Maintenance | X | X |

a Spent filters will be disposed following filter change-out using approved maintenance and radiological procedures.

b Manipulators requiring extensive repairs will be pulled and transferred to the C3 workshop for decontamination. Once the contamination levels are reduced to within acceptable limits for hands-on maintenance, the manipulator will be repaired using approved maintenance and radiological procedures.

**Figure 4-1 WTP Site Layout**

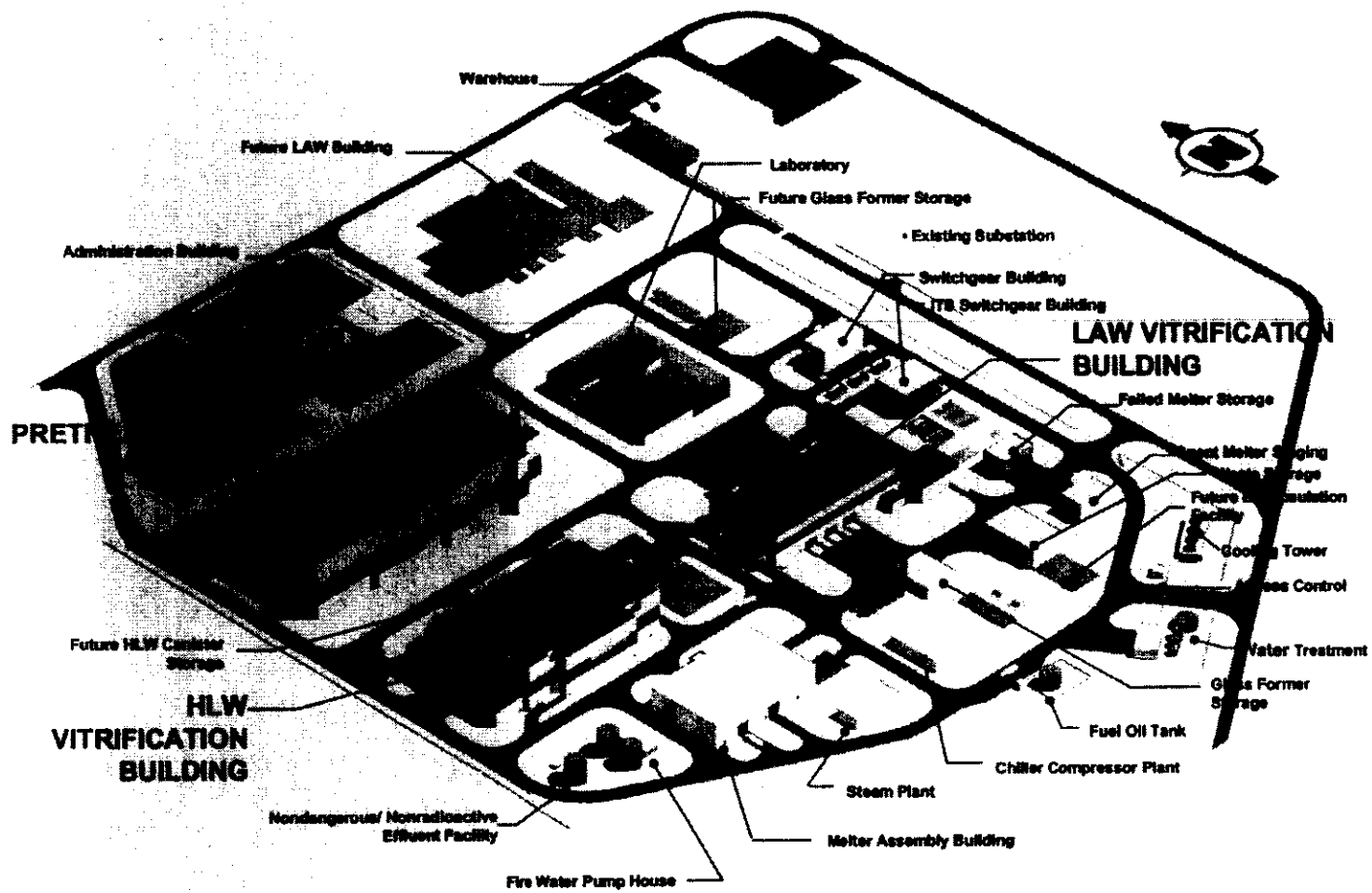


Best Available Copy

**Figure 4-2 Simplified Flow Diagram**

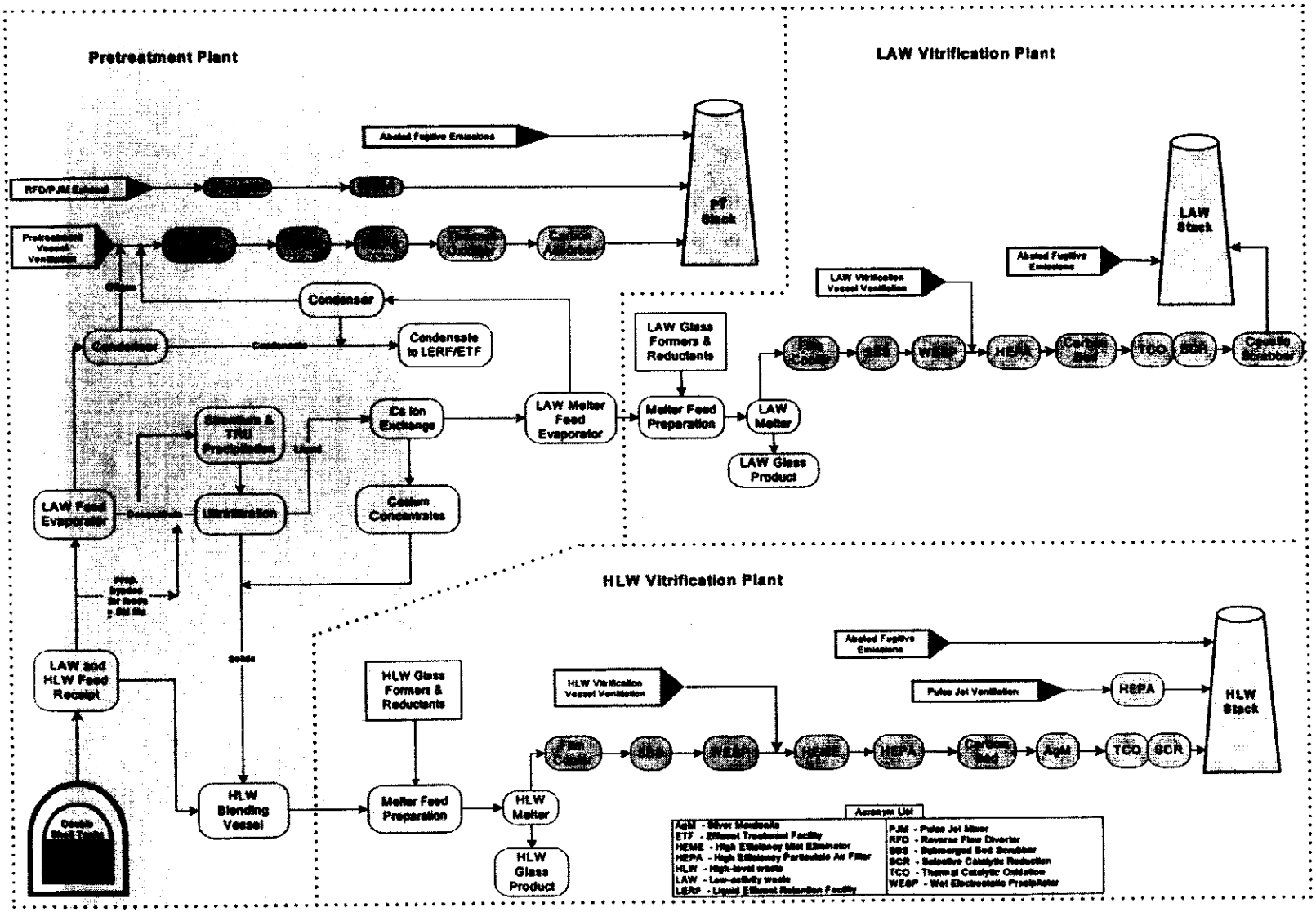


Best Available Copy

**Figure 4-3 Pretreatment Simplified Flow Diagram**

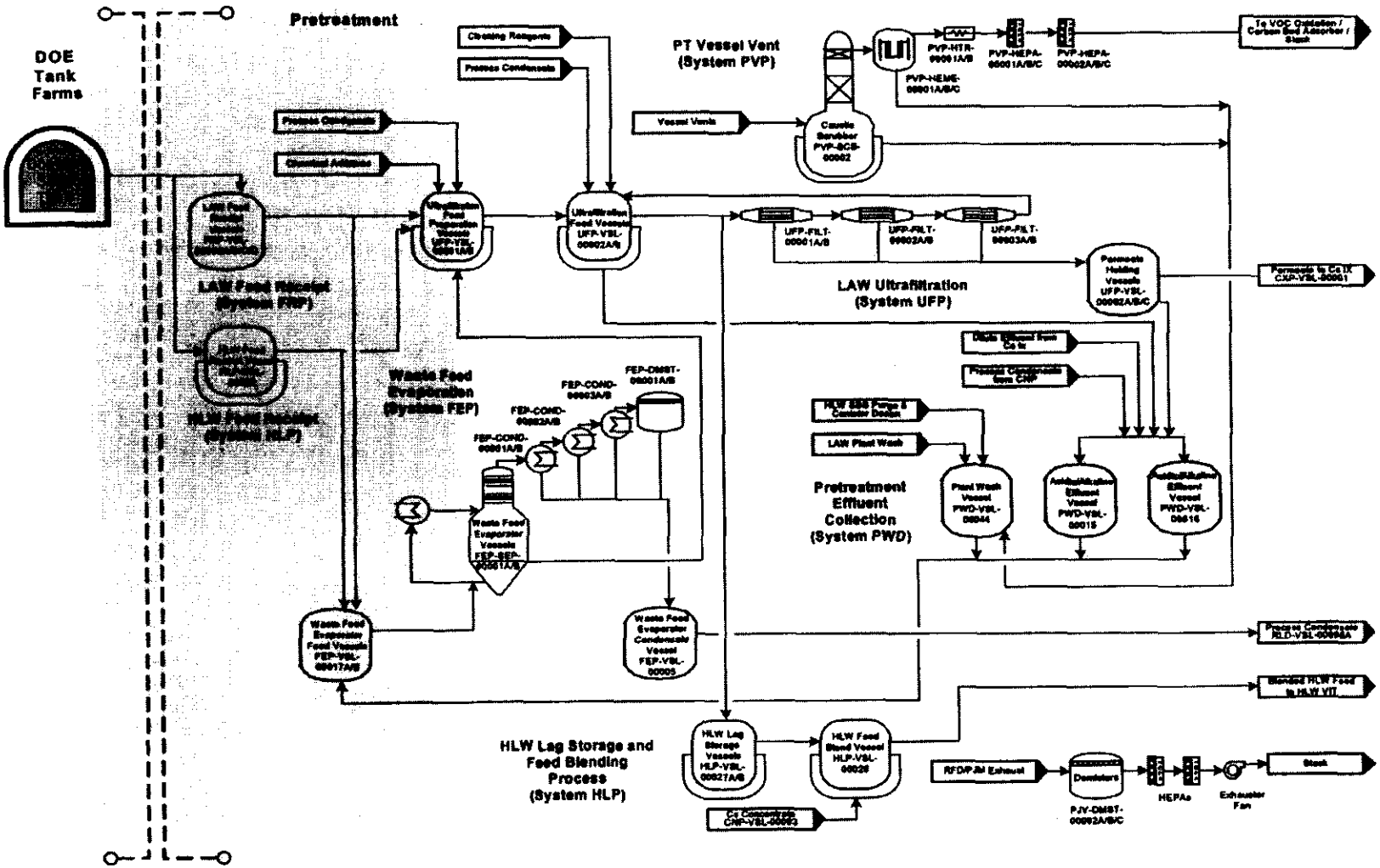


Best Available Copy

**Figure 4-4 Pretreatment Simplified Flow Diagram (Continued)**

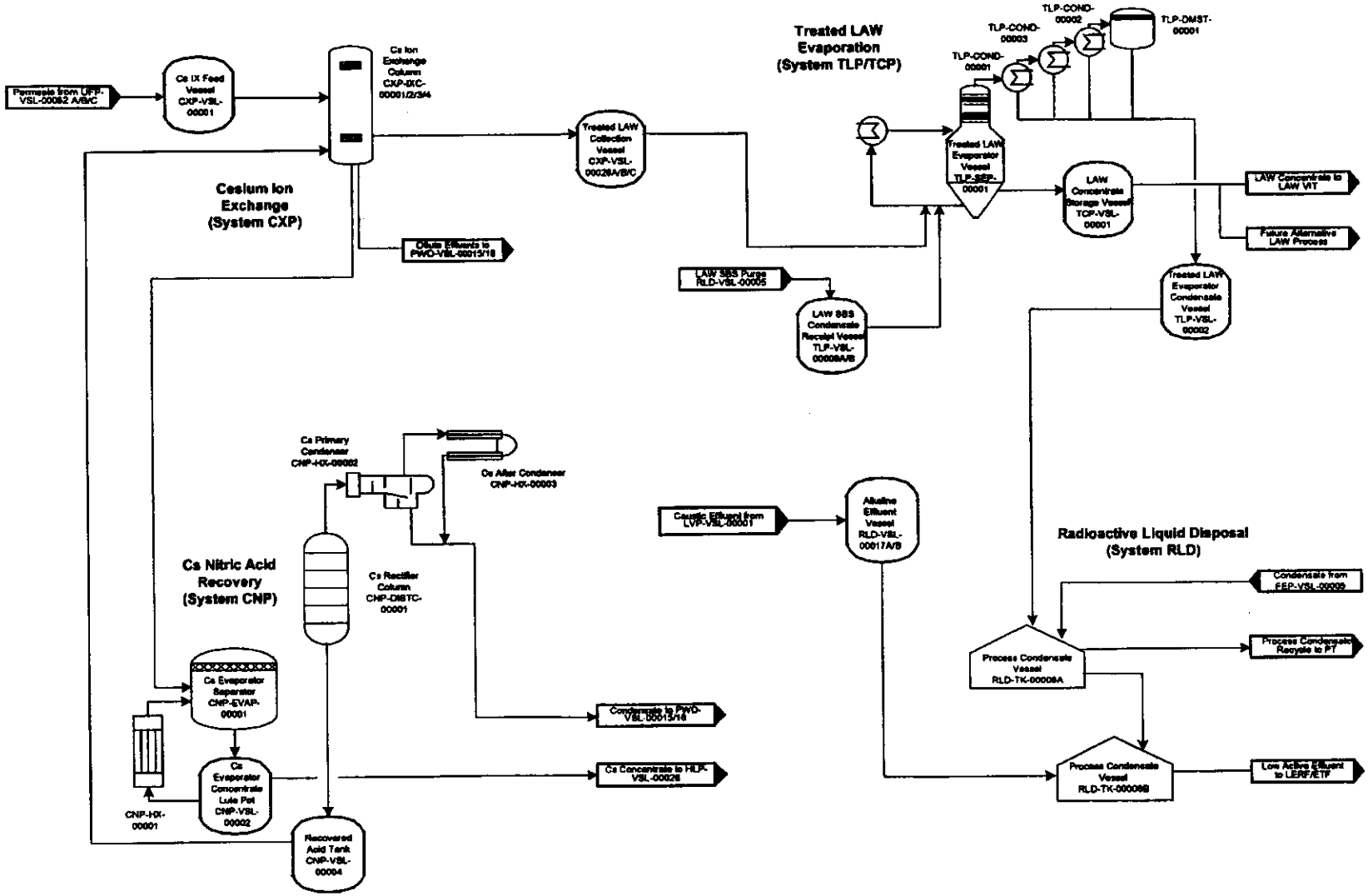

**Figure 4-5 LAW Vitrification Simplified Flow Diagram**

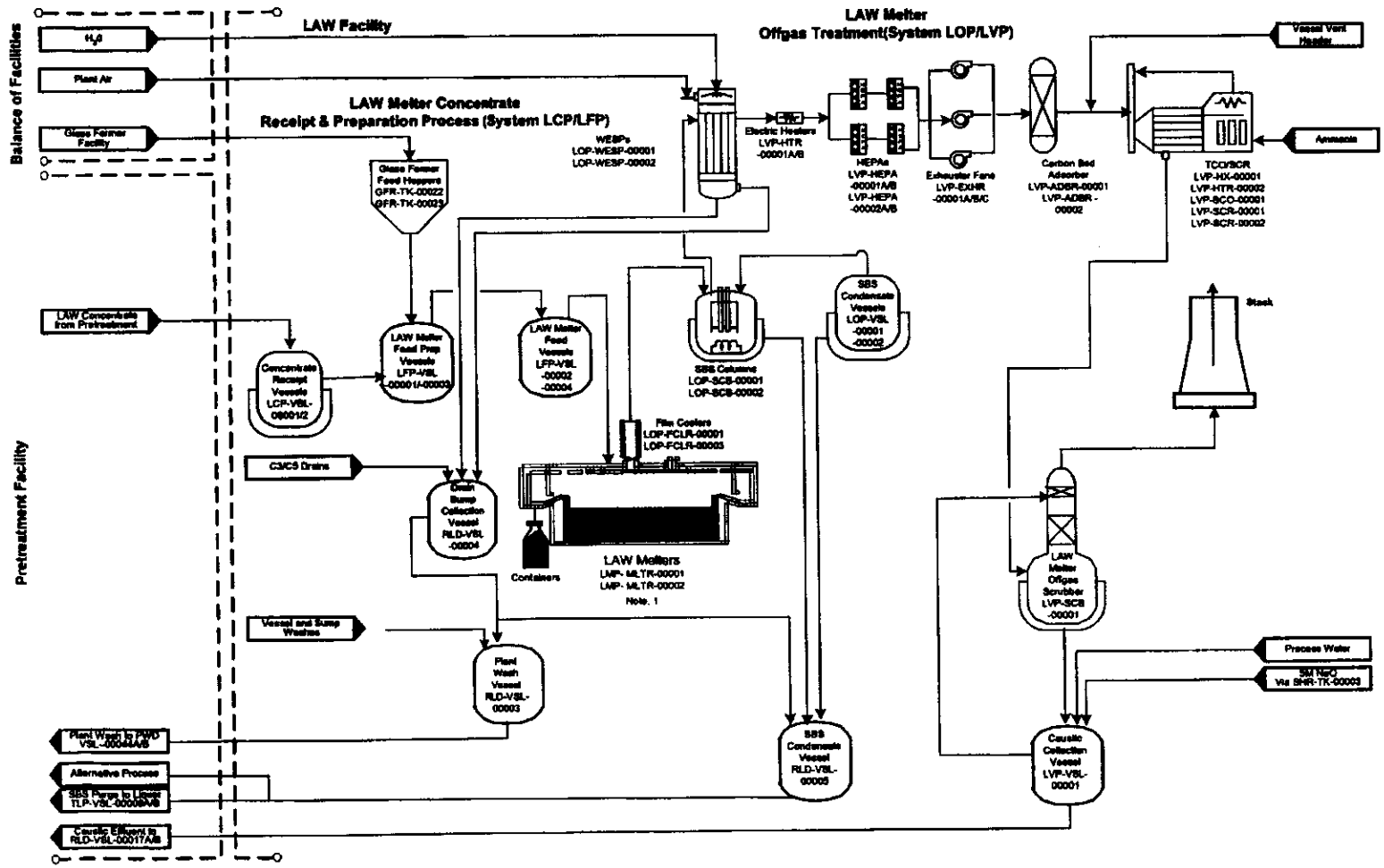


Notes:
1. For this diagram one melter system is shown but assumes a total of two LAW melter systems of identical capacity

**Figure 4-6 HLW Vitrification Simplified Flow Diagram**

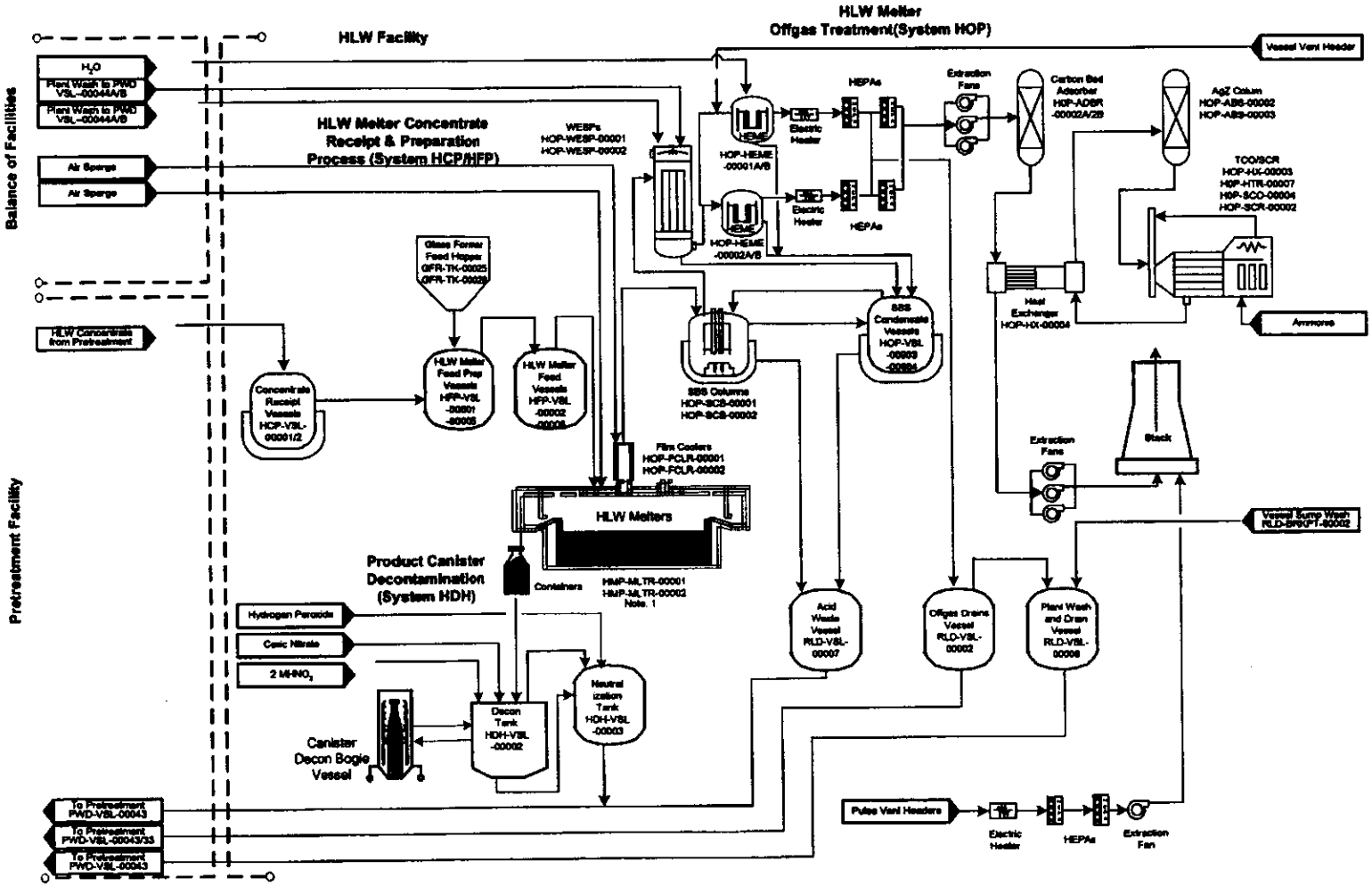


Notes:
1. For this diagram one melter system is shown but assumes a total of two HLW melter systems of identical capacity.

**Figure 4-7 Laboratory RLD System Simplified Flow Diagram**

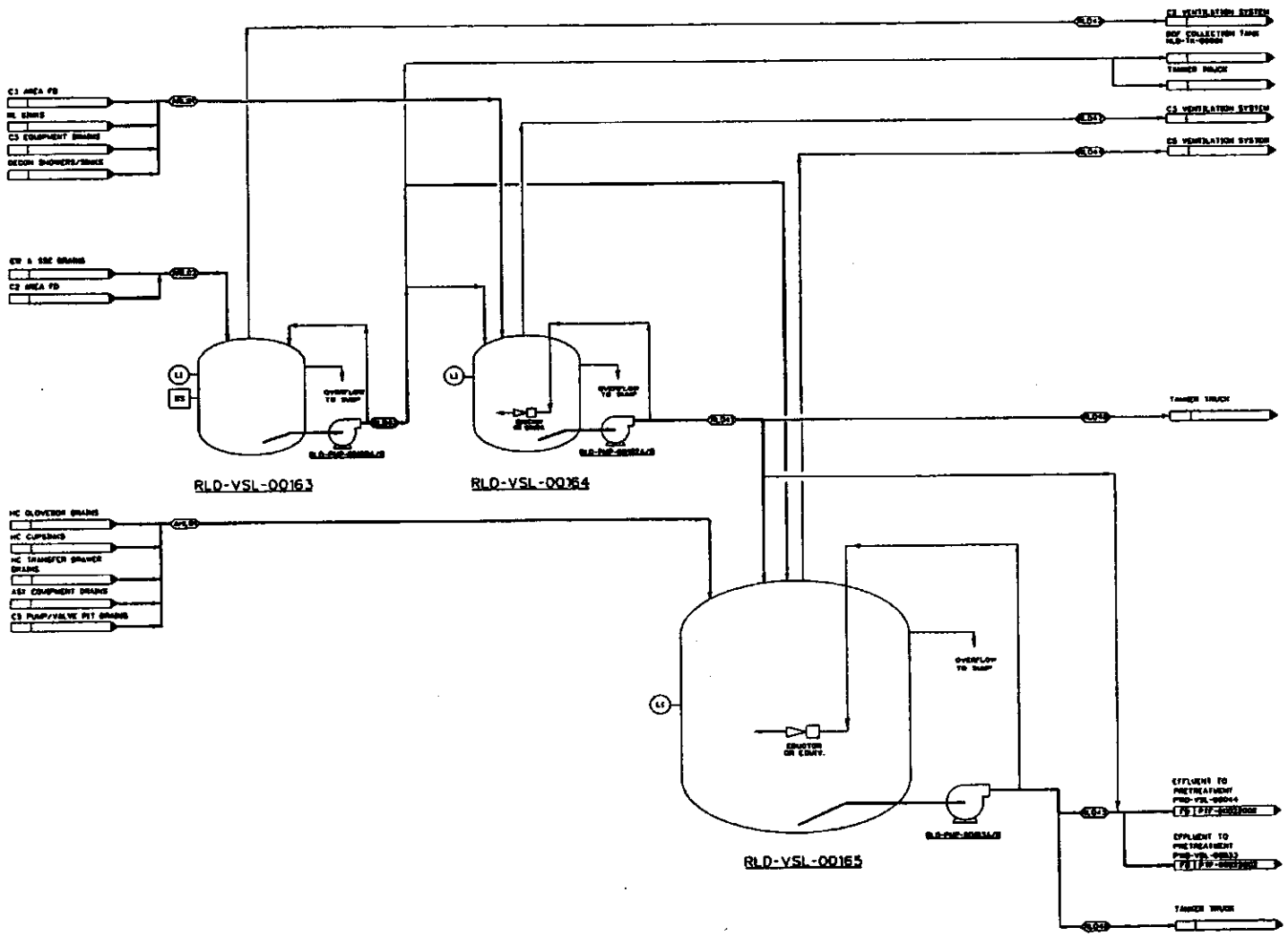

**Figure 4-8 Pretreatment Plant Emission Units**

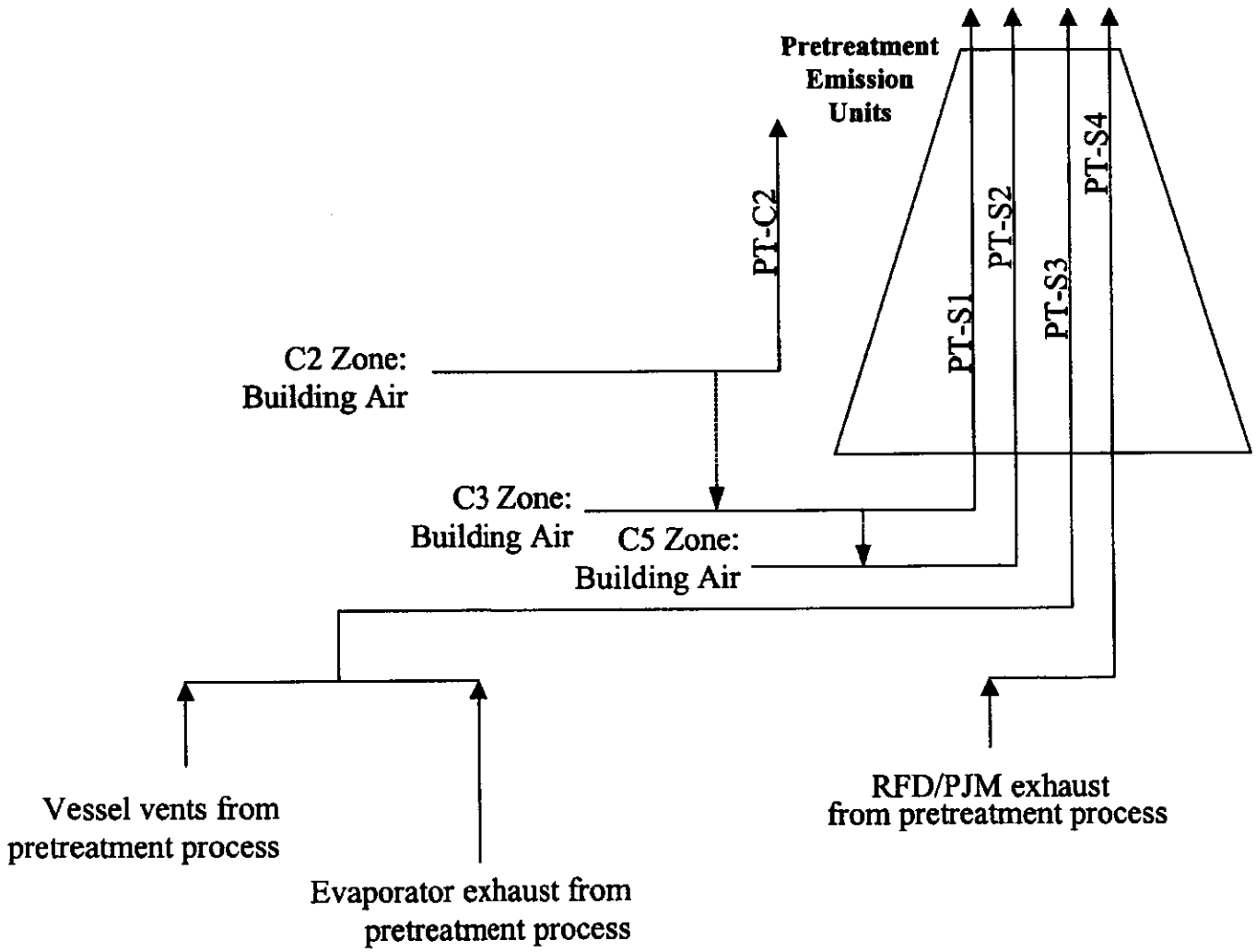

**Figure 4-9 LAW Vitrification Plant Emission Units**

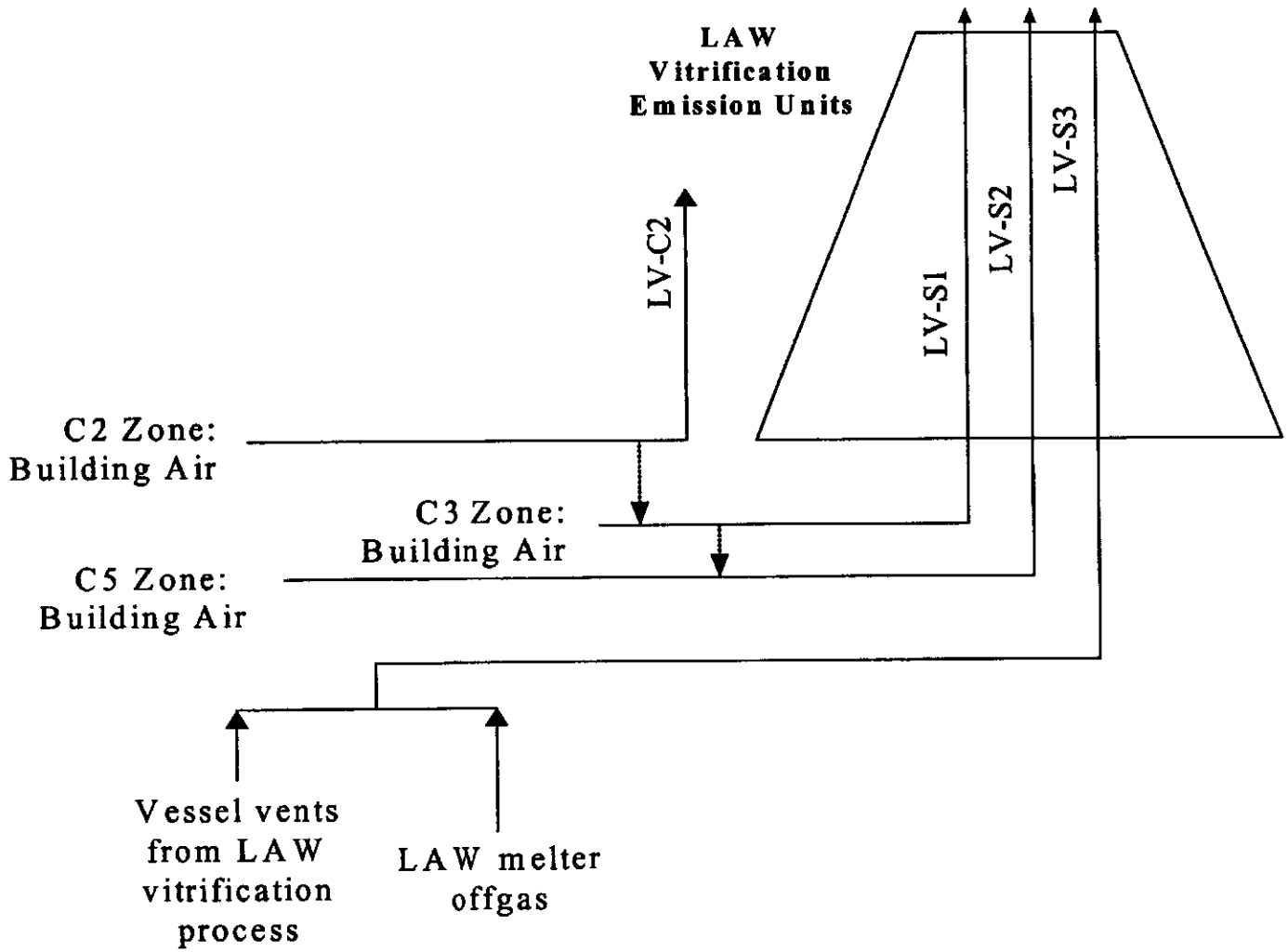

**Figure 4-10 HLW Vitrification Plant Emission Units**

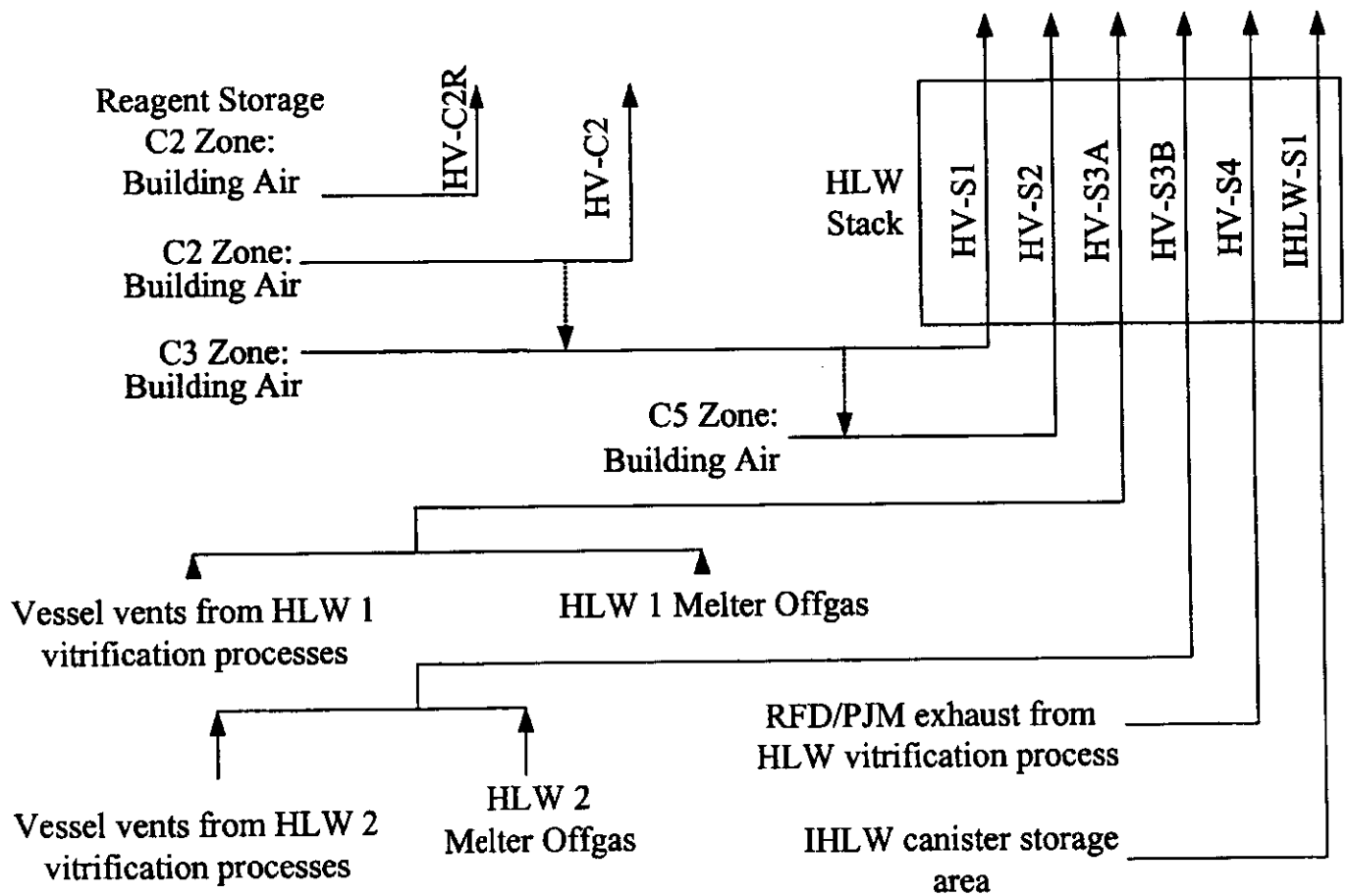

**Figure 4-11 Analytical Laboratory Ventilation System Diagram**

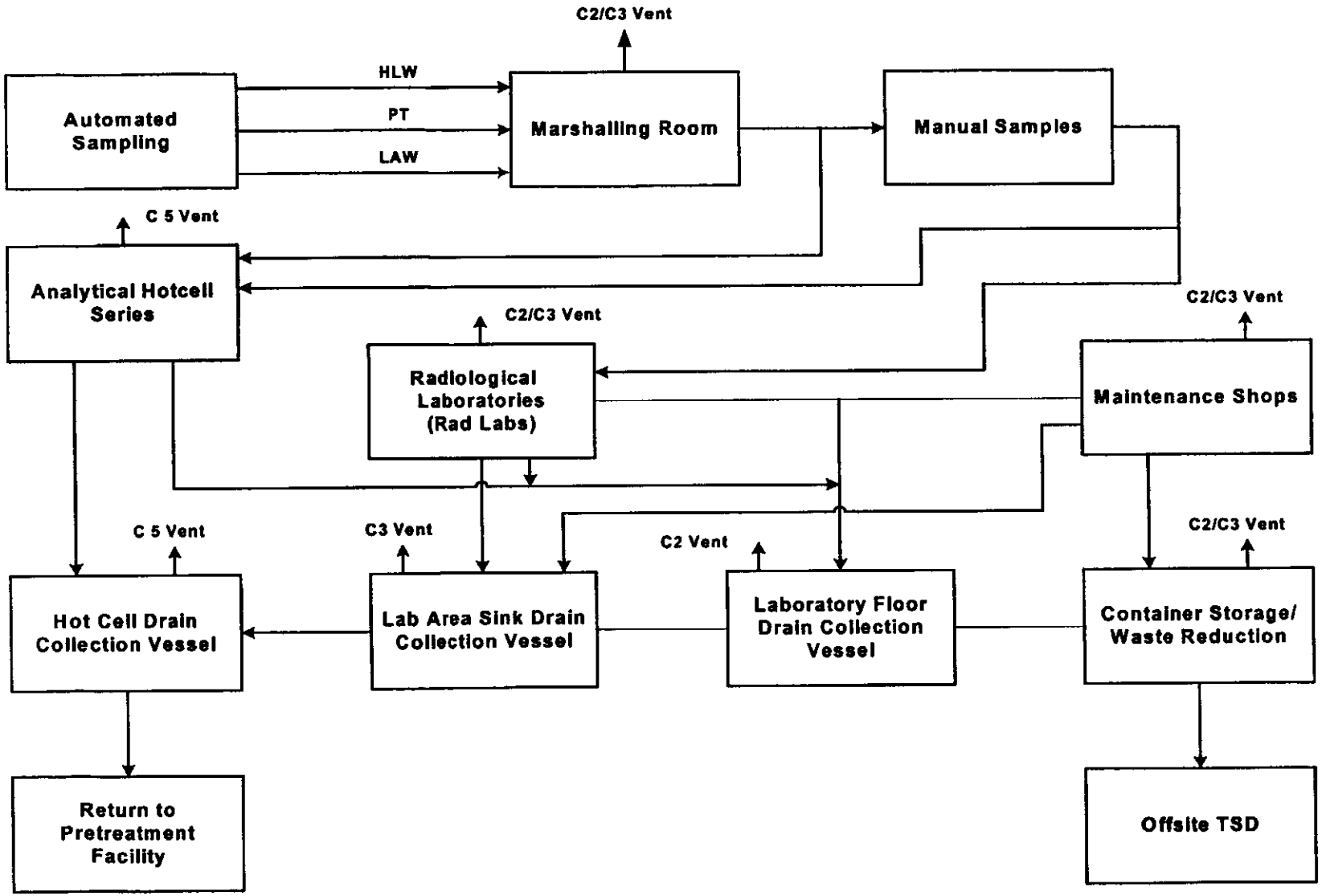

**Figure 4-12 Analytical Laboratory Emission Unit Diagram**

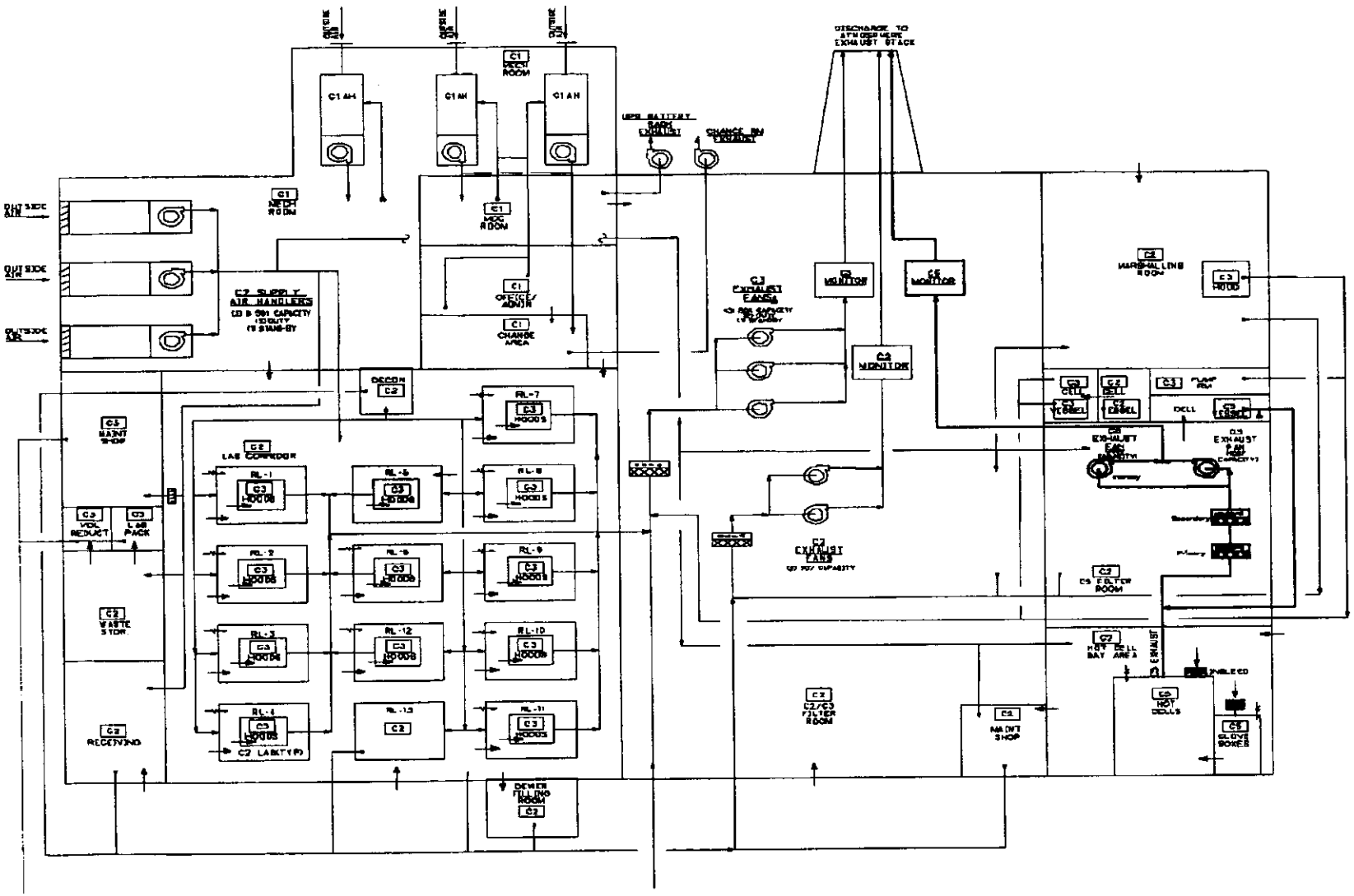

**Figure 4-13 WTP Emission Units Configuration - Top View**

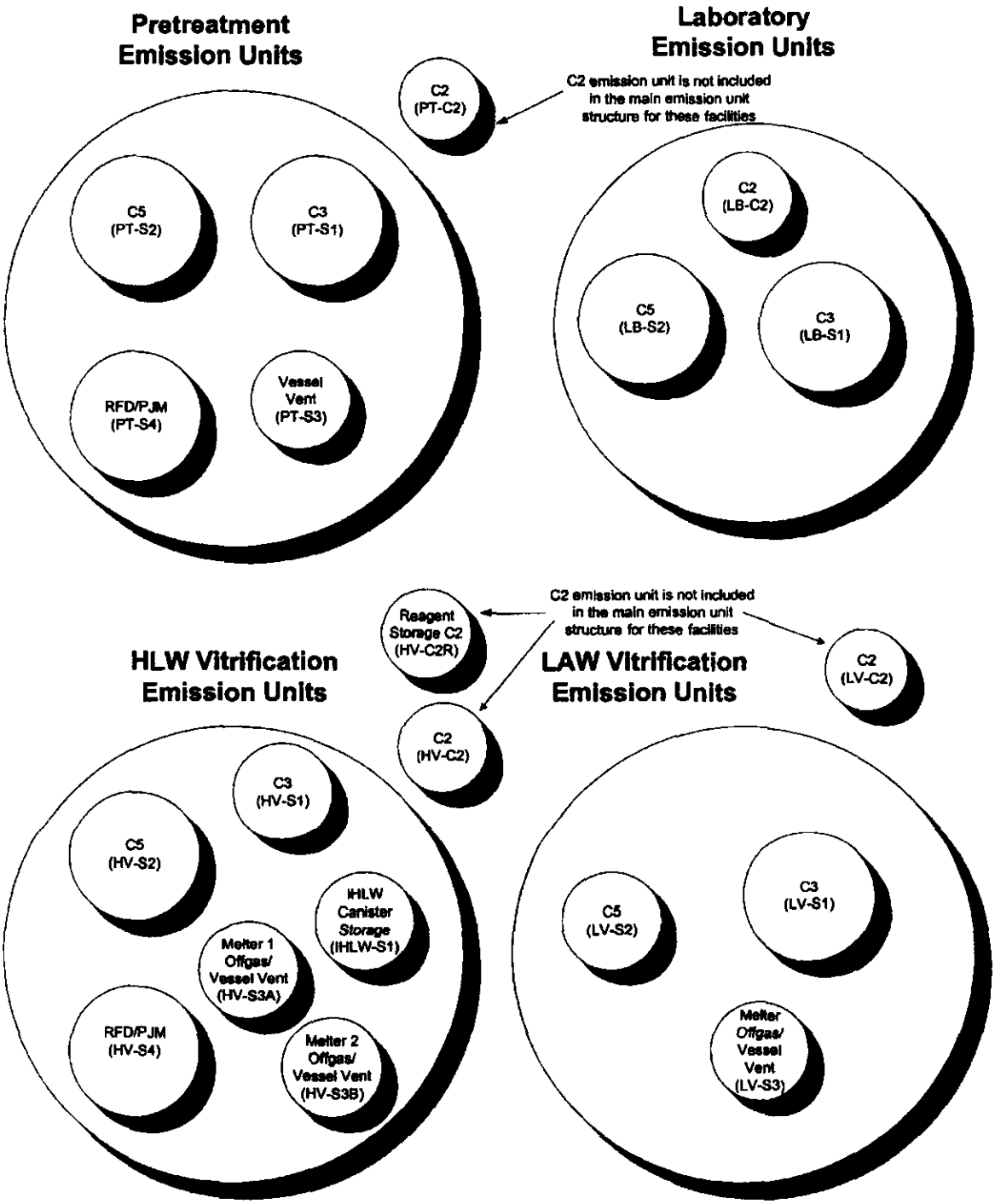

# Contents

**5 Proposed Non-Radionuclide Controls** ..... **5-1**

**5.1 Evaluation of BACT for Criteria Pollutants Emitted Below PSD Significance Levels** ..... **5-1**

**5.2 Proposed Offgas Treatment Systems for WTP** ..... **5-2**

5.2.1 Proposed Pretreatment Plant Offgas and Ventilation Treatment Systems ..... 5-2
5.2.2 Proposed LAW Vitrification Plant Offgas and Ventilation Treatment ..... 5-4
5.2.3 Proposed HLW Vitrification Plant Offgas System ..... 5-9
5.2.4 Melter Offgas Maintenance Bypass System ..... 5-13
5.2.5 Proposed WTP Building Ventilation ..... 5-14
5.2.6 Proposed Analytical Laboratory Offgas System ..... 5-14
5.2.7 Proposed Balance of Facilities Offgas Controls ..... 5-15

# Tables

**Table 5-1 Results of the T-BACT Analysis** ..... **5-16**

# 5 Proposed Non-Radionuclide Controls

Best available control technology for toxic air pollutants (T-BACT) and best available control technology (BACT) will be required for construction of the Hanford Tank Waste Treatment and Immobilization Plant (WTP) under Washington Administrative Code (WAC) 173-460-060 and WAC 173-400-113. A top-down T-BACT analysis has been performed on technologies to control toxic air pollutant emissions from the WTP. A separate T-BACT analysis report (24590-WTP-RPT-ENV-01-005) was prepared for each source of toxic air pollutant emissions within the WTP. The analysis was performed based on applicable state and federal standards and guidance.

This notice of construction (NOC) permit application presents the proposed control technologies for all of the criteria pollutants, including sulfur dioxide ($SO_2$), volatile organic compounds (VOCs), carbon monoxide (CO), and lead, which are expected to be released from the WTP in quantities below the prevention of significant deterioration (PSD) significance limits as defined under WAC 173-400-113. BACT analyses have been conducted for nitrogen oxides ($NO_x$) and particulates ($PM_{10}$), and are included in the Prevention of Significant Deterioration Permit Application (24590-WTP-RPT-ENV-01-007, Rev 1).

It should be noted that 1 of the criteria pollutants, ozone-depleting substances, will not be present in the Hanford double-shell tank (DST) wastes or the WTP processes. Therefore, a T-BACT analysis was not prepared for ozone-depleting substances.

**Summary of T-BACT Analyses**

As shown in Table 5-1, high efficiency particulate air (HEPA) filters with a removal efficiency of 99.95 % for single-stage filtration and 99.9995 % for 2-stage filtration are proposed as T-BACT for the control of particulates and aerosols. The offgases from low-activity waste (LAW) and high-level waste (HLW) melters are characterized as high temperature streams. Therefore, it was determined that additional equipment, such as quenching and mist elimination equipment, would be required to protect the HEPA filters in the HLW and LAW vitrification plants.

As indicated in the T-BACT analysis report (24590-WTP-RPT-ENV-01-005), caustic scrubbers with a removal efficiency of 97 % are proposed as T-BACT for the control of acid gases in the pretreatment (PT) and LAW vitrification plants. A silver mordenite adsorber is proposed as the T-BACT for the removal of halogens (precursors to acid gases) in the HLW waste feed. The silver mordenite will have a removal efficiency for halogens of 99.95 %.

Thermal oxidizers with a removal efficiency of 99 % or thermal catalytic oxidizers with a removal efficiency of 95 % are proposed as T-BACT for the control of VOCs in the PT, LAW vitrification, and HLW vitrification plants.

## 5.1 Evaluation of BACT for Criteria Pollutants Emitted Below PSD Significance Levels

Several criteria pollutants will be released from the WTP at levels below the PSD significance levels, including $SO_2$, VOCs, CO, and lead. The majority of these emissions result from the combustion of diesel fuel in the steam boilers. Please see Appendix B of this application for detailed emission calculations for the boilers.

Over 99 % of the $SO_2$ emissions come from the combustion of diesel fuel in the boilers. The proposed BACT for $SO_2$ will be defined as the use of ultra-low sulfur fuel oil with a sulfur content of less than 0.003 %.

The majority of the lead emissions from the WTP come from the combustion of diesel fuel in the boilers. However, only trace amounts of lead will be released from the WTP. The lead emission is estimated to be approximately 28 pounds per year. This is approximately 2 orders of magnitude below the PSD significance limit of 0.6 US tons per year (or 1,200 pounds per year). As a result, there was no T-BACT proposed for the control of lead emissions.

The combustion of diesel fuel in the boilers will be the primary source of emissions of CO and VOCs. The proposed BACT for these pollutants will be defined as the application of good combustion practices for the boilers. This is generally accepted throughout the US for boilers not subject to specific regulatory limits. Examples of good combustion practices may include a visual combustion check, air supply check, burner inspection, and periodic boiler tuneups in accordance with the manufacturer's recommendations.

## 5.2 Proposed Offgas Treatment Systems for WTP

This section briefly describes the proposed offgas treatment systems for the abatement of criteria pollutants and toxic air pollutant emission sources from the WTP.

### 5.2.1 Proposed Pretreatment Plant Offgas and Ventilation Treatment Systems

The PT plant offgas treatment systems will consist of 2 offgas streams. One stream will be from PT vessel vents, and the other stream will be exhaust from reverse flow diverters (RFDs) and pulsed jet mixers (PJMs). The process vessel vent offgas will be treated through a caustic scrubber, high efficiency mist eliminator (HEME), a VOC oxidation unit, and carbon bed adsorbers, and will be sampled and vented through emission unit PT-S3. The RFD and PJM offgas will be treated through demisters and HEPA filters, and will be sampled and vented through emission unit PT-S4.

The following paragraphs provide descriptions of the PT offgas treatment components.

- Air inlet (air purge system)
- Collection (exhaust piping system)
- Vessel vent caustic scrubber
- HEMEs (PT-S3 emission unit) and preheaters
- Demisters (PT-S4 emission unit)
- VOC oxidation unit
- Carbon bed adsorbers

**Air Inlet (Air Purge System)**

Because the PT process system design will be essentially an airtight design, the overall gas exhaust flow (except for evaporation, boiling, and so on) will be directly dependent on the air purge rates provided to each individual process vessel.

Continuous air purge to process vessels will be the primary control strategy for radiolytically produced hydrogen. Additional airflow above the minimum hydrogen control rate may be introduced to each vessel to help balance the system and ensure that all vessels are obtaining the minimum required flow. Additional airflow above the minimum for hydrogen dilution will also be introduced into individual vessels to remove heat by evaporative cooling. This function will help prevent boiling of self-heating tanks during an extended shutdown.

The air inlet header system will be fitted with balance and control valves to regulate flow, and a flow measurement device. Each inlet header will obtain air, at atmospheric pressure, from a C3 area and flow to a group of tanks. The supply lines will be designed to support the desired balance and the total flow, which is regulated at the inlet by the valves. The HEPA filters will protect the C3 area from cross contamination in the unlikely event of reverse airflow.

**Collection (Exhaust Piping System)**

From the individual process vessels, a vent line will route exhaust to a sub-header, usually 1 for each cell or group of vessels within a cell. The connection to the sub-headers from the process vessels will be arranged, where possible, to maintain airflow from normally lower activity vessels to (or past) normally higher activity level vessels. This will help prevent the contamination of lower activity vessels due to potential reverse flow or inbreathing. The sub-header locations and the overall flow scheme will also be influenced by the plant layout and by the physical location of the major vessel vent headers.

The final sizing of the individual exhaust vent lines will be determined by airflow, process pump capacities for filling vessels, and other potential pressurization scenarios. The individual exhaust vent lines, the sub-headers, and the headers will also be sized to minimize the overall pressure drop and to help balance the system.

**Vessel Vent Caustic Scrubber**

The vessel vent exhaust streams will be collected for treatment in the caustic scrubber. The scrubber removes radioactive aerosols, acid gases, and $NO_x$ emissions. The caustic scrubber will be a column with a bed filled with packing material. Sodium hydroxide solution flows down through the bed while the offgas enters the bottom and is drawn up through the packing and caustic solution. Contact between the gas and the liquid in the bed causes a portion of the $NO_x$ in the vent gas to dissolve and form sodium nitrate. The scrubbing liquor collects in the sump of the column, and any excess overflows to PT effluent collection.

After leaving the scrubber, the offgas will flow to the HEMEs. The HEMEs will prevent droplet carryover. Positioning the scrubber upstream of the HEMEs will saturate the gas flow and enable the HEMEs to avoid damage from dry operation. The scrubber will be provided with a bypass line and valve. The bypass function will permit continued operation of the hydrogen control system in the unlikely event that the scrubber becomes plugged or disabled, or during maintenance activities. Waste feed processing will be halted prior to initiating the use of the bypass line.

**High Efficiency Mist Eliminators and Preheater**

The HEMEs will be composed of regenerable deep-bed fiber filters configured in an annular shape to remove fine aerosols. Gas flows from the outside to the inside hollow core, where the treated gas exits at the top and the liquid collects at the sealed bottom in a drainpipe. The HEME will operate wet so that as

the liquid aerosols accumulate, they form a liquid film on the filter element and then drop to the drainpipe. Intermittent water spraying of the filter elements will be used to treat the vessel vent offgas stream.

Three separate HEMEs will be used to treat the vessel vent offgas streams. This configuration will permit washing each HEME while it is offline. The HEME effluent will be discharged to a drain vessel and then to an effluent vessel.

After treatment in a HEME, the vessel ventilation offgas stream will be heated by the hot air injection system prior to being processed through the oxidation unit. The hot air injection system draws air through HEPA filters from a C3 area. The air will be heated with an electric inline heater so that the combined air stream will be above its dewpoint to prevent condensation in the HEPA filters.

**Demisters**

The demister vessels will be provided with a number of segmented filter elements that are configured to form a set of long cylindrical filter candles to remove fine aerosols under dry operating conditions. The RFD and PJM exhausts will flow from the outside to the inside hollow core, from which the clean gases will exit the top.

Three separate demisters will be used to treat the RFD and PJM exhausts. This configuration will allow periodic washing of each demister while it is offline. The washing fluid will be discharged to a drain collection vessel.

After treatment in the demisters, the RFD and PJM exhausts will be mixed with heated C3 area air to maintain a desired relative humidity prior to treatment through the HEPA filters.

**Volatile Organic Compound Oxidation Unit**

A skid mounted VOC oxidation unit will remove VOCs from the vessel vent stream. This unit will oxidize the VOCs to form carbon dioxide, water, and a small amount of acid gases. The skid will comprise a heat recovery exchanger, an electric heater, and a residence time chamber for the VOC unit.

The vessel vent stream will be preheated in the heat recovery unit using heat recycled from the thermal oxidation unit offgas. The electric heater will be used to further heat the vessel vent stream to the temperature required at the inlet of the thermal oxidation unit.

**Carbon Bed Adsorbers**

Two parallel carbon beds will be provided after the oxidation unit. The carbon beds will further reduce VOCs in the offgas stream. The VOC oxidation unit is designed to remove most of the VOCs from the vessel vent and the carbon beds will remove the remaining VOCs.

### 5.2.2 Proposed LAW Vitrification Plant Offgas and Ventilation Treatment

The LAW vitrification plant will consist of 4 separate emission units that will emit radionuclide emissions: LV-C2, LV-S1, LV-S2, and LV-S3. The emission sources to LV-C2, LV-S1, and LV-S2 consist of offgases from plant building air supply systems. The offgases from those streams are expected to be particulate at normal temperatures. The emission sources to LV-S3 consist of offgases from LAW

melter and process vessels. This stream is expected to contain particulates, radioactive gases, volatile organics, and acid gases at a relatively high temperature and moisture content. Sections 5.2.3.1 and 5.2.3.2 describe the proposed LAW vitrification plant offgas treatment systems. Section 5.2.6 provides the proposed controls for emissions from the LAW vitrification plant building ventilation systems.

### 5.2.2.1 Proposed LAW Melter Offgas System

The proposed LAW melter offgas system consists of the following systems.

- LAW primary offgas treatment system
- LAW secondary offgas and vessel vent process system

Melter offgas will be generated from the vitrification of LAW in the joule-heated ceramic melters. The rate of generation of gases in the melters will be dynamic and not steady state. The melters will generate offgas resulting from the decomposition, oxidation, and vaporization of feed material. Constituents of the offgas include:

- $NO_x$
- Chloride, fluoride, and sulfur as oxides; acid gases; and salts
- Radionuclide particulates and aerosols

In addition, the LAW melters will generate small quantities of other volatile compounds including iodine-129 ($^{129}I$), carbon-14 ($^{14}C$), tritium ($^{3}H$), and VOCs.

The purpose of the LAW offgas system is to cool and treat the melter offgas and vessel ventilation offgas to a level that is protective of human health and the environment. The offgas system must also provide a pressure confinement boundary that will control melter pressure and prevent vapor release to the cell. The design of the melter offgas system needs to accommodate changes in offgas flow from each melter without causing other melters to pressurize, and without allowing variations in the flow from 1 melter to impact other melters.

Separate systems will be provided for the initial decontamination of offgas from each melter. This is known as the primary offgas treatment system. The primary offgas treatment system is designed to handle intermittent surges of 7 times steam flow and 3 times non-condensable flow from feed. The primary system consists of a film cooler, submerged bed scrubber (SBS), and a wet electrostatic precipitator (WESP). This system will cool the offgas and remove particulates.

Additionally, an extra line from the melter to the SBS is provided in the unlikely case that the primary offgas line plugs. This extra line is composed of a film cooler and a butterfly valve as the isolation device. As soon as the melter vacuum decreases to a set point, the butterfly valve is actuated and offgas flow is allowed through the line to the SBS, thereby preventing melter pressurization. In the event that the melter surge is much higher than the system is designed to handle, a pressure relief device acts as the pressure relief point venting the offgas to the wet process cell.

The vessel ventilation header offgas will be combined with the WESP offgas and routed to the secondary offgas treatment system. The secondary offgas treatment system will be designed to handle the maximum sustained flow rate from the melters, assuming all melters are operating. The system will be capable of

operating effectively if only 1 melter is running. The secondary offgas treatment system will consist of HEPA filters with preheater, exhauster fans, a carbon bed adsorber, a catalytic oxidizer/reducer unit, and a caustic scrubber. The following sections provide descriptions of melter offgas treatment components.

**LAW Primary Offgas Treatment System**

The purpose of the primary offgas treatment system is to cool the offgas and remove aerosols generated by the melter. The primary components consist of a film cooler, an SBS, and a WESP.

**Film Cooler.** The function of the film cooler is to cool the offgas below the glass sticking temperature to minimize solids deposition on the offgas piping walls. The offgas exits the melter and is mixed with air or a steam and air mixture in the offgas film cooler. Each melter has a film cooler. The film cooler is a double-walled pipe designed to introduce injected gas axially along the walls of the offgas pipe through a series of holes or slots in the inner wall.

**Submerged Bed Scrubber.** Each LAW melter has a dedicated SBS. After each film cooler, the offgas enters the SBS column for further cooling and solids removal. The SBS is a passive device designed for aqueous scrubbing of entrained radioactive particulate from melter offgas, for cooling and condensation of melter vapor emissions, and for interim storage of condensed fluids. It will also quench the offgas to a desired discharge temperature through the use of cooling coils and cooling jacket. The offgas leaves the SBS in thermal equilibrium with the scrubbing solution.

The SBS has 2 offgas inlets, 1 for the normal operations line, and 1 for the standby line. The offgas enters the SBS through the appropriate inlet pipe that runs down through the center of the bed to the packing support plate. The bed-retaining walls will extend below the support plate, creating a lower skirt that will allow the formation of a gas bubble underneath the packing. The entire bed is suspended off the floor of the SBS to allow the scrubbing solution to circulate freely through the bed. After the formation of the gas bubble beneath the packing, the injected offgas then bubbles up through the packed bed. The rising gas bubbles also cause the scrubbing liquid to circulate up through the packed bed, resulting in a general recirculation of the scrubbing solution. The packing breaks larger bubbles into smaller ones to increase the gas-to-water contacting surface, thereby increasing particulate removal and heat transfer efficiencies. The warmed scrubbing solution then flows downward, outside of the packed bed through the cooling coils and jacket.

The scrubbed offgas discharges through the top of the SBS and is routed to the WESP (1 per melter) for further particulate removal.

**Wet Electrostatic Precipitator.** The SBS offgas is routed to the WESP for removal of aerosols down to and including submicron size. Each melter system has a dedicated WESP. The offgas enters the bottom of the unit and passes through a distribution plate. The evenly distributed saturated gas then flows upward through the tubes. The tubes act as positive electrodes. Each tube has a single negatively charged electrode that runs down the center of the tube. A high-voltage, direct current transformer supplies power to the electrodes. A strong electric field is generated along the electrodes, giving a negative charge to the aerosols passing through the tubes. The negatively charged particles move towards the positively charged tube walls where they are collected. Collected particles are then washed from the tube walls along with collected mists. As the offgas passes through the tubes, the first particles captured are the water droplets. As the water droplets gravity drain through the electrode tubes, the collected particles are washed off, and the final condensate is collected in the WESP dished bottom area. A water spray may be used

periodically to facilitate washing collected aerosols from the tubes. The tube drain and wash solution are routed to a collection vessel.

**Standby Primary Offgas Treatment System**

The standby line consists of an offgas duct from the melter to the SBS and a pressure relief device. The standby offgas duct will extend to the bottom of the SBS packed bed, which is identical to the main offgas line. It is the same size as the main offgas line, thus it provides a doubling of flow for melter-generated gases. During the unlikely event of melter surge, the pressure relief device valve will open rapidly, providing an alternative path for the melter offgas. With this alternative routing, pressure control on the melter plenum can be maintained.

**Vessel Ventilation Offgas Treatment System**

The vessel ventilation offgas treatment system prevents the migration of waste contaminants into the process cells and operating areas. It does this by maintaining the various LAW process vessels under a slight vacuum relative to the pressure in the cell. The composition of the ventilation air is expected to be primarily air with slight chemical and radioactive particulate contamination.

The vessel ventilation air is combined with the melter offgas prior to entering the secondary offgas treatment system HEPA filter preheater. The combined air streams are treated together in the remaining sections of the secondary offgas treatment system. A pressure control device is used to regulate the pressure between the vessel ventilation offgas system and the melter offgas system.

**LAW Secondary Offgas and Vessel Ventilation Process System**

The melter offgas stream that is treated through the primary offgas treatment system is combined with the vessel ventilation offgas stream and treated through the LAW secondary offgas and vessel vent process system. This system removes the remaining particulate, miscellaneous acid gases, gaseous $NO_x$, and VOCs. Major components in the system include the HEPA preheaters and filters, carbon adsorber, a catalytic oxidizer and reducer unit, and a caustic scrubber. Descriptions of these components are provided below.

**HEPA Preheaters, Filters and Exhauster.** The offgas is heated, using an electric preheater, to a temperature above the gas stream's dewpoint and then passed through a dual set of HEPA filters to provide high efficiency submicron removal. The offgas is heated to avoid condensation in the HEPA filters. The HEPA filters provide a combined particulate removal efficiency greater than 99.9995 %. When the radiation levels or the differential pressure, or both, across the filters becomes too high, they will be manually changed. The system comprises 2 HEPA filter trains. The offgas passes through 1 filter train while the other remains available as an installed backup.

**Carbon Bed Adsorbers.** Two parallel carbon beds will be provided after the exhaust fans and will be arranged in a lead/lag configuration to allow continued operation media changeout.The carbon beds will be located upstream of the thermal catalytic oxidizer and reducer unit (TCO/SCR) to remove mercury and halides that have been identified as TCO/SCR catalyst poisons.

**Catalytic Oxidizer and Reducer Unit.** To remove volatile organics compounds and $NO_x$ from the offgas stream, a catalyst skid mounted unit with a combined thermal catalytic oxidizer unit and a $NO_x$ selective catalytic reduction (SCR) unit will be used. These units incorporate a heat recovery exchanger,

an electric heater, a thermal catalyst bed, and a $NO_x$ SCR bed. In this catalyst skid, organic compounds are oxidized to form carbon dioxide ($CO_2$), water vapor, and possibly acid gases (depending on the halogenated VOC present in the stream). Also, $NO_x$ is reacted with ammonia to reduce it to nitrogen gas and water vapor. The catalytic reduction unit has little effect in removing particulate radionuclides that may be present in the offgas and vessel vent stream. However, particulate radionuclides will have been removed upstream by HEPA filtration.

The VOC catalyst column operates at a somewhat lower temperature than the $NO_x$ catalyst; therefore, it is placed at the beginning of the unit. This arrangement also prevents the formation of $NO_x$ through the VOC catalyst's oxidation of ammonia, which is added after the gas goes through the VOC catalyst. Further offgas heating will occur through the VOC catalyst, as the reactions occurring will be exothermic.

As the offgas enters the unit, it travels through the heat recovery unit, which is a plate heat exchanger. The heating medium used is the exhaust from the catalytic oxidizer and reducer unit. The cool offgas enters the cold side of the heat recovery unit, then passes through an electric heater to bring the temperature up to that required for the VOC catalyst to operate.

After the VOC catalyst column, the offgas enters a chamber where either ammonia or a urea solution is injected through an atomized spray and allowed to mix with the offgas. Urea, an ammonia source, is added so that the $NO_x$ reduction reactions can be carried out. Two sets of $NO_x$ catalyst modules are required in order to achieve the required removal efficiency of greater than 95 %. The offgas is treated through the first set of $NO_x$ catalyst modules. After the first module, more ammonia or urea is injected into the stream to allow for further conversion in the second set. The offgas then goes through the second catalyst module. Reduction of $NO_x$ is also an exothermic reaction; therefore, it significantly increases the offgas temperature. This hot offgas then enters the hot side of the heat recovery unit to heat the incoming offgas. The cooled offgas stream is then directed to the caustic scrubber for iodine removal, acid gas removal, and final cooling.

**Caustic Scrubber.** The caustic scrubber further treats the melter offgas by removing $^{129}I$ and acid gases, and providing final offgas cooling. The offgas stream enters the bottom of the scrubber and flows upward through a packed bed. Contaminants in the offgas stream are absorbed into the liquid stream through the interaction of the gas, liquid, and packing media. To neutralize the collected acid gases, a sodium hydroxide solution is added periodically. The treated offgas is then discharged through a mist eliminator to prevent droplet carryover. After the caustic scrubber, the offgas is released to the environment via the LV-S3 emission unit.

#### 5.2.2.2 Immobilized Low-Activity Waste Glass Containers

The decontaminated immobilized low-activity waste (ILAW) containers will be shipped directly to a Hanford Site burial trench for disposal.

The ILAW containers will be constructed of steel that is physically and chemically compatible with the glass waste. All of the ILAW containers will be closed by means of mechanical sealing that will meet the ANSI 14.5 standard for reusable radiological shipping containers. Visual inspection will be conducted to ensure complete closure. Under normal operating conditions, the ILAW containers are not expected to produce non-radioactive air emissions.

### 5.2.3 Proposed HLW Vitrification Plant Offgas System

The HLW vitrification plant will consist of 8 separate emission units: HV-C2, HV-C2R (reagent storage room), HV-S1, HV-S2, HV-S3A and HV-S3B (second HLW melter emission unit), HV-S4, and IHLW-S1. The emission sources to HV-C2, HV-C2R, HV-S1, and HV-S2 will consist of offgases from plant building ventilation systems and will not emit non-radionuclide emissions. The emissions flowing to HV-S3A and HV-S3B will consist of offgases from the HLW melters and process vessels. These streams are expected to contain particulates, radioactive gases, volatile organics, and acid gases with relatively high temperature and moisture content. The emissions from HLW RFDs and PJMs will be vented through HV-S4.

The following sections provide a description of the proposed offgas control system for the HLW vitrification plant.

#### 5.2.3.1 Proposed HLW Melter Offgas Treatment Process System

The HLW melter offgas treatment process system consists of the following systems:

- HLW primary offgas treatment system
- HLW vessel vent process system
- HLW secondary offgas process system

Melter offgas will be generated from the vitrification of HLW in the joule-heated ceramic melters. The rate of generation of gases in the melters is dynamic and not steady state. The melters will generate offgas resulting from decomposition, oxidation, and vaporization of feed material. Constituents of the offgas will include:

- $NO_x$
- Chloride, fluoride, and sulfur as oxides; acid gases; and salts
- Radionuclide particulates and aerosols

In addition, the HLW melters generate small quantities of other volatile compounds, including $^{129}I$, $^{14}C$, $^{3}H$, and VOCs.

The purpose of the HLW offgas treatment system is to cool and treat melter offgas and vessel ventilation offgas to a level that is protective of human health and the environment. The offgas system must also provide a pressure confinement boundary that will control melter pressure and prevent vapor release to the plant. The design of the melter offgas system must accommodate changes in offgas flow from the melter without causing the melter to pressurize.

Initial decontamination of offgas from the melters is provided by the primary offgas treatment system. This primary offgas treatment system is designed to handle intermittent surges of 7 times steam flow and 3 times non-condensable flow from feed. The primary system consists of a film cooler, an SBS, a WESP, a HEME, and 2 stages of HEPA filtration. This system cools the offgas and removes particulates.

Additionally, an extra line from the melter to the SBS is provided in the unlikely case that the primary offgas line plugs. This extra line includes a valve as the isolation device. As soon as the melter vacuum

decreases to a set point, the valve is actuated and offgas flow is allowed through the line to the SBS, thereby preventing melter pressurization. In the event that the melter surge is much higher than the system is designed to handle, a pressure relief device acts as the pressure relief point venting the offgas to the melter cell.

The vessel ventilation header joins the primary offgas treatment system after the WESP. After passing through the HEPA filters, the offgas is routed to the secondary offgas treatment system. The offgas received through the vessel ventilation system consists primarily of air, water vapor, and minor amounts of aerosols generated by the agitation or movement of vessel contents.

The secondary offgas system is designed to handle the maximum sustained flow rate from the melter. The secondary offgas system consists of, exhauster fans (2 sets), a carbon bed adsorber, a heat recovery unit, a silver mordenite adsorption unit, and a catalytic oxidizer and reducer unit.. The following sections provide descriptions of major melter offgas treatment components.

**Primary Melter Offgas Treatment System**

The purpose of the primary melter offgas treatment system is to cool the melter offgas and remove offgas aerosols generated by the melter and from the vessel ventilation air. This treatment system consists of a film cooler, an SBS, a WESP, a HEME, an electric heater, and HEPA filters. Each of the HLW melters will have a dedicated offgas treatment system, and the following descriptions apply to both melter offgas treatment systems.

**Film Cooler.** The function of the film cooler is to cool the offgas below the glass sticking temperature to minimize solids deposition on the offgas piping walls. The offgas exits the melter and is mixed with air in the offgas film cooler. Each melter has a film cooler. The film cooler is a double-walled pipe designed to introduce injected gas axially along the walls of the offgas pipe through a series of holes or slots in the inner wall.

A mechanical reamer may be mounted on the film cooler to periodically remove solids buildup from the inner film cooler wall. The reaming device (wire brush or drill) will be periodically inserted into the film cooler for mechanical solids removal.

**Submerged Bed Scrubber.** The offgas from the HLW melter is further treated by an SBS. The offgas enters the SBS column for further cooling and solids removal. The SBS is a passive device designed for aqueous scrubbing of entrained radioactive particulate from the melter offgas, for cooling and condensation of melter vapor emissions, and for interim storage of condensed fluids. It will also quench the offgas to a desired discharge temperature through the use of cooling coils and cooling jacket. The offgas leaves the SBS in thermal equilibrium with the scrubbing solution.

The SBS has 2 offgas inlets: 1 for the normal operations line and 1 for the standby line. The offgas enters the SBS through the appropriate inlet pipe that runs down through the center of the bed to the packing support plate. The bed-retaining walls will extend below the support plate, creating a lower skirt that will allow the formation of a gas bubble underneath the packing. The entire bed is suspended off the floor of the SBS to allow the scrubbing solution to circulate freely through the bed. After formation of the gas bubble beneath the packing, the injected offgas then bubbles up through the packed bed. The rising gas bubbles also cause the scrubbing liquid to circulate up through the packed bed, resulting in a general recirculation of the scrubbing solution. The packing breaks larger bubbles into smaller ones to increase the gas-to-water contacting surface, thereby increasing particulate removal and heat transfer efficiencies.

The warmed scrubbing solution then flows downward outside of the packed bed through cooling coils and cooling jacket. The scrubbed offgas discharges through the top of the SBS and is routed to the WESP for further particulate removal.

**Wet Electrostatic Precipitator.** The SBS offgas is routed to the WESP for removal of aerosols down to and including those of submicron size. The offgas enters at the bottom of the unit and may pass through a distribution plate. The evenly distributed saturated gas then flows upward through the tubes. The tubes act as positive electrodes. Each of these tubes has a single negatively charged electrode that runs down the centerline of each tube. A high voltage, direct current transformer supplies the power to the electrodes. A strong electric field generated along the electrodes will give a negative charge to the aerosols. The negatively charged particles move toward the positively charged tube walls for collection. Collected particles are then washed from the tube walls along with collected mists. As the gas passes through the tubes, the first particles captured are the water droplets. As the water droplets gravity drain through the electrode tubes, the collected particles are washed off and the final condensate is collected in the WESP dished bottom area. A water spray may be used periodically to facilitate washing the collected aerosols from the tubes. The tube drain and the wash solution are routed to a collection vessel.

**High Efficiency Mist Eliminator.** Further removal of radioactive aerosols is accomplished using the HEME. The HEMEs also reduce the dust-loading rate of the HEPA filters. A HEME is essentially a high efficiency demister that has a removal efficiency of greater than 99 % for aerosols down to those of submicron size. As the offgas passes through the HEME, the liquid droplets and other aerosols within the offgas interact with HEME filaments. As the aerosols contact the filaments, they adhere to the filaments' surface because of surface tension. As the droplets agglomerate and grow, they eventually acquire enough mass to fall by means of gravity to the bottom of the unit, thus overriding the original surface tension, friction with the filaments, and the gas velocity. These collected droplets will contain the majority of the offgas radioactivity and will be collected in the bottom of the HEME. The condensate will collect and gravity drain into an SBS condensate vessel. As the condensate flows down through the filter bed, a washing action is generated that will help wash collected solids from the filter elements. However, some solids may accumulate in the bed over time, causing the pressure drop across the filter to increase. When the pressure drop across the HEME reaches a predefined level, it is washed with process water to facilitate the removal of accumulated solids. Some insoluble solids may remain, and their accumulation will eventually lead to the replacement of the HEME filter elements.

**HEPA Preheaters, Filters and Exhauster.** The offgas is heated using an electric preheater to a temperature above the gas stream's dewpoint and then passed through a dual set of HEPA filters to provide high efficiency submicron removal. The offgas is heated to avoid condensation in the HEPA filters. The HEPA filters provide a combined particulate removal efficiency greater than 99.9995 %. When the differential pressure drop across the filters becomes too high, they will be remotely changed out. The system comprises 2 parallel heater and HEPA filter trains. The offgas passes through 1 train while the other remains available as an installed backup.

**Standby Primary Offgas Treatment System**

The standby line consists of an offgas duct from the melter to the SBS and a pressure relief device. The standby offgas duct will extend to the bottom of the SBS packed bed, which is identical to the main offgas line. It is the same size as the main offgas line, thus it provides a doubling of flow cross for melter-generated gases. During the unlikely event of melter surge, the pressure relief valve will open rapidly, providing an alternative path for the melter offgas to flow. With this alternative routing, pressure control on the melter plenum can be maintained.

**Vessel Ventilation Offgas Treatment System**

The vessel ventilation offgas treatment system prevents migration of waste contaminants into the process cells and operating areas. It does this by maintaining the various HLW process vessels under a slight vacuum relative to the cell pressure. The composition of the ventilation air is expected to be primarily air with slight chemical and radioactive particulate contamination.

The vessel ventilation air combines with the melter offgas prior to entering the primary offgas treatment system HEMEs. The combined air streams are treated together in the remaining sections of the primary and secondary offgas treatment systems. A pressure control device is used to regulate the pressure between the vessel ventilation offgas system and the melter offgas system.

**HLW Pulse Ventilation System**

Gaseous emissions are produced by RFDs and PJMs that are used to mix and move wastes in the HLW vitrification plant. The exhaust from RFDs and PJMs throughout the HLW vitrification plant is collected in the pulse ventilation system headers. This exhaust is potentially contaminated with aerosols and particulates. Electric preheaters eliminate liquid aerosols and reduce the relative humidity of the gas stream, as necessary, before it encounters the system HEPA filters. The gas is passed through HEPA filters to remove particulates that may be present. When the differential pressure drops or radiation levels across the filters become too high, the filters will be remotely changed.

**Secondary Offgas Treatment System**

The combined primary offgas stream and vessel ventilation offgas stream are discharged to the secondary offgas treatment system. The secondary offgas system will treat the combined offgas to a level that is protective of human health and the environment. Specifically, the secondary offgas treatment system will remove radioactive iodine, VOCs, and acid gases, as required, to meet the facility air discharge requirements. The secondary offgas treatment system consists of carbon bed adsorbers, silver mordenite column, an organic thermal catalytic oxidizer unit, and a $NO_x$ SCR unit.

**Carbon Bed Adsorbers**

Two parallel carbon beds will be provided after the exhaust fans and will be arranged in a lead/lag configuration to allow continued operation media changeout. The carbon beds will be located upstream of the thermal catalytic oxidizer and reducer unit (TCO/SCR) to remove mercury and halides from the offgas and serve to prevent mercury from fouling the TCO/SCR catalyst.

**Silver Mordenite Adsorber.** The silver mordenite adsorber is present to remove halogens such as radioactive iodine, fluorine, and chlorine from the melter offgas. Silver mordenite is an absorbent in the form of cylindrical pellets contained in cartridges. The absorbent is expected to lose effectiveness over time and will require replacement. Halogens react with the silver in the bed and are trapped within the matrix. Loading begins at the front of the silver mordenite beds and progressively loads the silver through the column until breakthrough is reached at the end of the column. Absorption reactions occur within a reaction zone (or mass transfer zone) that varies in length, depending on the temperature of the bed and the gas velocity through the bed. The column structure is similar to that in a carbon bed absorber. The adsorber unit is not a tank-like structure, but is instead a bank of cartridges through which the gas

stream is directed. The absorbent cartridges allow for manual removal and replacement, when required or after a predetermined life span, and are sized to fit into standard waste drums for disposal.

**Catalytic Oxidizer and Reducer Unit.** To remove VOCs and $NO_x$ in the offgas stream, a catalyst skid mounted unit with a combined thermal catalytic oxidizer unit and a $NO_x$ SCR unit will be used. These units incorporate a heat recovery exchanger, an electric heater, a thermal catalyst bed, and a $NO_x$ SCR bed. In this catalyst skid, organic compounds are oxidized to $CO_2$, water vapor, and possibly acid gases (depending on the halogenated VOC present in the stream). Also, $NO_x$ is reacted with ammonia to reduce it to nitrogen gas and water vapor.

The VOC catalyst column operates at the same temperature as the $NO_x$ catalyst. This arrangement prevents the formation of $NO_x$ through the VOC catalyst column by means of the oxidation of ammonia, which is added after the gas goes through the VOC catalyst. Further offgas heating will occur through the VOC catalyst column, as the reactions occurring are exothermic.

As the offgas enters the unit, it travels through the heat recovery unit, which is a plate heat exchanger. The heating medium used is the exhaust from the catalytic oxidizer and reducer unit. The cool offgas enters the cold side of the heat recovery unit, then passes through an electric heater to bring the temperature up to that required for the VOC catalyst column to operate.

After the VOC catalyst column, the offgas enters a chamber where gaseous ammonia is injected through an atomized spray and allowed to mix with the offgas. Ammonia is added so that the $NO_x$ reduction reactions can be carried out. Reduction of $NO_x$ is also an exothermic reaction; therefore, it significantly increases the offgas temperature. This hot offgas then enters the hot side of the heat recovery unit to heat the incoming offgas. The offgas stream is then directed to the silver mordenite column for iodine and acid gas removal.

#### 5.2.3.2 Immobilized High-Level Waste Glass Canister Storage

The decontaminated immobilized high-level waste (IHLW) canisters are stored at the IHLW canister storage area, which is located in the HLW vitrification plant.

The IHLW containers will be constructed of steel. The steel will be physically and chemically compatible with the glass waste. All of the IHLW canisters will be sealed by means of welding. Visual inspections will be conducted to ensure their complete closure. Under normal operating conditions, the IHLW canisters are not expected to produce non-radioactive air emissions. Therefore, no non-radionuclide controls will be provided for the IHLW canister storage area.

### 5.2.4 Melter Offgas Maintenance Bypass System

The HLW melters are equipped with a maintenance ventilation line that bypasses the SBS and WESP units. The purpose of this line is to provide melter ventilation during idling conditions in the unlikely event that the SBS or WESP requires maintenance. Prior to initiating the use of the maintenance ventilation line, waste feed will be halted and the melter placed in an idle mode. No waste will be fed to the melters when the maintenance ventilation line is in use.

The maintenance ventilation line may also be used during commissioning, when the plant is running on non-radioactive, nondangerous simulants. The maintenance ventilation line may also be used if maintenance is required for the melter standby, or for duty offgas lines connecting the melter and the

SBS, or for the standby offgas line actuation valve. In this case, the standby and duty lines would be isolated, for example, by valves, spectacle flanges, or hydraulically (by raising the level in the SBS).

Idling emissions from the melter are mainly heated air at about 1/5 to 1/10 the gas volume expected during slurry feeding. This gas will still be processed through the secondary offgas treatment system, which includes HEPA filtration, thermal catalytic oxidation, and SCR.

### 5.2.5 Proposed WTP Building Ventilation

The PT, LAW vitrification, and HLW vitrification plant building ventilation systems requiring radiological controls are:

- C2 area ventilation system
- C3 area ventilation system
- C5 area ventilation system

The C2 areas typically will consist of nonprocess operating areas, access corridors, and control/instrumentation and electrical rooms. Filtered air will be supplied to these areas by the C2 supply system and will be cascaded into adjacent C3 areas or HEPA filtered and passed through the C2 exhaust system.

The C3 areas typically will consist of filter plant rooms, workshops, maintenance areas, and monitoring areas. Access from a C2 area to a C3 area will be via a C2 and C3 sub-change room. Air will generally be drawn from C2 areas and cascaded through the C3 areas into C5 areas. The C3 air that is not cascaded to C5 areas is passed through HEPA filters and discharged to the atmosphere.

The C5 areas typically will consist of a series of process cells where waste will be stored and treated. The hot cell will house major pumps and valves and other process equipment. Air will be cascaded into the C5 areas, generally from adjacent C3 areas, and extracted by the C5 extraction system. The C5 exhaust system will comprise HEPA filters and variable speed fans. Fans designed to maintain continuous system operation will drive the airflow. This system will also be interlocked with the C3 area ventilation system in order to prevent backflow by shutting down the C3 system if the C5 area ventilation system shuts down. The C5 air is passed through HEPA filters and discharged to the atmosphere.

### 5.2.6 Proposed Analytical Laboratory Offgas System

The WTP analytical laboratory will provide support for WTP process control samples and select tank farm waste acceptance samples. Regulatory analysis for air, liquid, soil, and sludge samples and tank farm grab samples will be completed by a subcontract laboratory. Radionuclide particulate and aerosols are expected in the analytical laboratory exhaust systems due to the handling and analysis of various samples.

The WTP laboratory will be composed of analytical hot cell laboratory equipment system (AHL) and analytical radiological laboratory equipment system (rad labs). Sample conveyance systems will automatically transport samples from the other process plants to the analytical laboratory. High-activity samples will be managed in a hotcell area that will contain hot cells dedicated to sample receipt, sample fusion, acid digestion, and dilution to support specific analytical techniques or functions in the analytical radiological laboratories. The hot cell exhaust will be handled as C5 ventilation system and the exhausts

from C5 ventilation will be vented through the C5 emission unit (LB-S2). This stream will be filtered through a two-stage HEPA filtration system.

The analytical radiological laboratory will support analyses of low and medium radioactive samples. Each laboratory will have specific analytical equipment to perform the intended function. Fume hoods within these laboratories will be handled by the C3 ventilation system and vented through emission unit LB-S1. This stream is processed through one stage of HEPA filtration. The building ventilation air associated with general laboratory work areas or offices will be vented through emission unit LB-C2. This stream is processed through a one-stage HEPA filtration system.

### 5.2.7 Proposed Balance of Facilities Offgas Controls

Based on the anticipated activities and emission analyses that follow (see section 6), the glass former storage area is the only area that will be equipped with controls for criteria air pollutant emissions.

The outdoor storage area will contain the material storage silos, weight hoppers, transporters, blending silos, and blended glass former transporters. The storage silos and blending silos will have baghouses to minimize emissions during loading and unloading. To further limit emissions, transfer of the glass formers between the weigh hoppers, the blending silos, and the melter feed hoppers will occur through sealed, dense-phase pneumatic conveying.

**Table 5-1 Results of the T-BACT Analysis**

| Process/Facility | Abated Emission Point | Flue Name | Unabated Emission Sources | Proposed Controls | | | |
|---|---|---|---|---|---|---|---|
| | | | | Acid Gas ($SO_2$) | $NO_x$ [c] | Particulates and Aerosols [c] | Volatile Organics |
| Pretreatment | Pretreatment stack | PT-S1 | C3 building air | NA | NA | HEPA (single) [RE=99.95 %] | NA |
| | | PT-S2 | C5 building air | NA | NA | HEPA [RE=99.9995 %] | NA |
| | | PT-S3 | Process vessel vent<br>LAW evaporator offgas<br>LAW melter offgas | Caustic scrubber [RE=97 %] | NA | HEPA [RE=99.9995 %] | Thermal Catalytic Oxidizer [RE=95 %] |
| | | PT-S4 | RFD/PJM exhausts | NA | NA | HEPA [RE=99.9995 %] | NA |
| | C2 air discharge | PT-C2 | C2 building air | NA | NA | HEPA (single) [RE=99.95 %] | NA |
| LAW vitrification | LAW vitrification stack | LV-S1 | C3 building air | NA | NA | HEPA (single) [RE=99.95 %] | NA |
| | | LV-S2 | C5 building air | NA | NA | HEPA [RE=99.9995 %] | NA |
| | | LV-S3 | LAW melter offgas<br>process vessel vent | Caustic scrubber [RE=97 %] | Selective catalytic reducer [RE=95 %] | HEPA [RE=99.9995 %] | Thermal Catalytic Oxidizer [RE=95 %] |
| | C2 air discharge | LV-C2 | C2 building air | NA | NA | HEPA (single) [RE=99.95 %] | NA |
| HLW vitrification | HLW vitrification stack | HV-S1 | C3 building air | NA | NA | HEPA (single) [RE=99.95 %] | NA |

**Table 5-1 Results of the T-BACT Analysis**

| Process/Facility | Abated Emission Point | Flue Name | Unabated Emission Sources | Proposed Controls | | | |
|---|---|---|---|---|---|---|---|
| | | | | Acid Gas ($SO_x$) | $NO_x$ [c] | Particulates and Aerosols [c] | Volatile Organics |
| HLW vitrification | HLW vitrification stack | HV-S2 | C5 building air | NA | NA | HEPA [RE=99.9995 %] | NA |
| | | HV-S3A and HV-S3B | HLW melter offgas<br>Process vessel vent | Silver mordenite adsorber [a] [RE=99.95 %] | Selective catalytic reducer [RE=95 %] | HEPA [RE=99.9995 %] | TCO [RE=95 %] |
| | | HV-S4 | RFD/PJM exhausts | NA | NA | HEPA [RE=99.9995 %] | NA |
| | C2 air | HV-C2 and HV-C2R | C2 building air | NA | NA | HEPA (single) [RE=99.95 %] | NA |
| WTP laboratory | WTP laboratory stack | LB-S1 | C3 building air | NA | NA | HEPA (single) [RE=99.95 %] | NA |
| | | LB-S2 | C5 building air | NA | NA | HEPA [RE=99.9995 %] | NA |
| | C2 air | LB-C2 | C2 building air | NA | NA | HEPA (single) [RE=99.95 %] | NA |
| BOF | Glass former storage | NA | Glass former materials | NA | NA | Baghouse | NA |
| | Central waste storage | NA | NA | NA | NA | NA [b] | NA |
| | Steam plant | NA | Diesel-fired boilers | Ultra Low Sulfur Fuel (30 ppm), Good combustion practices | Low $NO_x$ burners, Steam atomization | Good combustion practices | Good combustion practices |
| | Backup generators | NA | Diesel-fired engines | Ultra Low Sulfur Fuel (30 ppm) | NA | NA | NA |

**Table 5-1 Results of the T-BACT Analysis**

| Process/Facility | Abated Emission Point | Flue Name | Unabated Emission Sources | Proposed Controls | | | |
|---|---|---|---|---|---|---|---|
| | | | | Acid Gas ($SO_x$) | $NO_x$ [c] | Particulates and Aerosols [c] | Volatile Organics |
| | Fire water pump | NA | Diesel-fired engines | Ultra Low Sulfur Fuel (30 ppm) | NA | NA | NA |
| | Fuel storage tanks | NA | Fuel transfer and storage | NA | NA | NA | NA |

a treatment for halogen-containing acid gases
b no vented containers
c Regulated under Prevention of Significant Deterioration Permit
BOF balance of facilities
NA not applicable: no gaseous toxics emitted requiring T-BACT control technology
RE removal efficiency

# Contents

6 Emissions Estimation and Air Impact Analysis ..... 6-1

6.1 Emission Calculations ..... 6-1
6.1.1 Air Toxic and Criteria Pollutant Emissions from Pretreatment, LAW Vitrification, and HLW Vitrification Processes ..... 6-1
6.1.2 Air Toxic and Criteria Pollutant Emissions from the WTP Analytical Laboratory ..... 6-1
6.1.3 Air Toxic and Criteria Pollutant Emissions from the Balance of Facilities ..... 6-1

6.2 Dispersion Modeling Methodology ..... 6-4
6.2.1 Meteorological Data ..... 6-5
6.2.2 Receptor Grid ..... 6-5
6.2.3 Building Downwash ..... 6-6
6.2.4 Stack Parameters ..... 6-6

6.3 Air Quality Modeling Results ..... 6-6

# 6 Emissions Estimation and Air Impact Analysis

This section contains descriptions of the emission rates of toxic air pollutants and criteria pollutants and also the air quality impact analysis from toxic air pollutant (TAP) emissions for the Hanford Tank Waste Treatment and Immobilization Plant (WTP).

## 6.1 Emission Calculations

The primary source for determining the criteria pollutant and toxic air pollutant emissions from the WTP process facilities is the *Integrated Emissions Baseline Report for the Hanford Tank Waste Treatment and Immobilization Plant* (24590-WTP-RPT-PO-03-008, Rev 0). This report contains estimated emission rates for 470 organic, inorganic, and radionuclide constituents of potential concern (COPC). Emission rates from the pretreatment (PT), low-activity waste (LAW) vitrification, and high-level waste (HLW) vitrification processes were estimated using the Aspen Custom Modeler computer software (WTP Steady-State Flowsheet Model). Engineering calculations were prepared to project the emission rates associated with the COPC that were not included in the computer model and, consequently, not part of the baseline flowsheet.

### 6.1.1 Air Toxic and Criteria Pollutant Emissions from Pretreatment, LAW Vitrification, and HLW Vitrification Processes

The *Integrated Emissions Baseline Report for the Hanford Tank Waste Treatment and Immobilization Plant* (24590-WTP-RPT-PO-03-008) estimates criteria and air toxic pollutant emissions from the PT, HLW, and LAW vitrification processes and presents the emission rates for inorganic and organic air toxic and criteria pollutants, respectively. The unabated and abated emission rates are provided in Appendix B.

### 6.1.2 Air Toxic and Criteria Pollutant Emissions from the WTP Analytical Laboratory

Calculations of criteria and air toxic pollutant emissions from the analytical laboratory were calculated using an engineering estimate based on the annual usage of chemicals at the analytical laboratory. A release fraction was multiplied by the annual use of chemicals to estimate the amount that would be potentially emitted to the laboratory ventilation system. Based on the small quantities of constituents being managed, and because most constituents are in a liquid or solid phase, a conservative release fraction of 1.0E-03 was applied to all constituents in order to calculate the estimated emissions. Emission estimates were derived from the annual quantities used of each organic and inorganic constituent. Emissions to the LB-S1 emission unit (C3) were calculated from quantities present in the radiological laboratories (rad labs) and C3 collection vessel. Emissions to the LB-S2 emission unit (C5) were calculated from quantities present in the hot cells and the C5 collection vessel. The analytical laboratory emissions are presented in Appendix B.

### 6.1.3 Air Toxic and Criteria Pollutant Emissions from the Balance of Facilities

There are a number of potential emission sources of air toxic and criteria pollutants in the balance of facilities (BOF) areas. These include:

- Boilers
- Generators

- Fire pump engines
- Central waste storage area
- Cooling tower facility
- Fuel oil pump house
- Fuel oil storage vessels
- Glass former storage building
- Out-of-service melter storage areas
- Water treatment plant
- Wet chemical storage area

The following subsections provide descriptions of air toxic and criteria pollutant emissions from BOF areas.

#### 6.1.3.1 Boilers

The steam plant will supply steam to the PT, LAW vitrification, and HLW vitrification plants and will also provide heat to other WTP buildings. The steam plant will utilize six boilers each with a heat output of 50 million BTU per hour and will operate on ultra-low sulfur diesel fuel with a sulfur content of 30 parts per million (ppm), or 0.003 %, by weight. The potential air toxic pollutant emissions were estimated using the *Compilation of Air Pollutant Emission Factors, AP-42, Fifth Edition, Volume I: Stationary Point and Area Sources* (EPA 1998), emission factors provided by the California Air Resources Board (CARB 1991), and emission factors provided by Cleaver-Brooks (boiler vendor). The emission factors were then multiplied by the maximum boiler output and the total hours of operation to arrive at estimated emissions. The boiler emissions estimates are provided in Appendix B.

#### 6.1.3.2 Generators and Emergency Fire Pump Engines

A total of 3 diesel generators will be located in the BOF and will include 2 important to safety (ITS) generators and 1 non-important to safety (NITS) generator. The generators will provide emergency electrical power to the BOF, PT plant, and LAW and HLW vitrification plants in the event of loss of site power. The air toxic and criteria pollutant emissions from the generators were estimated based on emission factors published in EPA 1998, section 3.4, Large Stationary Diesel and All Stationary Dual-Fuel Engines, supplementary data from the California Air Resources Board (CARB 1991), and vendor supplied emission factors. All generators will be operated using ultra-low sulfur diesel fuel with a sulfur content of 30 ppm by weight.

The fire pump house will contain the 2 diesel engine driven fire pump packages and the electric motor driven fire pump package. During normal operation, the primary fire pump will be electric motor driven and the secondary pumps will be diesel engine driven. The air toxic and criteria pollutant emissions from the diesel engine driven fire pumps were estimated based on emission factors published in EPA 1998, section 3.3, Gasoline and Diesel Industrial Engine, supplementary data from the California Air Resources Board (CARB 1991), and vendor supplied emission factors. The fire pump engines will be operated using ultra-low sulfur diesel fuel with a sulfur content of 30 ppm by weight.

The generators' emissions and fire water pump emissions are provided in Appendix B.

#### 6.1.3.3 Cooling Tower Facility

The cooling tower facility will provide the heat sink for cooling loads generated in the WTP. A multi-cell, mechanical draft, counter flow, evaporative cooling tower will be used to provide the heat sink. The cooling water chemistry is maintained by injecting organic phosphate and polymer for corrosion control, and biocide to control algae. Sulfuric acid may also be used to control the pH of the cooling water. This area is not expected to produce significant air toxic and criteria pollutant emissions.

#### 6.1.3.4 Fuel Oil Pump House

The fuel oil pump house consists of fuel oil transfer pumps, diesel fuel unloading pumps, and the boiler fuel oil pumps. It provides weather protection for the pumps and associated equipment. It also provides a controlled environment for the operation and maintenance of equipment and for personnel access. These pumps are expected produce approximately 0.3 US tons per year of volatile organic compound (VOC) emissions.

#### 6.1.3.5 Fuel Oil Storage

A total of 5 fuel oil storage vessels will be located in the BOF area to provide fuel to the boilers, generators, and the fire pumps.

The largest vessel will be the main fuel storage vessel provided for the boilers, and it has a capacity of approximately 345,000 US gallons.

Two 26,000 US gallon horizontal vessels will service the 2 ITS generators, and one 1,100 US gallon horizontal vessel will service the NITS generator. In addition, one 500 US gallon horizontal vessel will service the 2 diesel powered fire pump engines.

All vessels will store # 2 ultra low sulfur diesel fuel oil, and each has the potential to produce emissions of VOCs from working and breathing losses.

Emission estimates were calculated from vessel volumes, dimensions, shell colors, and their anticipated throughput and were determined using the *Storage Tank Emissions Calculation Software* (TANKS) (EPA 1999) for this notice of construction permit application. Results of the emissions calculations showed the total VOC emissions to be approximately 0.21 US tons per year. Therefore, these tanks are an insignificant source of VOC emissions.

#### 6.1.3.6 Glass Former Storage Building

A glass former storage building will be designed to receive, store, weigh, and blend glass former materials, and also to transport glass former materials to the LAW and HLW vitrification plants. The building will consist of an enclosed materials receipt area and an outdoor storage area. The receipt area houses a truck unloading drive-through, a bagged chemical storage area, bag unloaders, a vacuum unloader and transporter, an operator's office, and air compressors that support the glass former handling and pneumatic transport. The outdoor storage area will contain storage silos, weight hoppers, transporters, blending silos, and blended glass former transporters. The building will have a baghouse to minimize particulate emissions during loading and unloading. Transference of the glass formers will occur by means of a sealed pneumatic transport.

An emissions estimate was developed for the activity associated with loading, unloading, and storage of the glass formers. The estimate was based on a US Environmental Protection Agency (EPA) emission factor developed for the production of sodium carbonate, which is 1 of the glass formers used at the WTP. The emission estimate for loading, unloading, and storage activities at the glass former storage building should be bounding, because that environment will be better controlled. The emissions at the glass former building will be well controlled using a baghouse and a sealed pneumatic transport system. Because this facility's emissions result only in particulate matter, the emissions calculation estimates are provided in *Prevention of Significant Deterioration Application for Hanford Tank Waste Treatment and Immobilization* (24590-WTP-ENV-01-007, Rev 1).

#### 6.1.3.7 Out-of-Service Melter Storage Areas

The out-of-service melter storage areas will be used primarily to stage out-of-service melters prior to transferring them to a permitted treatment, storage, or disposal facility. The out-of-service melters will be totally enclosed. Therefore, no emissions are expected.

#### 6.1.3.8 Water Treatment Plant

A water treatment plant will be developed to provide process, potable, and demineralized water. The water treatment plant will also be used to store typical water treatment chemicals such as organic phosphate and sulfuric acid. Other water treatment packages, such as the water softening unit and the demineralizer package, will be located within the water treatment plant. These activities are not expected to produce significant air toxic and criteria pollutant emissions.

#### 6.1.3.9 Wet Chemical Storage Area

The wet chemical storage area will be located on the southwest side of the PT plant. This building will be used to store resin and reagents such as nitric acid, strontium nitrate, sodium permanganate, sodium nitrite, and sodium hydroxide. The resins will be stored in an enclosed, controlled environment. The remaining chemicals will be stored in tanks with spill retention curbs. Most of these chemicals are nonvolatile and will not have emissions. Nitric acid will be stored at both high and low concentrations (12.2 molar, 0.5 molar, and 2.0 molar) in closed tanks. Therefore, air toxic and criteria pollutant emissions are not expected.

#### 6.1.3.10 Immobilized High-Level Waste Container Lid Welding

After the HLW canisters are filled with molten glass and cooled, the lids are welded on to seal the canisters. An automatic gas tungsten arc weld process is used to weld the lids. This welding process employs an electric arc created between the tungsten electrode and the materials to be melted.

The amount of welding per day will total approximately 2 linear feet. The calculation results shown in Appendix B have indicated that the welding activities at the WTP will not produce significant levels of air toxic and criteria pollutant emissions.

## 6.2 Dispersion Modeling Methodology

Annual and peak 24-hour ground level TAP concentrations, expressed as micrograms per cubic meter ($\mu g/m^3$), were determined by using the EPA's Industrial Source Complex-Short Term (ISCST3) air dispersion model. The model incorporates complex terrain algorithms that can be enabled to predict

ground level concentrations at receptors. The model was run for each of the process facility emission units, the laboratory emission units, boilers, and generators/fire pump stacks. Each emission unit was modeled using a unit emission rate of 1 gram per second. The maximum average annual impact sites are all located along the Hanford boundary to the east and east-northeast of the WTP site.

The modeled impact sites are directly proportional to emission levels for each stack. Therefore, the concentration for each emission unit is multiplied by the actual stack emissions for each inorganic and organic constituent in order to determine the actual concentrations (in $\mu g/m^3$) at the maximum impact location. The offsite concentrations for each emission unit and source were then totaled for comparison to the Washington Administrative Code (WAC) 173-460 Class A and Class B acceptable source impact levels (ASILs). Results of these comparisons are discussed in section 6.3.

Annual emission rates assumed a continuous operating schedule amounting to 8,760 hours per year. Emissions used to calculate maximum 24-hour concentrations were based on a full 24-hour operating day.

Results of the ground level impact for each emission unit are provided in Appendix B.

### 6.2.1 Meteorological Data

The ISCST3 air dispersion model was run with a sequential hourly meteorological data set for a 5-year period (1994 through 1998). Air quality impact analyses were based on the worst-case year with the highest calculated concentrations. The surface air data, including wind direction, wind speed, and temperature, was obtained from the Hanford meteorological monitoring network station no. 6, which is located in the 200 East Area, near the location where the WTP is being built. The precipitation data was obtained from the main Hanford meteorological station, located approximately 5 miles west of the 200 East Area. Upper air data used to calculate mixing heights was obtained from the National Weather Service station in Spokane, Washington. The city of Spokane is located approximately 150 miles northeast of Hanford, and is the most representative upper air monitoring station east of the Cascade Mountains.

### 6.2.2 Receptor Grid

A receptor grid with 250-meter spacing was placed around the entire fence line of the Hanford Site and along the portion of the Columbia River that flows through the site. An additional receptor grid using 500-meter spacing was extended 10 kilometers around the eastern property boundary, and 4 onsite public access points at Hanford (Laser Interferometer Gravitational Observatory, Energy Northwest, aluminum plant, Washington State University Laboratory) were used to ensure that the highest air quality impact sites at public access locations were identified. In all, over 2,700 receptors were modeled to determine the highest ground level concentrations at an offsite (fence line or beyond) receptor or public access location.

The state plane coordinate system was used to locate all of the modeled emissions sources, receptors, and buildings. Complex terrain modeling was performed using elevation data from topographic information contained in the US Geological Survey's Digital Elevation Model (DEM) files for this site. Elevations were determined for all sources, receptors, and buildings, and were used in the ISCST3 air dispersion modeling process.

### 6.2.3 Building Downwash

The building profile input was used to determine the dominant structures for building downwash calculations required in the ISCST3 air dispersion modeling for point sources. This program provided the direction-specific building heights and widths as dominant downwash structures. These heights and widths were included in the ISCST3 air dispersion model data input file.

### 6.2.4 Stack Parameters

The stack parameters are unique to each point source. Stack parameters include location, elevation, height, temperature, exit velocity, and diameter. Information on stack parameters is summarized in Appendix C of this document.

## 6.3 Air Quality Modeling Results

The predicted annual and 24-hour ground level concentrations from the ISCST3 air dispersion model were compared with the Class A and Class B TAPs. A percentage of the highest predicted ground level concentration for each TAP, divided by the ASILs for that TAP, was calculated to show whether there was a potential for any of the ASILs to be exceeded. The Appendix B table entitled Summary of Annual Average Impacts for Class A TAPs presents the predicted ambient concentration of each Class A TAP, and compares it with the respective ASIL. The Appendix B table entitled Summary of Maximum Ambient Impacts for 24-hour Class B TAPs presents the predicted ambient concentration of each Class B TAP and compares this concentration with the ASIL for that TAP.

As shown in each table, the WTP emissions will not exceed any of the Class A or Class B TAP ASILs. A Class A TAP, N-nitrososdimethylamine, is predicted to have annual concentrations that are approximately 70 % of the ASIL for this TAP, which is the largest fraction of an ASIL that was predicted to be consumed by WTP emissions. The second highest percentage compared to an ASIL was that of chromium, a Class A TAP, which is predicted to have a maximum annual concentration of approximately 46 % of the ASIL for chromium. The third highest percentage compared to an ASIL was that of arsenic, a Class A TAP, which is predicted to have a maximum annual concentration of approximately 19 % of the ASIL for arsenic. The majority of the chromium and arsenic emissions from the WTP will be due to the combustion of diesel fuel in the boilers.

The ISCST3 air dispersion modeling output data is provided in Appendix C of this NOC document.

# Contents

7 References ..... 7-1
7.1 Project Documents ..... 7-1
7.2 Codes and Standards ..... 7-1
7.3 Other Documents ..... 7-2

# 7 References

## 7.1 Project Documents

24590-WTP-RPT-ENV-01-005, *Best Available Control Technology Analysis for Toxic Air Pollutants for the WTP* (also known as the "T-BACT analysis report").

24590-WTP-RPT-ENV-01-007, *Prevention of Significant Deterioration Application for the Hanford Tank Waste Treatment and Immobilization Plant* (also known as the "PSD permit application").

24590-WTP-RPT-PO-03-008, *Integrated Emissions Baseline Report for the Hanford Tank Waste Treatment and Immobilization Plant.*

RPT-24590-EN00008, *Best Available Control Technology Analysis for Toxic Air Pollutants for the RPP-WTP.*

## 7.2 Codes and Standards

40 CFR 51. Appendix W, *Guideline on Air Quality Models,* Code of Federal Regulations, as amended.

40 CFR 61. *National Emission Standards for Hazardous Air Pollutants*, Code of Federal Regulations, as amended.

40 CFR 63. *National Emission Standards for Hazardous Air Pollutants for Source Categories*, Code of Federal Regulations, as amended.

62 FR 8693. 1997. "Record of Decision for the Tank Waste Remediation System", 62 *Federal Register* 8693, 26 February 1997.

ANSI N14.5. American National Standards Institute (ANSI) N14.5, "Leakage Tests on Packages for Shipment".

CAA. 1970. *Clean Air Act of 1970,* 42 USC. US Congress, Washington, DC, USA, as amended.

EPA. 1998. *Compilation of Air Pollutant Emissions Factors, AP-42, Fifth Edition, Volume I: Stationary Point and Area Sources*. Clearinghouse for Inventories and Emissions Factors, Office of Air Quality Planning and Standards, Research Triangle Park, North Carolina, USA.

RCW 70.94. *Washington Clean Air Act,* Revised Code of Washington, as amended.

RCW 43.21C. *State Environmental Policy Act,* Revised Code of Washington, as amended.

WAC 173-303. *Dangerous Waste Regulations*, Washington Administrative Code, as amended.

WAC 173-400. *General Regulations for Air Pollution Sources*, Washington Administrative Code, as amended.

WAC 173-460. *Control for New Sources of Toxic Air Pollutants*, Washington Administrative Code, as amended.

## 7.3 Other Documents

CARB. 1991a. *ARB Speciation Manual*, Volume 1, "Identification of Volatile Organic Compound Species Profiles", 1991. California Air Resources Board Sacramento, California, USA.

CARB. 1991b. *ARB Speciation Manual*, Volume 2, "Identification of Particulate Matter Species Profiles", 1991. California Air Resources Board, Sacramento, California, USA.

DOE. 1996. *Tank Waste Remediation System, Hanford Site, Richland, Washington, Final Environmental Impact Statement*. August 1996. US Department of Energy, Washington, DC, USA (also known as DOE/EIS-0189).

DOE and Ecology. 1996. *Final Environmental Impact Statement for the Tank Waste Remediation System*. US Department of Energy and US Department of Ecology, 1996.

Ecology. 1994. *Dangerous Waste Portion of the Resource Conservation and Recovery Act Permit for the Treatment, Storage, and Disposal of Dangerous Waste*, WA7890008967. Washington State Department of Ecology, Olympia, Washington, USA (also known as Hanford Facility RCRA Permit-DW Portion or "dangerous waste permit").

Ecology, EPA, and DOE. 1998. *Hanford Federal Facility Agreement and Consent Order*, 89-10, Revision 5. Washington State Department of Ecology, Olympia, Washington, US Environmental Protection Agency, Washington, DC and US Department of Energy, Washington, DC, USA (also known as the Tri-Party Agreement).

EPA. 1999. *Storage Tank Emissions Calculation Software* (TANKS). Version 4.0. US Environmental Protection Agency.

# Appendix A

# State Environmental Policy Act Checklist

Document title: **State Environmental Policy Act Environmental Checklist for the River Protection Project - Waste Treatment Plant**

Contract number: DE-AC27-01RV14136

Department: Environmental, Safety and Health

Author(s): P Berlin

Principal author signature:

Document number: 24590-WTP-RPT-ENV-01-011, Rev. 2

Checked by: J Markillie

Checker signature:

Date of issue: 28 November 2001

Issue status: Approved

Approved by: B Erlandson

Approver's position: Environmental Permits Lead

Approver signature:

ISSUED BY
RPP-WTP PDC
11-29-01
INIT DATE

River Protection Project
Waste Treatment Plant
3000 George Washington Way
Richland, WA 99352
United States of America
Tel: 509 371 3500
Fax: 509 371 3504

# History Sheet

| Rev | Date | Reason for revision | Revised by |
|---|---|---|---|
| A | 23 March 2000 | Draft | J Sipkowski |
| 0 | 31 March 2000 | Approved | J Sipkowski |
| 1 | 28 April 2000 | Approved | J Sipkowski |
| A | 13 June 2001 | Draft for Review; Replaces RPT-W375-EN00014, Rev. 1 | P Berlin |
| 0 | 25 September 2001 | Approved; Replaces RPT-24590-EN00010, Rev. A | P Berlin |
| 1 | 24 October 2001 | Changes made as a result of DOE review | P Berlin |
| 2 | 28 November 2001 | Incorporates DOE Signature | P Berlin |

# Contents

Item | Page Number

A Background ..... 1
B Environmental Elements ..... 4
1. Earth ..... 4
2. Air ..... 6
3. Water ..... 9
4. Plants ..... 12
5. Animals ..... 14
6. Energy and Natural Resources ..... 15
7. Environmental Health ..... 16
8. Land and Shoreline Use ..... 18
9. Housing ..... 20
10. Aesthetics ..... 20
11. Light and Glare ..... 21
12. Recreation ..... 21
13. Historic and Cultural Preservation ..... 21
14. Transportation ..... 22
15. Public Services ..... 23
16. Utilities ..... 24
References ..... 25

# Acronyms and Abbreviations

| | |
|---|---|
| BNI | Bechtel National, Inc. |
| CFR | Code of Federal Regulations |
| DOE | US Department of Energy |
| DOE-RL | US Department of Energy, Richland Operations Office |
| EIS | Environmental Impact Statement |
| PM | particulate matter |
| TWRS | Tank Waste Remediation System |
| WAC | Washington Administrative Code |
| WTP | River Protection Project-Waste Treatment Plant |

# A Background

1. **Name of proposed project, if applicable:**

   The River Protection Project Waste Treatment Plant (WTP)

2. **Name of applicants:**

   US Department of Energy, Office of River Protection
   US Department of Energy, Richland Operations Office

3. **Address and phone number of applicants and contact persons:**

   US Department of Energy
   Office of River Protection
   P.O. Box 550
   Richland, Washington 99352

   Mr. James Rasmussen, Director
   Environmental Management Division
   (509) 376-2247

4. **Date checklist prepared:**

   September 2001

5. **Agency requesting the checklist:**

   Washington State Department of Ecology
   Nuclear Waste Program
   1315 West 4th Avenue
   Kennewick, Washington 99336

6. **Proposed timing or schedule (including phasing, if applicable):**

   Field construction activities are scheduled to begin in September of 2001. Construction of facility structures is scheduled to begin in November of 2002.

7. **Do you have any plans for future additions, expansion, or further activity related to or connected with this proposal? If yes, explain.**

   The initial phase is to construct the WTP to treat approximately 10% of the volume of Hanford tank waste through the year 2018. A decision to modify, expand, or continue operation of the treatment and storage capacities in the facility could be made in the future with regulatory approval.

8. **List any environmental information you know about that has been prepared, or will be prepared, directly related to this proposal.**

   The WTP concept was included in the *Tank Waste Remediation System, Final Environmental Impact Statement* (TWRS EIS; DOE 1996). The *Tank Waste Remediation System (TWRS) Record of Decision* (DOE 1997) was jointly issued by DOE and the Washington State

Department of Ecology to fulfill the environmental review requirements of the *National Environmental Policy Act of 1969* (NEPA 1969) and the *State Environmental Policy Act of 1971* (RCW 43.21). In addition, DOE approved the *Supplement Analysis for Tank Waste Remediation System* (Supplement Analysis 2; DOE 1998) and the *Mitigation Action Plan for the US Department of Energy, Hanford Site, Tank Waste Remediation System-Privatization, Phase I Facility Construction* (TWRS Mitigation Action Plan; DOE-RL 1998). Another supplement analysis is currently being written.

A *River Protection Project – Waste Treatment Plant Dangerous Waste Permit Application* (WTP Dangerous Waste Permit Application; BNFL 2000) was submitted by the Department of Energy to the Washington Department of Ecology on April 28, 2000. A revised Dangerous Waste Permit Application will be submitted in December 2001.

9. **Do you know whether applications are pending for government approvals of other proposals directly affecting the property covered by your proposal? If yes, explain.**

No known applications are pending for government approvals of other proposals directly affecting the proposed property.

10. **List any government approvals or permits that will be needed for your proposal, if known.**

The Washington State Department of Ecology is the lead agency authorized to approve the WTP Dangerous Waste Permit Application Part A, Form 3, and Part B for the WTP, pursuant to the requirements of Washington Administrative Code (WAC) 173-303-806, and the US Environmental Protection Agency Code of Federal Regulations, 40 CFR 270.

Emissions from the WTP will be permitted under:

- The State of Washington Department of Ecology Air Permit Regulations, WAC 173-400, 173-401, 173-460, and 173-480
- The State of Washington Department of Health radioactive air emissions licensing, WAC 246-247
- 40 CFR 52.21 and 40 CFR 61

Industrial waste water discharges, including the water generated from construction testing and storm water, will be permitted under the *Water Quality Standards for Ground Waters of the State of Washington*, WAC 173-200 and the *State Waste Discharge Permit Program*, WAC 173-216, as appropriate. Discharges from the sanitary sewer system will be permitted according to *On-Site Sewage Systems*, WAC 246-272.

The DOE Office of River Protection is responsible for overseeing nuclear and process safety for the WTP. To implement that responsibility, the Office of River Protection will review and approve the authorization basis prepared by Bechtel National Inc. (BNI), as required, for the design, construction, and operation of the WTP.

11. **Give a brief, complete description of your proposal, including the proposed uses and the size of the project and site. There are several questions later in this checklist that ask you to describe certain aspects of your proposal. You do not need to repeat those answers on this page.**

The WTP is proposed as a dedicated waste treatment and storage facility that will receive a mixed waste stream from Hanford's double-shell and single-shell tank farm systems. The waste will contain organic, inorganic, and radionuclide constituents. The facility will provide capabilities for vitrification treatment of low-activity waste (LAW) feed and high-level waste (HLW) feed. These feeds are subsets of high-level waste, which is defined in 10 CFR 72.3.

The feed treated in the LAW feed treatment process will primarily be the liquid supernatant portion of waste, with minor volumes of entrained solids, which at present is stored in the tank systems at the Hanford Site. The HLW feed treatment process will allow for the treatment of waste with a higher solids content.

12. **Location of the proposal. Give sufficient information for a person to understand the precise location of your proposed project, including a street address, if any, and section, township, and range, if known. If a proposal would occur over a range of area, provide the range or boundaries of the site(s). Provide a legal description, site plan, vicinity map, and topographic map, if reasonably available. While you should submit any plans required by the agency, you are not required to duplicate maps or detailed plans submitted with any permit applications related to this checklist.**

The WTP will be located in the 200 East Area of the Hanford Site, Benton County, Washington, on the Gable Butte, Washington, 7.5 minute quadrangle topographic map in section 3, T12N, R26E of the Willamette Base and Meridian. This location is in agreement with the comprehensive land use plan (DOE 1999a).

The WTP Dangerous Waste Permit Application (BNFL 2000) provides a small-scale map depicting the Hanford Site and the location of the WTP in Chapter 2, and a topographic map in Appendix 2A.

# B Environmental Elements

## 1. Earth

a. **General description of the site (circle one): Flat, rolling, hilly, steep slopes, mountainous, other _____.**

The site is flat.

b. **What is the steepest slope on the site (approximate percent slope)?**

The approximate slope of the land is less than two percent.

c. **What general types of soils are found on the site (for example, clay, sandy gravel, peat, and muck)? If you know the classification of agricultural soils, specify them and note any prime farmland.**

Soil types for the 200 Areas of the Hanford Site are described in Volume I of the TWRS EIS, section 4.1.4 (DOE 1996). In general, soil types in the 200 Areas and around the WTP consist mainly of eolian and fluvial sands, and gravel. More detailed information concerning specific soil classifications can be found in *Hanford Site National Environmental Policy Act (NEPA) Characterization* (PNNL 2000). Farming is not permitted on the Hanford Site. The general area surrounding the Hanford Site 200 Areas was not farmed prior to construction of the Hanford facilities.

d. **Are there surface indications or history of unstable soils in the immediate vicinity? If so, describe.**

No. The proposed WTP site is not located in an area of slope or soil instability, or in an area affected by unstable slope or soil conditions.

e. **Describe the purpose, type, and approximate quantities of any filling or grading proposed. Indicate source of fill.**

Clearing and grading of land is the first activity in the sequence of construction and facility startup.

Approximately 450,000 cubic yards of earthworks is planned. Clearing and grading will be followed by excavation, compaction, and then facility construction.

An area below the grade slab will be fine-graded. Aggregate and fill for fine grading will be brought from quarry sites and borrow pits on or near the Hanford Site. Contaminated materials will not be used for fill.

f. **Could erosion occur as a result of clearing, construction, or use? If so, generally describe.**

Yes. During construction following initial disturbances and before revegetation, wind and storm water runoff erosion is possible. These conditions should be present only for a relatively short period of time. Land used only for construction purposes will either remain covered with aggregate or be restored to original condition and revegetated after construction.

Due to the possibility that the soil will be disturbed again for future work, construction laydown areas and other portions of the site will be reseeded using the appropriate standard Washington State Department of Transportation seed mix for revegetation in this climate, consistent with the TWRS Mitigation Action Plan (DOE-RL 1998). Infrastructure construction, such as transmission corridors, will be reseeded using a native grass and sagebrush seed mix.

A sizable portion of the WTP site, and also of nearby land, has previously been disturbed. Disturbance in the surrounding areas includes the construction of roads, processing facilities, pipelines, and other facilities and infrastructure associated with the production of plutonium and waste management. The impact from the grading activities on surface or near surface geologic features will be confined to small, localized topographic changes where facilities are constructed.

g. **About what percent of the site will be covered with impervious surfaces after project construction (for example, asphalt or buildings)?**

A total of approximately 119.2 acres of land will be used for the construction of the WTP.

Approximately 64 acres will be occupied by the operational WTP and potentially covered with an impervious surface. Approximately 4.2 acres will be used for septic leach fields, which will be allowed to revegetate naturally. The remaining 51 acres will be used temporarily during construction for workforce parking, lay down area, and stockpiling. Small portions of the construction area may be covered with concrete or asphalt to provide material storage and temporary construction offices. These concrete or asphalt areas will remain upon completion of construction.

h. **Proposed measures to reduce or control erosion, or other impacts to the earth, if any:**

- Gravel and dust suppression techniques (for example, watering and the application of degradable soil fixatives) will help control erosion in the construction area.
- Land used only for construction purposes will either remain covered with aggregate or be restored to original condition and revegetated after construction.
- Due to the possibility that the soil will be disturbed again for future work, construction laydown areas will be reseeded using the appropriate standard Washington State Department of Transportation seed mix for revegetation in this climate, consistent with the TWRS Mitigation Action Plan (DOE-RL 1998).

2. **Air**

a. **What types of emissions to the air would result from the proposal (such as, dust, automobile, odors, and industrial wood smoke) during construction and when the project is completed? If any, generally describe and give approximate quantities, if known.**

Air emissions as a result of construction activities are estimated, in the TWRS-EIS (DOE 1996) Volume 5, Appendix G, to be:

| Criteria pollutants | Emissions in grams per |
|---|---|
| Sulfur oxides | 0.19 |
| Nitrogen oxides | 8.6 |
| Carbon monoxide | 46 |
| Particulate matter (PM-10) | 6.8 |

| Hazardous pollutants | Emissions in grams per second |
|---|---|
| Formaldehyde | $3.5 \times 10^{-3}$ |

Air emissions from plant operations, excluding steam boilers, are estimated in the *Integrated Emissions Baseline Report for the River Protection Project Waste Treatment Plan* (BNI 2001). The tables below summarize the information for: criteria pollutants; and total organic pollutants, inorganic pollutants, and radionuclide emissions.

| Criteria pollutants | Emissions in grams per second |
|---|---|
| Sulfur oxides | $1.4 \times 10^{-4}$ |
| Nitrogen oxides | 0.43 |
| Carbon monoxide | 0.43 |
| PM-10 | $1.6 \times 10^{-4}$ |

| Pollutant | Emissions |
|---|---|
| Total organic carbon | 0.29 tons per year |
| Inorganics | 0.87 grams per second |
| Radionuclides | 2.71 curies per day |

Air emissions from steam boilers are estimated to be:

| Criteria pollutants | Emissions in tons per year |
|---|---|
| $SO_x$ | 31.99 |
| $NO_x$ | 113.46 |
| CO | 27.96 |
| PM-10 | 9.27 |
| Volatile organic compounds | 2.00 |

These emission estimates will be verified as the design progresses. Emissions from the treatment facility will be regulated under the appropriate permits as presented in section A.10.

b. **Are there any offsite sources of emissions or odors that may affect your proposal? If so, generally describe.**

No.

c. **Proposed measures to reduce or control emissions or other impacts to the air, if any?**

Dust control measures will be applied during construction to reduce fugitive dust emissions. These measures may include watering or application of dust control chemicals, as well as temporary seeding and revegetation. The primary and secondary offgas controls specified for the WTP designs are expected to result in emissions that would be substantially below both federal and state standards in all areas open to the public. Commercially available treatment systems will treat the steam boiler and standby generator emissions to levels compliant with applicable standards.

In addition, good engineering practices will be followed, and actions would comply with procedures designed to protect human health and the environment. Administrative control practices will limit air emissions and protect worker health.

## 3. Water

### a. Surface

1) **Is there any surface water body on or in the immediate vicinity of the site (including year-round and seasonal streams, saltwater, lakes, ponds, and wetlands)? If yes, describe type and provide names. If appropriate, state what stream or river it flows into.**

   There is no surface water body on or in the immediate vicinity of the WTP. Additional information can be found in the TWRS-EIS, Section 4.2.1.

2) **Will the project require any work over, in, or adjacent to (within 200 feet) the described waters? If yes, please describe and attach available plans.**

   No.

3) **Estimate the amount of fill and dredge material that would be placed in or removed from surface water or wetlands and indicate the area of the site that would be affected. Indicate the source of fill material.**

   None. There will be no dredging or filling from, or to, surface water or wetlands.

4) **Will the proposal require surface water withdrawals or diversions? Give general description, purpose, and approximate quantities if known.**

   The water supply for the 200 Areas is pumped from the Columbia River. The WTP will use raw water at approximately 875 US gallons per minute, based on an annual average. The water will primarily be used in cooling towers and will also be used for reagent make-up and plant and equipment wash down.

5) **Does the proposal lie within a 100-year floodplain? If so, note location on the site plan.**

The WTP is not within the 100-year floodplain.

6) **Does the proposal involve any discharges of waste materials to surface waters? If so, describe the type of waste and anticipated volume of discharge.**

No.

b. **Ground**

1) **Will ground water be withdrawn, or will water be discharged to ground water? Give general description, purpose, and approximate quantities if known.**

No groundwater will be withdrawn in support of the project, nor will water be discharged directly to the aquifer from the WTP. The project is governed by three Hanford site-wide permits that allow water to be discharged to the ground at the WTP. These discharges will include hydrotesting, maintenance, and construction discharges, cooling water condensate, and stormwater. Liquids may also be transferred to other permitted facilities (for example, the Effluent Treatment Facility and the Treated Effluent Disposal Facility) that will treat effluent prior to its discharge to the ground. The depth to groundwater at the WTP is over 260 feet. Sanitary sewage will be discharged to permitted leach fields.

In addition to the three discharge sources identified above, process water and stormwater will be discharged from the concrete batch plant. These discharges will be during construction of the WTP and are covered by a sand and gravel general permit.

2) **Describe waste material that will be discharged into the ground from septic tanks or other sources, if any (for example: Domestic sewage; industrial, containing the following chemicals... agricultural; and so forth). Describe the general size of the system, the number of such systems, the number of houses to be served (if applicable), or the number of animals or humans the system(s) are expected to serve.**

During construction, approximately 48,000 US gallons per day of sanitary waste will be disposed of in onsite septic leach fields, based on a construction work force of approximately 3200. During operations, approximately 29,000 US gallons per day of sanitary waste will be discharged to septic leach fields from an operational work force of approximately 1110. Anticipated discharges to the ground will be from construction activities, which include:

- stormwater
- dust mitigation
- concrete work
- tank and pipe hydrotesting
- construction operations

c. **Water Runoff (including storm water)**

1) **Describe the source of runoff (including storm water) and method of collection and disposal, if any (include quantities, if known). Where will this water flow? Will this water flow into other waters? If so, describe.**

The Hanford Site receives an average of six to seven inches of annual precipitation. The primary source of runoff associated with this project will be storm water from the buildings, paved areas, and other impervious surfaces of the plant. The light and infrequent nature of precipitation at the site will produce correspondingly light runoff from the impervious surfaces. The precipitation will not come into contact with any of the mixed waste being stored in the facility. Storm water will be managed in

accordance with an approved permit, as presented in section A.10.

2) **Could waste materials enter ground or surface waters? If so, generally describe.**

Waste materials will not enter ground or surface waters. Waste materials will be primarily contained in buildings with roofs to prevent contact with storm water and ground or surface water. Two tanks containing waste will be located outside of buildings. These tanks will have secondary containment with protective coating to prevent waste from entering ground or surface waters.

d. **Proposed measures to reduce or control surface, ground, and runoff water impacts, if any:**

No surface, ground, or runoff water impacts are expected. A Stormwater Pollution Prevention Plan and an Erosion and Sediment Control Plan are required by the sand and gravel permits. These plans will be written to utilize and incorporate the Best Management Practices Plan for Hanford Site permits

**4. Plants**

a. **Check or circle the types of vegetation found on the site.**

___ **deciduous tree: alder, maple, aspen, other**
___ **evergreen tree: fir, cedar, pine, other**
X **shrubs**
X **grass**
___ **pasture**
___ **crop or grain**
___ **wet soil plants: cattail, buttercup, bulrush, skunk cabbage, other**
___ **water plants: water lily, eelgrass, milfoil, other**
X **other types of vegetation**

The most common native vegetation community in the vicinity of the WTP is the sagebrush and bunch grass community. Numerous species of sagebrush and a variety of bunch grass species are found on the Hanford Site. Disturbed areas are commonly populated by cheat grass, *Bromus tectorum*.

**b. What kind and amount of vegetation will be removed or altered?**

Section 4.4 in Volume I of the TWRS EIS (DOE 1996) describes the vegetation in the vicinity of the WTP. Acreage taken by the WTP is inside the portion of the Hanford Site dedicated to long-term waste management under the *Hanford Comprehensive Land-Use Plan Environmental Impact Statement* (DOE 1999a). Substantial portions of the 119.2-acre site have been previously disturbed by clearing, grading, or other activities and are poor-quality habitat. Nevertheless, clearing and grading will remove and alter shrub-steppe vegetation and habitat.

The Supplement Analysis 2 (DOE 1998) states that 37 acres in the area of the proposed site have previously been disturbed. The TWRS EIS (DOE 1996) assumes that 62 percent of the area that would be used for construction and operation for the WTP would disturb previously undisturbed shrub-steppe habitat. Based on the current 119.2 acres requested (64 acres for operations, 4.2 acres for septic leach fields, and 51 acres for construction) and the information in the Supplement Analysis 2 (DOE 1998), it is estimated that 51 acres (119.2 – 37 = 82.2 acres; 0.62 × 82.2 = approximately 51 acres) of previously undisturbed land will be taken.

Plant species likely to be taken would include big sagebrush and gray rabbit brush, dominant species in the Hanford Site shrub-steppe habitat. While not known to exist on the WTP site, potentially affected species of concern that could be present, according to the TWRS EIS Volume I, section 4.4.2 (DOE 1996), include crouching milkvetch, stalk-pod milkvetch, scilla onion, and Piper's daisy.

**c. List threatened or endangered species known to be on or near the site.**

None. No federally-listed threatened or endangered plant or animal species are known to occur on or near the Central Plateau, where the WTP site is located. Additional information is provided in Volume I of the TWRS EIS, sections 4.4.4 and 4.4.5 (DOE 1996).

The Hanford Site contains some federally and state-listed threatened and endangered plant and animal species. Additional information on species can be found in the *Hanford Site National Environmental Policy Act (NEPA) Characterization* (PNNL 2000).

d. **Proposed landscaping, use of native plants, or other measures to preserve or enhance vegetation on the site, if any:**

DOE has committed to compensate for biological and natural resource disturbance caused by construction activities of the WTP at an appropriate site to be determined by the DOE. Furthermore, due to the possibility that the soil at the site will be disturbed again for future work, construction laydown areas and other portions of the site will be reseeded, using the appropriate standard Washington State Department of Transportation seed mix for revegetation in this climate. Additional information is provided in Volume I of the TWRS EIS, section 5.20 (DOE 1996), and the TWRS Mitigation Action Plan (DOE-RL 1998).

## 5. Animals

a. **Indicate (by underlining) any birds and animals which have been observed on or near the site or are known to be on or near the site.**

The following (as indicated by underlining) have been observed on or near the site or are known to be on or near the site:

| | |
|---|---|
| birds: | <u>hawk</u>, heron, eagle, <u>songbirds</u>, <u>other</u> |
| mammals: | <u>deer</u>, bear, elk, beaver, <u>other</u> |
| fish: | bass, salmon, trout, herring, shellfish, other |

Raptors (for example, burrowing owls, ferruginous, red-tail, and Swainson's hawks) are seen occasionally in the 200 East Area. Small passerines (for example, sparrows, finches) also are present in the general vicinity of the WTP. Two Washington State candidate bird species were observed in the vicinity during the performance of a biological review of the proposed location of the WTP: the loggerhead shrike (*Lanius ludovicianus*) and the sage sparrow (*Amphispiza belli*) (PNNL 1999). Mule deer, rabbits, badgers, and coyotes occasionally are seen in the general area. Additional

information is provided in Volume I of the TWRS EIS, sections 4.4.3, and 4.4.5 (DOE 1996).

b. **List any threatened or endangered species known to be on or near the site.**

Two federally and state-listed threatened or endangered species have been identified on the 560 square mile Hanford Site along the Columbia River: the bald eagle and the peregrine falcon. In addition, the state-listed white pelican, sandhill crane, and ferruginous hawk also occur on or migrate through the Hanford Site. Of these 5 species, only the ferruginous hawks have been seen on occasion in the general area. These hawks have not been observed to use the habitat in the vicinity of the WTP for perching, hunting, or nesting. The sage sparrow (*Amphispiza belli*) and the loggerhead shrike (*Lanius ludovicianus*), two Washington State Candidate bird species, were observed in the vicinity of the proposed location of the WTP.

Additional information is provided in Volume I of the TWRS EIS, section 4.4.5 (DOE 1996).

c. **Is the site part of a migration route? If so, explain.**

The Hanford Site is a part of the broad Pacific Flyway.

d. **Proposed measures to preserve or enhance wildlife, if any:**

Specific measures to preserve or enhance wildlife are discussed in section 5.20 of Volume I of the TWRS EIS (DOE 1996) and the TWRS Mitigation Action Plan (DOE-RL 1998).

## 6. Energy and Natural Resources

a. **What kinds of energy (electric, natural gas, oil, wood stove, solar) will be used to meet the completed project's energy needs? Describe whether it will be used for heating, manufacturing, and so forth.**

Energy needs for the WTP are presented in the TWRS-EIS, Volume I, Table 5.16.1. Electrical and oil energy will be used for heating and to support operation of the treatment facility.

b. **Would your project affect the potential use of solar energy by adjacent properties? If so, generally describe.**

No.

c. **What kinds of energy conservation features are included in the plans of this proposal? List other proposed measures to reduce or control energy impacts, if any:**

A pollution prevention plan that includes elements of sustainable design, and pollution prevention opportunity assessments, will be implemented to identify methods to reduce energy use and minimize waste. Systems will be operated to use energy and resources in the most efficient manner possible.

## 7. Environmental Health

a. **Are there any environmental health hazards, including exposure to toxic chemicals, risk of fire and explosion, spill, or hazardous waste, that could occur as a result of this proposal? If so, describe.**

Possible environmental health hazards to workers could arise from activities at the WTP. The hazard could come from exposure to radioactive, dangerous, or mixed waste. Engineered barriers and administrative controls are used to minimize the probability of even a minor incident or accident. A chemical spill, release, fire, or explosion could occur only as a result of a simultaneous breakdown in multiple barriers or a catastrophic natural event.

1) **Describe special emergency services that might be required.**

Special emergency services might be required for circumstances involving mixed waste incidents, such as spills, releases, fires, and explosions.

2) **Proposed measures to reduce or control environmental health hazards, if any:**

All personnel will be trained to follow proper procedures during the WTP treatment and storage operations to minimize potential

exposure. The WTP will have systems for air emission controls, radiation monitoring, fire protection, and alarm capability. The ventilation system will maintain a negative air pressure in operations buildings.

The WTP will have measures in place to reduce or control environmental health hazards. These measures will include containment structures and equipment, protective equipment and clothing, and operating procedures to ensure that hazards are minimized. The physical security of a chain-link fence around the WTP and limited access to authorized personnel will further reduce potential exposures.

**b. Noise**

**1) What type of noise exists in the area which may affect your project (for example: traffic, equipment, operation, other)?**

The site is characterized by background noise from traffic and activities taking place in the 200 East Area. The project is not noise-sensitive.

**2) What types and levels of noise would be created by or associated with the project on a short-term or a long-term basis (for example: traffic, construction, operations, other)? Indicate what hours noise would come from the site.**

During construction, noise will largely be generated by mechanized equipment such as loaders, bulldozers, cranes, and trucks. Noise levels from all mechanized equipment used during construction activities will be within the General Services Administration construction noise specifications or other similar noise standards (29 CFR 1910.95). Noise from construction activities will primarily be during daylight hours.

Because the waste treatment process equipment will be operating inside enclosed structures, exterior noise levels will not be substantially increased due to the WTP.

Minor amounts of noise from traffic and equipment are expected during day-shift hours during operations. For additional information, refer to the TWRS EIS (DOE 1996).

3) **Proposed measures to reduce or control noise impacts, if any:**

If Occupational Safety and Health Administration noise standards are exceeded, appropriate measures to protect workers will be employed.

## 8. Land and Shoreline Use

a. **What is the current use of the site and adjacent properties?**

The site consists of disturbed and undisturbed sagebrush. The subject site is adjacent to the 241-AP Tank Farm and generally flat, with a spoils pile near the center. The spoils pile is soil from the construction of the adjacent grout vaults.

b. **Has the site been used for agriculture? If so, describe.**

No portion of the 200 Areas has been used for agricultural purposes since 1943, if ever.

c. **Describe any structures on the site.**

As of September 2001, power distribution facilities, a visitor trailer, and a construction trailer have been located at the WTP site.

d. **Will any structures be demolished? If so, what?**

No structures are to be demolished.

e. **What is the current zoning classification of the site?**

The Hanford Site is zoned as an Unclassified Use District by Benton County, Washington.

f. **What is the current comprehensive plan designation of the site?**

The *Record of Decision: Hanford Comprehensive Land-Use Plan Environmental Impact Statement* (DOE 1999b) designated the 200 Areas as "Industrial Exclusive", dedicated to nuclear waste management activities.

g. **If applicable, what is the current shoreline master program designation of the site?**

Does not apply.

h. **Has any part of the site been classified as an "environmentally sensitive" area? If so, specify.**

No part of the WTP site has been classified as an "environmentally sensitive" area. The 200 Areas, in particular, is located in a previously disturbed industrial area of little or no environmental significance. There will be an environmental impact to the shrub steppe habitat from construction activities. The State of Washington Department of Fish and Wildlife has designated the shrub steppe as a "priority habitat" (PNNL 2000). Mitigation has been performed in accordance with the TWRS Mitigation Action Plan (DOE-RL 1998) developed by DOE in accordance with department policy. Additional information is provided in Volume I of the TWRS EIS, section 4.0 (DOE 1996).

i. **Approximately how many people would reside or work in the completed project?**

Employment during peak construction will be approximately 2,700 full-time equivalents onsite. About 500 additional personnel (for example, engineers, designers, managers, and support personnel) will be located in office facilities in the Tri-Cities area. Approximately 1110 onsite workers are expected during operations.

j. **Approximately how many people would the completed project displace?**

None. Refer to Volume I of the TWRS EIS, section 5.6.1 (DOE 1996), for additional information.

k. **Proposed measures to avoid or reduce displacement impacts, if any:**

Does not apply.

l. **Proposed measures to ensure the proposal is compatible with existing and project land uses and plans, if any:**

Does not apply.

## 9. Housing

a. **Approximately how many units would be provided, if any? Indicate whether high, middle, or low-income housing.**

None. Refer to Volume I of the TWRS EIS, section 5.6.2 (DOE 1996), for additional information.

b. **Approximately how many units, if any, would be eliminated? Indicate whether high, middle, or low-income housing.**

None.

c. **Proposed measures to reduce or control housing impacts, if any:**

None.

## 10. Aesthetics

a. **What is the tallest height of any proposed structure(s), not including antennas; what is the principal exterior building material(s) proposed?**

The tallest building of the WTP will be approximately 140 feet above grade, and the tallest stack will be approximately 200 feet. The principal exterior building material will be sheet metal.

b. **What views in the immediate vicinity would be altered or obstructed?**

None.

c. **Proposed measures to reduce or control aesthetic impacts, if any:**

None. Refer to Volume I of the TWRS EIS, section 5.20 (DOE 1996), for additional information.

## 11. Light and Glare

a. **What type of light or glare will the proposal produce? What time of day would it mainly occur?**

Lighting will be provided for the proposed site during construction and operations during the day and night.

b. **Could light or glare from the finished project be a safety hazard or interfere with views?**

No.

c. **What existing offsite sources of light or glare may affect your proposal?**

None.

d. **Proposed measures to reduce or control light and glare impacts, if any:**

None.

## 12. Recreation

a. **What designated and informal recreational opportunities are in the immediate vicinity?**

None.

b. **Would the proposed project displace any existing recreational uses? If so, describe.**

No.

c. **Proposed measures to reduce or control impacts on recreation, including recreation opportunities to be provided by the project or applicant, if any?**

None.

## 13. Historic and Cultural Preservation

a. **Are there any places or objects listed on, or proposed for, national, state, or local preservation registers known to be on or next to the site? Is so, generally describe.**

Portions of the Hanford Site were included in land designated as the Hanford Reach National Monument in June 2000. Land on or adjacent to the WTP is not included in this designation. Refer to Volume I of the TWRS EIS, section 5.5 (DOE 1996), and the *Hanford Site National Environmental Policy Act (NEPA) Characterization* (PNNL 2000) for additional information.

b. **Generally describe any landmarks or evidence of historic, archaeological, scientific, or cultural importance known to be on or next to the site.**

There are no known landmarks or evidence of historic, archaeological, scientific, or cultural importance at the WTP site (PNNL 1998) and (PNNL 2000).

c. **Proposed measures to reduce or control impacts, if any:**

Does not apply.

## 14. Transportation

a. **Identify public streets and highways serving the site, and describe proposed access to the existing street system. Show onsite plans, if any.**

Access to the WTP site is via DOE-provided highways and roads. There will be no public access to the WTP. A small-scale map is provided in Chapter 2 of the WTP Dangerous Waste Permit Application (BNFL 2000), depicting the Hanford Site and the location of the WTP. The map also identifies public streets and highways that connect to the DOE-owned Hanford Site roads.

b. **Is the site currently served by public transit? If not, what is the approximate distance to the nearest transit stop?**

The WTP will not be accessible to the public and will not be served by public transit. The nearest public transit stop is approximately 20 miles from the WTP.

c. **How many parking spaces would the completed project have? How many would the project eliminate?**

The WTP will provide 320 parking spaces. Because the proposed site is currently undeveloped, no parking will be eliminated as a result of this project.

d. **Will the proposal require any new roads or streets, or improvements to existing roads or streets, not including driveways? If so, generally describe (indicate whether public or private).**

Yes. An access road will be constructed from Canton Avenue to the WTP site. The road will be accessible only to authorized personnel.

e. **Will the project use (or occur in the immediate vicinity of) water, rail, or air transportation? If so, generally describe.**

No.

f. **How many vehicular trips per day would be generated by the completed project? If known, indicate when peak volumes would occur.**

The Supplement Analysis 2 (DOE 1998), section 4.11, states that traffic impacts associated with the construction and operation of the WTP would be similar to those analyzed in the TWRS-EIS, Volume 1, section 5.10 (DOE 1996). The morning peak hour traffic volume would be approximately 5600 vehicles. Refer to the Supplement Analysis 2 and the TWRS-EIS for additional information.

g. **Proposed measures to reduce or control transportation impacts, if any:**

Volume I of the TWRS EIS, section 5.20.2 (DOE 1996), discusses widening Route 4 west of the Wye Barricade, or reducing the speed limits on Route 4 as potential mitigation measures that may be deemed necessary.

## 15. Public Services

a. **Would the project result in an increased need for public services (for example: fire protection, police protection, health care, schools, other)? If so, generally describe.**

The increased population resulting from the construction and operation of the WTP is expected to place additional demands on public facilities and

services. Refer to the Volume I of the TWRS EIS, section 5.6.3 (DOE 1996), for additional information.

b. **Proposed measures to reduce or control direct impacts on public services, if any:**

Volume 1 of the TWRS-EIS, section 5.20 (DOE 1996), does not identify any mitigation measures to reduce or control the impacts of the WTP on public services.

## 16. Utilities

a. **Circle utilities currently available at the site: electricity, natural gas, water, refuse service, telephone, sanitary sewer, septic system, other:**

There are no utilities currently available on the WTP site.

b. **Describe the utilities that are proposed for the project, the utility providing the service, and the general construction activities on the site or in the immediate vicinity which might be needed.**

The water is provided to the facility from extensions of the 200 Areas potable and raw water systems. The water system extensions proceed east to the WTP from existing pipelines in the vicinity of Canton Street in the 200 East Area.

Electricity is provided to the WTP from a new substation built to support the WTP. The substation has a capacity of 62.5 megawatts.

Oil storage may be added as part of the project.

# References

10 CFR 72.3. *Licensing Requirements for the Independent Storage of Spent Nuclear Fuel and High-Level Radioactive Waste*, as amended. Code of Federal Regulations.

29 CFR 1910.95. *Occupational Noise Exposure*, as amended. Code of Federal Regulations.

40 CFR 52.21. *Prevention of Significant Deterioration of Air Quality*, as amended. Code of Federal Regulations.

40 CFR 61. *National Emission Standards for Hazardous Air Pollutants*, as amended. Code of Federal Regulations.

40 CFR 270. *EPA Administered Permit Programs: The Hazardous Waste Permit Program*, as amended. Code of Federal Regulations.

BNFL. 2000. *River Protection Project – Waste Treatment Plant Dangerous Waste Permit Application*, BNFL-5193-RCRA-01, Revision 2. 28 April 2000. BNFL Inc., Richland, Washington, USA.

BNI. 2001. *Integrated Emissions Baseline Report for the River Protection Project Waste Treatment Plant*, RPT-W375-ES00001, Revision 1. May 2001. Bechtel National Inc., Richland, Washington, USA.

DOE. 1996. *Tank Waste Remediation System, Hanford Site, Richland, Washington, Final Environmental Impact Statement*, DOE/EIS-0189, August 1996. US Department of Energy, Washington, DC, USA.

DOE. 1997. *Tank Waste Remediation System (TWRS) Record of Decision (ROD)*, Federal Register Volume 62 pp. 8693-8704. 62 FR 8693, February 27, 1997.

DOE. 1998. *Supplement Analysis for the Tank Waste Remediation System*, DOE/EIS-0189-SA2, May 1998. US Department of Energy, Washington, DC, USA.

DOE. 1999a. *Hanford Comprehensive Land-Use Plan Environmental Impact Statement*. DOE/EIS-0222-F, September 1999. US Department of Energy, Washington, DC, USA.

DOE. 1999b. *Record of Decision: Hanford Comprehensive Land-Use Plan Environmental Impact Statement*. Federal Register, Vol. 64, No. 218. 12 November 1999.

DOE-RL. 1998. *Mitigation Action Plan for the US Department of Energy, Hanford Site, Tank Waste Remediation System-Privatization, Phase I Facility Construction*, May 1998. US Department of Energy, Richland Operations Office, Richland, Washington, USA.

NEPA. 1969. *National Environmental Policy Act of 1969*. 42 United States Code 4321 et seq.

PNNL. 1998. Letter from Hale LL, PNNL to Kjarmo K, FDH, *Cultural Resources Review of the TWRS Mitigation Planning Support-Phase One Project, HCRC #98-0200-022*, May 22, 1998. Pacific Northwest National Laboratory, Richland, Washington, USA.

PNNL. 2000. *Hanford Site National Environmental Policy Act (NEPA) Characterization*, PNL-6415, Revision 12. September 2000. Pacific Northwest National Laboratory, Richland, Washington, USA.

RCW. 43.21. *State Environmental Policy Act of 1971*, Chapter 43.21C. Revised Code of Washington.

WAC 173-200. *Water Quality Standards for Ground Waters of the State of Washington*, as amended. Washington Administrative Code.

WAC 173-216. *State Waste Discharge Permit Program*, as amended. Washington Administrative Code.

WAC 173-303. *Dangerous Waste Regulations*, as amended. Washington Administrative Code.

WAC 173-400. *General Regulation for Air Pollution Sources*, as amended. Washington Administrative Code.

WAC 173-401. *Operating Permit Regulation*, as amended. Washington Administrative Code.

WAC 173-460. *Controls for New Sources of Toxic Air Pollutants*, as amended. Washington Administrative Code.

WAC 173-480. *Ambient Air Quality Standards and Emission Limits for Radionuclides*, as amended. Washington Administrative Code.

WAC 246-247. *Radiation Protection – Air Emissions*, as amended. Washington Administrative Code.

WAC 246-272. *On-Site Sewage Systems*, as amended. Washington Administrative Code.

## SIGNATURES

The above answers are true and complete to the best of my knowledge.

Harry L. Boston, Manager
US Department of Energy
Office of River Protection

11/28/01
Date

# Appendix B

# Detailed Emissions Calculations

## Estimated Inorganic Unabated Emissions from PT, LAW, and HLW

| CAS Number | Compound | PT-S3 (g/s) | PT-S4 (g/s) | LV-S3 (g/s) | HV-S3a (g/s) | HV-S3b (g/s) | HV-S4 (g/s) |
|---|---|---|---|---|---|---|---|
| 7440-22-4 | Silver | 6.83E-07 | 6.26E-06 | 6.70E-04 | 1.21E-03 | 1.21E-03 | 1.03E-11 |
| 7429-90-5 | Aluminum | 1.42E-04 | 1.14E-03 | 1.83E-01 | 1.39E-02 | 1.39E-02 | 3.11E-10 |
| 7440-38-2 | Arsenic | 1.79E-04 | 2.43E-03 | 6.34E+00 | 1.64E+01 | 1.64E+01 | 4.39E-08 |
| 7440-42-8 | Boron | 5.11E-06 | 3.74E-05 | 6.30E-01 | 3.23E-02 | 3.23E-02 | 1.02E-10 |
| 7440-39-3 | Barium | 3.42E-06 | 3.59E-05 | 2.07E-04 | 2.82E-03 | 2.82E-03 | 6.33E-11 |
| 7440-69-9 | Bismuth | 1.89E-06 | 2.75E-05 | 6.37E-04 | 1.78E-03 | 1.78E-03 | 4.01E-11 |
| 7440-70-2 | Calcium | 4.84E-04 | 3.06E-04 | 3.34E-01 | 7.56E-03 | 7.56E-03 | 1.32E-10 |
| 7440-43-9 | Cadmium | 9.50E-06 | 1.09E-04 | 7.45E-02 | 3.47E-02 | 3.47E-02 | 1.58E-10 |
| 16887-00-6 | Chloride | 3.06E-05 | 2.72E-04 | 4.21E-01 | 2.11E-02 | 2.11E-02 | 1.22E-10 |
| 18540-29-9 | Chromium (hexavalent) | 1.66E-05 | 1.65E-04 | 1.57E-02 | 1.21E-03 | 1.21E-03 | 2.72E-11 |
| 7440-50-8 | Copper | 6.47E-07 | 5.74E-06 | 1.05E-04 | 1.55E-04 | 1.55E-04 | 6.57E-12 |
| 16984-48-8 | Flouride | 3.53E-05 | 3.61E-04 | 6.51E-01 | 6.83E-02 | 6.83E-02 | 3.30E-10 |
| 7439-89-6 | Iron | 3.36E-05 | 3.06E-04 | 1.08E-01 | 9.24E-03 | 9.24E-03 | 3.92E-10 |
| 7439-97-6 | Mercury | 1.40E-06 | 1.92E-05 | 2.51E-02 | 1.32E-01 | 1.32E-01 | 3.36E-10 |
| 7440-09-7 | Potassium | 1.25E-04 | 1.10E-03 | 5.54E-01 | 3.09E-02 | 3.09E-02 | 2.02E-10 |
| 7439-93-2 | Lithium | 7.36E-07 | 7.81E-06 | 1.10E-01 | 2.79E-03 | 2.79E-03 | 9.75E-12 |
| 7439-95-4 | Magnesium | 1.83E-05 | 2.31E-05 | 4.09E-02 | 6.69E-04 | 6.69E-04 | 2.84E-11 |
| 7439-96-5 | Manganese | 1.02E-05 | 9.02E-05 | 5.39E-03 | 5.71E-03 | 5.71E-03 | 9.96E-11 |
| 7440-23-5 | Sodium | 4.88E-04 | 3.92E-03 | 3.69E-01 | 3.19E-02 | 3.19E-02 | 7.19E-10 |
| 7440-02-0 | Nickel | 3.87E-06 | 4.53E-05 | 3.01E-03 | 1.84E-03 | 1.84E-03 | 3.72E-11 |
| 14797-65-0 | Nitrite | 1.44E-04 | 1.42E-03 | 0.00E+00 | 0.00E+00 | 0.00E+00 | 2.06E-10 |
| 14797-55-8 | Nitrate | 7.70E-04 | 7.49E-03 | 0.00E+00 | 0.00E+00 | 0.00E+00 | 1.42E-09 |
| 14280-30-9 | Hydroxide | 5.76E-04 | 4.21E-03 | 0.00E+00 | 0.00E+00 | 0.00E+00 | 1.78E-09 |
| 7723-14-0 | Phosphorous | 6.41E-11 | 2.84E-12 | 7.73E-02 | 8.56E-03 | 8.56E-03 | 1.05E-17 |
| 7439-92-1 | Lead | 2.68E-06 | 2.98E-05 | 1.06E-03 | 3.95E-04 | 3.95E-04 | 1.68E-11 |
| 14265-44-2 | Phosphate | 1.45E-04 | 1.04E-03 | 0.00E+00 | 0.00E+00 | 0.00E+00 | 2.10E-10 |
| 63705-05-5 | Sulfur (total) | 1.44E-07 | 8.60E-12 | 0.00E+00 | 0.00E+00 | 0.00E+00 | 1.43E-17 |
| 7440-21-3 | Silicon | 2.61E-05 | 1.74E-04 | 4.20E-01 | 2.14E-02 | 2.14E-02 | 2.93E-10 |
| 14808-79-8 | Sulfate | 5.91E-05 | 5.40E-04 | 0.00E+00 | 0.00E+00 | 0.00E+00 | 6.84E-11 |
| 7440-24-6 | Strontium (total) | 2.93E-07 | 4.56E-06 | 6.38E-05 | 3.28E-04 | 3.28E-04 | 7.37E-12 |
| 7440-66-6 | Zinc | 1.41E-06 | 1.07E-05 | 1.42E-01 | 4.88E-03 | 4.88E-03 | 1.85E-11 |
| 7440-67-7 | Zirconium | 1.11E-05 | 1.18E-04 | 4.32E-02 | 3.11E-03 | 3.11E-03 | 1.94E-10 |

**Estimated Inorganic Unabated Emissions from PT, LAW, and HLW**

| CAS Number | Compound | PT-S3 (g/s) | PT-S4 (g/s) | LV-S3 (g/s) | HV-S3a (g/s) | HV-S3b (g/s) | HV-S4 (g/s) |
|---|---|---|---|---|---|---|---|
| 7440-41-7 | Beryllium | 7.50E-07 | 7.93E-06 | 2.89E-03 | 2.10E-04 | 2.10E-04 | 1.31E-11 |
| 57-12-5 | Cyanide | 3.94E-05 | 2.83E-04 | 6.46E-02 | 7.16E-03 | 7.16E-03 | 5.73E-11 |
| 7440-48-4 | Cobalt | 4.60E-06 | 5.42E-05 | 5.32E-05 | 2.21E-03 | 2.21E-03 | 9.41E-11 |
| 7439-98-7 | Molybdenum | 5.82E-06 | 8.50E-05 | 1.96E-03 | 5.52E-03 | 5.52E-03 | 1.24E-10 |
| 7440-16-6 | Rhodium | 1.50E-06 | 1.59E-05 | 5.78E-03 | 4.20E-04 | 4.20E-04 | 2.62E-11 |
| 7440-36-0 | Antimony | 7.67E-06 | 1.11E-04 | 2.76E-03 | 7.01E-03 | 7.01E-03 | 1.58E-10 |
| 7782-49-2 | Selenium | 9.92E-06 | 1.01E-04 | 1.83E-01 | 1.94E-02 | 1.94E-02 | 9.37E-11 |
| 7440-31-5 | Tin | 5.21E-08 | 7.06E-07 | 1.22E-05 | 1.96E-05 | 1.96E-05 | 8.33E-13 |
| 7440-25-7 | Tantalum | 3.47E-07 | 3.66E-06 | 1.33E-03 | 9.69E-05 | 9.69E-05 | 6.05E-12 |
| 7440-28-0 | Thallium | 8.61E-06 | 8.79E-05 | 1.59E-01 | 1.68E-02 | 1.68E-02 | 8.13E-11 |
| 7440-61-1 | Uranium | 2.44E-04 | 2.03E-03 | 4.98E-02 | 4.46E-02 | 4.46E-02 | 1.90E-09 |
| 7440-62-2 | Vanadium | 2.87E-07 | 4.19E-06 | 9.64E-05 | 2.72E-04 | 2.72E-04 | 6.12E-12 |
| 7440-33-7 | Tungsten | 2.77E-06 | 2.93E-05 | 1.07E-02 | 7.74E-04 | 7.74E-04 | 4.83E-11 |
| 7440-65-5 | Yttrium | 1.17E-06 | 1.95E-05 | 8.09E-05 | 1.56E-03 | 1.56E-03 | 3.51E-11 |
| 630-08-0 | Carbon monoxide | 7.58E-22 | 5.55E-22 | 6.37E-01 | 5.27E-02 | 5.27E-02 | 1.68E-27 |
| 10102-43-9 | Nitric oxide | 3.71E-27 | 5.77E-27 | 2.24E+01 | 2.17E+00 | 2.17E+00 | 1.47E-32 |
| 10102-44-0 | Nitrogen dioxide | 2.73E-21 | 2.55E-28 | 3.13E+00 | 3.03E-01 | 3.03E-01 | 2.69E-32 |
| 7446-09-5 | Sulfur dioxide | 1.40E-23 | 4.51E-27 | 1.28E+00 | 8.44E-02 | 8.44E-02 | 2.98E-33 |
| 7664-41-7 | Ammonia/ammonium | 1.60E-03 | 1.32E-05 | 3.58E-03 | 2.88E-02 | 2.88E-02 | 5.99E-11 |

**Estimated Inorganic Abated Emissions from PT, LAW, and HLW**

| CAS Number | Compound | PT-S3 (g/s) | PT-S4 (g/s) | LV-S3 (g/s) | HV-S3a (g/s) | HV-S3b (g/s) | HV-S4 (g/s) |
|---|---|---|---|---|---|---|---|
| 7440-22-4 | Silver | 5.13E-15 | 6.26E-12 | 3.72E-11 | 6.71E-13 | 6.71E-13 | 5.15E-17 |
| 7429-90-5 | Aluminum | 1.06E-12 | 1.14E-09 | 2.29E-09 | 1.93E-12 | 1.93E-12 | 1.55E-15 |
| 7440-38-2 | Arsenic | 1.34E-12 | 2.43E-09 | 3.30E-07 | 8.57E-09 | 8.57E-09 | 2.19E-13 |
| 7440-42-8 | Boron | 3.84E-14 | 3.74E-11 | 1.05E-08 | 6.01E-12 | 6.01E-12 | 5.12E-16 |
| 7440-39-3 | Barium | 2.56E-14 | 3.59E-11 | 1.05E-12 | 1.60E-13 | 1.60E-13 | 3.17E-16 |
| 7440-69-9 | Bismuth | 1.42E-14 | 2.75E-11 | 4.08E-11 | 1.14E-12 | 1.14E-12 | 2.01E-16 |
| 7440-70-2 | Calcium | 3.64E-12 | 3.06E-10 | 8.36E-09 | 2.11E-12 | 2.11E-12 | 6.60E-16 |
| 7440-43-9 | Cadmium | 7.13E-14 | 1.09E-10 | 2.91E-09 | 1.23E-11 | 1.23E-11 | 7.89E-16 |
| 16887-00-6 | Chloride | 2.30E-13 | 2.72E-10 | 7.01E-09 | 3.93E-15 | 3.93E-15 | 6.08E-16 |
| 18540-29-9 | Chromium (hexavalent) | 1.25E-13 | 1.65E-10 | 1.93E-09 | 1.65E-12 | 1.65E-12 | 1.36E-16 |
| 7440-50-8 | Copper | 4.86E-15 | 5.74E-12 | 6.05E-12 | 8.90E-14 | 8.90E-14 | 3.29E-17 |
| 16984-48-8 | Flouride | 2.65E-13 | 3.61E-10 | 1.09E-08 | 1.27E-14 | 1.27E-14 | 1.65E-15 |
| 7439-89-6 | Iron | 2.52E-13 | 3.06E-10 | 1.35E-09 | 1.29E-12 | 1.29E-12 | 1.96E-15 |
| 7439-97-6 | Mercury | 1.40E-06 | 1.92E-05 | 6.99E-05 | 6.31E-06 | 6.31E-06 | 3.36E-10 |
| 7440-09-7 | Potassium | 9.39E-13 | 1.10E-09 | 2.72E-08 | 1.52E-11 | 1.52E-11 | 1.01E-15 |
| 7439-93-2 | Lithium | 5.52E-15 | 7.81E-12 | 6.53E-09 | 1.66E-12 | 1.66E-12 | 4.88E-17 |
| 7439-95-4 | Magnesium | 1.38E-13 | 2.31E-11 | 1.02E-09 | 1.86E-13 | 1.86E-13 | 1.42E-16 |
| 7439-96-5 | Manganese | 7.62E-14 | 9.02E-11 | 8.98E-11 | 1.06E-12 | 1.06E-12 | 4.98E-16 |
| 7440-23-5 | Sodium | 3.66E-12 | 3.92E-09 | 3.55E-08 | 3.07E-11 | 3.07E-11 | 3.59E-15 |
| 7440-02-0 | Nickel | 2.90E-14 | 4.53E-11 | 1.27E-10 | 8.67E-13 | 8.67E-13 | 1.86E-16 |
| 14797-65-0 | Nitrite | 1.08E-12 | 1.42E-09 | 1.34E-12 | 6.87E-16 | 6.87E-16 | 1.03E-15 |
| 14797-55-8 | Nitrate | 5.78E-12 | 7.49E-09 | 6.98E-12 | 4.79E-15 | 4.79E-15 | 7.11E-15 |
| 14280-30-9 | Hydroxide | 4.32E-12 | 4.21E-09 | 3.21E-12 | 5.94E-15 | 5.94E-15 | 8.90E-15 |
| 7723-14-0 | Phosphorous | 4.81E-19 | 2.84E-18 | 3.86E-07 | 4.28E-08 | 4.28E-08 | 5.27E-23 |
| 7439-92-1 | Lead | 2.01E-14 | 2.98E-11 | 7.66E-11 | 2.86E-13 | 2.86E-13 | 8.40E-17 |
| 14265-44-2 | Phosphate | 1.09E-12 | 1.04E-09 | 9.48E-13 | 7.00E-16 | 7.00E-16 | 1.05E-15 |
| 63705-05-5 | Sulfur (total) | 1.08E-15 | 8.60E-18 | 1.06E-02 | 7.04E-03 | 7.04E-03 | 7.17E-23 |
| 7440-21-3 | Silicon | 1.96E-13 | 1.74E-10 | 7.00E-09 | 3.97E-12 | 3.97E-12 | 1.47E-15 |
| 14808-79-8 | Sulfate | 4.44E-13 | 5.40E-10 | 5.16E-13 | 2.28E-16 | 2.28E-16 | 3.42E-16 |
| 7440-24-6 | Strontium (total) | 2.20E-15 | 4.56E-12 | 7.98E-13 | 4.58E-14 | 4.58E-14 | 3.68E-17 |
| 7440-66-6 | Zinc | 1.06E-14 | 1.07E-11 | 3.23E-09 | 1.23E-12 | 1.23E-12 | 9.23E-17 |
| 7440-67-7 | Zirconium | 8.36E-14 | 1.18E-10 | 7.20E-10 | 5.79E-13 | 5.79E-13 | 9.72E-16 |

**Estimated Inorganic Abated Emissions from PT, LAW, and HLW**

| CAS Number | Compound | PT-S3 (g/s) | PT-S4 (g/s) | LV-S3 (g/s) | HV-S3a (g/s) | HV-S3b (g/s) | HV-S4 (g/s) |
|---|---|---|---|---|---|---|---|
| 7440-41-7 | Beryllium | 5.63E-15 | 7.93E-12 | 4.82E-11 | 3.90E-14 | 3.90E-14 | 6.55E-17 |
| 57-12-5 | Cyanide | 2.96E-13 | 2.83E-10 | 2.58E-13 | 1.91E-16 | 1.91E-16 | 2.86E-16 |
| 7440-48-4 | Cobalt | 3.46E-14 | 5.42E-11 | 4.16E-12 | 1.73E-12 | 1.73E-12 | 4.70E-16 |
| 7439-98-7 | Molybdenum | 4.37E-14 | 8.50E-11 | 1.26E-10 | 3.54E-12 | 3.54E-12 | 6.21E-16 |
| 7440-16-6 | Rhodium | 1.13E-14 | 1.59E-11 | 9.64E-11 | 7.80E-14 | 7.80E-14 | 1.31E-16 |
| 7440-36-0 | Antimony | 5.76E-14 | 1.11E-10 | 3.40E-10 | 8.62E-12 | 8.62E-12 | 7.89E-16 |
| 7782-49-2 | Selenium | 7.45E-14 | 1.01E-10 | 3.05E-09 | 3.60E-15 | 3.60E-15 | 4.69E-16 |
| 7440-31-5 | Tin | 3.91E-16 | 7.06E-13 | 1.53E-13 | 2.74E-15 | 2.74E-15 | 4.16E-18 |
| 7440-25-7 | Tantalum | 2.60E-15 | 3.66E-12 | 2.23E-11 | 1.80E-14 | 1.80E-14 | 3.03E-17 |
| 7440-28-0 | Thallium | 6.46E-14 | 8.79E-11 | 2.65E-09 | 3.13E-15 | 3.13E-15 | 4.07E-16 |
| 7440-61-1 | Uranium | 1.83E-12 | 2.03E-09 | 6.24E-10 | 6.23E-12 | 6.23E-12 | 9.48E-15 |
| 7440-62-2 | Vanadium | 2.15E-15 | 4.19E-12 | 6.18E-12 | 1.74E-13 | 1.74E-13 | 3.06E-17 |
| 7440-33-7 | Tungsten | 2.08E-14 | 2.93E-11 | 1.78E-10 | 1.44E-13 | 1.44E-13 | 2.42E-16 |
| 7440-65-5 | Yttrium | 8.78E-15 | 1.95E-11 | 1.01E-12 | 2.18E-13 | 2.18E-13 | 1.75E-16 |
| 630-08-0 | Carbon monoxide | 2.09E-23 | 5.58E-22 | 6.37E-02 | 5.27E-03 | 5.27E-03 | 3.74E-22 |
| 10102-43-9 | Nitric oxide | 1.60E-28 | 5.58E-27 | 9.34E-01 | 1.08E-01 | 1.08E-01 | 6.99E-39 |
| 10102-44-0 | Nitrogen dioxide | 1.07E-18 | 2.35E-28 | 1.30E-01 | 1.51E-02 | 1.51E-02 | 3.38E-44 |
| 7446-09-5 | Sulfur dioxide | 7.93E-24 | 1.34E-24 | 1.06E-01 | 7.04E-02 | 7.04E-02 | 0.00E+00 |
| 7664-41-7 | Ammonia/ammonium | 5.32E-04 | 1.35E-05 | 3.27E-02 | 9.44E-03 | 9.44E-03 | 9.75E-11 |

## Estimated Inorganic Concentration at Point of Maximum Impact for Pretreatment

| | | PT-S3 | PT-S4 | | | | | | |
|---|---|---|---|---|---|---|---|---|---|
| | | Vapor/Particle/ Particle-Bound | Vapor/Particle/ Particle-Bound | | | | | | |
| Average Annual Concentration | | 0.07839 | 0.07451 | µg/m³ per g/s | | | | | |
| Maximum 24-Hour Concentration | | 0.56649 | 0.52364 | µg/m3 per g/s | | | | | |
| CAS Number | Compound | PT-S3 Emissions (g/s) | PT-S3 Annual Average Concentration (µg/m³) | PT-S3 Maximum 24 hr Concentration (µg/m³) | PT-S4 Emissions (g/s) | PT-S4 Annual Average Concentration (µg/m³) | PT-S4 Maximum 24 hr Concentration (µg/m³) | Total PT Annual Average Concentration (µg/m³) | Total PT Maximum 24 hr Concentration (µg/m³) |
| 7440-22-4 | Silver | 5.13E-15 | 4.02E-16 | 2.90E-15 | 6.26E-12 | 4.67E-13 | 3.28E-12 | 4.67E-13 | 3.28E-12 |
| 7429-90-5 | Aluminum | 1.06E-12 | 8.34E-14 | 6.02E-13 | 1.14E-09 | 8.51E-11 | 5.98E-10 | 8.52E-11 | 5.99E-10 |
| 7440-38-2 | Arsenic | 1.34E-12 | 1.05E-13 | 7.61E-13 | 2.43E-09 | 1.81E-10 | 1.28E-09 | 1.82E-10 | 1.28E-09 |
| 7440-42-8 | Boron | 3.84E-14 | 3.01E-15 | 2.18E-14 | 3.74E-11 | 2.79E-12 | 1.96E-11 | 2.79E-12 | 1.96E-11 |
| 7440-39-3 | Barium | 2.56E-14 | 2.01E-15 | 1.45E-14 | 3.59E-11 | 2.68E-12 | 1.88E-11 | 2.68E-12 | 1.88E-11 |
| 7440-69-9 | Bismuth | 1.42E-14 | 1.11E-15 | 8.02E-15 | 2.75E-11 | 2.05E-12 | 1.44E-11 | 2.05E-12 | 1.44E-11 |
| 7440-70-2 | Calcium | 3.64E-12 | 2.85E-13 | 2.06E-12 | 3.06E-10 | 2.28E-11 | 1.60E-10 | 2.31E-11 | 1.62E-10 |
| 7440-43-9 | Cadmium | 7.13E-14 | 5.59E-15 | 4.04E-14 | 1.09E-10 | 8.09E-12 | 5.69E-11 | 8.10E-12 | 5.69E-11 |
| 16887-00-6 | Chloride | 2.30E-13 | 1.80E-14 | 1.30E-13 | 2.72E-10 | 2.02E-11 | 1.42E-10 | 2.03E-11 | 1.42E-10 |
| 18540-29-9 | Chromium (hexavalent) | 1.25E-13 | 9.76E-15 | 7.05E-14 | 1.65E-10 | 1.23E-11 | 8.65E-11 | 1.23E-11 | 8.65E-11 |
| 7440-50-8 | Copper | 4.86E-15 | 3.81E-16 | 2.75E-15 | 5.74E-12 | 4.28E-13 | 3.01E-12 | 4.28E-13 | 3.01E-12 |
| 16984-48-8 | Flouride | 2.65E-13 | 2.08E-14 | 1.50E-13 | 3.61E-10 | 2.69E-11 | 1.89E-10 | 2.69E-11 | 1.89E-10 |
| 7439-89-6 | Iron | 2.52E-13 | 1.98E-14 | 1.43E-13 | 3.06E-10 | 2.28E-11 | 1.60E-10 | 2.28E-11 | 1.60E-10 |
| 7439-97-6 | Mercury | 1.40E-06 | 1.09E-07 | 7.91E-07 | 1.92E-05 | 1.43E-06 | 1.01E-05 | 1.54E-06 | 1.09E-05 |
| 7440-09-7 | Potassium | 9.39E-13 | 7.36E-14 | 5.32E-13 | 1.10E-09 | 8.23E-11 | 5.78E-10 | 8.24E-11 | 5.79E-10 |
| 7439-93-2 | Lithium | 5.52E-15 | 4.33E-16 | 3.13E-15 | 7.81E-12 | 5.82E-13 | 4.09E-12 | 5.82E-13 | 4.09E-12 |
| 7439-95-4 | Magnesium | 1.38E-13 | 1.08E-14 | 7.79E-14 | 2.31E-11 | 1.72E-12 | 1.21E-11 | 1.73E-12 | 1.22E-11 |
| 7439-96-5 | Manganese | 7.62E-14 | 5.98E-15 | 4.32E-14 | 9.02E-11 | 6.72E-12 | 4.72E-11 | 6.72E-12 | 4.73E-11 |
| 7440-23-5 | Sodium | 3.66E-12 | 2.87E-13 | 2.08E-12 | 3.92E-09 | 2.92E-10 | 2.06E-09 | 2.93E-10 | 2.06E-09 |
| 7440-02-0 | Nickel | 2.90E-14 | 2.28E-15 | 1.64E-14 | 4.53E-11 | 3.37E-12 | 2.37E-11 | 3.38E-12 | 2.37E-11 |
| 14797-65-0 | Nitrite | 1.08E-12 | 8.49E-14 | 6.14E-13 | 1.42E-09 | 1.06E-10 | 7.45E-10 | 1.06E-10 | 7.45E-10 |
| 14797-55-8 | Nitrate | 5.78E-12 | 4.53E-13 | 3.28E-12 | 7.49E-09 | 5.58E-10 | 3.92E-09 | 5.59E-10 | 3.93E-09 |
| 14280-30-9 | Hydroxide | 4.32E-12 | 3.39E-13 | 2.45E-12 | 4.21E-09 | 3.13E-10 | 2.20E-09 | 3.14E-10 | 2.20E-09 |
| 7723-14-0 | Phosphorous | 4.81E-19 | 3.77E-20 | 2.72E-19 | 2.84E-18 | 2.11E-19 | 1.48E-18 | 2.49E-19 | 1.76E-18 |
| 7439-92-1 | Lead | 2.01E-14 | 1.58E-15 | 1.14E-14 | 2.98E-11 | 2.22E-12 | 1.56E-11 | 2.22E-12 | 1.56E-11 |
| 14265-44-2 | Phosphate | 1.09E-12 | 8.52E-14 | 6.15E-13 | 1.04E-09 | 7.76E-11 | 5.46E-10 | 7.77E-11 | 5.46E-10 |
| 63705-05-5 | Sulfur (total) | 1.08E-15 | 8.45E-17 | 6.11E-16 | 8.60E-18 | 6.41E-19 | 4.50E-18 | 8.52E-17 | 6.15E-16 |
| 7440-21-3 | Silicon | 1.96E-13 | 1.54E-14 | 1.11E-13 | 1.74E-10 | 1.30E-11 | 9.14E-11 | 1.30E-11 | 9.15E-11 |
| 14808-79-8 | Sulfate | 4.44E-13 | 3.48E-14 | 2.51E-13 | 5.40E-10 | 4.02E-11 | 2.83E-10 | 4.03E-11 | 2.83E-10 |

## Estimated Inorganic Concentration at Point of Maximum Impact for Pretreatment

| | PT-S3 | PT-S4 | |
|---|---|---|---|
| | Vapor/Particle/ Particle-Bound | Vapor/Particle/ Particle-Bound | |
| Average Annual Concentration | 0.07839 | 0.07451 | $\mu g/m^3$ per g/s |
| Maximum 24-Hour Concentration | 0.56649 | 0.52364 | µg/m3 per g/s |

| CAS Number | Compound | PT-S3 Emissions (g/s) | PT-S3 Annual Average Concentration ($\mu g/m^3$) | PT-S3 Maximum 24 hr Concentration ($\mu g/m^3$) | PT-S4 Emissions (g/s) | PT-S4 Annual Average Concentration ($\mu g/m^3$) | PT-S4 Maximum 24 hr Concentration ($\mu g/m^3$) | Total PT Annual Average Concentration ($\mu g/m^3$) | Total PT Maximum 24 hr Concentration ($\mu g/m^3$) |
|---|---|---|---|---|---|---|---|---|---|
| 7440-24-6 | Strontium (total) | 2.20E-15 | 1.72E-16 | 1.25E-15 | 4.56E-12 | 3.40E-13 | 2.39E-12 | 3.40E-13 | 2.39E-12 |
| 7440-66-6 | Zinc | 1.06E-14 | 8.29E-16 | 5.99E-15 | 1.07E-11 | 7.96E-13 | 5.59E-12 | 7.97E-13 | 5.60E-12 |
| 7440-67-7 | Zirconium | 8.36E-14 | 6.56E-15 | 4.74E-14 | 1.18E-10 | 8.77E-12 | 6.17E-11 | 8.78E-12 | 6.17E-11 |
| 7440-41-7 | Beryllium | 5.63E-15 | 4.41E-16 | 3.19E-15 | 7.93E-12 | 5.91E-13 | 4.15E-12 | 5.91E-13 | 4.15E-12 |
| 57-12-5 | Cyanide | 2.96E-13 | 2.32E-14 | 1.68E-13 | 2.83E-10 | 2.11E-11 | 1.48E-10 | 2.11E-11 | 1.49E-10 |
| 7440-48-4 | Cobalt | 3.46E-14 | 2.71E-15 | 1.96E-14 | 5.42E-11 | 4.04E-12 | 2.84E-11 | 4.04E-12 | 2.84E-11 |
| 7439-98-7 | Molybdenum | 4.37E-14 | 3.42E-15 | 2.47E-14 | 8.50E-11 | 6.34E-12 | 4.45E-11 | 6.34E-12 | 4.45E-11 |
| 7440-16-6 | Rhodium | 1.13E-14 | 8.83E-16 | 6.38E-15 | 1.59E-11 | 1.18E-12 | 8.31E-12 | 1.18E-12 | 8.31E-12 |
| 7440-36-0 | Antimony | 5.76E-14 | 4.52E-15 | 3.26E-14 | 1.11E-10 | 8.25E-12 | 5.80E-11 | 8.25E-12 | 5.80E-11 |
| 7782-49-2 | Selenium | 7.45E-14 | 5.84E-15 | 4.22E-14 | 1.01E-10 | 7.55E-12 | 5.30E-11 | 7.55E-12 | 5.31E-11 |
| 7440-31-5 | Tin | 3.91E-16 | 3.06E-17 | 2.21E-16 | 7.06E-13 | 5.26E-14 | 3.70E-13 | 5.26E-14 | 3.70E-13 |
| 7440-25-7 | Tantalum | 2.60E-15 | 2.04E-16 | 1.47E-15 | 3.66E-12 | 2.73E-13 | 1.92E-12 | 2.73E-13 | 1.92E-12 |
| 7440-28-0 | Thallium | 6.46E-14 | 5.07E-15 | 3.66E-14 | 8.79E-11 | 6.55E-12 | 4.60E-11 | 6.55E-12 | 4.60E-11 |
| 7440-61-1 | Uranium | 1.83E-12 | 1.44E-13 | 1.04E-12 | 2.03E-09 | 1.51E-10 | 1.06E-09 | 1.51E-10 | 1.06E-09 |
| 7440-62-2 | Vanadium | 2.15E-15 | 1.69E-16 | 1.22E-15 | 4.19E-12 | 3.12E-13 | 2.19E-12 | 3.12E-13 | 2.19E-12 |
| 7440-33-7 | Tungsten | 2.08E-14 | 1.63E-15 | 1.18E-14 | 2.93E-11 | 2.18E-12 | 1.53E-11 | 2.18E-12 | 1.53E-11 |
| 7440-65-5 | Yttrium | 8.78E-15 | 6.88E-16 | 4.98E-15 | 1.95E-11 | 1.46E-12 | 1.02E-11 | 1.46E-12 | 1.02E-11 |
| 630-08-0 | Carbon monoxide | 2.09E-23 | 1.64E-24 | 1.18E-23 | 5.58E-22 | 4.16E-23 | 2.92E-22 | 4.32E-23 | 3.04E-22 |
| 10102-43-9 | Nitric oxide | 1.60E-28 | 1.25E-29 | 9.05E-29 | 5.58E-27 | 4.16E-28 | 2.92E-27 | 4.29E-28 | 3.01E-27 |
| 10102-44-0 | Nitrogen dioxide | 1.07E-18 | 8.35E-20 | 6.03E-19 | 2.35E-28 | 1.75E-29 | 1.23E-28 | 8.35E-20 | 6.03E-19 |
| 7446-09-5 | Sulfur dioxide | 7.93E-24 | 6.22E-25 | 4.49E-24 | 1.34E-24 | 9.97E-26 | 7.01E-25 | 7.21E-25 | 5.19E-24 |
| 7664-41-7 | Ammonia/Ammonium | 5.32E-04 | 4.17E-05 | 3.01E-04 | 1.35E-05 | 1.00E-06 | 7.06E-06 | 4.27E-05 | 3.08E-04 |

| Estimated Inorganic Concentration at Point of Maximum Impact for LAW | | | | |
|---|---|---|---|---|
| | | | | |
| | | LV-S3 Unit Concentration Factors | | |
| | | Vapor/Particle/Particle-Bound | | |
| Average Annual Concentration | | 0.08352 | $\mu g/m^3$ per g/s | |
| Maximum 24-Hour Concentration | | 0.62274 | $\mu g/m^3$ per g/s | |
| | | | | |
| CAS Number | Compound | LV-S3 (g/s) | LV-S3 Annual Average Concentration $\mu g/m^3$ | LV-S3 Maximum 24 hr Concentration $\mu g/m^3$ |
| 7440-22-4 | Silver | 3.72E-11 | 3.11E-12 | 2.32E-11 |
| 7429-90-5 | Aluminum | 2.29E-09 | 1.91E-10 | 1.42E-09 |
| 7440-38-2 | Arsenic | 3.30E-07 | 2.76E-08 | 2.06E-07 |
| 7440-42-8 | Boron | 1.05E-08 | 8.78E-10 | 6.54E-09 |
| 7440-39-3 | Barium | 1.05E-12 | 8.76E-14 | 6.53E-13 |
| 7440-69-9 | Bismuth | 4.08E-11 | 3.41E-12 | 2.54E-11 |
| 7440-70-2 | Calcium | 8.36E-09 | 6.99E-10 | 5.21E-09 |
| 7440-43-9 | Cadmium | 2.91E-09 | 2.43E-10 | 1.81E-09 |
| 16887-00-6 | Chloride | 7.01E-09 | 5.86E-10 | 4.37E-09 |
| 18540-29-9 | Chromium (hexavalent) | 1.93E-09 | 1.61E-10 | 1.20E-09 |
| 7440-50-8 | Copper | 6.05E-12 | 5.05E-13 | 3.77E-12 |
| 16984-48-8 | Flouride | 1.09E-08 | 9.07E-10 | 6.76E-09 |
| 7439-89-6 | Iron | 1.35E-09 | 1.13E-10 | 8.42E-10 |
| 7439-97-6 | Mercury | 6.99E-05 | 5.83E-06 | 4.35E-05 |
| 7440-09-7 | Potassium | 2.72E-08 | 2.27E-09 | 1.69E-08 |
| 7439-93-2 | Lithium | 6.53E-09 | 5.45E-10 | 4.06E-09 |
| 7439-95-4 | Magnesium | 1.02E-09 | 8.54E-11 | 6.37E-10 |
| 7439-96-5 | Manganese | 8.98E-11 | 7.50E-12 | 5.59E-11 |
| 7440-23-5 | Sodium | 3.55E-08 | 2.97E-09 | 2.21E-08 |
| 7440-02-0 | Nickel | 1.27E-10 | 1.06E-11 | 7.93E-11 |
| 14797-65-0 | Nitrite | 1.34E-12 | 1.12E-13 | 8.37E-13 |
| 14797-55-8 | Nitrate | 6.98E-12 | 5.83E-13 | 4.35E-12 |
| 14280-30-9 | Hydroxide | 3.21E-12 | 2.68E-13 | 2.00E-12 |
| 7723-14-0 | Phosphorous | 3.86E-07 | 3.23E-08 | 2.41E-07 |
| 7439-92-1 | Lead | 7.66E-11 | 6.40E-12 | 4.77E-11 |
| 14265-44-2 | Phosphate | 9.48E-13 | 7.91E-14 | 5.90E-13 |
| 63705-05-5 | Sulfur (total) | 1.06E-02 | 8.89E-04 | 6.63E-03 |
| 7440-21-3 | Silicon | 7.00E-09 | 5.85E-10 | 4.36E-09 |
| 14808-79-8 | Sulfate | 5.16E-13 | 4.31E-14 | 3.22E-13 |
| 7440-24-6 | Strontium (total) | 7.98E-13 | 6.67E-14 | 4.97E-13 |
| 7440-66-6 | Zinc | 3.23E-09 | 2.70E-10 | 2.01E-09 |
| 7440-67-7 | Zirconium | 7.20E-10 | 6.02E-11 | 4.49E-10 |
| 7440-41-7 | Beryllium | 4.82E-11 | 4.02E-12 | 3.00E-11 |
| 57-12-5 | Cyanide | 2.58E-13 | 2.16E-14 | 1.61E-13 |
| 7440-48-4 | Cobalt | 4.16E-12 | 3.47E-13 | 2.59E-12 |
| 7439-98-7 | Molybdenum | 1.26E-10 | 1.05E-11 | 7.82E-11 |

| Estimated Inorganic Concentration at Point of Maximum Impact for LAW | | | | |
|---|---|---|---|---|
| | | | | |
| | | LV-S3 Unit Concentration Factors | | |
| | | Vapor/Particle/Particle-Bound | | |
| Average Annual Concentration | | 0.08352 | $\mu g/m^3$ per g/s | |
| Maximum 24-Hour Concentration | | 0.62274 | $\mu g/m^3$ per g/s | |
| | | | | |
| CAS Number | Compound | LV-S3 (g/s) | LV-S3 Annual Average Concentration $\mu g/m^3$ | LV-S3 Maximum 24 hr Concentration $\mu g/m^3$ |
| 7440-16-6 | Rhodium | 9.64E-11 | 8.05E-12 | 6.00E-11 |
| 7440-36-0 | Antimony | 3.40E-10 | 2.84E-11 | 2.11E-10 |
| 7782-49-2 | Selenium | 3.05E-09 | 2.55E-10 | 1.90E-09 |
| 7440-31-5 | Tin | 1.53E-13 | 1.28E-14 | 9.55E-14 |
| 7440-25-7 | Tantalum | 2.23E-11 | 1.86E-12 | 1.39E-11 |
| 7440-28-0 | Thallium | 2.65E-09 | 2.21E-10 | 1.65E-09 |
| 7440-61-1 | Uranium | 6.24E-10 | 5.21E-11 | 3.88E-10 |
| 7440-62-2 | Vanadium | 6.18E-12 | 5.16E-13 | 3.85E-12 |
| 7440-33-7 | Tungsten | 1.78E-10 | 1.48E-11 | 1.11E-10 |
| 7440-65-5 | Yttrium | 1.01E-12 | 8.45E-14 | 6.30E-13 |
| 630-08-0 | Carbon monoxide | 6.37E-02 | 5.32E-03 | 3.97E-02 |
| 10102-43-9 | Nitric oxide | 9.34E-01 | 7.80E-02 | 5.81E-01 |
| 10102-44-0 | Nitrogen dioxide | 1.30E-01 | 1.09E-02 | 8.12E-02 |
| 7446-09-5 | Sulfur dioxide | 1.06E-01 | 8.88E-03 | 6.62E-02 |
| 7664-41-7 | Ammonia/Ammonium | 3.27E-02 | 2.73E-03 | 2.04E-02 |

## Estimated Inorganic Concentration at Point of Maximum Impact for HLW

| | HV-S3 A and B Vapor/Particle/Particle-Bound | HV-S4 Vapor/Particle/Particle-Bound | |
|---|---|---|---|
| Average Annual Concentration | 0.08302 | 0.08406 | µg/m³ per g/s |
| Maximum 24-Hour Concentration | 0.61071 | 0.61652 | µg/m³ per g/s |

| CAS Number | Compound | HV-S3a (g/s) | HV-S3a Annual Average Concentration µg/m³ | HV-S3a Maximum 24 hr Concentration µg/m³ | HV-S3b (g/s) | HV-S3b Annual Average Concentration µg/m³ | HV-S3b Maximum 24 hr Concentration µg/m³ | HV-S4 (g/s) | HV-S4 Annual Average Concentration µg/m³ | HV-S4 Maximum 24 hr Concentration µg/m³ | Total HLW Annual Average Concentration µg/m³ | Total HLW Maximum 24 hr Concentration µg/m³ |
|---|---|---|---|---|---|---|---|---|---|---|---|---|
| 7440-22-4 | Silver | 6.71E-13 | 5.57E-14 | 4.10E-13 | 6.71E-13 | 5.57E-14 | 4.10E-13 | 5.15E-17 | 4.33E-18 | 3.18E-17 | 1.11E-13 | 8.20E-13 |
| 7429-90-5 | Aluminum | 1.93E-12 | 1.60E-13 | 1.18E-12 | 1.93E-12 | 1.60E-13 | 1.18E-12 | 1.55E-15 | 1.31E-16 | 9.58E-16 | 3.21E-13 | 2.36E-12 |
| 7440-38-2 | Arsenic | 8.57E-09 | 7.12E-10 | 5.24E-09 | 8.57E-09 | 7.12E-10 | 5.24E-09 | 2.19E-13 | 1.85E-14 | 1.35E-13 | 1.42E-09 | 1.05E-08 |
| 7440-42-8 | Boron | 6.01E-12 | 4.99E-13 | 3.67E-12 | 6.01E-12 | 4.99E-13 | 3.67E-12 | 5.12E-16 | 4.30E-17 | 3.15E-16 | 9.97E-13 | 7.33E-12 |
| 7440-39-3 | Barium | 1.60E-13 | 1.33E-14 | 9.78E-14 | 1.60E-13 | 1.33E-14 | 9.78E-14 | 3.17E-16 | 2.66E-17 | 1.95E-16 | 2.66E-14 | 1.96E-13 |
| 7440-69-9 | Bismuth | 1.14E-12 | 9.49E-14 | 6.98E-13 | 1.14E-12 | 9.49E-14 | 6.98E-13 | 2.01E-16 | 1.69E-17 | 1.24E-16 | 1.90E-13 | 1.40E-12 |
| 7440-70-2 | Calcium | 2.11E-12 | 1.75E-13 | 1.29E-12 | 2.11E-12 | 1.75E-13 | 1.29E-12 | 6.60E-16 | 5.54E-17 | 4.07E-16 | 3.50E-13 | 2.57E-12 |
| 7440-43-9 | Cadmium | 1.23E-11 | 1.02E-12 | 7.53E-12 | 1.23E-11 | 1.02E-12 | 7.53E-12 | 7.89E-16 | 6.64E-17 | 4.87E-16 | 2.05E-12 | 1.51E-11 |
| 16887-00-6 | Chloride | 3.93E-15 | 3.27E-16 | 2.40E-15 | 3.93E-15 | 3.27E-16 | 2.40E-15 | 6.08E-16 | 5.11E-17 | 3.75E-16 | 7.04E-16 | 5.18E-15 |
| 18540-29-9 | Chromium (hexavalent) | 1.65E-12 | 1.37E-13 | 1.01E-12 | 1.65E-12 | 1.37E-13 | 1.01E-12 | 1.36E-16 | 1.14E-17 | 8.39E-17 | 2.74E-13 | 2.01E-12 |
| 7440-50-8 | Copper | 8.90E-14 | 7.39E-15 | 5.43E-14 | 8.90E-14 | 7.39E-15 | 5.43E-14 | 3.29E-17 | 2.76E-18 | 2.03E-17 | 1.48E-14 | 1.09E-13 |
| 16984-48-8 | Flouride | 1.27E-14 | 1.05E-15 | 7.76E-15 | 1.27E-14 | 1.05E-15 | 7.76E-15 | 1.65E-15 | 1.39E-16 | 1.02E-15 | 2.25E-15 | 1.65E-14 |
| 7439-89-6 | Iron | 1.29E-12 | 1.07E-13 | 7.87E-13 | 1.29E-12 | 1.07E-13 | 7.87E-13 | 1.96E-15 | 1.65E-16 | 1.21E-15 | 2.14E-13 | 1.58E-12 |
| 7439-97-6 | Mercury | 6.31E-06 | 5.24E-07 | 3.85E-06 | 6.31E-06 | 5.24E-07 | 3.85E-06 | 3.36E-10 | 2.82E-11 | 2.07E-10 | 1.05E-06 | 7.70E-06 |
| 7440-09-7 | Potassium | 1.52E-11 | 1.26E-12 | 9.27E-12 | 1.52E-11 | 1.26E-12 | 9.27E-12 | 1.01E-15 | 8.51E-17 | 6.24E-16 | 2.52E-12 | 1.85E-11 |
| 7439-93-2 | Lithium | 1.66E-12 | 1.38E-13 | 1.02E-12 | 1.66E-12 | 1.38E-13 | 1.02E-12 | 4.88E-17 | 4.10E-18 | 3.01E-17 | 2.76E-13 | 2.03E-12 |
| 7439-95-4 | Magnesium | 1.86E-13 | 1.55E-14 | 1.14E-13 | 1.86E-13 | 1.55E-14 | 1.14E-13 | 1.42E-16 | 1.19E-17 | 8.76E-17 | 3.10E-14 | 2.28E-13 |
| 7439-96-5 | Manganese | 1.06E-12 | 8.81E-14 | 6.48E-13 | 1.06E-12 | 8.81E-14 | 6.48E-13 | 4.98E-16 | 4.18E-17 | 3.07E-16 | 1.76E-13 | 1.30E-12 |
| 7440-23-5 | Sodium | 3.07E-11 | 2.55E-12 | 1.88E-11 | 3.07E-11 | 2.55E-12 | 1.88E-11 | 3.59E-15 | 3.02E-16 | 2.22E-15 | 5.10E-12 | 3.75E-11 |
| 7440-02-0 | Nickel | 8.67E-13 | 7.19E-14 | 5.29E-13 | 8.67E-13 | 7.19E-14 | 5.29E-13 | 1.86E-16 | 1.57E-17 | 1.15E-16 | 1.44E-13 | 1.06E-12 |
| 14797-65-0 | Nitrite | 6.87E-16 | 5.70E-17 | 4.19E-16 | 6.87E-16 | 5.70E-17 | 4.19E-16 | 1.03E-15 | 8.66E-17 | 6.35E-16 | 2.01E-16 | 1.47E-15 |
| 14797-55-8 | Nitrate | 4.79E-15 | 3.98E-16 | 2.92E-15 | 4.79E-15 | 3.98E-16 | 2.92E-15 | 7.11E-15 | 5.98E-16 | 4.38E-15 | 1.39E-15 | 1.02E-14 |
| 14280-30-9 | Hydroxide | 5.94E-15 | 4.93E-16 | 3.63E-15 | 5.94E-15 | 4.93E-16 | 3.63E-15 | 8.90E-15 | 7.49E-16 | 5.49E-15 | 1.73E-15 | 1.27E-14 |
| 7723-14-0 | Phosphorous | 4.28E-08 | 3.56E-09 | 2.62E-08 | 4.28E-08 | 3.56E-09 | 2.62E-08 | 5.27E-23 | 4.43E-24 | 3.25E-23 | 7.11E-09 | 5.23E-08 |
| 7439-92-1 | Lead | 2.86E-13 | 2.38E-14 | 1.75E-13 | 2.86E-13 | 2.38E-14 | 1.75E-13 | 8.40E-17 | 7.06E-18 | 5.18E-17 | 4.76E-14 | 3.50E-13 |
| 14265-44-2 | Phosphate | 7.00E-16 | 5.81E-17 | 4.28E-16 | 7.00E-16 | 5.81E-17 | 4.28E-16 | 1.05E-15 | 8.83E-17 | 6.48E-16 | 2.05E-16 | 1.50E-15 |
| 63705-05-5 | Sulfur (total) | 7.04E-03 | 5.85E-04 | 4.30E-03 | 7.04E-03 | 5.85E-04 | 4.30E-03 | 7.17E-23 | 6.02E-24 | 4.42E-23 | 1.17E-03 | 8.60E-03 |
| 7440-21-3 | Silicon | 3.97E-12 | 3.30E-13 | 2.42E-12 | 3.97E-12 | 3.30E-13 | 2.42E-12 | 1.47E-15 | 1.23E-16 | 9.05E-16 | 6.59E-13 | 4.85E-12 |
| 14808-79-8 | Sulfate | 2.28E-16 | 1.89E-17 | 1.39E-16 | 2.28E-16 | 1.89E-17 | 1.39E-16 | 3.42E-16 | 2.87E-17 | 2.11E-16 | 6.66E-17 | 4.89E-16 |
| 7440-24-6 | Strontium (total) | 4.58E-14 | 3.80E-15 | 2.80E-14 | 4.58E-14 | 3.80E-15 | 2.80E-14 | 3.68E-17 | 3.10E-18 | 2.27E-17 | 7.61E-15 | 5.60E-14 |
| 7440-66-6 | Zinc | 1.23E-12 | 1.02E-13 | 7.54E-13 | 1.23E-12 | 1.02E-13 | 7.54E-13 | 9.23E-17 | 7.76E-18 | 5.69E-17 | 2.05E-13 | 1.51E-12 |
| 7440-67-7 | Zirconium | 5.79E-13 | 4.81E-14 | 3.54E-13 | 5.79E-13 | 4.81E-14 | 3.54E-13 | 9.72E-16 | 8.17E-17 | 5.99E-16 | 9.62E-14 | 7.08E-13 |
| 7440-41-7 | Beryllium | 3.90E-14 | 3.24E-15 | 2.38E-14 | 3.90E-14 | 3.24E-15 | 2.38E-14 | 6.55E-17 | 5.50E-18 | 4.04E-17 | 6.48E-15 | 4.77E-14 |
| 57-12-5 | Cyanide | 1.91E-16 | 1.58E-17 | 1.17E-16 | 1.91E-16 | 1.58E-17 | 1.17E-16 | 2.86E-16 | 2.41E-17 | 1.77E-16 | 5.58E-17 | 4.10E-16 |
| 7440-48-4 | Cobalt | 1.73E-12 | 1.44E-13 | 1.06E-12 | 1.73E-12 | 1.44E-13 | 1.06E-12 | 4.70E-16 | 3.95E-17 | 2.90E-16 | 2.87E-13 | 2.11E-12 |

## Estimated Inorganic Concentration at Point of Maximum Impact for HLW

| | HV-S3 A and B Vapor/Particle/Particle-Bound | HV-S4 Vapor/Particle/Particle-Bound | |
|---|---|---|---|
| Average Annual Concentration | 0.08302 | 0.08406 | $\mu g/m^3$ per g/s |
| Maximum 24-Hour Concentration | 0.61071 | 0.61652 | $\mu g/m^3$ per g/s |

| CAS Number | Compound | HV-S3a (g/s) | HV-S3a Annual Average Concentration $\mu g/m^3$ | HV-S3a Maximum 24 hr Concentration $\mu g/m^3$ | HV-S3b (g/s) | HV-S3b Annual Average Concentration $\mu g/m^3$ | HV-S3b Maximum 24 hr Concentration $\mu g/m^3$ | HV-S4 (g/s) | HV-S4 Annual Average Concentration $\mu g/m^3$ | HV-S4 Maximum 24 hr Concentration $\mu g/m^3$ | Total HLW Annual Average Concentration $\mu g/m^3$ | Total HLW Maximum 24 hr Concentration $\mu g/m^3$ |
|---|---|---|---|---|---|---|---|---|---|---|---|---|
| 7439-98-7 | Molybdenum | 3.54E-12 | 2.94E-13 | 2.16E-12 | 3.54E-12 | 2.94E-13 | 2.16E-12 | 6.21E-16 | 5.22E-17 | 3.83E-16 | 5.88E-13 | 4.32E-12 |
| 7440-16-6 | Rhodium | 7.80E-14 | 6.48E-15 | 4.77E-14 | 7.80E-14 | 6.48E-15 | 4.77E-14 | 1.31E-16 | 1.10E-17 | 8.08E-17 | 1.30E-14 | 9.54E-14 |
| 7440-36-0 | Antimony | 8.62E-12 | 7.15E-13 | 5.26E-12 | 8.62E-12 | 7.15E-13 | 5.26E-12 | 7.89E-16 | 6.63E-17 | 4.86E-16 | 1.43E-12 | 1.05E-11 |
| 7782-49-2 | Selenium | 3.60E-15 | 2.99E-16 | 2.20E-15 | 3.60E-15 | 2.99E-16 | 2.20E-15 | 4.69E-16 | 3.94E-17 | 2.89E-16 | 6.38E-16 | 4.69E-15 |
| 7440-31-5 | Tin | 2.74E-15 | 2.27E-16 | 1.67E-15 | 2.74E-15 | 2.27E-16 | 1.67E-15 | 4.16E-18 | 3.50E-19 | 2.57E-18 | 4.55E-16 | 3.35E-15 |
| 7440-25-7 | Tantalum | 1.80E-14 | 1.50E-15 | 1.10E-14 | 1.80E-14 | 1.50E-15 | 1.10E-14 | 3.03E-17 | 2.54E-18 | 1.87E-17 | 2.99E-15 | 2.20E-14 |
| 7440-28-0 | Thallium | 3.13E-15 | 2.59E-16 | 1.91E-15 | 3.13E-15 | 2.59E-16 | 1.91E-15 | 4.07E-16 | 3.42E-17 | 2.51E-16 | 5.53E-16 | 4.07E-15 |
| 7440-61-1 | Uranium | 6.23E-12 | 5.17E-13 | 3.81E-12 | 6.23E-12 | 5.17E-13 | 3.81E-12 | 9.48E-15 | 7.97E-16 | 5.84E-15 | 1.04E-12 | 7.62E-12 |
| 7440-62-2 | Vanadium | 1.74E-13 | 1.45E-14 | 1.06E-13 | 1.74E-13 | 1.45E-14 | 1.06E-13 | 3.06E-17 | 2.57E-18 | 1.89E-17 | 2.90E-14 | 2.13E-13 |
| 7440-33-7 | Tungsten | 1.44E-13 | 1.19E-14 | 8.79E-14 | 1.44E-13 | 1.19E-14 | 8.79E-14 | 2.42E-16 | 2.03E-17 | 1.49E-16 | 2.39E-14 | 1.76E-13 |
| 7440-65-5 | Yttrium | 2.18E-13 | 1.81E-14 | 1.33E-13 | 2.18E-13 | 1.81E-14 | 1.33E-13 | 1.75E-16 | 1.47E-17 | 1.08E-16 | 3.62E-14 | 2.66E-13 |
| 630-08-0 | Carbon monoxide | 5.27E-03 | 4.38E-04 | 3.22E-03 | 5.27E-03 | 4.38E-04 | 3.22E-03 | 3.74E-22 | 3.14E-23 | 2.31E-22 | 8.75E-04 | 6.44E-03 |
| 10102-43-9 | Nitric oxide | 1.08E-01 | 9.00E-03 | 6.62E-02 | 1.08E-01 | 9.00E-03 | 6.62E-02 | 6.99E-39 | 5.88E-40 | 4.31E-39 | 1.80E-02 | 1.32E-01 |
| 10102-44-0 | Nitrogen dioxide | 1.51E-02 | 1.26E-03 | 9.24E-03 | 1.51E-02 | 1.26E-03 | 9.24E-03 | 3.38E-44 | 2.84E-45 | 2.08E-44 | 2.51E-03 | 1.85E-02 |
| 7446-09-5 | Sulfur dioxide | 7.04E-02 | 5.84E-03 | 4.30E-02 | 7.04E-02 | 5.84E-03 | 4.30E-02 | 0.00E+00 | 0.00E+00 | 0.00E+00 | 1.17E-02 | 8.60E-02 |
| 7664-41-7 | Ammonia/ Ammonium | 9.44E-03 | 7.84E-04 | 5.77E-03 | 9.44E-03 | 7.84E-04 | 5.77E-03 | 9.75E-11 | 8.20E-12 | 6.01E-11 | 1.57E-03 | 1.15E-02 |

| Summary of Estimated Inorganic Concentration at Point of Maximum Impact for the WTP | | | |
|---|---|---|---|
| | | | |
| CAS Number | Compound | Annual Average Concentration µg/m³ | Maximum 24 hr Concentration µg/m³ |
| 10102-43-9 | Nitric oxide | 9.60E-02 | 7.14E-01 |
| 10102-44-0 | Nitrogen dioxide | 1.34E-02 | 9.97E-02 |
| 14265-44-2 | Phosphate | 7.78E-11 | 5.47E-10 |
| 14280-30-9 | Hydroxide | 3.14E-10 | 2.21E-09 |
| 14797-55-8 | Nitrate | 5.59E-10 | 3.93E-09 |
| 14797-65-0 | Nitrite | 1.06E-10 | 7.46E-10 |
| 14808-79-8 | Sulfate | 4.03E-11 | 2.83E-10 |
| 16887-00-6 | Chloride | 6.06E-10 | 4.51E-09 |
| 16984-48-8 | Flouride | 9.34E-10 | 6.95E-09 |
| 18540-29-9 | Chromium (hexavalent) | 1.73E-10 | 1.29E-09 |
| 57-12-5 | Cyanide | 2.12E-11 | 1.49E-10 |
| 630-08-0 | Carbon monoxide | 6.20E-03 | 4.61E-02 |
| 63705-05-5 | Sulfur (total) | 2.06E-03 | 1.52E-02 |
| 7429-90-5 | Aluminum | 2.76E-10 | 2.02E-09 |
| 7439-89-6 | Iron | 1.36E-10 | 1.00E-09 |
| 7439-92-1 | Lead | 8.67E-12 | 6.37E-11 |
| 7439-93-2 | Lithium | 5.46E-10 | 4.07E-09 |
| 7439-95-4 | Magnesium | 8.71E-11 | 6.49E-10 |
| 7439-96-5 | Manganese | 1.44E-11 | 1.04E-10 |
| 7439-97-6 | Mercury | 8.42E-06 | 6.21E-05 |
| 7439-98-7 | Molybdenum | 1.74E-11 | 1.27E-10 |
| 7440-02-0 | Nickel | 1.42E-11 | 1.04E-10 |
| 7440-09-7 | Potassium | 2.35E-09 | 1.75E-08 |
| 7440-16-6 | Rhodium | 9.25E-12 | 6.84E-11 |
| 7440-21-3 | Silicon | 5.98E-10 | 4.46E-09 |
| 7440-22-4 | Silver | 3.69E-12 | 2.73E-11 |
| 7440-23-5 | Sodium | 3.27E-09 | 2.42E-08 |
| 7440-24-6 | Strontium (total) | 4.14E-13 | 2.94E-12 |
| 7440-25-7 | Tantalum | 2.14E-12 | 1.58E-11 |
| 7440-28-0 | Thallium | 2.28E-10 | 1.70E-09 |
| 7440-31-5 | Tin | 6.59E-14 | 4.69E-13 |
| 7440-33-7 | Tungsten | 1.71E-11 | 1.26E-10 |
| 7440-36-0 | Antimony | 3.80E-11 | 2.80E-10 |
| 7440-38-2 | Arsenic | 2.92E-08 | 2.17E-07 |
| 7440-39-3 | Barium | 2.79E-12 | 1.97E-11 |
| 7440-41-7 | Beryllium | 4.62E-12 | 3.42E-11 |
| 7440-42-8 | Boron | 8.82E-10 | 6.57E-09 |
| 7440-43-9 | Cadmium | 2.53E-10 | 1.89E-09 |
| 7440-48-4 | Cobalt | 4.67E-12 | 3.31E-11 |
| 7440-50-8 | Copper | 9.48E-13 | 6.88E-12 |
| 7440-61-1 | Uranium | 2.04E-10 | 1.46E-09 |
| 7440-62-2 | Vanadium | 8.58E-13 | 6.26E-12 |
| 7440-65-5 | Yttrium | 1.58E-12 | 1.11E-11 |
| 7440-66-6 | Zinc | 2.71E-10 | 2.02E-09 |

| Summary of Estimated Inorganic Concentration at Point of Maximum Impact for the WTP | | | |
|---|---|---|---|
| | | | |
| CAS Number | Compound | Annual Average Concentration $\mu g/m^3$ | Maximum 24 hr Concentration $\mu g/m^3$ |
| 7440-67-7 | Zirconium | 6.90E-11 | 5.11E-10 |
| 7440-69-9 | Bismuth | 5.65E-12 | 4.13E-11 |
| 7440-70-2 | Calcium | 7.22E-10 | 5.37E-09 |
| 7446-09-5 | Sulfur dioxide | 2.06E-02 | 1.52E-01 |
| 7664-41-7 | Ammonia/Ammonium | 4.34E-03 | 3.22E-02 |
| 7723-14-0 | Phosphorous | 3.94E-08 | 2.93E-07 |
| 7782-49-2 | Selenium | 2.63E-10 | 1.96E-09 |

| Estimated Process Facility Organic Unabated Emissions | | | | | | |
|---|---|---|---|---|---|---|
| | | | | | | |
| | | PT-S3 | PT-S4 | LV-S3 | HV-S3a | HV-S3b |
| (CAS) | Component | g/sec | g/sec | g/sec | g/sec | g/sec |
| 100-00-5 | p-Nitrochlorobenzene | 2.32E-03 | 1.42E-06 | 2.55E-04 | 2.51E-03 | 2.51E-03 |
| 100-21-0 | p-Phthalic acid | 3.05E-08 | 2.90E-06 | 2.48E-02 | 3.41E-03 | 3.41E-03 |
| 100-25-4 | 1,4-Dinitrobenzene | 2.15E-05 | 2.82E-06 | 2.28E-02 | 3.43E-03 | 3.43E-03 |
| 100-41-4 | Ethyl benzene | 7.69E-03 | 7.78E-08 | 0.00E+00 | 5.87E-13 | 5.87E-13 |
| 100-42-5 | Styrene | 7.70E-03 | 7.92E-08 | 0.00E+00 | 1.69E-10 | 1.69E-10 |
| 10061-01-5 | cis-1,3-Dichloropropene | 7.72E-03 | 8.06E-08 | 0.00E+00 | 4.89E-10 | 4.89E-10 |
| 10061-02-6 | trans-1,3-Dichloropropene | 7.66E-03 | 8.33E-08 | 0.00E+00 | 9.41E-09 | 9.41E-09 |
| 101-55-3 | 4-Bromophenylphenyl ether | 2.41E-02 | 6.48E-07 | 1.03E-07 | 1.75E-04 | 1.75E-04 |
| 101-84-8 | Diphenyl ether | 7.19E-03 | 9.69E-08 | 7.45E-13 | 1.49E-06 | 1.49E-06 |
| 106-35-4 | 3-Heptanone | 5.31E-03 | 1.43E-07 | 2.26E-08 | 3.85E-05 | 3.85E-05 |
| 106-42-3 | p-Xylene (Dimethyl benzene) | 7.70E-03 | 7.92E-08 | 0.00E+00 | 1.69E-10 | 1.69E-10 |
| 106-46-7 | 1,4-Dichlorobenzene | 7.86E-03 | 8.43E-08 | 0.00E+00 | 4.40E-09 | 4.40E-09 |
| 106-88-7 | 1,2-Epoxybutane | 6.54E-03 | 1.17E-07 | 1.14E-09 | 8.69E-06 | 8.69E-06 |
| 106-93-4 | Ethylene dibromide (Dibromethane) | 3.41E-02 | 4.10E-07 | 1.02E-11 | 9.34E-07 | 9.34E-07 |
| 106-97-8 | Butane | 7.71E-03 | 7.71E-08 | 0.00E+00 | 0.00E+00 | 0.00E+00 |
| 106-99-0 | 1,3-Butadiene | 7.71E-03 | 7.72E-08 | 0.00E+00 | 0.00E+00 | 0.00E+00 |
| 107-02-8 | Acrolein | 5.31E-03 | 1.43E-07 | 2.26E-08 | 3.85E-05 | 3.85E-05 |
| 107-05-1 | 3-Chloropropene (Allyl chloride) | 7.69E-03 | 7.78E-08 | 0.00E+00 | 5.87E-13 | 5.87E-13 |
| 107-06-2 | 1,2-Dichloroethane (Ethylene chloride) | 7.66E-03 | 8.33E-08 | 0.00E+00 | 9.41E-09 | 9.41E-09 |
| 107-12-0 | Propionitrile | 3.05E-03 | 1.86E-07 | 4.05E-07 | 1.62E-04 | 1.62E-04 |
| 107-13-1 | Acrylonitrile | 5.31E-03 | 1.43E-07 | 2.26E-08 | 3.85E-05 | 3.85E-05 |
| 107-18-6 | 2-Propene-1-ol | 2.32E-03 | 1.42E-06 | 2.55E-04 | 2.51E-03 | 2.51E-03 |
| 107-31-3 | Formic acid, methyl ester | 2.97E-02 | 5.30E-07 | 5.16E-09 | 3.95E-05 | 3.95E-05 |
| 107-66-4 | Dibutylphosphate | 9.95E-06 | 2.88E-06 | 2.40E-02 | 3.43E-03 | 3.43E-03 |
| 107-87-9 | 2-Pentanone | 5.31E-03 | 1.43E-07 | 2.26E-08 | 3.85E-05 | 3.85E-05 |
| 108-03-2 | 1-Nitropropane | 2.41E-02 | 6.48E-07 | 1.03E-07 | 1.75E-04 | 1.75E-04 |
| 108-05-4 | Vinyl acetate | 3.27E-02 | 4.40E-07 | 3.39E-12 | 6.79E-06 | 6.79E-06 |
| 108-10-1 | Hexone (4-Methyl-2-pentanone or MIBK) | 5.31E-03 | 1.43E-07 | 2.26E-08 | 3.85E-05 | 3.85E-05 |

| Estimated Process Facility Organic Unabated Emissions | | | | | | |
|---|---|---|---|---|---|---|
| | | | | | | |
| | | PT-S3 | PT-S4 | LV-S3 | HV-S3a | HV-S3b |
| (CAS) | Component | g/sec | g/sec | g/sec | g/sec | g/sec |
| 108-20-3 | Bis(isopropyl)ether | 7.86E-03 | 8.43E-08 | 0.00E+00 | 4.40E-09 | 4.40E-09 |
| 108-38-3 | m-Xylene (Dimethyl benzene) | 7.70E-03 | 7.92E-08 | 0.00E+00 | 1.69E-10 | 1.69E-10 |
| 108-39-4 | m-Cresol | 2.09E-04 | 3.20E-07 | 2.59E-04 | 5.82E-04 | 5.82E-04 |
| 108-87-2 | Methylcyclohexane | 7.68E-03 | 7.69E-08 | 0.00E+00 | 0.00E+00 | 0.00E+00 |
| 108-88-3 | Toluene | 7.70E-03 | 7.84E-08 | 0.00E+00 | 5.32E-12 | 5.32E-12 |
| 108-90-7 | Chlorobenzene | 7.70E-03 | 7.92E-08 | 0.00E+00 | 1.69E-10 | 1.69E-10 |
| 108-93-0 | Cyclohexanol | 5.11E-04 | 3.13E-07 | 5.60E-05 | 5.53E-04 | 5.53E-04 |
| 108-94-1 | Cyclohexanone | 8.63E-04 | 2.39E-07 | 1.17E-05 | 3.98E-04 | 3.98E-04 |
| 108-95-2 | Phenol | 2.41E-04 | 2.21E-06 | 9.42E-03 | 3.36E-03 | 3.36E-03 |
| 109-66-0 | n-Pentane | 7.71E-03 | 7.71E-08 | 0.00E+00 | 0.00E+00 | 0.00E+00 |
| 109-99-9 | Tetrahydrofuran | 6.47E-03 | 3.95E-07 | 8.58E-07 | 3.43E-04 | 3.43E-04 |
| 110-12-3 | 5-Methyl-2-hexanone | 6.54E-03 | 1.17E-07 | 1.14E-09 | 8.69E-06 | 8.69E-06 |
| 110-43-0 | 2-Heptanone | 6.54E-03 | 1.17E-07 | 1.14E-09 | 8.69E-06 | 8.69E-06 |
| 110-54-3 | n-Hexane | 7.70E-03 | 7.70E-08 | 0.00E+00 | 0.00E+00 | 0.00E+00 |
| 110-62-3 | n-Valeraldehyde | 2.97E-02 | 5.30E-07 | 5.16E-09 | 3.95E-05 | 3.95E-05 |
| 110-82-7 | Cyclohexane | 7.69E-03 | 7.70E-08 | 0.00E+00 | 0.00E+00 | 0.00E+00 |
| 110-83-8 | Cyclohexene | 7.73E-03 | 7.76E-08 | 0.00E+00 | 9.16E-21 | 9.16E-21 |
| 110-86-1 | Pyridine | 3.92E-03 | 1.09E-06 | 5.33E-05 | 1.81E-03 | 1.81E-03 |
| 111-65-9 | n-Octane | 7.71E-03 | 7.71E-08 | 0.00E+00 | 0.00E+00 | 0.00E+00 |
| 111-76-2 | Ethylene glycol monobutyl ether | 9.48E-04 | 1.45E-06 | 1.18E-03 | 2.64E-03 | 2.64E-03 |
| 111-84-2 | n-Nonane | 7.71E-03 | 7.71E-08 | 0.00E+00 | 0.00E+00 | 0.00E+00 |
| 117-81-7 | Bis(2-ethylhexyl)phthalate (DEHP) | 3.67E-04 | 2.78E-06 | 9.49E-03 | 4.25E-03 | 4.25E-03 |
| 117-84-0 | n-Dioctyl phthalate | 2.52E-03 | 1.42E-06 | 1.84E-04 | 2.48E-03 | 2.48E-03 |
| 118-74-1 | Hexachlorobenzene | 7.39E-04 | 7.92E-09 | 0.00E+00 | 4.13E-10 | 4.13E-10 |
| 120-12-7 | Anthracene | 1.62E-02 | 8.01E-07 | 8.55E-07 | 5.55E-04 | 5.55E-04 |
| 120-82-1 | 1,2,4-Trichlorobenzene | 7.66E-03 | 8.33E-08 | 0.00E+00 | 9.41E-09 | 9.41E-09 |
| 120-83-2 | 2,4-Dichlorophenol | 2.32E-03 | 1.42E-06 | 2.55E-04 | 2.51E-03 | 2.51E-03 |
| 121-44-8 | Triethylamine | 6.54E-03 | 1.17E-07 | 1.14E-09 | 8.69E-06 | 8.69E-06 |
| 121-69-7 | Dimethylaniline | 3.05E-03 | 1.86E-07 | 4.05E-07 | 1.62E-04 | 1.62E-04 |
| 122-39-4 | N,N-Diphenylamine | 3.51E-04 | 2.82E-07 | 8.77E-05 | 5.17E-04 | 5.17E-04 |

| Estimated Process Facility Organic Unabated Emissions | | | | | | |
|---|---|---|---|---|---|---|
| | | | | | | |
| | | PT-S3 | PT-S4 | LV-S3 | HV-S3a | HV-S3b |
| (CAS) | Component | g/sec | g/sec | g/sec | g/sec | g/sec |
| 123-19-3 | 4-Heptanone | 3.05E-03 | 1.86E-07 | 4.05E-07 | 1.62E-04 | 1.62E-04 |
| 123-38-6 | n-Propionaldehyde | 5.31E-03 | 1.43E-07 | 2.26E-08 | 3.85E-05 | 3.85E-05 |
| 123-51-3 | 3-Methyl-1-butanol | 1.08E-03 | 2.31E-07 | 6.90E-06 | 3.64E-04 | 3.64E-04 |
| 123-86-4 | Acetic acid n-butyl ester | 3.27E-02 | 4.40E-07 | 3.39E-12 | 6.79E-06 | 6.79E-06 |
| 123-91-1 | 1,4-Dioxane | 1.39E-03 | 8.54E-07 | 1.53E-04 | 1.51E-03 | 1.51E-03 |
| 126-73-8 | Tributyl phosphate | 1.20E-04 | 2.52E-06 | 1.52E-02 | 3.45E-03 | 3.45E-03 |
| 126-98-7 | 2-Methyl-2-propenenitrile (Methacrylonitrile) | 7.19E-03 | 9.69E-08 | 7.45E-13 | 1.49E-06 | 1.49E-06 |
| 127-18-4 | Perchloroethylene (tetrachloroethylene) | 7.72E-03 | 7.77E-08 | 0.00E+00 | 2.41E-14 | 2.41E-14 |
| 127-19-5 | N,N-Dimethylacetamide | 2.19E-06 | 6.33E-07 | 5.28E-03 | 7.55E-04 | 7.55E-04 |
| 128-37-0 | 2,6-Bis(tert-butyl)-4-methylphenol | 2.52E-03 | 1.42E-06 | 1.84E-04 | 2.48E-03 | 2.48E-03 |
| 129-00-0 | Pyrene | 5.32E-03 | 1.41E-06 | 4.53E-05 | 2.19E-03 | 2.19E-03 |
| 1321-64-8 | Pentachloronaphthalene | 2.41E-02 | 6.48E-07 | 1.03E-07 | 1.75E-04 | 1.75E-04 |
| 1321-65-9 | Trichloronaphthalene | 2.97E-02 | 5.30E-07 | 5.16E-09 | 3.95E-05 | 3.95E-05 |
| 132-64-9 | Dibenzofuran | 2.97E-02 | 5.30E-07 | 5.16E-09 | 3.95E-05 | 3.95E-05 |
| 1335-87-1 | Hexachloronaphthalene | 2.41E-02 | 6.48E-07 | 1.03E-07 | 1.75E-04 | 1.75E-04 |
| 1335-88-2 | Tetrachloronaphthalene | 2.97E-02 | 5.30E-07 | 5.16E-09 | 3.95E-05 | 3.95E-05 |
| 1336-36-3 | Polychlorinated biphenyls (PCBs) | 5.79E-02 | 1.32E-06 | 5.42E-11 | 3.31E-05 | 3.31E-05 |
| 141-78-6 | Acetic acid ethyl ester (Ethyl acetate) | 2.41E-02 | 6.48E-07 | 1.03E-07 | 1.75E-04 | 1.75E-04 |
| 141-79-7 | 4-Methyl-3-penten-2-one | 1.39E-02 | 8.47E-07 | 1.84E-06 | 7.35E-04 | 7.35E-04 |
| 142-82-5 | n-Heptane | 7.70E-03 | 7.70E-08 | 0.00E+00 | 0.00E+00 | 0.00E+00 |
| 144-62-7 | Oxalic acid | 1.58E-08 | 2.90E-07 | 2.48E-03 | 3.41E-04 | 3.41E-04 |
| 156-60-5 | trans-1,2-Dichloroethylene | 7.69E-03 | 7.78E-08 | 0.00E+00 | 5.87E-13 | 5.87E-13 |
| 1582-09-8 | Trifluralin | 2.41E-02 | 6.48E-07 | 1.03E-07 | 1.75E-04 | 1.75E-04 |
| 1634-04-4 | Methyl tert-butyl ether | 7.19E-03 | 9.69E-08 | 7.45E-13 | 1.49E-06 | 1.49E-06 |
| 1836-75-5 | Nitrofen | 3.67E-04 | 2.78E-06 | 9.49E-03 | 4.25E-03 | 4.25E-03 |
| 189-55-9 | Dibenzo[a,i]pyrene | 9.95E-06 | 2.88E-06 | 2.40E-02 | 3.43E-03 | 3.43E-03 |

| Estimated Process Facility Organic Unabated Emissions | | | | | | |
|---|---|---|---|---|---|---|
| | | | | | | |
| | | PT-S3 | PT-S4 | LV-S3 | HV-S3a | HV-S3b |
| (CAS) | Component | g/sec | g/sec | g/sec | g/sec | g/sec |
| 189-64-0 | Dibenzo[a,h]pyrene | 9.95E-06 | 2.88E-06 | 2.40E-02 | 3.43E-03 | 3.43E-03 |
| 191-24-2 | Benzo(g,h,i)perylene | 3.67E-04 | 2.78E-06 | 9.49E-03 | 4.25E-03 | 4.25E-03 |
| 191-30-0 | Benzo[a,i]pyrene | 9.95E-06 | 2.88E-06 | 2.40E-02 | 3.43E-03 | 3.43E-03 |
| 192-65-4 | Dibenzo[a,e]pyrene | 9.95E-06 | 2.88E-06 | 2.40E-02 | 3.43E-03 | 3.43E-03 |
| 193-39-5 | Indeno(1,2,3-cd)pyrene | 3.67E-04 | 2.78E-06 | 9.49E-03 | 4.25E-03 | 4.25E-03 |
| 205-82-3 | Benzo(j)fluoranthene | 1.20E-04 | 2.52E-06 | 1.52E-02 | 3.45E-03 | 3.45E-03 |
| 205-99-2 | Benzo(b)fluoranthene | 3.67E-04 | 2.78E-06 | 9.49E-03 | 4.25E-03 | 4.25E-03 |
| 206-44-0 | Fluoranthene | 5.04E-03 | 1.45E-06 | 4.07E-05 | 2.29E-03 | 2.29E-03 |
| 207-08-9 | Benzo(k)fluoranthene | 3.67E-04 | 2.78E-06 | 9.49E-03 | 4.25E-03 | 4.25E-03 |
| 208-96-8 | Acenaphthylene | 2.41E-02 | 6.48E-07 | 1.03E-07 | 1.75E-04 | 1.75E-04 |
| 218-01-9 | Chrysene | 2.55E-03 | 1.51E-06 | 2.40E-04 | 2.63E-03 | 2.63E-03 |
| 2234-13-1 | Octachloronaphthalene | 2.41E-02 | 6.48E-07 | 1.03E-07 | 1.75E-04 | 1.75E-04 |
| 224-42-0 | Dibenz[a,j]acridine | 1.27E-06 | 2.89E-06 | 2.47E-02 | 3.40E-03 | 3.40E-03 |
| 226-36-8 | Dibenz[a,h]acridine | 1.27E-06 | 2.89E-06 | 2.47E-02 | 3.40E-03 | 3.40E-03 |
| 2385-85-5 | Mirex | 3.48E-02 | 3.79E-07 | 0.00E+00 | 4.28E-08 | 4.28E-08 |
| 2551-13-7 | Trimethyl benzene | 7.70E-03 | 7.92E-08 | 0.00E+00 | 1.69E-10 | 1.69E-10 |
| 26140-60-3 | Terphenyls | 1.70E-02 | 1.39E-06 | 9.55E-07 | 1.22E-03 | 1.22E-03 |
| 27154-33-2 | Trichlorofluoroethane | 7.71E-03 | 7.72E-08 | 0.00E+00 | 0.00E+00 | 0.00E+00 |
| 287-92-3 | Cyclopentane | 7.69E-03 | 7.70E-08 | 0.00E+00 | 0.00E+00 | 0.00E+00 |
| 309-00-2 | Aldrin | 2.10E-04 | 1.72E-08 | 1.18E-08 | 1.51E-05 | 1.51E-05 |
| 319-84-6 | Hexachlorocyclohexane (Lindane) Alpha BHC | 1.68E-05 | 4.83E-09 | 1.36E-07 | 7.63E-06 | 7.63E-06 |
| 319-85-7 | Hexachlorocyclohexane (Lindane) Beta BHC | 1.22E-06 | 9.38E-09 | 3.11E-05 | 1.43E-05 | 1.43E-05 |
| 319-86-8 | Delta-BHC | 1.22E-06 | 9.25E-09 | 3.16E-05 | 1.42E-05 | 1.42E-05 |
| 3697-24-3 | 5-Methylchrysene | 2.52E-03 | 1.42E-06 | 1.84E-04 | 2.48E-03 | 2.48E-03 |
| 3825-26-1 | Ammonium perfluorooctanoate | 2.41E-02 | 6.48E-07 | 1.03E-07 | 1.75E-04 | 1.75E-04 |
| 4170-30-3 | 2-Butenaldehyde (2-Butenal or Crotonaldehyde) | 8.70E-04 | 2.39E-07 | 1.16E-05 | 3.98E-04 | 3.98E-04 |
| 465-73-6 | Isodrin | 1.12E-03 | 2.57E-08 | 1.05E-12 | 6.43E-07 | 6.43E-07 |
| 50-00-0 | Formaldehyde | 7.67E-05 | 5.38E-07 | 2.46E-03 | 8.34E-04 | 8.34E-04 |

| Estimated Process Facility Organic Unabated Emissions | | | | | | |
|---|---|---|---|---|---|---|
| | | | | | | |
| | | PT-S3 | PT-S4 | LV-S3 | HV-S3a | HV-S3b |
| (CAS) | Component | g/sec | g/sec | g/sec | g/sec | g/sec |
| 50-29-3 | 4,4-DDT | 3.36E-05 | 9.67E-09 | 2.72E-07 | 1.53E-05 | 1.53E-05 |
| 50-32-8 | Benzo(a)pyrene | 4.67E-06 | 3.47E-08 | 1.22E-04 | 5.33E-05 | 5.33E-05 |
| 53-70-3 | Dibenzo(a,h)anthracene | 2.01E-07 | 4.19E-09 | 2.53E-05 | 5.75E-06 | 5.75E-06 |
| 540-59-0 | 1,2-Dichloroethylene | 7.70E-03 | 7.92E-08 | 0.00E+00 | 1.69E-10 | 1.69E-10 |
| 540-84-1 | 2,2,4-Trimethylpentane | 7.71E-03 | 7.71E-08 | 0.00E+00 | 0.00E+00 | 0.00E+00 |
| 541-73-1 | 1,3-Dichlorobenzene | 7.70E-03 | 7.92E-08 | 0.00E+00 | 1.69E-10 | 1.69E-10 |
| 56-23-5 | Carbon tetrachloride | 7.73E-03 | 7.76E-08 | 0.00E+00 | 9.16E-21 | 9.16E-21 |
| 563-80-4 | 3-Methyl-2-butanone | 5.31E-03 | 1.43E-07 | 2.26E-08 | 3.85E-05 | 3.85E-05 |
| 56-49-5 | 3-Methylcholanthrene | 3.51E-02 | 3.51E-07 | 0.00E+00 | 0.00E+00 | 0.00E+00 |
| 56-55-3 | Benzo(a)anthracene | 5.04E-03 | 1.45E-06 | 4.07E-05 | 2.29E-03 | 2.29E-03 |
| 57-14-7 | 1,1-Dimethylhydrazine | 4.90E-03 | 1.05E-06 | 3.14E-05 | 1.65E-03 | 1.65E-03 |
| 58-89-9 | gamma-BHC (Lindane) | 8.74E-06 | 5.22E-09 | 4.92E-07 | 9.04E-06 | 9.04E-06 |
| 58-90-2 | 2,3,4,6-Tetrachlorophenol | 3.64E-03 | 1.10E-06 | 6.24E-05 | 1.86E-03 | 1.86E-03 |
| 591-78-6 | 2-Hexanone | 5.31E-03 | 1.43E-07 | 2.26E-08 | 3.85E-05 | 3.85E-05 |
| 59-50-7 | 4-Chloro-3-methylphenol | 2.52E-03 | 1.42E-06 | 1.84E-04 | 2.48E-03 | 2.48E-03 |
| 59-89-2 | N-Nitrosomorpholine | 2.15E-05 | 2.82E-06 | 2.28E-02 | 3.43E-03 | 3.43E-03 |
| 602-87-9 | 5-Nitroacenaphthene | 9.48E-04 | 1.45E-06 | 1.18E-03 | 2.64E-03 | 2.64E-03 |
| 60-29-7 | Ethyl ether | 3.48E-02 | 3.79E-07 | 0.00E+00 | 4.28E-08 | 4.28E-08 |
| 603-34-9 | Triphenylamine | 2.37E-03 | 1.18E-06 | 1.65E-04 | 2.11E-03 | 2.11E-03 |
| 60-34-4 | Methylhydrazine | 5.11E-04 | 3.13E-07 | 5.60E-05 | 5.53E-04 | 5.53E-04 |
| 60-35-5 | Acetamide | 2.19E-06 | 6.33E-07 | 5.28E-03 | 7.55E-04 | 7.55E-04 |
| 60-57-1 | Dieldrin | 3.18E-05 | 9.95E-09 | 2.41E-07 | 1.59E-05 | 1.59E-05 |
| 621-64-7 | Di-n-Propylnitrosamine (N-Nitroso-di-n-propylamine) | 2.32E-03 | 1.42E-06 | 2.55E-04 | 2.51E-03 | 2.51E-03 |
| 624-83-9 | Methyl isocyanate | 7.66E-03 | 8.33E-08 | 0.00E+00 | 9.41E-09 | 9.41E-09 |
| 627-13-4 | Nitric acid, propyl ester | 3.48E-02 | 3.79E-07 | 0.00E+00 | 4.28E-08 | 4.28E-08 |
| 62-75-9 | N-Nitroso-N,N-dimethylamine (Dimethylnitrosamine) | 1.77E-03 | 2.71E-06 | 2.20E-03 | 4.94E-03 | 4.94E-03 |
| 630-20-6 | 1,1,1,2-Tetrachloroethane | 7.86E-03 | 8.43E-08 | 0.00E+00 | 4.40E-09 | 4.40E-09 |
| 64-17-5 | Ethyl alcohol | 5.11E-04 | 3.13E-07 | 5.60E-05 | 5.53E-04 | 5.53E-04 |
| 64-18-6 | Formic acid | 1.20E-04 | 2.52E-06 | 1.52E-02 | 3.45E-03 | 3.45E-03 |

| Estimated Process Facility Organic Unabated Emissions | | | | | | |
|---|---|---|---|---|---|---|
| | | | | | | |
| | | PT-S3 | PT-S4 | LV-S3 | HV-S3a | HV-S3b |
| (CAS) | Component | g/sec | g/sec | g/sec | g/sec | g/sec |
| 64-19-7 | Acetic acid | 2.15E-05 | 2.82E-06 | 2.28E-02 | 3.43E-03 | 3.43E-03 |
| 67-56-1 | Methyl alcohol (Methanol) | 5.11E-04 | 3.13E-07 | 5.60E-05 | 5.53E-04 | 5.53E-04 |
| 67-63-0 | 2-Propyl alcohol (Isopropanol; Propan-2-01) | 8.63E-04 | 2.39E-07 | 1.17E-05 | 3.98E-04 | 3.98E-04 |
| 67-64-1 | 2-Propanone (Acetone) | 1.66E-02 | 1.02E-06 | 2.21E-06 | 8.82E-04 | 8.82E-04 |
| 67-66-3 | Chloroform | 7.70E-03 | 7.92E-08 | 0.00E+00 | 1.69E-10 | 1.69E-10 |
| 67-72-1 | Hexachloroethane | 3.50E-02 | 3.60E-07 | 0.00E+00 | 7.70E-10 | 7.70E-10 |
| 684-16-2 | Hexafluoroacetone | 7.70E-03 | 7.92E-08 | 0.00E+00 | 1.69E-10 | 1.69E-10 |
| 71-23-8 | n-Propyl alcohol | 8.63E-04 | 2.39E-07 | 1.17E-05 | 3.98E-04 | 3.98E-04 |
| 71-36-3 | n-Butyl alcohol | 8.63E-04 | 2.39E-07 | 1.17E-05 | 3.98E-04 | 3.98E-04 |
| 71-43-2 | Benzene | 7.69E-03 | 7.85E-08 | 0.00E+00 | 1.37E-11 | 1.37E-11 |
| 71-55-6 | Methyl chloroform (1,1,1-Trichloroethane) | 7.72E-03 | 7.77E-08 | 0.00E+00 | 2.41E-14 | 2.41E-14 |
| 72-20-8 | Endrin | 1.68E-05 | 9.45E-09 | 1.23E-06 | 1.66E-05 | 1.66E-05 |
| 72-43-5 | Methoxychlor | 4.01E-06 | 8.39E-08 | 5.07E-04 | 1.15E-04 | 1.15E-04 |
| 72-54-8 | 4,4-DDD | 1.68E-05 | 9.45E-09 | 1.23E-06 | 1.66E-05 | 1.66E-05 |
| 72-55-9 | 4,4-DDE | 1.13E-04 | 9.28E-09 | 6.36E-09 | 8.16E-06 | 8.16E-06 |
| 74-83-9 | Bromomethane (Methyl bromide) | 7.70E-03 | 7.92E-08 | 0.00E+00 | 1.69E-10 | 1.69E-10 |
| 74-87-3 | Chloromethane (Methyl chloride) | 7.69E-03 | 7.78E-08 | 0.00E+00 | 5.87E-13 | 5.87E-13 |
| 74-97-5 | Bromochloromethane | 7.66E-03 | 8.33E-08 | 0.00E+00 | 9.41E-09 | 9.41E-09 |
| 74-99-7 | Methylacetylene | 3.50E-02 | 3.54E-07 | 0.00E+00 | 2.67E-12 | 2.67E-12 |
| 75-00-3 | Chloroethane | 7.69E-03 | 7.78E-08 | 0.00E+00 | 5.87E-13 | 5.87E-13 |
| 75-01-4 | Vinyl chloride (1-Chloroethene) | 3.51E-02 | 3.53E-07 | 0.00E+00 | 4.16E-20 | 4.16E-20 |
| 75-05-8 | Acetonitrile | 3.60E-03 | 2.80E-07 | 8.85E-07 | 2.87E-04 | 2.87E-04 |
| 75-07-0 | Acetaldehyde | 1.39E-02 | 8.47E-07 | 1.84E-06 | 7.35E-04 | 7.35E-04 |
| 75-09-2 | Dichloromethane (Methylene chloride) | 7.70E-03 | 7.92E-08 | 0.00E+00 | 1.69E-10 | 1.69E-10 |
| 75-12-7 | Formamide | 1.27E-06 | 2.89E-06 | 2.47E-02 | 3.40E-03 | 3.40E-03 |
| 75-15-0 | Carbon disulfide | 7.69E-03 | 7.78E-08 | 0.00E+00 | 5.87E-13 | 5.87E-13 |
| 75-21-8 | Ethylene oxide (Oxirane) | 6.54E-03 | 1.17E-07 | 1.14E-09 | 8.69E-06 | 8.69E-06 |
| 75-27-4 | Bromodichloromethane | 7.86E-03 | 8.43E-08 | 0.00E+00 | 4.40E-09 | 4.40E-09 |

| Estimated Process Facility Organic Unabated Emissions | | | | | | |
|---|---|---|---|---|---|---|
| | | | | | | |
| | | PT-S3 | PT-S4 | LV-S3 | HV-S3a | HV-S3b |
| (CAS) | Component | g/sec | g/sec | g/sec | g/sec | g/sec |
| 75-34-3 | 1,1-Dichloroethane | 7.70E-03 | 7.92E-08 | 0.00E+00 | 1.69E-10 | 1.69E-10 |
| 75-35-4 | 1,1-Dichloroethene (Vinylidene chloride) | 7.73E-03 | 7.76E-08 | 0.00E+00 | 9.16E-21 | 9.16E-21 |
| 75-43-4 | Dichlorofluoromethane | 7.69E-03 | 7.78E-08 | 0.00E+00 | 5.87E-13 | 5.87E-13 |
| 75-45-6 | Chlorodifluoromethane | 7.73E-03 | 7.76E-08 | 0.00E+00 | 9.16E-21 | 9.16E-21 |
| 75-50-3 | Trimethylamine | 5.31E-03 | 1.43E-07 | 2.26E-08 | 3.85E-05 | 3.85E-05 |
| 75-52-5 | Nitromethane | 1.39E-02 | 8.47E-07 | 1.84E-06 | 7.35E-04 | 7.35E-04 |
| 75-55-8 | 2-Methylaziridine | 3.92E-03 | 1.09E-06 | 5.33E-05 | 1.81E-03 | 1.81E-03 |
| 75-61-6 | Difluorodibromomethane | 7.73E-03 | 7.76E-08 | 0.00E+00 | 9.16E-21 | 9.16E-21 |
| 75-63-8 | Trifluorobromomethane | 7.68E-03 | 7.69E-08 | 0.00E+00 | 0.00E+00 | 0.00E+00 |
| 75-65-0 | 2-Methyl-2-propanol | 8.63E-04 | 2.39E-07 | 1.17E-05 | 3.98E-04 | 3.98E-04 |
| 75-69-4 | Trichlorofluoromethane | 7.71E-03 | 7.72E-08 | 0.00E+00 | 0.00E+00 | 0.00E+00 |
| 75-71-8 | Dichlorodifluoromethane | 7.68E-03 | 7.69E-08 | 0.00E+00 | 0.00E+00 | 0.00E+00 |
| 75-99-0 | 2,2-Dichloropropionic acid | 2.15E-05 | 2.82E-06 | 2.28E-02 | 3.43E-03 | 3.43E-03 |
| 76-03-9 | Trichloroacetic acid | 2.19E-06 | 6.33E-07 | 5.28E-03 | 7.55E-04 | 7.55E-04 |
| 76-11-9 | 1,1,1,2-Tetrachloro-2,2-difluoroethane | 3.50E-02 | 3.50E-07 | 0.00E+00 | 0.00E+00 | 0.00E+00 |
| 76-12-0 | 1,1,2,2-Tetrachloro-1,2-difluoroethane | 3.50E-02 | 3.51E-07 | 0.00E+00 | 0.00E+00 | 0.00E+00 |
| 76-13-1 | 1,2,2-Trichloro-1,1,2-trifluoroethane (Freon 113) | 7.68E-03 | 7.69E-08 | 0.00E+00 | 0.00E+00 | 0.00E+00 |
| 76-14-2 | 1,2-Dichloro-1,1,2,2-tetrafluoroethane | 7.71E-03 | 7.71E-08 | 0.00E+00 | 0.00E+00 | 0.00E+00 |
| 76-15-3 | Chloropentafluoroethane | 7.70E-03 | 7.70E-08 | 0.00E+00 | 0.00E+00 | 0.00E+00 |
| 76-44-8 | Heptachlor | 6.72E-04 | 1.03E-08 | 0.00E+00 | 3.31E-07 | 3.31E-07 |
| 78-83-1 | 2-Methylpropyl alcohol (Isobutyl alcohol) | 3.92E-03 | 1.09E-06 | 5.33E-05 | 1.81E-03 | 1.81E-03 |
| 78-87-5 | 1,2-Dichloropropane | 7.70E-03 | 7.92E-08 | 0.00E+00 | 1.69E-10 | 1.69E-10 |
| 78-92-2 | 1-Methylpropyl alcohol (2-Butanol) | 8.63E-04 | 2.39E-07 | 1.17E-05 | 3.98E-04 | 3.98E-04 |

| Estimated Process Facility Organic Unabated Emissions | | | | | | |
|---|---|---|---|---|---|---|
| | | | | | | |
| | | PT-S3 | PT-S4 | LV-S3 | HV-S3a | HV-S3b |
| (CAS) | Component | g/sec | g/sec | g/sec | g/sec | g/sec |
| 78-93-3 | Methyl ethyl ketone (MEK, 2-Butanone) | 3.05E-03 | 1.86E-07 | 4.05E-07 | 1.62E-04 | 1.62E-04 |
| 79-00-5 | 1,1,2-Trichloroethane | 7.66E-03 | 8.33E-08 | 0.00E+00 | 9.41E-09 | 9.41E-09 |
| 79-01-6 | Trichloroethylene | 7.68E-03 | 7.78E-08 | 0.00E+00 | 6.65E-13 | 6.65E-13 |
| 79-09-4 | Propionic acid | 3.49E-04 | 2.44E-06 | 1.12E-02 | 3.79E-03 | 3.79E-03 |
| 79-10-7 | 2-Propenoic acid | 3.49E-04 | 2.44E-06 | 1.12E-02 | 3.79E-03 | 3.79E-03 |
| 79-20-9 | Methyl acetate | 2.41E-02 | 6.48E-07 | 1.03E-07 | 1.75E-04 | 1.75E-04 |
| 79-34-5 | 1,1,2,2-Tetrachloroethane | 7.19E-03 | 9.69E-08 | 7.45E-13 | 1.49E-06 | 1.49E-06 |
| 8001-35-2 | Toxaphene | 2.34E-05 | 1.20E-08 | 8.46E-07 | 2.05E-05 | 2.05E-05 |
| 82-68-8 | Pentachloronitrobenzene (PCBN or quintobenzene) | 1.39E-02 | 8.47E-07 | 1.84E-06 | 7.35E-04 | 7.35E-04 |
| 83-32-9 | Acenaphthene | 2.97E-02 | 5.30E-07 | 5.16E-09 | 3.95E-05 | 3.95E-05 |
| 84-66-2 | Diethyl phthalate | 3.97E-04 | 1.92E-06 | 5.30E-03 | 3.17E-03 | 3.17E-03 |
| 84-74-2 | Dibutyl phthalate | 1.07E-03 | 1.89E-06 | 1.84E-03 | 3.33E-03 | 3.33E-03 |
| 85-01-8 | Phenanthrene | 1.39E-02 | 8.47E-07 | 1.84E-06 | 7.35E-04 | 7.35E-04 |
| 85-68-7 | Butylbenzyl phthalate | 1.07E-03 | 1.89E-06 | 1.84E-03 | 3.33E-03 | 3.33E-03 |
| 86-73-7 | Fluorene | 2.41E-02 | 6.48E-07 | 1.03E-07 | 1.75E-04 | 1.75E-04 |
| 87-68-3 | Hexachlorobutadiene | 7.70E-03 | 7.79E-08 | 0.00E+00 | 5.09E-13 | 5.09E-13 |
| 87-86-5 | Pentachlorophenol | 2.15E-05 | 2.82E-06 | 2.28E-02 | 3.43E-03 | 3.43E-03 |
| 88-06-2 | 2,4,6-Trichlorophenol | 2.32E-03 | 1.42E-06 | 2.55E-04 | 2.51E-03 | 2.51E-03 |
| 88-72-2 | 2-Nitrotoluene | 1.08E-03 | 2.31E-07 | 6.90E-06 | 3.64E-04 | 3.64E-04 |
| 88-75-5 | 2-Nitrophenol | 4.90E-03 | 1.05E-06 | 3.14E-05 | 1.65E-03 | 1.65E-03 |
| 88-85-7 | 2-sec-Butyl-4,6-dinitrophenol (Dinoseb) | 4.08E-04 | 3.20E-06 | 1.88E-02 | 4.85E-03 | 4.85E-03 |
| 88-89-1 | Picric acid | 6.84E-08 | 1.03E-05 | 3.31E-01 | 4.23E-03 | 4.23E-03 |
| 91-20-3 | Naphthalene | 1.10E-03 | 1.45E-08 | 0.00E+00 | 1.39E-07 | 1.39E-07 |
| 91-22-5 | Quinoline | 9.48E-04 | 1.45E-06 | 1.18E-03 | 2.64E-03 | 2.64E-03 |
| 91-58-7 | 2-Chloronapthalene | 3.27E-02 | 4.40E-07 | 3.39E-12 | 6.79E-06 | 6.79E-06 |
| 92-52-4 | 1,1`-Biphenyl | 3.27E-02 | 4.40E-07 | 3.39E-12 | 6.79E-06 | 6.79E-06 |
| 92-93-3 | 4-Nitrobiphenyl | 2.32E-03 | 1.42E-06 | 2.55E-04 | 2.51E-03 | 2.51E-03 |
| 93-72-1 | Silvex (2,4,5-TP) | 9.95E-06 | 2.88E-06 | 2.40E-02 | 3.43E-03 | 3.43E-03 |

| Estimated Process Facility Organic Unabated Emissions | | | | | | |
|---|---|---|---|---|---|---|
| | | PT-S3 | PT-S4 | LV-S3 | HV-S3a | HV-S3b |
| (CAS) | Component | g/sec | g/sec | g/sec | g/sec | g/sec |
| 93-76-5 | 2,4,5-T | 9.95E-06 | 2.88E-06 | 2.40E-02 | 3.43E-03 | 3.43E-03 |
| 94-75-7 | 2,4-D and esters (160C typed) | 2.15E-05 | 2.82E-06 | 2.28E-02 | 3.43E-03 | 3.43E-03 |
| 95-13-6 | Indene | 3.57E-02 | 3.83E-07 | 0.00E+00 | 2.00E-08 | 2.00E-08 |
| 95-47-6 | o-Xylene | 7.70E-03 | 7.92E-08 | 0.00E+00 | 1.69E-10 | 1.69E-10 |
| 95-48-7 | o-Cresol (2-Methylphenol) | 2.09E-04 | 3.20E-07 | 2.59E-04 | 5.82E-04 | 5.82E-04 |
| 95-49-8 | 2-Chlorotoluene | 3.50E-02 | 3.60E-07 | 0.00E+00 | 7.70E-10 | 7.70E-10 |
| 95-50-1 | o-Dichlorobenzene (1,2-Dichlorobenzene) | 7.86E-03 | 8.43E-08 | 0.00E+00 | 4.40E-09 | 4.40E-09 |
| 95-57-8 | 2-Chlorophenol | 3.92E-03 | 1.09E-06 | 5.33E-05 | 1.81E-03 | 1.81E-03 |
| 95-95-4 | 2,4,5-Trichlorophenol | 9.48E-04 | 1.45E-06 | 1.18E-03 | 2.64E-03 | 2.64E-03 |
| 96-22-0 | 3-Pentanone | 5.31E-03 | 1.43E-07 | 2.26E-08 | 3.85E-05 | 3.85E-05 |
| 96-69-5 | Bis(3-tert-butyl-4-hydroxy-6-methyl-phenyl)sulfide | 3.50E-02 | 3.60E-07 | 0.00E+00 | 7.70E-10 | 7.70E-10 |
| 98-51-1 | p-tert-Butyltoluene | 3.51E-02 | 3.53E-07 | 0.00E+00 | 1.09E-13 | 1.09E-13 |
| 98-82-8 | Cumene | 3.50E-02 | 3.54E-07 | 0.00E+00 | 2.67E-12 | 2.67E-12 |
| 98-83-9 | alpha-Methylstyrene | 7.70E-03 | 7.92E-08 | 0.00E+00 | 1.69E-10 | 1.69E-10 |
| 98-86-2 | Acetophenone | 4.18E-03 | 1.07E-06 | 4.49E-05 | 1.76E-03 | 1.76E-03 |
| 98-95-3 | Nitrobenzene | 4.90E-03 | 1.05E-06 | 3.14E-05 | 1.65E-03 | 1.65E-03 |
| Products of Incomplete Combustion (PICs) | | | | | | |
| 100-02-7 | 4-Nitrophenol | 1.75E-05 | 0.00E+00 | 3.09E-05 | 3.91E-06 | 3.91E-06 |
| 100-44-7 | Benzyl chloride | 2.33E-06 | 0.00E+00 | 4.12E-06 | 5.21E-07 | 5.21E-07 |
| 100-51-6 | Benzyl alcohol | 1.75E-05 | 0.00E+00 | 3.09E-05 | 3.91E-06 | 3.91E-06 |
| 100-52-7 | Benzaldehyde | 1.75E-05 | 0.00E+00 | 3.09E-05 | 3.91E-06 | 3.91E-06 |
| 101-77-9 | 4,4-Methylenedianiline | 1.75E-05 | 0.00E+00 | 3.09E-05 | 3.91E-06 | 3.91E-06 |
| 103-33-3 | Azobenzene | 1.75E-05 | 0.00E+00 | 3.09E-05 | 3.91E-06 | 3.91E-06 |
| 103-65-1 | n-Propyl benzene (Isocumene) | 2.33E-06 | 0.00E+00 | 4.12E-06 | 5.21E-07 | 5.21E-07 |
| 104-51-8 | n-Butylbenzene | 2.33E-06 | 0.00E+00 | 4.12E-06 | 5.21E-07 | 5.21E-07 |
| 105-67-9 | 2,4-Dimethylphenol | 1.75E-05 | 0.00E+00 | 3.09E-05 | 3.91E-06 | 3.91E-06 |
| 106-43-4 | 4-Chlorotoluene (p-Tolyl chloride) | 2.33E-06 | 0.00E+00 | 4.12E-06 | 5.21E-07 | 5.21E-07 |
| 106-44-5 | p-Cresol (4-Methyl phenol) | 1.75E-05 | 0.00E+00 | 3.09E-05 | 3.91E-06 | 3.91E-06 |

| Estimated Process Facility Organic Unabated Emissions | | | | | | |
|---|---|---|---|---|---|---|
| | | | | | | |
| | | PT-S3 | PT-S4 | LV-S3 | HV-S3a | HV-S3b |
| (CAS) | Component | g/sec | g/sec | g/sec | g/sec | g/sec |
| 106-47-8 | p-Chloroaniline | 1.75E-05 | 0.00E+00 | 3.09E-05 | 3.91E-06 | 3.91E-06 |
| 106-49-0 | p-Toluidine | 1.75E-05 | 0.00E+00 | 3.09E-05 | 3.91E-06 | 3.91E-06 |
| 106-51-4 | Quinone | 1.75E-05 | 0.00E+00 | 3.09E-05 | 3.91E-06 | 3.91E-06 |
| 106-89-8 | Epichlorohydrin (1-chloro-2,3-epoxypropane) | 2.33E-06 | 0.00E+00 | 4.12E-06 | 5.21E-07 | 5.21E-07 |
| 107-19-7 | Propargyl alcohol | 2.33E-06 | 0.00E+00 | 4.12E-06 | 5.21E-07 | 5.21E-07 |
| 107-21-1 | Ethylene glycol | 2.33E-06 | 0.00E+00 | 4.12E-06 | 5.21E-07 | 5.21E-07 |
| 107-98-2 | Propylene gylcol monomethyl ether | 1.75E-05 | 0.00E+00 | 3.09E-05 | 3.91E-06 | 3.91E-06 |
| 108-60-1 | Dichloroisopropyl ether (2,2'-Oxybis(1-chloropropane)) | 1.75E-05 | 0.00E+00 | 3.09E-05 | 3.91E-06 | 3.91E-06 |
| 108-67-8 | 1,3,5-Trimethyl benzene | 2.33E-06 | 0.00E+00 | 4.12E-06 | 5.21E-07 | 5.21E-07 |
| 108-86-1 | Bromobenzene (Phenyl bromide) | 2.33E-06 | 0.00E+00 | 4.12E-06 | 5.21E-07 | 5.21E-07 |
| 109-77-3 | Malononitrile | 2.33E-06 | 0.00E+00 | 4.12E-06 | 5.21E-07 | 5.21E-07 |
| 109-86-4 | 2-Methoxyethanol | 1.75E-05 | 0.00E+00 | 3.09E-05 | 3.91E-06 | 3.91E-06 |
| 110-80-5 | 2-Ethoxyethanol | 1.75E-05 | 0.00E+00 | 3.09E-05 | 3.91E-06 | 3.91E-06 |
| 111-15-9 | Ethylene glycol monoethyl ether acetate | 1.75E-05 | 0.00E+00 | 3.09E-05 | 3.91E-06 | 3.91E-06 |
| 111-44-4 | Bis(2-chloroethyl) ether | 1.75E-05 | 0.00E+00 | 3.09E-05 | 3.91E-06 | 3.91E-06 |
| 111-91-1 | Bis(2-chloroethoxy)methane | 1.75E-05 | 0.00E+00 | 3.09E-05 | 3.91E-06 | 3.91E-06 |
| 1120-71-4 | 1,3-Propane sultone | 1.75E-05 | 0.00E+00 | 3.09E-05 | 3.91E-06 | 3.91E-06 |
| 119-90-4 | 3,3'-Dimethoxybenzidine (ortho-dianisidine) | 1.75E-05 | 0.00E+00 | 3.09E-05 | 3.91E-06 | 3.91E-06 |
| 121-14-2 | 2,4-Dinitrotoluene | 1.75E-05 | 0.00E+00 | 3.09E-05 | 3.91E-06 | 3.91E-06 |
| 122-66-7 | 1,2-Diphenylhydrazine | 1.75E-05 | 0.00E+00 | 3.09E-05 | 3.91E-06 | 3.91E-06 |
| 123-33-1 | Maleic hydrazide | 1.75E-05 | 0.00E+00 | 3.09E-05 | 3.91E-06 | 3.91E-06 |
| 124-48-1 | Chlorodibromomethane | 2.33E-06 | 0.00E+00 | 4.12E-06 | 5.21E-07 | 5.21E-07 |
| 131-11-3 | Dimethylphthalate | 1.75E-05 | 0.00E+00 | 3.09E-05 | 3.91E-06 | 3.91E-06 |
| 131-89-5 | 2-Cyclohexyl-4,6-dinitrophenol | 1.75E-05 | 0.00E+00 | 3.09E-05 | 3.91E-06 | 3.91E-06 |
| 133-06-2 | Captan | 1.75E-05 | 0.00E+00 | 3.09E-05 | 3.91E-06 | 3.91E-06 |
| 135-98-8 | sec-Butylbenzene | 2.33E-06 | 0.00E+00 | 4.12E-06 | 5.21E-07 | 5.21E-07 |

| Estimated Process Facility Organic Unabated Emissions | | | | | | |
|---|---|---|---|---|---|---|
| | | | | | | |
| | | PT-S3 | PT-S4 | LV-S3 | HV-S3a | HV-S3b |
| (CAS) | Component | g/sec | g/sec | g/sec | g/sec | g/sec |
| 145-73-3 | Endothall | 1.75E-05 | 0.00E+00 | 3.09E-05 | 3.91E-06 | 3.91E-06 |
| 156-59-2 | cis-1,2-Dichloroethene | 2.33E-06 | 0.00E+00 | 4.12E-06 | 5.21E-07 | 5.21E-07 |
| 1746-01-6 | 2,3,7,8-Tetrachlorodibenzo(p)dioxin (TCDD) | 1.10E-11 | 0.00E+00 | 1.93E-11 | 2.44E-12 | 2.44E-12 |
| 192-97-2 | Benzo(e)pyrene | 3.50E-06 | 0.00E+00 | 6.19E-06 | 7.81E-07 | 7.81E-07 |
| 19408-74-3 | 1,2,3,7,8,9-Hexachlorodibenzo(p)dioxin | 1.82E-11 | 0.00E+00 | 3.22E-11 | 4.06E-12 | 4.06E-12 |
| 23950-58-5 | Pronamide | 1.75E-05 | 0.00E+00 | 3.09E-05 | 3.91E-06 | 3.91E-06 |
| 25013-15-4 | Methyl styrene (mixed isomers) | 2.33E-06 | 0.00E+00 | 4.12E-06 | 5.21E-07 | 5.21E-07 |
| 3268-87-9 | Octachlorodibenzo(p)dioxin | 9.12E-11 | 0.00E+00 | 1.61E-10 | 2.03E-11 | 2.03E-11 |
| 35822-46-9 | 1,2,3,4,6,7,8-Heptachlorodibenzo(p)dioxin | 3.65E-11 | 0.00E+00 | 6.45E-11 | 8.15E-12 | 8.15E-12 |
| 39001-02-0 | Octachlorodibenzofuran | 7.30E-11 | 0.00E+00 | 1.29E-10 | 1.63E-11 | 1.63E-11 |
| 39227-28-6 | 1,2,3,4,7,8-Hexachlorodibenzo(p)dioxin | 1.82E-11 | 0.00E+00 | 3.22E-11 | 4.06E-12 | 4.06E-12 |
| 40321-76-4 | 1,2,3,7,8-Pentachlorodibenzo(p)dioxin | 1.82E-11 | 0.00E+00 | 3.22E-11 | 4.06E-12 | 4.06E-12 |
| 41851-50-7 | Chlorocyclopentadiene | 2.33E-06 | 0.00E+00 | 4.12E-06 | 5.21E-07 | 5.21E-07 |
| 460-19-5 | Cyanogen | 2.33E-06 | 0.00E+00 | 4.12E-06 | 5.21E-07 | 5.21E-07 |
| 506-68-3 | Cyanogen bromide | 1.75E-05 | 0.00E+00 | 3.09E-05 | 3.91E-06 | 3.91E-06 |
| 506-77-4 | Cyanogen chloride | 2.33E-06 | 0.00E+00 | 4.12E-06 | 5.21E-07 | 5.21E-07 |
| 510-15-6 | Chlorobenzilate | 1.75E-05 | 0.00E+00 | 3.09E-05 | 3.91E-06 | 3.91E-06 |
| 51207-31-9 | 2,3,7,8-Tetrachlorodibenzofuran | 9.12E-12 | 0.00E+00 | 1.61E-11 | 2.03E-12 | 2.03E-12 |
| 51-28-5 | 2,4-Dinitrophenol | 1.75E-05 | 0.00E+00 | 3.09E-05 | 3.91E-06 | 3.91E-06 |
| 51-79-6 | Ethyl Carbamate (urethane) | 1.75E-05 | 0.00E+00 | 3.09E-05 | 3.91E-06 | 3.91E-06 |
| 528-29-0 | o-Dinitrobenzene | 1.75E-05 | 0.00E+00 | 3.09E-05 | 3.91E-06 | 3.91E-06 |
| 532-27-4 | 2-Chloroacetophenone | 1.75E-05 | 0.00E+00 | 3.09E-05 | 3.91E-06 | 3.91E-06 |
| 534-52-1 | 4,6-Dinitro-o-cresol (4,6-Dinitro-2-methylphenol) | 1.75E-05 | 0.00E+00 | 3.09E-05 | 3.91E-06 | 3.91E-06 |
| 5385-75-1 | Dibenzo(a,e)fluoranthene | 3.50E-06 | 0.00E+00 | 6.19E-06 | 7.81E-07 | 7.81E-07 |

| Estimated Process Facility Organic Unabated Emissions | | | | | | |
|---|---|---|---|---|---|---|
| | | | | | | |
| | | PT-S3 | PT-S4 | LV-S3 | HV-S3a | HV-S3b |
| (CAS) | Component | g/sec | g/sec | g/sec | g/sec | g/sec |
| 540-73-8 | 1,2-Dimethylhydrazine | 2.33E-06 | 0.00E+00 | 4.12E-06 | 5.21E-07 | 5.21E-07 |
| 542-75-6 | 1,3-Dichloropropene | 2.33E-06 | 0.00E+00 | 4.12E-06 | 5.21E-07 | 5.21E-07 |
| 542-88-1 | Dichloromethyl ether | 2.33E-06 | 0.00E+00 | 4.12E-06 | 5.21E-07 | 5.21E-07 |
| 55673-89-7 | 1,2,3,4,7,8,9-Heptachlorodibenzofuran | 1.82E-11 | 0.00E+00 | 3.22E-11 | 4.06E-12 | 4.06E-12 |
| 57117-31-4 | 2,3,4,7,8-Pentachlorodibenzofuran | 9.12E-12 | 0.00E+00 | 1.61E-11 | 2.03E-12 | 2.03E-12 |
| 57117-41-6 | 1,2,3,7,8-Pentachlorodibenzofuran | 9.12E-12 | 0.00E+00 | 1.61E-11 | 2.03E-12 | 2.03E-12 |
| 57117-44-9 | 1,2,3,6,7,8-Hexachlorodibenzofuran | 1.46E-11 | 0.00E+00 | 2.58E-11 | 3.25E-12 | 3.25E-12 |
| 57-24-9 | Strychnine | 1.75E-05 | 0.00E+00 | 3.09E-05 | 3.91E-06 | 3.91E-06 |
| 57653-85-7 | 1,2,3,6,7,8-Hexachlorodibenzo(p)dioxin | 1.82E-11 | 0.00E+00 | 3.22E-11 | 4.06E-12 | 4.06E-12 |
| 57-74-9 | Chlordane | 1.75E-05 | 0.00E+00 | 3.09E-05 | 3.91E-06 | 3.91E-06 |
| 584-84-9 | 2,4-Toluene diisocyante | 1.75E-05 | 0.00E+00 | 3.09E-05 | 3.91E-06 | 3.91E-06 |
| 593-60-2 | Bromoethene | 2.33E-06 | 0.00E+00 | 4.12E-06 | 5.21E-07 | 5.21E-07 |
| 60-11-7 | Dimethyl aminoazobenzene | 1.75E-05 | 0.00E+00 | 3.09E-05 | 3.91E-06 | 3.91E-06 |
| 606-20-2 | 2,6-Dinitrotoluene | 1.75E-05 | 0.00E+00 | 3.09E-05 | 3.91E-06 | 3.91E-06 |
| 60851-34-5 | 2,3,4,6,7,8-Hexachlorodibenzofuran | 1.65E-11 | 0.00E+00 | 2.91E-11 | 3.67E-12 | 3.67E-12 |
| 608-93-5 | Pentachlorobenzene | 1.75E-05 | 0.00E+00 | 3.09E-05 | 3.91E-06 | 3.91E-06 |
| 61626-71-9 | Dichloropentadiene | 2.33E-06 | 0.00E+00 | 4.12E-06 | 5.21E-07 | 5.21E-07 |
| 62-50-0 | Ethyl methanesulfonate | 1.75E-05 | 0.00E+00 | 3.09E-05 | 3.91E-06 | 3.91E-06 |
| 62-53-3 | Aniline | 1.75E-05 | 0.00E+00 | 3.09E-05 | 3.91E-06 | 3.91E-06 |
| 65-85-0 | Benzoic acid | 1.75E-05 | 0.00E+00 | 3.09E-05 | 3.91E-06 | 3.91E-06 |
| 67562-39-4 | 1,2,3,4,6,7,8-Heptachlorodibenzofuran | 1.82E-11 | 0.00E+00 | 3.22E-11 | 4.06E-12 | 4.06E-12 |
| 70-30-4 | Hexachlorophene | 1.75E-05 | 0.00E+00 | 3.09E-05 | 3.91E-06 | 3.91E-06 |
| 70648-26-9 | 1,2,3,4,7,8-Hexachlorodibenzofuran | 1.65E-11 | 0.00E+00 | 2.91E-11 | 3.67E-12 | 3.67E-12 |

| Estimated Process Facility Organic Unabated Emissions | | | | | | |
|---|---|---|---|---|---|---|
| | | | | | | |
| | | PT-S3 | PT-S4 | LV-S3 | HV-S3a | HV-S3b |
| (CAS) | Component | g/sec | g/sec | g/sec | g/sec | g/sec |
| 72918-21-9 | 1,2,3,7,8,9-Hexachlorodibenzofuran | 1.82E-11 | 0.00E+00 | 3.22E-11 | 4.06E-12 | 4.06E-12 |
| 74-88-4 | Iodomethane (Methyl iodide) | 2.33E-06 | 0.00E+00 | 4.12E-06 | 5.21E-07 | 5.21E-07 |
| 74-95-3 | Methylene bromide | 2.33E-06 | 0.00E+00 | 4.12E-06 | 5.21E-07 | 5.21E-07 |
| 75-25-2 | Bromoform | 2.33E-06 | 0.00E+00 | 4.12E-06 | 5.21E-07 | 5.21E-07 |
| 75-29-6 | 2-Chloropropane | 2.33E-06 | 0.00E+00 | 4.12E-06 | 5.21E-07 | 5.21E-07 |
| 75-44-5 | Phosgene | 2.33E-06 | 0.00E+00 | 4.12E-06 | 5.21E-07 | 5.21E-07 |
| 76-01-7 | Pentachloroethane | 2.33E-06 | 0.00E+00 | 4.12E-06 | 5.21E-07 | 5.21E-07 |
| 764-41-0 | 1,4-Dichloro-2-butene | 2.33E-06 | 0.00E+00 | 4.12E-06 | 5.21E-07 | 5.21E-07 |
| 765-34-4 | Glycidylaldehyde | 1.75E-05 | 0.00E+00 | 3.09E-05 | 3.91E-06 | 3.91E-06 |
| 77-47-4 | Hexachlorocyclopentadiene | 1.75E-05 | 0.00E+00 | 3.09E-05 | 3.91E-06 | 3.91E-06 |
| 77-78-1 | Dimethyl sulfate | 1.75E-05 | 0.00E+00 | 3.09E-05 | 3.91E-06 | 3.91E-06 |
| 80-62-6 | Methyl methacrylate | 2.33E-06 | 0.00E+00 | 4.12E-06 | 5.21E-07 | 5.21E-07 |
| 822-06-0 | Hexamethylene-1,5-diisocyanate | 1.75E-05 | 0.00E+00 | 3.09E-05 | 3.91E-06 | 3.91E-06 |
| 823-40-5 | Toluene-2,6-diamine | 1.75E-05 | 0.00E+00 | 3.09E-05 | 3.91E-06 | 3.91E-06 |
| 85-44-9 | Phthalic anhydride | 1.75E-05 | 0.00E+00 | 3.09E-05 | 3.91E-06 | 3.91E-06 |
| 87-61-6 | 1,2,3-Trichlorobenzene | 2.33E-06 | 0.00E+00 | 4.12E-06 | 5.21E-07 | 5.21E-07 |
| 88-74-4 | o-Nitroaniline (2-Nitroaniline) | 1.75E-05 | 0.00E+00 | 3.09E-05 | 3.91E-06 | 3.91E-06 |
| 90-04-0 | o-Anisidine | 1.75E-05 | 0.00E+00 | 3.09E-05 | 3.91E-06 | 3.91E-06 |
| 91-57-6 | 2-Methylnaphthalene | 3.50E-06 | 0.00E+00 | 6.19E-06 | 7.81E-07 | 7.81E-07 |
| 91-94-1 | 3,3'-Dichlorobenzidine | 1.75E-05 | 0.00E+00 | 3.09E-05 | 3.91E-06 | 3.91E-06 |
| 924-16-3 | N-Nitrosodi-n-butylamine | 2.33E-06 | 0.00E+00 | 4.12E-06 | 5.21E-07 | 5.21E-07 |
| 94-59-7 | Safrole | 1.75E-05 | 0.00E+00 | 3.09E-05 | 3.91E-06 | 3.91E-06 |
| 95-53-4 | o-Toluidine | 2.33E-06 | 0.00E+00 | 4.12E-06 | 5.21E-07 | 5.21E-07 |
| 95-63-6 | 1,2,4-Trimethyl benzene | 2.33E-06 | 0.00E+00 | 4.12E-06 | 5.21E-07 | 5.21E-07 |
| 95-94-3 | 1,2,4,5-Tetrachlorobenzene | 1.75E-05 | 0.00E+00 | 3.09E-05 | 3.91E-06 | 3.91E-06 |
| 96-12-8 | 1,2-Dibromo-3-chloropropane | 1.75E-05 | 0.00E+00 | 3.09E-05 | 3.91E-06 | 3.91E-06 |
| 96-18-4 | 1,2,3-Trichloropropane | 2.33E-06 | 0.00E+00 | 4.12E-06 | 5.21E-07 | 5.21E-07 |
| 96-45-7 | Ethylene thiourea | 1.75E-05 | 0.00E+00 | 3.09E-05 | 3.91E-06 | 3.91E-06 |
| 97-63-2 | Ethyl methacrylate | 2.33E-06 | 0.00E+00 | 4.12E-06 | 5.21E-07 | 5.21E-07 |
| 98-01-1 | Furfural | 1.75E-05 | 0.00E+00 | 3.09E-05 | 3.91E-06 | 3.91E-06 |

| Estimated Process Facility Organic Unabated Emissions | | | | | | |
|---|---|---|---|---|---|---|
| | | | | | | |
| | | PT-S3 | PT-S4 | LV-S3 | HV-S3a | HV-S3b |
| (CAS) | Component | g/sec | g/sec | g/sec | g/sec | g/sec |
| 98-06-6 | tert-Butyl benzene | 2.33E-06 | 0.00E+00 | 4.12E-06 | 5.21E-07 | 5.21E-07 |
| 98-07-7 | Benzotrichloride | 1.75E-05 | 0.00E+00 | 3.09E-05 | 3.91E-06 | 3.91E-06 |
| 99-35-4 | 1,3,5-Trinitrobenzene | 1.75E-05 | 0.00E+00 | 3.09E-05 | 3.91E-06 | 3.91E-06 |
| 99-65-0 | 1,3-Dinitrobenzene | 1.75E-05 | 0.00E+00 | 3.09E-05 | 3.91E-06 | 3.91E-06 |
| 99-87-6 | p-Cymene | 2.33E-06 | 0.00E+00 | 4.12E-06 | 5.21E-07 | 5.21E-07 |
| no cas # | Dibenzo(a,h)fluoranthene | 3.50E-06 | 0.00E+00 | 6.19E-06 | 7.81E-07 | 7.81E-07 |
| **Coplanar PCBs** | | | | | | |
| 31508-00-6 | 2,3',4,4',5-Pentachlorobiphenyl (PBC 118) | 4.18E-05 | 9.56E-10 | 3.91E-14 | 2.39E-08 | 2.39E-08 |
| 32598-13-3 | 3,3',4,4'-Tetrachlorobiphenyl (TCB) | 4.18E-05 | 9.56E-10 | 3.91E-14 | 2.39E-08 | 2.39E-08 |
| 32598-14-4 | 2,3,3',4,4'-Pentachlorobiphenyl (PCB 105) | 4.18E-05 | 9.56E-10 | 3.91E-14 | 2.39E-08 | 2.39E-08 |
| 32774-16-6 | 3,3',4,4',5,5'-Hexachlorobiphenyl | 4.18E-05 | 9.56E-10 | 3.91E-14 | 2.39E-08 | 2.39E-08 |
| 35065-29-3 | 2,2',3,4,4',5,5'-Heptachlorobiphenyl | 4.18E-05 | 9.56E-10 | 3.91E-14 | 2.39E-08 | 2.39E-08 |
| 35065-30-6 | 2,2',3,3',4,4',5-Heptachlorobiphenyl | 4.18E-05 | 9.56E-10 | 3.91E-14 | 2.39E-08 | 2.39E-08 |
| 38380-08-4 | 2,3,3',4,4',5-Hexachlorobiphenyl (PCB 157) | 4.18E-05 | 9.56E-10 | 3.91E-14 | 2.39E-08 | 2.39E-08 |
| 39635-31-9 | 2,3,3',4,4',5,5'-Heptachlorobiphenyl | 4.18E-05 | 9.56E-10 | 3.91E-14 | 2.39E-08 | 2.39E-08 |
| 52663-72-6 | 2,3',4,4',5,5'-Hexachlorobiphenyl | 4.18E-05 | 9.56E-10 | 3.91E-14 | 2.39E-08 | 2.39E-08 |
| 57465-28-8 | 3,3',4,4',5-Pentachlorobiphenyl | 4.18E-05 | 9.56E-10 | 3.91E-14 | 2.39E-08 | 2.39E-08 |
| 65510-44-3 | 2',3,4,4',5-Pentachlorobiphenyl | 4.18E-05 | 9.56E-10 | 3.91E-14 | 2.39E-08 | 2.39E-08 |
| 69782-90-7 | 2,3,3',4,4',5'-Hexachlorobiphenyl | 4.18E-05 | 9.56E-10 | 3.91E-14 | 2.39E-08 | 2.39E-08 |
| 70362-50-4 | 3,4,4',5-Tetrachlorobiphenyl | 4.18E-05 | 9.56E-10 | 3.91E-14 | 2.39E-08 | 2.39E-08 |
| 74472-37-0 | 2,3,4,4',5-Pentachlorobiphenyl | 4.18E-05 | 9.56E-10 | 3.91E-14 | 2.39E-08 | 2.39E-08 |
| | | | | | | |

## Estimated Process Facility Organic Abated Emissions

| (CAS) | Component | PT-S3 g/sec | PT-S4 g/sec | LV-S3 g/sec | HV-S3a g/sec | HV-S3b g/sec | HV-S4 g/sec |
|---|---|---|---|---|---|---|---|
| 100-00-5 | p-Nitrochlorobenzene | 4.65E-08 | 1.42E-06 | 1.27E-05 | 1.26E-04 | 1.26E-04 | 3.82E-12 |
| 100-21-0 | p-Phthalic acid | 3.05E-11 | 2.90E-06 | 1.24E-03 | 1.70E-04 | 1.70E-04 | 7.49E-13 |
| 100-25-4 | 1,4-Dinitrobenzene | 3.25E-18 | 2.82E-12 | 1.29E-11 | 2.17E-14 | 2.17E-14 | 3.77E-18 |
| 100-41-4 | Ethyl benzene | 7.69E-07 | 7.78E-08 | 0.00E+00 | 9.43E-14 | 9.43E-14 | 3.90E-22 |
| 100-42-5 | Styrene | 7.70E-07 | 7.92E-08 | 0.00E+00 | 1.38E-11 | 1.38E-11 | 5.85E-20 |
| 10061-01-5 | cis-1,3-Dichloropropene | 7.72E-05 | 8.06E-08 | 0.00E+00 | 3.91E-11 | 3.91E-11 | 1.66E-19 |
| 10061-02-6 | trans-1,3-Dichloropropene | 1.53E-04 | 8.33E-08 | 0.00E+00 | 6.18E-10 | 6.18E-10 | 2.66E-18 |
| 101-55-3 | 4-Bromophenylphenyl ether | 1.45E-04 | 6.48E-07 | 5.13E-09 | 8.98E-06 | 8.98E-06 | 3.94E-14 |
| 101-84-8 | Diphenyl ether | 2.87E-05 | 9.69E-08 | 3.73E-14 | 8.04E-08 | 8.04E-08 | 3.51E-16 |
| 106-35-4 | 3-Heptanone | 5.31E-07 | 1.43E-07 | 1.13E-09 | 1.97E-06 | 1.97E-06 | 8.67E-15 |
| 106-42-3 | p-Xylene (Dimethyl benzene) | 7.70E-06 | 7.92E-08 | 0.00E+00 | 1.38E-11 | 1.38E-11 | 5.85E-20 |
| 106-46-7 | 1,4-Dichlorobenzene | 7.86E-05 | 8.43E-08 | 0.00E+00 | 3.02E-10 | 3.02E-10 | 1.30E-18 |
| 106-88-7 | 1,2-Epoxybutane | 6.54E-07 | 1.17E-07 | 5.68E-11 | 4.55E-07 | 4.55E-07 | 1.99E-15 |
| 106-93-4 | Ethylene dibromide (Dibromethane) | 3.41E-03 | 4.10E-07 | 5.08E-13 | 5.36E-08 | 5.36E-08 | 2.33E-16 |
| 106-97-8 | Butane | 7.71E-07 | 7.71E-08 | 0.00E+00 | 0.00E+00 | 0.00E+00 | 0.00E+00 |
| 106-99-0 | 1,3-Butadiene | 7.71E-07 | 7.72E-08 | 0.00E+00 | 0.00E+00 | 0.00E+00 | 2.11E-26 |
| 107-02-8 | Acrolein | 5.31E-07 | 1.43E-07 | 1.13E-09 | 1.97E-06 | 1.97E-06 | 8.67E-15 |
| 107-05-1 | 3-Chloropropene (Allyl chloride) | 7.69E-07 | 7.78E-08 | 0.00E+00 | 9.43E-14 | 9.43E-14 | 3.90E-22 |
| 107-06-2 | 1,2-Dichloroethane (Ethylene chloride) | 7.66E-07 | 8.33E-08 | 0.00E+00 | 6.18E-10 | 6.18E-10 | 2.66E-18 |
| 107-12-0 | Propionitrile | 3.05E-07 | 1.86E-07 | 2.02E-08 | 8.16E-06 | 8.16E-06 | 3.59E-14 |
| 107-13-1 | Acrylonitrile | 5.31E-07 | 1.43E-07 | 1.13E-09 | 1.97E-06 | 1.97E-06 | 8.67E-15 |
| 107-18-6 | 2-Propene-1-ol | 2.32E-07 | 1.42E-06 | 1.27E-05 | 1.26E-04 | 1.26E-04 | 3.82E-12 |
| 107-31-3 | Formic acid, methyl ester | 2.97E-06 | 5.30E-07 | 2.58E-10 | 2.07E-06 | 2.07E-06 | 9.06E-15 |
| 107-66-4 | Dibutylphosphate | 7.54E-18 | 2.88E-12 | 1.36E-11 | 2.17E-14 | 2.17E-14 | 3.77E-18 |
| 107-87-9 | 2-Pentanone | 5.31E-07 | 1.43E-07 | 1.13E-09 | 1.97E-06 | 1.97E-06 | 8.67E-15 |
| 108-03-2 | 1-Nitropropane | 2.41E-06 | 6.48E-07 | 5.13E-09 | 8.98E-06 | 8.98E-06 | 3.94E-14 |
| 108-05-4 | Vinyl acetate | 3.27E-06 | 4.40E-07 | 1.69E-13 | 3.65E-07 | 3.65E-07 | 1.60E-15 |
| 108-10-1 | Hexone (4-Methyl-2-pentanone or MIBK) | 5.31E-07 | 1.43E-07 | 1.13E-09 | 1.97E-06 | 1.97E-06 | 8.67E-15 |
| 108-20-3 | Bis(isopropyl)ether | 7.86E-07 | 8.43E-08 | 0.00E+00 | 3.02E-10 | 3.02E-10 | 1.30E-18 |
| 108-38-3 | m-Xylene (Dimethyl benzene) | 7.70E-06 | 7.92E-08 | 0.00E+00 | 1.38E-11 | 1.38E-11 | 5.85E-20 |
| 108-39-4 | m-Cresol | 1.04E-07 | 3.20E-07 | 1.30E-05 | 2.91E-05 | 2.91E-05 | 1.28E-13 |
| 108-87-2 | Methylcyclohexane | 7.68E-07 | 7.69E-08 | 0.00E+00 | 0.00E+00 | 0.00E+00 | 0.00E+00 |

## Estimated Process Facility Organic Abated Emissions

| (CAS) | Component | PT-S3 g/sec | PT-S4 g/sec | LV-S3 g/sec | HV-S3a g/sec | HV-S3b g/sec | HV-S4 g/sec |
|---|---|---|---|---|---|---|---|
| 108-88-3 | Toluene | 7.70E-07 | 7.84E-08 | 0.00E+00 | 6.57E-13 | 6.57E-13 | 2.73E-21 |
| 108-90-7 | Chlorobenzene | 7.70E-05 | 7.92E-08 | 0.00E+00 | 1.38E-11 | 1.38E-11 | 5.85E-20 |
| 108-93-0 | Cyclohexanol | 2.56E-08 | 3.13E-07 | 2.80E-06 | 2.77E-05 | 2.77E-05 | 8.41E-13 |
| 108-94-1 | Cyclohexanone | 4.32E-08 | 2.39E-07 | 5.87E-07 | 1.99E-05 | 1.99E-05 | 8.78E-14 |
| 108-95-2 | Phenol | 1.21E-06 | 2.21E-06 | 4.71E-04 | 1.68E-04 | 1.68E-04 | 7.39E-13 |
| 109-66-0 | n-Pentane | 7.71E-07 | 7.71E-08 | 0.00E+00 | 0.00E+00 | 0.00E+00 | 0.00E+00 |
| 109-99-9 | Tetrahydrofuran | 6.47E-07 | 3.95E-07 | 4.29E-08 | 1.73E-05 | 1.73E-05 | 7.61E-14 |
| 110-12-3 | 5-Methyl-2-hexanone | 6.54E-07 | 1.17E-07 | 5.68E-11 | 4.55E-07 | 4.55E-07 | 1.99E-15 |
| 110-43-0 | 2-Heptanone | 6.54E-07 | 1.17E-07 | 5.68E-11 | 4.55E-07 | 4.55E-07 | 1.99E-15 |
| 110-54-3 | n-Hexane | 7.70E-07 | 7.70E-08 | 0.00E+00 | 0.00E+00 | 0.00E+00 | 0.00E+00 |
| 110-62-3 | n-Valeraldehyde | 2.97E-06 | 5.30E-07 | 2.58E-10 | 2.07E-06 | 2.07E-06 | 9.06E-15 |
| 110-82-7 | Cyclohexane | 7.69E-07 | 7.70E-08 | 0.00E+00 | 0.00E+00 | 0.00E+00 | 1.24E-34 |
| 110-83-8 | Cyclohexene | 7.73E-07 | 7.76E-08 | 0.00E+00 | 3.23E-21 | 3.23E-21 | 2.75E-24 |
| 110-86-1 | Pyridine | 3.92E-07 | 1.09E-06 | 2.67E-06 | 9.07E-05 | 9.07E-05 | 3.99E-13 |
| 111-65-9 | n-Octane | 7.71E-07 | 7.71E-08 | 0.00E+00 | 0.00E+00 | 0.00E+00 | 0.00E+00 |
| 111-76-2 | Ethylene glycol monobutyl ether | 4.74E-08 | 1.45E-06 | 5.89E-05 | 1.32E-04 | 1.32E-04 | 5.82E-13 |
| 111-84-2 | n-Nonane | 3.86E-07 | 7.71E-08 | 0.00E+00 | 0.00E+00 | 0.00E+00 | 0.00E+00 |
| 117-81-7 | Bis(2-ethylhexyl)phthalate (DEHP) | 5.57E-17 | 2.78E-12 | 5.39E-12 | 3.03E-14 | 3.03E-14 | 5.64E-17 |
| 117-84-0 | n-Dioctyl phthalate | 3.81E-16 | 1.42E-12 | 1.05E-13 | 3.51E-14 | 3.51E-14 | 2.45E-17 |
| 118-74-1 | Hexachlorobenzene | 4.43E-06 | 7.92E-09 | 0.00E+00 | 2.84E-11 | 2.84E-11 | 1.22E-19 |
| 120-12-7 | Anthracene | 3.25E-06 | 8.01E-07 | 4.27E-08 | 2.81E-05 | 2.81E-05 | 1.23E-13 |
| 120-82-1 | 1,2,4-Trichlorobenzene | 1.53E-05 | 8.33E-08 | 0.00E+00 | 6.18E-10 | 6.18E-10 | 2.66E-18 |
| 120-83-2 | 2,4-Dichlorophenol | 1.39E-05 | 1.42E-06 | 1.27E-05 | 1.26E-04 | 1.26E-04 | 3.82E-12 |
| 121-44-8 | Triethylamine | 6.54E-07 | 1.17E-07 | 5.68E-11 | 4.55E-07 | 4.55E-07 | 1.99E-15 |
| 121-69-7 | Dimethylaniline | 1.53E-07 | 1.86E-07 | 2.02E-08 | 8.16E-06 | 8.16E-06 | 3.59E-14 |
| 122-39-4 | N,N-Diphenylamine | 1.41E-06 | 2.82E-07 | 4.39E-06 | 2.58E-05 | 2.58E-05 | 1.14E-13 |
| 123-19-3 | 4-Heptanone | 3.05E-07 | 1.86E-07 | 2.02E-08 | 8.16E-06 | 8.16E-06 | 3.59E-14 |
| 123-38-6 | n-Propionaldehyde | 5.31E-07 | 1.43E-07 | 1.13E-09 | 1.97E-06 | 1.97E-06 | 8.67E-15 |
| 123-51-3 | 3-Methyl-1-butanol | 1.08E-07 | 2.31E-07 | 3.45E-07 | 1.82E-05 | 1.82E-05 | 8.02E-14 |
| 123-86-4 | Acetic acid n-butyl ester | 3.27E-06 | 4.40E-07 | 1.69E-13 | 3.65E-07 | 3.65E-07 | 1.60E-15 |
| 123-91-1 | 1,4-Dioxane | 1.39E-07 | 8.54E-07 | 7.64E-06 | 7.56E-05 | 7.56E-05 | 2.29E-12 |
| 126-73-8 | Tributyl phosphate | 2.41E-09 | 2.52E-06 | 7.60E-04 | 1.73E-04 | 1.73E-04 | 7.59E-13 |

## Estimated Process Facility Organic Abated Emissions

| (CAS) | Component | PT-S3 g/sec | PT-S4 g/sec | LV-S3 g/sec | HV-S3a g/sec | HV-S3b g/sec | HV-S4 g/sec |
|---|---|---|---|---|---|---|---|
| 126-98-7 | 2-Methyl-2-propenenitrile (Methacrylonitrile) | 7.19E-07 | 9.69E-08 | 3.73E-14 | 8.04E-08 | 8.04E-08 | 3.51E-16 |
| 127-18-4 | Perchloroethylene (tetrachloroethylene) | 7.72E-04 | 7.77E-08 | 0.00E+00 | 5.94E-15 | 5.94E-15 | 2.48E-23 |
| 127-19-5 | N,N-Dimethylacetamide | 1.09E-10 | 6.33E-07 | 2.64E-04 | 3.77E-05 | 3.77E-05 | 1.66E-13 |
| 128-37-0 | 2,6-Bis(tert-butyl)-4-methylphenol | 5.03E-08 | 1.42E-06 | 9.20E-06 | 1.25E-04 | 1.25E-04 | 4.89E-12 |
| 129-00-0 | Pyrene | 2.42E-13 | 1.41E-12 | 2.58E-14 | 6.21E-14 | 6.21E-14 | 2.92E-17 |
| 1321-64-8 | Pentachloronaphthalene | 1.10E-12 | 6.48E-13 | 5.82E-17 | 1.33E-14 | 1.33E-14 | 1.97E-19 |
| 1321-65-9 | Trichloronaphthalene | 1.78E-04 | 5.30E-07 | 2.58E-10 | 2.07E-06 | 2.07E-06 | 9.06E-15 |
| 132-64-9 | Dibenzofuran | 1.78E-04 | 5.30E-07 | 2.58E-10 | 2.07E-06 | 2.07E-06 | 9.06E-15 |
| 1335-87-1 | Hexachloronaphthalene | 1.10E-12 | 6.48E-13 | 5.82E-17 | 1.33E-14 | 1.33E-14 | 1.97E-19 |
| 1335-88-2 | Tetrachloronaphthalene | 1.35E-12 | 5.30E-13 | 2.93E-18 | 5.43E-15 | 5.43E-15 | 4.53E-20 |
| 1336-36-3 | Polychlorinated biphenyls (PCBs) | 2.63E-12 | 1.32E-12 | 3.08E-20 | 2.71E-14 | 2.71E-14 | 5.68E-19 |
| 141-78-6 | Acetic acid ethyl ester (Ethyl acetate) | 2.41E-06 | 6.48E-07 | 5.13E-09 | 8.98E-06 | 8.98E-06 | 3.94E-14 |
| 141-79-7 | 4-Methyl-3-penten-2-one | 1.39E-06 | 8.47E-07 | 9.20E-08 | 3.71E-05 | 3.71E-05 | 1.63E-13 |
| 142-82-5 | n-Heptane | 7.70E-07 | 7.70E-08 | 0.00E+00 | 0.00E+00 | 0.00E+00 | 0.00E+00 |
| 144-62-7 | Oxalic acid | 7.91E-11 | 2.90E-07 | 1.24E-04 | 1.71E-05 | 1.71E-05 | 7.51E-14 |
| 156-60-5 | trans-1,2-Dichloroethylene | 7.69E-07 | 7.78E-08 | 0.00E+00 | 9.43E-14 | 9.43E-14 | 3.90E-22 |
| 1582-09-8 | Trifluralin | 1.83E-14 | 6.48E-13 | 5.82E-17 | 1.33E-14 | 1.33E-14 | 1.97E-19 |
| 1634-04-4 | Methyl tert-butyl ether | 7.19E-07 | 9.69E-08 | 3.73E-14 | 8.04E-08 | 8.04E-08 | 3.51E-16 |
| 1836-75-5 | Nitrofen | 1.67E-14 | 2.78E-12 | 5.39E-12 | 3.03E-14 | 3.03E-14 | 5.64E-17 |
| 189-55-9 | Dibenzo[a,i]pyrene | 4.52E-16 | 2.88E-12 | 1.36E-11 | 2.17E-14 | 2.17E-14 | 3.77E-18 |
| 189-64-0 | Dibenzo[a,h]pyrene | 4.52E-16 | 2.88E-12 | 1.36E-11 | 2.17E-14 | 2.17E-14 | 3.77E-18 |
| 191-24-2 | Benzo(g,h,i)perylene | 1.67E-14 | 2.78E-12 | 5.39E-12 | 3.03E-14 | 3.03E-14 | 5.64E-17 |
| 191-30-0 | Benzo[a,i]pyrene | 4.52E-16 | 2.88E-12 | 1.36E-11 | 2.17E-14 | 2.17E-14 | 3.77E-18 |
| 192-65-4 | Dibenzo[a,e]pyrene | 4.52E-16 | 2.88E-12 | 1.36E-11 | 2.17E-14 | 2.17E-14 | 3.77E-18 |
| 193-39-5 | Indeno(1,2,3-cd)pyrene | 1.67E-14 | 2.78E-12 | 5.39E-12 | 3.03E-14 | 3.03E-14 | 5.64E-17 |
| 205-82-3 | Benzo(j)fluoranthene | 5.47E-15 | 2.52E-12 | 8.64E-12 | 2.21E-14 | 2.21E-14 | 3.80E-18 |
| 205-99-2 | Benzo(b)fluoranthene | 1.67E-14 | 2.78E-12 | 5.39E-12 | 3.03E-14 | 3.03E-14 | 5.64E-17 |
| 206-44-0 | Fluoranthene | 2.29E-13 | 1.45E-12 | 2.31E-14 | 6.06E-14 | 6.06E-14 | 3.06E-17 |
| 207-08-9 | Benzo(k)fluoranthene | 1.67E-14 | 2.78E-12 | 5.39E-12 | 3.03E-14 | 3.03E-14 | 5.64E-17 |
| 208-96-8 | Acenaphthylene | 1.45E-04 | 6.48E-07 | 5.13E-09 | 8.98E-06 | 8.98E-06 | 3.94E-14 |

## Estimated Process Facility Organic Abated Emissions

| (CAS) | Component | PT-S3 g/sec | PT-S4 g/sec | LV-S3 g/sec | HV-S3a g/sec | HV-S3b g/sec | HV-S4 g/sec |
|---|---|---|---|---|---|---|---|
| 218-01-9 | Chrysene | 1.16E-13 | 1.51E-12 | 1.36E-13 | 4.20E-14 | 4.20E-14 | 3.50E-17 |
| 2234-13-1 | Octachloronaphthalene | 1.10E-12 | 6.48E-13 | 5.82E-17 | 1.33E-14 | 1.33E-14 | 1.97E-19 |
| 224-42-0 | Dibenz[a,j]acridine | 5.78E-17 | 2.89E-12 | 1.40E-11 | 2.15E-14 | 2.15E-14 | 3.74E-18 |
| 226-36-8 | Dibenz[a,h]acridine | 5.78E-17 | 2.89E-12 | 1.40E-11 | 2.15E-14 | 2.15E-14 | 3.74E-18 |
| 2385-85-5 | Mirex | 2.09E-04 | 3.79E-07 | 0.00E+00 | 2.81E-09 | 2.81E-09 | 1.21E-17 |
| 2551-13-7 | Trimethyl benzene | 3.85E-06 | 7.92E-08 | 0.00E+00 | 1.38E-11 | 1.38E-11 | 5.85E-20 |
| 26140-60-3 | Terphenyls | 7.73E-13 | 1.39E-12 | 5.42E-16 | 1.08E-13 | 1.08E-13 | 1.67E-17 |
| 27154-33-2 | Trichlorofluoroethane | 7.71E-04 | 7.72E-08 | 0.00E+00 | 0.00E+00 | 0.00E+00 | 2.11E-26 |
| 287-92-3 | Cyclopentane | 7.69E-07 | 7.70E-08 | 0.00E+00 | 0.00E+00 | 0.00E+00 | 1.24E-34 |
| 309-00-2 | Aldrin | 4.77E-14 | 1.72E-14 | 6.69E-18 | 1.33E-15 | 1.33E-15 | 2.06E-19 |
| 319-84-6 | Hexachlorocyclohexane (Lindane) Alpha BHC | 1.01E-07 | 4.83E-09 | 6.79E-09 | 3.84E-07 | 3.84E-07 | 2.04E-14 |
| 319-85-7 | Hexachlorocyclohexane (Lindane) Beta BHC | 5.55E-17 | 9.38E-15 | 1.77E-14 | 1.02E-16 | 1.02E-16 | 1.90E-19 |
| 319-86-8 | Delta-BHC | 5.57E-17 | 9.25E-15 | 1.80E-14 | 1.01E-16 | 1.01E-16 | 1.88E-19 |
| 3697-24-3 | 5-Methylchrysene | 1.14E-13 | 1.42E-12 | 1.05E-13 | 3.51E-14 | 3.51E-14 | 2.45E-17 |
| 3825-26-1 | Ammonium perfluorooctanoate | 1.10E-12 | 6.48E-13 | 5.82E-17 | 1.33E-14 | 1.33E-14 | 1.97E-19 |
| 4170-30-3 | 2-Butenaldehyde (2-Butenal or Crotonaldehyde) | 8.70E-08 | 2.39E-07 | 5.80E-07 | 1.99E-05 | 1.99E-05 | 8.77E-14 |
| 465-73-6 | Isodrin | 6.74E-06 | 2.57E-08 | 5.25E-14 | 4.15E-08 | 4.15E-08 | 2.20E-15 |
| 50-00-0 | Formaldehyde | 7.67E-09 | 5.38E-07 | 1.23E-04 | 4.17E-05 | 4.17E-05 | 1.05E-12 |
| 50-29-3 | 4,4-DDT | 1.53E-15 | 9.67E-15 | 1.54E-16 | 4.04E-16 | 4.04E-16 | 2.04E-19 |
| 50-32-8 | Benzo(a)pyrene | 2.12E-16 | 3.47E-14 | 6.95E-14 | 3.81E-16 | 3.81E-16 | 7.07E-19 |
| 53-70-3 | Dibenzo(a,h)anthracene | 9.12E-18 | 4.19E-15 | 1.44E-14 | 3.69E-17 | 3.69E-17 | 6.33E-21 |
| 540-59-0 | 1,2-Dichloroethylene | 7.70E-07 | 7.92E-08 | 0.00E+00 | 1.38E-11 | 1.38E-11 | 5.85E-20 |
| 540-84-1 | 2,2,4-Trimethylpentane | 7.71E-07 | 7.71E-08 | 0.00E+00 | 0.00E+00 | 0.00E+00 | 0.00E+00 |
| 541-73-1 | 1,3-Dichlorobenzene | 7.70E-05 | 7.92E-08 | 0.00E+00 | 1.38E-11 | 1.38E-11 | 5.85E-20 |
| 56-23-5 | Carbon tetrachloride | 1.55E-03 | 7.76E-08 | 0.00E+00 | 3.23E-21 | 3.23E-21 | 2.75E-24 |
| 563-80-4 | 3-Methyl-2-butanone | 5.31E-07 | 1.43E-07 | 1.13E-09 | 1.97E-06 | 1.97E-06 | 8.67E-15 |
| 56-49-5 | 3-Methylcholanthrene | 1.59E-12 | 3.51E-13 | 0.00E+00 | 0.00E+00 | 0.00E+00 | 0.00E+00 |
| 56-55-3 | Benzo(a)anthracene | 2.29E-13 | 1.45E-12 | 2.31E-14 | 6.06E-14 | 6.06E-14 | 3.06E-17 |
| 57-14-7 | 1,1-Dimethylhydrazine | 4.90E-07 | 1.05E-06 | 1.57E-06 | 8.29E-05 | 8.29E-05 | 3.65E-13 |
| 58-89-9 | gamma-BHC (Lindane) | 3.97E-16 | 5.22E-15 | 2.79E-16 | 1.43E-16 | 1.43E-16 | 1.20E-19 |
| 58-90-2 | 2,3,4,6-Tetrachlorophenol | 1.09E-04 | 1.10E-06 | 3.12E-06 | 9.30E-05 | 9.30E-05 | 4.09E-13 |
| 591-78-6 | 2-Hexanone | 5.31E-06 | 1.43E-07 | 1.13E-09 | 1.97E-06 | 1.97E-06 | 8.67E-15 |

## Estimated Process Facility Organic Abated Emissions

| (CAS) | Component | PT-S3 g/sec | PT-S4 g/sec | LV-S3 g/sec | HV-S3a g/sec | HV-S3b g/sec | HV-S4 g/sec |
|---|---|---|---|---|---|---|---|
| 59-50-7 | 4-Chloro-3-methylphenol | 2.86E-13 | 1.42E-12 | 1.05E-13 | 3.51E-14 | 3.51E-14 | 2.45E-17 |
| 59-89-2 | N-Nitrosomorpholine | 8.13E-18 | 2.82E-06 | 1.14E-03 | 1.71E-04 | 1.71E-04 | 7.54E-13 |
| 602-87-9 | 5-Nitroacenaphthene | 4.31E-14 | 1.45E-12 | 6.69E-13 | 1.96E-14 | 1.96E-14 | 2.91E-18 |
| 60-29-7 | Ethyl ether | 3.48E-06 | 3.79E-07 | 0.00E+00 | 2.81E-09 | 2.81E-09 | 1.21E-17 |
| 603-34-9 | Triphenylamine | 1.42E-05 | 1.18E-06 | 8.23E-06 | 1.06E-04 | 1.06E-04 | 4.65E-13 |
| 60-34-4 | Methylhydrazine | 5.11E-08 | 3.13E-07 | 2.80E-06 | 2.77E-05 | 2.77E-05 | 8.41E-13 |
| 60-35-5 | Acetamide | 1.09E-10 | 6.33E-07 | 2.64E-04 | 3.77E-05 | 3.77E-05 | 1.66E-13 |
| 60-57-1 | Dieldrin | 1.44E-15 | 9.95E-15 | 1.37E-16 | 3.94E-16 | 3.94E-16 | 2.13E-19 |
| 621-64-7 | Di-n-Propylnitrosamine (N-Nitroso-di-n-propylamine) | 1.16E-07 | 1.42E-06 | 1.27E-05 | 1.26E-04 | 1.26E-04 | 3.82E-12 |
| 624-83-9 | Methyl isocyanate | 7.66E-06 | 8.33E-08 | 0.00E+00 | 6.18E-10 | 6.18E-10 | 2.66E-18 |
| 627-13-4 | Nitric acid, propyl ester | 3.48E-06 | 3.79E-07 | 0.00E+00 | 2.81E-09 | 2.81E-09 | 1.21E-17 |
| 62-75-9 | N-Nitroso-N,N-dimethylamine (Dimethylnitrosamine) | 8.85E-08 | 2.71E-06 | 1.10E-04 | 2.47E-04 | 2.47E-04 | 1.09E-12 |
| 630-20-6 | 1,1,1,2-Tetrachloroethane | 7.86E-04 | 8.43E-08 | 0.00E+00 | 3.02E-10 | 3.02E-10 | 1.30E-18 |
| 64-17-5 | Ethyl alcohol | 5.11E-08 | 3.13E-07 | 2.80E-06 | 2.77E-05 | 2.77E-05 | 8.41E-13 |
| 64-18-6 | Formic acid | 1.20E-08 | 2.52E-06 | 7.60E-04 | 1.73E-04 | 1.73E-04 | 7.59E-13 |
| 64-19-7 | Acetic acid | 2.15E-09 | 2.82E-06 | 1.14E-03 | 1.71E-04 | 1.71E-04 | 7.54E-13 |
| 67-56-1 | Methyl alcohol (Methanol) | 5.11E-08 | 3.13E-07 | 2.80E-06 | 2.77E-05 | 2.77E-05 | 8.41E-13 |
| 67-63-0 | 2-Propyl alcohol (Isopropanol; Propan-2-01) | 8.63E-08 | 2.39E-07 | 5.87E-07 | 1.99E-05 | 1.99E-05 | 8.78E-14 |
| 67-64-1 | 2-Propanone (Acetone) | 1.66E-06 | 1.02E-06 | 1.10E-07 | 4.45E-05 | 4.45E-05 | 1.96E-13 |
| 67-66-3 | Chloroform | 3.85E-03 | 7.92E-08 | 0.00E+00 | 1.38E-11 | 1.38E-11 | 5.85E-20 |
| 67-72-1 | Hexachloroethane | 7.00E-04 | 3.60E-07 | 0.00E+00 | 6.26E-11 | 6.26E-11 | 2.66E-19 |
| 684-16-2 | Hexafluoroacetone | 7.70E-03 | 7.92E-08 | 0.00E+00 | 1.38E-11 | 1.38E-11 | 5.85E-20 |
| 71-23-8 | n-Propyl alcohol | 8.63E-08 | 2.39E-07 | 5.87E-07 | 1.99E-05 | 1.99E-05 | 8.78E-14 |
| 71-36-3 | n-Butyl alcohol | 8.63E-08 | 2.39E-07 | 5.87E-07 | 1.99E-05 | 1.99E-05 | 8.78E-14 |
| 71-43-2 | Benzene | 7.69E-05 | 7.85E-08 | 0.00E+00 | 1.52E-12 | 1.52E-12 | 6.36E-21 |
| 71-55-6 | Methyl chloroform (1,1,1-Trichloroethane) | 7.72E-06 | 7.77E-08 | 0.00E+00 | 5.94E-15 | 5.94E-15 | 2.48E-23 |
| 72-20-8 | Endrin | 7.62E-16 | 9.45E-15 | 6.97E-16 | 2.34E-16 | 2.34E-16 | 1.63E-19 |
| 72-43-5 | Methoxychlor | 1.82E-16 | 8.39E-14 | 2.88E-13 | 7.37E-16 | 7.37E-16 | 1.27E-19 |
| 72-54-8 | 4,4-DDD | 7.62E-16 | 9.45E-15 | 6.97E-16 | 2.34E-16 | 2.34E-16 | 1.63E-19 |
| 72-55-9 | 4,4-DDE | 5.15E-15 | 9.28E-15 | 3.62E-18 | 7.18E-16 | 7.18E-16 | 1.11E-19 |

## Estimated Process Facility Organic Abated Emissions

| (CAS) | Component | PT-S3 g/sec | PT-S4 g/sec | LV-S3 g/sec | HV-S3a g/sec | HV-S3b g/sec | HV-S4 g/sec |
|---|---|---|---|---|---|---|---|
| 74-83-9 | Bromomethane (Methyl bromide) | 7.70E-06 | 7.92E-08 | 0.00E+00 | 1.38E-11 | 1.38E-11 | 5.85E-20 |
| 74-87-3 | Chloromethane (Methyl chloride) | 3.85E-04 | 7.78E-08 | 0.00E+00 | 9.43E-14 | 9.43E-14 | 3.90E-22 |
| 74-97-5 | Bromochloromethane | 3.83E-03 | 8.33E-08 | 0.00E+00 | 6.18E-10 | 6.18E-10 | 2.66E-18 |
| 74-99-7 | Methylacetylene | 3.50E-06 | 3.54E-07 | 0.00E+00 | 4.29E-13 | 4.29E-13 | 1.77E-21 |
| 75-00-3 | Chloroethane | 7.69E-06 | 7.78E-08 | 0.00E+00 | 9.43E-14 | 9.43E-14 | 3.90E-22 |
| 75-01-4 | Vinyl chloride (1-Chloroethene) | 3.51E-06 | 3.53E-07 | 0.00E+00 | 1.47E-20 | 1.47E-20 | 1.25E-23 |
| 75-05-8 | Acetonitrile | 3.60E-06 | 2.80E-07 | 4.42E-08 | 1.44E-05 | 1.44E-05 | 6.35E-14 |
| 75-07-0 | Acetaldehyde | 1.39E-06 | 8.47E-07 | 9.20E-08 | 3.71E-05 | 3.71E-05 | 1.63E-13 |
| 75-09-2 | Dichloromethane (Methylene chloride) | 3.85E-04 | 7.92E-08 | 0.00E+00 | 1.38E-11 | 1.38E-11 | 5.85E-20 |
| 75-12-7 | Formamide | 1.27E-10 | 2.89E-06 | 1.24E-03 | 1.70E-04 | 1.70E-04 | 7.48E-13 |
| 75-15-0 | Carbon disulfide | 7.69E-07 | 7.78E-08 | 0.00E+00 | 9.43E-14 | 9.43E-14 | 3.90E-22 |
| 75-21-8 | Ethylene oxide (Oxirane) | 6.54E-07 | 1.17E-07 | 5.68E-11 | 4.55E-07 | 4.55E-07 | 1.99E-15 |
| 75-27-4 | Bromodichloromethane | 1.57E-03 | 8.43E-08 | 0.00E+00 | 3.02E-10 | 3.02E-10 | 1.30E-18 |
| 75-34-3 | 1,1-Dichloroethane | 7.70E-07 | 7.92E-08 | 0.00E+00 | 1.38E-11 | 1.38E-11 | 5.85E-20 |
| 75-35-4 | 1,1-Dichloroethene (Vinylidene chloride) | 7.73E-07 | 7.76E-08 | 0.00E+00 | 3.23E-21 | 3.23E-21 | 2.75E-24 |
| 75-43-4 | Dichlorofluoromethane | 7.69E-06 | 7.78E-08 | 0.00E+00 | 9.43E-14 | 9.43E-14 | 3.90E-22 |
| 75-45-6 | Chlorodifluoromethane | 1.55E-04 | 7.76E-08 | 0.00E+00 | 3.23E-21 | 3.23E-21 | 2.75E-24 |
| 75-50-3 | Trimethylamine | 5.31E-07 | 1.43E-07 | 1.13E-09 | 1.97E-06 | 1.97E-06 | 8.67E-15 |
| 75-52-5 | Nitromethane | 1.39E-06 | 8.47E-07 | 9.20E-08 | 3.71E-05 | 3.71E-05 | 1.63E-13 |
| 75-55-8 | 2-Methylaziridine | 3.92E-07 | 1.09E-06 | 2.67E-06 | 9.07E-05 | 9.07E-05 | 3.99E-13 |
| 75-61-6 | Difluorodibromomethane | 7.73E-03 | 7.76E-08 | 0.00E+00 | 3.23E-21 | 3.23E-21 | 2.75E-24 |
| 75-63-8 | Trifluorobromomethane | 7.68E-03 | 7.69E-08 | 0.00E+00 | 0.00E+00 | 0.00E+00 | 0.00E+00 |
| 75-65-0 | 2-Methyl-2-propanol | 8.63E-08 | 2.39E-07 | 5.87E-07 | 1.99E-05 | 1.99E-05 | 8.78E-14 |
| 75-69-4 | Trichlorofluoromethane | 7.71E-03 | 7.72E-08 | 0.00E+00 | 0.00E+00 | 0.00E+00 | 2.11E-26 |
| 75-71-8 | Dichlorodifluoromethane | 7.68E-03 | 7.69E-08 | 0.00E+00 | 0.00E+00 | 0.00E+00 | 0.00E+00 |
| 75-99-0 | 2,2-Dichloropropionic acid | 1.07E-07 | 2.82E-06 | 1.14E-03 | 1.71E-04 | 1.71E-04 | 7.54E-13 |
| 76-03-9 | Trichloroacetic acid | 4.38E-08 | 6.33E-07 | 2.64E-04 | 3.77E-05 | 3.77E-05 | 1.66E-13 |
| 76-11-9 | 1,1,1,2-Tetrachloro-2,2-difluoroethane | 6.99E-04 | 3.50E-07 | 0.00E+00 | 0.00E+00 | 0.00E+00 | 5.66E-34 |
| 76-12-0 | 1,1,2,2-Tetrachloro-1,2-difluoroethane | 7.01E-04 | 3.51E-07 | 0.00E+00 | 0.00E+00 | 0.00E+00 | 9.60E-26 |

## Estimated Process Facility Organic Abated Emissions

| (CAS) | Component | PT-S3 g/sec | PT-S4 g/sec | LV-S3 g/sec | HV-S3a g/sec | HV-S3b g/sec | HV-S4 g/sec |
|---|---|---|---|---|---|---|---|
| 76-13-1 | 1,2,2-Trichloro-1,1,2-trifluoroethane (Freon 113) | 1.92E-04 | 7.69E-08 | 0.00E+00 | 0.00E+00 | 0.00E+00 | 0.00E+00 |
| 76-14-2 | 1,2-Dichloro-1,1,2,2-tetrafluoroethane | 7.71E-03 | 7.71E-08 | 0.00E+00 | 0.00E+00 | 0.00E+00 | 0.00E+00 |
| 76-15-3 | Chloropentafluoroethane | 7.70E-03 | 7.70E-08 | 0.00E+00 | 2.12E-30 | 2.12E-30 | 0.00E+00 |
| 76-44-8 | Heptachlor | 2.02E-05 | 1.03E-08 | 0.00E+00 | 1.76E-08 | 1.76E-08 | 7.72E-17 |
| 78-83-1 | 2-Methylpropyl alcohol (Isobutyl alcohol) | 3.92E-07 | 1.09E-06 | 2.67E-06 | 9.07E-05 | 9.07E-05 | 3.99E-13 |
| 78-87-5 | 1,2-Dichloropropane | 7.70E-06 | 7.92E-08 | 0.00E+00 | 1.38E-11 | 1.38E-11 | 5.85E-20 |
| 78-92-2 | 1-Methylpropyl alcohol (2-Butanol) | 8.63E-08 | 2.39E-07 | 5.87E-07 | 1.99E-05 | 1.99E-05 | 8.78E-14 |
| 78-93-3 | Methyl ethyl ketone (MEK, 2-Butanone) | 3.05E-06 | 1.86E-07 | 2.02E-08 | 8.16E-06 | 8.16E-06 | 3.59E-14 |
| 79-00-5 | 1,1,2-Trichloroethane | 7.66E-07 | 8.33E-08 | 0.00E+00 | 6.18E-10 | 6.18E-10 | 2.66E-18 |
| 79-01-6 | Trichloroethylene | 7.68E-07 | 7.78E-08 | 0.00E+00 | 1.05E-13 | 1.05E-13 | 4.37E-22 |
| 79-09-4 | Propionic acid | 3.49E-08 | 2.44E-06 | 5.58E-04 | 1.90E-04 | 1.90E-04 | 4.77E-12 |
| 79-10-7 | 2-Propenoic acid | 3.49E-08 | 2.44E-06 | 5.58E-04 | 1.90E-04 | 1.90E-04 | 4.77E-12 |
| 79-20-9 | Methyl acetate | 2.41E-06 | 6.48E-07 | 5.13E-09 | 8.98E-06 | 8.98E-06 | 3.94E-14 |
| 79-34-5 | 1,1,2,2-Tetrachloroethane | 7.19E-04 | 9.69E-08 | 3.73E-14 | 8.04E-08 | 8.04E-08 | 3.51E-16 |
| 8001-35-2 | Toxaphene | 1.06E-15 | 1.20E-14 | 4.81E-16 | 3.57E-16 | 3.57E-16 | 2.73E-19 |
| 82-68-8 | Pentachloronitrobenzene (PCBN or quintobenzene) | 8.32E-05 | 8.47E-07 | 9.20E-08 | 3.71E-05 | 3.71E-05 | 1.63E-13 |
| 83-32-9 | Acenaphthene | 1.78E-04 | 5.30E-07 | 2.58E-10 | 2.07E-06 | 2.07E-06 | 9.06E-15 |
| 84-66-2 | Diethyl phthalate | 7.94E-09 | 1.92E-06 | 2.65E-04 | 1.58E-04 | 1.58E-04 | 6.97E-13 |
| 84-74-2 | Dibutyl phthalate | 1.63E-16 | 1.89E-12 | 1.04E-12 | 3.21E-14 | 3.21E-14 | 4.42E-17 |
| 85-01-8 | Phenanthrene | 8.32E-05 | 8.47E-07 | 9.20E-08 | 3.71E-05 | 3.71E-05 | 1.63E-13 |
| 85-68-7 | Butylbenzyl phthalate | 1.63E-16 | 1.89E-12 | 1.04E-12 | 3.21E-14 | 3.21E-14 | 4.42E-17 |
| 86-73-7 | Fluorene | 1.10E-12 | 6.48E-13 | 5.82E-17 | 1.33E-14 | 1.33E-14 | 1.97E-19 |
| 87-68-3 | Hexachlorobutadiene | 3.08E-05 | 7.79E-08 | 0.00E+00 | 8.33E-14 | 8.33E-14 | 3.44E-22 |
| 87-86-5 | Pentachlorophenol | 1.29E-07 | 2.82E-06 | 1.14E-03 | 1.71E-04 | 1.71E-04 | 7.54E-13 |
| 88-06-2 | 2,4,6-Trichlorophenol | 1.39E-05 | 1.42E-06 | 1.27E-05 | 1.26E-04 | 1.26E-04 | 3.82E-12 |
| 88-72-2 | 2-Nitrotoluene | 5.39E-08 | 2.31E-07 | 3.45E-07 | 1.82E-05 | 1.82E-05 | 8.02E-14 |
| 88-75-5 | 2-Nitrophenol | 7.35E-05 | 1.05E-06 | 1.57E-06 | 8.29E-05 | 8.29E-05 | 3.65E-13 |
| 88-85-7 | 2-sec-Butyl-4,6-dinitrophenol (Dinoseb) | 1.86E-14 | 3.20E-12 | 1.07E-11 | 3.47E-14 | 3.47E-14 | 6.43E-17 |

## Estimated Process Facility Organic Abated Emissions

| (CAS) | Component | PT-S3 g/sec | PT-S4 g/sec | LV-S3 g/sec | HV-S3a g/sec | HV-S3b g/sec | HV-S4 g/sec |
|---|---|---|---|---|---|---|---|
| 88-89-1 | Picric acid | 1.04E-20 | 1.03E-11 | 1.88E-10 | 2.67E-14 | 2.67E-14 | 5.61E-17 |
| 91-20-3 | Naphthalene | 5.48E-06 | 1.45E-08 | 0.00E+00 | 7.61E-09 | 7.61E-09 | 3.32E-17 |
| 91-22-5 | Quinoline | 4.74E-08 | 1.45E-06 | 5.89E-05 | 1.32E-04 | 1.32E-04 | 5.82E-13 |
| 91-58-7 | 2-Chloronapthalene | 1.96E-04 | 4.40E-07 | 1.69E-13 | 3.65E-07 | 3.65E-07 | 1.60E-15 |
| 92-52-4 | 1,1'-Biphenyl | 6.53E-06 | 4.40E-07 | 1.69E-13 | 3.65E-07 | 3.65E-07 | 1.60E-15 |
| 92-93-3 | 4-Nitrobiphenyl | 1.06E-13 | 1.42E-12 | 1.45E-13 | 3.32E-14 | 3.32E-14 | 1.91E-17 |
| 93-72-1 | Silvex (2,4,5-TP) | 4.52E-16 | 2.88E-12 | 1.36E-11 | 2.17E-14 | 2.17E-14 | 3.77E-18 |
| 93-76-5 | 2,4,5-T | 4.52E-16 | 2.88E-12 | 1.36E-11 | 2.17E-14 | 2.17E-14 | 3.77E-18 |
| 94-75-7 | 2,4-D and esters (160C typed) | 1.29E-07 | 2.82E-06 | 1.14E-03 | 1.71E-04 | 1.71E-04 | 7.54E-13 |
| 95-13-6 | Indene | 1.79E-05 | 3.83E-07 | 0.00E+00 | 1.37E-09 | 1.37E-09 | 5.90E-18 |
| 95-47-6 | o-Xylene | 7.70E-07 | 7.92E-08 | 0.00E+00 | 1.38E-11 | 1.38E-11 | 5.85E-20 |
| 95-48-7 | o-Cresol (2-Methylphenol) | 1.04E-07 | 3.20E-07 | 1.30E-05 | 2.91E-05 | 2.91E-05 | 1.28E-13 |
| 95-49-8 | 2-Chlorotoluene | 1.75E-06 | 3.60E-07 | 0.00E+00 | 6.26E-11 | 6.26E-11 | 2.66E-19 |
| 95-50-1 | o-Dichlorobenzene (1,2-Dichlorobenzene) | 7.86E-05 | 8.43E-08 | 0.00E+00 | 3.02E-10 | 3.02E-10 | 1.30E-18 |
| 95-57-8 | 2-Chlorophenol | 1.96E-07 | 1.09E-06 | 2.67E-06 | 9.07E-05 | 9.07E-05 | 3.99E-13 |
| 95-95-4 | 2,4,5-Trichlorophenol | 5.69E-06 | 1.45E-06 | 5.89E-05 | 1.32E-04 | 1.32E-04 | 5.82E-13 |
| 96-22-0 | 3-Pentanone | 5.31E-07 | 1.43E-07 | 1.13E-09 | 1.97E-06 | 1.97E-06 | 8.67E-15 |
| 96-69-5 | Bis(3-tert-butyl-4-hydroxy-6-methyl-phenyl)sulfide | 1.59E-12 | 3.60E-13 | 0.00E+00 | 1.35E-18 | 1.35E-18 | 1.33E-24 |
| 98-51-1 | p-tert-Butyltoluene | 1.75E-06 | 3.53E-07 | 0.00E+00 | 2.70E-14 | 2.70E-14 | 1.13E-22 |
| 98-82-8 | Cumene | 1.75E-06 | 3.54E-07 | 0.00E+00 | 4.29E-13 | 4.29E-13 | 1.77E-21 |
| 98-83-9 | alpha-Methylstyrene | 3.85E-05 | 7.92E-08 | 0.00E+00 | 1.38E-11 | 1.38E-11 | 5.85E-20 |
| 98-86-2 | Acetophenone | 2.09E-05 | 1.07E-06 | 2.25E-06 | 8.84E-05 | 8.84E-05 | 3.89E-13 |
| 98-95-3 | Nitrobenzene | 2.45E-07 | 1.05E-06 | 1.57E-06 | 8.29E-05 | 8.29E-05 | 3.65E-13 |
| **Products of Incomplete Combustion (PICs)** | | | | | | | |
| 100-02-7 | 4-Nitrophenol | 1.75E-05 | 0.00E+00 | 3.09E-05 | 3.91E-06 | 3.91E-06 | 0.00E+00 |
| 100-44-7 | Benzyl chloride | 2.33E-06 | 0.00E+00 | 4.12E-06 | 5.21E-07 | 5.21E-07 | 0.00E+00 |
| 100-51-6 | Benzyl alcohol | 1.75E-05 | 0.00E+00 | 3.09E-05 | 3.91E-06 | 3.91E-06 | 0.00E+00 |
| 100-52-7 | Benzaldehyde | 1.75E-05 | 0.00E+00 | 3.09E-05 | 3.91E-06 | 3.91E-06 | 0.00E+00 |
| 101-77-9 | 4,4-Methylenedianiline | 1.75E-05 | 0.00E+00 | 3.09E-05 | 3.91E-06 | 3.91E-06 | 0.00E+00 |
| 103-33-3 | Azobenzene | 1.75E-05 | 0.00E+00 | 3.09E-05 | 3.91E-06 | 3.91E-06 | 0.00E+00 |
| 103-65-1 | n-Propyl benzene (Isocumene) | 2.33E-06 | 0.00E+00 | 4.12E-06 | 5.21E-07 | 5.21E-07 | 0.00E+00 |

## Estimated Process Facility Organic Abated Emissions

| (CAS) | Component | PT-S3 g/sec | PT-S4 g/sec | LV-S3 g/sec | HV-S3a g/sec | HV-S3b g/sec | HV-S4 g/sec |
|---|---|---|---|---|---|---|---|
| 104-51-8 | n-Butylbenzene | 2.33E-06 | 0.00E+00 | 4.12E-06 | 5.21E-07 | 5.21E-07 | 0.00E+00 |
| 105-67-9 | 2,4-Dimethylphenol | 1.75E-05 | 0.00E+00 | 3.09E-05 | 3.91E-06 | 3.91E-06 | 0.00E+00 |
| 106-43-4 | 4-Chlorotoluene (p-Tolyl chloride) | 2.33E-06 | 0.00E+00 | 4.12E-06 | 5.21E-07 | 5.21E-07 | 0.00E+00 |
| 106-44-5 | p-Cresol (4-Methyl phenol) | 1.75E-05 | 0.00E+00 | 3.09E-05 | 3.91E-06 | 3.91E-06 | 0.00E+00 |
| 106-47-8 | p-Chloroaniline | 1.75E-05 | 0.00E+00 | 3.09E-05 | 3.91E-06 | 3.91E-06 | 0.00E+00 |
| 106-49-0 | p-Toluidine | 1.75E-05 | 0.00E+00 | 3.09E-05 | 3.91E-06 | 3.91E-06 | 0.00E+00 |
| 106-51-4 | Quinone | 1.75E-05 | 0.00E+00 | 3.09E-05 | 3.91E-06 | 3.91E-06 | 0.00E+00 |
| 106-89-8 | Epichlorohydrin (1-chloro-2,3-epoxypropane) | 2.33E-06 | 0.00E+00 | 4.12E-06 | 5.21E-07 | 5.21E-07 | 0.00E+00 |
| 107-19-7 | Propargyl alcohol | 2.33E-06 | 0.00E+00 | 4.12E-06 | 5.21E-07 | 5.21E-07 | 0.00E+00 |
| 107-21-1 | Ethylene glycol | 2.33E-06 | 0.00E+00 | 4.12E-06 | 5.21E-07 | 5.21E-07 | 0.00E+00 |
| 107-98-2 | Propylene gylcol monomethyl ether | 1.75E-05 | 0.00E+00 | 3.09E-05 | 3.91E-06 | 3.91E-06 | 0.00E+00 |
| 108-60-1 | Dichloroisopropyl ether (2,2'-Oxybis(1-chloropropane)) | 1.75E-05 | 0.00E+00 | 3.09E-05 | 3.91E-06 | 3.91E-06 | 0.00E+00 |
| 108-67-8 | 1,3,5-Trimethyl benzene | 2.33E-06 | 0.00E+00 | 4.12E-06 | 5.21E-07 | 5.21E-07 | 0.00E+00 |
| 108-86-1 | Bromobenzene (Phenyl bromide) | 2.33E-06 | 0.00E+00 | 4.12E-06 | 5.21E-07 | 5.21E-07 | 0.00E+00 |
| 109-77-3 | Malononitrile | 2.33E-06 | 0.00E+00 | 4.12E-06 | 5.21E-07 | 5.21E-07 | 0.00E+00 |
| 109-86-4 | 2-Methoxyethanol | 1.75E-05 | 0.00E+00 | 3.09E-05 | 3.91E-06 | 3.91E-06 | 0.00E+00 |
| 110-80-5 | 2-Ethoxyethanol | 1.75E-05 | 0.00E+00 | 3.09E-05 | 3.91E-06 | 3.91E-06 | 0.00E+00 |
| 111-15-9 | Ethylene glycol monoethyl ether acetate | 1.75E-05 | 0.00E+00 | 3.09E-05 | 3.91E-06 | 3.91E-06 | 0.00E+00 |
| 111-44-4 | Bis(2-chloroethyl) ether | 1.75E-05 | 0.00E+00 | 3.09E-05 | 3.91E-06 | 3.91E-06 | 0.00E+00 |
| 111-91-1 | Bis(2-chloroethoxy)methane | 1.75E-05 | 0.00E+00 | 3.09E-05 | 3.91E-06 | 3.91E-06 | 0.00E+00 |
| 1120-71-4 | 1,3-Propane sultone | 1.75E-05 | 0.00E+00 | 3.09E-05 | 3.91E-06 | 3.91E-06 | 0.00E+00 |
| 119-90-4 | 3,3'-Dimethoxybenzidine (ortho-dianisidine) | 1.75E-05 | 0.00E+00 | 3.09E-05 | 3.91E-06 | 3.91E-06 | 0.00E+00 |
| 121-14-2 | 2,4-Dinitrotoluene | 1.75E-05 | 0.00E+00 | 3.09E-05 | 3.91E-06 | 3.91E-06 | 0.00E+00 |
| 122-66-7 | 1,2-Diphenylhydrazine | 1.75E-05 | 0.00E+00 | 3.09E-05 | 3.91E-06 | 3.91E-06 | 0.00E+00 |
| 123-33-1 | Maleic hydrazide | 1.75E-05 | 0.00E+00 | 3.09E-05 | 3.91E-06 | 3.91E-06 | 0.00E+00 |
| 124-48-1 | Chlorodibromomethane | 2.33E-06 | 0.00E+00 | 4.12E-06 | 5.21E-07 | 5.21E-07 | 0.00E+00 |
| 131-11-3 | Dimethylphthalate | 1.75E-05 | 0.00E+00 | 3.09E-05 | 3.91E-06 | 3.91E-06 | 0.00E+00 |
| 131-89-5 | 2-Cyclohexyl-4,6-dinitrophenol | 1.75E-05 | 0.00E+00 | 3.09E-05 | 3.91E-06 | 3.91E-06 | 0.00E+00 |

## Estimated Process Facility Organic Abated Emissions

| (CAS) | Component | PT-S3 g/sec | PT-S4 g/sec | LV-S3 g/sec | HV-S3a g/sec | HV-S3b g/sec | HV-S4 g/sec |
|---|---|---|---|---|---|---|---|
| 133-06-2 | Captan | 1.75E-05 | 0.00E+00 | 3.09E-05 | 3.91E-06 | 3.91E-06 | 0.00E+00 |
| 135-98-8 | sec-Butylbenzene | 2.33E-06 | 0.00E+00 | 4.12E-06 | 5.21E-07 | 5.21E-07 | 0.00E+00 |
| 145-73-3 | Endothall | 1.75E-05 | 0.00E+00 | 3.09E-05 | 3.91E-06 | 3.91E-06 | 0.00E+00 |
| 156-59-2 | cis-1,2-Dichloroethene | 2.33E-06 | 0.00E+00 | 4.12E-06 | 5.21E-07 | 5.21E-07 | 0.00E+00 |
| 1746-01-6 | 2,3,7,8-Tetrachlorodibenzo(p)dioxin (TCDD) | 1.10E-11 | 0.00E+00 | 1.93E-11 | 2.44E-12 | 2.44E-12 | 0.00E+00 |
| 192-97-2 | Benzo(e)pyrene | 3.50E-06 | 0.00E+00 | 6.19E-06 | 7.81E-07 | 7.81E-07 | 0.00E+00 |
| 19408-74-3 | 1,2,3,7,8,9-Hexachlorodibenzo(p)dioxin | 1.82E-11 | 0.00E+00 | 3.22E-11 | 4.06E-12 | 4.06E-12 | 0.00E+00 |
| 23950-58-5 | Pronamide | 1.75E-05 | 0.00E+00 | 3.09E-05 | 3.91E-06 | 3.91E-06 | 0.00E+00 |
| 25013-15-4 | Methyl styrene (mixed isomers) | 2.33E-06 | 0.00E+00 | 4.12E-06 | 5.21E-07 | 5.21E-07 | 0.00E+00 |
| 3268-87-9 | Octachlorodibenzo(p)dioxin | 9.12E-11 | 0.00E+00 | 1.61E-10 | 2.03E-11 | 2.03E-11 | 0.00E+00 |
| 35822-46-9 | 1,2,3,4,6,7,8-Heptachlorodibenzo(p)dioxin | 3.65E-11 | 0.00E+00 | 6.45E-11 | 8.15E-12 | 8.15E-12 | 0.00E+00 |
| 39001-02-0 | Octachlorodibenzofuran | 7.30E-11 | 0.00E+00 | 1.29E-10 | 1.63E-11 | 1.63E-11 | 0.00E+00 |
| 39227-28-6 | 1,2,3,4,7,8-Hexachlorodibenzo(p)dioxin | 1.82E-11 | 0.00E+00 | 3.22E-11 | 4.06E-12 | 4.06E-12 | 0.00E+00 |
| 40321-76-4 | 1,2,3,7,8-Pentachlorodibenzo(p)dioxin | 1.82E-11 | 0.00E+00 | 3.22E-11 | 4.06E-12 | 4.06E-12 | 0.00E+00 |
| 41851-50-7 | Chlorocyclopentadiene | 2.33E-06 | 0.00E+00 | 4.12E-06 | 5.21E-07 | 5.21E-07 | 0.00E+00 |
| 460-19-5 | Cyanogen | 2.33E-06 | 0.00E+00 | 4.12E-06 | 5.21E-07 | 5.21E-07 | 0.00E+00 |
| 506-68-3 | Cyanogen bromide | 1.75E-05 | 0.00E+00 | 3.09E-05 | 3.91E-06 | 3.91E-06 | 0.00E+00 |
| 506-77-4 | Cyanogen chloride | 2.33E-06 | 0.00E+00 | 4.12E-06 | 5.21E-07 | 5.21E-07 | 0.00E+00 |
| 510-15-6 | Chlorobenzilate | 1.75E-05 | 0.00E+00 | 3.09E-05 | 3.91E-06 | 3.91E-06 | 0.00E+00 |
| 51207-31-9 | 2,3,7,8-Tetrachlorodibenzofuran | 9.12E-12 | 0.00E+00 | 1.61E-11 | 2.03E-12 | 2.03E-12 | 0.00E+00 |
| 51-28-5 | 2,4-Dinitrophenol | 1.75E-05 | 0.00E+00 | 3.09E-05 | 3.91E-06 | 3.91E-06 | 0.00E+00 |
| 51-79-6 | Ethyl carbamate (urethane) | 1.75E-05 | 0.00E+00 | 3.09E-05 | 3.91E-06 | 3.91E-06 | 0.00E+00 |
| 528-29-0 | o-Dinitrobenzene | 1.75E-05 | 0.00E+00 | 3.09E-05 | 3.91E-06 | 3.91E-06 | 0.00E+00 |
| 532-27-4 | 2-Chloroacetophenone | 1.75E-05 | 0.00E+00 | 3.09E-05 | 3.91E-06 | 3.91E-06 | 0.00E+00 |
| 534-52-1 | 4,6-Dinitro-o-cresol (4,6-Dinitro-2-methylphenol) | 1.75E-05 | 0.00E+00 | 3.09E-05 | 3.91E-06 | 3.91E-06 | 0.00E+00 |
| 5385-75-1 | Dibenzo(a,e)fluoranthene | 3.50E-06 | 0.00E+00 | 6.19E-06 | 7.81E-07 | 7.81E-07 | 0.00E+00 |

## Estimated Process Facility Organic Abated Emissions

| (CAS) | Component | PT-S3 g/sec | PT-S4 g/sec | LV-S3 g/sec | HV-S3a g/sec | HV-S3b g/sec | HV-S4 g/sec |
|---|---|---|---|---|---|---|---|
| 540-73-8 | 1,2-Dimethylhydrazine | 2.33E-06 | 0.00E+00 | 4.12E-06 | 5.21E-07 | 5.21E-07 | 0.00E+00 |
| 542-75-6 | 1,3-Dichloropropene | 2.33E-06 | 0.00E+00 | 4.12E-06 | 5.21E-07 | 5.21E-07 | 0.00E+00 |
| 542-88-1 | Dichloromethyl ether | 2.33E-06 | 0.00E+00 | 4.12E-06 | 5.21E-07 | 5.21E-07 | 0.00E+00 |
| 55673-89-7 | 1,2,3,4,7,8,9-Heptachlorodibenzofuran | 1.82E-11 | 0.00E+00 | 3.22E-11 | 4.06E-12 | 4.06E-12 | 0.00E+00 |
| 57117-31-4 | 2,3,4,7,8-Pentachlorodibenzofuran | 9.12E-12 | 0.00E+00 | 1.61E-11 | 2.03E-12 | 2.03E-12 | 0.00E+00 |
| 57117-41-6 | 1,2,3,7,8-Pentachlorodibenzofuran | 9.12E-12 | 0.00E+00 | 1.61E-11 | 2.03E-12 | 2.03E-12 | 0.00E+00 |
| 57117-44-9 | 1,2,3,6,7,8-Hexachlorodibenzofuran | 1.46E-11 | 0.00E+00 | 2.58E-11 | 3.25E-12 | 3.25E-12 | 0.00E+00 |
| 57-24-9 | Strychnine | 1.75E-05 | 0.00E+00 | 3.09E-05 | 3.91E-06 | 3.91E-06 | 0.00E+00 |
| 57653-85-7 | 1,2,3,6,7,8-Hexachlorodibenzo(p)dioxin | 1.82E-11 | 0.00E+00 | 3.22E-11 | 4.06E-12 | 4.06E-12 | 0.00E+00 |
| 57-74-9 | Chlordane | 1.75E-05 | 0.00E+00 | 3.09E-05 | 3.91E-06 | 3.91E-06 | 0.00E+00 |
| 584-84-9 | 2,4-Toluene diisocyante | 1.75E-05 | 0.00E+00 | 3.09E-05 | 3.91E-06 | 3.91E-06 | 0.00E+00 |
| 593-60-2 | Bromoethene | 2.33E-06 | 0.00E+00 | 4.12E-06 | 5.21E-07 | 5.21E-07 | 0.00E+00 |
| 60-11-7 | Dimethyl aminoazobenzene | 1.75E-05 | 0.00E+00 | 3.09E-05 | 3.91E-06 | 3.91E-06 | 0.00E+00 |
| 606-20-2 | 2,6-Dinitrotoluene | 1.75E-05 | 0.00E+00 | 3.09E-05 | 3.91E-06 | 3.91E-06 | 0.00E+00 |
| 60851-34-5 | 2,3,4,6,7,8-Hexachlorodibenzofuran | 1.65E-11 | 0.00E+00 | 2.91E-11 | 3.67E-12 | 3.67E-12 | 0.00E+00 |
| 608-93-5 | Pentachlorobenzene | 1.75E-05 | 0.00E+00 | 3.09E-05 | 3.91E-06 | 3.91E-06 | 0.00E+00 |
| 61626-71-9 | Dichloropentadiene | 2.33E-06 | 0.00E+00 | 4.12E-06 | 5.21E-07 | 5.21E-07 | 0.00E+00 |
| 62-50-0 | Ethyl methanesulfonate | 1.75E-05 | 0.00E+00 | 3.09E-05 | 3.91E-06 | 3.91E-06 | 0.00E+00 |
| 62-53-3 | Aniline | 1.75E-05 | 0.00E+00 | 3.09E-05 | 3.91E-06 | 3.91E-06 | 0.00E+00 |
| 65-85-0 | Benzoic acid | 1.75E-05 | 0.00E+00 | 3.09E-05 | 3.91E-06 | 3.91E-06 | 0.00E+00 |
| 67562-39-4 | 1,2,3,4,6,7,8-Heptachlorodibenzofuran | 1.82E-11 | 0.00E+00 | 3.22E-11 | 4.06E-12 | 4.06E-12 | 0.00E+00 |
| 70-30-4 | Hexachlorophene | 1.75E-05 | 0.00E+00 | 3.09E-05 | 3.91E-06 | 3.91E-06 | 0.00E+00 |
| 70648-26-9 | 1,2,3,4,7,8-Hexachlorodibenzofuran | 1.65E-11 | 0.00E+00 | 2.91E-11 | 3.67E-12 | 3.67E-12 | 0.00E+00 |
| 72918-21-9 | 1,2,3,7,8,9-Hexachlorodibenzofuran | 1.82E-11 | 0.00E+00 | 3.22E-11 | 4.06E-12 | 4.06E-12 | 0.00E+00 |
| 74-88-4 | Iodomethane (Methyl iodide) | 2.33E-06 | 0.00E+00 | 4.12E-06 | 5.21E-07 | 5.21E-07 | 0.00E+00 |
| 74-95-3 | Methylene bromide | 2.33E-06 | 0.00E+00 | 4.12E-06 | 5.21E-07 | 5.21E-07 | 0.00E+00 |

## Estimated Process Facility Organic Abated Emissions

| (CAS) | Component | PT-S3 g/sec | PT-S4 g/sec | LV-S3 g/sec | HV-S3a g/sec | HV-S3b g/sec | HV-S4 g/sec |
|---|---|---|---|---|---|---|---|
| 75-25-2 | Bromoform | 2.33E-06 | 0.00E+00 | 4.12E-06 | 5.21E-07 | 5.21E-07 | 0.00E+00 |
| 75-29-6 | 2-Chloropropane | 2.33E-06 | 0.00E+00 | 4.12E-06 | 5.21E-07 | 5.21E-07 | 0.00E+00 |
| 75-44-5 | Phosgene | 2.33E-06 | 0.00E+00 | 4.12E-06 | 5.21E-07 | 5.21E-07 | 0.00E+00 |
| 76-01-7 | Pentachloroethane | 2.33E-06 | 0.00E+00 | 4.12E-06 | 5.21E-07 | 5.21E-07 | 0.00E+00 |
| 764-41-0 | 1,4-Dichloro-2-butene | 2.33E-06 | 0.00E+00 | 4.12E-06 | 5.21E-07 | 5.21E-07 | 0.00E+00 |
| 765-34-4 | Glycidylaldehyde | 1.75E-05 | 0.00E+00 | 3.09E-05 | 3.91E-06 | 3.91E-06 | 0.00E+00 |
| 77-47-4 | Hexachlorocyclopentadiene | 1.75E-05 | 0.00E+00 | 3.09E-05 | 3.91E-06 | 3.91E-06 | 0.00E+00 |
| 77-78-1 | Dimethyl sulfate | 1.75E-05 | 0.00E+00 | 3.09E-05 | 3.91E-06 | 3.91E-06 | 0.00E+00 |
| 80-62-6 | Methyl methacrylate | 2.33E-06 | 0.00E+00 | 4.12E-06 | 5.21E-07 | 5.21E-07 | 0.00E+00 |
| 822-06-0 | Hexamethylene-1,5-diisocyanate | 1.75E-05 | 0.00E+00 | 3.09E-05 | 3.91E-06 | 3.91E-06 | 0.00E+00 |
| 823-40-5 | Toluene-2,6-diamine | 1.75E-05 | 0.00E+00 | 3.09E-05 | 3.91E-06 | 3.91E-06 | 0.00E+00 |
| 85-44-9 | Phthalic anhydride | 1.75E-05 | 0.00E+00 | 3.09E-05 | 3.91E-06 | 3.91E-06 | 0.00E+00 |
| 87-61-6 | 1,2,3-Trichlorobenzene | 2.33E-06 | 0.00E+00 | 4.12E-06 | 5.21E-07 | 5.21E-07 | 0.00E+00 |
| 88-74-4 | o-Nitroaniline (2-Nitroaniline) | 1.75E-05 | 0.00E+00 | 3.09E-05 | 3.91E-06 | 3.91E-06 | 0.00E+00 |
| 90-04-0 | o-Anisidine | 1.75E-05 | 0.00E+00 | 3.09E-05 | 3.91E-06 | 3.91E-06 | 0.00E+00 |
| 91-57-6 | 2-Methylnaphthalene | 3.50E-06 | 0.00E+00 | 6.19E-06 | 7.81E-07 | 7.81E-07 | 0.00E+00 |
| 91-94-1 | 3,3'-Dichlorobenzidine | 1.75E-05 | 0.00E+00 | 3.09E-05 | 3.91E-06 | 3.91E-06 | 0.00E+00 |
| 924-16-3 | N-Nitrosodi-n-butylamine | 2.33E-06 | 0.00E+00 | 4.12E-06 | 5.21E-07 | 5.21E-07 | 0.00E+00 |
| 94-59-7 | Safrole | 1.75E-05 | 0.00E+00 | 3.09E-05 | 3.91E-06 | 3.91E-06 | 0.00E+00 |
| 95-53-4 | o-Toluidine | 2.33E-06 | 0.00E+00 | 4.12E-06 | 5.21E-07 | 5.21E-07 | 0.00E+00 |
| 95-63-6 | 1,2,4-Trimethyl benzene | 2.33E-06 | 0.00E+00 | 4.12E-06 | 5.21E-07 | 5.21E-07 | 0.00E+00 |
| 95-94-3 | 1,2,4,5-Tetrachlorobenzene | 1.75E-05 | 0.00E+00 | 3.09E-05 | 3.91E-06 | 3.91E-06 | 0.00E+00 |
| 96-12-8 | 1,2-Dibromo-3-chloropropane | 1.75E-05 | 0.00E+00 | 3.09E-05 | 3.91E-06 | 3.91E-06 | 0.00E+00 |
| 96-18-4 | 1,2,3-Trichloropropane | 2.33E-06 | 0.00E+00 | 4.12E-06 | 5.21E-07 | 5.21E-07 | 0.00E+00 |
| 96-45-7 | Ethylene thiourea | 1.75E-05 | 0.00E+00 | 3.09E-05 | 3.91E-06 | 3.91E-06 | 0.00E+00 |
| 97-63-2 | Ethyl methacrylate | 2.33E-06 | 0.00E+00 | 4.12E-06 | 5.21E-07 | 5.21E-07 | 0.00E+00 |
| 98-01-1 | Furfural | 1.75E-05 | 0.00E+00 | 3.09E-05 | 3.91E-06 | 3.91E-06 | 0.00E+00 |
| 98-06-6 | tert-Butyl benzene | 2.33E-06 | 0.00E+00 | 4.12E-06 | 5.21E-07 | 5.21E-07 | 0.00E+00 |
| 98-07-7 | Benzotrichloride | 1.75E-05 | 0.00E+00 | 3.09E-05 | 3.91E-06 | 3.91E-06 | 0.00E+00 |
| 99-35-4 | 1,3,5-Trinitrobenzene | 1.75E-05 | 0.00E+00 | 3.09E-05 | 3.91E-06 | 3.91E-06 | 0.00E+00 |
| 99-65-0 | 1,3-Dinitrobenzene | 1.75E-05 | 0.00E+00 | 3.09E-05 | 3.91E-06 | 3.91E-06 | 0.00E+00 |
| 99-87-6 | p-Cymene | 2.33E-06 | 0.00E+00 | 4.12E-06 | 5.21E-07 | 5.21E-07 | 0.00E+00 |
| No CAS # | Dibenzo(a,h)fluoranthene | 3.50E-06 | 0.00E+00 | 6.19E-06 | 7.81E-07 | 7.81E-07 | 0.00E+00 |

## Estimated Process Facility Organic Abated Emissions

| (CAS) | Component | PT-S3 g/sec | PT-S4 g/sec | LV-S3 g/sec | HV-S3a g/sec | HV-S3b g/sec | HV-S4 g/sec |
|---|---|---|---|---|---|---|---|
| **Coplanar PCBs** | | | | | | | |
| 31508-00-6 | 2,3',4,4',5-Pentachlorobiphenyl (PBC 118) | 1.90E-15 | 9.56E-16 | 2.22E-23 | 1.95E-17 | 1.95E-17 | 4.10E-22 |
| 32598-13-3 | 3,3',4,4'-Tetrachlorobiphenyl (TCB) | 1.90E-15 | 9.56E-16 | 2.22E-23 | 1.95E-17 | 1.95E-17 | 4.10E-22 |
| 32598-14-4 | 2,3,3',4,4'-Pentachlorobiphenyl (PCB 105) | 1.90E-15 | 9.56E-16 | 2.22E-23 | 1.95E-17 | 1.95E-17 | 4.10E-22 |
| 32774-16-6 | 3,3',4,4',5,5'-Hexachlorobiphenyl | 1.90E-15 | 9.56E-16 | 2.22E-23 | 1.95E-17 | 1.95E-17 | 4.10E-22 |
| 35065-29-3 | 2,2',3,4,4',5,5'-Heptachlorobiphenyl | 1.90E-15 | 9.56E-16 | 2.22E-23 | 1.95E-17 | 1.95E-17 | 4.10E-22 |
| 35065-30-6 | 2,2',3,3',4,4',5-Heptachlorobiphenyl | 1.90E-15 | 9.56E-16 | 2.22E-23 | 1.95E-17 | 1.95E-17 | 4.10E-22 |
| 38380-08-4 | 2,3,3',4,4',5-Hexachlorobiphenyl (PCB 157) | 1.90E-15 | 9.56E-16 | 2.22E-23 | 1.95E-17 | 1.95E-17 | 4.10E-22 |
| 39635-31-9 | 2,3,3',4,4',5,5'-Heptachlorobiphenyl | 1.90E-15 | 9.56E-16 | 2.22E-23 | 1.95E-17 | 1.95E-17 | 4.10E-22 |
| 52663-72-6 | 2,3',4,4',5,5'-Hexachlorobiphenyl | 1.90E-15 | 9.56E-16 | 2.22E-23 | 1.95E-17 | 1.95E-17 | 4.10E-22 |
| 57465-28-8 | 3,3',4,4',5-Pentachlorobiphenyl | 1.90E-15 | 9.56E-16 | 2.22E-23 | 1.95E-17 | 1.95E-17 | 4.10E-22 |
| 65510-44-3 | 2',3,4,4',5-Pentachlorobiphenyl | 1.90E-15 | 9.56E-16 | 2.22E-23 | 1.95E-17 | 1.95E-17 | 4.10E-22 |
| 69782-90-7 | 2,3,3',4,4',5'-Hexachlorobiphenyl | 1.90E-15 | 9.56E-16 | 2.22E-23 | 1.95E-17 | 1.95E-17 | 4.10E-22 |
| 70362-50-4 | 3,4,4',5-Tetrachlorobiphenyl | 1.90E-15 | 9.56E-16 | 2.22E-23 | 1.95E-17 | 1.95E-17 | 4.10E-22 |
| 74472-37-0 | 2,3,4,4',5-Pentachlorobiphenyl | 1.90E-15 | 9.56E-16 | 2.22E-23 | 1.95E-17 | 1.95E-17 | 4.10E-22 |

**Estimated Organic Concentration at Point of Maximum Impact for Pretreatment**

| | PT-S3 Vapor/Particle/Particle-Bound | PT-S4 Vapor/Particle/Particle-Bound | |
|---|---|---|---|
| Average Annual Concentration | 0.07839 | 0.07451 | $\mu g/m^3$ per g/s |
| Maximum 24-Hour Concentration | 0.56649 | 0.52364 | $\mu g/m^3$ per g/s |

| CAS Number | Compound | PT-S3 (g/s) | PT-S3 Annual Average Concentration ($\mu g/m^3$) | PT-S3 Maximum 24 hr Concentration (ug/m3) | PT-S4 (gm/sec) | PT-S4 Annual Average Concentration (ug/m3) | PT-S4 Maximum 24 hr Concentration (ug/m3) | Total PT Annual Average Concentration (ug/m3) | Total Pretreat Maximum 24 hr Concentration (ug/m3) |
|---|---|---|---|---|---|---|---|---|---|
| 100-00-5 | p-Nitrochlorobenzene | 4.65E-08 | 3.64E-09 | 2.63E-08 | 1.42E-06 | 1.06E-07 | 7.45E-07 | 1.10E-07 | 7.72E-07 |
| 100-21-0 | p-Phthalic acid | 3.05E-11 | 2.39E-12 | 1.73E-11 | 2.90E-06 | 2.16E-07 | 1.52E-06 | 2.16E-07 | 1.52E-06 |
| 100-25-4 | 1,4-Dinitrobenzene | 3.25E-18 | 2.55E-19 | 1.84E-18 | 2.82E-12 | 2.10E-13 | 1.48E-12 | 2.10E-13 | 1.48E-12 |
| 100-41-4 | Ethyl benzene | 7.69E-07 | 6.03E-08 | 4.36E-07 | 7.78E-08 | 5.80E-09 | 4.08E-08 | 6.61E-08 | 4.76E-07 |
| 100-42-5 | Styrene | 7.70E-07 | 6.04E-08 | 4.36E-07 | 7.92E-08 | 5.90E-09 | 4.15E-08 | 6.63E-08 | 4.78E-07 |
| 10061-01-5 | cis-1,3-Dichloropropene | 7.72E-05 | 6.05E-06 | 4.37E-05 | 8.06E-08 | 6.00E-09 | 4.22E-08 | 6.05E-06 | 4.38E-05 |
| 10061-02-6 | trans-1,3-Dichloropropene | 1.53E-04 | 1.20E-05 | 8.68E-05 | 8.33E-08 | 6.21E-09 | 4.36E-08 | 1.20E-05 | 8.69E-05 |
| 101-55-3 | 4-Bromophenylphenyl ether | 1.45E-04 | 1.13E-05 | 8.20E-05 | 6.48E-07 | 4.83E-08 | 3.39E-07 | 1.14E-05 | 8.23E-05 |
| 101-84-8 | Diphenyl ether | 2.87E-05 | 2.25E-06 | 1.63E-05 | 9.69E-08 | 7.22E-09 | 5.07E-08 | 2.26E-06 | 1.63E-05 |
| 106-35-4 | 3-Heptanone | 5.31E-07 | 4.16E-08 | 3.01E-07 | 1.43E-07 | 1.06E-08 | 7.47E-08 | 5.22E-08 | 3.75E-07 |
| 106-42-3 | p-Xylene (Dimethyl benzene) | 7.70E-06 | 6.04E-07 | 4.36E-06 | 7.92E-08 | 5.90E-09 | 4.15E-08 | 6.10E-07 | 4.40E-06 |
| 106-46-7 | 1,4-Dichlorobenzene | 7.86E-05 | 6.16E-06 | 4.45E-05 | 8.43E-08 | 6.28E-09 | 4.41E-08 | 6.17E-06 | 4.46E-05 |
| 106-88-7 | 1,2-Epoxybutane | 6.54E-07 | 5.13E-08 | 3.70E-07 | 1.17E-07 | 8.70E-09 | 6.11E-08 | 5.99E-08 | 4.31E-07 |
| 106-93-4 | Ethylene dibromide (Dibromethane) | 3.41E-03 | 2.67E-04 | 1.93E-03 | 4.10E-07 | 3.05E-08 | 2.15E-07 | 2.67E-04 | 1.93E-03 |
| 106-97-8 | Butane | 7.71E-07 | 6.04E-08 | 4.37E-07 | 7.71E-08 | 5.74E-09 | 4.04E-08 | 6.62E-08 | 4.77E-07 |
| 106-99-0 | 1,3-Butadiene | 7.71E-07 | 6.04E-08 | 4.37E-07 | 7.72E-08 | 5.75E-09 | 4.04E-08 | 6.62E-08 | 4.77E-07 |
| 107-02-8 | Acrolein | 5.31E-07 | 4.16E-08 | 3.01E-07 | 1.43E-07 | 1.06E-08 | 7.47E-08 | 5.22E-08 | 3.75E-07 |
| 107-05-1 | 3-Chloropropene (Allyl chloride) | 7.69E-07 | 6.03E-08 | 4.36E-07 | 7.78E-08 | 5.80E-09 | 4.08E-08 | 6.61E-08 | 4.76E-07 |
| 107-06-2 | 1,2-Dichloroethane (Ethylene chloride) | 7.66E-07 | 6.01E-08 | 4.34E-07 | 8.33E-08 | 6.21E-09 | 4.36E-08 | 6.63E-08 | 4.78E-07 |
| 107-12-0 | Propionitrile | 3.05E-07 | 2.39E-08 | 1.73E-07 | 1.86E-07 | 1.39E-08 | 9.76E-08 | 3.78E-08 | 2.70E-07 |
| 107-13-1 | Acrylonitrile | 5.31E-07 | 4.16E-08 | 3.01E-07 | 1.43E-07 | 1.06E-08 | 7.47E-08 | 5.22E-08 | 3.75E-07 |
| 107-18-6 | 2-Propene-1-ol | 2.32E-07 | 1.82E-08 | 1.32E-07 | 1.42E-06 | 1.06E-07 | 7.45E-07 | 1.24E-07 | 8.77E-07 |
| 107-31-3 | Formic acid, methyl ester | 2.97E-06 | 2.33E-07 | 1.68E-06 | 5.30E-07 | 3.95E-08 | 2.78E-07 | 2.72E-07 | 1.96E-06 |
| 107-66-4 | Dibutylphosphate | 7.54E-18 | 5.91E-19 | 4.27E-18 | 2.88E-12 | 2.14E-13 | 1.51E-12 | 2.14E-13 | 1.51E-12 |
| 107-87-9 | 2-Pentanone | 5.31E-07 | 4.16E-08 | 3.01E-07 | 1.43E-07 | 1.06E-08 | 7.47E-08 | 5.22E-08 | 3.75E-07 |
| 108-03-2 | 1-Nitropropane | 2.41E-06 | 1.89E-07 | 1.37E-06 | 6.48E-07 | 4.83E-08 | 3.39E-07 | 2.37E-07 | 1.71E-06 |
| 108-05-4 | Vinyl acetate | 3.27E-06 | 2.56E-07 | 1.85E-06 | 4.40E-07 | 3.28E-08 | 2.31E-07 | 2.89E-07 | 2.08E-06 |
| 108-10-1 | Hexone (4-Methyl-2-pentanone or MIBK) | 5.31E-07 | 4.16E-08 | 3.01E-07 | 1.43E-07 | 1.06E-08 | 7.47E-08 | 5.22E-08 | 3.75E-07 |
| 108-20-3 | Bis(isopropyl)ether | 7.86E-07 | 6.16E-08 | 4.45E-07 | 8.43E-08 | 6.28E-09 | 4.41E-08 | 6.79E-08 | 4.89E-07 |

**Estimated Organic Concentration at Point of Maximum Impact for Pretreatment**

| | PT-S3 Vapor/Particle/Particle-Bound | PT-S4 Vapor/Particle/Particle-Bound | |
|---|---|---|---|
| Average Annual Concentration | 0.07839 | 0.07451 | $\mu g/m^3$ per g/s |
| Maximum 24-Hour Concentration | 0.56649 | 0.52364 | $\mu g/m^3$ per g/s |

| CAS Number | Compound | PT-S3 (g/s) | PT-S3 Annual Average Concentration ($\mu g/m^3$) | PT-S3 Maximum 24 hr Concentration (ug/m3) | PT-S4 (gm/sec) | PT-S4 Annual Average Concentration (ug/m3) | PT-S4 Maximum 24 hr Concentration (ug/m3) | Total PT Annual Average Concentration (ug/m3) | Total Pretreat Maximum 24 hr Concentration (ug/m3) |
|---|---|---|---|---|---|---|---|---|---|
| 108-38-3 | m-Xylene (Dimethyl benzene) | 7.70E-06 | 6.04E-07 | 4.36E-06 | 7.92E-08 | 5.90E-09 | 4.15E-08 | 6.10E-07 | 4.40E-06 |
| 108-39-4 | m-Cresol | 1.04E-07 | 8.18E-09 | 5.91E-08 | 3.20E-07 | 2.38E-08 | 1.67E-07 | 3.20E-08 | 2.26E-07 |
| 108-87-2 | Methylcyclohexane | 7.68E-07 | 6.02E-08 | 4.35E-07 | 7.69E-08 | 5.73E-09 | 4.02E-08 | 6.60E-08 | 4.75E-07 |
| 108-88-3 | Toluene | 7.70E-07 | 6.04E-08 | 4.36E-07 | 7.84E-08 | 5.84E-09 | 4.11E-08 | 6.62E-08 | 4.77E-07 |
| 108-90-7 | Chlorobenzene | 7.70E-05 | 6.04E-06 | 4.36E-05 | 7.92E-08 | 5.90E-09 | 4.15E-08 | 6.04E-06 | 4.37E-05 |
| 108-93-0 | Cyclohexanol | 2.56E-08 | 2.00E-09 | 1.45E-08 | 3.13E-07 | 2.33E-08 | 1.64E-07 | 2.53E-08 | 1.78E-07 |
| 108-94-1 | Cyclohexanone | 4.32E-08 | 3.38E-09 | 2.45E-08 | 2.39E-07 | 1.78E-08 | 1.25E-07 | 2.12E-08 | 1.50E-07 |
| 108-95-2 | Phenol | 1.21E-06 | 9.46E-08 | 6.84E-07 | 2.21E-06 | 1.65E-07 | 1.16E-06 | 2.59E-07 | 1.84E-06 |
| 109-66-0 | n-Pentane | 7.71E-07 | 6.04E-08 | 4.37E-07 | 7.71E-08 | 5.74E-09 | 4.04E-08 | 6.62E-08 | 4.77E-07 |
| 109-99-9 | Tetrahydrofuran | 6.47E-07 | 5.07E-08 | 3.67E-07 | 3.95E-07 | 2.95E-08 | 2.07E-07 | 8.02E-08 | 5.74E-07 |
| 110-12-3 | 5-Methyl-2-hexanone | 6.54E-07 | 5.13E-08 | 3.70E-07 | 1.17E-07 | 8.70E-09 | 6.11E-08 | 5.99E-08 | 4.31E-07 |
| 110-43-0 | 2-Heptanone | 6.54E-07 | 5.13E-08 | 3.70E-07 | 1.17E-07 | 8.70E-09 | 6.11E-08 | 5.99E-08 | 4.31E-07 |
| 110-54-3 | n-Hexane | 7.70E-07 | 6.04E-08 | 4.36E-07 | 7.70E-08 | 5.74E-09 | 4.03E-08 | 6.61E-08 | 4.77E-07 |
| 110-62-3 | n-Valeraldehyde | 2.97E-06 | 2.33E-07 | 1.68E-06 | 5.30E-07 | 3.95E-08 | 2.78E-07 | 2.72E-07 | 1.96E-06 |
| 110-82-7 | Cyclohexane | 7.69E-07 | 6.03E-08 | 4.36E-07 | 7.70E-08 | 5.74E-09 | 4.03E-08 | 6.61E-08 | 4.76E-07 |
| 110-83-8 | Cyclohexene | 7.73E-07 | 6.06E-08 | 4.38E-07 | 7.76E-08 | 5.78E-09 | 4.07E-08 | 6.64E-08 | 4.79E-07 |
| 110-86-1 | Pyridine | 3.92E-07 | 3.08E-08 | 2.22E-07 | 1.09E-06 | 8.10E-08 | 5.69E-07 | 1.12E-07 | 7.92E-07 |
| 111-65-9 | n-Octane | 7.71E-07 | 6.05E-08 | 4.37E-07 | 7.71E-08 | 5.75E-09 | 4.04E-08 | 6.62E-08 | 4.77E-07 |
| 111-76-2 | Ethylene glycol monobutyl ether | 4.74E-08 | 3.72E-09 | 2.69E-08 | 1.45E-06 | 1.08E-07 | 7.61E-07 | 1.12E-07 | 7.88E-07 |
| 111-84-2 | n-Nonane | 3.86E-07 | 3.02E-08 | 2.18E-07 | 7.71E-08 | 5.75E-09 | 4.04E-08 | 3.60E-08 | 2.59E-07 |
| 117-81-7 | Bis(2-ethylhexyl)phthalate (DEHP) | 5.57E-17 | 4.36E-18 | 3.15E-17 | 2.78E-12 | 2.07E-13 | 1.45E-12 | 2.07E-13 | 1.45E-12 |
| 117-84-0 | n-Dioctyl phthalate | 3.81E-16 | 2.99E-17 | 2.16E-16 | 1.42E-12 | 1.06E-13 | 7.43E-13 | 1.06E-13 | 7.43E-13 |
| 118-74-1 | Hexachlorobenzene | 4.43E-06 | 3.47E-07 | 2.51E-06 | 7.92E-09 | 5.90E-10 | 4.15E-09 | 3.48E-07 | 2.51E-06 |
| 120-12-7 | Anthracene | 3.25E-06 | 2.55E-07 | 1.84E-06 | 8.01E-07 | 5.96E-08 | 4.19E-07 | 3.14E-07 | 2.26E-06 |
| 120-82-1 | 1,2,4-Trichlorobenzene | 1.53E-05 | 1.20E-06 | 8.68E-06 | 8.33E-08 | 6.21E-09 | 4.36E-08 | 1.21E-06 | 8.73E-06 |
| 120-83-2 | 2,4-Dichlorophenol | 1.39E-05 | 1.09E-06 | 7.90E-06 | 1.42E-06 | 1.06E-07 | 7.45E-07 | 1.20E-06 | 8.64E-06 |
| 121-44-8 | Triethylamine | 6.54E-07 | 5.13E-08 | 3.70E-07 | 1.17E-07 | 8.70E-09 | 6.11E-08 | 5.99E-08 | 4.31E-07 |
| 121-69-7 | Dimethylaniline | 1.53E-07 | 1.20E-08 | 8.64E-08 | 1.86E-07 | 1.39E-08 | 9.76E-08 | 2.58E-08 | 1.84E-07 |
| 122-39-4 | N,N-Diphenylamine | 1.41E-06 | 1.10E-07 | 7.96E-07 | 2.82E-07 | 2.10E-08 | 1.47E-07 | 1.31E-07 | 9.44E-07 |
| 123-19-3 | 4-Heptanone | 3.05E-07 | 2.39E-08 | 1.73E-07 | 1.86E-07 | 1.39E-08 | 9.76E-08 | 3.78E-08 | 2.70E-07 |
| 123-38-6 | n-Propionaldehyde | 5.31E-07 | 4.16E-08 | 3.01E-07 | 1.43E-07 | 1.06E-08 | 7.47E-08 | 5.22E-08 | 3.75E-07 |
| 123-51-3 | 3-Methyl-1-butanol | 1.08E-07 | 8.45E-09 | 6.11E-08 | 2.31E-07 | 1.72E-08 | 1.21E-07 | 2.56E-08 | 1.82E-07 |

**Estimated Organic Concentration at Point of Maximum Impact for Pretreatment**

| | PT-S3 Vapor/Particle/Particle-Bound | PT-S4 Vapor/Particle/Particle-Bound | |
|---|---|---|---|
| Average Annual Concentration | 0.07839 | 0.07451 | $\mu g/m^3$ per g/s |
| *Maximum 24-Hour Concentration* | 0.56649 | 0.52364 | $\mu g/m^3$ per g/s |

| CAS Number | Compound | PT-S3 (g/s) | PT-S3 Annual Average Concentration ($\mu g/m^3$) | PT-S3 Maximum 24 hr Concentration (ug/m3) | PT-S4 (gm/sec) | PT-S4 Annual Average Concentration (ug/m3) | PT-S4 Maximum 24 hr Concentration (ug/m3) | Total PT Annual Average Concentration (ug/m3) | Total Pretreat Maximum 24 hr Concentration (ug/m3) |
|---|---|---|---|---|---|---|---|---|---|
| 123-86-4 | Acetic acid n-butyl ester | 3.27E-06 | 2.56E-07 | 1.85E-06 | 4.40E-07 | 3.28E-08 | 2.31E-07 | 2.89E-07 | 2.08E-06 |
| 123-91-1 | 1,4-Dioxane | 1.39E-07 | 1.09E-08 | 7.90E-08 | 8.54E-07 | 6.36E-08 | 4.47E-07 | 7.46E-08 | 5.26E-07 |
| 126-73-8 | Tributyl phosphate | 2.41E-09 | 1.89E-10 | 1.36E-09 | 2.52E-06 | 1.88E-07 | 1.32E-06 | 1.88E-07 | 1.32E-06 |
| 126-98-7 | 2-Methyl-2-propenenitrile (Methacrylonitrile) | 7.19E-07 | 5.63E-08 | 4.07E-07 | 9.69E-08 | 7.22E-09 | 5.07E-08 | 6.35E-08 | 4.58E-07 |
| 127-18-4 | Perchloroethylene (tetrachloroethylene) | 7.72E-04 | 6.05E-05 | 4.37E-04 | 7.77E-08 | 5.79E-09 | 4.07E-08 | 6.05E-05 | 4.37E-04 |
| 127-19-5 | N,N-Dimethylacetamide | 1.09E-10 | 8.58E-12 | 6.20E-11 | 6.33E-07 | 4.72E-08 | 3.32E-07 | 4.72E-08 | 3.32E-07 |
| 128-37-0 | 2,6-Bis(tert-butyl)-4-methylphenol | 5.03E-08 | 3.94E-09 | 2.85E-08 | 1.42E-06 | 1.06E-07 | 7.43E-07 | 1.10E-07 | 7.71E-07 |
| 129-00-0 | Pyrene | 2.42E-13 | 1.90E-14 | 1.37E-13 | 1.41E-12 | 1.05E-13 | 7.37E-13 | 1.24E-13 | 8.74E-13 |
| 1321-64-8 | Pentachloronaphthalene | 1.10E-12 | 8.60E-14 | 6.21E-13 | 6.48E-13 | 4.83E-14 | 3.39E-13 | 1.34E-13 | 9.60E-13 |
| 1321-65-9 | Trichloronaphthalene | 1.78E-04 | 1.40E-05 | 1.01E-04 | 5.30E-07 | 3.95E-08 | 2.78E-07 | 1.40E-05 | 1.01E-04 |
| 132-64-9 | Dibenzofuran | 1.78E-04 | 1.40E-05 | 1.01E-04 | 5.30E-07 | 3.95E-08 | 2.78E-07 | 1.40E-05 | 1.01E-04 |
| 1335-87-1 | Hexachloronaphthalene | 1.10E-12 | 8.60E-14 | 6.21E-13 | 6.48E-13 | 4.83E-14 | 3.39E-13 | 1.34E-13 | 9.60E-13 |
| 1335-88-2 | Tetrachloronaphthalene | 1.35E-12 | 1.06E-13 | 7.65E-13 | 5.30E-13 | 3.95E-14 | 2.78E-13 | 1.45E-13 | 1.04E-12 |
| 1336-36-3 | Polychlorinated biphenyls (PCBs) | 2.63E-12 | 2.06E-13 | 1.49E-12 | 1.32E-12 | 9.87E-14 | 6.94E-13 | 3.05E-13 | 2.18E-12 |
| 141-78-6 | Acetic acid ethyl ester (Ethyl acetate) | 2.41E-06 | 1.89E-07 | 1.37E-06 | 6.48E-07 | 4.83E-08 | 3.39E-07 | 2.37E-07 | 1.71E-06 |
| 141-79-7 | 4-Methyl-3-penten-2-one | 1.39E-06 | 1.09E-07 | 7.86E-07 | 8.47E-07 | 6.31E-08 | 4.44E-07 | 1.72E-07 | 1.23E-06 |
| 142-82-5 | n-Heptane | 7.70E-07 | 6.04E-08 | 4.36E-07 | 7.70E-08 | 5.74E-09 | 4.03E-08 | 6.61E-08 | 4.77E-07 |
| 144-62-7 | Oxalic acid | 7.91E-11 | 6.20E-12 | 4.48E-11 | 2.90E-07 | 2.16E-08 | 1.52E-07 | 2.16E-08 | 1.52E-07 |
| 156-60-5 | trans-1,2-Dichloroethylene | 7.69E-07 | 6.03E-08 | 4.36E-07 | 7.78E-08 | 5.80E-09 | 4.08E-08 | 6.61E-08 | 4.76E-07 |
| 1582-09-8 | Trifluralin | 1.83E-14 | 1.43E-15 | 1.04E-14 | 6.48E-13 | 4.83E-14 | 3.39E-13 | 4.97E-14 | 3.50E-13 |
| 1634-04-4 | Methyl tert-butyl ether | 7.19E-07 | 5.63E-08 | 4.07E-07 | 9.69E-08 | 7.22E-09 | 5.07E-08 | 6.35E-08 | 4.58E-07 |
| 1836-75-5 | Nitrofen | 1.67E-14 | 1.31E-15 | 9.46E-15 | 2.78E-12 | 2.07E-13 | 1.45E-12 | 2.08E-13 | 1.46E-12 |
| 189-55-9 | Dibenzo[a,i]pyrene | 4.52E-16 | 3.54E-17 | 2.56E-16 | 2.88E-12 | 2.14E-13 | 1.51E-12 | 2.14E-13 | 1.51E-12 |
| 189-64-0 | Dibenzo[a,h]pyrene | 4.52E-16 | 3.54E-17 | 2.56E-16 | 2.88E-12 | 2.14E-13 | 1.51E-12 | 2.14E-13 | 1.51E-12 |
| 191-24-2 | Benzo(g,h,i)perylene | 1.67E-14 | 1.31E-15 | 9.46E-15 | 2.78E-12 | 2.07E-13 | 1.45E-12 | 2.08E-13 | 1.46E-12 |
| 191-30-0 | Benzo[a,i]pyrene | 4.52E-16 | 3.54E-17 | 2.56E-16 | 2.88E-12 | 2.14E-13 | 1.51E-12 | 2.14E-13 | 1.51E-12 |
| 192-65-4 | Dibenzo[a,e]pyrene | 4.52E-16 | 3.54E-17 | 2.56E-16 | 2.88E-12 | 2.14E-13 | 1.51E-12 | 2.14E-13 | 1.51E-12 |
| 193-39-5 | Indeno(1,2,3-cd)pyrene | 1.67E-14 | 1.31E-15 | 9.46E-15 | 2.78E-12 | 2.07E-13 | 1.45E-12 | 2.08E-13 | 1.46E-12 |
| 205-82-3 | Benzo(j)fluoranthene | 5.47E-15 | 4.29E-16 | 3.10E-15 | 2.52E-12 | 1.88E-13 | 1.32E-12 | 1.88E-13 | 1.32E-12 |
| 205-99-2 | Benzo(b)fluoranthene | 1.67E-14 | 1.31E-15 | 9.46E-15 | 2.78E-12 | 2.07E-13 | 1.45E-12 | 2.08E-13 | 1.46E-12 |

**Estimated Organic Concentration at Point of Maximum Impact for Pretreatment**

| | PT-S3 Vapor/Particle/Particle-Bound | PT-S4 Vapor/Particle/Particle-Bound | |
|---|---|---|---|
| Average Annual Concentration | 0.07839 | 0.07451 | µg/m³ per g/s |
| Maximum 24-Hour Concentration | 0.56649 | 0.52364 | µg/m³ per g/s |

| CAS Number | Compound | PT-S3 (g/s) | PT-S3 Annual Average Concentration (µg/m³) | PT-S3 Maximum 24 hr Concentration (ug/m3) | PT-S4 (gm/sec) | PT-S4 Annual Average Concentration (ug/m3) | PT-S4 Maximum 24 hr Concentration (ug/m3) | Total PT Annual Average Concentration (ug/m3) | Total Pretreat Maximum 24 hr Concentration (ug/m3) |
|---|---|---|---|---|---|---|---|---|---|
| 206-44-0 | Fluoranthene | 2.29E-13 | 1.80E-14 | 1.30E-13 | 1.45E-12 | 1.08E-13 | 7.60E-13 | 1.26E-13 | 8.89E-13 |
| 207-08-9 | Benzo(k)fluoranthene | 1.67E-14 | 1.31E-15 | 9.46E-15 | 2.78E-12 | 2.07E-13 | 1.45E-12 | 2.08E-13 | 1.46E-12 |
| 208-96-8 | Acenaphthylene | 1.45E-04 | 1.13E-05 | 8.20E-05 | 6.48E-07 | 4.83E-08 | 3.39E-07 | 1.14E-05 | 8.23E-05 |
| 218-01-9 | Chrysene | 1.16E-13 | 9.09E-15 | 6.57E-14 | 1.51E-12 | 1.13E-13 | 7.91E-13 | 1.22E-13 | 8.57E-13 |
| 2234-13-1 | Octachloronaphthalene | 1.10E-12 | 8.60E-14 | 6.21E-13 | 6.48E-13 | 4.83E-14 | 3.39E-13 | 1.34E-13 | 9.60E-13 |
| 224-42-0 | Dibenz[a,j]acridine | 5.78E-17 | 4.53E-18 | 3.27E-17 | 2.89E-12 | 2.15E-13 | 1.51E-12 | 2.15E-13 | 1.51E-12 |
| 226-36-8 | Dibenz[a,h]acridine | 5.78E-17 | 4.53E-18 | 3.27E-17 | 2.89E-12 | 2.15E-13 | 1.51E-12 | 2.15E-13 | 1.51E-12 |
| 2385-85-5 | Mirex | 2.09E-04 | 1.64E-05 | 1.18E-04 | 3.79E-07 | 2.82E-08 | 1.98E-07 | 1.64E-05 | 1.19E-04 |
| 25551-13-7 | Trimethyl benzene | 3.85E-06 | 3.02E-07 | 2.18E-06 | 7.92E-08 | 5.90E-09 | 4.15E-08 | 3.08E-07 | 2.22E-06 |
| 26140-60-3 | Terphenyls | 7.73E-13 | 6.06E-14 | 4.38E-13 | 1.39E-12 | 1.04E-13 | 7.29E-13 | 1.64E-13 | 1.17E-12 |
| 27154-33-2 | Trichlorofluoroethane | 7.71E-04 | 6.04E-05 | 4.37E-04 | 7.72E-08 | 5.75E-09 | 4.04E-08 | 6.04E-05 | 4.37E-04 |
| 287-92-3 | Cyclopentane | 7.69E-07 | 6.03E-08 | 4.36E-07 | 7.70E-08 | 5.74E-09 | 4.03E-08 | 6.61E-08 | 4.76E-07 |
| 309-00-2 | Aldrin | 4.77E-14 | 3.74E-15 | 2.70E-14 | 1.72E-14 | 1.28E-15 | 8.99E-15 | 5.02E-15 | 3.60E-14 |
| 319-84-6 | Hexachlorocyclohexane (Lindane) Alpha BHC | 1.01E-07 | 7.90E-09 | 5.71E-08 | 4.83E-09 | 3.60E-10 | 2.53E-09 | 8.26E-09 | 5.97E-08 |
| 319-85-7 | Hexachlorocyclohexane (Lindane) Beta BHC | 5.55E-17 | 4.35E-18 | 3.14E-17 | 9.38E-15 | 6.99E-16 | 4.91E-15 | 7.04E-16 | 4.95E-15 |
| 319-86-8 | Delta-BHC | 5.57E-17 | 4.36E-18 | 3.15E-17 | 9.25E-15 | 6.90E-16 | 4.85E-15 | 6.94E-16 | 4.88E-15 |
| 3697-24-3 | 5-Methylchrysene | 1.14E-13 | 8.96E-15 | 6.48E-14 | 1.42E-12 | 1.06E-13 | 7.43E-13 | 1.15E-13 | 8.07E-13 |
| 3825-26-1 | Ammonium perfluorooctanoate | 1.10E-12 | 8.60E-14 | 6.21E-13 | 6.48E-13 | 4.83E-14 | 3.39E-13 | 1.34E-13 | 9.60E-13 |
| 4170-30-3 | 2-Butenaldehyde (2-Butenal or Crotonaldehyde) | 8.70E-08 | 6.82E-09 | 4.93E-08 | 2.39E-07 | 1.78E-08 | 1.25E-07 | 2.47E-08 | 1.75E-07 |
| 465-73-6 | Isodrin | 6.74E-06 | 5.28E-07 | 3.82E-06 | 2.57E-08 | 1.91E-09 | 1.35E-08 | 5.30E-07 | 3.83E-06 |
| 50-00-0 | Formaldehyde | 7.67E-09 | 6.01E-10 | 4.35E-09 | 5.38E-07 | 4.01E-08 | 2.82E-07 | 4.07E-08 | 2.86E-07 |
| 50-29-3 | 4,4-DDT | 1.53E-15 | 1.20E-16 | 8.65E-16 | 9.67E-15 | 7.20E-16 | 5.06E-15 | 8.40E-16 | 5.93E-15 |
| 50-32-8 | Benzo(a)pyrene | 2.12E-16 | 1.66E-17 | 1.20E-16 | 3.47E-14 | 2.58E-15 | 1.82E-14 | 2.60E-15 | 1.83E-14 |
| 53-70-3 | Dibenzo(a,h)anthracene | 9.12E-18 | 7.15E-19 | 5.17E-18 | 4.19E-15 | 3.13E-16 | 2.20E-15 | 3.13E-16 | 2.20E-15 |
| 540-59-0 | 1,2-Dichloroethylene | 7.70E-07 | 6.04E-08 | 4.36E-07 | 7.92E-08 | 5.90E-09 | 4.15E-08 | 6.63E-08 | 4.78E-07 |
| 540-84-1 | 2,2,4-Trimethylpentane | 7.71E-07 | 6.05E-08 | 4.37E-07 | 7.71E-08 | 5.75E-09 | 4.04E-08 | 6.62E-08 | 4.77E-07 |
| 541-73-1 | 1,3-Dichlorobenzene | 7.70E-05 | 6.04E-06 | 4.36E-05 | 7.92E-08 | 5.90E-09 | 4.15E-08 | 6.04E-06 | 4.37E-05 |
| 56-23-5 | Carbon tetrachloride | 1.55E-03 | 1.21E-04 | 8.76E-04 | 7.76E-08 | 5.78E-09 | 4.07E-08 | 1.21E-04 | 8.76E-04 |
| 563-80-4 | 3-Methyl-2-butanone | 5.31E-07 | 4.16E-08 | 3.01E-07 | 1.43E-07 | 1.06E-08 | 7.47E-08 | 5.22E-08 | 3.75E-07 |
| 56-49-5 | 3-Methylcholanthrene | 1.59E-12 | 1.25E-13 | 9.03E-13 | 3.51E-13 | 2.61E-14 | 1.84E-13 | 1.51E-13 | 1.09E-12 |
| 56-55-3 | Benzo(a)anthracene | 2.29E-13 | 1.80E-14 | 1.30E-13 | 1.45E-12 | 1.08E-13 | 7.60E-13 | 1.26E-13 | 8.89E-13 |

**Estimated Organic Concentration at Point of Maximum Impact for Pretreatment**

| | PT-S3 Vapor/Particle/Particle-Bound | PT-S4 Vapor/Particle/Particle-Bound | |
|---|---|---|---|
| Average Annual Concentration | 0.07839 | 0.07451 | $\mu g/m^3$ per g/s |
| Maximum 24-Hour Concentration | 0.56649 | 0.52364 | $\mu g/m^3$ per g/s |

| CAS Number | Compound | PT-S3 (g/s) | PT-S3 Annual Average Concentration ($\mu g/m^3$) | PT-S3 Maximum 24 hr Concentration (ug/m3) | PT-S4 (gm/sec) | PT-S4 Annual Average Concentration (ug/m3) | PT-S4 Maximum 24 hr Concentration (ug/m3) | Total PT Annual Average Concentration (ug/m3) | Total Pretreat Maximum 24 hr Concentration (ug/m3) |
|---|---|---|---|---|---|---|---|---|---|
| 57-14-7 | 1,1-Dimethylhydrazine | 4.90E-07 | 3.84E-08 | 2.78E-07 | 1.05E-06 | 7.81E-08 | 5.49E-07 | 1.17E-07 | 8.27E-07 |
| 58-89-9 | gamma-BHC (Lindane) | 3.97E-16 | 3.11E-17 | 2.25E-16 | 5.22E-15 | 3.89E-16 | 2.74E-15 | 4.20E-16 | 2.96E-15 |
| 58-90-2 | 2,3,4,6-Tetrachlorophenol | 1.09E-04 | 8.56E-06 | 6.18E-05 | 1.10E-06 | 8.18E-08 | 5.75E-07 | 8.64E-06 | 6.24E-05 |
| 591-78-6 | 2-Hexanone | 5.31E-06 | 4.16E-07 | 3.01E-06 | 1.43E-07 | 1.06E-08 | 7.47E-08 | 4.27E-07 | 3.08E-06 |
| 59-50-7 | 4-Chloro-3-methylphenol | 2.86E-13 | 2.24E-14 | 1.62E-13 | 1.42E-12 | 1.06E-13 | 7.43E-13 | 1.28E-13 | 9.04E-13 |
| 59-89-2 | N-Nitrosomorpholine | 8.13E-18 | 6.38E-19 | 4.61E-18 | 2.82E-06 | 2.10E-07 | 1.48E-06 | 2.10E-07 | 1.48E-06 |
| 602-87-9 | 5-Nitroacenaphthene | 4.31E-14 | 3.38E-15 | 2.44E-14 | 1.45E-12 | 1.08E-13 | 7.61E-13 | 1.12E-13 | 7.85E-13 |
| 60-29-7 | Ethyl ether | 3.48E-06 | 2.73E-07 | 1.97E-06 | 3.79E-07 | 2.82E-08 | 1.98E-07 | 3.01E-07 | 2.17E-06 |
| 603-34-9 | Triphenylamine | 1.42E-05 | 1.12E-06 | 8.06E-06 | 1.18E-06 | 8.77E-08 | 6.16E-07 | 1.20E-06 | 8.68E-06 |
| 60-34-4 | Methylhydrazine | 5.11E-08 | 4.01E-09 | 2.90E-08 | 3.13E-07 | 2.33E-08 | 1.64E-07 | 2.73E-08 | 1.93E-07 |
| 60-35-5 | Acetamide | 1.09E-10 | 8.58E-12 | 6.20E-11 | 6.33E-07 | 4.72E-08 | 3.32E-07 | 4.72E-08 | 3.32E-07 |
| 60-57-1 | Dieldrin | 1.44E-15 | 1.13E-16 | 8.18E-16 | 9.95E-15 | 7.42E-16 | 5.21E-15 | 8.55E-16 | 6.03E-15 |
| 621-64-7 | Di-n-Propylnitrosamine (N-Nitroso-di-n-propylamine) | 1.16E-07 | 9.11E-09 | 6.58E-08 | 1.42E-06 | 1.06E-07 | 7.45E-07 | 1.15E-07 | 8.11E-07 |
| 624-83-9 | Methyl isocyanate | 7.66E-06 | 6.01E-07 | 4.34E-06 | 8.33E-08 | 6.21E-09 | 4.36E-08 | 6.07E-07 | 4.38E-06 |
| 627-13-4 | Nitric acid, propyl ester | 3.48E-06 | 2.73E-07 | 1.97E-06 | 3.79E-07 | 2.82E-08 | 1.98E-07 | 3.01E-07 | 2.17E-06 |
| 62-75-9 | N-Nitroso-N,N-dimethylamine (Dimethylnitrosamine) | 8.85E-08 | 6.94E-09 | 5.01E-08 | 2.71E-06 | 2.02E-07 | 1.42E-06 | 2.09E-07 | 1.47E-06 |
| 630-20-6 | 1,1,1,2-Tetrachloroethane | 7.86E-04 | 6.16E-05 | 4.45E-04 | 8.43E-08 | 6.28E-09 | 4.41E-08 | 6.16E-05 | 4.45E-04 |
| 64-17-5 | Ethyl alcohol | 5.11E-08 | 4.01E-09 | 2.90E-08 | 3.13E-07 | 2.33E-08 | 1.64E-07 | 2.73E-08 | 1.93E-07 |
| 64-18-6 | Formic acid | 1.20E-08 | 9.44E-10 | 6.82E-09 | 2.52E-06 | 1.88E-07 | 1.32E-06 | 1.88E-07 | 1.32E-06 |
| 64-19-7 | Acetic acid | 2.15E-09 | 1.68E-10 | 1.22E-09 | 2.82E-06 | 2.10E-07 | 1.48E-06 | 2.11E-07 | 1.48E-06 |
| 67-56-1 | Methyl alcohol (Methanol) | 5.11E-08 | 4.01E-09 | 2.90E-08 | 3.13E-07 | 2.33E-08 | 1.64E-07 | 2.73E-08 | 1.93E-07 |
| 67-63-0 | 2-Propyl alcohol (Isopropanol; Propan-2-01) | 8.63E-08 | 6.77E-09 | 4.89E-08 | 2.39E-07 | 1.78E-08 | 1.25E-07 | 2.46E-08 | 1.74E-07 |
| 67-64-1 | 2-Propanone (Acetone) | 1.66E-06 | 1.30E-07 | 9.43E-07 | 1.02E-06 | 7.57E-08 | 5.32E-07 | 2.06E-07 | 1.48E-06 |
| 67-66-3 | Chloroform | 3.85E-03 | 3.02E-04 | 2.18E-03 | 7.92E-08 | 5.90E-09 | 4.15E-08 | 3.02E-04 | 2.18E-03 |
| 67-72-1 | Hexachloroethane | 7.00E-04 | 5.49E-05 | 3.97E-04 | 3.60E-07 | 2.68E-08 | 1.88E-07 | 5.49E-05 | 3.97E-04 |
| 684-16-2 | Hexafluoroacetone | 7.70E-03 | 6.04E-04 | 4.36E-03 | 7.92E-08 | 5.90E-09 | 4.15E-08 | 6.04E-04 | 4.36E-03 |
| 71-23-8 | n-Propyl alcohol | 8.63E-08 | 6.77E-09 | 4.89E-08 | 2.39E-07 | 1.78E-08 | 1.25E-07 | 2.46E-08 | 1.74E-07 |
| 71-36-3 | n-Butyl alcohol | 8.63E-08 | 6.77E-09 | 4.89E-08 | 2.39E-07 | 1.78E-08 | 1.25E-07 | 2.46E-08 | 1.74E-07 |
| 71-43-2 | Benzene | 7.69E-05 | 6.03E-06 | 4.35E-05 | 7.85E-08 | 5.85E-09 | 4.11E-08 | 6.03E-06 | 4.36E-05 |
| 71-55-6 | Methyl chloroform (1,1,1-Trichloroethane) | 7.72E-06 | 6.05E-07 | 4.37E-06 | 7.77E-08 | 5.79E-09 | 4.07E-08 | 6.11E-07 | 4.41E-06 |

**Estimated Organic Concentration at Point of Maximum Impact for Pretreatment**

| | PT-S3 Vapor/Particle/Particle-Bound | PT-S4 Vapor/Particle/Particle-Bound | |
|---|---|---|---|
| Average Annual Concentration | 0.07839 | 0.07451 | $\mu g/m^3$ per g/s |
| Maximum 24-Hour Concentration | 0.56649 | 0.52364 | $\mu g/m^3$ per g/s |

| CAS Number | Compound | PT-S3 (g/s) | PT-S3 Annual Average Concentration ($\mu g/m^3$) | PT-S3 Maximum 24 hr Concentration (ug/m3) | PT-S4 (gm/sec) | PT-S4 Annual Average Concentration (ug/m3) | PT-S4 Maximum 24 hr Concentration (ug/m3) | Total PT Annual Average Concentration (ug/m3) | Total Pretreat Maximum 24 hr Concentration (ug/m3) |
|---|---|---|---|---|---|---|---|---|---|
| 72-20-8 | Endrin | 7.62E-16 | 5.98E-17 | 4.32E-16 | 9.45E-15 | 7.04E-16 | 4.95E-15 | 7.64E-16 | 5.38E-15 |
| 72-43-5 | Methoxychlor | 1.82E-16 | 1.43E-17 | 1.03E-16 | 8.39E-14 | 6.25E-15 | 4.39E-14 | 6.27E-15 | 4.40E-14 |
| 72-54-8 | 4,4-DDD | 7.62E-16 | 5.98E-17 | 4.32E-16 | 9.45E-15 | 7.04E-16 | 4.95E-15 | 7.64E-16 | 5.38E-15 |
| 72-55-9 | 4,4-DDE | 5.15E-15 | 4.04E-16 | 2.92E-15 | 9.28E-15 | 6.91E-16 | 4.86E-15 | 1.10E-15 | 7.78E-15 |
| 74-83-9 | Bromomethane (Methyl bromide) | 7.70E-06 | 6.04E-07 | 4.36E-06 | 7.92E-08 | 5.90E-09 | 4.15E-08 | 6.10E-07 | 4.40E-06 |
| 74-87-3 | Chloromethane (Methyl chloride) | 3.85E-04 | 3.01E-05 | 2.18E-04 | 7.78E-08 | 5.80E-09 | 4.08E-08 | 3.02E-05 | 2.18E-04 |
| 74-97-5 | Bromochloromethane | 3.83E-03 | 3.00E-04 | 2.17E-03 | 8.33E-08 | 6.21E-09 | 4.36E-08 | 3.00E-04 | 2.17E-03 |
| 74-99-7 | Methylacetylene | 3.50E-06 | 2.74E-07 | 1.98E-06 | 3.54E-07 | 2.64E-08 | 1.85E-07 | 3.00E-07 | 2.17E-06 |
| 75-00-3 | Chloroethane | 7.69E-06 | 6.03E-07 | 4.36E-06 | 7.78E-08 | 5.80E-09 | 4.08E-08 | 6.09E-07 | 4.40E-06 |
| 75-01-4 | Vinyl chloride (1-Chloroethene) | 3.51E-06 | 2.75E-07 | 1.99E-06 | 3.53E-07 | 2.63E-08 | 1.85E-07 | 3.02E-07 | 2.18E-06 |
| 75-05-8 | Acetonitrile | 3.60E-06 | 2.82E-07 | 2.04E-06 | 2.80E-07 | 2.09E-08 | 1.47E-07 | 3.03E-07 | 2.19E-06 |
| 75-07-0 | Acetaldehyde | 1.39E-06 | 1.09E-07 | 7.86E-07 | 8.47E-07 | 6.31E-08 | 4.44E-07 | 1.72E-07 | 1.23E-06 |
| 75-09-2 | Dichloromethane (Methylene chloride) | 3.85E-04 | 3.02E-05 | 2.18E-04 | 7.92E-08 | 5.90E-09 | 4.15E-08 | 3.02E-05 | 2.18E-04 |
| 75-12-7 | Formamide | 1.27E-10 | 9.96E-12 | 7.20E-11 | 2.89E-06 | 2.15E-07 | 1.51E-06 | 2.15E-07 | 1.51E-06 |
| 75-15-0 | Carbon disulfide | 7.69E-07 | 6.03E-08 | 4.36E-07 | 7.78E-08 | 5.80E-09 | 4.08E-08 | 6.61E-08 | 4.76E-07 |
| 75-21-8 | Ethylene oxide (Oxirane) | 6.54E-07 | 5.13E-08 | 3.70E-07 | 1.17E-07 | 8.70E-09 | 6.11E-08 | 5.99E-08 | 4.31E-07 |
| 75-27-4 | Bromodichloromethane | 1.57E-03 | 1.23E-04 | 8.91E-04 | 8.43E-08 | 6.28E-09 | 4.41E-08 | 1.23E-04 | 8.91E-04 |
| 75-34-3 | 1,1-Dichloroethane | 7.70E-07 | 6.04E-08 | 4.36E-07 | 7.92E-08 | 5.90E-09 | 4.15E-08 | 6.63E-08 | 4.78E-07 |
| 75-35-4 | 1,1-Dichloroethene (Vinylidene chloride) | 7.73E-07 | 6.06E-08 | 4.38E-07 | 7.76E-08 | 5.78E-09 | 4.07E-08 | 6.64E-08 | 4.79E-07 |
| 75-43-4 | Dichlorofluoromethane | 7.69E-06 | 6.03E-07 | 4.36E-06 | 7.78E-08 | 5.80E-09 | 4.08E-08 | 6.09E-07 | 4.40E-06 |
| 75-45-6 | Chlorodifluoromethane | 1.55E-04 | 1.21E-05 | 8.76E-05 | 7.76E-08 | 5.78E-09 | 4.07E-08 | 1.21E-05 | 8.76E-05 |
| 75-50-3 | Trimethylamine | 5.31E-07 | 4.16E-08 | 3.01E-07 | 1.43E-07 | 1.06E-08 | 7.47E-08 | 5.22E-08 | 3.75E-07 |
| 75-52-5 | Nitromethane | 1.39E-06 | 1.09E-07 | 7.86E-07 | 8.47E-07 | 6.31E-08 | 4.44E-07 | 1.72E-07 | 1.23E-06 |
| 75-55-8 | 2-Methylaziridine | 3.92E-07 | 3.08E-08 | 2.22E-07 | 1.09E-06 | 8.10E-08 | 5.69E-07 | 1.12E-07 | 7.92E-07 |
| 75-61-6 | Difluorodibromomethane | 7.73E-03 | 6.06E-04 | 4.38E-03 | 7.76E-08 | 5.78E-09 | 4.07E-08 | 6.06E-04 | 4.38E-03 |
| 75-63-8 | Trifluorobromomethane | 7.68E-03 | 6.02E-04 | 4.35E-03 | 7.69E-08 | 5.73E-09 | 4.02E-08 | 6.02E-04 | 4.35E-03 |
| 75-65-0 | 2-Methyl-2-propanol | 8.63E-08 | 6.77E-09 | 4.89E-08 | 2.39E-07 | 1.78E-08 | 1.25E-07 | 2.46E-08 | 1.74E-07 |
| 75-69-4 | Trichlorofluoromethane | 7.71E-03 | 6.04E-04 | 4.37E-03 | 7.72E-08 | 5.75E-09 | 4.04E-08 | 6.04E-04 | 4.37E-03 |
| 75-71-8 | Dichlorodifluoromethane | 7.68E-03 | 6.02E-04 | 4.35E-03 | 7.69E-08 | 5.73E-09 | 4.02E-08 | 6.02E-04 | 4.35E-03 |
| 75-99-0 | 2,2-Dichloropropionic acid | 1.07E-07 | 8.42E-09 | 6.08E-08 | 2.82E-06 | 2.10E-07 | 1.48E-06 | 2.19E-07 | 1.54E-06 |

**Estimated Organic Concentration at Point of Maximum Impact for Pretreatment**

| | PT-S3 Vapor/Particle/Particle-Bound | PT-S4 Vapor/Particle/Particle-Bound | |
|---|---|---|---|
| Average Annual Concentration | 0.07839 | 0.07451 | $\mu g/m^3$ per g/s |
| Maximum 24-Hour Concentration | 0.56649 | 0.52364 | $\mu g/m^3$ per g/s |

| CAS Number | Compound | PT-S3 (g/s) | PT-S3 Annual Average Concentration ($\mu g/m^3$) | PT-S3 Maximum 24 hr Concentration (ug/m3) | PT-S4 (gm/sec) | PT-S4 Annual Average Concentration (ug/m3) | PT-S4 Maximum 24 hr Concentration (ug/m3) | Total PT Annual Average Concentration (ug/m3) | Total Pretreat Maximum 24 hr Concentration (ug/m3) |
|---|---|---|---|---|---|---|---|---|---|
| 76-03-9 | Trichloroacetic acid | 4.38E-08 | 3.43E-09 | 2.48E-08 | 6.33E-07 | 4.72E-08 | 3.32E-07 | 5.06E-08 | 3.56E-07 |
| 76-11-9 | 1,1,1,2-Tetrachloro-2,2-difluoroethane | 6.99E-04 | 5.48E-05 | 3.96E-04 | 3.50E-07 | 2.61E-08 | 1.83E-07 | 5.49E-05 | 3.96E-04 |
| 76-12-0 | 1,1,2,2-Tetrachloro-1,2-difluoroethane | 7.01E-04 | 5.49E-05 | 3.97E-04 | 3.51E-07 | 2.61E-08 | 1.84E-07 | 5.50E-05 | 3.97E-04 |
| 76-13-1 | 1,2,2-Trichloro-1,1,2-trifluoroethane (Freon 113) | 1.92E-04 | 1.51E-05 | 1.09E-04 | 7.69E-08 | 5.73E-09 | 4.02E-08 | 1.51E-05 | 1.09E-04 |
| 76-14-2 | 1,2-Dichloro-1,1,2,2-tetrafluoroethane | 7.71E-03 | 6.05E-04 | 4.37E-03 | 7.71E-08 | 5.75E-09 | 4.04E-08 | 6.05E-04 | 4.37E-03 |
| 76-15-3 | Chloropentafluoroethane | 7.70E-03 | 6.03E-04 | 4.36E-03 | 7.70E-08 | 5.74E-09 | 4.03E-08 | 6.03E-04 | 4.36E-03 |
| 76-44-8 | Heptachlor | 2.02E-05 | 1.58E-06 | 1.14E-05 | 1.03E-08 | 7.66E-10 | 5.39E-09 | 1.58E-06 | 1.14E-05 |
| 78-83-1 | 2-Methylpropyl alcohol (*Isobutyl alcohol*) | 3.92E-07 | 3.08E-08 | 2.22E-07 | 1.09E-06 | 8.10E-08 | 5.69E-07 | 1.12E-07 | 7.92E-07 |
| 78-87-5 | 1,2-Dichloropropane | 7.70E-06 | 6.04E-07 | 4.36E-06 | 7.92E-08 | 5.90E-09 | 4.15E-08 | 6.10E-07 | 4.40E-06 |
| 78-92-2 | 1-Methylpropyl alcohol (2-Butanol) | 8.63E-08 | 6.77E-09 | 4.89E-08 | 2.39E-07 | 1.78E-08 | 1.25E-07 | 2.46E-08 | 1.74E-07 |
| 78-93-3 | Methyl ethyl ketone (MEK, 2-Butanone) | 3.05E-06 | 2.39E-07 | 1.73E-06 | 1.86E-07 | 1.39E-08 | 9.76E-08 | 2.53E-07 | 1.83E-06 |
| 79-00-5 | 1,1,2-Trichloroethane | 7.66E-07 | 6.01E-08 | 4.34E-07 | 8.33E-08 | 6.21E-09 | 4.36E-08 | 6.63E-08 | 4.78E-07 |
| 79-01-6 | Trichloroethylene | 7.68E-07 | 6.02E-08 | 4.35E-07 | 7.78E-08 | 5.80E-09 | 4.07E-08 | 6.60E-08 | 4.76E-07 |
| 79-09-4 | Propionic acid | 3.49E-08 | 2.73E-09 | 1.98E-08 | 2.44E-06 | 1.82E-07 | 1.28E-06 | 1.85E-07 | 1.30E-06 |
| 79-10-7 | 2-Propenoic acid | 3.49E-08 | 2.73E-09 | 1.98E-08 | 2.44E-06 | 1.82E-07 | 1.28E-06 | 1.85E-07 | 1.30E-06 |
| 79-20-9 | Methyl acetate | 2.41E-06 | 1.89E-07 | 1.37E-06 | 6.48E-07 | 4.83E-08 | 3.39E-07 | 2.37E-07 | 1.71E-06 |
| 79-34-5 | 1,1,2,2-Tetrachloroethane | 7.19E-04 | 5.63E-05 | 4.07E-04 | 9.69E-08 | 7.22E-09 | 5.07E-08 | 5.63E-05 | 4.07E-04 |
| 8001-35-2 | Toxaphene | 1.06E-15 | 8.34E-17 | 6.02E-16 | 1.20E-14 | 8.95E-16 | 6.29E-15 | 9.78E-16 | 6.89E-15 |
| 82-68-8 | Pentachloronitrobenzene (PCBN or quintobenzene) | 8.32E-05 | 6.52E-06 | 4.72E-05 | 8.47E-07 | 6.31E-08 | 4.44E-07 | 6.59E-06 | 4.76E-05 |
| 83-32-9 | Acenaphthene | 1.78E-04 | 1.40E-05 | 1.01E-04 | 5.30E-07 | 3.95E-08 | 2.78E-07 | 1.40E-05 | 1.01E-04 |
| 84-66-2 | Diethyl phthalate | 7.94E-09 | 6.22E-10 | 4.50E-09 | 1.92E-06 | 1.43E-07 | 1.01E-06 | 1.44E-07 | 1.01E-06 |
| 84-74-2 | Dibutyl phthalate | 1.63E-16 | 1.27E-17 | 9.21E-17 | 1.89E-12 | 1.41E-13 | 9.88E-13 | 1.41E-13 | 9.88E-13 |
| 85-01-8 | Phenanthrene | 8.32E-05 | 6.52E-06 | 4.72E-05 | 8.47E-07 | 6.31E-08 | 4.44E-07 | 6.59E-06 | 4.76E-05 |
| 85-68-7 | Butylbenzyl phthalate | 1.63E-16 | 1.27E-17 | 9.21E-17 | 1.89E-12 | 1.41E-13 | 9.88E-13 | 1.41E-13 | 9.88E-13 |
| 86-73-7 | Fluorene | 1.10E-12 | 8.60E-14 | 6.21E-13 | 6.48E-13 | 4.83E-14 | 3.39E-13 | 1.34E-13 | 9.60E-13 |
| 87-68-3 | Hexachlorobutadiene | 3.08E-05 | 2.41E-06 | 1.74E-05 | 7.79E-08 | 5.80E-09 | 4.08E-08 | 2.42E-06 | 1.75E-05 |
| 87-86-5 | Pentachlorophenol | 1.29E-07 | 1.01E-08 | 7.30E-08 | 2.82E-06 | 2.10E-07 | 1.48E-06 | 2.21E-07 | 1.55E-06 |

**Estimated Organic Concentration at Point of Maximum Impact for Pretreatment**

| | PT-S3 Vapor/Particle/Particle-Bound | PT-S4 Vapor/Particle/Particle-Bound | |
|---|---|---|---|
| Average Annual Concentration | 0.07839 | 0.07451 | $\mu g/m^3$ per g/s |
| Maximum 24-Hour Concentration | 0.56649 | 0.52364 | $\mu g/m^3$ per g/s |

| CAS Number | Compound | PT-S3 (g/s) | PT-S3 Annual Average Concentration ($\mu g/m^3$) | PT-S3 Maximum 24 hr Concentration (ug/m3) | PT-S4 (gm/sec) | PT-S4 Annual Average Concentration (ug/m3) | PT-S4 Maximum 24 hr Concentration (ug/m3) | Total PT Annual Average Concentration (ug/m3) | Total Pretreat Maximum 24 hr Concentration (ug/m3) |
|---|---|---|---|---|---|---|---|---|---|
| 88-06-2 | 2,4,6-Trichlorophenol | 1.39E-05 | 1.09E-06 | 7.90E-06 | 1.42E-06 | 1.06E-07 | 7.45E-07 | 1.20E-06 | 8.64E-06 |
| 88-72-2 | 2-Nitrotoluene | 5.39E-08 | 4.22E-09 | 3.05E-08 | 2.31E-07 | 1.72E-08 | 1.21E-07 | 2.14E-08 | 1.51E-07 |
| 88-75-5 | 2-Nitrophenol | 7.35E-05 | 5.76E-06 | 4.16E-05 | 1.05E-06 | 7.81E-08 | 5.49E-07 | 5.84E-06 | 4.22E-05 |
| 88-85-7 | 2-sec-Butyl-4,6-dinitrophenol (Dinoseb) | 1.86E-14 | 1.45E-15 | 1.05E-14 | 3.20E-12 | 2.39E-13 | 1.68E-12 | 2.40E-13 | 1.69E-12 |
| 88-89-1 | Picric acid | 1.04E-20 | 8.13E-22 | 5.87E-21 | 1.03E-11 | 7.67E-13 | 5.39E-12 | 7.67E-13 | 5.39E-12 |
| 91-20-3 | Naphthalene | 5.48E-06 | 4.29E-07 | 3.10E-06 | 1.45E-08 | 1.08E-09 | 7.61E-09 | 4.30E-07 | 3.11E-06 |
| 91-22-5 | Quinoline | 4.74E-08 | 3.72E-09 | 2.69E-08 | 1.45E-06 | 1.08E-07 | 7.61E-07 | 1.12E-07 | 7.88E-07 |
| 91-58-7 | 2-Chloronapthalene | 1.96E-04 | 1.54E-05 | 1.11E-04 | 4.40E-07 | 3.28E-08 | 2.31E-07 | 1.54E-05 | 1.11E-04 |
| 92-52-4 | 1,1'-Biphenyl | 6.53E-06 | 5.12E-07 | 3.70E-06 | 4.40E-07 | 3.28E-08 | 2.31E-07 | 5.45E-07 | 3.93E-06 |
| 92-93-3 | 4-Nitrobiphenyl | 1.06E-13 | 8.28E-15 | 5.98E-14 | 1.42E-12 | 1.06E-13 | 7.45E-13 | 1.14E-13 | 8.05E-13 |
| 93-72-1 | Silvex (2,4,5-TP) | 4.52E-16 | 3.54E-17 | 2.56E-16 | 2.88E-12 | 2.14E-13 | 1.51E-12 | 2.14E-13 | 1.51E-12 |
| 93-76-5 | 2,4,5-T | 4.52E-16 | 3.54E-17 | 2.56E-16 | 2.88E-12 | 2.14E-13 | 1.51E-12 | 2.14E-13 | 1.51E-12 |
| 94-75-7 | 2,4-D and esters (160C typed) | 1.29E-07 | 1.01E-08 | 7.30E-08 | 2.82E-06 | 2.10E-07 | 1.48E-06 | 2.21E-07 | 1.55E-06 |
| 95-13-6 | Indene | 1.79E-05 | 1.40E-06 | 1.01E-05 | 3.83E-07 | 2.85E-08 | 2.01E-07 | 1.43E-06 | 1.03E-05 |
| 95-47-6 | o-Xylene | 7.70E-07 | 6.04E-08 | 4.36E-07 | 7.92E-08 | 5.90E-09 | 4.15E-08 | 6.63E-08 | 4.78E-07 |
| 95-48-7 | o-Cresol (2-Methylphenol) | 1.04E-07 | 8.18E-09 | 5.91E-08 | 3.20E-07 | 2.38E-08 | 1.67E-07 | 3.20E-08 | 2.26E-07 |
| 95-49-8 | 2-Chlorotoluene | 1.75E-06 | 1.37E-07 | 9.92E-07 | 3.60E-07 | 2.68E-08 | 1.88E-07 | 1.64E-07 | 1.18E-06 |
| 95-50-1 | o-Dichlorobenzene (1,2-Dichlorobenzene) | 7.86E-05 | 6.16E-06 | 4.45E-05 | 8.43E-08 | 6.28E-09 | 4.41E-08 | 6.17E-06 | 4.46E-05 |
| 95-57-8 | 2-Chlorophenol | 1.96E-07 | 1.54E-08 | 1.11E-07 | 1.09E-06 | 8.10E-08 | 5.69E-07 | 9.64E-08 | 6.80E-07 |
| 95-95-4 | 2,4,5-Trichlorophenol | 5.69E-06 | 4.46E-07 | 3.22E-06 | 1.45E-06 | 1.08E-07 | 7.61E-07 | 5.54E-07 | 3.98E-06 |
| 96-22-0 | 3-Pentanone | 5.31E-07 | 4.16E-08 | 3.01E-07 | 1.43E-07 | 1.06E-08 | 7.47E-08 | 5.22E-08 | 3.75E-07 |
| 96-69-5 | Bis(3-tert-butyl-4-hydroxy-6-methyl-phenyl)sulfide | 1.59E-12 | 1.25E-13 | 9.01E-13 | 3.60E-13 | 2.68E-14 | 1.88E-13 | 1.52E-13 | 1.09E-12 |
| 98-51-1 | p-tert-Butyltoluene | 1.75E-06 | 1.38E-07 | 9.94E-07 | 3.53E-07 | 2.63E-08 | 1.85E-07 | 1.64E-07 | 1.18E-06 |
| 98-82-8 | Cumene | 1.75E-06 | 1.37E-07 | 9.90E-07 | 3.54E-07 | 2.64E-08 | 1.85E-07 | 1.63E-07 | 1.18E-06 |
| 98-83-9 | alpha-Methylstyrene | 3.85E-05 | 3.02E-06 | 2.18E-05 | 7.92E-08 | 5.90E-09 | 4.15E-08 | 3.02E-06 | 2.19E-05 |
| 98-86-2 | Acetophenone | 2.09E-05 | 1.64E-06 | 1.18E-05 | 1.07E-06 | 8.01E-08 | 5.63E-07 | 1.72E-06 | 1.24E-05 |
| 98-95-3 | Nitrobenzene | 2.45E-07 | 1.92E-08 | 1.39E-07 | 1.05E-06 | 7.81E-08 | 5.49E-07 | 9.73E-08 | 6.88E-07 |
| Products of Incomplete Combustion (PICs) | | | | | | | | | |
| 100-02-7 | 4-Nitrophenol | 1.75E-05 | 1.37E-06 | 9.92E-06 | 0.00E+00 | 0.00E+00 | 0.00E+00 | 1.37E-06 | 9.92E-06 |
| 100-44-7 | Benzyl chloride | 2.33E-06 | 1.83E-07 | 1.32E-06 | 0.00E+00 | 0.00E+00 | 0.00E+00 | 1.83E-07 | 1.32E-06 |
| 100-51-6 | Benzyl alcohol | 1.75E-05 | 1.37E-06 | 9.92E-06 | 0.00E+00 | 0.00E+00 | 0.00E+00 | 1.37E-06 | 9.92E-06 |

**Estimated Organic Concentration at Point of Maximum Impact for Pretreatment**

| | PT-S3 Vapor/Particle/Particle-Bound | PT-S4 Vapor/Particle/Particle-Bound | |
|---|---|---|---|
| Average Annual Concentration | 0.07839 | 0.07451 | $\mu g/m^3$ per g/s |
| Maximum 24-Hour Concentration | 0.56649 | 0.52364 | $\mu g/m^3$ per g/s |

| CAS Number | Compound | PT-S3 (g/s) | PT-S3 Annual Average Concentration ($\mu g/m^3$) | PT-S3 Maximum 24 hr Concentration (ug/m3) | PT-S4 (gm/sec) | PT-S4 Annual Average Concentration (ug/m3) | PT-S4 Maximum 24 hr Concentration (ug/m3) | Total PT Annual Average Concentration (ug/m3) | Total Pretreat Maximum 24 hr Concentration (ug/m3) |
|---|---|---|---|---|---|---|---|---|---|
| 100-52-7 | Benzaldehyde | 1.75E-05 | 1.37E-06 | 9.92E-06 | 0.00E+00 | 0.00E+00 | 0.00E+00 | 1.37E-06 | 9.92E-06 |
| 101-77-9 | 4,4-Methylenedianiline | 1.75E-05 | 1.37E-06 | 9.92E-06 | 0.00E+00 | 0.00E+00 | 0.00E+00 | 1.37E-06 | 9.92E-06 |
| 103-33-3 | Azobenzene | 1.75E-05 | 1.37E-06 | 9.92E-06 | 0.00E+00 | 0.00E+00 | 0.00E+00 | 1.37E-06 | 9.92E-06 |
| 103-65-1 | n-Propyl benzene (Isocumene) | 2.33E-06 | 1.83E-07 | 1.32E-06 | 0.00E+00 | 0.00E+00 | 0.00E+00 | 1.83E-07 | 1.32E-06 |
| 104-51-8 | n-Butylbenzene | 2.33E-06 | 1.83E-07 | 1.32E-06 | 0.00E+00 | 0.00E+00 | 0.00E+00 | 1.83E-07 | 1.32E-06 |
| 105-67-9 | 2,4-Dimethylphenol | 1.75E-05 | 1.37E-06 | 9.92E-06 | 0.00E+00 | 0.00E+00 | 0.00E+00 | 1.37E-06 | 9.92E-06 |
| 106-43-4 | 4-Chlorotoluene (p-Tolyl chloride) | 2.33E-06 | 1.83E-07 | 1.32E-06 | 0.00E+00 | 0.00E+00 | 0.00E+00 | 1.83E-07 | 1.32E-06 |
| 106-44-5 | p-Cresol (4-Methyl phenol) | 1.75E-05 | 1.37E-06 | 9.92E-06 | 0.00E+00 | 0.00E+00 | 0.00E+00 | 1.37E-06 | 9.92E-06 |
| 106-47-8 | p-Chloroaniline | 1.75E-05 | 1.37E-06 | 9.92E-06 | 0.00E+00 | 0.00E+00 | 0.00E+00 | 1.37E-06 | 9.92E-06 |
| 106-49-0 | p-Toluidine | 1.75E-05 | 1.37E-06 | 9.92E-06 | 0.00E+00 | 0.00E+00 | 0.00E+00 | 1.37E-06 | 9.92E-06 |
| 106-51-4 | Quinone | 1.75E-05 | 1.37E-06 | 9.92E-06 | 0.00E+00 | 0.00E+00 | 0.00E+00 | 1.37E-06 | 9.92E-06 |
| 106-89-8 | Epichlorohydrin (1-chloro-2,3-epoxypropane) | 2.33E-06 | 1.83E-07 | 1.32E-06 | 0.00E+00 | 0.00E+00 | 0.00E+00 | 1.83E-07 | 1.32E-06 |
| 107-19-7 | Propargyl alcohol | 2.33E-06 | 1.83E-07 | 1.32E-06 | 0.00E+00 | 0.00E+00 | 0.00E+00 | 1.83E-07 | 1.32E-06 |
| 107-21-1 | Ethylene glycol | 2.33E-06 | 1.83E-07 | 1.32E-06 | 0.00E+00 | 0.00E+00 | 0.00E+00 | 1.83E-07 | 1.32E-06 |
| 107-98-2 | Propylene gylcol monomethyl ether | 1.75E-05 | 1.37E-06 | 9.92E-06 | 0.00E+00 | 0.00E+00 | 0.00E+00 | 1.37E-06 | 9.92E-06 |
| 108-60-1 | Dichloroisopropyl ether (2,2'-Oxybis(1-chloropropane)) | 1.75E-05 | 1.37E-06 | 9.92E-06 | 0.00E+00 | 0.00E+00 | 0.00E+00 | 1.37E-06 | 9.92E-06 |
| 108-67-8 | 1,3,5-Trimethyl benzene | 2.33E-06 | 1.83E-07 | 1.32E-06 | 0.00E+00 | 0.00E+00 | 0.00E+00 | 1.83E-07 | 1.32E-06 |
| 108-86-1 | Bromobenzene (Phenyl bromide) | 2.33E-06 | 1.83E-07 | 1.32E-06 | 0.00E+00 | 0.00E+00 | 0.00E+00 | 1.83E-07 | 1.32E-06 |
| 109-77-3 | Malononitrile | 2.33E-06 | 1.83E-07 | 1.32E-06 | 0.00E+00 | 0.00E+00 | 0.00E+00 | 1.83E-07 | 1.32E-06 |
| 109-86-4 | 2-Methoxyethanol | 1.75E-05 | 1.37E-06 | 9.92E-06 | 0.00E+00 | 0.00E+00 | 0.00E+00 | 1.37E-06 | 9.92E-06 |
| 110-80-5 | 2-Ethoxyethanol | 1.75E-05 | 1.37E-06 | 9.92E-06 | 0.00E+00 | 0.00E+00 | 0.00E+00 | 1.37E-06 | 9.92E-06 |
| 111-15-9 | Ethylene glycol monoethyl ether acetate | 1.75E-05 | 1.37E-06 | 9.92E-06 | 0.00E+00 | 0.00E+00 | 0.00E+00 | 1.37E-06 | 9.92E-06 |
| 111-44-4 | Bis(2-chloroethyl) ether | 1.75E-05 | 1.37E-06 | 9.92E-06 | 0.00E+00 | 0.00E+00 | 0.00E+00 | 1.37E-06 | 9.92E-06 |
| 111-91-1 | Bis(2-chloroethoxy)methane | 1.75E-05 | 1.37E-06 | 9.92E-06 | 0.00E+00 | 0.00E+00 | 0.00E+00 | 1.37E-06 | 9.92E-06 |
| 1120-71-4 | 1,3-Propane sultone | 1.75E-05 | 1.37E-06 | 9.92E-06 | 0.00E+00 | 0.00E+00 | 0.00E+00 | 1.37E-06 | 9.92E-06 |
| 119-90-4 | 3,3'-Dimethoxybenzidine (ortho-dianisidine) | 1.75E-05 | 1.37E-06 | 9.92E-06 | 0.00E+00 | 0.00E+00 | 0.00E+00 | 1.37E-06 | 9.92E-06 |
| 121-14-2 | 2,4-Dinitrotoluene | 1.75E-05 | 1.37E-06 | 9.92E-06 | 0.00E+00 | 0.00E+00 | 0.00E+00 | 1.37E-06 | 9.92E-06 |

**Estimated Organic Concentration at Point of Maximum Impact for *Pretreatment***

| | PT-S3 Vapor/Particle/Particle-Bound | PT-S4 Vapor/Particle/Particle-Bound | |
|---|---|---|---|
| Average Annual Concentration | 0.07839 | 0.07451 | $\mu g/m^3$ per g/s |
| Maximum 24-Hour Concentration | 0.56649 | 0.52364 | $\mu g/m^3$ per g/s |

| CAS Number | Compound | PT-S3 (g/s) | PT-S3 Annual Average Concentration ($\mu g/m^3$) | PT-S3 Maximum 24 hr Concentration (ug/m3) | PT-S4 (gm/sec) | PT-S4 Annual Average Concentration (ug/m3) | PT-S4 Maximum 24 hr Concentration (ug/m3) | Total PT Annual Average Concentration (ug/m3) | Total Pretreat Maximum 24 hr Concentration (ug/m3) |
|---|---|---|---|---|---|---|---|---|---|
| 122-66-7 | 1,2-Diphenylhydrazine | 1.75E-05 | 1.37E-06 | 9.92E-06 | 0.00E+00 | 0.00E+00 | 0.00E+00 | 1.37E-06 | 9.92E-06 |
| 123-33-1 | Maleic hydrazide | 1.75E-05 | 1.37E-06 | 9.92E-06 | 0.00E+00 | 0.00E+00 | 0.00E+00 | 1.37E-06 | 9.92E-06 |
| 124-48-1 | Chlorodibromomethane | 2.33E-06 | 1.83E-07 | 1.32E-06 | 0.00E+00 | 0.00E+00 | 0.00E+00 | 1.83E-07 | 1.32E-06 |
| 131-11-3 | Dimethylphthalate | 1.75E-05 | 1.37E-06 | 9.92E-06 | 0.00E+00 | 0.00E+00 | 0.00E+00 | 1.37E-06 | 9.92E-06 |
| 131-89-5 | 2-Cyclohexyl-4,6-dinitrophenol | 1.75E-05 | 1.37E-06 | 9.92E-06 | 0.00E+00 | 0.00E+00 | 0.00E+00 | 1.37E-06 | 9.92E-06 |
| 133-06-2 | Captan | 1.75E-05 | 1.37E-06 | 9.92E-06 | 0.00E+00 | 0.00E+00 | 0.00E+00 | 1.37E-06 | 9.92E-06 |
| 135-98-8 | sec-Butylbenzene | 2.33E-06 | 1.83E-07 | 1.32E-06 | 0.00E+00 | 0.00E+00 | 0.00E+00 | 1.83E-07 | 1.32E-06 |
| 145-73-3 | Endothall | 1.75E-05 | 1.37E-06 | 9.92E-06 | 0.00E+00 | 0.00E+00 | 0.00E+00 | 1.37E-06 | 9.92E-06 |
| 156-59-2 | cis-1,2-Dichloroethene | 2.33E-06 | 1.83E-07 | 1.32E-06 | 0.00E+00 | 0.00E+00 | 0.00E+00 | 1.83E-07 | 1.32E-06 |
| 1746-01-6 | 2,3,7,8-Tetrachlorodibenzo(p)dioxin (TCDD) | 1.10E-11 | 8.58E-13 | 6.20E-12 | 0.00E+00 | 0.00E+00 | 0.00E+00 | 8.58E-13 | 6.20E-12 |
| 192-97-2 | Benzo(e)pyrene | 3.50E-06 | 2.75E-07 | 1.98E-06 | 0.00E+00 | 0.00E+00 | 0.00E+00 | 2.75E-07 | 1.98E-06 |
| 19408-74-3 | 1,2,3,7,8,9-Hexachlorodibenzo(p)dioxin | 1.82E-11 | 1.43E-12 | 1.03E-11 | 0.00E+00 | 0.00E+00 | 0.00E+00 | 1.43E-12 | 1.03E-11 |
| 23950-58-5 | Pronamide | 1.75E-05 | 1.37E-06 | 9.92E-06 | 0.00E+00 | 0.00E+00 | 0.00E+00 | 1.37E-06 | 9.92E-06 |
| 25013-15-4 | Methyl styrene (mixed isomers) | 2.33E-06 | 1.83E-07 | 1.32E-06 | 0.00E+00 | 0.00E+00 | 0.00E+00 | 1.83E-07 | 1.32E-06 |
| 3268-87-9 | Octachlorodibenzo(p)dioxin | 9.12E-11 | 7.15E-12 | 5.16E-11 | 0.00E+00 | 0.00E+00 | 0.00E+00 | 7.15E-12 | 5.16E-11 |
| 35822-46-9 | 1,2,3,4,6,7,8-Heptachlorodibenzo(p)dioxin | 3.65E-11 | 2.86E-12 | 2.07E-11 | 0.00E+00 | 0.00E+00 | 0.00E+00 | 2.86E-12 | 2.07E-11 |
| 39001-02-0 | Octachlorodibenzofuran | 7.30E-11 | 5.72E-12 | 4.13E-11 | 0.00E+00 | 0.00E+00 | 0.00E+00 | 5.72E-12 | 4.13E-11 |
| 39227-28-6 | 1,2,3,4,7,8-Hexachlorodibenzo(p)dioxin | 1.82E-11 | 1.43E-12 | 1.03E-11 | 0.00E+00 | 0.00E+00 | 0.00E+00 | 1.43E-12 | 1.03E-11 |
| 40321-76-4 | 1,2,3,7,8-Pentachlorodibenzo(p)dioxin | 1.82E-11 | 1.43E-12 | 1.03E-11 | 0.00E+00 | 0.00E+00 | 0.00E+00 | 1.43E-12 | 1.03E-11 |
| 41851-50-7 | Chlorocyclopentadiene | 2.33E-06 | 1.83E-07 | 1.32E-06 | 0.00E+00 | 0.00E+00 | 0.00E+00 | 1.83E-07 | 1.32E-06 |
| 460-19-5 | Cyanogen | 2.33E-06 | 1.83E-07 | 1.32E-06 | 0.00E+00 | 0.00E+00 | 0.00E+00 | 1.83E-07 | 1.32E-06 |
| 506-68-3 | Cyanogen bromide | 1.75E-05 | 1.37E-06 | 9.92E-06 | 0.00E+00 | 0.00E+00 | 0.00E+00 | 1.37E-06 | 9.92E-06 |
| 506-77-4 | Cyanogen chloride | 2.33E-06 | 1.83E-07 | 1.32E-06 | 0.00E+00 | 0.00E+00 | 0.00E+00 | 1.83E-07 | 1.32E-06 |
| 510-15-6 | Chlorobenzilate | 1.75E-05 | 1.37E-06 | 9.92E-06 | 0.00E+00 | 0.00E+00 | 0.00E+00 | 1.37E-06 | 9.92E-06 |

**Estimated Organic Concentration at Point of Maximum Impact for Pretreatment**

| | PT-S3 Vapor/Particle/Particle-Bound | PT-S4 Vapor/Particle/Particle-Bound | |
|---|---|---|---|
| Average Annual Concentration | 0.07839 | 0.07451 | $\mu g/m^3$ per g/s |
| Maximum 24-Hour Concentration | 0.56649 | 0.52364 | $\mu g/m^3$ per g/s |

| CAS Number | Compound | PT-S3 (g/s) | PT-S3 Annual Average Concentration ($\mu g/m^3$) | PT-S3 Maximum 24 hr Concentration (ug/m3) | PT-S4 (gm/sec) | PT-S4 Annual Average Concentration (ug/m3) | PT-S4 Maximum 24 hr Concentration (ug/m3) | Total PT Annual Average Concentration (ug/m3) | Total Pretreat Maximum 24 hr Concentration (ug/m3) |
|---|---|---|---|---|---|---|---|---|---|
| 51207-31-9 | 2,3,7,8-Tetrachlorodibenzofuran | 9.12E-12 | 7.15E-13 | 5.16E-12 | 0.00E+00 | 0.00E+00 | 0.00E+00 | 7.15E-13 | 5.16E-12 |
| 51-28-5 | 2,4-Dinitrophenol | 1.75E-05 | 1.37E-06 | 9.92E-06 | 0.00E+00 | 0.00E+00 | 0.00E+00 | 1.37E-06 | 9.92E-06 |
| 51-79-6 | Ethyl carbamate (urethane) | 1.75E-05 | 1.37E-06 | 9.92E-06 | 0.00E+00 | 0.00E+00 | 0.00E+00 | 1.37E-06 | 9.92E-06 |
| 528-29-0 | o-Dinitrobenzene | 1.75E-05 | 1.37E-06 | 9.92E-06 | 0.00E+00 | 0.00E+00 | 0.00E+00 | 1.37E-06 | 9.92E-06 |
| 532-27-4 | 2-Chloroacetophenone | 1.75E-05 | 1.37E-06 | 9.92E-06 | 0.00E+00 | 0.00E+00 | 0.00E+00 | 1.37E-06 | 9.92E-06 |
| 534-52-1 | 4,6-Dinitro-o-cresol (4,6-Dinitro-2-methylphenol) | 1.75E-05 | 1.37E-06 | 9.92E-06 | 0.00E+00 | 0.00E+00 | 0.00E+00 | 1.37E-06 | 9.92E-06 |
| 5385-75-1 | Dibenzo(a,e)fluoranthene | 3.50E-06 | 2.75E-07 | 1.98E-06 | 0.00E+00 | 0.00E+00 | 0.00E+00 | 2.75E-07 | 1.98E-06 |
| 540-73-8 | 1,2-Dimethylhydrazine | 2.33E-06 | 1.83E-07 | 1.32E-06 | 0.00E+00 | 0.00E+00 | 0.00E+00 | 1.83E-07 | 1.32E-06 |
| 542-75-6 | 1,3-Dichloropropene | 2.33E-06 | 1.83E-07 | 1.32E-06 | 0.00E+00 | 0.00E+00 | 0.00E+00 | 1.83E-07 | 1.32E-06 |
| 542-88-1 | Dichloromethyl ether | 2.33E-06 | 1.83E-07 | 1.32E-06 | 0.00E+00 | 0.00E+00 | 0.00E+00 | 1.83E-07 | 1.32E-06 |
| 55673-89-7 | 1,2,3,4,7,8,9-Heptachlorodibenzofuran | 1.82E-11 | 1.43E-12 | 1.03E-11 | 0.00E+00 | 0.00E+00 | 0.00E+00 | 1.43E-12 | 1.03E-11 |
| 57117-31-4 | 2,3,4,7,8-Pentachlorodibenzofuran | 9.12E-12 | 7.15E-13 | 5.16E-12 | 0.00E+00 | 0.00E+00 | 0.00E+00 | 7.15E-13 | 5.16E-12 |
| 57117-41-6 | 1,2,3,7,8-Pentachlorodibenzofuran | 9.12E-12 | 7.15E-13 | 5.16E-12 | 0.00E+00 | 0.00E+00 | 0.00E+00 | 7.15E-13 | 5.16E-12 |
| 57117-44-9 | 1,2,3,6,7,8-Hexachlorodibenzofuran | 1.46E-11 | 1.14E-12 | 8.27E-12 | 0.00E+00 | 0.00E+00 | 0.00E+00 | 1.14E-12 | 8.27E-12 |
| 57-24-9 | Strychnine | 1.75E-05 | 1.37E-06 | 9.92E-06 | 0.00E+00 | 0.00E+00 | 0.00E+00 | 1.37E-06 | 9.92E-06 |
| 57653-85-7 | 1,2,3,6,7,8-Hexachlorodibenzo(p)dioxin | 1.82E-11 | 1.43E-12 | 1.03E-11 | 0.00E+00 | 0.00E+00 | 0.00E+00 | 1.43E-12 | 1.03E-11 |
| 57-74-9 | Chlordane | 1.75E-05 | 1.37E-06 | 9.92E-06 | 0.00E+00 | 0.00E+00 | 0.00E+00 | 1.37E-06 | 9.92E-06 |
| 584-84-9 | 2,4-Toluene diisocyante | 1.75E-05 | 1.37E-06 | 9.92E-06 | 0.00E+00 | 0.00E+00 | 0.00E+00 | 1.37E-06 | 9.92E-06 |
| 593-60-2 | Bromoethene | 2.33E-06 | 1.83E-07 | 1.32E-06 | 0.00E+00 | 0.00E+00 | 0.00E+00 | 1.83E-07 | 1.32E-06 |
| 60-11-7 | Dimethyl aminoazobenzene | 1.75E-05 | 1.37E-06 | 9.92E-06 | 0.00E+00 | 0.00E+00 | 0.00E+00 | 1.37E-06 | 9.92E-06 |
| 606-20-2 | 2,6-Dinitrotoluene | 1.75E-05 | 1.37E-06 | 9.92E-06 | 0.00E+00 | 0.00E+00 | 0.00E+00 | 1.37E-06 | 9.92E-06 |
| 60851-34-5 | 2,3,4,6,7,8-Hexachlorodibenzofuran | 1.65E-11 | 1.29E-12 | 9.32E-12 | 0.00E+00 | 0.00E+00 | 0.00E+00 | 1.29E-12 | 9.32E-12 |
| 608-93-5 | Pentachlorobenzene | 1.75E-05 | 1.37E-06 | 9.92E-06 | 0.00E+00 | 0.00E+00 | 0.00E+00 | 1.37E-06 | 9.92E-06 |
| 61626-71-9 | Dichloropentadiene | 2.33E-06 | 1.83E-07 | 1.32E-06 | 0.00E+00 | 0.00E+00 | 0.00E+00 | 1.83E-07 | 1.32E-06 |
| 62-50-0 | Ethyl methanesulfonate | 1.75E-05 | 1.37E-06 | 9.92E-06 | 0.00E+00 | 0.00E+00 | 0.00E+00 | 1.37E-06 | 9.92E-06 |
| 62-53-3 | Aniline | 1.75E-05 | 1.37E-06 | 9.92E-06 | 0.00E+00 | 0.00E+00 | 0.00E+00 | 1.37E-06 | 9.92E-06 |
| 65-85-0 | Benzoic acid | 1.75E-05 | 1.37E-06 | 9.92E-06 | 0.00E+00 | 0.00E+00 | 0.00E+00 | 1.37E-06 | 9.92E-06 |

**Estimated Organic Concentration at Point of Maximum Impact for Pretreatment**

| | PT-S3 Vapor/Particle/Particle-Bound | PT-S4 Vapor/Particle/Particle-Bound | |
|---|---|---|---|
| Average Annual Concentration | 0.07839 | 0.07451 | $\mu g/m^3$ per g/s |
| Maximum 24-Hour Concentration | 0.56649 | 0.52364 | $\mu g/m^3$ per g/s |

| CAS Number | Compound | PT-S3 (g/s) | PT-S3 Annual Average Concentration ($\mu g/m^3$) | PT-S3 Maximum 24 hr Concentration (ug/m3) | PT-S4 (gm/sec) | PT-S4 Annual Average Concentration (ug/m3) | PT-S4 Maximum 24 hr Concentration (ug/m3) | Total PT Annual Average Concentration (ug/m3) | Total Pretreat Maximum 24 hr Concentration (ug/m3) |
|---|---|---|---|---|---|---|---|---|---|
| 67562-39-4 | 1,2,3,4,6,7,8-Heptachlorodibenzofuran | 1.82E-11 | 1.43E-12 | 1.03E-11 | 0.00E+00 | 0.00E+00 | 0.00E+00 | 1.43E-12 | 1.03E-11 |
| 70-30-4 | Hexachlorophene | 1.75E-05 | 1.37E-06 | 9.92E-06 | 0.00E+00 | 0.00E+00 | 0.00E+00 | 1.37E-06 | 9.92E-06 |
| 70648-26-9 | 1,2,3,4,7,8-Hexachlorodibenzofuran | 1.65E-11 | 1.29E-12 | 9.32E-12 | 0.00E+00 | 0.00E+00 | 0.00E+00 | 1.29E-12 | 9.32E-12 |
| 72918-21-9 | 1,2,3,7,8,9-Hexachlorodibenzofuran | 1.82E-11 | 1.43E-12 | 1.03E-11 | 0.00E+00 | 0.00E+00 | 0.00E+00 | 1.43E-12 | 1.03E-11 |
| 74-88-4 | Iodomethane (Methyl iodide) | 2.33E-06 | 1.83E-07 | 1.32E-06 | 0.00E+00 | 0.00E+00 | 0.00E+00 | 1.83E-07 | 1.32E-06 |
| 74-95-3 | Methylene bromide | 2.33E-06 | 1.83E-07 | 1.32E-06 | 0.00E+00 | 0.00E+00 | 0.00E+00 | 1.83E-07 | 1.32E-06 |
| 75-25-2 | Bromoform | 2.33E-06 | 1.83E-07 | 1.32E-06 | 0.00E+00 | 0.00E+00 | 0.00E+00 | 1.83E-07 | 1.32E-06 |
| 75-29-6 | 2-Chloropropane | 2.33E-06 | 1.83E-07 | 1.32E-06 | 0.00E+00 | 0.00E+00 | 0.00E+00 | 1.83E-07 | 1.32E-06 |
| 75-44-5 | Phosgene | 2.33E-06 | 1.83E-07 | 1.32E-06 | 0.00E+00 | 0.00E+00 | 0.00E+00 | 1.83E-07 | 1.32E-06 |
| 76-01-7 | Pentachloroethane | 2.33E-06 | 1.83E-07 | 1.32E-06 | 0.00E+00 | 0.00E+00 | 0.00E+00 | 1.83E-07 | 1.32E-06 |
| 764-41-0 | 1,4-Dichloro-2-butene | 2.33E-06 | 1.83E-07 | 1.32E-06 | 0.00E+00 | 0.00E+00 | 0.00E+00 | 1.83E-07 | 1.32E-06 |
| 765-34-4 | Glycidylaldehyde | 1.75E-05 | 1.37E-06 | 9.92E-06 | 0.00E+00 | 0.00E+00 | 0.00E+00 | 1.37E-06 | 9.92E-06 |
| 77-47-4 | Hexachlorocyclopentadiene | 1.75E-05 | 1.37E-06 | 9.92E-06 | 0.00E+00 | 0.00E+00 | 0.00E+00 | 1.37E-06 | 9.92E-06 |
| 77-78-1 | Dimethyl sulfate | 1.75E-05 | 1.37E-06 | 9.92E-06 | 0.00E+00 | 0.00E+00 | 0.00E+00 | 1.37E-06 | 9.92E-06 |
| 80-62-6 | Methyl methacrylate | 2.33E-06 | 1.83E-07 | 1.32E-06 | 0.00E+00 | 0.00E+00 | 0.00E+00 | 1.83E-07 | 1.32E-06 |
| 822-06-0 | Hexamethylene-1,5-diisocyanate | 1.75E-05 | 1.37E-06 | 9.92E-06 | 0.00E+00 | 0.00E+00 | 0.00E+00 | 1.37E-06 | 9.92E-06 |
| 823-40-5 | Toluene-2,6-diamine | 1.75E-05 | 1.37E-06 | 9.92E-06 | 0.00E+00 | 0.00E+00 | 0.00E+00 | 1.37E-06 | 9.92E-06 |
| 85-44-9 | Phthalic anhydride | 1.75E-05 | 1.37E-06 | 9.92E-06 | 0.00E+00 | 0.00E+00 | 0.00E+00 | 1.37E-06 | 9.92E-06 |
| 87-61-6 | 1,2,3-Trichlorobenzene | 2.33E-06 | 1.83E-07 | 1.32E-06 | 0.00E+00 | 0.00E+00 | 0.00E+00 | 1.83E-07 | 1.32E-06 |
| 88-74-4 | o-Nitroaniline (2-Nitroaniline) | 1.75E-05 | 1.37E-06 | 9.92E-06 | 0.00E+00 | 0.00E+00 | 0.00E+00 | 1.37E-06 | 9.92E-06 |
| 90-04-0 | o-Anisidine | 1.75E-05 | 1.37E-06 | 9.92E-06 | 0.00E+00 | 0.00E+00 | 0.00E+00 | 1.37E-06 | 9.92E-06 |
| 91-57-6 | 2-Methylnaphthalene | 3.50E-06 | 2.75E-07 | 1.98E-06 | 0.00E+00 | 0.00E+00 | 0.00E+00 | 2.75E-07 | 1.98E-06 |
| 91-94-1 | 3,3'-Dichlorobenzidine | 1.75E-05 | 1.37E-06 | 9.92E-06 | 0.00E+00 | 0.00E+00 | 0.00E+00 | 1.37E-06 | 9.92E-06 |
| 924-16-3 | N-Nitrosodi-n-butylamine | 2.33E-06 | 1.83E-07 | 1.32E-06 | 0.00E+00 | 0.00E+00 | 0.00E+00 | 1.83E-07 | 1.32E-06 |
| 94-59-7 | Safrole | 1.75E-05 | 1.37E-06 | 9.92E-06 | 0.00E+00 | 0.00E+00 | 0.00E+00 | 1.37E-06 | 9.92E-06 |
| 95-53-4 | o-Toluidine | 2.33E-06 | 1.83E-07 | 1.32E-06 | 0.00E+00 | 0.00E+00 | 0.00E+00 | 1.83E-07 | 1.32E-06 |
| 95-63-6 | 1,2,4-Trimethyl benzene | 2.33E-06 | 1.83E-07 | 1.32E-06 | 0.00E+00 | 0.00E+00 | 0.00E+00 | 1.83E-07 | 1.32E-06 |
| 95-94-3 | 1,2,4,5-Tetrachlorobenzene | 1.75E-05 | 1.37E-06 | 9.92E-06 | 0.00E+00 | 0.00E+00 | 0.00E+00 | 1.37E-06 | 9.92E-06 |

**Estimated Organic Concentration at Point of Maximum Impact for Pretreatment**

| | PT-S3 Vapor/Particle/Particle-Bound | PT-S4 Vapor/Particle/Particle-Bound | |
|---|---|---|---|
| Average Annual Concentration | 0.07839 | 0.07451 | $\mu g/m^3$ per g/s |
| Maximum 24-Hour Concentration | 0.56649 | 0.52364 | $\mu g/m^3$ per g/s |

| CAS Number | Compound | PT-S3 (g/s) | PT-S3 Annual Average Concentration ($\mu g/m^3$) | PT-S3 Maximum 24 hr Concentration (ug/m3) | PT-S4 (gm/sec) | PT-S4 Annual Average Concentration (ug/m3) | PT-S4 Maximum 24 hr Concentration (ug/m3) | Total PT Annual Average Concentration (ug/m3) | Total Pretreat Maximum 24 hr Concentration (ug/m3) |
|---|---|---|---|---|---|---|---|---|---|
| 96-12-8 | 1,2-Dibromo-3-chloropropane | 1.75E-05 | 1.37E-06 | 9.92E-06 | 0.00E+00 | 0.00E+00 | 0.00E+00 | 1.37E-06 | 9.92E-06 |
| 96-18-4 | 1,2,3-Trichloropropane | 2.33E-06 | 1.83E-07 | 1.32E-06 | 0.00E+00 | 0.00E+00 | 0.00E+00 | 1.83E-07 | 1.32E-06 |
| 96-45-7 | Ethylene thiourea | 1.75E-05 | 1.37E-06 | 9.92E-06 | 0.00E+00 | 0.00E+00 | 0.00E+00 | 1.37E-06 | 9.92E-06 |
| 97-63-2 | Ethyl methacrylate | 2.33E-06 | 1.83E-07 | 1.32E-06 | 0.00E+00 | 0.00E+00 | 0.00E+00 | 1.83E-07 | 1.32E-06 |
| 98-01-1 | Furfural | 1.75E-05 | 1.37E-06 | 9.92E-06 | 0.00E+00 | 0.00E+00 | 0.00E+00 | 1.37E-06 | 9.92E-06 |
| 98-06-6 | tert-Butyl benzene | 2.33E-06 | 1.83E-07 | 1.32E-06 | 0.00E+00 | 0.00E+00 | 0.00E+00 | 1.83E-07 | 1.32E-06 |
| 98-07-7 | Benzotrichloride | 1.75E-05 | 1.37E-06 | 9.92E-06 | 0.00E+00 | 0.00E+00 | 0.00E+00 | 1.37E-06 | 9.92E-06 |
| 99-35-4 | 1,3,5-Trinitrobenzene | 1.75E-05 | 1.37E-06 | 9.92E-06 | 0.00E+00 | 0.00E+00 | 0.00E+00 | 1.37E-06 | 9.92E-06 |
| 99-65-0 | 1,3-Dinitrobenzene | 1.75E-05 | 1.37E-06 | 9.92E-06 | 0.00E+00 | 0.00E+00 | 0.00E+00 | 1.37E-06 | 9.92E-06 |
| 99-87-6 | p-Cymene | 2.33E-06 | 1.83E-07 | 1.32E-06 | 0.00E+00 | 0.00E+00 | 0.00E+00 | 1.83E-07 | 1.32E-06 |
| no cas # | Dibenzo(a,h)fluoranthene | 3.50E-06 | 2.75E-07 | 1.98E-06 | 0.00E+00 | 0.00E+00 | 0.00E+00 | 2.75E-07 | 1.98E-06 |
| Coplanar PCBs | | | | | | | | | |
| 31508-00-6 | 2,3',4,4',5-Pentachlorobiphenyl (PBC 118) | 1.90E-15 | 1.49E-16 | 1.08E-15 | 9.56E-16 | 7.12E-17 | 5.00E-16 | 2.20E-16 | 1.58E-15 |
| 32598-13-3 | 3,3',4,4'-Tetrachlorobiphenyl (TCB) | 1.90E-15 | 1.49E-16 | 1.08E-15 | 9.56E-16 | 7.12E-17 | 5.00E-16 | 2.20E-16 | 1.58E-15 |
| 32598-14-4 | 2,3,3',4,4'-Pentachlorobiphenyl (PCB 105) | 1.90E-15 | 1.49E-16 | 1.08E-15 | 9.56E-16 | 7.12E-17 | 5.00E-16 | 2.20E-16 | 1.58E-15 |
| 32774-16-6 | 3,3',4,4',5,5'-Hexachlorobiphenyl | 1.90E-15 | 1.49E-16 | 1.08E-15 | 9.56E-16 | 7.12E-17 | 5.00E-16 | 2.20E-16 | 1.58E-15 |
| 35065-29-3 | 2,2',3,4,4',5,5'-Heptachlorobiphenyl | 1.90E-15 | 1.49E-16 | 1.08E-15 | 9.56E-16 | 7.12E-17 | 5.00E-16 | 2.20E-16 | 1.58E-15 |
| 35065-30-6 | 2,2',3,3',4,4',5-Heptachlorobiphenyl | 1.90E-15 | 1.49E-16 | 1.08E-15 | 9.56E-16 | 7.12E-17 | 5.00E-16 | 2.20E-16 | 1.58E-15 |
| 38380-08-4 | 2,3,3',4,4',5-Hexachlorobiphenyl (PCB 157) | 1.90E-15 | 1.49E-16 | 1.08E-15 | 9.56E-16 | 7.12E-17 | 5.00E-16 | 2.20E-16 | 1.58E-15 |
| 39635-31-9 | 2,3,3',4,4',5,5'-Heptachlorobiphenyl | 1.90E-15 | 1.49E-16 | 1.08E-15 | 9.56E-16 | 7.12E-17 | 5.00E-16 | 2.20E-16 | 1.58E-15 |
| 52663-72-6 | 2,3',4,4',5,5'-Hexachlorobiphenyl | 1.90E-15 | 1.49E-16 | 1.08E-15 | 9.56E-16 | 7.12E-17 | 5.00E-16 | 2.20E-16 | 1.58E-15 |

**Estimated Organic Concentration at Point of Maximum Impact for Pretreatment**

| | PT-S3 Vapor/Particle/Particle-Bound | PT-S4 Vapor/Particle/Particle-Bound | |
|---|---|---|---|
| Average Annual Concentration | 0.07839 | 0.07451 | $\mu g/m^3$ per g/s |
| Maximum 24-Hour Concentration | 0.56649 | 0.52364 | $\mu g/m^3$ per g/s |

| CAS Number | Compound | PT-S3 (g/s) | PT-S3 Annual Average Concentration ($\mu g/m^3$) | PT-S3 Maximum 24 hr Concentration (ug/m3) | PT-S4 (gm/sec) | PT-S4 Annual Average Concentration (ug/m3) | PT-S4 Maximum 24 hr Concentration (ug/m3) | Total PT Annual Average Concentration (ug/m3) | Total Pretreat Maximum 24 hr Concentration (ug/m3) |
|---|---|---|---|---|---|---|---|---|---|
| 57465-28-8 | 3,3',4,4',5-Pentachlorobiphenyl | 1.90E-15 | 1.49E-16 | 1.08E-15 | 9.56E-16 | 7.12E-17 | 5.00E-16 | 2.20E-16 | 1.58E-15 |
| 65510-44-3 | 2',3,4,4',5-Pentachlorobiphenyl | 1.90E-15 | 1.49E-16 | 1.08E-15 | 9.56E-16 | 7.12E-17 | 5.00E-16 | 2.20E-16 | 1.58E-15 |
| 69782-90-7 | 2,3,3',4,4',5'-Hexachlorobiphenyl | 1.90E-15 | 1.49E-16 | 1.08E-15 | 9.56E-16 | 7.12E-17 | 5.00E-16 | 2.20E-16 | 1.58E-15 |
| 70362-50-4 | 3,4,4',5-Tetrachlorobiphenyl | 1.90E-15 | 1.49E-16 | 1.08E-15 | 9.56E-16 | 7.12E-17 | 5.00E-16 | 2.20E-16 | 1.58E-15 |
| 74472-37-0 | 2,3,4,4',5-Pentachlorobiphenyl | 1.90E-15 | 1.49E-16 | 1.08E-15 | 9.56E-16 | 7.12E-17 | 5.00E-16 | 2.20E-16 | 1.58E-15 |

| Estimated Organic Concentration at Point of Maximum Impact for LAW | | | | |
|---|---|---|---|---|
| | | | | |
| | | | LV-S3 Unit Concentration Factors | |
| | | | Vapor/particle/ particle-bound | |
| Average Annual Concentration | | | 0.08352 | ug/m3 per g/s |
| Maximum 24-hour Concentration | | | 0.62274 | ug/m3 per g/s |
| | | | | |
| CAS Number | Compound | LV-S3 (gm/sec) | LV-S3 Annual Average Concentration (ug/m3) | LV-S3 Maximum 24 hr Concentration (ug/m3) |
| 100-00-5 | p-Nitrochlorobenzene | 1.27E-05 | 1.06E-06 | 7.93E-06 |
| 100-21-0 | p-Phthalic acid | 1.24E-03 | 1.04E-04 | 7.73E-04 |
| 100-25-4 | 1,4-Dinitrobenzene | 1.29E-11 | 1.08E-12 | 8.05E-12 |
| 100-41-4 | Ethyl benzene | 0.00E+00 | 0.00E+00 | 0.00E+00 |
| 100-42-5 | Styrene | 0.00E+00 | 0.00E+00 | 0.00E+00 |
| 10061-01-5 | cis-1,3-Dichloropropene | 0.00E+00 | 0.00E+00 | 0.00E+00 |
| 10061-02-6 | trans-1,3-Dichloropropene | 0.00E+00 | 0.00E+00 | 0.00E+00 |
| 101-55-3 | 4-Bromophenylphenyl ether | 5.13E-09 | 4.28E-10 | 3.19E-09 |
| 101-84-8 | Diphenyl ether | 3.73E-14 | 3.11E-15 | 2.32E-14 |
| 106-35-4 | 3-Heptanone | 1.13E-09 | 9.42E-11 | 7.02E-10 |
| 106-42-3 | p-Xylene (Dimethyl benzene) | 0.00E+00 | 0.00E+00 | 0.00E+00 |
| 106-46-7 | 1,4-Dichlorobenzene | 0.00E+00 | 0.00E+00 | 0.00E+00 |
| 106-88-7 | 1,2-Epoxybutane | 5.68E-11 | 4.74E-12 | 3.53E-11 |
| 106-93-4 | Ethylene dibromide (Dibromethane) | 5.08E-13 | 4.24E-14 | 3.16E-13 |
| 106-97-8 | Butane | 0.00E+00 | 0.00E+00 | 0.00E+00 |
| 106-99-0 | 1,3-Butadiene | 0.00E+00 | 0.00E+00 | 0.00E+00 |
| 107-02-8 | Acrolein | 1.13E-09 | 9.42E-11 | 7.02E-10 |
| 107-05-1 | 3-Chloropropene (Allyl chloride) | 0.00E+00 | 0.00E+00 | 0.00E+00 |
| 107-06-2 | 1,2-Dichloroethane (Ethylene chloride) | 0.00E+00 | 0.00E+00 | 0.00E+00 |
| 107-12-0 | Propionitrile | 2.02E-08 | 1.69E-09 | 1.26E-08 |
| 107-13-1 | Acrylonitrile | 1.13E-09 | 9.42E-11 | 7.02E-10 |
| 107-18-6 | 2-Propene-1-ol | 1.27E-05 | 1.06E-06 | 7.93E-06 |
| 107-31-3 | Formic acid, methyl ester | 2.58E-10 | 2.15E-11 | 1.61E-10 |
| 107-66-4 | Dibutylphosphate | 1.36E-11 | 1.14E-12 | 8.49E-12 |
| 107-87-9 | 2-Pentanone | 1.13E-09 | 9.42E-11 | 7.02E-10 |
| 108-03-2 | 1-Nitropropane | 5.13E-09 | 4.28E-10 | 3.19E-09 |
| 108-05-4 | Vinyl acetate | 1.69E-13 | 1.41E-14 | 1.05E-13 |
| 108-10-1 | Hexone (4-Methyl-2-pentanone or MIBK) | 1.13E-09 | 9.42E-11 | 7.02E-10 |
| 108-20-3 | Bis(isopropyl)ether | 0.00E+00 | 0.00E+00 | 0.00E+00 |

| Estimated Organic Concentration at Point of Maximum Impact for LAW | | | | |
|---|---|---|---|---|
| | | | | |
| | | | LV-S3 Unit Concentration Factors | |
| | | | Vapor/particle/ particle-bound | |
| Average Annual Concentration | | | 0.08352 | ug/m3 per g/s |
| Maximum 24-hour Concentration | | | 0.62274 | ug/m3 per g/s |
| | | | | |
| CAS Number | Compound | LV-S3 (gm/sec) | LV-S3 Annual Average Concentration (ug/m3) | LV-S3 Maximum 24 hr Concentration (ug/m3) |
| 108-38-3 | m-Xylene (Dimethyl benzene) | 0.00E+00 | 0.00E+00 | 0.00E+00 |
| 108-39-4 | m-Cresol | 1.30E-05 | 1.08E-06 | 8.07E-06 |
| 108-87-2 | Methylcyclohexane | 0.00E+00 | 0.00E+00 | 0.00E+00 |
| 108-88-3 | Toluene | 0.00E+00 | 0.00E+00 | 0.00E+00 |
| 108-90-7 | Chlorobenzene | 0.00E+00 | 0.00E+00 | 0.00E+00 |
| 108-93-0 | Cyclohexanol | 2.80E-06 | 2.34E-07 | 1.74E-06 |
| 108-94-1 | Cyclohexanone | 5.87E-07 | 4.90E-08 | 3.65E-07 |
| 108-95-2 | Phenol | 4.71E-04 | 3.93E-05 | 2.93E-04 |
| 109-66-0 | n-Pentane | 0.00E+00 | 0.00E+00 | 0.00E+00 |
| 109-99-9 | Tetrahydrofuran | 4.29E-08 | 3.58E-09 | 2.67E-08 |
| 110-12-3 | 5-Methyl-2-hexanone | 5.68E-11 | 4.74E-12 | 3.53E-11 |
| 110-43-0 | 2-Heptanone | 5.68E-11 | 4.74E-12 | 3.53E-11 |
| 110-54-3 | n-Hexane | 0.00E+00 | 0.00E+00 | 0.00E+00 |
| 110-62-3 | n-Valeraldehyde | 2.58E-10 | 2.15E-11 | 1.61E-10 |
| 110-82-7 | Cyclohexane | 0.00E+00 | 0.00E+00 | 0.00E+00 |
| 110-83-8 | Cyclohexene | 0.00E+00 | 0.00E+00 | 0.00E+00 |
| 110-86-1 | Pyridine | 2.67E-06 | 2.23E-07 | 1.66E-06 |
| 111-65-9 | n-Octane | 0.00E+00 | 0.00E+00 | 0.00E+00 |
| 111-76-2 | Ethylene glycol monobutyl ether | 5.89E-05 | 4.92E-06 | 3.67E-05 |
| 111-84-2 | n-Nonane | 0.00E+00 | 0.00E+00 | 0.00E+00 |
| 117-81-7 | Bis(2-ethylhexyl)phthalate (DEHP) | 5.39E-12 | 4.50E-13 | 3.36E-12 |
| 117-84-0 | n-Dioctyl phthalate | 1.05E-13 | 8.73E-15 | 6.51E-14 |
| 118-74-1 | Hexachlorobenzene | 0.00E+00 | 0.00E+00 | 0.00E+00 |
| 120-12-7 | Anthracene | 4.27E-08 | 3.57E-09 | 2.66E-08 |
| 120-82-1 | 1,2,4-Trichlorobenzene | 0.00E+00 | 0.00E+00 | 0.00E+00 |
| 120-83-2 | 2,4-Dichlorophenol | 1.27E-05 | 1.06E-06 | 7.93E-06 |
| 121-44-8 | Triethylamine | 5.68E-11 | 4.74E-12 | 3.53E-11 |
| 121-69-7 | Dimethylaniline | 2.02E-08 | 1.69E-09 | 1.26E-08 |
| 122-39-4 | N,N-Diphenylamine | 4.39E-06 | 3.66E-07 | 2.73E-06 |
| 123-19-3 | 4-Heptanone | 2.02E-08 | 1.69E-09 | 1.26E-08 |
| 123-38-6 | n-Propionaldehyde | 1.13E-09 | 9.42E-11 | 7.02E-10 |
| 123-51-3 | 3-Methyl-1-butanol | 3.45E-07 | 2.88E-08 | 2.15E-07 |

| Estimated Organic Concentration at Point of Maximum Impact for LAW | | | | |
|---|---|---|---|---|
| | | | | |
| | | | LV-S3 Unit Concentration Factors | |
| | | | Vapor/particle/ particle-bound | |
| Average Annual Concentration | | | 0.08352 | ug/m3 per g/s |
| Maximum 24-hour Concentration | | | 0.62274 | ug/m3 per g/s |
| | | | | |
| CAS Number | Compound | LV-S3 (gm/sec) | LV-S3 Annual Average Concentration (ug/m3) | LV-S3 Maximum 24 hr Concentration (ug/m3) |
| 123-86-4 | Acetic acid n-butyl ester | 1.69E-13 | 1.41E-14 | 1.05E-13 |
| 123-91-1 | 1,4-Dioxane | 7.64E-06 | 6.38E-07 | 4.76E-06 |
| 126-73-8 | Tributyl phosphate | 7.60E-04 | 6.35E-05 | 4.74E-04 |
| 126-98-7 | 2-Methyl-2-propenenitrile (Methacrylonitrile) | 3.73E-14 | 3.11E-15 | 2.32E-14 |
| 127-18-4 | Perchloroethylene (tetrachloroethylene) | 0.00E+00 | 0.00E+00 | 0.00E+00 |
| 127-19-5 | N,N-Dimethylacetamide | 2.64E-04 | 2.20E-05 | 1.64E-04 |
| 128-37-0 | 2,6-Bis(tert-butyl)-4-methylphenol | 9.20E-06 | 7.69E-07 | 5.73E-06 |
| 129-00-0 | Pyrene | 2.58E-14 | 2.15E-15 | 1.60E-14 |
| 1321-64-8 | Pentachloronaphthalene | 5.82E-17 | 4.86E-18 | 3.63E-17 |
| 1321-65-9 | Trichloronaphthalene | 2.58E-10 | 2.15E-11 | 1.61E-10 |
| 132-64-9 | Dibenzofuran | 2.58E-10 | 2.15E-11 | 1.61E-10 |
| 1335-87-1 | Hexachloronaphthalene | 5.82E-17 | 4.86E-18 | 3.63E-17 |
| 1335-88-2 | Tetrachloronaphthalene | 2.93E-18 | 2.45E-19 | 1.83E-18 |
| 1336-36-3 | Polychlorinated biphenyls (PCBs) | 3.08E-20 | 2.57E-21 | 1.92E-20 |
| 141-78-6 | Acetic acid ethyl ester (Ethyl acetate) | 5.13E-09 | 4.28E-10 | 3.19E-09 |
| 141-79-7 | 4-Methyl-3-penten-2-one | 9.20E-08 | 7.68E-09 | 5.73E-08 |
| 142-82-5 | n-Heptane | 0.00E+00 | 0.00E+00 | 0.00E+00 |
| 144-62-7 | Oxalic acid | 1.24E-04 | 1.03E-05 | 7.71E-05 |
| 156-60-5 | trans-1,2-Dichloroethylene | 0.00E+00 | 0.00E+00 | 0.00E+00 |
| 1582-09-8 | Trifluralin | 5.82E-17 | 4.86E-18 | 3.63E-17 |
| 1634-04-4 | Methyl tert-butyl ether | 3.73E-14 | 3.11E-15 | 2.32E-14 |
| 1836-75-5 | Nitrofen | 5.39E-12 | 4.50E-13 | 3.36E-12 |
| 189-55-9 | Dibenzo[a,i]pyrene | 1.36E-11 | 1.14E-12 | 8.49E-12 |
| 189-64-0 | Dibenzo[a,h]pyrene | 1.36E-11 | 1.14E-12 | 8.49E-12 |
| 191-24-2 | Benzo(g,h,i)perylene | 5.39E-12 | 4.50E-13 | 3.36E-12 |
| 191-30-0 | Benzo[a,i]pyrene | 1.36E-11 | 1.14E-12 | 8.49E-12 |
| 192-65-4 | Dibenzo[a,e]pyrene | 1.36E-11 | 1.14E-12 | 8.49E-12 |
| 193-39-5 | Indeno(1,2,3-cd)pyrene | 5.39E-12 | 4.50E-13 | 3.36E-12 |
| 205-82-3 | Benzo(j)fluoranthene | 8.64E-12 | 7.22E-13 | 5.38E-12 |
| 205-99-2 | Benzo(b)fluoranthene | 5.39E-12 | 4.50E-13 | 3.36E-12 |

| Estimated Organic Concentration at Point of Maximum Impact for LAW | | | | |
|---|---|---|---|---|
| | | | | |
| | | | LV-S3 Unit Concentration Factors | |
| | | | Vapor/particle/ particle-bound | |
| Average Annual Concentration | | | 0.08352 | ug/m3 per g/s |
| Maximum 24-hour Concentration | | | 0.62274 | ug/m3 per g/s |
| | | | | |
| CAS Number | Compound | LV-S3 (gm/sec) | LV-S3 Annual Average Concentration (ug/m3) | LV-S3 Maximum 24 hr Concentration (ug/m3) |
| 206-44-0 | Fluoranthene | 2.31E-14 | 1.93E-15 | 1.44E-14 |
| 207-08-9 | Benzo(k)fluoranthene | 5.39E-12 | 4.50E-13 | 3.36E-12 |
| 208-96-8 | Acenaphthylene | 5.13E-09 | 4.28E-10 | 3.19E-09 |
| 218-01-9 | Chrysene | 1.36E-13 | 1.14E-14 | 8.49E-14 |
| 2234-13-1 | Octachloronaphthalene | 5.82E-17 | 4.86E-18 | 3.63E-17 |
| 224-42-0 | Dibenz[a,j]acridine | 1.40E-11 | 1.17E-12 | 8.74E-12 |
| 226-36-8 | Dibenz[a,h]acridine | 1.40E-11 | 1.17E-12 | 8.74E-12 |
| 2385-85-5 | Mirex | 0.00E+00 | 0.00E+00 | 0.00E+00 |
| 2551-13-7 | Trimethyl benzene | 0.00E+00 | 0.00E+00 | 0.00E+00 |
| 26140-60-3 | Terphenyls | 5.42E-16 | 4.53E-17 | 3.38E-16 |
| 27154-33-2 | Trichlorofluoroethane | 0.00E+00 | 0.00E+00 | 0.00E+00 |
| 287-92-3 | Cyclopentane | 0.00E+00 | 0.00E+00 | 0.00E+00 |
| 309-00-2 | Aldrin | 6.69E-18 | 5.59E-19 | 4.17E-18 |
| 319-84-6 | Hexachlorocyclohexane (Lindane) Alpha BHC | 6.79E-09 | 5.67E-10 | 4.23E-09 |
| 319-85-7 | Hexachlorocyclohexane (Lindane) Beta BHC | 1.77E-14 | 1.47E-15 | 1.10E-14 |
| 319-86-8 | Delta-BHC | 1.80E-14 | 1.50E-15 | 1.12E-14 |
| 3697-24-3 | 5-Methylchrysene | 1.05E-13 | 8.73E-15 | 6.51E-14 |
| 3825-26-1 | Ammonium perfluorooctanoate | 5.82E-17 | 4.86E-18 | 3.63E-17 |
| 4170-30-3 | 2-Butenaldehyde (2-Butenal or Crotonaldehyde) | 5.80E-07 | 4.84E-08 | 3.61E-07 |
| 465-73-6 | Isodrin | 5.25E-14 | 4.39E-15 | 3.27E-14 |
| 50-00-0 | Formaldehyde | 1.23E-04 | 1.03E-05 | 7.65E-05 |
| 50-29-3 | 4,4-DDT | 1.54E-16 | 1.29E-17 | 9.61E-17 |
| 50-32-8 | Benzo(a)pyrene | 6.95E-14 | 5.80E-15 | 4.33E-14 |
| 53-70-3 | Dibenzo(a,h)anthracene | 1.44E-14 | 1.20E-15 | 8.97E-15 |
| 540-59-0 | 1,2-Dichloroethylene | 0.00E+00 | 0.00E+00 | 0.00E+00 |
| 540-84-1 | 2,2,4-Trimethylpentane | 0.00E+00 | 0.00E+00 | 0.00E+00 |
| 541-73-1 | 1,3-Dichlorobenzene | 0.00E+00 | 0.00E+00 | 0.00E+00 |
| 56-23-5 | Carbon tetrachloride | 0.00E+00 | 0.00E+00 | 0.00E+00 |
| 563-80-4 | 3-Methyl-2-butanone | 1.13E-09 | 9.42E-11 | 7.02E-10 |
| 56-49-5 | 3-Methylcholanthrene | 0.00E+00 | 0.00E+00 | 0.00E+00 |
| 56-55-3 | Benzo(a)anthracene | 2.31E-14 | 1.93E-15 | 1.44E-14 |

| Estimated Organic Concentration at Point of Maximum Impact for LAW | | | | |
|---|---|---|---|---|
| | | | | |
| | | | LV-S3 Unit Concentration Factors | |
| | | | Vapor/particle/ particle-bound | |
| Average Annual Concentration | | | 0.08352 | ug/m3 per g/s |
| Maximum 24-hour Concentration | | | 0.62274 | ug/m3 per g/s |
| | | | | |
| CAS Number | Compound | LV-S3 (gm/sec) | LV-S3 Annual Average Concentration (ug/m3) | LV-S3 Maximum 24 hr Concentration (ug/m3) |
| 57-14-7 | 1,1-Dimethylhydrazine | 1.57E-06 | 1.31E-07 | 9.77E-07 |
| 58-89-9 | gamma-BHC (Lindane) | 2.79E-16 | 2.33E-17 | 1.74E-16 |
| 58-90-2 | 2,3,4,6-Tetrachlorophenol | 3.12E-06 | 2.60E-07 | 1.94E-06 |
| 591-78-6 | 2-Hexanone | 1.13E-09 | 9.42E-11 | 7.02E-10 |
| 59-50-7 | 4-Chloro-3-methylphenol | 1.05E-13 | 8.73E-15 | 6.51E-14 |
| 59-89-2 | N-Nitrosomorpholine | 1.14E-03 | 9.50E-05 | 7.09E-04 |
| 602-87-9 | 5-Nitroacenaphthene | 6.69E-13 | 5.59E-14 | 4.17E-13 |
| 60-29-7 | Ethyl ether | 0.00E+00 | 0.00E+00 | 0.00E+00 |
| 603-34-9 | Triphenylamine | 8.23E-06 | 6.87E-07 | 5.12E-06 |
| 60-34-4 | Methylhydrazine | 2.80E-06 | 2.34E-07 | 1.74E-06 |
| 60-35-5 | Acetamide | 2.64E-04 | 2.20E-05 | 1.64E-04 |
| 60-57-1 | Dieldrin | 1.37E-16 | 1.14E-17 | 8.52E-17 |
| 621-64-7 | Di-n-Propylnitrosamine (N-Nitroso-di-n-propylamine) | 1.27E-05 | 1.06E-06 | 7.93E-06 |
| 624-83-9 | Methyl isocyanate | 0.00E+00 | 0.00E+00 | 0.00E+00 |
| 627-13-4 | Nitric acid, propyl ester | 0.00E+00 | 0.00E+00 | 0.00E+00 |
| 62-75-9 | N-Nitroso-N,N-dimethylamine (Dimethylnitrosamine) | 1.10E-04 | 9.18E-06 | 6.84E-05 |
| 630-20-6 | 1,1,1,2-Tetrachloroethane | 0.00E+00 | 0.00E+00 | 0.00E+00 |
| 64-17-5 | Ethyl alcohol | 2.80E-06 | 2.34E-07 | 1.74E-06 |
| 64-18-6 | Formic acid | 7.60E-04 | 6.35E-05 | 4.74E-04 |
| 64-19-7 | Acetic acid | 1.14E-03 | 9.50E-05 | 7.09E-04 |
| 67-56-1 | Methyl alcohol (Methanol) | 2.80E-06 | 2.34E-07 | 1.74E-06 |
| 67-63-0 | 2-Propyl alcohol (Isopropanol; Propan-2-01) | 5.87E-07 | 4.90E-08 | 3.65E-07 |
| 67-64-1 | 2-Propanone (Acetone) | 1.10E-07 | 9.22E-09 | 6.87E-08 |
| 67-66-3 | Chloroform | 0.00E+00 | 0.00E+00 | 0.00E+00 |
| 67-72-1 | Hexachloroethane | 0.00E+00 | 0.00E+00 | 0.00E+00 |
| 684-16-2 | Hexafluoroacetone | 0.00E+00 | 0.00E+00 | 0.00E+00 |
| 71-23-8 | n-Propyl alcohol | 5.87E-07 | 4.90E-08 | 3.65E-07 |
| 71-36-3 | n-Butyl alcohol | 5.87E-07 | 4.90E-08 | 3.65E-07 |
| 71-43-2 | Benzene | 0.00E+00 | 0.00E+00 | 0.00E+00 |
| 71-55-6 | Methyl chloroform (1,1,1-Trichloroethane) | 0.00E+00 | 0.00E+00 | 0.00E+00 |

| Estimated Organic Concentration at Point of Maximum Impact for LAW | | | | |
|---|---|---|---|---|
| | | | | |
| | | | LV-S3 Unit Concentration Factors | |
| | | | Vapor/particle/ particle-bound | |
| Average Annual Concentration | | | 0.08352 | ug/m3 per g/s |
| Maximum 24-hour Concentration | | | 0.62274 | ug/m3 per g/s |
| | | | | |
| CAS Number | Compound | LV-S3 (gm/sec) | LV-S3 Annual Average Concentration (ug/m3) | LV-S3 Maximum 24 hr Concentration (ug/m3) |
| 72-20-8 | Endrin | 6.97E-16 | 5.82E-17 | 4.34E-16 |
| 72-43-5 | Methoxychlor | 2.88E-13 | 2.41E-14 | 1.79E-13 |
| 72-54-8 | 4,4-DDD | 6.97E-16 | 5.82E-17 | 4.34E-16 |
| 72-55-9 | 4,4-DDE | 3.62E-18 | 3.02E-19 | 2.25E-18 |
| 74-83-9 | Bromomethane (Methyl bromide) | 0.00E+00 | 0.00E+00 | 0.00E+00 |
| 74-87-3 | Chloromethane (Methyl chloride) | 0.00E+00 | 0.00E+00 | 0.00E+00 |
| 74-97-5 | Bromochloromethane | 0.00E+00 | 0.00E+00 | 0.00E+00 |
| 74-99-7 | Methylacetylene | 0.00E+00 | 0.00E+00 | 0.00E+00 |
| 75-00-3 | Chloroethane | 0.00E+00 | 0.00E+00 | 0.00E+00 |
| 75-01-4 | Vinyl chloride (1-Chloroethene) | 0.00E+00 | 0.00E+00 | 0.00E+00 |
| 75-05-8 | Acetonitrile | 4.42E-08 | 3.70E-09 | 2.76E-08 |
| 75-07-0 | Acetaldehyde | 9.20E-08 | 7.68E-09 | 5.73E-08 |
| 75-09-2 | Dichloromethane (Methylene chloride) | 0.00E+00 | 0.00E+00 | 0.00E+00 |
| 75-12-7 | Formamide | 1.24E-03 | 1.03E-04 | 7.69E-04 |
| 75-15-0 | Carbon disulfide | 0.00E+00 | 0.00E+00 | 0.00E+00 |
| 75-21-8 | Ethylene oxide (Oxirane) | 5.68E-11 | 4.74E-12 | 3.53E-11 |
| 75-27-4 | Bromodichloromethane | 0.00E+00 | 0.00E+00 | 0.00E+00 |
| 75-34-3 | 1,1-Dichloroethane | 0.00E+00 | 0.00E+00 | 0.00E+00 |
| 75-35-4 | 1,1-Dichloroethene (Vinylidene chloride) | 0.00E+00 | 0.00E+00 | 0.00E+00 |
| 75-43-4 | Dichlorofluoromethane | 0.00E+00 | 0.00E+00 | 0.00E+00 |
| 75-45-6 | Chlorodifluoromethane | 0.00E+00 | 0.00E+00 | 0.00E+00 |
| 75-50-3 | Trimethylamine | 1.13E-09 | 9.42E-11 | 7.02E-10 |
| 75-52-5 | Nitromethane | 9.20E-08 | 7.68E-09 | 5.73E-08 |
| 75-55-8 | 2-Methylaziridine | 2.67E-06 | 2.23E-07 | 1.66E-06 |
| 75-61-6 | Difluorodibromomethane | 0.00E+00 | 0.00E+00 | 0.00E+00 |
| 75-63-8 | Trifluorobromomethane | 0.00E+00 | 0.00E+00 | 0.00E+00 |
| 75-65-0 | 2-Methyl-2-propanol | 5.87E-07 | 4.90E-08 | 3.65E-07 |
| 75-69-4 | Trichlorofluoromethane | 0.00E+00 | 0.00E+00 | 0.00E+00 |
| 75-71-8 | Dichlorodifluoromethane | 0.00E+00 | 0.00E+00 | 0.00E+00 |
| 75-99-0 | 2,2-Dichloropropionic acid | 1.14E-03 | 9.50E-05 | 7.09E-04 |

| Estimated Organic Concentration at Point of Maximum Impact for LAW | | | | |
|---|---|---|---|---|
| | | | | |
| | | | LV-S3 Unit Concentration Factors | |
| | | | Vapor/particle/ particle-bound | |
| Average Annual Concentration | | | 0.08352 | ug/m3 per g/s |
| Maximum 24-hour Concentration | | | 0.62274 | ug/m3 per g/s |
| | | | | |
| CAS Number | Compound | LV-S3 (gm/sec) | LV-S3 Annual Average Concentration (ug/m3) | LV-S3 Maximum 24 hr Concentration (ug/m3) |
| 76-03-9 | Trichloroacetic acid | 2.64E-04 | 2.20E-05 | 1.64E-04 |
| 76-11-9 | 1,1,1,2-Tetrachloro-2,2-difluoroethane | 0.00E+00 | 0.00E+00 | 0.00E+00 |
| 76-12-0 | 1,1,2,2-Tetrachloro-1,2-difluoroethane | 0.00E+00 | 0.00E+00 | 0.00E+00 |
| 76-13-1 | 1,2,2-Trichloro-1,1,2-trifluoroethane (Freon 113) | 0.00E+00 | 0.00E+00 | 0.00E+00 |
| 76-14-2 | 1,2-Dichloro-1,1,2,2-tetrafluoroethane | 0.00E+00 | 0.00E+00 | 0.00E+00 |
| 76-15-3 | Chloropentafluoroethane | 0.00E+00 | 0.00E+00 | 0.00E+00 |
| 76-44-8 | Heptachlor | 0.00E+00 | 0.00E+00 | 0.00E+00 |
| 78-83-1 | 2-Methylpropyl alcohol (Isobutyl alcohol) | 2.67E-06 | 2.23E-07 | 1.66E-06 |
| 78-87-5 | 1,2-Dichloropropane | 0.00E+00 | 0.00E+00 | 0.00E+00 |
| 78-92-2 | 1-Methylpropyl alcohol (2-Butanol) | 5.87E-07 | 4.90E-08 | 3.65E-07 |
| 78-93-3 | Methyl ethyl ketone (MEK, 2-Butanone) | 2.02E-08 | 1.69E-09 | 1.26E-08 |
| 79-00-5 | 1,1,2-Trichloroethane | 0.00E+00 | 0.00E+00 | 0.00E+00 |
| 79-01-6 | Trichloroethylene | 0.00E+00 | 0.00E+00 | 0.00E+00 |
| 79-09-4 | Propionic acid | 5.58E-04 | 4.66E-05 | 3.48E-04 |
| 79-10-7 | 2-Propenoic acid | 5.58E-04 | 4.66E-05 | 3.48E-04 |
| 79-20-9 | Methyl acetate | 5.13E-09 | 4.28E-10 | 3.19E-09 |
| 79-34-5 | 1,1,2,2-Tetrachloroethane | 3.73E-14 | 3.11E-15 | 2.32E-14 |
| 8001-35-2 | Toxaphene | 4.81E-16 | 4.01E-17 | 2.99E-16 |
| 82-68-8 | Pentachloronitrobenzene (PCBN or quintobenzene) | 9.20E-08 | 7.68E-09 | 5.73E-08 |
| 83-32-9 | Acenaphthene | 2.58E-10 | 2.15E-11 | 1.61E-10 |
| 84-66-2 | Diethyl phthalate | 2.65E-04 | 2.21E-05 | 1.65E-04 |
| 84-74-2 | Dibutyl phthalate | 1.04E-12 | 8.71E-14 | 6.50E-13 |
| 85-01-8 | Phenanthrene | 9.20E-08 | 7.68E-09 | 5.73E-08 |
| 85-68-7 | Butylbenzyl phthalate | 1.04E-12 | 8.71E-14 | 6.50E-13 |
| 86-73-7 | Fluorene | 5.82E-17 | 4.86E-18 | 3.63E-17 |
| 87-68-3 | Hexachlorobutadiene | 0.00E+00 | 0.00E+00 | 0.00E+00 |
| 87-86-5 | Pentachlorophenol | 1.14E-03 | 9.50E-05 | 7.09E-04 |

| Estimated Organic Concentration at Point of Maximum Impact for LAW | | | | |
|---|---|---|---|---|
| | | | | |
| | | | LV-S3 Unit Concentration Factors | |
| | | | Vapor/particle/ particle-bound | |
| Average Annual Concentration | | | 0.08352 | ug/m3 per g/s |
| Maximum 24-hour Concentration | | | 0.62274 | ug/m3 per g/s |
| | | | | |
| CAS Number | Compound | LV-S3 (gm/sec) | LV-S3 Annual Average Concentration (ug/m3) | LV-S3 Maximum 24 hr Concentration (ug/m3) |
| 88-06-2 | 2,4,6-Trichlorophenol | 1.27E-05 | 1.06E-06 | 7.93E-06 |
| 88-72-2 | 2-Nitrotoluene | 3.45E-07 | 2.88E-08 | 2.15E-07 |
| 88-75-5 | 2-Nitrophenol | 1.57E-06 | 1.31E-07 | 9.77E-07 |
| 88-85-7 | 2-sec-Butyl-4,6-dinitrophenol (Dinoseb) | 1.07E-11 | 8.90E-13 | 6.64E-12 |
| 88-89-1 | Picric acid | 1.88E-10 | 1.57E-11 | 1.17E-10 |
| 91-20-3 | Naphthalene | 0.00E+00 | 0.00E+00 | 0.00E+00 |
| 91-22-5 | Quinoline | 5.89E-05 | 4.92E-06 | 3.67E-05 |
| 91-58-7 | 2-Chloronapthalene | 1.69E-13 | 1.41E-14 | 1.05E-13 |
| 92-52-4 | 1,1'-Biphenyl | 1.69E-13 | 1.41E-14 | 1.05E-13 |
| 92-93-3 | 4-Nitrobiphenyl | 1.45E-13 | 1.21E-14 | 9.01E-14 |
| 93-72-1 | Silvex (2,4,5-TP) | 1.36E-11 | 1.14E-12 | 8.49E-12 |
| 93-76-5 | 2,4,5-T | 1.36E-11 | 1.14E-12 | 8.49E-12 |
| 94-75-7 | 2,4-D and esters (160C typed) | 1.14E-03 | 9.50E-05 | 7.09E-04 |
| 95-13-6 | Indene | 0.00E+00 | 0.00E+00 | 0.00E+00 |
| 95-47-6 | o-Xylene | 0.00E+00 | 0.00E+00 | 0.00E+00 |
| 95-48-7 | o-Cresol (2-Methylphenol) | 1.30E-05 | 1.08E-06 | 8.07E-06 |
| 95-49-8 | 2-Chlorotoluene | 0.00E+00 | 0.00E+00 | 0.00E+00 |
| 95-50-1 | o-Dichlorobenzene (1,2-Dichlorobenzene) | 0.00E+00 | 0.00E+00 | 0.00E+00 |
| 95-57-8 | 2-Chlorophenol | 2.67E-06 | 2.23E-07 | 1.66E-06 |
| 95-95-4 | 2,4,5-Trichlorophenol | 5.89E-05 | 4.92E-06 | 3.67E-05 |
| 96-22-0 | 3-Pentanone | 1.13E-09 | 9.42E-11 | 7.02E-10 |
| 96-69-5 | Bis(3-tert-butyl-4-hydroxy-6-methyl-phenyl)sulfide | 0.00E+00 | 0.00E+00 | 0.00E+00 |
| 98-51-1 | p-tert-Butyltoluene | 0.00E+00 | 0.00E+00 | 0.00E+00 |
| 98-82-8 | Cumene | 0.00E+00 | 0.00E+00 | 0.00E+00 |
| 98-83-9 | alpha-Methylstyrene | 0.00E+00 | 0.00E+00 | 0.00E+00 |
| 98-86-2 | Acetophenone | 2.25E-06 | 1.88E-07 | 1.40E-06 |
| 98-95-3 | Nitrobenzene | 1.57E-06 | 1.31E-07 | 9.77E-07 |
| Products of Incomplete Combustion (PICs) | 0 | 0.00E+00 | 0.00E+00 | 0.00E+00 |

| Estimated Organic Concentration at Point of Maximum Impact for LAW | | | | |
|---|---|---|---|---|
| | | | | |
| | | | LV-S3 Unit Concentration Factors | |
| | | | Vapor/particle/ particle-bound | |
| Average Annual Concentration | | | 0.08352 | ug/m3 per g/s |
| Maximum 24-hour Concentration | | | 0.62274 | ug/m3 per g/s |
| | | | | |
| CAS Number | Compound | LV-S3 (gm/sec) | LV-S3 Annual Average Concentration (ug/m3) | LV-S3 Maximum 24 hr Concentration (ug/m3) |
| 100-02-7 | 4-Nitrophenol | 3.09E-05 | 2.58E-06 | 1.93E-05 |
| 100-44-7 | Benzyl chloride | 4.12E-06 | 3.44E-07 | 2.57E-06 |
| 100-51-6 | Benzyl alcohol | 3.09E-05 | 2.58E-06 | 1.93E-05 |
| 100-52-7 | Benzaldehyde | 3.09E-05 | 2.58E-06 | 1.93E-05 |
| 101-77-9 | 4,4-Methylenedianiline | 3.09E-05 | 2.58E-06 | 1.93E-05 |
| 103-33-3 | Azobenzene | 3.09E-05 | 2.58E-06 | 1.93E-05 |
| 103-65-1 | n-Propyl benzene (Isocumene) | 4.12E-06 | 3.44E-07 | 2.57E-06 |
| 104-51-8 | n-Butylbenzene | 4.12E-06 | 3.44E-07 | 2.57E-06 |
| 105-67-9 | 2,4-Dimethylphenol | 3.09E-05 | 2.58E-06 | 1.93E-05 |
| 106-43-4 | 4-Chlorotoluene (p-Tolyl chloride) | 4.12E-06 | 3.44E-07 | 2.57E-06 |
| 106-44-5 | p-Cresol (4-Methyl phenol) | 3.09E-05 | 2.58E-06 | 1.93E-05 |
| 106-47-8 | p-Chloroaniline | 3.09E-05 | 2.58E-06 | 1.93E-05 |
| 106-49-0 | p-Toluidine | 3.09E-05 | 2.58E-06 | 1.93E-05 |
| 106-51-4 | Quinone | 3.09E-05 | 2.58E-06 | 1.93E-05 |
| 106-89-8 | Epichlorohydrin (1-chloro-2,3-epoxypropane) | 4.12E-06 | 3.44E-07 | 2.57E-06 |
| 107-19-7 | Propargyl alcohol | 4.12E-06 | 3.44E-07 | 2.57E-06 |
| 107-21-1 | Ethylene glycol | 4.12E-06 | 3.44E-07 | 2.57E-06 |
| 107-98-2 | Propylene gylcol monomethyl ether | 3.09E-05 | 2.58E-06 | 1.93E-05 |
| 108-60-1 | Dichloroisopropyl ether (2,2'-Oxybis(1-chloropropane)) | 3.09E-05 | 2.58E-06 | 1.93E-05 |
| 108-67-8 | 1,3,5-Trimethyl benzene | 4.12E-06 | 3.44E-07 | 2.57E-06 |
| 108-86-1 | Bromobenzene (Phenyl bromide) | 4.12E-06 | 3.44E-07 | 2.57E-06 |
| 109-77-3 | Malononitrile | 4.12E-06 | 3.44E-07 | 2.57E-06 |
| 109-86-4 | 2-Methoxyethanol | 3.09E-05 | 2.58E-06 | 1.93E-05 |
| 110-80-5 | 2-Ethoxyethanol | 3.09E-05 | 2.58E-06 | 1.93E-05 |
| 111-15-9 | Ethylene glycol monoethyl ether acetate | 3.09E-05 | 2.58E-06 | 1.93E-05 |
| 111-44-4 | Bis(2-chloroethyl) ether | 3.09E-05 | 2.58E-06 | 1.93E-05 |
| 111-91-1 | Bis(2-chloroethoxy)methane | 3.09E-05 | 2.58E-06 | 1.93E-05 |

| Estimated Organic Concentration at Point of Maximum Impact for LAW | | | | |
|---|---|---|---|---|
| | | | | |
| | | | LV-S3 Unit Concentration Factors | |
| | | | Vapor/particle/ particle-bound | |
| Average Annual Concentration | | | 0.08352 | ug/m3 per g/s |
| Maximum 24-hour Concentration | | | 0.62274 | ug/m3 per g/s |
| | | | | |
| CAS Number | Compound | LV-S3 (gm/sec) | LV-S3 Annual Average Concentration (ug/m3) | LV-S3 Maximum 24 hr Concentration (ug/m3) |
| 1120-71-4 | 1,3-Propane sultone | 3.09E-05 | 2.58E-06 | 1.93E-05 |
| 119-90-4 | 3,3'-Dimethoxybenzidine (ortho-dianisidine) | 3.09E-05 | 2.58E-06 | 1.93E-05 |
| 121-14-2 | 2,4-Dinitrotoluene | 3.09E-05 | 2.58E-06 | 1.93E-05 |
| 122-66-7 | 1,2-Diphenylhydrazine | 3.09E-05 | 2.58E-06 | 1.93E-05 |
| 123-33-1 | Maleic hydrazide | 3.09E-05 | 2.58E-06 | 1.93E-05 |
| 124-48-1 | Chlorodibromomethane | 4.12E-06 | 3.44E-07 | 2.57E-06 |
| 131-11-3 | Dimethylphthalate | 3.09E-05 | 2.58E-06 | 1.93E-05 |
| 131-89-5 | 2-Cyclohexyl-4,6-dinitrophenol | 3.09E-05 | 2.58E-06 | 1.93E-05 |
| 133-06-2 | Captan | 3.09E-05 | 2.58E-06 | 1.93E-05 |
| 135-98-8 | sec-Butylbenzene | 4.12E-06 | 3.44E-07 | 2.57E-06 |
| 145-73-3 | Endothall | 3.09E-05 | 2.58E-06 | 1.93E-05 |
| 156-59-2 | cis-1,2-Dichloroethene | 4.12E-06 | 3.44E-07 | 2.57E-06 |
| 1746-01-6 | 2,3,7,8-Tetrachlorodibenzo(p)dioxin (TCDD) | 1.93E-11 | 1.62E-12 | 1.20E-11 |
| 192-97-2 | Benzo(e)pyrene | 6.19E-06 | 5.17E-07 | 3.85E-06 |
| 19408-74-3 | 1,2,3,7,8,9-Hexachlorodibenzo(p)dioxin | 3.22E-11 | 2.69E-12 | 2.00E-11 |
| 23950-58-5 | Pronamide | 3.09E-05 | 2.58E-06 | 1.93E-05 |
| 25013-15-4 | Methyl styrene (mixed isomers) | 4.12E-06 | 3.44E-07 | 2.57E-06 |
| 3268-87-9 | Octachlorodibenzo(p)dioxin | 1.61E-10 | 1.35E-11 | 1.00E-10 |
| 35822-46-9 | 1,2,3,4,6,7,8-Heptachlorodibenzo(p)dioxin | 6.45E-11 | 5.39E-12 | 4.02E-11 |
| 39001-02-0 | Octachlorodibenzofuran | 1.29E-10 | 1.08E-11 | 8.03E-11 |
| 39227-28-6 | 1,2,3,4,7,8-Hexachlorodibenzo(p)dioxin | 3.22E-11 | 2.69E-12 | 2.00E-11 |
| 40321-76-4 | 1,2,3,7,8-Pentachlorodibenzo(p)dioxin | 3.22E-11 | 2.69E-12 | 2.00E-11 |
| 41851-50-7 | Chlorocyclopentadiene | 4.12E-06 | 3.44E-07 | 2.57E-06 |
| 460-19-5 | Cyanogen | 4.12E-06 | 3.44E-07 | 2.57E-06 |

| Estimated Organic Concentration at Point of Maximum Impact for LAW | | | | |
|---|---|---|---|---|
| | | | | |
| | | | LV-S3 Unit Concentration Factors | |
| | | | Vapor/particle/ particle-bound | |
| Average Annual Concentration | | | 0.08352 | ug/m3 per g/s |
| Maximum 24-hour Concentration | | | 0.62274 | ug/m3 per g/s |
| | | | | |
| CAS Number | Compound | LV-S3 (gm/sec) | LV-S3 Annual Average Concentration (ug/m3) | LV-S3 Maximum 24 hr Concentration (ug/m3) |
| 506-68-3 | Cyanogen bromide | 3.09E-05 | 2.58E-06 | 1.93E-05 |
| 506-77-4 | Cyanogen chloride | 4.12E-06 | 3.44E-07 | 2.57E-06 |
| 510-15-6 | Chlorobenzilate | 3.09E-05 | 2.58E-06 | 1.93E-05 |
| 51207-31-9 | 2,3,7,8-Tetrachlorodibenzofuran | 1.61E-11 | 1.35E-12 | 1.00E-11 |
| 51-28-5 | 2,4-Dinitrophenol | 3.09E-05 | 2.58E-06 | 1.93E-05 |
| 51-79-6 | Ethyl carbamate (urethane) | 3.09E-05 | 2.58E-06 | 1.93E-05 |
| 528-29-0 | o-Dinitrobenzene | 3.09E-05 | 2.58E-06 | 1.93E-05 |
| 532-27-4 | 2-Chloroacetophenone | 3.09E-05 | 2.58E-06 | 1.93E-05 |
| 534-52-1 | 4,6-Dinitro-o-cresol (4,6-Dinitro-2-methylphenol) | 3.09E-05 | 2.58E-06 | 1.93E-05 |
| 5385-75-1 | Dibenzo(a,e)fluoranthene | 6.19E-06 | 5.17E-07 | 3.85E-06 |
| 540-73-8 | 1,2-Dimethylhydrazine | 4.12E-06 | 3.44E-07 | 2.57E-06 |
| 542-75-6 | 1,3-Dichloropropene | 4.12E-06 | 3.44E-07 | 2.57E-06 |
| 542-88-1 | Dichloromethyl ether | 4.12E-06 | 3.44E-07 | 2.57E-06 |
| 55673-89-7 | 1,2,3,4,7,8,9-Heptachlorodibenzofuran | 3.22E-11 | 2.69E-12 | 2.00E-11 |
| 57117-31-4 | 2,3,4,7,8-Pentachlorodibenzofuran | 1.61E-11 | 1.35E-12 | 1.00E-11 |
| 57117-41-6 | 1,2,3,7,8-Pentachlorodibenzofuran | 1.61E-11 | 1.35E-12 | 1.00E-11 |
| 57117-44-9 | 1,2,3,6,7,8-Hexachlorodibenzofuran | 2.58E-11 | 2.15E-12 | 1.61E-11 |
| 57-24-9 | Strychnine | 3.09E-05 | 2.58E-06 | 1.93E-05 |
| 57653-85-7 | 1,2,3,6,7,8-Hexachlorodibenzo(p)dioxin | 3.22E-11 | 2.69E-12 | 2.00E-11 |
| 57-74-9 | Chlordane | 3.09E-05 | 2.58E-06 | 1.93E-05 |
| 584-84-9 | 2,4-Toluene diisocyante | 3.09E-05 | 2.58E-06 | 1.93E-05 |
| 593-60-2 | Bromoethene | 4.12E-06 | 3.44E-07 | 2.57E-06 |
| 60-11-7 | Dimethyl aminoazobenzene | 3.09E-05 | 2.58E-06 | 1.93E-05 |
| 606-20-2 | 2,6-Dinitrotoluene | 3.09E-05 | 2.58E-06 | 1.93E-05 |
| 60851-34-5 | 2,3,4,6,7,8-Hexachlorodibenzofuran | 2.91E-11 | 2.43E-12 | 1.81E-11 |
| 608-93-5 | Pentachlorobenzene | 3.09E-05 | 2.58E-06 | 1.93E-05 |
| 61626-71-9 | Dichloropentadiene | 4.12E-06 | 3.44E-07 | 2.57E-06 |

| Estimated Organic Concentration at Point of Maximum Impact for LAW | | | | |
|---|---|---|---|---|
| | | | | |
| | | | LV-S3 Unit Concentration Factors | |
| | | | Vapor/particle/ particle-bound | |
| Average Annual Concentration | | | 0.08352 | ug/m3 per g/s |
| Maximum 24-hour Concentration | | | 0.62274 | ug/m3 per g/s |
| | | | | |
| CAS Number | Compound | LV-S3 (gm/sec) | LV-S3 Annual Average Concentration (ug/m3) | LV-S3 Maximum 24 hr Concentration (ug/m3) |
| 62-50-0 | Ethyl methanesulfonate | 3.09E-05 | 2.58E-06 | 1.93E-05 |
| 62-53-3 | Aniline | 3.09E-05 | 2.58E-06 | 1.93E-05 |
| 65-85-0 | Benzoic acid | 3.09E-05 | 2.58E-06 | 1.93E-05 |
| 67562-39-4 | 1,2,3,4,6,7,8-Heptachlorodibenzofuran | 3.22E-11 | 2.69E-12 | 2.00E-11 |
| 70-30-4 | Hexachlorophene | 3.09E-05 | 2.58E-06 | 1.93E-05 |
| 70648-26-9 | 1,2,3,4,7,8-Hexachlorodibenzofuran | 2.91E-11 | 2.43E-12 | 1.81E-11 |
| 72918-21-9 | 1,2,3,7,8,9-Hexachlorodibenzofuran | 3.22E-11 | 2.69E-12 | 2.00E-11 |
| 74-88-4 | Iodomethane (Methyl iodide) | 4.12E-06 | 3.44E-07 | 2.57E-06 |
| 74-95-3 | Methylene bromide | 4.12E-06 | 3.44E-07 | 2.57E-06 |
| 75-25-2 | Bromoform | 4.12E-06 | 3.44E-07 | 2.57E-06 |
| 75-29-6 | 2-Chloropropane | 4.12E-06 | 3.44E-07 | 2.57E-06 |
| 75-44-5 | Phosgene | 4.12E-06 | 3.44E-07 | 2.57E-06 |
| 76-01-7 | Pentachloroethane | 4.12E-06 | 3.44E-07 | 2.57E-06 |
| 764-41-0 | 1,4-Dichloro-2-butene | 4.12E-06 | 3.44E-07 | 2.57E-06 |
| 765-34-4 | Glycidylaldehyde | 3.09E-05 | 2.58E-06 | 1.93E-05 |
| 77-47-4 | Hexachlorocyclopentadiene | 3.09E-05 | 2.58E-06 | 1.93E-05 |
| 77-78-1 | Dimethyl sulfate | 3.09E-05 | 2.58E-06 | 1.93E-05 |
| 80-62-6 | Methyl methacrylate | 4.12E-06 | 3.44E-07 | 2.57E-06 |
| 822-06-0 | Hexamethylene-1,5-diisocyanate | 3.09E-05 | 2.58E-06 | 1.93E-05 |
| 823-40-5 | Toluene-2,6-diamine | 3.09E-05 | 2.58E-06 | 1.93E-05 |
| 85-44-9 | Phthalic anhydride | 3.09E-05 | 2.58E-06 | 1.93E-05 |
| 87-61-6 | 1,2,3-Trichlorobenzene | 4.12E-06 | 3.44E-07 | 2.57E-06 |
| 88-74-4 | o-Nitroaniline (2-Nitroaniline) | 3.09E-05 | 2.58E-06 | 1.93E-05 |
| 90-04-0 | o-Anisidine | 3.09E-05 | 2.58E-06 | 1.93E-05 |
| 91-57-6 | 2-Methylnaphthalene | 6.19E-06 | 5.17E-07 | 3.85E-06 |
| 91-94-1 | 3,3'-Dichlorobenzidine | 3.09E-05 | 2.58E-06 | 1.93E-05 |
| 924-16-3 | N-Nitrosodi-n-butylamine | 4.12E-06 | 3.44E-07 | 2.57E-06 |
| 94-59-7 | Safrole | 3.09E-05 | 2.58E-06 | 1.93E-05 |
| 95-53-4 | o-Toluidine | 4.12E-06 | 3.44E-07 | 2.57E-06 |

| Estimated Organic Concentration at Point of Maximum Impact for LAW | | | | |
|---|---|---|---|---|
| | | | | |
| | | | LV-S3 Unit Concentration Factors | |
| | | | Vapor/particle/ particle-bound | |
| Average Annual Concentration | | | 0.08352 | ug/m3 per g/s |
| Maximum 24-hour Concentration | | | 0.62274 | ug/m3 per g/s |
| | | | | |
| CAS Number | Compound | LV-S3 (gm/sec) | LV-S3 Annual Average Concentration (ug/m3) | LV-S3 Maximum 24 hr Concentration (ug/m3) |
| 95-63-6 | 1,2,4-Trimethyl benzene | 4.12E-06 | 3.44E-07 | 2.57E-06 |
| 95-94-3 | 1,2,4,5-Tetrachlorobenzene | 3.09E-05 | 2.58E-06 | 1.93E-05 |
| 96-12-8 | 1,2-Dibromo-3-chloropropane | 3.09E-05 | 2.58E-06 | 1.93E-05 |
| 96-18-4 | 1,2,3-Trichloropropane | 4.12E-06 | 3.44E-07 | 2.57E-06 |
| 96-45-7 | Ethylene thiourea | 3.09E-05 | 2.58E-06 | 1.93E-05 |
| 97-63-2 | Ethyl methacrylate | 4.12E-06 | 3.44E-07 | 2.57E-06 |
| 98-01-1 | Furfural | 3.09E-05 | 2.58E-06 | 1.93E-05 |
| 98-06-6 | tert-Butyl benzene | 4.12E-06 | 3.44E-07 | 2.57E-06 |
| 98-07-7 | Benzotrichloride | 3.09E-05 | 2.58E-06 | 1.93E-05 |
| 99-35-4 | 1,3,5-Trinitrobenzene | 3.09E-05 | 2.58E-06 | 1.93E-05 |
| 99-65-0 | 1,3-Dinitrobenzene | 3.09E-05 | 2.58E-06 | 1.93E-05 |
| 99-87-6 | p-Cymene | 4.12E-06 | 3.44E-07 | 2.57E-06 |
| No CAS # | Dibenzo(a,h)fluoranthene | 6.19E-06 | 5.17E-07 | 3.85E-06 |
| Coplanar PCBs | | 0.00E+00 | | |
| 31508-00-6 | 2,3',4,4',5-Pentachlorobiphenyl (PBC 118) | 2.22E-23 | 1.85E-24 | 1.38E-23 |
| 32598-13-3 | 3,3',4,4'-Tetrachlorobiphenyl (TCB) | 2.22E-23 | 1.85E-24 | 1.38E-23 |
| 32598-14-4 | 2,3,3',4,4'-Pentachlorobiphenyl (PCB 105) | 2.22E-23 | 1.85E-24 | 1.38E-23 |
| 32774-16-6 | 3,3',4,4',5,5'-Hexachlorobiphenyl | 2.22E-23 | 1.85E-24 | 1.38E-23 |
| 35065-29-3 | 2,2',3,4,4',5,5'-Heptachlorobiphenyl | 2.22E-23 | 1.85E-24 | 1.38E-23 |
| 35065-30-6 | 2,2',3,3',4,4',5-Heptachlorobiphenyl | 2.22E-23 | 1.85E-24 | 1.38E-23 |
| 38380-08-4 | 2,3,3',4,4',5-Hexachlorobiphenyl (PCB 157) | 2.22E-23 | 1.85E-24 | 1.38E-23 |
| 39635-31-9 | 2,3,3',4,4',5,5'-Heptachlorobiphenyl | 2.22E-23 | 1.85E-24 | 1.38E-23 |

| Estimated Organic Concentration at Point of Maximum Impact for LAW | | | | |
|---|---|---|---|---|
| | | | | |
| | | | LV-S3 Unit Concentration Factors | |
| | | | Vapor/particle/ particle-bound | |
| Average Annual Concentration | | | 0.08352 | ug/m3 per g/s |
| Maximum 24-hour Concentration | | | 0.62274 | ug/m3 per g/s |
| | | | | |
| CAS Number | Compound | LV-S3 (gm/sec) | LV-S3 Annual Average Concentration (ug/m3) | LV-S3 Maximum 24 hr Concentration (ug/m3) |
| 52663-72-6 | 2,3',4,4',5,5'-Hexachlorobiphenyl | 2.22E-23 | 1.85E-24 | 1.38E-23 |
| 57465-28-8 | 3,3',4,4',5-Pentachlorobiphenyl | 2.22E-23 | 1.85E-24 | 1.38E-23 |
| 65510-44-3 | 2',3,4,4',5-Pentachlorobiphenyl | 2.22E-23 | 1.85E-24 | 1.38E-23 |
| 69782-90-7 | 2,3,3',4,4',5'-Hexachlorobiphenyl | 2.22E-23 | 1.85E-24 | 1.38E-23 |
| 70362-50-4 | 3,4,4',5-Tetrachlorobiphenyl | 2.22E-23 | 1.85E-24 | 1.38E-23 |
| 74472-37-0 | 2,3,4,4',5-Pentachlorobiphenyl | 2.22E-23 | 1.85E-24 | 1.38E-23 |

## Estimated Organic Concentration at Point of Maximum Impact for HLW

| | HV-S3 A & B Vapor/particle/ particle-bound | |
|---|---|---|
| Average Annual Concentration | 0.08302 | ug/m3 per g/s |
| Maximum 24-hour Concentration | 0.61071 | ug/m3 per g/s |

| CAS Number | Compound | HV-S3A (gm/sec) | HV-S3A Annual Average Concentration (ug/m3) | HV-S3A Maximum 24 hr Concentration (ug/m3) | HV-S3B (gm/sec) | HV-S3B Annual Average Concentration (ug/m3) | HV-S3B Maximum 24 hr Concentration (ug/m3) | Total HLW Annual Average Concentration (ug/m3) | Total HLW Maximum 24 hr Concentration (ug/m3) |
|---|---|---|---|---|---|---|---|---|---|
| 100-00-5 | p-Nitrochlorobenzene | 1.26E-04 | 1.05E-05 | 7.69E-05 | 1.26E-04 | 1.05E-05 | 7.69E-05 | 2.09E-05 | 1.54E-04 |
| 100-21-0 | p-Phthalic acid | 1.70E-04 | 1.41E-05 | 1.04E-04 | 1.70E-04 | 1.41E-05 | 1.04E-04 | 2.83E-05 | 2.08E-04 |
| 100-25-4 | 1,4-Dinitrobenzene | 2.17E-14 | 1.80E-15 | 1.32E-14 | 2.17E-14 | 1.80E-15 | 1.32E-14 | 3.60E-15 | 2.65E-14 |
| 100-41-4 | Ethyl benzene | 9.43E-14 | 7.83E-15 | 5.76E-14 | 9.43E-14 | 7.83E-15 | 5.76E-14 | 1.57E-14 | 1.15E-13 |
| 100-42-5 | Styrene | 1.38E-11 | 1.14E-12 | 8.41E-12 | 1.38E-11 | 1.14E-12 | 8.41E-12 | 2.29E-12 | 1.68E-11 |
| 10061-01-5 | cis-1,3-Dichloropropene | 3.91E-11 | 3.25E-12 | 2.39E-11 | 3.91E-11 | 3.25E-12 | 2.39E-11 | 6.50E-12 | 4.78E-11 |
| 10061-02-6 | trans-1,3-Dichloropropene | 6.18E-10 | 5.13E-11 | 3.78E-10 | 6.18E-10 | 5.13E-11 | 3.78E-10 | 1.03E-10 | 7.55E-10 |
| 101-55-3 | 4-Bromophenylphenyl ether | 8.98E-06 | 7.45E-07 | 5.48E-06 | 8.98E-06 | 7.45E-07 | 5.48E-06 | 1.49E-06 | 1.10E-05 |
| 101-84-8 | Diphenyl ether | 8.04E-08 | 6.67E-09 | 4.91E-08 | 8.04E-08 | 6.67E-09 | 4.91E-08 | 1.33E-08 | 9.82E-08 |
| 106-35-4 | 3-Heptanone | 1.97E-06 | 1.64E-07 | 1.21E-06 | 1.97E-06 | 1.64E-07 | 1.21E-06 | 3.28E-07 | 2.41E-06 |
| 106-42-3 | p-Xylene (Dimethyl benzene) | 1.38E-11 | 1.14E-12 | 8.41E-12 | 1.38E-11 | 1.14E-12 | 8.41E-12 | 2.29E-12 | 1.68E-11 |
| 106-46-7 | 1,4-Dichlorobenzene | 3.02E-10 | 2.51E-11 | 1.85E-10 | 3.02E-10 | 2.51E-11 | 1.85E-10 | 5.02E-11 | 3.69E-10 |
| 106-88-7 | 1,2-Epoxybutane | 4.55E-07 | 3.78E-08 | 2.78E-07 | 4.55E-07 | 3.78E-08 | 2.78E-07 | 7.55E-08 | 5.56E-07 |
| 106-93-4 | Ethylene dibromide (Dibromethane) | 5.36E-08 | 4.45E-09 | 3.27E-08 | 5.36E-08 | 4.45E-09 | 3.27E-08 | 8.90E-09 | 6.55E-08 |
| 106-97-8 | Butane | 0.00E+00 | 0.00E+00 | 0.00E+00 | 0.00E+00 | 0.00E+00 | 0.00E+00 | 0.00E+00 | 0.00E+00 |
| 106-99-0 | 1,3-Butadiene | 0.00E+00 | 0.00E+00 | 0.00E+00 | 0.00E+00 | 0.00E+00 | 0.00E+00 | 0.00E+00 | 0.00E+00 |
| 107-02-8 | Acrolein | 1.97E-06 | 1.64E-07 | 1.21E-06 | 1.97E-06 | 1.64E-07 | 1.21E-06 | 3.28E-07 | 2.41E-06 |
| 107-05-1 | 3-Chloropropene (Allyl chloride) | 9.43E-14 | 7.83E-15 | 5.76E-14 | 9.43E-14 | 7.83E-15 | 5.76E-14 | 1.57E-14 | 1.15E-13 |
| 107-06-2 | 1,2-Dichloroethane (Ethylene chloride) | 6.18E-10 | 5.13E-11 | 3.78E-10 | 6.18E-10 | 5.13E-11 | 3.78E-10 | 1.03E-10 | 7.55E-10 |
| 107-12-0 | Propionitrile | 8.16E-06 | 6.78E-07 | 4.99E-06 | 8.16E-06 | 6.78E-07 | 4.99E-06 | 1.36E-06 | 9.97E-06 |
| 107-13-1 | Acrylonitrile | 1.97E-06 | 1.64E-07 | 1.21E-06 | 1.97E-06 | 1.64E-07 | 1.21E-06 | 3.28E-07 | 2.41E-06 |
| 107-18-6 | 2-Propene-1-ol | 1.26E-04 | 1.05E-05 | 7.69E-05 | 1.26E-04 | 1.05E-05 | 7.69E-05 | 2.09E-05 | 1.54E-04 |
| 107-31-3 | Formic acid, methyl ester | 2.07E-06 | 1.72E-07 | 1.26E-06 | 2.07E-06 | 1.72E-07 | 1.26E-06 | 3.43E-07 | 2.53E-06 |
| 107-66-4 | Dibutylphosphate | 2.17E-14 | 1.80E-15 | 1.32E-14 | 2.17E-14 | 1.80E-15 | 1.32E-14 | 3.60E-15 | 2.65E-14 |
| 107-87-9 | 2-Pentanone | 1.97E-06 | 1.64E-07 | 1.21E-06 | 1.97E-06 | 1.64E-07 | 1.21E-06 | 3.28E-07 | 2.41E-06 |
| 108-03-2 | 1-Nitropropane | 8.98E-06 | 7.45E-07 | 5.48E-06 | 8.98E-06 | 7.45E-07 | 5.48E-06 | 1.49E-06 | 1.10E-05 |
| 108-05-4 | Vinyl acetate | 3.65E-07 | 3.03E-08 | 2.23E-07 | 3.65E-07 | 3.03E-08 | 2.23E-07 | 6.07E-08 | 4.46E-07 |

## Estimated Organic Concentration at Point of Maximum Impact for HLW

| | HV-S3 A & B Vapor/particle/ particle-bound | |
|---|---|---|
| Average Annual Concentration | 0.08302 | ug/m3 per g/s |
| Maximum 24-hour Concentration | 0.61071 | ug/m3 per g/s |

| CAS Number | Compound | HV-S3A (gm/sec) | HV-S3A Annual Average Concentration (ug/m3) | HV-S3A Maximum 24 hr Concentration (ug/m3) | HV-S3B (gm/sec) | HV-S3B Annual Average Concentration (ug/m3) | HV-S3B Maximum 24 hr Concentration (ug/m3) | Total HLW Annual Average Concentration (ug/m3) | Total HLW Maximum 24 hr Concentration (ug/m3) |
|---|---|---|---|---|---|---|---|---|---|
| 108-10-1 | Hexone (4-Methyl-2-pentanone or MIBK) | 1.97E-06 | 1.64E-07 | 1.21E-06 | 1.97E-06 | 1.64E-07 | 1.21E-06 | 3.28E-07 | 2.41E-06 |
| 108-20-3 | Bis(isopropyl)ether | 3.02E-10 | 2.51E-11 | 1.85E-10 | 3.02E-10 | 2.51E-11 | 1.85E-10 | 5.02E-11 | 3.69E-10 |
| 108-38-3 | m-Xylene (Dimethyl benzene) | 1.38E-11 | 1.14E-12 | 8.41E-12 | 1.38E-11 | 1.14E-12 | 8.41E-12 | 2.29E-12 | 1.68E-11 |
| 108-39-4 | m-Cresol | 2.91E-05 | 2.42E-06 | 1.78E-05 | 2.91E-05 | 2.42E-06 | 1.78E-05 | 4.83E-06 | 3.55E-05 |
| 108-87-2 | Methylcyclohexane | 0.00E+00 | 0.00E+00 | 0.00E+00 | 0.00E+00 | 0.00E+00 | 0.00E+00 | 0.00E+00 | 0.00E+00 |
| 108-88-3 | Toluene | 6.57E-13 | 5.45E-14 | 4.01E-13 | 6.57E-13 | 5.45E-14 | 4.01E-13 | 1.09E-13 | 8.02E-13 |
| 108-90-7 | Chlorobenzene | 1.38E-11 | 1.14E-12 | 8.41E-12 | 1.38E-11 | 1.14E-12 | 8.41E-12 | 2.29E-12 | 1.68E-11 |
| 108-93-0 | Cyclohexanol | 2.77E-05 | 2.30E-06 | 1.69E-05 | 2.77E-05 | 2.30E-06 | 1.69E-05 | 4.60E-06 | 3.38E-05 |
| 108-94-1 | Cyclohexanone | 1.99E-05 | 1.66E-06 | 1.22E-05 | 1.99E-05 | 1.66E-06 | 1.22E-05 | 3.31E-06 | 2.44E-05 |
| 108-95-2 | Phenol | 1.68E-04 | 1.39E-05 | 1.03E-04 | 1.68E-04 | 1.39E-05 | 1.03E-04 | 2.79E-05 | 2.05E-04 |
| 109-66-0 | n-Pentane | 0.00E+00 | 0.00E+00 | 0.00E+00 | 0.00E+00 | 0.00E+00 | 0.00E+00 | 0.00E+00 | 0.00E+00 |
| 109-99-9 | Tetrahydrofuran | 1.73E-05 | 1.44E-06 | 1.06E-05 | 1.73E-05 | 1.44E-06 | 1.06E-05 | 2.88E-06 | 2.12E-05 |
| 110-12-3 | 5-Methyl-2-hexanone | 4.55E-07 | 3.78E-08 | 2.78E-07 | 4.55E-07 | 3.78E-08 | 2.78E-07 | 7.55E-08 | 5.56E-07 |
| 110-43-0 | 2-Heptanone | 4.55E-07 | 3.78E-08 | 2.78E-07 | 4.55E-07 | 3.78E-08 | 2.78E-07 | 7.55E-08 | 5.56E-07 |
| 110-54-3 | n-Hexane | 0.00E+00 | 0.00E+00 | 0.00E+00 | 0.00E+00 | 0.00E+00 | 0.00E+00 | 0.00E+00 | 0.00E+00 |
| 110-62-3 | n-Valeraldehyde | 2.07E-06 | 1.72E-07 | 1.26E-06 | 2.07E-06 | 1.72E-07 | 1.26E-06 | 3.43E-07 | 2.53E-06 |
| 110-82-7 | Cyclohexane | 0.00E+00 | 0.00E+00 | 0.00E+00 | 0.00E+00 | 0.00E+00 | 0.00E+00 | 0.00E+00 | 0.00E+00 |
| 110-83-8 | Cyclohexene | 3.23E-21 | 2.68E-22 | 1.98E-21 | 3.23E-21 | 2.68E-22 | 1.98E-21 | 5.37E-22 | 3.95E-21 |
| 110-86-1 | Pyridine | 9.07E-05 | 7.53E-06 | 5.54E-05 | 9.07E-05 | 7.53E-06 | 5.54E-05 | 1.51E-05 | 1.11E-04 |
| 111-65-9 | n-Octane | 0.00E+00 | 0.00E+00 | 0.00E+00 | 0.00E+00 | 0.00E+00 | 0.00E+00 | 0.00E+00 | 0.00E+00 |
| 111-76-2 | Ethylene glycol monobutyl ether | 1.32E-04 | 1.10E-05 | 8.08E-05 | 1.32E-04 | 1.10E-05 | 8.08E-05 | 2.20E-05 | 1.62E-04 |
| 111-84-2 | n-Nonane | 0.00E+00 | 0.00E+00 | 0.00E+00 | 0.00E+00 | 0.00E+00 | 0.00E+00 | 0.00E+00 | 0.00E+00 |
| 117-81-7 | Bis(2-ethylhexyl)phthalate (DEHP) | 3.03E-14 | 2.52E-15 | 1.85E-14 | 3.03E-14 | 2.52E-15 | 1.85E-14 | 5.04E-15 | 3.71E-14 |
| 117-84-0 | n-Dioctyl phthalate | 3.51E-14 | 2.91E-15 | 2.14E-14 | 3.51E-14 | 2.91E-15 | 2.14E-14 | 5.82E-15 | 4.28E-14 |
| 118-74-1 | Hexachlorobenzene | 2.84E-11 | 2.36E-12 | 1.73E-11 | 2.84E-11 | 2.36E-12 | 1.73E-11 | 4.72E-12 | 3.47E-11 |
| 120-12-7 | Anthracene | 2.81E-05 | 2.33E-06 | 1.72E-05 | 2.81E-05 | 2.33E-06 | 1.72E-05 | 4.67E-06 | 3.43E-05 |
| 120-82-1 | 1,2,4-Trichlorobenzene | 6.18E-10 | 5.13E-11 | 3.78E-10 | 6.18E-10 | 5.13E-11 | 3.78E-10 | 1.03E-10 | 7.55E-10 |

## Estimated Organic Concentration at Point of Maximum Impact for HLW

| | HV-S3 A & B Vapor/particle/ particle-bound | |
|---|---|---|
| Average Annual Concentration | 0.08302 | ug/m3 per g/s |
| Maximum 24-hour Concentration | 0.61071 | ug/m3 per g/s |

| CAS Number | Compound | HV-S3A (gm/sec) | HV-S3A Annual Average Concentration (ug/m3) | HV-S3A Maximum 24 hr Concentration (ug/m3) | HV-S3B (gm/sec) | HV-S3B Annual Average Concentration (ug/m3) | HV-S3B Maximum 24 hr Concentration (ug/m3) | Total HLW Annual Average Concentration (ug/m3) | Total HLW Maximum 24 hr Concentration (ug/m3) |
|---|---|---|---|---|---|---|---|---|---|
| 120-83-2 | 2,4-Dichlorophenol | 1.26E-04 | 1.05E-05 | 7.69E-05 | 1.26E-04 | 1.05E-05 | 7.69E-05 | 2.09E-05 | 1.54E-04 |
| 121-44-8 | Triethylamine | 4.55E-07 | 3.78E-08 | 2.78E-07 | 4.55E-07 | 3.78E-08 | 2.78E-07 | 7.55E-08 | 5.56E-07 |
| 121-69-7 | Dimethylaniline | 8.16E-06 | 6.78E-07 | 4.99E-06 | 8.16E-06 | 6.78E-07 | 4.99E-06 | 1.36E-06 | 9.97E-06 |
| 122-39-4 | N,N-Diphenylamine | 2.58E-05 | 2.15E-06 | 1.58E-05 | 2.58E-05 | 2.15E-06 | 1.58E-05 | 4.29E-06 | 3.16E-05 |
| 123-19-3 | 4-Heptanone | 8.16E-06 | 6.78E-07 | 4.99E-06 | 8.16E-06 | 6.78E-07 | 4.99E-06 | 1.36E-06 | 9.97E-06 |
| 123-38-6 | n-Propionaldehyde | 1.97E-06 | 1.64E-07 | 1.21E-06 | 1.97E-06 | 1.64E-07 | 1.21E-06 | 3.28E-07 | 2.41E-06 |
| 123-51-3 | 3-Methyl-1-butanol | 1.82E-05 | 1.51E-06 | 1.11E-05 | 1.82E-05 | 1.51E-06 | 1.11E-05 | 3.03E-06 | 2.23E-05 |
| 123-86-4 | Acetic acid n-butyl ester | 3.65E-07 | 3.03E-08 | 2.23E-07 | 3.65E-07 | 3.03E-08 | 2.23E-07 | 6.07E-08 | 4.46E-07 |
| 123-91-1 | 1,4-Dioxane | 7.56E-05 | 6.27E-06 | 4.62E-05 | 7.56E-05 | 6.27E-06 | 4.62E-05 | 1.25E-05 | 9.23E-05 |
| 126-73-8 | Tributyl phosphate | 1.73E-04 | 1.43E-05 | 1.05E-04 | 1.73E-04 | 1.43E-05 | 1.05E-04 | 2.87E-05 | 2.11E-04 |
| 126-98-7 | 2-Methyl-2-propenenitrile (Methacrylonitrile) | 8.04E-08 | 6.67E-09 | 4.91E-08 | 8.04E-08 | 6.67E-09 | 4.91E-08 | 1.33E-08 | 9.82E-08 |
| 127-18-4 | Perchloroethylene (tetrachloroethylene) | 5.94E-15 | 4.93E-16 | 3.63E-15 | 5.94E-15 | 4.93E-16 | 3.63E-15 | 9.86E-16 | 7.25E-15 |
| 127-19-5 | N,N-Dimethylacetamide | 3.77E-05 | 3.13E-06 | 2.31E-05 | 3.77E-05 | 3.13E-06 | 2.31E-05 | 6.27E-06 | 4.61E-05 |
| 128-37-0 | 2,6-Bis(tert-butyl)-4-methylphenol | 1.25E-04 | 1.03E-05 | 7.60E-05 | 1.25E-04 | 1.03E-05 | 7.60E-05 | 2.07E-05 | 1.52E-04 |
| 129-00-0 | Pyrene | 6.21E-14 | 5.15E-15 | 3.79E-14 | 6.21E-14 | 5.15E-15 | 3.79E-14 | 1.03E-14 | 7.58E-14 |
| 1321-64-8 | Pentachloronaphthalene | 1.33E-14 | 1.11E-15 | 8.14E-15 | 1.33E-14 | 1.11E-15 | 8.14E-15 | 2.21E-15 | 1.63E-14 |
| 1321-65-9 | Trichloronaphthalene | 2.07E-06 | 1.72E-07 | 1.26E-06 | 2.07E-06 | 1.72E-07 | 1.26E-06 | 3.43E-07 | 2.53E-06 |
| 132-64-9 | Dibenzofuran | 2.07E-06 | 1.72E-07 | 1.26E-06 | 2.07E-06 | 1.72E-07 | 1.26E-06 | 3.43E-07 | 2.53E-06 |
| 1335-87-1 | Hexachloronaphthalene | 1.33E-14 | 1.11E-15 | 8.14E-15 | 1.33E-14 | 1.11E-15 | 8.14E-15 | 2.21E-15 | 1.63E-14 |
| 1335-88-2 | Tetrachloronaphthalene | 5.43E-15 | 4.51E-16 | 3.32E-15 | 5.43E-15 | 4.51E-16 | 3.32E-15 | 9.01E-16 | 6.63E-15 |
| 1336-36-3 | Polychlorinated biphenyls (PCBs) | 2.71E-14 | 2.25E-15 | 1.65E-14 | 2.71E-14 | 2.25E-15 | 1.65E-14 | 4.49E-15 | 3.30E-14 |
| 141-78-6 | Acetic acid ethyl ester (Ethyl acetate) | 8.98E-06 | 7.45E-07 | 5.48E-06 | 8.98E-06 | 7.45E-07 | 5.48E-06 | 1.49E-06 | 1.10E-05 |
| 141-79-7 | 4-Methyl-3-penten-2-one | 3.71E-05 | 3.08E-06 | 2.27E-05 | 3.71E-05 | 3.08E-06 | 2.27E-05 | 6.16E-06 | 4.53E-05 |
| 142-82-5 | n-Heptane | 0.00E+00 | 0.00E+00 | 0.00E+00 | 0.00E+00 | 0.00E+00 | 0.00E+00 | 0.00E+00 | 0.00E+00 |
| 144-62-7 | Oxalic acid | 1.71E-05 | 1.42E-06 | 1.04E-05 | 1.71E-05 | 1.42E-06 | 1.04E-05 | 2.83E-06 | 2.08E-05 |
| 156-60-5 | trans-1,2-Dichloroethylene | 9.43E-14 | 7.83E-15 | 5.76E-14 | 9.43E-14 | 7.83E-15 | 5.76E-14 | 1.57E-14 | 1.15E-13 |

## Estimated Organic Concentration at Point of Maximum Impact for HLW

| | HV-S3 A & B Vapor/particle/ particle-bound | |
|---|---|---|
| Average Annual Concentration | 0.08302 | ug/m3 per g/s |
| Maximum 24-hour Concentration | 0.61071 | ug/m3 per g/s |

| CAS Number | Compound | HV-S3A (gm/sec) | HV-S3A Annual Average Concentration (ug/m3) | HV-S3A Maximum 24 hr Concentration (ug/m3) | HV-S3B (gm/sec) | HV-S3B Annual Average Concentration (ug/m3) | HV-S3B Maximum 24 hr Concentration (ug/m3) | Total HLW Annual Average Concentration (ug/m3) | Total HLW Maximum 24 hr Concentration (ug/m3) |
|---|---|---|---|---|---|---|---|---|---|
| 1582-09-8 | Trifluralin | 1.33E-14 | 1.11E-15 | 8.14E-15 | 1.33E-14 | 1.11E-15 | 8.14E-15 | 2.21E-15 | 1.63E-14 |
| 1634-04-4 | Methyl tert-butyl ether | 8.04E-08 | 6.67E-09 | 4.91E-08 | 8.04E-08 | 6.67E-09 | 4.91E-08 | 1.33E-08 | 9.82E-08 |
| 1836-75-5 | Nitrofen | 3.03E-14 | 2.52E-15 | 1.85E-14 | 3.03E-14 | 2.52E-15 | 1.85E-14 | 5.04E-15 | 3.71E-14 |
| 189-55-9 | Dibenzo[a,i]pyrene | 2.17E-14 | 1.80E-15 | 1.32E-14 | 2.17E-14 | 1.80E-15 | 1.32E-14 | 3.60E-15 | 2.65E-14 |
| 189-64-0 | Dibenzo[a,h]pyrene | 2.17E-14 | 1.80E-15 | 1.32E-14 | 2.17E-14 | 1.80E-15 | 1.32E-14 | 3.60E-15 | 2.65E-14 |
| 191-24-2 | Benzo(g,h,i)perylene | 3.03E-14 | 2.52E-15 | 1.85E-14 | 3.03E-14 | 2.52E-15 | 1.85E-14 | 5.04E-15 | 3.71E-14 |
| 191-30-0 | Benzo[a,i]pyrene | 2.17E-14 | 1.80E-15 | 1.32E-14 | 2.17E-14 | 1.80E-15 | 1.32E-14 | 3.60E-15 | 2.65E-14 |
| 192-65-4 | Dibenzo[a,e]pyrene | 2.17E-14 | 1.80E-15 | 1.32E-14 | 2.17E-14 | 1.80E-15 | 1.32E-14 | 3.60E-15 | 2.65E-14 |
| 193-39-5 | Indeno(1,2,3-cd)pyrene | 3.03E-14 | 2.52E-15 | 1.85E-14 | 3.03E-14 | 2.52E-15 | 1.85E-14 | 5.04E-15 | 3.71E-14 |
| 205-82-3 | Benzo(j)fluoranthene | 2.21E-14 | 1.84E-15 | 1.35E-14 | 2.21E-14 | 1.84E-15 | 1.35E-14 | 3.67E-15 | 2.70E-14 |
| 205-99-2 | Benzo(b)fluoranthene | 3.03E-14 | 2.52E-15 | 1.85E-14 | 3.03E-14 | 2.52E-15 | 1.85E-14 | 5.04E-15 | 3.71E-14 |
| 206-44-0 | Fluoranthene | 6.06E-14 | 5.03E-15 | 3.70E-14 | 6.06E-14 | 5.03E-15 | 3.70E-14 | 1.01E-14 | 7.40E-14 |
| 207-08-9 | Benzo(k)fluoranthene | 3.03E-14 | 2.52E-15 | 1.85E-14 | 3.03E-14 | 2.52E-15 | 1.85E-14 | 5.04E-15 | 3.71E-14 |
| 208-96-8 | Acenaphthylene | 8.98E-06 | 7.45E-07 | 5.48E-06 | 8.98E-06 | 7.45E-07 | 5.48E-06 | 1.49E-06 | 1.10E-05 |
| 218-01-9 | Chrysene | 4.20E-14 | 3.49E-15 | 2.57E-14 | 4.20E-14 | 3.49E-15 | 2.57E-14 | 6.97E-15 | 5.13E-14 |
| 2234-13-1 | Octachloronaphthalene | 1.33E-14 | 1.11E-15 | 8.14E-15 | 1.33E-14 | 1.11E-15 | 8.14E-15 | 2.21E-15 | 1.63E-14 |
| 224-42-0 | Dibenz[a,j]acridine | 2.15E-14 | 1.78E-15 | 1.31E-14 | 2.15E-14 | 1.78E-15 | 1.31E-14 | 3.57E-15 | 2.62E-14 |
| 226-36-8 | Dibenz[a,h]acridine | 2.15E-14 | 1.78E-15 | 1.31E-14 | 2.15E-14 | 1.78E-15 | 1.31E-14 | 3.57E-15 | 2.62E-14 |
| 2385-85-5 | Mirex | 2.81E-09 | 2.33E-10 | 1.72E-09 | 2.81E-09 | 2.33E-10 | 1.72E-09 | 4.67E-10 | 3.43E-09 |
| 2551-13-7 | Trimethyl benzene | 1.38E-11 | 1.14E-12 | 8.41E-12 | 1.38E-11 | 1.14E-12 | 8.41E-12 | 2.29E-12 | 1.68E-11 |
| 26140-60-3 | Terphenyls | 1.08E-13 | 8.94E-15 | 6.58E-14 | 1.08E-13 | 8.94E-15 | 6.58E-14 | 1.79E-14 | 1.32E-13 |
| 27154-33-2 | Trichlorofluoroethane | 0.00E+00 | 0.00E+00 | 0.00E+00 | 0.00E+00 | 0.00E+00 | 0.00E+00 | 0.00E+00 | 0.00E+00 |
| 287-92-3 | Cyclopentane | 0.00E+00 | 0.00E+00 | 0.00E+00 | 0.00E+00 | 0.00E+00 | 0.00E+00 | 0.00E+00 | 0.00E+00 |
| 309-00-2 | Aldrin | 1.33E-15 | 1.10E-16 | 8.12E-16 | 1.33E-15 | 1.10E-16 | 8.12E-16 | 2.21E-16 | 1.62E-15 |
| 319-84-6 | Hexachlorocyclohexane (Lindane) Alpha BHC | 3.84E-07 | 3.19E-08 | 2.35E-07 | 3.84E-07 | 3.19E-08 | 2.35E-07 | 6.38E-08 | 4.69E-07 |
| 319-85-7 | Hexachlorocyclohexane (Lindane) Beta BHC | 1.02E-16 | 8.46E-18 | 6.23E-17 | 1.02E-16 | 8.46E-18 | 6.23E-17 | 1.69E-17 | 1.25E-16 |
| 319-86-8 | Delta-BHC | 1.01E-16 | 8.40E-18 | 6.18E-17 | 1.01E-16 | 8.40E-18 | 6.18E-17 | 1.68E-17 | 1.24E-16 |
| 3697-24-3 | 5-Methylchrysene | 3.51E-14 | 2.91E-15 | 2.14E-14 | 3.51E-14 | 2.91E-15 | 2.14E-14 | 5.82E-15 | 4.28E-14 |

## Estimated Organic Concentration at Point of Maximum Impact for HLW

| | | | HV-S3 A & B Vapor/particle/ particle-bound | | | | | | |
|---|---|---|---|---|---|---|---|---|---|
| Average Annual Concentration | | | 0.08302 | ug/m3 per g/s | | | | | |
| Maximum 24-hour Concentration | | | 0.61071 | ug/m3 per g/s | | | | | |
| CAS Number | Compound | HV-S3A (gm/sec) | HV-S3A Annual Average Concentration (ug/m3) | HV-S3A Maximum 24 hr Concentration (ug/m3) | HV-S3B (gm/sec) | HV-S3B Annual Average Concentration (ug/m3) | HV-S3B Maximum 24 hr Concentration (ug/m3) | Total HLW Annual Average Concentration (ug/m3) | Total HLW Maximum 24 hr Concentration (ug/m3) |
| 3825-26-1 | Ammonium perfluorooctanoate | 1.33E-14 | 1.11E-15 | 8.14E-15 | 1.33E-14 | 1.11E-15 | 8.14E-15 | 2.21E-15 | 1.63E-14 |
| 4170-30-3 | 2-Butenaldehyde (2-Butenal or Crotonaldehyde) | 1.99E-05 | 1.66E-06 | 1.22E-05 | 1.99E-05 | 1.66E-06 | 1.22E-05 | 3.31E-06 | 2.44E-05 |
| 465-73-6 | Isodrin | 4.15E-08 | 3.45E-09 | 2.53E-08 | 4.15E-08 | 3.45E-09 | 2.53E-08 | 6.89E-09 | 5.07E-08 |
| 50-00-0 | Formaldehyde | 4.17E-05 | 3.46E-06 | 2.55E-05 | 4.17E-05 | 3.46E-06 | 2.55E-05 | 6.92E-06 | 5.09E-05 |
| 50-29-3 | 4,4-DDT | 4.04E-16 | 3.35E-17 | 2.47E-16 | 4.04E-16 | 3.35E-17 | 2.47E-16 | 6.71E-17 | 4.94E-16 |
| 50-32-8 | Benzo(a)pyrene | 3.81E-16 | 3.17E-17 | 2.33E-16 | 3.81E-16 | 3.17E-17 | 2.33E-16 | 6.33E-17 | 4.66E-16 |
| 53-70-3 | Dibenzo(a,h)anthracene | 3.69E-17 | 3.06E-18 | 2.25E-17 | 3.69E-17 | 3.06E-18 | 2.25E-17 | 6.12E-18 | 4.50E-17 |
| 540-59-0 | 1,2-Dichloroethylene | 1.38E-11 | 1.14E-12 | 8.41E-12 | 1.38E-11 | 1.14E-12 | 8.41E-12 | 2.29E-12 | 1.68E-11 |
| 540-84-1 | 2,2,4-Trimethylpentane | 0.00E+00 | 0.00E+00 | 0.00E+00 | 0.00E+00 | 0.00E+00 | 0.00E+00 | 0.00E+00 | 0.00E+00 |
| 541-73-1 | 1,3-Dichlorobenzene | 1.38E-11 | 1.14E-12 | 8.41E-12 | 1.38E-11 | 1.14E-12 | 8.41E-12 | 2.29E-12 | 1.68E-11 |
| 56-23-5 | Carbon tetrachloride | 3.23E-21 | 2.68E-22 | 1.98E-21 | 3.23E-21 | 2.68E-22 | 1.98E-21 | 5.37E-22 | 3.95E-21 |
| 563-80-4 | 3-Methyl-2-butanone | 1.97E-06 | 1.64E-07 | 1.21E-06 | 1.97E-06 | 1.64E-07 | 1.21E-06 | 3.28E-07 | 2.41E-06 |
| 56-49-5 | 3-Methylcholanthrene | 0.00E+00 | 0.00E+00 | 0.00E+00 | 0.00E+00 | 0.00E+00 | 0.00E+00 | 0.00E+00 | 0.00E+00 |
| 56-55-3 | Benzo(a)anthracene | 6.06E-14 | 5.03E-15 | 3.70E-14 | 6.06E-14 | 5.03E-15 | 3.70E-14 | 1.01E-14 | 7.40E-14 |
| 57-14-7 | 1,1-Dimethylhydrazine | 8.29E-05 | 6.88E-06 | 5.06E-05 | 8.29E-05 | 6.88E-06 | 5.06E-05 | 1.38E-05 | 1.01E-04 |
| 58-89-9 | gamma-BHC (Lindane) | 1.43E-16 | 1.19E-17 | 8.73E-17 | 1.43E-16 | 1.19E-17 | 8.73E-17 | 2.37E-17 | 1.75E-16 |
| 58-90-2 | 2,3,4,6-Tetrachlorophenol | 9.30E-05 | 7.72E-06 | 5.68E-05 | 9.30E-05 | 7.72E-06 | 5.68E-05 | 1.54E-05 | 1.14E-04 |
| 591-78-6 | 2-Hexanone | 1.97E-06 | 1.64E-07 | 1.21E-06 | 1.97E-06 | 1.64E-07 | 1.21E-06 | 3.28E-07 | 2.41E-06 |
| 59-50-7 | 4-Chloro-3-methylphenol | 3.51E-14 | 2.91E-15 | 2.14E-14 | 3.51E-14 | 2.91E-15 | 2.14E-14 | 5.82E-15 | 4.28E-14 |
| 59-89-2 | N-Nitrosomorpholine | 1.71E-04 | 1.42E-05 | 1.05E-04 | 1.71E-04 | 1.42E-05 | 1.05E-04 | 2.85E-05 | 2.09E-04 |
| 602-87-9 | 5-Nitroacenaphthene | 1.96E-14 | 1.63E-15 | 1.20E-14 | 1.96E-14 | 1.63E-15 | 1.20E-14 | 3.26E-15 | 2.40E-14 |
| 60-29-7 | Ethyl ether | 2.81E-09 | 2.33E-10 | 1.72E-09 | 2.81E-09 | 2.33E-10 | 1.72E-09 | 4.67E-10 | 3.43E-09 |
| 603-34-9 | Triphenylamine | 1.06E-04 | 8.77E-06 | 6.45E-05 | 1.06E-04 | 8.77E-06 | 6.45E-05 | 1.75E-05 | 1.29E-04 |
| 60-34-4 | Methylhydrazine | 2.77E-05 | 2.30E-06 | 1.69E-05 | 2.77E-05 | 2.30E-06 | 1.69E-05 | 4.60E-06 | 3.38E-05 |
| 60-35-5 | Acetamide | 3.77E-05 | 3.13E-06 | 2.31E-05 | 3.77E-05 | 3.13E-06 | 2.31E-05 | 6.27E-06 | 4.61E-05 |
| 60-57-1 | Dieldrin | 3.94E-16 | 3.27E-17 | 2.41E-16 | 3.94E-16 | 3.27E-17 | 2.41E-16 | 6.55E-17 | 4.82E-16 |
| 621-64-7 | Di-n-Propylnitrosamine (N-Nitroso-di-n-propylamine) | 1.26E-04 | 1.05E-05 | 7.69E-05 | 1.26E-04 | 1.05E-05 | 7.69E-05 | 2.09E-05 | 1.54E-04 |
| 624-83-9 | Methyl isocyanate | 6.18E-10 | 5.13E-11 | 3.78E-10 | 6.18E-10 | 5.13E-11 | 3.78E-10 | 1.03E-10 | 7.55E-10 |

## Estimated Organic Concentration at Point of Maximum Impact for HLW

| | HV-S3 A & B Vapor/particle/ particle-bound | |
|---|---|---|
| Average Annual Concentration | 0.08302 | ug/m3 per g/s |
| Maximum 24-hour Concentration | 0.61071 | ug/m3 per g/s |

| CAS Number | Compound | HV-S3A (gm/sec) | HV-S3A Annual Average Concentration (ug/m3) | HV-S3A Maximum 24 hr Concentration (ug/m3) | HV-S3B (gm/sec) | HV-S3B Annual Average Concentration (ug/m3) | HV-S3B Maximum 24 hr Concentration (ug/m3) | Total HLW Annual Average Concentration (ug/m3) | Total HLW Maximum 24 hr Concentration (ug/m3) |
|---|---|---|---|---|---|---|---|---|---|
| 627-13-4 | Nitric acid, propyl ester | 2.81E-09 | 2.33E-10 | 1.72E-09 | 2.81E-09 | 2.33E-10 | 1.72E-09 | 4.67E-10 | 3.43E-09 |
| 62-75-9 | N-Nitroso-N,N-dimethylamine (Dimethylnitrosamine) | 2.47E-04 | 2.05E-05 | 1.51E-04 | 2.47E-04 | 2.05E-05 | 1.51E-04 | 4.10E-05 | 3.02E-04 |
| 630-20-6 | 1,1,1,2-Tetrachloroethane | 3.02E-10 | 2.51E-11 | 1.85E-10 | 3.02E-10 | 2.51E-11 | 1.85E-10 | 5.02E-11 | 3.69E-10 |
| 64-17-5 | Ethyl alcohol | 2.77E-05 | 2.30E-06 | 1.69E-05 | 2.77E-05 | 2.30E-06 | 1.69E-05 | 4.60E-06 | 3.38E-05 |
| 64-18-6 | Formic acid | 1.73E-04 | 1.43E-05 | 1.05E-04 | 1.73E-04 | 1.43E-05 | 1.05E-04 | 2.87E-05 | 2.11E-04 |
| 64-19-7 | Acetic acid | 1.71E-04 | 1.42E-05 | 1.05E-04 | 1.71E-04 | 1.42E-05 | 1.05E-04 | 2.85E-05 | 2.09E-04 |
| 67-56-1 | Methyl alcohol (Methanol) | 2.77E-05 | 2.30E-06 | 1.69E-05 | 2.77E-05 | 2.30E-06 | 1.69E-05 | 4.60E-06 | 3.38E-05 |
| 67-63-0 | 2-Propyl alcohol (Isopropanol; Propan-2-01) | 1.99E-05 | 1.66E-06 | 1.22E-05 | 1.99E-05 | 1.66E-06 | 1.22E-05 | 3.31E-06 | 2.44E-05 |
| 67-64-1 | 2-Propanone (Acetone) | 4.45E-05 | 3.70E-06 | 2.72E-05 | 4.45E-05 | 3.70E-06 | 2.72E-05 | 7.39E-06 | 5.44E-05 |
| 67-66-3 | Chloroform | 1.38E-11 | 1.14E-12 | 8.41E-12 | 1.38E-11 | 1.14E-12 | 8.41E-12 | 2.29E-12 | 1.68E-11 |
| 67-72-1 | Hexachloroethane | 6.26E-11 | 5.20E-12 | 3.82E-11 | 6.26E-11 | 5.20E-12 | 3.82E-11 | 1.04E-11 | 7.65E-11 |
| 684-16-2 | Hexafluoroacetone | 1.38E-11 | 1.14E-12 | 8.41E-12 | 1.38E-11 | 1.14E-12 | 8.41E-12 | 2.29E-12 | 1.68E-11 |
| 71-23-8 | n-Propyl alcohol | 1.99E-05 | 1.66E-06 | 1.22E-05 | 1.99E-05 | 1.66E-06 | 1.22E-05 | 3.31E-06 | 2.44E-05 |
| 71-36-3 | n-Butyl alcohol | 1.99E-05 | 1.66E-06 | 1.22E-05 | 1.99E-05 | 1.66E-06 | 1.22E-05 | 3.31E-06 | 2.44E-05 |
| 71-43-2 | Benzene | 1.52E-12 | 1.26E-13 | 9.29E-13 | 1.52E-12 | 1.26E-13 | 9.29E-13 | 2.53E-13 | 1.86E-12 |
| 71-55-6 | Methyl chloroform (1,1,1-Trichloroethane) | 5.94E-15 | 4.93E-16 | 3.63E-15 | 5.94E-15 | 4.93E-16 | 3.63E-15 | 9.86E-16 | 7.25E-15 |
| 72-20-8 | Endrin | 2.34E-16 | 1.94E-17 | 1.43E-16 | 2.34E-16 | 1.94E-17 | 1.43E-16 | 3.88E-17 | 2.86E-16 |
| 72-43-5 | Methoxychlor | 7.37E-16 | 6.12E-17 | 4.50E-16 | 7.37E-16 | 6.12E-17 | 4.50E-16 | 1.22E-16 | 9.00E-16 |
| 72-54-8 | 4,4-DDD | 2.34E-16 | 1.94E-17 | 1.43E-16 | 2.34E-16 | 1.94E-17 | 1.43E-16 | 3.88E-17 | 2.86E-16 |
| 72-55-9 | 4,4-DDE | 7.18E-16 | 5.96E-17 | 4.39E-16 | 7.18E-16 | 5.96E-17 | 4.39E-16 | 1.19E-16 | 8.77E-16 |
| 74-83-9 | Bromomethane (Methyl bromide) | 1.38E-11 | 1.14E-12 | 8.41E-12 | 1.38E-11 | 1.14E-12 | 8.41E-12 | 2.29E-12 | 1.68E-11 |
| 74-87-3 | Chloromethane (Methyl chloride) | 9.43E-14 | 7.83E-15 | 5.76E-14 | 9.43E-14 | 7.83E-15 | 5.76E-14 | 1.57E-14 | 1.15E-13 |
| 74-97-5 | Bromochloromethane | 6.18E-10 | 5.13E-11 | 3.78E-10 | 6.18E-10 | 5.13E-11 | 3.78E-10 | 1.03E-10 | 7.55E-10 |
| 74-99-7 | Methylacetylene | 4.29E-13 | 3.56E-14 | 2.62E-13 | 4.29E-13 | 3.56E-14 | 2.62E-13 | 7.12E-14 | 5.23E-13 |
| 75-00-3 | Chloroethane | 9.43E-14 | 7.83E-15 | 5.76E-14 | 9.43E-14 | 7.83E-15 | 5.76E-14 | 1.57E-14 | 1.15E-13 |

## Estimated Organic Concentration at Point of Maximum Impact for HLW

| | | | HV-S3 A & B Vapor/particle/ particle-bound | | | | | | |
|---|---|---|---|---|---|---|---|---|---|
| Average Annual Concentration | | | 0.08302 | ug/m3 per g/s | | | | | |
| Maximum 24-hour Concentration | | | 0.61071 | ug/m3 per g/s | | | | | |
| CAS Number | Compound | HV-S3A (gm/sec) | HV-S3A Annual Average Concentration (ug/m3) | HV-S3A Maximum 24 hr Concentration (ug/m3) | HV-S3B (gm/sec) | HV-S3B Annual Average Concentration (ug/m3) | HV-S3B Maximum 24 hr Concentration (ug/m3) | Total HLW Annual Average Concentration (ug/m3) | Total HLW Maximum 24 hr Concentration (ug/m3) |
| 75-01-4 | Vinyl chloride (1-Chloroethene) | 1.47E-20 | 1.22E-21 | 8.98E-21 | 1.47E-20 | 1.22E-21 | 8.98E-21 | 2.44E-21 | 1.80E-20 |
| 75-05-8 | Acetonitrile | 1.44E-05 | 1.20E-06 | 8.82E-06 | 1.44E-05 | 1.20E-06 | 8.82E-06 | 2.40E-06 | 1.76E-05 |
| 75-07-0 | Acetaldehyde | 3.71E-05 | 3.08E-06 | 2.27E-05 | 3.71E-05 | 3.08E-06 | 2.27E-05 | 6.16E-06 | 4.53E-05 |
| 75-09-2 | Dichloromethane (Methylene chloride) | 1.38E-11 | 1.14E-12 | 8.41E-12 | 1.38E-11 | 1.14E-12 | 8.41E-12 | 2.29E-12 | 1.68E-11 |
| 75-12-7 | Formamide | 1.70E-04 | 1.41E-05 | 1.04E-04 | 1.70E-04 | 1.41E-05 | 1.04E-04 | 2.82E-05 | 2.08E-04 |
| 75-15-0 | Carbon disulfide | 9.43E-14 | 7.83E-15 | 5.76E-14 | 9.43E-14 | 7.83E-15 | 5.76E-14 | 1.57E-14 | 1.15E-13 |
| 75-21-8 | Ethylene oxide (Oxirane) | 4.55E-07 | 3.78E-08 | 2.78E-07 | 4.55E-07 | 3.78E-08 | 2.78E-07 | 7.55E-08 | 5.56E-07 |
| 75-27-4 | Bromodichloromethane | 3.02E-10 | 2.51E-11 | 1.85E-10 | 3.02E-10 | 2.51E-11 | 1.85E-10 | 5.02E-11 | 3.69E-10 |
| 75-34-3 | 1,1-Dichloroethane | 1.38E-11 | 1.14E-12 | 8.41E-12 | 1.38E-11 | 1.14E-12 | 8.41E-12 | 2.29E-12 | 1.68E-11 |
| 75-35-4 | 1,1-Dichloroethene (Vinylidene chloride) | 3.23E-21 | 2.68E-22 | 1.98E-21 | 3.23E-21 | 2.68E-22 | 1.98E-21 | 5.37E-22 | 3.95E-21 |
| 75-43-4 | Dichlorofluoromethane | 9.43E-14 | 7.83E-15 | 5.76E-14 | 9.43E-14 | 7.83E-15 | 5.76E-14 | 1.57E-14 | 1.15E-13 |
| 75-45-6 | Chlorodifluoromethane | 3.23E-21 | 2.68E-22 | 1.98E-21 | 3.23E-21 | 2.68E-22 | 1.98E-21 | 5.37E-22 | 3.95E-21 |
| 75-50-3 | Trimethylamine | 1.97E-06 | 1.64E-07 | 1.21E-06 | 1.97E-06 | 1.64E-07 | 1.21E-06 | 3.28E-07 | 2.41E-06 |
| 75-52-5 | Nitromethane | 3.71E-05 | 3.08E-06 | 2.27E-05 | 3.71E-05 | 3.08E-06 | 2.27E-05 | 6.16E-06 | 4.53E-05 |
| 75-55-8 | 2-Methylaziridine | 9.07E-05 | 7.53E-06 | 5.54E-05 | 9.07E-05 | 7.53E-06 | 5.54E-05 | 1.51E-05 | 1.11E-04 |
| 75-61-6 | Difluorodibromomethane | 3.23E-21 | 2.68E-22 | 1.98E-21 | 3.23E-21 | 2.68E-22 | 1.98E-21 | 5.37E-22 | 3.95E-21 |
| 75-63-8 | Trifluorobromomethane | 0.00E+00 | 0.00E+00 | 0.00E+00 | 0.00E+00 | 0.00E+00 | 0.00E+00 | 0.00E+00 | 0.00E+00 |
| 75-65-0 | 2-Methyl-2-propanol | 1.99E-05 | 1.66E-06 | 1.22E-05 | 1.99E-05 | 1.66E-06 | 1.22E-05 | 3.31E-06 | 2.44E-05 |
| 75-69-4 | Trichlorofluoromethane | 0.00E+00 | 0.00E+00 | 0.00E+00 | 0.00E+00 | 0.00E+00 | 0.00E+00 | 0.00E+00 | 0.00E+00 |
| 75-71-8 | Dichlorodifluoromethane | 0.00E+00 | 0.00E+00 | 0.00E+00 | 0.00E+00 | 0.00E+00 | 0.00E+00 | 0.00E+00 | 0.00E+00 |
| 75-99-0 | 2,2-Dichloropropionic acid | 1.71E-04 | 1.42E-05 | 1.05E-04 | 1.71E-04 | 1.42E-05 | 1.05E-04 | 2.85E-05 | 2.09E-04 |
| 76-03-9 | Trichloroacetic acid | 3.77E-05 | 3.13E-06 | 2.31E-05 | 3.77E-05 | 3.13E-06 | 2.31E-05 | 6.27E-06 | 4.61E-05 |
| 76-11-9 | 1,1,1,2-Tetrachloro-2,2-difluoroethane | 0.00E+00 | 0.00E+00 | 0.00E+00 | 0.00E+00 | 0.00E+00 | 0.00E+00 | 0.00E+00 | 0.00E+00 |
| 76-12-0 | 1,1,2,2-Tetrachloro-1,2-difluoroethane | 0.00E+00 | 0.00E+00 | 0.00E+00 | 0.00E+00 | 0.00E+00 | 0.00E+00 | 0.00E+00 | 0.00E+00 |
| 76-13-1 | 1,2,2-Trichloro-1,1,2-trifluoroethane (Freon 113) | 0.00E+00 | 0.00E+00 | 0.00E+00 | 0.00E+00 | 0.00E+00 | 0.00E+00 | 0.00E+00 | 0.00E+00 |

## Estimated Organic Concentration at Point of Maximum Impact for HLW

| | HV-S3 A & B Vapor/particle/ particle-bound | |
|---|---|---|
| Average Annual Concentration | 0.08302 | ug/m3 per g/s |
| Maximum 24-hour Concentration | 0.61071 | ug/m3 per g/s |

| CAS Number | Compound | HV-S3A (gm/sec) | HV-S3A Annual Average Concentration (ug/m3) | HV-S3A Maximum 24 hr Concentration (ug/m3) | HV-S3B (gm/sec) | HV-S3B Annual Average Concentration (ug/m3) | HV-S3B Maximum 24 hr Concentration (ug/m3) | Total HLW Annual Average Concentration (ug/m3) | Total HLW Maximum 24 hr Concentration (ug/m3) |
|---|---|---|---|---|---|---|---|---|---|
| 76-14-2 | 1,2-Dichloro-1,1,2,2-tetrafluoroethane | 0.00E+00 | 0.00E+00 | 0.00E+00 | 0.00E+00 | 0.00E+00 | 0.00E+00 | 0.00E+00 | 0.00E+00 |
| 76-15-3 | Chloropentafluoroethane | 2.12E-30 | 1.76E-31 | 1.29E-30 | 2.12E-30 | 1.76E-31 | 1.29E-30 | 3.52E-31 | 2.59E-30 |
| 76-44-8 | Heptachlor | 1.76E-08 | 1.46E-09 | 1.08E-08 | 1.76E-08 | 1.46E-09 | 1.08E-08 | 2.93E-09 | 2.15E-08 |
| 78-83-1 | 2-Methylpropyl alcohol (Isobutyl alcohol) | 9.07E-05 | 7.53E-06 | 5.54E-05 | 9.07E-05 | 7.53E-06 | 5.54E-05 | 1.51E-05 | 1.11E-04 |
| 78-87-5 | 1,2-Dichloropropane | 1.38E-11 | 1.14E-12 | 8.41E-12 | 1.38E-11 | 1.14E-12 | 8.41E-12 | 2.29E-12 | 1.68E-11 |
| 78-92-2 | 1-Methylpropyl alcohol (2-Butanol) | 1.99E-05 | 1.66E-06 | 1.22E-05 | 1.99E-05 | 1.66E-06 | 1.22E-05 | 3.31E-06 | 2.44E-05 |
| 78-93-3 | Methyl ethyl ketone (MEK, 2-Butanone) | 8.16E-06 | 6.78E-07 | 4.99E-06 | 8.16E-06 | 6.78E-07 | 4.99E-06 | 1.36E-06 | 9.97E-06 |
| 79-00-5 | 1,1,2-Trichloroethane | 6.18E-10 | 5.13E-11 | 3.78E-10 | 6.18E-10 | 5.13E-11 | 3.78E-10 | 1.03E-10 | 7.55E-10 |
| 79-01-6 | Trichloroethylene | 1.05E-13 | 8.74E-15 | 6.43E-14 | 1.05E-13 | 8.74E-15 | 6.43E-14 | 1.75E-14 | 1.29E-13 |
| 79-09-4 | Propionic acid | 1.90E-04 | 1.57E-05 | 1.16E-04 | 1.90E-04 | 1.57E-05 | 1.16E-04 | 3.15E-05 | 2.32E-04 |
| 79-10-7 | 2-Propenoic acid | 1.90E-04 | 1.57E-05 | 1.16E-04 | 1.90E-04 | 1.57E-05 | 1.16E-04 | 3.15E-05 | 2.32E-04 |
| 79-20-9 | Methyl acetate | 8.98E-06 | 7.45E-07 | 5.48E-06 | 8.98E-06 | 7.45E-07 | 5.48E-06 | 1.49E-06 | 1.10E-05 |
| 79-34-5 | 1,1,2,2-Tetrachloroethane | 8.04E-08 | 6.67E-09 | 4.91E-08 | 8.04E-08 | 6.67E-09 | 4.91E-08 | 1.33E-08 | 9.82E-08 |
| 8001-35-2 | Toxaphene | 3.57E-16 | 2.97E-17 | 2.18E-16 | 3.57E-16 | 2.97E-17 | 2.18E-16 | 5.93E-17 | 4.36E-16 |
| 82-68-8 | Pentachloronitrobenzene (PCBN or quintobenzene) | 3.71E-05 | 3.08E-06 | 2.27E-05 | 3.71E-05 | 3.08E-06 | 2.27E-05 | 6.16E-06 | 4.53E-05 |
| 83-32-9 | Acenaphthene | 2.07E-06 | 1.72E-07 | 1.26E-06 | 2.07E-06 | 1.72E-07 | 1.26E-06 | 3.43E-07 | 2.53E-06 |
| 84-66-2 | Diethyl phthalate | 1.58E-04 | 1.31E-05 | 9.67E-05 | 1.58E-04 | 1.31E-05 | 9.67E-05 | 2.63E-05 | 1.93E-04 |
| 84-74-2 | Dibutyl phthalate | 3.21E-14 | 2.67E-15 | 1.96E-14 | 3.21E-14 | 2.67E-15 | 1.96E-14 | 5.34E-15 | 3.93E-14 |
| 85-01-8 | Phenanthrene | 3.71E-05 | 3.08E-06 | 2.27E-05 | 3.71E-05 | 3.08E-06 | 2.27E-05 | 6.16E-06 | 4.53E-05 |
| 85-68-7 | Butylbenzyl phthalate | 3.21E-14 | 2.67E-15 | 1.96E-14 | 3.21E-14 | 2.67E-15 | 1.96E-14 | 5.34E-15 | 3.93E-14 |
| 86-73-7 | Fluorene | 1.33E-14 | 1.11E-15 | 8.14E-15 | 1.33E-14 | 1.11E-15 | 8.14E-15 | 2.21E-15 | 1.63E-14 |
| 87-68-3 | Hexachlorobutadiene | 8.33E-14 | 6.92E-15 | 5.09E-14 | 8.33E-14 | 6.92E-15 | 5.09E-14 | 1.38E-14 | 1.02E-13 |
| 87-86-5 | Pentachlorophenol | 1.71E-04 | 1.42E-05 | 1.05E-04 | 1.71E-04 | 1.42E-05 | 1.05E-04 | 2.85E-05 | 2.09E-04 |
| 88-06-2 | 2,4,6-Trichlorophenol | 1.26E-04 | 1.05E-05 | 7.69E-05 | 1.26E-04 | 1.05E-05 | 7.69E-05 | 2.09E-05 | 1.54E-04 |
| 88-72-2 | 2-Nitrotoluene | 1.82E-05 | 1.51E-06 | 1.11E-05 | 1.82E-05 | 1.51E-06 | 1.11E-05 | 3.03E-06 | 2.23E-05 |
| 88-75-5 | 2-Nitrophenol | 8.29E-05 | 6.88E-06 | 5.06E-05 | 8.29E-05 | 6.88E-06 | 5.06E-05 | 1.38E-05 | 1.01E-04 |

## Estimated Organic Concentration at Point of Maximum Impact for HLW

| | | | HV-S3 A & B Vapor/particle/ particle-bound | | | | | | |
|---|---|---|---|---|---|---|---|---|---|
| Average Annual Concentration | | | 0.08302 | ug/m3 per g/s | | | | | |
| Maximum 24-hour Concentration | | | 0.61071 | ug/m3 per g/s | | | | | |
| CAS Number | Compound | HV-S3A (gm/sec) | HV-S3A Annual Average Concentration (ug/m3) | HV-S3A Maximum 24 hr Concentration (ug/m3) | HV-S3B (gm/sec) | HV-S3B Annual Average Concentration (ug/m3) | HV-S3B Maximum 24 hr Concentration (ug/m3) | Total HLW Annual Average Concentration (ug/m3) | Total HLW Maximum 24 hr Concentration (ug/m3) |
| 88-85-7 | 2-sec-Butyl-4,6-dinitrophenol (Dinoseb) | 3.47E-14 | 2.88E-15 | 2.12E-14 | 3.47E-14 | 2.88E-15 | 2.12E-14 | 5.76E-15 | 4.24E-14 |
| 88-89-1 | Picric acid | 2.67E-14 | 2.22E-15 | 1.63E-14 | 2.67E-14 | 2.22E-15 | 1.63E-14 | 4.43E-15 | 3.26E-14 |
| 91-20-3 | Naphthalene | 7.61E-09 | 6.32E-10 | 4.65E-09 | 7.61E-09 | 6.32E-10 | 4.65E-09 | 1.26E-09 | 9.30E-09 |
| 91-22-5 | Quinoline | 1.32E-04 | 1.10E-05 | 8.08E-05 | 1.32E-04 | 1.10E-05 | 8.08E-05 | 2.20E-05 | 1.62E-04 |
| 91-58-7 | 2-Chloronapthalene | 3.65E-07 | 3.03E-08 | 2.23E-07 | 3.65E-07 | 3.03E-08 | 2.23E-07 | 6.07E-08 | 4.46E-07 |
| 92-52-4 | 1,1'-Biphenyl | 3.65E-07 | 3.03E-08 | 2.23E-07 | 3.65E-07 | 3.03E-08 | 2.23E-07 | 6.07E-08 | 4.46E-07 |
| 92-93-3 | 4-Nitrobiphenyl | 3.32E-14 | 2.75E-15 | 2.02E-14 | 3.32E-14 | 2.75E-15 | 2.02E-14 | 5.51E-15 | 4.05E-14 |
| 93-72-1 | Silvex (2,4,5-TP) | 2.17E-14 | 1.80E-15 | 1.32E-14 | 2.17E-14 | 1.80E-15 | 1.32E-14 | 3.60E-15 | 2.65E-14 |
| 93-76-5 | 2,4,5-T | 2.17E-14 | 1.80E-15 | 1.32E-14 | 2.17E-14 | 1.80E-15 | 1.32E-14 | 3.60E-15 | 2.65E-14 |
| 94-75-7 | 2,4-D and esters (160C typed) | 1.71E-04 | 1.42E-05 | 1.05E-04 | 1.71E-04 | 1.42E-05 | 1.05E-04 | 2.85E-05 | 2.09E-04 |
| 95-13-6 | Indene | 1.37E-09 | 1.14E-10 | 8.39E-10 | 1.37E-09 | 1.14E-10 | 8.39E-10 | 2.28E-10 | 1.68E-09 |
| 95-47-6 | o-Xylene | 1.38E-11 | 1.14E-12 | 8.41E-12 | 1.38E-11 | 1.14E-12 | 8.41E-12 | 2.29E-12 | 1.68E-11 |
| 95-48-7 | o-Cresol (2-Methylphenol) | 2.91E-05 | 2.42E-06 | 1.78E-05 | 2.91E-05 | 2.42E-06 | 1.78E-05 | 4.83E-06 | 3.55E-05 |
| 95-49-8 | 2-Chlorotoluene | 6.26E-11 | 5.20E-12 | 3.82E-11 | 6.26E-11 | 5.20E-12 | 3.82E-11 | 1.04E-11 | 7.65E-11 |
| 95-50-1 | o-Dichlorobenzene (1,2-Dichlorobenzene) | 3.02E-10 | 2.51E-11 | 1.85E-10 | 3.02E-10 | 2.51E-11 | 1.85E-10 | 5.02E-11 | 3.69E-10 |
| 95-57-8 | 2-Chlorophenol | 9.07E-05 | 7.53E-06 | 5.54E-05 | 9.07E-05 | 7.53E-06 | 5.54E-05 | 1.51E-05 | 1.11E-04 |
| 95-95-4 | 2,4,5-Trichlorophenol | 1.32E-04 | 1.10E-05 | 8.08E-05 | 1.32E-04 | 1.10E-05 | 8.08E-05 | 2.20E-05 | 1.62E-04 |
| 96-22-0 | 3-Pentanone | 1.97E-06 | 1.64E-07 | 1.21E-06 | 1.97E-06 | 1.64E-07 | 1.21E-06 | 3.28E-07 | 2.41E-06 |
| 96-69-5 | Bis(3-tert-butyl-4-hydroxy-6-methyl-phenyl)sulfide | 1.35E-18 | 1.12E-19 | 8.22E-19 | 1.35E-18 | 1.12E-19 | 8.22E-19 | 2.23E-19 | 1.64E-18 |
| 98-51-1 | p-tert-Butyltoluene | 2.70E-14 | 2.24E-15 | 1.65E-14 | 2.70E-14 | 2.24E-15 | 1.65E-14 | 4.48E-15 | 3.30E-14 |
| 98-82-8 | Cumene | 4.29E-13 | 3.56E-14 | 2.62E-13 | 4.29E-13 | 3.56E-14 | 2.62E-13 | 7.12E-14 | 5.23E-13 |
| 98-83-9 | alpha-Methylstyrene | 1.38E-11 | 1.14E-12 | 8.41E-12 | 1.38E-11 | 1.14E-12 | 8.41E-12 | 2.29E-12 | 1.68E-11 |
| 98-86-2 | Acetophenone | 8.84E-05 | 7.34E-06 | 5.40E-05 | 8.84E-05 | 7.34E-06 | 5.40E-05 | 1.47E-05 | 1.08E-04 |
| 98-95-3 | Nitrobenzene | 8.29E-05 | 6.88E-06 | 5.06E-05 | 8.29E-05 | 6.88E-06 | 5.06E-05 | 1.38E-05 | 1.01E-04 |
| Products of Incomplete Combustion (PICs) | 0 | 0.00E+00 | 0.00E+00 | 0.00E+00 | 0.00E+00 | 0.00E+00 | 0.00E+00 | 0.00E+00 | 0.00E+00 |

## Estimated Organic Concentration at Point of Maximum Impact for HLW

| | HV-S3 A & B Vapor/particle/ particle-bound | |
|---|---|---|
| Average Annual Concentration | 0.08302 | ug/m3 per g/s |
| Maximum 24-hour Concentration | 0.61071 | ug/m3 per g/s |

| CAS Number | Compound | HV-S3A (gm/sec) | HV-S3A Annual Average Concentration (ug/m3) | HV-S3A Maximum 24 hr Concentration (ug/m3) | HV-S3B (gm/sec) | HV-S3B Annual Average Concentration (ug/m3) | HV-S3B Maximum 24 hr Concentration (ug/m3) | Total HLW Annual Average Concentration (ug/m3) | Total HLW Maximum 24 hr Concentration (ug/m3) |
|---|---|---|---|---|---|---|---|---|---|
| 100-02-7 | 4-Nitrophenol | 3.91E-06 | 3.24E-07 | 2.39E-06 | 3.91E-06 | 3.24E-07 | 2.39E-06 | 6.48E-07 | 4.77E-06 |
| 100-44-7 | Benzyl chloride | 5.21E-07 | 4.32E-08 | 3.18E-07 | 5.21E-07 | 4.32E-08 | 3.18E-07 | 8.65E-08 | 6.36E-07 |
| 100-51-6 | Benzyl alcohol | 3.91E-06 | 3.24E-07 | 2.39E-06 | 3.91E-06 | 3.24E-07 | 2.39E-06 | 6.48E-07 | 4.77E-06 |
| 100-52-7 | Benzaldehyde | 3.91E-06 | 3.24E-07 | 2.39E-06 | 3.91E-06 | 3.24E-07 | 2.39E-06 | 6.48E-07 | 4.77E-06 |
| 101-77-9 | 4,4-Methylenedianiline | 3.91E-06 | 3.24E-07 | 2.39E-06 | 3.91E-06 | 3.24E-07 | 2.39E-06 | 6.48E-07 | 4.77E-06 |
| 103-33-3 | Azobenzene | 3.91E-06 | 3.24E-07 | 2.39E-06 | 3.91E-06 | 3.24E-07 | 2.39E-06 | 6.48E-07 | 4.77E-06 |
| 103-65-1 | n-Propyl benzene (Isocumene) | 5.21E-07 | 4.32E-08 | 3.18E-07 | 5.21E-07 | 4.32E-08 | 3.18E-07 | 8.65E-08 | 6.36E-07 |
| 104-51-8 | n-Butylbenzene | 5.21E-07 | 4.32E-08 | 3.18E-07 | 5.21E-07 | 4.32E-08 | 3.18E-07 | 8.65E-08 | 6.36E-07 |
| 105-67-9 | 2,4-Dimethylphenol | 3.91E-06 | 3.24E-07 | 2.39E-06 | 3.91E-06 | 3.24E-07 | 2.39E-06 | 6.48E-07 | 4.77E-06 |
| 106-43-4 | 4-Chlorotoluene (p-Tolyl chloride) | 5.21E-07 | 4.32E-08 | 3.18E-07 | 5.21E-07 | 4.32E-08 | 3.18E-07 | 8.65E-08 | 6.36E-07 |
| 106-44-5 | p-Cresol (4-Methyl phenol) | 3.91E-06 | 3.24E-07 | 2.39E-06 | 3.91E-06 | 3.24E-07 | 2.39E-06 | 6.48E-07 | 4.77E-06 |
| 106-47-8 | p-Chloroaniline | 3.91E-06 | 3.24E-07 | 2.39E-06 | 3.91E-06 | 3.24E-07 | 2.39E-06 | 6.48E-07 | 4.77E-06 |
| 106-49-0 | p-Toluidine | 3.91E-06 | 3.24E-07 | 2.39E-06 | 3.91E-06 | 3.24E-07 | 2.39E-06 | 6.48E-07 | 4.77E-06 |
| 106-51-4 | Quinone | 3.91E-06 | 3.24E-07 | 2.39E-06 | 3.91E-06 | 3.24E-07 | 2.39E-06 | 6.48E-07 | 4.77E-06 |
| 106-89-8 | Epichlorohydrin (1-chloro-2,3-epoxypropane) | 5.21E-07 | 4.32E-08 | 3.18E-07 | 5.21E-07 | 4.32E-08 | 3.18E-07 | 8.65E-08 | 6.36E-07 |
| 107-19-7 | Propargyl alcohol | 5.21E-07 | 4.32E-08 | 3.18E-07 | 5.21E-07 | 4.32E-08 | 3.18E-07 | 8.65E-08 | 6.36E-07 |
| 107-21-1 | Ethylene glycol | 5.21E-07 | 4.32E-08 | 3.18E-07 | 5.21E-07 | 4.32E-08 | 3.18E-07 | 8.65E-08 | 6.36E-07 |
| 107-98-2 | Propylene gylcol monomethyl ether | 3.91E-06 | 3.24E-07 | 2.39E-06 | 3.91E-06 | 3.24E-07 | 2.39E-06 | 6.48E-07 | 4.77E-06 |
| 108-60-1 | Dichloroisopropyl ether (2,2'-Oxybis(1-chloropropane)) | 3.91E-06 | 3.24E-07 | 2.39E-06 | 3.91E-06 | 3.24E-07 | 2.39E-06 | 6.48E-07 | 4.77E-06 |
| 108-67-8 | 1,3,5-Trimethyl benzene | 5.21E-07 | 4.32E-08 | 3.18E-07 | 5.21E-07 | 4.32E-08 | 3.18E-07 | 8.65E-08 | 6.36E-07 |
| 108-86-1 | Bromobenzene (Phenyl bromide) | 5.21E-07 | 4.32E-08 | 3.18E-07 | 5.21E-07 | 4.32E-08 | 3.18E-07 | 8.65E-08 | 6.36E-07 |
| 109-77-3 | Malononitrile | 5.21E-07 | 4.32E-08 | 3.18E-07 | 5.21E-07 | 4.32E-08 | 3.18E-07 | 8.65E-08 | 6.36E-07 |
| 109-86-4 | 2-Methoxyethanol | 3.91E-06 | 3.24E-07 | 2.39E-06 | 3.91E-06 | 3.24E-07 | 2.39E-06 | 6.48E-07 | 4.77E-06 |
| 110-80-5 | 2-Ethoxyethanol | 3.91E-06 | 3.24E-07 | 2.39E-06 | 3.91E-06 | 3.24E-07 | 2.39E-06 | 6.48E-07 | 4.77E-06 |

## Estimated Organic Concentration at Point of Maximum Impact for HLW

| | HV-S3 A & B Vapor/particle/ particle-bound | |
|---|---|---|
| Average Annual Concentration | 0.08302 | ug/m3 per g/s |
| Maximum 24-hour Concentration | 0.61071 | ug/m3 per g/s |

| CAS Number | Compound | HV-S3A (gm/sec) | HV-S3A Annual Average Concentration (ug/m3) | HV-S3A Maximum 24 hr Concentration (ug/m3) | HV-S3B (gm/sec) | HV-S3B Annual Average Concentration (ug/m3) | HV-S3B Maximum 24 hr Concentration (ug/m3) | Total HLW Annual Average Concentration (ug/m3) | Total HLW Maximum 24 hr Concentration (ug/m3) |
|---|---|---|---|---|---|---|---|---|---|
| 111-15-9 | Ethylene glycol monoethyl ether acetate | 3.91E-06 | 3.24E-07 | 2.39E-06 | 3.91E-06 | 3.24E-07 | 2.39E-06 | 6.48E-07 | 4.77E-06 |
| 111-44-4 | Bis(2-chloroethyl) ether | 3.91E-06 | 3.24E-07 | 2.39E-06 | 3.91E-06 | 3.24E-07 | 2.39E-06 | 6.48E-07 | 4.77E-06 |
| 111-91-1 | Bis(2-chloroethoxy)methane | 3.91E-06 | 3.24E-07 | 2.39E-06 | 3.91E-06 | 3.24E-07 | 2.39E-06 | 6.48E-07 | 4.77E-06 |
| 1120-71-4 | 1,3-Propane sultone | 3.91E-06 | 3.24E-07 | 2.39E-06 | 3.91E-06 | 3.24E-07 | 2.39E-06 | 6.48E-07 | 4.77E-06 |
| 119-90-4 | 3,3'-Dimethoxybenzidine (ortho-dianisidine) | 3.91E-06 | 3.24E-07 | 2.39E-06 | 3.91E-06 | 3.24E-07 | 2.39E-06 | 6.48E-07 | 4.77E-06 |
| 121-14-2 | 2,4-Dinitrotoluene | 3.91E-06 | 3.24E-07 | 2.39E-06 | 3.91E-06 | 3.24E-07 | 2.39E-06 | 6.48E-07 | 4.77E-06 |
| 122-66-7 | 1,2-Diphenylhydrazine | 3.91E-06 | 3.24E-07 | 2.39E-06 | 3.91E-06 | 3.24E-07 | 2.39E-06 | 6.48E-07 | 4.77E-06 |
| 123-33-1 | Maleic hydrazide | 3.91E-06 | 3.24E-07 | 2.39E-06 | 3.91E-06 | 3.24E-07 | 2.39E-06 | 6.48E-07 | 4.77E-06 |
| 124-48-1 | Chlorodibromomethane | 5.21E-07 | 4.32E-08 | 3.18E-07 | 5.21E-07 | 4.32E-08 | 3.18E-07 | 8.65E-08 | 6.36E-07 |
| 131-11-3 | Dimethylphthalate | 3.91E-06 | 3.24E-07 | 2.39E-06 | 3.91E-06 | 3.24E-07 | 2.39E-06 | 6.48E-07 | 4.77E-06 |
| 131-89-5 | 2-Cyclohexyl-4,6-dinitrophenol | 3.91E-06 | 3.24E-07 | 2.39E-06 | 3.91E-06 | 3.24E-07 | 2.39E-06 | 6.48E-07 | 4.77E-06 |
| 133-06-2 | Captan | 3.91E-06 | 3.24E-07 | 2.39E-06 | 3.91E-06 | 3.24E-07 | 2.39E-06 | 6.48E-07 | 4.77E-06 |
| 135-98-8 | sec-Butylbenzene | 5.21E-07 | 4.32E-08 | 3.18E-07 | 5.21E-07 | 4.32E-08 | 3.18E-07 | 8.65E-08 | 6.36E-07 |
| 145-73-3 | Endothall | 3.91E-06 | 3.24E-07 | 2.39E-06 | 3.91E-06 | 3.24E-07 | 2.39E-06 | 6.48E-07 | 4.77E-06 |
| 156-59-2 | cis-1,2-Dichloroethene | 5.21E-07 | 4.32E-08 | 3.18E-07 | 5.21E-07 | 4.32E-08 | 3.18E-07 | 8.65E-08 | 6.36E-07 |
| 1746-01-6 | 2,3,7,8-Tetrachlorodibenzo(p)dioxin (TCDD) | 2.44E-12 | 2.03E-13 | 1.49E-12 | 2.44E-12 | 2.03E-13 | 1.49E-12 | 4.05E-13 | 2.98E-12 |
| 192-97-2 | Benzo(e)pyrene | 7.81E-07 | 6.48E-08 | 4.77E-07 | 7.81E-07 | 6.48E-08 | 4.77E-07 | 1.30E-07 | 9.54E-07 |
| 19408-74-3 | 1,2,3,7,8,9-Hexachlorodibenzo(p)dioxin | 4.06E-12 | 3.37E-13 | 2.48E-12 | 4.06E-12 | 3.37E-13 | 2.48E-12 | 6.74E-13 | 4.96E-12 |
| 23950-58-5 | Pronamide | 3.91E-06 | 3.24E-07 | 2.39E-06 | 3.91E-06 | 3.24E-07 | 2.39E-06 | 6.48E-07 | 4.77E-06 |
| 25013-15-4 | Methyl styrene (mixed isomers) | 5.21E-07 | 4.32E-08 | 3.18E-07 | 5.21E-07 | 4.32E-08 | 3.18E-07 | 8.65E-08 | 6.36E-07 |
| 3268-87-9 | Octachlorodibenzo(p)dioxin | 2.03E-11 | 1.69E-12 | 1.24E-11 | 2.03E-11 | 1.69E-12 | 1.24E-11 | 3.38E-12 | 2.48E-11 |
| 35822-46-9 | 1,2,3,4,6,7,8-Heptachlorodibenzo(p)dioxin | 8.15E-12 | 6.77E-13 | 4.98E-12 | 8.15E-12 | 6.77E-13 | 4.98E-12 | 1.35E-12 | 9.95E-12 |

## Estimated Organic Concentration at Point of Maximum Impact for HLW

| | HV-S3 A & B Vapor/particle/ particle-bound | |
|---|---|---|
| Average Annual Concentration | 0.08302 | ug/m3 per g/s |
| Maximum 24-hour Concentration | 0.61071 | ug/m3 per g/s |

| CAS Number | Compound | HV-S3A (gm/sec) | HV-S3A Annual Average Concentration (ug/m3) | HV-S3A Maximum 24 hr Concentration (ug/m3) | HV-S3B (gm/sec) | HV-S3B Annual Average Concentration (ug/m3) | HV-S3B Maximum 24 hr Concentration (ug/m3) | Total HLW Annual Average Concentration (ug/m3) | Total HLW Maximum 24 hr Concentration (ug/m3) |
|---|---|---|---|---|---|---|---|---|---|
| 39001-02-0 | Octachlorodibenzofuran | 1.63E-11 | 1.35E-12 | 9.94E-12 | 1.63E-11 | 1.35E-12 | 9.94E-12 | 2.70E-12 | 1.99E-11 |
| 39227-28-6 | 1,2,3,4,7,8-Hexachlorodibenzo(p)dioxin | 4.06E-12 | 3.37E-13 | 2.48E-12 | 4.06E-12 | 3.37E-13 | 2.48E-12 | 6.74E-13 | 4.96E-12 |
| 40321-76-4 | 1,2,3,7,8-Pentachlorodibenzo(p)dioxin | 4.06E-12 | 3.37E-13 | 2.48E-12 | 4.06E-12 | 3.37E-13 | 2.48E-12 | 6.74E-13 | 4.96E-12 |
| 41851-50-7 | Chlorocyclopentadiene | 5.21E-07 | 4.32E-08 | 3.18E-07 | 5.21E-07 | 4.32E-08 | 3.18E-07 | 8.65E-08 | 6.36E-07 |
| 460-19-5 | Cyanogen | 5.21E-07 | 4.32E-08 | 3.18E-07 | 5.21E-07 | 4.32E-08 | 3.18E-07 | 8.65E-08 | 6.36E-07 |
| 506-68-3 | Cyanogen bromide | 3.91E-06 | 3.24E-07 | 2.39E-06 | 3.91E-06 | 3.24E-07 | 2.39E-06 | 6.48E-07 | 4.77E-06 |
| 506-77-4 | Cyanogen chloride | 5.21E-07 | 4.32E-08 | 3.18E-07 | 5.21E-07 | 4.32E-08 | 3.18E-07 | 8.65E-08 | 6.36E-07 |
| 510-15-6 | Chlorobenzilate | 3.91E-06 | 3.24E-07 | 2.39E-06 | 3.91E-06 | 3.24E-07 | 2.39E-06 | 6.48E-07 | 4.77E-06 |
| 51207-31-9 | 2,3,7,8-Tetrachlorodibenzofuran | 2.03E-12 | 1.69E-13 | 1.24E-12 | 2.03E-12 | 1.69E-13 | 1.24E-12 | 3.38E-13 | 2.48E-12 |
| 51-28-5 | 2,4-Dinitrophenol | 3.91E-06 | 3.24E-07 | 2.39E-06 | 3.91E-06 | 3.24E-07 | 2.39E-06 | 6.48E-07 | 4.77E-06 |
| 51-79-6 | Ethyl carbamate (urethane) | 3.91E-06 | 3.24E-07 | 2.39E-06 | 3.91E-06 | 3.24E-07 | 2.39E-06 | 6.48E-07 | 4.77E-06 |
| 528-29-0 | o-Dinitrobenzene | 3.91E-06 | 3.24E-07 | 2.39E-06 | 3.91E-06 | 3.24E-07 | 2.39E-06 | 6.48E-07 | 4.77E-06 |
| 532-27-4 | 2-Chloroacetophenone | 3.91E-06 | 3.24E-07 | 2.39E-06 | 3.91E-06 | 3.24E-07 | 2.39E-06 | 6.48E-07 | 4.77E-06 |
| 534-52-1 | 4,6-Dinitro-o-cresol (4,6-Dinitro-2-methylphenol) | 3.91E-06 | 3.24E-07 | 2.39E-06 | 3.91E-06 | 3.24E-07 | 2.39E-06 | 6.48E-07 | 4.77E-06 |
| 5385-75-1 | Dibenzo(a,e)fluoranthene | 7.81E-07 | 6.48E-08 | 4.77E-07 | 7.81E-07 | 6.48E-08 | 4.77E-07 | 1.30E-07 | 9.54E-07 |
| 540-73-8 | 1,2-Dimethylhydrazine | 5.21E-07 | 4.32E-08 | 3.18E-07 | 5.21E-07 | 4.32E-08 | 3.18E-07 | 8.65E-08 | 6.36E-07 |
| 542-75-6 | 1,3-Dichloropropene | 5.21E-07 | 4.32E-08 | 3.18E-07 | 5.21E-07 | 4.32E-08 | 3.18E-07 | 8.65E-08 | 6.36E-07 |
| 542-88-1 | Dichloromethyl ether | 5.21E-07 | 4.32E-08 | 3.18E-07 | 5.21E-07 | 4.32E-08 | 3.18E-07 | 8.65E-08 | 6.36E-07 |
| 55673-89-7 | 1,2,3,4,7,8,9-Heptachlorodibenzofuran | 4.06E-12 | 3.37E-13 | 2.48E-12 | 4.06E-12 | 3.37E-13 | 2.48E-12 | 6.74E-13 | 4.96E-12 |
| 57117-31-4 | 2,3,4,7,8-Pentachlorodibenzofuran | 2.03E-12 | 1.69E-13 | 1.24E-12 | 2.03E-12 | 1.69E-13 | 1.24E-12 | 3.38E-13 | 2.48E-12 |
| 57117-41-6 | 1,2,3,7,8-Pentachlorodibenzofuran | 2.03E-12 | 1.69E-13 | 1.24E-12 | 2.03E-12 | 1.69E-13 | 1.24E-12 | 3.38E-13 | 2.48E-12 |
| 57117-44-9 | 1,2,3,6,7,8-Hexachlorodibenzofuran | 3.25E-12 | 2.70E-13 | 1.99E-12 | 3.25E-12 | 2.70E-13 | 1.99E-12 | 5.40E-13 | 3.98E-12 |

## Estimated Organic Concentration at Point of Maximum Impact for HLW

| | HV-S3 A & B Vapor/particle/ particle-bound | |
|---|---|---|
| Average Annual Concentration | 0.08302 | ug/m3 per g/s |
| Maximum 24-hour Concentration | 0.61071 | ug/m3 per g/s |

| CAS Number | Compound | HV-S3A (gm/sec) | HV-S3A Annual Average Concentration (ug/m3) | HV-S3A Maximum 24 hr Concentration (ug/m3) | HV-S3B (gm/sec) | HV-S3B Annual Average Concentration (ug/m3) | HV-S3B Maximum 24 hr Concentration (ug/m3) | Total HLW Annual Average Concentration (ug/m3) | Total HLW Maximum 24 hr Concentration (ug/m3) |
|---|---|---|---|---|---|---|---|---|---|
| 57-24-9 | Strychnine | 3.91E-06 | 3.24E-07 | 2.39E-06 | 3.91E-06 | 3.24E-07 | 2.39E-06 | 6.48E-07 | 4.77E-06 |
| 57653-85-7 | 1,2,3,6,7,8-Hexachlorodibenzo(p)dioxin | 4.06E-12 | 3.37E-13 | 2.48E-12 | 4.06E-12 | 3.37E-13 | 2.48E-12 | 6.74E-13 | 4.96E-12 |
| 57-74-9 | Chlordane | 3.91E-06 | 3.24E-07 | 2.39E-06 | 3.91E-06 | 3.24E-07 | 2.39E-06 | 6.48E-07 | 4.77E-06 |
| 584-84-9 | 2,4-Toluene diisocyante | 3.91E-06 | 3.24E-07 | 2.39E-06 | 3.91E-06 | 3.24E-07 | 2.39E-06 | 6.48E-07 | 4.77E-06 |
| 593-60-2 | Bromoethene | 5.21E-07 | 4.32E-08 | 3.18E-07 | 5.21E-07 | 4.32E-08 | 3.18E-07 | 8.65E-08 | 6.36E-07 |
| 60-11-7 | Dimethyl aminoazobenzene | 3.91E-06 | 3.24E-07 | 2.39E-06 | 3.91E-06 | 3.24E-07 | 2.39E-06 | 6.48E-07 | 4.77E-06 |
| 606-20-2 | 2,6-Dinitrotoluene | 3.91E-06 | 3.24E-07 | 2.39E-06 | 3.91E-06 | 3.24E-07 | 2.39E-06 | 6.48E-07 | 4.77E-06 |
| 60851-34-5 | 2,3,4,6,7,8-Hexachlorodibenzofuran | 3.67E-12 | 3.05E-13 | 2.24E-12 | 3.67E-12 | 3.05E-13 | 2.24E-12 | 6.10E-13 | 4.48E-12 |
| 608-93-5 | Pentachlorobenzene | 3.91E-06 | 3.24E-07 | 2.39E-06 | 3.91E-06 | 3.24E-07 | 2.39E-06 | 6.48E-07 | 4.77E-06 |
| 61626-71-9 | Dichloropentadiene | 5.21E-07 | 4.32E-08 | 3.18E-07 | 5.21E-07 | 4.32E-08 | 3.18E-07 | 8.65E-08 | 6.36E-07 |
| 62-50-0 | Ethyl methanesulfonate | 3.91E-06 | 3.24E-07 | 2.39E-06 | 3.91E-06 | 3.24E-07 | 2.39E-06 | 6.48E-07 | 4.77E-06 |
| 62-53-3 | Aniline | 3.91E-06 | 3.24E-07 | 2.39E-06 | 3.91E-06 | 3.24E-07 | 2.39E-06 | 6.48E-07 | 4.77E-06 |
| 65-85-0 | Benzoic acid | 3.91E-06 | 3.24E-07 | 2.39E-06 | 3.91E-06 | 3.24E-07 | 2.39E-06 | 6.48E-07 | 4.77E-06 |
| 67562-39-4 | 1,2,3,4,6,7,8-Heptachlorodibenzofuran | 4.06E-12 | 3.37E-13 | 2.48E-12 | 4.06E-12 | 3.37E-13 | 2.48E-12 | 6.74E-13 | 4.96E-12 |
| 70-30-4 | Hexachlorophene | 3.91E-06 | 3.24E-07 | 2.39E-06 | 3.91E-06 | 3.24E-07 | 2.39E-06 | 6.48E-07 | 4.77E-06 |
| 70648-26-9 | 1,2,3,4,7,8-Hexachlorodibenzofuran | 3.67E-12 | 3.05E-13 | 2.24E-12 | 3.67E-12 | 3.05E-13 | 2.24E-12 | 6.10E-13 | 4.48E-12 |
| 72918-21-9 | 1,2,3,7,8,9-Hexachlorodibenzofuran | 4.06E-12 | 3.37E-13 | 2.48E-12 | 4.06E-12 | 3.37E-13 | 2.48E-12 | 6.74E-13 | 4.96E-12 |
| 74-88-4 | Iodomethane (Methyl iodide) | 5.21E-07 | 4.32E-08 | 3.18E-07 | 5.21E-07 | 4.32E-08 | 3.18E-07 | 8.65E-08 | 6.36E-07 |
| 74-95-3 | Methylene bromide | 5.21E-07 | 4.32E-08 | 3.18E-07 | 5.21E-07 | 4.32E-08 | 3.18E-07 | 8.65E-08 | 6.36E-07 |
| 75-25-2 | Bromoform | 5.21E-07 | 4.32E-08 | 3.18E-07 | 5.21E-07 | 4.32E-08 | 3.18E-07 | 8.65E-08 | 6.36E-07 |
| 75-29-6 | 2-Chloropropane | 5.21E-07 | 4.32E-08 | 3.18E-07 | 5.21E-07 | 4.32E-08 | 3.18E-07 | 8.65E-08 | 6.36E-07 |
| 75-44-5 | Phosgene | 5.21E-07 | 4.32E-08 | 3.18E-07 | 5.21E-07 | 4.32E-08 | 3.18E-07 | 8.65E-08 | 6.36E-07 |
| 76-01-7 | Pentachloroethane | 5.21E-07 | 4.32E-08 | 3.18E-07 | 5.21E-07 | 4.32E-08 | 3.18E-07 | 8.65E-08 | 6.36E-07 |
| 764-41-0 | 1,4-Dichloro-2-butene | 5.21E-07 | 4.32E-08 | 3.18E-07 | 5.21E-07 | 4.32E-08 | 3.18E-07 | 8.65E-08 | 6.36E-07 |
| 765-34-4 | Glycidylaldehyde | 3.91E-06 | 3.24E-07 | 2.39E-06 | 3.91E-06 | 3.24E-07 | 2.39E-06 | 6.48E-07 | 4.77E-06 |

## Estimated Organic Concentration at Point of Maximum Impact for HLW

| | HV-S3 A & B Vapor/particle/ particle-bound | |
|---|---|---|
| Average Annual Concentration | 0.08302 | ug/m3 per g/s |
| Maximum 24-hour Concentration | 0.61071 | ug/m3 per g/s |

| CAS Number | Compound | HV-S3A (gm/sec) | HV-S3A Annual Average Concentration (ug/m3) | HV-S3A Maximum 24 hr Concentration (ug/m3) | HV-S3B (gm/sec) | HV-S3B Annual Average Concentration (ug/m3) | HV-S3B Maximum 24 hr Concentration (ug/m3) | Total HLW Annual Average Concentration (ug/m3) | Total HLW Maximum 24 hr Concentration (ug/m3) |
|---|---|---|---|---|---|---|---|---|---|
| 77-47-4 | Hexachlorocyclopentadiene | 3.91E-06 | 3.24E-07 | 2.39E-06 | 3.91E-06 | 3.24E-07 | 2.39E-06 | 6.48E-07 | 4.77E-06 |
| 77-78-1 | Dimethyl sulfate | 3.91E-06 | 3.24E-07 | 2.39E-06 | 3.91E-06 | 3.24E-07 | 2.39E-06 | 6.48E-07 | 4.77E-06 |
| 80-62-6 | Methyl methacrylate | 5.21E-07 | 4.32E-08 | 3.18E-07 | 5.21E-07 | 4.32E-08 | 3.18E-07 | 8.65E-08 | 6.36E-07 |
| 822-06-0 | Hexamethylene-1,5-diisocyanate | 3.91E-06 | 3.24E-07 | 2.39E-06 | 3.91E-06 | 3.24E-07 | 2.39E-06 | 6.48E-07 | 4.77E-06 |
| 823-40-5 | Toluene-2,6-diamine | 3.91E-06 | 3.24E-07 | 2.39E-06 | 3.91E-06 | 3.24E-07 | 2.39E-06 | 6.48E-07 | 4.77E-06 |
| 85-44-9 | Phthalic anhydride | 3.91E-06 | 3.24E-07 | 2.39E-06 | 3.91E-06 | 3.24E-07 | 2.39E-06 | 6.48E-07 | 4.77E-06 |
| 87-61-6 | 1,2,3-Trichlorobenzene | 5.21E-07 | 4.32E-08 | 3.18E-07 | 5.21E-07 | 4.32E-08 | 3.18E-07 | 8.65E-08 | 6.36E-07 |
| 88-74-4 | o-Nitroaniline (2-Nitroaniline) | 3.91E-06 | 3.24E-07 | 2.39E-06 | 3.91E-06 | 3.24E-07 | 2.39E-06 | 6.48E-07 | 4.77E-06 |
| 90-04-0 | o-Anisidine | 3.91E-06 | 3.24E-07 | 2.39E-06 | 3.91E-06 | 3.24E-07 | 2.39E-06 | 6.48E-07 | 4.77E-06 |
| 91-57-6 | 2-Methylnaphthalene | 7.81E-07 | 6.48E-08 | 4.77E-07 | 7.81E-07 | 6.48E-08 | 4.77E-07 | 1.30E-07 | 9.54E-07 |
| 91-94-1 | 3,3'-Dichlorobenzidine | 3.91E-06 | 3.24E-07 | 2.39E-06 | 3.91E-06 | 3.24E-07 | 2.39E-06 | 6.48E-07 | 4.77E-06 |
| 924-16-3 | N-Nitrosodi-n-butylamine | 5.21E-07 | 4.32E-08 | 3.18E-07 | 5.21E-07 | 4.32E-08 | 3.18E-07 | 8.65E-08 | 6.36E-07 |
| 94-59-7 | Safrole | 3.91E-06 | 3.24E-07 | 2.39E-06 | 3.91E-06 | 3.24E-07 | 2.39E-06 | 6.48E-07 | 4.77E-06 |
| 95-53-4 | o-Toluidine | 5.21E-07 | 4.32E-08 | 3.18E-07 | 5.21E-07 | 4.32E-08 | 3.18E-07 | 8.65E-08 | 6.36E-07 |
| 95-63-6 | 1,2,4-Trimethyl benzene | 5.21E-07 | 4.32E-08 | 3.18E-07 | 5.21E-07 | 4.32E-08 | 3.18E-07 | 8.65E-08 | 6.36E-07 |
| 95-94-3 | 1,2,4,5-Tetrachlorobenzene | 3.91E-06 | 3.24E-07 | 2.39E-06 | 3.91E-06 | 3.24E-07 | 2.39E-06 | 6.48E-07 | 4.77E-06 |
| 96-12-8 | 1,2-Dibromo-3-chloropropane | 3.91E-06 | 3.24E-07 | 2.39E-06 | 3.91E-06 | 3.24E-07 | 2.39E-06 | 6.48E-07 | 4.77E-06 |
| 96-18-4 | 1,2,3-Trichloropropane | 5.21E-07 | 4.32E-08 | 3.18E-07 | 5.21E-07 | 4.32E-08 | 3.18E-07 | 8.65E-08 | 6.36E-07 |
| 96-45-7 | Ethylene thiourea | 3.91E-06 | 3.24E-07 | 2.39E-06 | 3.91E-06 | 3.24E-07 | 2.39E-06 | 6.48E-07 | 4.77E-06 |
| 97-63-2 | Ethyl methacrylate | 5.21E-07 | 4.32E-08 | 3.18E-07 | 5.21E-07 | 4.32E-08 | 3.18E-07 | 8.65E-08 | 6.36E-07 |
| 98-01-1 | Furfural | 3.91E-06 | 3.24E-07 | 2.39E-06 | 3.91E-06 | 3.24E-07 | 2.39E-06 | 6.48E-07 | 4.77E-06 |
| 98-06-6 | tert-Butyl benzene | 5.21E-07 | 4.32E-08 | 3.18E-07 | 5.21E-07 | 4.32E-08 | 3.18E-07 | 8.65E-08 | 6.36E-07 |
| 98-07-7 | Benzotrichloride | 3.91E-06 | 3.24E-07 | 2.39E-06 | 3.91E-06 | 3.24E-07 | 2.39E-06 | 6.48E-07 | 4.77E-06 |
| 99-35-4 | 1,3,5-Trinitrobenzene | 3.91E-06 | 3.24E-07 | 2.39E-06 | 3.91E-06 | 3.24E-07 | 2.39E-06 | 6.48E-07 | 4.77E-06 |
| 99-65-0 | 1,3-Dinitrobenzene | 3.91E-06 | 3.24E-07 | 2.39E-06 | 3.91E-06 | 3.24E-07 | 2.39E-06 | 6.48E-07 | 4.77E-06 |
| 99-87-6 | p-Cymene | 5.21E-07 | 4.32E-08 | 3.18E-07 | 5.21E-07 | 4.32E-08 | 3.18E-07 | 8.65E-08 | 6.36E-07 |
| No CAS # | Dibenzo(a,h)fluoranthene | 7.81E-07 | 6.48E-08 | 4.77E-07 | 7.81E-07 | 6.48E-08 | 4.77E-07 | 1.30E-07 | 9.54E-07 |
| Coplanar PCBs | | 0.00E+00 | | | 0.00E+00 | 0.00E+00 | 0.00E+00 | #VALUE! | #VALUE! |

## Estimated Organic Concentration at Point of Maximum Impact for HLW

| | HV-S3 A & B Vapor/particle/ particle-bound | |
|---|---|---|
| Average Annual Concentration | 0.08302 | ug/m3 per g/s |
| Maximum 24-hour Concentration | 0.61071 | ug/m3 per g/s |

| CAS Number | Compound | HV-S3A (gm/sec) | HV-S3A Annual Average Concentration (ug/m3) | HV-S3A Maximum 24 hr Concentration (ug/m3) | HV-S3B (gm/sec) | HV-S3B Annual Average Concentration (ug/m3) | HV-S3B Maximum 24 hr Concentration (ug/m3) | Total HLW Annual Average Concentration (ug/m3) | Total HLW Maximum 24 hr Concentration (ug/m3) |
|---|---|---|---|---|---|---|---|---|---|
| 31508-00-6 | 2,3',4,4',5-Pentachlorobiphenyl (PBC 118) | 1.95E-17 | 1.62E-18 | 1.19E-17 | 1.95E-17 | 1.62E-18 | 1.19E-17 | 3.24E-18 | 2.38E-17 |
| 32598-13-3 | 3,3',4,4'-Tetrachlorobiphenyl (TCB) | 1.95E-17 | 1.62E-18 | 1.19E-17 | 1.95E-17 | 1.62E-18 | 1.19E-17 | 3.24E-18 | 2.38E-17 |
| 32598-14-4 | 2,3,3',4,4'-Pentachlorobiphenyl (PCB 105) | 1.95E-17 | 1.62E-18 | 1.19E-17 | 1.95E-17 | 1.62E-18 | 1.19E-17 | 3.24E-18 | 2.38E-17 |
| 32774-16-6 | 3,3',4,4',5,5'-Hexachlorobiphenyl | 1.95E-17 | 1.62E-18 | 1.19E-17 | 1.95E-17 | 1.62E-18 | 1.19E-17 | 3.24E-18 | 2.38E-17 |
| 35065-29-3 | 2,2',3,4,4',5,5'-Heptachlorobiphenyl | 1.95E-17 | 1.62E-18 | 1.19E-17 | 1.95E-17 | 1.62E-18 | 1.19E-17 | 3.24E-18 | 2.38E-17 |
| 35065-30-6 | 2,2',3,3',4,4',5-Heptachlorobiphenyl | 1.95E-17 | 1.62E-18 | 1.19E-17 | 1.95E-17 | 1.62E-18 | 1.19E-17 | 3.24E-18 | 2.38E-17 |
| 38380-08-4 | 2,3,3',4,4',5-Hexachlorobiphenyl (PCB 157) | 1.95E-17 | 1.62E-18 | 1.19E-17 | 1.95E-17 | 1.62E-18 | 1.19E-17 | 3.24E-18 | 2.38E-17 |
| 39635-31-9 | 2,3,3',4,4',5,5'-Heptachlorobiphenyl | 1.95E-17 | 1.62E-18 | 1.19E-17 | 1.95E-17 | 1.62E-18 | 1.19E-17 | 3.24E-18 | 2.38E-17 |
| 52663-72-6 | 2,3',4,4',5,5'-Hexachlorobiphenyl | 1.95E-17 | 1.62E-18 | 1.19E-17 | 1.95E-17 | 1.62E-18 | 1.19E-17 | 3.24E-18 | 2.38E-17 |
| 57465-28-8 | 3,3',4,4',5-Pentachlorobiphenyl | 1.95E-17 | 1.62E-18 | 1.19E-17 | 1.95E-17 | 1.62E-18 | 1.19E-17 | 3.24E-18 | 2.38E-17 |
| 65510-44-3 | 2',3,4,4',5-Pentachlorobiphenyl | 1.95E-17 | 1.62E-18 | 1.19E-17 | 1.95E-17 | 1.62E-18 | 1.19E-17 | 3.24E-18 | 2.38E-17 |
| 69782-90-7 | 2,3,3',4,4',5'-Hexachlorobiphenyl | 1.95E-17 | 1.62E-18 | 1.19E-17 | 1.95E-17 | 1.62E-18 | 1.19E-17 | 3.24E-18 | 2.38E-17 |
| 70362-50-4 | 3,4,4',5-Tetrachlorobiphenyl | 1.95E-17 | 1.62E-18 | 1.19E-17 | 1.95E-17 | 1.62E-18 | 1.19E-17 | 3.24E-18 | 2.38E-17 |
| 74472-37-0 | 2,3,4,4',5-Pentachlorobiphenyl | 1.95E-17 | 1.62E-18 | 1.19E-17 | 1.95E-17 | 1.62E-18 | 1.19E-17 | 3.24E-18 | 2.38E-17 |

| Summary Estimated Organic Concentration at Point of Maximum Impact | | | |
|---|---|---|---|
| | | | |
| CAS Number | Compound | Annual Average Concentration ($ug/m^3$) | Maximum 24 hr Concentration ($ug/m^3$) |
| 100-00-5 | p-Nitrochlorobenzene | 2.21E-05 | 1.63E-04 |
| 100-21-0 | p-Phthalic acid | 1.32E-04 | 9.83E-04 |
| 100-25-4 | 1,4-Dinitrobenzene | 1.29E-12 | 9.56E-12 |
| 100-41-4 | Ethyl benzene | 6.61E-08 | 4.76E-07 |
| 100-42-5 | Styrene | 6.63E-08 | 4.78E-07 |
| 10061-01-5 | cis-1,3-Dichloropropene | 6.05E-06 | 4.38E-05 |
| 10061-02-6 | trans-1,3-Dichloropropene | 1.20E-05 | 8.69E-05 |
| 101-55-3 | 4-Bromophenylphenyl ether | 1.29E-05 | 9.33E-05 |
| 101-84-8 | Diphenyl ether | 2.27E-06 | 1.64E-05 |
| 106-35-4 | 3-Heptanone | 3.80E-07 | 2.79E-06 |
| 106-42-3 | p-Xylene (Dimethyl benzene) | 6.10E-07 | 4.40E-06 |
| 106-46-7 | 1,4-Dichlorobenzene | 6.17E-06 | 4.46E-05 |
| 106-88-7 | 1,2-Epoxybutane | 1.35E-07 | 9.87E-07 |
| 106-93-4 | Ethylene dibromide (Dibromethane) | 2.67E-04 | 1.93E-03 |
| 106-97-8 | Butane | 6.62E-08 | 4.77E-07 |
| 106-99-0 | 1,3-Butadiene | 6.62E-08 | 4.77E-07 |
| 107-02-8 | Acrolein | 3.80E-07 | 2.79E-06 |
| 107-05-1 | 3-Chloropropene (Allyl chloride) | 6.61E-08 | 4.76E-07 |
| 107-06-2 | 1,2-Dichloroethane (Ethylene chloride) | 6.64E-08 | 4.78E-07 |
| 107-12-0 | Propionitrile | 1.39E-06 | 1.03E-05 |
| 107-13-1 | Acrylonitrile | 3.80E-07 | 2.79E-06 |
| 107-18-6 | 2-Propene-1-ol | 2.21E-05 | 1.63E-04 |
| 107-31-3 | Formic acid, methyl ester | 6.16E-07 | 4.49E-06 |
| 107-66-4 | Dibutylphosphate | 1.36E-12 | 1.00E-11 |
| 107-87-9 | 2-Pentanone | 3.80E-07 | 2.79E-06 |
| 108-03-2 | 1-Nitropropane | 1.73E-06 | 1.27E-05 |
| 108-05-4 | Vinyl acetate | 3.49E-07 | 2.53E-06 |
| 108-10-1 | Hexone (4-Methyl-2-pentanone or MIBK) | 3.80E-07 | 2.79E-06 |
| 108-20-3 | Bis(isopropyl)ether | 6.80E-08 | 4.90E-07 |
| 108-38-3 | m-Xylene (Dimethyl benzene) | 6.10E-07 | 4.40E-06 |
| 108-39-4 | m-Cresol | 5.94E-06 | 4.38E-05 |
| 108-87-2 | Methylcyclohexane | 6.60E-08 | 4.75E-07 |
| 108-88-3 | Toluene | 6.62E-08 | 4.77E-07 |
| 108-90-7 | Chlorobenzene | 6.04E-06 | 4.37E-05 |
| 108-93-0 | Cyclohexanol | 4.86E-06 | 3.58E-05 |
| 108-94-1 | Cyclohexanone | 3.38E-06 | 2.49E-05 |
| 108-95-2 | Phenol | 6.75E-05 | 5.00E-04 |
| 109-66-0 | n-Pentane | 6.62E-08 | 4.77E-07 |
| 109-99-9 | Tetrahydrofuran | 2.96E-06 | 2.18E-05 |
| 110-12-3 | 5-Methyl-2-hexanone | 1.35E-07 | 9.87E-07 |

**Summary Estimated Organic Concentration at Point of Maximum Impact**

| CAS Number | Compound | Annual Average Concentration (ug/m$^3$) | Maximum 24 hr Concentration (ug/m$^3$) |
|---|---|---|---|
| 110-43-0 | 2-Heptanone | 1.35E-07 | 9.87E-07 |
| 110-54-3 | n-Hexane | 6.61E-08 | 4.77E-07 |
| 110-62-3 | n-Valeraldehyde | 6.16E-07 | 4.49E-06 |
| 110-82-7 | Cyclohexane | 6.61E-08 | 4.76E-07 |
| 110-83-8 | Cyclohexene | 6.64E-08 | 4.79E-07 |
| 110-86-1 | Pyridine | 1.54E-05 | 1.13E-04 |
| 111-65-9 | n-Octane | 6.62E-08 | 4.77E-07 |
| 111-76-2 | Ethylene glycol monobutyl ether | 2.70E-05 | 1.99E-04 |
| 111-84-2 | n-Nonane | 3.60E-08 | 2.59E-07 |
| 117-81-7 | Bis(2-ethylhexyl)phthalate (DEHP) | 6.62E-13 | 4.85E-12 |
| 117-84-0 | n-Dioctyl phthalate | 1.20E-13 | 8.51E-13 |
| 118-74-1 | Hexachlorobenzene | 3.48E-07 | 2.51E-06 |
| 120-12-7 | Anthracene | 4.98E-06 | 3.66E-05 |
| 120-82-1 | 1,2,4-Trichlorobenzene | 1.21E-06 | 8.73E-06 |
| 120-83-2 | 2,4-Dichlorophenol | 2.32E-05 | 1.70E-04 |
| 121-44-8 | Triethylamine | 1.35E-07 | 9.87E-07 |
| 121-69-7 | Dimethylaniline | 1.38E-06 | 1.02E-05 |
| 122-39-4 | N,N-Diphenylamine | 4.79E-06 | 3.52E-05 |
| 123-19-3 | 4-Heptanone | 1.39E-06 | 1.03E-05 |
| 123-38-6 | n-Propionaldehyde | 3.80E-07 | 2.79E-06 |
| 123-51-3 | 3-Methyl-1-butanol | 3.08E-06 | 2.27E-05 |
| 123-86-4 | Acetic acid n-butyl ester | 3.49E-07 | 2.53E-06 |
| 123-91-1 | 1,4-Dioxane | 1.33E-05 | 9.76E-05 |
| 126-73-8 | Tributyl phosphate | 9.24E-05 | 6.86E-04 |
| 126-98-7 | 2-Methyl-2-propenenitrile (Methacrylonitrile) | 7.69E-08 | 5.56E-07 |
| 127-18-4 | Perchloroethylene (tetrachloroethylene) | 6.05E-05 | 4.37E-04 |
| 127-19-5 | N,N-Dimethylacetamide | 2.84E-05 | 2.11E-04 |
| 128-37-0 | 2,6-Bis(tert-butyl)-4-methylphenol | 2.16E-05 | 1.59E-04 |
| 129-00-0 | Pyrene | 1.36E-13 | 9.66E-13 |
| 1321-64-8 | Pentachloronaphthalene | 1.36E-13 | 9.77E-13 |
| 1321-65-9 | Trichloronaphthalene | 1.44E-05 | 1.04E-04 |
| 132-64-9 | Dibenzofuran | 1.44E-05 | 1.04E-04 |
| 1335-87-1 | Hexachloronaphthalene | 1.36E-13 | 9.77E-13 |
| 1335-88-2 | Tetrachloronaphthalene | 1.46E-13 | 1.05E-12 |
| 1336-36-3 | Polychlorinated biphenyls (PCBs) | 3.09E-13 | 2.22E-12 |
| 141-78-6 | Acetic acid ethyl ester (Ethyl acetate) | 1.73E-06 | 1.27E-05 |
| 141-79-7 | 4-Methyl-3-penten-2-one | 6.34E-06 | 4.66E-05 |

| Summary Estimated Organic Concentration at Point of Maximum Impact | | | |
|---|---|---|---|
| CAS Number | Compound | Annual Average Concentration (ug/m$^3$) | Maximum 24 hr Concentration (ug/m$^3$) |
| 142-82-5 | n-Heptane | 6.61E-08 | 4.77E-07 |
| 144-62-7 | Oxalic acid | 1.32E-05 | 9.81E-05 |
| 156-60-5 | trans-1,2-Dichloroethylene | 6.61E-08 | 4.76E-07 |
| 1582-09-8 | Trifluralin | 5.19E-14 | 3.66E-13 |
| 1634-04-4 | Methyl tert-butyl ether | 7.69E-08 | 5.56E-07 |
| 1836-75-5 | Nitrofen | 6.63E-13 | 4.86E-12 |
| 189-55-9 | Dibenzo[a,i]pyrene | 1.36E-12 | 1.00E-11 |
| 189-64-0 | Dibenzo[a,h]pyrene | 1.36E-12 | 1.00E-11 |
| 191-24-2 | Benzo(g,h,i)perylene | 6.63E-13 | 4.86E-12 |
| 191-30-0 | Benzo[a,i]pyrene | 1.36E-12 | 1.00E-11 |
| 192-65-4 | Dibenzo[a,e]pyrene | 1.36E-12 | 1.00E-11 |
| 193-39-5 | Indeno(1,2,3-cd)pyrene | 6.63E-13 | 4.86E-12 |
| 205-82-3 | Benzo(j)fluoranthene | 9.13E-13 | 6.73E-12 |
| 205-99-2 | Benzo(b)fluoranthene | 6.63E-13 | 4.86E-12 |
| 206-44-0 | Fluoranthene | 1.38E-13 | 9.78E-13 |
| 207-08-9 | Benzo(k)fluoranthene | 6.63E-13 | 4.86E-12 |
| 208-96-8 | Acenaphthylene | 1.29E-05 | 9.33E-05 |
| 218-01-9 | Chrysene | 1.40E-13 | 9.93E-13 |
| 2234-13-1 | Octachloronaphthalene | 1.36E-13 | 9.77E-13 |
| 224-42-0 | Dibenz[a,j]acridine | 1.39E-12 | 1.03E-11 |
| 226-36-8 | Dibenz[a,h]acridine | 1.39E-12 | 1.03E-11 |
| 2385-85-5 | Mirex | 1.64E-05 | 1.19E-04 |
| 2551-13-7 | Trimethyl benzene | 3.08E-07 | 2.22E-06 |
| 26140-60-3 | Terphenyls | 1.82E-13 | 1.30E-12 |
| 27154-33-2 | Trichlorofluoroethane | 6.04E-05 | 4.37E-04 |
| 287-92-3 | Cyclopentane | 6.61E-08 | 4.76E-07 |
| 309-00-2 | Aldrin | 5.24E-15 | 3.76E-14 |
| 319-84-6 | Hexachlorocyclohexane (Lindane) Alpha BHC | 7.26E-08 | 5.33E-07 |
| 319-85-7 | Hexachlorocyclohexane (Lindane) Beta BHC | 2.20E-15 | 1.61E-14 |
| 319-86-8 | Delta-BHC | 2.21E-15 | 1.62E-14 |
| 3697-24-3 | 5-Methylchrysene | 1.29E-13 | 9.15E-13 |
| 3825-26-1 | Ammonium perfluorooctanoate | 1.36E-13 | 9.77E-13 |
| 4170-30-3 | 2-Butenaldehyde (2-Butenal or Crotonaldehyde) | 3.38E-06 | 2.49E-05 |
| 465-73-6 | Isodrin | 5.37E-07 | 3.88E-06 |
| 50-00-0 | Formaldehyde | 1.72E-05 | 1.28E-04 |
| 50-29-3 | 4,4-DDT | 9.20E-16 | 6.52E-15 |
| 50-32-8 | Benzo(a)pyrene | 8.47E-15 | 6.20E-14 |
| 53-70-3 | Dibenzo(a,h)anthracene | 1.52E-15 | 1.12E-14 |
| 540-59-0 | 1,2-Dichloroethylene | 6.63E-08 | 4.78E-07 |
| 540-84-1 | 2,2,4-Trimethylpentane | 6.62E-08 | 4.77E-07 |

| Summary Estimated Organic Concentration at Point of Maximum Impact | | | |
|---|---|---|---|
| CAS Number | Compound | Annual Average Concentration (ug/m$^3$) | Maximum 24 hr Concentration (ug/m$^3$) |
| 541-73-1 | 1,3-Dichlorobenzene | 6.04E-06 | 4.37E-05 |
| 56-23-5 | Carbon tetrachloride | 1.21E-04 | 8.76E-04 |
| 563-80-4 | 3-Methyl-2-butanone | 3.80E-07 | 2.79E-06 |
| 56-49-5 | 3-Methylcholanthrene | 1.51E-13 | 1.09E-12 |
| 56-55-3 | Benzo(a)anthracene | 1.38E-13 | 9.78E-13 |
| 57-14-7 | 1,1-Dimethylhydrazine | 1.40E-05 | 1.03E-04 |
| 58-89-9 | gamma-BHC (Lindane) | 4.67E-16 | 3.31E-15 |
| 58-90-2 | 2,3,4,6-Tetrachlorophenol | 2.43E-05 | 1.78E-04 |
| 591-78-6 | 2-Hexanone | 7.55E-07 | 5.49E-06 |
| 59-50-7 | 4-Chloro-3-methylphenol | 1.43E-13 | 1.01E-12 |
| 59-89-2 | N-Nitrosomorpholine | 1.24E-04 | 9.19E-04 |
| 602-87-9 | 5-Nitroacenaphthene | 1.71E-13 | 1.23E-12 |
| 60-29-7 | Ethyl ether | 3.02E-07 | 2.17E-06 |
| 603-34-9 | Triphenylamine | 1.94E-05 | 1.43E-04 |
| 60-34-4 | Methylhydrazine | 4.86E-06 | 3.58E-05 |
| 60-35-5 | Acetamide | 2.84E-05 | 2.11E-04 |
| 60-57-1 | Dieldrin | 9.32E-16 | 6.60E-15 |
| 621-64-7 | Di-n-Propylnitrosamine (N-Nitroso-di-n-propylamine) | 2.21E-05 | 1.63E-04 |
| 624-83-9 | Methyl isocyanate | 6.07E-07 | 4.39E-06 |
| 627-13-4 | Nitric acid, propyl ester | 3.02E-07 | 2.17E-06 |
| 62-75-9 | N-Nitroso-N,N-dimethylamine (Dimethylnitrosamine) | 5.04E-05 | 3.71E-04 |
| 630-20-6 | 1,1,1,2-Tetrachloroethane | 6.16E-05 | 4.45E-04 |
| 64-17-5 | Ethyl alcohol | 4.86E-06 | 3.58E-05 |
| 64-18-6 | Formic acid | 9.24E-05 | 6.86E-04 |
| 64-19-7 | Acetic acid | 1.24E-04 | 9.19E-04 |
| 67-56-1 | Methyl alcohol (Methanol) | 4.86E-06 | 3.58E-05 |
| 67-63-0 | 2-Propyl alcohol (Isopropanol; Propan-2-01) | 3.39E-06 | 2.49E-05 |
| 67-64-1 | 2-Propanone (Acetone) | 7.61E-06 | 5.59E-05 |
| 67-66-3 | Chloroform | 3.02E-04 | 2.18E-03 |
| 67-72-1 | Hexachloroethane | 5.49E-05 | 3.97E-04 |
| 684-16-2 | Hexafluoroacetone | 6.04E-04 | 4.36E-03 |
| 71-23-8 | n-Propyl alcohol | 3.39E-06 | 2.49E-05 |
| 71-36-3 | n-Butyl alcohol | 3.39E-06 | 2.49E-05 |
| 71-43-2 | Benzene | 6.03E-06 | 4.36E-05 |
| 71-55-6 | Methyl chloroform (1,1,1-Trichloroethane) | 6.11E-07 | 4.41E-06 |
| 72-20-8 | Endrin | 8.61E-16 | 6.10E-15 |
| 72-43-5 | Methoxychlor | 3.04E-14 | 2.24E-13 |
| 72-54-8 | 4,4-DDD | 8.61E-16 | 6.10E-15 |
| 72-55-9 | 4,4-DDE | 1.21E-15 | 8.66E-15 |

| Summary Estimated Organic Concentration at Point of Maximum Impact | | | |
|---|---|---|---|
| | | | |
| CAS Number | Compound | Annual Average Concentration (ug/m$^3$) | Maximum 24 hr Concentration (ug/m$^3$) |
| 74-83-9 | Bromomethane (Methyl bromide) | 6.10E-07 | 4.40E-06 |
| 74-87-3 | Chloromethane (Methyl chloride) | 3.02E-05 | 2.18E-04 |
| 74-97-5 | Bromochloromethane | 3.00E-04 | 2.17E-03 |
| 74-99-7 | Methylacetylene | 3.00E-07 | 2.17E-06 |
| 75-00-3 | Chloroethane | 6.09E-07 | 4.40E-06 |
| 75-01-4 | Vinyl chloride (1-Chloroethene) | 3.02E-07 | 2.18E-06 |
| 75-05-8 | Acetonitrile | 2.71E-06 | 1.99E-05 |
| 75-07-0 | Acetaldehyde | 6.34E-06 | 4.66E-05 |
| 75-09-2 | Dichloromethane (Methylene chloride) | 3.02E-05 | 2.18E-04 |
| 75-12-7 | Formamide | 1.32E-04 | 9.78E-04 |
| 75-15-0 | Carbon disulfide | 6.61E-08 | 4.76E-07 |
| 75-21-8 | Ethylene oxide (Oxirane) | 1.35E-07 | 9.87E-07 |
| 75-27-4 | Bromodichloromethane | 1.23E-04 | 8.91E-04 |
| 75-34-3 | 1,1-Dichloroethane | 6.63E-08 | 4.78E-07 |
| 75-35-4 | 1,1-Dichloroethene (Vinylidene chloride) | 6.64E-08 | 4.79E-07 |
| 75-43-4 | Dichlorofluoromethane | 6.09E-07 | 4.40E-06 |
| 75-45-6 | Chlorodifluoromethane | 1.21E-05 | 8.76E-05 |
| 75-50-3 | Trimethylamine | 3.80E-07 | 2.79E-06 |
| 75-52-5 | Nitromethane | 6.34E-06 | 4.66E-05 |
| 75-55-8 | 2-Methylaziridine | 1.54E-05 | 1.13E-04 |
| 75-61-6 | Difluorodibromomethane | 6.06E-04 | 4.38E-03 |
| 75-63-8 | Trifluorobromomethane | 6.02E-04 | 4.35E-03 |
| 75-65-0 | 2-Methyl-2-propanol | 3.39E-06 | 2.49E-05 |
| 75-69-4 | Trichlorofluoromethane | 6.04E-04 | 4.37E-03 |
| 75-71-8 | Dichlorodifluoromethane | 6.02E-04 | 4.35E-03 |
| 75-99-0 | 2,2-Dichloropropionic acid | 1.24E-04 | 9.20E-04 |
| 76-03-9 | Trichloroacetic acid | 2.84E-05 | 2.11E-04 |
| 76-11-9 | 1,1,1,2-Tetrachloro-2,2-difluoroethane | 5.49E-05 | 3.96E-04 |
| 76-12-0 | 1,1,2,2-Tetrachloro-1,2-difluoroethane | 5.50E-05 | 3.97E-04 |
| 76-13-1 | 1,2,2-Trichloro-1,1,2-trifluoroethane (Freon 113) | 1.51E-05 | 1.09E-04 |
| 76-14-2 | 1,2-Dichloro-1,1,2,2-tetrafluoroethane | 6.05E-04 | 4.37E-03 |
| 76-15-3 | Chloropentafluoroethane | 6.03E-04 | 4.36E-03 |
| 76-44-8 | Heptachlor | 1.58E-06 | 1.14E-05 |
| 78-83-1 | 2-Methylpropyl alcohol (Isobutyl alcohol) | 1.54E-05 | 1.13E-04 |
| 78-87-5 | 1,2-Dichloropropane | 6.10E-07 | 4.40E-06 |

| Summary Estimated Organic Concentration at Point of Maximum Impact | | | |
|---|---|---|---|
| | | | |
| CAS Number | Compound | Annual Average Concentration (ug/m$^3$) | Maximum 24 hr Concentration (ug/m$^3$) |
| 78-92-2 | 1-Methylpropyl alcohol (2-Butanol) | 3.39E-06 | 2.49E-05 |
| 78-93-3 | Methyl ethyl ketone (MEK, 2-Butanone) | 1.61E-06 | 1.18E-05 |
| 79-00-5 | 1,1,2-Trichloroethane | 6.64E-08 | 4.78E-07 |
| 79-01-6 | Trichloroethylene | 6.60E-08 | 4.76E-07 |
| 79-09-4 | Propionic acid | 7.83E-05 | 5.80E-04 |
| 79-10-7 | 2-Propenoic acid | 7.83E-05 | 5.80E-04 |
| 79-20-9 | Methyl acetate | 1.73E-06 | 1.27E-05 |
| 79-34-5 | 1,1,2,2-Tetrachloroethane | 5.63E-05 | 4.07E-04 |
| 8001-35-2 | Toxaphene | 1.08E-15 | 7.63E-15 |
| 82-68-8 | Pentachloronitrobenzene (PCBN or quintobenzene) | 1.28E-05 | 9.30E-05 |
| 83-32-9 | Acenaphthene | 1.44E-05 | 1.04E-04 |
| 84-66-2 | Diethyl phthalate | 4.86E-05 | 3.60E-04 |
| 84-74-2 | Dibutyl phthalate | 2.33E-13 | 1.68E-12 |
| 85-01-8 | Phenanthrene | 1.28E-05 | 9.30E-05 |
| 85-68-7 | Butylbenzyl phthalate | 2.33E-13 | 1.68E-12 |
| 86-73-7 | Fluorene | 1.36E-13 | 9.77E-13 |
| 87-68-3 | Hexachlorobutadiene | 2.42E-06 | 1.75E-05 |
| 87-86-5 | Pentachlorophenol | 1.24E-04 | 9.20E-04 |
| 88-06-2 | 2,4,6-Trichlorophenol | 2.32E-05 | 1.70E-04 |
| 88-72-2 | 2-Nitrotoluene | 3.08E-06 | 2.26E-05 |
| 88-75-5 | 2-Nitrophenol | 1.97E-05 | 1.44E-04 |
| 88-85-7 | 2-sec-Butyl-4,6-dinitrophenol (Dinoseb) | 1.14E-12 | 8.37E-12 |
| 88-89-1 | Picric acid | 1.65E-11 | 1.23E-10 |
| 91-20-3 | Naphthalene | 4.32E-07 | 3.12E-06 |
| 91-22-5 | Quinoline | 2.70E-05 | 1.99E-04 |
| 91-58-7 | 2-Chloronapthalene | 1.55E-05 | 1.12E-04 |
| 92-52-4 | 1,1`-Biphenyl | 6.06E-07 | 4.38E-06 |
| 92-93-3 | 4-Nitrobiphenyl | 1.32E-13 | 9.36E-13 |
| 93-72-1 | Silvex (2,4,5-TP) | 1.36E-12 | 1.00E-11 |
| 93-76-5 | 2,4,5-T | 1.36E-12 | 1.00E-11 |
| 94-75-7 | 2,4-D and esters (160C typed) | 1.24E-04 | 9.20E-04 |
| 95-13-6 | Indene | 1.43E-06 | 1.03E-05 |
| 95-47-6 | o-Xylene | 6.63E-08 | 4.78E-07 |
| 95-48-7 | o-Cresol (2-Methylphenol) | 5.94E-06 | 4.38E-05 |
| 95-49-8 | 2-Chlorotoluene | 1.64E-07 | 1.18E-06 |
| 95-50-1 | o-Dichlorobenzene (1,2-Dichlorobenzene) | 6.17E-06 | 4.46E-05 |
| 95-57-8 | 2-Chlorophenol | 1.54E-05 | 1.13E-04 |
| 95-95-4 | 2,4,5-Trichlorophenol | 2.74E-05 | 2.02E-04 |

| Summary Estimated Organic Concentration at Point of Maximum Impact | | | |
|---|---|---|---|
| | | | |
| CAS Number | Compound | Annual Average Concentration (ug/m$^3$) | Maximum 24 hr Concentration (ug/m$^3$) |
| 96-22-0 | 3-Pentanone | 3.80E-07 | 2.79E-06 |
| 96-69-5 | Bis(3-tert-butyl-4-hydroxy-6-methyl-phenyl)sulfide | 1.52E-13 | 1.09E-12 |
| 98-51-1 | p-tert-Butyltoluene | 1.64E-07 | 1.18E-06 |
| 98-82-8 | Cumene | 1.63E-07 | 1.18E-06 |
| 98-83-9 | alpha-Methylstyrene | 3.02E-06 | 2.19E-05 |
| 98-86-2 | Acetophenone | 1.66E-05 | 1.22E-04 |
| 98-95-3 | Nitrobenzene | 1.40E-05 | 1.03E-04 |
| Products of Incomplete Combustion (PICs) | 0 | 0.00E+00 | 0.00E+00 |
| 100-02-7 | 4-Nitrophenol | 4.60E-06 | 3.40E-05 |
| 100-44-7 | Benzyl chloride | 6.14E-07 | 4.53E-06 |
| 100-51-6 | Benzyl alcohol | 4.60E-06 | 3.40E-05 |
| 100-52-7 | Benzaldehyde | 4.60E-06 | 3.40E-05 |
| 101-77-9 | 4,4-Methylenedianiline | 4.60E-06 | 3.40E-05 |
| 103-33-3 | Azobenzene | 4.60E-06 | 3.40E-05 |
| 103-65-1 | n-Propyl benzene (Isocumene) | 6.14E-07 | 4.53E-06 |
| 104-51-8 | n-Butylbenzene | 6.14E-07 | 4.53E-06 |
| 105-67-9 | 2,4-Dimethylphenol | 4.60E-06 | 3.40E-05 |
| 106-43-4 | 4-Chlorotoluene (p-Tolyl chloride) | 6.14E-07 | 4.53E-06 |
| 106-44-5 | p-Cresol (4-Methyl phenol) | 4.60E-06 | 3.40E-05 |
| 106-47-8 | p-Chloroaniline | 4.60E-06 | 3.40E-05 |
| 106-49-0 | p-Toluidine | 4.60E-06 | 3.40E-05 |
| 106-51-4 | Quinone | 4.60E-06 | 3.40E-05 |
| 106-89-8 | Epichlorohydrin (1-chloro-2,3-epoxypropane) | 6.14E-07 | 4.53E-06 |
| 107-19-7 | Propargyl alcohol | 6.14E-07 | 4.53E-06 |
| 107-21-1 | Ethylene glycol | 6.14E-07 | 4.53E-06 |
| 107-98-2 | Propylene gylcol monomethyl ether | 4.60E-06 | 3.40E-05 |
| 108-60-1 | Dichloroisopropyl ether (2,2'-Oxybis(1-chloropropane)) | 4.60E-06 | 3.40E-05 |
| 108-67-8 | 1,3,5-Trimethyl benzene | 6.14E-07 | 4.53E-06 |
| 108-86-1 | Bromobenzene (Phenyl bromide) | 6.14E-07 | 4.53E-06 |
| 109-77-3 | Malononitrile | 6.14E-07 | 4.53E-06 |
| 109-86-4 | 2-Methoxyethanol | 4.60E-06 | 3.40E-05 |
| 110-80-5 | 2-Ethoxyethanol | 4.60E-06 | 3.40E-05 |
| 111-15-9 | Ethylene glycol monoethyl ether acetate | 4.60E-06 | 3.40E-05 |
| 111-44-4 | Bis(2-chloroethyl) ether | 4.60E-06 | 3.40E-05 |
| 111-91-1 | Bis(2-chloroethoxy)methane | 4.60E-06 | 3.40E-05 |

| Summary Estimated Organic Concentration at Point of Maximum Impact | | | |
|---|---|---|---|
| | | | |
| CAS Number | Compound | Annual Average Concentration (ug/m$^3$) | Maximum 24 hr Concentration (ug/m$^3$) |
| 1120-71-4 | 1,3-Propane sultone | 4.60E-06 | 3.40E-05 |
| 119-90-4 | 3,3'-Dimethoxybenzidine (ortho-dianisidine) | 4.60E-06 | 3.40E-05 |
| 121-14-2 | 2,4-Dinitrotoluene | 4.60E-06 | 3.40E-05 |
| 122-66-7 | 1,2-Diphenylhydrazine | 4.60E-06 | 3.40E-05 |
| 123-33-1 | Maleic hydrazide | 4.60E-06 | 3.40E-05 |
| 124-48-1 | Chlorodibromomethane | 6.14E-07 | 4.53E-06 |
| 131-11-3 | Dimethylphthalate | 4.60E-06 | 3.40E-05 |
| 131-89-5 | 2-Cyclohexyl-4,6-dinitrophenol | 4.60E-06 | 3.40E-05 |
| 133-06-2 | Captan | 4.60E-06 | 3.40E-05 |
| 135-98-8 | sec-Butylbenzene | 6.14E-07 | 4.53E-06 |
| 145-73-3 | Endothall | 4.60E-06 | 3.40E-05 |
| 156-59-2 | cis-1,2-Dichloroethene | 6.14E-07 | 4.53E-06 |
| 1746-01-6 | 2,3,7,8-Tetrachlorodibenzo(p)dioxin (TCDD) | 2.88E-12 | 2.12E-11 |
| 192-97-2 | Benzo(e)pyrene | 9.21E-07 | 6.79E-06 |
| 19408-74-3 | 1,2,3,7,8,9-Hexachlorodibenzo(p)dioxin | 4.79E-12 | 3.53E-11 |
| 23950-58-5 | Pronamide | 4.60E-06 | 3.40E-05 |
| 25013-15-4 | Methyl styrene (mixed isomers) | 6.14E-07 | 4.53E-06 |
| 3268-87-9 | Octachlorodibenzo(p)dioxin | 2.40E-11 | 1.77E-10 |
| 35822-46-9 | 1,2,3,4,6,7,8-Heptachlorodibenzo(p)dioxin | 9.61E-12 | 7.08E-11 |
| 39001-02-0 | Octachlorodibenzofuran | 1.92E-11 | 1.41E-10 |
| 39227-28-6 | 1,2,3,4,7,8-Hexachlorodibenzo(p)dioxin | 4.79E-12 | 3.53E-11 |
| 40321-76-4 | 1,2,3,7,8-Pentachlorodibenzo(p)dioxin | 4.79E-12 | 3.53E-11 |
| 41851-50-7 | Chlorocyclopentadiene | 6.14E-07 | 4.53E-06 |
| 460-19-5 | Cyanogen | 6.14E-07 | 4.53E-06 |
| 506-68-3 | Cyanogen bromide | 4.60E-06 | 3.40E-05 |
| 506-77-4 | Cyanogen chloride | 6.14E-07 | 4.53E-06 |
| 510-15-6 | Chlorobenzilate | 4.60E-06 | 3.40E-05 |
| 51207-31-9 | 2,3,7,8-Tetrachlorodibenzofuran | 2.40E-12 | 1.77E-11 |
| 51-28-5 | 2,4-Dinitrophenol | 4.60E-06 | 3.40E-05 |
| 51-79-6 | Ethyl Carbamate (urethane) | 4.60E-06 | 3.40E-05 |
| 528-29-0 | o-Dinitrobenzene | 4.60E-06 | 3.40E-05 |
| 532-27-4 | 2-Chloroacetophenone | 4.60E-06 | 3.40E-05 |
| 534-52-1 | 4,6-Dinitro-o-cresol (4,6-Dinitro-2-methylphenol) | 4.60E-06 | 3.40E-05 |
| 5385-75-1 | Dibenzo(a,e)fluoranthene | 9.21E-07 | 6.79E-06 |
| 540-73-8 | 1,2-Dimethylhydrazine | 6.14E-07 | 4.53E-06 |

| Summary Estimated Organic Concentration at Point of Maximum Impact | | | |
|---|---|---|---|
| CAS Number | Compound | Annual Average Concentration (ug/m$^3$) | Maximum 24 hr Concentration (ug/m$^3$) |
| 542-75-6 | 1,3-Dichloropropene | 6.14E-07 | 4.53E-06 |
| 542-88-1 | Dichloromethyl ether | 6.14E-07 | 4.53E-06 |
| 55673-89-7 | 1,2,3,4,7,8,9-Heptachlorodibenzofuran | 4.79E-12 | 3.53E-11 |
| 57117-31-4 | 2,3,4,7,8-Pentachlorodibenzofuran | 2.40E-12 | 1.77E-11 |
| 57117-41-6 | 1,2,3,7,8-Pentachlorodibenzofuran | 2.40E-12 | 1.77E-11 |
| 57117-44-9 | 1,2,3,6,7,8-Hexachlorodibenzofuran | 3.84E-12 | 2.83E-11 |
| 57-24-9 | Strychnine | 4.60E-06 | 3.40E-05 |
| 57653-85-7 | 1,2,3,6,7,8-Hexachlorodibenzo(p)dioxin | 4.79E-12 | 3.53E-11 |
| 57-74-9 | Chlordane | 4.60E-06 | 3.40E-05 |
| 584-84-9 | 2,4-Toluene diisocyante | 4.60E-06 | 3.40E-05 |
| 593-60-2 | Bromoethene | 6.14E-07 | 4.53E-06 |
| 60-11-7 | Dimethyl aminoazobenzene | 4.60E-06 | 3.40E-05 |
| 606-20-2 | 2,6-Dinitrotoluene | 4.60E-06 | 3.40E-05 |
| 60851-34-5 | 2,3,4,6,7,8-Hexachlorodibenzofuran | 4.33E-12 | 3.19E-11 |
| 608-93-5 | Pentachlorobenzene | 4.60E-06 | 3.40E-05 |
| 61626-71-9 | Dichloropentadiene | 6.14E-07 | 4.53E-06 |
| 62-50-0 | Ethyl methanesulfonate | 4.60E-06 | 3.40E-05 |
| 62-53-3 | Aniline | 4.60E-06 | 3.40E-05 |
| 65-85-0 | Benzoic acid | 4.60E-06 | 3.40E-05 |
| 67562-39-4 | 1,2,3,4,6,7,8-Heptachlorodibenzofuran | 4.79E-12 | 3.53E-11 |
| 70-30-4 | Hexachlorophene | 4.60E-06 | 3.40E-05 |
| 70648-26-9 | 1,2,3,4,7,8-Hexachlorodibenzofuran | 4.33E-12 | 3.19E-11 |
| 72918-21-9 | 1,2,3,7,8,9-Hexachlorodibenzofuran | 4.79E-12 | 3.53E-11 |
| 74-88-4 | Iodomethane (Methyl iodide) | 6.14E-07 | 4.53E-06 |
| 74-95-3 | Methylene bromide | 6.14E-07 | 4.53E-06 |
| 75-25-2 | Bromoform | 6.14E-07 | 4.53E-06 |
| 75-29-6 | 2-Chloropropane | 6.14E-07 | 4.53E-06 |
| 75-44-5 | Phosgene | 6.14E-07 | 4.53E-06 |
| 76-01-7 | Pentachloroethane | 6.14E-07 | 4.53E-06 |
| 764-41-0 | 1,4-Dichloro-2-butene | 6.14E-07 | 4.53E-06 |
| 765-34-4 | Glycidylaldehyde | 4.60E-06 | 3.40E-05 |
| 77-47-4 | Hexachlorocyclopentadiene | 4.60E-06 | 3.40E-05 |
| 77-78-1 | Dimethyl sulfate | 4.60E-06 | 3.40E-05 |
| 80-62-6 | Methyl methacrylate | 6.14E-07 | 4.53E-06 |

| Summary Estimated Organic Concentration at Point of Maximum Impact | | | |
|---|---|---|---|
| | | | |
| CAS Number | Compound | Annual Average Concentration (ug/m$^3$) | Maximum 24 hr Concentration (ug/m$^3$) |
| 822-06-0 | Hexamethylene-1,5-diisocyanate | 4.60E-06 | 3.40E-05 |
| 823-40-5 | Toluene-2,6-diamine | 4.60E-06 | 3.40E-05 |
| 85-44-9 | Phthalic anhydride | 4.60E-06 | 3.40E-05 |
| 87-61-6 | 1,2,3-Trichlorobenzene | 6.14E-07 | 4.53E-06 |
| 88-74-4 | o-Nitroaniline (2-Nitroaniline) | 4.60E-06 | 3.40E-05 |
| 90-04-0 | o-Anisidine | 4.60E-06 | 3.40E-05 |
| 91-57-6 | 2-Methylnaphthalene | 9.21E-07 | 6.79E-06 |
| 91-94-1 | 3,3'-Dichlorobenzidine | 4.60E-06 | 3.40E-05 |
| 924-16-3 | N-Nitrosodi-n-butylamine | 6.14E-07 | 4.53E-06 |
| 94-59-7 | Safrole | 4.60E-06 | 3.40E-05 |
| 95-53-4 | o-Toluidine | 6.14E-07 | 4.53E-06 |
| 95-63-6 | 1,2,4-Trimethyl benzene | 6.14E-07 | 4.53E-06 |
| 95-94-3 | 1,2,4,5-Tetrachlorobenzene | 4.60E-06 | 3.40E-05 |
| 96-12-8 | 1,2-Dibromo-3-chloropropane | 4.60E-06 | 3.40E-05 |
| 96-18-4 | 1,2,3-Trichloropropane | 6.14E-07 | 4.53E-06 |
| 96-45-7 | Ethylene thiourea | 4.60E-06 | 3.40E-05 |
| 97-63-2 | Ethyl methacrylate | 6.14E-07 | 4.53E-06 |
| 98-01-1 | Furfural | 4.60E-06 | 3.40E-05 |
| 98-06-6 | tert-Butyl benzene | 6.14E-07 | 4.53E-06 |
| 98-07-7 | Benzotrichloride | 4.60E-06 | 3.40E-05 |
| 99-35-4 | 1,3,5-Trinitrobenzene | 4.60E-06 | 3.40E-05 |
| 99-65-0 | 1,3-Dinitrobenzene | 4.60E-06 | 3.40E-05 |
| 99-87-6 | p-Cymene | 6.14E-07 | 4.53E-06 |
| no cas # | Dibenzo(a,h)fluoranthene | 9.21E-07 | 6.79E-06 |
| Coplanar PCBs | | #VALUE! | #VALUE! |
| 31508-00-6 | 2,3',4,4',5-Pentachlorobiphenyl (PBC 118) | 2.23E-16 | 1.60E-15 |
| 32598-13-3 | 3,3',4,4'-Tetrachlorobiphenyl (TCB) | 2.23E-16 | 1.60E-15 |
| 32598-14-4 | 2,3,3',4,4'-Pentachlorobiphenyl (PCB 105) | 2.23E-16 | 1.60E-15 |
| 32774-16-6 | 3,3',4,4',5,5'-Hexachlorobiphenyl | 2.23E-16 | 1.60E-15 |
| 35065-29-3 | 2,2',3,4,4',5,5'-Heptachlorobiphenyl | 2.23E-16 | 1.60E-15 |
| 35065-30-6 | 2,2',3,3',4,4',5-Heptachlorobiphenyl | 2.23E-16 | 1.60E-15 |
| 38380-08-4 | 2,3,3',4,4',5-Hexachlorobiphenyl (PCB 157) | 2.23E-16 | 1.60E-15 |
| 39635-31-9 | 2,3,3',4,4',5,5'-Heptachlorobiphenyl | 2.23E-16 | 1.60E-15 |
| 52663-72-6 | 2,3',4,4',5,5'-Hexachlorobiphenyl | 2.23E-16 | 1.60E-15 |
| 57465-28-8 | 3,3',4,4',5-Pentachlorobiphenyl | 2.23E-16 | 1.60E-15 |
| 65510-44-3 | 2',3,4,4',5-Pentachlorobiphenyl | 2.23E-16 | 1.60E-15 |

| Summary Estimated Organic Concentration at Point of Maximum Impact | | | |
|---|---|---|---|
| | | | |
| CAS Number | Compound | Annual Average Concentration ($ug/m^3$) | Maximum 24 hr Concentration ($ug/m^3$) |
| 69782-90-7 | 2,3,3',4,4',5'-Hexachlorobiphenyl | 2.23E-16 | 1.60E-15 |
| 70362-50-4 | 3,4,4',5-Tetrachlorobiphenyl | 2.23E-16 | 1.60E-15 |
| 74472-37-0 | 2,3,4,4',5-Pentachlorobiphenyl | 2.23E-16 | 1.60E-15 |

## Laboratory Organic Emissions

| | | | | | | | | | | | | |
|---|---|---|---|---|---|---|---|---|---|---|---|---|
| | | | | | | | C3 | C5 | | | | |
| | Release Fraction | 1.00E-03 | | Average Annual Concentration | | | 0.12957 | 0.12269 | | | | |
| | Number of seconds per year | 3.15E+07 | | Max 24-hr Concentration | | | 0.85812 | 0.80736 | | | | |
| CAS Number | Compound | Phase (Solid, Liquid) | C3 Usage (g/yr) | C3 Emissions (g/s) | C3 Annual Average Concentration (ug/m3) | C3 Maximum 24-hr Concentration (ug/m3) | C5 Usage (g/yr) | C5 Emissions (g/s) | C5 Annual Average Concentration (ug/m3) | C5 Maximum 24 hr Concentration (ug/m3) | Total Laboratory Annual Average Concentration (ug/m3) | Total Laboratory Maximum 24-hr Concentration (ug/m3) |
| 025549-16-0 | Tri-iso-octylamine | L | 2.66E+02 | 8.44E-09 | 1.09E-09 | 7.24E-09 | 0.00E+00 | 0.00E+00 | 0.00E+00 | 0.00E+00 | 1.09E-09 | 7.24E-09 |
| 069011-42-3 | Styrene divinylbenzene matrix | S | 1.32E+02 | 4.19E-09 | 5.43E-10 | 3.60E-09 | 0.00E+00 | 0.00E+00 | 0.00E+00 | 0.00E+00 | 5.43E-10 | 3.60E-09 |
| 100-02-7 | 4-Nitrophenol | L | 2.26E-03 | 7.17E-14 | 9.29E-15 | 6.16E-14 | 0.00E+00 | 0.00E+00 | 0.00E+00 | 0.00E+00 | 9.29E-15 | 6.16E-14 |
| 100-51-6 | Benzyl alcohol | L | 7.58E-03 | 2.41E-13 | 3.12E-14 | 2.07E-13 | 0.00E+00 | 0.00E+00 | 0.00E+00 | 0.00E+00 | 3.12E-14 | 2.07E-13 |
| 106-46-7 | 1,4-Dichlorobenzene | L | 4.35E-02 | 1.38E-12 | 1.79E-13 | 1.18E-12 | 8.06E-03 | 2.56E-13 | 3.14E-14 | 2.07E-13 | 2.10E-13 | 1.39E-12 |
| 107-06-2 | 1,2-Dichloroethane | L | 4.45E-02 | 1.41E-12 | 1.83E-13 | 1.21E-12 | 0.00E+00 | 0.00E+00 | 0.00E+00 | 0.00E+00 | 1.83E-13 | 1.21E-12 |
| 108-88-3 | Toluene | L | 4.45E-02 | 1.41E-12 | 1.83E-13 | 1.21E-12 | 2.21E-03 | 7.03E-14 | 8.62E-15 | 5.67E-14 | 1.92E-13 | 1.27E-12 |
| 108-90-7 | Chlorobenzene | L | 4.44E-03 | 1.41E-13 | 1.83E-14 | 1.21E-13 | 2.13E-03 | 6.77E-14 | 8.31E-15 | 5.47E-14 | 2.66E-14 | 1.76E-13 |
| 109-99-9 | Tetrahydrofuran | L | 4.35E-02 | 1.38E-12 | 1.79E-13 | 1.18E-12 | 0.00E+00 | 0.00E+00 | 0.00E+00 | 0.00E+00 | 1.79E-13 | 1.18E-12 |
| 110-54-3 | Hexane | L | 3.16E+03 | 1.00E-07 | 1.30E-08 | 8.62E-08 | 4.75E+03 | 1.51E-07 | 1.85E-08 | 1.22E-07 | 3.15E-08 | 2.08E-07 |
| 110-86-1 | Pyridine | L | 2.48E+04 | 7.86E-07 | 1.02E-07 | 6.74E-07 | 0.00E+00 | 0.00E+00 | 0.00E+00 | 0.00E+00 | 1.02E-07 | 6.74E-07 |
| 1146-65-2 | Naphthalene-d8 | L | 0.00E+00 | 0.00E+00 | 0.00E+00 | 0.00E+00 | 4.61E-02 | 1.46E-12 | 1.80E-13 | 1.18E-12 | 1.80E-13 | 1.18E-12 |
| 117-81-7 | Bis(2-ethylhexyl phthalate | L | 1.52E-02 | 4.82E-13 | 6.24E-14 | 4.13E-13 | 0.00E+00 | 0.00E+00 | 0.00E+00 | 0.00E+00 | 6.24E-14 | 4.13E-13 |
| 117-84-0 | Di-n-octyl phthalate | L | 1.52E-02 | 4.82E-13 | 6.24E-14 | 4.13E-13 | 0.00E+00 | 0.00E+00 | 0.00E+00 | 0.00E+00 | 6.24E-14 | 4.13E-13 |
| 118-79-6 | 2,4,6-Tribromophenol | L | 1.03E-03 | 3.26E-14 | 4.22E-15 | 2.80E-14 | 1.45E-02 | 4.60E-13 | 5.64E-14 | 3.71E-13 | 6.06E-14 | 3.99E-13 |
| 120-82-1 | 1,2,4-Trichlorobenzene | L | 0.00E+00 | 0.00E+00 | 0.00E+00 | 0.00E+00 | 8.06E-03 | 2.56E-13 | 3.14E-14 | 2.07E-13 | 3.14E-14 | 2.07E-13 |
| 121-14-2 | 2,4-Dinitrotoluene | L | 7.58E-03 | 2.41E-13 | 3.12E-14 | 2.07E-13 | 8.06E-03 | 2.56E-13 | 3.14E-14 | 2.07E-13 | 6.26E-14 | 4.13E-13 |
| 126-73-8 | Tributyl phosphate | L | 7.58E-03 | 2.41E-13 | 3.12E-14 | 2.07E-13 | 0.00E+00 | 0.00E+00 | 0.00E+00 | 0.00E+00 | 3.12E-14 | 2.07E-13 |
| 129-00-0 | Pyrene | L | 0.00E+00 | 0.00E+00 | 0.00E+00 | 0.00E+00 | 8.06E-03 | 2.56E-13 | 3.14E-14 | 2.07E-13 | 3.14E-14 | 2.07E-13 |
| 1310-73-2 | Sodium hydroxide | L | 5.31E+04 | 1.68E-06 | 2.18E-07 | 1.45E-06 | 1.44E+01 | 4.57E-10 | 5.61E-11 | 3.69E-10 | 2.18E-07 | 1.45E-06 |
| 13127-88-3 | Phenol-d6 | L | 0.00E+00 | 0.00E+00 | 0.00E+00 | 0.00E+00 | 1.23E-02 | 3.91E-13 | 4.80E-14 | 3.16E-13 | 4.80E-14 | 3.16E-13 |
| 13280-61-0 | 1-4-bis(4-methyl-alpha-styryl)benzene | L | 1.34E+03 | 4.27E-08 | 5.53E-09 | 3.66E-08 | 0.00E+00 | 0.00E+00 | 0.00E+00 | 0.00E+00 | 5.53E-09 | 3.66E-08 |
| 1330-20-7 | Xylene | L | 6.41E+04 | 2.04E-06 | 2.64E-07 | 1.75E-06 | 0.00E+00 | 0.00E+00 | 0.00E+00 | 0.00E+00 | 2.64E-07 | 1.75E-06 |
| 141-43-5 | Ethanolamine | L | 1.38E+04 | 4.39E-07 | 5.69E-08 | 3.77E-07 | 0.00E+00 | 0.00E+00 | 0.00E+00 | 0.00E+00 | 5.69E-08 | 3.77E-07 |
| 1517-22-2 | Phenanthrene-d10 | L | 0.00E+00 | 0.00E+00 | 0.00E+00 | 0.00E+00 | 4.61E-02 | 1.46E-12 | 1.80E-13 | 1.18E-12 | 1.80E-13 | 1.18E-12 |
| 16605-91-7 | 2,3-Dichlorobiphenyl | L | 0.00E+00 | 0.00E+00 | 0.00E+00 | 0.00E+00 | 1.52E-03 | 4.82E-14 | 5.91E-15 | 3.89E-14 | 5.91E-15 | 3.89E-14 |
| 1718-51-0 | P-terphenyl-d14 | L | 0.00E+00 | 0.00E+00 | 0.00E+00 | 0.00E+00 | 1.23E-02 | 3.91E-13 | 4.80E-14 | 3.16E-13 | 4.80E-14 | 3.16E-13 |
| 1719-53-5 | Chrysene-d12 | L | 0.00E+00 | 0.00E+00 | 0.00E+00 | 0.00E+00 | 4.61E-02 | 1.46E-12 | 1.80E-13 | 1.18E-12 | 1.80E-13 | 1.18E-12 |
| 1868-53-7 | Dibromofluoromethane | L | 9.48E-06 | 3.01E-16 | 3.90E-17 | 2.58E-16 | 6.16E-05 | 1.96E-15 | 2.40E-16 | 1.58E-15 | 2.79E-16 | 1.84E-15 |
| 2051-24-3 | C12Cl10 PCB Congener 209 | L | 0.00E+00 | 0.00E+00 | 0.00E+00 | 0.00E+00 | 7.51E-02 | 2.38E-12 | 2.92E-13 | 1.92E-12 | 2.92E-13 | 1.92E-12 |
| 298-07-7 | Bis(2-ethylhexyl) hydrogen phosphate | L | 2.28E+02 | 7.24E-09 | 9.38E-10 | 6.21E-09 | 0.00E+00 | 0.00E+00 | 0.00E+00 | 0.00E+00 | 9.38E-10 | 6.21E-09 |
| 3114-55-4 | Chlorobenzene-d5 | L | 2.37E-04 | 7.52E-15 | 9.75E-16 | 6.46E-15 | 3.08E-05 | 9.78E-16 | 1.20E-16 | 7.90E-16 | 1.09E-15 | 7.25E-15 |
| 321-60-8 | 2-Fluorobiphenyl | L | 0.00E+00 | 0.00E+00 | 0.00E+00 | 0.00E+00 | 1.23E-02 | 3.91E-13 | 4.80E-14 | 3.16E-13 | 4.80E-14 | 3.16E-13 |
| 326-91-0 | 2-Thenoyltrifluoroacetone (ITA) (crystalline) | L | 3.20E+01 | 1.02E-09 | 1.32E-10 | 8.72E-10 | 0.00E+00 | 0.00E+00 | 0.00E+00 | 0.00E+00 | 1.32E-10 | 8.72E-10 |
| 35065-28-2 | 2,2'3,4,4',5'-Hexachlorobiphenyl | L | 0.00E+00 | 0.00E+00 | 0.00E+00 | 0.00E+00 | 4.55E-03 | 1.44E-13 | 1.77E-14 | 1.17E-13 | 1.77E-14 | 1.17E-13 |
| 35065-29-3 | 2,2'3,4,4'5,5'-Heptachlorobiphenyl | L | 0.00E+00 | 0.00E+00 | 0.00E+00 | 0.00E+00 | 1.52E-03 | 4.82E-14 | 5.91E-15 | 3.89E-14 | 5.91E-15 | 3.89E-14 |
| 35693-99-3 | 2,2'5,5'-Tetrachlorobiphenyl | L | 0.00E+00 | 0.00E+00 | 0.00E+00 | 0.00E+00 | 4.55E-03 | 1.44E-13 | 1.77E-14 | 1.17E-13 | 1.77E-14 | 1.17E-13 |
| 367-12-4 | 2-Fluorophenol | L | 0.00E+00 | 0.00E+00 | 0.00E+00 | 0.00E+00 | 1.23E-02 | 3.91E-13 | 4.80E-14 | 3.16E-13 | 4.80E-14 | 3.16E-13 |
| 37680-65-2 | 2,2',5'Trichlorobiphenyl | L | 0.00E+00 | 0.00E+00 | 0.00E+00 | 0.00E+00 | 1.52E-03 | 4.82E-14 | 5.91E-15 | 3.89E-14 | 5.91E-15 | 3.89E-14 |

## Laboratory Organic Emissions

| | | | | | | | | | | | | |
|---|---|---|---|---|---|---|---|---|---|---|---|---|
| | | | | | | | C3 | C5 | | | | |
| | Release Fraction | 1.00E-03 | | Average Annual Concentration | | | 0.12957 | 0.12269 | | | | |
| | Number of seconds per year | 3.15E+07 | | Max 24-hr Concentration | | | 0.85812 | 0.80736 | | | | |
| CAS Number | Compound | Phase (Solid, Liquid) | C3 Usage (g/yr) | C3 Emissions (g/s) | C3 Annual Average Concentration (ug/m3) | C3 Maximum 24-hr Concentration (ug/m3) | C5 Usage (g/yr) | C5 Emissions (g/s) | C5 Annual Average Concentration (ug/m3) | C5 Maximum 24-hr Concentration (ug/m3) | Total Laboratory Annual Average Concentration (ug/m3) | Total Laboratory Maximum 24-hr Concentration (ug/m3) |
| 3855-82-1 | 1,4-dichlorobenzene-d4 | L | 2.37E-04 | 7.52E-15 | 9.75E-16 | 6.46E-15 | 4.61E-02 | 1.46E-12 | 1.80E-13 | 1.18E-12 | 1.81E-13 | 1.19E-12 |
| 38640-62-9 | Diisopropyl napthalene | L | 1.19E+03 | 3.77E-08 | 4.88E-09 | 3.23E-08 | 0.00E+00 | 0.00E+00 | 0.00E+00 | 0.00E+00 | 4.88E-09 | 3.23E-08 |
| 4165-60-0 | Nitrobenzene-d5 | L | 0.00E+00 | 0.00E+00 | 0.00E+00 | 0.00E+00 | 1.23E-02 | 3.91E-13 | 4.80E-14 | 3.16E-13 | 4.80E-14 | 3.16E-13 |
| 460-00-4 | 4-Bromofluorobenzene | L | 1.56E-02 | 4.96E-13 | 6.42E-14 | 4.25E-13 | 6.16E-05 | 1.96E-15 | 2.40E-16 | 1.58E-15 | 6.44E-14 | 4.27E-13 |
| 462-06-6 | Fluorobenzene | L | 4.13E-02 | 1.31E-12 | 1.70E-13 | 1.13E-12 | 3.08E-05 | 9.78E-16 | 1.20E-16 | 7.90E-16 | 1.70E-13 | 1.13E-12 |
| 5074-71-5 | Decafluorotriphenylphosphine DFTPP) | L | 4.26E-01 | 1.35E-11 | 1.75E-12 | 1.16E-11 | 0.00E+00 | 0.00E+00 | 0.00E+00 | 0.00E+00 | 1.75E-12 | 1.16E-11 |
| 50-81-7 | Ascorbic acid | L | 6.10E+03 | 1.94E-07 | 2.51E-08 | 1.66E-07 | 0.00E+00 | 0.00E+00 | 0.00E+00 | 0.00E+00 | 2.51E-08 | 1.66E-07 |
| 51-28-5 | 2,4-Dinitrophenol | L | 2.26E-03 | 7.17E-14 | 9.29E-15 | 6.16E-14 | 0.00E+00 | 0.00E+00 | 0.00E+00 | 0.00E+00 | 9.29E-15 | 6.16E-14 |
| 5137-55-3 | Tricaprylmethylammonium chloride | L | 1.63E+04 | 5.17E-07 | 6.70E-08 | 4.44E-07 | 0.00E+00 | 0.00E+00 | 0.00E+00 | 0.00E+00 | 6.70E-08 | 4.44E-07 |
| 540-59-0 | 1,2-Dichloroethene | L | 4.45E-02 | 1.41E-12 | 1.83E-13 | 1.21E-12 | 2.15E-03 | 6.83E-14 | 8.38E-15 | 5.52E-14 | 1.91E-13 | 1.27E-12 |
| 56-23-5 | Carbon tetrachloride | L | 2.37E-03 | 7.52E-14 | 9.75E-15 | 6.46E-14 | 0.00E+00 | 0.00E+00 | 0.00E+00 | 0.00E+00 | 9.75E-15 | 6.46E-14 |
| 577-11-7 | Sodium di-octylsulphosuccinate | L | 4.56E+01 | 1.45E-09 | 1.88E-10 | 1.24E-09 | 0.00E+00 | 0.00E+00 | 0.00E+00 | 0.00E+00 | 1.88E-10 | 1.24E-09 |
| 582-17-2 | Naphthalene | L | 7.58E-03 | 2.41E-13 | 3.12E-14 | 2.07E-13 | 0.00E+00 | 0.00E+00 | 0.00E+00 | 0.00E+00 | 3.12E-14 | 2.07E-13 |
| 591-78-6 | 2-Hexanone | L | 2.39E-01 | 7.60E-12 | 9.85E-13 | 6.52E-12 | 0.00E+00 | 0.00E+00 | 0.00E+00 | 0.00E+00 | 9.85E-13 | 6.52E-12 |
| 6009-70-7 | Ammonium Hydrogen Oxalate Monohydrate | L | 1.88E+03 | 5.96E-08 | 7.72E-09 | 5.11E-08 | 0.00E+00 | 0.00E+00 | 0.00E+00 | 0.00E+00 | 7.72E-09 | 5.11E-08 |
| 6153-56-6 | Oxalic Acid | L | 9.61E+02 | 3.05E-08 | 3.95E-09 | 2.62E-08 | 0.00E+00 | 0.00E+00 | 0.00E+00 | 0.00E+00 | 3.95E-09 | 2.62E-08 |
| 6381-92-6 | Disodium EDTA dihydrate | L | 3.31E+02 | 1.05E-08 | 1.36E-09 | 9.01E-09 | 3.29E+02 | 1.04E-08 | 1.28E-09 | 8.42E-09 | 2.64E-09 | 1.74E-08 |
| 64-17-5 | Ethanol | L | 5.57E+04 | 1.77E-06 | 2.29E-07 | 1.52E-06 | 0.00E+00 | 0.00E+00 | 0.00E+00 | 0.00E+00 | 2.29E-07 | 1.52E-06 |
| 64-19-7 | Glacial Acetic Acid | L | 5.53E+03 | 1.75E-07 | 2.27E-08 | 1.51E-07 | 0.00E+00 | 0.00E+00 | 0.00E+00 | 0.00E+00 | 2.27E-08 | 1.51E-07 |
| 67-68-5 | Dimethyl sulfoxide | L | 3.04E+05 | 9.64E-06 | 1.25E-06 | 8.27E-06 | 0.00E+00 | 0.00E+00 | 0.00E+00 | 0.00E+00 | 1.25E-06 | 8.27E-06 |
| 7080-50-4 | Chloramine T | L | 8.25E+00 | 2.62E-10 | 3.39E-11 | 2.25E-10 | 0.00E+00 | 0.00E+00 | 0.00E+00 | 0.00E+00 | 3.39E-11 | 2.25E-10 |
| 71-91-0 | Tetraethylammonium bromide | L | 6.14E+03 | 1.95E-07 | 2.53E-08 | 1.67E-07 | 0.00E+00 | 0.00E+00 | 0.00E+00 | 0.00E+00 | 2.53E-08 | 1.67E-07 |
| 621-64-7 | N-nitroso-di-n-propylamine | L | 2.26E-03 | 7.17E-14 | 9.29E-15 | 6.16E-14 | 8.06E-03 | 2.56E-13 | 3.14E-14 | 2.07E-13 | 4.07E-14 | 2.68E-13 |
| 62-75-9 | Dimethylnitrosamine | L | 7.58E-03 | 2.41E-13 | 3.12E-14 | 2.07E-13 | 0.00E+00 | 0.00E+00 | 0.00E+00 | 0.00E+00 | 3.12E-14 | 2.07E-13 |
| 67-52-7 | Barbituric Acid | L | 4.95E+03 | 1.57E-07 | 2.04E-08 | 1.35E-07 | 0.00E+00 | 0.00E+00 | 0.00E+00 | 0.00E+00 | 2.04E-08 | 1.35E-07 |
| 67-64-1 | Acetone | L | 2.39E-01 | 7.60E-12 | 9.85E-13 | 6.52E-12 | 0.00E+00 | 0.00E+00 | 0.00E+00 | 0.00E+00 | 9.85E-13 | 6.52E-12 |
| 67-66-3 | Chloroform | L | 4.35E-02 | 1.38E-12 | 1.79E-13 | 1.18E-12 | 0.00E+00 | 0.00E+00 | 0.00E+00 | 0.00E+00 | 1.79E-13 | 1.18E-12 |
| 71-43-2 | Benzene | L | 4.45E-02 | 1.41E-12 | 1.83E-13 | 1.21E-12 | 2.15E-03 | 6.83E-14 | 8.38E-15 | 5.52E-14 | 1.91E-13 | 1.27E-12 |
| 71-55-6 | 1,1,1-Trichloroethane | L | 4.58E-02 | 1.45E-12 | 1.88E-13 | 1.25E-12 | 0.00E+00 | 0.00E+00 | 0.00E+00 | 0.00E+00 | 1.88E-13 | 1.25E-12 |
| 74-87-3 | Chloromethane | L | 1.05E-03 | 3.32E-14 | 4.30E-15 | 2.85E-14 | 0.00E+00 | 0.00E+00 | 0.00E+00 | 0.00E+00 | 4.30E-15 | 2.85E-14 |
| 75-09-2 | Methylene chloride | L | 6.14E+03 | 1.95E-07 | 2.52E-08 | 1.67E-07 | 0.00E+00 | 0.00E+00 | 0.00E+00 | 0.00E+00 | 2.52E-08 | 1.67E-07 |
| 75-25-2 | Bromoform | L | 1.05E-03 | 3.32E-14 | 4.30E-15 | 2.85E-14 | 0.00E+00 | 0.00E+00 | 0.00E+00 | 0.00E+00 | 4.30E-15 | 2.85E-14 |
| 75-34-3 | 1,1-Dichloroethane | L | 4.45E-02 | 1.41E-12 | 1.83E-13 | 1.21E-12 | 0.00E+00 | 0.00E+00 | 0.00E+00 | 0.00E+00 | 1.83E-13 | 1.21E-12 |
| 75-35-4 | 1,1-Dichloroethene | L | 4.21E-02 | 1.34E-12 | 1.73E-13 | 1.15E-12 | 2.15E-03 | 6.83E-14 | 8.38E-15 | 5.52E-14 | 1.82E-13 | 1.20E-12 |
| 77-47-4 | Hexachlorocyclopentadiene | L | 2.26E-03 | 7.17E-14 | 9.29E-15 | 6.16E-14 | 0.00E+00 | 0.00E+00 | 0.00E+00 | 0.00E+00 | 9.29E-15 | 6.16E-14 |
| 78-40-0 | Triethyl phosphate | L | 2.28E+02 | 7.24E-09 | 9.38E-10 | 6.21E-09 | 0.00E+00 | 0.00E+00 | 0.00E+00 | 0.00E+00 | 9.38E-10 | 6.21E-09 |
| 79-00-5 | 1,1,2-Trichloroethane | L | 4.58E-02 | 1.45E-12 | 1.88E-13 | 1.25E-12 | 0.00E+00 | 0.00E+00 | 0.00E+00 | 0.00E+00 | 1.88E-13 | 1.25E-12 |
| 79-01-6 | Trichloroethylene | L | 4.21E-02 | 1.34E-12 | 1.73E-13 | 1.15E-12 | 2.15E-03 | 6.83E-14 | 8.38E-15 | 5.52E-14 | 1.82E-13 | 1.20E-12 |
| 79-34-5 | 1,1,2,2-Tetrachloroethane | L | 1.05E-03 | 3.32E-14 | 4.30E-15 | 2.85E-14 | 1.90E-05 | 6.02E-16 | 7.38E-17 | 4.86E-16 | 4.38E-15 | 2.90E-14 |

## Laboratory Organic Emissions

| | | | | | | | | | | | | |
|---|---|---|---|---|---|---|---|---|---|---|---|---|
| | | | | | | | C3 | C5 | | | | |
| | Release Fraction | 1.00E-03 | | Average Annual Concentration | | | 0.12957 | 0.12269 | | | | |
| | Number of seconds per year | 3.15E+07 | | Max 24-hr Concentration | | | 0.85812 | 0.80736 | | | | |
| CAS Number | Compound | Phase (Solid, Liquid) | C3 Usage (g/yr) | C3 Emissions (g/s) | C3 Annual Average Concentration (ug/m3) | C3 Maximum 24-hr Concentration (ug/m3) | C5 Usage (g/yr) | C5 Emissions (g/s) | C5 Annual Average Concentration (ug/m3) | C5 Maximum 24-hr Concentration (ug/m3) | Total Laboratory Annual Average Concentration (ug/m3) | Total Laboratory Maximum 24-hr Concentration (ug/m3) |
| 83-32-9 | Acenaphthene | L | 0.00E+00 | 0.00E+00 | 0.00E+00 | 0.00E+00 | 8.06E-03 | 2.56E-13 | 3.14E-14 | 2.07E-13 | 3.14E-14 | 2.07E-13 |
| 83-32-9 | Acenaphthene-d10 | L | 0.00E+00 | 0.00E+00 | 0.00E+00 | 0.00E+00 | 4.61E-02 | 1.46E-12 | 1.80E-13 | 1.18E-12 | 1.80E-13 | 1.18E-12 |
| 84-74-2 | Di-n-butyl phthalate | L | 4.11E-02 | 1.30E-12 | 1.69E-13 | 1.12E-12 | 8.06E-03 | 2.56E-13 | 3.14E-14 | 2.07E-13 | 2.00E-13 | 1.33E-12 |
| 87-68-3 | Hexachlorobutadiene | L | 7.58E-03 | 2.41E-13 | 3.12E-14 | 2.07E-13 | 0.00E+00 | 0.00E+00 | 0.00E+00 | 0.00E+00 | 3.12E-14 | 2.07E-13 |
| 877-24-7 | Potassium Hydrogen Phthalate | L | 8.00E+02 | 2.54E-08 | 3.29E-09 | 2.18E-08 | 7.97E+02 | 2.53E-08 | 3.11E-09 | 2.04E-08 | 6.39E-09 | 4.22E-08 |
| 9016-45-9 | Ethoxylated alkylphenol | L | 6.64E+04 | 2.11E-06 | 2.73E-07 | 1.81E-06 | 0.00E+00 | 0.00E+00 | 0.00E+00 | 0.00E+00 | 2.73E-07 | 1.81E-06 |
| 92-71-7 | 2,5-Diphenyloxazole | L | 1.37E+03 | 4.34E-08 | 5.62E-09 | 3.72E-08 | 0.00E+00 | 0.00E+00 | 0.00E+00 | 0.00E+00 | 5.62E-09 | 3.72E-08 |
| 1319-77-3 | Cresol (o,m,p) | L | 2.28E+01 | 7.24E-10 | 9.39E-11 | 6.22E-10 | 0.00E+00 | 0.00E+00 | 0.00E+00 | 0.00E+00 | 9.39E-11 | 6.22E-10 |
| 95-63-6 | 1,2,4-Tri-methylbenzene | L | 6.59E+04 | 2.09E-06 | 2.71E-07 | 1.79E-06 | 0.00E+00 | 0.00E+00 | 0.00E+00 | 0.00E+00 | 2.71E-07 | 1.79E-06 |
| 95-95-4 | 2,4,5-Trichlorophenol | L | 7.58E-03 | 2.41E-13 | 3.12E-14 | 2.07E-13 | 0.00E+00 | 0.00E+00 | 0.00E+00 | 0.00E+00 | 3.12E-14 | 2.07E-13 |
| 98-86-2 | Acetophenone | L | 7.58E-03 | 2.41E-13 | 3.12E-14 | 2.07E-13 | 0.00E+00 | 0.00E+00 | 0.00E+00 | 0.00E+00 | 3.12E-14 | 2.07E-13 |
| 98-95-3 | Nitrobenzene | L | 7.58E-03 | 2.41E-13 | 3.12E-14 | 2.07E-13 | 0.00E+00 | 0.00E+00 | 0.00E+00 | 0.00E+00 | 3.12E-14 | 2.07E-13 |
| 99-82-121 | 1,2-Dichloroethane-d4 | L | 9.48E-06 | 3.01E-16 | 3.90E-17 | 2.58E-16 | 6.16E-05 | 1.96E-15 | 2.40E-16 | 1.58E-15 | 2.79E-16 | 1.84E-15 |

Note: C3 emissions are from Radiological Labs
C5 emissions are from Hotcells

## Laboratory Inorganic Emissions

| | | | | | | | | | | | | |
|---|---|---|---|---|---|---|---|---|---|---|---|---|
| | | | | | | | | C3 | C5 | | | |
| | | Release Fraction | 1.00E-03 | | Average Annual Concentration | | | 0.12957 | 0.12269 | | | |
| | | Number of seconds per year | 3.15E+07 | | Max 24-hr Concentration | | | 0.85812 | 0.80736 | | | |
| CAS Number | Compound | Phase | C3 Usage (g/yr) | C3 Emissions (g/s) | C3 Annual Average Concentration (ug/m3) | C3 Maximum 24-hr Concentration (ug/m3) | C5 Usage (g/yr) | C5 Emissions (g/s) | C5 Annual Average Concentration (ug/m3) | C5 Maximum 24-hr Concentration (ug/m3) | Total Laboratory Annual Average Concentration (ug/m3) | Total Laboratory Maximum 24-hr Concentration (ug/m3) |
| 07705-07-9 | Titanium trichloride | L | 9.30E+02 | 2.95E-08 | 3.83E-09 | 2.53E-08 | 9.30E+02 | 2.95E-08 | 3.62E-09 | 2.38E-08 | 7.45E-09 | 4.92E-08 |
| 10022-31-8 | Barium nitrate | L | 5.59E+00 | 1.77E-10 | 2.30E-11 | 1.52E-10 | 5.59E+00 | 1.77E-10 | 2.18E-11 | 1.43E-10 | 4.48E-11 | 2.96E-10 |
| 10022-68-1 | Cadmium nitrate | L | 1.03E+00 | 3.27E-11 | 4.24E-12 | 2.81E-11 | 1.03E+00 | 3.27E-11 | 4.02E-12 | 2.64E-11 | 8.26E-12 | 5.45E-11 |
| 10025-69-1 | Stannous chloride | L | 7.80E+03 | 2.48E-07 | 3.21E-08 | 2.12E-07 | 7.80E+03 | 2.48E-07 | 3.04E-08 | 2.00E-07 | 6.24E-08 | 4.12E-07 |
| 10025-91-9 | Antimony chloride | L | 2.52E+00 | 7.99E-11 | 1.04E-11 | 6.86E-11 | 2.52E+00 | 7.99E-11 | 9.81E-12 | 6.45E-11 | 2.02E-11 | 1.33E-10 |
| 10034-81-8 | Magnesium perchlorate | L | 1.14E+05 | 3.63E-06 | 4.71E-07 | 3.12E-06 | 1.14E+05 | 3.63E-06 | 4.46E-07 | 2.93E-06 | 9.16E-07 | 6.05E-06 |
| 10034-99-8 | Magnesium sulfate heptahydrate | L | 7.72E+03 | 2.45E-07 | 3.18E-08 | 2.10E-07 | 7.72E+03 | 2.45E-07 | 3.01E-08 | 1.98E-07 | 6.18E-08 | 4.08E-07 |
| 10042-76-9 | Strontium nitrate quadrahydrate | L | 1.35E+01 | 4.29E-10 | 5.55E-11 | 3.68E-10 | 1.35E+01 | 4.29E-10 | 5.26E-11 | 3.46E-10 | 1.08E-10 | 7.14E-10 |
| 10043-35-3 | Boric acid | L | 0.00E+00 | 0.00E+00 | 0.00E+00 | 0.00E+00 | 7.49E+03 | 2.38E-07 | 2.92E-08 | 1.92E-07 | 2.92E-08 | 1.92E-07 |
| 10045-94-0 | Mercury (+2) nitrate | L | 3.40E-02 | 1.08E-12 | 1.40E-13 | 9.26E-13 | 3.40E-02 | 1.08E-12 | 1.32E-13 | 8.71E-13 | 2.72E-13 | 1.80E-12 |
| 10049-21-5 | Sodium Dihydrogen Phosphate | L | 1.37E+02 | 4.34E-09 | 5.62E-10 | 3.72E-09 | 1.37E+02 | 4.34E-09 | 5.32E-10 | 3.50E-09 | 1.09E-09 | 7.22E-09 |
| 10099-74-8 | Lead (+2) nitrate | L | 1.59E+00 | 5.06E-11 | 6.56E-12 | 4.34E-11 | 1.59E+00 | 5.06E-11 | 6.21E-12 | 4.09E-11 | 1.28E-11 | 8.43E-11 |
| 10102-45-1 | Thallium nitrate | L | 8.03E-01 | 2.55E-11 | 3.30E-12 | 2.19E-11 | 8.03E-01 | 2.55E-11 | 3.13E-12 | 2.06E-11 | 6.43E-12 | 4.24E-11 |
| 10141-05-6 | Cobalt (+2) nitrate | L | 2.65E+00 | 8.41E-11 | 1.09E-11 | 7.21E-11 | 2.65E+00 | 8.41E-11 | 1.03E-11 | 6.79E-11 | 2.12E-11 | 1.40E-10 |
| 10196-18-6 | Zinc nitrate | L | 5.61E+00 | 1.78E-10 | 2.31E-11 | 1.53E-10 | 5.61E+00 | 1.78E-10 | 2.18E-11 | 1.44E-10 | 4.49E-11 | 2.96E-10 |
| 10294-41-4 | Cerium nitrate | L | 9.13E-02 | 2.90E-12 | 3.75E-13 | 2.49E-12 | 9.13E-02 | 2.90E-12 | 3.55E-13 | 2.34E-12 | 7.31E-13 | 4.82E-12 |
| 10294-41-4 | Cerium nitrate hexahydrate | L | 1.14E+00 | 3.63E-11 | 4.71E-12 | 3.12E-11 | 1.14E+00 | 3.63E-11 | 4.46E-12 | 2.93E-11 | 9.16E-12 | 6.05E-11 |
| 10361-93-0 | Yttrium nitrate | L | 9.13E-02 | 2.90E-12 | 3.75E-13 | 2.49E-12 | 9.13E-02 | 2.90E-12 | 3.55E-13 | 2.34E-12 | 7.31E-13 | 4.82E-12 |
| 12125-02-9 | Ammonium chloride | L | 9.06E+00 | 2.88E-10 | 3.73E-11 | 2.47E-10 | 9.06E+00 | 2.88E-10 | 3.53E-11 | 2.32E-10 | 7.26E-11 | 4.79E-10 |
| 1310-58-3 | Potassium hydroxide | L | 4.08E+02 | 1.30E-08 | 1.68E-09 | 1.11E-08 | 9.22E+04 | 2.93E-06 | 3.59E-07 | 2.36E-06 | 3.61E-07 | 2.37E-06 |
| 13106-76-8 | Ammonium molybdate | L | 4.85E-01 | 1.54E-11 | 1.99E-12 | 1.32E-11 | 4.85E-01 | 1.54E-11 | 1.89E-12 | 1.24E-11 | 3.88E-12 | 2.56E-11 |
| 1310-73-2 | Sodium hydroxide | L | 3.96E+04 | 1.26E-06 | 1.63E-07 | 1.08E-06 | 4.87E+04 | 1.55E-06 | 1.90E-07 | 1.25E-06 | 3.53E-07 | 2.33E-06 |
| 1313-13-9 | Manganese dioxide | L | 1.11E+05 | 3.51E-06 | 4.55E-07 | 3.01E-06 | 2.61E+03 | 8.30E-08 | 1.02E-08 | 6.70E-08 | 4.65E-07 | 3.08E-06 |
| 1313-60-6 | Sodium peroxide[1] | L | 7.20E+01 | 2.28E-09 | 2.96E-10 | 1.96E-09 | 1.63E+04 | 5.16E-07 | 6.33E-08 | 4.17E-07 | 6.36E-08 | 4.19E-07 |
| 1317-42-6 | Cupric sulfide | L | 1.35E+01 | 4.29E-10 | 5.55E-11 | 3.68E-10 | 1.35E+01 | 4.29E-10 | 5.26E-11 | 3.46E-10 | 1.08E-10 | 7.14E-10 |
| 1336-21-6 | Ammonium hydroxide | L | 3.86E+03 | 1.23E-07 | 1.59E-08 | 1.05E-07 | 3.86E+03 | 1.23E-07 | 1.50E-08 | 9.90E-08 | 3.09E-08 | 2.04E-07 |
| 13477-34-4 | Calcium nitrate | L | 4.61E-01 | 1.46E-11 | 1.90E-12 | 1.26E-11 | 4.61E-01 | 1.46E-11 | 1.79E-12 | 1.18E-11 | 3.69E-12 | 2.44E-11 |
| 13478-00-7 | Nickel (+2) nitrate | L | 2.56E+00 | 8.12E-11 | 1.05E-11 | 6.97E-11 | 2.56E+00 | 8.12E-11 | 9.96E-12 | 6.55E-11 | 2.05E-11 | 1.35E-10 |
| 13569-65-8 | Rhodium chloride | L | 9.13E-02 | 2.90E-12 | 3.75E-13 | 2.49E-12 | 9.13E-02 | 2.90E-12 | 3.55E-13 | 2.34E-12 | 7.31E-13 | 4.82E-12 |
| 13770-61-1 | Indium nitrate | L | 9.13E-02 | 2.90E-12 | 3.75E-13 | 2.49E-12 | 9.13E-02 | 2.90E-12 | 3.55E-13 | 2.34E-12 | 7.31E-13 | 4.82E-12 |
| 13823-29-5 | Thorium nitrate | L | 4.12E-01 | 1.31E-11 | 1.69E-12 | 1.12E-11 | 4.12E-01 | 1.31E-11 | 1.60E-12 | 1.05E-11 | 3.30E-12 | 2.18E-11 |

## Laboratory Inorganic Emissions

| | | | | | | | | C3 | C5 | | | |
|---|---|---|---|---|---|---|---|---|---|---|---|---|
| | | Release Fraction | 1.00E-03 | | Average Annual Concentration | | | 0.12957 | 0.12269 | | | |
| | | Number of seconds per year | 3.15E+07 | | Max 24-hr Concentration | | | 0.85812 | 0.80736 | | | |
| CAS Number | Compound | Phase | C3 Usage (g/yr) | C3 Emissions (g/s) | C3 Annual Average Concentration (ug/m3) | C3 Maximum 24-hr Concentration (ug/m3) | C5 Usage (g/yr) | C5 Emissions (g/s) | C5 Annual Average Concentration (ug/m3) | C5 Maximum 24-hr Concentration (ug/m3) | Total Laboratory Annual Average Concentration (ug/m3) | Total Laboratory Maximum 24-hr Concentration (ug/m3) |
| 144-55-8 | Sodium Bicarbonate | L | 1.79E+06 | 5.67E-05 | 7.35E-06 | 4.87E-05 | 1.79E+06 | 5.67E-05 | 6.96E-06 | 4.58E-05 | 1.43E-05 | 9.45E-05 |
| 151-50-8 | Potassium cyanide | L | 3.72E-02 | 1.18E-12 | 1.53E-13 | 1.01E-12 | 3.72E-02 | 1.18E-12 | 1.45E-13 | 9.53E-13 | 2.98E-13 | 1.97E-12 |
| 15710-66-4 | Manganese (+2) nitrate | L | 2.56E+00 | 8.11E-11 | 1.05E-11 | 6.96E-11 | 2.56E+00 | 8.11E-11 | 9.96E-12 | 6.55E-11 | 2.05E-11 | 1.35E-10 |
| 1633-05-2 | Strontium Nitrate | L | 3.03E+01 | 9.62E-10 | 1.25E-10 | 8.26E-10 | 3.03E+01 | 9.62E-10 | 1.18E-10 | 7.77E-10 | 2.43E-10 | 1.60E-09 |
| 19049-40-2 | Beryllium acetate | L | 1.09E+00 | 3.45E-11 | 4.47E-12 | 2.96E-11 | 1.09E+00 | 3.45E-11 | 4.23E-12 | 2.78E-11 | 8.70E-12 | 5.74E-11 |
| 302-01-2 | Hydrazine | L | 1.02E+02 | 3.22E-09 | 4.18E-10 | 2.77E-09 | 1.02E+02 | 3.22E-09 | 3.95E-10 | 2.60E-09 | 8.13E-10 | 5.37E-09 |
| 5332-73-0 | 2-Methoxy-1-aminoethane | L | 1.88E+02 | 5.97E-09 | 7.73E-10 | 5.12E-09 | 1.88E+02 | 5.97E-09 | 7.32E-10 | 4.82E-09 | 1.50E-09 | 9.94E-09 |
| 5470-11-1 | Hydroxylamine hydrochloride | L | 1.15E+04 | 3.65E-07 | 4.73E-08 | 3.13E-07 | 1.15E+04 | 3.65E-07 | 4.48E-08 | 2.95E-07 | 9.21E-08 | 6.08E-07 |
| 5968-11-6 | Sodium Carbonate | L | 1.89E+06 | 6.01E-05 | 7.78E-06 | 5.15E-05 | 1.89E+06 | 6.01E-05 | 7.37E-06 | 4.85E-05 | 1.52E-05 | 1.00E-04 |
| 5968-11-6 | Sodium carbonate monohydrate | L | 1.35E+01 | 4.29E-10 | 5.55E-11 | 3.68E-10 | 1.35E+01 | 4.29E-10 | 5.26E-11 | 3.46E-10 | 1.08E-10 | 7.14E-10 |
| 7439-89-6 | Iron (+3) nitrate | L | 1.06E+01 | 3.37E-10 | 4.37E-11 | 2.90E-10 | 1.06E+01 | 3.37E-10 | 4.14E-11 | 2.72E-10 | 8.51E-11 | 5.62E-10 |
| 7439-95-4 | Magnesium nitrate | L | 5.52E-01 | 1.75E-11 | 2.27E-12 | 1.50E-11 | 5.52E-01 | 1.75E-11 | 2.15E-12 | 1.41E-11 | 4.42E-12 | 2.92E-11 |
| 7440-50-8 | Copper (+2) nitrate | L | 2.56E+00 | 8.12E-11 | 1.05E-11 | 6.97E-11 | 2.56E+00 | 8.12E-11 | 9.96E-12 | 6.55E-11 | 2.05E-11 | 1.35E-10 |
| 7447-40-7 | Potassium chloride | L | 3.29E+02 | 1.04E-08 | 1.35E-09 | 8.95E-09 | 6.57E+02 | 2.09E-08 | 2.56E-09 | 1.68E-08 | 3.91E-09 | 2.58E-08 |
| 7550-45-0 | Titanium tetrachloride | L | 3.57E-01 | 1.13E-11 | 1.47E-12 | 9.72E-12 | 3.57E-01 | 1.13E-11 | 1.39E-12 | 9.14E-12 | 2.86E-12 | 1.89E-11 |
| 7558-80-7 | Sodium phosphate | L | 5.18E-01 | 1.65E-11 | 2.13E-12 | 1.41E-11 | 5.18E-01 | 1.65E-11 | 2.02E-12 | 1.33E-11 | 4.15E-12 | 2.74E-11 |
| 7631-90-5 | Sodium bisulfite | L | 2.75E+01 | 8.72E-10 | 1.13E-10 | 7.48E-10 | 2.75E+01 | 8.72E-10 | 1.07E-10 | 7.04E-10 | 2.20E-10 | 1.45E-09 |
| 7631-99-4 | Sodium nitrate | L | 1.15E+00 | 3.67E-11 | 4.75E-12 | 3.15E-11 | 1.15E+00 | 3.67E-11 | 4.50E-12 | 2.96E-11 | 9.25E-12 | 6.10E-11 |
| 7632-00-0 | Sodium nitrite | L | 1.12E+02 | 3.56E-09 | 4.61E-10 | 3.05E-09 | 1.12E+02 | 3.56E-09 | 4.36E-10 | 2.87E-09 | 8.97E-10 | 5.92E-09 |
| 7647-10-1 | Palladium (II) chloride | L | 4.68E+00 | 1.49E-10 | 1.93E-11 | 1.28E-10 | 4.68E+00 | 1.49E-10 | 1.82E-11 | 1.20E-10 | 3.75E-11 | 2.48E-10 |
| 7647-14-5 | Sodium chloride | L | 1.12E+04 | 3.57E-07 | 4.62E-08 | 3.06E-07 | 1.12E+04 | 3.57E-07 | 4.37E-08 | 2.88E-07 | 8.99E-08 | 5.94E-07 |
| 7647-15-6 | Sodium bromide | L | 5.18E-01 | 1.65E-11 | 2.13E-12 | 1.41E-11 | 5.18E-01 | 1.65E-11 | 2.02E-12 | 1.33E-11 | 4.15E-12 | 2.74E-11 |
| 7664-38-2 | Hydrogen phosphate | L | 3.80E-01 | 1.21E-11 | 1.56E-12 | 1.03E-11 | 3.80E-01 | 1.21E-11 | 1.48E-12 | 9.73E-12 | 3.04E-12 | 2.01E-11 |

## Laboratory Inorganic Emissions

| | | | | | | | | C3 | C5 | | | |
|---|---|---|---|---|---|---|---|---|---|---|---|---|
| | | Release Fraction | 1.00E-03 | | Average Annual Concentration | | | 0.12957 | 0.12269 | | | |
| | | Number of seconds per year | 3.15E+07 | | Max 24-hr Concentration | | | 0.85812 | 0.80736 | | | |
| CAS Number | Compound | Phase | C3 Usage (g/yr) | C3 Emissions (g/s) | C3 Annual Average Concentration (ug/m3) | C3 Maximum 24-hr Concentration (ug/m3) | C5 Usage (g/yr) | C5 Emissions (g/s) | C5 Annual Average Concentration (ug/m3) | C5 Maximum 24-hr Concentration (ug/m3) | Total Laboratory Annual Average Concentration (ug/m3) | Total Laboratory Maximum 24-hr Concentration (ug/m3) |
| 7664-38-2 | Phosphoric Acid | L | 1.94E+02 | 6.16E-09 | 7.98E-10 | 5.29E-09 | 1.94E+02 | 6.16E-09 | 7.56E-10 | 4.97E-09 | 1.55E-09 | 1.03E-08 |
| 7664-39-3 | Hydrofluoric acid | L | 2.56E+04 | 8.14E-07 | 1.05E-07 | 6.98E-07 | 4.02E+04 | 1.28E-06 | 1.57E-07 | 1.03E-06 | 2.62E-07 | 1.73E-06 |
| 7664-93-9 | Sulfuric acid | L | 5.32E+04 | 1.69E-06 | 2.19E-07 | 1.45E-06 | 5.40E+04 | 1.71E-06 | 2.10E-07 | 1.38E-06 | 4.29E-07 | 2.83E-06 |
| 7681-49-4 | Fluoride | L | 6.35E-01 | 2.02E-11 | 2.61E-12 | 1.73E-11 | 6.35E-01 | 2.02E-11 | 2.47E-12 | 1.63E-11 | 5.09E-12 | 3.36E-11 |
| 7681-52-9 | Sodium hypochlorite | L | 7.92E+00 | 2.51E-10 | 3.26E-11 | 2.16E-10 | 7.92E+00 | 2.51E-10 | 3.08E-11 | 2.03E-10 | 6.34E-11 | 4.19E-10 |
| 7697-37-2 | Nitric acid | L | 2.86E+05 | 9.09E-06 | 1.18E-06 | 7.80E-06 | 3.23E+05 | 1.02E-05 | 1.26E-06 | 8.27E-06 | 2.43E-06 | 1.61E-05 |
| 7722-64-7 | Potassium permanganate | L | 1.17E+04 | 3.71E-07 | 4.81E-08 | 3.19E-07 | 1.17E+04 | 3.71E-07 | 4.56E-08 | 3.00E-07 | 9.37E-08 | 6.18E-07 |
| 7722-84-1 | Hydrogen Peroxide | L | 2.94E+03 | 9.32E-08 | 1.21E-08 | 8.00E-08 | 2.94E+03 | 9.32E-08 | 1.14E-08 | 7.52E-08 | 2.35E-08 | 1.55E-07 |
| 7727-21-1 | Potassium persulfate | L | 6.94E+03 | 2.20E-07 | 2.85E-08 | 1.89E-07 | 6.94E+03 | 2.20E-07 | 2.70E-08 | 1.78E-07 | 5.56E-08 | 3.67E-07 |
| 7757-79-1 | Potassium nitrate | L | 3.88E-01 | 1.23E-11 | 1.59E-12 | 1.06E-11 | 3.88E-01 | 1.23E-11 | 1.51E-12 | 9.94E-12 | 3.11E-12 | 2.05E-11 |
| 7757-82-6 | Anhydrous Sodium Sulfate | L | 0.00E+00 | 0.00E+00 | 0.00E+00 | 0.00E+00 | 2.57E+03 | 8.15E-08 | 9.99E-09 | 6.58E-08 | 9.99E-09 | 6.58E-08 |
| 7757-82-6 | Sodium sulfate | L | 7.67E-01 | 2.43E-11 | 3.15E-12 | 2.09E-11 | 7.67E-01 | 2.43E-11 | 2.99E-12 | 1.96E-11 | 6.14E-12 | 4.05E-11 |
| 7761-88-8 | Silver nitrate | L | 6.06E+01 | 1.92E-09 | 2.49E-10 | 1.65E-09 | 6.06E+01 | 1.92E-09 | 2.36E-10 | 1.55E-09 | 4.85E-10 | 3.20E-09 |
| 7773-06-0 | Ammonium sulfamate | L | 4.38E+01 | 1.39E-09 | 1.80E-10 | 1.19E-09 | 4.38E+01 | 1.39E-09 | 1.71E-10 | 1.12E-09 | 3.51E-10 | 2.32E-09 |
| 7775-27-1 | Sodium persulfate[2] | L | 2.86E+03 | 9.09E-08 | 1.18E-08 | 7.80E-08 | 2.86E+03 | 9.09E-08 | 1.12E-08 | 7.34E-08 | 2.29E-08 | 1.51E-07 |
| 7778-39-4 | Arsenic Acid | L | 1.54E+00 | 4.89E-11 | 6.33E-12 | 4.20E-11 | 1.54E+00 | 4.89E-11 | 6.00E-12 | 3.95E-11 | 1.23E-11 | 8.14E-11 |
| 7783-08-6 | Selenic acid | L | 9.95E-01 | 3.16E-11 | 4.09E-12 | 2.71E-11 | 9.95E-01 | 3.16E-11 | 3.88E-12 | 2.55E-11 | 7.97E-12 | 5.26E-11 |
| 7783-47-3 | Stannous (+2) fluoride | L | 2.84E-01 | 9.01E-12 | 1.17E-12 | 7.73E-12 | 2.84E-01 | 9.01E-12 | 1.11E-12 | 7.27E-12 | 2.27E-12 | 1.50E-11 |
| 7784-27-2 | Aluminum nitrate | L | 1.62E+04 | 5.16E-07 | 6.68E-08 | 4.43E-07 | 1.62E+04 | 5.16E-07 | 6.33E-08 | 4.16E-07 | 1.30E-07 | 8.59E-07 |
| 7789-02-8 | Chromium nitrate | L | 2.56E+00 | 8.12E-11 | 1.05E-11 | 6.97E-11 | 2.56E+00 | 8.12E-11 | 9.96E-12 | 6.55E-11 | 2.05E-11 | 1.35E-10 |
| 7790-69-4 | Lithium nitrate | L | 1.64E-01 | 5.21E-12 | 6.76E-13 | 4.47E-12 | 1.64E-01 | 5.21E-12 | 6.40E-13 | 4.21E-12 | 1.32E-12 | 8.68E-12 |
| 7803-55-6 | Ammonium vanadate | L | 2.52E+00 | 8.00E-11 | 1.04E-11 | 6.87E-11 | 2.52E+00 | 8.00E-11 | 9.82E-12 | 6.46E-11 | 2.02E-11 | 1.33E-10 |
| 7440-21-3 | Silver | S | 4.75E-02 | 1.51E-12 | 1.95E-13 | 1.29E-12 | 6.40E+02 | 2.03E-08 | 2.49E-09 | 1.64E-08 | 2.49E-09 | 1.64E-08 |
| 7429-90-5 | Aluminum | S | 2.22E+02 | 7.06E-09 | 9.14E-10 | 6.06E-09 | 1.27E+05 | 4.02E-06 | 4.94E-07 | 3.25E-06 | 4.95E-07 | 3.25E-06 |
| 7440-42-8 | Boron | S | 2.24E+00 | 7.10E-11 | 9.20E-12 | 6.09E-11 | 9.45E+02 | 3.00E-08 | 3.68E-09 | 2.42E-08 | 3.69E-09 | 2.43E-08 |
| 7440-31-5 | Tin | L | 5.56E+04 | 1.76E-06 | 2.29E-07 | 1.51E-06 | 0.00E+00 | 0.00E+00 | 0.00E+00 | 0.00E+00 | 2.29E-07 | 1.51E-06 |
| 7440-39-3 | Barium | S | 1.00E-01 | 3.18E-12 | 4.11E-13 | 2.73E-12 | 7.06E+02 | 2.24E-08 | 2.75E-09 | 1.81E-08 | 2.75E-09 | 1.81E-08 |
| 7440-69-9 | Bismuth | S | 2.30E-01 | 7.29E-12 | 9.45E-13 | 6.26E-12 | 3.79E+02 | 1.20E-08 | 1.48E-09 | 9.72E-09 | 1.48E-09 | 9.72E-09 |
| | BO3 | S | 6.72E-03 | 2.13E-13 | 2.77E-14 | 1.83E-13 | 6.99E+02 | 2.22E-08 | 2.72E-09 | 1.79E-08 | 2.72E-09 | 1.79E-08 |
| 7440-70-2 | Calcium | S | 6.16E+00 | 1.95E-10 | 2.53E-11 | 1.68E-10 | 5.65E+03 | 1.79E-07 | 2.20E-08 | 1.45E-07 | 2.20E-08 | 1.45E-07 |

## Laboratory Inorganic Emissions

| | | | | | | | | | | | | |
|---|---|---|---|---|---|---|---|---|---|---|---|---|
| | | | | | | | | C3 | C5 | | | |
| | | Release Fraction | 1.00E-03 | | Average Annual Concentration | | | 0.12957 | 0.12269 | | | |
| | | Number of seconds per year | 3.15E+07 | | Max 24-hr Concentration | | | 0.85812 | 0.80736 | | | |
| CAS Number | Compound | Phase | C3 Usage (g/yr) | C3 Emissions (g/s) | C3 Annual Average Concentration (ug/m3) | C3 Maximum 24-hr Concentration (ug/m3) | C5 Usage (g/yr) | C5 Emissions (g/s) | C5 Annual Average Concentration (ug/m3) | C5 Maximum 24-hr Concentration (ug/m3) | Total Laboratory Annual Average Concentration (ug/m3) | Total Laboratory Maximum 24-hr Concentration (ug/m3) |
| 7440-43-9 | Cadmium | S | 5.04E-02 | 1.60E-12 | 2.07E-13 | 1.37E-12 | 3.26E+03 | 1.04E-07 | 1.27E-08 | 8.36E-08 | 1.27E-08 | 8.36E-08 |
| 7647-01-0 | Hydrochloric acid | L | 2.79E+05 | 8.84E-06 | 1.15E-06 | 7.59E-06 | 2.80E+05 | 8.88E-06 | 1.09E-06 | 7.17E-06 | 2.24E-06 | 1.48E-05 |
| 7681-11-0 | Potassium Iodide | L | 5.73E+03 | 1.82E-07 | 2.36E-08 | 1.56E-07 | 2.97E+03 | 9.42E-08 | 1.16E-08 | 7.60E-08 | 3.51E-08 | 2.32E-07 |
| 7778-18-9 | Calcium Sulfate | S | 5.85E+04 | 1.86E-06 | 2.41E-07 | 1.59E-06 | 0.00E+00 | 0.00E+00 | 0.00E+00 | 0.00E+00 | 2.41E-07 | 1.59E-06 |
| 7778-50-9 | Potassium dichromate | S | 1.11E+05 | 3.51E-06 | 4.55E-07 | 3.01E-06 | 2.63E+03 | 8.34E-08 | 1.02E-08 | 6.73E-08 | 4.65E-07 | 3.08E-06 |
| 7778-77-0 | Monobasic Potassium Phosphate | L | 4.58E+02 | 1.45E-08 | 1.88E-09 | 1.25E-08 | 1.16E+03 | 3.68E-08 | 4.52E-09 | 2.97E-08 | 6.40E-09 | 4.22E-08 |
| 7782-50-5 | Chlorine | S | 1.38E+02 | 4.37E-09 | 5.66E-10 | 3.75E-09 | 1.01E+04 | 3.21E-07 | 3.94E-08 | 2.59E-07 | 4.00E-08 | 2.63E-07 |
| 18540-29-9 | Chromium | S | 1.21E+01 | 3.84E-10 | 4.98E-11 | 3.30E-10 | 6.66E+03 | 2.12E-07 | 2.60E-08 | 1.71E-07 | 2.60E-08 | 1.71E-07 |
| 16984-48-8 | Flourides | S | 4.33E+01 | 1.37E-09 | 1.78E-10 | 1.18E-09 | 5.14E+03 | 1.63E-07 | 2.00E-08 | 1.32E-07 | 2.02E-08 | 1.33E-07 |
| 7439-89-6 | Iron | S | 4.58E+00 | 1.45E-10 | 1.88E-11 | 1.25E-10 | 7.53E+04 | 2.39E-06 | 2.93E-07 | 1.93E-06 | 2.93E-07 | 1.93E-06 |
| 7439-97-6 | Mercury | L | 5.50E-01 | 1.75E-11 | 2.26E-12 | 1.50E-11 | 1.68E+02 | 5.33E-09 | 6.54E-10 | 4.30E-09 | 6.56E-10 | 4.32E-09 |
| 7553-56-2 | Iodine | L | 1.10E-10 | 3.49E-21 | 4.53E-22 | 3.00E-21 | 4.06E-06 | 1.29E-16 | 1.58E-17 | 1.04E-16 | 1.58E-17 | 1.04E-16 |
| C7439-98-7 | Molybdenum | S | 3.83E-01 | 1.22E-11 | 1.58E-12 | 1.04E-11 | 1.86E+02 | 5.91E-09 | 7.26E-10 | 4.78E-09 | 7.27E-10 | 4.79E-09 |
| 7664-41-7 | Ammonia | L | 7.87E-01 | 2.50E-11 | 3.24E-12 | 2.14E-11 | 2.07E+03 | 6.58E-08 | 8.07E-09 | 5.31E-08 | 8.08E-09 | 5.31E-08 |
| C7782-49-2 | Selenium | L | 3.11E-01 | 9.87E-12 | 1.28E-12 | 8.47E-12 | 8.56E+02 | 2.72E-08 | 3.34E-09 | 2.19E-08 | 3.34E-09 | 2.20E-08 |
| 7440-21-3 | Silicon | L | 2.24E+01 | 7.13E-10 | 9.23E-11 | 6.11E-10 | 9.83E+03 | 3.12E-07 | 3.83E-08 | 2.52E-07 | 3.84E-08 | 2.53E-07 |
| 7440-24-6 | Strontium | L | 5.16E+01 | 1.64E-09 | 2.12E-10 | 1.41E-09 | 2.23E+03 | 7.08E-08 | 8.69E-09 | 5.72E-08 | 8.90E-09 | 5.86E-08 |
| 7440-61-1 | Uranium | L | 3.53E-01 | 1.12E-11 | 1.45E-12 | 9.63E-12 | 4.30E+02 | 1.36E-08 | 1.67E-09 | 1.10E-08 | 1.68E-09 | 1.10E-08 |
| 7440-67-7 | Zirconium | L | 3.56E+00 | 1.13E-10 | 1.46E-11 | 9.70E-11 | 3.00E+04 | 9.51E-07 | 1.17E-07 | 7.68E-07 | 1.17E-07 | 7.68E-07 |

## Emissions from Standby Generators

| | | |
|---|---|---|
| Standby Generator | 3950 | Bhp |
| Total Standby Generator Hours | 164 | hr/yr (1 generator operating 164 hr/yr) |
| Brake Specific Fuel Consumption for Engines | 7000 | Btu/hp-hr |

| Pollutant | | Emission Factor (lbs/MMBtu) | Emission Factor (lbs/hp-hr) | Max Hourly Emissions per Generator (lbs/hr) | Max Hourly Emissions per Generator (gm/sec) | Max Hourly Emissions for all generators (gm/sec) | Total Annual Standby Emissions (lbs/yr) | Total Annual Standby Emissions (gm/sec) |
|---|---|---|---|---|---|---|---|---|
| *Air Toxics* | | | | | | | | |
| 75-07-0 | Acetaldehyde | 2.52E-05 | 1.76E-07 | 6.97E-04 | 8.78E-05 | 1.76E-04 | 1.14E-01 | 1.64E-06 |
| 107-02-8 | Acrolein | 7.88E-06 | 5.52E-08 | 2.18E-04 | 2.75E-05 | 5.49E-05 | 3.57E-02 | 5.14E-07 |
| 71-43-2 | Benzene | 7.76E-04 | 5.43E-06 | 2.15E-02 | 2.70E-03 | 5.41E-03 | 3.52E+00 | 5.06E-05 |
| 50-00-0 | Formaldehyde | 7.89E-05 | 5.52E-07 | 2.18E-03 | 2.75E-04 | 5.50E-04 | 3.58E-01 | 5.15E-06 |
| 115-07-1 | Propylene | 2.79E-03 | 1.95E-05 | 7.71E-02 | 9.72E-03 | 1.94E-02 | 1.27E+01 | 1.82E-04 |
| 108-88-3 | Toluene | 2.81E-04 | 1.97E-06 | 7.77E-03 | 9.79E-04 | 1.96E-03 | 1.27E+00 | 1.83E-05 |
| 1330-20-7 | Xylenes | 1.93E-04 | 1.35E-06 | 5.34E-03 | 6.72E-04 | 1.34E-03 | 8.75E-01 | 1.26E-05 |
| **PAH** | | | | | | | | |
| 83-32-9 | Acenaphthene | 4.68E-06 | 3.28E-08 | 1.29E-04 | 1.63E-05 | 3.26E-05 | 2.12E-02 | 3.05E-07 |
| 208-96-8 | Acenaphthylene | 9.23E-06 | 6.46E-08 | 2.55E-04 | 3.22E-05 | 6.43E-05 | 4.19E-02 | 6.02E-07 |
| 120-12-7 | Anthracene | 1.23E-06 | 8.61E-09 | 3.40E-05 | 4.29E-06 | 8.57E-06 | 5.58E-03 | 8.02E-08 |
| 56-55-3 | Benz(a)anthracene | 6.22E-07 | 4.35E-09 | 1.72E-05 | 2.17E-06 | 4.33E-06 | 2.82E-03 | 4.06E-08 |
| 50-32-8 | Benzo(a)pyrene | 2.57E-07 | 1.80E-09 | 7.11E-06 | 8.95E-07 | 1.79E-06 | 1.17E-03 | 1.68E-08 |
| 205-99-2 | Benzo(b)fluoranthene | 1.11E-06 | 7.77E-09 | 3.07E-05 | 3.87E-06 | 7.73E-06 | 5.03E-03 | 7.24E-08 |
| 191-24-2 | Benzo(g,h,l)perylene | 5.56E-07 | 3.89E-09 | 1.54E-05 | 1.94E-06 | 3.87E-06 | 2.52E-03 | 3.63E-08 |
| 207-08-9 | Benzo(k)fluoranthene | 2.18E-07 | 1.53E-09 | 6.03E-06 | 7.59E-07 | 1.52E-06 | 9.89E-04 | 1.42E-08 |
| 218-01-9 | Chrysene | 1.53E-06 | 1.07E-08 | 4.23E-05 | 5.33E-06 | 1.07E-05 | 6.94E-03 | 9.98E-08 |
| 53-70-3 | Dibenz(a,h)anthracene | 3.46E-07 | 2.42E-09 | 9.57E-06 | 1.21E-06 | 2.41E-06 | 1.57E-03 | 2.26E-08 |
| 206-44-0 | Flouranthene | 4.03E-06 | 2.82E-08 | 1.11E-04 | 1.40E-05 | 2.81E-05 | 1.83E-02 | 2.63E-07 |
| 86-73-7 | Flourene | 1.28E-05 | 8.96E-08 | 3.54E-04 | 4.46E-05 | 8.92E-05 | 5.80E-02 | 8.35E-07 |

## Emissions from Standby Generators

| | |
|---|---|
| Standby Generator | 3950 Bhp |
| Total Standby Generator Hours | 164 hr/yr (1 generator operating 164 hr/yr) |
| Brake Specific Fuel Consumption for Engines | 7000 Btu/hp-hr |

| Pollutant | | Emission Factor (lbs/MMBtu) | Emission Factor (lbs/hp-hr) | Max Hourly Emissions per Generator (lbs/hr) | Max Hourly Emissions per Generator (gm/sec) | Max Hourly Emissions for all generators (gm/sec) | Total Annual Standby Emissions (lbs/yr) | Total Annual Standby Emissions (gm/sec) |
|---|---|---|---|---|---|---|---|---|
| 193-39-5 | Indeno(1,2,3-cd)pyrene | 4.14E-07 | 2.90E-09 | 1.14E-05 | 1.44E-06 | 2.88E-06 | 1.88E-03 | 2.70E-08 |
| 91-20-3 | Naphthalene | 1.30E-04 | 9.10E-07 | 3.59E-03 | 4.53E-04 | 9.06E-04 | 5.89E-01 | 8.48E-06 |
| 85-01-8 | Phenanthrene | 4.08E-05 | 2.86E-07 | 1.13E-03 | 1.42E-04 | 2.84E-04 | 1.85E-01 | 2.66E-06 |
| 129-00-0 | Pyrene | 3.71E-06 | 2.60E-08 | 1.03E-04 | 1.29E-05 | 2.58E-05 | 1.68E-02 | 2.42E-07 |
| n/a | VOC (3) | | 6.61E-04 | 2.61E+00 | 3.29E-01 | 6.58E-01 | 4.28E+02 | 6.16E-03 |
| **Pollutant** | | **(lbs/1000 gal)** | **(lbs/hp-hr)** | **(lbs/hr)** | **(gm/sec)** | | **(lbs/yr)** | **(gm/sec)** |
| PM (3) | | | 5.51E-04 | 2.18 | 0.27 | 5.48E-01 | 3.57E+02 | 5.13E-03 |
| **Metals** | | **(lbs/lb PM)** | | | | | | |
| 7440-38-2 | Arsenic | 5.30E-03 | 2.92E-06 | 1.15E-02 | 1.45E-03 | 2.91E-03 | 1.89E+00 | 2.72E-05 |
| 7440-43-9 | Cadmium | 5.00E-04 | 2.76E-07 | 1.09E-03 | 1.37E-04 | 2.74E-04 | 1.78E-01 | 2.57E-06 |
| 7440-47-3 | Chromium | 5.30E-03 | 2.92E-06 | 1.15E-02 | 1.45E-03 | 2.91E-03 | 1.89E+00 | 2.72E-05 |
| 7439-92-1 | Lead | 5.50E-03 | 3.03E-06 | 1.20E-02 | 1.51E-03 | 3.02E-03 | 1.96E+00 | 2.82E-05 |
| 7440-02-0 | Nickel | 5.00E-04 | 2.76E-07 | 1.09E-03 | 1.37E-04 | 2.74E-04 | 1.78E-01 | 2.57E-06 |
| 7782-49-2 | Selenium | 5.00E-04 | 2.76E-07 | 1.09E-03 | 1.37E-04 | 2.74E-04 | 1.78E-01 | 2.57E-06 |
| 7440-31-5 | Tin | 5.00E-04 | 2.76E-07 | 1.09E-03 | 1.37E-04 | 2.74E-04 | 1.78E-01 | 2.57E-06 |
| 7440-32-6 | Titanium | 5.00E-04 | 2.76E-07 | 1.09E-03 | 1.37E-04 | 2.74E-04 | 1.78E-01 | 2.57E-06 |
| 7440-66-6 | Zinc | 5.50E-03 | 3.03E-06 | 1.20E-02 | 1.51E-03 | 3.02E-03 | 1.96E+00 | 2.82E-05 |
| 10102-44-0 | Nitrogen oxides (3) | | 1.65E-02 | 6.52E+01 | 8.21E+00 | 1.64E+01 | 1.07E+04 | 1.54E-01 |

## Emissions from Standby Generators

| | | | | | | | | |
|---|---|---|---|---|---|---|---|---|
| | | | Standby Generator | 3950 | Bhp | | | |
| | | | Total Standby Generator Hours | 164 | hr/yr (1 generator operating 164 hr/yr) | | | |
| | | | Brake Specific Fuel Consumption for Engines | 7000 | Btu/hp-hr | | | |
| **Pollutant** | | **Emission Factor (lbs/1000 gal)** | **Emission Factor (lbs/hp-hr)** | **Max Hourly Emissions per Generator (lbs/hr)** | **Max Hourly Emissions per Generator (gm/sec)** | **Max Hourly Emissions for all generators** | **Total Annual Standby Emissions (lbs/yr)** | **Total Annual Standby Emissions (gm/sec)** |
| 630-08-0 | Carbon monoxide (3) | | 1.98E-03 | 7.82E+00 | 9.85E-01 | 1.97E+00 | 1.28E+03 | 1.84E-02 |
| 7446-09-5 | Sulfur dioxide | | 4.05E-04 | 1.60E+00 | 2.02E-01 | 4.03E-01 | 2.62E+02 | 3.77E-03 |
| | Diesel | Units | Reference | | | | | |
| Heating Value | 19300 | Btu/lb | AP-42 (1996), page 3.3-6, Table 3.3-1. | | | | | |
| Density | 7.1 | lb/gal | Ap-42 (1996) | | | | | |
| | Brake-specific fuel consumption for engines = | | 7000 | Btu/hp-hr | | | | |

Notes:

1 Organics emission factors from EPA's AP-42 document, Section 3.4, Large Stationary Diesel and All Stationary Dual-fuel Engines.

2 Inorganic emission factors from California Air Resources Board *Identification of Particulate Matter Species Profiles. Volume 2, ARB Speciation Manual*, 1991.

3 Emission factors based on vendor data.

## Emissions from ITS Generators

| | | | | | | | | |
|---|---|---|---|---|---|---|---|---|
| | | | ITS Generator | 5530 | Bhp | | | |
| | | | Total ITS Generator Hours | 328 | hr/yr (2 generators each operating 164 hr/yr) | | | |
| | | | Brake Specific Fuel Consumption for Engines | 7000 | Btu/hp-hr | | | |
| Pollutant | | Emission Factor (lbs/MMBtu) | Emission Factor (lbs/hp-hr) | Maximum hourly Emissions per Generator (lbs/hr) | Maximum hourly Emissions per Generator (gm/sec) | Maximum Hourly Emissions for all generators (gm/sec) | Total Annual Emissions (lbs/yr) | Total Annual Emissions (gm/sec) |
| *Air Toxics* | | | | | | | | |
| 75-07-0 | Acetaldehyde | 2.52E-05 | 1.76E-07 | 9.75E-04 | 1.23E-04 | 2.46E-04 | 3.20E-01 | 4.60E-06 |
| 107-02-8 | Acrolein | 7.88E-06 | 5.52E-08 | 3.05E-04 | 3.84E-05 | 7.69E-05 | 1.00E-01 | 1.44E-06 |
| 71-43-2 | Benzene | 7.76E-04 | 5.43E-06 | 3.00E-02 | 3.78E-03 | 7.57E-03 | 9.85E+00 | 1.42E-04 |
| 50-00-0 | Formaldehyde | 7.89E-05 | 5.52E-07 | 3.05E-03 | 3.85E-04 | 7.70E-04 | 1.00E+00 | 1.44E-05 |
| 115-07-1 | Propylene | 2.79E-03 | 1.95E-05 | 1.08E-01 | 1.36E-02 | 2.72E-02 | 3.54E+01 | 5.10E-04 |
| 108-88-3 | Toluene | 2.81E-04 | 1.97E-06 | 1.09E-02 | 1.37E-03 | 2.74E-03 | 3.57E+00 | 5.13E-05 |
| 1330-20-7 | Xylenes | 1.93E-04 | 1.35E-06 | 7.47E-03 | 9.41E-04 | 1.88E-03 | 2.45E+00 | 3.52E-05 |
| PAH | | | | | | | | |
| 83-32-9 | Acenaphthene | 4.68E-06 | 3.28E-08 | 1.81E-04 | 2.28E-05 | 4.57E-05 | 5.94E-02 | 8.55E-07 |
| 208-96-8 | Acenaphthylene | 9.23E-06 | 6.46E-08 | 3.57E-04 | 4.50E-05 | 9.00E-05 | 1.17E-01 | 1.69E-06 |
| 120-12-7 | Anthracene | 1.23E-06 | 8.61E-09 | 4.76E-05 | 6.00E-06 | 1.20E-05 | 1.56E-02 | 2.25E-07 |
| 56-55-3 | Benz(a)anthracene | 6.22E-07 | 4.35E-09 | 2.41E-05 | 3.03E-06 | 6.07E-06 | 7.90E-03 | 1.14E-07 |
| 50-32-8 | Benzo(a)pyrene | 2.57E-07 | 1.80E-09 | 9.95E-06 | 1.25E-06 | 2.51E-06 | 3.26E-03 | 4.69E-08 |
| 205-99-2 | Benzo(b)fluoranthene | 1.11E-06 | 7.77E-09 | 4.30E-05 | 5.41E-06 | 1.08E-05 | 1.41E-02 | 2.03E-07 |
| 191-24-2 | Benzo(g,h,l)perylene | 5.56E-07 | 3.89E-09 | 2.15E-05 | 2.71E-06 | 5.42E-06 | 7.06E-03 | 1.02E-07 |
| 207-08-9 | Benzo(k)fluoranthene | 2.18E-07 | 1.53E-09 | 8.44E-06 | 1.06E-06 | 2.13E-06 | 2.77E-03 | 3.98E-08 |
| 218-01-9 | Chrysene | 1.53E-06 | 1.07E-08 | 5.92E-05 | 7.46E-06 | 1.49E-05 | 1.94E-02 | 2.79E-07 |
| 53-70-3 | Dibenz(a,h)anthracene | 3.46E-07 | 2.42E-09 | 1.34E-05 | 1.69E-06 | 3.38E-06 | 4.39E-03 | 6.32E-08 |
| 206-44-0 | Flouranthene | 4.03E-06 | 2.82E-08 | 1.56E-04 | 1.97E-05 | 3.93E-05 | 5.12E-02 | 7.36E-07 |
| 86-73-7 | Flourene | 1.28E-05 | 8.96E-08 | 4.95E-04 | 6.24E-05 | 1.25E-04 | 1.63E-01 | 2.34E-06 |
| 193-39-5 | Indeno(1,2,3-cd)pyrene | 4.14E-07 | 2.90E-09 | 1.60E-05 | 2.02E-06 | 4.04E-06 | 5.26E-03 | 7.56E-08 |
| 91-20-3 | Naphthalene | 1.30E-04 | 9.10E-07 | 5.03E-03 | 6.34E-04 | 1.27E-03 | 1.65E+00 | 2.37E-05 |
| 85-01-8 | Phenanthrene | 4.08E-05 | 2.86E-07 | 1.58E-03 | 1.99E-04 | 3.98E-04 | 5.18E-01 | 7.45E-06 |
| 129-00-0 | Pyrene | 3.71E-06 | 2.60E-08 | 1.44E-04 | 1.81E-05 | 3.62E-05 | 4.71E-02 | 6.78E-07 |
| n/a | VOC (3) | | 6.61E-04 | 3.66E+00 | 4.61E-01 | 9.21E-01 | 1.20E+03 | 1.72E-02 |

## Emissions from ITS Generators

| | | | | | | | | |
|---|---|---|---|---|---|---|---|---|
| | | | ITS Generator | 5530 | Bhp | | | |
| | | | Total ITS Generator Hours | 328 | hr/yr (2 generators each operating 164 hr/yr) | | | |
| | | | Brake Specific Fuel Consumption for Engines | 7000 | Btu/hp-hr | | | |
| | | Emission Factor | Emission Factor | Maximum hourly Emissions per Generator | Maximum hourly Emissions per Generator | Maximum Hourly Emissions for all generators | Total Annual Emissions | Total Annual Emissions |
| Pollutant | | (lbs/1000 gal) | (lbs/hp-hr) | (lbs/hr) | (gm/sec) | | (lbs/yr) | (gm/sec) |
| PM (3) | | | 5.51E-04 | 3.05 | 0.38 | 7.68E-01 | 9.99E+02 | 1.44E-02 |
| Metals | | (lbs/lb PM) | | | | | | |
| 7440-38-2 | Arsenic | 5.30E-03 | 2.92E-06 | 1.61E-02 | 2.03E-03 | 4.07E-03 | 5.30E+00 | 7.62E-05 |
| 7440-43-9 | Cadmium | 5.00E-04 | 2.76E-07 | 1.52E-03 | 1.92E-04 | 3.84E-04 | 5.00E-01 | 7.19E-06 |
| 7440-47-3 | Chromium | 5.30E-03 | 2.92E-06 | 1.61E-02 | 2.03E-03 | 4.07E-03 | 5.30E+00 | 7.62E-05 |
| 7439-92-1 | Lead | 5.50E-03 | 3.03E-06 | 1.68E-02 | 2.11E-03 | 4.22E-03 | 5.50E+00 | 7.91E-05 |
| 7440-02-0 | Nickel | 5.00E-04 | 2.76E-07 | 1.52E-03 | 1.92E-04 | 3.84E-04 | 5.00E-01 | 7.19E-06 |
| 7782-49-2 | Selenium | 5.00E-04 | 2.76E-07 | 1.52E-03 | 1.92E-04 | 3.84E-04 | 5.00E-01 | 7.19E-06 |
| 7440-31-5 | Tin | 5.00E-04 | 2.76E-07 | 1.52E-03 | 1.92E-04 | 3.84E-04 | 5.00E-01 | 7.19E-06 |
| 7440-32-6 | Titanium | 5.00E-04 | 2.76E-07 | 1.52E-03 | 1.92E-04 | 3.84E-04 | 5.00E-01 | 7.19E-06 |
| 7440-66-6 | Zinc | 5.50E-03 | 3.03E-06 | 1.68E-02 | 2.11E-03 | 4.22E-03 | 5.50E+00 | 7.91E-05 |
| 10102-44-0 | Nitrogen oxides (3) | | 1.65E-02 | 9.12E+01 | 1.15E+01 | 2.30E+01 | 2.99E+04 | 4.30E-01 |
| 630-08-0 | Carbon monoxide (3) | | 1.98E-03 | 1.09E+01 | 1.38E+00 | 2.76E+00 | 3.59E+03 | 5.17E-02 |
| 7446-09-5 | Sulfur dioxide | | 4.05E-04 | 2.24E+00 | 2.82E-01 | 5.64E-01 | 7.35E+02 | 1.06E-02 |
| | Diesel | Units | Reference | | | | | |
| Heating Value | 19300 | Btu/lb | AP-42 (1996), page 3.3-6, Table 3.3-1. | | | | | |
| Density | 7.1 | lb/gal | Ap-42 (1996) | | | | | |
| | Brake-specific fuel consumption for engines = | | 7000 | Btu/hp-hr | | | | |

Notes:
1 Organics emission factors from EPA's AP-42 document, Section 3.4, Large Stationary Diesel and All Stationary Dual-fuel Engines.
2 Inorganic emission factors from California Air Resources Board *Identification of Particulate Matter Species Profiles. Volume 2, ARB Speciation Manual*, 1991.
3 Emission factors based on vendor data.

## Total Emissions from ITS and Standby Generators

| Pollutant | | Annual Standby Emissions (lbs/yr) | Annual Standby Emissions (gm/sec) | Maximum Hourly Emissions for Standby generators (gm/sec) | Maximum Hourly Emissions for ITS generators (gm/sec) | Annual ITS Emissions (lbs/yr) | Annual ITS Emissions (gm/sec) | Combined ITS and Standby Annual Emissions (lbs/yr) | Combined ITS and Standby Annual Emissions (gm/sec) | Combined ITS and Standby Maximum Hourly Emissions (gm/sec) |
|---|---|---|---|---|---|---|---|---|---|---|
| ***Air Toxics*** | | | | | | | | | | |
| 75-07-0 | Acetaldehyde | 1.14E-01 | 1.64E-06 | 1.76E-04 | 2.46E-04 | 3.20E-01 | 4.60E-06 | 4.34E-01 | 6.25E-06 | 4.21E-04 |
| 107-02-8 | Acrolein | 3.57E-02 | 5.14E-07 | 5.49E-05 | 7.69E-05 | 1.00E-01 | 1.44E-06 | 1.36E-01 | 1.95E-06 | 1.32E-04 |
| 71-43-2 | Benzene | 3.52E+00 | 5.06E-05 | 5.41E-03 | 7.57E-03 | 9.85E+00 | 1.42E-04 | 1.34E+01 | 1.92E-04 | 1.30E-02 |
| 50-00-0 | Formaldehyde | 3.58E-01 | 5.15E-06 | 5.50E-04 | 7.70E-04 | 1.00E+00 | 1.44E-05 | 1.36E+00 | 1.96E-05 | 1.32E-03 |
| 115-07-1 | Propylene | 1.27E+01 | 1.82E-04 | 1.94E-02 | 2.72E-02 | 3.54E+01 | 5.10E-04 | 4.81E+01 | 6.91E-04 | 4.67E-02 |
| 108-88-3 | Toluene | 1.27E+00 | 1.83E-05 | 1.96E-03 | 2.74E-03 | 3.57E+00 | 5.13E-05 | 4.84E+00 | 6.96E-05 | 4.70E-03 |
| 1330-20-7 | Xylenes | 8.75E-01 | 1.26E-05 | 1.34E-03 | 1.88E-03 | 2.45E+00 | 3.52E-05 | 3.33E+00 | 4.78E-05 | 3.23E-03 |
| **PAH** | | | | | | | | | | |
| 83-32-9 | Acenaphthene | 2.12E-02 | 3.05E-07 | 3.26E-05 | 4.57E-05 | 5.94E-02 | 8.55E-07 | 8.06E-02 | 1.16E-06 | 7.83E-05 |
| 208-96-8 | Acenaphthylene | 4.19E-02 | 6.02E-07 | 6.43E-05 | 9.00E-05 | 1.17E-01 | 1.69E-06 | 1.59E-01 | 2.29E-06 | 1.54E-04 |
| 120-12-7 | Anthracene | 5.58E-03 | 8.02E-08 | 8.57E-06 | 1.20E-05 | 1.56E-02 | 2.25E-07 | 2.12E-02 | 3.05E-07 | 2.06E-05 |
| 56-55-3 | Benz(a)anthracene | 2.82E-03 | 4.06E-08 | 4.33E-06 | 6.07E-06 | 7.90E-03 | 1.14E-07 | 1.07E-02 | 1.54E-07 | 1.04E-05 |
| 50-32-8 | Benzo(a)pyrene | 1.17E-03 | 1.68E-08 | 1.79E-06 | 2.51E-06 | 3.26E-03 | 4.69E-08 | 4.43E-03 | 6.37E-08 | 4.30E-06 |
| 205-99-2 | Benzo(b)fluoranthene | 5.03E-03 | 7.24E-08 | 7.73E-06 | 1.08E-05 | 1.41E-02 | 2.03E-07 | 1.91E-02 | 2.75E-07 | 1.86E-05 |
| 191-24-2 | Benzo(g,h,l)perylene | 2.52E-03 | 3.63E-08 | 3.87E-06 | 5.42E-06 | 7.06E-03 | 1.02E-07 | 9.58E-03 | 1.38E-07 | 9.30E-06 |
| 207-08-9 | Benzo(k)fluoranthene | 9.89E-04 | 1.42E-08 | 1.52E-06 | 2.13E-06 | 2.77E-03 | 3.98E-08 | 3.76E-03 | 5.40E-08 | 3.65E-06 |
| 218-01-9 | Chrysene | 6.94E-03 | 9.98E-08 | 1.07E-05 | 1.49E-05 | 1.94E-02 | 2.79E-07 | 2.64E-02 | 3.79E-07 | 2.56E-05 |
| 53-70-3 | Dibenz(a,h)anthracene | 1.57E-03 | 2.26E-08 | 2.41E-06 | 3.38E-06 | 4.39E-03 | 6.32E-08 | 5.96E-03 | 8.58E-08 | 5.79E-06 |
| 206-44-0 | Flouranthene | 1.83E-02 | 2.63E-07 | 2.81E-05 | 3.93E-05 | 5.12E-02 | 7.36E-07 | 6.94E-02 | 9.99E-07 | 6.74E-05 |
| 86-73-7 | Flourene | 5.80E-02 | 8.35E-07 | 8.92E-05 | 1.25E-04 | 1.63E-01 | 2.34E-06 | 2.21E-01 | 3.17E-06 | 2.14E-04 |
| 193-39-5 | Indeno(1,2,3-cd)pyrene | 1.88E-03 | 2.70E-08 | 2.88E-06 | 4.04E-06 | 5.26E-03 | 7.56E-08 | 7.13E-03 | 1.03E-07 | 6.92E-06 |
| 91-20-3 | Naphthalene | 5.89E-01 | 8.48E-06 | 9.06E-04 | 1.27E-03 | 1.65E+00 | 2.37E-05 | 2.24E+00 | 3.22E-05 | 2.17E-03 |
| 85-01-8 | Phenanthrene | 1.85E-01 | 2.66E-06 | 2.84E-04 | 3.98E-04 | 5.18E-01 | 7.45E-06 | 7.03E-01 | 1.01E-05 | 6.82E-04 |
| 129-00-0 | Pyrene | 1.68E-02 | 2.42E-07 | 2.58E-05 | 3.62E-05 | 4.71E-02 | 6.78E-07 | 6.39E-02 | 9.20E-07 | 6.20E-05 |
| n/a | VOC | 4.28E+02 | 6.16E-03 | 6.58E-01 | 9.21E-01 | 1.20E+03 | 1.72E-02 | 1.63E+03 | 2.34E-02 | 1.58E+00 |

## Total Emissions from ITS and Standby Generators

| Pollutant | | Annual Standby Emissions (lbs/yr) | Annual Standby Emissions (gm/sec) | Maximum Hourly Emissions for Standby generators (gm/sec) | Maximum Hourly Emissions for ITS generators (gm/sec) | Annual ITS Emissions (lbs/yr) | Annual ITS Emissions (gm/sec) | Combined ITS and Standby Annual Emissions (lbs/yr) | Combined ITS and Standby Annual Emissions (gm/sec) | Combined ITS and Standby Maximum Hourly Emissions (gm/sec) |
|---|---|---|---|---|---|---|---|---|---|---|
| PM | | 3.57E+02 | 5.13E-03 | 5.48E-01 | 7.68E-01 | 9.99E+02 | 1.44E-02 | 1.36E+03 | 1.95E-02 | 1.32E+00 |
| Metals | | | | | | | | | | |
| 7440-38-2 | Arsenic | 1.89E+00 | 2.72E-05 | 2.91E-03 | 4.07E-03 | 5.30E+00 | 7.62E-05 | 7.19E+00 | 1.03E-04 | 6.98E-03 |
| 7440-43-9 | Cadmium | 1.78E-01 | 2.57E-06 | 2.74E-04 | 3.84E-04 | 5.00E-01 | 7.19E-06 | 6.78E-01 | 9.75E-06 | 6.58E-04 |
| 7440-47-3 | Chromium | 1.89E+00 | 2.72E-05 | 2.91E-03 | 4.07E-03 | 5.30E+00 | 7.62E-05 | 7.19E+00 | 1.03E-04 | 6.98E-03 |
| 7439-92-1 | Lead | 1.96E+00 | 2.82E-05 | 3.02E-03 | 4.22E-03 | 5.50E+00 | 7.91E-05 | 7.46E+00 | 1.07E-04 | 7.24E-03 |
| 7440-02-0 | Nickel | 1.78E-01 | 2.57E-06 | 2.74E-04 | 3.84E-04 | 5.00E-01 | 7.19E-06 | 6.78E-01 | 9.75E-06 | 6.58E-04 |
| 7782-49-2 | Selenium | 1.78E-01 | 2.57E-06 | 2.74E-04 | 3.84E-04 | 5.00E-01 | 7.19E-06 | 6.78E-01 | 9.75E-06 | 6.58E-04 |
| 7440-31-5 | Tin | 1.78E-01 | 2.57E-06 | 2.74E-04 | 3.84E-04 | 5.00E-01 | 7.19E-06 | 6.78E-01 | 9.75E-06 | 6.58E-04 |
| 7440-32-6 | Titanium | 1.78E-01 | 2.57E-06 | 2.74E-04 | 3.84E-04 | 5.00E-01 | 7.19E-06 | 6.78E-01 | 9.75E-06 | 6.58E-04 |
| 7440-66-6 | Zinc | 1.96E+00 | 2.82E-05 | 3.02E-03 | 4.22E-03 | 5.50E+00 | 7.91E-05 | 7.46E+00 | 1.07E-04 | 7.24E-03 |
| 10102-44-0 | Nitrogen oxides | 1.07E+04 | 1.54E-01 | 1.64E+01 | 2.30E+01 | 2.99E+04 | 4.30E-01 | 4.06E+04 | 5.84E-01 | 3.94E+01 |
| 630-08-0 | Carbon monoxide | 1.28E+03 | 1.84E-02 | 1.97E+00 | 2.76E+00 | 3.59E+03 | 5.17E-02 | 4.87E+03 | 7.01E-02 | 4.73E+00 |
| 7446-09-5 | Sulfur dioxide | 2.62E+02 | 3.77E-03 | 4.03E-01 | 5.64E-01 | 7.35E+02 | 1.06E-02 | 9.97E+02 | 1.43E-02 | 9.68E-01 |

**Emissions from Fire Pump**

| | | | | | | | | |
|---|---|---|---|---|---|---|---|---|
| | | | Fire Pump | 300 | hp | | | |
| | | | Usage | 220 | hours/year (2 pumps operating 110 hrs/yr) | | | |
| | Brake Specific Fuel Consumption for Engines | | | 7000 | Btu/hp-hr | | | |
| Pollutant | | Emission Factor (lbs/MMBtu) | Emission Factor (lbs/hp-hr) | Maximum 24-hour Emissions (lbs/hr) | Maximum 24-hour Emissions (gm/sec) | Maximum Hourly Emissions for all Fire Pumps (gm/sec) | Total Annual Emissions (lbs/yr) | Total Annual Emissions (gm/sec) |
| *Air Toxics* | | | | | | | | |
| 75-07-0 | Acetaldehyde | 7.67E-04 | 5.37E-06 | 1.61E-03 | 2.03E-04 | 4.06E-04 | 0.3544 | 5.10E-06 |
| 107-02-8 | Acrolein | 9.25E-05 | 6.48E-07 | 1.94E-04 | 2.45E-05 | 4.89E-05 | 0.0427 | 6.15E-07 |
| 71-43-2 | Benzene | 9.33E-04 | 6.53E-06 | 1.96E-03 | 2.47E-04 | 4.94E-04 | 0.4310 | 6.20E-06 |
| 50-00-0 | Formaldehyde | 1.18E-03 | 8.26E-06 | 2.48E-03 | 3.12E-04 | 6.24E-04 | 0.5452 | 7.84E-06 |
| 115-07-1 | Propylene | 2.79E-03 | 1.95E-05 | 5.86E-03 | 7.38E-04 | 1.48E-03 | 1.2890 | 1.85E-05 |
| 108-88-3 | Toluene | 4.09E-04 | 2.86E-06 | 8.59E-04 | 1.08E-04 | 2.16E-04 | 0.1890 | 2.72E-06 |
| 1330-20-7 | Xylenes | 2.85E-04 | 2.00E-06 | 5.99E-04 | 7.54E-05 | 1.51E-04 | 0.1317 | 1.89E-06 |
| PAH | | | | | | | | |
| 83-32-9 | Acenaphthene | 1.42E-06 | 9.94E-09 | 2.98E-06 | 3.76E-07 | 7.51E-07 | 0.0007 | 9.44E-09 |
| 208-96-8 | Acenaphthylene | 5.06E-06 | 3.54E-08 | 1.06E-05 | 1.34E-06 | 2.68E-06 | 0.0023 | 3.36E-08 |
| 120-12-7 | Anthracene | 1.87E-06 | 1.31E-08 | 3.93E-06 | 4.95E-07 | 9.90E-07 | 0.0009 | 1.24E-08 |
| 56-55-3 | Benz(a)anthracene | 1.68E-06 | 1.18E-08 | 3.53E-06 | 4.45E-07 | 8.89E-07 | 0.0008 | 1.12E-08 |
| 50-32-8 | Benzo(a)pyrene | 2.57E-07 | 1.80E-09 | 5.40E-07 | 6.80E-08 | 1.36E-07 | 0.0001 | 1.71E-09 |
| 205-99-2 | Benzo(b)fluoranthene | 9.91E-08 | 6.94E-10 | 2.08E-07 | 2.62E-08 | 5.24E-08 | 0.0000 | 6.59E-10 |
| 191-24-2 | Benzo(g,h,l)perylene | 4.89E-07 | 3.42E-09 | 1.03E-06 | 1.29E-07 | 2.59E-07 | 0.0002 | 3.25E-09 |
| 207-08-9 | Benzo(k)fluoranthene | 1.55E-07 | 1.09E-09 | 3.26E-07 | 4.10E-08 | 8.20E-08 | 0.0001 | 1.03E-09 |
| 218-01-9 | Chrysene | 3.53E-07 | 2.47E-09 | 7.41E-07 | 9.34E-08 | 1.87E-07 | 0.0002 | 2.35E-09 |
| 53-70-3 | Dibenz(a,h)anthracene | 5.83E-07 | 4.08E-09 | 1.22E-06 | 1.54E-07 | 3.09E-07 | 0.0003 | 3.87E-09 |
| 206-44-0 | Flouranthene | 7.61E-06 | 5.33E-08 | 1.60E-05 | 2.01E-06 | 4.03E-06 | 0.0035 | 5.06E-08 |
| 86-73-7 | Flourene | 2.92E-05 | 2.04E-07 | 6.13E-05 | 7.73E-06 | 1.55E-05 | 0.0135 | 1.94E-07 |
| 193-39-5 | Indeno(1,2,3-cd)pyrene | 3.75E-07 | 2.63E-09 | 7.88E-07 | 9.92E-08 | 1.98E-07 | 0.0002 | 2.49E-09 |
| 91-20-3 | Naphthalene | 8.48E-05 | 5.94E-07 | 1.78E-04 | 2.24E-05 | 4.49E-05 | 0.0392 | 5.64E-07 |
| 85-01-8 | Phenanthrene | 2.94E-05 | 2.06E-07 | 6.17E-05 | 7.78E-06 | 1.56E-05 | 0.0136 | 1.95E-07 |
| 129-00-0 | Pyrene | 1.88E-07 | 1.32E-09 | 3.95E-07 | 4.97E-08 | 9.95E-08 | 0.0001 | 1.25E-09 |
| n/a | VOC (3) | | 1.54E-04 | 4.62E-02 | 5.82E-03 | 1.16E-02 | 10.1640 | 1.46E-04 |

## Emissions from Fire Pump

| | | | | | | | | |
|---|---|---|---|---|---|---|---|---|
| | | | Fire Pump | 300 | hp | | | |
| | | | Usage | 220 | hours/year (2 pumps operating 110 hrs/yr) | | | |
| | Brake Specific Fuel Consumption for Engines | | | 7000 | Btu/hp-hr | | | |
| Pollutant | | Emission Factor (lbs/1000 gal) | Emission Factor (lbs/hp-hr) | Maximum 24-hour Emissions (lbs/hr) | Maximum 24-hour Emissions (gm/sec) | Maximum Hourly Emissions for all Fire Pumps (gm/sec) | Total Annual Emissions (lbs/yr) | Total Annual Emissions (gm/sec) |
| PM (3) | | 50.00 | 1.54E-04 | 0.05 | 0.01 | 1.16E-02 | 10.16 | 1.46E-04 |
| Metals | | (lbs/lb PM) | | | | | | |
| 7440-38-2 | Arsenic | 5.30E-03 | 8.16E-07 | 2.45E-04 | 3.09E-05 | 6.17E-05 | 0.0539 | 7.75E-07 |
| 7440-43-9 | Cadmium | 5.00E-04 | 7.70E-08 | 2.31E-05 | 2.91E-06 | 5.82E-06 | 0.0051 | 7.31E-08 |
| 7440-47-3 | Chromium | 5.30E-03 | 8.16E-07 | 2.45E-04 | 3.09E-05 | 6.17E-05 | 0.0539 | 7.75E-07 |
| 7439-92-1 | Lead | 5.50E-03 | 8.47E-07 | 2.54E-04 | 3.20E-05 | 6.40E-05 | 0.0559 | 8.04E-07 |
| 7440-02-0 | Nickel | 5.00E-04 | 7.70E-08 | 2.31E-05 | 2.91E-06 | 5.82E-06 | 0.0051 | 7.31E-08 |
| 7782-49-2 | Selenium | 5.00E-04 | 7.70E-08 | 2.31E-05 | 2.91E-06 | 5.82E-06 | 0.0051 | 7.31E-08 |
| 7440-31-5 | Tin | 5.00E-04 | 7.70E-08 | 2.31E-05 | 2.91E-06 | 5.82E-06 | 0.0051 | 7.31E-08 |
| 7440-32-6 | Titanium | 5.00E-04 | 7.70E-08 | 2.31E-05 | 2.91E-06 | 5.82E-06 | 0.0051 | 7.31E-08 |
| 7440-66-6 | Zinc | 5.50E-03 | 8.47E-07 | 2.54E-04 | 3.20E-05 | 6.40E-05 | 0.0559 | 8.04E-07 |
| 10102-44-0 | Nitrogen oxides (3) | | 1.12E-02 | 3.37E+00 | 4.25E-01 | 8.50E-01 | 741.8664 | 1.07E-02 |
| 630-08-0 | Carbon monoxide (3) | | 4.85E-04 | 1.46E-01 | 1.83E-02 | 3.67E-02 | 32.0100 | 4.60E-04 |
| 7446-09-5 | Sulfur dioxide (3) | | 3.09E-04 | 9.26E-02 | 1.17E-02 | 2.33E-02 | 20.3650 | 2.93E-04 |

| | Diesel | Units | Reference |
|---|---|---|---|
| Heating Value | 19300 | Btu/lb | AP-42 (1996), page 3.3-6, Table 3.3-1. |
| Density | 7.1 | lb/gal | AP-42 (1996) |
| | Brake-specific fuel consumption for engines = | 7000 | Btu/hp-hr |

Notes:

1 Organics emission factors from EPA's AP-42 document, Section 3.3, Gasoline and Diesel Industrial Engines.

2 Inorganic emission factors from California Air Resources Board *Identification of Particulate Matter Compound Species Profiles, Volume 2, ARB Speciation Manual*, 1991.

3 The emission factors for Nox, SO2, CO, VOC, and PM are based on vendor quotes.

4 The operating hours were determined based on a one hour weekly testing run, a 3-hour annual testing, and other miscellaneous uses.

## Boiler Emissions Estimates

| | | | |
|---|---|---|---|
| Maximum Boiler Output | 50.2 | MMBtu/hr | |
| 3 boilers operating at 100 % (8,760 hours) | 26280 | hr/yr | |
| 3 boilers operating at 42 % (3,679 hours) | 11037 | hr/yr | |
| Total annual Boiler operating hours | 37317 | hr/yr | |

| Pollutant | | Emission Factor (lb/MMBtu) | Maximum 24-hour Emissions per Boiler (lbs/hr) | Maximum 24-hour Emissions per Boiler (gm/sec) | Maximum 24-hour Emissions for all Boilers (gm/sec) | Total Annual Average Emissions (lbs/yr) | Total Annual Average Emissions (gm/sec) |
|---|---|---|---|---|---|---|---|
| VOC (3) | | 3.00E-02 | 1.51E+00 | 1.90E-01 | 1.14E+00 | 56199.40 | 8.08E-01 |
| *Air Toxics* Organics | | (lb/lb VOC) | (lbs/hr) | (gm/sec) | (gm/sec) | (lbs/yr) | (gm/sec) |
| 6975-98-0 | 2-Methyldecane | 7.40E-03 | 1.11E-02 | 1.40E-03 | 8.42E-03 | 4.16E+02 | 5.98E-03 |
| 3221-61-2 | 2-Methyloctane | 2.70E-03 | 4.07E-03 | 5.12E-04 | 3.07E-03 | 1.52E+02 | 2.18E-03 |
| 71-43-2 | Benzene | 1.75E-02 | 2.64E-02 | 3.32E-03 | 1.99E-02 | 9.83E+02 | 1.41E-02 |
| 100-41-4 | Ethylbenzene | 6.00E-04 | 9.04E-04 | 1.14E-04 | 6.83E-04 | 3.37E+01 | 4.85E-04 |
| 50-00-0 | Formaldyhe | 9.00E-04 | 1.36E-03 | 1.71E-04 | 1.02E-03 | 5.06E+01 | 7.27E-04 |
| 110-54-3 | Hexane | 1.42E-02 | 2.14E-02 | 2.69E-03 | 1.62E-02 | 7.98E+02 | 1.15E-02 |
| 63335-87-5 | Methylnonane | 7.50E-03 | 1.13E-02 | 1.42E-03 | 8.54E-03 | 4.21E+02 | 6.06E-03 |
| 91-20-3 | Naphthalene | 6.00E-04 | 9.04E-04 | 1.14E-04 | 6.83E-04 | 3.37E+01 | 4.85E-04 |
| 29063-28-3 | Octanol | 2.00E-03 | 3.01E-03 | 3.80E-04 | 2.28E-03 | 1.12E+02 | 1.62E-03 |
| 103-65-1 | Propylbenzene | 1.70E-03 | 2.56E-03 | 3.23E-04 | 1.94E-03 | 9.55E+01 | 1.37E-03 |
| 1678-92-8 | Propylcyclohexane | 3.70E-03 | 5.57E-03 | 7.02E-04 | 4.21E-03 | 2.08E+02 | 2.99E-03 |
| 115-07-1 | Propylene | 3.99E-02 | 6.01E-02 | 7.57E-03 | 4.54E-02 | 2.24E+03 | 3.23E-02 |
| 98-06-6 | Tert-Butylbenzene | 5.00E-04 | 7.53E-04 | 9.49E-05 | 5.69E-04 | 2.81E+01 | 4.04E-04 |
| 2782-91-4 | Tetramethylthiourea | 2.00E-04 | 3.01E-04 | 3.80E-05 | 2.28E-04 | 1.12E+01 | 1.62E-04 |
| 108-88-3 | Toluene | 1.76E-02 | 2.65E-02 | 3.34E-03 | 2.00E-02 | 9.89E+02 | 1.42E-02 |
| 25551-13-7 | Trimethylbenzene | 5.70E-03 | 8.58E-03 | 1.08E-03 | 6.49E-03 | 3.20E+02 | 4.61E-03 |
| 30498-63-6 | Trimethylcyclohexane | 3.60E-03 | 5.42E-03 | 6.83E-04 | 4.10E-03 | 2.02E+02 | 2.91E-03 |
| 1321-60-4 | Trimethylcyclohexanol | 3.00E-04 | 4.52E-04 | 5.69E-05 | 3.42E-04 | 1.69E+01 | 2.42E-04 |
| 98060-52-7 | Trimethyloctane | 6.00E-04 | 9.04E-04 | 1.14E-04 | 6.83E-04 | 3.37E+01 | 4.85E-04 |
| 1330-20-7 | Xylene | 2.80E-03 | 4.22E-03 | 5.31E-04 | 3.19E-03 | 1.57E+02 | 2.26E-03 |

## Boiler Emissions Estimates

| | | | |
|---|---|---|---|
| Maximum Boiler Output | 50.2 | MMBtu/hr | |
| 3 boilers operating at 100 % (8,760 hours) | 26280 | hr/yr | |
| 3 boilers operating at 42 % (3,679 hours) | 11037 | hr/yr | |
| Total annual Boiler operating hours | 37317 | hr/yr | |

| Pollutant | | Emission Factor (lb/MMBtu) | Maximum 24-hour Emissions per Boiler (lbs/hr) | Maximum 24-hour Emissions per Boiler (gm/sec) | Maximum 24-hour Emissions for all Boilers (gm/sec) | Total Annual Average Emissions (lbs/yr) | Total Annual Average Emissions (gm/sec) |
|---|---|---|---|---|---|---|---|
| **Metals** | | | | | | | |
| 7440-38-2 | Arsenic | 4.00E-06 | 2.01E-04 | 2.53E-05 | 1.52E-04 | 7.49E+00 | 1.08E-04 |
| 7440-41-7 | Beryllium | 3.00E-06 | 1.51E-04 | 1.90E-05 | 1.14E-04 | 5.62E+00 | 8.08E-05 |
| 7440-43-9 | Cadmium | 3.00E-06 | 1.51E-04 | 1.90E-05 | 1.14E-04 | 5.62E+00 | 8.08E-05 |
| 7440-47-3 | Chromium | 3.00E-06 | 1.51E-04 | 1.90E-05 | 1.14E-04 | 5.62E+00 | 8.08E-05 |
| 7440-50-8 | Copper | 6.00E-06 | 3.01E-04 | 3.80E-05 | 2.28E-04 | 1.12E+01 | 1.62E-04 |
| 7439-92-1 | Lead | 9.00E-06 | 4.52E-04 | 5.69E-05 | 3.42E-04 | 1.69E+01 | 2.42E-04 |
| 7439-97-6 | Mercury | 3.00E-06 | 1.51E-04 | 1.90E-05 | 1.14E-04 | 5.62E+00 | 8.08E-05 |
| 7439-96-5 | Manganese | 6.00E-06 | 3.01E-04 | 3.80E-05 | 2.28E-04 | 1.12E+01 | 1.62E-04 |
| 7440-02-0 | Nickel | 3.00E-06 | 1.51E-04 | 1.90E-05 | 1.14E-04 | 5.62E+00 | 8.08E-05 |
| 7782-49-2 | Selenium | 1.50E-06 | 7.53E-05 | 9.49E-06 | 5.69E-05 | 2.81E+00 | 4.04E-05 |
| 7440-66-6 | Zinc | 4.00E-06 | 2.01E-04 | 2.53E-05 | 1.52E-04 | 7.49E+00 | 1.08E-04 |
| 10102-44-0 | Nitrogen oxides (3) | 9.00E-02 | 4.52E+00 | 5.69E-01 | 3.42E+00 | 1.69E+05 | 2.42E+00 |
| 7664-09-7 | Sulfur dioxide (3) | 3.00E-03 | 1.51E-01 | 1.90E-02 | 1.14E-01 | 5.62E+03 | 8.08E-02 |
| 630-08-0 | Carbon monoxide (3) | 7.00E-02 | 3.51E+00 | 4.43E-01 | 2.66E+00 | 1.31E+05 | 1.89E+00 |
| n/a | Particulate matter (3) | 2.00E-02 | 1.00E+00 | 1.27E-01 | 7.59E-01 | 3.75E+04 | 5.39E-01 |

Notes:

1 Inorganic emission factors from AP-42, Section 1.3, Fuel Oil Combustion.

2 Organic emission factors from California Air Resources Board *Identification of Volatile Organic Compound Species Profiles, Volume 1, ARB Speciation Manual*, 1991.

3 Emission factors are based vender literature: *Boiler Emissions Reference Guide*, 2nd edition, Cleaver-Brooks.

## Welding Emissions

| CAS | Pollutant | Usage (lb rod/year) | EF (lbs/$10^4$ lb rod) | Welding Emissions (lbs/year) | Welding Emissions (g/s) | Total Facility Emissions w/welding (g/s) | Welding Concentration (mg/m$^3$) | Total Facility Concentration w/Welding (mg/m$^3$) | ASIL (mg/m$^3$) | |
|---|---|---|---|---|---|---|---|---|---|---|
| 18540-29-9 | Chromium (VI) | 16060 | 1.00E-01 | 0.1606 | 2.31E-06 | 2.31E-06 | 4.12E-07 | 4.13E-07 | 8.30E-05 | annual average |
| 7439-96-5 | Manganese | 16060 | 2.45 | 3.9347 | 5.66E-05 | 5.66E-05 | 2.17E-04 | 2.17E-04 | 1.7 | max. 24-hour average |
| 7440-02-0 | Nickel | 16060 | 2.26 | 3.62956 | 5.22E-05 | 5.22E-05 | 9.32E-06 | 5.53E-05 | 2.10E-03 | annual average |
| | Annual Average Concentration | | 0.17847 | | | | | | | |
| | Maximum 24-hour Concentration | | 3.83551 | | | | | | | |

Notes:
1 Metals emission factors from EPA's AP-42 document, Section 12.19, Electric Arc Welding.

## Estimated Inorganic Concentration at Point of Maximum Impact for BOF

| | | | | | | | | | | | |
|---|---|---|---|---|---|---|---|---|---|---|---|
| | | Boilers | | | | | | | Generators/fire pump | | |
| Average Annual Conce | | 0.19607 | ug/m3 per g/s | | | | Average Annual Concent | | 0.14938 | ug/m3 per g/s | |
| Maximum 24-hour Conc | | 1.31556 | ug/m3 per g/s | | | | Maximum 24-hour Concer | | 3.83551 | ug/m3 per g/s | |
| CAS | Compound | Total Annual Average Boiler Emissions | Annual Average Concentration for Boilers | Maximum 24 hr Concentration for Boilers | Annual Emissions from all Generators | Annual Emissions from all Fire Pumps | Total Annual Emissions from all Generators and Fire Pumps | Annual Average Concentration for Generators and Fire Pumps | Maximum 24 hr Concentration for Generators and Fire Pumps | Annual Average Concentration for All BOF Sources | Maximum 24 hr Concentration for All BOF Sources |
| | | (g/sec) | (ug/m3) | (ug/m3) | (g/sec) | (g/sec) | (g/sec) | (ug/m3) | (ug/m3) | (ug/m3) | (ug/m3) |
| 7440-38-2 | Arsenic | 1.08E-04 | 2.11E-05 | 1.42E-04 | 1.03E-04 | 7.75E-07 | 1.04E-04 | 1.56E-05 | 4.00E-04 | 3.67E-05 | 5.41E-04 |
| 7440-41-7 | Beryllium | 8.08E-05 | 1.58E-05 | 1.06E-04 | | | | | | 1.58E-05 | 1.06E-04 |
| 7440-43-9 | Cadmium | 8.08E-05 | 1.58E-05 | 1.06E-04 | 9.75E-06 | 7.31E-08 | 9.83E-06 | 1.47E-06 | 3.77E-05 | 1.73E-05 | 1.44E-04 |
| 7440-47-3 | Chromium | 8.08E-05 | 1.58E-05 | 1.06E-04 | 1.03E-04 | 7.75E-07 | 1.04E-04 | 1.56E-05 | 4.00E-04 | 3.14E-05 | 5.06E-04 |
| 7440-50-8 | Copper | 1.62E-04 | 3.17E-05 | 2.13E-04 | | | | | | 3.17E-05 | 2.13E-04 |
| 7439-92-1 | Lead | 2.42E-04 | 4.75E-05 | 3.19E-04 | 1.07E-04 | 8.04E-07 | 1.08E-04 | 1.61E-05 | 4.15E-04 | 6.37E-05 | 7.34E-04 |
| 7439-97-6 | Mercury | 8.08E-05 | 1.58E-05 | 1.06E-04 | | | | | | 1.58E-05 | 1.06E-04 |
| 7439-96-5 | Manganese | 1.62E-04 | 3.17E-05 | 2.13E-04 | | | | | | 3.17E-05 | 2.13E-04 |
| 7440-02-0 | Nickel | 8.08E-05 | 1.58E-05 | 1.06E-04 | 9.75E-06 | 7.31E-08 | 9.83E-06 | 1.47E-06 | 3.77E-05 | 1.73E-05 | 1.44E-04 |
| 7782-49-2 | Selenium | 4.04E-05 | 7.92E-06 | 5.32E-05 | 9.75E-06 | 7.31E-08 | 9.83E-06 | 1.47E-06 | 3.77E-05 | 9.39E-06 | 9.09E-05 |
| 7440-66-6 | Zinc | 1.08E-04 | 2.11E-05 | 1.42E-04 | 1.07E-04 | 8.04E-07 | 1.08E-04 | 1.61E-05 | 4.15E-04 | 3.73E-05 | 5.56E-04 |

## Estimated Organic Concentration at Point of Maximum Impact from all BOF Sources

| | | Boilers | | | | Generators/fire pump | | | | | |
|---|---|---|---|---|---|---|---|---|---|---|---|
| Average Annual Concentration | | 0.19607 | ug/m3 per g/s | | | | | | 0.14938 | ug/m3 per g/s | |
| Maximum 24-hour Concentration | | 1.31556 | ug/m3 per g/s | | | | | | 3.83551 | ug/m3 per g/s | |
| CAS | Compound | Total Annual Average Boiler Emissions | Annual Average Concentration for Boilers | Maximum 24 hr Concentration for Boilers | Annual Emissions from all Generators | Annual Emissions from all Fire Pumps | Total Annual Emissions from all Generators and Fire Pumps | Annual Average Concentration for Generators and Fire Pumps | Maximum 24 hr Concentration for Generators and Fire Pumps | Annual Average Concentration for All BOF Sources | Maximum 24 hr Concentration for All BOF Sources |
| 100-41-4 | Ethylbenzene | 4.85E-04 | 9.51E-05 | 6.38E-04 | | | | | | 9.51E-05 | 6.38E-04 |
| 103-65-1 | Propylbenzene | 1.37E-03 | 2.69E-04 | 1.81E-03 | | | | | | 2.69E-04 | 1.81E-03 |
| 107-02-8 | Acrolein | | | | 1.95E-06 | 6.15E-07 | 2.57E-06 | 3.84E-07 | 9.85E-06 | 3.84E-07 | 9.85E-06 |
| 108-88-3 | Toluene | 1.42E-02 | 2.79E-03 | 1.87E-02 | 6.96E-05 | 2.72E-06 | 7.24E-05 | 1.08E-05 | 2.78E-04 | 2.80E-03 | 1.90E-02 |
| 110-54-3 | Hexane | 1.15E-02 | 2.25E-03 | 1.51E-02 | | | | | | 2.25E-03 | 1.51E-02 |
| 115-07-1 | Propylene | 3.23E-02 | 6.32E-03 | 4.24E-02 | 6.91E-04 | 1.85E-05 | 7.10E-04 | 1.06E-04 | 2.72E-03 | 6.43E-03 | 4.52E-02 |
| 120-12-7 | Anthracene | | | | 3.05E-07 | 1.24E-08 | 3.17E-07 | 4.74E-08 | 1.22E-06 | 4.74E-08 | 1.22E-06 |
| 129-00-0 | Pyrene | | | | 9.20E-07 | 1.25E-09 | 9.21E-07 | 1.38E-07 | 3.53E-06 | 1.38E-07 | 3.53E-06 |
| 1321-60-4 | Trimethylcyclohexanol | 2.42E-04 | 4.75E-05 | 3.19E-04 | | | | | | 4.75E-05 | 3.19E-04 |
| 1330-20-7 | Xylene | 2.26E-03 | 4.44E-04 | 2.98E-03 | 4.78E-05 | 1.89E-06 | 4.97E-05 | 7.43E-06 | 1.91E-04 | 4.51E-04 | 3.17E-03 |
| 1678-92-8 | Propylcyclohexane | 2.99E-03 | 5.86E-04 | 3.93E-03 | | | | | | 5.86E-04 | 3.93E-03 |
| 191-24-2 | Benzo(g,h,l)perylene | | | | 1.38E-07 | 3.25E-09 | 1.41E-07 | 2.11E-08 | 5.41E-07 | 2.11E-08 | 5.41E-07 |
| 193-39-5 | Indeno(1,2,3-cd)pyrene | | | | 1.03E-07 | 2.49E-09 | 1.05E-07 | 1.57E-08 | 4.03E-07 | 1.57E-08 | 4.03E-07 |
| 205-99-2 | Benzo(b)fluoranthene | | | | 2.75E-07 | 6.59E-10 | 2.76E-07 | 4.12E-08 | 1.06E-06 | 4.12E-08 | 1.06E-06 |
| 206-44-0 | Flouranthene | | | | 9.99E-07 | 5.06E-08 | 1.05E-06 | 1.57E-07 | 4.02E-06 | 1.57E-07 | 4.02E-06 |
| 207-08-9 | Benzo(k)fluoranthene | | | | 5.40E-08 | 1.03E-09 | 5.51E-08 | 8.22E-09 | 2.11E-07 | 8.22E-09 | 2.11E-07 |
| 208-96-8 | Acenaphthylene | | | | 2.29E-06 | 3.36E-08 | 2.32E-06 | 3.47E-07 | 8.90E-06 | 3.47E-07 | 8.90E-06 |
| 218-01-9 | Chrysene | | | | 3.79E-07 | 2.35E-09 | 3.82E-07 | 5.70E-08 | 1.46E-06 | 5.70E-08 | 1.46E-06 |
| 25551-13-7 | Trimethylbenzene | 4.61E-03 | 9.03E-04 | 6.06E-03 | | | | | | 9.03E-04 | 6.06E-03 |
| 2782-91-4 | Tetramethylthiourea | 1.62E-04 | 3.17E-05 | 2.13E-04 | | | | | | 3.17E-05 | 2.13E-03 |
| 29063-28-3 | Octanol | 1.62E-03 | 3.17E-04 | 2.13E-03 | | | | | | 3.17E-04 | 2.13E-03 |
| 30498-63-6 | Trimethylcyclohexane | 2.91E-03 | 5.71E-04 | 3.83E-03 | | | | | | 5.71E-04 | 3.83E-03 |
| 3221-61-2 | 2-Methyloctane | 2.18E-03 | 4.28E-04 | 2.87E-03 | | | | | | 4.28E-04 | 2.87E-03 |
| 50-00-0 | Formaldahyde | 7.27E-04 | 1.43E-04 | 9.57E-04 | 1.96E-05 | 7.84E-06 | 2.74E-05 | 4.09E-06 | 1.05E-04 | 1.47E-04 | 1.06E-03 |
| 50-32-8 | Benzo(a)pyrene | | | | 6.37E-08 | 1.71E-09 | 6.54E-08 | 9.77E-09 | 2.51E-07 | 9.77E-09 | 2.51E-07 |
| 53-70-3 | Dibenz(a,h)anthracene | | | | 8.58E-08 | 3.87E-09 | 8.96E-08 | 1.34E-08 | 3.44E-07 | 1.34E-08 | 3.44E-07 |
| 56-55-3 | Benz(a)anthracene | | | | 1.54E-07 | 1.12E-08 | 1.65E-07 | 2.47E-08 | 6.34E-07 | 2.47E-08 | 6.34E-07 |
| 63335-87-5 | Methylnonane | 6.06E-03 | 1.19E-03 | 7.98E-03 | | | | | | 1.19E-03 | 7.98E-03 |
| 6975-98-0 | 2-Methyldecane | 5.98E-03 | 1.17E-03 | 7.87E-03 | | | | | | 1.17E-03 | 7.87E-03 |
| 71-43-2 | Benzene | 1.41E-02 | 2.77E-03 | 1.86E-02 | 1.92E-04 | 6.20E-06 | 1.99E-04 | 2.97E-05 | 7.61E-04 | 2.80E-03 | 1.94E-02 |
| 75-07-0 | Acetaldehyde | | | | 6.25E-06 | 5.10E-06 | 1.13E-05 | 1.69E-06 | 4.35E-05 | 1.69E-06 | 4.35E-05 |
| 83-32-9 | Acenaphthene | | | | 1.16E-06 | 9.44E-09 | 1.17E-06 | 1.75E-07 | 4.49E-06 | 1.75E-07 | 4.49E-06 |
| 85-01-8 | Phenanthrene | | | | 1.01E-05 | 1.95E-07 | 1.03E-05 | 1.54E-06 | 3.95E-05 | 1.54E-06 | 3.95E-05 |
| 86-73-7 | Flourene | | | | 3.17E-06 | 1.94E-07 | 3.37E-06 | 5.03E-07 | 1.29E-05 | 5.03E-07 | 1.29E-05 |
| 91-20-3 | Naphthalene | 4.85E-04 | 9.51E-05 | 6.38E-04 | 3.22E-05 | 5.64E-07 | 3.28E-05 | 4.90E-06 | 1.26E-04 | 9.51E-05 | 7.64E-04 |
| 98060-52-7 | Trimethyloctane | 4.85E-04 | 9.51E-05 | 6.38E-04 | | | | | | 9.51E-05 | 6.38E-04 |
| 98-06-6 | Tert-Butylbenzene | 4.04E-04 | 7.92E-05 | 5.32E-04 | | | | | | 7.92E-05 | 5.32E-04 |

## Summary of Annual Average Ambient Impacts for Class A TAPs

| CAS No. | Pollutant | Annual Average ASIL (ug/m3) | Annual Average Concentration (ug/m3) | Percent of ASIL |
|---|---|---|---|---|
| 101-77-9 | 4,4-Methylene dianiline | 2.7 | 4.60E-06 | |
| 106-46-7 | 1,4-Dichlorobenzene | 1.50E+00 | 6.17E-06 | 0.000% |
| 106-89-8 | Epichlorohydrin | 8.30E-01 | 6.14E-07 | 0.000% |
| 106-93-4 | Ethylene dibromide (dibromethane) | 4.50E-03 | 2.67E-04 | 5.944% |
| 106-99-0 | 1,3-Butadiene | 3.60E-03 | 6.62E-08 | 0.002% |
| 107-06-2 | 1,2-Dichloroethane (ethylene chloride) | 3.80E-02 | 6.64E-08 | 0.000% |
| 107-13-1 | Acrylonitrile | 1.50E-02 | 3.80E-07 | 0.003% |
| 111-44-4 | Bis(2-chloroethyl)ether | 3.00E-03 | 4.60E-06 | |
| 117-81-7 | Bis(2-ethylhexyl)phthalate (DEHP) | 2.50E+00 | 6.62E-13 | 0.000% |
| 118-74-1 | Hexachlorobenzene | 2.20E-03 | 3.48E-07 | 0.016% |
| 127-18-4 | Perchloroethylene (tetrachloroethylene) | 1.10E+00 | 6.05E-05 | 0.006% |
| 1336-36-3 | Polychlorinated biphenyls (PCBs) | 4.50E-03 | 3.09E-13 | 0.000% |
| 1746-01-6 | 2,3,7,8-Tetrachlorodibenzo-p-dioxin (2,3,7,8-TCDD) | 3.00E-07 | 2.88E-12 | 0.001% |
| 18540-29-9 | Chromium (hexavalent) | 8.30E-05 | 3.18E-05 | 38.341% |
| 309-00-2 | Aldrin | 2.00E-04 | 5.24E-15 | 0.000% |
| 319-84-6 | Hexachlorocyclohexane (Lindane) alpha BHC | 1.7 | 7.26E-08 | 0.000% |
| 319-85-7 | Hexachlorocyclohexane (Lindane) beta BHC | 1.7 | 2.20E-15 | 0.000% |
| 50-00-0 | Formaldehyde | 7.70E-02 | 1.64E-04 | 0.213% |
| 50-29-3 | DDT (1,1,1 Trichloro-2,2-Bis(p-chlorophenyl)-ethane) | 1.00E-02 | 9.20E-16 | 0.000% |
| 50-32-8 | Benzo(a)pyrene | 4.80E-04 | 9.77E-09 | 0.002% |
| 510-15-6 | Chlorobenzilate | 2.00E-01 | 4.60E-06 | 0.002% |
| 542-88-1 | Bis(chloromethyl)ether | 1.60E-05 | 6.14E-07 | 3.837% |
| 56-23-5 | Carbon tetrachloride | 6.70E-02 | 1.21E-04 | 0.181% |
| 57-74-9 | Chlordane | 2.70E-03 | 4.60E-06 | 0.171% |
| 584-84-9 | 2,4-Toluene diisocyanate | 0.12 | 4.60E-06 | 0.004% |
| 58-89-9 | Hexachlorohexane (Lindane) Gamma BHC | 2.60E-03 | 4.67E-16 | 0.000% |
| 60-57-1 | Dieldrin | 2.20E-04 | 9.32E-16 | 0.000% |
| 62-53-3 | Aniline | 6.30E+00 | 4.60E-06 | 0.000% |
| 62-75-9 | N-Nitrososdimethylamine | 7.10E-05 | 5.04E-05 | 70.958% |
| 67-66-3 | Chloroform | 4.30E-02 | 3.02E-04 | 0.702% |
| 71-43-2 | Benzene | 1.20E-01 | 2.81E-03 | 2.341% |
| 7439-92-1 | Lead compounds | 0.5 | 6.37E-05 | 0.013% |
| 7440-02-0 | Nickel and compounds | 2.10E-03 | 7.26E-05 | 3.457% |

## Summary of Annual Average Ambient Impacts for Class A TAPs

| CAS No. | Pollutant | Annual Average ASIL (ug/m3) | Annual Average Concentration (ug/m3) | Percent of ASIL |
|---|---|---|---|---|
| 7440-38-2 | Arsenic and inorganic arsenic compounds | 2.30E-04 | 3.67E-05 | 15.966% |
| 7440-41-7 | Beryllium and compounds | 4.20E-04 | 1.58E-05 | 3.774% |
| 7440-43-9 | Cadmium and compounds | 5.60E-04 | 1.73E-05 | 3.092% |
| 75-01-4 | Vinyl Chloride | 1.20E-02 | 3.02E-07 | 0.003% |
| 75-07-0 | Acetaldehyde | 4.50E-01 | 8.04E-06 | 0.002% |
| 75-09-2 | Dichlormethane (methylene chloride) | 5.60E-01 | 3.02E-05 | 0.005% |
| 75-21-8 | Ethylene oxide | 1.00E-02 | 1.35E-07 | 0.001% |
| 75-25-2 | Bromoform | 9.10E-01 | 6.14E-07 | 0.000% |
| 764-41-0 | 1,4-Dichloro-2-butene | 3.80E-04 | 6.14E-07 | 0.162% |
| 76-44-8 | Heptachlor | 7.70E-04 | 1.58E-06 | 0.206% |
| 77-78-1 | Dimethyl sulfate | 3.20E-02 | 4.60E-06 | 0.014% |
| 77-78-1 | Dimethyl sulfate | 1.7 | 4.60E-06 | 0.000% |
| 78-87-5 | 1,2-Dichloropropane | 4 | 6.10E-07 | 0.000% |
| 79-01-6 | Trichloroethylene | 5.90E-01 | 6.60E-08 | 0.000% |
| 8001-35-2 | Toxaphene | 3.10E-03 | 1.08E-15 | 0.000% |
| 87-86-5 | Pentachlorophenol | 3.30E-01 | 1.24E-04 | 0.037% |
| 88-06-2 | 2,4,6-Trichlorophenol | 3.20E-01 | 2.32E-05 | 0.007% |
| 90-04-0 | o-Anisidine | 1.7 | 4.60E-06 | 0.000% |
| 91-94-1 | 3,3'-Dichlorobenzidine | 7.70E-02 | 4.60E-06 | 0.006% |
| 924-16-3 | N-Nitrosodi-n-butylamine | 6.30E-04 | 6.14E-07 | 0.097% |
| 94-75-7 | 2,4-D and esters | 33 | 1.24E-04 | 0.000% |
| 95-53-4 | o-Toluidine | 1.40E-01 | 6.14E-07 | 0.000% |
| 96-45-7 | Ethylene thiourea | 1.00E+00 | 4.60E-06 | 0.000% |

| Summary of Maximum Ambient Impacts for 24 hr Class A TAPs | | | | |
|---|---|---|---|---|
| | | | | |
| CAS No. | Pollutant | 24-hour Maximum ASIL (ug/m3) | 24-hour Maximum Concentration (ug/m3) | Percent of ASIL |
| | | | | |
| 101-77-9 | 4,4-Methylene dianiline | 2.7 | 3.40E-05 | 0.001% |
| 319-84-6 | Hexachlorocyclohexane (Lindane) alpha BHC | 1.7 | 5.33E-07 | 0.000% |
| 319-85-7 | Hexachlorocyclohexane (Lindane) beta BHC | 1.7 | 1.61E-14 | 0.000% |
| 540-73-8 | 1,2-Dimethylhydrazine | 4 | 4.53E-06 | 0.000% |
| 584-84-9 | 2,4-Toluene diisocyanate | 0.12 | 3.40E-05 | 0.028% |
| 7439-92-1 | Lead compounds | 0.5 | 7.34E-04 | 0.147% |
| 77-78-1 | Dimethyl sulfate | 1.7 | 3.40E-05 | 0.002% |
| 78-87-5 | 1,2-Dichloropropane | 4 | 4.40E-06 | 0.000% |
| 90-04-0 | o-Anisidine | 1.7 | 3.40E-05 | 0.002% |
| 94-75-7 | 2,4-D and esters | 33 | 9.20E-04 | 0.003% |

## Summary of Maximum Ambient Impacts for 24 hr Class B TAPs

| CAS No. | Pollutant | 24-hour Maximum ASIL (ug/m3) | 24-hour Maximum Concentration (ug/m3) | Percent of ASIL |
|---|---|---|---|---|
| 100-00-5 | p-Nitrochlorobenzene | 2.00E+00 | 1.63E-04 | 0.008% |
| 100-25-4 | 1,4-Dinitrobenzene | 3.30E+00 | 9.56E-12 | 0.000% |
| 100-41-4 | Ethyl benzene | 1.00E+03 | 4.76E-07 | 0.000% |
| 100-42-5 | Styrene | 1.00E+03 | 4.78E-07 | 0.000% |
| 10061-01-5 | cis-1,3-Dichloropropene | 2.00E+01 | 4.38E-05 | 0.000% |
| 10061-02-6 | trans-1,3-Dichloropropene (dichloropropene) | 2.00E+01 | 8.69E-05 | 0.000% |
| 101-84-8 | Diphenyl ether | 2.30E+01 | 1.64E-05 | 0.000% |
| 106-35-4 | 3-Heptanone | 7.80E+02 | 2.79E-06 | 0.000% |
| 106-42-3 | p-Xylene | 1.50E+03 | 4.40E-06 | 0.000% |
| 106-88-7 | 1,2-Epoxybutane | 2.00E+01 | 9.87E-07 | 0.000% |
| 106-97-8 | Butane | 6.30E+03 | 4.77E-07 | 0.000% |
| 107-02-8 | Acrolein | 2.00E-02 | 1.26E-05 | 0.063% |
| 107-05-1 | 3-Chloropropene | 1.00E+00 | 4.76E-07 | 0.000% |
| 107-18-6 | 2-Propene-1-ol | 1.70E+01 | 1.63E-04 | 0.001% |
| 107-31-3 | Formic acid, methyl ester | 8.20E+02 | 4.49E-06 | 0.000% |
| 107-66-4 | Dibutylphosphate | 2.90E+01 | 1.00E-11 | 0.000% |
| 107-87-9 | 2-Pentanone | 2.30E+03 | 2.79E-06 | 0.000% |
| 108-03-2 | 1-Nitropropane | 2.00E+01 | 1.27E-05 | 0.000% |
| 108-05-4 | Acetic acid vinyl ester | 2.00E+02 | 2.53E-06 | 0.000% |
| 108-10-1 | 4-Methyl-2-pentanone | 6.80E+02 | 2.79E-06 | 0.000% |
| 108-20-3 | Bis(isopropyl)ether | 3.50E+03 | 4.90E-07 | 0.000% |
| 108-38-3 | m-Xylene | 1.50E+03 | 4.40E-06 | 0.000% |
| 108-39-4 | m-Cresol | 7.30E+01 | 4.38E-05 | 0.000% |
| 108-87-2 | Methylcyclohexane | 5.40E+03 | 4.75E-07 | 0.000% |
| 108-88-3 | Toluene | 4.00E+02 | 1.90E-02 | 0.005% |
| 108-90-7 | Chlorobenzene | 1.50E+02 | 4.37E-05 | 0.000% |
| 108-93-0 | Cyclohexanol | 6.90E+02 | 3.58E-05 | 0.000% |
| 108-94-1 | Cyclohexanone | 3.30E+02 | 2.49E-05 | 0.000% |
| 108-95-2 | Phenol | 6.30E+01 | 5.00E-04 | 0.001% |
| 109-66-0 | n-Pentane | 6.00E+03 | 4.77E-07 | 0.000% |
| 109-99-9 | Tetrahydrofuran | 2.00E+03 | 2.18E-05 | 0.000% |
| 110-12-3 | 5-Methyl-2-hexanone | 7.80E+02 | 9.87E-07 | 0.000% |
| 110-43-0 | 2-Heptanone | 7.80E+02 | 9.87E-07 | 0.000% |
| 110-54-3 | n-Hexane | 2.00E+02 | 1.51E-02 | 0.008% |
| 110-62-3 | n-Valeraldehyde | 5.90E+02 | 4.49E-06 | 0.000% |
| 110-82-7 | Cyclohexane | 3.40E+03 | 4.76E-07 | 0.000% |
| 110-83-8 | Cyclohexene | 3.40E+03 | 4.79E-07 | 0.000% |
| 110-86-1 | Pyridine | 5.30E+01 | 1.13E-04 | 0.000% |
| 111-65-9 | n-Octane | 4.70E+03 | 4.77E-07 | 0.000% |
| 111-76-2 | 2-Butoxyethanol | 4.00E+02 | 1.99E-04 | 0.000% |
| 111-84-2 | n-Nonane | 3.50E+03 | 2.59E-07 | 0.000% |
| 120-82-1 | 1,2,4-Trichlorobenzene | 1.20E+02 | 8.73E-06 | 0.000% |

## Summary of Maximum Ambient Impacts for 24 hr Class B TAPs

| CAS No. | Pollutant | 24-hour Maximum ASIL (ug/m3) | 24-hour Maximum Concentration (ug/m3) | Percent of ASIL |
|---|---|---|---|---|
| 121-44-8 | Triethylamine | 7.00E+00 | 9.87E-07 | 0.000% |
| 121-69-7 | Dimethylaniline | 8.30E+01 | 1.02E-05 | 0.000% |
| 122-39-4 | N,N-Diphenylamine | 3.30E+01 | 3.52E-05 | 0.000% |
| 123-19-3 | 4-Heptanone | 7.80E+02 | 1.03E-05 | 0.000% |
| 123-51-3 | 3-Methyl-1-butanol | 1.20E+03 | 2.27E-05 | 0.000% |
| 123-86-4 | Acetic acid n-butyl ester | 2.40E+03 | 2.53E-06 | 0.000% |
| 126-73-8 | Tributyl phosphate | 7.30E+00 | 6.86E-04 | 0.009% |
| 126-98-7 | 2-Methyl-2-propenenitrile | 9.00E+00 | 5.56E-07 | 0.000% |
| 127-19-5 | N,N-Dimethylacetamide | 1.20E+02 | 2.11E-04 | 0.000% |
| 128-37-0 | 2,6-Bis(tert-butyl)-4-methylphenol | 3.30E+01 | 1.59E-04 | 0.000% |
| 1321-64-8 | Pentachloronaphthalene | 1.70E+00 | 9.77E-13 | 0.000% |
| 1321-65-9 | Trichloronaphthalene | 1.70E+01 | 1.04E-04 | 0.001% |
| 1330-20-7 | Xylenes | 8.30E+00 | 3.17E-03 | 0.038% |
| 1335-87-1 | Hexachloronaphthalene | 6.70E-01 | 9.77E-13 | 0.000% |
| 1335-88-2 | Tetrachloronaphthalene | 6.70E+00 | 1.05E-12 | 0.000% |
| 141-78-6 | Acetic acid ethyl ester | 4.80E+03 | 1.27E-05 | 0.000% |
| 141-79-7 | 4-Methyl-3-penten-2-one | 2.00E+02 | 4.66E-05 | 0.000% |
| 142-82-5 | n-Heptane | 5.50E+03 | 4.77E-07 | 0.000% |
| 144-62-7 | Oxalic acid | 3.30E+00 | 9.81E-05 | 0.003% |
| 1634-04-4 | Methyl tert-butyl ether | 5.00E+02 | 5.56E-07 | 0.000% |
| 16984-48-8 | Fluoride | 8.30E+00 | 6.95E-09 | 0.000% |
| 2234-13-1 | Octachloronaphthalene | 3.30E-01 | 9.77E-13 | 0.000% |
| 2551-13-7 | Trimethyl Benzene | 4.20E+02 | 6.06E-03 | 0.001% |
| 26140-60-3 | Terphenyls | 1.60E+01 | 1.30E-12 | 0.000% |
| 287-92-3 | Cyclopentane | 5.70E+03 | 4.76E-07 | 0.000% |
| 3825-26-1 | Ammonium perfluorooctanoate | 3.30E-01 | 9.77E-13 | 0.000% |
| 4170-30-3 | 2-Butenaldehyde (2-Butenal) | 2.00E+01 | 2.49E-05 | 0.000% |
| 540-59-0 | 1,2-Dichloroethylene | 2.60E+03 | 4.78E-07 | 0.000% |
| 563-80-4 | 3-Methyl-2-butanone | 2.30E+03 | 2.79E-06 | 0.000% |
| 57-12-5 | Cyanide | 1.70E+01 | 1.49E-10 | 0.000% |
| 57-14-7 | 1,1-Dimethylhydrazine | 4.00E+00 | 1.03E-04 | 0.003% |
| 591-78-6 | 2-Hexanone | 6.70E+01 | 5.49E-06 | 0.000% |
| 60-29-7 | Ethyl ether | 4.00E+03 | 2.17E-06 | 0.000% |
| 603-34-9 | Triphenyl amine | 1.70E+01 | 1.43E-04 | 0.001% |
| 60-34-4 | Methylhydrazine | 1.20E+00 | 3.58E-05 | 0.003% |
| 624-83-9 | Methyl isocyanate | 1.60E-01 | 4.39E-06 | 0.003% |
| 627-13-4 | Nitric acid, propyl ester | 3.60E+02 | 2.17E-06 | 0.000% |
| 64-17-5 | Ethyl alcohol | 6.30E+03 | 3.58E-05 | 0.000% |
| 64-18-6 | Formic acid | 3.10E+01 | 6.86E-04 | 0.002% |
| 64-19-7 | Acetic acid | 8.30E+01 | 9.19E-04 | 0.001% |
| 67-56-1 | Methyl alcohol (Methanol) | 8.70E+02 | 3.58E-05 | 0.000% |

## Summary of Maximum Ambient Impacts for 24 hr Class B TAPs

| CAS No. | Pollutant | 24-hour Maximum ASIL (ug/m3) | 24-hour Maximum Concentration (ug/m3) | Percent of ASIL |
|---|---|---|---|---|
| 67-63-0 | 2-Propyl alcohol | 3.30E+03 | 2.49E-05 | 0.000% |
| 67-64-1 | 2-Propanone (Acetone) | 5.90E+03 | 5.59E-05 | 0.000% |
| 67-72-1 | Hexachloroethane | 3.20E+01 | 3.97E-04 | 0.001% |
| 684-16-2 | Hexafluoroacetone | 2.30E+00 | 4.36E-03 | 0.190% |
| 71-23-8 | n-Propyl alcohol (1-propanol) | 1.60E+03 | 2.49E-05 | 0.000% |
| 71-36-3 | n-Butyl alcohol | 5.00E+02 | 2.49E-05 | 0.000% |
| 71-55-6 | 1,1,1-Trichloroethane | 6.40E+03 | 4.41E-06 | 0.000% |
| 72-20-8 | Endrin | 3.30E-01 | 6.10E-15 | 0.000% |
| 72-43-5 | Methoxychlor | 3.30E+01 | 2.24E-13 | 0.000% |
| 7429-90-5 | Aluminum | 1.70E+01 | 2.02E-09 | 0.000% |
| 7439-96-5 | Manganese | 4.00E-01 | 4.30E-04 | 0.107% |
| 7439-97-6 | Mercury | 1.70E-01 | 1.68E-04 | 0.099% |
| 7439-98-7 | Molybdenum | 1.70E+01 | 1.27E-10 | 0.000% |
| 7440-16-6 | Rhodium | 3.30E-02 | 6.84E-11 | 0.000% |
| 7440-22-4 | Silver | 3.30E-02 | 2.73E-11 | 0.000% |
| 7440-25-7 | Tantalum | 1.70E+01 | 1.58E-11 | 0.000% |
| 7440-28-0 | Thallium | 3.30E-01 | 1.70E-09 | 0.000% |
| 7440-31-5 | Tin | 6.70E+00 | 4.69E-13 | 0.000% |
| 7440-33-7 | Tungsten | 3.30E+00 | 1.26E-10 | 0.000% |
| 7440-36-0 | Antimony | 1.70E+00 | 2.80E-10 | 0.000% |
| 7440-39-3 | Barium | 1.70E+00 | 1.97E-11 | 0.000% |
| 7440-42-8 | Boron | 3.30E+01 | 6.57E-09 | 0.000% |
| 7440-48-4 | Cobalt | 1.70E-01 | 3.31E-11 | 0.000% |
| 7440-50-8 | Copper | 6.70E-01 | 2.13E-04 | 0.032% |
| 7440-61-1 | Uranium | 6.70E-01 | 1.46E-09 | 0.000% |
| 7440-62-2 | Vanadium (as V2O5) | 1.70E-01 | 6.26E-12 | 0.000% |
| 7440-65-5 | Yttrium | 3.30E+00 | 1.11E-11 | 0.000% |
| 7440-67-7 | Zirconium | 1.70E+01 | 5.11E-10 | 0.000% |
| 74-83-9 | Bromomethane | 5.00E+00 | 4.40E-06 | 0.000% |
| 74-87-3 | Chloromethane | 3.40E+02 | 2.18E-04 | 0.000% |
| 74-97-5 | Bromochloromethane | 3.50E+03 | 2.17E-03 | 0.000% |
| 74-99-7 | Methylacetylene | 5.50E+03 | 2.17E-06 | 0.000% |
| 75-00-3 | Chloroethane | 1.00E+04 | 4.40E-06 | 0.000% |
| 75-05-8 | Acetonitrile | 2.20E+02 | 1.99E-05 | 0.000% |
| 75-12-7 | Foramamide | 6.00E+01 | 9.78E-04 | 0.002% |
| 75-15-0 | Carbon disulfide | 1.00E+02 | 4.76E-07 | 0.000% |
| 75-34-3 | 1,1-Dichloroethane | 2.70E+03 | 4.78E-07 | 0.000% |
| 75-35-4 | 1,1-Dichloroethene | 6.70E+01 | 4.79E-07 | 0.000% |
| 75-43-4 | Dichlorofluoromethane | 1.30E+02 | 4.40E-06 | 0.000% |
| 75-45-6 | Chlorodifluoromethane | 1.20E+04 | 8.76E-05 | 0.000% |
| 75-50-3 | Trimethylamine | 8.00E+01 | 2.79E-06 | 0.000% |
| 75-52-5 | Nitromethane | 8.30E+02 | 4.66E-05 | 0.000% |

## Summary of Maximum Ambient Impacts for 24 hr Class B TAPs

| CAS No. | Pollutant | 24-hour Maximum ASIL (ug/m3) | 24-hour Maximum Concentration (ug/m3) | Percent of ASIL |
|---|---|---|---|---|
| 75-55-8 | 2-Methylaziridine | 1.60E+01 | 1.13E-04 | 0.001% |
| 75-61-6 | Difluorodibromomethane | 2.90E+03 | 4.38E-03 | 0.000% |
| 75-63-8 | Trifluorbromomethane | 2.00E+04 | 4.35E-03 | 0.000% |
| 75-65-0 | 2-Methyl-2-propanol | 1.00E+03 | 2.49E-05 | 0.000% |
| 75-69-4 | Trichlorofluoromethane | 1.90E+04 | 4.37E-03 | 0.000% |
| 75-71-8 | Dichlorodifluoromethane | 1.60E+04 | 4.35E-03 | 0.000% |
| 75-99-0 | 2,2-Dichloropropionic acid | 1.90E+01 | 9.20E-04 | 0.005% |
| 76-03-9 | Trichloroacetic acid | 2.20E+01 | 2.11E-04 | 0.001% |
| 76-11-9 | 1,1,1,2-Tetrachloro-2,2-difluoroethane | 1.40E+04 | 3.96E-04 | 0.000% |
| 76-12-0 | 1,1,2,2,-Tetrachloro-1,2-difluoroethane | 1.40E+04 | 3.97E-04 | 0.000% |
| 76-13-1 | 1,2,2-Trichloro-1,1,2-trifluoroethane | 2.70E+04 | 1.09E-04 | 0.000% |
| 76-14-2 | 1,2-Dichloro-1,1,2,2-tetrafluoroethane | 2.30E+04 | 4.37E-03 | 0.000% |
| 76-15-3 | Chloropentafluoroethane | 2.10E+04 | 4.36E-03 | 0.000% |
| 7647-01-0 | Hydrochloric Acid | 7.00E+00 | #N/A | #N/A |
| 7664-39-3 | Hydroflouric Acid | 8.70E+00 | #N/A | #N/A |
| 7664-41-7 | Ammonia/Ammonium | 1.00E+02 | 3.22E-02 | 0.032% |
| 7664-93-9 | Sulfuric Acid | 3.30E+00 | #N/A | #N/A |
| 7697-37-2 | Nitric acid | 1.70E+01 | #N/A | #N/A |
| 7722-84-1 | Hydrogen Peroxide | 4.70E+00 | #N/A | #N/A |
| 7723-14-0 | Phosphorus | 3.30E-01 | 2.93E-07 | 0.000% |
| 7782-49-2 | Selenium | 6.70E-01 | 9.09E-05 | 0.014% |
| 78-83-1 | 2-Methylpropyl alcohol | 5.10E+02 | 1.13E-04 | 0.000% |
| 78-92-2 | 1-Methylpropyl alcohol (2-butanol) | 1.00E+03 | 2.49E-05 | 0.000% |
| 78-93-3 | 2-Butanone | 1.00E+03 | 1.18E-05 | 0.000% |
| 79-00-5 | 1,1,2-Trichloroethane | 1.80E+02 | 4.78E-07 | 0.000% |
| 79-09-4 | Propanoic acid | 1.00E+02 | 5.80E-04 | 0.001% |
| 79-20-9 | Methyl acetate | 2.00E+03 | 1.27E-05 | 0.000% |
| 79-34-5 | 1,1,2,2-Tetrachloroethane | 2.30E+01 | 4.07E-04 | 0.002% |
| 82-68-8 | Pentachloronitrobenzene | 1.70E+00 | 9.30E-05 | 0.005% |
| 84-66-2 | Diethyl phthalate | 1.70E+01 | 3.60E-04 | 0.002% |
| 84-74-2 | Di-n-butylphthalate | 1.70E+01 | 1.68E-12 | 0.000% |
| 87-68-3 | Hexachlorobutadiene | 7.00E-01 | 1.75E-05 | 0.002% |
| 88-72-2 | Nitrotoluene | 3.70E+01 | 2.26E-05 | 0.000% |
| 88-89-1 | Picric acid | 3.30E-01 | 1.23E-10 | 0.000% |
| 91-20-3 | Naphthalene | 1.70E+02 | 7.67E-04 | 0.000% |
| 92-52-4 | 1,1`-Biphenyl | 4.30E+00 | 4.38E-06 | 0.000% |
| 93-76-5 | 2,4,5-T | 3.30E+01 | 1.00E-11 | 0.000% |
| 95-13-6 | Indene | 1.60E+02 | 1.03E-05 | 0.000% |

| Summary of Maximum Ambient Impacts for 24 hr Class B TAPs | | | | |
|---|---|---|---|---|
| | | | | |
| CAS No. | Pollutant | 24-hour Maximum ASIL (ug/m3) | 24-hour Maximum Concentration (ug/m3) | Percent of ASIL |
| | | | | |
| 95-47-6 | o-Xylene | 1.50E+03 | 4.78E-07 | 0.000% |
| 95-48-7 | o-Cresol | 7.30E+01 | 4.38E-05 | 0.000% |
| 95-49-8 | o-Chlorotoluene | 8.60E+02 | 1.18E-06 | 0.000% |
| 95-50-1 | 1,2-Dichlorobenzene | 1.00E+03 | 4.46E-05 | 0.000% |
| 96-18-4 | 1,2,3-Trichloropropane | 2.00E+02 | 4.53E-06 | 0.000% |
| 96-22-0 | 3-Pentanone | 2.30E+03 | 2.79E-06 | 0.000% |
| 96-69-5 | Bis(3-tert-butyl-4-hydroxy-6-methyl-phenyl)sulfide | 3.30E+01 | 1.09E-12 | 0.000% |
| 98-51-1 | p-tert-Butyltoluene | 2.00E+02 | 1.18E-06 | 0.000% |
| 98-82-8 | Cumene | 8.20E+02 | 1.18E-06 | 0.000% |
| 98-83-9 | Methylsytrene | 8.10E+02 | 2.19E-05 | 0.000% |
| 98-95-3 | Nitrobenzene | 1.70E+00 | 1.03E-04 | 0.006% |