U.S. Department of Energy
Office of River Protection
P.O. Box 450
Richland, Washington 99352

0060375

03-ED-150

SEP 19 2003

Mr. Jeff KenKnight, Unit Manager
Office of Air Quality
U.S. Environmental Protection Agency
Region 10
1200 Sixth Avenue, OAQ-107
Seattle, Washington 98081

RECEIVED
SEP 24 2003
EDMC

Mr. A.W. Conklin, Head
Air Emissions and Defense
Waste Section
State of Washington
Department of Health
P.O. Box 47827
Olympia, Washington 98504

Addressees:

TRANSMITTAL OF RADIOACTIVE AIR EMISSIONS NOTICE OF CONSTRUCTION (NOC) APPLICATION FOR CATEGORICAL TANK FARM FACILITY WASTE RETRIEVAL AND CLOSURE: PHASE I-SITE PREPARATION AND SYSTEM INSTALLATION

The U.S. Department of Energy, Office of River Protection requests the Environmental Protection Agency and the State of Washington Department of Health approval of the NOC application for Categorical Tank Farm Facility Waste Retrieval and Closure for Site Preparation and System Installation.

This NOC (attached) is being submitted in accordance with the Washington Administrative Code 246-247, "Radiation Protection – Air Emissions," and Title 40, Code of Federal Regulations, Part 61, "National Emission Standards for Hazardous Air Pollutants."

It is also being submitted for approval to perform modifications to tank farm facilities in preparation for retrieval and closure of the tank farms. This may include, but is not limited to, installation and removal of equipment from tanks and pits, riser and inlet breather filter modifications, connections of exhausters, excavations inside and outside the tank farms, and connections of ancillary equipment in support of these activities.

If you have any questions, please contact me, or your staff may contact Dennis W. Bowser, Environmental Division, (509) 373-2566.

Sincerely,

Roy J. Schepens
Manager

ED:DWB

Attachment

cc w/attach:
D. J. Carrell, CH2M HILL
C. J. Kemp, CH2M HILL
O. S. Wang, Ecology
W. E. Green, FHI
J. J. Martell, WDOH Richland Office (4 copies)
Administrative Record

cc w/o attach:
B. Erlandson, BNI
J. Cox, CTUIR
S. Harris, CTUIR
J. L. Hensley, Ecology
D. Bartus, EPA c/o Ecology
J. L. Hanson, INNOV
P. Sobotta, NPT
J. B. Hebdon, RL
M. F. Jarvis, RL
R. Jim, YN
R. Lee, YN

Attachment
03-ED-150

Radioactive Air Emissions Notice of Construction Application for a Categorical Tank Farm Facility Waste Retrieval and Closure: Phase I-Site Preparation and System Installation

RADIOACTIVE AIR EMISSIONS NOTICE OF CONSTRUCTION APPLICATION FOR A CATEGORICAL TANK FARM FACILITY WASTE RETRIEVAL AND CLOSURE: PHASE I – SITE PREPARATION AND SYSTEM INSTALLATION

L. L. Penn
CH2M HILL Hanford Group, Inc.

Date Published
September 2003

CH2MHILL
Hanford Group, Inc.
Post Office Box 1500
Richland, Washington

Prepared for the U.S. Department of Energy
Office of River Protection

Contract No. DE-AC27-99RL14047

Approved for Public Release; Further Dissemination Unlimited

INTRODUCTION

This document serves as a categorical notice of construction (NOC) pursuant to the requirements of Washington Administrative Code (WAC) 246-247-060, and as a request for approval to modify pursuant to 40 Code of Federal Regulations (CFR) 61.07, for Phase I – Site preparation and system installation for waste retrieval from and closure of single-shell tanks in the 200 Area of the Hanford Reservation.

Tank preparation and retrieval system installation will be followed by waste retrieval operations (Phase II of the categorical NOC). Upon completion of retrieval, some additional tank preparation and equipment installation may be needed before closure activities begin. These activities are also covered by this NOC. Then, closure activities (Phase III of the categorical NOC) will begin. Separate NOC applications will be submitted for each of these three phases.

To support retrievals and closure, utilities upgrades will be necessary in some farms, and waste transfer systems must be provided where they currently do not exist or where they may be in a degraded condition. They will be designed, installed, and operated to meet the goals of the Hanford Federal Facility Agreement and Consent Order. This NOC covers the site preparation and system installation activities necessary to stage for retrieval and closure. Preparation activities in support of retrieval and closure are very similar. Generally this includes removal of existing equipment, installation of new equipment, and construction of new ancillary equipment. Concurrently, tank farm utility upgrades, transfer systems and (as needed) receiver tank modifications must be completed. The project activities are expected to start in January of 2004 and continue through 2028.

Section 15 of this NOC discusses the estimated total effective dose equivalent (TEDE) to the offsite maximally exposed individual (MEI) resulting from unabated fugitive emissions from the construction activities discussed in this NOC. The TEDE from all calendar year 2002 Hanford Site air emissions (point sources and diffuse and fugitive sources) was 0.066 mrem. The emissions estimated for the activities covered by this NOC are 3.32 mrem/yr, and in conjunction with the 2002 TEDE, will not exceed the National Emission Standard of 10 mrem per year (40 CFR 61, Subpart H). This estimate is conservative for purposes of bounding the project activities.

Pursuant to 40 CFR 61.09 (a)(1), this application is also intended to provide anticipated initial start-up notification. It is requested that Environmental Protection Agency (EPA) approval of this application will also constitute EPA acceptance of the initial start-up notification. Written notification of the actual date of initial startup, in accordance with the requirement listed in 40 CFR 61.09(a)(2), will be provided at a later date.

CONTENTS

1.0 FACILITY NAME AND LOCATION 6

2.0 RESPONSIBLE MANAGER 6

3.0 PROPOSED ACTION 6

4.0 SEPA 7

5.0 CHEMICAL AND PHYSICAL PROCESSES 7
- 5.1 PIT WORK 8
- 5.2 REMOVAL OF IN-TANK EQUIPMENT 8
- 5.3 IN-TANK EQUIPMENT INSTALLATION 8
- 5.4 SOIL EXCAVATIONS 9

6.0 EXISTING AND PROPOSED ABATEMENT TECHNOLOGY 10
- 6.1 PIT WORK ABATEMENT TECHNOLOGY 10
- 6.2 IN-TANK EQUIPMENT INSTALLATION AND REMOVAL 10
- 6.3 SOIL EXCAVATIONS 11

7.0 CONTROL TECHNOLOGY DRAWINGS 11

8.0 RADIONUCLIDES OF CONCERN 14

9.0 EFFLUENT MONITORING SYSTEM 14

10.0 ANNUAL POSSESSION QUANTITY 15

11.0 PHYSICAL FORM 16

12.0 RELEASE FORM 16

13.0 RELEASE RATES 16
- 13.1 PIT WORK 16
- 13.2 REMOVAL OF IN-TANK EQUIPMENT 17
- 13.3 RISER AND EQUIPMENT INSTALLATION 17
- 13.4 SOIL EXCAVATION 18

14.0 LOCATION OF THE MAXIMALLY EXPOSED INDIVIDUAL 18

15.0 TOTAL EFFECTIVE DOSE EQUIVALENT TO THE MAXIMALLY EXPOSED INDIVIDUAL 18

16.0 COST FACTOR IF NO ANALYSIS 19

17.0 DURATION OF LIFETIME 19

18.0 STANDARDS 19

19.0 REFERENCES 21

APPENDICES

Appendix A Calculations for Pit Opening A-1

Appendix B Calculations for Equipment Removal B-1

Appendix C Calculations for Equipment Installation C-1

Appendix D Calculations for Excavations D-1

LIST OF TABLES

Table 1. Maximum Radionuclide Inventory Annual Possession Quantity. 15

Table 2. TEDE to MEI Summary. 19

Table 3. Breather Filter Standards Comparison 20

LIST OF FIGURES

Figure 1. Typical Single Shell Tank 12

Figure 2. Typical Breather Filter Configuration 13

LIST OF TERMS

ALARACT	as low as reasonably achievable control technology
AMS	Articulated Mast System
ANSI	American National Standards Institute
APQ	annual possession quantity
ASME	American Society of Mechanical Engineers
BARCT	best available radionuclide control technology
Ci/yr	curies per year
CFR	Code of Federal Regulations
cm	centimeters
dpm	disintegrations per minute
EIS	environmental impact statement
ENRAF	Enraf-Nonius Series 854
EPA	Environmental Protection Agency
HEPA	high-efficiency particulate air
HIHTL	hose-in-hose transfer line
MEI	maximally exposed individual
MPR	maximum public receptor
mrem/yr	millirem per year
NOC	notice of construction
PCM	periodic confirmatory measurements
PTE	potential to emit
QA	quality assurance
SEPA	State Environmental Policy Act
SHMS	Standard Hydrogen Monitoring System
TEDE	total estimated dose equivalent
TWINS3	Tank Waste Information Network System 3
TWRS	Tank Waste Retrieval System
WAC	Washington Administrative Code

1.0 FACILITY NAME AND LOCATION

Name and address of the facility and location (latitude and longitude) of the emission unit(s).

U.S. Department of Energy, Office of River Protection
Hanford Site,
200 (East or West) Area Tank Farms
Richland, Washington 99352

2.0 RESPONSIBLE MANAGER

Name, title, address, and phone number of the responsible manager.

Roy J. Schepens, Manager
U.S. Department of Energy, Office of River Protection
P.O. Box 450
Richland, Washington 99352-0450
(509) 376-6677

3.0 PROPOSED ACTION

Identify the type of proposed action for which this application is submitted: (a) Construction of new emission unit(s); (b) Modification of existing emission unit(s); identify whether this is a significant modification – significant means the potential-to-emit airborne radioactivity at a rate that could increase the TEDE to the MEI by at least 1.0 mrem/yr as a result of the proposed modification; (c) Modification of existing unit(s), unregistered

The proposed action is a significant modification to the existing Tank Farms configurations as defined by the regulations.

Site preparation for the retrieval of the waste from single-shell tanks will involve development of standard systems suitable for different groups of tanks. To the maximum extent possible, these systems will be modular, reusable, and portable. The factors considered in the development of the waste retrieval technology, order of retrieval, and subsequently the necessary site preparations include, but are not limited to, size of tank, type of waste (e.g. saltcake or sludge), volume of waste, tank riser configuration, and classification with respect to leaks. In general, this will include removal of pumps and thermocouple trees, removing foam from pit cover blocks and conducting pit cleanup, gauging risers, equipment installations, transfer line installations, associated excavations and similar activities. Fugitive emission sources will be created during these activities. A more comprehensive description of activities follows.

4.0 SEPA

If this project is subject to the requirements of the State Environmental Policy Act (SEPA) contained in chapter 197-11 WAC, provide the name of the lead agency, lead agency contact person, and their phone number.

The proposed action is categorically exempt from the requirements of the SEPA under WAC 197-11-845. The Tank Waste Retrieval System (TWRS) Environmental Impact Statement (EIS) bounds this retrieval project.

5.0 CHEMICAL AND PHYSICAL PROCESSES

Describe the chemical and physical processes upstream of the emission unit(s).

Current design calls for modifications to many of the tanks and associated equipment to allow installation of waste retrieval system equipment, including the following major components:

New In-Tank Equipment

- Installation of waste distribution devices
- Installation of transfer pumps
- Installation of Enraf-Nonius Series 854 (ENRAF) stilling wells
- Temporary installation of video cameras
- Installation of instrument manifolds
- Installation of central fury devices
- Installation of drain lines back to tank
- Installation of AMS (Articulated Mast System)
- Temporary installation of sluicing nozzles
- Installation of ventilation inlet filter assemblies
- Connection of hose-in-hose transfer line (HIHTL)
- Installation of new pit cover-plates as needed
- Installation of electrical power and instrument cables and other utility tie-ins and/or upgrades
- Placement of new, above ground pits
- Installation of jumpers

Removal, Decontamination and Disposal of Existing Equipment

- Removal of breather filters
- Removal of sludge weights
- Removal of liquid observation wells (LOW)
- Removal of Standard Hydrogen Monitoring System (SHMS) probe
- Removal of thermocouple probes
- Removal of sluicing nozzles and video cameras after use
- Removal of liquid level reel

- Removal of jumpers from pits
- Removal of saltwell pumps and sluice pumps
- Removal of corrosions probes
- Removal of shield plugs
- Removal of slurry distributors
- Removal of air lift circulators
- Removal of riser adapter cover-plates
- Removal of saltwell screen
- Removal of dip tubes
- Removal of protective foam coating on pits

Miscellaneous

- Performance of related miscellaneous activities in support of construction and operation activities that will not increase emissions above those estimated in Section 13.0 Release Rates of this NOC.

Construction activities with the potential to emit include the following:

5.1 PIT WORK

Pits will be accessed for installation of instrument manifolds, transfer pump installation, jumper removal, replacement of existing HIHTLs with new HIHTLs, connection of high efficiency particulate air (HEPA) filters and exhauster trunk for the portable exhausters, removal of various jumpers, and similar activities. Standard procedure for contaminated pit entry includes the application of a fixant.

5.2 REMOVAL OF IN-TANK EQUIPMENT

Various in-tank equipment, such as those listed above, will be removed from the tanks to make room for the waste retrieval equipment, or to be replaced with equivalent equipment built to withstand the forces of waste retrieval.

5.3 IN-TANK EQUIPMENT INSTALLATION

Motor controlled spray devices will be inserted into risers on some tanks near the outside perimeter of the tank and an automatic indexing spray device also will be installed on a centrally located riser. In-tank closed circuit television cameras will be installed into risers and connected to a master camera control system skid. The equipment will be in the risers for the duration of the project and will not contact the waste. The installation will result in negligible dose to the workers because no work is performed inside the riser.

Each spray assembly is equipped with a spray washer to provide a decontamination rinse during removal. The spray devices and cameras will be sleeved out of the risers at completion of the project for reuse with contamination and dose expected to be minimal.

An AMS will be installed through risers of some tanks for use during retrieval. The AMS may be removed and reused, but in most cases these will be abandoned in place, upon completion, to minimize worker exposure involved in the decontamination process.

Ventilation inlet filter assemblies will be installed on those tanks whose breather filters have been removed to accommodate portable exhausters and other retrieval equipment. As the filter is lowered in place, the blank is removed from the riser allowing the filter to be set in place. The riser is open for approximately five minutes.

In some cases it will be necessary to install new risers on some tanks. Nominal riser diameters range from four inches to 42 inches. Riser will be installed by first removing soil down to the concrete tank dome surface using hand digging and/or the "guzzler." A steel caisson will be inserted into the hole for wall support. A small layer of grout added to the bottom of the hole will provide a level surface. A hole will be partially drilled into the concrete. After a cable is attached to the core, the drilling will be completed through the dome into the tank headspace. The core disk will be removed and disposed of and/or evaluated. The new prefabricated riser will be lowered into the caisson until support brackets on the side are seated on the grout top. The riser will then be backfilled in place.

During removal of the concrete plug, the plug will be wrapped in plastic or similar containment. The hole into the tank will be sealed from the atmosphere by plastic sleeving or a similar containment method. However, it is assumed the plastic is taken off and the hole is left open to the atmosphere for an estimated five minutes per riser before the new riser is installed.

Other similar equipment may be installed.

5.4 SOIL EXCAVATIONS

Soil will be excavated inside and outside the farms for various reasons such as tie in of instrumentation and power systems for monitoring transfer progress. Intermittent trenches will be excavated for this purpose. A HIHTL will be installed to convey waste from the single-shell tanks to the Double-Shell Tank Transfer System. Hoses will be connected in pits using standard flex jumpers.

The volumes of soil removed during excavation activities are volumes of disturbed soil that will not leave the respective farms. Clean soil piles may be moved from one place to another within the tank farm with heavy equipment (i.e., backhoe, front loader, etc.). The soil will be used to fill the trenches after the hose and the conduits are installed. For purposes of conservatism, emission calculations were based on 75 percent of this soil excavated by hand digging and 25 percent of the excavation performed with a guzzler.

Soil excavation outside the tank farm fence also may be performed with heavy equipment.

6.0 EXISTING AND PROPOSED ABATEMENT TECHNOLOGY

Describe the existing and proposed (as applicable) abatement technology. Describe the basis for the use of the proposed system. Include expected efficiency of each control device, and the annual average volumetric flow rate(s) in meters^3/sec for the emission unit(s).

During preparation and retrieval activities, controls will be established using the following as low as reasonably achievable control technology (ALARACT) demonstrations: ALARACT 1 "Demonstration for riser preparation/opening," ALARACT 4 "Demonstration for packaging and transportation of waste," ALARACT 5 "Demonstration for soil excavation (using hand tools)," ALARACT 6 "Demonstration for pit access," ALARACT 11, "Demonstration for waste transfers," ALARACT 13 "Demonstration for installation, operation, and removal of tank equipment," ALARACT 14 "Demonstration for pit work," ALARACT 15 "Demonstration for size reduction of waste equipment for disposal," and ALARACT 16 "Demonstration for work on potentially contaminated ventilation system components." Air, water, hydraulic, and electrical lines and a HIHTL, if necessary, may be placed in a shallow (~1 ft. trench) trench using ALARACT 5. Some excavations shall be performed using the "guzzler" NOC AIR 98-1215 (*Use of the Guzzler Vacuum Excavation System for Radiologically Limited Activities on the Hanford Site*) and HEPA vacuum AIR 99-1103 (*HEPA Filtered Vacuum Radioactive Air Emission Units, Revision 1*).

Currently, the single-shell tanks are passively ventilated through a HEPA filter with a manufacturer rated removal efficiency of 99.97 percent.

6.1 PIT WORK ABATEMENT TECHNOLOGY

Pit access and work will be performed in accordance with ALARACT Demonstrations 6 and 14 and will follow the radiological controls specified in those ALARACTs.

If a portable/temporary radioactive air emission unit or a HEPA filtered vacuum radioactive air emission unit is used during the pit work activities, controls as described in their NOCs (DOE/RL-96-75. and DOE/RL-97-50) will be followed. Descriptions of the emissions control technology for those units are also provided in those NOCs.

6.2 IN-TANK EQUIPMENT INSTALLATION AND REMOVAL

Equipment removal and installation activities will be performed in accordance with ALARACT Demonstrations 1 and 13. Disposition of excess equipment and waste will be performed in accordance with ALARACT Demonstrations 4 and 15. Work on the exhauster trunk, breather filter removal, and inlet filter installation will be performed in accordance with ALARACT Demonstration 16.

6.3 SOIL EXCAVATIONS

Soil excavation activities will be performed in accordance with ALARACT Demonstration 5, and will follow the radiological controls specified in that ALARACT.

If the regulated guzzler is used to excavate soil, radiological and administrative controls as described in its NOC will be followed. Description of the emissions control technology for the regulated guzzler is also provided in that NOC.

7.0 CONTROL TECHNOLOGY DRAWINGS

Provide conceptual drawings showing all applicable control technology components from the point of entry of radionuclides into the vapor space to release to the environment.

Figures 1 and 2 depict a typical single-shell tank and typical passive ventilation system.

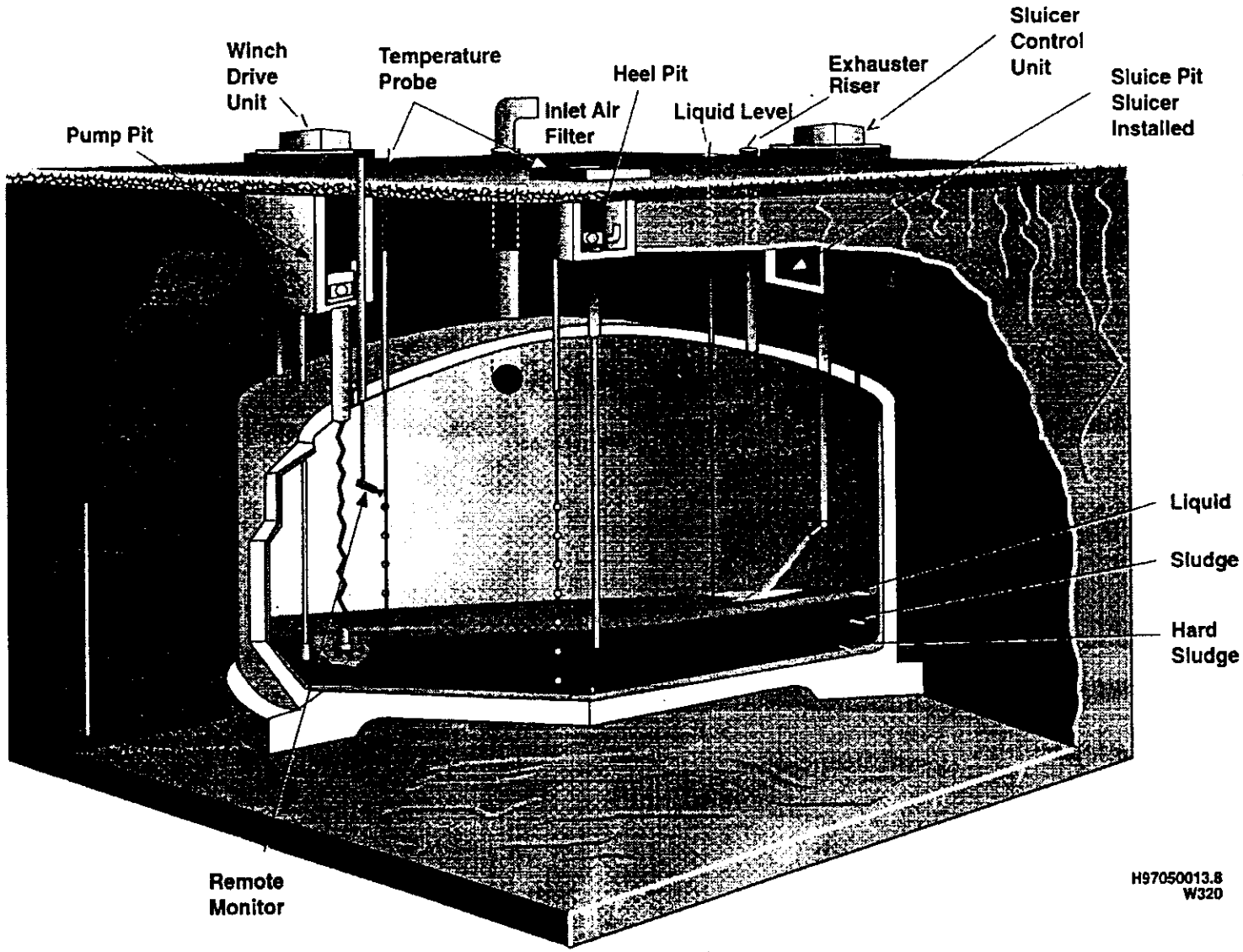

Figure 1. Typical Single Shell Tank

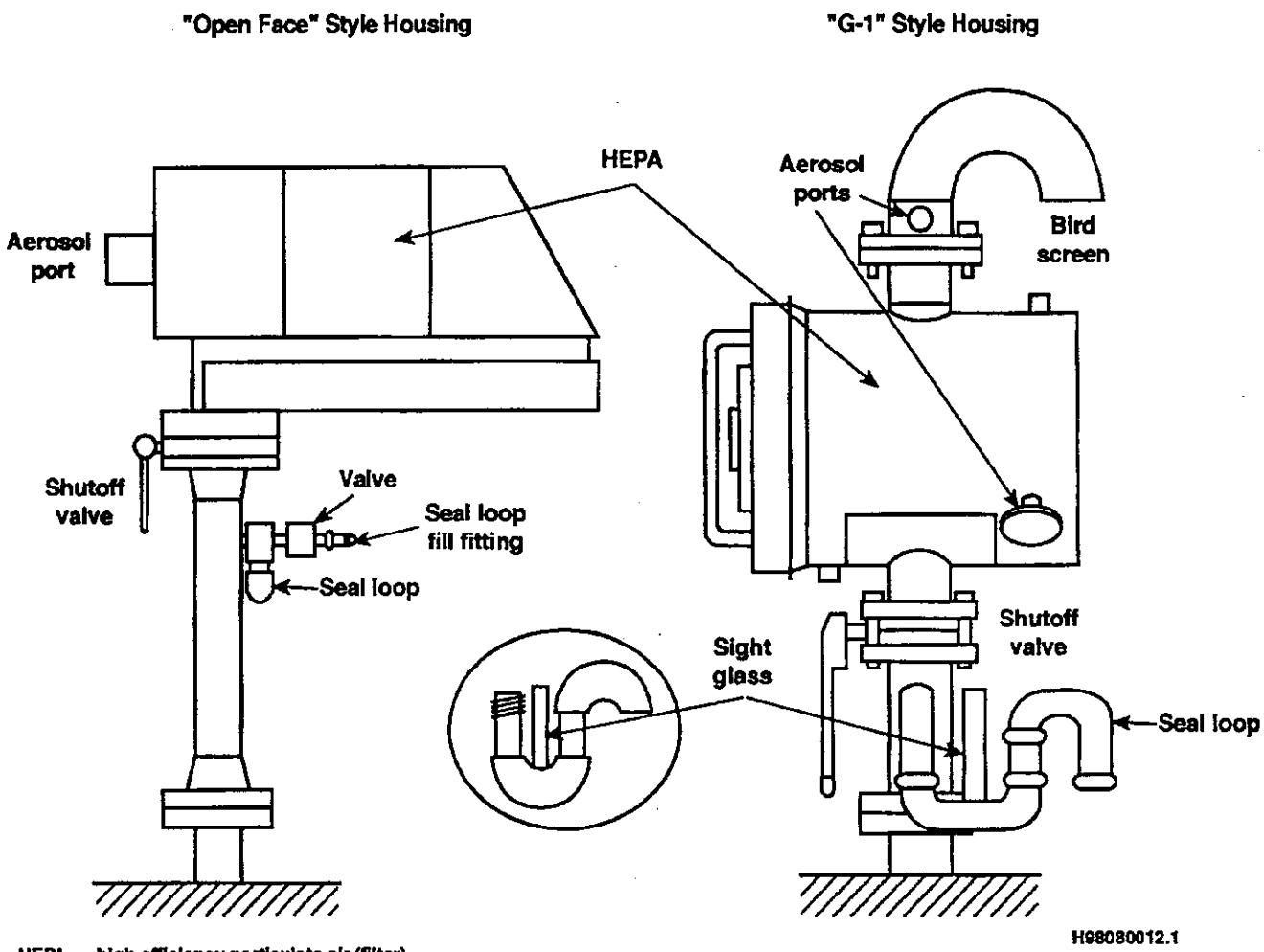

HEPA = high-efficiency particulate air (filter).

Figure 2. Typical Breather Filter Configuration

8.0 RADIONUCLIDES OF CONCERN

Identify each radionuclide that could contribute greater than ten percent of the potential –to-emit TEDE to the MEI, or greater than 0.1 mrem/yr potential-to-emit TEDE to the MEI.

Radionuclides estimated to contribute greater than ten percent of the potential-to-emit TEDE to the MEI from preparation of single-shell tank farms for waste retrieval and closure are assumed to be Sr-90, and Am-241, for the unabated doses. This is derived by direct application of the CAP-88PC dose conversion factors, discussed in Section 14.0, to the inventory values listed in Table 1 (after determining the release fraction).

Multiplying the curies of each radionuclide by the offsite maximum public receptor (MPR) Cap-88 unit dose factors indicates that Sr-90 would contribute approximately 87 percent of the potential unabated dose to the MEI from equipment removal activities. However, although Am-241 would contribute 0.04 percent, and Cs-137 would contribute only 4.6 percent from equipment removal, the remainder of the activities assume that the primary contributions come from Am-241 as well as Sr-90. These two radionuclides are estimated to contribute greater than 90 percent of the unabated total dose to the offsite maximum public receptor.

9.0 EFFLUENT MONITORING SYSTEM

Describe the effluent monitoring system for the proposed control system. Describe each piece of monitoring equipment and its monitoring capability, including detection limits, for each radionuclide that could contribute greater than ten percent of the potential-to-emit TEDE to the MEI, or greater than 0.1 mrem/yr potential-to-emit TEDE to the MEI, or greater than 25 percent of the TEDE to the MEI, after controls. Describe the method for monitoring or calculating those radionuclide emissions. Describe the method with detail sufficient to demonstrate compliance with the applicable requirements.

The potential, annual, unabated total effective offsite dose for the pre-retrieval tank preparation activities described within this NOC is greater than 0.1 millirem per year. Therefore, in accordance with 40 CFR 61, Subpart H, continuous monitoring will take place while engaging in these activities. Near-field monitoring has been established for this purpose for fugitive emissions such as are described in this NOC. In addition, periodic confirmatory measurements (PCM) will be taken where possible, and log sheets will be utilized to track emissions.

During pit work activities surface contamination surveys will constitute the PCM to verify low emissions. If a portable/temporary radioactive air emission unit or a HEPA filtered vacuum radioactive air emission unit is used, PCM will be performed as required by their NOCs.

During in-tank equipment removal and installation activities, surface contamination surveys as described in ALARACT Demonstration 13, *TWRS ALARACT Demonstration for Installation, Operation and Removal of Tank Equipment* will constitute the PCM to verify low emissions.

During soil excavation activities, soil contamination surveys will constitute the PCM to verify low emissions. As contamination levels vary widely across the tank farms, log sheets will be utilized to track contamination levels associated with volumes of soil in order to ensure that the excavation activities do not exceed the estimated emissions. If the regulated guzzler is used, PCM will be performed as required by their NOCs.

PCM will also be conducted annually on the breather filters and inlet filters by verifying the levels of smearable contamination of the inside surface of the ducting downstream of the HEPA filter or on the outside of the screen covering the outlet of the vent, should one exist. Confirmation of levels below 10,000 dpm per 100 cm^2 beta/gamma and 200 dpm per 100 cm^2 alpha will be used to verify low emissions. The radiological survey reports will become the record for the periodic confirmatory measurement.

10.0 ANNUAL POSSESSION QUANTITY

Indicate the annual possession quantity(APQ) for each radionuclide

In order to ascertain a bounding APQ for any single-shell tank regardless of order of retrieval, the radionuclides listed in the Tank Waste Information Network System 3 (TWINS3) database were assessed. The APQ table below (Table 10.1) consists of the highest curie value - for each radionuclide found in any single-shell tank subject to retrieval - multiplied by the volume of waste estimated to coat equipment removed from the tanks. In addition, the APQ associated with pit work, soil excavation, and equipment installation, has been included in this total.

Table 1. Maximum Radionuclide Inventory Annual Possession Quantity.

Analyte	Inventory(Ci)		Analyte	Inventory(Ci)		Analyte	Inventory(Ci)
3H	5.63E-02		134Cs	5.25E-02		235U	5.01E-04
14C	1.55E-02		137Cs	3.90E+02		236U	2.03E-04
59Ni	7.68E-02		137mBa	3.69E+02		237Np	8.68E-04
60Co	9.80E-01		151Sm	2.57E+02		238Pu	3.62E-01
63Ni	7.31E+00		152Eu	8.00E-02		238U	1.20E-02
79Se	3.70E-03		154Eu	8.19E+00		239Pu	7.53E+00
90Sr	1.62E+04		155Eu	5.80E+00		240Pu	1.15E+00
90Y	1.62E+04		226Ra	7.62E-01		241Am	7.21E+00
93mNb	2.76E-01		227Ac	2.15E-02		241Pu	6.14E+00
93Zr	3.34E-01		228Ra	4.47E-03		242Cm	6.12E-03
99Tc	6.85E-01		229Th	7.52E-02		242Pu	3.28E-05
106Ru	2.59E-05		231Pa	4.72E-02		243Am	2.13E-04
113mCd	1.03E+00		232Th	1.10E-03		243Cm	4.11E-04
125Sb	1.40E+00		232U	3.81E-03		244Cm	1.15E-02
126Sn	4.55E-02		233U	8.16E-02			
129I	3.40E-04		234U	1.17E-02			

11.0 PHYSICAL FORM

Indicate the physical form of each radionuclide in inventory: Solid, particulate solids, liquid, or gas.

Each radionuclide in the inventory listed in Table 10.1 is contained in the tank waste, which consists of gases, liquids, and solids. Excavation of soils and removal of particulate debris from pits are expected to be particulate solids.

12.0 RELEASE FORM

Indicate the release form of each radionuclide in inventory (i.e. particulate solids, vapor, or gas). Give the chemical form and ICRP 30 solubility class, if known.

The radionuclides in the inventory listed in Table 10.1 are assumed to be released as liquids or solids, except for H-3, C-14, Ru-106, and I-129, which will be released as a combination of liquids and gases.

13.0 RELEASE RATES

(a) New emission unit(s): Give predicted release rates without any emissions control equipment (the potential-to-emit) and with the proposed control equipment using the efficiencies described in subsection (6) of this section. (b) Modified emission unit(s): Give predicted release rates without any emissions control equipment (the potential-to-emit) and with the existing and proposed control equipment using the efficiencies described in subsection 6 of this section. Provide the latest year's emissions data or emissions estimates. In all cases, indicate whether the emission unit is operating in a batch or continuous mode.

Abated emissions from passive and diffuse sources were reported in DOE/RL-2003-19, *Radionuclide Air Emissions Report for the Hanford Site, Calendar Year 2002.* Abated emissions from all the Hanford Site sources were 0.066 mrem. Insofar as the activities in this NOC will be ongoing, the emission unit is considered to be operating in a continuous mode.

13.1 PIT WORK

Smearable contamination data is not available from all of the pits that are likely to be entered during preparation for waste retrieval. However, in accordance with ALARACT 6, the uniformly distributed contamination levels in any pit that is opened for retrieval preparation, must be decontaminated to less than 100,000 dpm/100 cm^2 beta-gamma and 2,000 dpm/100 cm^2 alpha by washing or applying an approved fixative to the pit surfaces. Therefore, for purposes of calculating a conservative PTE for pit work, it is assumed that these levels are reached for every pit, (approximately 75 pits per year) that is entered under this NOC. The entire surface area from the walls and floors of the pit and the enclosed

equipment, was assumed to be uniformly contaminated to these levels. The unabated emissions estimate for pit work were based upon this assumption, the 40 CFR 61 Appendix D release factor of 1E-03 for particulates and the CAPP88-PC dispersion factors of the offsite MEI. The beta-gamma contributing radionuclide was assumed to Sr-90 and the alpha contributing radionuclide was assumed to be Am-241. The calculations for the APQ and the unabated TEDE to the MEI from pit work activities are shown in Appendix A.

13.2 REMOVAL OF IN-TANK EQUIPMENT

The unabated emissions estimate for the removal of in-tank equipment was determined by assuming a 0.16 centimeter (0.0625 inches) layer of the applicable tank inventory being uniformly distributed across the surface area of the equipment, and applying the 40 CFR 61 Appendix D release factor for particulates to the total volume contained over that surface area. The number and types of equipment anticipated for removal was considered for approximately 10 tanks per year. The radionuclide concentrations of the waste in each and every single-shell tank subject to retrieval were examined and the maximum curie values multiplied by the volume. CAPP88-PC dispersion factors for the offsite MPR were also applied. The largest equipment from any given tank was chosen to represent the unabated emissions, irrespective of from which tank the removal takes place. Free liquids are not expected to be held up in this equipment because the equipment is designed as self-draining. The small amount of liquid (less than one liter) that may be trapped behind a transfer pump impeller will be immobilized in the absorbent mat and will not be released. Equipment will be sleeved as it is removed; however, this is not considered in calculating the PTE; therefore, potential abated and unabated emissions are considered the same. The APQ and TEDE calculations from in-tank equipment removals are shown in Appendix B.

13.3 RISER AND EQUIPMENT INSTALLATION

At times, during installation of new risers, inlet filters, and various equipment into the tanks via risers, tanks will be momentarily opened to the environment. To account for these brief occasions on a conservative basis, the potential emissions have been calculated as though these activities would be continuous throughout the year. A possession quantity, in terms of gross alpha, gross beta and Cesium, was established using the vapor space data for the worst case tank from 23 SSTs per PNNL letter (Sklarew 2001). The concentration of Am-241 was chosen as the most representative of alpha and the concentration of Sr-90 was chosen as most representative of beta. The APQ quantity was multiplied by a release fraction of 1.00E+00 to determine the unabated release in curies per year (Ci/yr). This was then multiplied by the CAPP88-PC offsite dose factor to determine the potential unabated emissions. The APQ and TEDE calculations for in-tank equipment installations are shown in Appendix C.

13.4 SOIL EXCAVATION

Soil contamination varies considerably not only from one farm to the next, but within a given farm as well. Therefore, the operative guidelines contained within ALARACT 5, were used as a basis of estimate. Specifically, it is assumed that the net contamination for the general area is no greater than 200 dpm/probe area alpha nor greater than 500,000 dpm/probe area beta-gamma. Unabated emissions for manual soil excavation activities were then determined by further assuming the entire volume of soil intended to be excavated (15,000 ft^3) was at the same contamination concentration and applying the 40 CFR 61 Appendix D release factor for particulates to the total volume. Unabated emissions for soil excavation using the guzzler (5,000 ft^3) is based on the same assumption but uses a release fraction of 1.0E+00.

As described in Section 9.0, Effluent Monitoring System, radiological soil surveys will be taken to ensure that the total soil excavated remains at or below these values.

14.0 LOCATION OF THE MAXIMALLY EXPOSED INDIVIDUAL

Identify the MEI by distance and direction from the emission unit(s). The MEI is determined by considering distance, windrose data, presence of vegetable gardens, and meat or milk producing animals at unrestricted areas surrounding the emission unit.

The MEI is determined using CAP-88PC dispersion factors, which are derived for use on the Hanford Site and published in HNF-3602, *Calculating Potential-to-Emit Releases and Doses for FEMPs and NOCs*. Values used for this NOC came from Tables 4-9 and 4-10 from HNF-3602 for the 200 East Area and 200 West Area respectively, with effective release height <40 meters. Each table gives values in two separate columns for offsite MPR and onsite MPR. Values from every column were examined to determine the maximum dose. The results showed that the maximum dose would be received by the offsite MR for the 200 East Area. This MPR location is Ringold, which is 200 meters east-southeast of the 200 East Area.

15.0 TOTAL EFFECTIVE DOSE EQUIVALENT TO THE MAXIMALLY EXPOSED INDIVIDUAL

Calculate the TEDE to the MEI using an approved procedure (see WAC 246-247-085). For each radionuclide identified in Subsection 8 of this section, determine the TEDE to the MEI for existing and proposed emission controls, and without any emission controls (the potential-to-emit) using the release rates from Subsection 13 of this section. Provide all input data used in the calculations.

The TEDE to the MEI resulted in emissions of approximately 3.32 mrem/yr as shown in Table 2.

Table 2. TEDE to MEI Summary.

Activities	Unabated Offsite mrem/yr	Abated Offsite mrem/yr
Pit Work	8.63E-05	8.63E-05
Equipment Removal	2.04E+00	2.04E+00
Equipment Installation	2.32E-02	2.32E-02
Excavation (Hand/Guzzler)	1.25E+00	1.25E+00
Total	**3.32E+00**	**3.32E+00**

16.0 COST FACTOR IF NO ANALYSIS

Provide cost factors for construction, operation, and maintenance of the proposed control technology components and system, if a best available radionuclide control technology (BARCT) or ALARACT demonstration is not submitted with the NOC.

Pursuant to WAC 246-247-110, App. A (16), cost factors for construction, operation, and maintenance of proposed technology requirements are not required, as the Washington State Department of Health has provided guidance that HEPA filters are generally considered BARCT for particulate emissions. Because the key radionuclides of concern are particulates, it is proposed that the HEPA filter controls described in Section 6.0 be accepted as BARCT. Compliance with the substantive BARCT standards is described in Section 18.0.

17.0 DURATION OF LIFETIME

Provide an estimate of the lifetime for the facility process with the emission rates provided in this application.

Field activities to support equipment removal and installation are currently scheduled to begin January 2004 and are expected to continue until 2028, as retrieval commences and tanks are closed.

18.0 STANDARDS

*Indicate which of the following control technology standards have been considered and will be complied with in the design and operation of the emission unit(s) described in this application: **ASME/ANSI AG-1**, Code on Nuclear Air and Gas Treatment (where there are conflicts in standards with the other listed references, this standard shall take precedence; **ASME/ANSI N509**, Nuclear Power Plant Air-Cleaning Units and Components; **ASME/ANSI N510**, Testing of Nuclear Air Treatment Systems; ASME/ANSI NQA-1, Quality Assurance (QA) Program Requirements for Nuclear Facilities; **40 CFR 60. Appendix A**, Methods 1, 1A, 2, 2A, 2C, 2D, 4,*

5, and 17. ANSI N13.1, Guide to Sampling Airborne Radioactive materials in Nuclear Facilities. For each standard not so indicated, give reason(s) to support adequacy of the design and operation of the emission unit(s) as proposed.

The ventilation system has been designed to meet the required WAC-246-247-110 control technology standards as described in the following table.

Table 3. Breather Filter Standards Comparison.

Standard	Does design comply?	Notes
ASME/ANSI AG-1	Yes	HEPA filter housing design meets ASME AG-1.
ASME/ANSI N509	Yes	HEPA filters on the Hanford Site are purchased following a site standard specification that lists requirements from AG-1. Also the filter housings are purchased to meet requirements in AG-1 for single filter, side access housings.
ASME/ANSI N510	Yes	Filters are testable per ANSI N510 and the housing will contain testing devices that meet requirements under AG-1.
ANSI/ASME NQA-1	Yes	Current version of QA program is performed in accordance with TFC-PLN-02, "Quality Assurance Program Description".
ANSI N13.1	NA	Confirmatory measurements will consist of smears on the filter.
40 CFR 60, Appendix A Test Methods: 1, 1A, 2, 2A, 2C, 2D, 4	NA	ASME N510 filter testing requires airflow measurements. Other methods not required because flow rates vary based upon barometric breathing.
40 CFR 60, Appendix A Test Methods: 5, 17	NA	These methods are for sampling system designs. Periodic confirmatory measurements will be taken via smears in lieu of a sampling system.

19.0 REFERENCES

40 CFR 60, "Standards for Performance of New Stationary Sources," *Code of Federal Regulations,* as amended.

40 CFR 61, "National Emission Standards for Hazardous Air Pollutant." *Code of Federal Regulations,* as amended.

AMCA Standard 99-0401-86, Air Movement Contractors Association, Chicago, Illinois.

ANSI/ASME AG-1, 1997, *Code on Nuclear Air and Gas Treatment,* American Society of Mechanical Engineers, New York, New York.

ANSI/ASME NQA-1, *Quality Assurance Program Requirements for Nuclear Facilities,* American Society of Mechanical Engineers, New York, New York.

ANSI/HPS N13.1, 1999, *Sampling and Monitoring Releases of Airborne Radioactive Substances from Stacks and Ducts of Nuclear Facilities,* American National Standards Institute, New York, New York.

ANSI N13.1, 1969, *Guide to Sampling Airborne Radioactive Materials in Nuclear Facilities,* American National Standards Institute, New York, New York.

ANSI N509, *Nuclear Power Plant Air Cleaning Units and Components,* American National Standards Institute, New York, New York.

ANSI N510, *Testing of Nuclear Air Treatment Systems,* American National Standards Institute, New York, New York.

DOE-HDBK-3010-94 Change Notice No. 1, March 2000, *Airborne Release Fractions/Rates and Respirable Fractions for Non-Reactor Nuclear Facilities.*

DOE/RL-2002-20, *Radionuclide Air Emissions Report for the Hanford Site, Calendar Year 2001,* The U.S. Department of Energy, Richland Operations Office, Richland, Washington.

Hanford Federal Facility Agreement and Consent Order by State of Washington, Department of Ecology; United States Environmental Protection Agency; and the United States Department of Energy.

HNF-0528, *National Emission Standards for Hazardous Air Pollutants (NESHAP) Quality Assurance Project Plan for Radioactive Airborne Emissions,* Rev. 4, Fluor Hanford, Inc., Richland, Washington.

HNF-3602, 2002, *Calculating Potential-to-Emit Release and Dose for FEMP and NOCs,* Rev. 1, Fluor Hanford, Inc., Richland, Washington.

HNF-4327, Rev. 1A, 2002, *Control of Airborne Radioactive Emissions for Frequently Performed TWRS Work Activities (ALARACT Demonstrations)*, CH2M HILL Hanford Group, Inc., Richland, Washington.

HNF-5267, Rev. 2, 1999, *Waste Retrieval Sluicing System Campaign Number 3 Solids Volume Transferred Calculation*, Lockheed Martin Hanford Corporation, Richland, Washington.

HNF-EP-0182-174, *Waste Tank Summary Report for Month Ending, September 30, 2002,* CH2M HILL Hanford Group, Inc., Richland, Washington.

HNF-SD-WM-TI-797, 1998, *Results of Vapor Space Monitoring of Flammable Gas Watch List Tanks*, Rev. 3, Lockheed Martin Hanford Corporation and DE&S Hanford, Inc., Richland, Washington.

RPP-MP-600, 2000, *QA Program Description for the Tank Farm Contractor,* CH2M HILL Hanford Group, Inc., Richland, Washington.

Sklarew, D., 2001, letter to G. Wells, CH2M HILL, August 27, Pacific Northwest National Laboratory, Richland, Washington.

WAC 197-11-845, *State Environmental Policy Act,* "SEPA Rules, Department of Social and Health Services," *Washington Administration Code*, as amended.

WAC 246-247, "Radiation Protection – Air Emissions," *Washington Administrative Code,* as amended.

APPENDIX A
POTENTIAL UNABATED EMISSIONS FOR PIT WORK

Emissions, and Dose Associated with Pit Entry

Release Fraction (RF)	1.00E-03						
Area of individual Pit	4.65E+05	cm^2	5.00E+02	ft^2			
Multiplyer (estimated entries) (M)	75						
Smear Sample Calculations	Max Smear Removable Concentration (dpm/100 cm2)*	Conversion (dpm/100cm^2) to (Ci/cm^2)	Max Smear Concentration (Ci/cm^2)	Possession Quantity (Ci)	Unabated Release (Ci/yr)	Offsite Dose Factor (mrem/Ci) a	Unabated Dose (mrem/yr)
	A	B	C = A*B	D =(TSA)*C*(M)	E =RF*D	G	H = E*G
Alpha (Am-241)	20	4.50E-15	9.00E-14	3.14E-06	3.14E-09	1.30E+01	4.08E-08
Beta (Sr-90)	50,000	4.50E-15	2.25E-10	7.84E-03	7.84E-06	1.10E+01	8.62E-05
Total				**7.84E-03**	**7.84E-06**		**8.63E-05**

Notes:

[a] HNF-3602, Rev 1, Calculating Potential-to-Emit Releases and Doses for FEMPs and NOCs. The Offsite Dose Factor is an annual quantity.

(*) source ALARACT 5 Pit Work parameters

APPENDIX B
POTENTIAL UNABATED EMISSION FOR EQUIPMENT REMOVAL

Equipment:	SHMS probe	Thermo-couple	Supernat/ Saltwell pump	Slurry Distrib.	Air lift circ.	Saltwell Screen	ENRAF Stilling Well	Liquid Level Reel	Sluice Eductor	Core Disk	LOW		
Length (ft)	26	50	94	7	40	47	45	45	24		55.5		
Diameter (in)	2	2	2	2	6	10	3	1.5	3	42	3.5		
Vol in^3	126.35	242.98	456.81	34.02	571.38	1114.33	324.71	165.67	173.18	346.36	465.86		
Vol gals	0.55	1.05	1.98	0.15	2.47	4.82	1.41	0.72	0.75	1.50	2.02		
# per year	4	12	3	1	1	2	3	3	1	2	4	Total Gals:	
Total Vol. gals	2.19	12.62	5.93	0.15	2.47	9.65	4.22	2.15	0.75	3.00	8.07	51.20	

* Contamination on outside of equipment assumed to be 1/16 - inch thick (0.0625 inch)

Analyte	Max. Conc. (Ci/gal)	APQ Inventory on Equip. (Ci)	Release Fraction	Unabated Release Ci	Cap-88 West Area		CAP-88 East Area		West TEDE to MEI		East TEDE to MEI		% Contrib. to Total
	B	C=B*Vol	D	E=C*D	Offsite	Onsite	Offsite	Onsite	Offsite	Onsite	Offsite	Onsite	
3H	1.10E-03	5.63E-02	1.00E+00	5.63E-02	2.50E-05	1.10E-05	2.50E-05	7.10E-06	1.41E-06	6.19E-07	1.41E-06	4.00E-07	6.91E-07
14C	3.03E-04	1.55E-02	1.00E+00	1.55E-02	2.00E-03	3.00E-04	1.90E-03	1.80E-04	3.10E-05	4.65E-06	2.95E-05	2.79E-06	1.45E-05
59Ni	1.50E-03	7.68E-02	1.00E-03	7.68E-05	2.40E-04	3.30E-04	3.10E-04	2.90E-04	1.84E-08	2.53E-08	2.38E-08	2.23E-08	1.17E-08
60Co	1.91E-02	9.80E-01	1.00E-03	9.80E-04	1.90E-01	3.40E-01	2.50E-01	3.00E-01	1.86E-04	3.33E-04	2.45E-04	2.94E-04	1.20E-04
63Ni	1.43E-01	7.31E+00	1.00E-03	7.31E-03	2.00E-04	7.80E-05	2.60E-04	6.90E-05	1.46E-06	5.70E-07	1.90E-06	5.05E-07	9.33E-07
79Se	7.22E-05	3.70E-03	1.00E-03	3.70E-06	1.00E-01	1.60E-01	1.30E-01	1.50E-01	3.70E-07	5.91E-07	4.80E-07	5.54E-07	2.36E-07
90Y	3.16E+02	1.62E+04	1.00E-03	1.62E+01	2.60E-04	2.90E-04	3.40E-04	2.60E-04	4.20E-03	4.69E-03	5.50E-03	4.20E-03	2.70E-03
90Sr	3.16E+02	1.62E+04	1.00E-03	1.62E+01	8.80E-02	1.10E-02	1.10E-01	9.50E-03	1.42E+00	1.78E-01	1.78E+00	1.54E-01	8.73E-01
93mNb	5.40E-03	2.76E-01	1.00E-03	2.76E-04	9.90E-04	1.50E-03	1.30E-03	1.30E-03	2.74E-07	4.15E-07	3.59E-07	3.59E-07	1.76E-07
93Zr	6.53E-03	3.34E-01	1.00E-03	3.34E-04	1.60E-03	1.30E-03	2.10E-03	1.20E-03	5.35E-07	4.35E-07	7.02E-07	4.01E-07	3.45E-07
99Tc	1.34E-02	6.85E-01	1.00E-03	6.85E-04	1.80E-02	1.80E-03	2.30E-02	1.40E-03	1.23E-05	1.23E-06	1.58E-05	9.59E-07	7.74E-06
106Ru	5.07E-07	2.59E-05	1.00E+00	2.59E-05	1.60E-02	2.20E-02	2.00E-02	1.90E-02	4.15E-07	5.71E-07	5.19E-07	4.93E-07	2.55E-07
113mCd	2.01E-02	1.03E+00	1.00E-03	1.03E-03	1.00E-01	1.60E-01	1.30E-01	1.50E-01	1.03E-04	1.65E-04	1.34E-04	1.55E-04	6.58E-05
125Sb	2.73E-02	1.40E+00	1.00E-03	1.40E-03	2.10E-02	3.70E-02	2.60E-02	3.30E-02	2.93E-05	5.16E-05	3.63E-05	4.61E-05	1.78E-05
126Sn	8.89E-04	4.55E-02	1.00E-03	4.55E-05	3.70E-02	4.60E-02	4.70E-02	4.10E-02	1.68E-06	2.09E-06	2.14E-06	1.87E-06	1.05E-06
129I	6.64E-06	3.40E-04	1.00E+00	3.40E-04	7.60E-02	8.10E-03	2.00E-01	2.20E-02	2.58E-05	2.75E-06	6.80E-05	7.48E-06	3.34E-05
134Cs	1.03E-03	5.25E-02	1.00E-03	5.25E-05	7.80E-02	1.00E-01	1.00E-01	4.70E-02	4.09E-06	5.25E-06	5.25E-06	2.47E-06	2.58E-06
137Cs	7.61E+00	3.90E+02	1.00E-03	3.90E-01	1.90E-01	3.10E-01	2.40E-01	2.70E-01	7.41E-02	1.21E-01	9.36E-02	1.05E-01	4.59E-02

Analyte	Max. Conc. (Ci/gal)	APQ Inventory on Equip. (Ci)	Release Fraction	Unabated Release Ci	Cap-88 West Area		CAP-88 East Area		West TEDE to MEI		East TEDE to MEI		% Contrib. to Total
	B	C=B*Vol	D	E=C*D	Offsite	Onsite	Offsite	Onsite	Offsite	Onsite	Offsite	Onsite	
137mBa	7.21E+00	3.69E+02	1.00E-03	3.69E-01	8.60E-14	1.70E-12	5.30E-13	1.00E-11	3.18E-14	6.28E-13	1.96E-13	3.69E-12	9.61E-14
151Sm	5.03E+00	2.57E+02	1.00E-03	2.57E-01	5.80E-04	9.50E-04	7.50E-04	8.40E-04	1.49E-04	2.45E-04	1.93E-04	2.16E-04	9.48E-05
152Eu	1.56E-03	8.00E-02	1.00E-03	8.00E-05	1.90E-01	3.40E-01	2.40E-01	3.10E-01	1.52E-05	2.72E-05	1.92E-05	2.48E-05	9.42E-06
154Eu	1.60E-01	8.19E+00	1.00E-03	8.19E-03	1.50E-01	2.80E-01	2.00E-01	2.50E-01	1.23E-03	2.29E-03	1.64E-03	2.05E-03	8.04E-04
155Eu	1.13E-01	5.80E+00	1.00E-03	5.80E-03	6.30E-03	1.10E-02	8.00E-03	9.80E-03	3.65E-05	6.38E-05	4.64E-05	5.68E-05	2.28E-05
226Ra	1.49E-02	7.62E-01	1.00E-03	7.62E-04	3.60E-01	2.90E-01	4.60E-01	2.50E-01	2.74E-04	2.21E-04	3.50E-04	1.90E-04	1.72E-04
227Ac	4.21E-04	2.15E-02	1.00E-03	2.15E-05	1.10E+01	2.00E+01	1.50E+01	1.80E+01	2.37E-04	4.31E-04	3.23E-04	3.88E-04	1.59E-04
228Ra	8.73E-05	4.47E-03	1.00E-03	4.47E-06	1.50E-01	7.90E-02	1.90E-01	7.00E-02	6.70E-07	3.53E-07	8.49E-07	3.13E-07	4.17E-07
229Th	1.47E-03	7.52E-02	1.00E-03	7.52E-05	1.20E+01	2.20E+01	1.60E+01	2.00E+01	9.02E-04	1.65E-03	1.20E-03	1.50E-03	5.91E-04
231Pa	9.23E-04	4.72E-02	1.00E-03	4.72E-05	8.90E+00	1.50E+01	1.20E+01	1.40E+01	4.20E-04	7.09E-04	5.67E-04	6.61E-04	2.78E-04
232Th	2.15E-05	1.10E-03	1.00E-03	1.10E-06	8.60E+00	1.50E+01	1.10E+01	1.30E+01	9.49E-06	1.65E-05	1.21E-05	1.43E-05	5.96E-06
232U	7.45E-05	3.81E-03	1.00E-03	3.81E-06	6.20E+00	1.10E+01	8.00E+00	1.00E+00	2.37E-05	4.20E-05	3.05E-05	3.81E-06	1.50E-05
233U	1.59E-03	8.16E-02	1.00E-03	8.16E-05	2.40E+00	4.20E+00	3.10E+00	3.70E+00	1.96E-04	3.43E-04	2.53E-04	3.02E-04	1.24E-04
234U	2.29E-04	1.17E-02	1.00E-03	1.17E-05	2.40E+00	4.20E+00	3.10E+00	3.70E+00	2.82E-05	4.93E-05	3.64E-05	4.34E-05	1.79E-05
235U	9.79E-06	5.01E-04	1.00E-03	5.01E-07	2.30E+00	4.00E+00	3.00E+00	3.50E+00	1.15E-06	2.00E-06	1.50E-06	1.75E-06	7.38E-07
236U	3.97E-06	2.03E-04	1.00E-03	2.03E-07	2.30E+00	3.90E+00	2.90E+00	3.50E+00	4.68E-07	7.93E-07	5.90E-07	7.12E-07	2.89E-07
237Np	1.69E-05	8.68E-04	1.00E-03	8.68E-07	8.90E+00	1.60E+01	1.20E+01	1.40E+01	7.72E-06	1.39E-05	1.04E-05	1.21E-05	5.11E-06
238Pu	7.07E-03	3.62E-01	1.00E-03	3.62E-04	5.90E+00	1.00E+01	7.60E+00	8.90E+00	2.14E-03	3.62E-03	2.75E-03	3.22E-03	1.35E-03
238U	2.35E-04	1.20E-02	1.00E-03	1.20E-05	2.10E+00	3.70E+00	2.80E+00	3.30E+00	2.53E-05	4.45E-05	3.37E-05	3.97E-05	1.65E-05
239Pu	1.47E-01	7.53E+00	1.00E-03	7.53E-03	6.40E+00	1.10E+01	8.20E+00	9.50E+00	4.82E-02	8.29E-02	6.18E-02	7.16E-02	3.03E-02
240Pu	2.24E-02	1.15E+00	1.00E-03	1.15E-03	6.40E+00	1.10E+01	8.20E+00	9.50E+00	7.35E-03	1.26E-02	9.42E-03	1.09E-02	4.62E-03
241Am	1.36E-01	6.96E+00	1.00E-03	6.96E-03	1.00E-01	1.60E-01	1.30E-01	1.50E-01	6.96E-04	1.11E-03	9.04E-04	1.04E-03	4.44E-04
241Pu	1.20E-01	6.14E+00	1.00E-03	6.14E-03	9.80E+00	1.70E+01	1.30E+01	1.50E+01	6.02E-02	1.04E-01	7.99E-02	9.22E-02	3.92E-02
242Cm	1.20E-04	6.12E-03	1.00E-03	6.12E-06	6.10E+00	1.00E+01	7.80E+00	9.10E+00	3.73E-05	6.12E-05	4.77E-05	5.57E-05	2.34E-05
242Pu	6.40E-07	3.28E-05	1.00E-03	3.28E-08	3.20E-01	5.70E-01	4.10E-01	5.00E-01	1.05E-08	1.87E-08	1.34E-08	1.64E-08	6.59E-09
243Am	4.16E-06	2.13E-04	1.00E-03	2.13E-07	9.80E+00	1.70E+01	1.30E+01	1.50E+01	2.09E-06	3.62E-06	2.77E-06	3.19E-06	1.36E-06
243Cm	8.03E-06	4.11E-04	1.00E-03	4.11E-07	6.60E+00	1.20E+01	8.50E+00	1.00E+01	2.71E-06	4.93E-06	3.49E-06	4.11E-06	1.72E-06
244Cm	2.24E-04	1.15E-02	1.00E-03	1.15E-05	5.20E+00	9.00E+00	6.70E+00	8.00E+00	5.97E-05	1.03E-04	7.69E-05	9.19E-05	3.78E-05
		3.34E+04		3.35E+01					1.62E+00	5.15E-01	2.04E+00	4.48E-01	

APPENDIX C
POTENTIAL UNABATED EMISSION FOR EQUIPMENT INSTALLATION

Emissions, and Dose Associated with Breather Filter Removal and Riser Installation

# HEPA Filters (HF)	**1**	**No Credit is taken for HEPA decon factor**			
Release Fraction (RF)	**1.00E+00**				
Ventilation Flow Rate	**2.80E-01**	**m^3/min**	**1.00E+01**	**cfm**	
Conversion Factor - pCi/l to Ci/yr (CF)	**1.47E-04**				
Vapor Space Data	**Possession Quantity pCi/l**	**Annual Possession Quantity (Ci/yr)**	**Unabated Release (Ci/yr)**	**Offsite Dose Factor (mrem/Ci)**	**Unabated Dose (mrem/yr)**
	A	**B=A*(CF)**	**C =B*RF**	**D**	**E=C*D**
Alpha (Am-241)	1.20E+01	1.77E-03	1.77E-03	1.30E+01	2.30E-02
Beta (Sr-90)	1.32E+01	1.94E-03	1.94E-03	1.10E-01	2.14E-04
Cs-137	1.00E-01	1.47E-05	1.47E-05	2.40E-01	3.53E-06
Total		**3.72E-03**	**3.72E-03**		**2.32E-02**

Notes:

[a] Dose conversion factors are from HNF-3602, Rev 1, *Calculating Potential-to-Emit Releases and Doses for FEMPs and NOCs* January 2002

(b) Vapor space data updated for 23 SST per PNNL Letter D. Sklarew (PNL) to G. Wells, CH2M HILL, August 27,2001

APPENDIX D
POTENTIAL UNABATED EMISSION FOR EXCAVATION

HAND DIGGING SOIL EXCAVATION ACTIVITIES						
Max. Soil Excavated	15,000	ft^3				
Soil Density	98	lbs/cu ft				
Total Mass of Soil (TMS)	6.67E+08	GRAMS				
Average Max Alpha(MA)	20	CPM				
Average Max Beta-Gamma (MB)	50,000	CPM	500,000	dpm/probe*		
Release Fraction (RF)	1.00E-03					
ASSUMED ISOTOPE	**CONVERSION FACTOR (pCi/gram)/cpm (a)**	**POSSESSION QUANTITY Ci (b)**	**UNABATED RELEASE, Ci**	**OFFSITE DOSE FACTOR, mrem/Ci**	**UNABATED DOSE, mrem/yr**	**% UNABATED OFFSITE DOSE**
	A	**B=A*TMS*M(B/A)/1E12**	**C =B*RF**	**D**	**E =C*D**	**F =E/(sum of E)**
Sr-90	3.54E-01	1.18E+01	1.18E-02	1.10E-01	1.30E-03	34.55%
Am-241	1.42E+01	1.89E-01	1.89E-04	1.30E+01	2.46E-03	65.45%
TOTAL		**1.20E+01**	**1.20E-02**		**3.76E-03**	**100.00%**

Notes:

[a] HNF-2418, Soil Contamination Standards for Protection of Personnel, March 1998, P.D. Rittmann Tables 1 and 4 based on 500 mrem/yr.

[b] WEIGHT OF SOIL X FIELD INSTRUMENT READING X CONVERSION FACTOR.

[c] HNF-3602, Rev 1, Calculating Potential-to-Emit Releases and Doses for FEMPs and NOCs. The Offsite Dose Factor is an annual quantity.

[d] There is no emissions control equipment. Abated and unabated values are equal.

* Based on ALARACT 5 parameters for soil excavations

GUZZLER SOIL EXCAVATION ACTIVITIES						
Max. Soil Excavated	5,000	FEET^3				
Soil Density	98	POUNDS/FEET^3				
Total Mass of Soil(b) (TMS)	2.22E+08	GRAMS				
Average Max Alpha(MA)	20	CPM				
Average Max Beta-Gamma (MB)	50,000	CPM	500,000	dpm/probe*		
Release Fraction (RF)	1.00E+00					
ASSUMED ISOTOPE	**CONVERSION FACTOR (pCi/gram)/cpm (a)**	**POSSESSION QUANTITY Ci (b)**	**UNABATED RELEASE, Ci**	**OFFSITE DOSE FACTOR, mrem/Ci**	**UNABATED DOSE, mrem/yr**	**% UNABATED OFFSITE DOSE**
	A	**B=A*TMS*M(B/A)/1E12**	**C =B*RF**	**D**	**E =C*D**	**F =E/(sum of E)**
Sr-90	3.54E-01	3.94E+00	3.94E+00	1.10E-01	4.33E-01	34.55%
Am-241	1.42E+01	6.31E-02	6.31E-02	1.30E+01	8.21E-01	65.45%
TOTAL		**4.00E+00**	**4.00E+00**		**1.25E+00**	**100.00%**

Notes:

[a] HNF-2418, Soil Contamination Standards for Protection of Personnel, March 1998, P.D. Rittmann Tables 1 and 4 based on 500 mrem/yr.

[b] WEIGHT OF SOIL X FIELD INSTRUMENT READING X CONVERSION FACTOR.

[c] HNF-3602, Rev 1, Calculating Potential-to-Emit Releases and Doses for FEMPs and NOCs. The Offsite Dose Factor is an annual quantity.

[d] No credit is taken for emissions control equipment. Abated and unabated values are equal.

* Based on ALARACT 5 parameters for soil excavations

CH2M-0303553

Attachment 2

HANFORD SITE TITLE V AIR OPERATING PERMIT NOTIFICATION OF OFF-PERMIT CHANGE REQUEST FORM FOR THE CATEGORICAL TANK FARMS RETRIEVAL PREPARATION NOTICE OF CONSTRUCTION

Consisting of 2 pages,
including coversheet

HANFORD SITE AIR OPERATING PERMIT

Notification of Off-Permit Change

Permit Number: 00-05-006

This notification is provided to Washington State Department of Ecology, Washington State Department of Health, and the U.S. Environmental Protection Agency as notice of an off-permit change described as follows.

This change is allowed pursuant to WAC 173-401-724(1) as:
1. Change is not specifically addressed or prohibited by the permit terms and conditions
2. Change does not weaken the enforceability of the existing permit conditions
3. Change is not a Title I modification or a change subject to the acid rain requirements under Title IV of the FCAA
4. Change meets all applicable requirements and does not violate an existing permit term or condition
5. Change has complied with applicable preconstruction review requirements established pursuant to RCW 70.94.152.

Provide the following information pursuant to WAC-173-401-724(3):

Description of the change:	
The NOC application is for the Radioactive Air Emissions Notice of Construction Application for a Categorical Tank Farm Facility Waste Retrieval and Closure: Phase I – Site Preparation and System Installation. This Notice of Construction is for modifications to Tank Farm facilities in preparation for retrieval and closure of the tank farms. This includes installation and removal of equipment from tanks and pits, riser and inlet breather filter modifications, connections of exhausters, excavations inside and outside the farms and connections of ancillary equipment in support of these activities.	
Date of Change: (To be provided in the agency approval order.)	
Describe the emissions resulting from the change:	
The potential unabated emissions are calculated to be 3.32 mrem per year total effective dose equivalent to the hypothetical onsite maximally exposed individual. The potential unabated and abated emissions are the same as no credit is taken for abatement measures for fugitive emissions.	
Describe the new applicable requirements that will apply as a result of the change: (To be provided in the agency approval order.)	
For Hanford Use Only:	
AOP Change Control Number:	Date Submitted: