Reactor Safe Storage and D&D of Surplus Facilities

Retrieve and Store Spent Nuclear Fuel

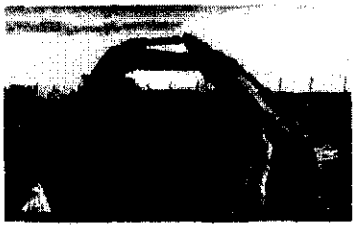

Remove and Dispose of Contaminated Soils

Manage Solid Wastes

Stabilize Plutonium

Tank Waste Storage

Tank Waste Glassification Complex

0056564

Hanford Site Tri-Party Agreement

Public Involvement

Community Relations Plan

RECEIVED
MAR 07 2002
EDMC

Hanford Federal Facility Agreement and Consent Order

- **United States Department of Energy**
- **United States Environmental Protection Agency**
- **Washington State Department of Ecology**

Tri-Party Agreement

January 2002

Prepared by: U.S. Department of Energy • Richland Operations Office

E0112013

CONTENTS

Section		Page
	Introduction	iii
1	**Information Resources and Public Participation Opportunities**	1
	Hanford Cleanup Line	1
	Internet Addresses	1
	Mailing Lists	1
	Tri-Party Agreement Publications	1
	Hanford Tri-Party Agreement Public Information Repositories	2
	News Media Activities	3
	Hanford Site Tours	3
	Public Involvement Opportunities	3
	Public Comment Periods on Documents Related to the Tri-Party Agreement	3
	Tri-Party Agreement Public Meetings	4
	Specific Public Meetings	4
	Annual Budget Meetings	4
	Tri-Party Agreement Quarterly Public Involvement Planning Meetings	5
	Other Tri-Party Agreement Public Outreach Activities	5
	Tri-Party Agreement Public Notification Process	5
	Effective Public Notice	6
	Tri-Party Agreement Public Involvement Evaluation Process	6
	Tribal Government Involvement	7
	Local Involvement	7
	Briefings for Elected and Appointed Officials and Agency Representatives	7
	Stakeholder Involvement	8
	Hanford Advisory Board	8
	Other Agencies Involved in Hanford Site Cleanup	8
	Organizations Involved with Hanford Site Cleanup	9
	EPA Technical Assistance Grants	9
	Washington State Public Participation Grants	9
2	**Hanford Decision Process**	10
	Hanford Tri-Party Agreement Decisions	10
	Changes in the Tri-Party Agreement	10
	Change Request Process	10
	Resource Conservation and Recovery Act of 1976-Related Decisions	12
	Comprehensive Environmental Response, Compensation, and Liability Act of 1980 Decisions	13
	Expedited Response Actions	14

Section **Page**

3 Description of the Hanford Site and Activities Carried Out on the Site 16

Site Description 16
Hanford Site History 18
Science and Technology Mission 19
Past and Present Operations at the Hanford Site 19
100 Area 19
200 Area 20
B Plant and T Plant 22
Reduction Oxidation Plant and Plutonium-Uranium Extraction Plant 22
Uranium Oxide Plant 22
Plutonium Finishing Plant 22
200 Area Laboratories 23
Environmental Restoration Disposal Facility 23
300 Area 23
400 Area 23
600 Area 23
1100 Area 24

4 Tri-Cities and Regional Background 25

Appendices

A Reference: Other Laws A-1
B Documents to be Placed in Information Repositories B-1
C Hanford Tri-Party Agreement Community Relations Plan Update Process C-1
D Hanford Advisory Board D-1
E Acronym List and Glossary E-1

INTRODUCTION

WHAT IS HANFORD?

Hanford is a 586-square mile site in southeastern Washington State that was created in 1943 as part of the Manhattan Project to produce plutonium for nuclear weapons. A total of nine nuclear reactors were eventually built along the banks of the Columbia River as the defense mission continued throughout the Cold War years. The weapons material production mission ended in the late 1980s and the Site's mission shifted from production to waste cleanup. However, more than 40 years of plutonium production created an enormous challenge in terms of hundreds of square miles of contaminated soil and groundwater and millions of gallons of highly radioactive waste stored in underground tanks.

WHO'S WHO AT HANFORD?

The U.S. Department of Energy (USDOE) Richland Operations Office and the Office of River Protection manage and operate the Hanford Site. The Richland Operations Office oversees management of the Hanford Site, including restoration of the Columbia River corridor and transition of the central part of the Hanford Site for waste treatment and long-term storage. Richland Operations Office is responsible for moving 1,200 metric tons of spent fuel away from the River Corridor; stabilizing 4 tons of plutonium; restoring land; placing reactors in safe storage; demolishing old facilities along the Columbia River; providing site infrastructure; remediating groundwater; and doing a host of other cleanup activities. The Office of River Protection was created in 1998 by the U.S. Congress to manage the USDOE's largest, most complex environmental cleanup project – Hanford's tank waste retrieval, treatment, and disposal project. The Office of River Protection's mission is to retrieve and treat tank waste, and close the tank farms to protect the Columbia River.

The Washington State Department of Ecology (Ecology) and the U.S. Environmental Protection Agency (EPA) regulate USDOE's activities. The regulatory agencies divide authority for different aspects of Hanford Site cleanup. Ecology's Nuclear Waste Program is responsible for oversight of the tank waste treatment and storage, waste management activities and implementation of the state's cleanup regulations. EPA has lead oversight for the *Comprehensive Environmental Response, Compensation, and Liability Act of 1980* cleanup activities that include removal and transfer of spent nuclear fuel from corroding storage pools to safer storage areas. These two regulatory agencies oversee other multiple cleanup activities as well.

WHAT IS THE TRI-PARTY AGREEMENT?

The *Hanford Federal Facility Agreement and Consent Order* (Tri-Party Agreement) was signed in 1989 by USDOE, EPA, and Ecology. The original Tri-Party Agreement outlined a 30-year cleanup schedule to bring the Hanford Site into compliance with state and federal environmental laws. The Tri-Party Agreement is a legal agreement made up of action plans that include milestones, or deadlines, for specific cleanup actions to be completed. Additionally, each major milestone series consists of interim milestones guiding cleanup activities through the course of the project.

The Tri-Party Agreement also outlines the process for changing, removing or adding milestones; the conditions under which penalties may be issued; and the requirements for public participation activities pertaining to Hanford cleanup actions. Changes can be made to the Tri-Party Agreement with the approval of all three agencies. The change request process can be initiated by any of the Tri-Parties, and a public participation process must be followed prior to any changes being implemented.

WHAT IS THE COMMUNITY RELATIONS PLAN?

This Community Relations Plan outlines the public participation processes implemented by the Tri-Parties under authority of the Tri-Party Agreement, and identifies several ways the public can participate in the Hanford Site cleanup decision-making process.

In many cases, Hanford public involvement goes beyond what is required by law because the Tri-Parties believe public involvement is essential to cleanup success. The Tri-Parties conduct public involvement and information activities both cooperatively and independently.

This Community Relations Plan intends to fulfill applicable state and federal laws regarding development of community involvement and public participation plans. The plan also serves as one of the overall public participation plans guiding public involvement at the Hanford Site. Additional project-specific, public participation plans will be developed as needed.

The Tri-Parties recognize that people nationwide are concerned and affected by the Hanford Site. Some primary reasons for public involvement include the following:

- When members of the public are involved in the decision-making process at the Hanford Site, they help ensure that better long-term decisions are made.
- Better decisions are made if the public is involved early, frequently, and regularly.
- Continued public support in the cleanup process will help maintain political support for cleanup funding.
- If the public is not informed or involved in the decision-making process, it has reason to doubt, criticize, or stop the cleanup process.

This is the fourth revision to the Community Relations Plan. (The plan was originally issued in 1990.) The primary changes in the 2001-revised Community Relations Plan include updated information, a better explanation of Hanford Site public participation plans, and a new format for improved readability.

WHY SHOULD THE PUBLIC GET INVOLVED?

Cleanup at Hanford is one of the largest environmental challenges, as well as one of the most expensive. Public support for cleanup activities plays a vital role in ensuring that the Hanford Site receives adequate funding to continue cleanup progress. Public participation in the decision-making process results in better decision-making and more sustainable decisions.

Section 1
INFORMATION RESOURCES AND PUBLIC PARTICIPATION OPPORTUNITIES

The main objective of the Tri-Parties is to inform and involve by providing clear and comprehensive information to the public. This section addresses the various ways to receive information from and provide comments to the USDOE, Ecology, and EPA about Hanford Site activities. This section also presents information about other public organizations that closely follow Hanford Site issues and how the Tri-Parties work with them.

HANFORD CLEANUP LINE

1-800-321-2008

Call the Hanford Cleanup Line to request information about Tri-Party Agreement cleanup and compliance activities at the Hanford Site. Ecology personnel answer all calls and forward requests for information to the appropriate Tri-Party agency. The Tri-Parties strive to provide a timely response to all requests. The Hanford Cleanup Line is advertised frequently in a variety of ways, including all Tri-Party Agreement newspaper notices, brochures, meeting notices, fact sheets, etc.

INTERNET ADDRESSES

Internet web sites are updated regularly with information that include schedules for public involvement on Hanford Site activities.

Ecology: www.ecy.wa.gov/programs/nwp

EPA: www.yosemite.epa.gov/r10/cleanup.nsf/web page/Hanford,+Washington

USDOE: www.hanford.gov/pubinvolve.html

Hanford Advisory Board: www.hanford.gov/hab/

Community Relations Plan:
www.hanford.gov/crp/toc.htm

Hanford Happenings:
www.ecy.wa.gov/programs/nwp/pdf/happenings.pdf

Hanford Update:
www.hanford.gov/rl/programs.asp.html

Link to Stakeholder Addresses:
www.hanford.gov/misc_info/stakehld.htm

Tri-Party Agreement:
www.hanford.gov/tpa/tpahome.htm

MAILING LISTS

The Tri-Parties maintain two mailing lists tailored to different levels of interest on Hanford Site activities. The lists distinguish between 1) those individuals who are "highly interested" and would like to be involved with cleanup and compliance decision-making, and 2) those individuals who would only like to be informed about Hanford Site activities. Individuals on the "highly interested" list could receive 25 or more mailings per year including fact sheets, meeting notices, and schedules, as well as the bi-monthly *Hanford Update* newsletter and the monthly *Hanford Happenings* calendar. Individuals on the general list primarily receive the bi-monthly *Hanford Update* newsletter and the monthly *Hanford Happenings* calendar. If you would like your name to be added to either list, call the Hanford Cleanup Line at **1-800-321-2008** and please specify your mailing list preference, including your e-mail address if you would prefer to receive information electronically.

TRI-PARTY AGREEMENT PUBLICATIONS

A continuing goal of the Tri-Parties is to improve the readability of Hanford Site publications. These publications include the *Hanford Update* newsletter, fact and focus sheets, and other summary publications. The Tri-Parties understand that providing accurate, up-to-date and descriptive information is fundamental for active participation by the public in Tri-Party Agreement decisions.

Hanford Update Newsletter

The *Hanford Update* newsletter is published bi-monthly and provides general information about Tri-Party Agreement cleanup and compliance activities. The *Hanford Update* also contains information on public meetings, workshops, and other opportunities to participate in Hanford Site decisions. The newsletter is available on the Internet at www.hanford.gov/tpa/updates.html.

Hanford Happenings Calendar

The *Hanford Happenings* calendar is published monthly and provides the locations and dates for upcoming meetings, public comment periods, and other Hanford Site cleanup activities. The calendar is available on the Internet at www.ecy.wa.gov/ programs/nwpl/pdf/ happenings.pdf.

Fact and Focus Sheets

Fact and focus sheets provide information on Hanford Site issues, cleanup activities, and opportunities for public involvement, for example a Tri-Party Agreement milestone change package. The Tri-Parties send out fact and focus sheets throughout the year.

Meeting Summaries

Summaries of certain public meetings are available upon request and are located in the Public Information Repositories (see the Hanford Tri-Party Agreement Public Information Repositories section).

Comment and Response Documents

Following a Tri-Party Agreement public comment period, a Comment and Response document is developed by the Tri-Parties to record the public comments received on an issue. Comment and Response documents are distributed to those members of the public who request copies. The documents are also placed in the Public Information Repositories and Administrative Records as part of the decision documentation, and also on a designated web site.

To receive any of the Tri-Party agreement publications, call the Hanford Cleanup Line at 1-800-321-2008.

HANFORD TRI-PARTY AGREEMENT PUBLIC INFORMATION REPOSITORIES

The purpose of the Public Information Repositories is to give the public access to information on Tri-Party Agreement activities and provide documents for public comment. This information may include work plans, transcripts, and summaries of public meetings and workshops, copies of the Tri-Party Agreement, and other related documents.

The Public Information Repositories also have copies of the Administrative Record index. Table 1 in Appendix B lists the Tri-Party Agreement-related documents normally placed in the repositories. A checkout service is not available for documents; however, each library has a copying service.

To review information on Hanford Site Tri-Party Agreement issues and the Administrative Record index, visit the Public Information Repository nearest you:

University of Washington
Suzzallo Library
Government Publications Division
Box 352900
Seattle, WA 98195
(206) 543-4664

Portland State University
Branford Price Millar Library
Science and Engineering Floor
934 SW Harrison
P.O. Box 1151
Portland, OR 97207
(503) 725-3690

USDOE Public Reading Room
Washington State University, Tri-Cities
Consolidated Information Center, Room 101-L
2770 University Drive
Richland, WA 99352
(509) 372-7443

Gonzaga University
Foley Center
East 502 Boone
Spokane, WA 99258
(509) 323-6548

In addition to the Tri-Party Agreement Administrative Records, all information is available on the following Internet web site:

Tri-Party Agreement Administrative Record and Public Information Repository:
www2.hanford.gov/arpir/

NEWS MEDIA ACTIVITIES

To keep the public informed, the Tri-Parties conduct a variety of activities to ensure the media has timely, complete, and accurate information about Hanford Site cleanup and compliance activities. Information is distributed through news releases, public service announcements, editorial boards, Hanford Site tours, and individual contact with reporters.

The Tri-Parties strive to provide advance notice of planned media interactions, notifying each other with at least 48 hours to review any Tri-Party Agreement materials prior to distribution to the media.

HANFORD SITE TOURS

One of the best ways to become more informed about Hanford is by touring the Site. The Hanford Site Saturday Road Tour Program is a series of public bus tours around the 586-square mile Site. Tour participants can see the retired nuclear reactors, the old town sites of Hanford and White Bluffs, and the Central Plateau where chemical separations facilities and underground waste storage tanks are located. The Saturday tours are coordinated through USDOE and eight to ten tours are usually scheduled throughout the summer months, beginning in late April. The tours are free, but pre-registration is required. Participants must be at least 16 years old (18 years of age for tours that include B Reactor), be a U.S. citizen, and bring legal photo identification to obtain a required badge.

USDOE offers specialized program tours to interested parties. Program tours are also offered through EPA and Ecology in coordination with USDOE. These tours are tailored to specific areas of interest for specialized audiences such as congressional representatives, local and national media, and other groups and individuals. Agendas for the program tours are designed to address the interests of the visitors.

For more information on Hanford Site tours, visit our web site at www.hanford.gov.tours/index.cfm or call USDOE Public Affairs at 509-376-7505 or for general information call the Hanford Cleanup Line at 1-800-321-2008.

PUBLIC INVOLVEMENT OPPORTUNITIES

Public Comment Periods on Documents Related to the Tri-Party Agreement

All public comment periods on Tri-Party Agreement documents are announced in regional newspapers. The Tri-Parties also notify individuals through the *Hanford Update* and *Hanford Happenings*.

The length of public comment periods vary according to requirements for permits or actions related to the Tri-Party Agreement; typically, a public comment period ranges from 30 to 45 days. All public comment periods will be determined in accordance with applicable state and federal regulations. When requested, the Tri-Parties will consider extending a public comment period as

provided for under the law. Documents available for public comment are kept at the Public Information Repositories or are available on the Administrative Record and Public Information Repository web site (www2.hanford.gov/arpir/). Documents for public comment may also be requested by contacting the Hanford Cleanup Line at **1-800-321-2008**. Immediate notification will be sent to the requestor if a printing fee will be charged for the document.

After a public comment period closes, the Tri-Parties will consider all comments received before finalizing the document or decision. The Tri-Parties strive to publish a Comment and Response document within 60 days after the public comment period closes when possible. If delays occur due to a large volume and/or the complexity of comments received, interested citizens may be notified by mailer, the *Hanford Update* and/or the Tri-Party Agreement web site at www.hanford.gov/tpa/tpahome.htm. Once the document is finalized, it will be made available to citizens who provided comments and others who request the Comment and Response document. If there are only a few comments made during the public comment period, the agencies may prepare individual letters and/or contact the commentors directly in response to comments.

Final documents, milestone changes or decisions, and Comment and Response documents are available through the Public Information Repositories and Administrative Record web site at www2:hanford.gov/arpir/.

Tri-Party Agreement Public Meetings

In an effort to provide broad and timely perspectives to the public on Hanford Site cleanup priorities and budget decisions, the Tri-Parties regularly conduct public information meetings. To improve effectiveness and efficiency of these meetings, the Tri-Parties strive to use innovative outreach techniques to involve the public and to provide the information to the public 30-45 days prior to holding a public meeting.

Specific Public Meetings

All Tri-Party Agreement quarterly public involvement planning meetings, semi-annual meetings, special meetings, and workshops are open to the public. In addition, the Tri-Parties welcome opportunities for co-sponsorship of meetings by local, state and tribal governments, and members of citizen groups.

The Tri-Parties assess public interest and areas of public concern regarding specific actions based on consultations with tribal governments, and interfaces with the Hanford Advisory Board, stakeholders, interested public and the State of Oregon when public participation activities are conducted in Oregon. A member of the public also may request a public hearing on a permit action or a public meeting on a *Comprehensive Environmental Response, Compensation, and Liability Act of 1980* action. If significant interest is demonstrated, the Tri-Parties will conduct a formal public process.

If the Tri-Parties determine that public interest on an issue is minimal based on feedback and/or the number of requests received, they may conduct informal workshops, briefings, meetings, or informational exchanges instead of holding formal public meetings. The Tri-Parties strive to include a wide variety of viewpoints, such as an alternative viewpoint or local perspective in all Tri-Party Agreement public involvement meetings. When feasible, space is made available for citizens to meet before scheduled public involvement activities.

Annual Budget Meetings

At least one public meeting is held in the spring to involve the public and stakeholders in the USDOE budget formulation, a USDOE commitment reflected in the Tri-Party Agreement (paragraphs 148 and 149). An optional meeting in the fall may be conducted to further discuss and evaluate budget issues. At these meetings, the Tri-Parties discuss the impact of budget decisions and take public comment and questions on cleanup priorities, as well as outline any changes to Hanford Site cleanup objectives and decisions.

One of the meetings may be conducted at the discretion of the Tri-Parties in conjunction with the Hanford Advisory Board. Other meetings will be conducted at public meeting facilities (when available) in key cities in Washington and Oregon.

Tri-Party Agreement Quarterly Public Involvement Planning Meetings

The Tri-Parties meet quarterly with the Hanford Advisory Board, the state of Oregon, local government officials, and interested members of the public to discuss current and future public involvement activities. These public involvement planning meetings are open to the public.

At these Tri-Party Agreement public involvement planning meetings recommendations are made in the following areas:

- Current and upcoming public involvement activities
- Level and type of public involvement needed for activities
- Public outreach activities
- Coordination of multiple public involvement activities
- Enhancement of communication
- Cost efficiencies in public involvement
- Feedback on public involvement activities.

The Tri-Parties are responsible for coordinating these planning meetings. In addition, four times yearly, the Tri-Parties revise the *Hanford Site Public Involvement Activities* document to provide an overview of anticipated public involvement opportunities for the coming months. The revised document identifies which activities the Tri-Parties believe are most important to the public and how they intend to involve the public in the decision-making process. To request a copy of the current *Hanford Site Public Involvement Activities* document, call the Hanford Cleanup Line at **1-800-321-2008** or visit the web site at www.hanford.gov/pubinvolve.html.

Other Tri-Party Agreement Public Outreach Activities

The Tri-Parties conduct other forms of public outreach in Washington and Oregon. Informal public outreach activities are usually conducted on request and include public meetings, focus groups, workshops, open houses, and meetings with local governments and civic organizations. Public outreach activities promote public awareness, education, and involvement with Hanford Site cleanup and compliance decisions. The Tri-Parties also conduct regularly scheduled meetings with public interest group representatives to discuss Hanford Site issues and concerns.

If you would like to have a presentation made to your group by one of the Tri-Parties, call the Hanford Cleanup Line at 1-800-321-2008.

TRI-PARTY AGREEMENT PUBLIC NOTIFICATION PROCESS

Public meetings, hearings, and workshops are announced in the *Hanford Update*, in the *Hanford Happenings* calendar, and are posted on the Tri-Party Agreement and agency web sites, or with other public notices. All members on the Hanford Site mailing list will receive notices on significant public meetings or workshops. In addition, other methods of announcing public participation opportunities may include:

- Advertisements in regional and local newspapers
- Public service announcements on radio and television stations
- News releases
- Trade publications
- Direct mailings to interested parties
- Telephone notification

- Public access television announcements
- Internet postings and calendars
- Notices in the Federal Register
- Electronic distribution lists
- E-mail discussion sites.

The Tri-Parties will strive to notify stakeholders 30 to 45 days before the start of a public comment period or before a public meeting. As much information as possible, regarding the public involvement activity, will be provided prior to the event.

Effective Public Notice

The Tri-Party Agencies will strive to design public notices that will attract a wide range of participants to become involved in a public comment period, attend a public meeting, or otherwise participate in Tri-Party Agreement public participation activities.

Effective notice will include:

- Understandable descriptions of the proposal and its impacts
- How the public can obtain more information and become involved
- The time frame for a public comment period
- Meeting dates, times and locations (when applicable).

In the event that a cleanup plan uses a site-specific risk assessment that would restrict future site use, the public notice will identify potential restrictions and other applicable requirements.

Different public participation activities require different types of notices, and frequently more than one set of regulations applies to the proposed action or decision. In these instances, the agencies will coordinate all requirements to be as comprehensive as possible. When possible, the agencies will seek input on the design and content of notices from public interest groups and other interested parties in the region where a meeting or comment period is being conducted.

TRI-PARTY AGREEMENT PUBLIC INVOLVEMENT EVALUATION PROCESS

Creating opportunities for the public to provide meaningful and useful input to Hanford Site decisions is an ongoing activity. The Tri-Parties work with the Hanford Advisory Board and its committees, stakeholders, and the interested public to improve the process of evaluating public involvement activities and events. The Tri-Parties strive to accomplish the following:

- Publish effective advertisements and meeting notices
- Provide advance meeting notice
- Provide factual written material that is easily understood by the public
- Obtain knowledgeable speakers who are sensitive to different views and opinions, and who provide concise, easily-understood presentations
- Provide meeting leaders who listen to public comment and consider input to decisions
- Develop creative and innovative ways to communicate meeting information to the public
- Conduct effective meetings
- Provide stakeholder access to the design of public involvement activities
- Ensure meeting locations are convenient, easily accessible and cost-effective
- Provide timely feedback after meetings.

The evaluation process consists of two parts. Part 1: Evaluation forms are distributed at all Tri-Party Agreement meetings, hearings, workshops, seminars, etc., to gather timely feedback on the effectiveness of specific events and activities. The comment cards include a space for participants to rate the effectiveness of the event and how the participant heard about the event.

Part 2: Ecology leads an annual evaluation of the overall effectiveness of public involvement activities for the Tri-Parties. The evaluation process begins in October of each year. Surveys are distributed to members of the Hanford Advisory Board, and other members of the public who have indicated a willingness to participate, as well as to Tri-Parties' management and staff. Feedback received on public involvement activities held throughout the year is also included in this annual evaluation. Ecology coordinates distribution of the surveys and compilation of the information, and publishes a final report on the evaluation results no later than the end of each calendar year. The final report has a list of activities conducted during the evaluation period, including the purpose of the activity and lead agency; a summary of comments received; a summary of efforts taken by each agency to reach new audiences; a description of changes made or planned in response to comments received; and a summary of issues raised during the previous evaluation process and how they were implemented. The report will be provided to the full Hanford Advisory Board as well as any survey participant.

The evaluation report is available on the Ecology web site at www.ecy.wa.gov/programs/nwp/pdf/eval.pdf, or by mail by calling the Hanford Cleanup Line at **1-800-321-2008**.

TRIBAL GOVERNMENT INVOLVEMENT

The Hanford Site is located on land at one time ceded to the United States under separate treaties with Indian nations. As a result of treaties with the United States, the Confederated Tribes of the Umatilla Indian Reservation, Yakama Nation, and the Nez Perce Tribe retained certain rights at the Hanford Site. The policies of both the United States and Washington State commit to maintaining a government-to-government relationship with tribal governments. The USDOE consults with tribal governments prior to taking action, making decisions, or implementing programs that may affect the tribes. In addition, USDOE consults with the Wanapum (a nonfederally recognized tribal government) who live adjacent to the Hanford Site and with the Confederated Tribes of the Colville Reservation on cultural resource issues.

The Tri-Parties take a proactive approach to soliciting input from tribal governments on Tri-Party Agreement policies and issues. Specifically, the Tri-Parties conduct periodic briefings for the affected tribal governments. USDOE routinely provides copies of Tri-Party Agreement documents concurrently to tribal governments, Ecology, and EPA.

LOCAL INVOLVEMENT

Several public and private organizations in the Tri-Cities area work closely with the Tri-Parties on Hanford cleanup issues. These organizations include the Tri-City Industrial Development Council; Central Washington Building Trades Council; Hanford Atomic Trades Council; Hanford Communities; Benton, Franklin, and Grant County governments; and the city governments of Richland, West Richland, Pasco, and Kennewick. For more information about local organizations involved in the Hanford Site cleanup, call the Hanford Cleanup Line at **1-800-321-2008.**

Briefings for Elected and Appointed Officials and Agency Representatives

Many people receive their information about the Hanford Site from elected or appointed officials, or from agencies other than USDOE, Ecology, or EPA. The Tri-Parties strive to keep public officials informed through publications, mailings,

and periodic briefings. These officials are also on the "highly interested" mailing list to receive timely notification of significant findings or decisions. The Tri-Parties strive to respond to questions from officials and other agency representatives in a timely manner. The Tri-Parties also welcome requests for information or comments on public involvement activities from officials or agency representatives.

STAKEHOLDER INVOLVEMENT

Hanford Advisory Board

The Hanford Advisory Board was created in 1994 by the Tri-Parties to advise all three agencies on major cleanup policy decisions. The Hanford Advisory Board is composed of 31 members and their alternates who represent a broad range of stakeholder interests including environmental, cultural and socio-economic; Hanford Site employees; public interest; local government; higher education; other Federal and state agencies; and the State of Oregon. Two of three affected tribal governments are represented on the Hanford Advisory Board. One other tribal government participates on the Hanford Advisory Board in an ex-officio status.

The Hanford Advisory Board's Charter describes the Hanford Advisory Board as "...an independent, non-partisan, and broadly representative body consisting of a balanced mix of the diverse interests that are affected by Hanford cleanup issues." The Hanford Advisory Board's mission "...is to provide informed recommendations and advice to the USDOE, U.S. Environmental Protection Agency, and the Washington Department of Ecology ...on selected major policy issues related to the cleanup of the Hanford Site." The Hanford Advisory Board's charter is included in Appendix D.

The Hanford Advisory Board has researched and provided consensus advice on topics ranging from spending and budget priorities to technical recommendations on removing tank waste. The Hanford Advisory Board has also advised the Tri-Parties on the principle to build the Environmental Restoration Disposal Facility, on groundwater pump-and-treat programs, and on privatizing Hanford's tank waste cleanup. The Hanford Advisory Board has issued several pieces of advice on public involvement including public involvement in the budget process and how the Tri-Parties respond to advice.

Included within the Hanford Advisory Board membership are four standing committees: Budgets and Contracts; River and Plateau; Tank Waste; and Health, Safety, and Environmental Protection Committees. Although the Public Involvement and Communication Committee is not a standing committee, it can convene when the Hanford Advisory Board deems it necessary.

For a copy of the Hanford Advisory Board Charter, meeting agendas, and other information, call the Hanford Cleanup Line at 1-800-321-2008 or visit the Hanford Advisory Board web site at www.hanford.gov/boards/hab/index.htm or www.hanford.gov/boards/hab/calendar/calendar.htm

Other Agencies Involved in Hanford Site Cleanup

Washington State Department of Health. The Washington State Department of Health's Division of Radiation Protection regulates Hanford radioactive air emissions. The Division conducts environmental radiation monitoring to fulfill its public health responsibilities and verifies the results of monitoring performed by USDOE and its contractors. The Division also conducts joint investigations with Ecology into practices at Hanford. For more information, contact the Department of Health at (206) 753-3934 or in Washington State at 1-800-525-0127.

Washington Department of Fish and Wildlife. The Washington Department of Fish and Wildlife monitors and documents Hanford Site activities in regard to restoration and mitigation programs to prevent injury to fish, wildlife, and their habitats. The Department also issues state permits for cleanup work involving the disturbance of the Columbia River and its

shoreline. For more information contact the Washington Department of Fish and Wildlife at (360) 902-2250 or visit the web site at www.wa.gov/wdfw.

U.S. Fish and Wildlife Service. The U.S. Fish and Wildlife Service manages the Hanford Reach National Monument/Saddle Mountain National Wildlife Refuge for the USDOE. The land managed by the U.S. Fish and Wildlife Service includes all Hanford Site lands north of the Columbia River and those in the Fitzner-Eberhardt Arid Lands Ecology Reserve. Other lands, as they are cleaned up, may be added to the U.S. Fish and Wildlife Service management scope. For more information, contact the U.S. Fish and Wildlife Service at (509) 371-1801 or visit the web site at www.fws.gov/.

Oregon Office of Energy. The Oregon Office of Energy is the lead Oregon agency on Hanford Site issues. This office monitors cleanup and other activities at the Hanford Site and the downstream Columbia River environment. Oregon staff work with USDOE and local governments on safe transport of Hanford nuclear wastes through Oregon. Staff also support the Oregon Hanford Waste Board, which recommends policy and gives advice to the Oregon Governor on Hanford Site issues. The Oregon Office of Energy is also the lead for Hanford emergency planning and response and public involvement in Oregon. For more information, contact the Oregon Office of Energy at (503) 378-4040 or in Oregon at 1-800-221-8035, or visit the web site at www.energy.state.or.us/

Organizations Involved with Hanford Site Cleanup

For organizations actively involved in Hanford Site cleanup issues, see Appendix D in this document or the Hanford Advisory Board web site at www.hanford.gov/boards/hab/index.htm.

EPA Technical Assistance Grants

The EPA's Technical Assistance Grant program can provide funds to citizen groups affected by Superfund sites. These funds can be used by citizen groups to hire technical advisors to help them interpret and understand the complex technical materials produced as part of the Superfund process. Grants can be up to $50,000 for the life of the project and require a local share contribution of 20 percent of the total program cost. The local share can be cash or in the form of in-kind services. Because Hanford now has three Superfund sites, three Technical Assistant Grants could be made available. EPA has a *Citizen's Guidance Manual* and videos that explain the program and illustrate the ways in which such a grant can help the community participate in the Superfund process. For more information, please contact:

TAG Coordinator
U.S. Environmental Protection Agency
1200 6th Ave. ECO-081
Seattle, WA 98101
(206) 553-6919

Washington State Public Participation Grants

Washington State Public Participation Grants promote public involvement and education on Hanford Site cleanup activities. The grants facilitate active participation by individuals and citizen groups in the investigation and remedial action required due to releases or threatened releases of a hazardous substance. For more information, please contact:

Solid Waste Financial Assistance Program
Washington Department of Ecology
P.O. Box 47600
Olympia, WA 98504-7600
(360) 407-6061

For more information and contacts for organizations involved in Hanford Site cleanup activities, see the "Hanford Contacts." To obtain a copy, call the Hanford Cleanup Line at 1-800-321-2008.

Section 2

HANFORD DECISION PROCESS

Many decisions are made at the Hanford Site. This section addresses decisions made within the scope of the Tri-Party Agreement. Those decisions are made pursuant to the Tri-Party Agreement; the *Resource Conservation and Recovery Act of 1976*; the *State of Washington Hazardous Waste Management Act;* and the *Comprehensive Environmental Response, Compensation, and Liability Act of 1980.* The Tri-Party Agreement provides the processes for making cleanup decisions. The *Resource Conservation and Recovery Act of 1976* and the *State of Washington Hazardous Waste Management Act* govern the management (treatment, storage, and disposal) of hazardous and dangerous wastes to minimize threat to human health and the environment. These regulations provide "cradle-to-grave" controls by imposing management requirements on generators and transporters of hazardous and dangerous wastes, and upon owners and operators of treatment, storage and disposal facilities that generate and manage hazardous and dangerous wastes. The *Comprehensive Environmental Response, Compensation and Liability Act of 1980*, commonly referred to as "Superfund," was designed to respond to situations involving the past disposal of hazardous substances. As such, it compliments *Resource Conservation and Recovery Act of 1976* and the *State of Washington Hazardous Waste Management Act* which regulate ongoing hazardous and dangerous waste handling and disposal.

HANFORD TRI-PARTY AGREEMENT DECISIONS

The Tri-Party Agreement provides the legal framework for Hanford Site cleanup and compliance schedules. Tri-Party Agreement decisions cover a wide range of issues. *Resource Conservation and Recovery Act of 1976* and *Comprehensive Environmental Response, Compensation, and Liability Act of 1980* decisions are made under the umbrella of the Tri-Party Agreement.

Since 1989, new information has been obtained about the Hanford Site and advanced technologies are being developed to address Site contamination problems. Therefore, periodically decisions made as part of the 1989 Tri-Party Agreement must be revisited in light of new information, advanced technology, or for other reasons.

To address this need, the Tri-Parties developed a system called the change request process. This process allows changes to the Tri-Party Agreement cleanup and compliance schedule by mutual agreement of the Tri-Parties. Any of the Tri-Parties can initiate a proposed change, although as implementor of cleanup, USDOE initiates most changes. This process provides a formal mechanism for reaching agreement among all the Tri-Parties. If agreement cannot be reached, a formal dispute resolution process is outlined in the Tri-Party Agreement.

Some of the changes and decisions must include public involvement and public comment, while others can be made by the Tri-Parties in a routine manner, and do not require public involvement. All schedule changes, which must be for good cause, are documented in the Tri-Party Agreement work schedule.

CHANGES IN THE TRI-PARTY AGREEMENT

Change Request Process

Proposed wording or milestone changes in the Tri-Party Agreement can be very modest or they can be significant changes in strategy. The process for making a change gives the Tri-Parties some discretion in what kind of public involvement process will take place. A flow diagram of the change request process is on page 12.

Twice in the process, the Tri-Parties determine whether the proposed change is significant. Each time, if they conclude the change is significant, they will initiate a process for public involvement.

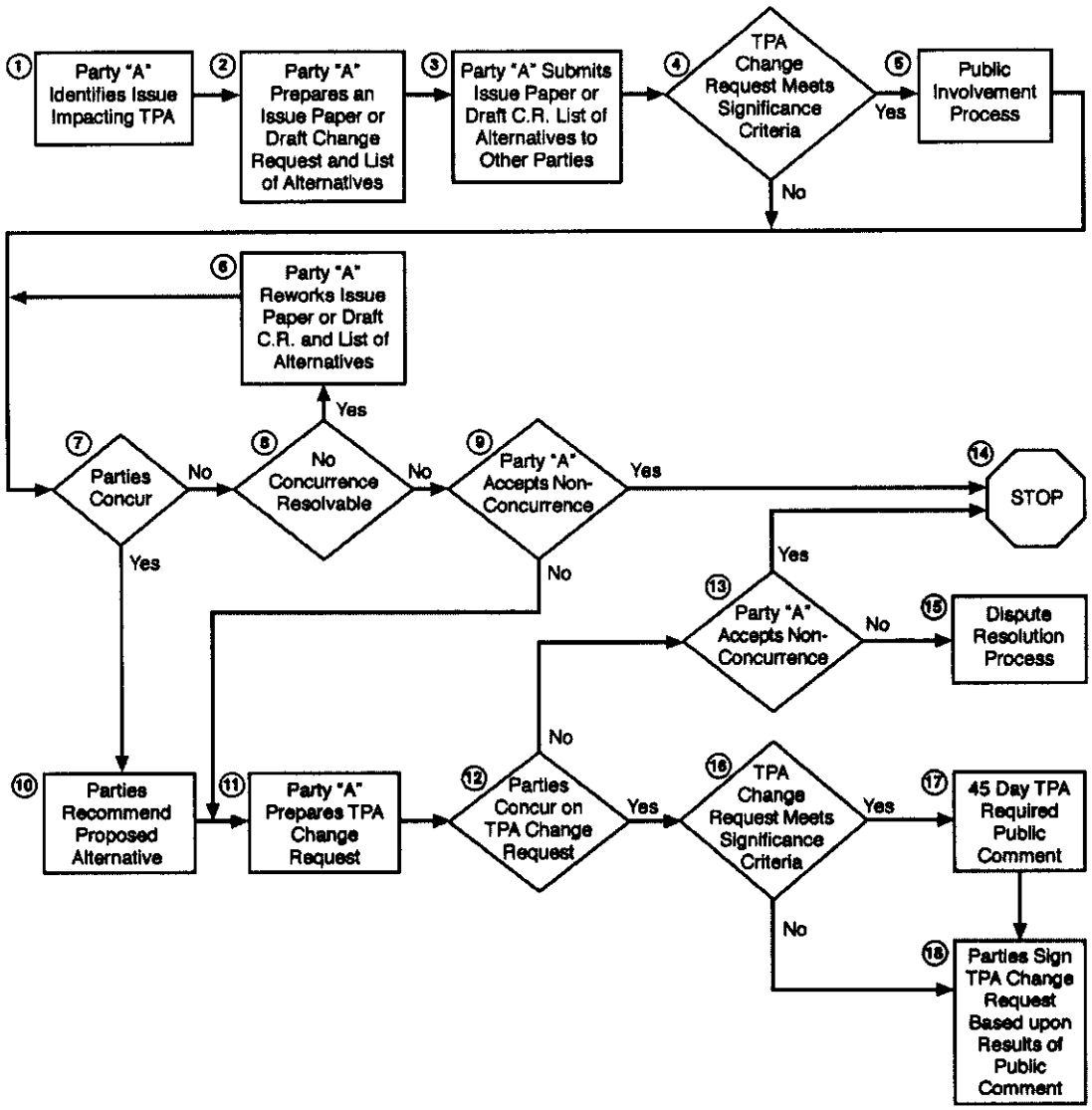

Tri-Party Agreement Change Request Decision Process

E0107061.1

The criteria reviewed by the Tri-Parties to determine whether a change is significant include the following:

- The draft change could have substantial adverse impact on the environment.
- The draft change involves a major milestone.
- The draft change could have a significant impact on maintaining and fulfilling important Hanford Site cleanup objectives and Tri-Party Agreement milestones.
- The draft change could have an impact on interested parties, including Native Americans, labor unions, the Tri-Cities community, and Hanford public interest groups.
- The draft change is proposed under a law or regulation that stipulates public involvement.

Each of the criteria is evaluated to determine the suitable level of public involvement.

The first opportunity for public involvement allows the interested public to help clarify the issue with USDOE and regulators and offer suggestions for alternatives to be considered. The second public involvement opportunity focuses on the proposed change to the Tri-Party Agreement.

A significant Tri-Party Agreement change requires a 45-day public comment period. Before approving the change, the Tri-Parties consider all public comments as well as summarize and respond to the comments. One copy of the final Tri-Party Agreement change and a Comments and Responses document is sent to all individuals who request them. Focus groups or individual meetings may be used to clarify comments or responses. Also, the milestone change and Comments and Responses document are distributed to the Public Information Repositories and Administrative Record (see page 2). The Tri-Parties may schedule public meetings to discuss the proposed change.

Resource Conservation and Recovery Act of 1976-Related Decisions

The *Resource Conservation and Recovery Act of 1976* was enacted by Congress. It requires "cradle-to-grave" (from the first point of waste

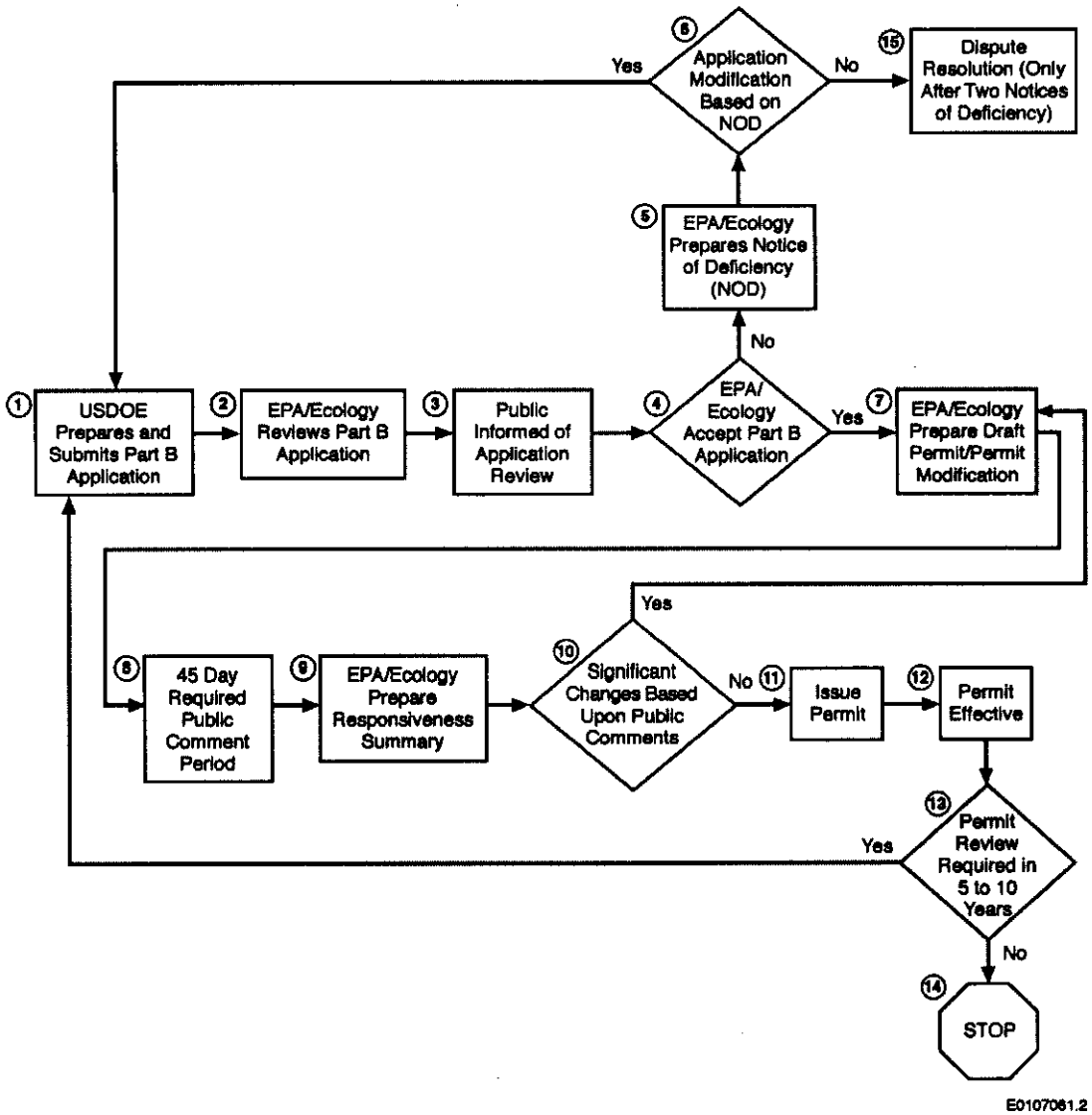

Tri-Party Agreement *Resource Conservation and Recovery Act of 1976* Decision Process

generation until final disposal) management of hazardous wastes by all generators, transporters, and owners/operators of treatment, storage, and disposal facilities that handle hazardous waste. A major goal of the *Resource Conservation and Recovery Act of 1976* is to reduce the generation of hazardous waste.

The EPA delegated authority to Ecology to carry out the base *Resource Conservation and Recovery Act of 1976* program (ongoing waste management) in Washington State through its own dangerous waste program, the *Washington State Hazardous Waste Management Act*. Washington State regulations for dangerous waste management are similar to, but more restrictive in some cases than, the *Resource Conservation and Recovery Act of 1976* regulations. A Hazardous Waste Permit was issued in August 1994 for the entire Hanford Site by the EPA and Ecology. The permit outlined general conditions for the operation and closure of hazardous waste treatment, storage, and disposal sites at Hanford.

The *Resource Conservation and Recovery Act of 1976* covers the treatment, storage, and disposal of hazardous waste, such as tank waste. The decision outline for this process is shown on the preceding page. There are several informal points of communication with the public during the *Resource Conservation and Recovery Act of 1976* permit process. As described in the *Resource Conservation and Recovery Act* decision outline, draft permits require a 45-day public comment period. All public comments are considered before issuing the final permit. All individuals who comment on the draft permit receive a copy of the final permit (without attachments) and the Response Summary, that includes a summary of the public's comments, responses to the comments by Ecology and EPA, and changes to the permit as a result of public comment.

According to Washington State Dangerous Waste Regulations, an individual may also send a written request for a public hearing to the director of the Department of Ecology, P.O. Box 47600, Olympia, WA 98504-7600. The request must state the nature of the issue to be raised at the hearing. Decisions on the need for public hearings will be made on an individual basis, at the discretion of Ecology. If a hearing is held, it will be in the community where the interest in the issue is greatest.

Comprehensive Environmental Response, Compensation, and Liability Act of 1980 Decisions

Under the *Comprehensive Environmental Response, Compensation, and Liability Act of 1980*, a plan is developed for remediation of each waste site. The best technology is selected after a thorough study of the characteristics of that site. In general, EPA is the regulator for decisions about historical waste sites. The decision process is defined under the *Comprehensive Environmental Response, Compensation, and Liability Act of 1980*. The decision outline for this process is shown on the right side of the decision process flowchart on page 15. In the *Comprehensive Environmental Response, Compensation, and Liability Act of 1980* process, the proposed cleanup plan must undergo a 30-day public comment period before a decision is made. A public meeting may be requested on the plan during the comment period by contacting the Hanford Cleanup Line at **1-800-321-2008**.

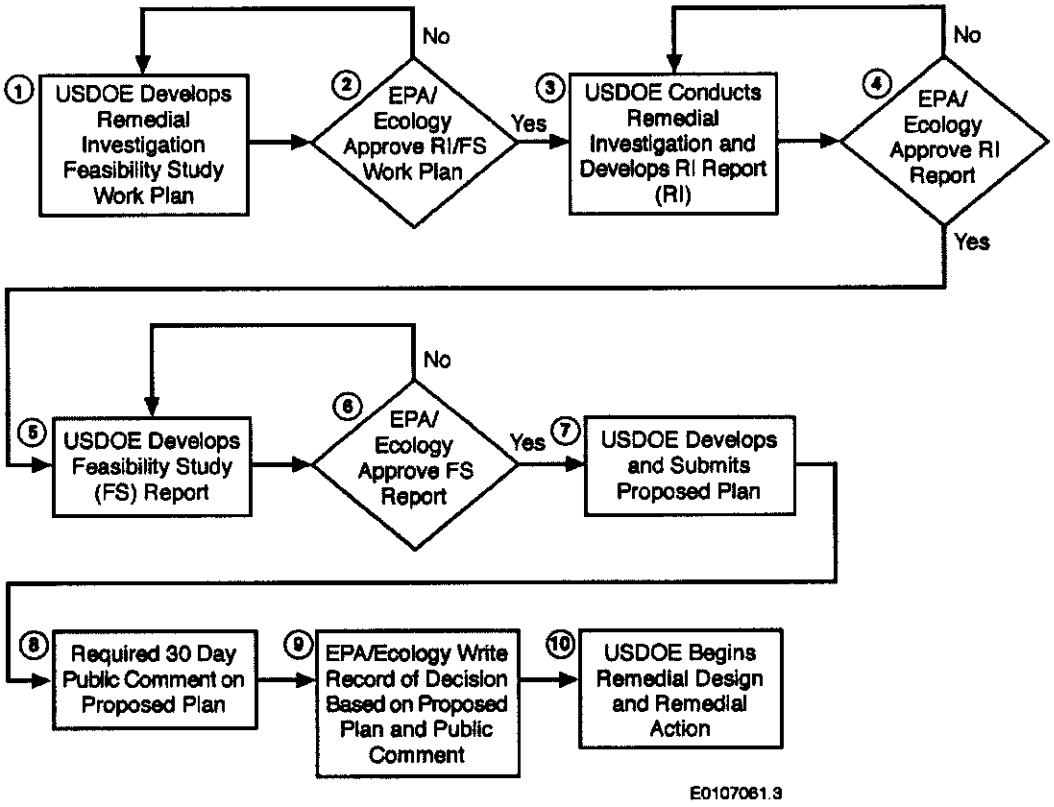

Tri-Party Agreement *Comprehensive Environmental Response, Compensation, and Liability Act of 1980* Remedial Investigation/Feasibility Study Decision Process

Expedited Response Actions

In cases where the waste could pose a threat to human health or the environment, the Tri-Parties may use an Expedited Response Action process, also known as removal actions, to reach a quicker decision. At the Hanford Site, Expedited Response Actions are sometimes used where timely action has resulted in overall cost effectiveness for cleanup of historical waste sites. Section 104 of the *Comprehensive Environmental Response, Compensation, and Liability Act of 1980* outlines the Expedited Response Action guidelines.

The decision process for an Expedited Response Action is shown on the flowchart on page 16. Step 9 is the one point at which there is a 30-day public comment period on an Expedited Response Action, if the action is not time-critical. In the event of a time-critical Expedited Response Action, no public comment period is provided before an action is taken. There are two reasons for this: 1) concerns about health and safety push that require an expedited action, and 2) time-critical Expedited Response Actions are only stop-gap measures taken to protect health and safety, and provide time to make a longer-term decision in which the public will be consulted more extensively. In some situations, if time is not critical, the Tri-Parties may offer opportunities for public involvement beyond those steps shown.

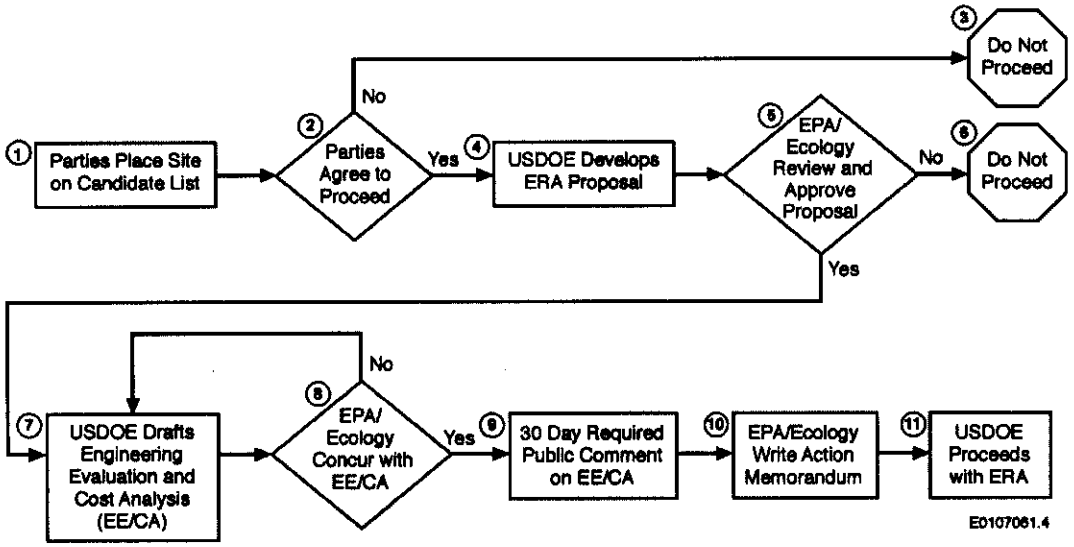

Tri-Party Agreement Expedited Response Action Decision Process (Non-Time Critical)

Section 3

DESCRIPTION OF THE HANFORD SITE AND ACTIVITIES CARRIED OUT ON THE SITE

This section provides a general description of the Hanford Site, its activities and past practices. It is not a complete description of all that is known about the Hanford Site, its operations, or its waste management history. More recent data on environmental contamination and groundwater plumes may be found in several documents publicly available at the USDOE Public Reading Room in Richland, or by searching the Reading Room's catalog on the Internet at www.rrcatalog.pnl.gov.

SITE DESCRIPTION

Hanford is a 586-square mile site in southeastern Washington State, situated north and west of the cities of Richland, Kennewick, and Pasco, an area commonly known as the Tri-Cities. Hanford is approximately 140 miles southwest of Spokane, Washington; 200 miles southeast of Seattle, Washington; and 200 miles northeast of Portland, Oregon. (Refer to Hanford Site map.) The Columbia River runs through the northern portions of the Site, then turns south to form part of the eastern boundary.

The geologic structure beneath the Hanford Site consists of three distinct formations. The deepest level is a thick series of basalt flows that have been warped and folded, resulting in extensions that crop out as rock ridges in some places. Layers of silt, gravel, and sand form the middle level, known as the Ringold formation. The uppermost level is known as the Hanford formation and consists of gravel and sands deposited by catastrophic floods. Both confined and unconfined aquifers can be found beneath the Hanford Site. Confined aquifers consist of water-saturated, porous material confined by layers of basalt. Unconfined aquifers consist of water-saturated, porous material located above the first confining basalt layer. The depth of the water table ranges from 60 to 250 feet below ground surface.

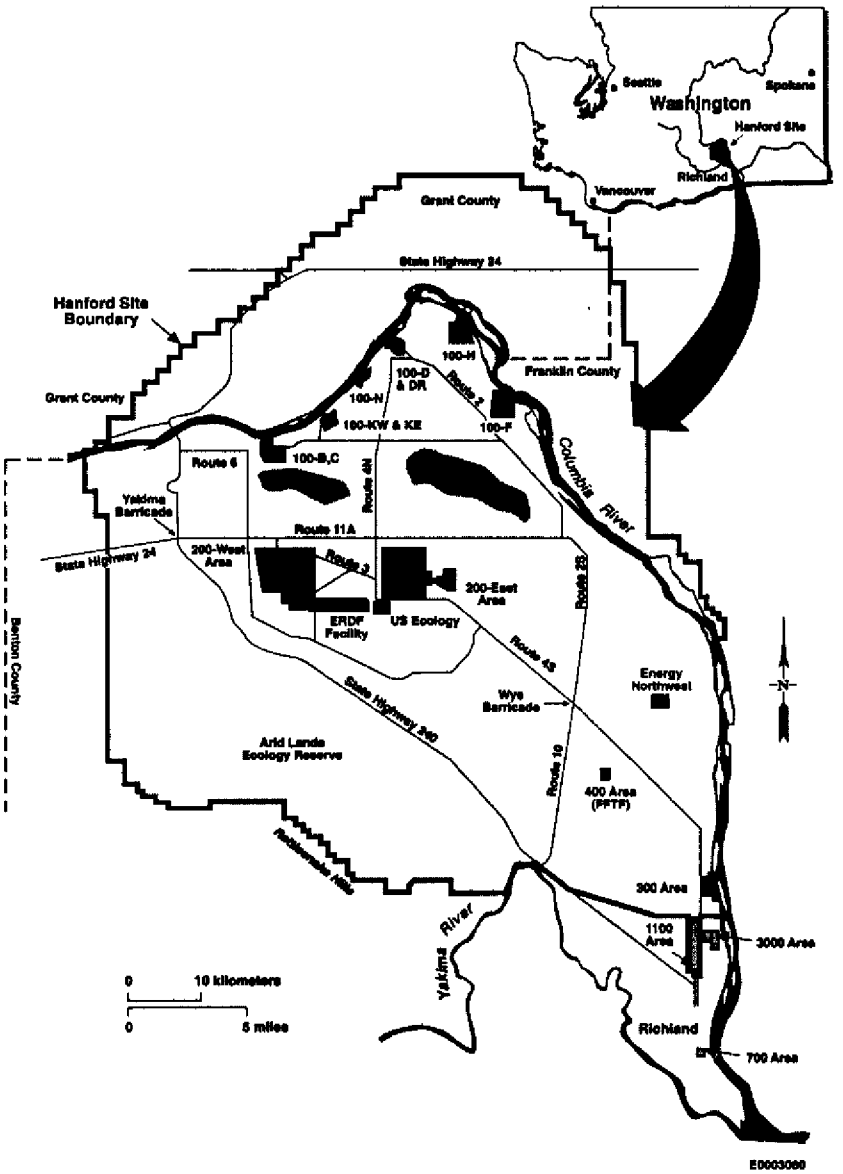

Hanford Site

Semi-arid land with a sparse covering of cold desert shrubs and drought-resistant grasses dominates the Hanford Site landscape. Forty percent of the Site's annual 6.25 inches of rain occurs between November and January. The land surrounding the Hanford Site is used primarily for agriculture and livestock grazing. The major population center near the Site is the Tri-Cities, with a combined population of nearly 120,000. The southwest area of the Hanford Site, covering 120 square miles, is designated as the Fitzner-Eberhardt Arid Lands Ecology Reserve. The Arid Lands Ecology Reserve is managed for the USDOE by the U.S. Fish and Wildlife Service, part of the Department of the Interior, and is used for ecological research and preservation. The Site's Wahluke Slope area, also known as the North Slope, located across the Columbia River, is also managed for the USDOE as a wildlife refuge by the U.S. Fish and Wildlife Service. The Wahluke Slope and Arid Lands Ecology Reserve, which comprise 45 percent of the 586-square-mile Site, have been cleaned and removed from the EPA Superfund list. In 2000, President William Clinton created the Hanford Reach National Monument that encompasses a 0.25-mile corridor on each side of the Columbia River for a 51-mile stretch through the Hanford Site. 'The Hanford Reach National Monument is managed by the U.S. Fish and Wildlife Service and USDOE.

Non-USDOE facilities within Hanford Site boundaries include three nuclear plants owned by Energy Northwest, a public utility. The Columbia Generating Plant (formerly WNP-2) is the only nuclear power plant operating to make electricity. Construction was stopped on WNP-1 and WNP-4 during the 1980s, but in 2001 Congress funded a study to investigate the feasibility of completing WNP-1.

Another non-USDOE facility on the Hanford Site is a low-level radioactive waste disposal facility operated by US Ecology, a private firm licensed by Washington State.

Additionally, the Laser Interferometer Gravitational Observatory project, a joint endeavor of the California Institute of Technology, and the Massachusetts Institute of Technology, sponsored by the National Science Foundation, built on the Hanford Site in 1994. The Laser Interferometer Gravitational Observatory is an advanced scientific observatory, designed to team with similar projects in Louisiana and Italy, for detecting gravity waves. Findings are expected to aid in understanding the workings of the universe, including Einstein's theories of gravity. The Laser Interferometer Gravitational Observatory is not a USDOE project, but the Hanford Site location was selected because of its available space and seismic stability.

USDOE facilities are located throughout the Hanford Site and the city of Richland. The Site is divided into six administrative areas, known as the 100, 200, 300, 400, 600, and 1100 Areas. The first four areas contained most of the nuclear operations at the Hanford Site. The 100 Area includes nine deactivated nuclear production reactors along the northern stretch of the Columbia River. The 200 East and 200 West Areas, located in Hanford's Central Plateau, contain approximately 53 million gallons of high-level radioactive waste in aging underground tanks, and the principal nuclear chemical processing and waste management facilities. The 300 Area, approximately three miles north of the city of Richland, contains research and development laboratories and former reactor fuel manufacturing facilities. The Fast Flux Test Facility is located in the 400 Area, which lies about 9 miles northwest of the 300 Area. The 600 Area is the administrative designation for Site lands that are not part of any other administrative area. The 1100 Area, located adjacent to the Richland city limits, once contained vehicle maintenance and storage facilities. However, this 1.25-square mile area was cleaned up, removed from the Superfund list in 1995, and transferred to the Port of Benton (a local port district) to assist in economic diversification development in the North Richland area and is no longer a part of the Hanford Site.

HANFORD SITE HISTORY

The Hanford Site was originally inhabited by Native Americans, primarily the Wanapum Band. It was also used by the Yakama, Nez Perce, Umatilla, Walla Walla, and Cayuse Tribes. In 1855, the Yakama, Nez Perce, Umatilla, Cayuse and Walla Walla Tribes signed treaties with the United States under which the tribes ceded to the Federal government the lands on which the Hanford Site is located and other lands. The tribes reserved certain rights in the ceded lands: to take fish from all streams within or adjacent to the territory and at their usual and accustomed places, and to erect temporary buildings for curing fish. The tribes also reserved the privileges to hunt, to gather roots and berries, to graze their horses and cattle on open and unclaimed land, and to observe traditional religious practices at physical locations considered sacred.

Parts of the land, now the Hanford Site, were settled by non-Native Americans and used for irrigated orchards, farms, and ranches before World War II. Approximately 6,000 acres were used to grow peaches, pears, grapes, asparagus, and other agricultural products. The towns of Hanford, White Bluffs and Richland were founded by some of these non-Native Americans.

Hanford Site construction began in March 1943 after the Manhattan District of the Army Corps of Engineers chose it as one of the sites for the highly secret Manhattan Project. Hanford's mission was to produce plutonium for the world's first nuclear weapons. Hanford was considered to be an ideal site for the Manhattan Project for several reasons: 1) its remote location; 2) access to railroad systems; 3) the abundance of water from the Columbia River for cooling the reactors; and 4) the abundance of hydroelectric power from dams on the Columbia River. About 1,500 people who were living within the Site boundaries were forced to move.

In September 1944, with the first operation of B Reactor in the 100 Area, the Department of Defense (at that time known as the War Department) began producing materials to be used in nuclear weapons. B Reactor startup was followed by the startup of D Reactor in December 1944, and F Reactor in February 1945. These three reactors produced the initial plutonium for nuclear weapons.

By 1955, seven reactors similar in design to the original B Reactor were built and all eight reactors were in operation to produce plutonium at the Hanford Site. Between 1959 and 1963, a very powerful dual-purpose reactor, N Reactor, was constructed. In addition to producing plutonium, N Reactor steam was used to make electricity for domestic consumption. In 1966, the utility known then as the Washington Public Power Supply System (now Energy Northwest) built a power generating facility near the N Reactor to harness reactor steam to generate electricity.

In addition to the reactors, operations at the Hanford Site included other elements of the nuclear fuel cycle: fuel fabrication, chemical processing, waste management, and research and development facilities. Large amounts of radioactive substances were released to the air, ground, and water during early operations at the Hanford Site. The possible health consequences of these releases are being studied by programs outside the Tri-Party Agreement.

The development of Hanford's plutonium production capacity resulted in the growth of the area surrounding the Site. In the months following initial construction on the Site in 1943, more than 50,000 construction workers moved to the Hanford area. Many of these workers later settled in the Tri-Cities, which became not only the fourth largest metropolitan area in Washington State, but a new economic hub for the region.

Eight of the nine plutonium production reactors were closed between 1964 and 1971 when the nation's plutonium needs diminished due to a shift in national defense policy. As part of a national program to investigate peaceful uses of nuclear power and research, the Hanford Site was chosen as the location for the Fast Flux Test Facility advanced reactor in 1967.

In the early 1980s, Hanford Site activities shifted again to re-emphasize defense production. Site facilities were upgraded and used to produce material that was to be part of President Ronald Reagan's Strategic Defense Initiative (sometimes known as Star Wars).

Beginning in 1989, USDOE's primary mission at the Hanford Site shifted from production to waste cleanup. The Tri-Party Agreement was signed in May 1989, among the USDOE, EPA, and Ecology. No plutonium for defense purposes has been produced at the Hanford Site since that time.

SCIENCE AND TECHNOLOGY MISSION

The USDOE's Pacific Northwest National Laboratory (Pacific Northwest) is located just south of the Hanford Site. Pacific Northwest provides science and technology support for USDOE's science, environmental, quality, energy and national security mission.

Pacific Northwest staff members provide research and engineering design to develop new environmental technologies as well as support clients in making informed environmental decisions. They also advance fundamental knowledge in the biological, physical and information sciences; provide solutions that prevent proliferation of nuclear, chemical and biological weapons of mass destruction; and develop new technologies to assure the nation's energy security.

Battelle has operated Pacific Northwest for USDOE and its predecessors since 1965. A unique feature of Battelle's contract with the Department allows its staff to work for private industry.

PAST AND PRESENT OPERATIONS AT THE HANFORD SITE

USDOE activities at the Hanford Site now center around waste management, environmental restoration, and science and technology. Activities that have been or are presently conducted at the Hanford Site are described in the following sections, and are broken into Hanford's main operating areas.

100 AREA

The 100 Area consists of 26 square miles of land along the Columbia River where nine water-cooled plutonium reactors were constructed between 1943-1963 as part of the nation's defense program. There are six reactor areas in the 100 Area. Three of these areas contain two reactors each, and three contain just one reactor each. All nine reactors were operating at one time during the early1960s, but only N Reactor remained in operation after1971. N Reactor ceased operations in January 1987. The other eight reactors are B Reactor, 1944-1968; D Reactor, 1944-1967; F Reactor, 1945-1965; DR Reactor, 1950-1964; H Reactor, 1949-1965; C Reactor 1952-1969; KW Reactor, 1955-1970; and KE Reactor, 1955-1971. B Reactor is listed on the National Register of Historic Places and is being considered for preservation as a museum.

While in operation, the reactors disposed cooling water and solid wastes in the Columbia River and in more than 100 trenches, cribs (underground drain fields), ponds, and burial grounds in the 100 Area. Also, leaks in the reactors' wastewater piping and retention systems caused soil and underlying groundwater to be contaminated with chemical and radioactive pollutants.

The primary contaminants are the radioisotopes strontium-90, cobalt-60, cesium-137, tritium, and the heavy metal chromium. Solid waste burial grounds and other facilities not associated with liquid wastewater may also contain significant amounts of contaminants. These could pose human or environmental threats through exposure to ground and surface water contaminated by these substances. Some of the waste has reached groundwater, which ultimately flows into the Columbia River. The 100 Area has about 11 square miles of waste disposal locations and contaminated groundwater.

Hundreds of soil waste sites have been identified in the 100 Area, and contractors working for USDOE's Richland Operations Office began remediating them in the mid-1990s. Since then, over two million tons of contaminated soil have been excavated and taken to a lined, permitted, mixed waste landfill called the Environmental Restoration Disposal Facility in the center of the Hanford Site. The Environmental Restoration Disposal Facility lies more than 200 feet above the groundwater, and all of its rainwater and drainage water is collected and treated to remove contaminants before being discharged. Soil cleanup operations in the 100 Area are projected to last until at least 2012, and involve removing an estimated 10 million tons of waste from the 100 and 300 Areas. Final remediation of surface and near-surface sites will consist of placing clean fill dirt on the formerly contaminated areas, and re-vegetating with native plant species. Additionally, "pump-and-treat" systems are in use to reduce chromium levels and the levels of some other contaminants in 100 Area groundwater sites. The chromium cleanup actions will help protect salmon spawning areas in the Hanford Reach.

Contamination discharges from the 100 Area have stopped almost totally, although there is slow seepage of some contaminants to the Columbia River through underground springs and groundwater. Monitoring results show that concentrations of radionuclides identified in the river are within the drinking water standards set by the EPA and Washington State.

The 100 Area reactors are being remediated in the USDOE Interim Safe Storage program, known as "cocooning." Beginning in late 1996, all of the "wings" were torn off of the C Reactor building; hundreds of tons of asbestos, steel, copper, and contaminated soil were removed; and the old pumphouse, pumps, tunnels and other ancillary parts of the structure were razed. In total, approximately 80 percent of C Reactor was eliminated and buried in Hanford Site disposal facilities. Only the core and the surrounding shields were left. They were then sealed up, and given a new aluminum and zinc-coated steel roof slanted at a sharp angle to facilitate rain run-off and extended down over the top portions of the old shield walls for additional sealing. The entire C Reactor Interim Safe Storage Project was completed in October 1998. Presently, interim safe storage projects are underway at F, H, and DR Reactors, and similar projects are planned for at least three other Hanford production reactors. Costs decline at each location as crews learn their way through the maze of tunnels, levels, and service areas.

One of the major cleanup priorities in the 100 Area is the K Basins. More than 2,100 metric tons of spent nuclear fuel, nearly 80 percent of USDOE's nationwide inventory, is stored in concrete basins adjacent to the K West and K East reactors. Located a few hundred yards from the Columbia River, the 40-year-old basins do not meet current safety standards, and one has a history of serious leaks. After six years of planning, design, and construction, operations to remove the spent nuclear fuel from the basins began in December 2000. Operations are now fully underway and fuel removal is scheduled to be completed in mid-2004. Fuel is removed from the basin water in a large steel container called a Multi-Canister Overpack, taken to a new drying facility where the moisture is removed, and then sent to dry storage in steel tubes beneath a large building in the Hanford Site's Central Plateau.

200 AREA

Chemical processing, plutonium finishing, and defense waste management activities took place in the 200 East and 200 West Areas, located on the Central Plateau. Since 1944, nuclear fuel irradiated in Hanford's 100 Area production reactors was transported to the 200 Areas and chemically treated to remove and refine plutonium and uranium. The process involved dissolving the solid irradiated fuel elements, and then chemically separating constituents in order to separate plutonium and uranium from waste fission products. Then the plutonium constituent, mixed with nitric acid in a liquid plutonium nitrate form, was heated with some forming agents to produce solid metal plutonium shapes.

These processes produced radioactive, hazardous, and mixed (radioactive and hazardous) wastes, all of which have been stored or disposed in the 200 Areas. The 200 Areas contain 149 underground, single-shell storage tanks and 28 double-shell tanks with a capacity of up to 1 million gallons each. These tanks store more than 53 million gallons of high-level radioactive waste, the majority of which came from the radiochemical facilities. Up to 67 of the single-shell tanks are known or suspected to have leaked some of their contents into the soil. Between 1 and 2 million gallons of tank wastes are believed to have leaked, with some contaminants reaching groundwater. Congress created the Office of River Protection in 1998 to protect the Columbia River from the hazardous tank waste. The primary purpose of this USDOE field office is establishing the Hanford tank waste treatment complex. The mission of the Office of River Protection is to retrieve high-level tank waste, build and operate tank waste facilities, and to close tank farms.

Wastes from the plutonium finishing operations were more varied, and generally smaller in volume. Sludges, powders, shavings, aerosols, liquids, and solids were generated as wastes from these operations. Many of the liquid wastes were disposed in the soil south of the Plutonium Finishing Plant in the 200 West Area, and stored in tanks after 1973. Various plutonium materials and wastes remain in the Plutonium Finishing Plant and are undergoing stabilization and cleanout today.

Solid radioactive and mixed wastes were disposed over the years by burial in trenches and in two large structural tunnels at the Hanford Site. The two tunnels extend just south of the Plutonium-Uranium Extraction plant in the 200 East Area, and were used to dispose of very large items. In 1970, Hanford Site policy changed to mandate that all solid waste disposals had to occur in the northwest quadrant of the 200 West Area, and that wastes and locations had to be labeled to record their contents and radioactivity levels. Today, solid wastes known to contain transuranic elements are being excavated for shipment to the Waste Isolation Pilot Project in New Mexico for permanent disposal. Transuranic elements are those higher, or heavier, than uranium on the Periodic Table of the Elements. These elements include plutonium, neptunium, and americium. Low-level solid wastes will remain buried at the Hanford Site in perpetuity.

Over the years, low-level liquid wastes from 200 and 300 Area facilities were discharged to Site soils through various trenches, drains, cribs, and, in a few cases, reverse wells (also known as injection wells). A total of about 440 billion gallons were so disposed to Site soils (not counting reactor cooling water that went to the Columbia River). The practice of discharging untreated liquid wastes to Hanford Site soils ended in 1995, when the Liquid Effluent Retention Facility began operations. The facility, along with two Treated Effluent Disposal Facilities built onsite in the early 1990s, treats all contaminated discharges to remove radioactivity before liquids are discharged to the soil.

Groundwater samples taken over the years in the 200 Areas have revealed concentrations of many radioisotopes, including tritium (a radioactive isotope of hydrogen), uranium, strontium-90, cesium-137, iodine-129, and others. Chemicals including cyanide, carbon tetrachloride and others also are present in 200 Area groundwater. Cyanide is an organic compound that was used during uranium recovery, and carbon tetrachloride is a solvent that was used in the plutonium extraction process in the Plutonium Finishing Plant. Contaminants spread out in groundwater from the point of disposal into large fans known as plumes. Spreading from Hanford's 200 Areas, the tritium plume is the largest and extends east to the Columbia River. In total, the 200 Areas contain 230 known liquid disposal locations that generated 215 square miles of contaminated plumes.

In the early 1990s, a large project began to remove carbon tetrachloride from soils in the vicinity of the Plutonium Finishing Plant using a vapor extraction method. Thus far, about 20 percent of the approximately 900,000 pounds of the chemical has been extracted from 200 West Area soils. A large pump-and-treat effort is underway for contaminated groundwater below the historical U Pond site in the 200 West Area. In total, over 300 million gallons of contaminated groundwater

have been pumped out, treated, and released as clean water at the Hanford Site thus far. In 1998, Hanford's newest major project was created, the Groundwater/Vadose Zone Integration Project, to examine all aspects of subsurface, non-solid contamination in an integrated fashion. The vadose zone is that area between the surface of the soil and the groundwater.

The following large facilities operated over the years in the 200 Areas.

B Plant and T Plant

Processing of the Hanford Site's reactor fuel from 1944 through 1956 was conducted at B Plant in the 200 East Area and T Plant in the 200 West Area. Since 1957, T Plant has been used as a decontamination facility for Site equipment. T Plant is now the oldest nuclear facility in the world that still has a nuclear mission. Today, T Plant is being readied to store the contaminated sludge that will come out of the spent nuclear fuel basins at the Hanford Site.

From 1968 through 1984, B Plant was used to remove high heat-producing isotopes of cesium and strontium from the liquid waste in storage tanks. The Waste Encapsulation and Storage Facility was added to the B Plant complex in 1974 to encapsulate and store the cesium and strontium. B Plant was deactivated in a project that was completed in 1998. During that project, the Waste Encapsulation and Storage Facility was "de-coupled" from B Plant, so that it can continue to store the nearly 2,000 capsules until final disposal decisions are made. As of now, schedules call for the contents of the capsules to be vitrified in Hanford's vitrification facility beginning in 2018.

Reduction Oxidation Plant and Plutonium-Uranium Extraction Plant

In the 1950s, two new radiochemical processes were invented at the Hanford Site. Chemical processing was conducted at the Reduction Oxidation Plant in the 200 West Area from 1952 through 1967, and at the Plutonium-Uranium Extraction plant in 200 East Area. The Plutonium-Uranium Extraction plant opened in 1956, went into standby in 1972, was re-started in 1983, and was shut down in 1988. A large deactivation project, which became a model in the USDOE complex, was conducted from 1993-1997. As a result, facility surveillance costs declined dramatically and the plant remains passive until final disposition decisions are made.

Uranium Oxide Plant

Once plutonium and uranium were separated from irradiated fuel, they were sent to other Hanford Site facilities for further processing. Liquid material containing uranium went to the Uranium Oxide Plant in the 200 West Area, where it was converted into a solid powder (oxide) and sent offsite for recycling. The Uranium Oxide Plant was deactivated and placed on long-term surveillance and maintenance status in 1994.

Plutonium Finishing Plant

The Plutonium Finish Plant was built in 1949 to process plutonium for use in nuclear weapons. During the Cold War, the Plutonium Finish Plant was the final link in the Hanford Site plutonium production activities. There, plutonium nitrate solutions were purified and converted into solid plutonium metal for shipment to government weapons facilities until 1989. In 1996, the Plutonium Finish Plant received its shutdown order from USDOE Headquarters. An explosion at the Plutonium Finish Plant the following year heightened concerns about conditions at the plant and underscored the urgent need to cleanup and dismantle the facility. About 4 metric tons of plutonium in about 17 metric tons of bulk plutonium-bearing materials remains at the plant in a variety of forms such as metals, oxides, liquids, polycubes, and residues. Currently, the main focus at the Plutonium Finish Plant is to safely stabilize and repackage the plutonium, and to conduct planning for the deactivation and dismantling. The current USDOE baseline activities and schedule for Plutonium Finish Plant transition are 1) stabilize and/or repackage nuclear materials to be performed by fiscal year (FY) 2004, 2) deactivate and dismantle process support facilities beginning FY 2002 and ending FY 2016, and 3) surveillance and maintenance phase beginning FY 2017.

200 Area Laboratories

The 222-S Laboratory in the 200 West Area was built during 1950-1951, but was upgraded and modernized in the early 1990s. Today it performs sampling analyses for the Site's waste tanks program, and other Site programs. The Waste Characterization and Sampling Facility, located just east of the 200 West Area, is a much newer laboratory complex built during the 1990s that processes hazardous samples and samples containing low levels of radioactivity. It also manages a mobile sampling vehicle that serves some remote onsite locations.

Environmental Restoration Disposal Facility

The Environmental Restoration Disposal Facility is the primary repository for low-level/mixed contaminated soils and contaminated structure rubble from cleanup projects on the Hanford Site. The Environmental Restoration Disposal Facility opened in 1996, and by 2001 it had received over 2 million tons of such nuclear debris. About 3,000 tons of waste, contained in about 150 truckloads, enter the Environmental Restoration Disposal Facility on a typical day. The total amount of waste and debris deposited in the Environmental Restoration Disposal Facility is expected to be at least 10 million tons as cleanup progresses.

300 AREA

Facilities in the 300 Area have been used since World War II for fabrication of reactor fuel, research and development, and technical and service support functions. Some limited research and development on radioactive materials still takes place in the 300 Area, but most of the old laboratories are being deactivated. Fuel fabrication buildings, and structures associated with irradiation experiments, either have been deactivated or are now being deactivated. Deactivation activities are governed by Tri-Party Agreement milestones. Eventual demolition of most of the 300 Area buildings is planned.

Liquid and solid wastes from operations in the 300 Area were disposed of in various ponds, trenches, and burial grounds over approximately a 5-square mile area. The primary contaminants of these sites include uranium, metal shavings and dusts, acids, and solvents used in fuel fabrication operations.

400 AREA

The 400 Area is the location of the Fast Flux Test Facility, a liquid metal test reactor that began full-power operation in 1982 and shut down in 1993. Initially, the Fast Flux Test Facility served as a test tool for advanced reactor technology, but it then expanded into other areas of research and development, including fusion research, space power systems, medical isotope production, and international research programs. During its standby period, the Fast Flux Test Facility was considered as a possible producer of tritium and medical isotopes for the United States. However, after seven years in standby status, the Fast Flux Test Facility was ordered to permanent deactivation and closure in late 2000. In early 2001, at the request of the Hanford Site's Congressman, USDOE authorized another study of Fast Flux Test Facility's future viability as a facility to produce medical isotopes. However, the USDOE announced in December 2001 that the reactor will be shutdown and the Department will proceed with facility deactivation.

600 AREA

The 600 Area encompasses Hanford's roads, railroads, fire station, an old concrete batch plant site, contaminated storage vaults in the east end of Gable Mountain, the former town sites of Hanford and White Bluffs, the Hanford meteorology station, the Wahluke Slope, and the Arid Lands Ecology Reserve (including Rattlesnake Mountain). There is little contamination in the 600 Area, except in groundwater beneath large stretches.

1100 AREA

Cleanup of the 1100 Area was completed in 1995, and it became the first Hanford area to be removed from the National Priorities List (created by the *Comprehensive Environmental Response, Compensation and Liability Act of 1980*). It had no disposal locations for radioactive or mixed wastes, but contained several sites at which hazardous wastes were disposed. These wastes included batteries and battery acid containing lead and sulfuric acid, and ethylene glycol (antifreeze). After cleanup, USDOE transferred the 1100 Area to the Port of Benton in Richland to assist in local economic diversification. The Port of Benton created a Manufacturing Mall, and has attracted several private businesses.

Section 4

TRI-CITIES AND REGIONAL BACKGROUND

The Hanford Site has played a primary role in determining the Tri-Cities economic makeup. When Hanford's mission changes, the Tri-Cities feels the repercussions. A brief history of the community reveals the Tri-Cities' dependence on the Hanford Site for economic stability and growth. The history also reveals its vulnerabilities and strengths influencing present and future economic conditions.

In December 1942, scientists in Chicago conducted the first controlled nuclear chain reaction. In the race to develop nuclear weapons during World War II, this initial step provided America the knowledge needed to develop the atomic bomb. A site was needed to apply this new technology to weapons production. In January 1943, Hanford, north of Richland, was chosen by the Federal government as the site to build facilities to produce America's nuclear weapons.

To construct the facilities that would create the plutonium required for the world's first nuclear weapons, the Federal government acquired land, including the towns of Richland, Hanford, and White Bluffs. The Hanford Site became home to the world's first full-scale plutonium production plants. More than 1,500 Hanford residents were evacuated during the spring of 1943 to make way for construction.

Thousands of workers across the nation converged on the area in 1944 and 1945 to build these plants. The population swelled to 51,000 in a few months. The world's first three production plutonium reactors were built about 35 miles north of Richland, although at the time few knew their purpose. About two years after their construction started, Hanford produced plutonium for America's first nuclear detonation.

Following World War II, during the Cold War years, the Federal government continued to use the Hanford Site for nuclear weapons materials production. From 1943 to 1958, Richland was a government-owned town. Most Hanford workers lived in Richland. As a result, a large proportion of Richland's population consisted of skilled laborers and highly educated professionals in the upper-income brackets. This work force provided the Tri-Cities with a strong economic base.

In 1958, the citizens chose by popular vote to incorporate Richland as an independent city. Although freed from federal oversight of the municipal government, Richland's economic well-being remained dependent on Hanford.

By 1945, three plutonium production reactors were in operation at the Hanford Site. There were also facilities for the entire nuclear production cycle, including fuel fabrication, chemical processing, waste management, and research. In the mid-1960s, Hanford entered a period of decline. All eight of the single-purpose plutonium production reactors were closed between 1964 and 1971. Only the N Reactor, a dual-purpose reactor producing plutonium and electricity, remained in operation.

In the 1970s, the Hanford Site became a research center for peaceful uses of the atom and alternative energy sources. By 1975, energy research had become Hanford's major mission. Besides nuclear energy, solar, geothermal, fossil, wind, and organic energy sources were studied.

The Tri-Cities was one of the fastest growing metropolitan areas in the nation during the 1970s, with a population increase of 55 percent during that decade.

The growth of the 1970s was reversed in the 1980s. Starting in 1981, construction of the Washington Public Power Supply System plant WNP-4 was terminated, construction on plant WNP-1 was halted, and plans for additional power plants were canceled. About 11,000 construction jobs associated with building these plants were lost during that decade. In the late 1980s, the N Reactor was placed in cold standby, terminating another major Site project; and in 1987, the Basalt Waste Isolation Project was unexpectedly discontinued.

During the decline of the 1980s, the weaknesses of the Tri-Cities' reliance on Hanford were revealed. The severe cutbacks in Hanford jobs forced many highly-skilled nuclear technicians and construction workers to leave the Tri-Cities area. This cost the community a large portion of residents in the upper-income brackets. Though many left during downturns in the Tri-Cities economy, others chose to find alternative local employment and remain because of the high quality of life found in the Tri-Cities.

In 1991, USDOE announced N Reactor would be permanently shut down. Nearly 50 years of producing nuclear materials at the Hanford Site for America's defense had come to an end. Several Hanford areas were left contaminated by chemical and radioactive waste from the years of weapon production. This resulted in the present Hanford Site mission of environmental cleanup.

Thousands of jobs were added at the Hanford Site to support new and expanded environmental restoration and waste management activities. In 1994, Site employment peaked at approximately 18,000. Since that time, declining budgets and restructuring of work have reduced Site employment to about 10,000.

The ongoing science and technology mission at the Pacific Northwest National Laboratory provides another source of economic strength. The laboratory has approximately 3,500 employees engaged in a full range of science and technology programs.

The primary concern of the down river communities, such as Portland, Hood River, The Dalles, Vancouver and Umatilla, is the health of the Columbia River. The Columbia River serves as a source of irrigation for agriculture, as well as a key inland transportation route for commerce. The down river communities use the river as a recreational asset for boating, fishing, and other water activities. The River provides important agricultural, fishing and other natural resources vital to the economy of the communities and the states of Washington and Oregon. The down river communities general position on Hanford cleanup is the treatment of groundwater must continue, the waste in the tanks must be removed and treated, and other major cleanup projects must be completed to protect the Columbia River.

Appendix A

REFERENCE: OTHER LAWS

The following is a description of the public involvement requirements of additional laws that may pertain to Hanford Site cleanup actions. When more than one set of public involvement requirements applies to a specific decision, activity or action, the Tri-Party agencies will review the pertinent requirements and coordinate and/or combine them to conduct a comprehensive process.

THE CLEAN WATER ACT

The Clean Water Act is a 1977 amendment to the *Federal Water Pollution Control Act of 1972*, which set the basic structure for regulating discharges of pollutants to waters of the United States. EPA delegates authority to implement these laws to the State. Ecology oversees Washington State Discharge permits issued for the 200 Area Treated Effluent Disposal Facility and the 200 Area Effluent Treatment Facility. The EPA regulates the 300 Area Treated Effluent Disposal Facility through a National Pollution Discharge Elimination System permit.

Both the state and federal permit processes include requirements for public involvement and comment.

The state public involvement requirements related to water regulations can be found in Washington Administrative Code 173-216-090 and 173-216-100. Public involvement requirements pertaining to wastewater discharge to the groundwater include a minimum public notice in a local newspaper, accepting written public comment for 30 days following newspaper publication of proposed changes, and consideration for a public hearing if there is significant request.

For more information, contact Ecology at (509) 735-7581 or call the Hanford Cleanup Line at 1-800-321-2008.

THE CLEAN AIR ACT

The EPA delegated *Clean Air Act* responsibility to Ecology and the Washington Department of Health. Ecology and the Washington Department of Health jointly regulate Clean Air provisions at the Hanford Site. The EPA has regulatory authority over National Emission Standards for Hazardous Air Pollutants provisions for primary air pollutants. The primary air pollutants are sulfur dioxide, particulate matter, carbon monoxide, ozone, nitrogen oxides, and lead.

The Washington Department of Health Division of Radiation Protection regulates Hanford Site radioactive air emissions and conducts environmental radiation monitoring.

The state public involvement requirements related to air regulations can be found in Washington Administrative Code 173-401-800. Public involvement requirements pertaining to air operating permits include publication of notices in local newspapers, distribution of notice to a facility-specific mailing list, a minimum 30-day public comment period on proposed permits, and 30 days notice prior to a public meeting.

For more information, contact Ecology at (509) 735-7581 or call the Hanford Cleanup Line at 1-800-321-2008.

NEPA ENVIRONMENTAL POLICY ACT

The National Environmental Policy Act (NEPA) ensures that environmental factors are given the same consideration as other factors in decision making by federal agencies. The public participation requirements can be found in 10 CFR 1500 through 1508 and 10 CFR 1021 where NEPA public comment periods and hearings are addressed.

For more information on NEPA contact the USDOE NEPA Compliance Officer at 509-376-6667.

STATE ENVIRONMENTAL POLICY ACT

Ecology must review the permitting of several Hanford Site projects under the State Environmental Policy Act. The purpose of the State Environmental Policy Act is to ensure that environmental values are considered by state and local government officials when making decisions. Before taking actions (issuing permits, etc.), agencies must follow specific procedures to ensure that appropriate consideration is given to the environment. The severity of the potential environmental impacts associated with a proposed project will determine whether an environmental impact statement is required.

The public participation requirements of SEPA can be found in Washington Administrative Code chapter 197-11-510. Public participation requirements allow the permittee to use their existing notice procedures. The state can also require that additional public notice be provided through publication in local newspapers, news media contacts, publication in the SEPA register and other methods. Public hearings may be scheduled based on the lead agency's discretion, including written requests from 50 or more people, or written request from two other agencies with jurisdiction.

For more information call the Hanford Cleanup Line at 1-800-321-2008.

MODEL TOXICS CONTROL ACT

The Model Toxics Control Act (MTCA) is Washington State's version of the *Comprehensive Environmental Response, Compensation, and Liability Act of 1980*. Ecology implements the Model Toxics Control Act's public involvement activities, which are similar to *Comprehensive Environmental Response, Compensation, and Liability Act of 1980* public involvement requirements.

The public involvement requirements of MTCA include a minimum 30-day public comment period on actions covered under MTCA, early planning of public participation activities, requirements for contents of public notice on site-specific risk assessments, and requirements for who shall receive notice and where notices will be published. Additionally, MTCA requires a public participation grant program, to provide funding for citizen-based public participation efforts. MTCA also requires a citizen technical advisor, to provide technical assistance to citizens regarding MTCA and the actions covered under it. For more information on public participation grant application process, contact Ecology's Solid Waste/Financial Assistance program at (360) 407-6061.

To contact the citizen technical advisor, call Ecology's Toxics Control Program at (360) 407-7170.

TOXIC SUBSTANCES CONTROL ACT OF 1976

The *Toxic Substances Control Act* provides for protection of human health and the environment from exposure to certain hazardous and toxic chemical substances and mixtures (e.g., PCBs and newly manufactured chemicals). The Hanford Facility has in place a program for the cleanup, treatment, and disposal of materials regulated by the *Toxic Substances Control Act.* The regulations derived from the act are administered by the EPA.

For more information call EPA at 1-800-424-4EPA.

FREEDOM OF INFORMATION ACT

The Freedom of Information Act (FOIA), Title 5, United States Code, Section 552, was signed into law on July 4, 1966, by President Lyndon Johnson. The FOIA has since been amended in 1974, 1986, and most recently, with the *Electronic Freedom of Information Act Amendments of 1996.*

The FOIA applies to documents held by agencies in the executive branch of the federal government, USDOE and EPA. The FOIA does not apply to Congress or the judicial branch, nor does it apply to records of state or local governments. However, many state governments have their own open records laws. You may request information about a state's laws by writing the attorney general of the state.

The FOIA requires that certain information, such as descriptions of agency organization and office addresses, statements of agency operations, rules of procedures, general policy statements, final opinions made in the adjudication of cases, and administrative staff manuals that affect the public must be made available for inspection by the general public. This is accomplished through the use of public reading rooms.

All other agency records may be requested under the FOIA, regardless of the format of the record (i.e., electronic records, photographs, videos, tape recordings, etc.). For more information about the FOIA, please visit our web site at: www.hanford.gov/FOIA/.

For documents not undergoing public comment, EPA follows the requirements set forth in the *Freedom of Information Act* (Title 40 *Code of Federal Regulations*, Part 2). For more information, contact the EPA at 1-800-424-4372.

STATE OF WASHINGTON PUBLIC DISCLOSURE LAW

Requests for public records from Ecology concerning Hanford Site cleanup activities and compliance must be made in accordance with state law. The guidelines for the state's public disclosure law can be found in the Revised Code of Washington, chapter 42.17. Public review of records requires a signed "Request for Public Record" form and the RCW sets provisions for the public records coordinator to set appointments for review of records and documents between 9 a.m. - noon and 1:00 - 4:00 p.m. daily. Ecology may fill some requests through telephone or fax. There is no fee for viewing records. Copy fees are 15 cents per page. Postage charges may be added if the postage exceeds $4. State sales tax will be added to the total copy charges. Pre-payment is required. For more information, contact the Nuclear Waste Program Public Records coordinator at (509) 736 3097.

Appendix B

DOCUMENTS TO BE PLACED IN INFORMATION REPOSITORIES

The following list includes documents and/or types of documents that are placed in the Public Information Repositories.

Action Plans (for implementation of the *Hanford Federal Facility Agreement and Consent Order*)

Closure Plans

Comments and Responses Document

Community Relations Plan

Fact and Focus Sheets (information on Tri-Party Agreement issues, cleanup activities, and public involvement opportunities)

Feasibility Study and Corrective Measures Study Phase II Reports

Feasibility Study and Corrective Measures Study Phase III Reports

Hanford Federal Facility Agreement and Consent Order (Tri-Party Agreement) amendments and changes

Hanford Site Performance Summary – Environmental Management Funded Programs

Hearing Transcripts (from public hearings related to the Tri-Party Agreement)

Interim Action Records of Decision

Meeting Summaries (from Tri-Party Agreement public meetings)

Newsletters (*Hanford Update, Hanford Happenings,* and others)

Resource Conservation and Recovery Act of 1976 Permits

Resource Conservation and Recovery Act of 1976 Permit Modifications

Records of Decision

Remedial Action and Corrective Measures Implementation Work Plans

Remedial Design and Corrective Measures Design Reports

Remedial Investigation/Feasibility Study and *Resource Conservation and Recovery Act of 1976* Facility Investigation/Corrective Measures Study Work Plans

Remedial Investigation and *Resource Conservation and Recovery Act of 1976* Facility Investigation Reports

Site Management System Executive Summary Report

Topics

Administrative Record Index

Agency for Toxic Substances and Disease Registry Health Assessments

Current Activity Data Sheets (budget information)

Current Hanford Site Waste Management Unit Reports

Expedited Response Action -- Action Memoranda

Expedited Response Action -- Candidate Waste Sites

Expedited Response Action Closeout Reports

Expedited Response Action Engineering Evaluation/Cost Analysis

Hanford Groundwater Monitoring Reports (1987 - Present)

Preliminary Natural Resource Survey

Public Notices

Resource Conservation and Recovery Act of 1976 Part B modifications to the Hanford Site-Wide Permit

Washington State Permit Applications, Draft and Final Permits, and Fact Sheets

ADMINISTRATIVE RECORD

The Administrative Record serves the same purpose in the *Comprehensive Environmental Response, Compensation, and Liability Act of 1980*, *Resource Conservation and Recovery Act of 1976*, and Washington State Dangerous Waste Programs. The Administrative Record is the body of documents and information that is considered or relied on to arrive at a decision for remedial action or hazardous waste management.

An Administrative Record file is established for each group of waste sites with a similar location and waste characteristics and for each grouping of treatment, storage, or disposal units for the purpose of preparing and submitting a permit application and/or closure plan. It will include all the documents considered or relied on in arriving at a decision or to issue a permit or permit modification. When the investigation process begins or when a permit action begins, the Administrative Record file is established. The USDOE is responsible for management of the official Administrative Record file (hard copies). EPA and Ecology (and the public information repositories) have information listings only.

Environmental Data Management Center
2440 Stevens Center Place, H6-08
Richland, WA 99352
(509) 376-2530

Washington State Department of Ecology
1315 West 4th Avenue
Kennewick, WA 99336
(509) 735-7581

U.S. Environmental Protection Agency
Park Place Building
1200 6th Avenue, HW-070
Records Center, HW-070
Seattle, WA 98101
(206) 553-0685

Appendix C

HANFORD TRI-PARTY AGREEMENT COMMUNITY RELATIONS PLAN UPDATE PROCESS

The Tri-Party Agreement Community Relations Plan is revised periodically. This is the fourth revision to the plan. To update the Hanford Tri-Party Agreement Community Relations Plan, the Tri-Parties have conducted the following activities:

- In the first quarter of 2001, the Tri-Parties made editorial revisions to the Community Relations Plan by updating information and adding web site addresses.
- On March 27, 2001, a discussion was held with the Oregon Hanford Waste Board about the upcoming revision to the Community Relations Plan.
- At the April 11, 2001, Hanford Advisory Board Public Involvement and Communication Committee meeting, the Tri-Parties provided copies of the revised plan to committee members and asked them to review the Plan and provide feedback.
- The Tri-Parties further discussed the Community Relations Plan with the Hanford Advisory Board Public Involvement and Communication Committee at their May 16, 2001 meeting.
- The Hanford Advisory Board Public Involvement and Communication Committee further discussed and came to consensus on proposed changes to the Community Relations Plan. It was decided to develop formal advice to present to the Hanford Advisory Board for consensus.
- The Hanford Advisory Board Public Involvement and Communication Committee at their September 5, 2001 meeting plan further discussions on the Community Relations Plan. The Committee also plans to present the draft advice for consensus to the Hanford Advisory Board at the September 6-7, 2001 meeting.
- A 45-day public comment was held from August 27 to October 10, 2001. The public comment period was extended to November 9, 2001 at the request of interested stakeholders.
- Public meetings were held in Hood River, Oregon on October 24 and in Seattle, Washington on October 29.
- Postcards acknowledging receipt of public comments were mailed on December 3 to people who provided comments on the community relations plan.
- The final Hanford Site Tri-Party Agreement Public Involvement Community Relations Plan and the Response to Comment document were sent to the distribution list and placed in USDOE's Information Repository.

For more information on the Community Relations Plan process call the Hanford Cleanup Line at 1-800-321-2008.

Appendix D

HANFORD ADVISORY BOARD

CHARTER and OPERATING GROUND RULES
HANFORD ADVISORY BOARD

Revised November 7, 1997

I. MISSION STATEMENT

The Hanford Advisory Board -- hereafter referred to as the Board -- is an independent, non-partisan, and broadly representative body consisting of a balanced mix of the diverse interests that are affected by Hanford cleanup issues. As set forth in its charter, the primary mission of the Board is to provide informed recommendations and advice to the U.S. Department of Energy (DOE), the U.S Environmental Protection Agency (EPA), and the Washington Department of Ecology (Ecology) -- hereafter referred to as the Tri-Party agencies -- on selected major policy issues related to the cleanup of the Hanford site.

The goal of the Board is to develop consensus policy recommendations and advice. When this is not possible, the Board will convey its recommendations and advice in a manner that communicates the points of view expressed by all Board members.

The Board is intended to be an integral component for some Hanford tribal and general public involvement activities, but not to be the sole conduit for those activities. The Board should assist the agencies in focusing public involvement and make efficient use of Board member's time and energy. Through its open public meetings, advice on agency public involvement activities, and the responsibilities of Board members to communicate with their constituencies, the Board will assist the broader public in becoming more informed and meaningfully involved in Hanford cleanup decisions.

II. SCOPE OF ISSUES

The primary mission of the Hanford site is cleanup, which is defined herein as including both waste management and environmental restoration activities. Thus, all major policy issues to be addressed at the Hanford site may fall within the scope of issues to be addressed by the Board. It is recognized, however, that it will not be possible for the Board to provide informed recommendations and advice on all Hanford policy issues, be they directly related to the cleanup mission or not. Board members serve on a limited time basis. It is also recognized that the Tri-Party agencies may seek advice on some issues from other sources. Thus, it will be necessary for the Board to work closely with the Tri-Party agencies to set priorities as to what the Board considers "major" policy issues.
A fundamental responsibility of the Board is to respond to requests for advice from the Tri-Party agencies. Additionally, the Board will identify issues of concern to its members and provide appropriate advice.

The Tri-Party Agreement (TPA) is a primary instrument through which many of the major policy issues related to cleaning up the Hanford site are decided, prioritized, and tracked. Thus, a major focus of the Board will be the content of, and proposed changes to the TPA, and monitoring agency progress in meeting regulatory milestones, all of which determines the broad strategic direction of Hanford cleanup activities. Other major policy issues may include, but not be limited to:

- reviewing the budgeting and funding of specific Hanford cleanup activities;
- waste management issues, including the treatment, storage, and disposal of all solid, hazardous, radioactive, and mixed waste currently at the site, or generated at the site in the future;
- the determination of future land uses and the release of Hanford lands for other uses, to the extent that the Board determines such uses impact or are impacted by the Hanford cleanup mission;

- full recognition of the treaty rights of affected tribes and in particular the interrelationship between such rights and Hanford environmental restoration and waste management activities;
- local and other land use authorities and requirements, as specified under state and federal law, as they relate to Hanford environmental restoration and waste management activities;
- transportation of wastes and hazardous materials to and from the site;
- the maintenance, restart, or decommissioning and decontamination of contaminated facilities;
- the protection and restoration of natural resources and ecological values;
- the protection of groundwater and restoration of contaminated groundwater;
- impacts on the Columbia River;
- protecting worker and local/regional public health and safety;
- review work force restructuring and community impact plans required by federal or state law with regard to Hanford's transition and downsizing;
- technology development and transfer; and
- strategies for effectively and meaningfully involving the public in decisions regarding cleanup of the Hanford site.

III. MEMBERSHIP AND EX-OFFICIO AGENCY PARTICIPATION

A. Membership

As stated above, the Hanford Advisory Board is a broadly representative body consisting of a balanced mix of the diverse interests that are affected by Hanford cleanup issues. Unless the Board decides to change the balance and diversity of its initial membership (which would be considered a major procedural issue -- see Section V.B. below), the Board shall consist of the following:

- Seven representatives of local governmental interests: including one each appointed by the governing bodies of Benton County, Franklin and Grant Counties jointly, the Cities of Kennewick, Richland, Pasco, and West Richland, and one appointed by the Benton-Franklin Regional Council;
- One representative of business interests from the Tri-Cities area, appointed by the Tri-Cities Industrial Development Council, or an organization similar to TRIDEC;
- Five representatives of the Hanford workforce: including two that represent workers that are members of the Hanford Atomic Metal Trades Council and the Central Washington Building and Construction Trades Council; two that are not members of the previous two trade unions, nor in management positions, who can effectively represent cleanup contractor workers and research and development and health contractor workers; and one that represents the interests of workers that have public policy implications that may not be addressed by the other seats in this category;
- One representative of local environmental interests;
- Five representatives of regional citizen, environmental, and public interest organizations with an active interest in Hanford cleanup issues, drawn from and nominated by those regional organizations;
- One representative each of local and regional public health concerns, focusing on individuals and organizations that have a particular expertise in this area;

- One representative of each of the three tribes that have treaty rights that are affected by Hanford cleanup decisions: including the Confederated Tribes of the Yakama Indian Nation, the Confederated Tribes of the Umatilla Indian Reservation, and the Nez Perce Tribe;

- Two representatives of the interests of the citizens of the State of Oregon that might not otherwise be covered by the categories listed above: including one appointed by the Governor of Oregon or the agency that has the lead role for the State of Oregon on Hanford cleanup issues; and one that can represent the broad interests of Oregon citizens appointed by the Oregon Hanford Waste;

- No more than four at-large members individuals who have expressed a general interest in Hanford cleanup issues and who might otherwise contribute to ethnic, racial, or gender diversity on the Board. These at-large seats should be used to bring additional leadership skills and technical, economic, and agricultural expertise to the Board.

The Board shall establish a membership rotation schedule that will maintain the balance and diversity inherent in the original makeup of the Board and, at the same time, encourage new individuals to participate in the Board.

B. Filling Vacancies

When a vacancy occurs on the Board, Ecology and EPA shall consult with the constituency or interest group represented by the seat. The constituency shall submit in writing the names of at least one, but not more than three, prospective appointees. When a vacancy occurs in a seat representing non-union, non-management Hanford workers, Ecology and EPA shall solicit nominations from employees of the relevant group of Hanford contractors. When a vacancy occurs in an at-large seat, Ecology and EPA may advertise for nominations in ways that appear to best meet the intent of Section III.A., ninth bullet, above. Ecology and EPA may interview prospective appointees and may further consult with constituencies prior to submitting nominees to DOE for formal appointment.

C. Sponsoring Agency and Other Ex-Officio Participants

In addition to the members listed above, the Board will include representatives of the three sponsoring agencies who will serve in an "ex-officio" capacity. The term ex-officio is defined herein to mean that the individuals representing these agencies may participate in Board discussions and deliberations on both substantive and procedural matters. However, they will refrain from "voting" when the Board is determining what substantive advice it wishes to give or what procedural direction to take. They are "non-voting" members because it would be inappropriate for them to give advice to the agencies they are representing.

In addition to these three ex-officio sponsoring agency representatives, additional representatives of other state and federal agencies that have regulatory or other decision making responsibilities -- such as the Agency for Toxic Substance Disease Registry, the Bureau of Land Management, and the Washington Department of Health -- may also be asked to participate in an ex-officio capacity.

Finally, from time to time it may be necessary for other Board members who represent local or tribal governments to participate in Board deliberations in ex-officio capacity in order to refrain from providing advice to an agency or governmental entity that they represent that has decision making responsibility. If this becomes necessary, the Board member will communicate this situation at the outset of deliberations on the particular issue that causes the situation to arise, or as soon as it is determined that participation in an ex-officio capacity is necessary.

IV. EXPECTATIONS AND COMMITMENTS OF THE TRI-PARTY AGENCIES AND BOARD MEMBERS

It is the expectation of the Tri-Party agencies that the Board will:

- be a well-informed group of local, regional, and tribal representatives who are focused on problem solving and providing input on key policy decisions;
- improve open communications between and among Board members, the sponsoring agencies, and the public;
- provide broader, more robust definitions of problems, priorities and alternatives;
- help the agencies reach key decisions and set priorities in an era of tight budget constraints;
- provide a forum in which the agencies are publicly accountable for progress on Hanford cleanup and compliance with all applicable state and federal laws;
- provide a forum that can complement and help focus, but not duplicate or supplant other Hanford public involvement activities; and
- advise agencies on how to coordinate and carry out these activities in ways that maximize public involvement opportunities and minimize unnecessary duplication and conflicts in scheduling and contribute to agency decisions that better reflect the principles and values of all of the diverse Hanford interests.

It is the expectation of the Board that the Tri-Party agencies, either in concert or individually, will:

- assist the Board in accomplishing its mission and fulfilling the expectation of Board members as outlined below;
- not attempt to control the Board or its agenda;
- treat Board members with candor and respect;
- listen to and try to understand Board members' views;
- honor, respond and give serious consideration to the views, recommendations and advice of the Board in agency policy development, decisions and actions;
- utilize the Board as an integral component of Hanford public involvement activities to help minimize unnecessary duplication;
- provide sufficient notice to the Board regarding emerging issues and imminent policy decisions in time for the Board to make a choice about whether it wishes to provide recommendations and advice on the decision and/or the manner in which the broader public should be involved in the decision;
- provide information on budget matters early in the federal budgeting process so as to enable the Board to play a meaningful role in budget decisions;
- respond in writing to all written recommendations of the Board, stating the manner in which Board recommendations were incorporated into agency decision-making processes and, if applicable, the reason(s) why Board recommendations were not adopted or followed and how that advice might be changed to become acceptable;
- provide written responses to all written recommendations of the Board in a timely manner, wherever possible affording the Board opportunity to correct information, reply to, or have a dialogue regarding the agencies responses prior to final agency action;
- invite and encourage other agencies involved in issues being addressed by the Board to either participate or interact with the Board;

- work with the Board to provide funds for independent technical assistance, staff and other administrative support, facilitators, and access to information and agency personnel that the Board determines is needed to fulfill its mission;

- ensure that senior agency managers (such as the Assistant Director for Waste Management of the Washington Department of Ecology, the Waste Management Division Director of EPA Region 10, and the Deputy Site Manager of DOE's Richland Operations Office) attend and participate in Board meetings, along with whatever additional agency staff may be necessary and helpful, without overburdening the Board with agency staff participation; and

- help Board members develop clear and understandable information to Board members' constituencies and to the general public.

It is the expectation of Board members and/or their alternates that their fellow members and/or alternates will:

- attend and participate actively in meetings, read and come to meetings prepared to comment on documents, and be available for work between formal meetings (e.g., conference calls); and

- represent information, especially information contained in draft documents, accurately and appropriately, consult with their constituencies, and keep their constituencies well informed.

V. DECISION MAKING

A. Major Policy Recommendations

The Board will operate by consensus in seeking to determine what advice the Board as a whole wishes to convey to the Tri-Party agencies on selected major policy issues. In agreeing to operate by consensus, the Board also agrees that it will try to avoid spending an inordinate amount of time striving to achieve consensus on any selected major policy issue at the expense of striving to achieve consensus on other major policy issues.

The Board also recognizes that there are several levels of consensus that may be possible. The first is unanimous agreement among all Board members on the advice to convey. The second is a consensus that can be characterized as all Board members being willing to "live with" a proposed set of advice. The third is one or more Board members registering dissent, but not wishing to block the Board from providing advice that might otherwise be characterized as a consensus of the Board, but for their dissent. In conveying consensus advice to the agencies, it will be incumbent upon the Board and its chair to accurately describe the level of consensus that has been achieved.

In addition to expressing consent or dissent regarding items proposed for consensus, Board members are free to abstain or "stand aside" from the determination of consensus, if they have a conflict of interest that would prevent them from offering such advice, if it is not part of the mission or role of their appointing organization to participate in discussions on the topic being proposed for consensus, or for whatever other reasons they may choose. It is the responsibility of each Board member or alternate to affirmatively state their desire to abstain from participating in the determination of consensus, if they choose to do so.

In those instances where Board members have strongly held views on a subject that is of vital importance to the interests that they represent, they can block consensus if they believe these views are not adequately addressed by the proposal put forth by other Board members. The Chairperson, facilitator, and staff (see Section VI) will rely on Board members to voice their dissent if they do not agree with a particular policy recommendation that has been proposed by another Board member or members. If consensus cannot be reached, and the Board still wishes to convey advice to the Tri-Party agencies on the issue, the views of Board members may be expressed through majority and minority reports,

at the option of those Board members who are in the minority.

Board policy recommendations can be conveyed orally, during the course of Board meetings, or in writing through reports and policy papers. If the Board wishes to convey a recommendation orally through discussions at Board meetings, these recommendations will be recorded in the written summary of the Board meeting at which they were conveyed (see Section IX.B.).

It is understood that a Board member or alternate's absence from a meeting does not imply consent to any recommendation. However, it is the responsibility of each Board member to review the draft meeting summary or written report through which a proposed or draft consensus is characterized, and voice their dissent, if they so choose, prior to or at the next meeting of the Board.

In no instance shall the Board convey consensus policy advice, or characterize its advice as being a consensus of the Board, unless there exists a quorum of at least half of the non-ex-officio members or alternates in attendance at the meeting at which consensus is being determined.

B. Major and Minor Procedural Decisions

Throughout its deliberations, the Board will need to make major and minor procedural decisions. Similar to selected major policy issues, for major procedural decisions the Board will operate by consensus. Major procedural issues include such issues as whether to create Committees or other subunits of the Board, the frequency of Board meetings, changes in Board leadership or membership, changes in the Board's Charter or Ground Rules, etcetera. If the Board is unable to achieve consensus on a major procedural issue, then a two-third majority vote will determine whether the Board will follow a proposed course of action, so long as there exists a quorum of Board members or alternates that consists of at least one-half of the full number of Board seats.

In the case of minor procedural issues, such as precise meeting dates and locations, the appropriate date for completing an advance mailing to the Board, etcetera, the Board will also strive to achieve consensus where possible or appropriate. If consensus on such issues is not possible or appropriate, the Chair will decide what course of action to follow.

The Chair will also decide whether procedural issues can be considered major or minor. For major issues, the Chairperson will ensure that the decision making process outlined above is followed. For minor issues, the Chairperson will be expected to act on behalf of the interests of the full Board in making a decision. Members of the Board are responsible for communicating to the Chair any concerns they may have about these decisions. If a dispute arises as to whether a particular procedural issue should be considered major or minor, this dispute will itself be considered a "major procedural issue" and will be resolved in accordance with the process outlined above for such issues.

VI. ROLES AND RESPONSIBILITIES

A. Chair and Vice Chair

1. The Chair shall be appointed by the sponsoring Tri-Party agencies, based on the advice and recommendations of Hanford stakeholders. The Chair will be responsible for protecting the interests of all Board members and will act in a fair and balanced manner with respect to the Board's operation, the conduct of Board meetings, and all other activities associated with the Chair's involvement with the Board.

The Chair, with the assistance of a facilitator and/or Tri-Party agency staff will strive to determine the views of all Board members regarding Board advice on major policy issues and the determination of what course of action to follow on major procedural matters. The Chair will work to achieve a consensus among all Board members on such issues and matters, to the greatest extent possible, but to also understand when consensus is not possible and some other course of action is necessary.

The Chair will have the authority to represent and convey the views of the Board before the sponsoring agencies, elected officials, and in public settings, such as before Congress and State Legislatures. With the assistance of a facilitator and/or agency or other support staff, the Chair will be responsible for ensuring the development of meeting agendas that reflect the issues of concern to Board members and the sponsoring agencies, and the production of meeting summaries that accurately reflect the content of Board deliberations.

The term of office of the Chair will be for two years, with opportunity for reappointment for no more than two additional terms of two years each. Should a Board member believe that the Chair is not performing in a fair and balanced manner, it is the responsibility of the member to raise their concerns to the Chair, to the full Board, or the representatives of the Tri-Party Agencies for consideration.

2. A Vice Chair will be selected by the Board to serve in the absence of the Chair.

The term of office of the Vice-Chair will be for two years, with the opportunity for reappointment for no more than two additional terms of two years each.

B. Board Members and Alternates

With the exception of the at-large members, Board members are responsible for representing the interests and concerns of the organizations, institutions, or constituencies that have appointed them. Therefore, Board members will be expected to consult with these entities and constituencies on a regular basis concerning the discussions and recommendations of the Board. At-large members may consult with other individuals or organizations to assist them in assessing and defining the interests of the public at large but are not expected to do so.

Board members are expected to attend as many of the Board meetings as possible. If a Board member or their alternate(s) are absent for more than 25% of the meetings annually, or for three consecutive Board meetings, they shall be considered for replacement.

Each member may designate a primary alternate who may attend Board meetings or meetings of subunits of the Board in the event the member cannot attend. When necessary and appropriate, additional alternates may be designated to form a team of individuals who can represent the interests and concerns of the appointing organizations, institutions, or constituencies in the various activities of the Board. When a vacancy occurs in a Board member seat, the vacancy will be filled in accordance with Section III. B. above.

Board members or their alternates will be expected to participate actively in meetings, to read and be prepared to comment on documents, and be available for work between formal meetings (e.g., meeting of subunits, conference calls, etc.). In addition, Board members will seek to offer sound, quality recommendations to the sponsoring agencies on issues of importance to the Board and the agencies. In striving to achieve consensus on major policy and procedural issues, Board members will listen carefully to the views expressed by other Board members and seek to find ways to reconcile those views with their own, without entering into positions that might cause them to compromise on matters of principle or fundamental importance to interests that they have been charged to represent.

C. Tri-Party Agency Representatives and Staff

The sponsoring, Tri-Party agencies shall each appoint a senior agency manager to represent the agency in Board meetings and other important Board activities. As of the date of the initial convening of the Hanford Advisory Board, such senior representatives include the Assistant Director for Waste Management of the Washington Department of Ecology, the Waste Management Division Director of Region 10 of the U.S. Environmental Protection Agency, and the Deputy Site Manager of the Department of Energy's Richland Operations Office.

Each agency shall also appoint a primary alternate who will attend Board meetings and represent the agency in the absence of the designated senior representative. In addition, each agency shall ensure that appropriate agency staff are in attendance at Board meetings, and subunits of the Board, in order to be responsive to Board needs without overburdening the Hanford Advisory Board process with agency staff participation.

As noted above, Tri-Party agency representatives will not participate in Board decisions regarding advice on major policy decisions (i.e., they will not provide advice to themselves). Tri-Party agency representatives will, however, participate in Board decisions regarding major and minor procedural matters, but they will not attempt to control the Board or its agenda. Agency representatives agree to listen and attempt to understand Board members' views on major policy issues and procedural matters.

The Tri-Party agencies will respond in writing to all written recommendations of the Board, stating the manner in which Board recommendations were incorporated into agency decision-making processes. The agencies will report the reason(s) why Board recommendations were not adopted or followed and how that advice might be changed to become acceptable. The agencies will provide written responses to all written recommendations of the Board in a timely manner, wherever possible affording the Board opportunity to correct information, reply to, or have a dialogue regarding agency responses prior to final agency action.

In addition, the Tri-Party agencies will provide sufficient notice to the Board regarding emerging issues and imminent policy decisions in time for the Board to provide recommendations on the decisions and/or on the manner in which the broader public should be involved in the decision. The Tri-Party agencies will work with the Board to provide funds for independent technical assistance, staff and other administrative support, facilitators (if necessary), and access to information and agency personnel that the Board determines is needed to fulfill its mission.

D. Facilitator(s) and Other Support Staff

The role of a neutral third party facilitator and support staff, if utilized, is to assist the Chair and the Board to accomplish the Board's mission. In all instances the facilitator, who will serve at the pleasure of the Board, shall operate in a completely neutral, balanced, and fair manner. Specific tasks that a facilitator might be asked to accomplish are developing draft meeting agendas, assisting the Chair in conducting and otherwise managing Board meetings and deliberations, consulting with the Chair and Board members between meetings about how to manage the process and resolve substantive and procedural issues of concern, and preparing draft and final meeting summaries and other Board documents.

Other support staff may either be provided by the sponsoring agencies or asked to be involved in board activities by the Chair and/or the Board. The role of such staff shall generally be to support the Chair and the Board in accomplishing the Board's mission. The specific tasks of such staff shall be specified at the time that they are asked to be involved in the Hanford Advisory Board process.

VII. FUNDING CONSIDERATIONS

Funding for the Board's activities and operations will be provided by the U.S. Department of Energy. For purposes of assuring independence and guaranteeing access to such funds on a timely basis, the funds will be administered by an independent fiscal agent. This agent will be determined by the Board, in consultation with the Tri-party agencies.

The Department of Energy commits to provide funding levels adequate to cover or provide:

- technical assistance sufficiently adequate for independent review of all major policy issues that the Board believes warrant independent technical advice or review prior to the Board rendering advice. The Board shall determine adequacy of funding.

- facilitation assistance;
- administrative assistance;
- meeting costs and costs associated with Board member travel and a reasonable reimbursement of incidental incurred expenses through a per diem or honorarium;
- preparation of information on key technical policy questions and technological issues. These resources shall be used by the Board to prepare materials that will be easily understood by the public, with provision for adequate dissemination of such information to the public and to constituencies represented by the Board.

Annual funding levels will be determined through annual consultation between the Board and the Tri-Party agencies, and will be based upon a proposed budget presented by the Board. The Board will determine how to approve expenditures within its total annual budget.

VIII. STRUCTURAL COMPONENTS: EXECUTIVE COMMITTEE, OTHER COMMITTEES, WORK GROUPS AND TASK FORCES

From time to time the Board, at its discretion, may wish to create subgroups or subunits of various kinds to ensure the efficient and successful accomplishment of its mission.

A. Executive Committee

One such subunit may be the establishment of an Executive Committee. Unless otherwise determined by the Board, the role and function of the Executive Committee is to help the Chair make decisions on procedural matters between Board meetings (such as the agenda for upcoming Board meetings, meeting dates and locations, etc.), to consult with the Chair regarding efforts to resolve substantive policy issues between and during Board meetings, and, along with the Chair, to represent the Board before the sponsoring agencies, and elected officials and legislative bodies.

If formed, the Executive Committee shall consist of the Chair, Vice Chair (if applicable), and a number of other Board members to be determined who represent a cross-section of the Board's membership. These members will be selected in accordance with a nomination and, if necessary, voting procedure to be determined by the Board. Where necessary and appropriate, a representative of each of the Tri-Party agencies will also attend and participate in Executive Committee meetings and deliberations.

B. Other Board Committees and Work Groups

The Board may also wish to create committees to address issues of an ongoing nature. Unless otherwise determined by the Board, membership in Board committees shall be limited to Board members and alternates and, typically, should not exceed fifteen persons.

Each committee shall select a chair and vice-chair, who will serve at the pleasure of the committee. The committee shall determine the selection process. An effort should be made to achieve committee consensus on the chair and vice-chair and every effort should be made to ensure full participation of the committee in the selection process. As a minimum, a majority vote shall be required. Voting on the committee chair and vice-chair shall be by only those committee members listed on the committee roster at that point in time. Where a Board seat is represented by two or more people, there shall be only one vote for that Board seat. Every effort should be made to secure the vote of absent committee members. The selection of a committee chair shall be announced at the subsequent Board meeting and shall not require Board approval.

In addition, the Board, or one of the Board's committees may wish to form smaller work groups to develop specific work products or to discuss specific issues that are of a time sensitive nature and fit within the overall scope of issues to be addressed by the Board.

Board committees and work groups shall not have the authority to issue advice directly to the Tri-Party agencies. Rather, they will develop draft proposals regarding such advice for consideration by the full Board in accordance with ground rules specified herein. The Chair and the Board as a whole shall make every effort to ensure that Board committees, and where necessary and appropriate, Board or committee work groups, represent a diversity of views that are concerned with focus of that subgroup.

C. Task Forces

As another component of its operation, the Board may wish to form, or encourage the formation of, task forces to address issues that are either time dependent, or more narrowly focused than its primary mission. As used in these ground rules, the term task force is defined as a body whose membership may be drawn from individuals and organizations that do not participate directly on the Hanford Advisory Board, as well as from within the Board.

In establishing such task forces, the Board must determine whether it is forming the task force or simply encouraging its formation. In the case of the former, the established task force would operate similar to a Board committee or work group in that it would not provide advice directly to the Tri-Party agencies, but rather would develop draft proposals regarding such advice that would then be considered by the Board in accordance with the ground rules specified herein. In the case of the latter, the Board would be encouraging the formation of a task force that would be free to provide advice directly to the appropriate agency or agencies under whatever ground rules the task force deems appropriate.

Individuals outside of the Board who are asked to participate in such task forces should have a clear and present interest in the issues to be addressed and a willingness to devote the time and resources necessary to effectively participate in the process.

IX. MEETINGS, PUBLIC INVOLVEMENT, AND PRESS INQUIRIES

A. Open Meetings/Opportunity for Public Comment

All meetings of the Hanford Advisory Board itself, and its work group, committee and/or task force meetings shall be open to the public and shall be conducted in accordance with the Federal Advisory Committee Act and the Washington Open Public Meetings Act. Observers, alternates, and members of the public are welcome to attend all meetings of the Hanford Advisory Board and its subgroups. The public will be given reasonable notice as to when Board meetings or subgroup meetings will be conducted. The public will be given the opportunity for at least one formal comment period during the course of each of these meetings. Other opportunities for public comment will be offered at the discretion of the Chair or in accordance with the agenda developed by the Chair, the Board, or its facilitator.

B. Public Participation Plan, Mailing List of Interested Persons, and Public Notice

The Tri-Party Agencies, based on advice from the Board, shall develop a public participation plan regarding Board activities that is compatible with the Tri-Party Agreement public participation plan. At a minimum, the public participation related to Board activities shall designate an official from one of the sponsoring Tri-Party agencies, or a contracting entity that is directly responsible to a Tri-Party agency, who will maintain a mailing list of persons interested in the activities of the Hanford Advisory Board. This mailing list shall be updated periodically and shall be used to provide notice of all meetings of the Board. To the greatest extent possible, such notice shall be provided no less than thirty days prior to the date of the meeting. Where necessary and appropriate, notice shall also be made through advertisements in major newspapers.

C. Press Inquiries/Contacts

In responding to inquiries from, or initiating contact with the press or other media representatives, Board members agree to refrain from characterizing the views or opinions expressed by other Board members and to exercise comity and appropriate restraint in commenting on the Board's deliberations and processes. Formal Board recommendations issued in writing will be made available to the press and general public, along with summaries of Board meetings that have been approved by the Board.

X. ACCOUNTABILITY AND MUTUAL RESPONSIBILITIES

The Board will maintain a written record that will accurately summarize the content of and any decisions made by the Board at Board meetings. This written summary will be prepared in draft form and all Board members will be provided an opportunity to suggest revisions and changes to a draft meeting summary if they do not believe it accurately portrays the content of the Board's deliberations. Once approved as final, meeting summaries will be available to the public upon request.

The Chair and each member of the Board have a joint responsibility for assuring that these operating ground rules are observed. Board members are encouraged to bring concerns regarding the operating ground rules, and adherence thereto, to the attention of the Chair for consideration of possible revision or other appropriate action. Since the success of the Hanford Advisory Board depends upon the cooperation and effective communication between and among its members, Board members and Tri-Party agency representatives agree to:

- listen carefully to each other and not interrupt;
- adhere to the ground rules and respect the procedural guidance and recommendations of the Chairperson;
- avoid personal attacks; and
- avoid characterizing the views or opinions of another Board member outside of any Board meeting or activity.

The Chair and each member of the Board also have a joint responsibility to ensure that the aspects of the Board's mission that pertain to broader public involvement in the Hanford Advisory Board process and, more importantly, the Hanford cleanup decision-making process, are accomplished.

At the end of each year of operation, or at other times if necessary, the Board will evaluate and, if necessary, revise these ground rules and the membership of the Board with the objective of ensuring an efficient and fair process, and balanced and diverse membership.

Finally, the Chair and each member of the Board have a joint responsibility to periodically and honestly evaluate the effectiveness of the Board in accomplishing its mission, the degree to which the Board's mission is still necessary and relevant, and through such an evaluation to determine whether the Board should continue to exist.

HANFORD ADVISORY BOARD ORGANIZATION

Local Government Interests

Benton County
Benton-Franklin Council of Governments
City of Kennewick
City of Pasco
City of Richland
City of West Richland
Grant and Franklin Counties

Local Business Interests

Tri-Cities Industrial Development Council

Hanford Work Force

Central Washington Building Trades Council

Hanford Atomic Metal Trades Council

"Non-Union, Non-Management" Employees (2 Members)

Government Accountability Project

Local Environmental Interests

Lower Columbia Basin Audubon Society and Columbia River Conservation League

Regional Citizen, Environmental and Public Interest Organizations

Columbia Riverkeeper

Hanford Watch/Hanford Action

Heart of America Northwest

Washington League of Women Voters

Citizens for a Clean Eastern Washington

Local and Regional Public Health

Benton-Franklin Public Health

Physicians for Social Responsibility

Tribal Government

Nez Perce Tribe

Yakama Nation

State of Oregon

Oregon Hanford Waste Board

Oregon Office of Energy

University

University of Washington

Washington State University

Public at Large

(4 members)

Ex-Officio Representatives

Confederated Tribes of the Umatilla Indian Reservation

Washington State Department of Health

U.S. Department of Energy – Richland Operations Office

U.S. Department of Energy – Office of River Protection

U.S. Environmental Protection Agency

Washington State Department of Ecology

Appendix E

ACRONYM LIST AND GLOSSARY

COMMONLY USED ACRONYMS AT THE HANFORD SITE

AEA	*Atomic Energy Act*
AIP	agreement in principle
ALARA	as low as reasonably achievable
ALE	Fitzner-Eberhardt Arid Lands Ecology Reserve
AMEW	RL Assistant Manager for Environmental Restoration and Waste Management
ARAR	applicable or relevant and appropriate requirements
ATSDR	Agency for Toxic Substances and Disease Registry
BBC	Business, Budgets, and Contracts
BCP	Baseline Change Proposal
BHI	Bechtel Hanford, Inc.
BMOP	Business Management Overview Process
BMP	Business Management Practice
BNI	Bechtel National, Inc.
Board	Hanford Advisory Board
BPA	Bonneville Power Administration
CERCLA	*Comprehensive Environmental Response, Compensation, and Liability Act of 1980*
CFR	Code of Federal Regulations
CHG	CH2M Hill Hanford Group, Inc.
CONOPS	Conduct of Operations
CPP	CERCLA Past Practice
CRP	Community Relations Plan
D&D	decontamination and decommissioning
DCRT	double-contained Receiver Tank
DCG	derived concentration guide
DOE	U.S. Department of Energy
DOE-HQ	U.S. Department of Energy-Headquarters
DQO	data quality objectives
DST	double-shell tank
DW	dangerous waste
DWP	Detailed Work Plan
EA	Environmental Assessment
Ecology	Washington State Department of Ecology
EEA	Engineering Evaluation of Alternative
EE/CA	Engineering Evaluation/Cost Analysis
EIS	Environmental Impact Statement
EM	DOE Office of Environmental Management
EMSL	Environmental Molecular Sciences Laboratory
EPA	U.S. Environmental Protection Agency
ER	environmental restoration
ERA	Expedited Response Action
ERDF	Environmental Restoration Disposal Facility
ES&H	environment, safety, and health
FFTF	Fast Flux Test Facility
FH	Fluor Hanford, Inc.

COMMONLY USED ACRONYMS AT THE HANFORD SITE

FS	Feasibility Study
FSUG	Future Site Uses Working Group
FY	fiscal year
HAMMER	Hazardous Material Management and Emergency Response (Training Center)
HCP-EIS	Hanford Comprehensive Land Use Plan-Environmental Impact Statement
HEHF	Hanford Environmental Health Foundation
HGET	Hanford General Employee Training
HLW	high-level waste
HMTC	Hanford Atomic Metal Trades Council
HRA-EIS	Hanford Remedial Action – Environmental Impact Statement
HSWA	Hazardous and Solid Waste Amendments (of 1984)
HSMA	Hazardous Waste Management Act
HWVP	Hanford Waste Vitrification Plant
IAMIT	Inter-Agency Management Integration Team
IM	Interim Measure
INEEL	Idaho National Engineering and Environmental Laboratory
IRA	Interim Response Actions
IRM	Information Records Management
ISMS	Integrated Safety Management System
ISS	Interim Safe Storage (of the reactors)
ISV	In-situ Vitrification
JIC	Joint Information Center
LDR	Land Disposal Restrictions
LERF	Liquid Effluent Retention Facility
LFI	Limited field investigation
LL	low level
LLBG	Low-level burial ground
LLMW	low-level mixed waste
LLW	low-level waste
LMSI	Lockheed Martin Services, Inc.
LWDF	Liquid Waste Disposal Facility
MB	Megabyte
MCL	maximum contaminant level
MOA	Memorandum of Agreement
MOU	Memorandum of Understanding
MREM	Millirem
MSDS	Material Safety Data Sheet
MTCA	*Model Toxics Control Act*
MW	mixed waste
MYPP	Multi-Year Program Plan
MYWP	Multi-Year Work Plan
NEPA	*National Environmental Policy Act*
NCP	National Oil and Hazardous Substances Contingency Plan
NOAA	National Oceanic and Atmospheric Administration
NPDES	National Pollutant Discharge Elimination System
NPL	National Priorities List
NRC	Nuclear Regulatory Commission
NRTC	National Resource Trustee Council

COMMONLY USED ACRONYMS AT THE HANFORD SITE

O&M	Operation and Maintenance
OMB	Office of Management and Budget
ORNL	Oak Ridge National Laboratory
ORP	DOE Office of River Protection
OSHA	Occupational Safety and Health Administration
OU	operable unit
PA/SI	Preliminary Assessment and Site Investigation
PCHB	Pollution Control Hearings Board
pCi/L	pico curies per liter
PFP	Plutonium Finishing Plant
PHMC	Project Hanford Management Contractor
PI	Performance Indicator
PNNL	Pacific Northwest National Laboratory
PUREX	Plutonium Uranium Reduction Extraction (Facility)
QA	quality assurance
QC	quality control
RA	remedial action
RCRA	*Resource Conservation and Recovery Act of 1976*
R&D	research and development
RL	DOE-Richland Operations Office
ROD	Record of Decision
RPP	RCRA Past Practice
RPP	River Protection Project
S&H	safety and health
SAP	sampling and analysis plan
SARA	Superfund Amendments and Reauthorization Act of 1986
SEC	Senior Executive Committee
SEPA	*State Environmental Policy Act*
SMS	Site Management System
SNFP	Spent Nuclear Fuels Project
SNM	Special Nuclear Material
SOW	Statement of Work
SRS	Savannah River Site
SST	single-shell tank
STCG	Science and Technology Coordinating Group
SWMU	site waste management unit
TAG	Technical Assistance Grant
TBD	to be decided/determined
TPA	Tri-Party Agreement *(Hanford Federal Facility Agreement and Consent Order)*
TRIDEC	Tri-Cities Industrial Development Council
TRU	transuranic
TRUEX	Transuranic Extraction (process)
TRUSAF	Transuranic Waste Storage and Assay Facility
TSD	Treatment, storage and disposal
U.S.C.	U.S. Code
USDOE	U.S. Department of Energy
USEPA	U.S. Environmental Protection Agency
USQ	Unreviewed Safety Questions

COMMONLY USED ACRONYMS AT THE HANFORD SITE

UST	underground storage tank
WAC	Washington Administrative Code
WBS	Work Breakdown Structure
WESF	Waste Encapsulation and Storage Facility
WIPP	Waste Isolation Pilot Project
WM	waste management
WRAP	Waste Receiving and Processing
WTF	Water Treatment Facility
YN	Yakama Nation

GLOSSARY

Administrative Record: The administrative record is a library of documents which includes information from Tri-Party Agreement activities such as remedial action, interim response action (i.e. removal action), corrective measure, interim measure, RCRA permit, or approved RCRA closure plan. There are two Administrative Records, managed by the U.S. Department of Energy in Richland, Washington and the Washington State Department of Ecology in Kennewick, Washington.

Agency (Agencies): The U.S. Department of Energy, Washington State Department of Ecology, and the U.S. Environmental Protection Agency.

Agency for Toxic Substances and Disease Registry: The agency under the Department of Health and Human Services, Public Health Service, that is responsible for conducting health assessments at Superfund sites for EPA.

Alpha-Emitter: A radioactive substance, such as plutonium, that emits alpha particles. Alpha radiation is much less penetrating than gamma or beta radiation, but is much more ionizing, and therefore potentially extremely toxic.

Applicable or Relevant and Appropriate Requirement (ARAR): Any standard, requirement, criteria or limitation as provided in Section 121(d)(2) of CERCLA.

Aquifer: A geologic formation, group of formations, or part of a formation capable of yielding significant quantities of groundwater to wells, springs, or other points of discharge.

Aquifer System: A logical grouping of aquifers in a region, grouped on the basis of characteristics such as superficial geology, water quality, and vulnerability.

As Low As Reasonably Achievable (ALARA): A radiation protection principle applied to radiation exposure, with costs and benefits taken into account.

Authority: Legal jurisdiction enabling a governmental agency to administer and implement federal or state laws and regulations.

B Plant: Old Hanford plutonium recovery and separations facility converted in 1968 for waste fractionation.

Barrier: A manmade addition to a disposal site that is designed to retard or preclude contaminant transport and/or to preserve the integrity of the disposal site.

Basalt: A dark, fine-grained, extrusive igneous rock. Within the geologic structure beneath the Hanford Site, there are three distinct formations. Basalt flows that have been warped and folded make up the deepest level.

Basalt Waste Isolation Project (BWIP): Program to study Hanford as a possible location for the high-level nuclear waste repository. This project was discontinued in the late 1980s.

Base RCRA Program: Those elements of the federal Resource Conservation and Recovery Act of 1976, as amended, for which the state of Washington has received authorization to implement. The state implements its own dangerous waste program in lieu of the base RCRA program.

Beta Radiation: Essentially weightless charged particles (electrons or positrons) emitted from the nucleus of atoms undergoing nuclear transformation.

Bottoms (tank bottoms): The concentrated material remaining in the waste tanks after most of the contents have been pumped out for solidification or transfer to other storage tanks; refers also to specific tanks used to collect such bottoms waste from several other tanks.

Burial Ground: Land area specifically designated to receive contaminated waste packages and equipment, usually in trenches covered with overburden.

Byproduct Material: Waste produced by extraction or concentration of uranium or thorium from any ore processed primarily for its source material content, including discrete surface waste resulting from uranium solution extraction processes; excludes fission products and other radioactive material covered in 10 CFR Part 20.3(3).

Carbon Tetrachloride: A chlorinated organic solvent used in the plutonium extraction process at the Plutonium Finishing Plant. Carbon tetrachloride is a known human liver carcinogen via inhalation and ingestion. Other toxic effects include central nervous system damage.

Chromium: An inorganic element, found in the environment in two forms: hexavalent and trivalent. Hexavalent chromium is carcinogenic via inhalation; hexavalent and trivalent chromium are less toxic via ingestion. Hexavalent chromium is a primary contaminant in groundwater beneath the 100 Area at Hanford.

Central Plateau: Hanford's 200 East and 200 West Areas are located in this area of the Hanford Site. The area has approximately 53 million gallons of high-level radioactive waste in aging underground tanks. In addition, there are principal nuclear chemical processing and waste management facilities located in the Central Plateau.

CERCLA Past Practice (CPP): A process by which a past practice unit containing hazardous substances will be addressed for response action (as opposed to RCRA past practice).

Closure: Actions taken to reduce the human health and environmental threats posed by a hazardous waste treatment, storage and/or disposal (TSD) facility or unit (along with it structures and contiguous land) after the facility or unit has received its final volume of hazardous waste. Closure must satisfy applicable requirements of 40CFR Part 264, subpart G, and of WAC 173-303-610. For purposes of this Agreement, use of the word closure also includes actions necessary for the facility or unit to meet post closure requirements.

Code of Federal Regulations (CFR): Regulations developed by the federal government to implement statutory requirements.

Cold Standby: A condition whereby a reactor is defueled and maintained in a state that will allow the reactor to be restarted, if necessary.

Community Relations Plan (CRP): A public document that provides information on public participation opportunities and information resources The CRP also encourages and ensures two-way communication between an affected community and the public agency overseeing the site cleanup.

Comprehensive Environmental Response, Compensation, and Liability Act (CERCLA), also known as Superfund: The federal statute enacted in 1980 and reauthorized in 1986, which provides the statutory authority for cleanup of hazardous substances that could endanger public health or welfare or the environment.

Confined Aquifer: An aquifer having defined, relatively impermeable upper and lower boundaries and the pressure of which is significantly greater than atmospheric.

Containment Building (for the purposes of RCRA Interim Status Standards): A completely enclosed, self-supporting structure that is designed and constructed of manmade materials of sufficient strength and thickness to support themselves, the waste contents, and any personnel and heavy equipment that operate within the units. It has a primary barrier designed to be: 1) sufficiently durable to withstand the movement of personnel and the handling of equipment within the unit and 2) operated to ensure containment and prevent the tracking of materials from the unit by personnel or equipment. (Ref. 40 CFR 265.1100)

Contamination (Groundwater and Surface Water): An impairment of quality by biological, chemical, or radiological materials that lowers the water quality to a degree which creates a potential hazard to the environment, public health, or interferes with a beneficial use.

Corrective Action: The RCRA processes of interim and corrective measures. See definitions for Interim Measure and Corrective Measure.

Corrective Measure: An action taken under RCRA authority to permanently resolve a hazardous waste release or to significantly reduce the potential for a future release from a unit or group of units.

Corrective Measures Implementation (CMI): The step in RCRA past practice process in which a corrective action system is designed and implemented; comparable to the Remedial Design and Remedial Action phases of the CERCLA process.

Corrective Measures Study (CMS): The step in the RCRA past practice process in which alternatives for a corrective action system are investigated and screened; comparable to the Feasibility Study phase of the CERCLA process. (see Section 7.4)

Crib: An underground structure designed to receive liquid waste that can percolate into the soil directly and/or after travelling through a connected tile field.

Cradle-to-grave: The Resource Conservation and Recovery Act requires management of hazardous wastes from the first point of waste generation until final disposal by all generators, transporters, and owners/operators of treatment, storage, and disposal facilities that handle hazardous waste.

Criteria: Numerical or narrative values which represent the maximum level a contaminant must not exceed to maintain a given beneficial use.

Curie (Ci): The basic unit used to describe the intensity of radioactivity.

Cyanide: An extremely hazardous substance used in the extraction of ores, treatment of metals, and in the manufacture of pharmaceuticals.

Dangerous Waste (DW): Those solid wastes designated in WAC 173-303-070 through 173-303-103 as dangerous or extremely hazardous wastes.

Data Quality Objective (as used for a planning process): The formal decision-making process between the laboratory and the client that defines necessary analytical requirements based on the end-use of the data.

Deactivation: Activities associated with removing facility systems and/or areas from operational service with the intent of being ready for facility transition to either convert the facility for another use or move to permanent shutdown. These activities could include the removal of fuel, draining and/or de-energizing of systems, removal of accessible stored radioactive and hazardous materials and other actions to place the facility systems and/or areas in a safe and stable condition. Once this is completed, a surveillance and maintenance program will be able to most cost-effectively prevent any unacceptable risk to the public or the environment until ultimate disposition of the facility. (Note: These activities are usually conducted during the facility transition phase.)

Decontamination: The process of removing radioactive and/or hazardous contamination from facilities, equipment, or soils by physical removal, washing, heating, chemical action, mechanical cleaning or other techniques to achieve a stated objective or end condition.

Decommissioning: Actions taken to reduce the potential health and safety impacts of USDOE contaminated facilities, including activities to stabilize, reduce, or remove radioactive materials or to demolish the facilities.

Defense Waste: Radioactive waste from any activity performed in whole or in part in support of USDOE atomic energy defense activities; term excludes waste under purview of the Nuclear Regulatory Commission or generated by the commercial nuclear power industry.

Definitive Design: USDOE's design phase in which detailed construction drawings and specifications are prepared following conceptual design for a new, or modification to a facility or unit.

Dismantlement: The process of disassembly and/or demolition of all or portions of a facility, and appropriate disposal of the residue.

Ditch: An unlined conveyance for transport of liquid wastes to a pond or trench structure designed for percolation.

Double Shell Tank (DST): A reinforced concrete underground vessel with two inner steel liners to provide containment and backup containment of liquid wastes; annulus is instrumented to permit detection of leaks from inner liner.

Drywell: A drainage receptacle constructed by digging a hole and refilling with coarse gravel; also a watertight well casing used for inserting monitoring equipment.

Ecology: The Washington State Department of Ecology.

Entombment: The remedial process to encapsulate a facility in place as a method of final disposition once cleanout has been completed.

Ethylene Glycol: An organic compound used primarily as an anti-freeze. Ethylene glycol is moderately toxic when ingested.

Evapotranspiration: The combined loss of water from soil by evaporation and from the surfaces of plant structures.

Environmental Restoration Disposal Facility (ERDF): The Environmental Restoration Disposal Facility is a large-scale, evolving landfill, complete with ancillary facility, located on the Central Plateau. It is designed to receive and isolate low-level radioactive, hazardous and mixed wastes from Hanford Site cleanup activities only. The ERDF is designed to provide disposal capacity to accommodate projected Hanford wastes volumes over the next 20-30 years.

Expedited Response Action: A general term referring to either an interim response action (i. e. removal action) under authority of CERCLA, or an interim measure under the authority of the Hazardous and Solid Waste Amendments (of 1984).

Extremely Hazardous Waste (EHW): Those solid wastes designated in WAC 173-303-070 through 173-303-103 as dangerous or extremely hazardous wastes.

Facility (as applied to the Facility Decommissioning Process): A free-standing building, plant, laboratory, or other enclosure and associated buildings and disposal sites under its responsibility that fulfills, or fulfilled, a specific purpose, and is owned by or otherwise under the responsibility of the USDOE-HQ. (Note: This usage differs substantially from that in the Comprehensive Environmental Response, Compensation, and Liability Act [CERCLA] and RCRA).

Facility Startup: The time at which the Department of Energy has completed their readiness assessment and has provided the operating contractor approval via letter to start initial operations. At this time the contractor has completed their readiness review verifying that: 1) all operability tests have been completed, 2) operating procedures are available for use, and 3) a trained operating staff capable of operating the facility is in place.

Facility Surveillance and Maintenance (S&M) Phase: Period in the life of a facility following completion of the transition phase until such time as the facility is dispositioned for other use, or facility disposition has commenced.

Facility Transition Phase: A period of time during which activities necessary to place the subject facility in a safe, stable, and environmentally sound condition, suitable for an extended period of surveillance and maintenance pending final disposition are completed. Facility transition starts with termination of operations, includes the establishment of a S&M program, and ends with the achievement of facility-specific end point criteria.

Fast Flux Test Facility (FFTF): The Fast Flux Test Facility (FFTF) is a 400-megawatt (thermal) liquid-metal (sodium) cooled fast neutron flux nuclear test reactor owned by the U.S. Department of Energy (USDOE). The facility is located in the 400 Area of the Hanford Site. FFTF was completed in 1978 and initial operation began in 1980. From April 1982 to April 1992, the FFTF operated as a national research facility to test advanced nuclear fuels, materials, components, nuclear power plant operations and maintenance protocols, and reactor safety designs. The U.S. Department of Energy announced in December 2001 that the reactor will be shut down."

Feasibility Study (FS): The step in the CERCLA process in which alternatives for a remedial action system are investigated and screened (see Section 7.3).

Final Disposition of the Reactors: Final disposition of the reactors will consist of removing the reactor cores from their present location at or before the end of the 75-year safe storage period to a disposal facility in the 200 Area of the Hanford Site. Associated structure(s) and residual wastes will be removed so as to meet established cleanup requirements pertaining to Hanford's 100 Area. Resulting wastes will be disposed at Hanford's Environmental Restoration Disposal Facility, or other disposal facility as may be approved by the parties. USDOE's schedule for this activity will be included in an engineering evaluation/ cost analysis due to the regulators in September 2005.

Fiscal Year (FY): The federal government uses the fiscal year for planning-October 1 through September 30. The State of Washington's fiscal year is July 1 through June 30.

Fitzner-Eberhardt Arid Lands Ecology Reserve (ALE): Located southwest on the Hanford Site, the ALE covers 120 square miles and is managed for the USDOE by the U.S. Fish and Wildlife Service, part of the Department of Interior, and is used for ecological research and preservation.

Focused Feasibility Study: A study conducted such that a limited number of alternatives are evaluated that are focused to the scope of the response action planned.

French Drain: A rock-filled encasement with an open bottom to allow seepage of liquid waste into the ground.

Future Site Uses Working Group: A former working group of representatives from tribal, government, business, economic development, labor, agriculture, environmental groups, and Hanford public interest groups. The group was charged with the task of articulating a range of visions for the future use of the Hanford Site, discussing the implications of those visions on cleanup, and searching for common visions of cleanup scenarios and priorities.

Groundwater: Water which fills the spaces between soil, sand, rock, and gravel particles beneath the earth's surface. Rain that does not immediately flow to streams and rivers slowly percolates down through the soil to a point of saturation to form groundwater reservoirs. Groundwater flows at a very slow rate, compared to surface water, along gradients which often lead to river systems. If occurring in significant quantities, groundwater can be withdrawn for domestic, industrial, and agricultural purposes.

Grout: A fluid mixture of cementitious materials and liquid waste that sets up as a solid mass and is used for waste fixation and immobilization.

Half-life: The time required for a radionuclide's activity to decay to half its value, used as a measure of the persistence of radioactive materials; each radionuclide has a characteristic constant half-life.

Hanford Advisory Board: Created in 1994 by the Tri-Parties, the Board advises all three agencies on major cleanup policy decisions. The Board consists of 31 members and their alternates who represent a broad range of stakeholder interests. Two of the three affected tribal governments are represented on the Board. One of the tribal governments participates on the Board in an ex-officio status.

Hanford formation: Within the geologic structure beneath the Hanford Site, there are three distinct formations. This is the uppermost level and it consists of gravel and sands deposited by catastrophic floods. The second layer, Ringold formation, consists of layers of silt, gravel and sand. The deepest level is a thick series of basalt flows that have been warped and folded and crop out as rock ridges in some places."

Hanford Operable Units Report: Documents the assignment of individual units to operable units and provides the rationale and justification for the prioritization of the operable units for the remedial investigation process.

Hanford Reach National Monument: Managed by the U.S. Fish and Wildlife Service and USDOE, the Hanford Reach consists of a 51-mile stretch through the Hanford Site. It is located on each side of the Columbia River with approximately at 0.25-mile corridor. Many types of plant-life and wildlife live on the land.

Hanford Site: Also referred to as "Hanford" or "Site", the approximately 586 square miles in Southeastern Washington State, excluding leased lands, and State and Bonneville Power Administration owned lands, which is owned by the United States and which is commonly known as the Hanford Reservation.

Hanford Waste Vitrification Plant (HWVP): A facility to be constructed for treatment of high level liquid radioactive waste. Liquids are vitrified or glassified in order to reduce the potential for radioactive and hazardous contamination leaching into the environment. This unit will be regulated under RCRA.

Hazardous and Solid Waste Amendments of 1984, P.L. 98-616 (HSWA): The reauthorization of the RCRA program, enacted by Congress on November 8, 1984.

Hazardous Substance: Substances regulated under CERCLA, as defined in CERCLA Sec. 101(14).

Hazardous Waste: Those wastes included in the definitions of RCRA 1004(5) and RCW 70.105.010(15).

Hazardous Waste Management Act (HWMA): A state program, commonly referred to as the State Dangerous Waste Program, which regulates the generation, treatment, storage and/or disposal of hazardous wastes in cooperation with RCRA.

In-Situ Vitrification (ISV): A process by which electrical current is passed through contaminated soils in-place heating the soil to a molten state. While cooling the soils become a homogenous glass-like block thereby minimizing the leachability of contaminants.

Interagency Management Integration Team (IAMIT): A committee of the Executive Managers from each agency with the functions of negotiation of new milestones, adjustment of scope and schedule of existing interim milestones, and Tri-Party Agreement Issue Resolution/Dispute Resolution. The IAMIT also serves as the interface with the Hanford Advisory Board (HAB).

Interim Measure (IM): An expedited response action taken under RCRA authority to mitigate a hazardous waste release or to reduce the potential for a future release from a unit.

Interim Response Action (IRA): An expedited response action taken under CERCLA authority to mitigate a hazardous substance release or to reduce the potential for a future release from a unit.

Interim Safe Storage (ISS) of the Reactors: Interim Safe Storage (ISS) is the first stage of final disposition. It consists of 1) ensuring that facility hazardous substances are and will remain safe and secure, and 2) reducing the footprint of the reactor building to the primary shield wall, and sealing all openings such that the facility is in an environmentally safe and secure condition prior to initiation of disposition phase II.

Interim Stabilization (as pertains to Single-Shell Tanks)**:** It is the removal of pumpable supernatant and interstitial liquid from single-shell tank systems into double-shell tank systems. As much liquid as practicable will be removed. Supernatant is free standing liquid. Interstitial liquid is that liquid in the waste matrix contained within the pore spaces of the salts and sludges, some of which is capable of gravity drainage while the rest is held by capillary forces.

Interim Status: A RCRA provision which grants a facility the right to continue to operate (treat, store, or dispose of hazardous waste) in accordance with applicable RCRA or state regulations until a RCRA permit is issued.

Iodine: A gaseous inorganic chemical produced in the plutonium production reactors at Hanford. Radioactive isotopes of iodine are found in most radioactive waste streams at Hanford.

Ion Exchange: Process for selectively removing a hazardous constituent from a waste stream by reversibly transferring ions between an insoluble solid and the waste stream; the exchange medium (usually from a column of resin) can then be washed to collect the waste or taken directly to disposal. Both the residue and liquid stream from this process may still be a hazardous waste.

Isotope: Any of two or more forms of a chemical with the same atomic number and nearly identical chemical behavior but different atomic mass and physical (e.g. radioactive) properties.

Land Disposal Restriction Waste (LDR): RCRA hazardous wastes, subject to Section 3004(d) through (m) of RCRA and 40 CFR 268.

Leachate: The product obtained from the passage of water through landfills or storage piles.

Lead: A heavy metal used for shielding material in nuclear reactors. Lead can be toxic when ingested or inhaled. Lead can impair nervous system development in children and can cause nervous system damage in adults. Lead is also a reproductive toxin.

Lead Regulatory Agency: The agency (EPA or Ecology) which is assigned regulatory oversight responsibility with respect to actions under this Agreement regarding a particular Operable Unit; treatment, storage, and disposal group/unit; or, Tri-Party Agreement milestone. The designation of a Lead Regulatory Agency does not change the jurisdictional authorities of the Tri-Parties.

Level of Detection: The level at which a constituent can be detected by a department approved method of analysis.

Liquid Waste Disposal Site: Units used for discharge of contaminated liquids to the ground.

Low-Level Waste (LLW): Typically contains small amounts of radioactivity in large volumes, and most can be handled without protective shielding. Solid low-level waste consists of trash such as clothing, tools, and glassware. Liquid waste consists primarily of water circulated as cooling water.

Maximum Contaminant Level (MCL): The maximum level of a contaminant in water that can exist without harming the beneficial use of drinking water. Defined specifically in the Safe Drinking Water Act.

Model Toxics Control Act (MTCA): This Washington State law establishes administrative processes and standards to identify, investigate, and cleanup facilities where hazardous substances are located.

N Reactor: N Reactor is a dual purpose reactor, generating electricity from its steam by-product in addition to producing plutonium. It is the only plutonium production reactor at Hanford that has operated since 1971. It is currently in standby status.

National Pollutant Discharge Elimination System (NPDES): Grants authority to EPA and authorized states to issue permits for discharge of wastewaters into certain surface water bodies within prescribed limits for constituents, concentrations and volumes.

National Priorities List (NPL): EPA's list of priority waste sites containing hazardous substances that will be investigated and cleaned up under the Superfund program.

Operable Unit: An operable unit at Hanford is a group of land disposal sites placed together for the purposes of doing a Remedial Investigation/ Feasibility Study (RI/FS) and subsequent cleanup actions. The primary criteria for placement of a site into an operable unit includes geographic proximity, similarity of waste characteristics and site type, and the possibility for economies of scale.

Office of River Protection (ORP): The U.S. Department of Energy Office of River Protection manages the tank waste program on the Hanford Site.

Parties: The U.S. Environmental Protection Agency, the Washington State Department of Ecology, and the U.S. Department of Energy.

Percolation: Gravity flow of water through pore spaces in rock or soil.

pH: A measure of acidity and alkalinity.

Plume: A defined area of groundwater contamination.

Plutonium: A radioactive element used as the primary fuel in nuclear weapons. Plutonium is purified during various production operations at Hanford.

Plutonium Uranium Extraction (PUREX): Latest in a line of separation technologies, preceded by bismuth phosphate and REDOX.

Ponds: Surface impoundments used to contain low-level liquid radioactive wastes, mixed wastes, or hazardous wastes.

Preliminary Assessment and Site Inspection (PA/SI): Normally the first step in analyzing the nature and severity of contamination at a potential CERCLA site and is used to determine if a site should be nominated for the NPL. Based upon extensive documentation previously submitted to EPA by USDOE, this requirement is considered to have been satisfied for the Hanford Site.

Project Manager: The individual responsible for implementing the terms and conditions of the Agreement at the specific operable unit level on behalf of his/her respective Party. The project manager has direct responsibility for completion of targets and milestones and has authority to agree to modifications of scope and schedule, in accordance with Section 12.0 of the Action Plan.

Public Information Repositories: A library of documents which includes information from Tri-Party Agreement activities such as remedial action, interim response action (i.e. removal action), corrective measure, interim measure, RCRA permit, or approved RCRA closure plan. There are four Public Information Repositories, located in Richland, Washington; Seattle, Washington; Portland, Oregon; and, Spokane, Washington.

Pump and Treat: Active method of treating groundwater that involves pumping the water to the surface, processing the water to remove the contaminants from the water to a levels that meets regulatory requirements, and returning the treated water to the aquifer.

Quality Assurance (QA): The systematic actions necessary to provide adequate confidence that a material, component, system, process, or facility performs satisfactorily, or as planned in service.

Quality Control (QC): The quality assurance actions that control the attributes of a material, process, component, system, or facility in accordance with predetermined quality requirements.

Radioactive Mixed Waste: Also called "mixed waste", wastes that contain both hazardous waste subject to RCRA, as amended, and radioactive waste subject to the Atomic Energy Act of 1954, as amended. Mixed waste is regulated under the State Dangerous Waste Program.

Radioactive Waste: A solid, liquid, or gaseous material of negligible economic value that contains radionuclides in excess of threshold quantities except for radioactive material from post-weapons-test activities.

Radionuclide: A species of atoms having a particular number of protons (Z), a particular number of neutrons (A), and a particular atomic weight (N=Z+A) that happens to emit radiation.

Receptor: Any living entity potentially affected by release of substances to the environment from Hanford operations.

Record of Decision (ROD): The CERCLA document used to select the method of remedial action to be implemented at a site after the Feasibility Study/Proposed Plan process has been completed.

Reduction/Oxidation (REDOX): A facility and/or processes for separating plutonium from irradiated reactor fuels by using successive steps of chemical reduction/oxidation together with solvent extraction.

Remedial Action: An action taken under CERCLA authority to permanently resolve a hazardous substance release or to significantly reduce the potential for a release from a unit or group of units.

Remedial Design (RD): The CERCLA process of design for the remedial action alternative that was selected in the Record of Decision.

Remedial Investigation (RI): The CERCLA process of determining the extent of hazardous substance contamination and, as appropriate, conducting treatability investigations. The RI is done in conjunction with the Feasibility Study.

Resource Conservation and Recovery Act (RCRA): A federal law enacted in 1976 that regulates the generation, transportation, treatment, storage, and disposal of hazardous wastes.

Response Action: The CERCLA processes of interim response and remedial actions. See definitions for Interim Response Action and Remedial Action.

RCRA Facility Assessment (RFA): The initial RCRA process to determine whether corrective action for a RCRA past practice unit is warranted, or to define what additional data must be gathered to make this determination; analogous to a CERCLA Preliminary Assessment and Site Inspection

RCRA Facility Investigation (RFI): The RCRA process of determining the extent of hazardous waste contamination; analogous to the CERCLA Remedial Investigation.

RCRA Past Practice (RPP): A process by which a past practice unit containing hazardous wastes or hazardous constituents will be addressed for corrective action, regardless of the date waste was received or discharged at a unit.

RCRA Permit: A permit under RCRA and/or HWMA for treatment, storage or disposal of hazardous waste.

Reverse Well: Liquid waste disposal structure consisting of a well (sometimes drilled into the water table) into which waste solutions were pumped.

Revised Code of Washington (RCW): The Washington State statutes.

Ringold formation: Within the geologic structure beneath the Hanford Site, there are three distinct formations. This is the second layer, consisting of layers of silt, gravel, and sand. The uppermost level is know as the Hanford formation and consists of gravel and sands deposited by catastrophic floods. The deepest level is a thick series of basalt flows that have been warped and folded and crop out as rock ridges in some places.

Risk Assessment: An analysis of the potential adverse effects to human health and/or the environment (current or future) caused by radionuclide and/or hazardous substance releases from a site in the absence of any actions to control or mitigate these releases.

River Protection Project (RPP): The River Protection Project consists of the Hanford contractor staff who support the tank waste program.

Salt Cake: Crystallized nitrate and other salts deposited in waste tanks, usually after active measures are taken to remove moisture.

Sanitary Landfill: A burial operation for disposing of nonradioactive, nonhazardous waste or garbage.

Signatories: The Signatories are: For the USDOE, the signatory shall be the Manager, Richland Operations Office. For the EPA, the Signatory shall be the Regional Administrator for Region X. For the Washington State Department of Ecology, the signatory shall be the Director.

Single-Shell Tank (SST): At Hanford, 149 single-shell carbon steel tanks (ranging in size from 55,000 to 1 million gallons) that have been used to store high-level radioactive wastes.

Skyshine: Gamma radiation emitted from a source that is reflected off particles in the air, sometimes landing several hundred meters from their point of origin.

Solid Waste (radioactive): Either solid radioactive material or solid objects that contain radioactive material or bear radioactive surface contamination.

Stabilization: The combination of steps or activities to secure, convert and/or confine radioactive and/or hazardous material within enclosures, exhaust ducts, and process equipment within a facility. These activities may include; removal of loose equipment items, draining process fluids to the maximum extent practicable, coating internal surfaces with a fixative coating, removal of waste materials, installing seals and blank flanges, termination of nonessential energy sources, and/or conversion of reactive residues to a stable form suitable for extended safe storage.

State Waste Discharge Permit: A permit issued pursuant to Chapter 173-216 WAC.

Strontium 90: A highly radioactive isotope common in most radioactive waste streams at Hanford.

Sulfuric Acid: A highly corrosive inorganic acid used in various production processes at Hanford.

Superfund Amendments and Reauthorization Act of 1986 (SARA): The reauthorization of the CERCLA statute, enacted by Congress in December 1986.

Support Agency: The regulatory agency (EPA or Ecology) which is not designated as the lead regulatory agency at an operable unit. The support agency will provide assistance to the lead regulatory agency, as needed.

Surplus Facility: Any facility or site (including equipment) that has no identified programmatic use and may or may not be radioactively contaminated to levels that require controlled access.

Surveillance and Maintenance: Activities conducted to assure that a site or facility remains in a physically safe and environmentally secure condition, and includes periodic inspections and monitoring of the property, appropriate contamination control actions, and required maintenance of barriers controlling access.

Tank Farm: An installation of multiple adjacent tanks, usually interconnected, for storage of liquid waste, or substances used in Hanford operations. Major tank farms at Hanford at underground.

Tank Waste Task Force: A former group of representatives from tribal, government, business, economic development, labor, agriculture, environmental groups, and public interest groups focused on Hanford, labor, and public health. The task force was charged with providing values relative to the Tank Waste Remediation System and with principles for the overall Tri-Party Agreement package during the renegotiations of the Tri-Party Agreement, Summer 1993.

Technical Assistance Grant (TAG): A grant available from EPA designed to enhance public participation as described in Section 117 of CERCLA. A maximum of $50,000 per NPL site is available. Grant money must be used for the purpose of interpreting information regarding CERCLA activity at the site.

Transuranic (TRU) Waste: Waste contaminated with long-lived transuranic elements in concentrations with in a specified range established by USDOE, EPA, and the Nuclear Regulatory Commission (NRC). These are elements shown above uranium on the chemistry periodic table, such as plutonium, americium, and neptunium.

Treatment, Storage, or Disposal (TSD): A RCRA term referring to the treatment, storage, or disposal of hazardous waste. Under RCRA, TSD activity can occur only at units which received or stored hazardous waste after November 19, 1980, the effective date of the RCRA regulations.

Treatment, Storage, or Disposal (TSD) Unit: A unit used for treatment, storage, or disposal of hazardous waste and is required to be permitted and/or closed pursuant to RCRA requirements.

Trend Analysis: A statistical methodology used to detect net changes or trends in contaminant levels over time.

Tribal Government: The Hanford Site is located on land at one time ceded to the United States under separate treaties with Indian Nations. As a result of the treaties with the United States, the Confederated Tribes of the Umatilla Indian Reservation, the Yakama Nation, and the Nez Perce Tribe retained certain rights at the Hanford Site. These are known as the "affected tribal governments."

Tri-Parties: The U.S. Department of Energy, the Washington State Department of Ecology, and the U.S. Environmental Protection Agency.

Tritium: A radioactive isotope of hydrogen used in nuclear weapons to increase the efficiency of the nuclear reaction.

Tunnel: A large underground storage structure for large pieces of equipment, often on railroad cars; PUREX storage tunnels.

Unconfined Aquifer: An aquifer overlain with permeable material and sensitive to contamination; also, an aquifer that has a water table or surface at atmospheric pressure.

United States Department of Energy (USDOE): The United States Department of Energy, its employees and Authorized Representatives.

United States Environmental Protection Agency (EPA): The United States Environmental Protection Agency, its employees and Authorized Representatives.

Unplanned Release: An unintentional release, including a spill, of hazardous waste or hazardous substance into the environment.

Vadose Zone: The unsaturated region of soil between the ground surface and the water table.

Vault: A RCRA approved, subsurface structure designed for permanent disposal of low-level mixed wastes in grout.

Vitrification: See Hanford Waste Vitrification Plant (HWVP) or In-Situ Vitrification.

Wahluke Slope: Also known as the North Slope, this area is located across the Columbia River and is managed by the U.S. Fish and Wildlife Service as a wildlife refuge. The Wahluke Slope and the Fitzner-Eberhardt Arid Lands Ecology Reserve is approximately 45 percent of the Hanford Site and has been cleaned and removed from EPA's Superfund list.

Washington Administrative Code (WAC): The Washington State regulations.

Waste Isolation Pilot Project (WIPP): Located in New Mexico, it is the permanent repository for wastes. The Hanford Site began shipping solid wastes to WIPP.

Water Table: The upper boundary of an unconfined aquifer surface below which soil saturated with groundwater occurs; defined by the levels at which water stands in wells that barely penetrate the aquifer.

200 Areas Plateau: The highest portion (aside from Rattlesnake and Gable Mountains) on the Hanford Site, containing most of the waste processing and storage facilities.

Approved for implementation consistent with the Hanford Federal Facility Agreement and Consent Order.

FOR THE UNITED STATES DEPARTMENT OF ENERGY:

W. Wade Ballard

W. Wade Ballard, Assistant Manager
for Planning and Integration
U.S. Department of Energy, Richland Operations Office

James E. Rasmussen

James E. Rasmussen, Division Director
of Environmental Management
U.S. Department of Energy, Office of River Protection

FOR THE UNITED STATES ENVIRONMENTAL PROTECTION AGENCY:

Douglas R. Sherwood

Douglas R. Sherwood
Hanford Project Manager
U.S. Environmental Protection Agency, Region 10

FOR THE STATE OF WASHINGTON DEPARTMENT OF ECOLOGY:

Michael A. Wilson, Program Manager
Nuclear Waste Program
Washington State Department of Ecology