This document was too large to scan as a single document. It has been divided into smaller sections.

Section 2 of 3

Document Information			
Document #	0201741/02-RCA-0272	**Revision**	
Title	QUARTERLY NOTIFICATION OF CLASS 1 MODIFICATIONS TO THE HANFORD FACILITY RESOURCE CONSERVATION AND RECOVERY ACT (RCRA) PERMIT, DANGEROUS WASTE PORTION (QUARTER ENDING MARCH 31, 2002 - PERMIT CONDITION I.C.3)		
Date	04/09/2002		
Originator	J. HEBDON, R. H. GURSKE, R. D.(ROBY) ENGE	**Originator Co.**	DOE, FH, PNNL
Recipient	L. E. RUUD	**Recipient Co.**	DOEC
References			
Keywords			
Projects			
Other Information			

APPENDIX 4B

DETAILED DRAWINGS FOR THE 200 AREA EFFLUENT TREATMENT FACILITY CONTAINER STORAGE AREA AND TANK SYSTEMS

Drawings of the secondary containment systems for the ETF containers and tanks and process units and for the Load In Tanks are summarized in Table 4B 1 Because the failure of the secondary containment systems could lead to the release of dangerous waste into the environment Engineering Change Notices (ECNs) which affect the secondary containment systems will be submitted to the Washington State Department of Ecology as a Class 1 2 or 3 permit modification as required by WAC 173 303 830

Table 4B 1 Drawing of Effluent Treatment Facility and Load In Station Secondary Containment Systems

ETF Process Unit	Drawing Number	Outstanding ECNs	Drawing Title
Surge Tank Process/Container Storage Areas and Trenches Foundation and Containment	H 2 89063 Sh 1 Rev 3	ECN 647892	STRUCT – Foundation and Grade Beam Plan (Sheet 1)
Sump Tank Containment	H 2 89065 Sh 1 Rev 3	None	STRUCT – Foundation Sections and Detail (Sheet 1)
Verification Tank Foundation and Containment	H 2 89068 Sh 1 Rev 3	ECN 647892	STRUCT – Verification Tank Foundation (Sheet 1)
Load In Facility Foundation and Containment	H 2 817970 Sh 1 Rev 1	ECN 641703 ECN 647247	Structural – ETF Truck Load in Facility Plans and Sections (Sheet 1)
Load In Facility Foundation and Containment	H 2 817970 Sh 2 Rev 1	ECN 641703	Structural – ETF Truck Load in Facility Sections and Details (Sheet 2)

P&ID piping and instrumentation diagram
STRUCT architectural/structural diagram

The drawings identified in Table 4B 2 provide an illustration of the piping and instrumentation configuration for the major process units and tanks at the ETF and the Load In Tanks Drawings of the transfer piping systems between the LERF and ETF and between the Load In Station and the ETF also are presented in this table These drawings are provided for general information and to demonstrate the adequacy of the design of the tank systems An update to these drawings and drawings identified in Table 4B 1 will be provided annually to the Washington State Department of Ecology

Table 4B 2 Drawings of Major Process Units and Tanks at the Effluent Treatment Facility and Load In Station

ETF Process Unit	Drawing Number	Outstanding ECNs	Drawing Title
Load In Facility	H 2 817974 Sh 1 Rev 12	ECN 658555	P&ID – ETF Truck Load In Facility (Sheet 1)
Load In Facility	H 2 817974 Sh 2 Rev 0	None	P&ID – ETF Truck Load In Facility (Sheet 2)
Surge Tank	H 2 89337 Sh 1 Rev 13	ECN 644244	P&ID – Surge Tank System (Sheet 1)
UV/Oxidation	H 2 88976 Sh 1 Rev 10	None	P&ID – UV Oxidizer Part 1 (Sheet 1)
UV/Oxidation	H 2 89342 Sh 1 Rev 8	None	P&ID – UV Oxidizer Part 2 (Sheet 1)
Reverse Osmosis	H 2 88980 Sh 1 Rev 10	ECN 662006	P&ID – 1st RO Stage (Sheet 1)
Reverse Osmosis	H 2 88982 Sh 1 Rev 12	ECN 662006	P&ID – 2nd RO Stage (Sheet 1)
IX/Polishers	H 2 88983 Sh 1 Rev 12	ECN 664323	P&ID – Polisher (Sheet 1)
Verification Tanks	H 2 88985 Sh 1 Rev 9	None	P&ID – Verification Tank System (Sheet 1)
ETF Evaporator	H 2 89335 Sh 1 Rev 16	ECN 664332 HNF FMP 01 9013 R0	P&ID – Evaporator (Sheet 1)
Thin Film Dryer	H 2 88989 Sh 1 Rev 20	ECN 656781L ECN 662046 ECN 664330 ECN 664331 HNF FMP 01 9632 R0	P&ID – Thin Film Dryer (Sheet 1)
Transfer Piping from LERF to ETF	H 2 88768 Sh 1 Rev 1	None	Piping Plan/Profile 4 – 60M 002 M17 and 3 60M 001 M17 (Sheet 1)
Transfer Piping from Load In Facility to ETF	H 2 817969 Sh 1 Rev 1	ECN W291 015 ECN 641703	Civil – ETF Truck Load In Facility Site Plan (Sheet 1)

P&ID piping and instrumentation diagram
STRUCT architectural/structural diagram

This page intentionally left blank

Part III Chapter 4 and Attachment 34

Liquid Effluent Retention Facility and 200 Area Effluent Treatment Facility

Appendix 4B Table 4B 1

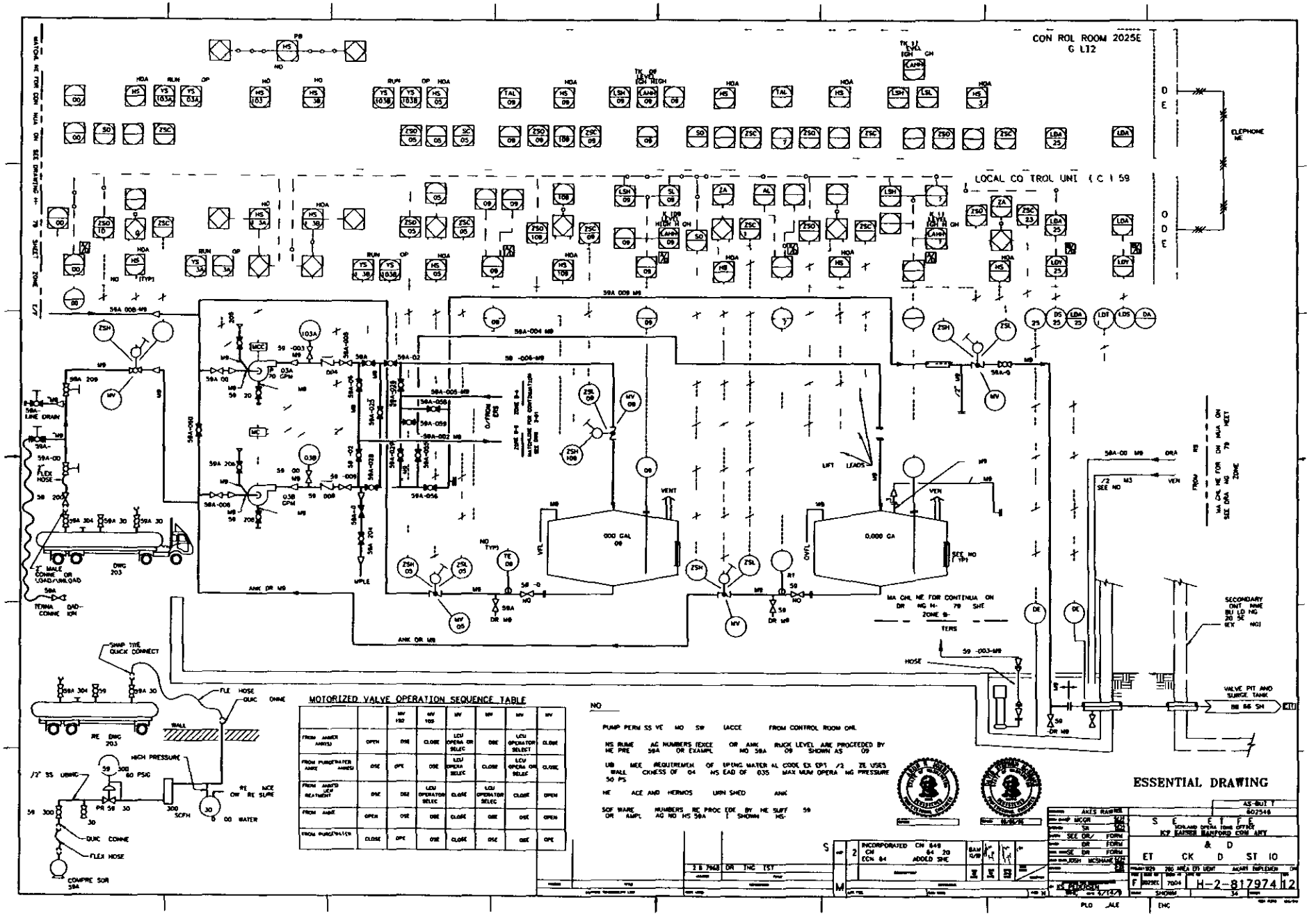

MOTORIZED VALVE OPERATION SEQUENCE TABLE

		MV 102	MV 103	MV	MV	MV	MV
FROM AMMER AMNIS	OPEN	OSE	CLOSE	LCU OPERA OR SELEC	OSE	LCU OPERATOR SELECT	CLOSE
FROM PURGEWATER AMNE AMNIS	OSE	OPE	OSE	LCU OPERA SELEC	CLOSE	LCU OPERA OR SELEC	CLOSE
FROM AMNIS LEAK REATMENT	OSE	OSE	LCU OPERATOR SELEC	CLOSE	LCU OPERATOR SELEC	CLOSE	OPEN
FROM AMNE	OPEN	OSE	OSE	CLOSE	OSE	OSE	OPEN
FROM PURGEWATER	CLOSE	OPE	OSE	CLOSE	OSE	OSE	OPE

NO

PUMP PERM SS VE MO SW IACCE FROM CONTROL ROOM ONL

NS RUME AC NUMBERS (EXCE OR AMK RUCK LEVEL ARE PROCEEDED BY HE PRE 58A OR EXAMPL NO 58A 09 SHOWN AS 09

UB MEE (REQUIREMEN OF EPENC MATER AL COOK EX EP1 /2 ZE USES WALL CKNESS OF 04 NS EAD OF 035 MAX MUM OPERA NG PRESSURE 50 PS

HE ACE AND HERMOS URN SHED ANK

SOF WARE NUMBERS RE PROC EDE BY HE SUFF 59 OR AMPL AG NO NS 58A I SHOWN NS-

INCORPORATED CH 849 CH 84 20 ECN 84 ADDED SHE

2 8 1968 DR ING TST

ESSENTIAL DRAWING

AS-BUI T
607548

S E E T F E
SCALAND OPERA TONS OFFICE
ICP EARNER HANFORD COM AMY

& D

ET CK D ST IO

F 3W3EC 7604 H-2-817974 12

SHOWN 34

PLO ALE EHC

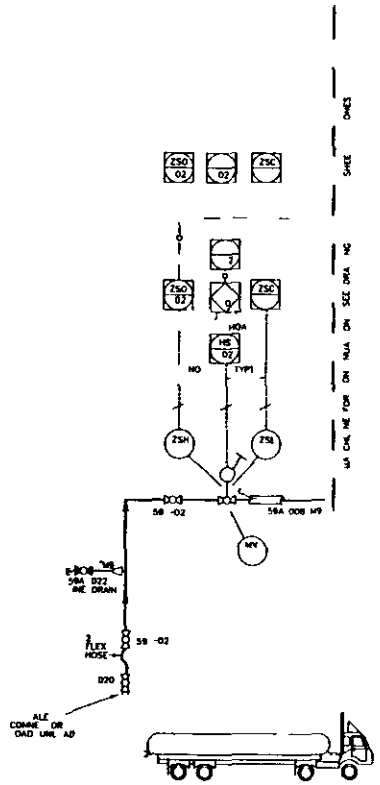

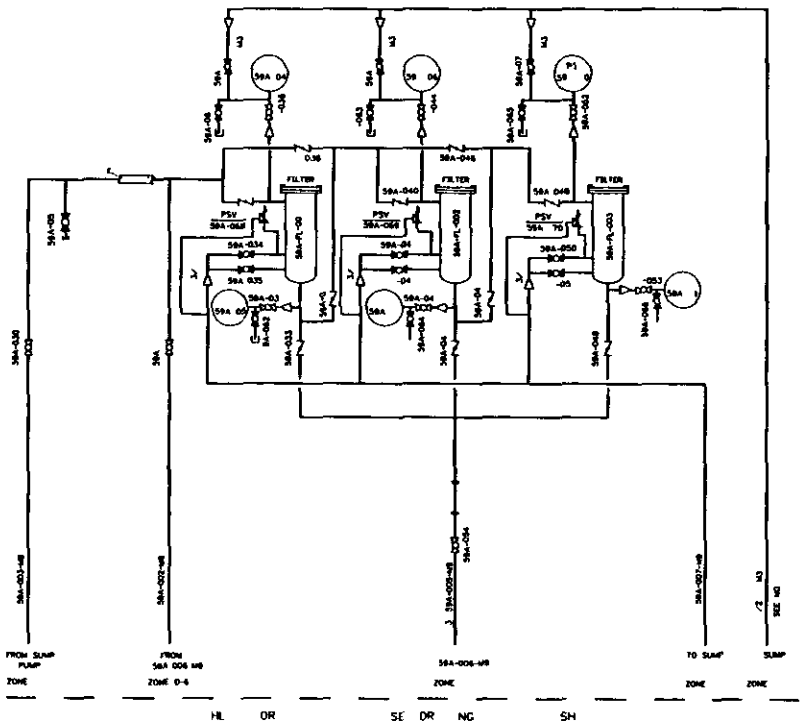

FOR REFE E CE DR W NGS D
GE ER L NOTES SEE SHEET

ESSENTIAL DRAWING

CN ECN 49 CN 84 20, CN-84

D T OF E RG
Richland Operations Office

P & ID
ETF
TRUCK LOAD IN STATION

F 2025CE 7604 H-2 817974 0

NONE for SE ABOVE

DWG NO TITLE
DRAWING CABLE LIST

NUM TITLE
REFERENCES
NE USED ON SHE

REVISIONS

BY WESSNER

S

CPF 18

ENGINEERING CHANGE NOTICE

ESSENTIAL

Page 1 of 54

1 ECN 662006

Proj ECN

2 ECN Category (mark one)	3 Originator s Name Organization MSIN and Telephone No	4 USQ Required?	5 Date
Supplemental [X] Direct Revision [] Change ECN [] Temporary [] Standby [] Supersedure [] Cancel/Void []	H L Roach/3M500/S6 72/373 1985	[] Yes [X] No	09/18/01
	6 Project Title/No /Work Order No Replace 3 Way Valves on RO System 60F/ CACN 101697 COA AJ60	7 Bldg /Sys /Fac No 2025E/60F	8 ApprovalDesignator T
	9 Document Numbers Changed by this ECN (includes sheet no and rev) See Block 13(a)	10 Related ECN No(s) N/A	11 Related PO No N/A

12a Modification Work	12b WorkPackage No	12c Modification WorkComplete	12d Restored to OriginalCondition(Temp or Standby ECN only)
[x] Yes (fill out Blk 12b) [] No (NA Blks 12b 12c 12d)	EL 01 00164/M	Design Authority/Cog Engineer Signature & Date	N/A Design Authority/Cog Engineer Signature & Date

13a Description of Change

13b Design Baseline Document? [x] Yes []No

Documents Number Changed by this ECN

H-2-88980 Rev 10 Sheet 1

H-2-88982 Rev 12 Sheet 1

Replace 3-way ball valves with two separate 2-way ball valves

Piping is to be in accordance with ETF Pipe Class Specification ADTECHS S-136H-001 pipe classes 153SV and 302V (Reference CVI V-135A-003-023 V-135A-003-024) with the exception that Flexitallic type LS gaskets will be used

Piping shall be fabricated and tested per ASME B31 3 for normal fluid service

See Continuation Sheet

14a Justification (mark one)

Criteria Change []	Design Improvement [X]	Environmental []	Facility Deactivation []
As Found []	Facilitate Const []	Const Error/Omission []	Design Error/Omission []

14b Justification Details

The Reverse Osmosis (RO) system (60F) has a number of 3-way ball valves that have a bleed by problem that prevents the use of the Clean In Place (CIP) system during RO system operation As a result the RO system must be shut down to allow for cleaning of RO membranes New 2-way ball valves will allow for use of the CIP system during system operation The RO system will not have to be shut down to allow RO membrane cleaning

15 Distribution (include name MSIN and no of copies)

MW Bowman	S6-72	1		CD Skogley	S6-71	1		
DL Flyckt	S6-71	1		NJ Sullivan	S6-72	1		
LL Huth	S6-72	1	H	RW Szelmeczka	S6-72	1		
JM Isdell	B4-39	1	H	CM Towne	S6-74	1		
R Mabry	S6-71	1		MJ Warn	S6-71	1		
BA Messinger	B4-39	1	H	RH Wight	S6-72	1		
HL Roach	S6-72	1	H	WPP Planning	S6-71	1	H	
JB Benton	S6-72	1						

(Advance Copy = H)

RELEASE STAMP

9-21-01

DATE

STA 4

HANFORD RELEASE

ID

A 7900 013 2 (05/96) GEF095

ENGINEERING CHANGE NOTICE CONTINUATION SHEET	Page 2 of 54	1 ECN (use no from pg 1) 662006

16 Design Verification Required	17 Cost Impact ENGINEERING		CONSTRUCTION		18 Schedule Impact (days)	
[x] Yes	Additional	[NA] $	Additional	[NA] $	Improvement	[NA]
[] No	Savings	[NA] $	Savings	[NA] $	Delay	[NA]

19 Change Impact Review Indicate the related documents(other than the engineering documents identified on Side 1)that will be affected by the change described in Block 13 Enter the affected document number in Block 20

SDD/DD	[NA]	Seismic/Stress Analysis	[NA]	Tank Calibration Manual	[NA]
Functional Design Criteria	[NA]	Stress/Design Report	[NA]	Health Physics Procedure	[NA]
Operating Specification	[NA]	Interface Control Drawing	[NA]	Spares Multiple Unit Listing	[NA]
Criticality Specification	[NA]	Calibration Procedure	[NA]	Test Procedures/Specification	[NA]
Conceptual Design Report	[NA]	Installation Procedure	[NA]	Component Index	[X]
Equipment Spec	[NA]	Maintenance Procedure	[NA]	ASME Coded Item	[NA]
Const Spec	[NA]	Engineering Procedure	[NA]	Human Factor Consideration	[NA]
Procurement Spec	[NA]	Operating Instruction	[NA]	Computer Software	[X]
Vendor Information	[X]	Operating Procedure	[X]	Electric Circuit Schedule	[NA]
OM Manual	[NA]	Operational Safety Requirement	[NA]	ICRS Procedure	[NA]
FSAR SAR	[NA]	IEFD Drawing	[NA]	Process Control Manual/Plan	[NA]
Saf ty Equipment List	[NA]	Cell Arrangement Drawing	[NA]	Process Flow Chart	[NA]
Rad ation Work Permit	[NA]	Essential Materia Specification	[NA]	Purchase Requisition	[NA]
Environmental Impact Statement	[NA]	Fac Proc Samp Schedule	[NA]	Tickler File	[NA]
En ironmental Report	[NA]	Inspection Plan	[NA]		[NA]
Environmental Permit	[NA]	Inventory Adjustment Request	[NA]		[NA]

20 Other Affected Documents (NOTE Documents listed below will not be revised by this ECN) Signatures below indicate that the signing organization has been notified of other affected documents listed below

Document Number/Revision	Document Number/Revision	Document Number Revision
POP 60F 002 Rev P 1	H 2 89297 (multiple sht s and Rev s)	
POP 60F-003 Rev E 1		

2 Approvals

	Signature	Date		Signature	Date
Design Author ty	LL Huth	9-20-01	Design Agent	HL Roach	8/14/01
Cog Eng			PE		
Cog Mgr	KJ Lueck	9/20/01	QA		
QA			Safety		
Safety			Design		
Environ			Environ		
Other			Other	B J Williams BJ Williams for tdeson 9/20/01	9/20/01
Rad Con			Independent Design Review		
Operations					
			DEPARTMENT OF ENERGY		
			Signature or a Control Number that tracks the Approval Signature		
			ADDITIONAL		

Drawing Changes are as follows

H-2-88980, SH 1, Zone E7

Remove and replace 3-Way ball valve 60F-103 with two 2-Way ball valves Label new valve downsteam of pipeline 3 -60F-103-302V with valve number 60F-103A Label other new 2-way valve 60F-103B

Show valve 60F-103A as open and 60F-103B as closed

Change label of (ZS) switch associated with new valve 60F-103A to ZS-60F103A

Change label of (ZS) switch associated with new valve 60F-103B to ZS-60F103B

Change label of two (ZI) inputs from 60F153 to 60F103

Show electrical connection between ZS-60F103A and ZS-60F103B

H-2-88980, SH 1, Zone D7

Remove and replace 3-Way ball valve 60F-102 with two 2-Way ball valves Label new valve downsteam of pipeline 3 -60F-102-302V with valve number 60F-102A Label other new 2-way valve 60F-102B

Show valve 60F-102A as open and 60F-102B as closed

Change label of (ZS) switch associated with new valve 60F-102A to ZS-60F102A

Change label of (ZS) switch associated with new valve 60F-102B to ZS-60F102B

Change label of two (ZI) inputs from 60F152 to 60F102

Show electrical connection between ZS-60F102A and ZS-60F102B

Change Pipeline label **2 -60F-109-302V** to **1-1/2 -60F-109-302V**

Add new ¾ branch line with ball valve and plug upstream from valve 60F-102A Show ball valve closed and label 60F-199

H-2-88980, SH 1, Zone C7

Remove and replace 3-Way ball valve 60F-101 with two 2-Way ball valves Label new valve downsteam of pipeline 3 -60F-101-302V with valve number 60F-101A Label other new 2-way valve 60F-101B

Show valve 60F-101A as closed and 60F-101B as open

Change label of (ZS) switch associated with new valve 60F-101A to ZS-60F101A

Change label of (ZS) switch associated with new valve 60F-101B to ZS-60F101B

Change label of two (ZI) inputs from 60F151 to 60F101

Show electrical connection between ZS-60F101A and ZS-60F101B

Change Pipeline label **2 -60F-108-302V** to **1-1/2 -60F-108-302V**

H-2-88980, SH 1, Zone B8

Remove 2 -60F-402-153SV pipeline label and replace with new pipeline label **2 -60F-125-302V**

H-2-88980, SH 1, Zone B8-B7

Install new check valve on pipeline 2 -60F-403-153SV Label check valve 60F-198

Show material break at check valve upstream flange Label pipeline downstream from the check valve 2 -60F-129-302V

Relocate ball valve 60F-291 downstream of check valve 60F-198

Connect pipeline 2 -60F-125-302V to pipeline 2 -60F-129-302V between check valve 60F-198 and ¾ branch line with valve 60F-291

H-2-88980, SH 1, Zones D6

Remove and replace 3-Way ball valve 60F-117 with two 2-Way ball valves Label new valve upstream of pipeline 2 -60F-128-153SV with valve number 60F-117A Label other new 2-way valve 60F-117B

Show valve 60F-117A as open and valve 60F-117B as closed

Change label of (ZS) switch associated with new valve 60F-117A to ZS-60F117A

Change label of (ZS) switch associated with new valve 60F-117B to ZS-60F117B

Change label of two (ZI) inputs from 60F159 to 60F117

Show electrical connection between ZS-60F117A and ZS-60F117B

Remove and replace 3-Way ball valve 60F-114 with two 2-Way ball valves Label new valve upstream of pipeline 2 -60F-107-302V with valve number 60F-114A Label other new 2-way valve 60F-114B

Show valve 60F-114A as open and valve 60F-114B as closed

Change label of (ZS) switch associated with new valve 60F-114A to ZS-60F114A

Change label of (ZS) switch associated with new valve 60F-114B to ZS-60F114B

Change label of two (ZI) inputs from 60F158 to 60F114

Show electrical connection between ZS-60F114A and ZS-60F114B

Correct orientation of pipe reducer shown upstream check valve 60F-115

H-2-88980, SH 1, Zone C6

Remove and replace 3-Way ball valve 60F-112 with two 2-Way ball valves Label new valve upstream of pipeline 2 -60F-128-153SV with valve number 60F-112A Label other new 2-way valve 60F-112B

Show valve 60F-112A as open and 60F-112B as closed

Change label of (ZS) switch associated with new valve 60F-112A to ZS-60F112A

Change label of (ZS) switch associated with new valve 60F-112B to ZS-60F112B

Change label of two (ZI) inputs from 60F157 to 60F112

Show electrical connection between ZS-60F112A and ZS-60F112B

Remove and replace 3-Way ball valve 60F-109 with two 2-Way ball valves Label new valve upstream of pipeline 2 -60F-107-302V with valve number 60F-109A Label other new 2-way valve 60F-109B

Show valve 60F-109A as open and valve 60F-109B as closed

Change label of (ZS) switch associated with new valve 60F-109A to ZS-60F109A

Change label of (ZS) switch associated with new valve 60F-109B to ZS-60F109B

Change label of two (ZI) inputs from 60F156 to 60F109

Show electrical connection between ZS-60F109A and ZS-60F109B

Remove and replace 3-Way ball valve 60F-107 with two 2-Way ball valves Label new valve upstream of pipeline 2 -60F-128-153SV with valve number 60F-107A Label other new 2-way valve 60F-107B

Show valve 60F-107A as closed and valve 60F-107B as open

Change label of (ZS) switch associated with new valve 60F-107A to ZS-60F107A

Change label of (ZS) switch associated with new valve 60F-107B to ZS-60F107B

Change label of two (ZI) inputs from 60F155 to 60F107

Show electrical connection between ZS-60F107A and ZS-60F107B

Correct orientation of pipe reducer shown upstream check valve 60F-110

H-2-88980, SH 1, Zone B7

Change Pipeline label **2 -60F-107-302V** to **1-1/2 -60F-130-302V**

H-2-88980, SH 1, Zone B6

Remove and replace 3-Way ball valve 60F-104 with two 2-Way ball valves Label new valve upstream of pipeline 2 -60F 107-302V with valve number 60F 104A Label other new 2-way valve 60F-104B

Show valve 60F-104A as closed and valve 60F-104B as open

Change label of (ZS) switch associated with new valve 60F-104A to ZS-60F104A

Change label of (ZS) switch associated with new valve 60F-104B to ZS-60F104B

Change label of two (ZI) inputs from 60F154 to 60F104

Show electrical connection between ZS-60F104A and ZS-60F104B

Correct orientation of pipe reducer shown upstream check valve 60F-105

H-2-88980, SH 1, Zone E4

Remove and replace 3-Way ball valve 60F-135 with two 2-Way ball valves Label new valve downstream of pipeline 2 -60F-110-302V with valve number 60F-135A Label other new 2-way valve 60F-135B

Show valve 60F-135A as open and valve 60F-135B as closed

ECN No	Page
662006	10 OF 54

Ref Dwg	Sh	Rev
H-2-88980	1	10

Zone
AS SHOWN

"WAS"

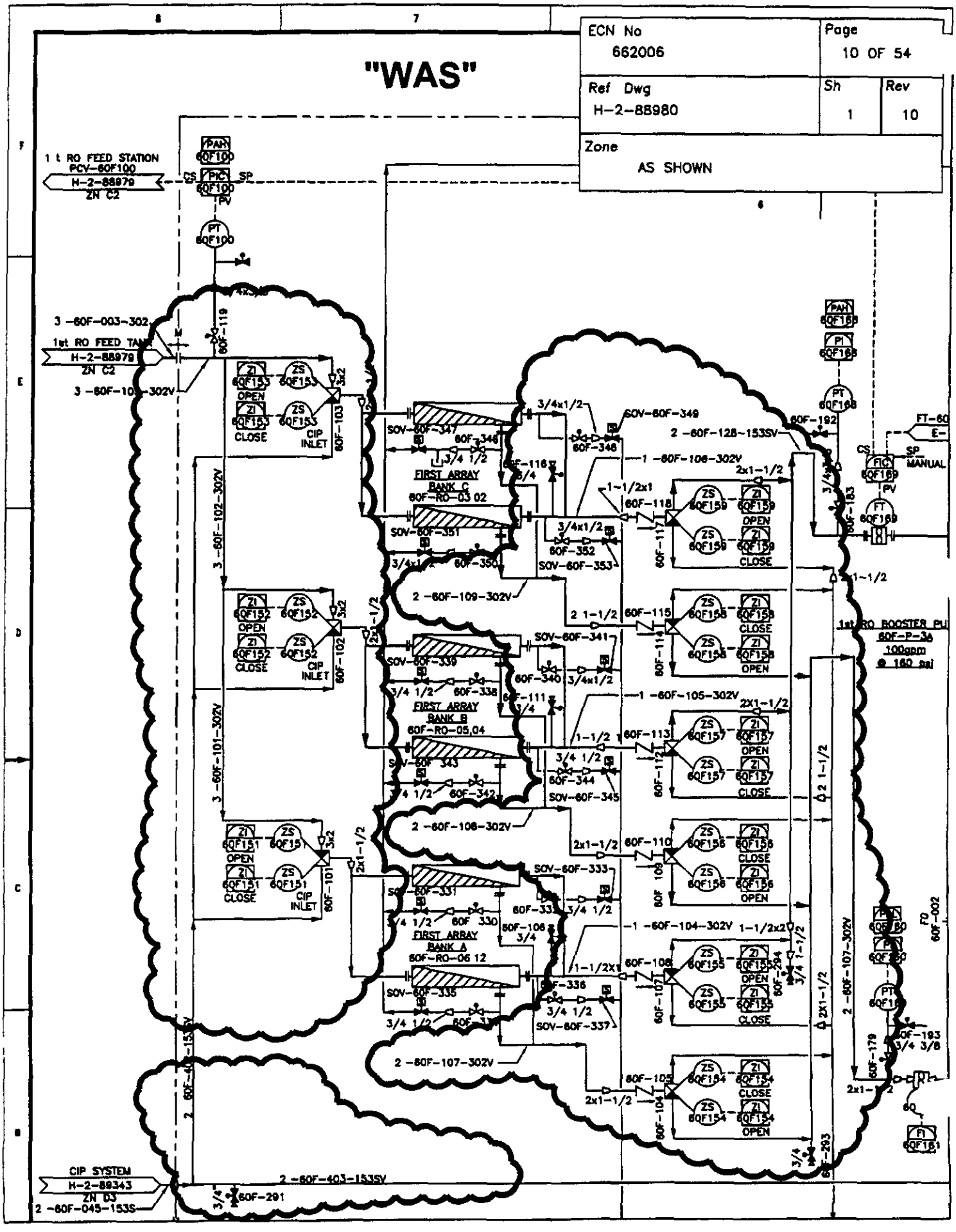

Change label of (ZS) switch associated with new valve 60F-140B to ZS-60F140B

Change label of two (ZI) inputs from 60F179 to 60F140

Show electrical connection between ZS-60F140A and ZS-60F140B

H-2-88980, SH 1, Zone C2

Remove and replace 3-Way ball valve 60F-137 with two 2-Way ball valves Label new valve upstream of pipeline 1-1/2 -60F-119-302V with valve number 60F-137A Label other new 2-way valve 60F-137B

Show valve 60F-137A as open and valve 60F-137B as closed

Change label of (ZS) switch associated with new valve 60F-137A to ZS-60F137A

Change label of (ZS) switch associated with new valve 60F-137B to ZS-60F137B

Change label of two (ZI) inputs from 60F176 to 60F137

Show electrical connection between ZS-60F137A and ZS-60F137B

Remove and replace 3-Way ball valve 60F-182 with two 2-Way ball valves Label new valve upstream of FT-60F188 with valve number 60F-182A Label other new 2-way valve 60F-182B

Show valve 60F-182B as open and valve 60F-182A as closed

Change label of (ZS) switch associated with new valve 60F-182A to ZS-60F182A

Change label of (ZS) switch associated with new valve 60F-182B to ZS-60F182B

Change label of two (ZI) inputs from 60F178 to 60F182

Show electrical connection between ZS-60F182A and ZS-60F182B

H-2-88980, SH 1, Zone C3

Change pipeline label from 1-1/2 -60F-110-302V to 1-1/2 -60F-132-302V

H-2-88980, SH 1, Zone B2

Remove and replace 3-Way ball valve 60F-142 with two 2-Way ball valves Label new valve upstream of pipeline 1-1/2 -60F-119-302V with valve number 60F-142A Label other new 2-way valve 60F-142B

Show valve 60F-142B as open and valve 60F-142A as closed

Change label of (ZS) switch associated with new valve 60F-142A to ZS-60F142A

Change label of (ZS) switch associated with new valve 60F-142B to ZS-60F142B

Change label of two (ZI) inputs from 60F175 to 60F142

Show electrical connection between ZS-60F142A and ZS-60F142B

H-2-88982, SH 1, Zone E7

Remove and replace 3-Way ball valve 60F-223 with two 2-Way ball valves Label new valve downsteam of pipeline 3 -60F-303-302V with valve number 60F-223A Label other new 2-way valve 60F-223B

Show valve 60F-223A as open and 60F-223B as closed

Change label of (ZS) switch associated with new valve 60F-223A to ZS-60F223A

Change label of (ZS) switch associated with new valve 60F-223B to ZS-60F223B

Change label of two (ZI) inputs from 60F253 to 60F223

Show electrical connection between ZS-60F223A and ZS-60F223B

H-2-88982, SH 1, Zone D7

Remove and replace 3-Way ball valve 60F-222 with two 2-Way ball valves Label new valve downsteam of pipeline 3 -60F-302-302V with valve number 60F-222A Label other new 2-way valve 60F-222B

Show valve 60F-222A as open and 60F-222B as closed

Change label of (ZS) switch associated with new valve 60F-222A to ZS-60F222A

Change label of (ZS) switch associated with new valve 60F-222B to ZS-60F222B

Change label of two (ZI) inputs from 60F252 to 60F222

Show electrical connection between ZS-60F222A and ZS-60F222B

H-2-88982, SH 1, Zone C7

Remove and replace 3-Way ball valve 60F-221 with two 2-Way ball valves Label new valve downsteam of pipeline 3 -60F-301-302V with valve number 60F-221A Label other new 2-way valve 60F-221B

Show valve 60F-221A as closed and 60F-221B as open

Change label of (ZS) switch associated with new valve 60F-221A to ZS-60F221A

Change label of (ZS) switch associated with new valve 60F-221B to ZS-60F221B

Change label of two (ZI) inputs from 60F251 to 60F221

Show electrical connection between ZS-60F221A and ZS-60F221B

H-2-88982, SH 1, Zones E5

Remove and replace 3-Way ball valve 60F-240 with two 2-Way ball valves Label new valve upstream of pipeline 2 -60F-319-153S with valve number 60F-240A Label other new 2-way valve 60F-240B

Show valve 60F-240A as open and valve 60F-240B as closed

Change label of (ZS) switch associated with new valve 60F-240A to ZS-60F240A

Change label of (ZS) switch associated with new valve 60F-240B to ZS-60F240B

Change label of two (ZI) inputs from 60F259 to 60F240

Show electrical connection between ZS-60F240A and ZS-60F240B

H-2-88982, SH 1, Zones D5

Remove and replace 3-Way ball valve 60F-238 with two 2-Way ball valves Label new valve upstream of pipeline 1 -60F-313-302V with valve number 60F-238A Label other new 2-way valve 60F-238B

Show valve 60F-238A as open and valve 60F-238B as closed

Change label of (ZS) switch associated with new valve 60F-238A to ZS-60F238A

Change label of (ZS) switch associated with new valve 60F-238B to ZS-60F238B

Change label of two (ZI) inputs from 60F256 to 60F238

Show electrical connection between ZS-60F238A and ZS-60F238B

Remove and replace 3-Way ball valve 60F-233 with two 2-Way ball valves Label new valve upstream of pipeline 2 -60F-319-153S with valve number 60F-233A Label other new 2-way valve 60F-233B

Show valve 60F-233A as open and 60F-233B as closed

Change label of (ZS) switch associated with new valve 60F-233A to ZS-60F233A

Change label of (ZS) switch associated with new valve 60F-233B to ZS-60F233B

Change label of two (ZI) inputs from 60F258 to 60F233

Show electrical connection between ZS-60F233A and ZS-60F233B

H-2-88982, SH 1, Zones C5

Remove and replace 3-Way ball valve 60F-231 with two 2-Way ball valves Label new valve upstream of pipeline 1 -60F-313-302V with valve number 60F-231A Label other new 2-way valve 60F-231B

Show valve 60F-231A as open and valve 60F-231B as closed

Change label of (ZS) switch associated with new valve 60F-231A to ZS-60F231A

Change label of (ZS) switch associated with new valve 60F-231B to ZS-60F231B

Change label of two (ZI) inputs from 60F255 to 60F231

Show electrical connection between ZS-60F231A and ZS-60F231B

Remove and replace 3-Way ball valve 60F-228 with two 2-Way ball valves Label new valve upstream of pipeline 2 -60F-319-153S with valve number 60F-228A Label other new 2-way valve 60F-228B

Show valve 60F-228A as closed and valve 60F-228B as open

Change label of (ZS) switch associated with new valve 60F-228A to ZS-60F228A

Change label of (ZS) switch associated with new valve 60F-228B to ZS-60F228B

Change label of two (ZI) inputs from 60F257 to 60F228

Show electrical connection between ZS-60F228A and ZS-60F228B

H-2-88982, SH 1, Zones B5

Remove and replace 3-Way ball valve 60F-224 with two 2-Way ball valves Label new valve upstream of pipeline 1 -60F-313-302V with valve number 60F-224A Label other new 2-way valve 60F-224B

Show valve 60F-224A as closed and valve 60F-224B as open

Change label of (ZS) switch associated with new valve 60F-224A to ZS-60F224A

Change label of (ZS) switch associated with new valve 60F-224B to ZS-60F224B

Change label of two (ZI) inputs from 60F254 to 60F224

Show electrical connection between ZS-60F224A and ZS-60F224B

Relabel pipeline 1-1/2 -60F-313-302V to 1-1/2 -60F-323-302V

H-2-88982, SH 1, Zones B8

Install new check valve on pipeline **2 -60F-404-153SV** Label check valve 60F-197 Label pipeline downstream of check valve **2 -60F-324-302V** Place material break symbol at upstream flange of check valve 60F-197

Relocate ball valve 60F-299 on downstream side of check valve 60F-197

Place material break at flange connection between pipelines 2 -60F-046-153S and 2 -60F-404-153SV

ECN No	Page
662006	14 OF 54

Ref Dwg	Sh	Rev
H-2-88982	1	12

Zone
AS SHOWN

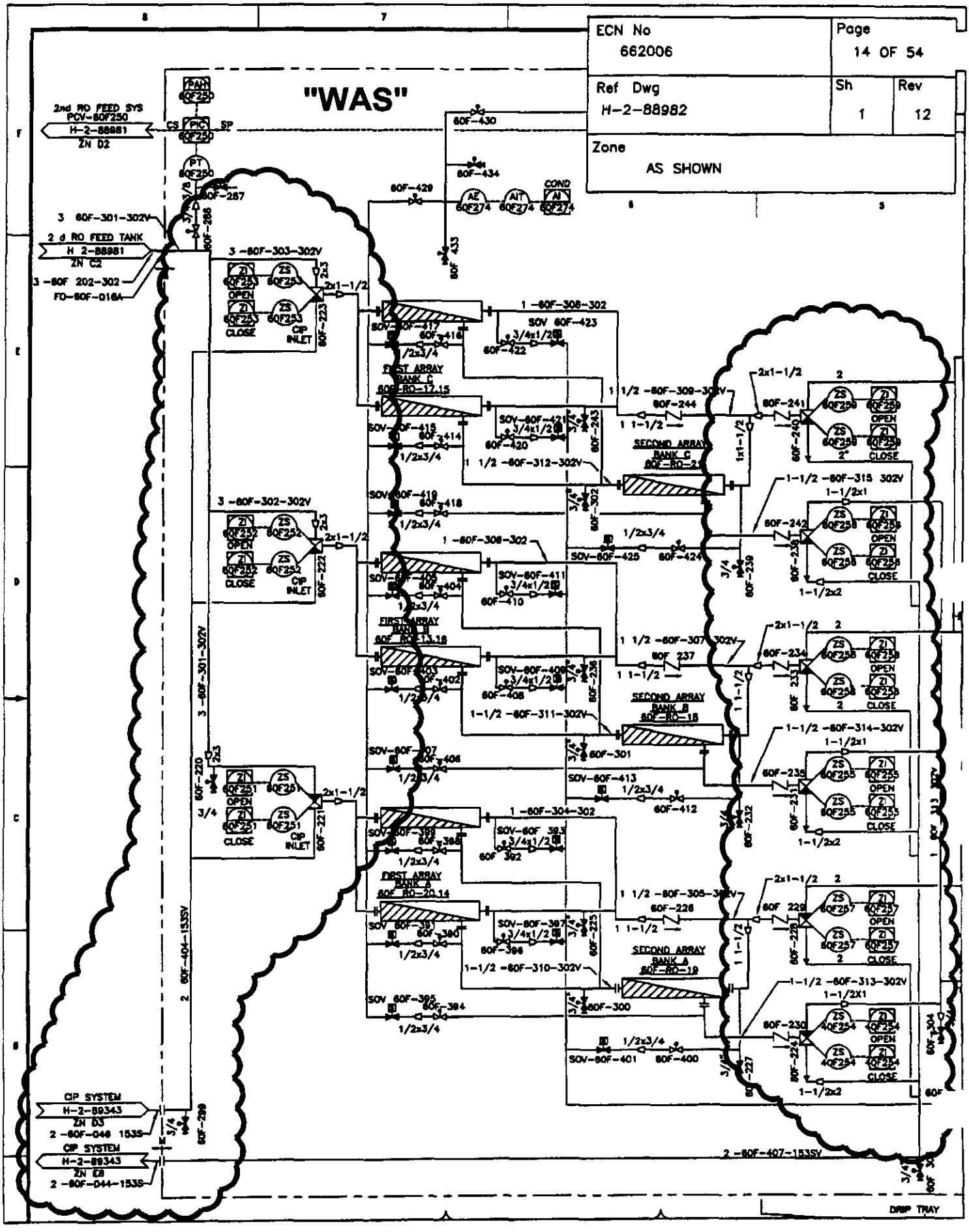

ECN No	Page
662006	10 OF 54

Ref Dwg	Sh	Rev
H-2-88980	1	10

Zone
AS SHOWN

"WAS"

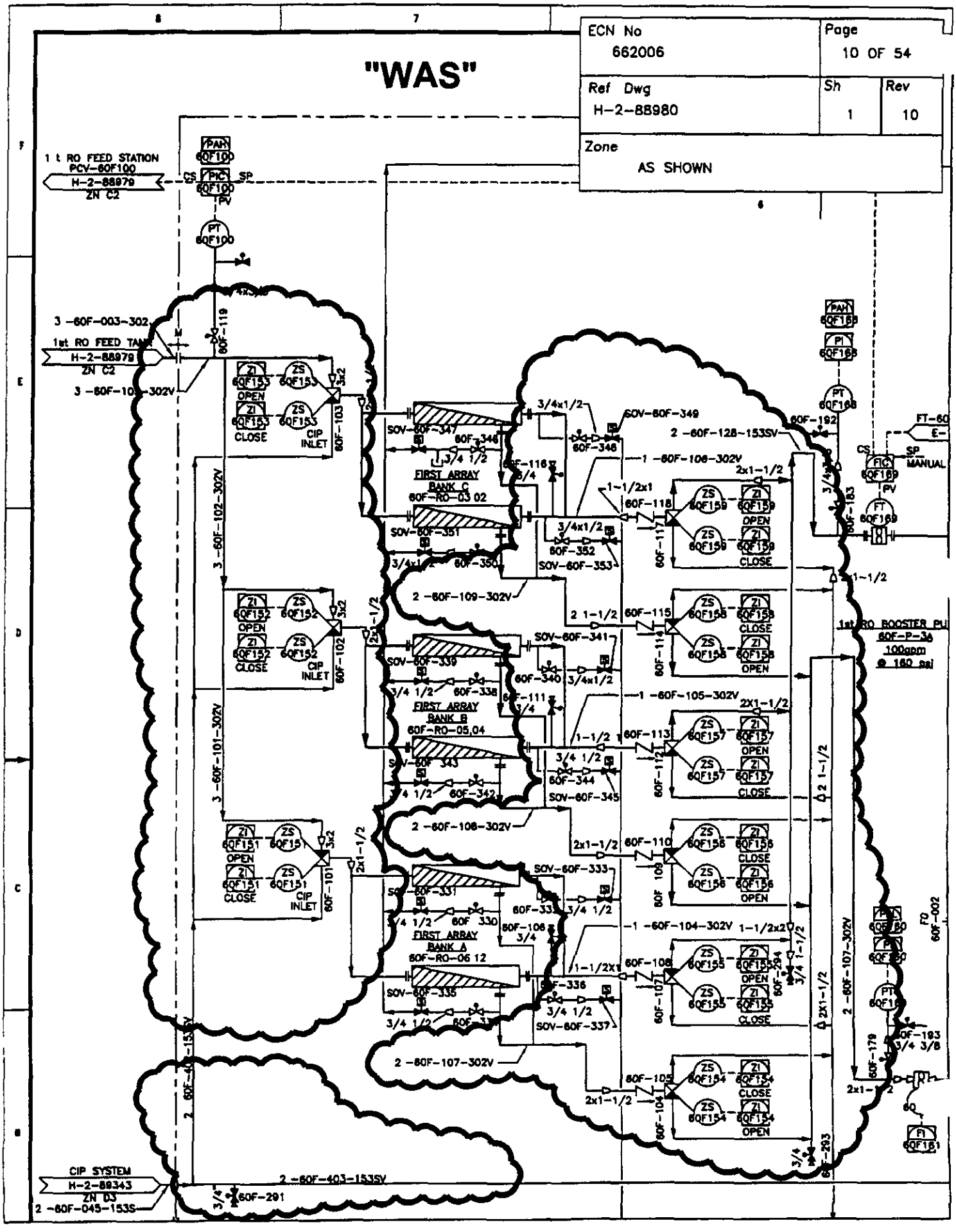

ECN No	Page
662006	11 OF 54

Ref Dwg	Sh	Rev
H-2-88980	1	10

Zone
AS SHOWN

"IS"

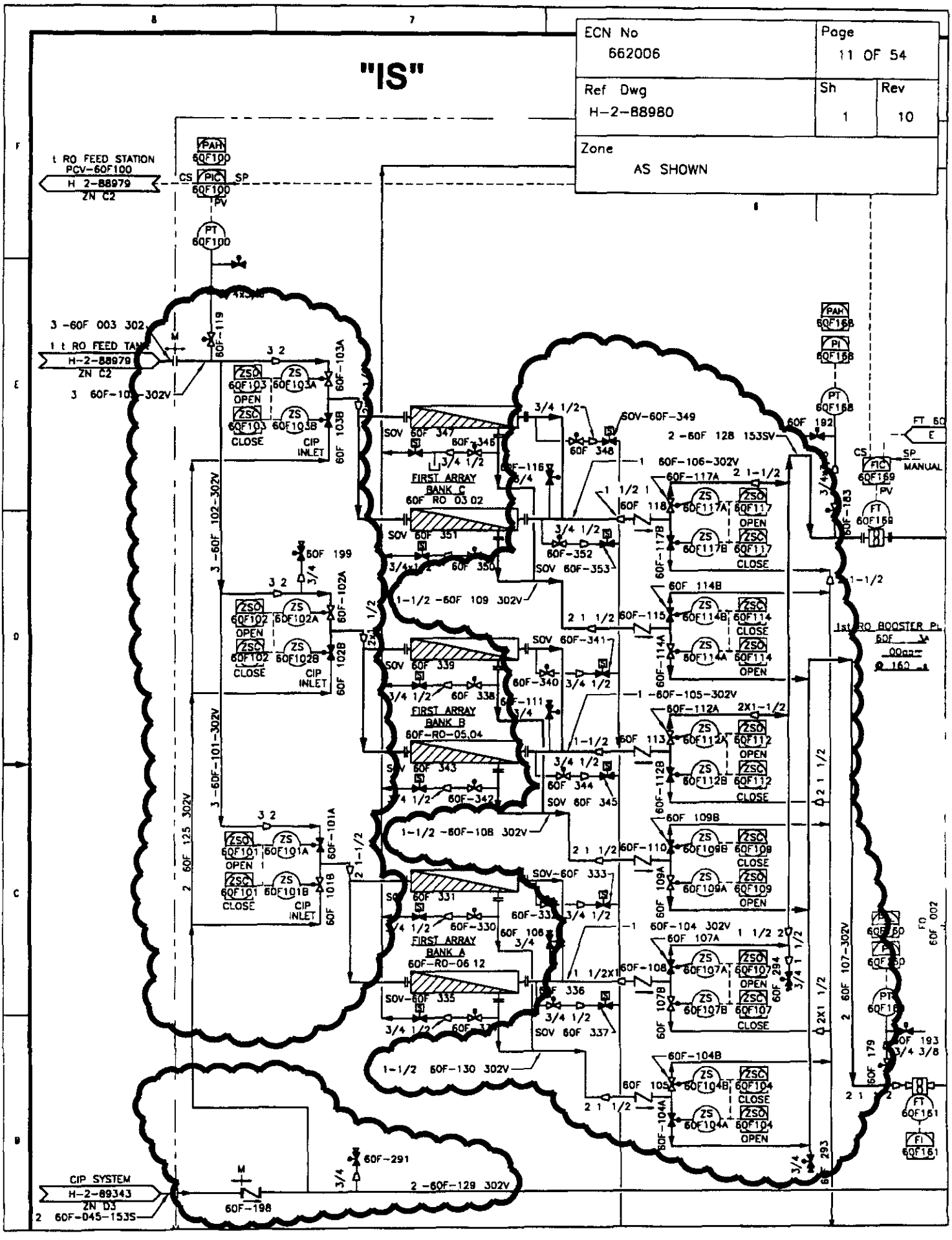

ECN No	Page
662006	12 OF 54

Ref Dwg	Sh	Rev
H-2-88980	1	10

Zone
AS SHOWN

"WAS"

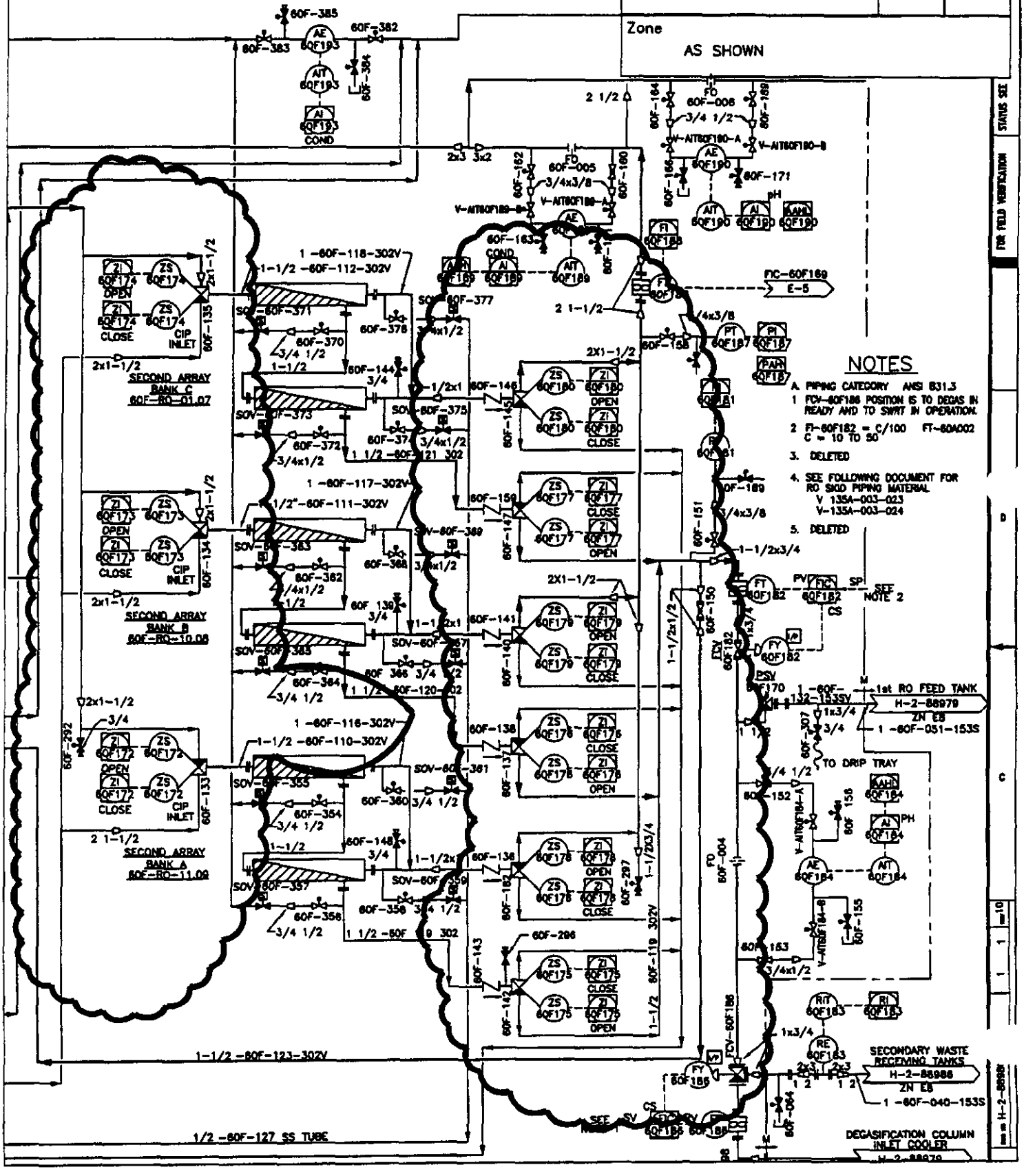

ECN No	Page
662006	13 OF 54

Ref Dwg	Sh	Rev
H-2-88980	1	10

Zone: AS SHOWN

"IS"

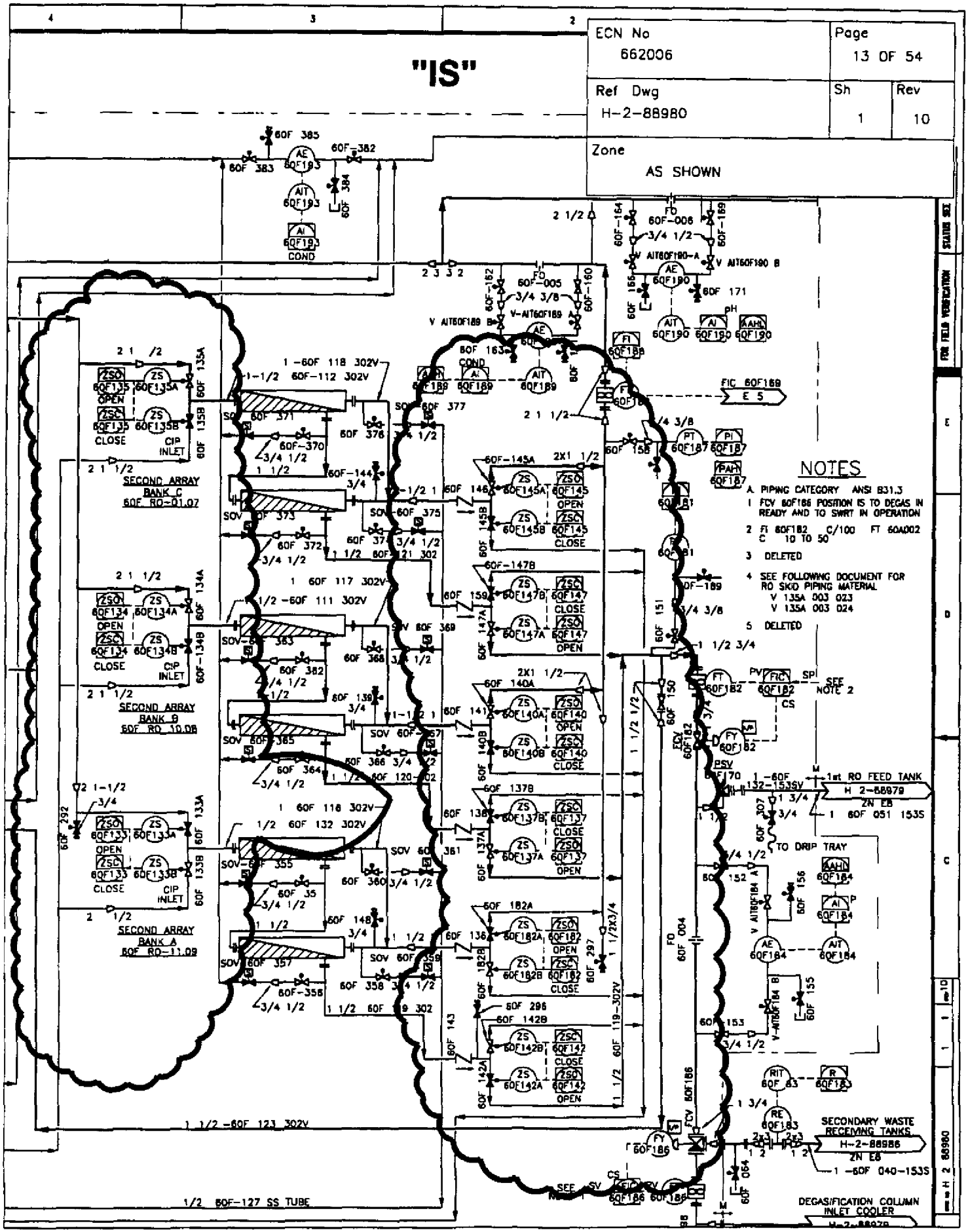

ECN No	Page
662006	14 OF 54

Ref Dwg	Sh	Rev
H-2-88982	1	12

Zone
AS SHOWN

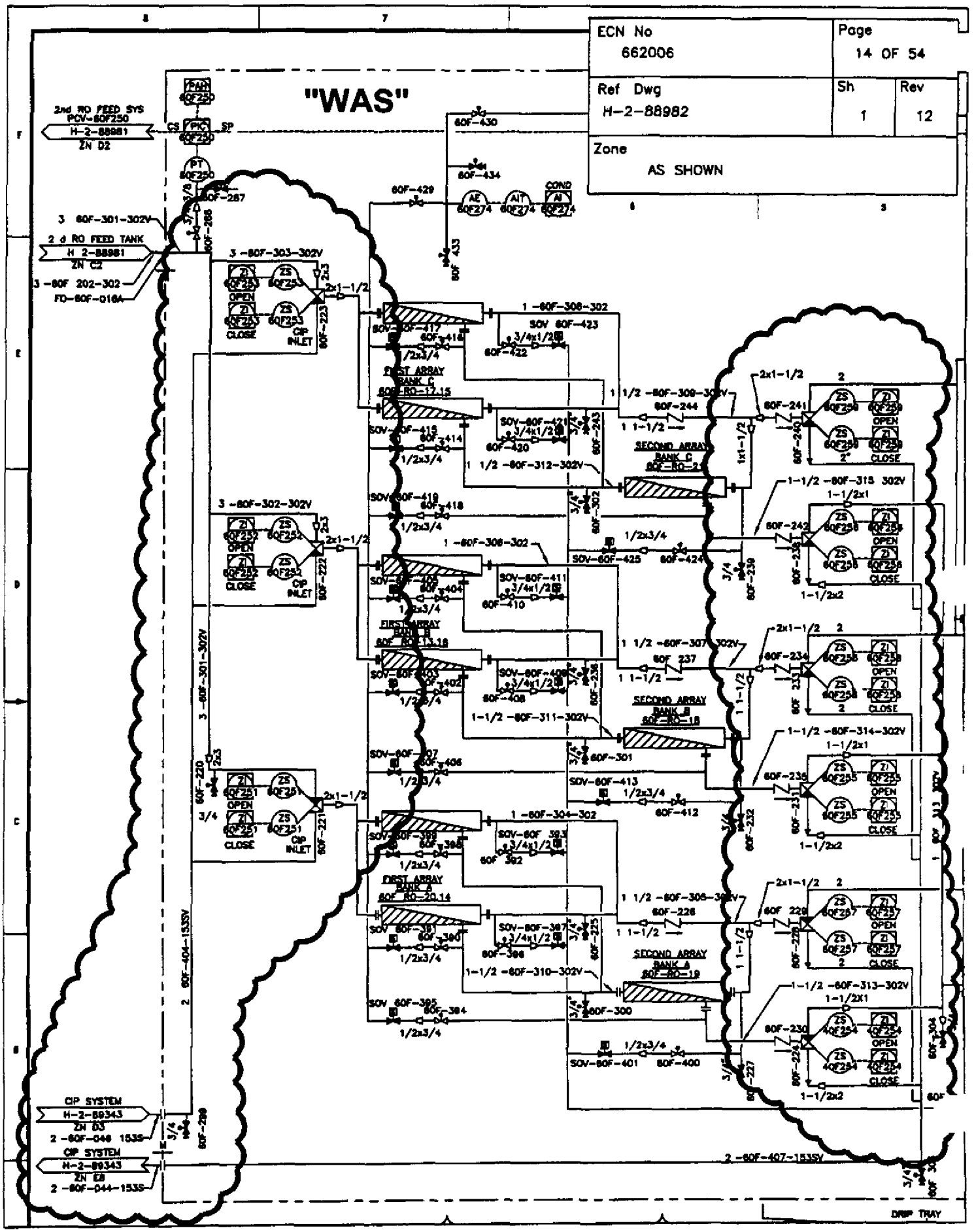

ECN No	Page
662006	15 OF 54

Ref Dwg	Sh	Rev
H-2-88982	1	12

Zone
AS SHOWN

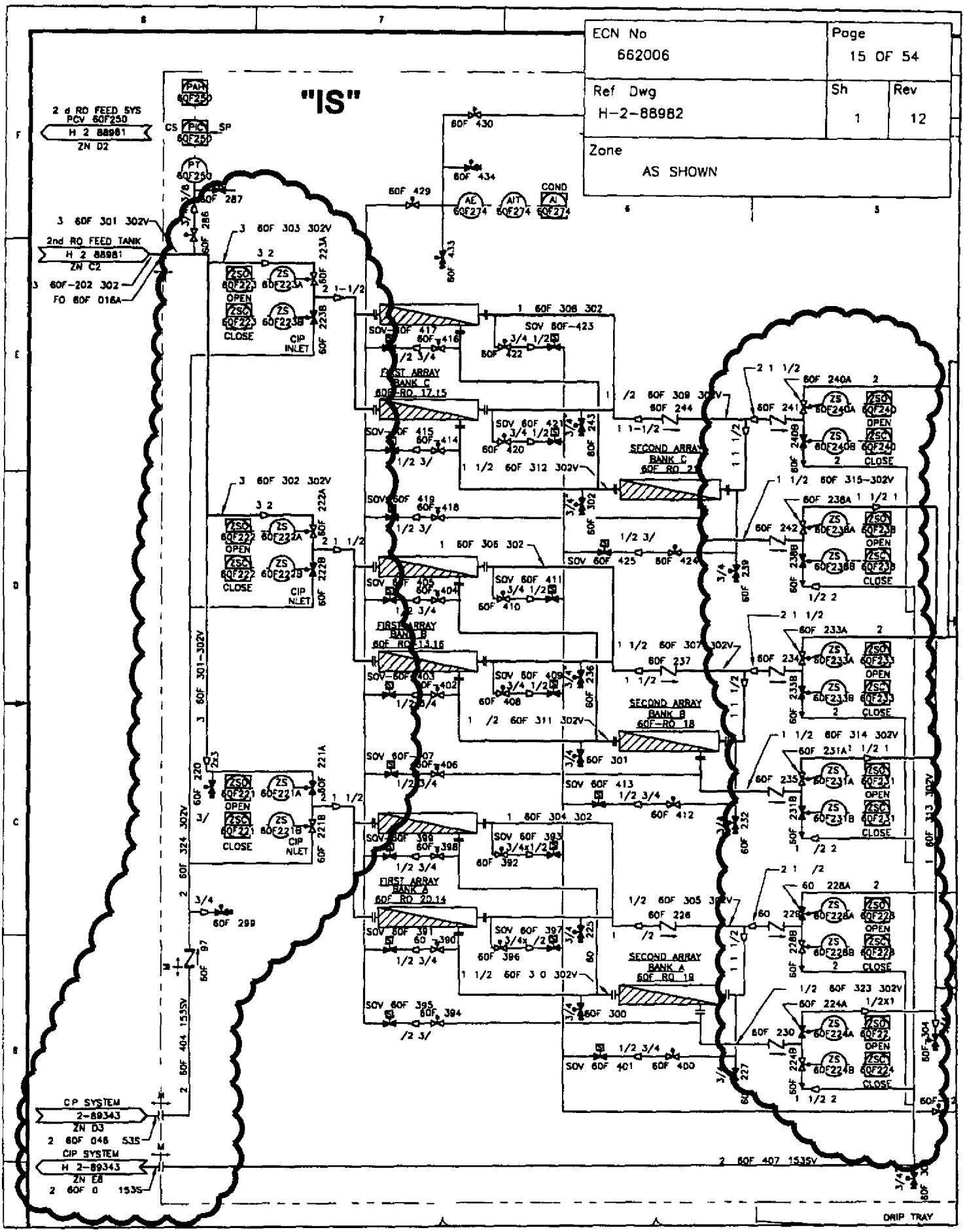

ENGINEERING CHANGE NOTICE CONTINUATION SHEET	DOCUMENT NO N/A	DATE 02/05/01	ECN 662006

ASSEMBLY SKETCH
NOT FOR DRAWING INCORPORATION

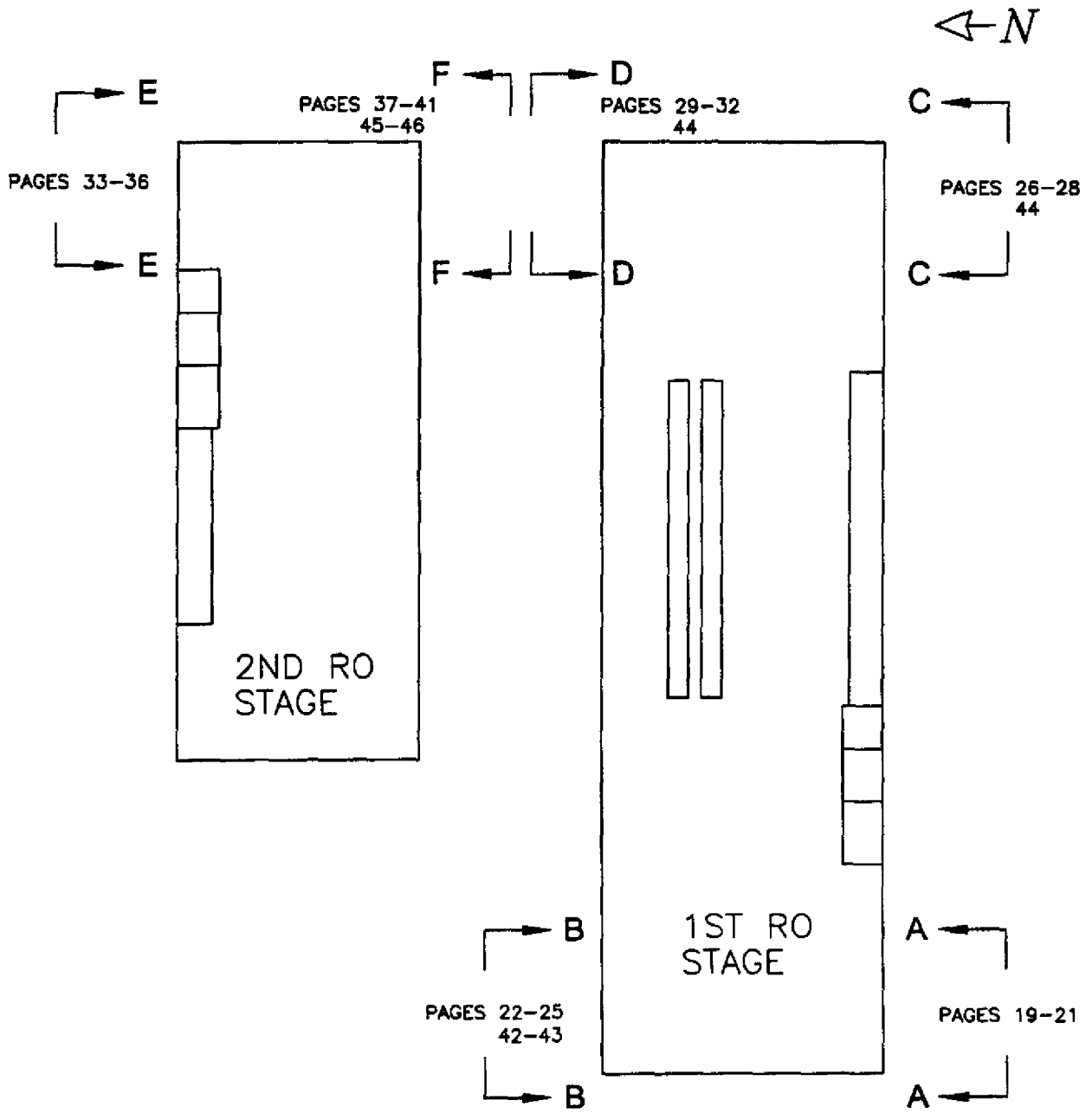

RO SYSTEM 60F KEY PLAN (PLAN VIEW)

ENGINEERING CHANGE NOTICE CONTINUATION SHEET	DOCUMENT NO N/A	DATE 02/05/01	ECN 662006

ASSEMBLY SKETCH
NOT FOR DRAWING INCORPORATION
DIMENSIONS SHOWN ARE REFERENCE DIMENSIONS

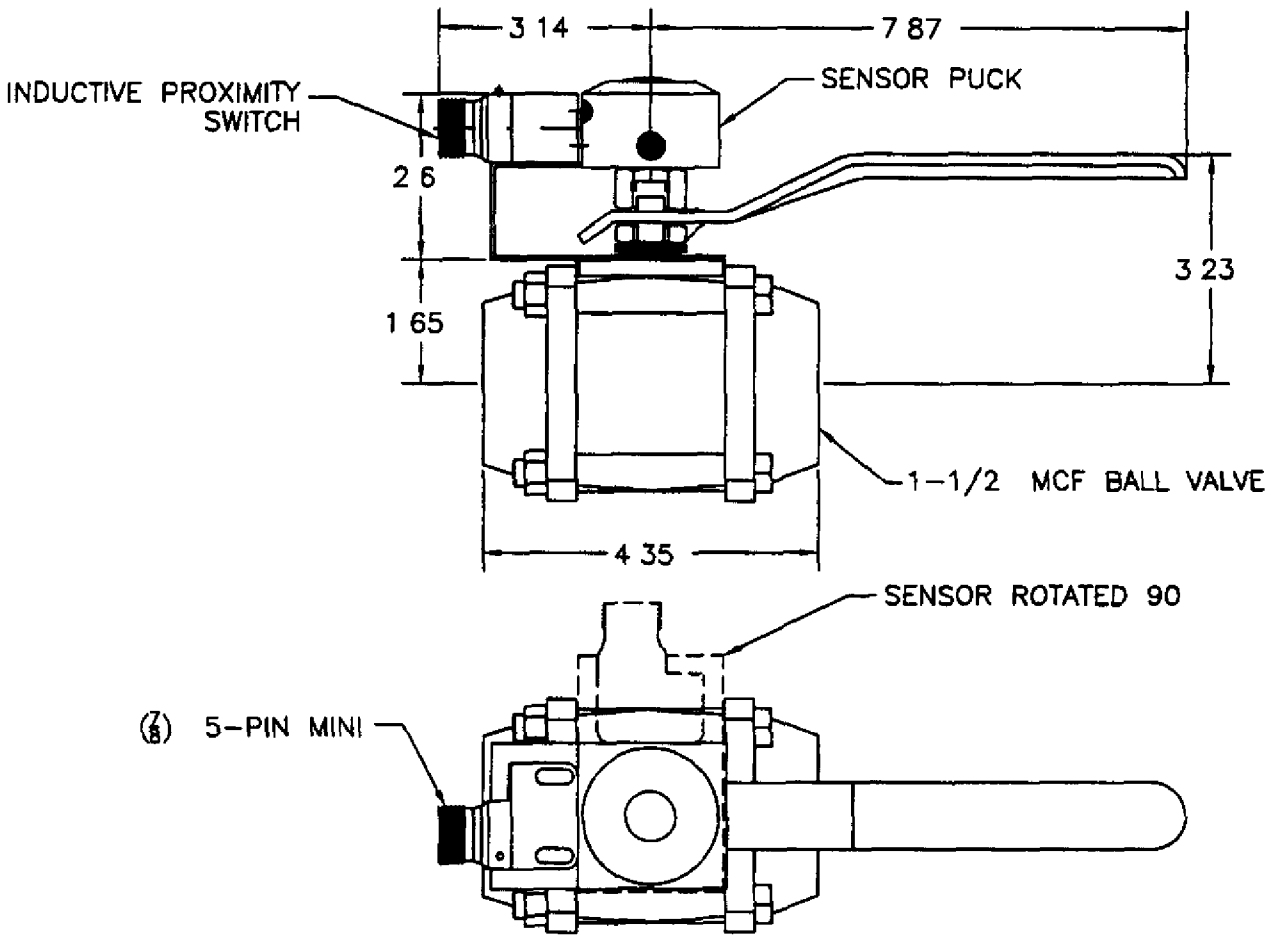

1 1-1/2 BALL VALVE ASSEMBLY WITH POSITION INSTRUMENTATION

ENGINEERING CHANGE NOTICE CONTINUATION SHEET	DOCUMENT NO N/A	DATE 02/05/01	ECN 662006

ASSEMBLY SKETCH
NOT FOR DRAWING INCORPORATION
DIMENSIONS SHOWN ARE REFERENCE DIMENSIONS

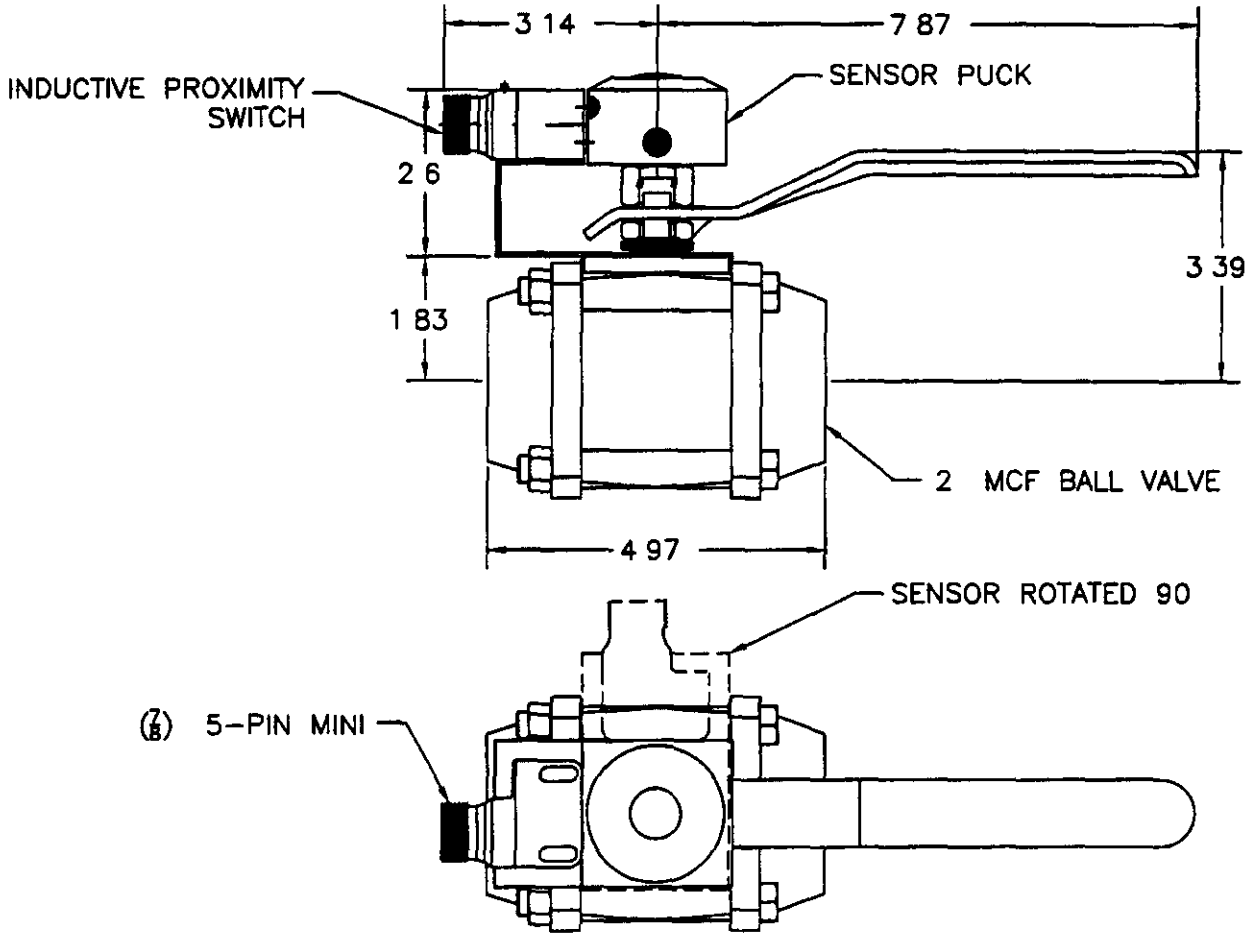

(2) 2 BALL VALVE ASSEMBLY WITH POSITION INSTRUMENTATION

ENGINEERING CHANGE NOTICE CONTINUATION SHEET	DOCUMENT NO N/A	DATE 02/05/01	ECN 662006

ASSEMBLY SKETCH
NOT FOR DRAWING INCORPORATION
DIMENSIONS SHOWN ARE APPROXIMATE
FIELD VERIFY AND ADJUST AS NECESSARY

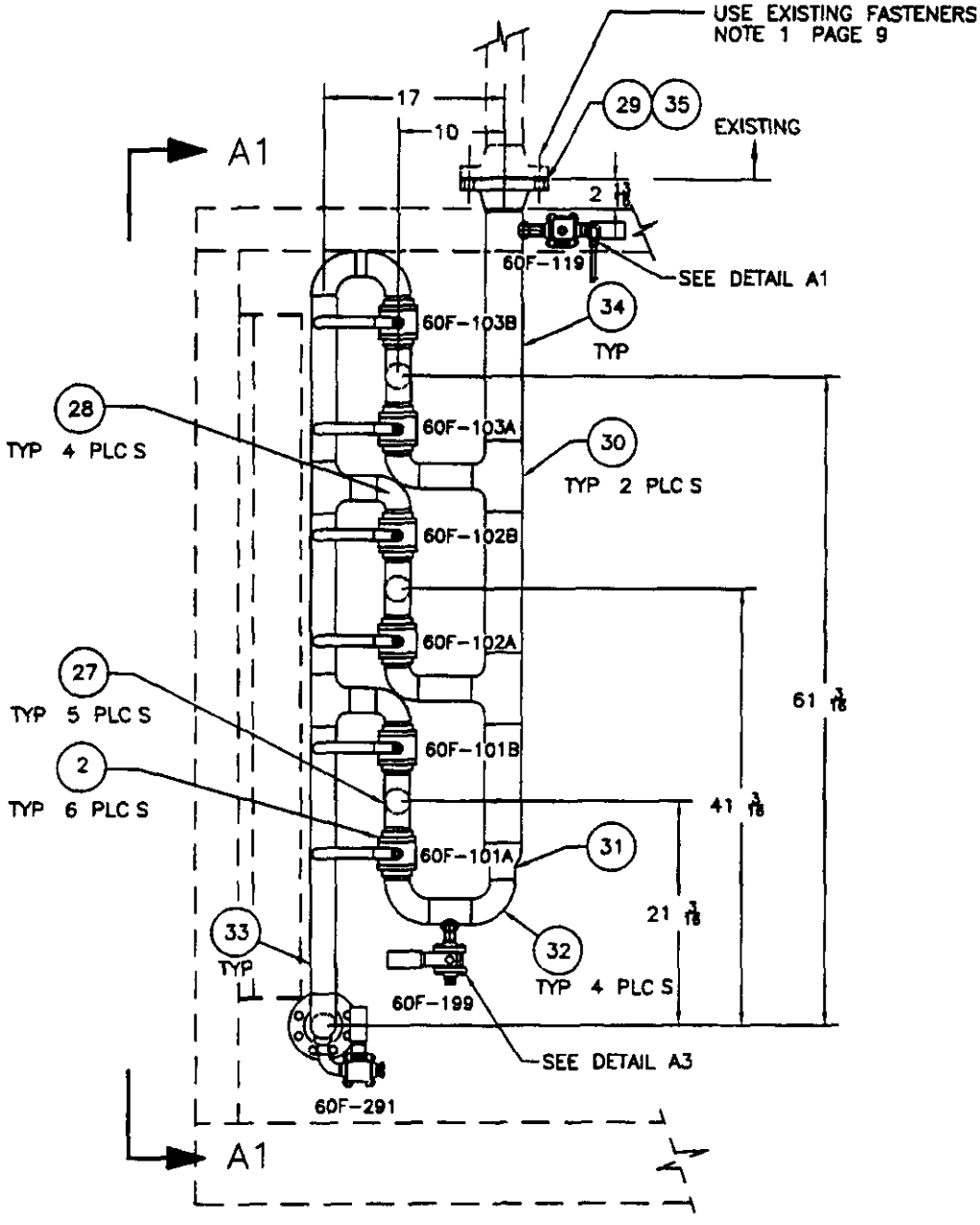

VIEW A-A FIRST RO

ENGINEERING CHANGE NOTICE CONTINUATION SHEET	DOCUMENT NO N/A	DATE 02/05/01	ECN 662006

ASSEMBLY SKETCH
NOT FOR DRAWING INCORPORATION

DIMENSIONS SHOWN ARE APPROXIMATE
FIELD VERIFY AND ADJUST AS NECESSARY

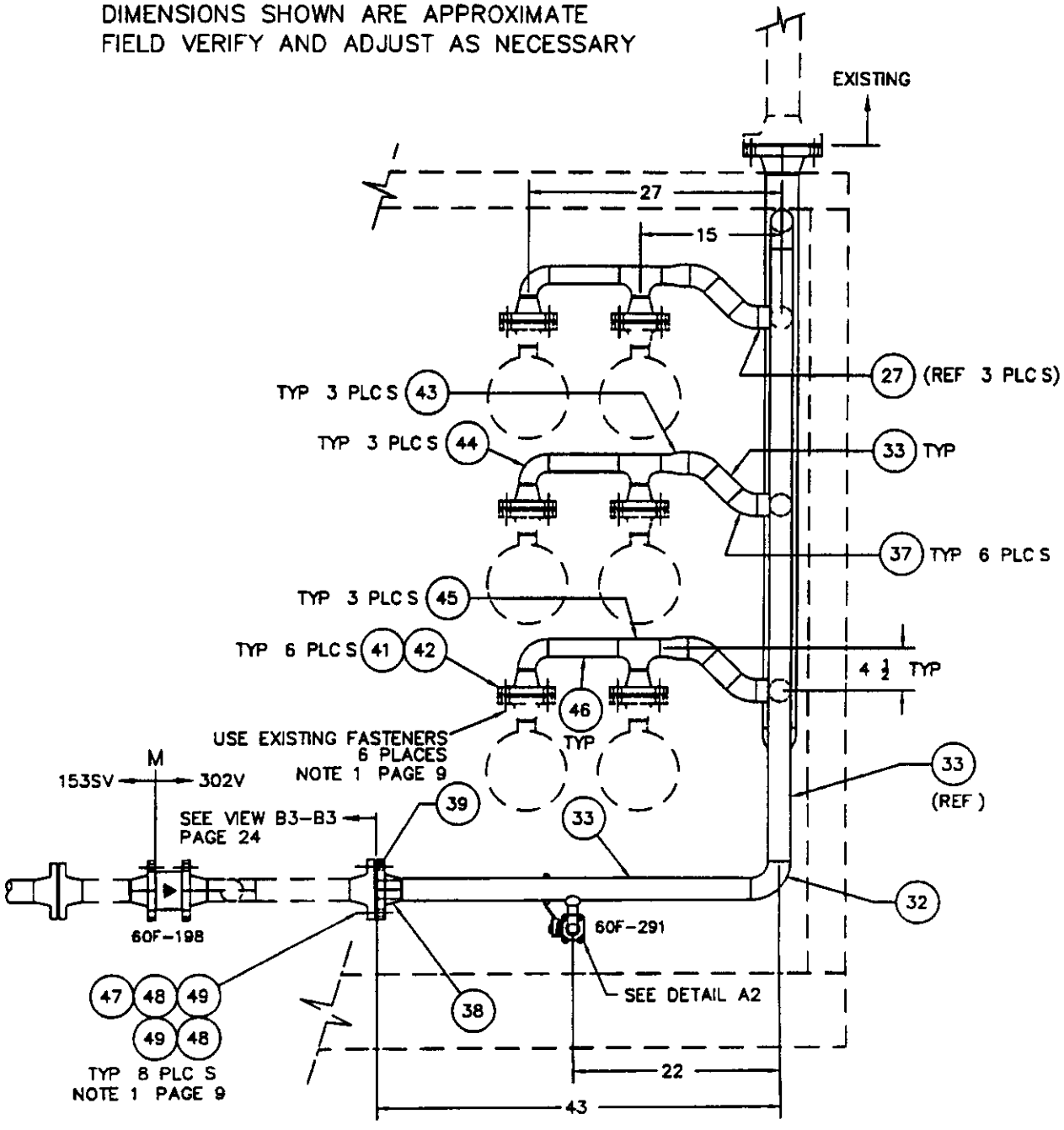

VIEW A1-A1 FIRST RO

ENGINEERING CHANGE NOTICE CONTINUATION SHEET	DOCUMENT NO N/A	DATE 02/05/01	ECN 662006

ASSEMBLY SKETCH
NOT FOR DRAWING INCORPORATION
DIMENSIONS SHOWN ARE APPROXIMATE
FIELD VERIFY AND ADJUST AS NECESSARY

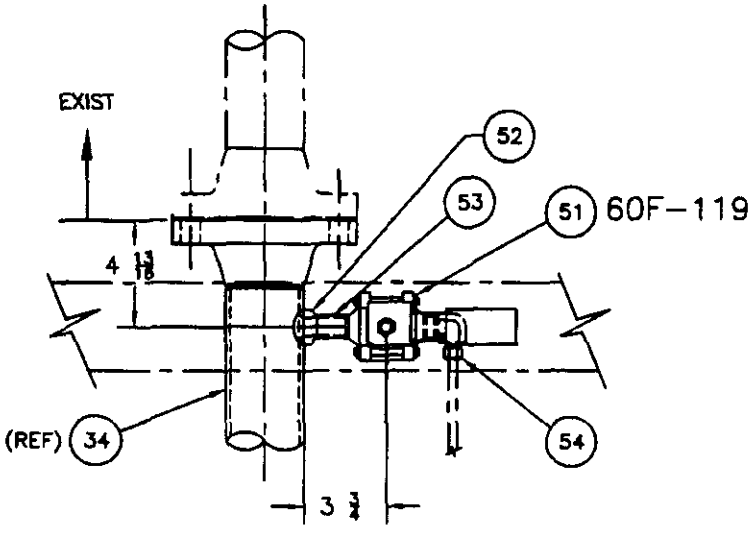

DETAIL A1

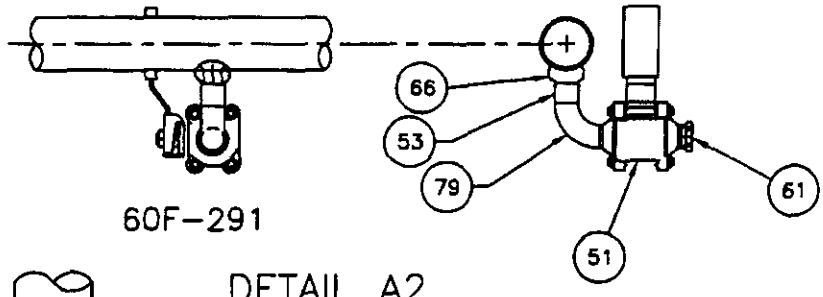

DETAIL A2

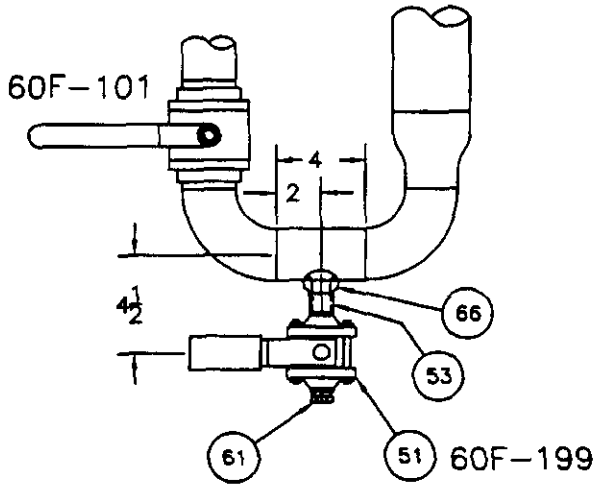

DETAIL A3

ENGINEERING CHANGE NOTICE CONTINUATION SHEET	DOCUMENT NO N/A	DATE 02/05/01	ECN 662006

ASSEMBLY SKETCH
NOT FOR DRAWING INCORPORATION
DIMENSIONS SHOWN ARE APPROXIMATE
FIELD VERIFY AND ADJUST AS NECESSARY

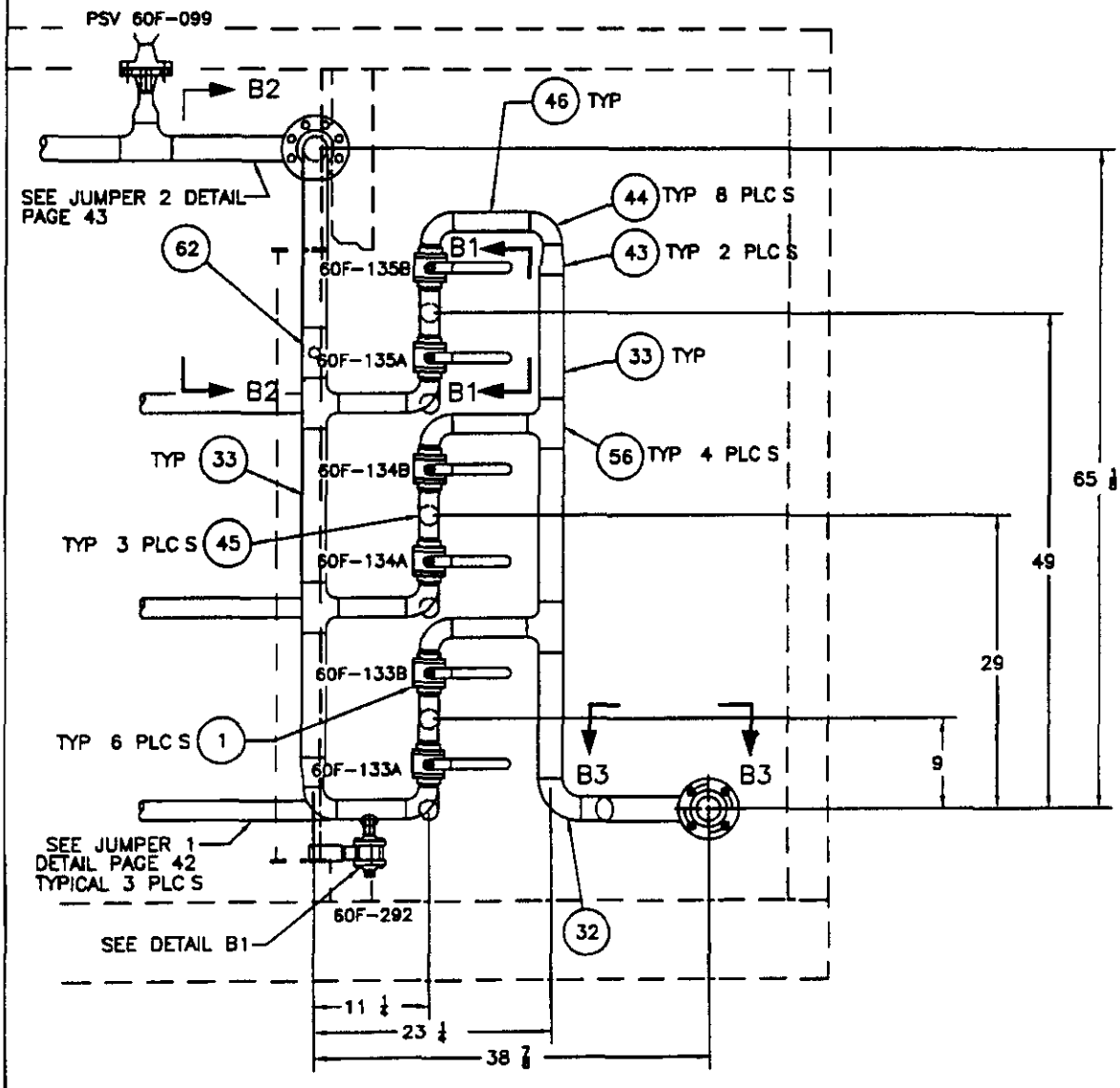

VIEW B-B FIRST RO

ENGINEERING CHANGE NOTICE CONTINUATION SHEET	DOCUMENT NO N/A	DATE 02/05/01	ECN 662006

ASSEMBLY SKETCH
NOT FOR DRAWING INCORPORATION
DIMENSIONS SHOWN ARE APPROXIMATE
FIELD VERIFY AND ADJUST AS NECESSARY

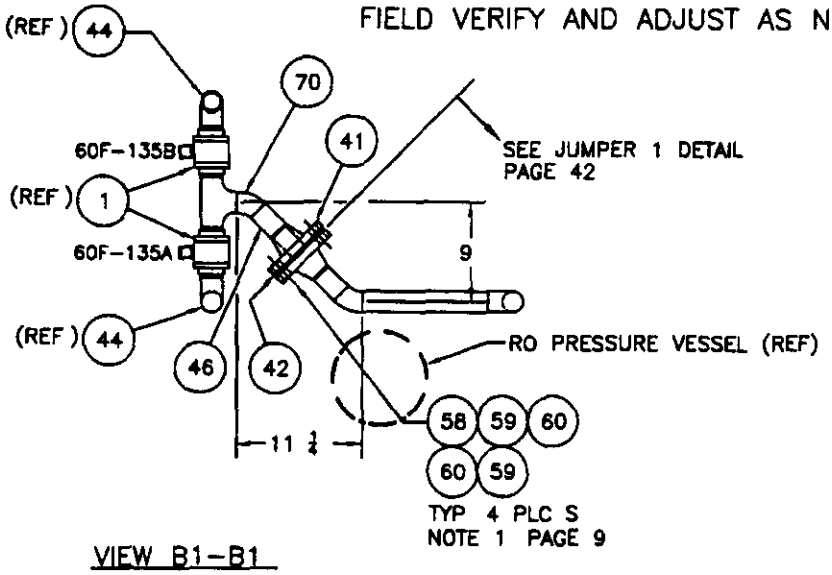

VIEW B1-B1
TYPICAL 3 PLACES
(EXCEPT FOR VALVE NUMBERS)

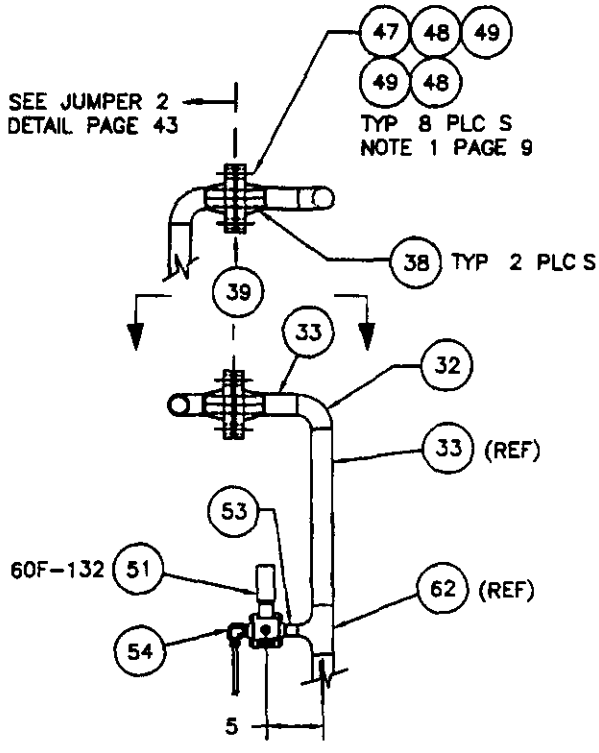

VIEW B2-B2

ENGINEERING CHANGE NOTICE CONTINUATION SHEET	DOCUMENT NO N/A	DATE 02/05/01	ECN 662006

ASSEMBLY SKETCH
NOT FOR DRAWING INCORPORATION
DIMENSIONS SHOWN ARE APPROXIMATE
FIELD VERIFY AND ADJUST AS NECESSARY

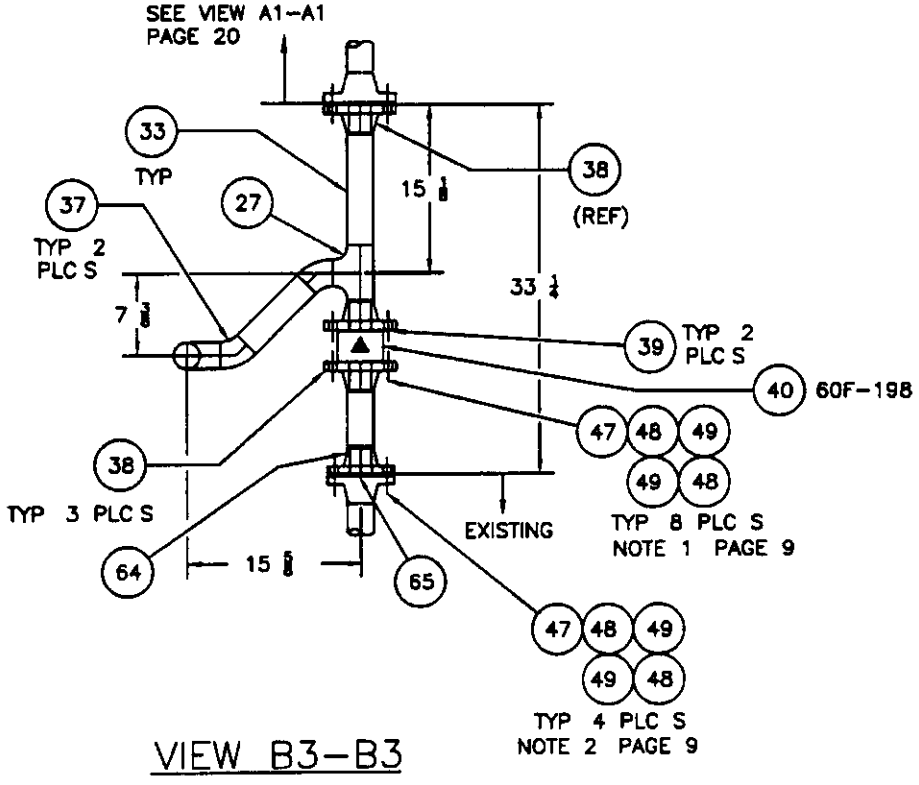

VIEW B3-B3

ENGINEERING CHANGE NOTICE CONTINUATION SHEET	DOCUMENT NO N/A	DATE 02/05/01	ECN 662006

ASSEMBLY SKETCH
NOT FOR DRAWING INCORPORATION
DIMENSIONS SHOWN ARE APPROXIMATE
FIELD VERIFY AND ADJUST AS NECESSARY

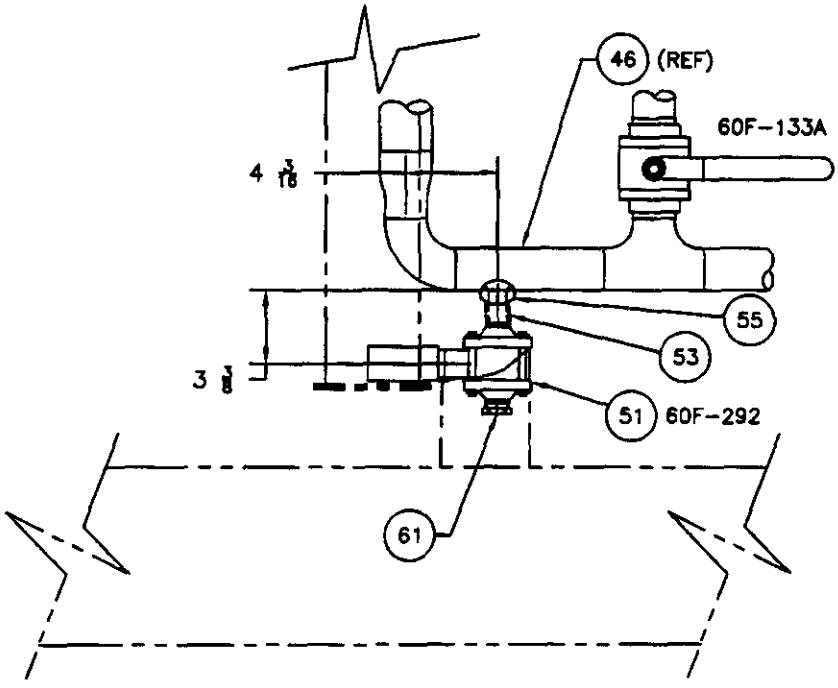

DETAIL B1

ENGINEERING CHANGE NOTICE CONTINUATION SHEET	DOCUMENT NO N/A	DATE 02/05/01	ECN 662006

ASSEMBLY SKETCH
NOT FOR DRAWING INCORPORATION

DIMENSIONS SHOWN ARE APPROXIMATE
FIELD VERIFY AND ADJUST AS NECESSARY

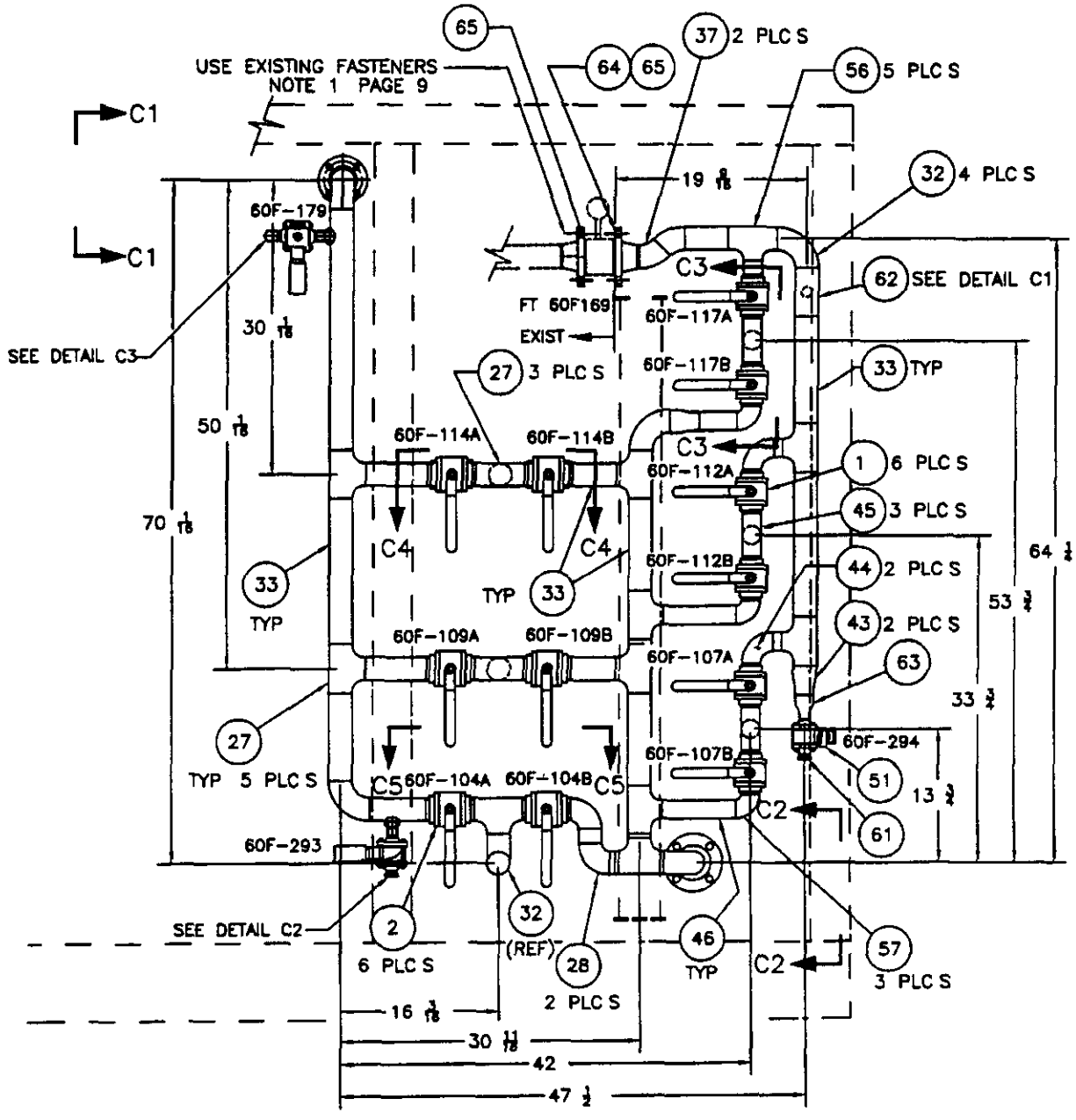

VIEW C-C FIRST RO

ENGINEERING CHANGE NOTICE CONTINUATION SHEET	DOCUMENT NO N/A	DATE 02/05/01	ECN 662006

ASSEMBLY SKETCH
NOT FOR DRAWING INCORPORATION

DIMENSIONS SHOWN ARE APPROXIMATE
FIELD VERIFY AND ADJUST AS NECESSARY

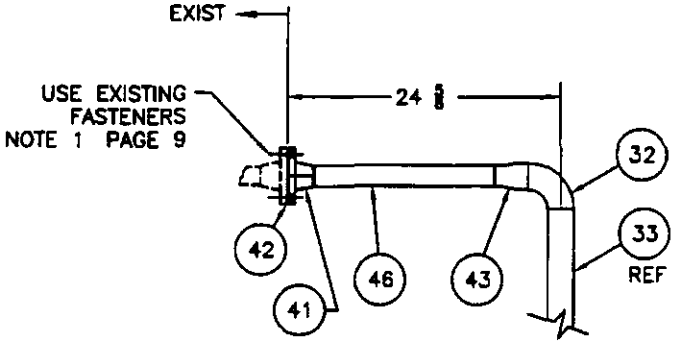

VIEW C1-C1

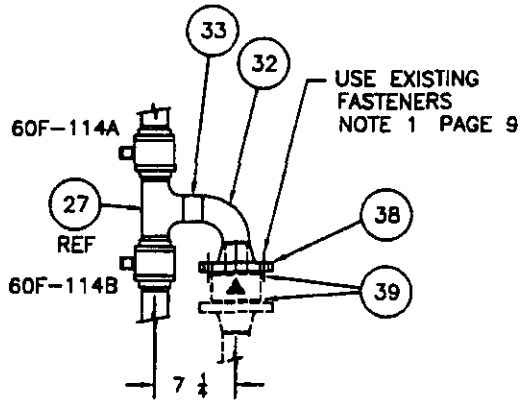

VIEW C4-C4
TYP 2 PLC S

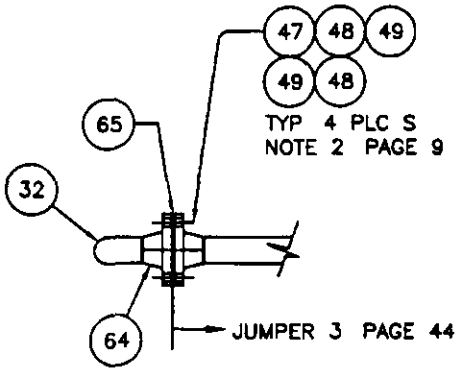

VIEW C2-C2

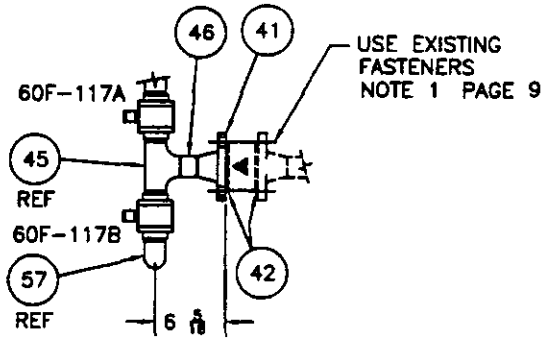

VIEW C3-C3
TYP 3 PLC S

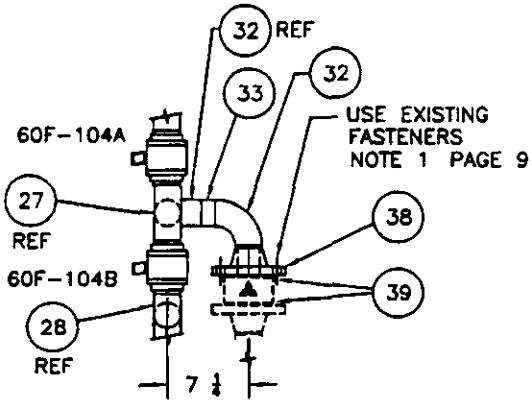

VIEW C5-C5

ENGINEERING CHANGE NOTICE CONTINUATION SHEET	DOCUMENT NO N/A	DATE 02/05/01	ECN 662006

ASSEMBLY SKETCH
NOT FOR DRAWING INCORPORATION
DIMENSIONS SHOWN ARE APPROXIMATE
FIELD VERIFY AND ADJUST AS NECESSARY

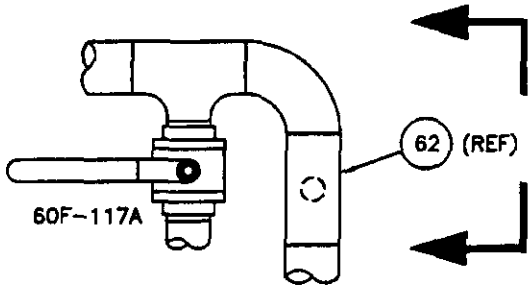

DETAIL C1

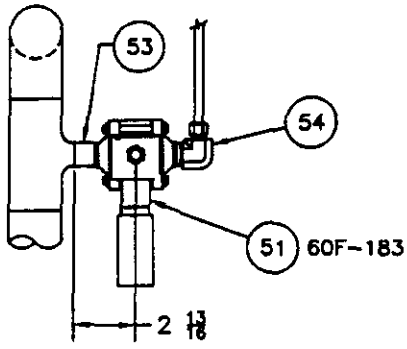

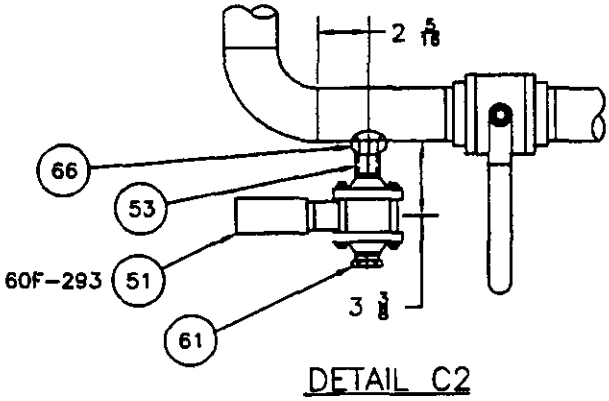

DETAIL C2

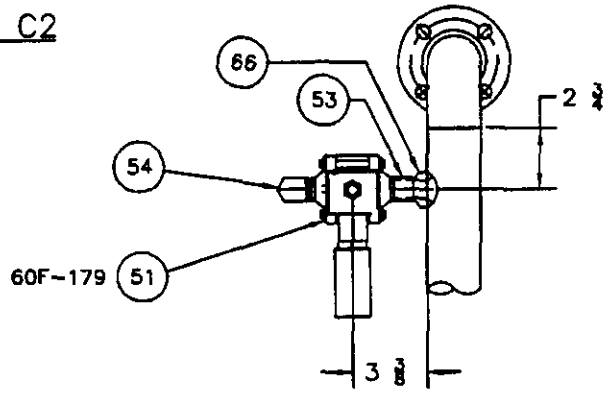

DETAIL C3

ENGINEERING CHANGE NOTICE CONTINUATION SHEET	DOCUMENT NO N/A	DATE 02/05/01	ECN 662006

ASSEMBLY SKETCH
NOT FOR DRAWING INCORPORATION

DIMENSIONS SHOWN ARE APPROXIMATE
FIELD VERIFY AND ADJUST AS NECESSARY

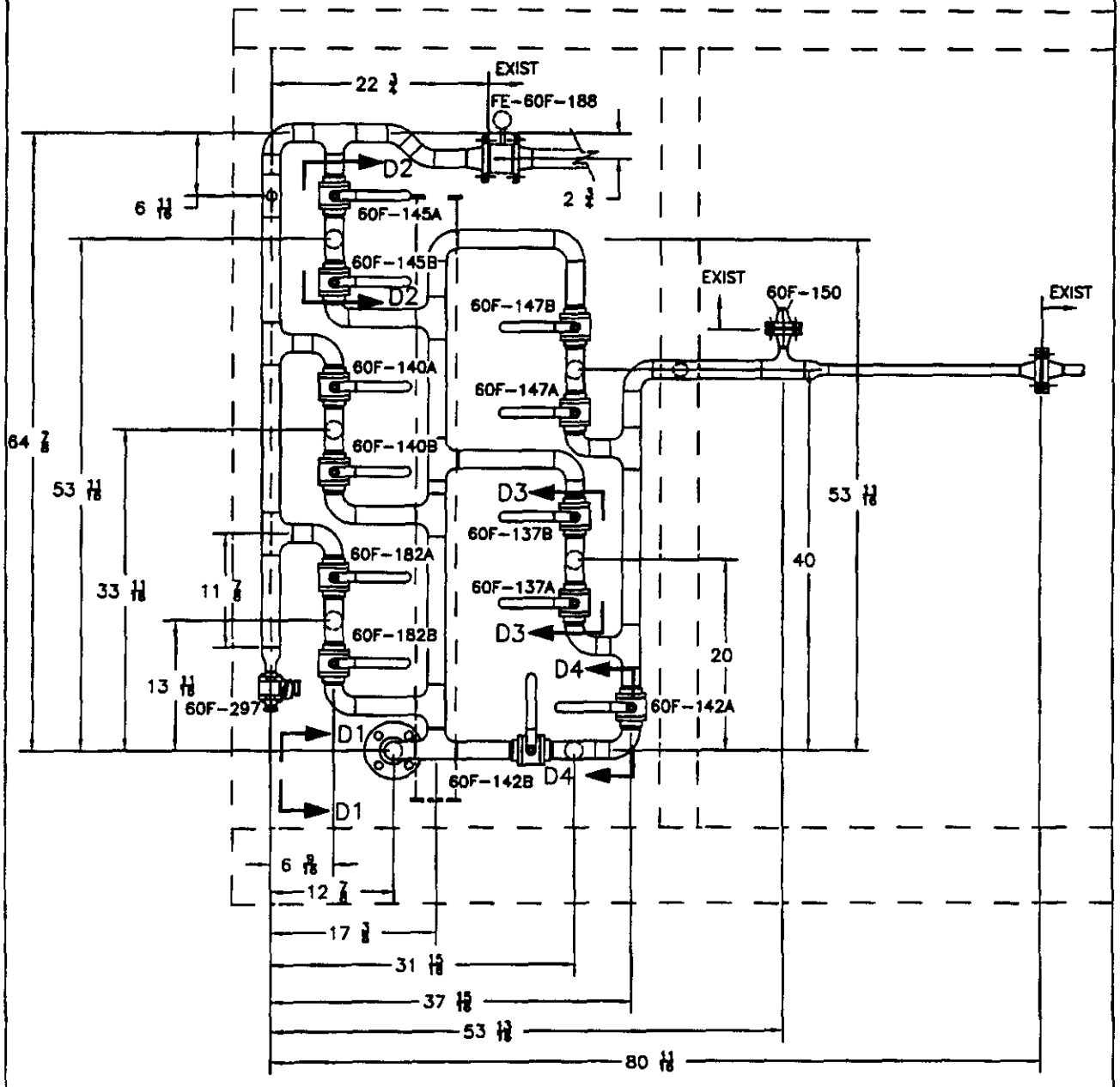

VIEW D-D FIRST RO DIMENSIONS

ENGINEERING CHANGE NOTICE CONTINUATION SHEET	DOCUMENT NO N/A	DATE 02/05/01	ECN 662006

ASSEMBLY SKETCH
NOT FOR DRAWING INCORPORATION

DIMENSIONS SHOWN ARE APPROXIMATE
FIELD VERIFY AND ADJUST AS NECESSARY

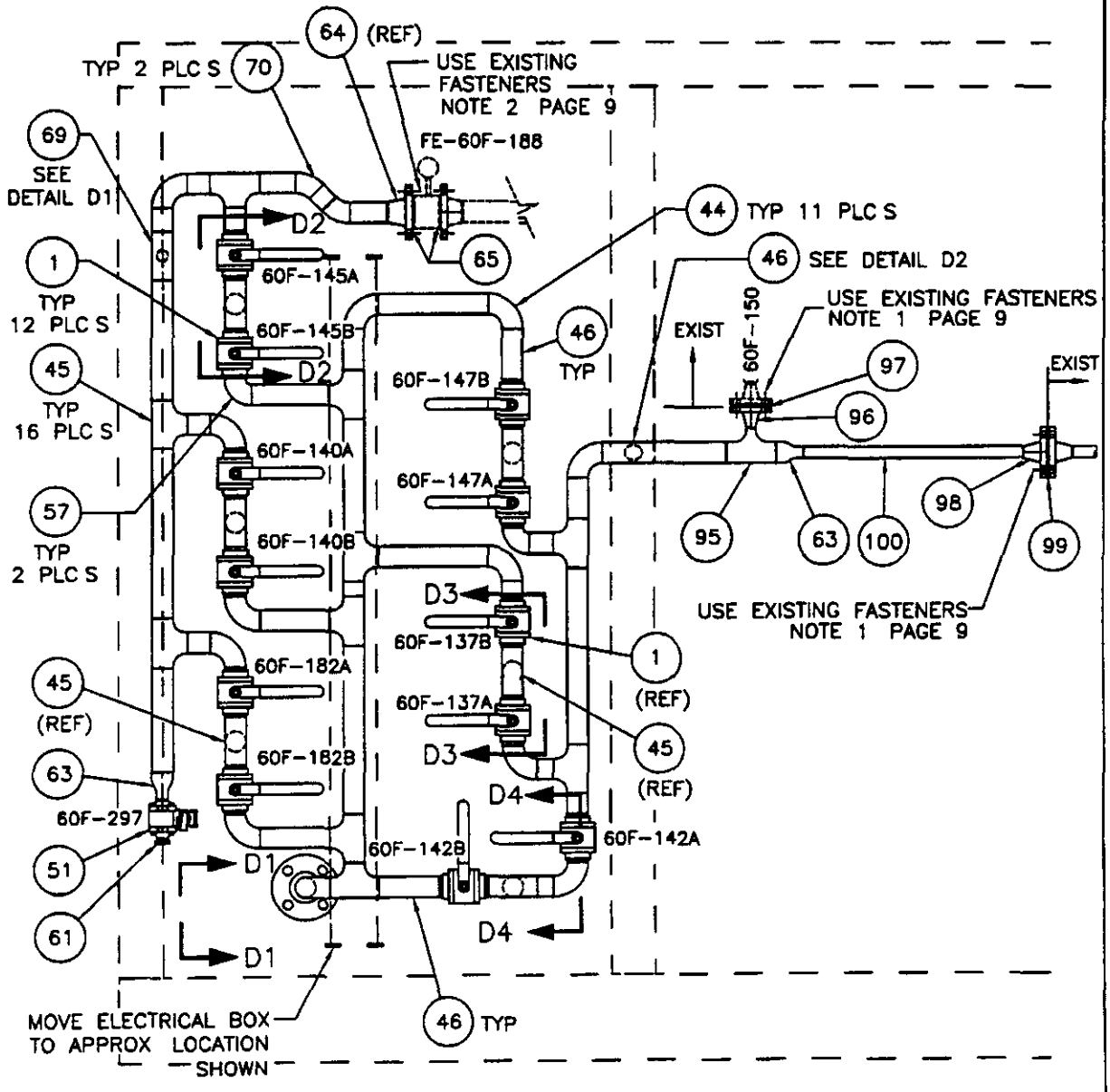

VIEW D-D FIRST RO PARTS CALLOUT

ENGINEERING CHANGE NOTICE CONTINUATION SHEET	DOCUMENT NO N/A	DATE 02/05/01	ECN 662006

ASSEMBLY SKETCH
NOT FOR DRAWING INCORPORATION

DIMENSIONS SHOWN ARE APPROXIMATE
FIELD VERIFY AND ADJUST AS NECESSARY

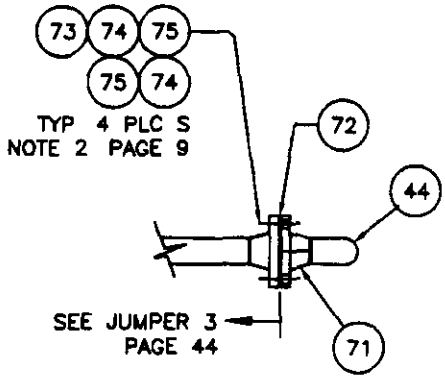

VIEW D1-D1

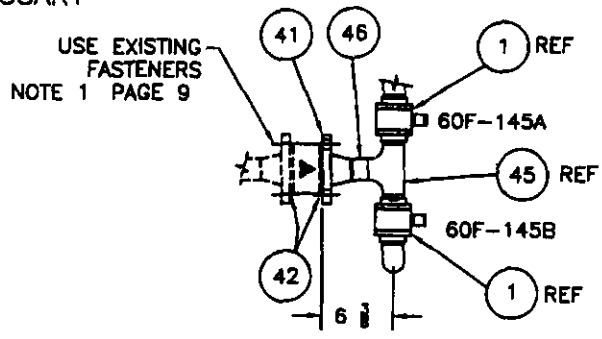

VIEW D2-D2
TYP 3 PLC S

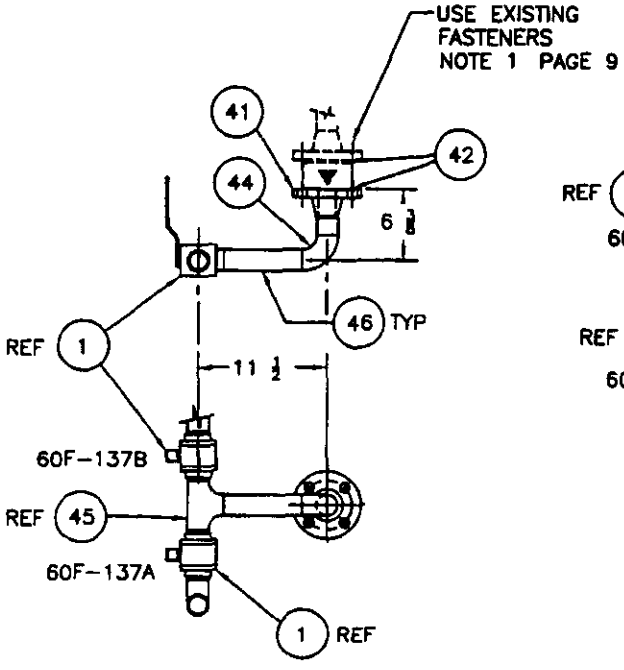

VIEW D3-D3
TYP 2 PLC S

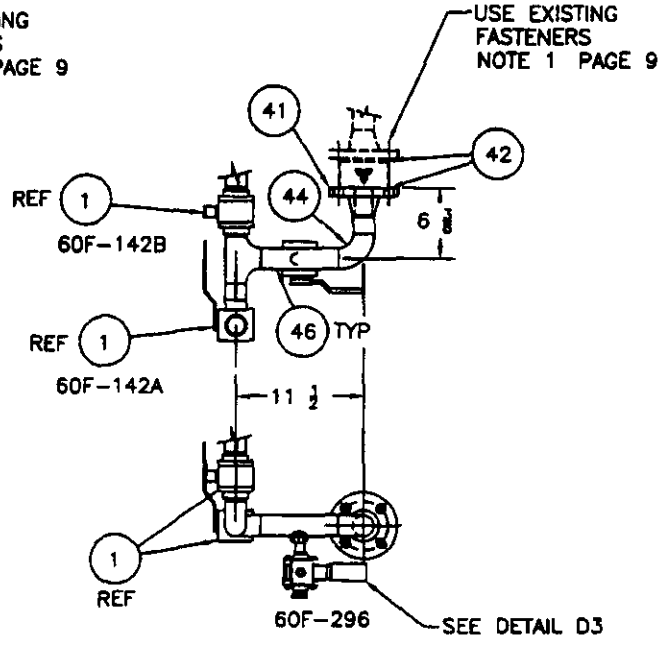

VIEW D4-D4

ENGINEERING CHANGE NOTICE CONTINUATION SHEET	DOCUMENT NO N/A	DATE 02/05/01	ECN 662006

ASSEMBLY SKETCH
NOT FOR DRAWING INCORPORATION
DIMENSIONS SHOWN ARE APPROXIMATE
FIELD VERIFY AND ADJUST AS NECESSARY

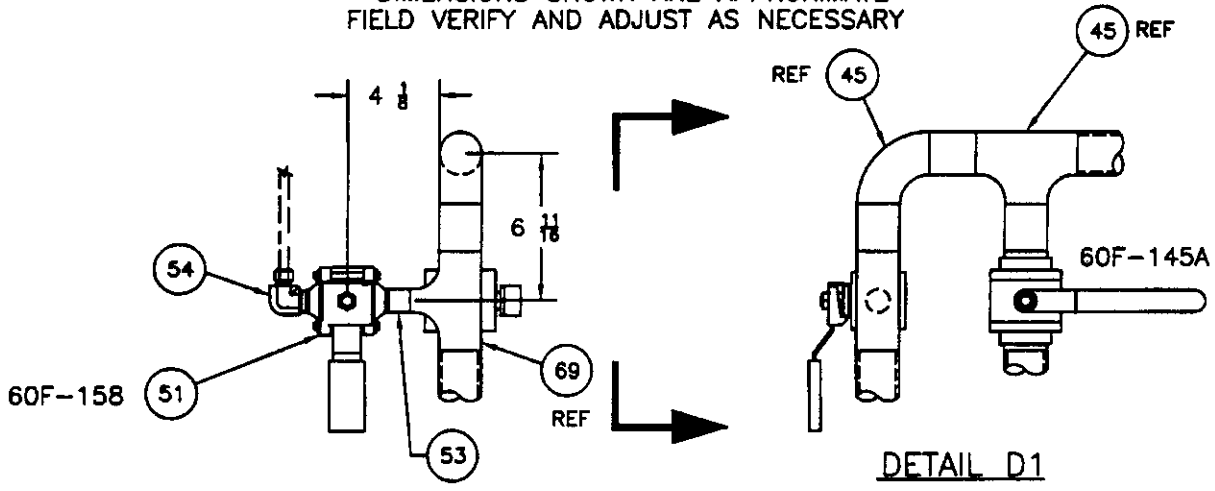

DETAIL D1

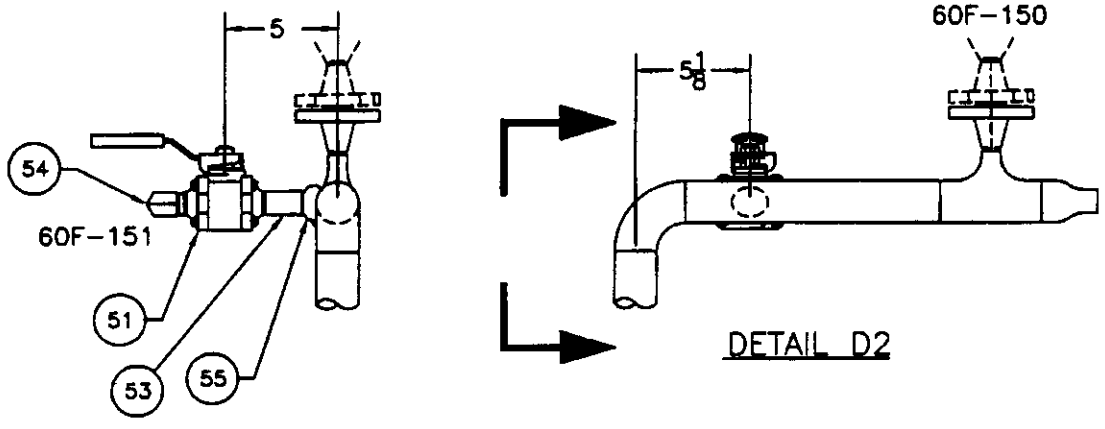

DETAIL D2

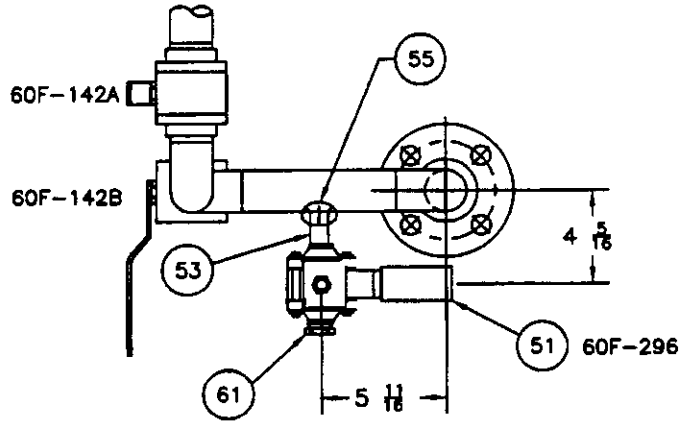

DETAIL D3

ENGINEERING CHANGE NOTICE CONTINUATION SHEET	DOCUMENT NO N/A	DATE 02/05/01	ECN 662006

ASSEMBLY SKETCH
NOT FOR DRAWING INCORPORATION
DIMENSIONS SHOWN ARE APPROXIMATE
FIELD VERIFY AND ADJUST AS NECESSARY

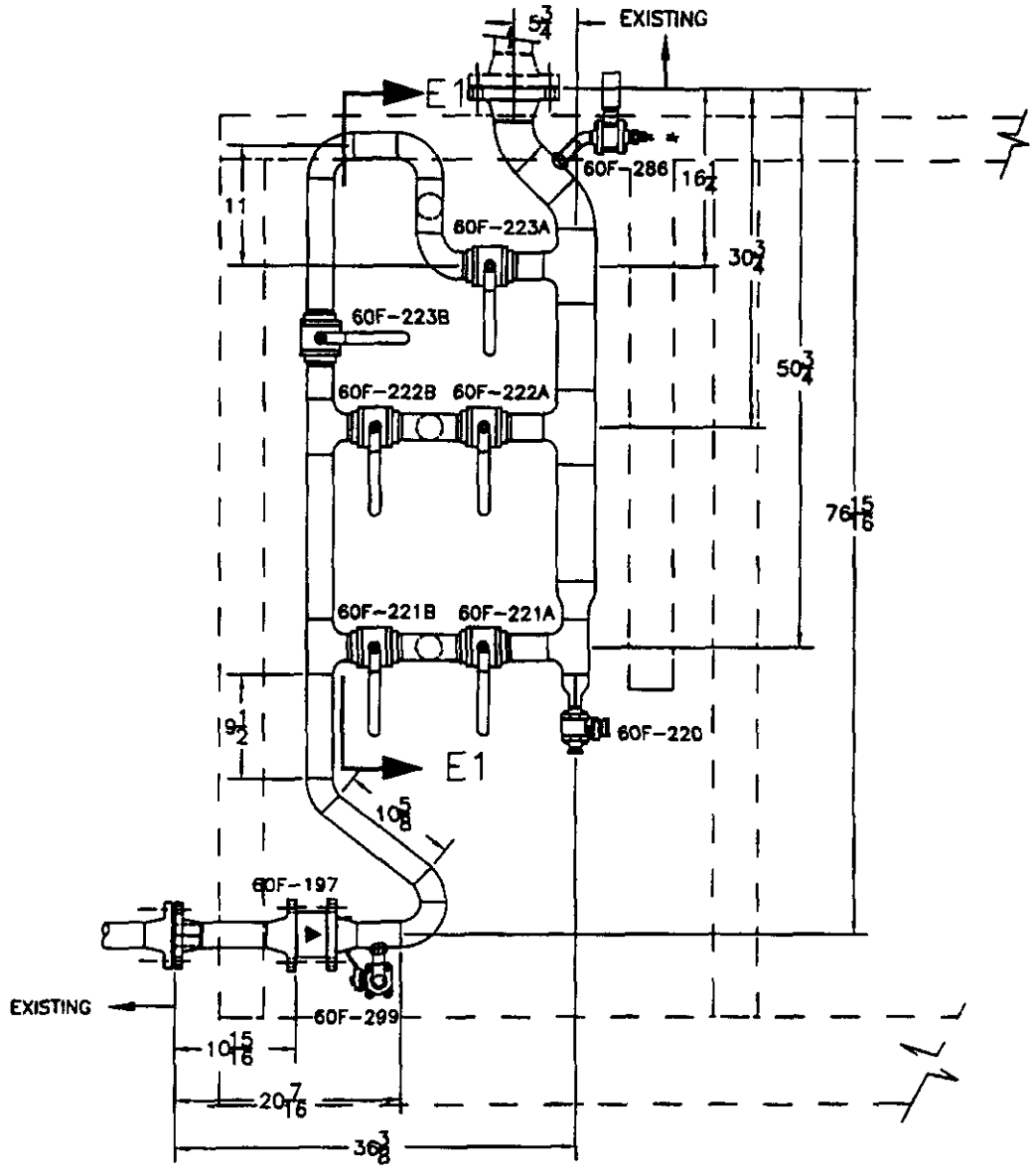

VIEW E-E SECOND RO DIMENSIONS

ENGINEERING CHANGE NOTICE CONTINUATION SHEET	DOCUMENT NO N/A	DATE 02/05/01	ECN 662006

ASSEMBLY SKETCH
NOT FOR DRAWING INCORPORATION

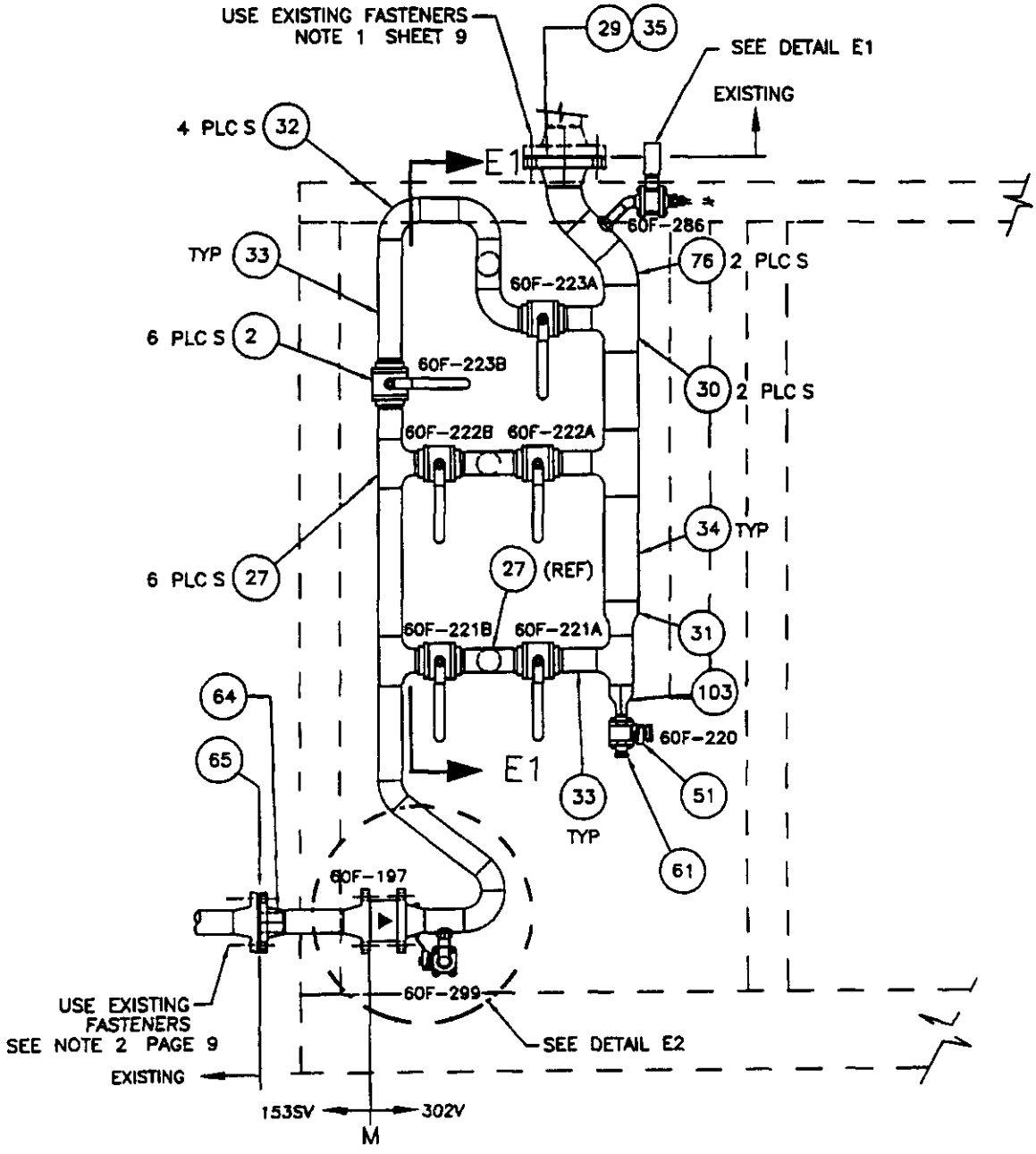

VIEW E-E SECOND RO PARTS CALLOUT

ENGINEERING CHANGE NOTICE CONTINUATION SHEET	DOCUMENT NO N/A	DATE 02/05/01	ECN 662006

ASSEMBLY SKETCH
NOT FOR DRAWING INCORPORATION

DIMENSIONS SHOWN ARE APPROXIMATE
FIELD VERIFY AND ADJUST AS NECESSARY

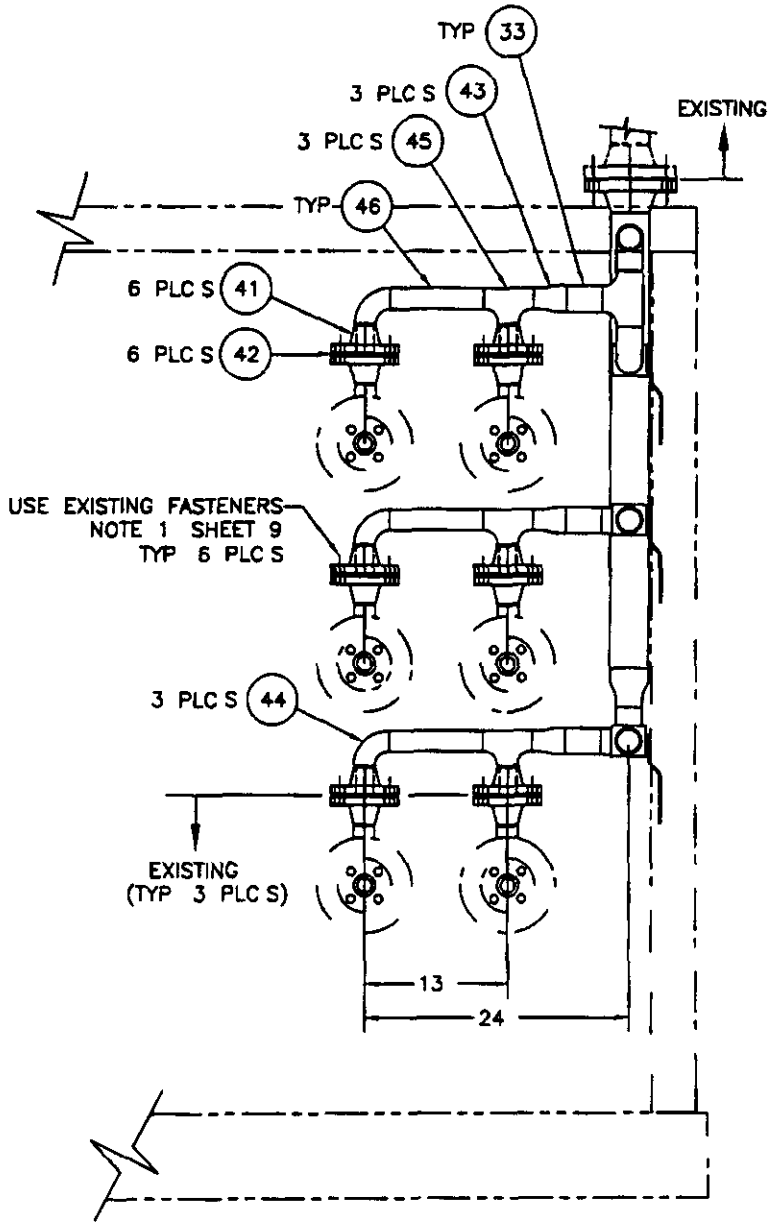

VIEW E1-E1 SECOND RO

ENGINEERING CHANGE NOTICE CONTINUATION SHEET	DOCUMENT NO N/A	DATE 02/05/01	ECN 662006

ASSEMBLY SKETCH
NOT FOR DRAWING INCORPORATION
DIMENSIONS SHOWN ARE APPROXIMATE
FIELD VERIFY AND ADJUST AS NECESSARY

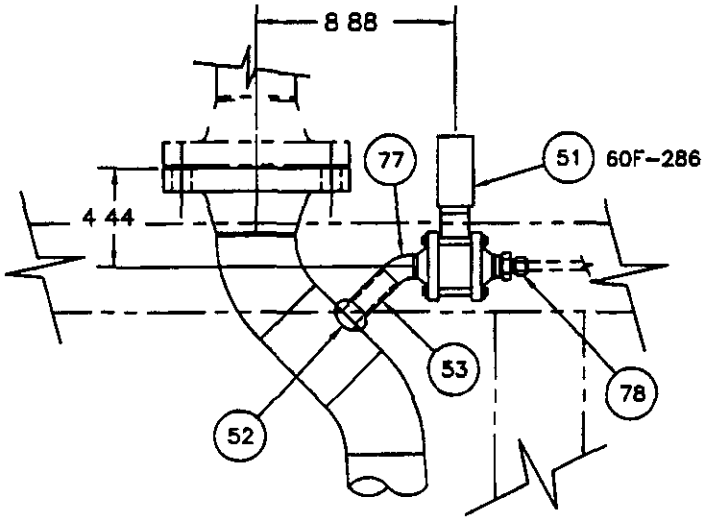

DETAIL E1

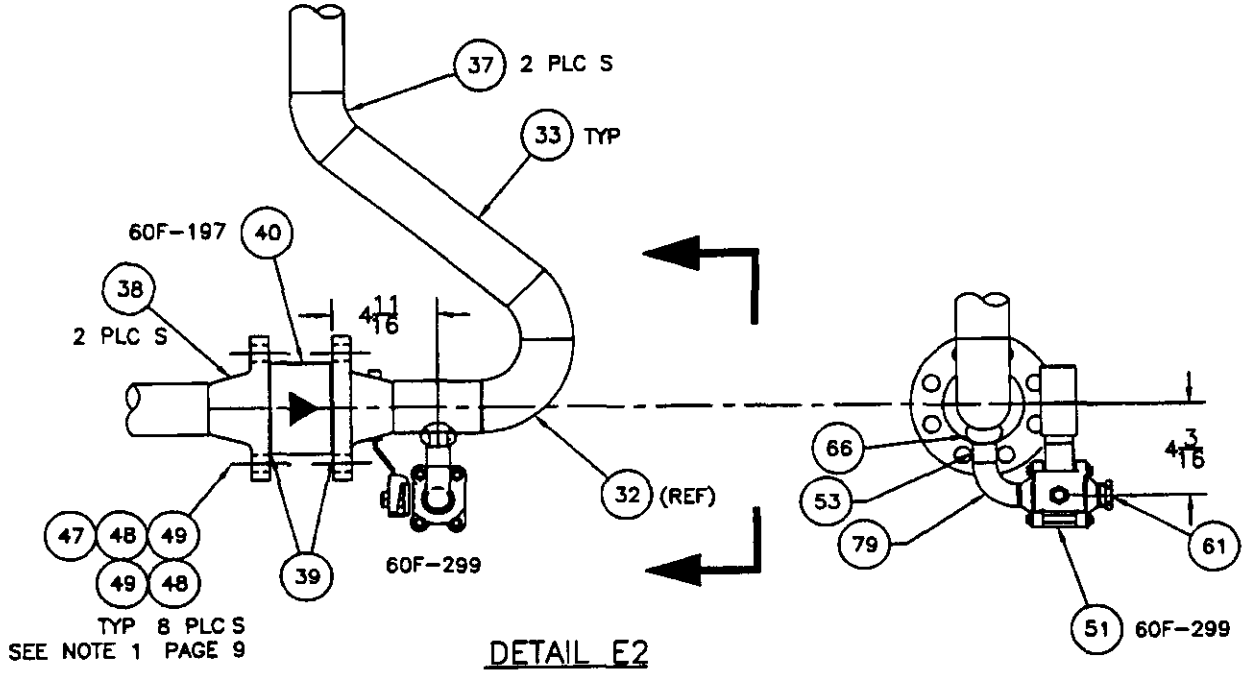

DETAIL E2

ENGINEERING CHANGE NOTICE CONTINUATION SHEET	DOCUMENT NO N/A	DATE 02/05/01	ECN 662006

ASSEMBLY SKETCH
NOT FOR DRAWING INCORPORATION

DIMENSIONS SHOWN ARE APPROXIMATE
FIELD VERIFY AND ADJUST AS NECESSARY

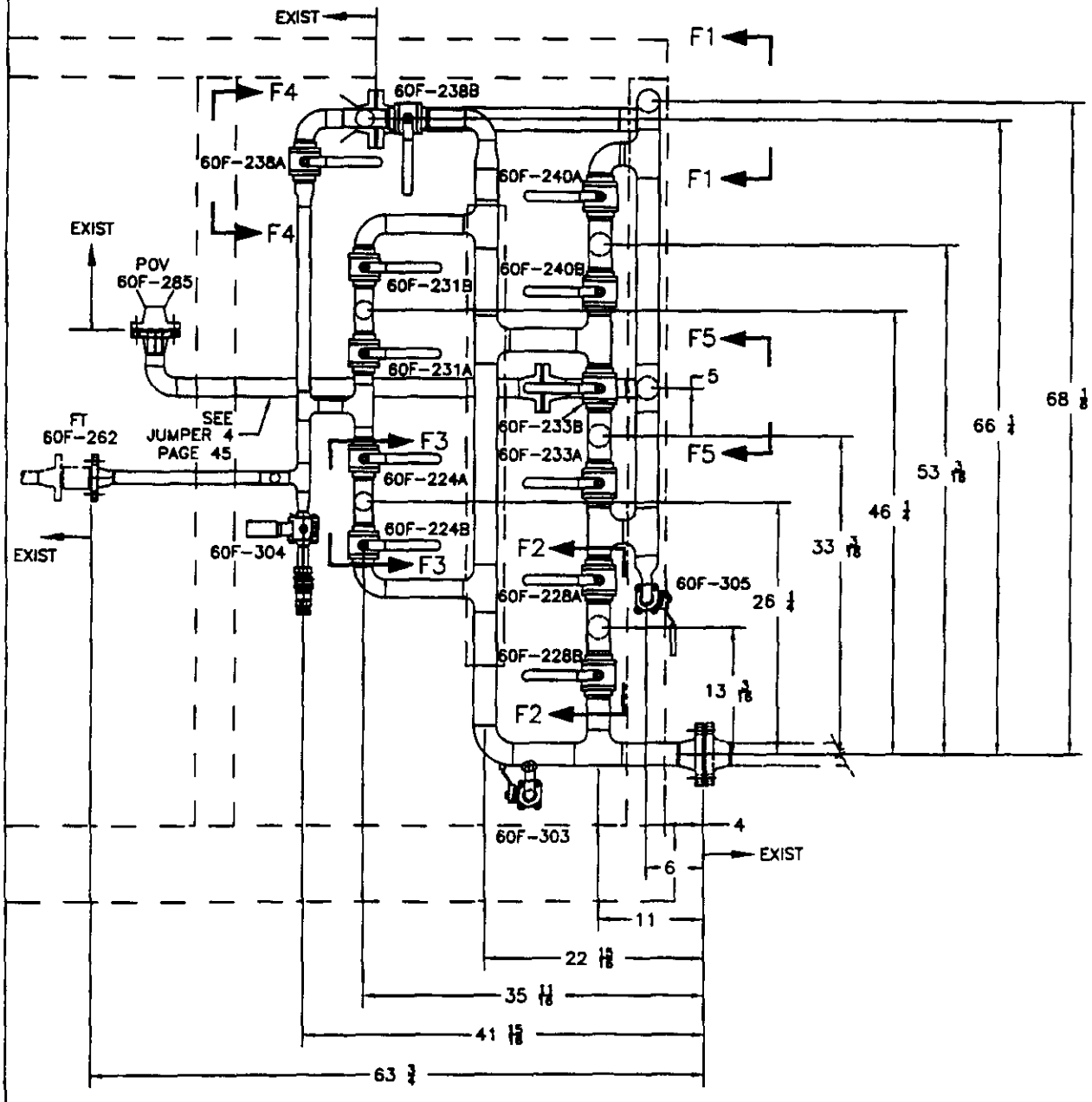

VIEW F-F DIMENSIONS, SECOND RO

ENGINEERING CHANGE NOTICE CONTINUATION SHEET	DOCUMENT NO N/A	DATE 02/05/01	ECN 662006

ASSEMBLY SKETCH
NOT FOR DRAWING INCORPORATION

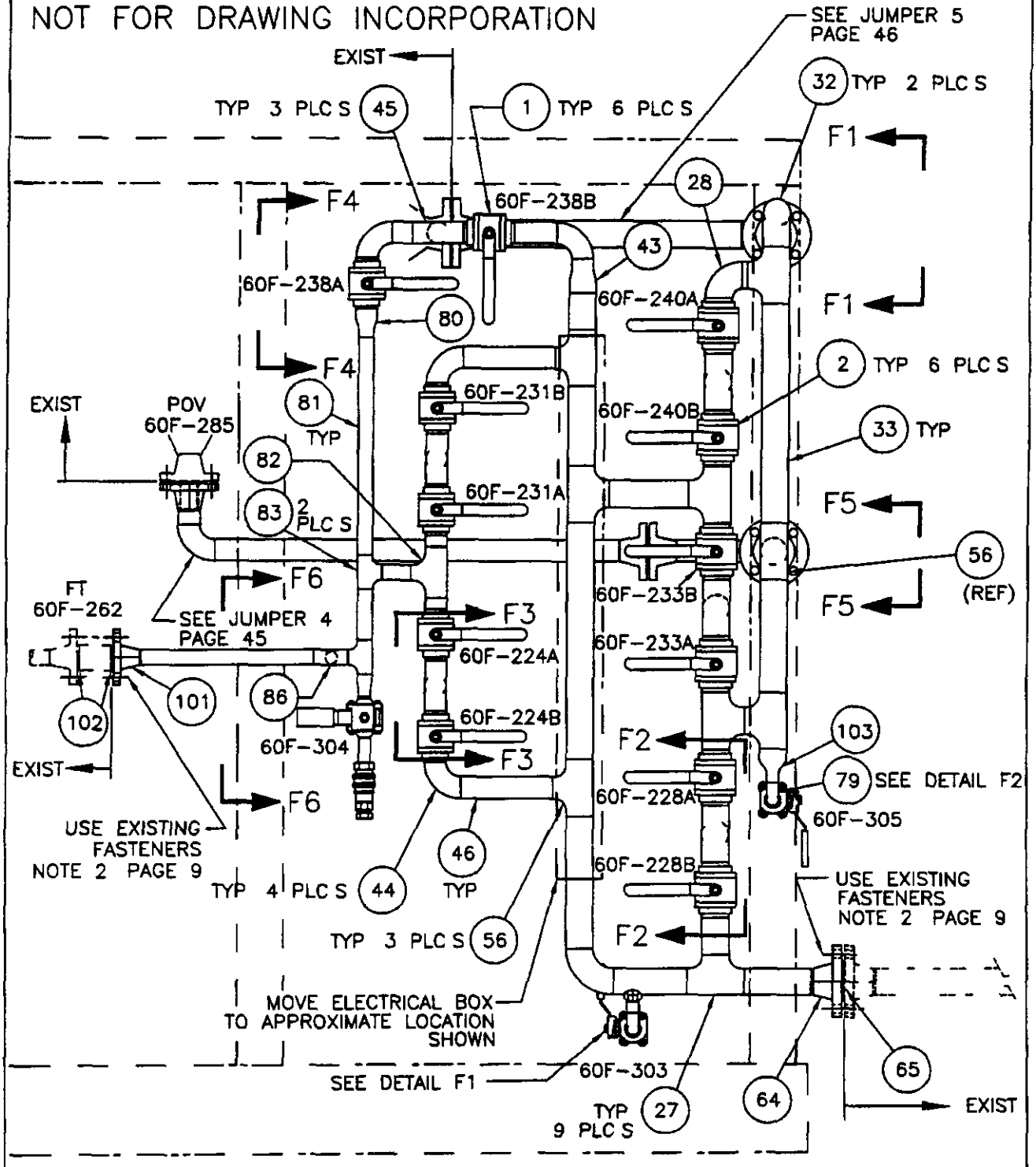

VIEW F-F PARTS CALLOUT, SECOND RO

ENGINEERING CHANGE NOTICE CONTINUATION SHEET	DOCUMENT NO N/A	DATE 02/05/01	ECN 662006

ASSEMBLY SKETCH
NOT FOR DRAWING INCORPORATION

DIMENSIONS SHOW ARE APPROXIMATE
FIELD ADJUST AS NECESSARY

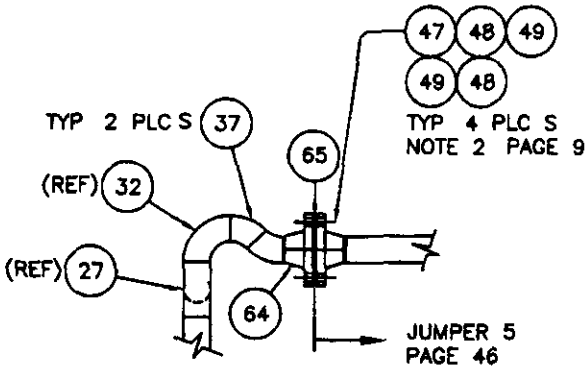

VIEW F1–F1

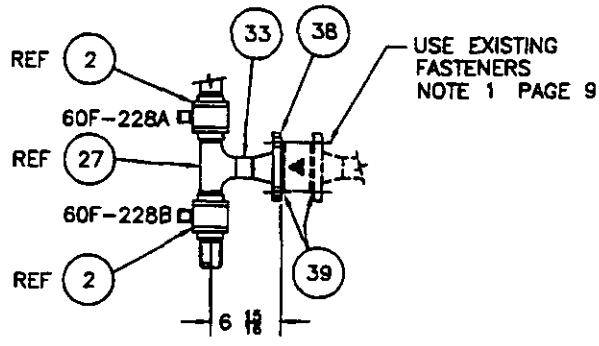

VIEW F2–F2
TYP 3 PLC S

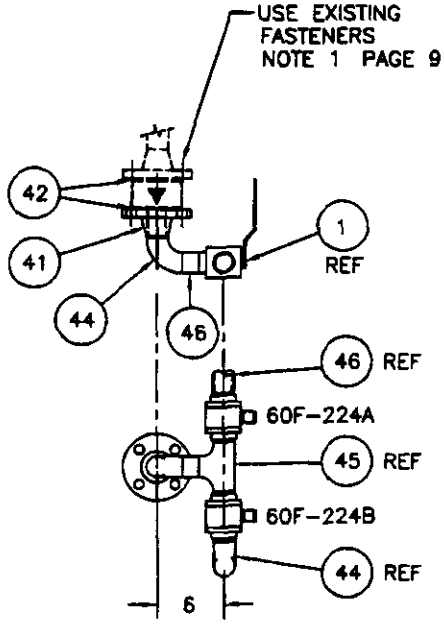

VIEW F3–F3
TYP 2 PLC S

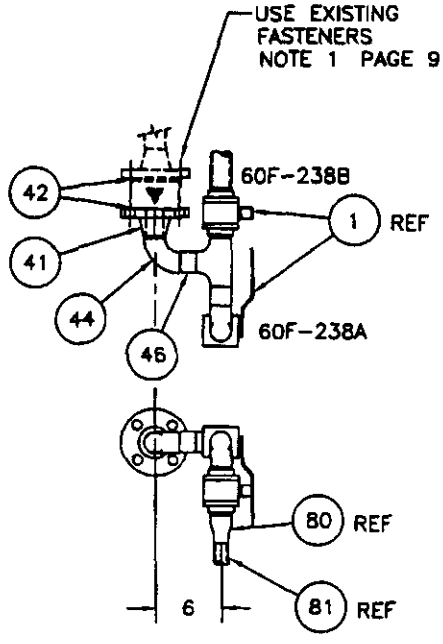

VIEW F4–F4
TYP 1 PLC S

ENGINEERING CHANGE NOTICE CONTINUATION SHEET	DOCUMENT NO N/A	DATE 02/05/01	ECN 662006

ASSEMBLY SKETCH
NOT FOR DRAWING INCORPORATION

DIMENSIONS SHOWN ARE APPROXIMATE
FIELD VERIFY AND ADJUST AS NECESSARY

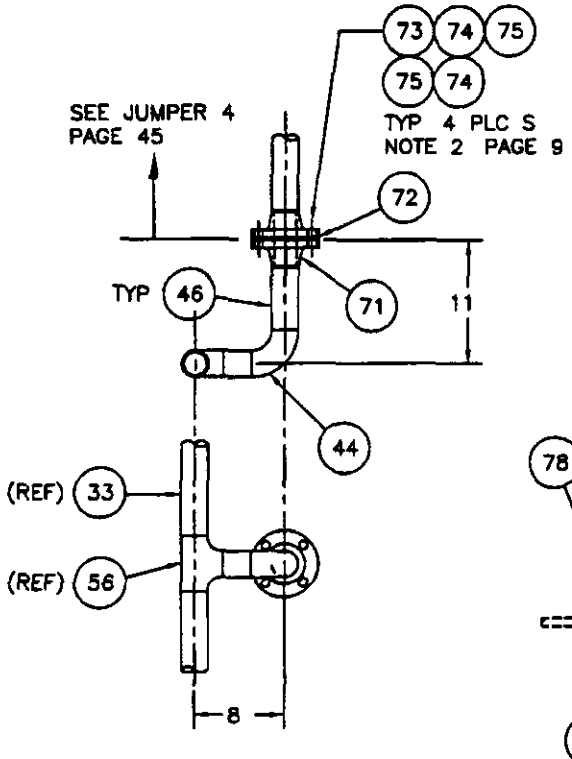

VIEW F5-F5
TYP 1 PLC S

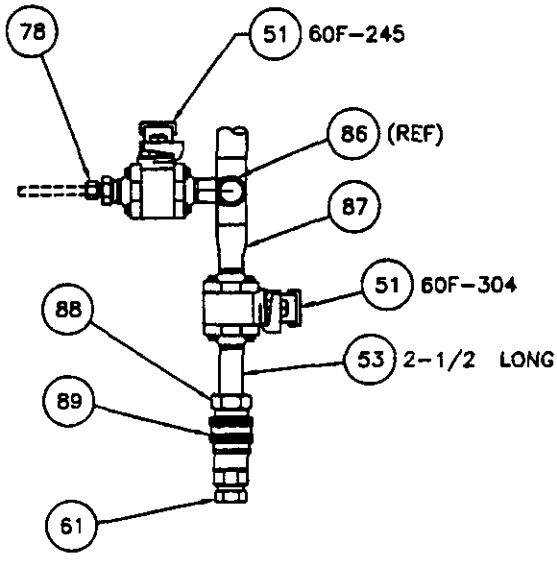

VIEW F6-F6
2X SCALE

ENGINEERING CHANGE NOTICE CONTINUATION SHEET	DOCUMENT NO N/A	DATE 02/05/01	ECN 662006

ASSEMBLY SKETCH
NOT FOR DRAWING INCORPORATION
DIMENSIONS SHOWN ARE APPROXIMATE
FIELD VERIFY AND ADJUST AS NECESSARY

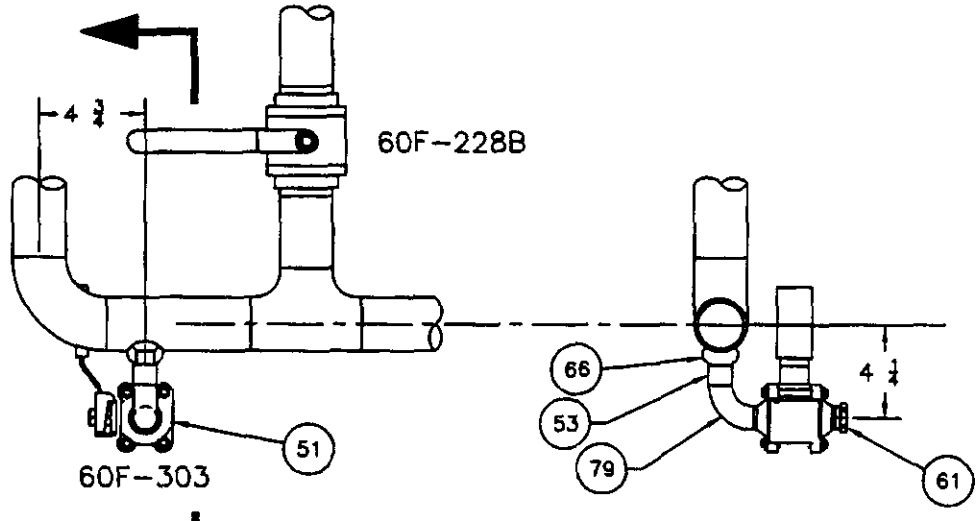

DETAIL F1

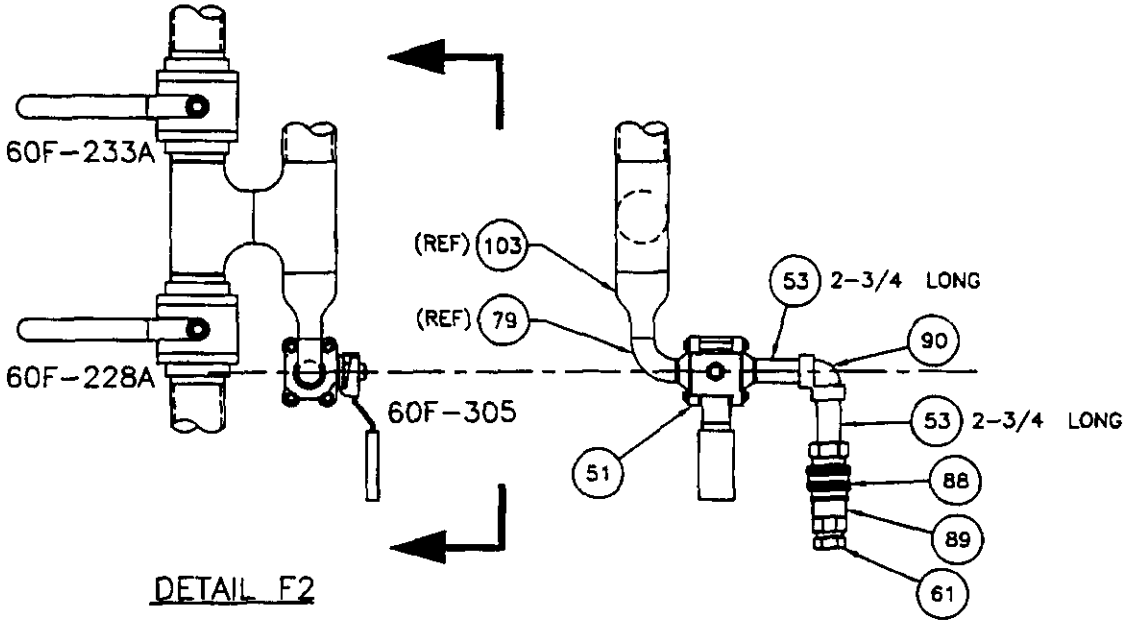

DETAIL F2

ASSEMBLY SKETCH
NOT FOR DRAWING INCORPORATION
DIMENSIONS SHOWN ARE APPROXIMATE
FIELD VERIFY AND ADJUST AS NECESSARY

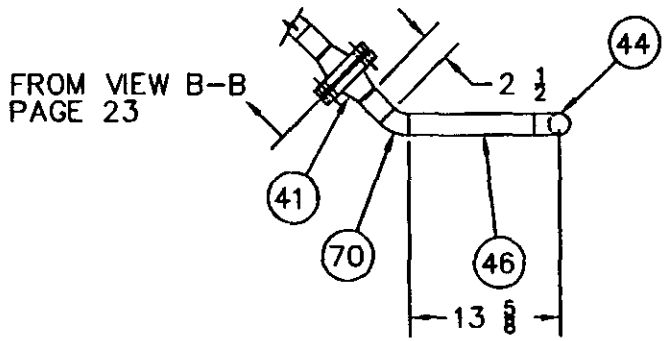

VIEW J1-J1

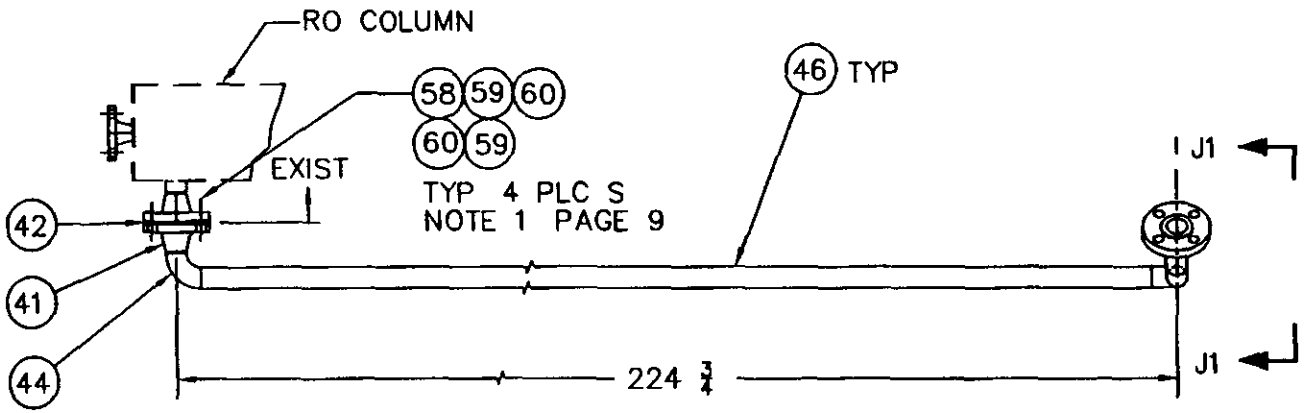

1ST RO JUMPER 1 DETAIL (SIDE VIEW)

TYPICAL 3 PLACES

ENGINEERING CHANGE NOTICE CONTINUATION SHEET	DOCUMENT NO N/A	DATE 02/05/01	ECN 662006

ASSEMBLY SKETCH
NOT FOR DRAWING INCORPORATION
DIMENSIONS SHOWN ARE APPROXIMATE
FIELD VERIFY AND ADJUST AS NECESSARY

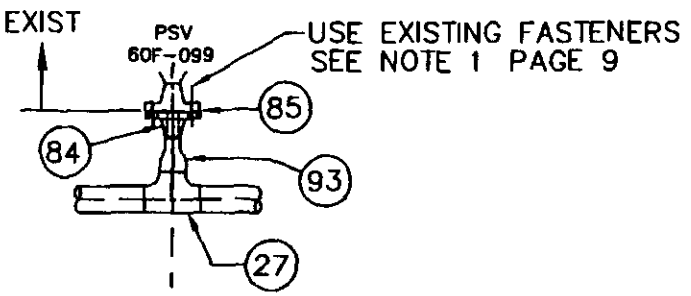

PARTIAL ELEVATION

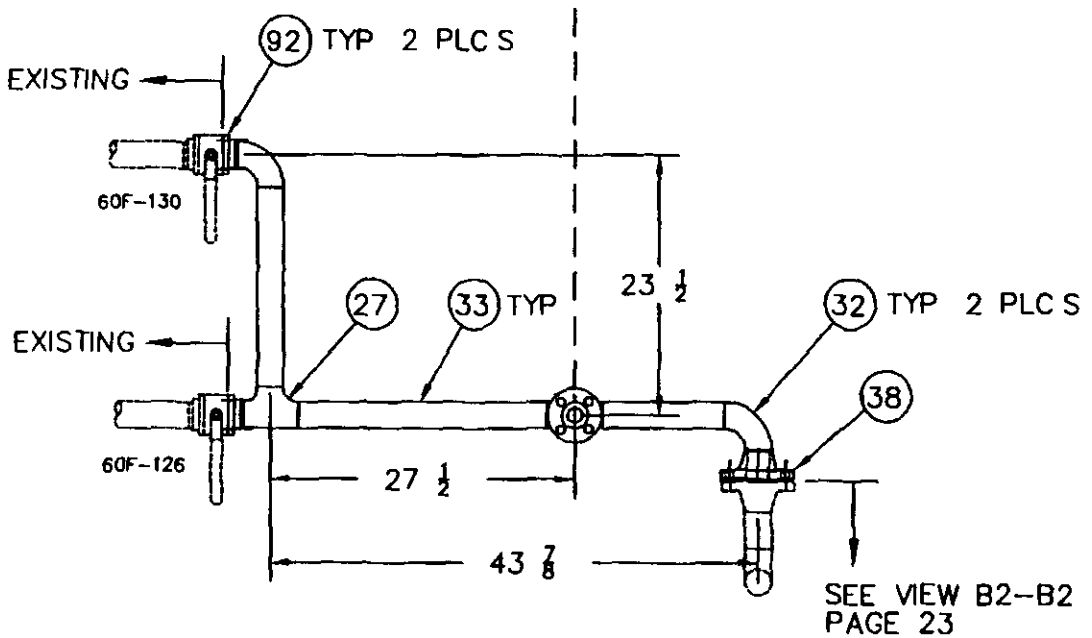

1ST RO JUMPER 2 DETAIL (PLAN VIEW)

ENGINEERING CHANGE NOTICE CONTINUATION SHEET	DOCUMENT NO N/A	DATE 02/05/01	ECN 662006

ASSEMBLY SKETCH
NOT FOR DRAWING INCORPORATION
DIMENSIONS SHOWN ARE APPROXIMATE
FIELD VERIFY AND ADJUST AS NECESSARY

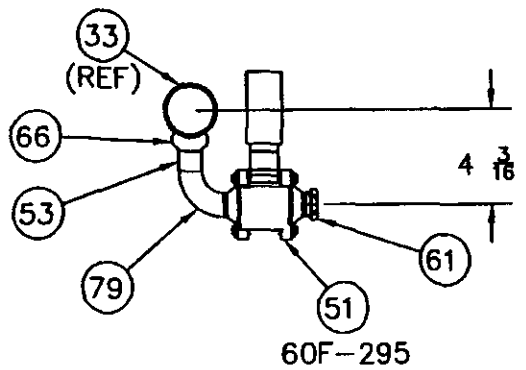

VIEW J3-J3

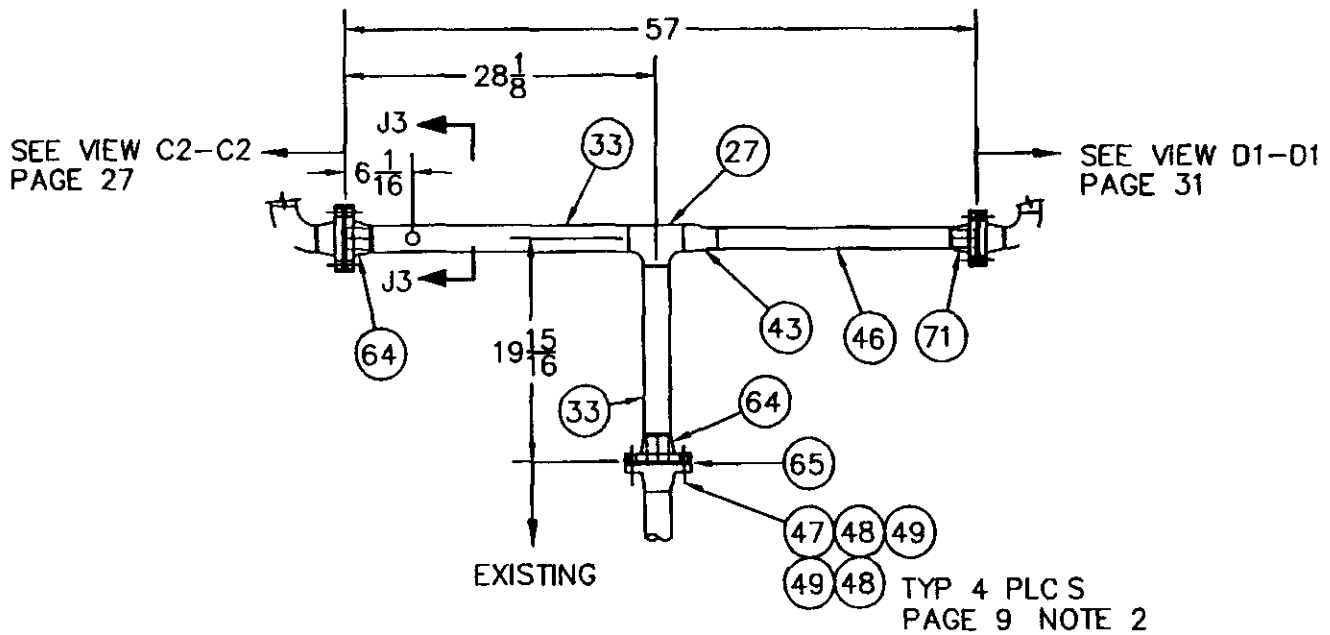

1ST RO JUMPER 3 DETAIL (PLAN VIEW)

ENGINEERING CHANGE NOTICE
CONTINUATION SHEET

DOCUMENT NO
N/A

DATE
02/05/01

ECN 662006

ASSEMBLY SKETCH
NOT FOR DRAWING INCORPORATION
DIMENSIONS SHOWN ARE APPROXIMATE
FIELD VERIFY AND ADJUST AS NECESSARY

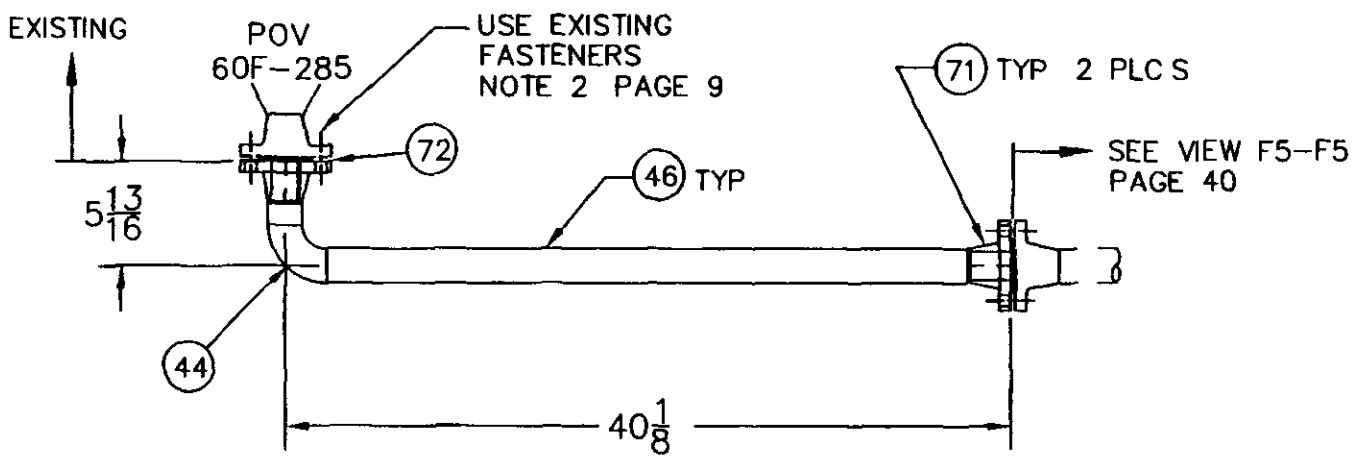

2ND RO JUMPER 4 DETAIL (SIDE VIEW)

ENGINEERING CHANGE NOTICE CONTINUATION SHEET	DOCUMENT NO	DATE	ECN
	N/A	07/23/01	662006

ASSEMBLY SKETCH
NOT FOR DRAWING INCORPORATION
DIMENSIONS SHOWN ARE APPROXIMATE
FIELD VERIFY AND ADJUST AS NECESSARY

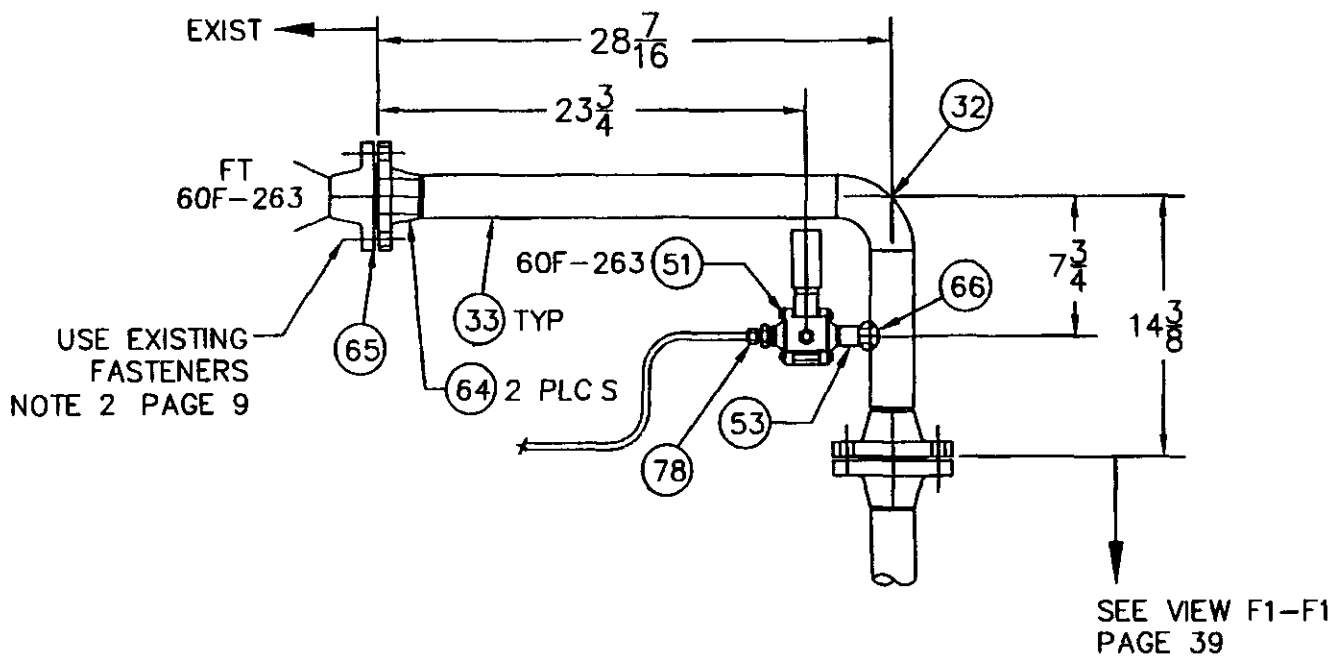

2ND RO JUMPER 5 DETAIL (PLAN VIEW)

ENGINEERING CHANGE NOTICE CONTINUATION SHEET	DOCUMENT NO N/A	DATE 07/23/01	ECN 662006

ITEM	QUANTITY	Description	Notes
		PART 1 - 1-1/2" BALL VALVE ASSEMBLY WITH POSITION INSTRUMENTATION (PAGE 17)	
1	30	1-1/2" Ball Valve Assembly Consisting of the following 3 Parts: • 1-1/2" Ball Valve, 3-Piece Ball Valve, Standard Port, Body and End Pieces 316L SS, Ball and Stem 316 SS, Virgin PTFE Seats/Seals, SCH 10 Butt Weld Ends (BWE), Direct (ISO 5211 Type) Center Section, MCF Part Number **1-1/2"-SRS-66-TFT-BWE-I** • Position Indicator Mounting Kit, MCF Part Number **MK-50IND** • Valve Position Indicator and Puck, MCF Part Number **IND0118**	Vendor Contact: MCF Valves Houston, Texas 77018 Tel: (713) 869-3100 Fax: (713) 869-5511 Email: sales@mcfvalves.com
		Part 2 - 2" BALL VALVE ASSEMBLY WITH POSITION INSTRUMENTATION (PAGE 18)	
2	24	2" Ball Valve Assembly Consisting of the following 3 Parts: • 2" Ball Valve, 3-Piece Ball Valve, Standard Port, Body and End Pieces 316L SS, Ball and Stem 316 SS, Virgin PTFE Seats/Seals, SCH 10 Butt Weld Ends (BWE), Direct (ISO 5211 Type) Center Section, MCF Part Number **2"-SRS-66-TFT-BWE-I** • Position Indicator Mounting Kit, MCF Part Number **MK-50IND** Valve Position Indicator and Puck, MCF Part Number **IND0118**	Vendor Same as Item 1
		VIEW A-A FIRST RO (PAGE 19)	
		(Some Parts Identified in This View are Listed Under other views or details)	
27	32	2" SCH 10S Pipe Tee, Butt Weld Ends, ASTM A403 WP304	
28	7	2" SCH 10S Short Radius Elbow, Butt Weld Ends, ASTM A403 WP304	
29	2	3" Welding Neck Flange, SCH 10S, Raised Face, 300 #, ASME B16.5, ASTM A182-F304	
30	4	3" x 2" Reducing Tee, SCH 10S, Butt Weld Ends, ASTM A403 WP304	
31	2	3" x 2" Concentric Reducer, SCH 10S, Butt Weld Ends, ASTM A403 WP304	
32	25	2" SCH 10S Long Radius Elbow, Butt Weld Ends, ASTM A403 WP304	
33	~65 feet	2" SCH 10S Pipe, ASTM A312 TP304	
34	~10 feet	3" SCH 10S Pipe, ASTM A312 TP304	
35	2	3" Flat Ring Gasket, Flexitallic Style LS (or equal), Type 304SS/Flexicarb, ASME B16.5, 300#	

		VIEW A1-A1 FIRST RO (PAGE 20)	
		(Some Parts Identified in This View are Listed Under other views or details)	
37	14	2" SCH 10S 45 Degree Elbow, Butt Weld Ends, ASTM A403 WP304	
38	14	2" Welding Neck Flange, SCH 10S, Raised Face, 300 #, ASME B16.5, ASTM A182-F304	
39	18	2" Flat Ring Gasket, Flexitallic Style LS (or equal), Type 304SS/Flexicarb, ASME B16.5, 300#	
41	35	1-1/2" Welding Neck Flange, SCH 10S, Raised Face, 300 #, ASME B16.5, ASTM A182-F304	
42	45	1-1/2" Flat Ring Gasket, Flexitallic Style LS (or equal), Type 304SS/Flexicarb, ASME B16.5, 300#	
43	13	2" x 1-1/2" Concentric Reducer, SCH 10S, Butt Weld Ends, ASTM A403 WP304	
44	46	1-1/2" SCH 10S Long Radius Elbow, Butt Weld Ends, ASTM A403 WP304	
45	37	1-1/2" SCH 10S Pipe Tee, Butt Weld Ends, ASTM A403 WP304	
46	~105 feet	1-1/2" SCH 10S Pipe, ASTM A312 TP304	
47	AR	Stud, Continuous Threaded, 5/8-11UNC, ASTM A193, GR. B7 Steel, ANSI B1.1	
48	AR	Nut, Hexagon Semifinished "Heavy Series", 5/8-11UNC, ASTM A194, GR. 2H, ANSI B18.2.2	
49	AR	Lock Washer, 5/8"	
		DETAILs A1 to A3 (PAGE 19)	
		(Some Parts Shown in This View are indentified Under other views or details)	
51	22	3/4" Ball Valve, 3 Piece, SCH 10 Butt Weld on one end and ¾" Female NPT other end, 316 SS, Whitey 60 Series Valve, SS-65TW12P10-TF12	Suggested Vendor for Swagelok and Whitey: Seattle Valve & Fitting Co. 425-825-1115 (Phone) 425-825-1705 (Fax)
52	2	3" x ¾" Weldolet, SCH 10, 304 SS, ASTM A182	Paramount Supply
53	~5 feet	¾" SCH 10 Pipe, ASTM A312 TP304	
54	6	Male Elbow Tube Fitting, 3/8" Tube, ¾" NPT, Swagelok SS-600-2-12	
61	13	¾ NPT Male Pipe Plug, 304 SS	
66	8	2" x ¾" Weldolet, SCH 10, 304, ASTM A182	
79	5	¾" Long Radius Elbow, Butt Weld Ends, ASTM A403 WP304	

		VIEW B-B FIRST RO (PAGE 20)	
		(Some Parts Identified in This View are Listed Under other views or details)	
56	12	2" x 1-1/2" SCH 10S Reducing Tee, Butt Weld Ends, ASTM A403 WP304	
62	2	2" x ¾" SCH 10S Reducing Tee, Butt Weld Ends, ASTM A403 WP304	
		VIEW B1-B1, VIEW B2-B2 (PAGE 23)	
		(Some Parts Identified in This View are Listed Under other views or details)	
58	AR	Stud, Continuous Threaded, 3/4-10UNC, ASTM A193, GR. B7 Steel, ANSI B1.1	
59	AR	Nut, Hexagon Semifinished "Heavy Series", 3/4-10UNC, ASTM A194, GR. 2H, ANSI B18.2.2	
60	AR	Lock Washer, 3/4"	
70	8	1-1/2" SCH 10S 45 Degree Elbow, Butt Weld Ends, ASTM A403 WP304	
		VIEW B3-B3 (PAGE 24)	
		(Some Parts Identified in This View are Listed Under other views or details)	
40	2	2" Check Valve, Mueller Steam Specialty, Sure Check Valve, Model 74, 300 LB ANSI, ASTM A351 Grade CF8M	
64	11	2" Welding Neck Flange, SCH 10S, Raised Face, 150 #, ASME B16.5, ASTM A182-F304	
65	11	2" Flat Ring Gasket, Flexitallic Style LS (or equal), Type 304SS/Flexicarb, ASME B16.5, 150#	
		DETAIL B1 (PAGE 25)	
		(Some Parts Identified in This View are Listed Under other views or details)	
55	3	1-1/2" x ¾" Weldolet, SCH 10, 304, ASTM A182	

VIEW C-C FIRST RO (PAGE 26)			
		(Some Parts Identified in This View are Listed Under other views or details)	
57	5	1-1/2" SCH 10S Short Radius Elbow, Butt Weld Ends, ASTM A403 WP304	
63	3	1-1/2" x ¾" Concentric Reducer, SCH 10S, Butt Weld Ends, ASTM A403 WP304	
VIEWS C1-C1 to C5-C5 (PAGE 27)			
		(All Parts Identified in This View are Listed Under other views or details)	
DETAILS C1 to C3 (PAGE 28)			
		(All Parts Identified in This View are Listed Under other views or details)	
VIEW D-D FIRST RO PARTS CALLOUT (PAGE 30)			
		(Some Parts Identified in This View are Listed Under other views or details)	
69	1	1-1/2" x ¾" SCH 10S Reducing Tee, Butt Weld Ends, ASTM A403 WP304	
95	1	1-1/2" x 1/2" Reducing Tee, SCH 10S, Butt Weld Ends, ASTM A403 WP304	
96	1	1/2" Welding Neck Flange, SCH 10S, Raised Face, 300 #, ASME B16.5, ASTM A182-F304	
97	1	1/2" Flat Ring Gasket, Flexitallic Style LS (or equal), Type 304SS/Flexicarb, ASME B16.5, 300 #	
98	1	3/4" Welding Neck Flange, SCH 10S, Raised Face, 300 #, ASME B16.5, ASTM A182-F304	
99	1	3/4" Flat Ring Gasket, Flexitallic Style LS (or equal), Type 304SS/Flexicarb, ASME B16.5, 300 #	
100	~ 3 FT	3/4" SCH 10S Pipe, ASTM A312 TP304	

		VIEWS D1-D1 to D4-D4 (PAGE 31)	
		(Some Parts Identified in This View are Listed Under other views or details)	
71	5	1-1/2" Welding Neck Flange, SCH 10S, Raised Face, 150 #, ASME B16.5, ASTM A182-F304	
72	3	1-1/2" Flat Ring Gasket, Flexitallic Style LS (or equal), Type 304SS/Flexicarb, ASME B16.5, 150#	
73	AR	Stud, Continuous Threaded, 1/2-13UNC, ASTM A193, GR. B7 Steel, ANSI B1.1	
74	AR	Nut, Hexagon Semifinished "Heavy Series", 1/2-13UNC, ASTM A194, GR. 2H, ANSI B18.2.2	
75	AR	Lock Washer, 1/2"	
		DETAILS D1 to D3 (PAGE 32)	
		(ALL Parts Identified in This View are Listed Under other views or details)	
		VIEW E-E SECOND RO PARTS CALLOUT (PAGE 34)	
		(Some Parts Identified in This View are Listed Under other views or details)	
76	2	3" SCH 10S 45 Degree Elbow, Butt Weld Ends, ASTM A403 WP304	
103	2	2" x 3/4" Concentric Reducer, SCH 10S, Butt Weld Ends, ASTM A403 WP304	
		VIEW E1-E1 SECOND RO (PAGE 35)	
		(All Parts Identified in This View are Listed Under other views or details)	
		DETAILS E1 to E2 (PAGE 36)	
		(Some Parts Identified in This View are Listed Under other views or details)	
77	1	3/4" SCH 10S 45 Degree Elbow, Butt Weld Ends, ASTM A403 WP304	
78	3	Male Tube Connector, 3/8" Tube, ¾" Male NPT, Swagelok SS-600-1-12	

VIEW F-F PARTS CALLOUT, SECOND RO (PAGE 38)			
		(Some Parts Identified in This View are Listed Under other views or details)	
80	1	1-1/2" x 1" Concentric Reducer, SCH 10S, Butt Weld Ends, ASTM A403 WP304	
81	~5 feet	1" SCH 10S Pipe, ASTM A312 TP304	
82	1	1-1/2" x 1" SCH 10S Reducing Tee, Butt Weld Ends, ASTM A403 WP304	
83	2	1" SCH 10S Pipe Tee, Butt Weld Ends, ASTM A403 WP304	
86	1	1" x ¾" SCH 10S Reducing Tee, Butt Weld Ends, ASTM A403 WP304	
101	1	1" Welding Neck Flange, SCH 10S, Raised Face, 150 #, ASME B16.5, ASTM A182-F304	
102	2	1" Flat Ring Gasket, Flexitallic Style LS (or equal), Type 304SS/Flexicarb, ASME B16.5, 150#	
VIEWS F1 to F4 (PAGE 37)			
		(All Parts Identified in This View are Listed Under other views or details)	
VIEWS F5 to F6 (PAGE 40)			
		(Some Parts Identified in This View are Listed Under other views or details)	
87	1	1" x 3/4" Concentric Reducer, SCH 10S, Butt Weld Ends, ASTM A403 WP304	
88	2	Swagelok Quick Connect, Male Stem, ¾" Female NPT, Swagelok SS-QF12-S-12PF	
89	2	Swagelok Quick Connect, Female Body, ¾" Female NPT, Swagelok SS-QF12-B-12PF	
DETAIL F1 to F2 (PAGE 41)			
		(Some Parts Identified in This View are Listed Under other views or details)	
90	1	¾" NPT Pipe Elbow, 304 SS	
1ST RO JUMPER 1 DETAIL (SIDE VIEW) (PAGE 42)			
		(Some Parts Identified in This View are Listed Under other views or details)	

1ST RO JUMPER 2 DETAIL (PLAN VIEW) (PAGE 43)			
		(Some Parts Identified in This View are Listed Under other views or details)	
84	1	1" Welding Neck Flange, SCH 10S, Raised Face, 300 #, ASME B16.5, ASTM A182-F304	
85	1	1" Flat Ring Gasket, Flexitallic Style LS (or equal), Type 304SS/Flexicarb, ASME B16.5, 300#	
92	2	Adapter, Butt Weld, for Watts Series 8452 2" 3-Piece Ball Valve, Grade CF3M Stainless Steel	CB Engineering Pacific Inc Bellevue, Washington 98004 (425) 646-7202 (PH) (425) 646-7211 (FAX)
93	1	2" x 1" Concentric Reducer, SCH 10S, Butt Weld Ends, ASTM A403 WP304	
1ST RO JUMPER 3 DETAIL (PLAN VIEW) (PAGE 44)			
		(All Parts Identified in This View are Listed Under other views or details)	
2ND RO JUMPER 4 DETAIL (SIDE VIEW) (PAGE 45)			
		(All Parts Identified in This View are Listed Under other views or details)	
2ND RO JUMPER 5 DETAIL (PLAN VIEW) (PAGE 46)			
		(All Parts Identified in This View are Listed Under other views or details)	

Trademarks:

Flexicarb - Flexitallic Limited Corporation
Flexitallic - "Flexitallic" Gasket Company Corporation
Swagelok - Crawford Fitting Company Corporation

ATTACHMENT B - AUTHORIZATION BASES REVIEW FORM

ECN 662006 Page 54 of 54

Part A:

REFERENCE ITEM # Proposed Change / Discovery

Proposed Change/Discovery (circle one)

APPROVAL DESIGNATOR ~~TQSR~~ T or H

TITLE Replace 3-Way Valves on RO System 60F

DESCRIPTION 3-Way ball valves on the Reverse Osmosis (RO) system 60F will be replaced with two 2-way ball valves to allow for Operation of Clean In Place (CIP) system during normal RO system operation..

[signature] 8/14/01

Originator Signature Date

Part B:

Does the referenced item:	(check one)
A. Increase risk from a hazard - to the workers &/or public beyond that *previously analyzed, evaluated, and documented in the Authorization* Bases?	NO x Yes/Maybe
B. Reduce the *reliability or effectiveness of features, controls, procedures,* or processes used to mitigate hazards?	NO x Yes/Maybe
C. Introduce a hazard not evaluated in the Authorization Bases?	NO x Yes/Maybe
D. Reflect new information on existing hazards beyond that currently documented in the Authorization Bases?	NO x Yes/Maybe

DETERMINATION BASES: Record complete justification and reference information below. Use Attachment 3 for continuations. *Maintain with submittal package.*

Replacement of 3-way valves will allow for continuous operation of RO system. Implementation of these changes falls within the existing authorization basis identified within the ASA (HNF-SD-ETF-ASA-001) and the Hazard Categorization for the Effluent Treatment Facility (WHC-SD-C018-HC-002).

PABI, Item Remains Open	No Impact, ABR Closed		
☐	☒	[signature]	9-20-01
		Authorization Bases Evaluator	Date
☐	☐		
		EWPF OSE Team Leader	Date

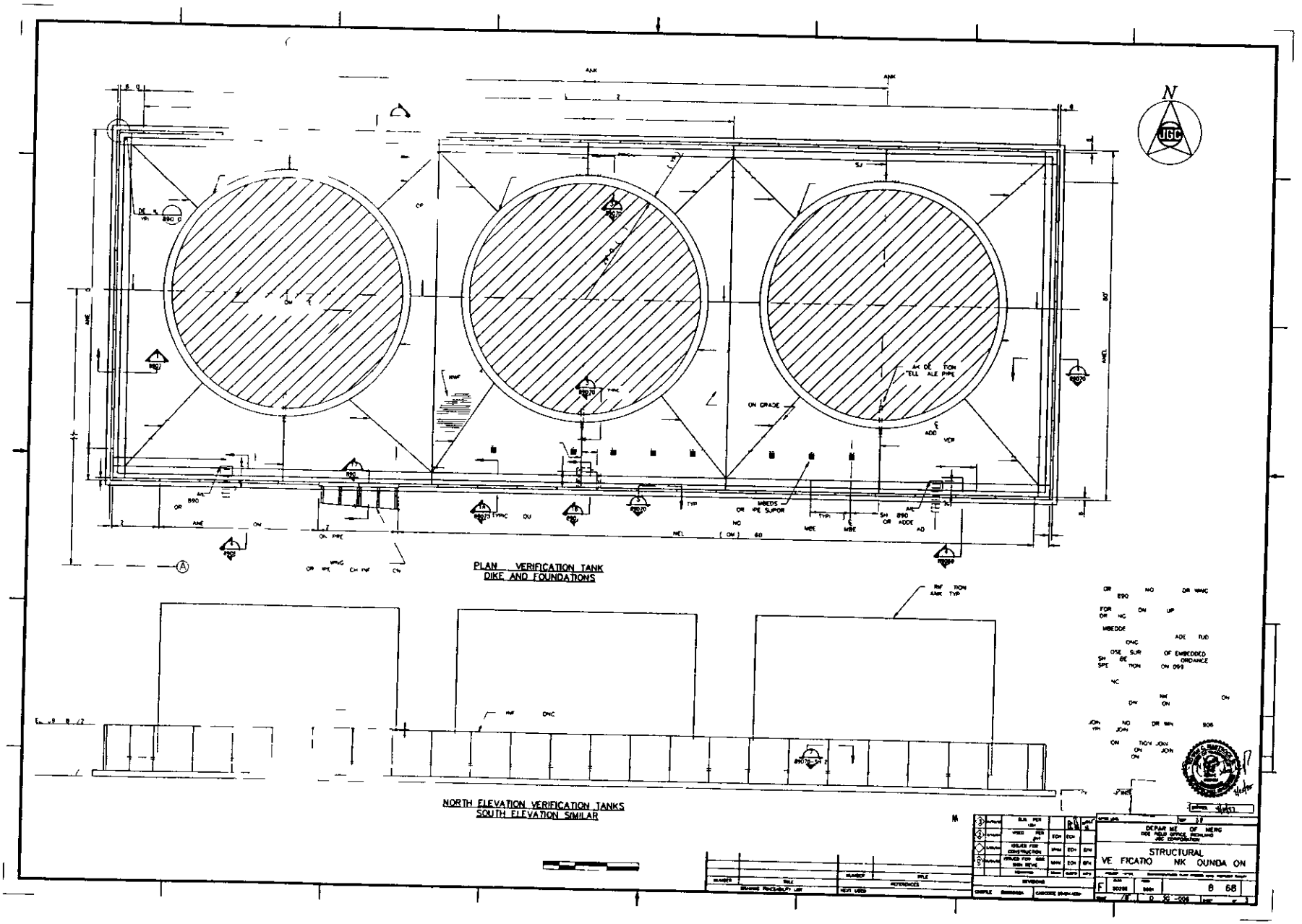
PLAN VERIFICATION TANK
DIKE AND FOUNDATIONS
NORTH ELEVATION VERIFICATION TANKS
SOUTH ELEVATION SIMILAR
ON GRADE
STRUCTURAL
VE FICATIO NK OUNDA ON
8 68

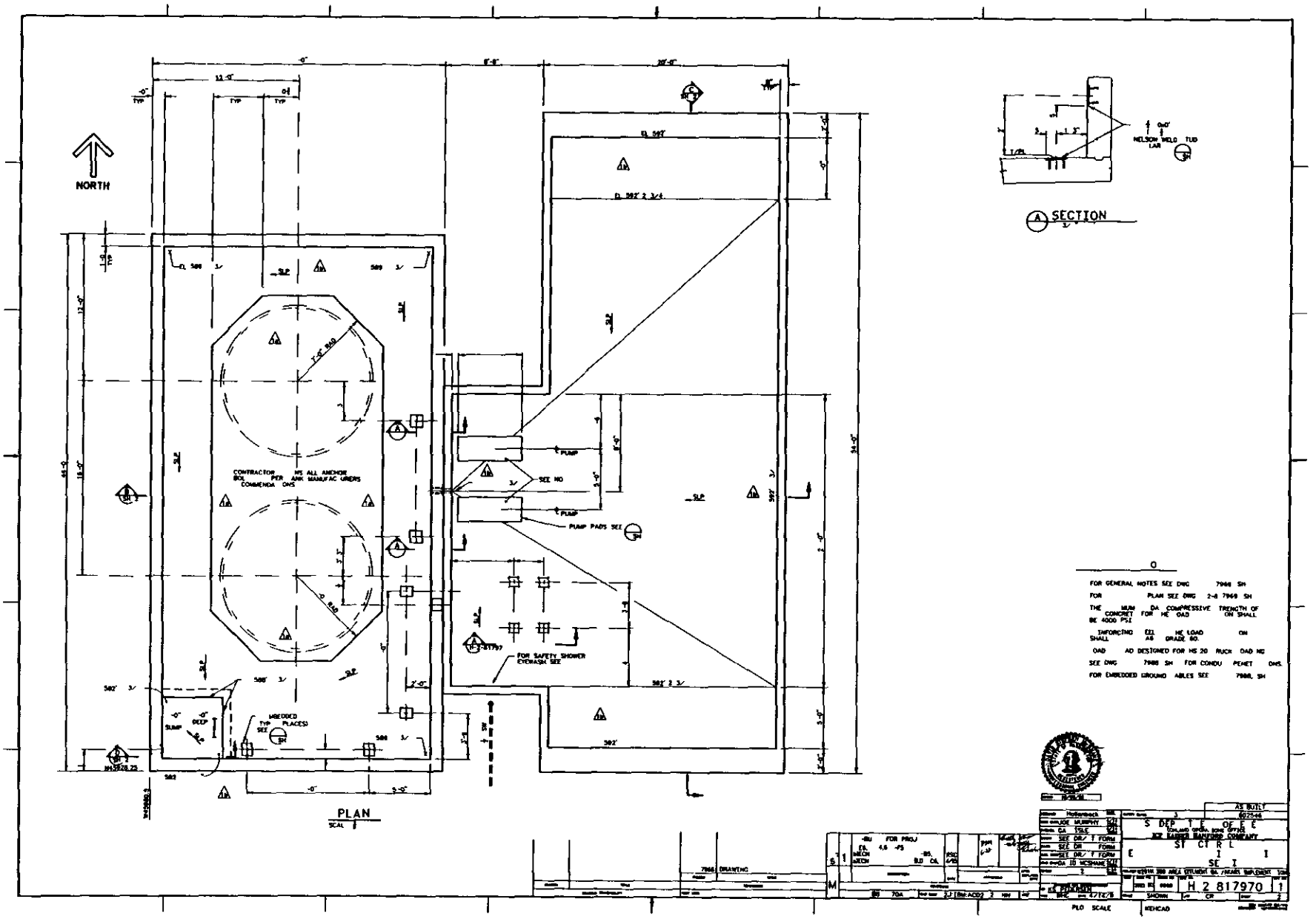
NORTH
PLAN
SCALE
SECTION
CONTRACTOR MS ALL ANCHOR BOL PER ANK MANUFAC URERS COMMENDA OHS
PUMP
SEE NO
PUMP PADS SEE
FOR SAFETY SHOWER EYEWASH SEE
EMBEDDED TYP PLACES
SUMP
NELSON WELD TUD LAR
FOR GENERAL NOTES SEE DWG 7966 SH
FOR PLAN SEE DWG 2-4 7968 SH
THE MUM DA COMPRESSIVE TRENGTH OF CONCRETE FOR HE OAD ON SHALL BE 4000 PSI
INFORCING EEL HE LOAD ON SHALL AS GRADE 60.
OAD AD DESIGNED FOR HS 20 RUCK OAD NG
SEE DWG 7968 SH FOR CONDU PENET OHS.
FOR EMBEDDED GROUND ABLES SEE 7968, SH
AS BUILT
S DEP T E OF E E
ENGINEERING DIVISION, ROME OFFICE
WCF HANFORD MANFORD COMPANY
E ST CT R L I
SE I
H 2 817970
7966 DRAWING
PLO SCALE
MEHCAD

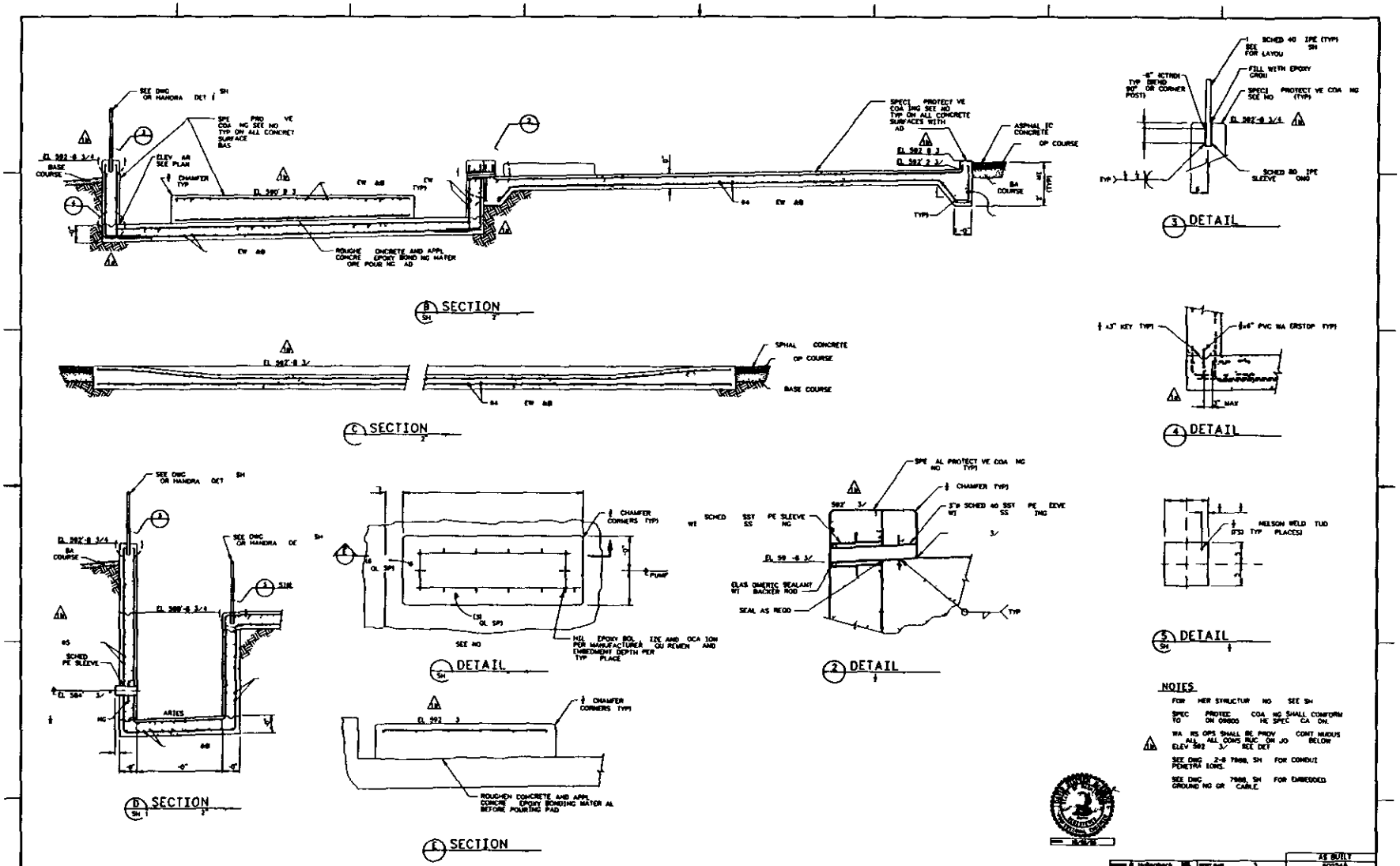
SECTION
SECTION
SECTION
SECTION
DETAIL
DETAIL
DETAIL
DETAIL
DETAIL
NOTES
U S DEP BT E T OF E
STRUCT R
E C D I I
C I NS E ILS
H 2 817970

CPF 18

ENGINEERING CHANGE NOTICE

ESSENTIAL

Page 1 of 24

1 ECN 641703

Proj ECN

2 ECN Category (mark one)	3 Originator s Name Organization MSIN and Telephone No	4 USQ Required?	5 Date
Supplemental [X] Direct Revision [] Change ECN [] Temporary [] Standby [] Supersedure [] Cancel/Void []	RN Wagner/32200/S6 71/376 4460	[] Yes [X] No	May 13 1997
	6 Project Title/No /Work Order No Misc Mods and As Builts for ETF Load In Station	7 Bldg /Sys /Fac No 2025E/59A 60M/ 200 Area ETF	8 Approval Designator NA
	9 Document Numbers Changed by this ECN (includes sheet no and rev) See Block 13A	10 Related ECN No(s) N/A	11 Related PO No NA

12a Modification Work	12b Work Package No	12c Modification Work Complete	12d Restored to Original Condition (Temp or Standby ECN only)
[X] Yes (fill out Blk 12b) [] No (NA Blks 12b 12c 12d)	EL 96 00208 EL 97 00343	Design Authority/Cog Engineer Signature & Date	NA Design Authority/Cog Engineer Signature & Date

13a Description of Change **13b Design Baseline Document?** [X] Yes [] No

This ECN implements the following changes

- Remove flow orifice in System 60M transfer line from Load In Station
- As build sample valve and tanker vent valving
- Add drain lines and valves to Load In Station pump cases
- Add bell reducer funnels and valving to suction of Load In Station pumps
- Replace Facility with Station in all Load In drawing titles
- Identify status of Load In Station drawings to Essential or Support

Piping fittings and jointing methods to meet the requirements of Hanford Site piping specification Class M 9 Install inspect and test the new piping installation in accordance with ASME B31 3 and Addenda for Category D fluid service

(Block 13a continued on Page 3)

14a Justification (mark one)

Criteria Change	[]	Design Improvement	[X]	Environmental	[]	Facility Deactivation	[]
As Found	[X]	Facilitate Const	[]	Const Error/Omission	[]	Design Error/Omission	[]

14b Justification Details

Remove flow orifice in transfer line from Load In Station to increase flow rate
As build sample valve and tanker vent valving for configuration control
Add drain lines and valves to Load In Station pump cases for improved contamination control
Add bell reducer funnels and valving to allow priming of Load In Station pumps
Replace Facility with Station in drawing titles to reflect the status of the Load In Station as part of the 200 Area ETF rather than a stand alone facility
Identify status of Load In Station drawings to Essential or Support as appropriate

15 Distribution (include name MSIN and no of copies)

N J Sullivan	S6 72	1		R J Nicklas	S6 72	1
J E Geary	S6 71	2		A K Yoakum	S6 71	1
R N Wagner	S6 71	2		S P Biglin	S6 74	1
C M Towne	S6 74	1		E A McNamar	S6 74	1
J L Vigue	S6 74	1		B S Darling	S6 72	1
J F Berger	S6 74	1		D P Nelsen	S6 71	1
T W Dallas	S6 71	1		Stations 3/4/5/15/16/30		

(Advance Copies)

RELEASE STAMP

DATE: MAY 27 1997 HANFORD RELEASE

STA: 30 IN: 25

A 7900 013 2 (05/96) GEF095

ENGINEERING CHANGE NOTICE

1 ECN (use no from pg 1) 641703

16 Design Verification Required	17 Cost Impact				18 Schedule Impact (days)	
	ENGINEERING NA		CONSTRUCTION		NA	
[X] Yes	Additional	[] $	Additional	[] $	Improvement	[]
[] No	Savings	[] $	Savings	[] $	Delay	[]

19 Change Impact Review Indicate the related documents (other than the engineering documents identified on Side 1) that will be affected by the change described in Block 13 Enter the affected document number in Block 20

SDD/DD	[]	Seismic/Stress Analysis	[]	Tank Calibration Ma ual	[]
Functional Design Criteria	[]	Stress/Desig Report	[]	Health Physics Procedure	[]
Operating Specific tion	[]	Interf c Control Drawing	[]	Spa es Multiple Unit Listing	[]
Criticality Specific tion	[]	Calibration Procedure	[]	Test Procedures/Specifi ation	[]
Conceptual Design Report	[]	Installation Procedure	[]	Component Index	[X]
Equipment Spec	[]	Mai tenance Procedure	[]	ASME Coded Item	[]
Const Spec	[]	Engi eering Procedure	[]	Human Factor Consideratio	[]
Procurement Spec	[]	Operating Instructio	[]	Compute Softwa e	[]
Vendo Informatio	[X]	Operating Pr edure	[]	Electric Circ it Schedul	[]
OM Manual	[]	Operational Saf ty Requirement	[]	ICRS Procedure	[]
FSAR/SAR	[]	IEFD Drawing	[]	Process Control Manual/Plan	[]
Safety Eq pment List	[]	C ll Ar angement Drawing	[]	Process Fl w Chart	[]
Radiat o W rk Permit	[]	Essent al Material Specification	[]	Purchase Requis tion	[]
Environment l Impact Stateme t	[]	Fac Proc Samp S hedule	[]	Tickler File	[]
Environme tal Report	[]	Inspection Pla	[]		[]
E ironment l Pe mit	[]	In entory Adjustment Request	[]		[]

20 Other Affected Documents (NOTE Documents listed below will not be revised by this ECN) Signatures below indicate that the signing organization has been notified of other affected documents listed below

Document Number/Revision	Document Number/Revision	Document Number Revision
JCS Database (Component Index)		

21 Approvals

	Signature	Date		Signature	Date
Design Authority	R N Wagner	5/23/97	Design Agent		
Cog Eng	R N Wagner	5/23/97	PE		
Cog Mgr	R J Nicklas FOR	5 23-97	QA		
QA			Safety		
Safety			Design		
Environ			Environ		
Other			Other		

DEPARTMENT OF ENERGY

Signature or a Control Number that tracks the Approval Signature

ADDITIONAL

Documents changed by this ECN (also see attached drawing changes)

H 2 88766	Sheet 4	Rev	2
H 2 88779	Sheet 4	Rev	0
H 9 203	Sheet 1	Rev	0
H 9 203	Sheet 4	Rev	0
H 2 817968	Sheet 1	Rev	1*
H 2 817969	Sheet 1	Rev	1*
H 2 817969	Sheet 2	Rev	1*
H 2 817969	Sheet 3	Rev	1*
H 2 817969	Sheet 4	Rev	1*
H 2 817969	Sheet 5	Rev	1*
H 2 817970	Sheet 1	Rev	1*
H 2 817970	Sheet 2	Rev	1*
H 2 817971	Sheet 1	Rev	1*
H 2 817971	Sheet 2	Rev	1*
H 2 817972	Sheet 1	Rev	1*
H 2 817973	Sheet 1	Rev	1*
H 2 817974	Sheet 1	Rev	2*
H 2 817975	Sheet 1	Rev	1*
H 2 817976	Sheet 1	Rev	1*
H 2 817977	Sheet 1	Rev	1*
H 2 817978	Sheet 1	Rev	1*
H 2 817980	Sheet 1	Rev	1*
H 2 817981	Sheet 1	Rev	1*
H 2 817981	Sheet 2	Rev	1*
H 2 817981	Sheet 3	Rev	1*
H 2 817981	Sheet 4	Rev	1*
H 2 817981	Sheet 5	Rev	1*
H 2 817983	Sheet 1	Rev	0*
H 2 817983	Sheet 2	Rev	1*
H 2 817983	Sheet 3	Rev	0*
H 2 817983	Sheet 4	Rev	1*
H 2 817983	Sheet 5	Rev	0*
H 2 817983	Sheet 6	Rev	1*
H 2 817983	Sheet 7	Rev	0*
H 2 817983	Sheet 8	Rev	0*
H 2 817985	Sheet 1	Rev	1*
H 2 817985	Sheet 2	Rev	1*
H 2 817987	Sheet 1	Rev	1*
H 2 817987	Sheet 3	Rev	1*
H 2 817987	Sheet 4	Rev	1*
H 2 817988	Sheet 1	Rev	1*
H 2 817988	Sheet 2	Rev	1*
H 2 817988	Sheet 3	Rev	1*
H 2 817989	Sheet 1	Rev	1*
H 2 817990	Sheet 1	Rev	1*
H 2 817991	Sheet 2	Rev	1*

(* Title and/or Essential/Support status is changed for these drawings per this ECN)

H 2 88766, Sheet 4, Rev 2, Zone D 2

IS

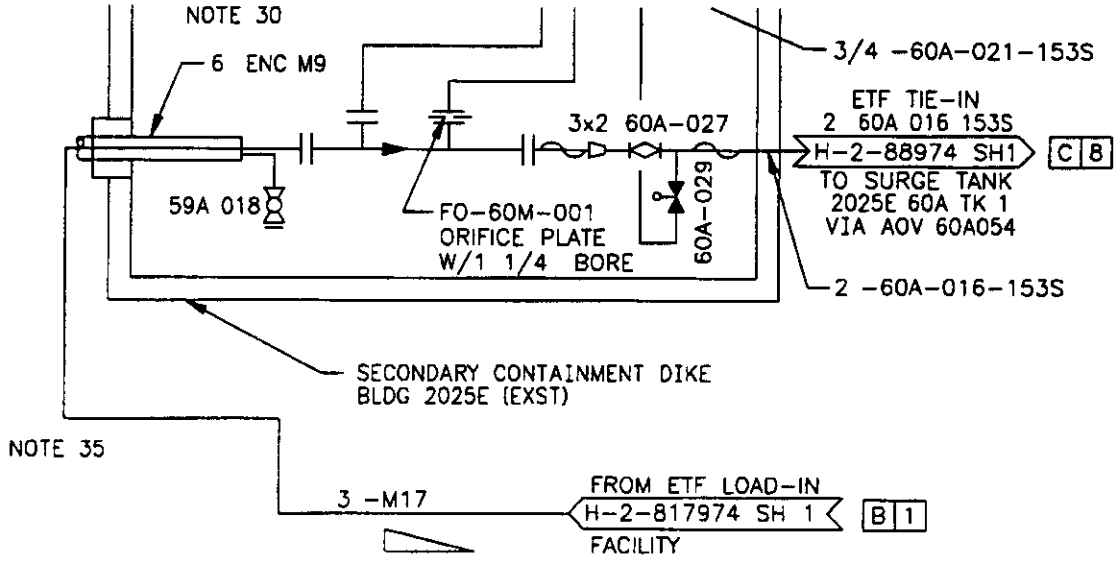

H 2 88766, Sheet 4, Rev. 2, Zone D 2

CHANGE TO

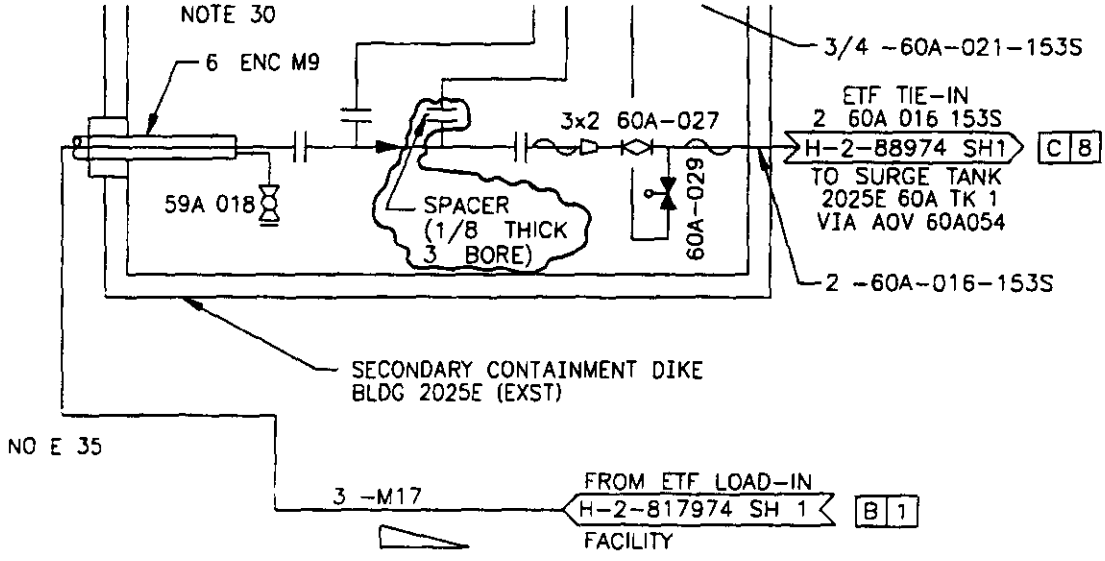

ECN 641703
Date 5/13/97

H 2 88779, Sheet 4, Rev. 0, Zone B 2

IS

B/1 SECTION
SCALE 3/4 = 1 -0

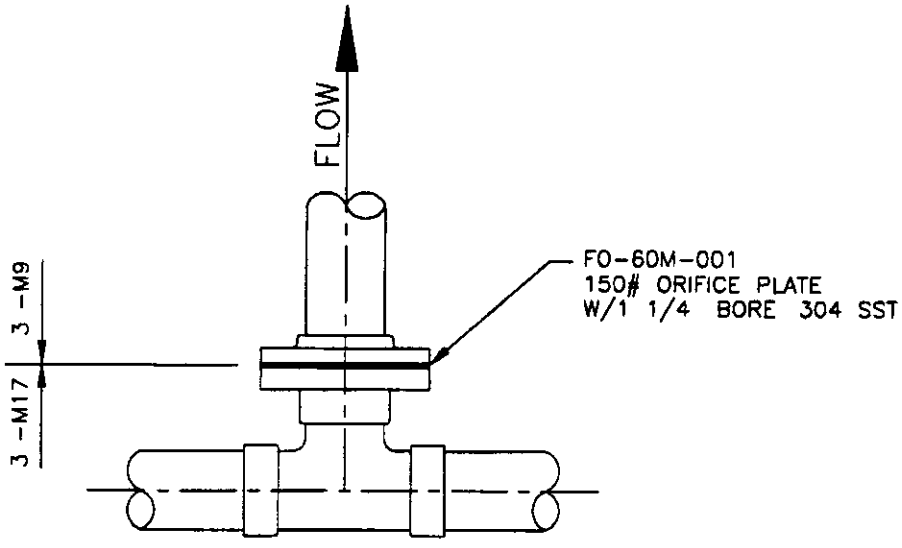

6/1 DETAIL
SCALE 3/16 SIZE

H 2 88779, Sheet 4, Rev. 0, Zone B 2

CHANGE TO

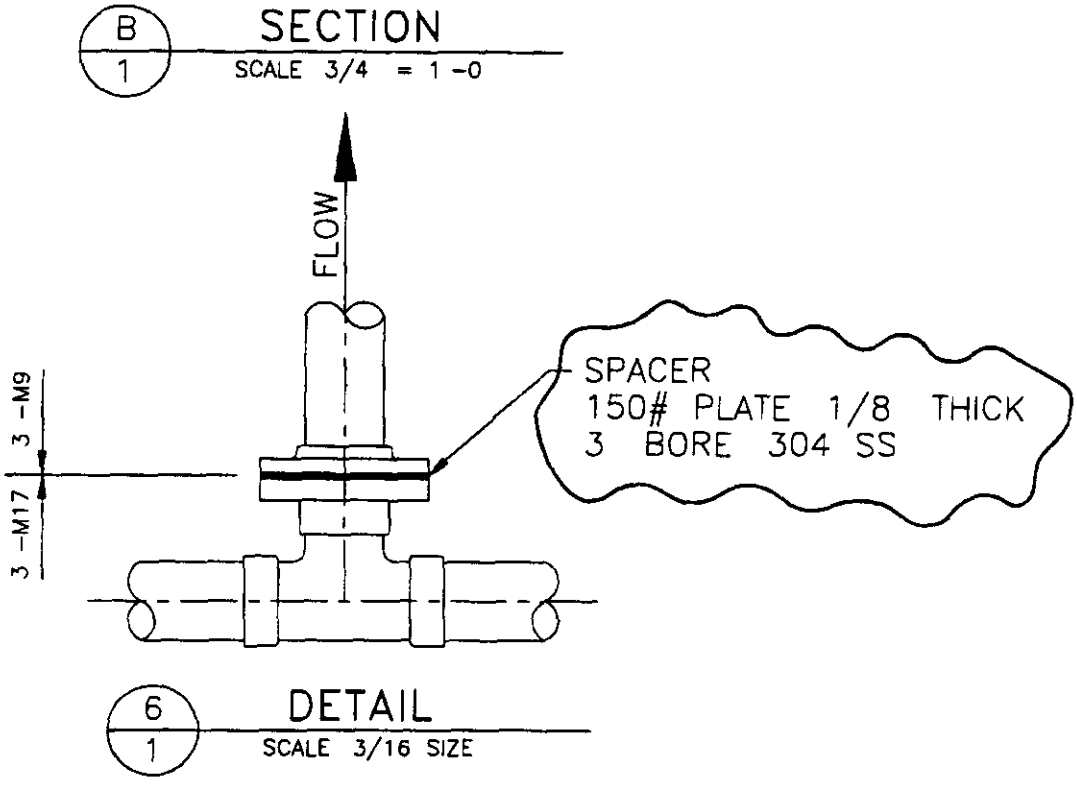

Sketch for 3 spacer shown in above changes to H 2 88779 and H 2 88766

3 FLANGE SPACER FOR ECN 641703

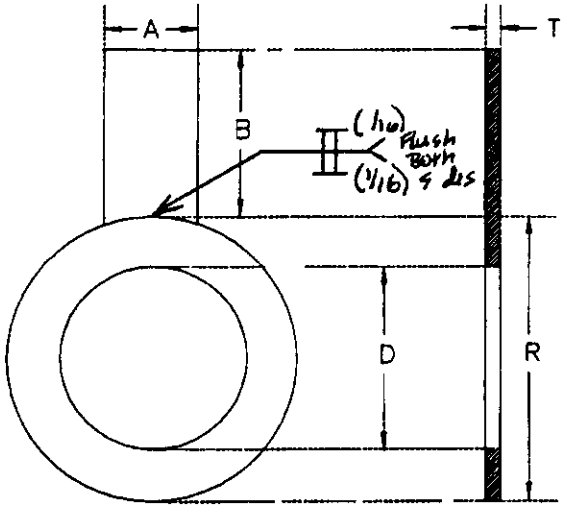

T = 1/8 PLATE THICKNESS

A = 2 (APPROX)
B = 3 (APPROX)

D = 3 00 +/- 05
R = 5 25 +/- 05

MATERIAL = 304SS
FLANGE CLASS = 150 LB

H 2 817974, Sheet 1, Rev 2, Zone C 5

IS

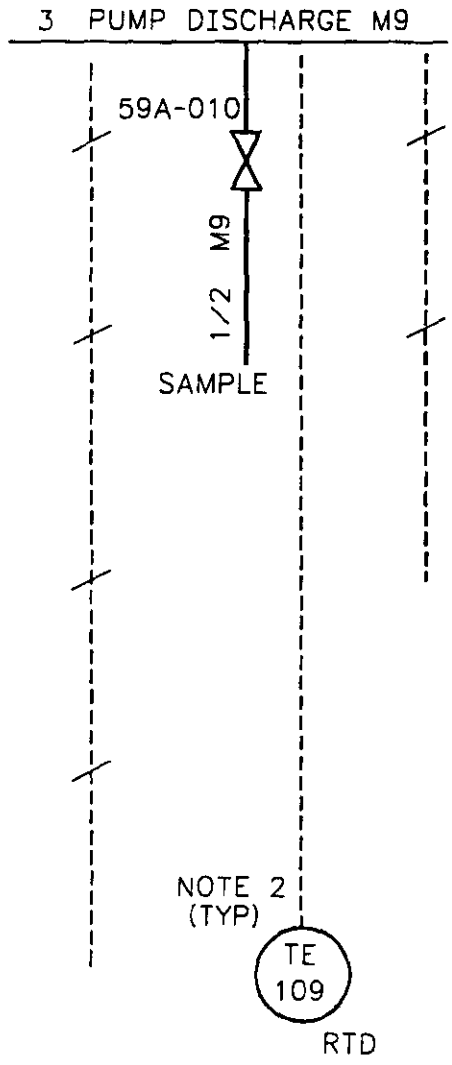

H 2 817974, Sheet 1, Rev 2, Zone C 5

CHANGE TO

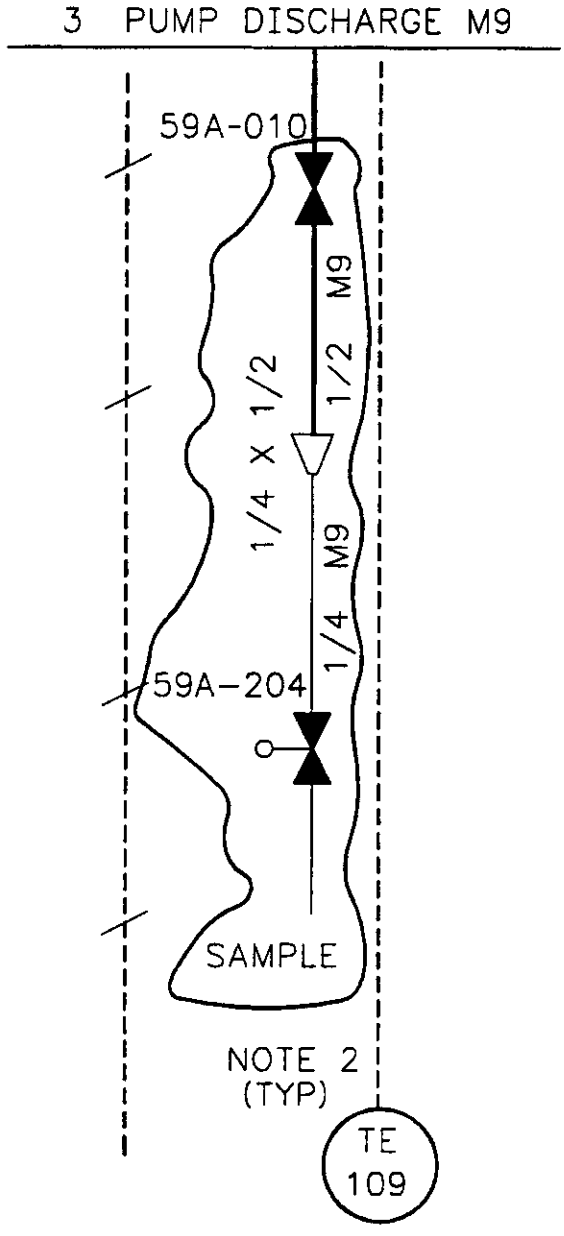

H 2 817974, Sheet 1, Rev 2, Zone C 7 to D 7

IS

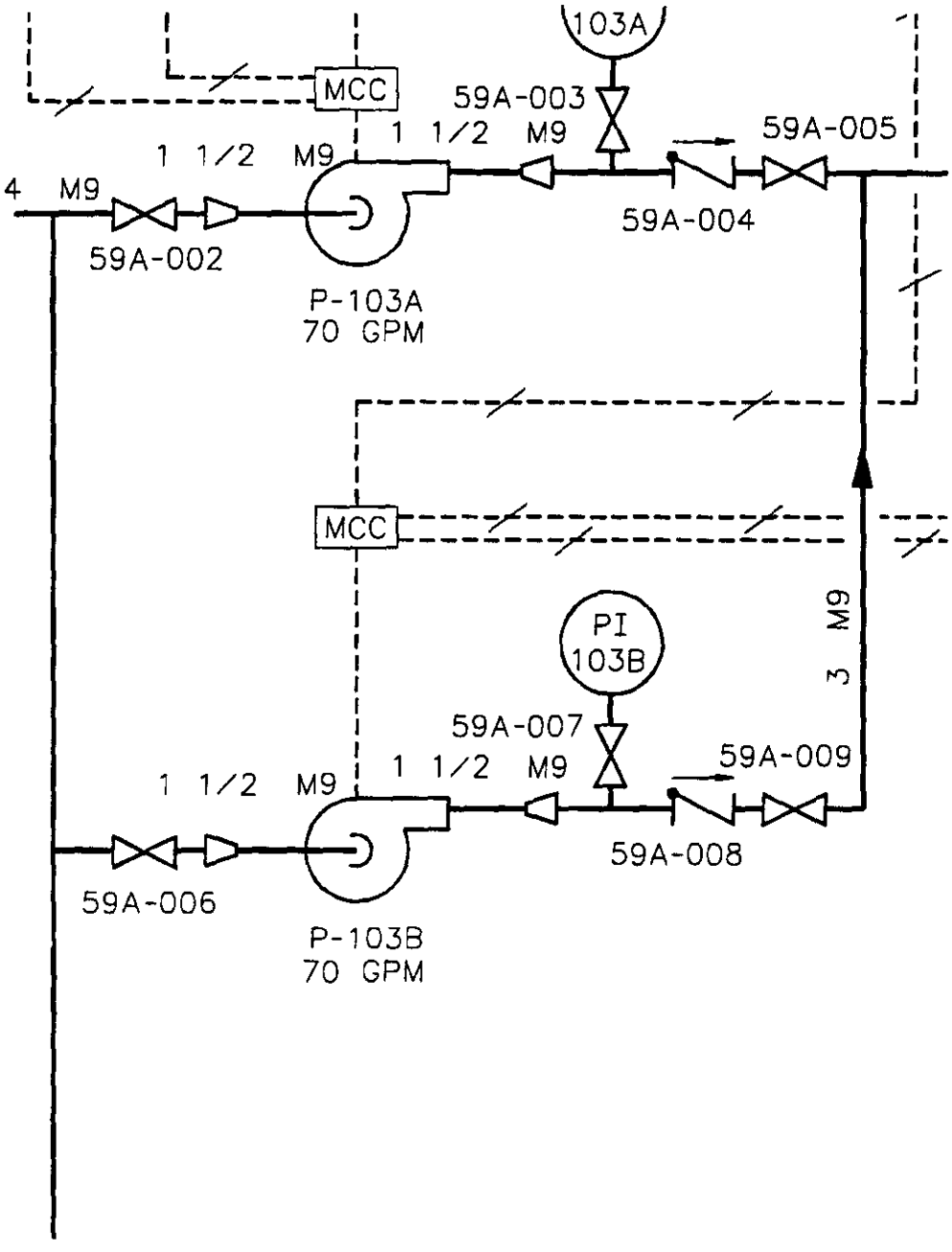

H 2 817974, Sheet 1, Rev. 2, Zone C 7 to D 7

CHANGE TO

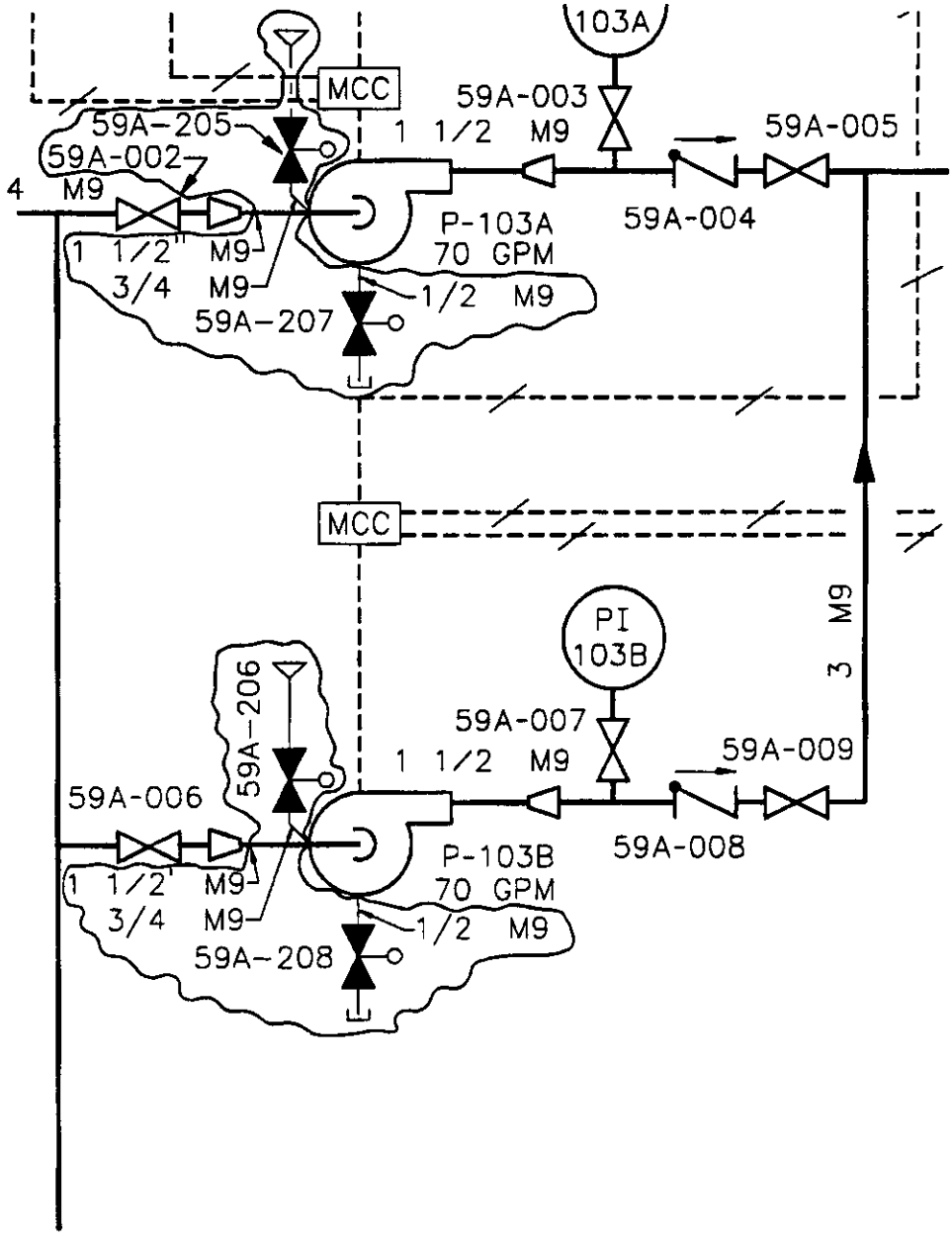

H 9 203, Sheet 1, Rev 0, Zone E 6

IS

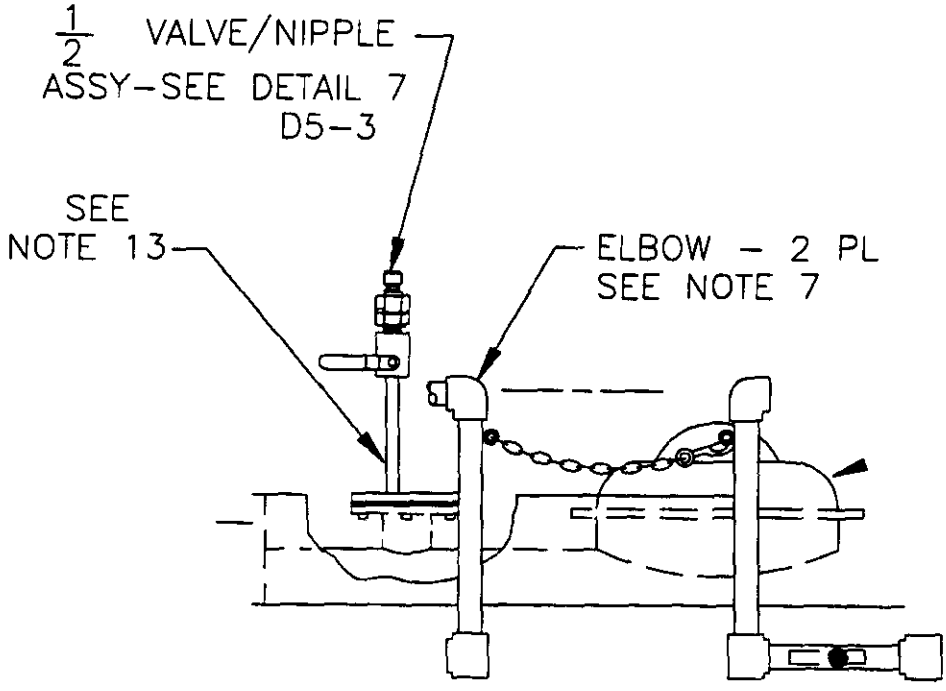

H 9 203, Sheet 1, Rev. 0, Zone E 6

CHANGE TO

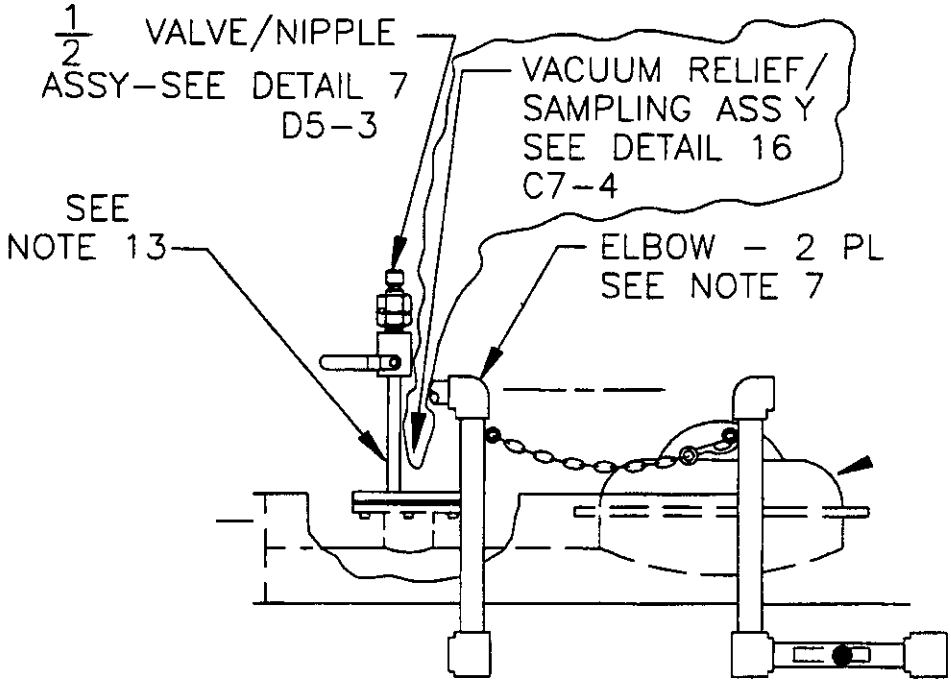

H 9 203, Sheet 4, Rev. 0, Zone D 7

IS

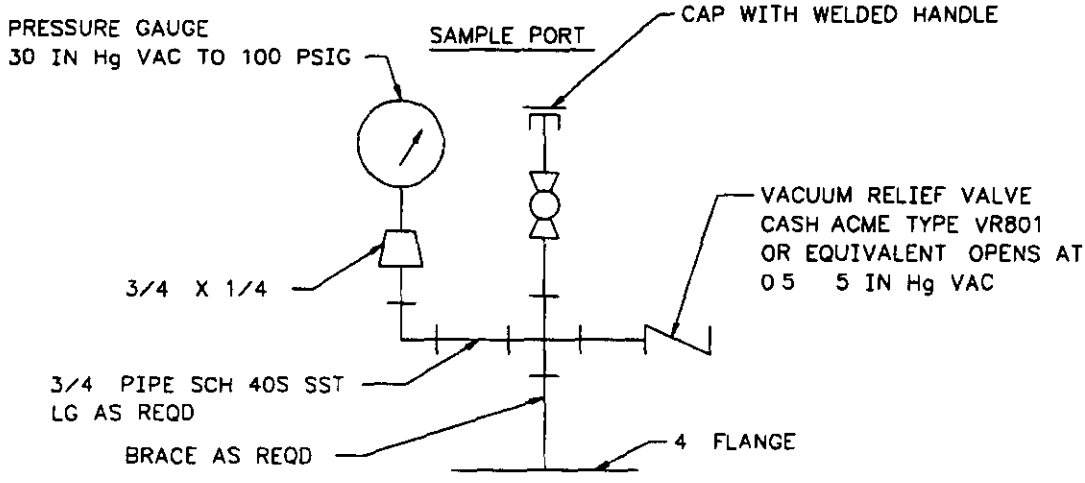

DETAIL 16 C6-2

SCALE NONE

H 9 203, Sheet 4, Rev. 0, Zone D 7

CHANGE TO

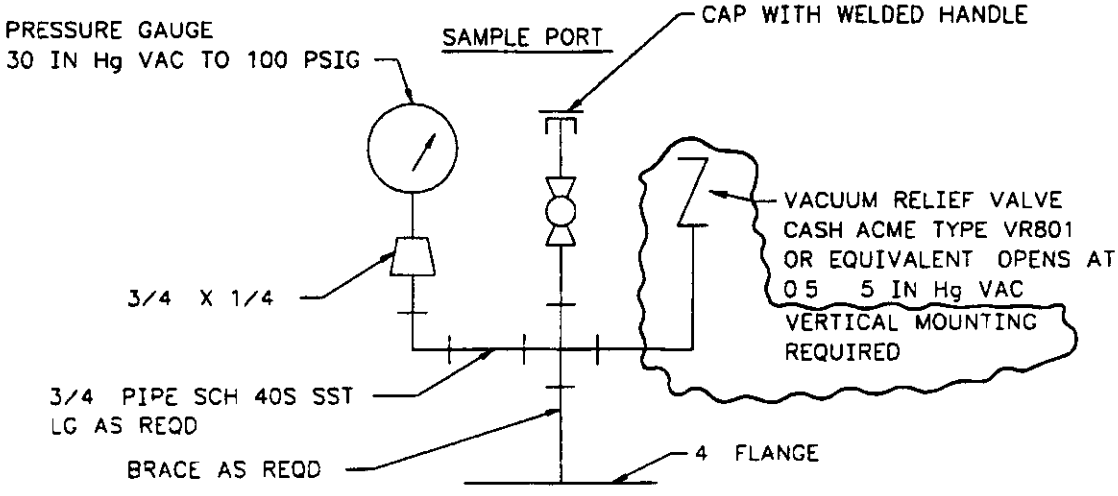

DETAIL 16 C6-2 E6 1

SCALE NONE

H 2 817968, Sheet 1, Rev 1, Title

IS ETF TRUCK LOAD IN FACILITY LOCATION PLAN & DWG LIST

CHANGE TO ETF TRUCK LOAD IN STATION LOCATION PLAN & DWG LIST

Drawing Status ESSENTIAL

H 2 817969, Sheet 1, Rev. 1, Title

IS CIVIL ETF TRUCK LOAD IN FACILITY SITE PLAN

CHANGE TO CIVIL ETF TRUCK LOAD IN STATION SITE PLAN

Drawing Status SUPPORT

H 2 817969, Sheet 2, Rev 1, Title

IS CIVIL ETF TRUCK LOAD IN FACILITY PLAN AND PROFILES

CHANGE TO CIVIL ETF TRUCK LOAD IN STATION PLAN AND PROFILES

Drawing Status SUPPORT

H 2 817969, Sheet 3, Rev 1, Title

IS CIVIL ETF TRUCK LOAD IN FACILITY ENLARGED PLAN

CHANGE TO CIVIL ETF TRUCK LOAD IN STATION ENLARGED PLAN

Drawing Status SUPPORT

H 2 817969, Sheet 4, Rev. 1, Title

IS CIVIL ETF TRUCK LOAD IN FACILITY MISCELLANEOUS DETAILS

CHANGE TO CIVIL ETF TRUCK LOAD IN STATION MISCELLANEOUS DETAILS

Drawing Status SUPPORT

H 2 817969, Sheet 5, Rev. 1, Title

IS CIVIL ETF TRUCK LOAD IN FACILITY MISCELLANEOUS DETAILS

CHANGE TO CIVIL ETF TRUCK LOAD IN STATION MISCELLANEOUS DETAILS

Drawing Status SUPPORT

H 2 817970, Sheet 1, Rev 1, Title

IS STRUCTURAL ETF TRUCK LOAD IN FACILITY PLAN AND SECTIONS

CHANGE TO STRUCTURAL ETF TRUCK LOAD IN STATION PLAN AND SECTIONS

Drawing Status SUPPORT

H 2 817970, Sheet 2, Rev 1, Title

IS STRUCTURAL ETF TRUCK LOAD IN FACILITY SECTIONS AND DETAILS

CHANGE TO STRUCTURAL ETF TRUCK LOAD IN STATION SECTIONS AND DETAILS

Drawing Status SUPPORT

H 2 817971, Sheet 1, Rev 1, Title

IS STRUCTURAL ETF TRUCK LOAD IN FACILITY STEEL PLAN & SECTIONS

CHANGE TO STRUCTURAL ETF TRUCK LOAD IN STATION STEEL PLAN & SECTIONS

Drawing Status SUPPORT

H 2 817971, Sheet 2, Rev. 1, Title

IS STRUCTURAL ETF TRUCK LOAD IN FACILITY STEEL DETAILS

CHANGE TO STRUCTURAL ETF TRUCK LOAD IN STATION STEEL DETAILS

Drawing Status SUPPORT

H 2 817972, Sheet 1, Rev. 1, Title

IS STRUCTURAL ETF TRUCK LOAD IN FACILITY SECTIONS AND DETAILS

CHANGE TO STRUCTURAL ETF TRUCK LOAD IN STATION SECTIONS AND DETAILS

Drawing Status SUPPORT

H 2 817973, Sheet 1, Rev. 1, Title

IS STRUCTURAL ETF TRUCK LOAD IN FACILITY MISC SECTIONS AND DETAILS

CHANGE TO STRUCTURAL ETF TRUCK LOAD IN STATION MISC SECTIONS AND DETAILS

Drawing Status SUPPORT

H 2 817974, Sheet 1, Rev. 2, Title

IS P & ID ETF TRUCK LOAD IN FACILITY

CHANGE TO P & ID ETF TRUCK LOAD IN STATION

Drawing Status ESSENTIAL

H 2 817975, Sheet 1, Rev. 1, Title

IS PIPING ETF TRUCK LOAD IN FACILITY PLAN

CHANGE TO PIPING ETF TRUCK LOAD IN STATION PLAN

Drawing Status ESSENTIAL

H 2 817976, Sheet 1, Rev. 1, Title

IS PIPING ETF TRUCK LOAD IN FACILITY SECTIONS AND DETAILS

CHANGE TO PIPING ETF TRUCK LOAD IN STATION SECTIONS AND DETAILS

Drawing Status SUPPORT

H 2 817977, Sheet 1, Rev. 1, Title

IS PIPING ETF TRUCK LOAD IN FACILITY DETAILS

CHANGE TO PIPING ETF TRUCK LOAD IN STATION DETAILS

Drawing Status SUPPORT

H 2 817978, Sheet 1, Rev 1, Title

IS PIPING ETF TRUCK LOAD IN FACILITY PIPE SUPPORTS

CHANGE TO PIPING ETF TRUCK LOAD IN STATION PIPE SUPPORTS

Drawing Status SUPPORT

H 2 817980, Sheet 1, Rev. 1, Title

IS INSTRUMENTATION ETF TRUCK LOAD IN FACILITY LEGEND & SYMBOLS

CHANGE TO INSTRUMENTATION ETF TRUCK LOAD IN STATION LEGEND & SYMBOLS

Drawing Status SUPPORT

H 2 817981, Sheet 1, Rev. 1, Title

IS INSTRUMENTATION ETF TRUCK LOAD IN FACILITY LOOP DIAGRAM

CHANGE TO INSTRUMENTATION ETF TRUCK LOAD IN STATION LOOP DIAGRAM

Drawing Status SUPPORT

H 2 817981, Sheet 2, Rev. 1, Title

IS INSTRUMENTATION ETF TRUCK LOAD IN FACILITY LOOP DIAGRAM

CHANGE TO INSTRUMENTATION ETF TRUCK LOAD IN STATION LOOP DIAGRAM

Drawing Status SUPPORT

H 2 817981, Sheet 3, Rev 1, Title

IS INSTRUMENTATION ETF TRUCK LOAD IN FACILITY LOOP DIAGRAM

CHANGE TO INSTRUMENTATION ETF TRUCK LOAD IN STATION LOOP DIAGRAM

Drawing Status SUPPORT

H 2 817981, Sheet 4, Rev. 1, Title

IS INSTRUMENTATION ETF TRUCK LOAD IN FACILITY LOOP DIAGRAM

CHANGE TO INSTRUMENTATION ETF TRUCK LOAD IN STATION LOOP DIAGRAM

Drawing Status SUPPORT

H 2 817981, Sheet 5, Rev. 1, Title

IS INSTRUMENTATION ETF TRUCK LOAD IN FACILITY LOOP DIAGRAM

CHANGE TO INSTRUMENTATION ETF TRUCK LOAD IN STATION LOOP DIAGRAM

Drawing Status SUPPORT

H 2 817983, Sheet 1, Rev 0, Title

CHANGE TO Drawing Status SUPPORT

H 2 817983, Sheet 2, Rev 1, Title

CHANGE TO Drawing Status SUPPORT

H 2 817983, Sheet 3, Rev. 0, Title

CHANGE TO Drawing Status SUPPORT

H 2 817983, Sheet 4, Rev 1, Title

CHANGE TO Drawing Status SUPPORT

H 2 817983, Sheet 5, Rev 0, Title

CHANGE TO Drawing Status SUPPORT

H 2 817983, Sheet 6, Rev. 1, Title

CHANGE TO Drawing Status SUPPORT

H 2 817983, Sheet 7, Rev 0, Title

CHANGE TO Drawing Status SUPPORT

H 2 817983, Sheet 8, Rev. 0, Title

CHANGE TO Drawing Status SUPPORT

H 2 817985, Sheet 1, Rev. 1, Title

IS INSTRUMENTATION ETF TRUCK LOAD IN FACILITY SECTIONS AND DETAILS

CHANGE TO INSTRUMENTATION ETF TRUCK LOAD IN STATION SECTIONS AND DETAILS

Drawing Status SUPPORT

H 2 817985, Sheet 2, Rev. 1, Title

IS INSTRUMENTATION ETF TRUCK LOAD IN FACILITY SECTIONS AND DETAILS

CHANGE TO INSTRUMENTATION ETF TRUCK LOAD IN STATION SECTIONS AND DETAILS

Drawing Status SUPPORT

H 2 817987, Sheet 1, Rev 1, Title

IS ELECTRICAL ETF TRUCK LOAD IN FACILITY SITE PLAN

CHANGE TO ELECTRICAL ETF TRUCK LOAD IN STATION SITE PLAN

Drawing Status SUPPORT

H 2 817987, Sheet 3, Rev. 1, Title

IS ELECTRICAL ETF TRUCK LOAD IN FACILITY SECTIONS & DETAILS

CHANGE TO ELECTRICAL ETF TRUCK LOAD IN STATION SECTIONS & DETAILS

Drawing Status SUPPORT

H 2 817987, Sheet 4, Rev. 1, Title

IS ELECTRICAL ETF TRUCK LOAD IN FACILITY SECTIONS & DETAILS

CHANGE TO ELECTRICAL ETF TRUCK LOAD IN STATION SECTIONS & DETAILS

Drawing Status SUPPORT

H 2 817988, Sheet 1, Rev 1, Title

IS ELECTRICAL ETF TRUCK LOAD IN FACILITY PLAN ONE LINE & DETAILS

CHANGE TO ELECTRICAL ETF TRUCK LOAD IN STATION PLAN ONE LINE & DETAILS

Drawing Status ESSENTIAL

H 2 817988, Sheet 2, Rev. 1, Title

IS ELECTRICAL ETF TRUCK LOAD IN FACILITY PLAN GND & HEAT TRACING

CHANGE TO ELECTRICAL ETF TRUCK LOAD IN STATION PLAN GND & HEAT TRACING

Drawing Status ESSENTIAL

H 2 817988, Sheet 3, Rev. 1, Title

IS ELECTRICAL ETF TRUCK LOAD IN FACILITY PANEL SCHEDULE & DETAILS

CHANGE TO ELECTRICAL ETF TRUCK LOAD IN STATION PANEL SCHEDULE & DETAILS

Drawing Status ESSENTIAL

H 2 817989, Sheet 1, Rev 1, Title

IS ELECTRICAL ETF TRUCK LOAD IN FACILITY ELEMENTARY DIAGRAM

CHANGE TO ELECTRICAL ETF TRUCK LOAD IN STATION ELEMENTARY DIAGRAM

Drawing Status ESSENTIAL

ECN 641703
Date 5/13/97

H 2 817990, Sheet 1, Rev. 1, Title

IS ELECTRICAL ETF TRUCK LOAD IN FACILITY WIRE & CONDUIT SCHEDULE

CHANGE TO ELECTRICAL ETF TRUCK LOAD IN STATION WIRE & CONDUIT SCHEDULE

Drawing Status ESSENTIAL

H 2 817991, Sheet 2, Rev. 1, Title

IS ELECTRICAL ETF TRUCK LOAD IN FACILITY TELECOMMUNICATIONS

CHANGE TO ELECTRICAL ETF TRUCK LOAD IN STATION TELECOMMUNICATIONS

Drawing Status SUPPORT

ESSENTIAL

S

ENGINEERING CHANGE NOTICE

1 ECN 647247

Proj ECN

2 ECN Category (mark one)	3 Originator's Name Organization MSIN and Telephone No	4 USQ Required?	5 Date
Supplemental [X] Direct Revision [] Change ECN [] Temporary [] Standby [] Supersedure [] Cancel/Void []	RN Wagner/32230/S6 72/376-4460	[] Yes [X] No	August 27 1998
	6 Project Title/No /Work Order No Install Tent Over ETF Load In Station/A4055	7 Bldg./Sys./Fac No 2025EC/59A/ 200 Area ETF	8 Approval Designator NA
	9 Document Numbers Changed by this ECN (includes sheet no and rev) See Block 13	10 Related ECN No(s) NA	11 Related PO No NA

12a. Modification Work	12b Work Package No	12c Modification Work Complete	12d Restored to Original Condition (Temp or Standby ECN only)
[X] Yes (fill out Blk 12b) [] No (NA Blks 12b 12c 12d)	EL-97-00853	Design Authority/Cog. Engineer Signature & Date	N/A Design Authority/Cog Engineer Signature & Date

13a. Description of Change — 13b Design Baseline Document? [X] Yes [] No

This ECN installs a tent over the ETF Load In Station to provide shelter during inclement weather Mechanical modifications to the Load In Station necessary to accommodate the tent placement are covered in this ECN

Drawings affected are

- H 2 817970 Sheet 1 Rev 1
- H 2 817972 Sheet 1 Rev 1
- H 2 817975 Sheet 1 Rev 5
- H 2 817976 Sheet 1 Rev 1

Concrete anchor bolts for relocation of the Load In transfer line support frame shall be Hilti P/N 0045407 Description Code KB II SS 58 812 Ext Trd or Engineering approved equivalent Piping fittings and jointing methods shall meet the requirements of Piping Specification Class M 9 Install inspect, and test the new piping installation in accordance with ASME B31 3 and Addenda for Category D fluid service

(Block 13a continued on Page 3)

14a Justification (mark one)

Criteria Change	[]	Design Improvement	[X]	Environmental	[]	Facility Deactivation	[]
As Found	[]	Facilitate Const	[]	Const Error/Omission	[]	Design Error/Omission	[]

14b Justification Details

The tent will provide shelter to ensure operator safety and allow continuity of operations during inclement weather

15 Distribution (include name MSIN and no of copies)

N J S Ilvan	S6 72	1	J E Geary	S6-71	1
A K Yoakum	S6 71	1	E A McNamar	S6-72	1
R N Wagner*	S6 72	2	M W Bowman	S6-72	1
WCC Planning	S6-71	1	T W Dallas	S6-74	1
L L Lin	S6 72	1	D L T bbs	S6-74	1
D L Flyckt	S6 71	1	C M Town	S6-74	1
(1 Advance Copy)					

IPF 7 - S6 72 1

IPF 4 - H6 26 1

RELEASE STAMP

DATE SEP 08 1998 HANFORD RELEASE

STA 4 ID 2

A 7900-013 2 (05/96) GEF095

ENGINEERING CHANGE NOTICE	Page 2 of 10	1 ECN (use no from pg 1) 647247

16 Design Verification Required	17 Cost Impact ——> NA <—— ENGINEERING		CONSTRUCTION		18 Schedule Impact (days) ——> NA <——	
[X] Yes	Additional	[] $	Additional	[] $	Improvement	[]
[] No	Savings	[] $	Savings	[] $	Delay	[]

19 Change Impact Review Indicate the related documents (other than the engineering documents identified on Side 1) that will be affected by the change described in Block 13. Enter the affected document number in Block 20.

SDD/DD	[NA]	Seismic/Stress Analysis	[NA]	Tank Calibration Manual	[NA]
Functional Design Criteria	[NA]	Stress/Design Report	[NA]	Health Physics Procedure	[NA]
Operating Specification	[NA]	Interface Control Drawing	[NA]	Spares Multiple Unit Listing	[NA]
Criticality Specification	[NA]	Calibration Procedure	[NA]	Test Procedures/Specification	[NA]
Conceptual Design Report	[NA]	Installation Procedure	[NA]	Component Index	[NA]
Equipment Spec	[NA]	Maintenance Procedure	[NA]	ASME Coded Item	[NA]
Const Spec.	[NA]	Engineering Procedure	[NA]	Human Factor Consideration	[NA]
Procurement Spec	[NA]	Operating Instruction	[NA]	Computer Software	[NA]
Vendor Information	[NA]	Operating Procedure	[NA]	Electric Circuit Schedule	[NA]
OM Manual	[NA]	Operational Safety Requirement	[NA]	ICRS Procedure	[NA]
FSAR/SAR	[NA]	IEFD Drawing	[NA]	Process Control Manual/Plan	[NA]
Safety Equipment List	[NA]	Cell Arrangement Drawing	[NA]	Process Flow Chart	[NA]
Radiation Work Permit	[NA]	Essential Material Specification	[NA]	Purchase Requisition	[NA]
Environmental Impact Statement	[NA]	Fac Proc Samp Schedule	[NA]	Tickler File	[NA]
Environmental Report	[NA]	Inspection Plan	[NA]		[]
Environmental Permit	[NA]	Inventory Adjustment Request	[NA]		[]

20 Other Affected Documents (NOTE Documents listed below will not be revised by this ECN) Signatures below indicate that the signing organization has been notified of other affected documents listed below

Document Number/Revision	Document Number/Revision	Document Number Revision
No other documents are affected by this ECN		

21 Approval

	Signature	Date		Signature	Date
Design Authority R N Wagner		9/27/98	Design Agent – R N Wagner		9/27/98
Cog Eng R N Wagner		9/27/98	PE		
Cog Mgr – N J Sullivan (Informal Design Review)		9-8-98	QA		
QA			Safety		
Safety			Design		
Environ			Environ		
Other			Other		
Operations – J E Geary		9-8-98			

DEPARTMENT OF ENERGY

Signature or a Control Number that tracks the Approval Signature

ADDITIONAL

A 7900 013 3 (05/96) GEF096

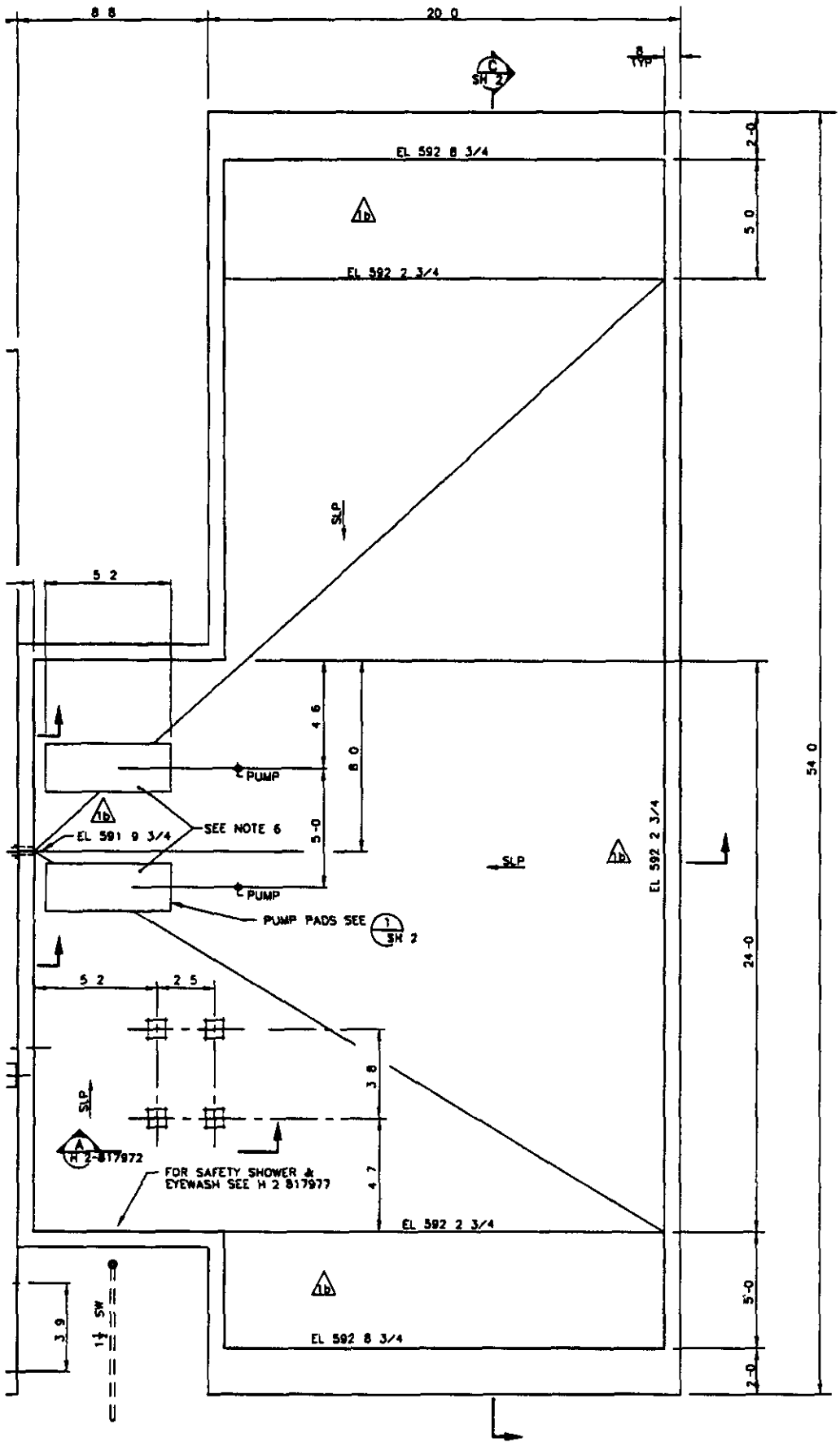
8 8
20 0
C
SH 2
EL 592 8 3/4
EL 592 2 3/4
SLP
5 2
4 6
8 0
PUMP
SEE NOTE 6
EL 591 9 3/4
5'-0
PUMP
PUMP PADS SEE 1 SH 2
EL 592 2 3/4
54 0
24-0
5 2
2 5
3 8
4 7
A
H 2-817972
FOR SAFETY SHOWER & EYEWASH SEE H 2 817977
EL 592 2 3/4
EL 592 8 3/4
3 9
1½ SW
2-0
5 0
5'-0
2-0

Block 13a Cont d
H 2-817970 Sh 1 Rev 1
Zones A3–F6
CHANGE TO

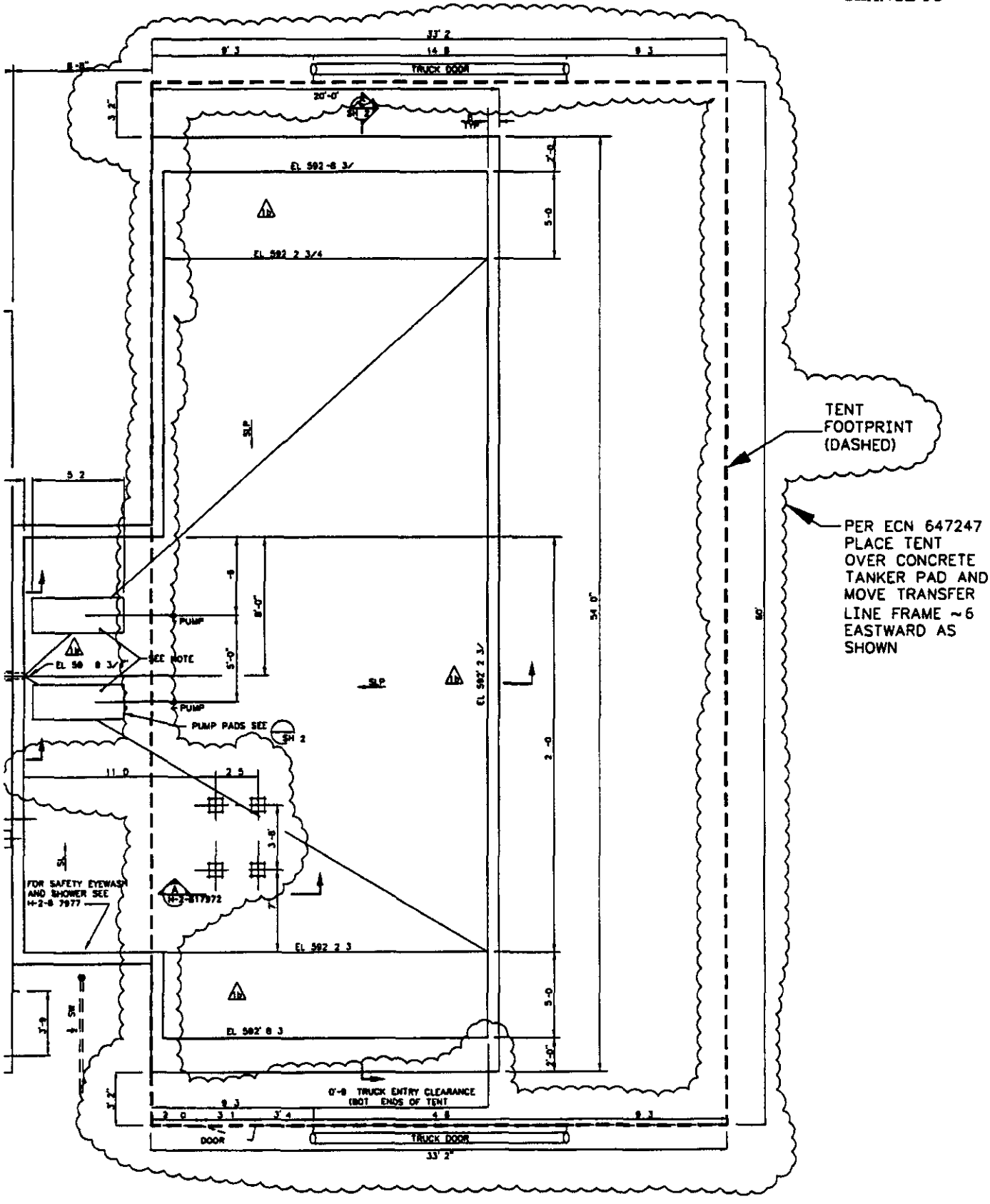

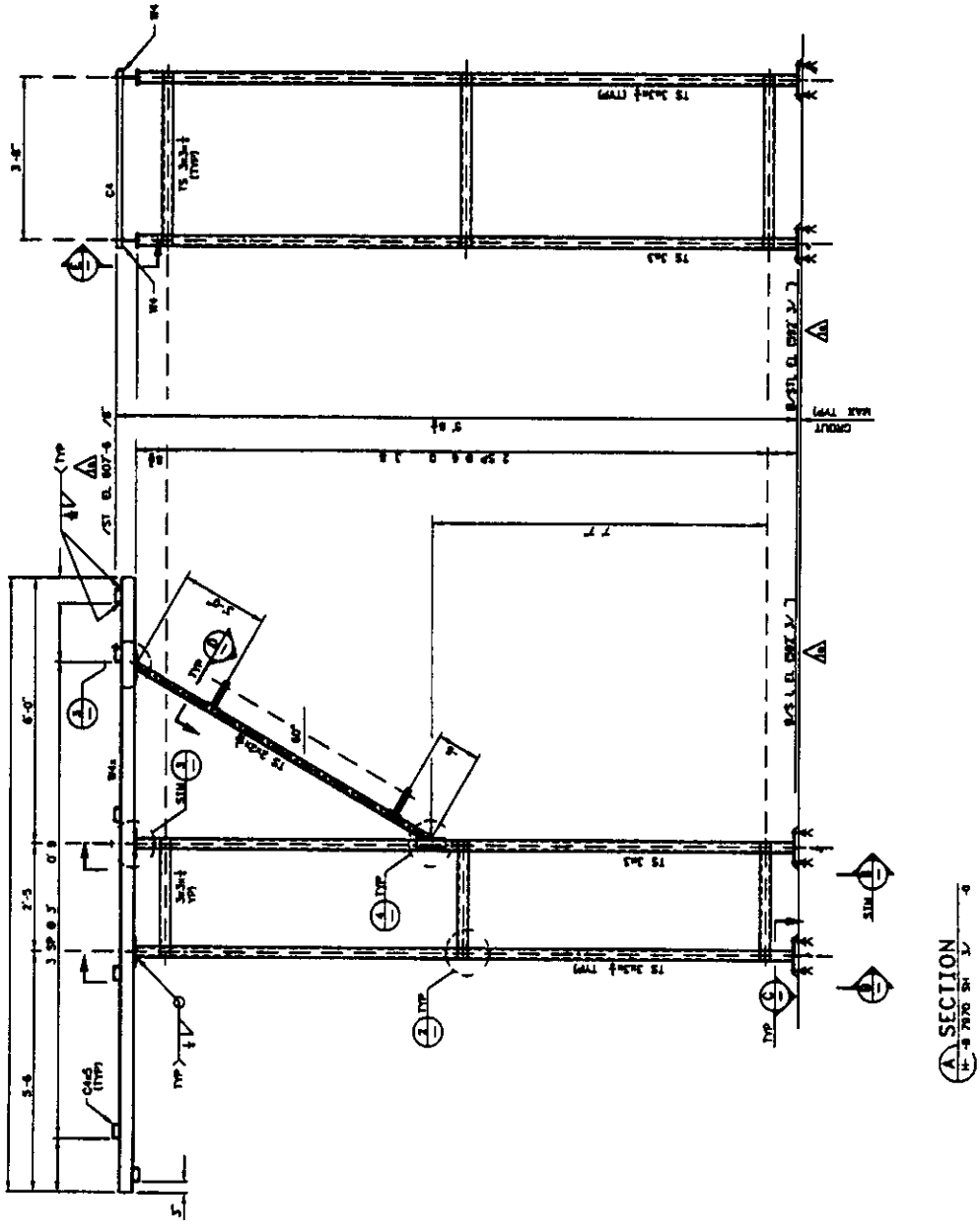
SECTION

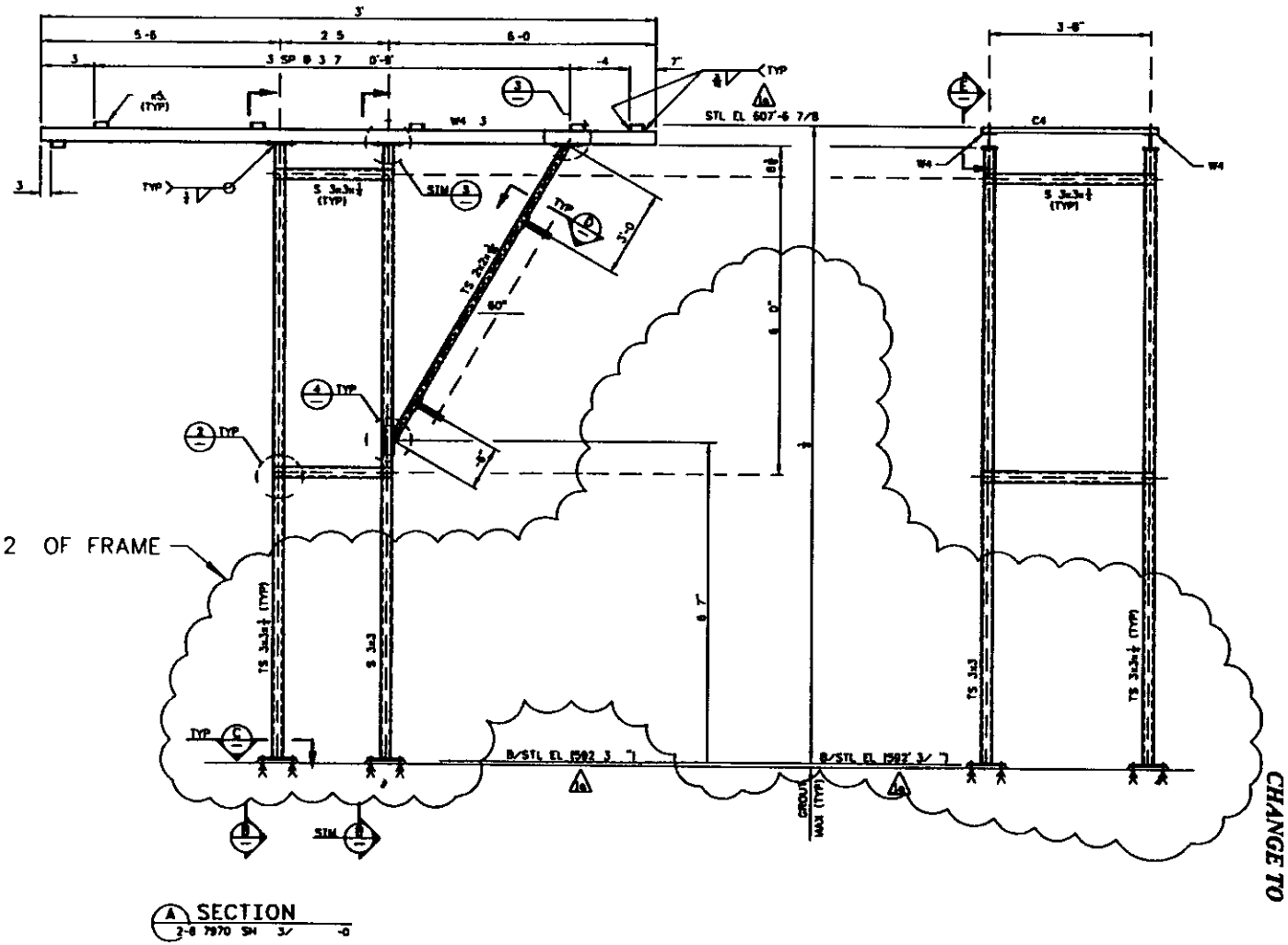

ECN 647247 – 8/27/98
Page 6 of 10
Block 13a Cont'd
H 2-817972 Sh 1 Rev 1
Zones C4–F8
CHANGE TO

Block 13a Cont d
H 2 817975 Sh 1 Rev 5
Zones A3–F5
IS NOW

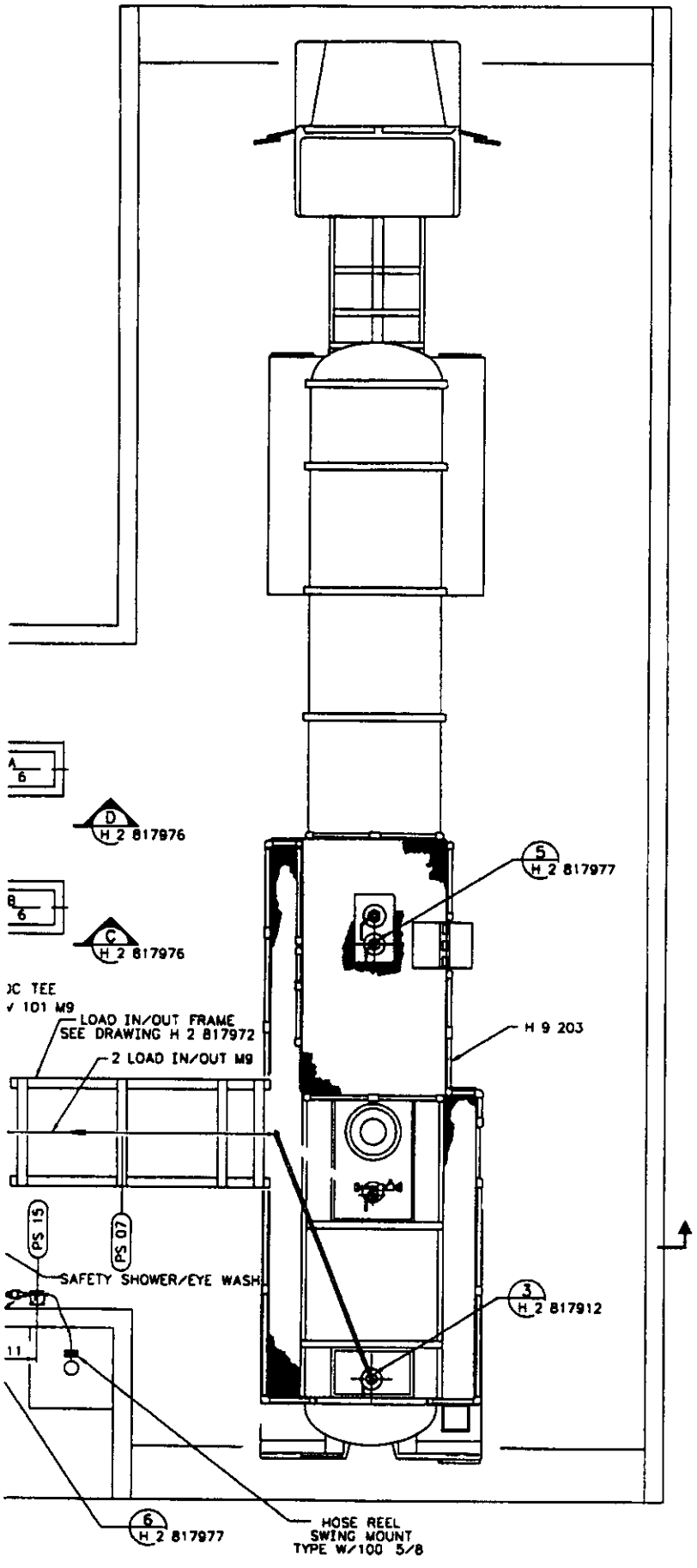

Block 13a Cont d
H 2-817975 Sh 1 Rev 5
Zones A3–F5
CHANGE TO

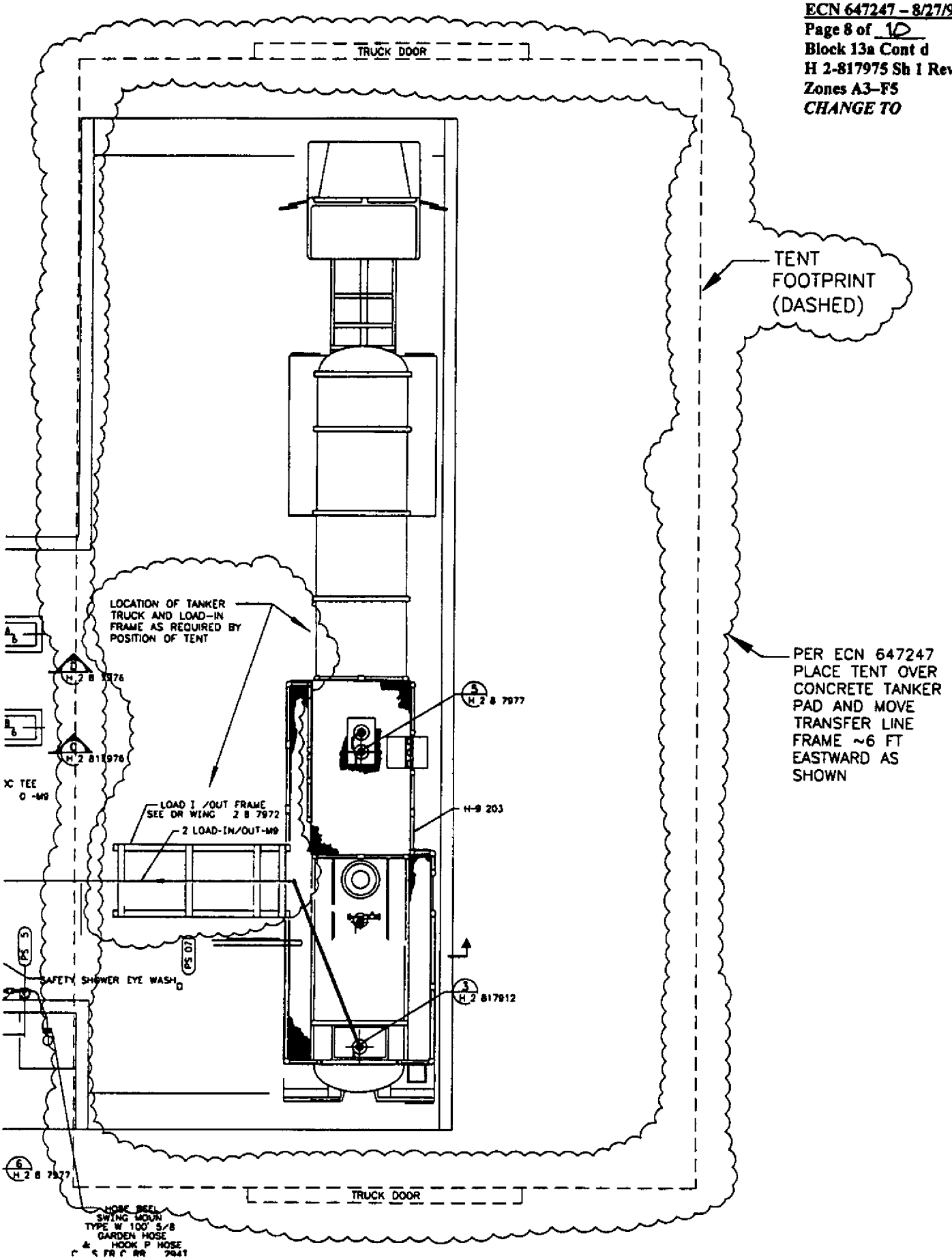

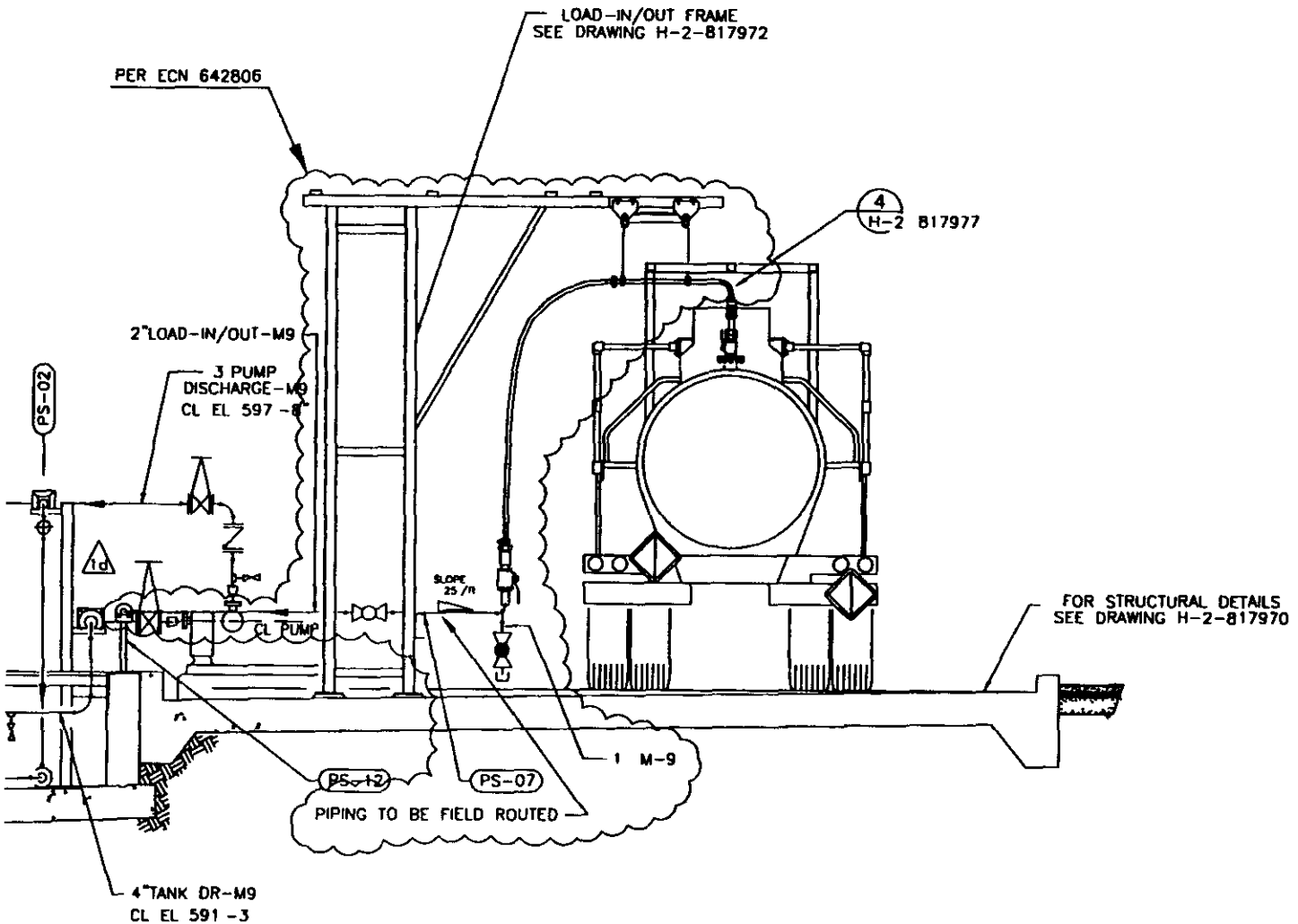

B SECTION
H-2-817975 SCALE 3/8 =1 -0

ECN 647247 - 8/27/98
Page 9 of 12
Block 13a Cont d
H 2-817976 Sh 1 Rev 1
Zones A4-D6
IS NOW

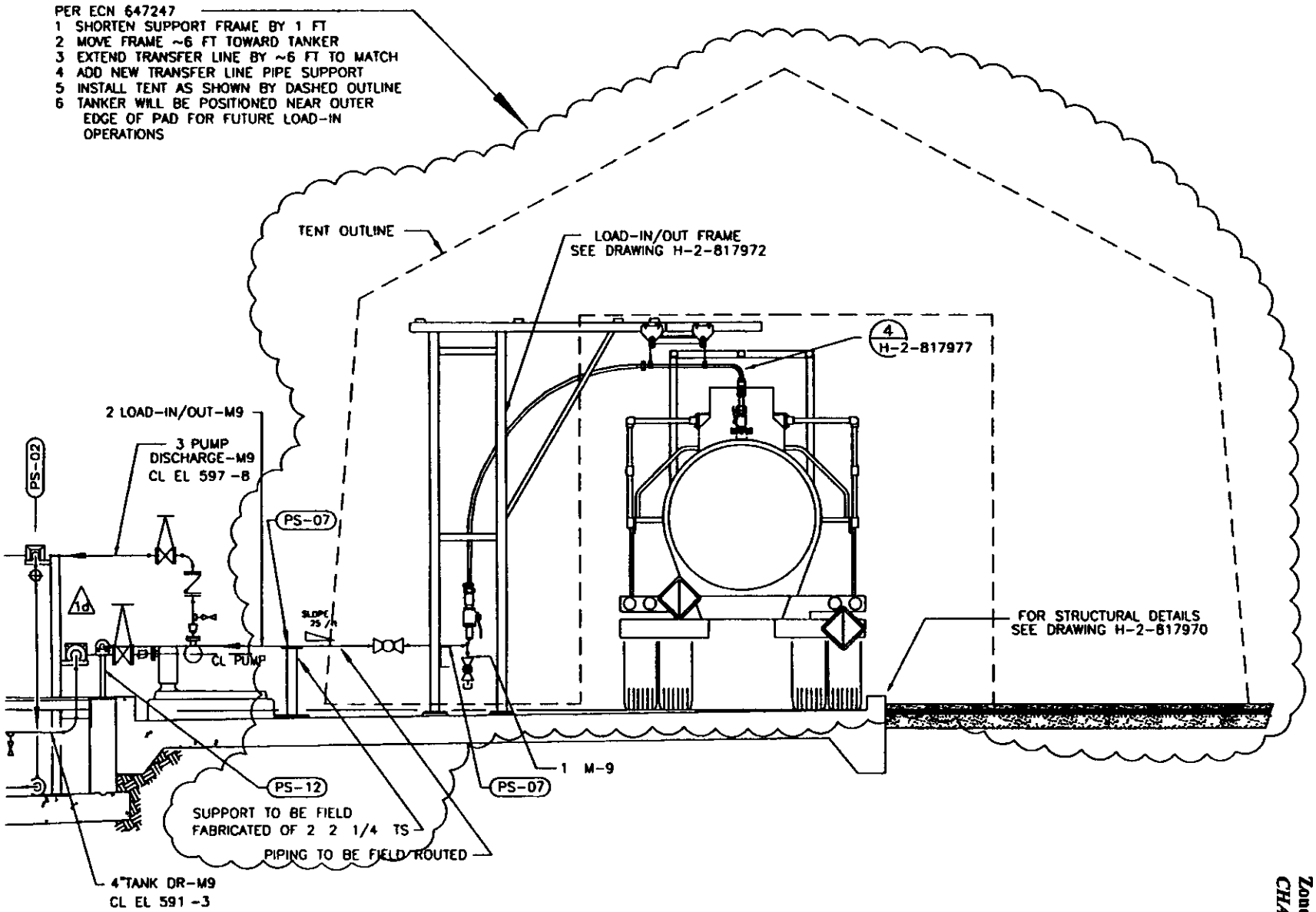

B SECTION
H-2-817975 SCALE 3/8 =1 0

ECN 647247 – 8/27/98
Page 10 of 10
Block 13a Cont d
H 2 817976 Sh 1 Rev 1
Zones A4–D6
CHANGE TO

Part III Chapter 4 and Attachment 34

Liquid Effluent Retention Facility and 200 Area Effluent Treatment Facility

Appendix 4B Table 4B 2

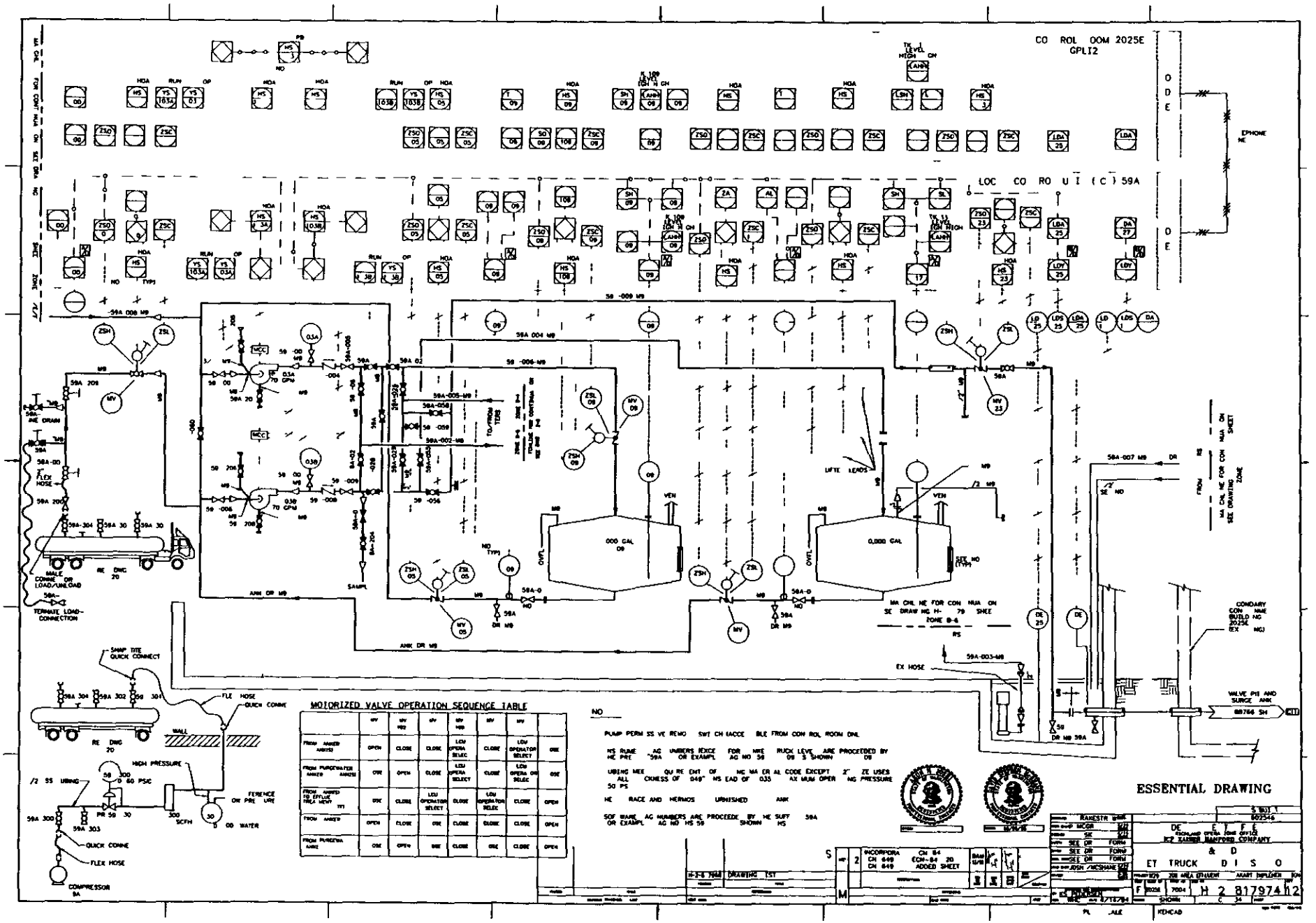

MOTORIZED VALVE OPERATION SEQUENCE TABLE

	MV	MV MV2	MV	MV MV6	MV	MV	
FROM ANKER ANKER	OPEN	CLOSE	CLOSE	LOW OPERA SELEC	CLOSE	LOW OPERATOR SELECT	OSE
FROM PUROEWATER ANKER ANKER	OSE	OPEN	CLOSE	LOW OPERA SELECT	CLOSE	LOW OPERA OR SELEC	OSE
FROM ANKER TO EFFLUE TREA MENT TT	OSE	CLOSE	LOW OPERATOR SELECT	CLOSE	LOW OPERATOR SELEC	CLOSE	OPEN
FROM ANKER	OPEN	CLOSE	OSE	CLOSE	CLOSE	CLOSE	OPEN
FROM PUROEWA ANKE	OSE	OPEN	OSE	CLOSE	OSE	CLOSE	OPEN

NO

PUMP PERM SS VE REMO SWT CH IACCE BLE FROM CON ROL ROOM ONL

HS RUME AG UMBERS IDICE FOR MRE RUCK LEVE ARE PROCEEDED BY HE PRE "59A OR EXAMPL AG NO 59 09 S SHOWN 09

UBING MEE QU RE ENT OF HE MA ER AL CODE EXCEPT 2" ZE USES ALL CKNESS OF 040" HS EAD OF 035 AX MUM OPER NG PRESSURE 50 PS

HE RACE AND HERMOS URNISHED ANK

SOF WARE AG NUMBERS ARE PROCEEDE BY HE SUFF 59A OR EXAMPL AG NO HS 59 SHOWN HS

2	INCORPORA CN 649 CN 649	CN 84 ECN-84 20 ADDED SHEET		

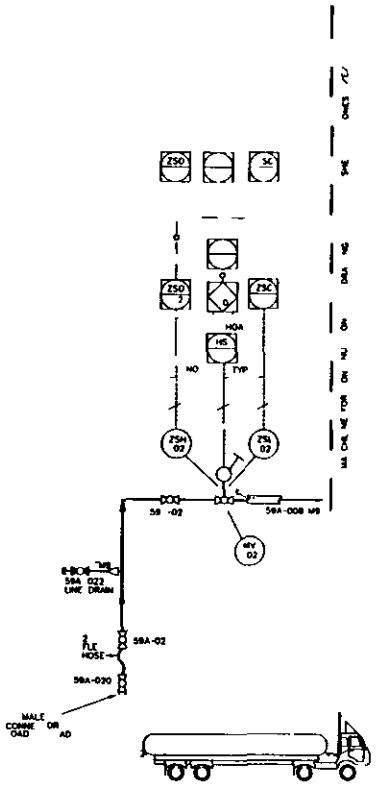

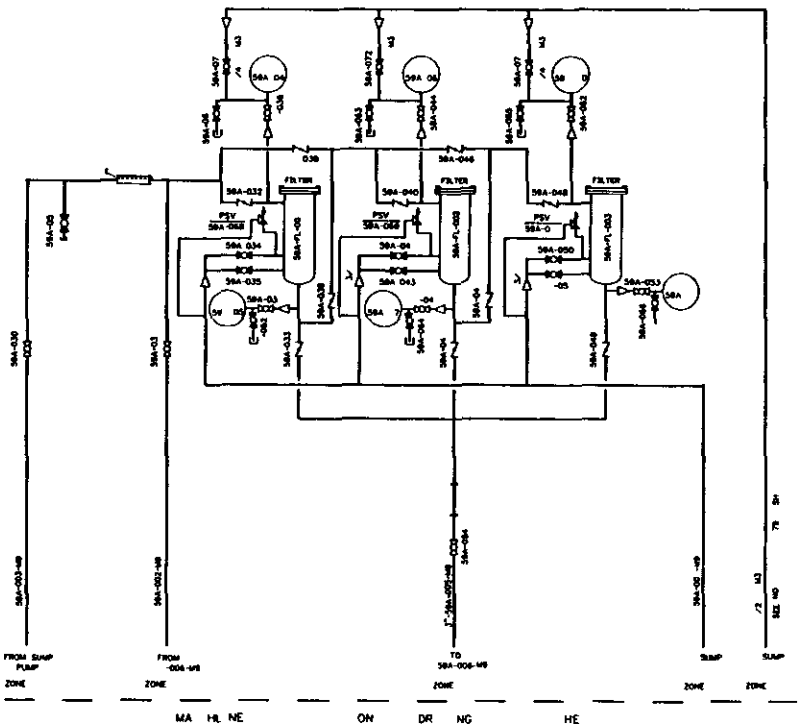

FOR REFERE CE DRAW GS D
GE ERAL O ES SEE S EE 1

ESSENTIAL DRAWING

CH 649 CH 649 CH 649 29. ECN

U T E T E RG
S Rockwell Operations Office

P & ID
ETF
TRUCK LOAD IN STATION

F H 2-817974 0

DRAWING TRACEABILITY LIST

REVISIONS

S

ENGINEERING CHANGE NOTICE

ESSENTIAL

CPP 18, 13A, 13B

Page 1 of 19

1 ECN 658555

Proj. ECN

2 ECN Category (mark one)	3 Originator Name Organization, MSIN and Telephone No	4 USQ Required?	5 Date
Supplemental [x] Direct Revision [] Change ECN [] Temporary [] Standby [] Supersedure [] Cancel/Void []	AF Crane 32910 S6 72 372 3152	[] Yes [x] No	04/25/01
	6 Project Title/No /Work Order No Annulus Air Purge/CACN 101697 COA AJ60	7 Bldg./Sys./Tag No 2025E/1D/ETF	8 Approval Designator E T R
	9 Document Numbers Changed by this ECN (includes sheet no and rev) See Block 13a	10 Related ECN No(s) 658563	11 Related PO No N/A

12 Modification Work	12b Work Package No	12 Mod Located Work Complete	12d Restored to Original Condition (Temp Standby ECN only)
[x] Yes (fill out Blk 12b) [] No (N/A Blks 12b, 12c, 12d)	EL 00 00651/M	Design Authority/Cognizant Engineer Signature & Date	N/A Design Authority/Cognizant Engineer Signature & Date

13a Description of Change

13b Design Baseline Document? [x] Yes [] No

Block 9 Document Numbers Changed by this ECN (cont)

4/18/01

H 2 88766 Sh 1 Rev 4 H 2 88766 Sh 2 Rev 5 H 2 88766 Sh 3 Rev 6 H 2 88766 Sh 4 Rev 6 H 2 817974 Sh 1 Rev 12

This ECN provides installation of an air purge system for the 3 M 17 pipeline between the Load in Station containment sump and the Surge containment sump as well as line 3 -60M 001 M17 and 4 60M 002 M17 The change installs connections between the instrument air junction box (AJB 1) and the respective lines as well as providing a flow path for the air purge to escape to atmosphere in each of the respective lines for the purpose of eliminating condensation in the piping annulus

Piping fittings and jointing methods shall meet the requirements for Pipe Code 153 and 1531 identified in the Project C 018 Pipe Class Specification (S 136H 001) except gasketing shall be in accordance with Pipe Code M 17 requirements identified in the 200 Area ETF Collection System Construction Specification (C 018H C6) Install inspect and test the new installation in accordance with ASME B31 1 and Addenda

14 Justification (mark one)

Criteria Change	[x]	Design Improvement	[]	Environmental	[]	Facility Deactivation	[]
As Found	[]	Facilitate Construct	[]	Const. Error/Omission	[]	Design Error/Omission	[]

14b Justification Detail

Piping changes were needed to install an air purge system to eliminate spurious alarms caused by condensation in the piping annulus

15 Distribution (Include name MSIN and number of copies)

KH Bergman	S6 72 (1)	LI Huth	S6 72 (1)	RW Szelmeczka	S6 72 (1)
MW Bowman	S6 72 (1)	R Mabry	S6 71 (1)	MT Wam	S6 72 (1)
AI Crane	S6 72 (1)*	BA Messinger	B4 30 (1)*	RH Wight	S6 72 (1)
DL Flyckt	S6 71 (1)	CD Skogley	S6 72 (1)	WCC Planning	S6 71 (1)*
JM Isdell	B4 30 (1)*	NJ Sullivan	S6 72 (1)	(* = Advance Copy)	

RELEASE STAMP
DATE: MAY 08 2001
HANFORD RELEASE
STA. 30
ID: 25 4

A 7000-013 2 (05/96) CEF095

ENGINEERING CHANGE NOTICE	Page 2 of 19	1 ECN 658555

16 Design Verification Required	17 Cost Impact ----------> NA <----------				18 Schedule Impact (days) ----------> NA <----------	
	ENGINEERING		CONSTRUCTION			
[ ] Yes	Additional	[] $	Additional	[] $	Improvement	[]
[] N	Savings	[] $	Savings	[] $	Delay	[]

19 Change Impact Review Indicate the related documents (other than the engineering documents identified on Side 1) that will be affected by the change described in Block 13 Enter the affected document number in Block 20

SDD/DD	[NA]	Seismic/Stress Analysis	[NA]	Tank Calibration Manual	[NA]
Functional Design Criteria	[NA]	Stress/Topology Report	[NA]	Health Physics Procedure	[NA]
Operating Specification	[NA]	Interface Control Drawing	[NA]	Spares Multiple Unit Listing	[NA]
Criticality Specification	[NA]	Calibration Procedure	[NA]	Test Procedures/Specification	[NA]
Conceptual Design Report	[NA]	Installation Procedure	[NA]	Component Index	[x]
Equipment Spec	[NA]	Maintenance Procedure	[NA]	ASME Coded Item	[NA]
Spec	[NA]	Engineering Procedure	[NA]	Hanford Facility Agreement	[NA]
Procurement Spec	[NA]	Operating Instruction	[NA]	Computer Software	[NA]
Vendor Information	[x]	Operating Procedure	[x]	Electrical Circuit Schedule	[NA]
OM Manual	[NA]	Operational Safety Requirement	[NA]	K.R. Procedure	[NA]
FSAR/SAR	[NA]	IEFD Drawing	[NA]	Process Control Manual/Plan	[NA]
Safety Equipment List	[NA]	Facility Arrangement Drawing	[NA]	Process Flow Chart	[NA]
Radiation Work Permit	[NA]	Essential Material Specification	[NA]	Purchase Requisition	[NA]
Environmental Impact Statement	[NA]	Facility Startup Schedule	[NA]	Tickler File	[NA]
Environmental Report	[NA]	Inspection Plan	[NA]		[]
Environmental Permit	[NA]	Inventory Adjustment Request	[NA]		[]

20 Other Affected Documents (NOTE Documents listed below will not be revised by this ECN) Signature below indicates that the cognizant organization has been notified of other affected documents listed below

Document Number/Revision	Document Number/Revision	Document Number Revision
HOP 30 001	HNF SD ETF OCD-001 Rev 6	
POP 59A 001	POP 60M 003 Rev 6	

21 Approval

	Signature	Date		Signature	Date
Design Authority AFC	[signature]	4/25/01	Design Agent		
Cog Eng			PE		
Cog Mgr NJS Hannan	[signature]	4-26-01	QA		
QA			Safety		
Safety			Design		
Environmental RWS Imaizumi	[signature]	5/1/01	Environmental		
Other LL Hanford	[signature]	4-26-01	Other		
Independent Design Review					
Rad Con RM Mabry	[signature]	8/24/01			

DEPARTMENT OF ENERGY

Signature or Control Number that tracks the Approval Signature

ADDITIONAL

Block 13a (continued)

H 2-88766 SH 1 Zone E/F 1/2 Add text to Notes 3 4 & 9

H 2 88766 SH 2 Zone E 4 Add reference to Note 3 Remove blind flange from valve HV-42 15

H 2 88766 SH 3 Zone E 5 Add reference to Note 3 Remove blind flange from valve HV-43 2

H 2 88766 SH 3 Zone E-6 Add reference to Note 3 Remove blind flange from valve HV-43 13

H 2-88766 SH 3 Zone F 3 Add reference to Note 3 Remove cap & blind flange from valves HV-43 15 & 60M 12C

H 2 88766 SH 4 Zone B 1/2 Add detail with reference to Note 4

H 2 88766 SH 4 Zone D 2 Add material break & connections associated with Zone B 1/2 detail with reference to Note 3 associated with valves 60M 14E & 59A-018

H 2 88766 SH 4 Zone F 2 Add material break & connections associated with Zone B 1/2 detail with reference to Note 3 associated with valve 60M 14D

H 2 817974 SH 1 Zone B 2 Change valve 59A 016 to normally closed & add 3/4 SS tubing vent line

H 2 817974 SH 1 Zone B/C 4 Change valves 59A-013 & 59A-014 to normally closed

H 2 817974 SH 1 Zone B/C 6 Change valve 59A 011 to normally closed

Bolting for flanged joints shall be in accordance with Pipe Code M 17 requirements identified in the 200 Area ETF Collection System Construction Specification (C 018H C6)

Fibercast Company one of the manufacturers of the M 17 piping has identified the maximum allowable air pressure in the piping annulus as 15 psig and recommends 5 psig be utilized for the air purge While no shielding is recommended for exposed piping with ≤ 15 psig air pressure as there is not enough energy contained to present a safety hazard to personnel the existing insulation will provide impact protection against external forces and restraint in the event of a bonded fitting failure This information is per telephone conversations with Nathan Culberson and Craig Moore of the Fibercast Company Ameron the other manufacturer of M 17 piping concurred with the Fibercast Company recommendations per a telephone conversation with Hector Mercado

Hanford NEPA Screening Form

F NEPA eq trem ts HNI PRO 452
Answer q estu ns YES NO and list NUMBER if ppl abl

W rk Item Tal: Annulus Air Purge

W rk Packag Number: EL 00 00651 / M

Proj t Des pti (pleas limit to 6 lines)

The change installs connections between the instrument air junction box (AJB-1) and underground piping as well as providing a flow path for the air purge to escape to atmosphere in each of the respective lines for the purpose of eliminating condensation in the piping annulus

A — INTEGRAL EI EMENTS

- ○ Yes ● N — W ll work threaten to iolate env ronmental l w regulations perm ts safety requirements?
- ○ Y ● N — W ll work inv lve constructi n/expansio f waste treatment, t rag disp sal f cilities?
- ○ Yes ● N — Will hazardous hsta ces b disturbed ll wing unco trolled/u perm tted releases

B — ECOLOGICAI RESOURCES

- ○ Yes ○ N — W ll w rk aff t Wetla ds/Aq tfers/ALE Reserv
- ○ Yes ● N — W ll w rk ccur w thin 1/4 m l f C l mbia River (H ford Reach N tional Monument)
- ○ Yes ○ No — W ll w ldlif natur l habitat be disturbed

If ll nswer re NO If any answer is YES get Ecological Review NUMBER N/A then

C — CULTURAI RESOURCES

- ○ Yes ● N — D th w rk req ire ex av tion r urf ce disturbing ct ities? Obtain perm t if required.
- ○ Yes ● N — Does th w rk req re h lding or eq pment mod f cat ons to l ted histori tructures?

If ll nsw are NO d ll cond tions hav been met and the SWCX ppl es J If y wer is YES C ltural Res urces Rev ew is required. List re ew NUMBER N/A NOTE If dvers mpacts re identified

D — SITE WIDE CATEGORICAL EXCLUSION (SWCX)

- ○ Yes ● N — In ev lusti g p tent l en ironmental mp ts w W te Minimization considered? S HNI PRO 402
- ● Y ○ N — I th w rk covered by SWCX?

If YES list SWCX th t ppl es B2 5 print form and g If NO

E — SITE WIDE CX DOES NOT APPLY

- ○ Yes ○ No — Does ther DOE ppro d NEPA doc mentation pply f l u s t ty? If yes p ov d. ppl cabl d ment mber

DOE/EA N/A DOE/EIS N/A Oth N/A

If CX EA prep rat on m y b needed co tact FH ES 376 4373

Signature

SWCX is t lid til any pplic bl C lt l/Ecol gical Reso ce Review ar eceived and tt hed t this form

Reviewer _____ Phon 372 3152
(I tiato C g Engineer Sched ler Planne)

Con rrence _____ D te 4/24/01
(Manager/ En Complian Officer FH ES)

SWCX cann t b used if th act is p rt of an ctivity under rev ew in an EA/EIS MAINTAIN A COPY IN THE APPLICABLE PROJECT FILE OR WORK PACKAGE

A-6001-497 (11/00)

242AL71 INSTRUMENT BUILDING

242 A EVAPORATOR BLDG

NOTES:

U.S. DEPARTMENT OF ENERGY

LERF BASIN & LTF INFLUENT EVAPORATOR

H 2-88766

Was

ECN 6 8555 PS = C 9

H 2 88 66 SH

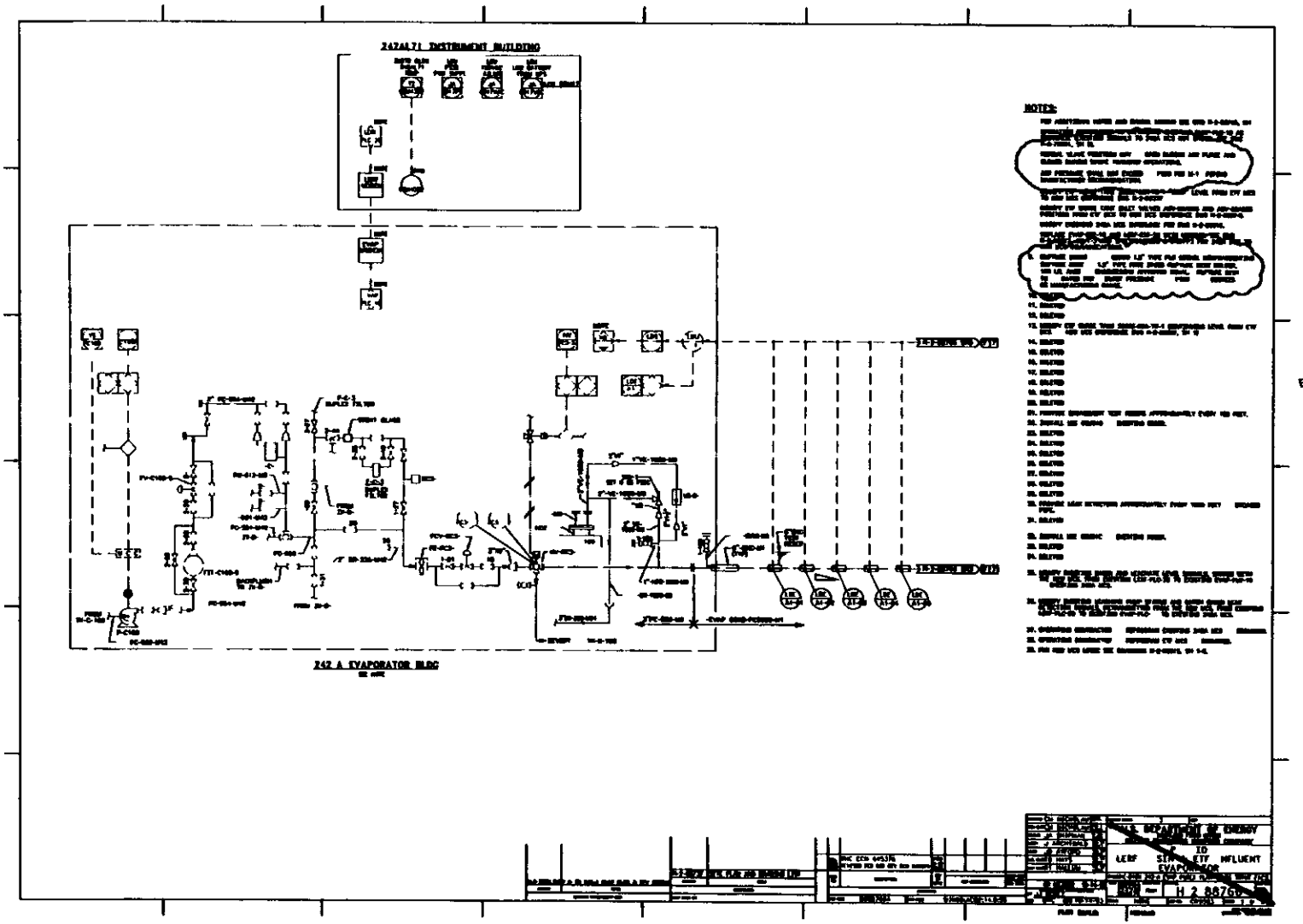

Is

ECN 658355 pg 6 of 9
+ 88766 SH

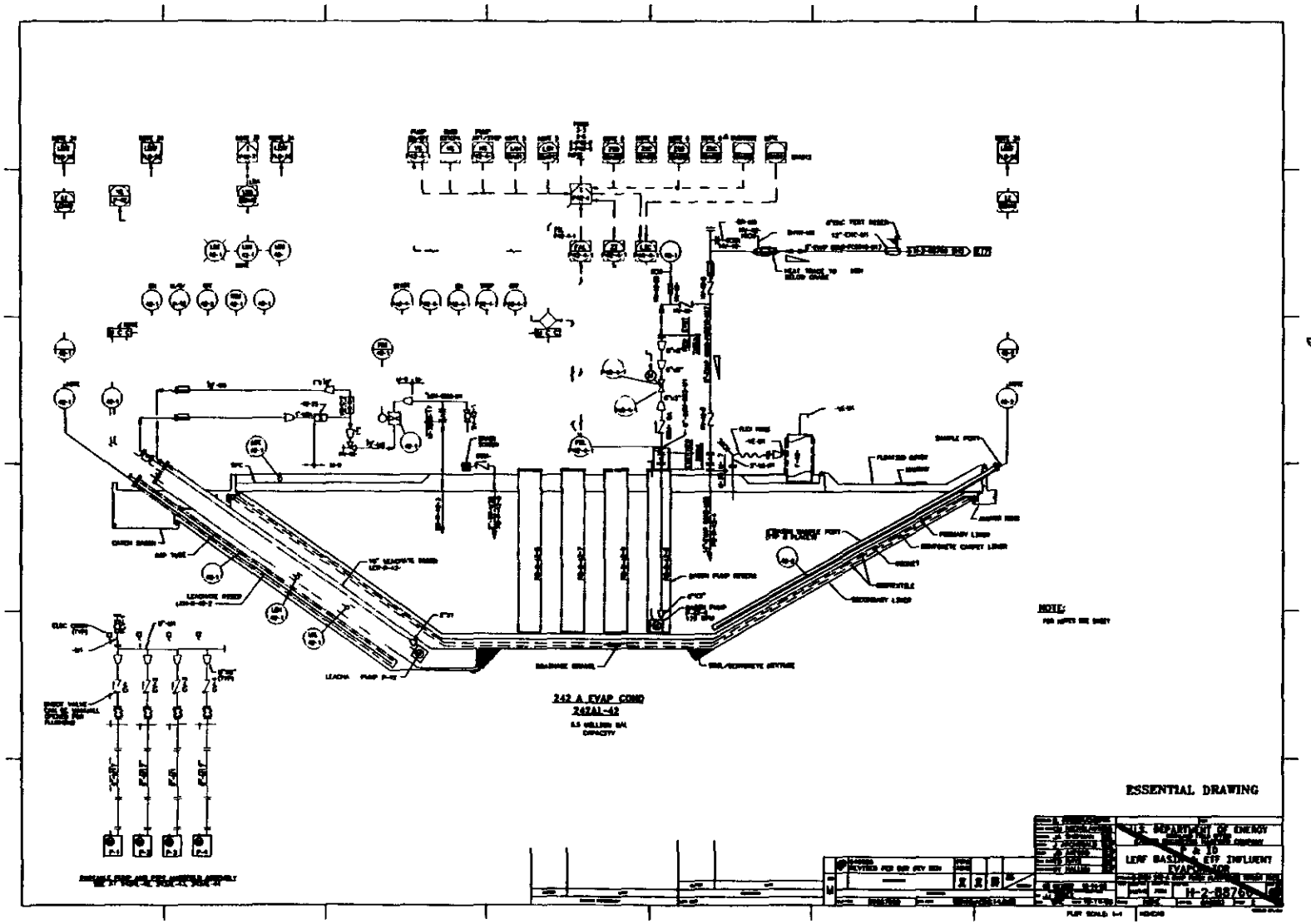

ECN 658555 Pg 7 of
1 2 88 66 SH 2

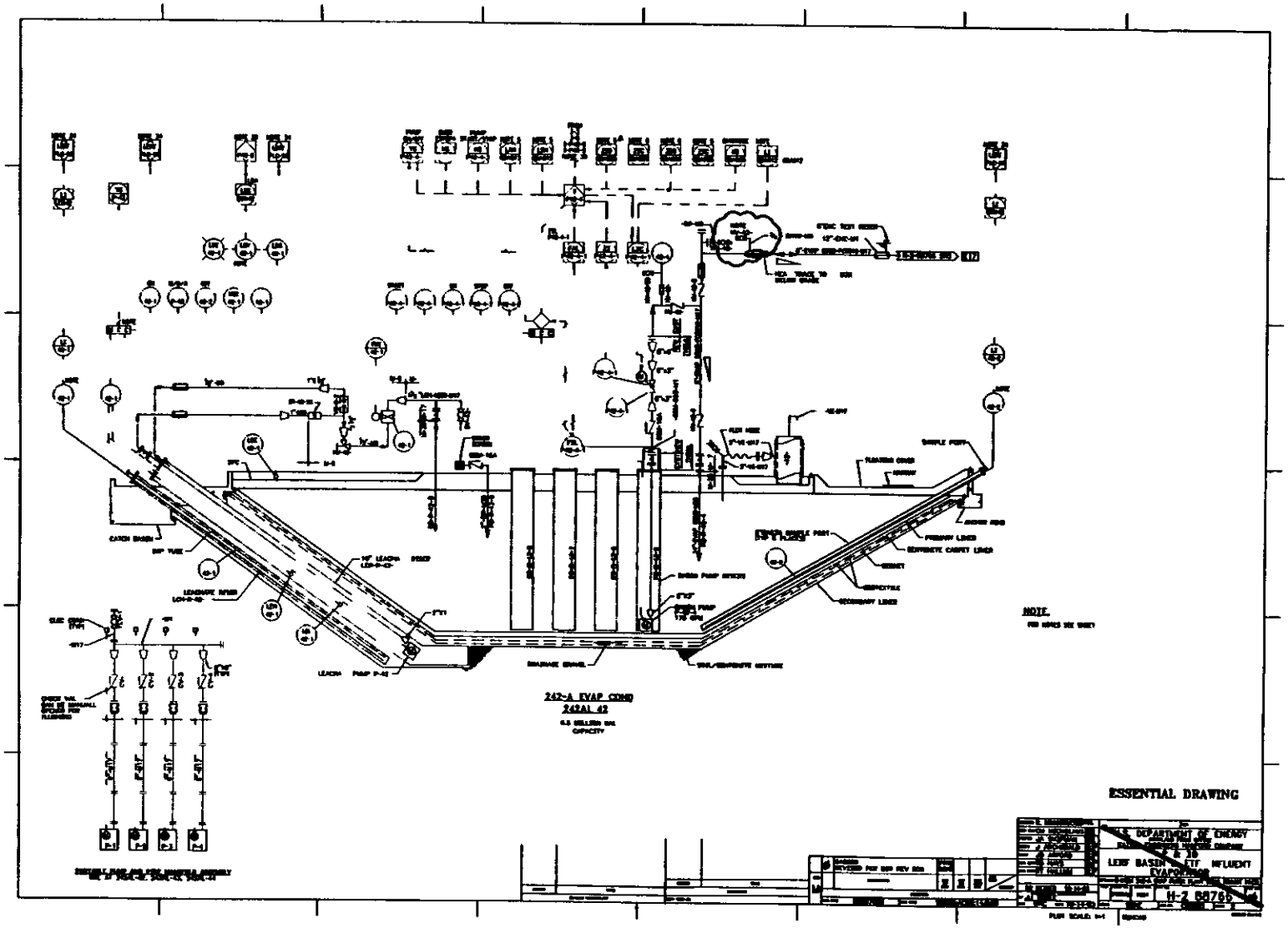

In
ECN 658555 pg 8 of 9
H 2 88766 SH 2

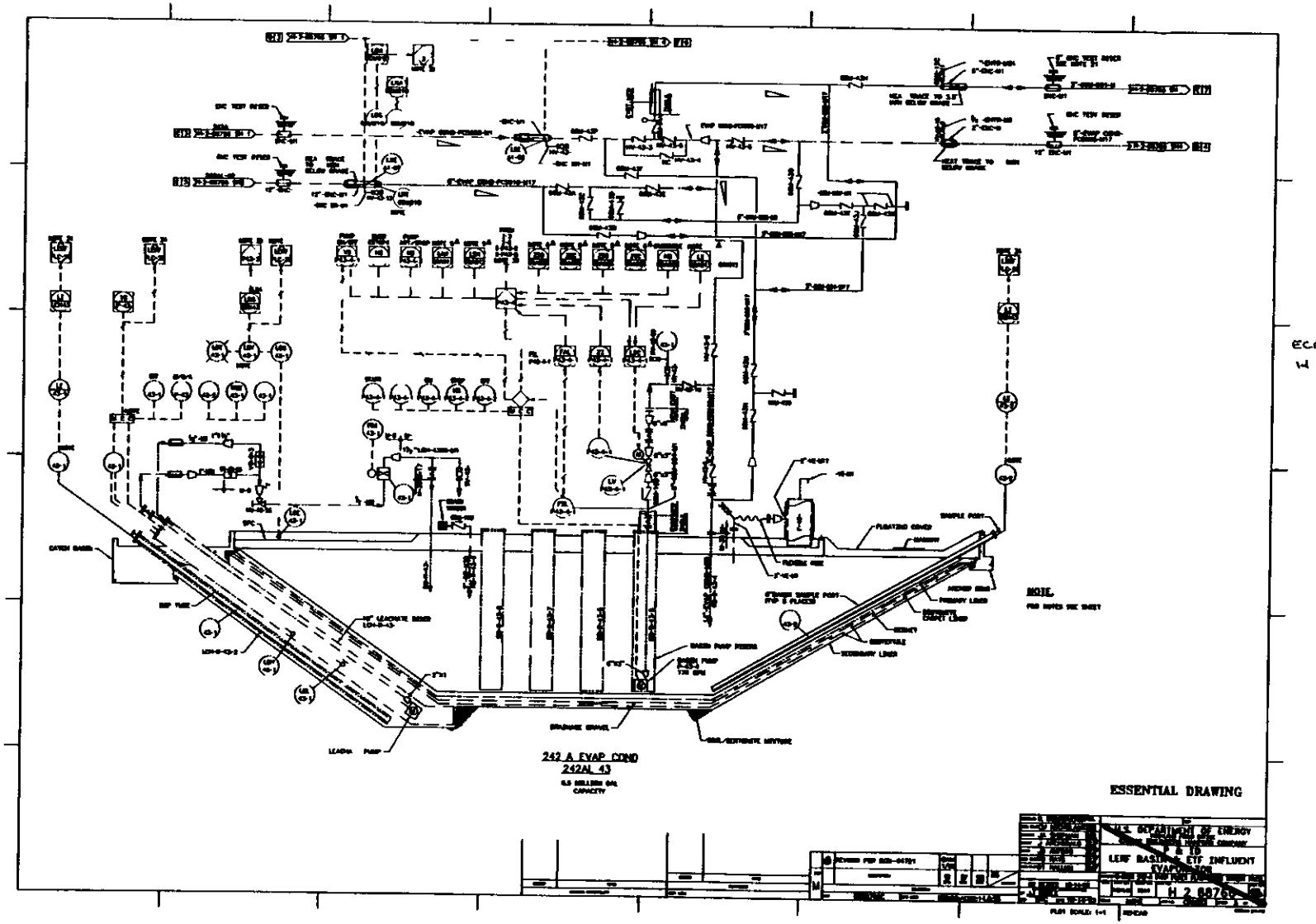

ECN 658555 Pg 9 of
H 2 88 66 SH 3

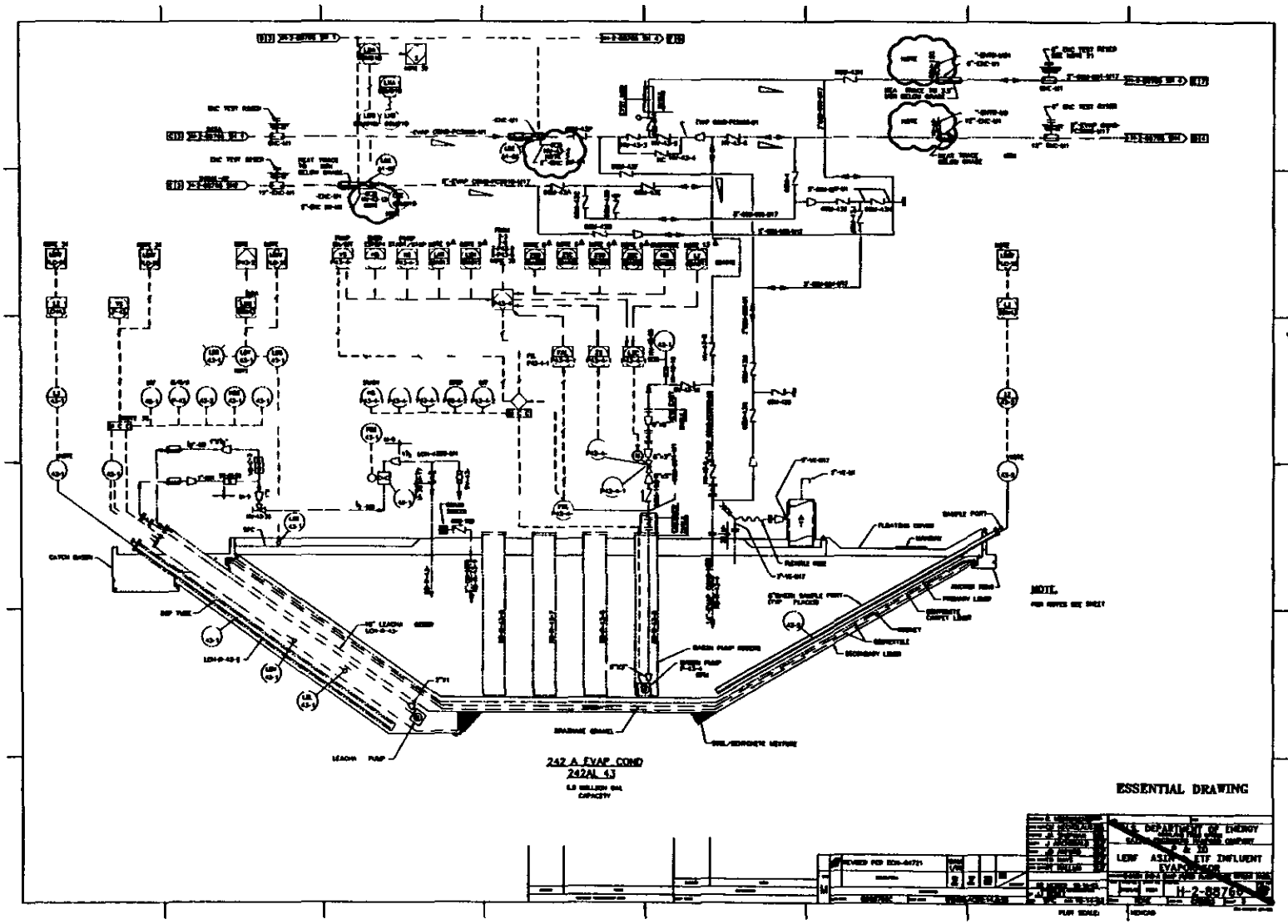

ECN 65 555 PS 0 AE A
H 2 88 66 SH 3

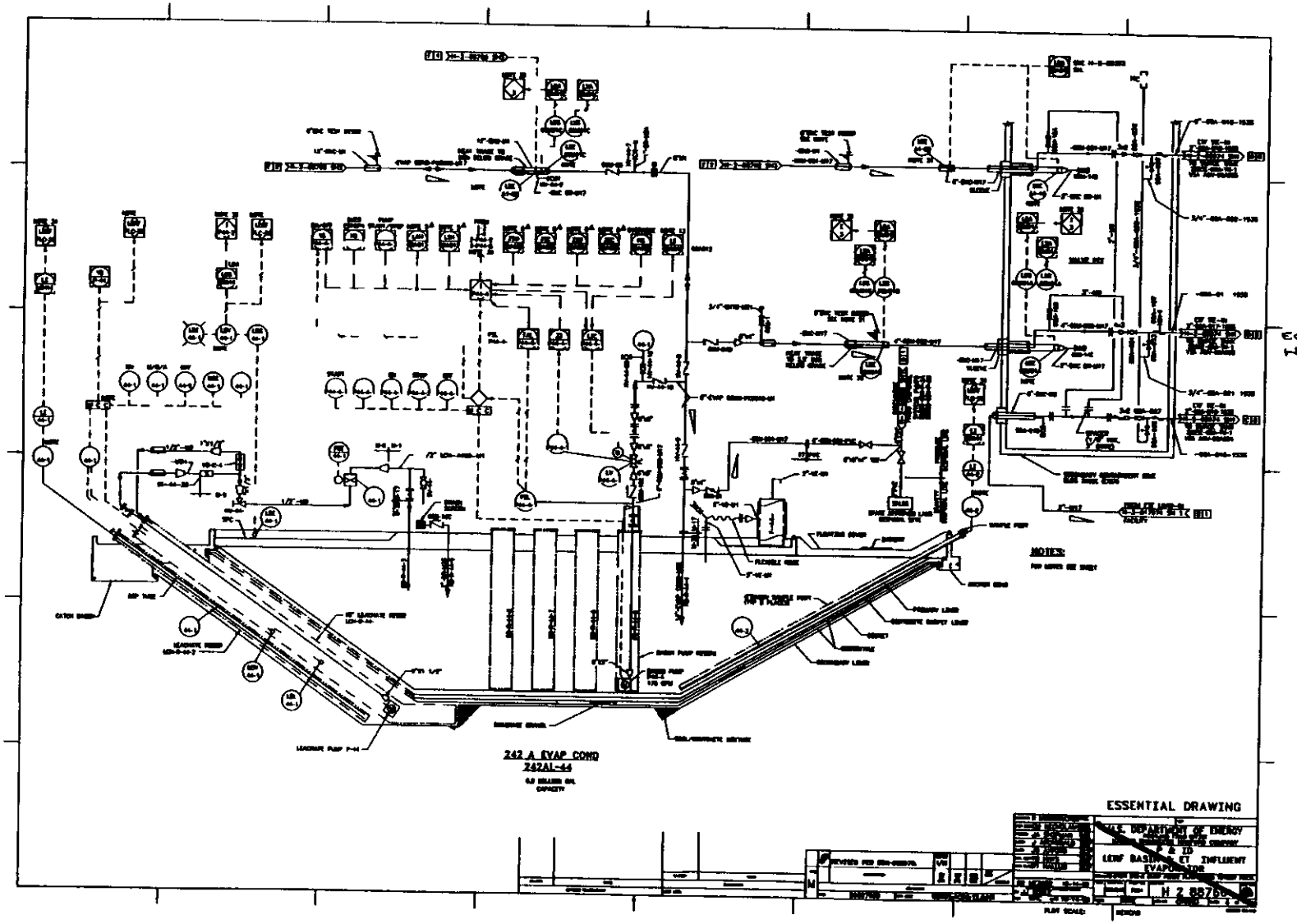

ECN 658555 pg of 9
H 2 88766 SH 4

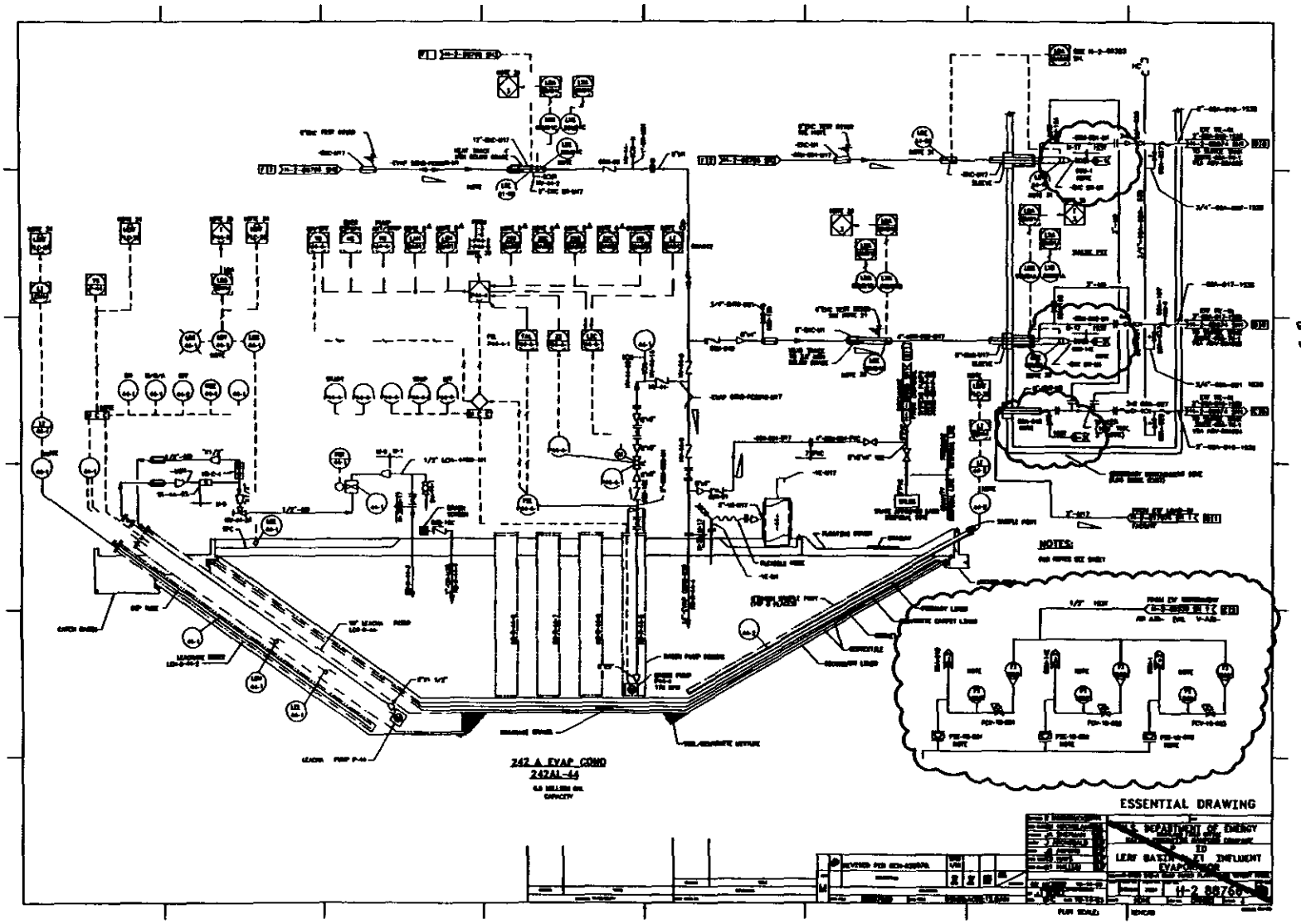

ECN 058555 PG 2 of 9
H 2 8 66 SH 4

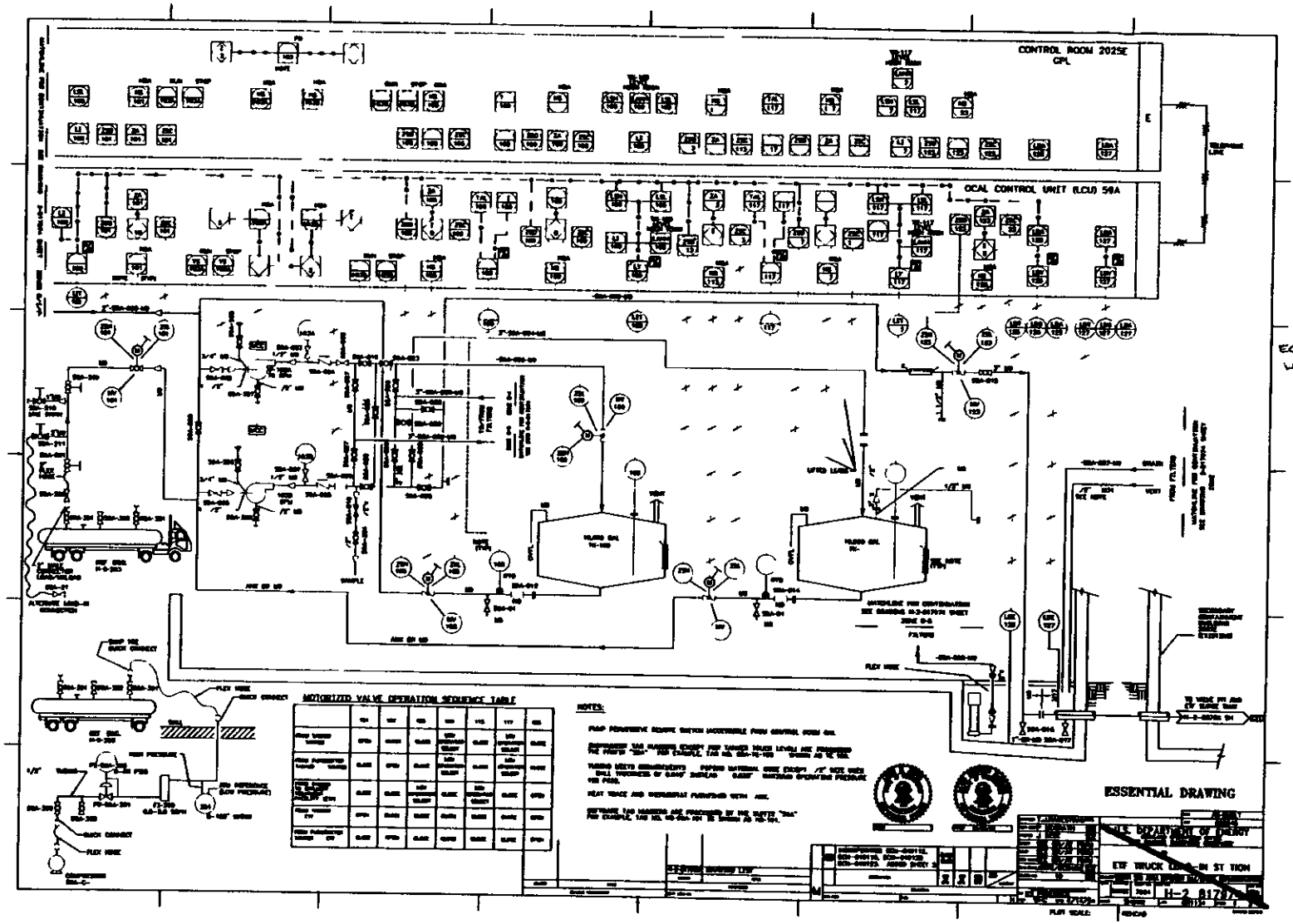

ECN 68 555
H 2 8 774

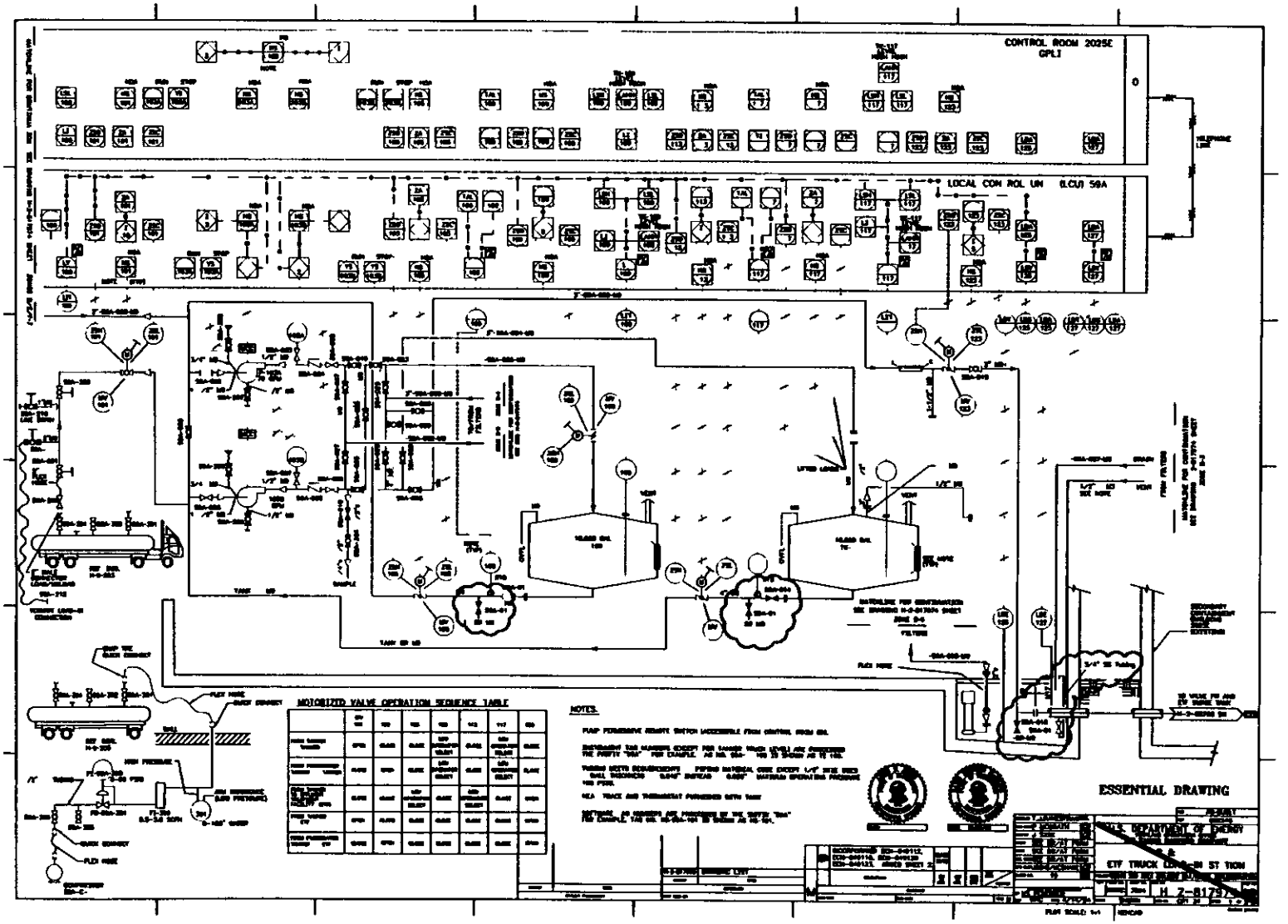

Is
ECN 658555 Pg 4 of 19
H 2 0 974 SH

NOT FOR DRAWING INCORPORATION
FOR PARTIAL PARTS LIST AND NOTES SEE PAGES 18 AND 19

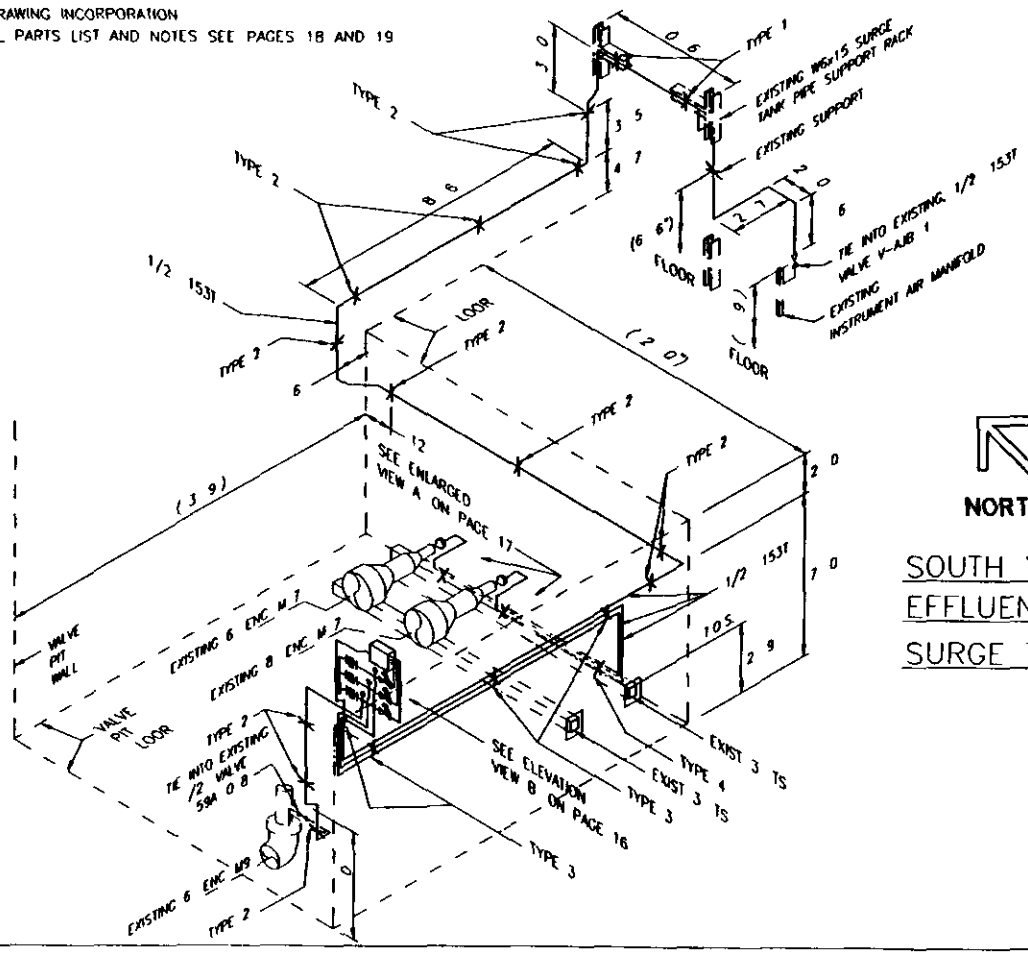

NORTH

SOUTH YARD
EFFLUENT TREATMENT FACILITY
SURGE TANK BERM AREA

NOT FOR DRAWING INCORPORATION
FOR PARTIAL PARTS LIST AND NOTES SEE PAGES 18 AND 19

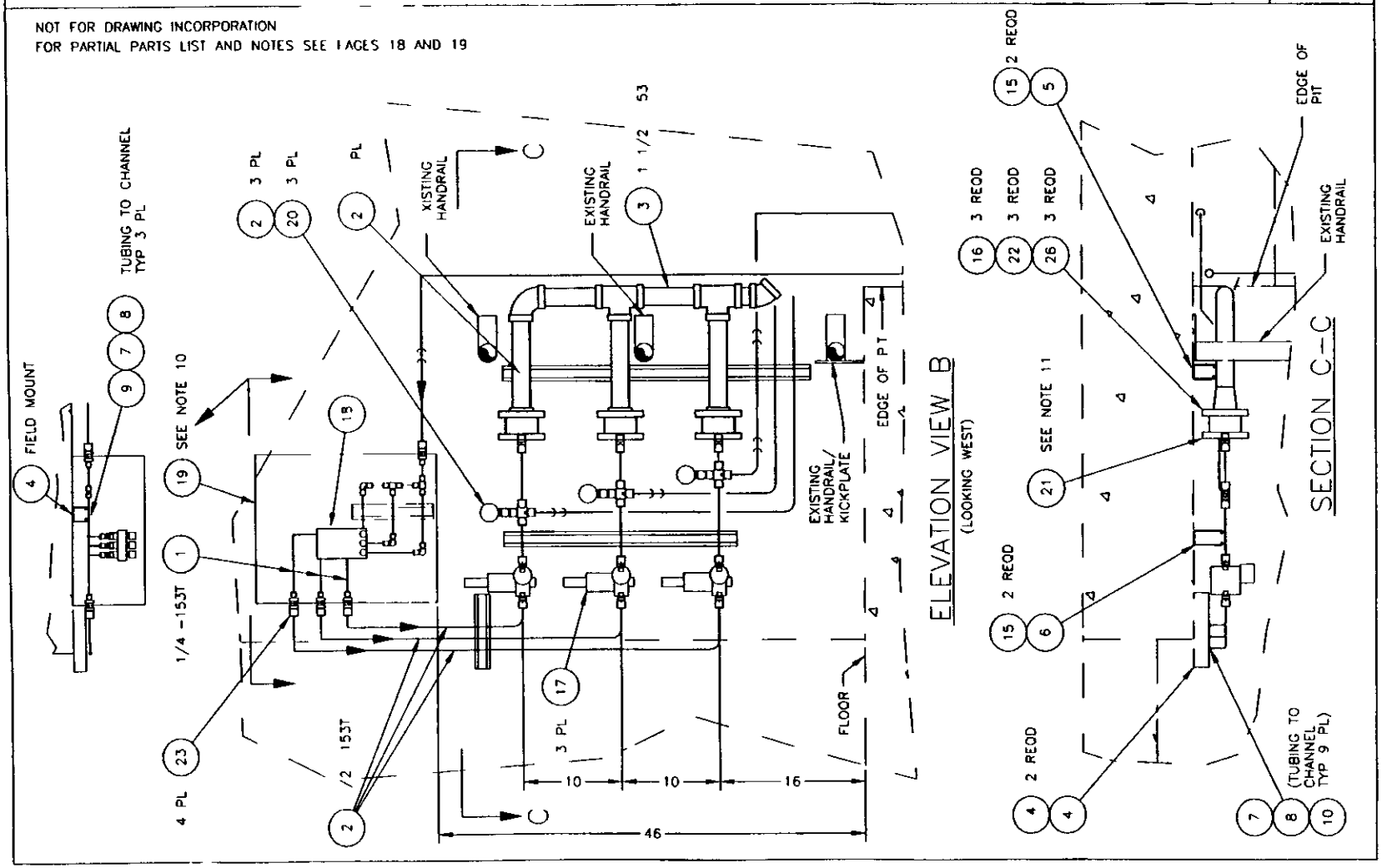

NOT FOR DRAWING INCORPORATION
FOR PARTIAL PARTS LIST AND NOTES SEE PAGE 18 AND 19

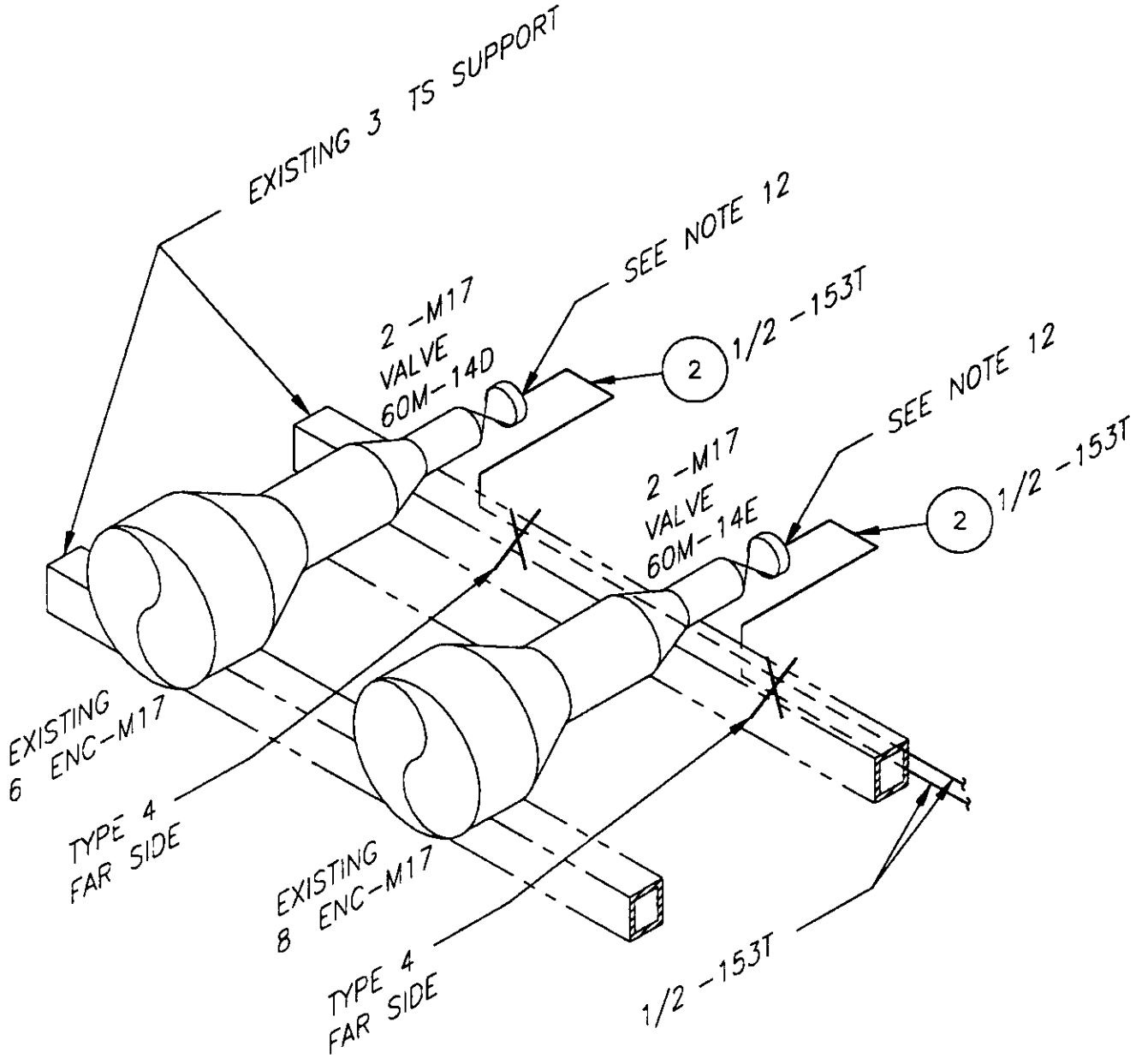

ENLARGED VIEW A

PARTIAL PARTS LIST

NOT FOR DRAWING INCORPORATION

PN	QTY	DESCRIPTION	MATL/REF
1	AR	TUBING 1/4 ø AND MISC FITTINGS	PIPE CODE 153T
2	AR	TUBING 1/2 ø AND MISC FITTINGS	PIPE CODE 153T
3	AR	PIPE 1 1/2 SCHED 40S AND 3000# SWLDG FITTINGS	PIPE CODE 153
4	AR	CHANNEL 1 5/8 x 1 5/8 12 GA, GALV	B-LINE B22
5	AR	CHANNEL 2 7/16 x 1 5/8 12 GA GALV	B-LINE B12
6	AR	CHANNEL 3 1/4 x 1 5/8 12 GA, GALV	B-LINE B11
7	29	SPRING NUT 1/4-20 GALV	B-LINE N224
8	32	SLOTTED HEX HEAD MACHINE SCREWS 1/4 X 3/4 LONG ZINC-PLATED	B-LINE 1/4 x3/4 SHHMS
9	3	TUBING CLAMP ONE HOLE 1/4 ø	B-LINE B2084
10	44	TUBING CLAMP ONE HOLE, 1/2 ø	B-LINE B2087
11	AR	ALL THREADED ROD 1/4 -UNC ZINC-PLATED	B-LINE ATR-1/4"
12	4	NUT HEX 1/4 -20UNC-2B ZINC-PLATED	COML
13	4	WASHERS, SPRING LOCK, ZINC-PLATED	COML
14	18	ANCHORS CONCRETE 1/4 (MIN EMB 1 1/8")	COML SST
15	14	ANCHORS CONCRETE 3/8 (MIN EMB 1 5/8")	COML SST
16	3	1 5 TYPE PLR NONFRAGMENTING NICKEL RUPTURE DISK BURST PRESSURE 7 PSIG @ 72 DEGREES F 0% MANUFACTURING RANGE IN 1 5 TYPE PRDI RUPTURE DISK HOLDER 150 LB ANSI 316SS CONSTRUCTION	OSECO (800)395-3475 LARRY SCOTT
17	3	PRESSURE REDUCINGING VALVE W/PRESSURE INDICATING GAGE 100 PSIG - 5 PSIG AIR SERVICE 1/4 NPT SST BODY 5 SCFM REQD CAPACITY PART #FS67SS-1/C7	FISHER CONTROLS 67SS/C7 PCE PACIFIC INC CRAIG JEANE (425)487-9600
18	1	FLOWMETER MULTI-TUBE PURGE MANIFOLD DESIGN 1/4 COMPRESSION FITTINGS ON INLETS & OUTLETS WITH (3) INLET VALVES (HOFFMAN INSTRUMENTATION SUPPLY INC (503)466-2200 DENNIS)	BROOKS INSTRUMENT MODEL#1370CB3C3EL W/ (3) TUBES #S930BAI8TV
19	1	ENCLOSURE WALL-MOUNT 16 x20 x8 SST	HOFFMAN C-SD16208SS
20	3	PRESSURE GAUGE 1/4 MNPT 0-10psig PART #FS50-14	FISHER CONTROLS TYPE 50
21	3	1-1/2 304SS RAISED FACE BLIND FLANGE DRILLED & TAPPED FOR 1/2 SWAGELOK MALE NPT CONNECTOR	PIPE CODE 153
22	3	1-1/2 304SS RAISED FACE FLANGE 150# SWLDG	PIPE CODE 153
23	4	BULKHEAD REDUCING UNION 1/2 x1/4	SWAGELOK SS-810-61-4
24	3	FEMALE ADAPTER 1/2 TUBE x 1/4 FNPT	SWAGELOK SS-8-TA-7-4
25	3	PIPE CLAMP 1 1/2	B-LINE, B2012
26	AR	GASKET STUDS AND NUTS	PIPE CODE 153

NOT FOR DRAWING INCORPORATION

NOTES.

1) FIELD RUN PIPE TUBING AND MISCELLANEOUS FITTINGS PER SPECIFICATION S-136H-001 PIPE CODE 153 AND 153T
2) ALL TUBE FITTINGS TO BE INSTALLED PER MANUFACTURER S SPECIFICATIONS
3) FABRICATION AND TESTING SHALL BE IN ACCORDANCE WITH ASME B31 1
4) DIMENSIONS SHOWN ARE APPROXIMATE FIELD ADJUST AS NECESSARY
5) FIELD ROUTE AND SUPPORT TUBING IN APPROXIMATE LOCATIONS SHOWN ADJUSTMENTS MAY BE MADE DUE TO FIELD CONDITIONS
6) MAXIMUM SPACING OF SUPPORTS 5 -0
7) SUPPORT TUBING USING TYPICAL FIELD FABRICATED SUPPORTS OR WHERE CALLED OUT ON ECN AS FOLLOWS
   - TYPE 1 CHANNEL PN4 STRAPPED TO W6x15 WITH 1/4" ø THREADED ROD PN11 NUTS PN12 AND WASHERS PN13
   - TYPE 2 CLAMP PN10 AND ANCHOR PN14
   - TYPE 3 CHANNEL PN4 ANCHORS PN15 MIN SPACING 5 CLAMP PN10 NUT PN7 AND SCREW PN8
   - TYPE 4 CLAMP PN10 AND SCREW PN8 DRILL AND TAP 3 TUBE STEEL
8) PCV-1D-001 PCV-1D-002 & PCV-1D-003 ARE TO BE SET TO MAINTAIN MAXIMUM DOWNSTREAM LINE PRESSURE AT LESS THAN OR EQUAL TO 5 PSIG
9) PCV-1D-004 PCV-1D-005 & PCV-1D-006 ARE TO BE SET TO RELIEVE AT 7 PSIG
10) FIELD LOCATE APPROX AS SHOWN MOUNT ENCLOSURE TO WALL WITH (4) 1/4" ø CONCRETE ANCHORS PN14
11) DRILL AND TAP BLIND FLANGE ON CENTER TO ACCEPT 1/2 SWAGELOK MALE CONNECTOR
12) REPLACE EXISTING 2 FIBERGLASS FLANGE WITH 2 STAINLESS STEEL FLANGE PIPE CODE 153S USE FLAT FACE BLIND FLANGE DRILLED THROUGH AND TAPPED TO ACCEPT 1/2 SWAGELOK MALE CONNECTOR GASKET SHALL BE 3/16" THK EPDM FULL FACE 6 OD x 3 1/2 ID TORQUE FASTENERS TO 25 FT/LBS

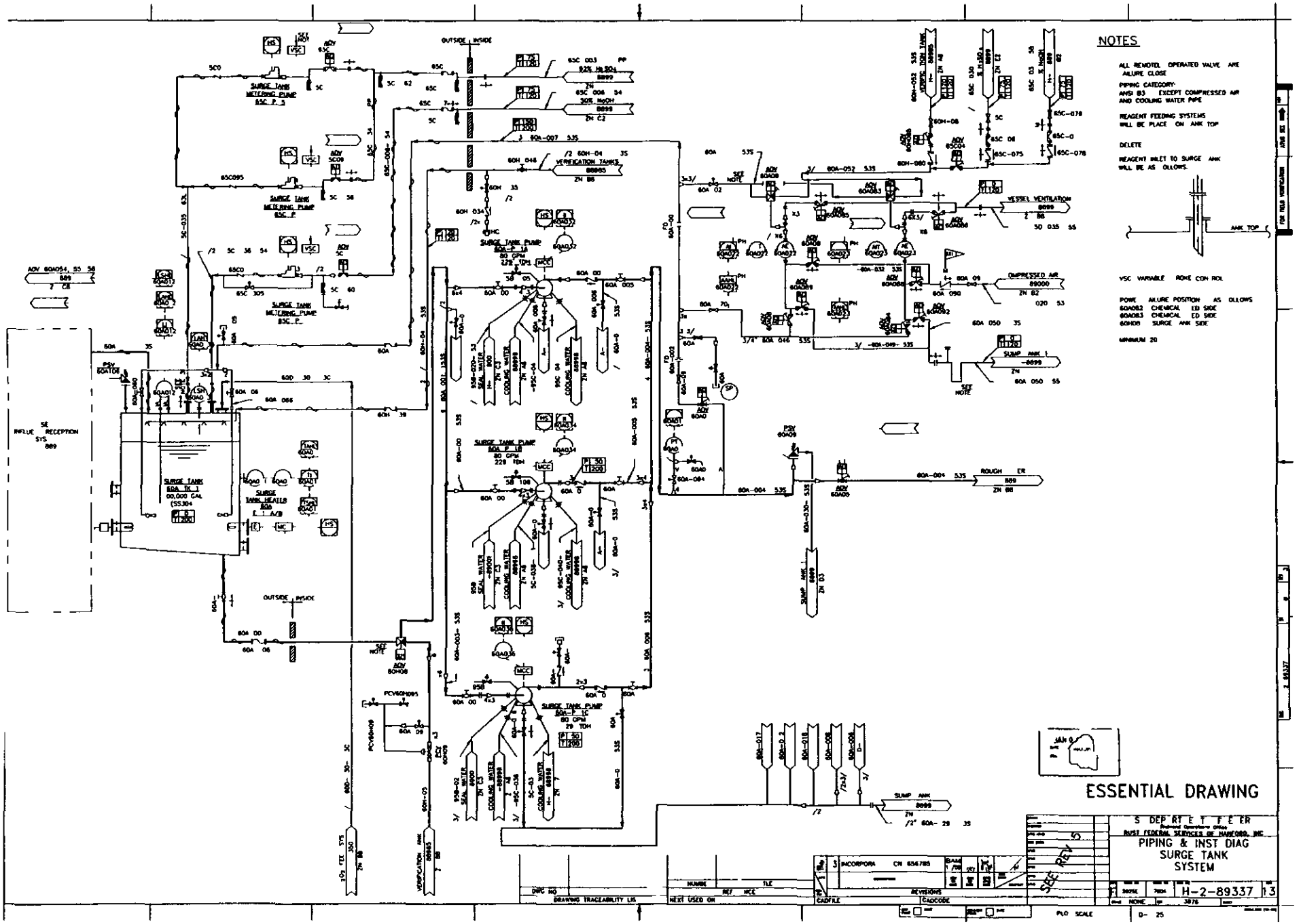
NOTES
ALL REMOTEL OPERATED VALVE ARE AILURE CLOSE
PIPING CATEGORY:
ANSI B3 EXCEPT COMPRESSED AIR AND COOLING WATER PIPE
REAGENT FEEDING SYSTEMS WILL BE PLACE ON ANK TOP
DELETE
REAGENT INLET TO SURGE ANK WILL BE AS OLLOWS.
ANK TOP
VSC VARIABLE ROKE CON ROL
POWE AILURE POSITION AS OLLOWS
60A082 CHEMICAL ED SIDE
60A083 CHEMICAL ED SIDE
60H08 SURGE ANK SIDE
MINIMUM 20
SURGE TANK METERING PUMP 85C P 5
SURGE TANK METERING PUMP 85C P
SURGE TANK METERING PUMP 85C P
SURGE TANK PUMP 60A-P 10 80 GPM 229 TDH
SURGE TANK PUMP 60A-P 10 80 GPM 229 TDH
SURGE TANK PUMP 60A-P 10 80 GPM 29 TDH
SURGE TANK 60A TK 1 00,000 GAL (SS304)
SURGE TANK HEATLB 60A
SE INFLUE RECEPTION SYS 889
VERIFICATION TANKS
VESSEL VENTILATION
COMPRESSED AIR
SUMP ANK 1
ROUGH ER
SUMP ANK
ESSENTIAL DRAWING
S DEP RT E T F E ER
RUST FEDERAL SERVICES OF HANFORD, INC
PIPING & INST DIAG
SURGE TANK
SYSTEM
H-2-89337
SEE REV 5
DRAWING TRACEABILITY LIS
NEXT USED ON
CADFILE
CADCODE
REVISIONS
PLO SCALE

S

CPF 18
1PF 7
1PF 1PF 4

ENGINEERING CHANGE NOTICE

ESSENTIAL

Page 1 of 18

ECN 644244

Proj ECN

2 ECN Category (mark one)	3 Originator's Name Organization MSIN and Telephone No	4 USQ Required?	5 Date
Supplemental [X] Direct Revision [X] Change ECN [ ] CAM 12/14/98 Temporary [ ] Standby [ ] Supersedure [ ] Cancel/Void [ ]	E A McNAMAR 32200 S6 72 373-3465	[ ] Yes [ ] No	11 20 98
	6 Project Title/No /Work Order No CHEMICAL FEED PUMP RELOCATION	7 Bldg /Sys /Fac No 2025E	8 Approval Designator NA
	9 Document Numbers Changed by this ECN (includes sheet no and rev) SEE BLOCK 13a	10 Related ECN No(s) 627754 644243	11 Related PO No NA

12a Modification Work	12b Work Package No	12c Modification Work Complete	12d Restored to Original Condition (Temp or Standby ECN only)
[X] Yes (fill out Blk 12b) [ ] No (NA Blks 12b 12c 12d)	EL- 97-00622	Design Authority/Cog Engineer Signature & Date	NA Design Authority/Cog Engineer Signature & Date

13a Description of Change — **13b Design Baseline Document?** [X] Yes [ ] No

H 2 88992 SH1 REV 9
H 2 89337 SH1 REV 10
H 2 89181 SH1 REV 5
H 2-89211 SH1 REV 1
H 2-89200 SH1 REV 3
H 2-89047 SH1 REV 6
H 2-89047 SH2 REV 0
H 2-89162 SH1 REV 4
~~H 2-89351 SH1 REV 4~~

Install, inspect and test new piping installation in accordance with ASME B31 3 Normal Fluid Service

CAM 3/22/99

SEE PAGE 3 FOR DESCRIPTION OF CHANGES

14a Justification (mark one)

Criteria Change	[ ]	Design Improvement	[X]	Environmental	[ ]	Facility Deactivation	[ ]
As Found	[ ]	Facilitate Const	[ ]	Const Error/Omission	[ ]	Design Error/Omission	[ ]

14b Justification Details

RELOCATE EXISTING CHEMICAL FEED PUMPS 2025E-65C P 5 -6 7 FROM THE TOP OF SURGE TANK 2025E 60A TK 1 TO INSIDE THE EFFLUENT TREATMENT FACILITY

15 Distribution (include name MSIN and no of copies)

E A McNAMAR	S6 72 *	A K Yoakum	S6-71
K D JUNT	G3 17	T W Dallas	S6-74
WCC Planning	S6-71 *	M W Bowman	S6 72
L L Lin	S6-72 *	B S Darling	T4-05
N J Sullivan	S6-72	J M Petty	S6-74

* = 1 Advance Copy

RELEASE STAMP
MAR 22 1999
DATE
HANFORD RELEASE
STA 30
ID 18

A 7900-013-2 (05/96) GEF095

ENGINEERING CHANGE NOTICE

1 ECN (use no from pg 1) 644244

16 Design Verification Required	17 Cost Impact				18 Schedule Impact (days)	
	ENGINEERING		CONSTRUCTION			
[X] Yes	Additional	[] $ NA	Additional	[] $ NA	Improvement	[] NA
[ ] No	Savings	[] $ NA	Savings	[] $ NA	Delay	[] NA

19 Change Impact Review Indicate the related documents (other than the engineering documents identified on Side 1) that will be affected by the change described in Block 13 Enter the affected document number in Block 20

SDD/DD	[]	Seismic/Stress Analysis	[]	Tank Calibration Manual	[]
Functional Design Criteria	[]	Stress/Design Report	[]	Health Physics Procedure	[]
Operating Specification	[]	Interface Control Drawing	[]	Spares Multiple Unit Listing	[]
Criticality Specification	[]	Calibration Procedure	[]	Test Procedures/Specification	[]
Conceptual Design Report	[]	Installation Procedure	[]	Component Index	[X]
Equipment Spec	[]	Maintenance Procedure	[]	ASME Coded Item	[]
Const Spec	[]	Engineering Procedure	[]	Human Factor Consideration	[]
Procurement Spec	[]	Operating Instruction	[]	Computer Software	[]
Vendor Information	[X]	Operating Procedure	[X]	Electric Circuit Schedule	[]
OM Manual	[]	Operational Safety Requirement	[]	ICRS Procedure	[]
FSAR/SAR	[]	IEFD Drawing	[]	Process Control Manual/Plan	[]
Safety Equipment List	[]	Cell Arrangement Drawing	[]	Process Flow Chart	[]
Radiation Work Permit	[]	Essential Material Specification	[]	Pu chase Requisition	[]
Environmental Impact Statement	[]	Fac Proc Samp Schedule	[]	Tickler File	[]
E ironmental Report	[]	Inspection Plan	[]		[]
Environmental Perm t	[]	Inventory Adjustment Request	[]		[]

20 Other Affected Documents (NOTE Documents listed below will not be revised by this ECN) Signatures below indicate that the signing organization has been notified of other affected documents listed below

Document Number/Revision	Document Number/Revision	Document Number Revision
POP 60 006		
POP 65C 001		

21 Approvals

	Signature	Date		Signature	Date
Design Authority	E A McNamar	12/10/98	Design Agent	E A McNamar	12/10/98
Cog Eng	E A McNamar	12/10/98	PE		
Cog Mgr (Informal Design Review)	N J Sullivan	3-22-99	QA		
QA			Safety		
Safety			Design		
Environ			Environ		
Other			Other		
			DEPARTMENT OF ENERGY		
			Signature or a Control Number that tracks the Approval Signature		
			ADDITIONAL		

Description of Changes

1) H 2 88992 SH 1, REV 9
Modify as shown on page 4

2) H 2 89337 SH 1, REV 10
Modify as shown on page 5

3) H 2 89181 SH1, REV 5
a) Modify as shown on page 6
b) Add ENLARGED PLAN as shown on page 7
c) Add SECTION D as shown on page 8
d) Add SECTION E as shown on page 9
e) Add SECTION F as shown on page 10

4) H 2 89211 SH 1, REV 1
a) Add TYPE 32 SUPPORT AND TYPE 35 SUPPORT as shown on page 11
b) Add TYPE 33 SUPPORT as shown on page 12
c) Add TYPE 34 SUPPORT SKID as shown on page 13

5) H 2 89200 SH 1, REV 3
a) Modify as shown on page 14
b) Add ENLARGED PLAN and SECTIONS F & G as shown on page 15

6) H 2 89047 SH 1, REV 6
Modify as shown on page 16

7) H 2 89162 SH 1, REV 4
Modify as shown on page 17

8) H 2 89047 SH 2, REV 0
Add DETAIL F as shown on page 18

ENGINEERING CHANGE NOTICE CONTINUATION SHEET

Page 4 of 18

ECN	644244
Date	11/20/98

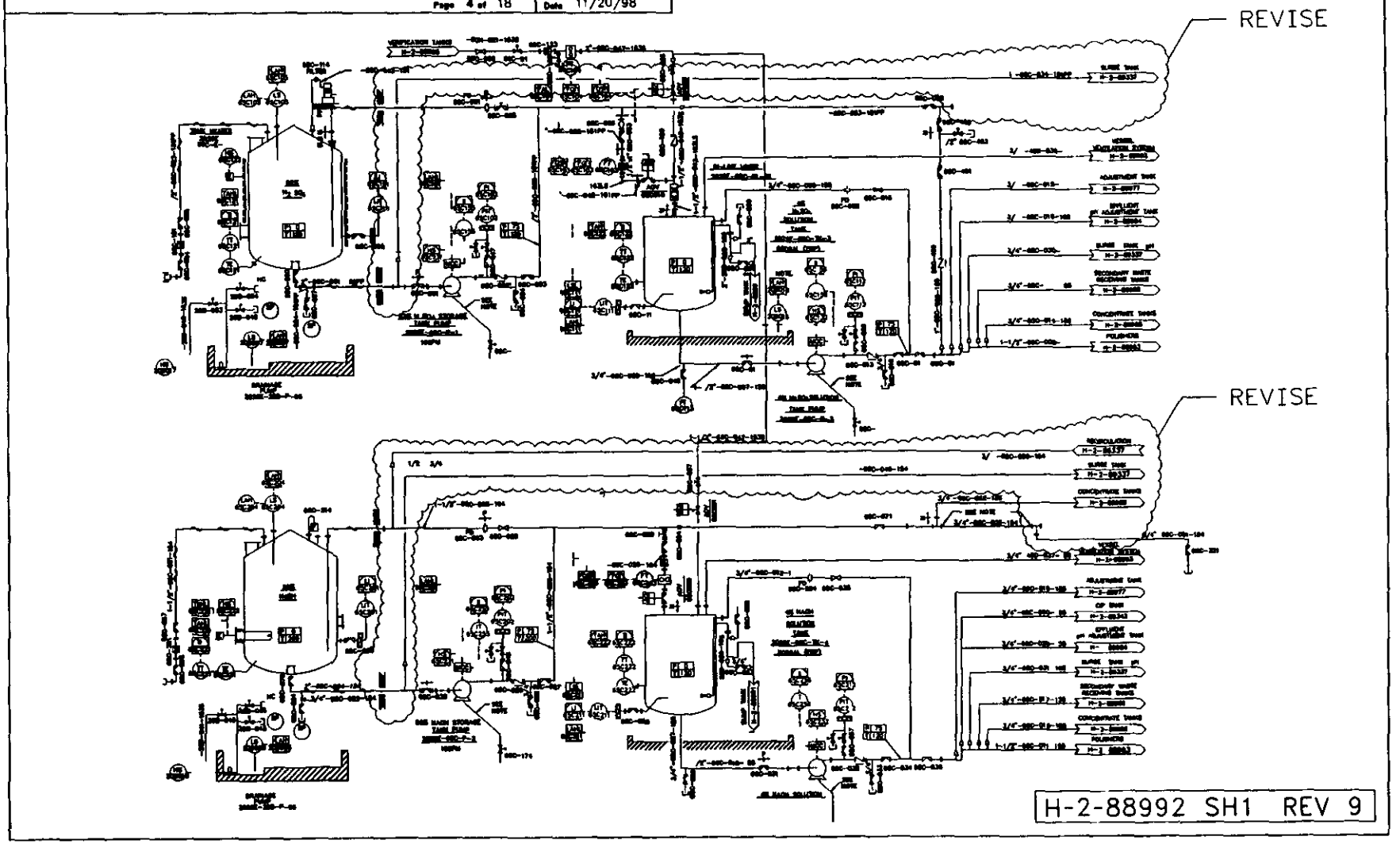

7900-0 3-4 (04/94) GEF094 ECNCS

ENGINEERING CHANGE NOTICE CONTINUATION SHEET

Page 5 of 18

ECN 64424

Date 11/20/98

REVISE

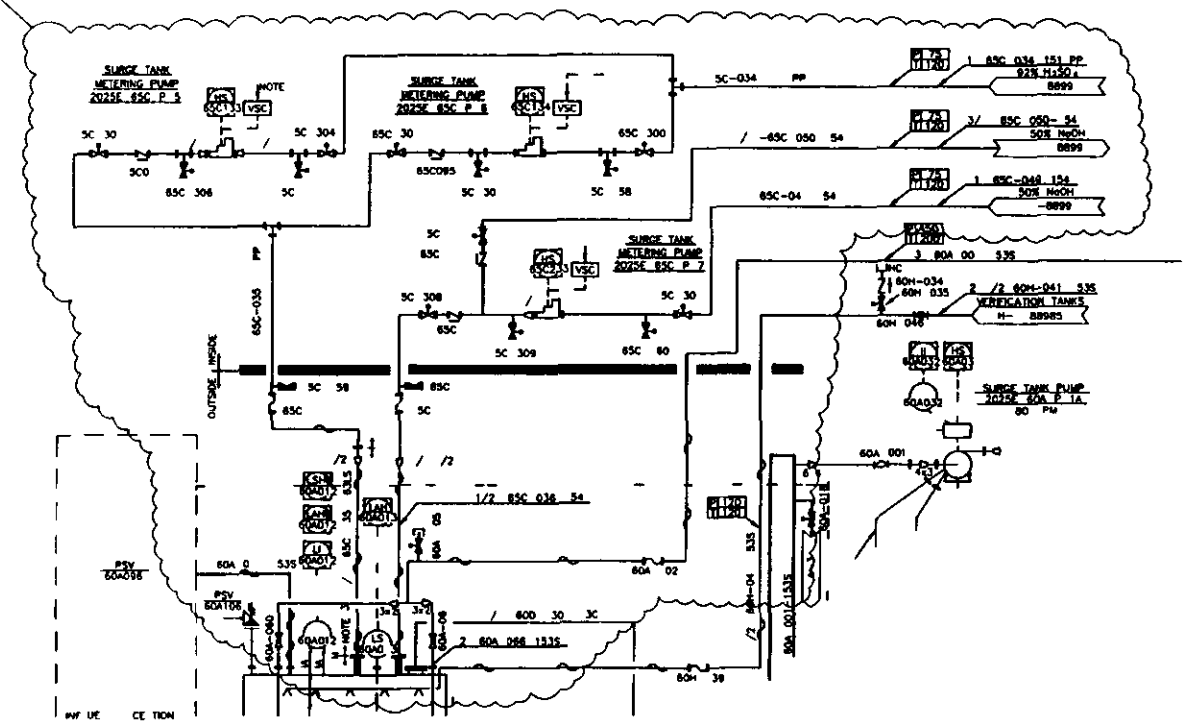

ZONE E/F 6/7

H-2-89337 SH1 REV 10

900-0 3-4 (04/9 0E709 ECNCS

ENGINEERING CHANGE NOTICE CONTINUATION SHEET

pg 6 18

CN 644244

Date 11/20/98

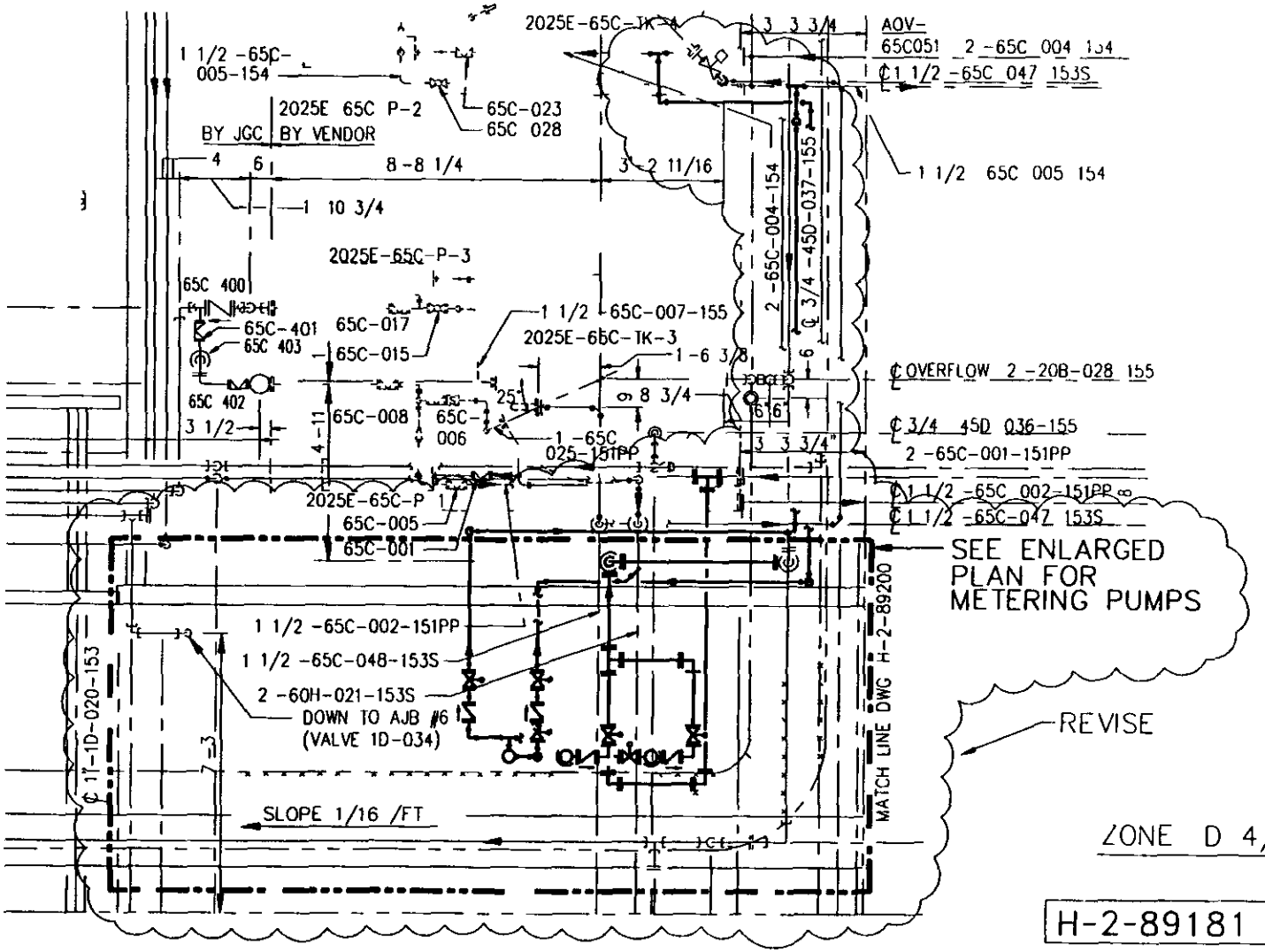

H-2-89181 SH1 REV 5

900- 3 (4/) E 09 CNCS

ENGINEERING CHANGE NOTICE CONTINUATION SHEET

pg 7 18

644244

date 11/20/98

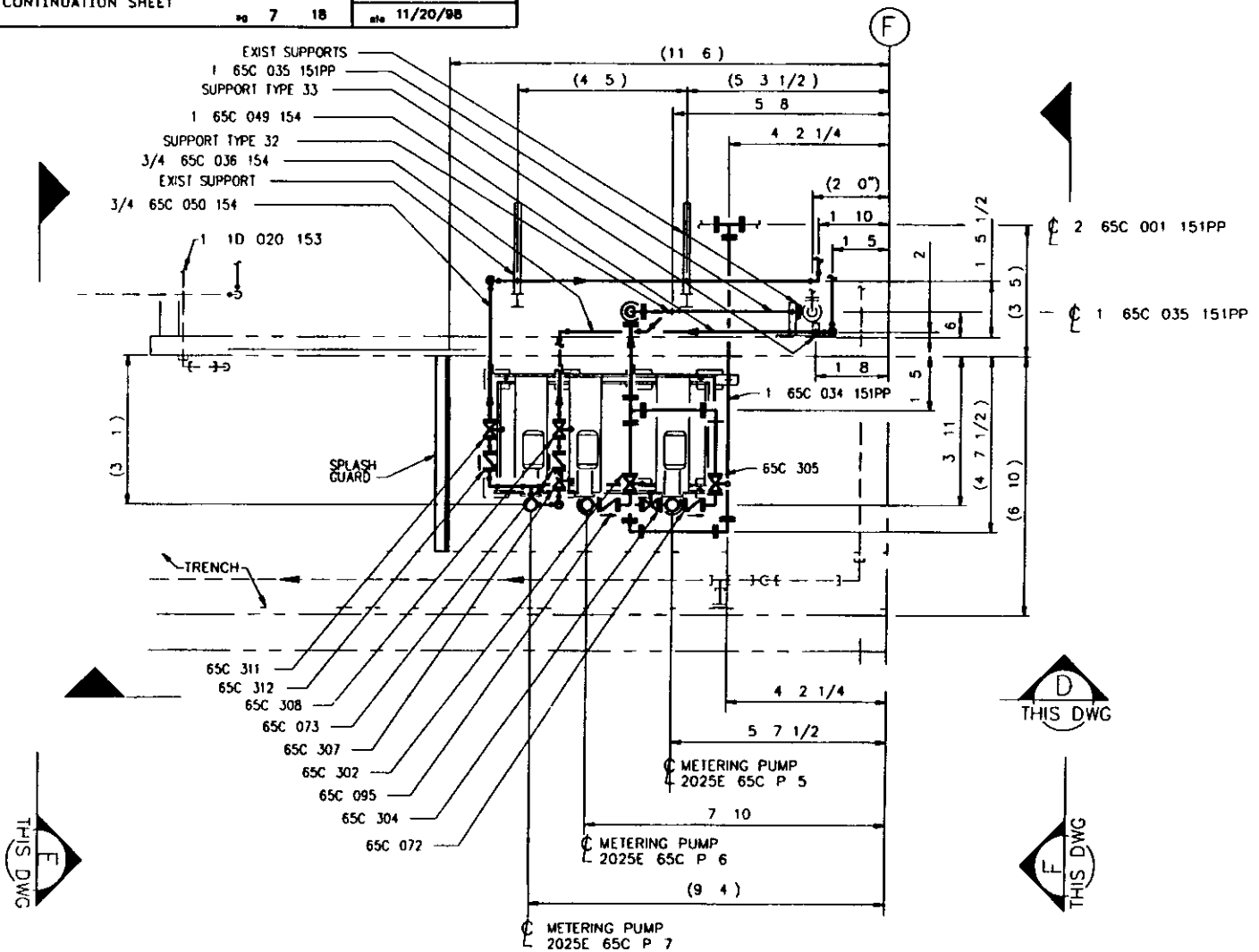

ENLARGED PLAN

H-2-89181 SH1 REV 5

00- 09 MC

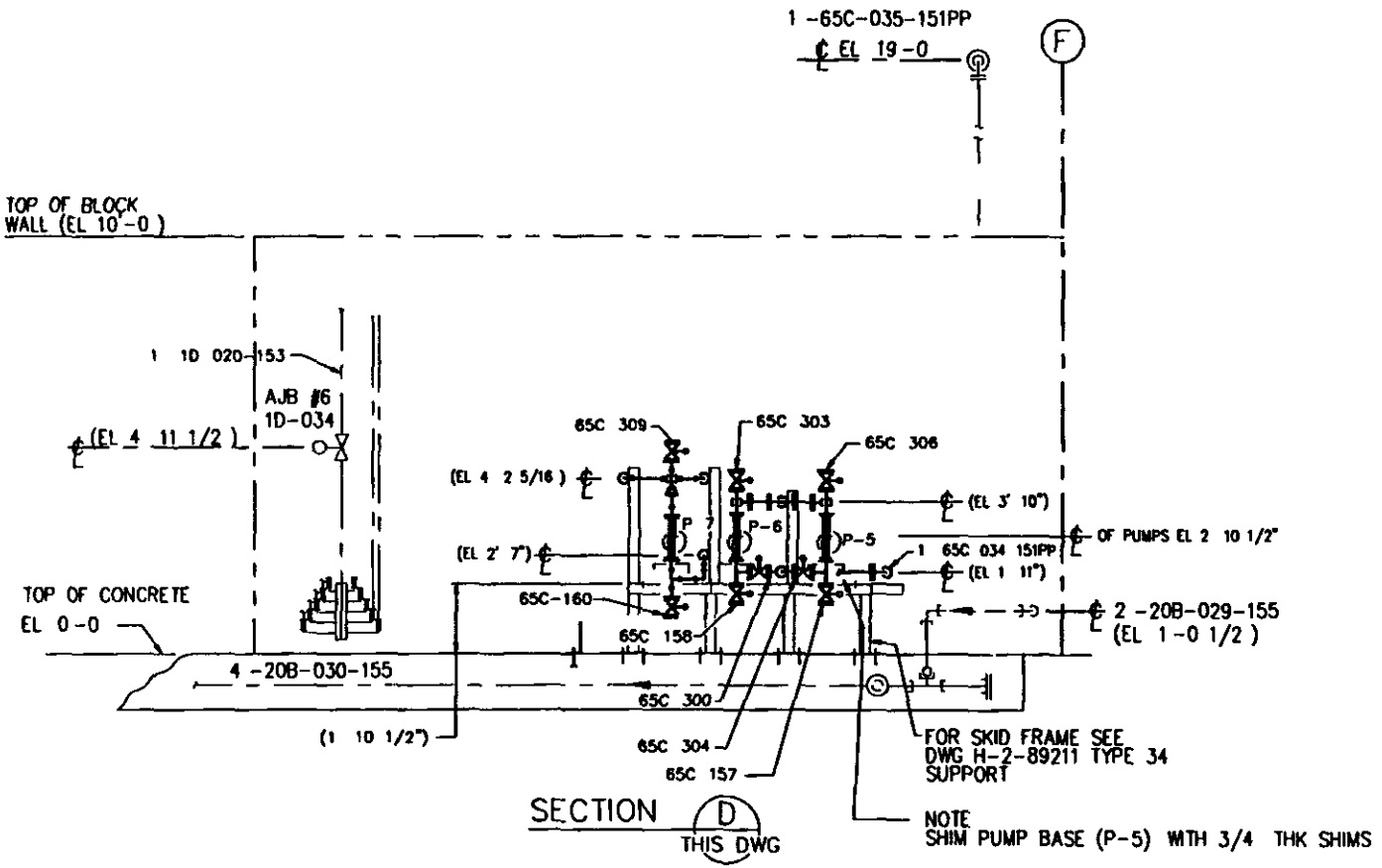

H-2-89181 SH1 REV 5

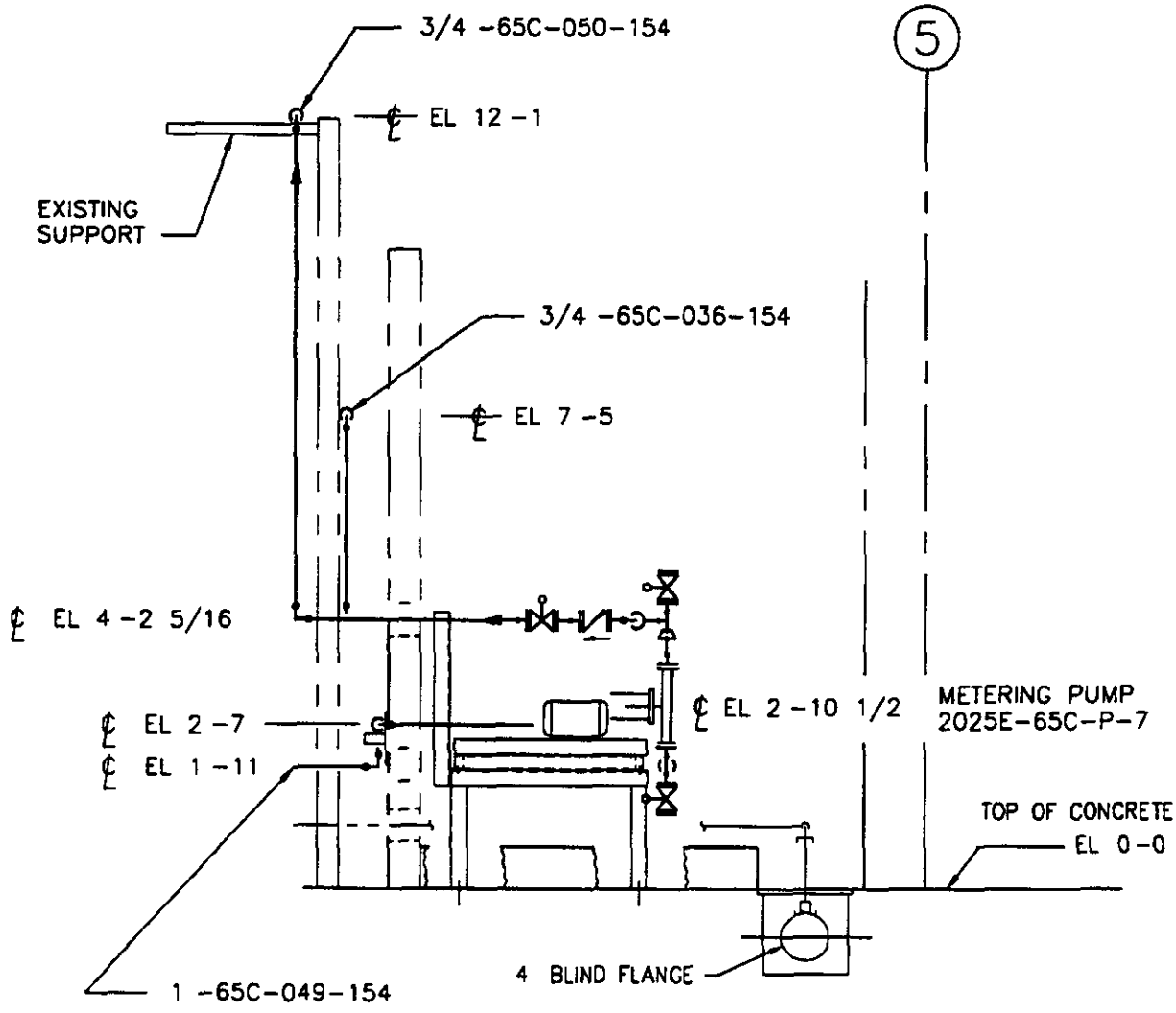

SECTION E
THIS DWG

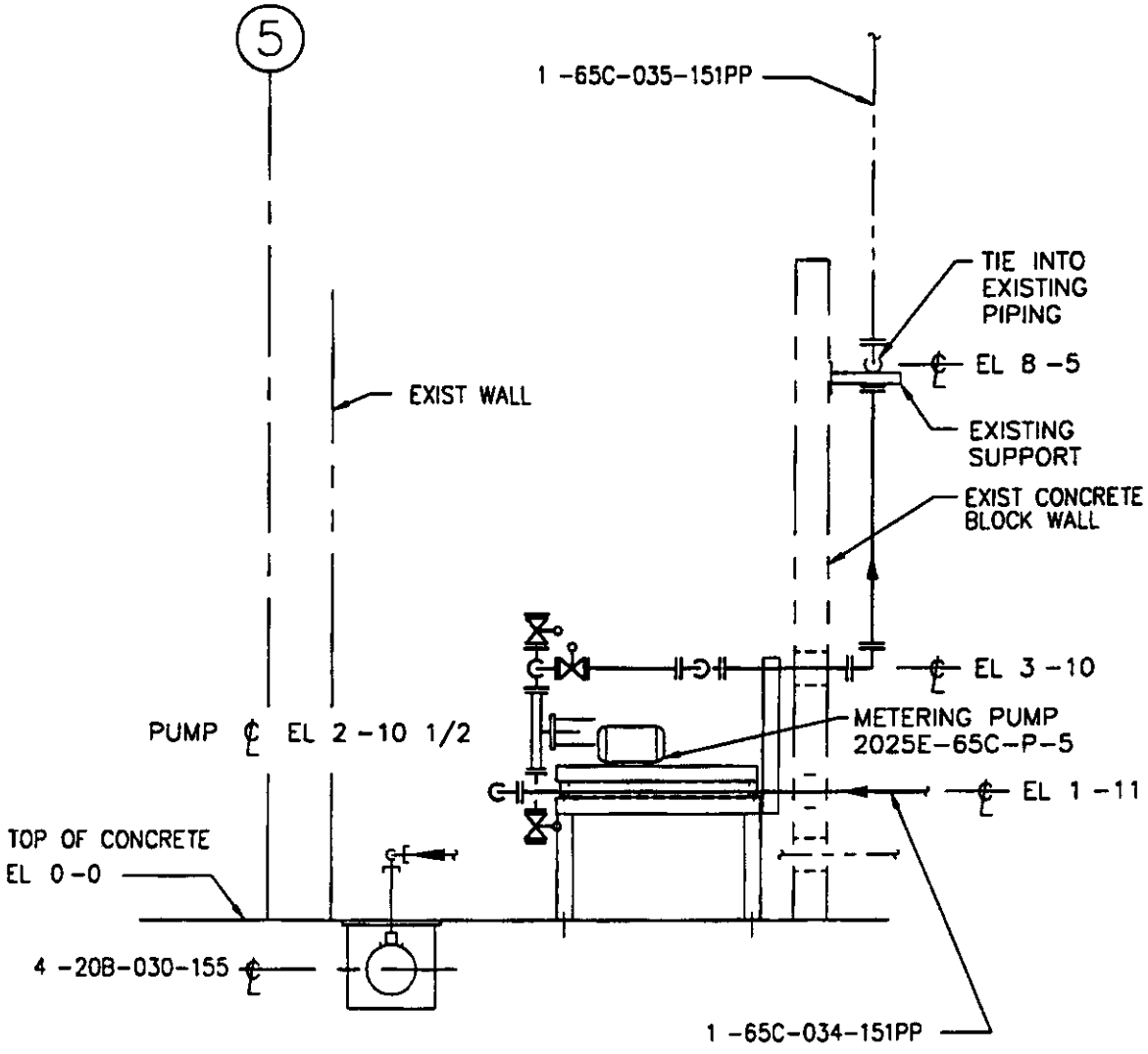

SECTION F
THIS DWG

H-2-89181 SH1, REV 5

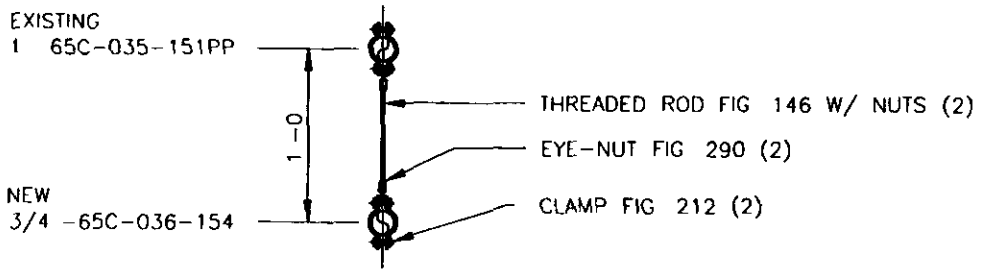

TYPE 32
(12 REQD)

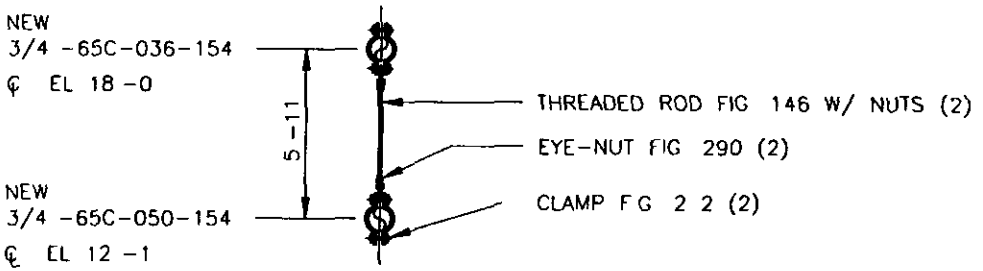

TYPE 35
(1 REQD)

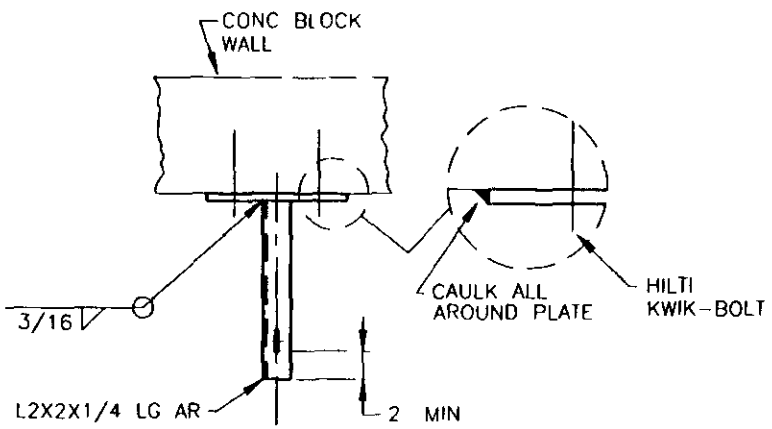

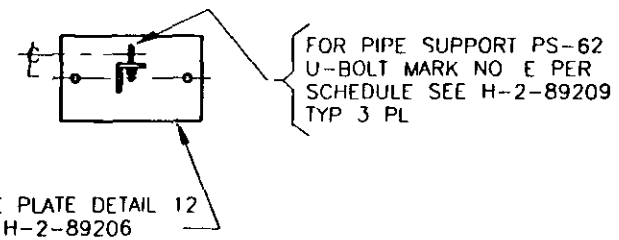

TYPE 33
(1 REQD)

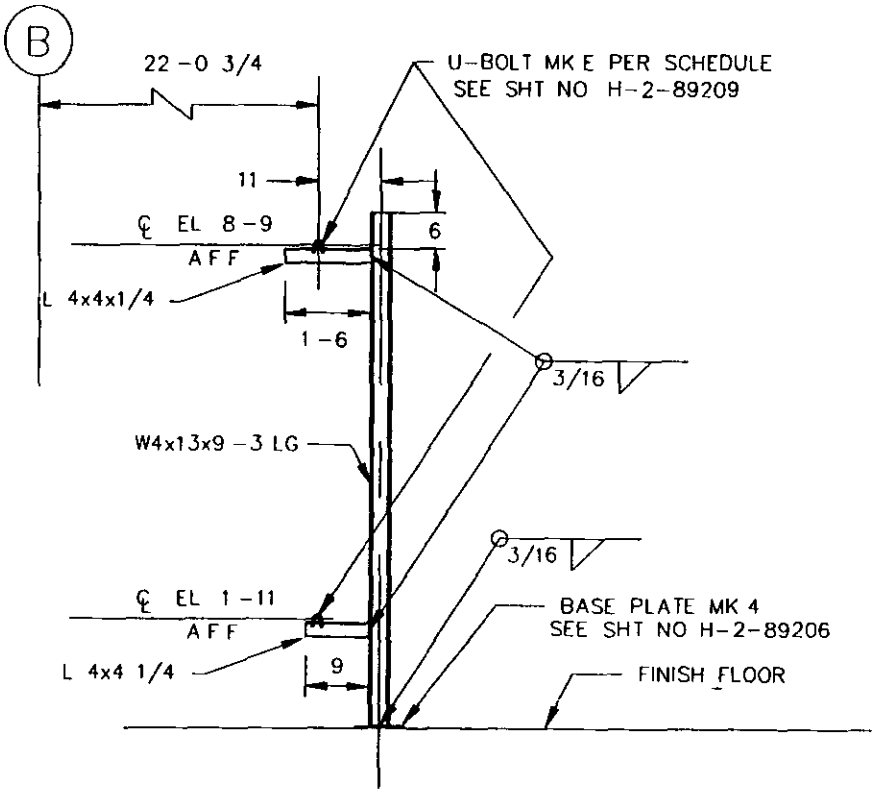

TYPE 26 (NON-TYPICAL)

ELEV LKG EAST

1/2 = 1 -0

H-2-89211 SH1 REV 1

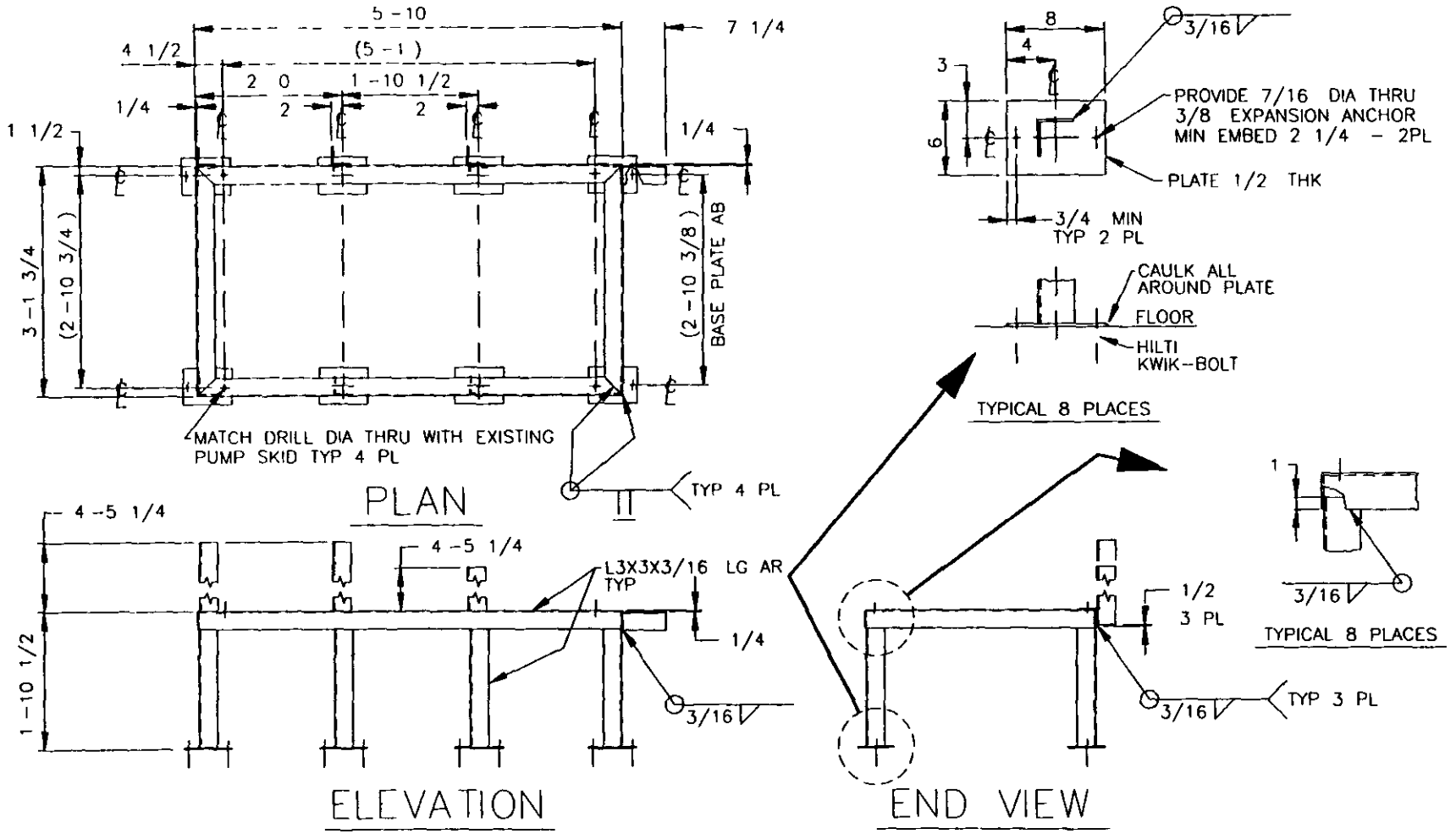

TYPE 34

H-2-89211 SH1 REV 1

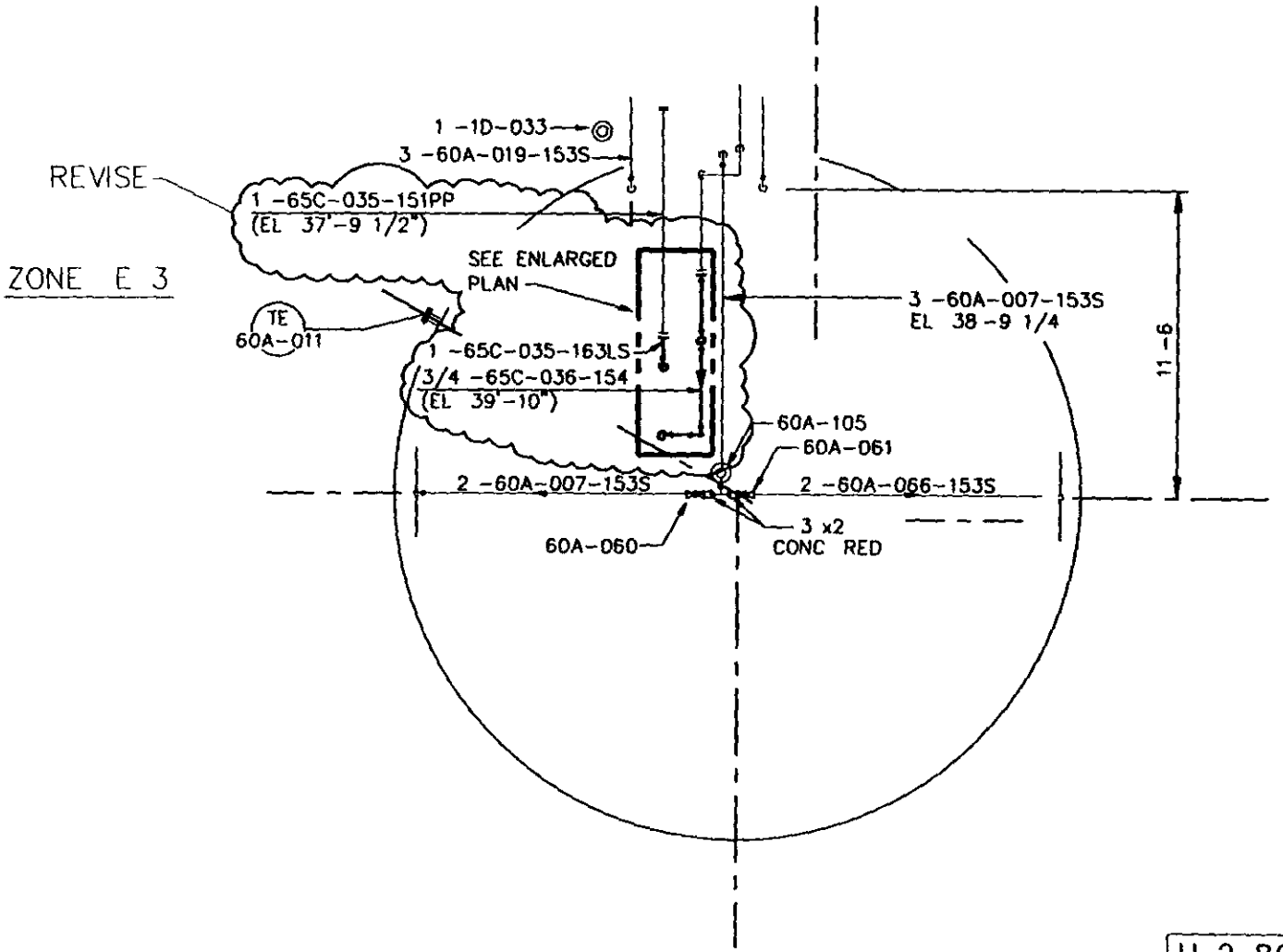

H-2-89200 SH1 REV 3

644244
Date 11/20/98

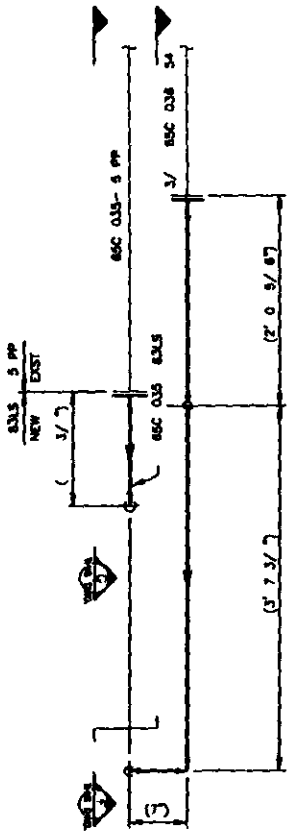

ENLARGED PLAN
SCALE: NONE

NOTE.
FIELD VERIFY DIMENSIONS
BE ORE ABRICATION

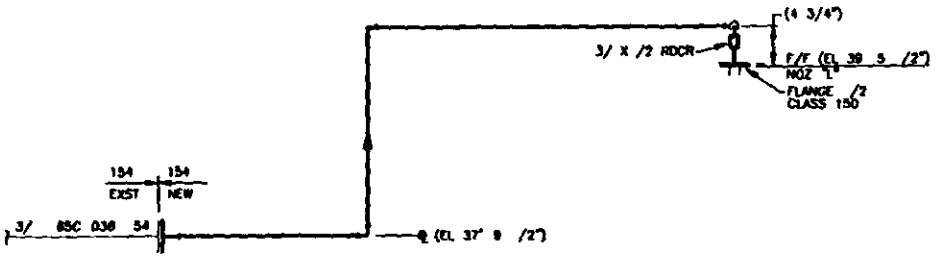

SECTION F
SCALE: NONE THIS DWG.

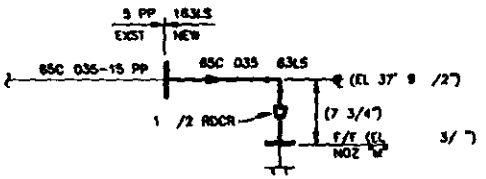

SECTION G
SCALE: NONE THIS DWG.

H-2-89200 SH1 REV 3

ECN	644244
Date	11/20/98

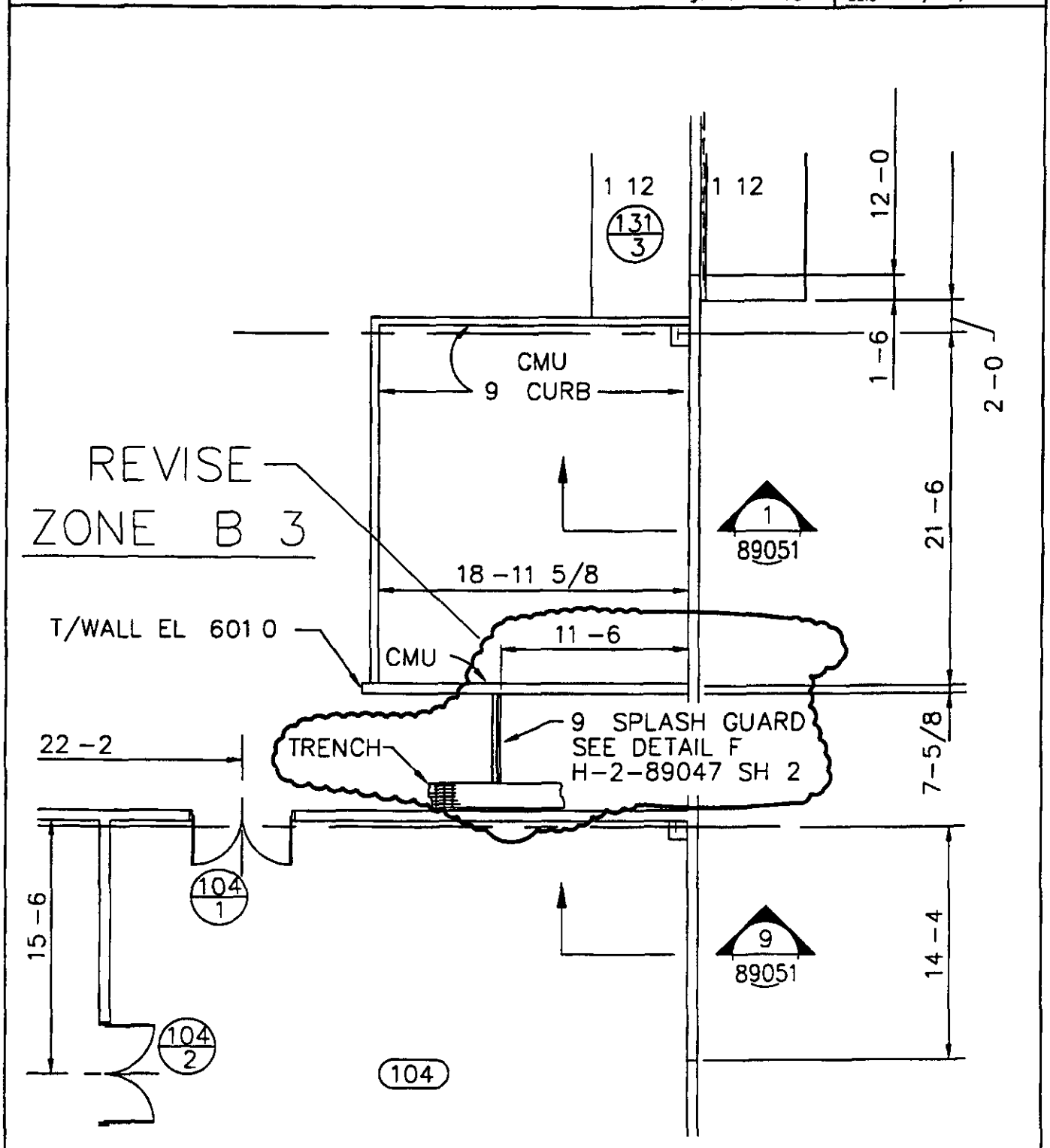

H-2-89047 SH1, REV 6

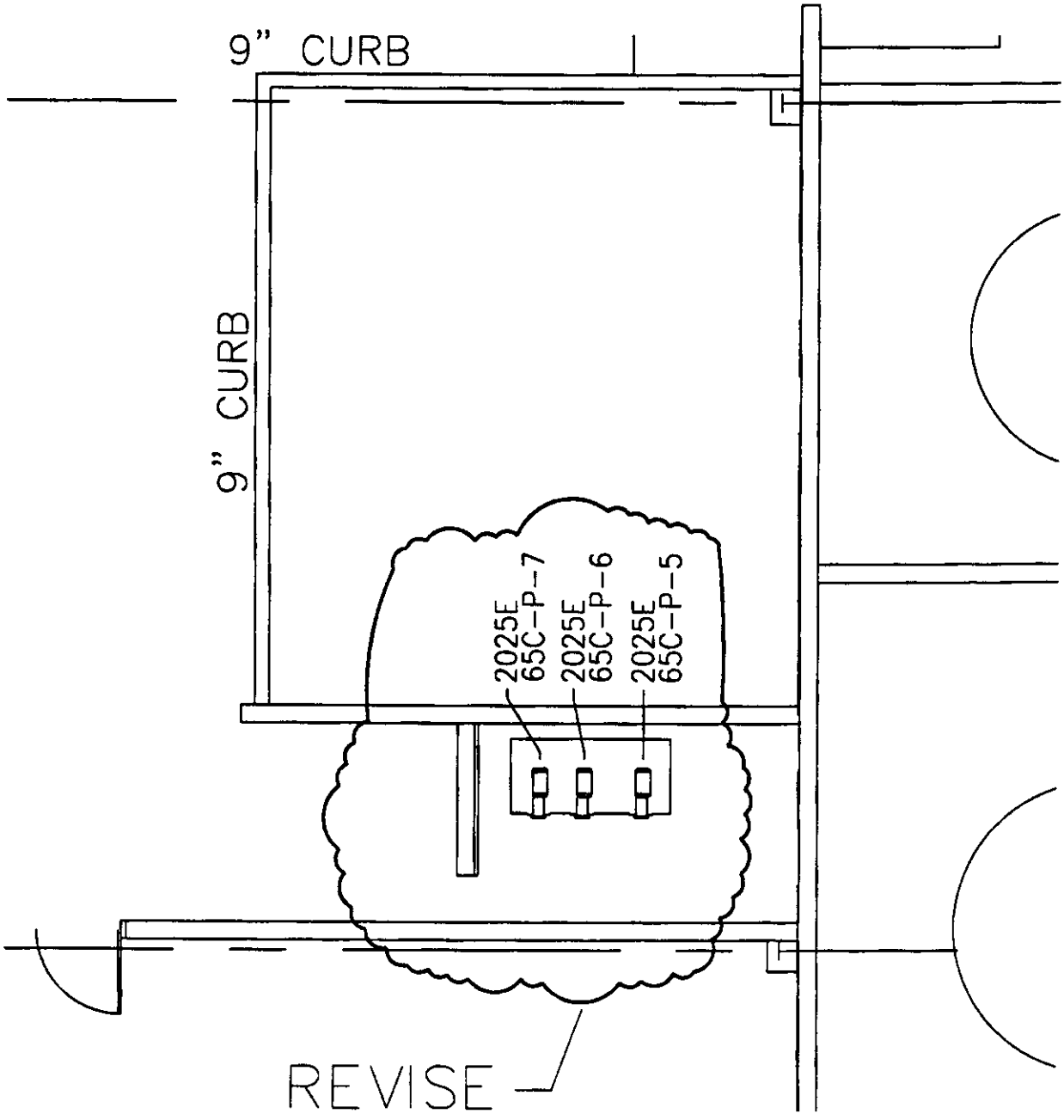

ZONE B 3

H-2-89162 SH1, REV 4

NOTE
COAT WITH SPC IN ACCORDANCE
WITH CONSTRUCTION SPEC
S-1131-103 REV 4 SECTION 09805

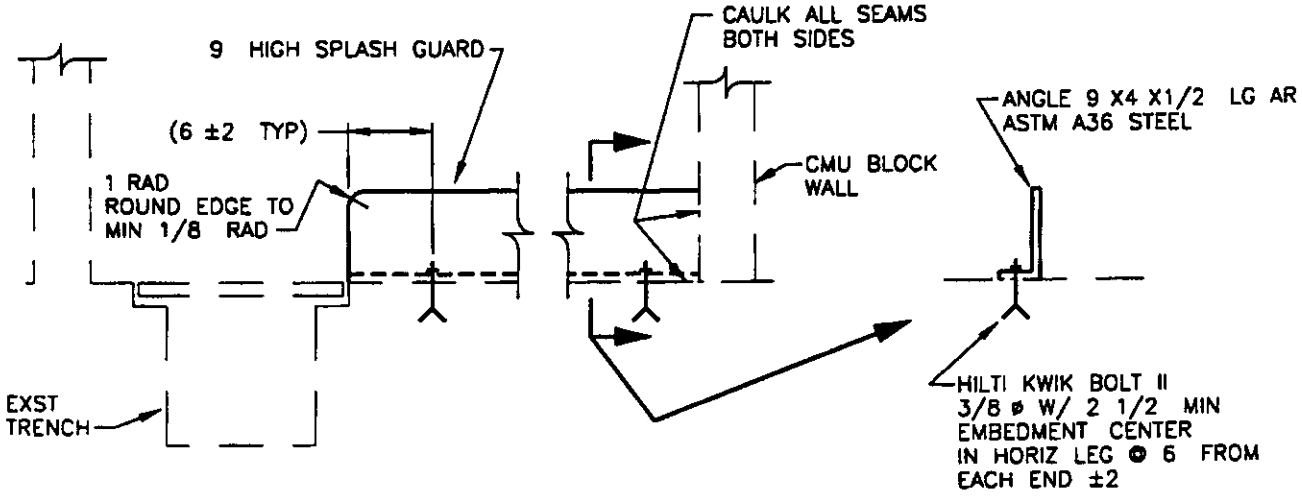

SECTION F
SCALE NONE H-2-89047 SH 1

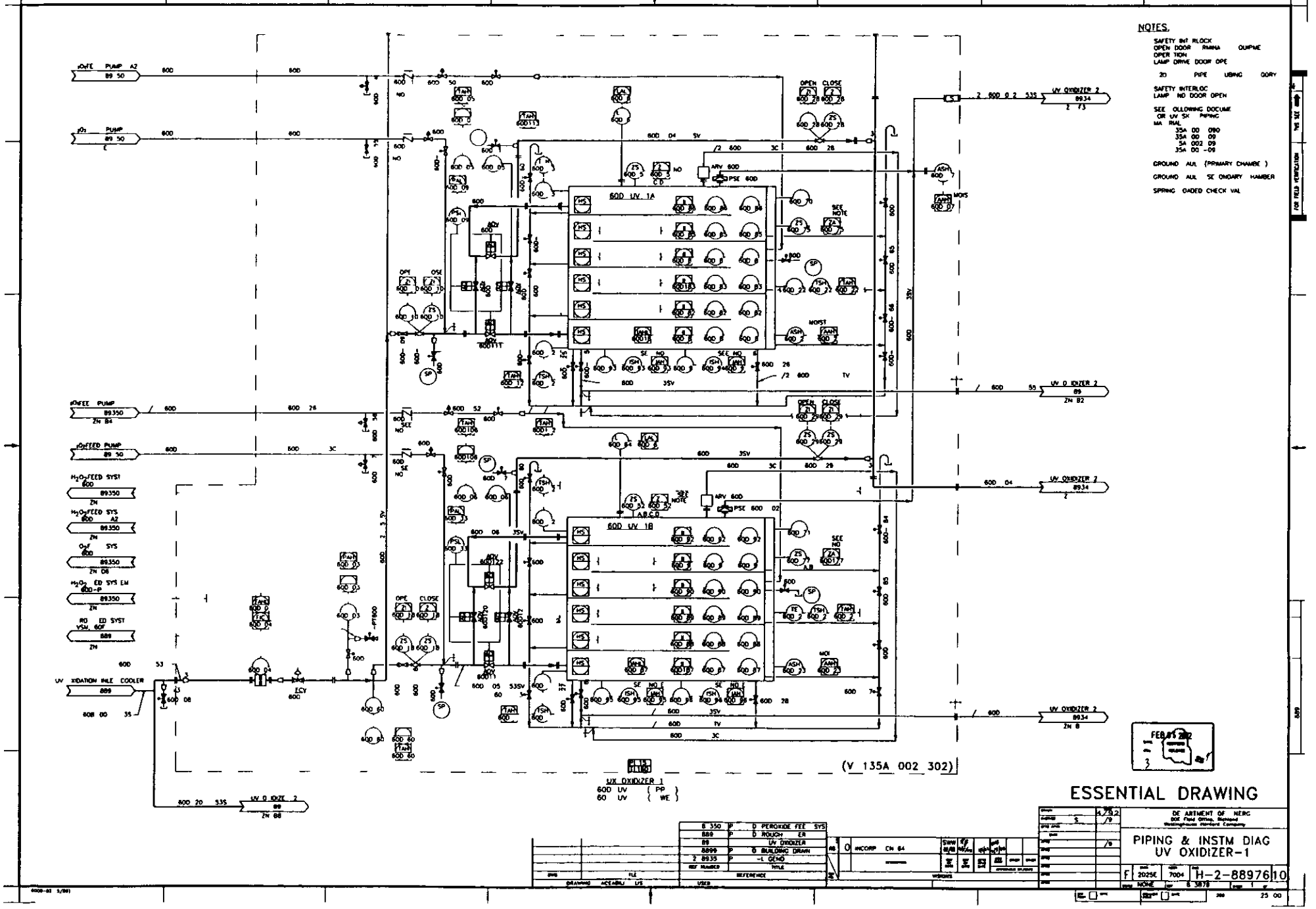
NOTES.
SAFETY INT BLOCK
OPEN DOOR
OPER TION
LAMP DRIVE DOOR OPE
SAFETY INTERLOC
LAMP NO DOOR OPEN
SEE OLLOWING DOCUME
OR UV SX PIPING
MA RIAL
35A 00 090
35A 00 09
5A 002 09
35A 00 -09
GROUND AUL (PRIMARY CHAMBE)
GROUND AUL SE ONDARY HAMBER
SPRING OADED CHECK VAL
600 UV 1A
600 UV 1B
UV OXIDIZER 2
UV OXIDIZER 1
600 UV (PP)
60 UV (WE)
(V 135A 002 302)
ESSENTIAL DRAWING
PIPING & INSTM DIAG
UV OXIDIZER-1
H-2-88976 10
2025E
7004
NONE

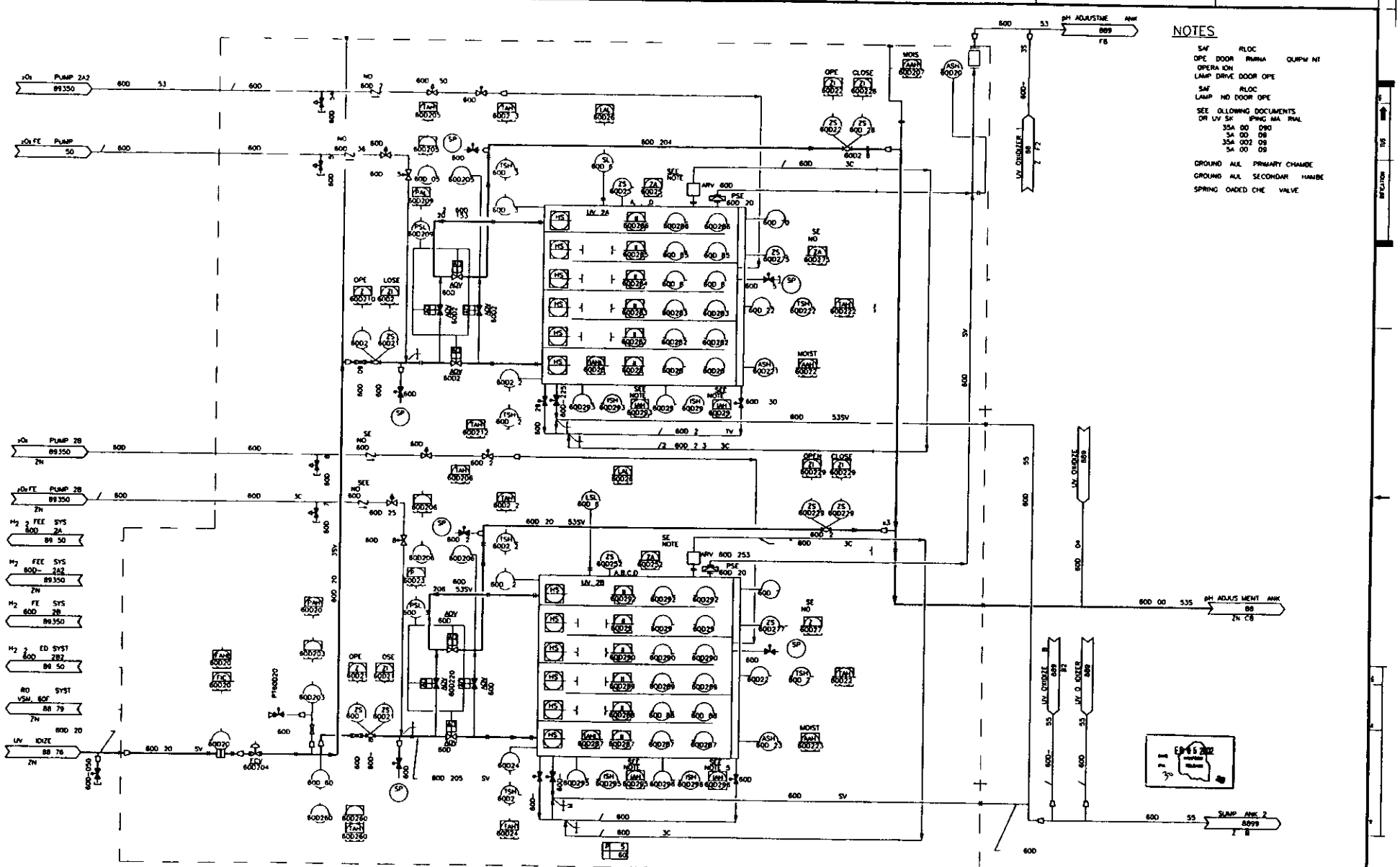
NOTES
SAF RLOC
OPE DOOR RMNA QUIPM NT
OPERA ION
LAMP DRIVE DOOR OPE
SAF RLOC
LAMP ND DOOR OPE
SEE OLLOWING DOCUMENTS
OR UV SK IPING MA RIAL
35A 00 090
3A 00 08
35A 002 09
5A 00 09
GROUND AUL PRIMARY CHAMBE
GROUND AUL SECONDAR HAMBE
SPRING OADED CHE VALVE
UV 2A
UV 2B
UV OXIDIZER 2
BOD UV 2A (UPPER)
BOD UV 2B (LOWER)
ESSENTIAL DRAWING
PIPING & INSTM DIAG
UV OXIDIZER-2
H-2-89342 8

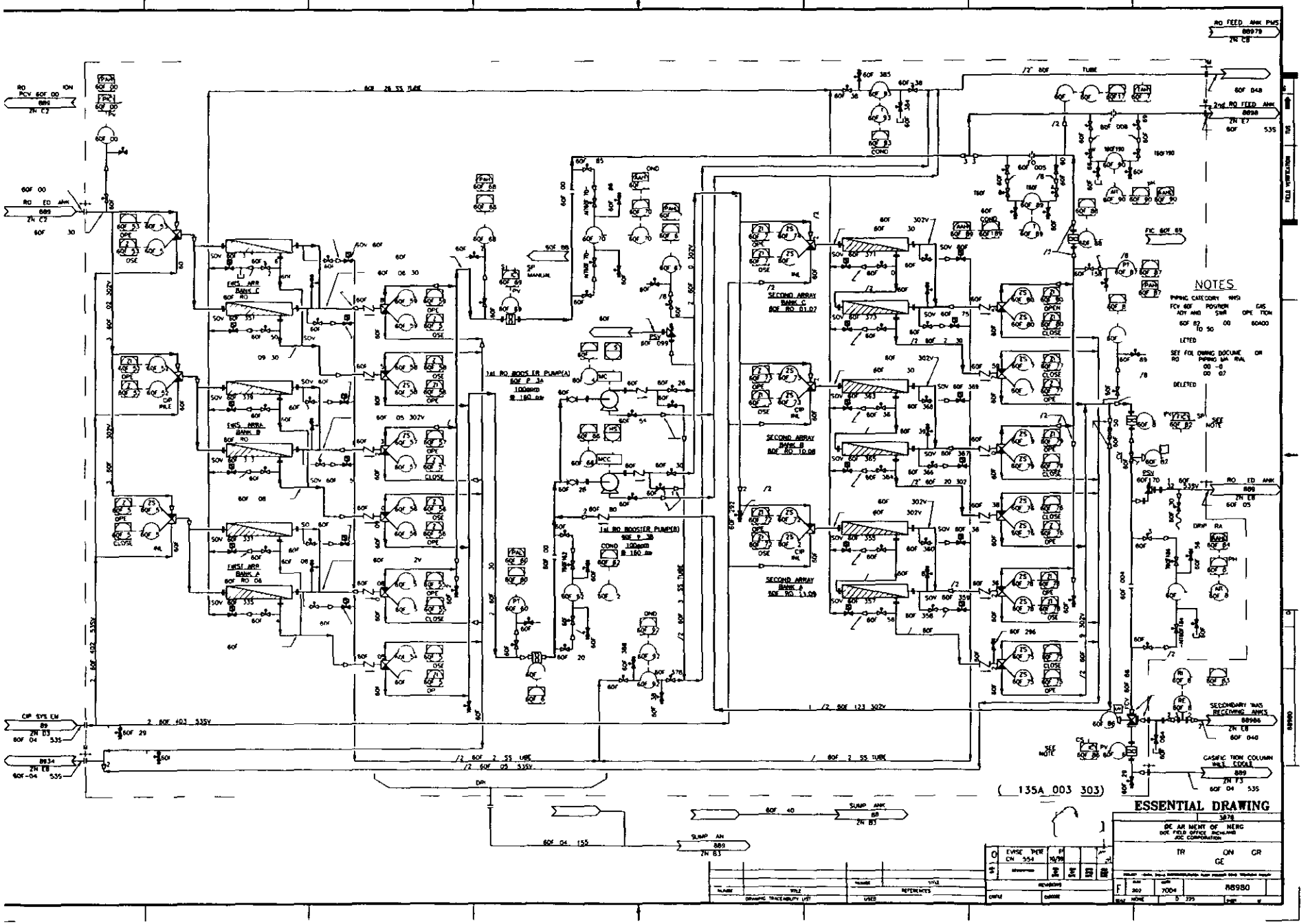
NOTES
ESSENTIAL DRAWING
(135A 003 303)
FIRST ARR BANK A
FIRS ARR BANK B
FIRS ARR BANK C
SECOND ARRAY BANK A
SECOND ARRAY BANK B
SECOND ARRAY BANK C
1st RO BOOSTER PUMP(A)
1st RO BOOSTER PUMP(B)
RO FEED ANK
2nd RO FEED ANK
SECONDARY WAS RECEIVING ANKS
CASAFIC TION COLUMN
SUMP ANK
CIP SYS EN
DRAWING TRACEABILITY LIST
REFERENCES
USED
REVISIONS
TR ON GR
GE
86980

S

CPF 18

ENGINEERING CHANGE NOTICE

ESSENTIAL

Page 1 of 54

1 ECN 662006

Proj ECN

2 ECN Category (mark one)	3 Originator s Name Organization MSIN and Telephone No	4 USQ Required?	5 Date
Supplemental [X] Direct Revision [] Change ECN [] Temporary [] Standby [] Supersedure [] Cancel/Void []	H L Roach/3M500/S6 72/373 1985	[] Yes [X] No	09/18/01
	6 Project Title/No /Work Order No Replace 3 Way Valves on RO System 60F/ CACN 101697 COA AJ60	7 Bldg /Sys /Fac No 2025E/60F	8 ApprovalDesignator T
	9 Document Numbers Changed by this ECN (includes sheet no and rev) See Block 13(a)	10 Related ECN No(s) N/A	11 Related PO No N/A

12a Modification Work	12b WorkPackage No	12c Modification WorkComplete	12d Restored to OriginalCondition(Temp or Standby ECN only)
[x] Yes (fill out Blk 12b) [] No (NA Blks 12b 12c 12d)	EL 01 00164/M	Design Authority/Cog Engineer Signature & Date	N/A Design Authority/Cog Engineer Signature & Date

13a Description of Change

13b Design Basel ne Document? [ ] Yes []No

Documents Number Changed by this ECN

H-2-88980 Rev 10 Sheet 1

H-2-88982 Rev 12 Sheet 1

Replace 3-way ball valves with two separate 2-way ball valves

Piping is to be in accordance with ETF Pipe Class Specification ADTECHS S-136H-001 pipe classes 153SV and 302V (Reference CVI V-135A-003-023 V-135A 003-024) with the exception that Flexitallic type LS gaskets will be used

Piping shall be fabricated and tested per ASME B31 3 for normal fluid service

See Continuation Sheet

14a Justification (mark one)

Criteria Change []	Design Improvement [X]	Environmental []	Facility Deactivation []
As Found []	Facilitate Const []	Const Error/Omission []	Design Error/Omission []

14b Justification Details

The Reverse Osmosis (RO) system (60F) has a number o 3-way ball valves that have a bleed by problem that prevents the use of the Clean In Place (CIP) system during RO system operation As a result the RO system must be shut down to allow for cleaning o RO membranes New 2-way ball valves will allow for use o the CIP system during system operation The RO system will not have to be shut down to allow RO membrane cleaning

15 Distribution (include name MSIN and no of copies)

MW Bowman	S6-72	1		CD Skogley	S6-71	1		
DL Flyckt	S6-71	1		NJ Sullivan	S6-72	1		
LL Huth	S6-72	1	H	RW Szelmeczka	S6-72	1		
JM Isdell	B4 39	1	H	CM Towne	S6-74	1		
R Mabry	S6-71	1		MJ Warn	S6-71	1		
BA Messinger	B4-39	1	H	RH Wight	S6-72	1		
HL Roach	S6-72	1	H	WPP Planning	S6-71	1	H	
JB Benton	S6-72	1						

(Advance Copy = H)

RELEASE STAMP

9-21-01

DATE

HANFORD RELEASE

STA 4

ID

A 7900 013 2 (05/96) GEF095

ENGINEERING CHANGE NOTICE CONTINUATION SHEET	Page 2 of 54	1 ECN (use no from pg 1) 662006

16 Design Verification Required	17 Cost Impact ENGINEERING		CONSTRUCTION		18 Schedule Impact (days)	
[x] Yes	Additional	[NA] $	Additional	[NA] $	Improvement	[NA]
[] No	Savings	[NA] $	Savings	[NA] $	Delay	[NA]

19 Change Impact Review Indicate the related documents(other than the engineering documents identified on Side 1)that will be affected by the change described in Block 13 Enter the affected document number in Block 20

SDD/DD	[NA]	Seismic/Stress Analysis	[NA]	Tank Calibration Manual	[NA]
Functional Design Criteria	[NA]	Stre s/Design Report	[NA]	Health Physics Procedure	[NA]
Operating Specification	[NA]	Interface Control Drawing	[NA]	Spares Multiple Unit Listing	[NA]
Criticality Specification	[NA]	Calibration Procedure	[NA]	Test Procedures/Specification	[NA]
Conceptual Design Report	[NA]	Installation Procedure	[NA]	Component Index	[X]
Equipment Spec	[NA]	Maintenance Procedure	[NA]	ASME Coded Item	[NA]
Const Spec	[NA]	Engineering Procedure	[NA]	Human Factor Consideration	[NA]
Procurement Spec	[NA]	Operating Instruction	[NA]	Computer Software	[X]
Vendor Information	[X]	Operating Procedure	[X]	Electric Circuit Schedule	[NA]
OM Manual	[NA]	Operational Safety Requirement	[NA]	ICRS Procedure	[NA]
FSAR/SAR	[NA]	IEFD Drawing	[NA]	Process Control Manual/Plan	[NA]
Safety Equipment List	[NA]	Cell Arrangement Drawing	[NA]	Process Flow Chart	[NA]
Radiation Work Permit	[NA]	Essential Materia Specification	[NA]	Purchase Requisition	[NA]
Environmental Impact Statement	[NA]	Fac Proc Samp Schedule	[NA]	Tickler File	[NA]
Environmental Report	[NA]	Inspection Plan	[NA]		[NA]
Environmental Permit	[NA]	Inventory Adjustment Request	[NA]		[NA]

20 Other Affected Documents (NOTE Documents listed below will not be revised by this ECN) Signatures below indicate that the signing organization has been notified of other affected documents listed below

Document Number/Revision	Document Number/Revision	Document Number Revision
POP 60F-002 Rev P 1	H 2 89297 (multiple sht s and Rev s)	
POP 60F 003 Rev E 1		

21 Approvals

	Signature	Date		Signature	Date
Design Authority	LL Huth	9-20-01	Design Agent	HL Roach	8/14/01
Cog Eng			PE		
Cog Mgr	KJ Lueck	9/20/01	QA		
QA			Safety		
Sa ety			Design		
nviron			Environ		
Othe			Other	B J Williams	9/20/01
Rad Cor			Independent Design Review		
Operations					
			DEPARTMENT OF ENERGY		
			Signature or a Control Number that tracks the Approval Signature		
			ADDITIONAL		

Drawing Changes are as follows

H-2-88980, SH 1, Zone E7

Remove and replace 3-Way ball valve 60F-103 with two 2-Way ball valves Label new valve downsteam of pipeline 3 -60F-103-302V with valve number 60F-103A Label other new 2-way valve 60F-103B

Show valve 60F-103A as open and 60F-103B as closed

Change label of (ZS) switch associated with new valve 60F-103A to ZS-60F103A

Change label of (ZS) switch associated with new valve 60F-103B to ZS-60F103B

Change label of two (ZI) inputs from 60F153 to 60F103

Show electrical connection between ZS-60F103A and ZS-60F103B

H-2-88980, SH 1, Zone D7

Remove and replace 3-Way ball valve 60F-102 with two 2-Way ball valves Label new valve downsteam of pipeline 3 -60F-102-302V with valve number 60F-102A Label other new 2-way valve 60F-102B

Show valve 60F-102A as open and 60F-102B as closed

Change label of (ZS) switch associated with new valve 60F-102A to ZS-60F102A

Change label of (ZS) switch associated with new valve 60F-102B to ZS-60F102B

Change label of two (ZI) inputs from 60F152 to 60F102

Show electrical connection between ZS-60F102A and ZS-60F102B

Change Pipeline label **2 -60F-109-302V** to **1-1/2"-60F-109-302V**

Add new ¾ branch line with ball valve and plug upstream from valve 60F-102A Show ball valve closed and label 60F-199

H-2-88980, SH 1, Zone C7

Remove and replace 3-Way ball valve 60F-101 with two 2-Way ball valves Label new valve downsteam of pipeline 3 -60F-101-302V with valve number 60F-101A Label other new 2-way valve 60F 101B

Show valve 60F-101A as closed and 60F-101B as open

Change label of (ZS) switch associated with new valve 60F-101A to ZS-60F101A

Change label of (ZS) switch associated with new valve 60F-101B to ZS-60F101B

Change label of two (ZI) inputs from 60F151 to 60F101

Show electrical connection between ZS-60F101A and ZS-60F101B

Change Pipeline label **2 -60F-108-302V** to **1-1/2 -60F-108-302V**

H-2-88980, SH 1, Zone B8

Remove 2 -60F-402-153SV pipeline label and replace with new pipeline label **2 -60F-125-302V**

H-2-88980, SH 1, Zone B8-B7

Ins all new check valve on pipeline 2 -60F-403-153SV Label check valve 60F-198

Show material break at check valve upstream flange Label pipeline downstream from the check valve 2 -60F-129 302V

Relocate ball valve 60F-291 downstream of check valve 60F-198

Connect pipeline 2 -60F-125 302V to pipeline 2 -60F 129-302V between check valve 60F-198 and ¾ branch line with valve 60F-291

H-2-88980, SH 1, Zones D6

Remove and replace 3-Way ball valve 60F-117 with two 2-Way ball valves Label new valve upstream of pipeline 2 -60F-128-153SV with valve number 60F-117A Label other new 2-way valve 60F 117B

Show valve 60F-117A as open and valve 60F-117B as closed

Change label of (ZS) switch associated with new valve 60F-117A to ZS-60F117A

Change label of (ZS) switch associated with new valve 60F-117B to ZS-60F117B

Change label of two (ZI) inputs from 60F159 to 60F117

Show electrical connection between ZS-60F117A and ZS-60F117B

Remove and replace 3-Way ball valve 60F-114 with two 2-Way ball valves Label new valve upstream of pipeline 2 -60F-107-302V with valve number 60F-114A Label other new 2-way valve 60F-114B

Show valve 60F-114A as open and valve 60F-114B as closed

Change label of (ZS) switch associated with new valve 60F-114A to ZS-60F114A

Change label of (ZS) switch associated with new valve 60F-114B to ZS-60F114B

Change label of two (ZI) inputs from 60F158 to 60F114

Show electrical connection between ZS-60F114A and ZS-60F114B

Correct orientation of pipe reducer shown upstream check valve 60F-115

H-2-88980, SH 1, Zone C6

Remove and replace 3-Way ball valve 60F-112 with two 2-Way ball valves Label new valve upstream of pipeline 2 -60F-128-153SV with valve number 60F-112A Label other new 2-way valve 60F-112B

Show valve 60F-112A as open and 60F-112B as closed

Change label of (ZS) switch associated with new valve 60F-112A to ZS-60F112A

Change label of (ZS) switch associated with new valve 60F-112B to ZS-60F112B

Change label of two (ZI) inputs from 60F157 to 60F112

Show electrical connection between ZS-60F112A and ZS-60F112B

Remove and replace 3-Way ball valve 60F-109 with two 2-Way ball valves Label new valve upstream of pipeline 2 -60F-107-302V with valve number 60F-109A Label other new 2-way valve 60F-109B

Show valve 60F-109A as open and valve 60F-109B as closed

Change label of (ZS) switch associated with new valve 60F-109A to ZS-60F109A

Change label of (ZS) switch associated with new valve 60F-109B to ZS-60F109B

Change label of two (ZI) inputs from 60F156 to 60F109

Show electrical connection between ZS-60F109A and ZS-60F109B

Remove and replace 3-Way ball valve 60F-107 with two 2-Way ball valves Label new valve upstream of pipeline 2 -60F-128-153SV with valve number 60F-107A Label other new 2-way valve 60F-107B

Show valve 60F-107A as closed and valve 60F-107B as open

Change label of (ZS) switch associated with new valve 60F-107A to ZS-60F107A

Change label of (ZS) switch associated with new valve 60F-107B to ZS-60F107B

Change label of two (ZI) inputs from 60F155 to 60F107

Show electrical connection between ZS-60F107A and ZS-60F107B

Correct orientation of pipe reducer shown upstream check valve 60F-110

H-2-88980, SH 1, Zone B7

Change Pipeline label **2 -60F-107-302V** to **1-1/2 -60F-130-302V**

H-2-88980, SH 1, Zone B6

Remove and replace 3-Way ball valve 60F-104 with two 2-Way ball valves Label new valve upstream of pipeline 2 -60F 107-302V with valve number 60F-104A Label other new 2-way valve 60F 104B

Show valve 60F-104A as closed and valve 60F-104B as open

Change label of (ZS) switch associated with new valve 60F-104A to ZS-60F104A

Change label of (ZS) switch associated with new valve 60F-104B to ZS-60F104B

Change label of two (ZI) inputs from 60F154 to 60F104

Show electrical connection between ZS-60F104A and ZS-60F104B

Correct orientation of pipe reducer shown upstream check valve 60F-105

H-2-88980, SH 1, Zone E4

Remove and replace 3-Way ball valve 60F-135 with two 2-Way ball valves Label new valve downstream of pipeline 2 -60F-110-302V with valve number 60F-135A Label other new 2-way valve 60F-135B

Show valve 60F-135A as open and valve 60F-135B as closed

Change label of (ZS) switch associated with new valve 60F-135A to ZS-60F135A

Change label of (ZS) switch associated with new valve 60F-135B to ZS-60F135B

Change label of two (ZI) inputs from 60F174 to 60F135

Show electrical connection between ZS-60F135A and ZS-60F135B

H-2-88980, SH 1, Zone D4

Remove and replace 3 Way ball valve 60F-134 with two 2-Way ball valves Label new valve downstream of pipeline 2 -60F-110-302V with valve number 60F-134A Label other new 2-way valve 60F-134B

Show valve 60F-134A as open and valve 60F-134B as closed

Change label of (ZS) switch associated with new valve 60F-134A to ZS-60F134A

Change label of (ZS) switch associated with new valve 60F-134B to ZS-60F134B

Change label of two (ZI) inputs from 60F173 to 60F134

Show electrical connection between ZS-60F134A and ZS-60F134B

H-2-88980, SH 1, Zone C4

Remove and replace 3-Way ball valve 60F-133 with two 2-Way ball valves Label new valve downstream of pipeline 2 -60F-110-302V with valve number 60F-133A Label other new 2-way valve 60F-133B

Show valve 60F-133A as closed and valve 60F-133B as open

Change label of (ZS) switch associated with new valve 60F-133A to ZS-60F133A

Change label of (ZS) switch associated with new valve 60F-133B to ZS-60F133B

Change label of two (ZI) inputs from 60F172 to 60F133

Show electrical connection between ZS-60F133A and ZS-60F133B

H-2-88980, SH 1, Zone D2

Remove and replace 3-Way ball valve 60F-145 with two 2-Way ball valves Label new valve upstream of FT-60F188 with valve number 60F-145A Label other new 2-way valve 60F-145B

Show valve 60F-145A as open and valve 60F-145B as closed

Change label of (ZS) switch associated with new valve 60F-145A to ZS-60F145A

Change label of (ZS) switch associated with new valve 60F-145B to ZS-60F145B

Change label of two (ZI) inputs from 60F180 to 60F145

Show electrical connection between ZS-60F145A and ZS-60F145B

Remove and replace 3-Way ball valve 60F-147 with two 2-Way ball valves Label new valve upstream of FT 60F-182 with valve number 60F 147A Label other new 2-way valve 60F-147B

Show valve 60F 147A as open and valve 60F-147B as closed

Change label of (ZS) switch associated with new valve 60F 147A to ZS-60F147A

Change label of (ZS) switch associated with new valve 60F-147B to ZS-60F147B

Change label of two (ZI) inputs from 60F177 to 60F147

Show electrical connection between ZS-60F147A and ZS-60F147B

Remove and replace 3-Way ball valve 60F-140 with two 2-Way ball valves Label new valve upstream of FT-60F188 with valve number 60F-140A Label other new 2-way valve 60F-140B

Show valve 60F-140A as open and valve 60F-140B as closed

Change label of (ZS) switch associated with new valve 60F-140A to ZS-60F140A

Change label of (ZS) switch associated with new valve 60F-140B to ZS-60F140B

Change label of two (ZI) inputs from 60F179 to 60F140

Show electrical connection between ZS-60F140A and ZS-60F140B

H-2-88980, SH 1, Zone C2

Remove and replace 3-Way ball valve 60F-137 with two 2-Way ball valves Label new valve upstream of pipeline 1-1/2 -60F-119-302V with valve number 60F-137A Label other new 2-way valve 60F-137B

Show valve 60F-137A as open and valve 60F-137B as closed

Change label of (ZS) switch associated with new valve 60F-137A to ZS-60F137A

Change label of (ZS) switch associated with new valve 60F-137B to ZS-60F137B

Change label of two (ZI) inputs from 60F176 to 60F137

Show electrical connection between ZS-60F137A and ZS-60F137B

Remove and replace 3-Way ball valve 60F-182 with two 2-Way ball valves Label new valve upstream of FT-60F188 with valve number 60F-182A Label other new 2-way valve 60F-182B

Show valve 60F-182B as open and valve 60F-182A as closed

Change label of (ZS) switch associated with new valve 60F 182A to ZS-60F182A

Change label of (ZS) switch associated with new valve 60F-182B to ZS-60F182B

Change label of two (ZI) inputs from 60F178 to 60F182

Show electrical connection between ZS-60F182A and ZS-60F182B

H-2-88980, SH 1, Zone C3

Change pipeline label from 1-1/2 -60F-110-302V to 1-1/2 -60F-132-302V

H-2-88980, SH 1, Zone B2

Remove and replace 3-Way ball valve 60F-142 with two 2-Way ball valves Label new valve upstream of pipeline 1-1/2 -60F-119-302V with valve number 60F-142A Label other new 2-way valve 60F-142B

Show valve 60F-142B as open and valve 60F-142A as closed

Change label of (ZS) switch associated with new valve 60F-142A to ZS-60F142A

Change label of (ZS) switch associated with new valve 60F-142B to ZS-60F142B

Change label of two (ZI) inputs from 60F175 to 60F142

Show electrical connection between ZS-60F142A and ZS-60F142B

H-2-88982, SH 1, Zone E7

Remove and replace 3-Way ball valve 60F-223 with two 2-Way ball valves Label new valve downsteam of pipeline 3 -60F-303-302V with valve number 60F-223A Label other new 2-way valve 60F-223B

Show valve 60F-223A as open and 60F-223B as closed

Change label of (ZS) switch associated with new valve 60F-223A to ZS-60F223A

Change label of (ZS) switch associated with new valve 60F-223B to ZS-60F223B

Change label of two (ZI) inputs from 60F253 to 60F223

Show electrical connection between ZS-60F223A and ZS-60F223B

H-2-88982, SH 1, Zone D7

Remove and replace 3-Way ball valve 60F-222 with two 2-Way ball valves Label new valve downsteam of pipeline 3 -60F-302-302V with valve number 60F 222A Label other new 2-way valve 60F-222B

Show valve 60F-222A as open and 60F-222B as closed

Change label of (ZS) switch associated with new valve 60F-222A to ZS-60F222A

Change label of (ZS) switch associated with new valve 60F-222B to ZS-60F222B

Change label of two (ZI) inputs from 60F252 to 60F222

Show electrical connection between ZS-60F222A and ZS-60F222B

H-2-88982, SH 1, Zone C7

Remove and replace 3-Way ball valve 60F-221 with two 2-Way ball valves Label new valve downsteam of pipeline 3 -60F-301-302V with valve number 60F-221A Label other new 2-way valve 60F-221B

Show valve 60F-221A as closed and 60F-221B as open

Change label of (ZS) switch associated with new valve 60F-221A to ZS-60F221A

Change label of (ZS) switch associated with new valve 60F-221B to ZS-60F221B

Change label of two (ZI) inputs from 60F251 to 60F221

Show electrical connection between ZS-60F221A and ZS-60F221B

H-2-88982, SH 1, Zones E5

Remove and replace 3-Way ball valve 60F-240 with two 2-Way ball valves Label new valve upstream of pipeline 2 -60F-319-153S with valve number 60F-240A Label other new 2-way valve 60F-240B

Show valve 60F-240A as open and valve 60F-240B as closed

Change label of (ZS) switch associated with new valve 60F 240A to ZS-60F240A

Change label of (ZS) switch associated with new valve 60F-240B to ZS-60F240B

Change label of two (ZI) inputs from 60F259 to 60F240

Show electrical connection between ZS-60F240A and ZS 60F240B

H-2-88982, SH 1, Zones D5

Remove and replace 3-Way ball valve 60F-238 with two 2-Way ball valves Label new valve upstream of pipeline 1 -60F-313-302V with valve number 60F-238A Label other new 2-way valve 60F-238B

Show valve 60F-238A as open and valve 60F-238B as closed

Change label of (ZS) switch associated with new valve 60F-238A to ZS-60F238A

Change label of (ZS) switch associated with new valve 60F-238B to ZS-60F238B

Change label of two (ZI) inputs from 60F256 to 60F238

Show electrical connection between ZS-60F238A and ZS-60F238B

Remove and replace 3-Way ball valve 60F-233 with two 2-Way ball valves Label new valve ups ream of pipeline 2 -60F-3 9 153S with valve number 60F-233A Label other new 2-way valve 60F-233B

Show valve 60F-233A as open and 60F-233B as closed

Change label of (ZS) switch associated with new valve 60F-233A to ZS-60F233A

Change label of (ZS) switch associated with new valve 60F-233B to ZS-60F233B

Change label of two (ZI) inputs from 60F258 to 60F233

Show electrical connection between ZS-60F233A and ZS-60F233B

H-2-88982, SH 1, Zones C5

Remove and replace 3-Way ball valve 60F-231 with two 2-Way ball valves Label new valve upstream of pipeline 1 -60F-313-302V with valve number 60F-231A Label other new 2-way valve 60F-231B

Show valve 60F-231A as open and valve 60F-231B as closed

Change label of (ZS) switch associated with new valve 60F-231A to ZS-60F231A

Change label of (ZS) switch associated with new valve 60F-231B to ZS-60F231B

Change label of two (ZI) inputs from 60F255 to 60F231

Show electrical connection between ZS-60F231A and ZS-60F231B

Remove and replace 3-Way ball valve 60F-228 with two 2-Way ball valves Label new valve upstream of pipeline 2 -60F-319-153S with valve number 60F-228A Label other new 2-way valve 60F-228B

Show valve 60F-228A as closed and valve 60F-228B as open

Change label of (ZS) switch associated with new valve 60F-228A to ZS-60F228A

Change label of (ZS) switch associated with new valve 60F-228B to ZS-60F228B

Change label of two (ZI) inputs from 60F257 to 60F228

Show electrical connection between ZS-60F228A and ZS-60F228B

H-2-88982, SH 1, Zones B5

Remove and replace 3-Way ball valve 60F-224 with two 2-Way ball valves Label new valve upstream of pipeline 1 -60F-313-302V with valve number 60F-224A Label other new 2-way valve 60F-224B

Show valve 60F-224A as closed and valve 60F-224B as open

Change label of (ZS) switch associated with new valve 60F-224A to ZS-60F224A

Change label of (ZS) switch associated with new valve 60F-224B to ZS-60F224B

Change label of two (ZI) inputs from 60F254 to 60F224

Show electrical connection between ZS-60F224A and ZS-60F224B

Relabel pipeline 1-1/2 -60F-313 302V to 1-1/2 -60F-323-302V

H-2-88982, SH 1, Zones B8

Install new check valve on pipeline **2 -60F-404-153SV** Label check valve 60F-197 Label pipeline downstream of check valve **2"-60F-324-302V** Place material break symbol at upstream flange of check valve 60F-197

Relocate ball valve 60F-299 on downstream side of check valve 60F-197

Place material break at flange connection between pipelines 2 60F-046-153S and 2 -60F-404-153SV

ECN CONSTRUCTION NOTES ONLY
DO NOT INCORPORATE ONTO DRAWINGS

1 ETF Class 302V flange connections

a) Gasket shall be flat ring Type 304 SST with flexicarb filler spiral wound flexitallic Style LS or Equal for **300 LB** ANSI B16 5 raised face flanges

b) Flanges shall be connected using continuously threaded stud with two nuts ASTM A193 GR B7 Steel ANSI B1 1

c) Nuts shall be hexagon semi-finished Heavy Series ANSI B18 2 2 ASTM A194 GR 2H heavy hex nuts with lock washer

d) Lubricate all threads and washers prior to applying bolt torque

e) Flange bolt torque shall be in the range shown in the following table

½	25 to 27 ft-lb
¾	50 to 52 ft-lb
1	50 to 52 ft-lb
1-1/2	83 to 85 ft-lb
2	50 to 52 ft-lb
3	83 to 85 ft-lb

2 For ETF 153SV flange connections

a) Gasket shall be flat ring Type 304 SST with flexicarb filler spiral wound flexitallic Style LS or Equal for **150 LB** ANSI B16 5 raised face flanges

b) Flanges shall be connected using continuously threaded stud with two nuts ASTM A193 GR B7 Steel ANSI B1 1

c) Nuts shall be hexagon semi-finished Heavy Series ANSI B18 2 2 ASTM A194 GR 2H heavy hex nuts with lock washer

d) Lubricate all threads and washers prior to applying bolt torque

e) Flange bolt torque shall be in the range shown in the following table

¾	25 to 27 ft-lb
1	25 to 27 ft-lb
1-1/2	25 to 27 ft-lb
2	50 to 52 ft-lb
3	50 to 52 ft lb

3 Related ECN s (or FMP s) will be generated by others for logic and electrical changes

ECN No	Page
662006	10 OF 54

Ref Dwg	Sh	Rev
H-2-88980	1	10

Zone
AS SHOWN

"WAS"

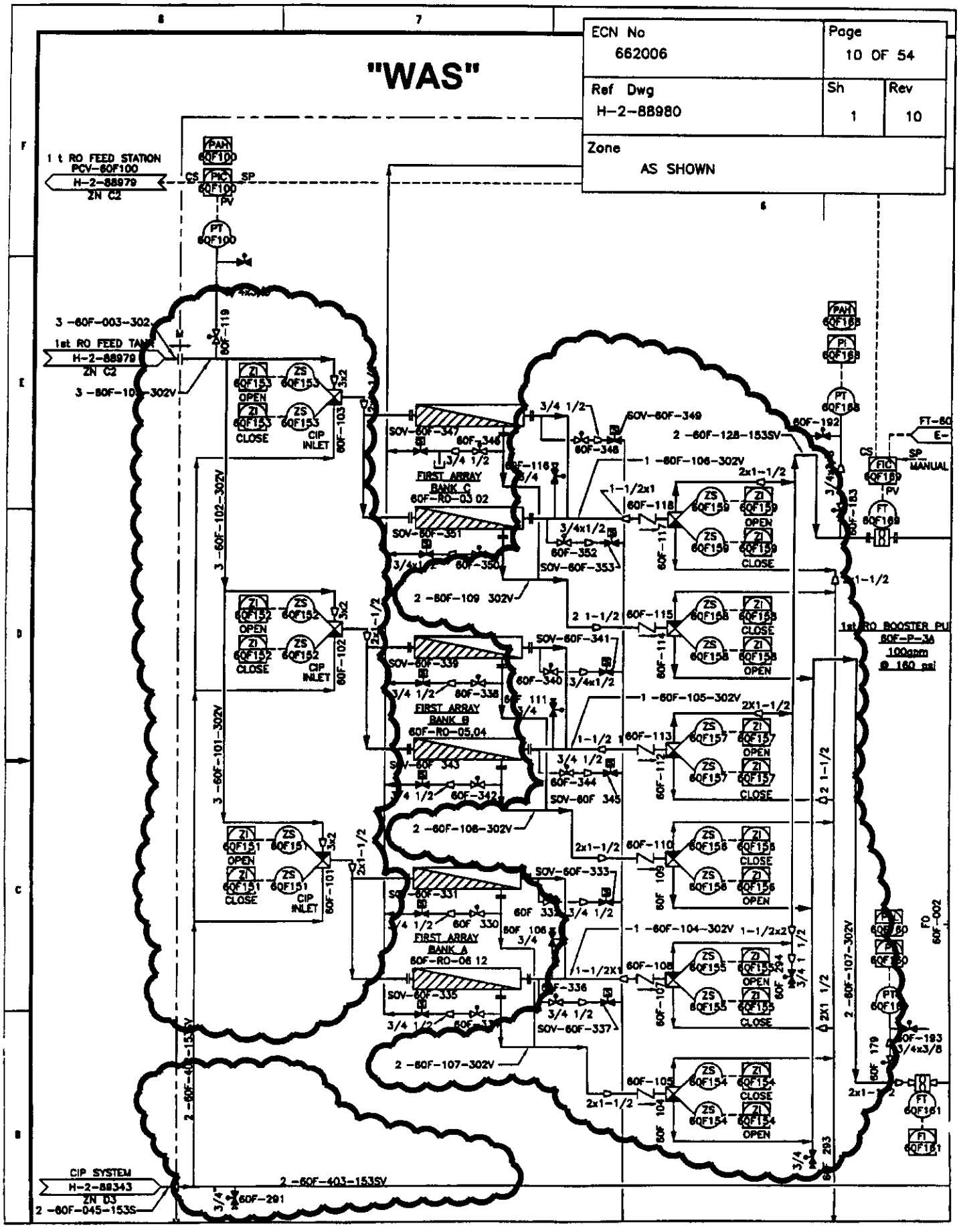

ECN No	Page
662006	11 OF 54
Ref Dwg	Sh / Rev
H-2-88980	1 / 10
Zone	
AS SHOWN	

"IS"

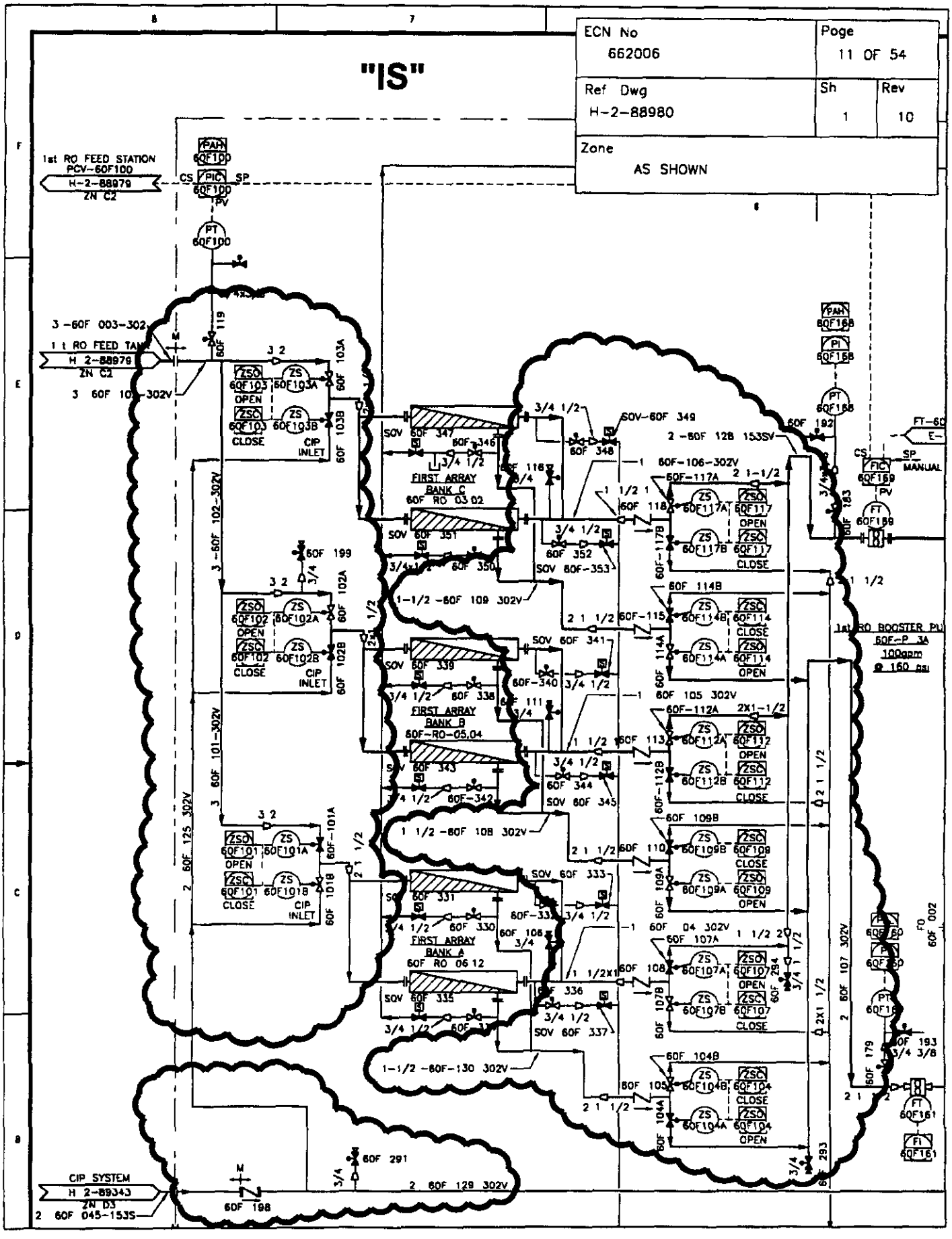

ECN No	Page
662006	12 OF 54
Ref Dwg	Sh / Rev
H-2-88980	1 / 10
Zone	
AS SHOWN	

"WAS"

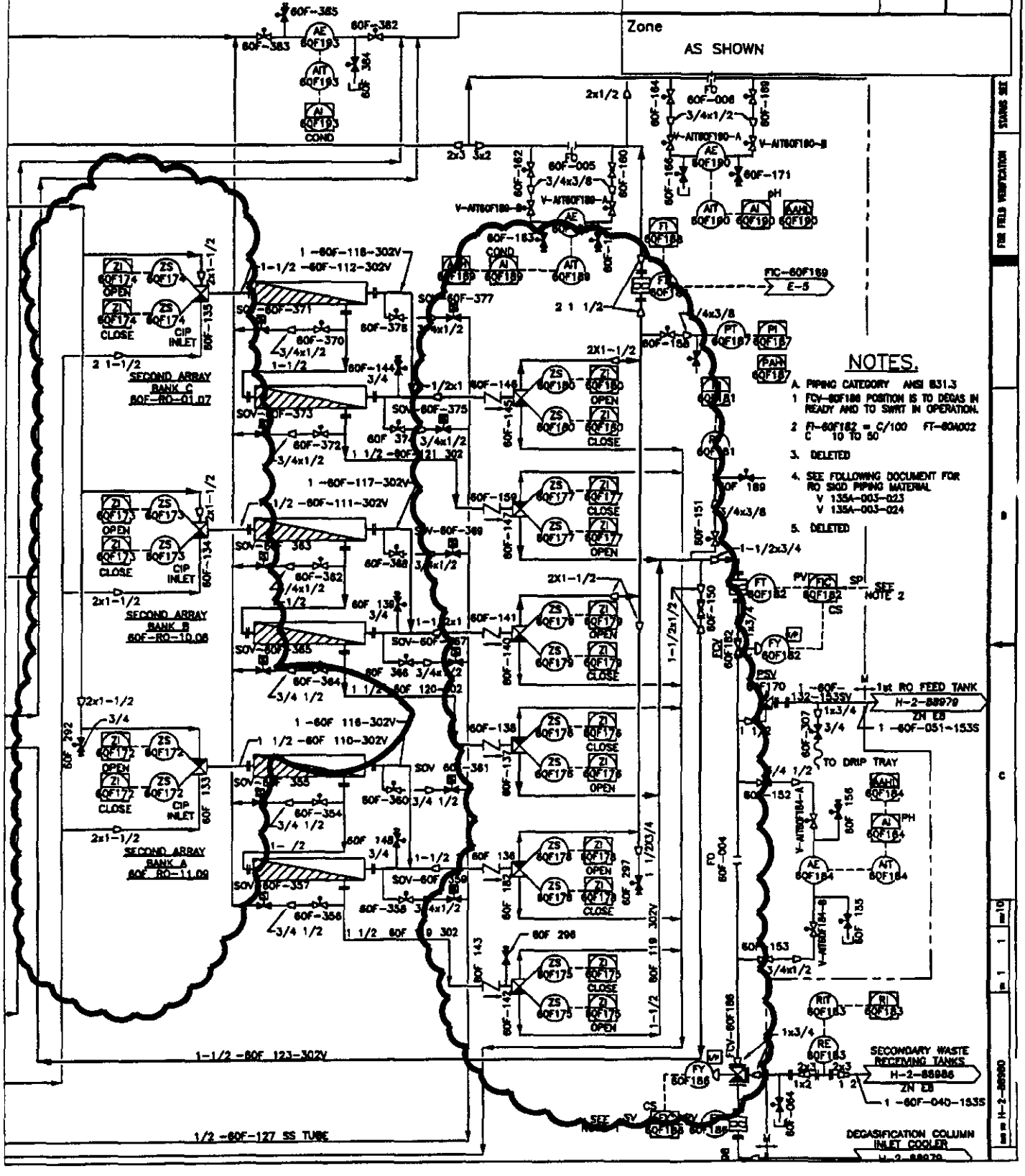

ECN No	Page
662006	13 OF 54

Ref Dwg	Sh	Rev
H-2-88980	1	10

Zone
AS SHOWN

"IS"

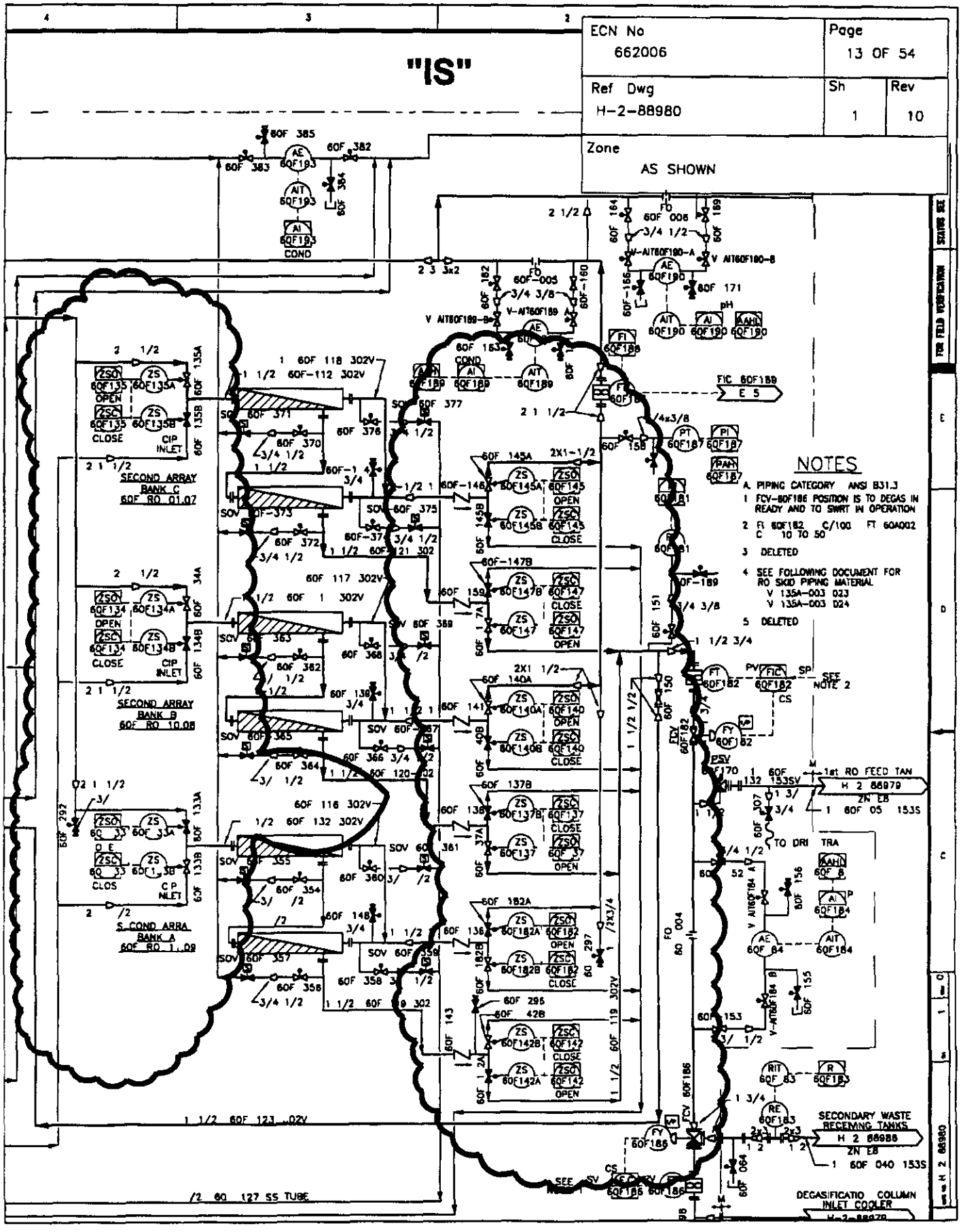

ECN No	Page
662006	14 OF 54

Ref Dwg	Sh	Rev
H-2-88982	1	12

Zone
AS SHOWN

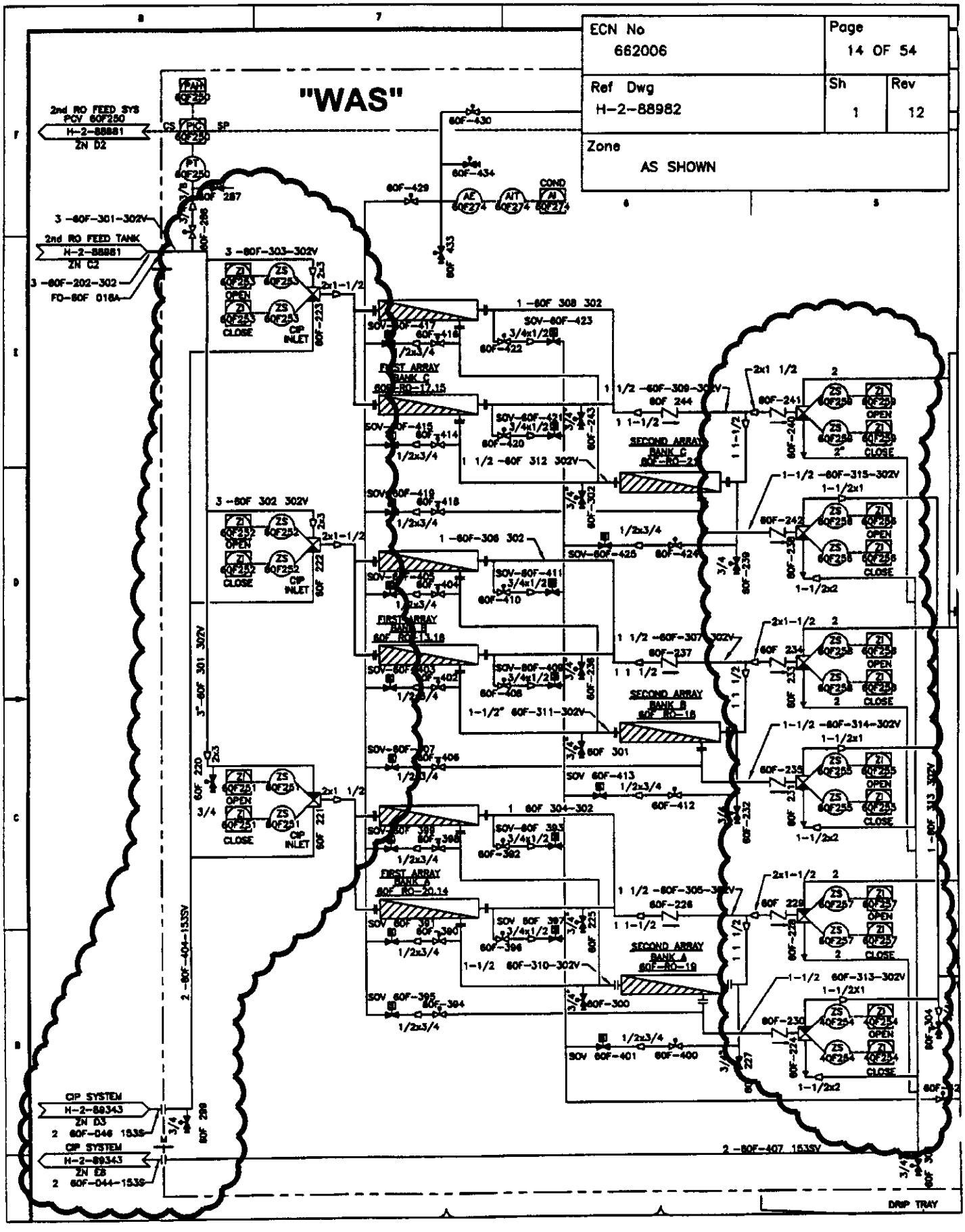

ECN No	Page
662006	15 OF 54
Ref Dwg	Sh / Rev
H-2-88982	1 / 12
Zone	
AS SHOWN	

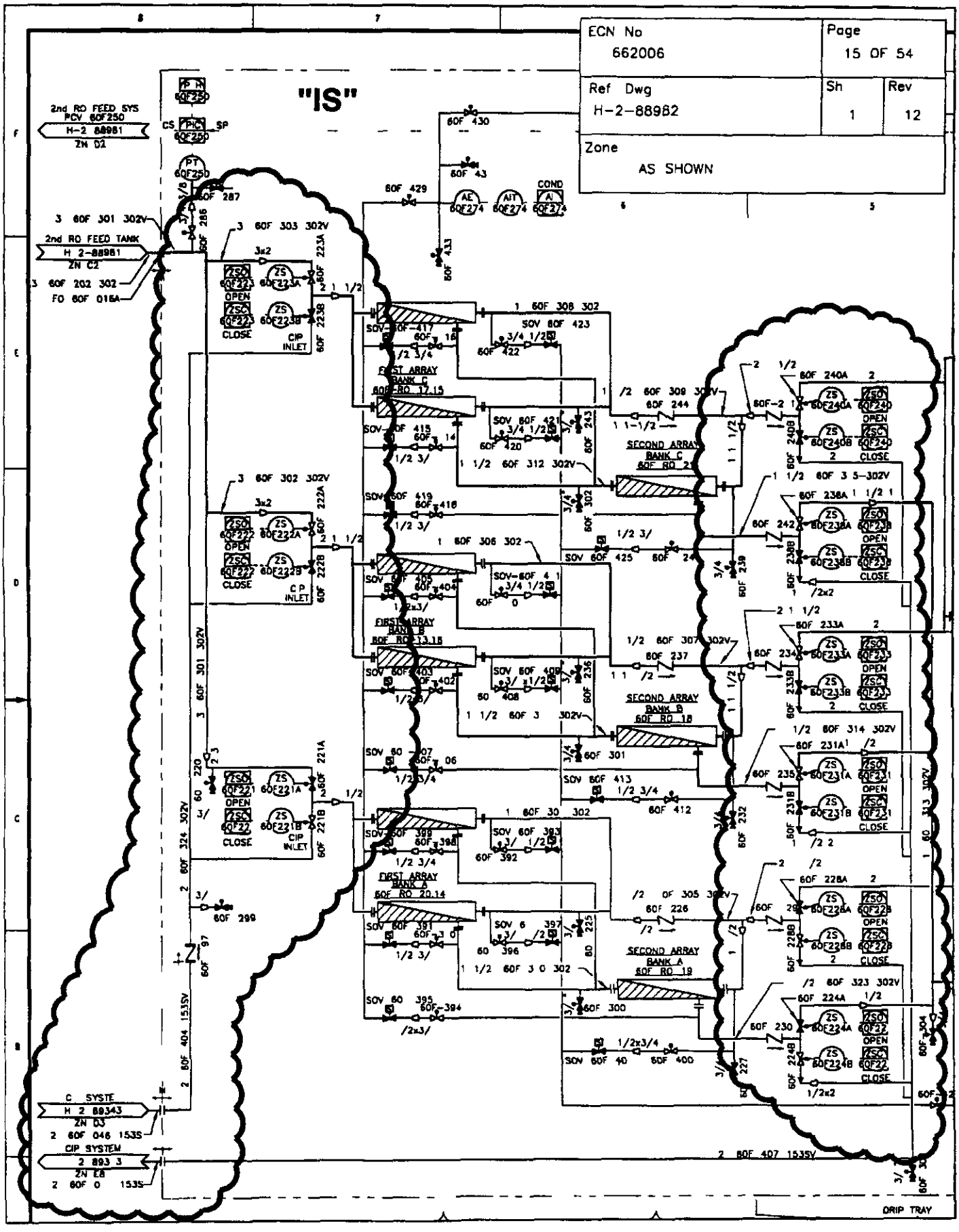

ENGINEERING CHANGE NOTICE CONTINUATION SHEET	DOCUMENT NO N/A	DATE 02/05/01	ECN 662006

ASSEMBLY SKETCH
NOT FOR DRAWING INCORPORATION

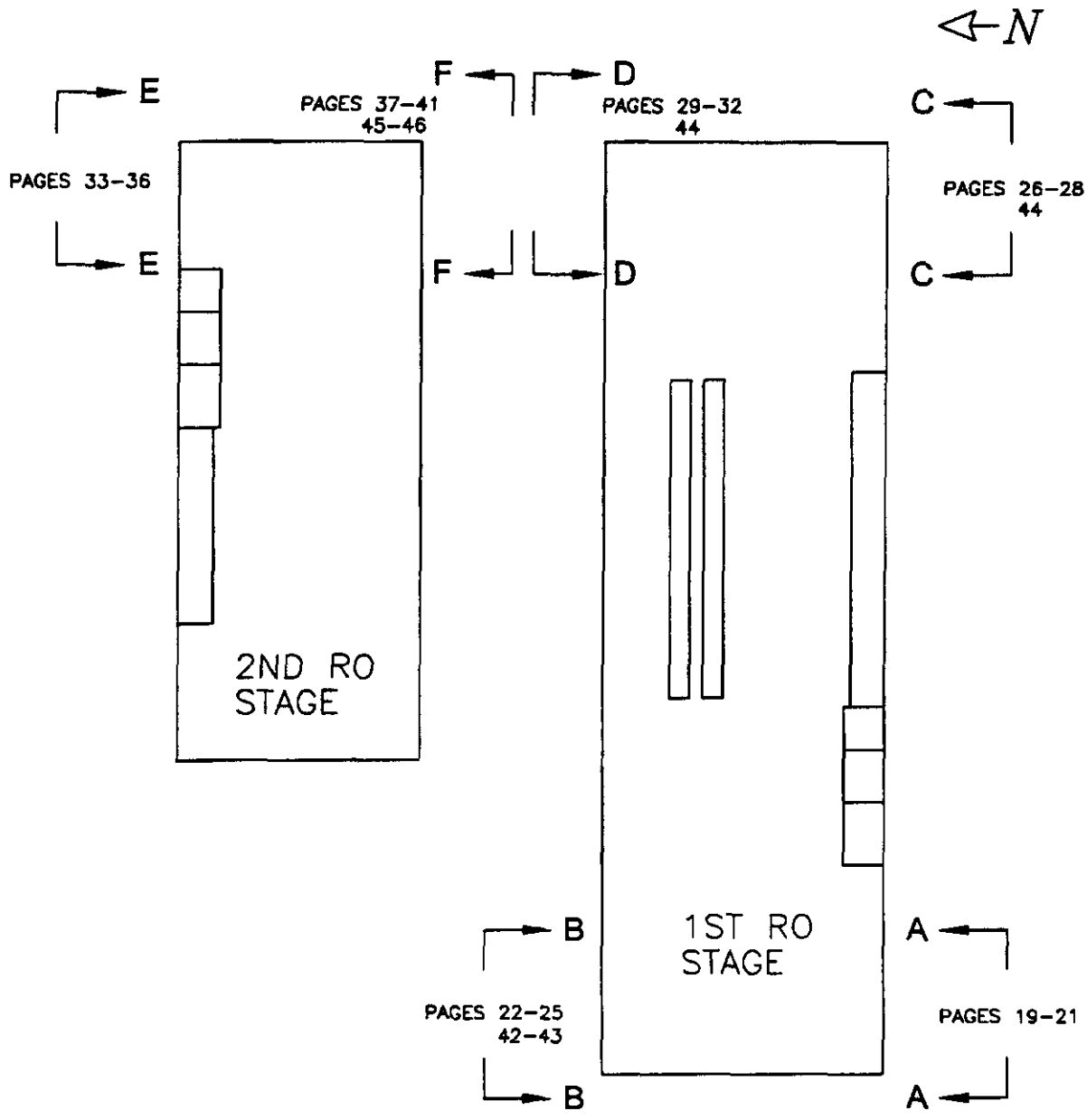

RO SYSTEM 60F KEY PLAN (PLAN VIEW)

ENGINEERING CHANGE NOTICE CONTINUATION SHEET	DOCUMENT NO N/A	DATE 02/05/01	ECN 662006

ASSEMBLY SKETCH
NOT FOR DRAWING INCORPORATION
DIMENSIONS SHOWN ARE REFERENCE DIMENSIONS

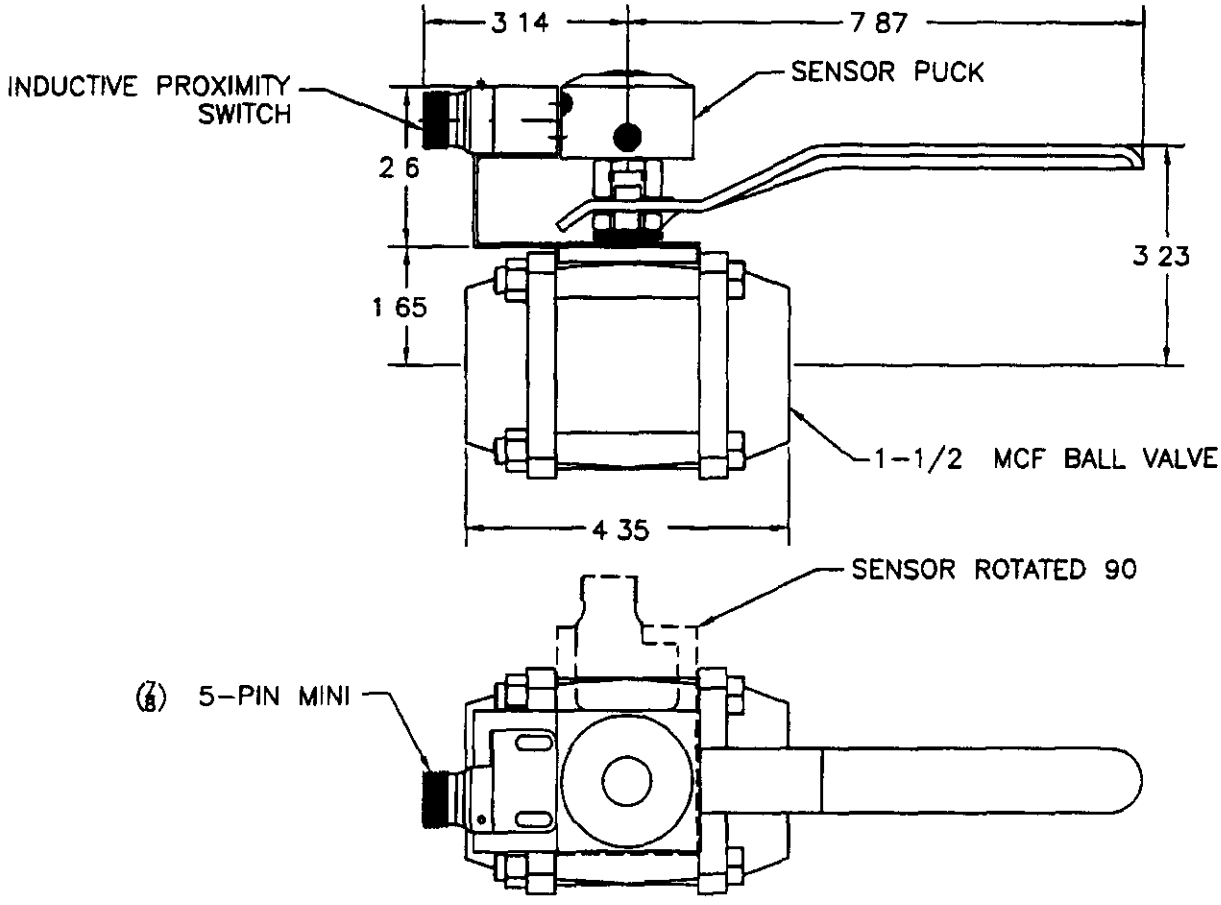

1 1-1/2 BALL VALVE ASSEMBLY WITH POSITION INSTRUMENTATION

ENGINEERING CHANGE NOTICE CONTINUATION SHEET	DOCUMENT NO N/A	DATE 02/05/01	ECN 662006

ASSEMBLY SKETCH
NOT FOR DRAWING INCORPORATION
DIMENSIONS SHOWN ARE REFERENCE DIMENSIONS

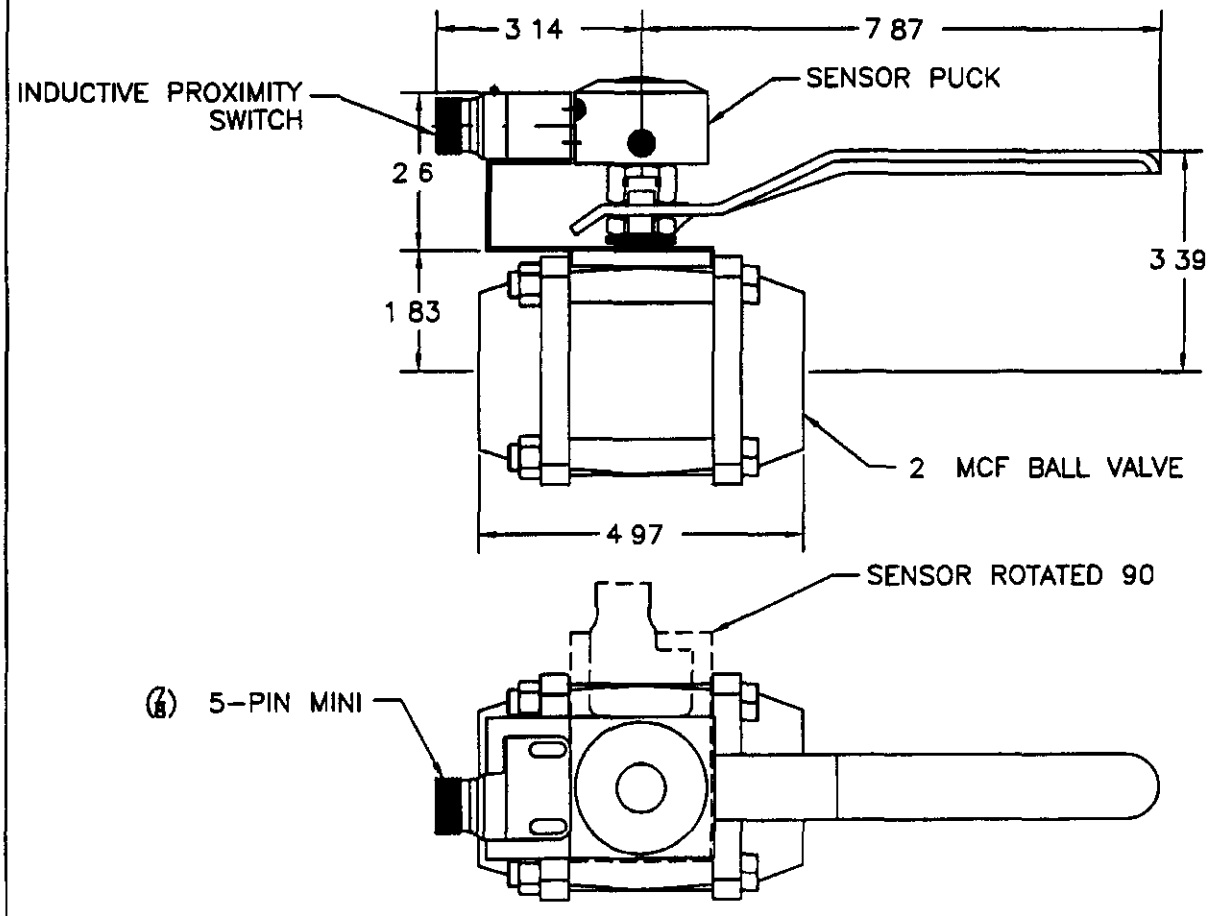

(2) 2 BALL VALVE ASSEMBLY WITH POSITION INSTRUMENTATION

ENGINEERING CHANGE NOTICE CONTINUATION SHEET	DOCUMENT NO N/A	DATE 02/05/01	ECN 662006

ASSEMBLY SKETCH
NOT FOR DRAWING INCORPORATION
DIMENSIONS SHOWN ARE APPROXIMATE
FIELD VERIFY AND ADJUST AS NECESSARY

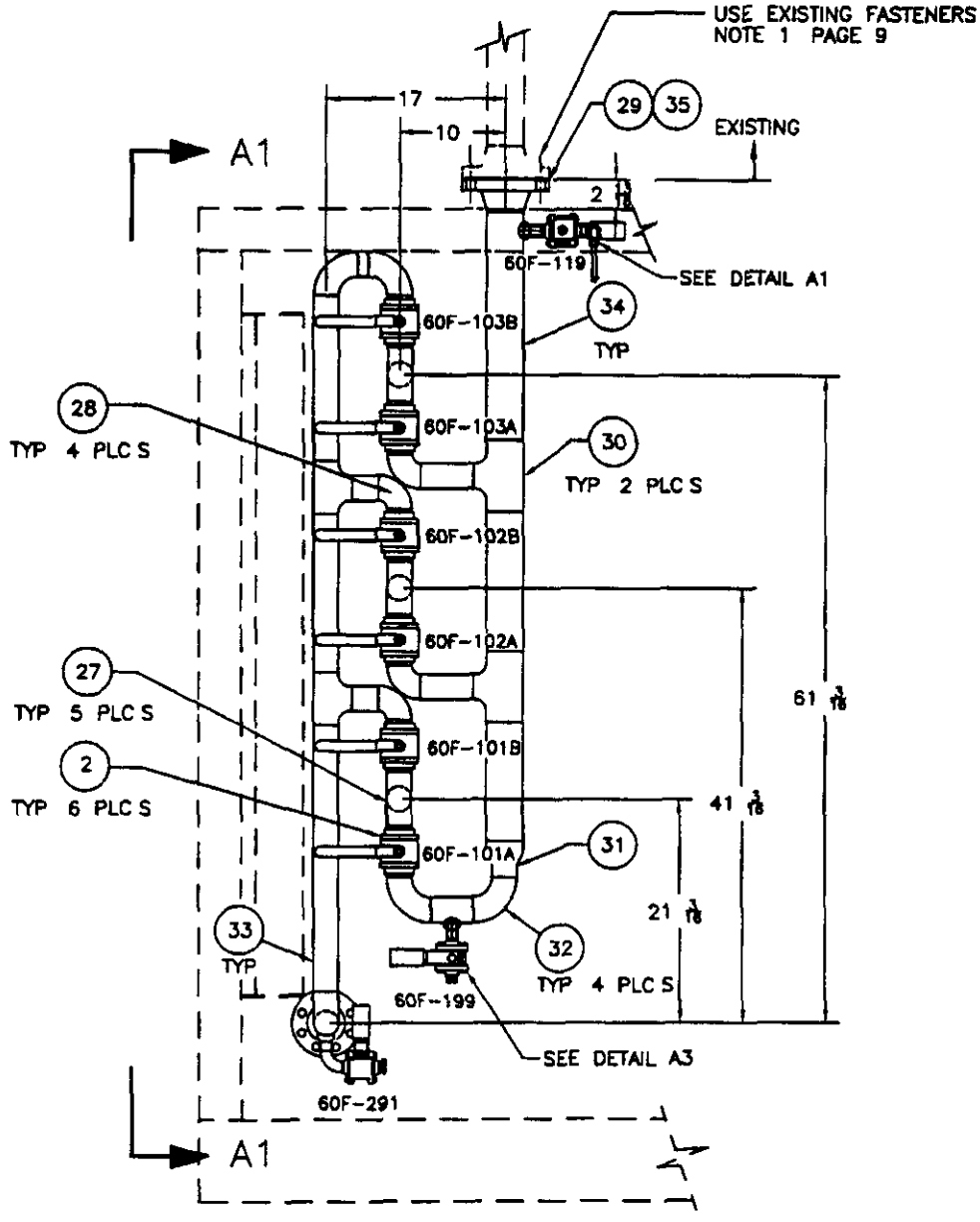

VIEW A-A FIRST RO

ENGINEERING CHANGE NOTICE CONTINUATION SHEET	DOCUMENT NO N/A	DATE 02/05/01	ECN 662006

ASSEMBLY SKETCH
NOT FOR DRAWING INCORPORATION

DIMENSIONS SHOWN ARE APPROXIMATE
FIELD VERIFY AND ADJUST AS NECESSARY

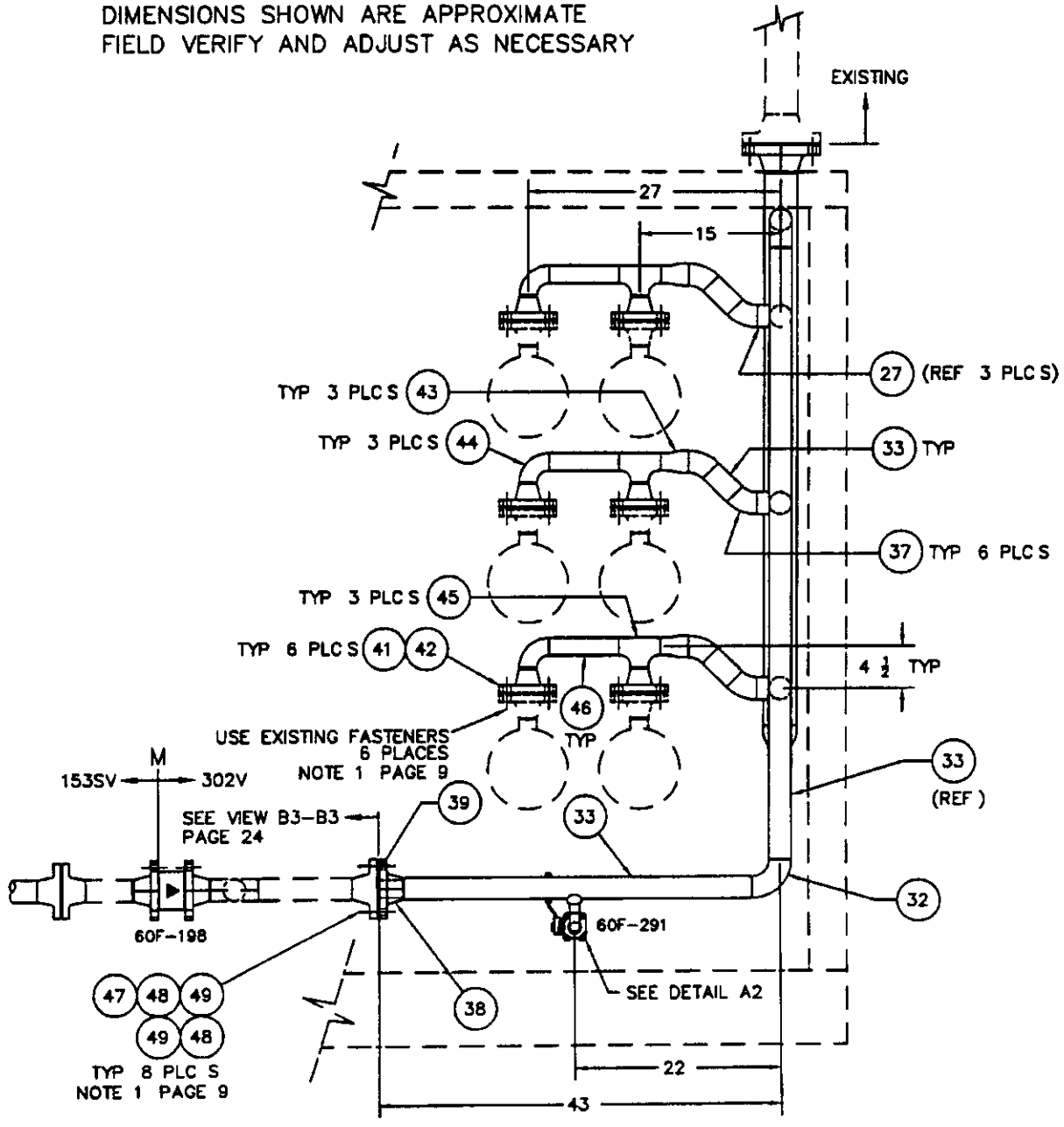

VIEW A1-A1 FIRST RO

ENGINEERING CHANGE NOTICE CONTINUATION SHEET	DOCUMENT NO N/A	DATE 02/05/01	ECN 662006

ASSEMBLY SKETCH
NOT FOR DRAWING INCORPORATION
DIMENSIONS SHOWN ARE APPROXIMATE
FIELD VERIFY AND ADJUST AS NECESSARY

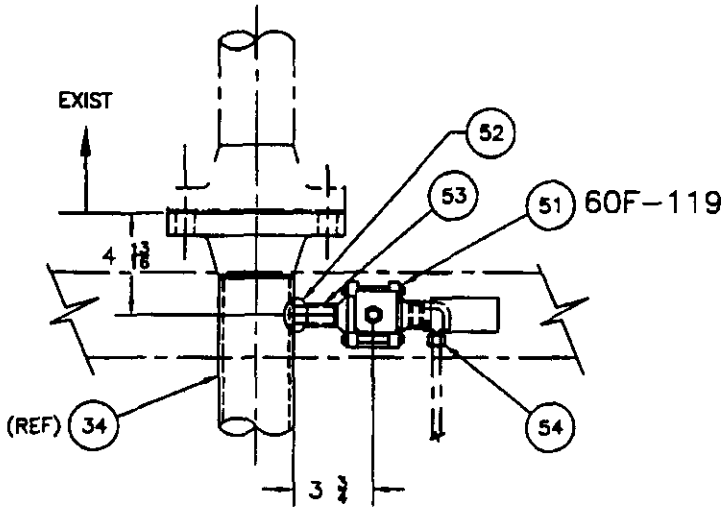

DETAIL A1

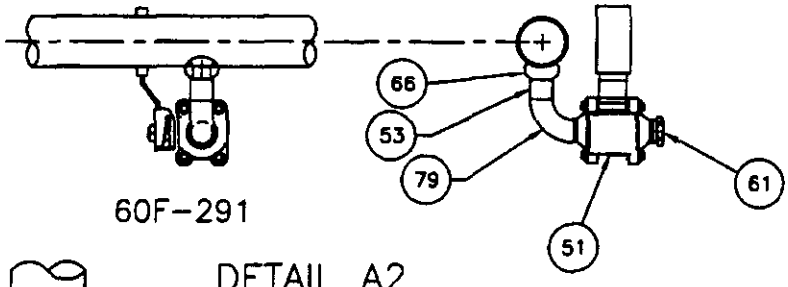

DETAIL A2

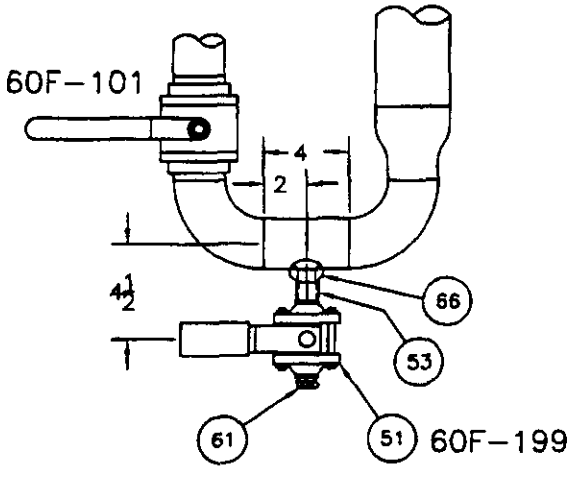

DETAIL A3

ENGINEERING CHANGE NOTICE CONTINUATION SHEET	DOCUMENT NO N/A	DATE 02/05/01	ECN 662006

ASSEMBLY SKETCH
NOT FOR DRAWING INCORPORATION
DIMENSIONS SHOWN ARE APPROXIMATE
FIELD VERIFY AND ADJUST AS NECESSARY

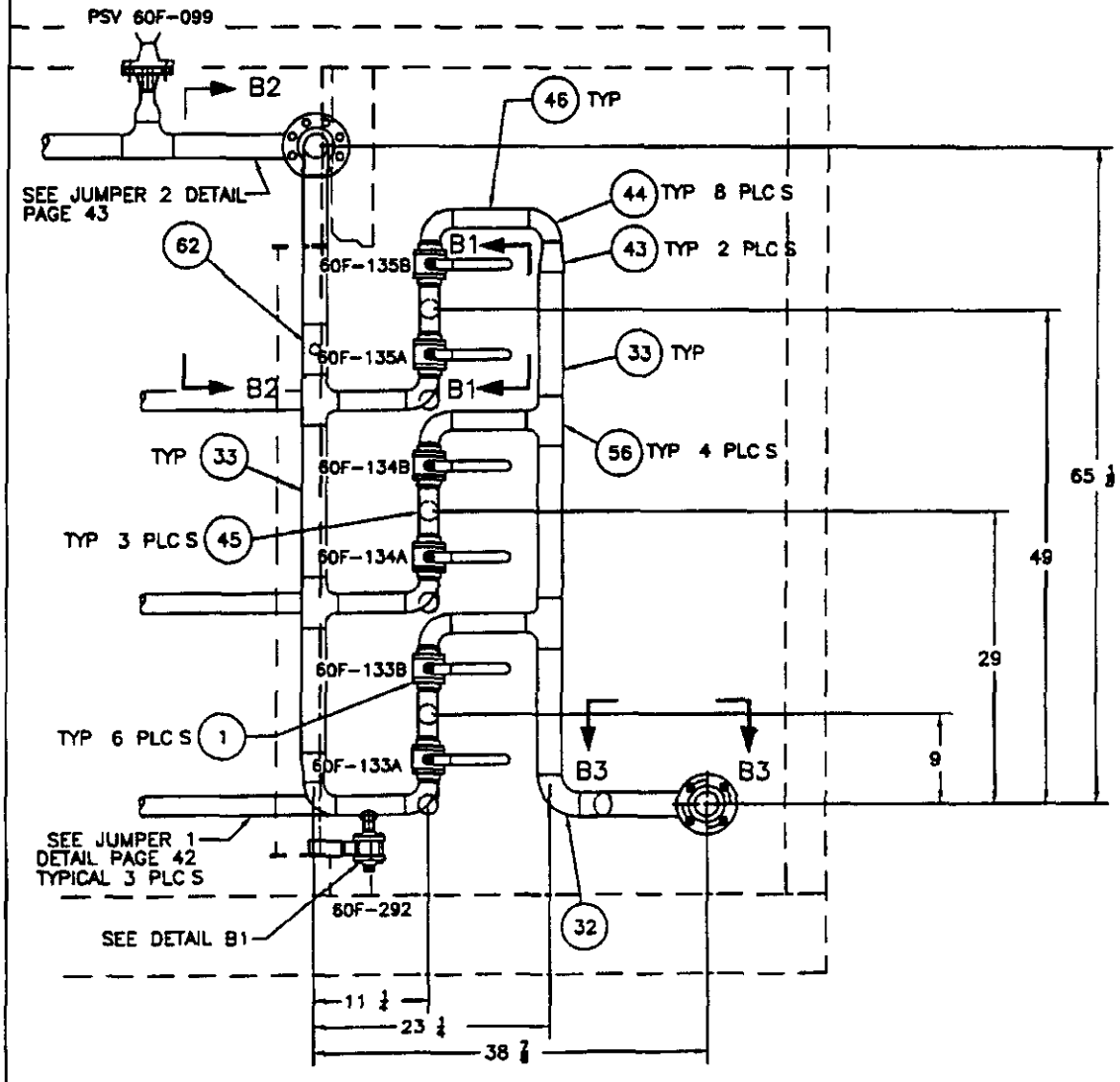

VIEW B-B FIRST RO

ENGINEERING CHANGE NOTICE CONTINUATION SHEET	DOCUMENT NO N/A	DATE 02/05/01	ECN 662006

ASSEMBLY SKETCH
NOT FOR DRAWING INCORPORATION
DIMENSIONS SHOWN ARE APPROXIMATE
FIELD VERIFY AND ADJUST AS NECESSARY

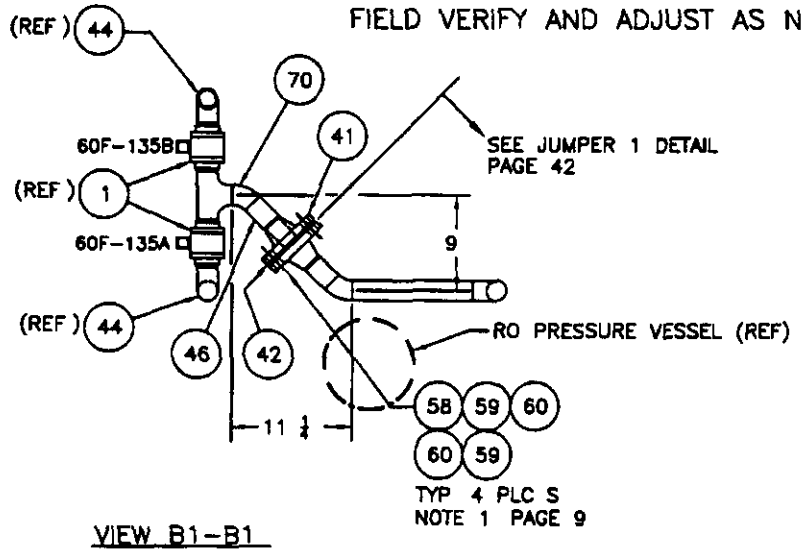

VIEW B1-B1
TYPICAL 3 PLACES
(EXCEPT FOR VALVE NUMBERS)

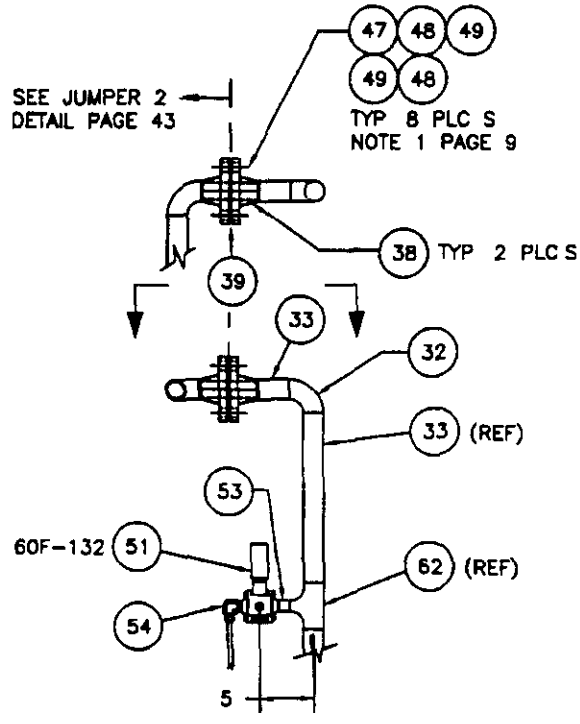

VIEW B2-B2

ENGINEERING CHANGE NOTICE CONTINUATION SHEET	DOCUMENT NO N/A	DATE 02/05/01	ECN 662006

ASSEMBLY SKETCH
NOT FOR DRAWING INCORPORATION

DIMENSIONS SHOWN ARE APPROXIMATE
FIELD VERIFY AND ADJUST AS NECESSARY

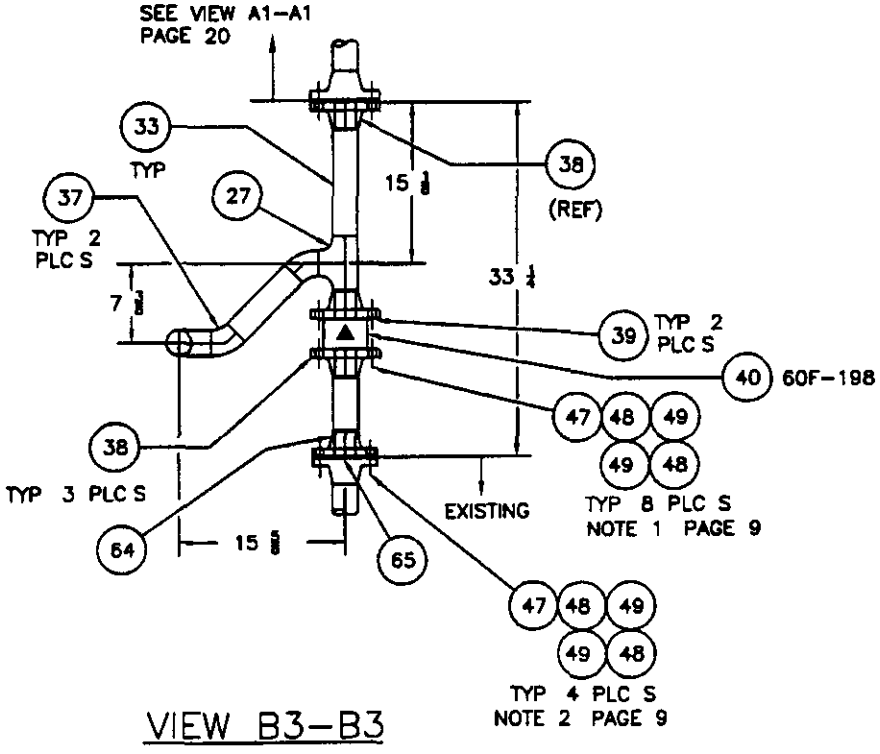

VIEW B3-B3

ENGINEERING CHANGE NOTICE CONTINUATION SHEET	DOCUMENT NO N/A	DATE 02/05/01	ECN 662006

ASSEMBLY SKETCH
NOT FOR DRAWING INCORPORATION
DIMENSIONS SHOWN ARE APPROXIMATE
FIELD VERIFY AND ADJUST AS NECESSARY

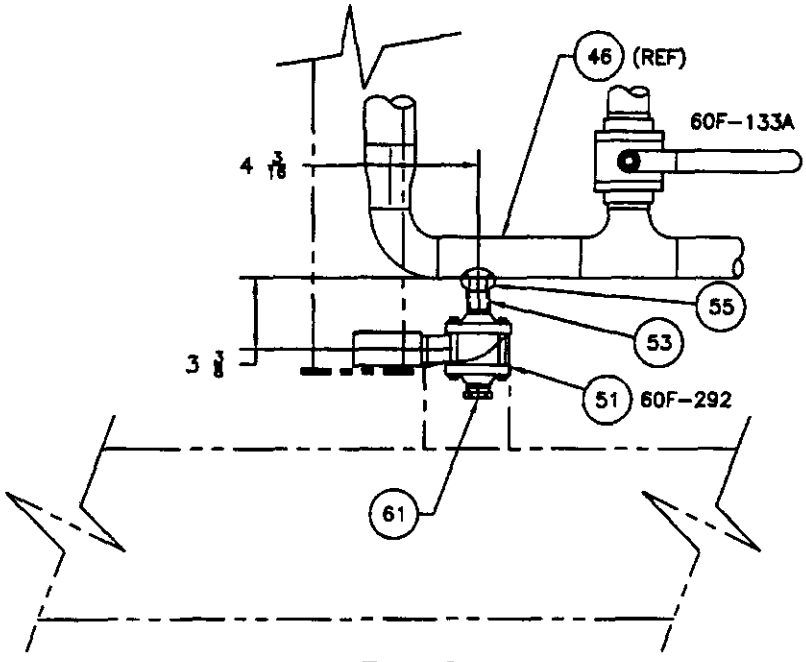

DETAIL B1

ENGINEERING CHANGE NOTICE CONTINUATION SHEET	DOCUMENT NO N/A	DATE 02/05/01	ECN 662006

ASSEMBLY SKETCH
NOT FOR DRAWING INCORPORATION

DIMENSIONS SHOWN ARE APPROXIMATE
FIELD VERIFY AND ADJUST AS NECESSARY

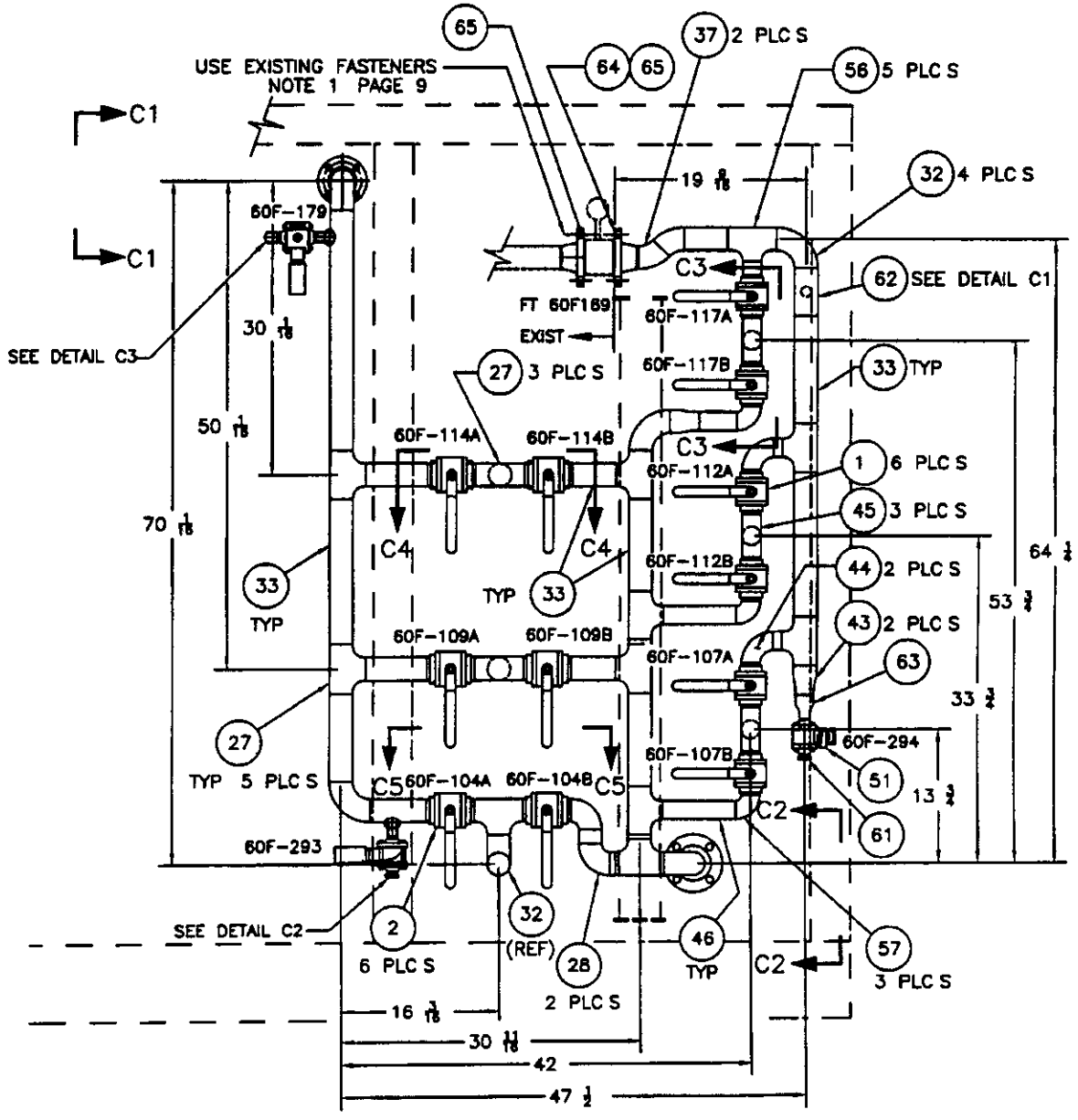

VIEW C-C FIRST RO

ENGINEERING CHANGE NOTICE CONTINUATION SHEET	DOCUMENT NO N/A	DATE 02/05/01	ECN 662006

ASSEMBLY SKETCH
NOT FOR DRAWING INCORPORATION

DIMENSIONS SHOWN ARE APPROXIMATE
FIELD VERIFY AND ADJUST AS NECESSARY

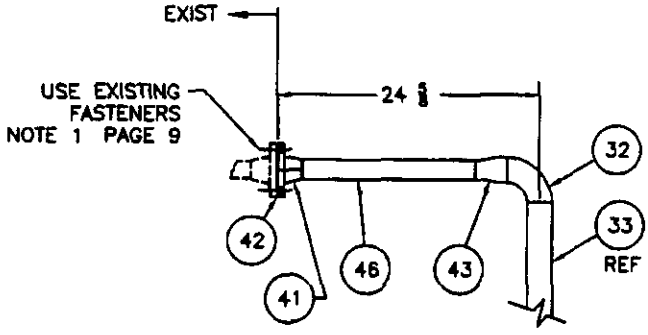

VIEW C1-C1

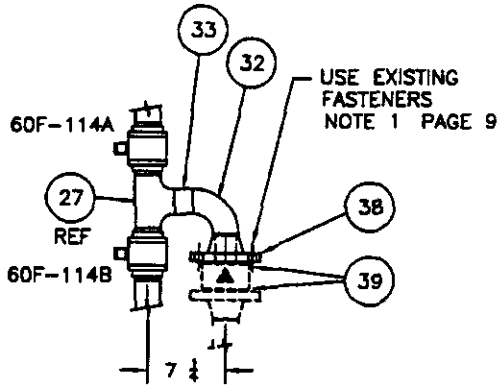

VIEW C4-C4
TYP 2 PLC S

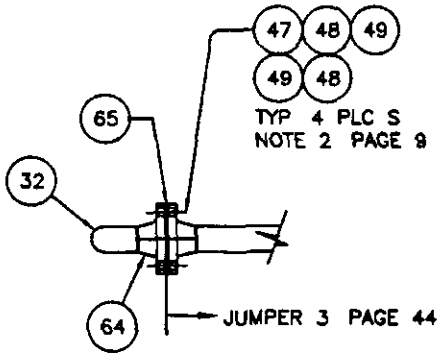

VIEW C2-C2

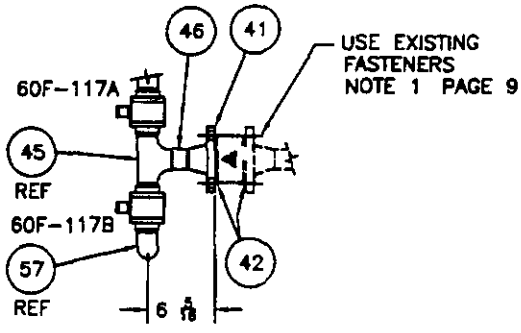

VIEW C3-C3
TYP 3 PLC S

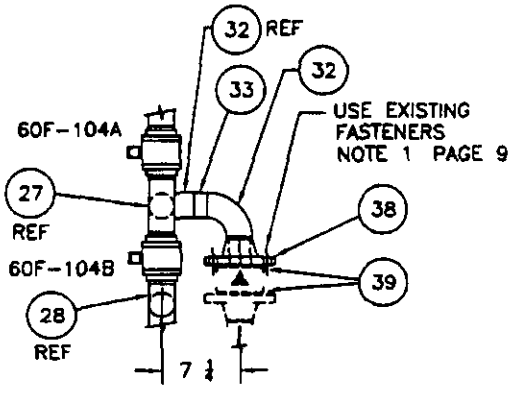

VIEW C5-C5

ENGINEERING CHANGE NOTICE CONTINUATION SHEET	DOCUMENT NO N/A	DATE 02/05/01	ECN 662006

ASSEMBLY SKETCH
NOT FOR DRAWING INCORPORATION
DIMENSIONS SHOWN ARE APPROXIMATE
FIELD VERIFY AND ADJUST AS NECESSARY

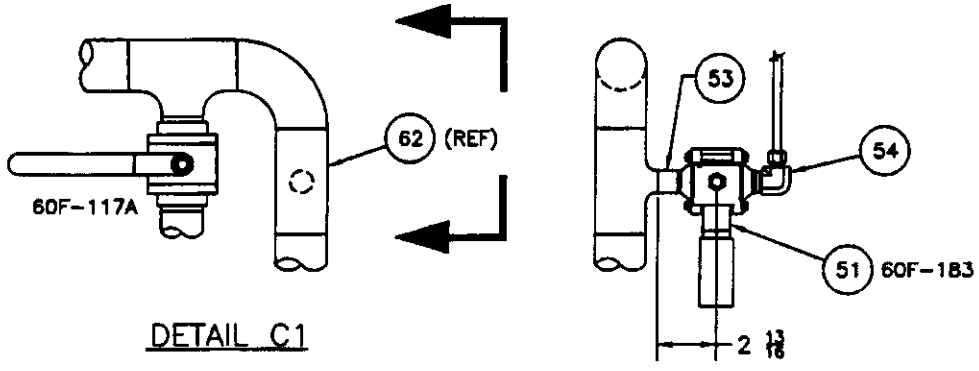

DETAIL C1

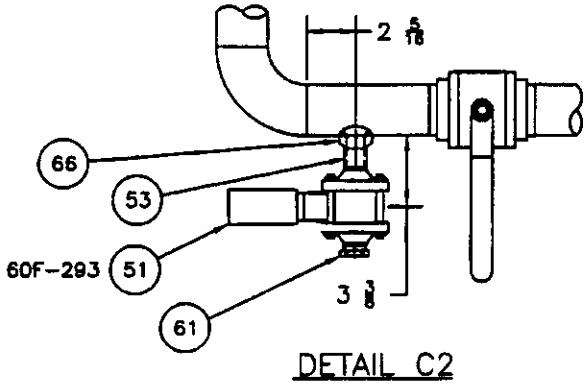

DETAIL C2

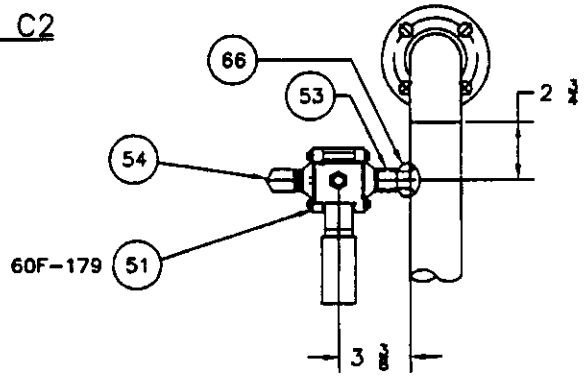

DETAIL C3

ENGINEERING CHANGE NOTICE CONTINUATION SHEET	DOCUMENT NO N/A	DATE 02/05/01	ECN 662006

ASSEMBLY SKETCH
NOT FOR DRAWING INCORPORATION

DIMENSIONS SHOWN ARE APPROXIMATE
FIELD VERIFY AND ADJUST AS NECESSARY

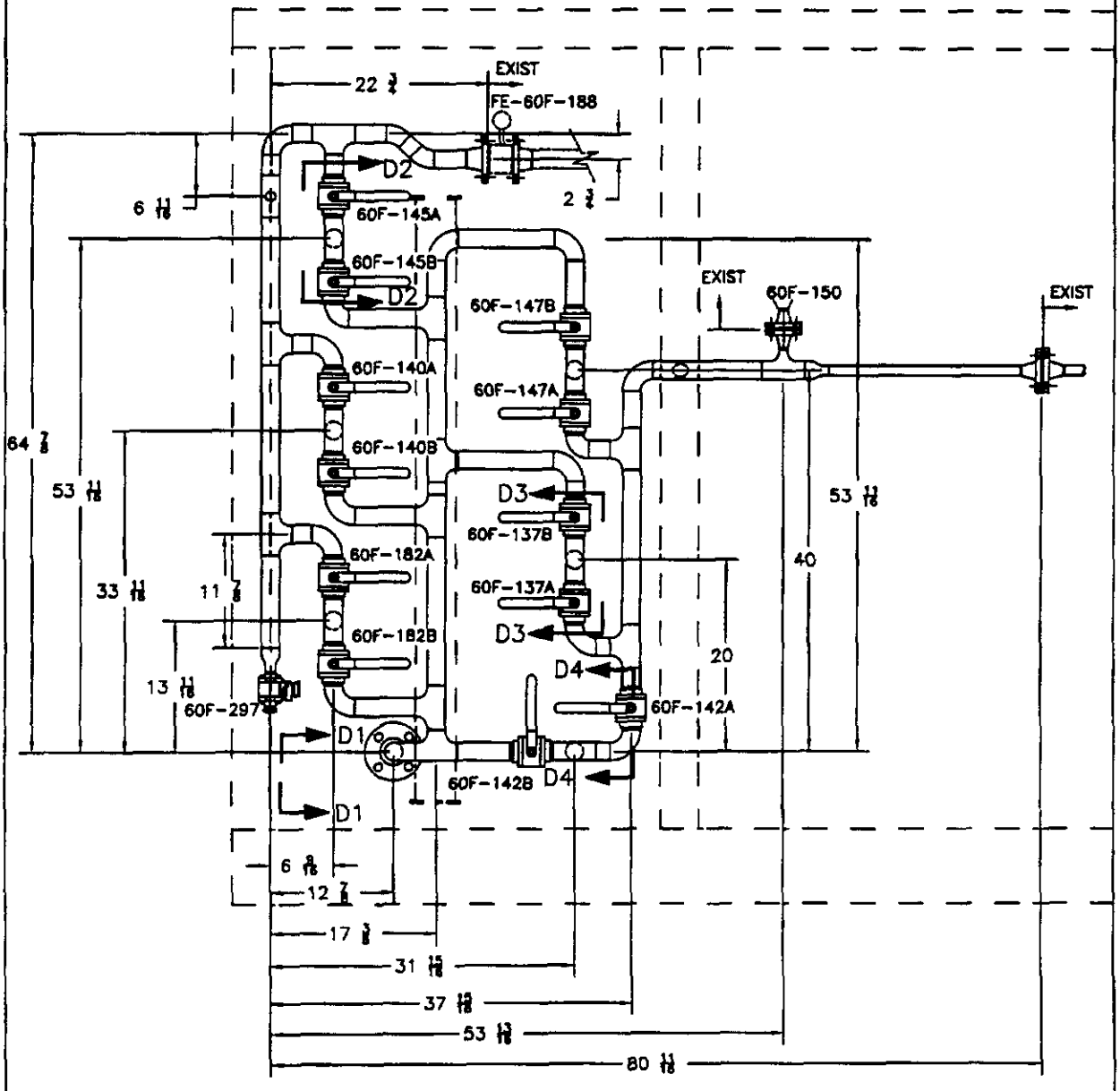

VIEW D-D FIRST RO DIMENSIONS

ENGINEERING CHANGE NOTICE CONTINUATION SHEET	DOCUMENT NO N/A	DATE 02/05/01	ECN 662006

ASSEMBLY SKETCH
NOT FOR DRAWING INCORPORATION

DIMENSIONS SHOWN ARE APPROXIMATE
FIELD VERIFY AND ADJUST AS NECESSARY

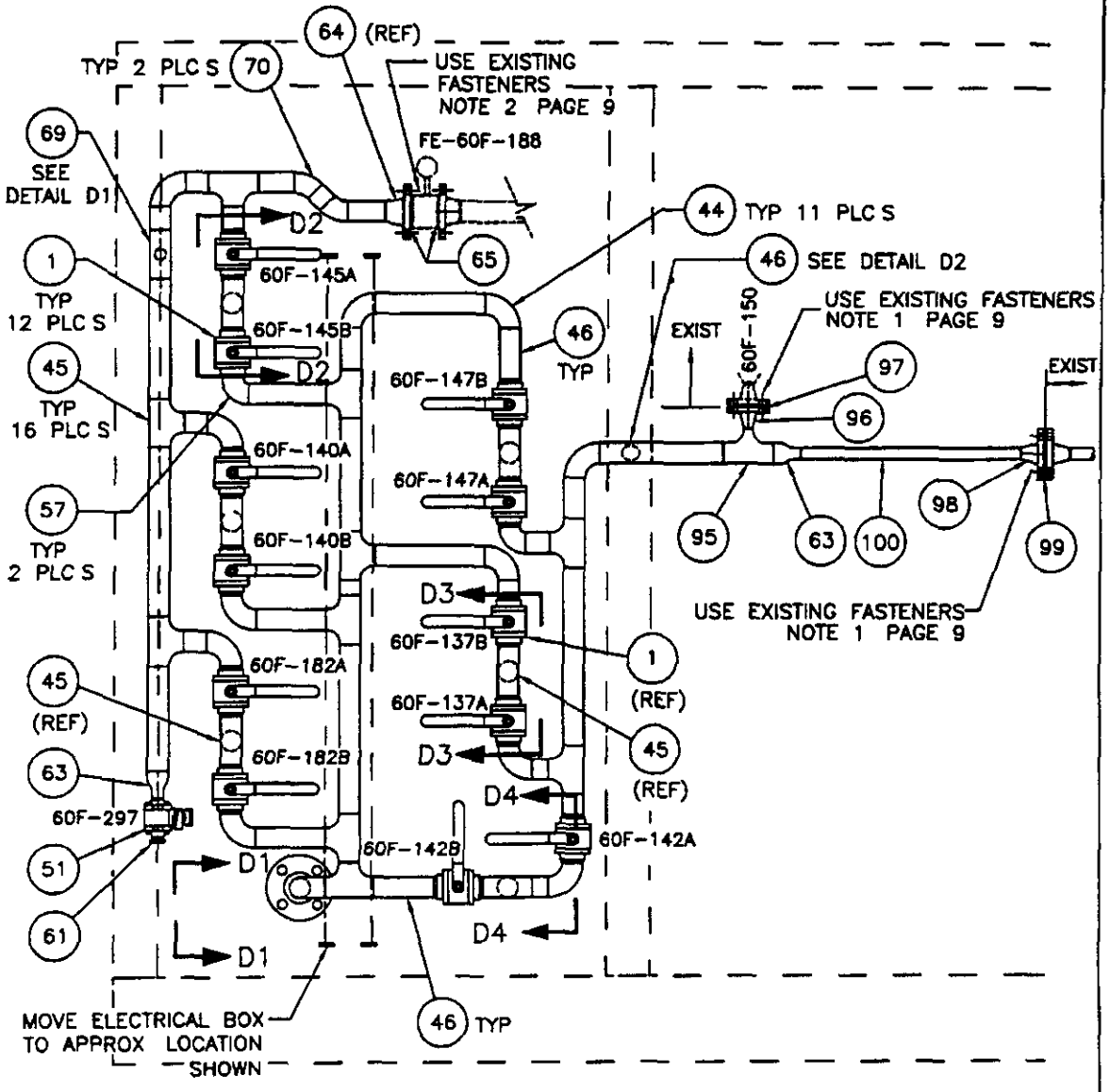

VIEW D-D FIRST RO PARTS CALLOUT

ENGINEERING CHANGE NOTICE CONTINUATION SHEET	DOCUMENT NO N/A	DATE 02/05/01	ECN 662006

ASSEMBLY SKETCH
NOT FOR DRAWING INCORPORATION

DIMENSIONS SHOWN ARE APPROXIMATE
FIELD VERIFY AND ADJUST AS NECESSARY

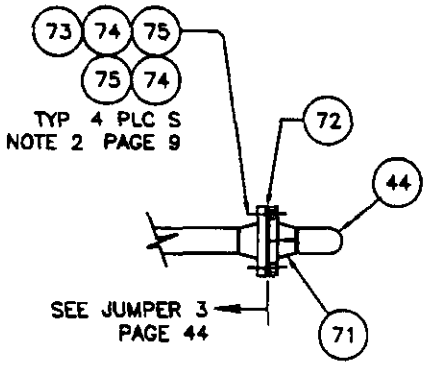

VIEW D1-D1

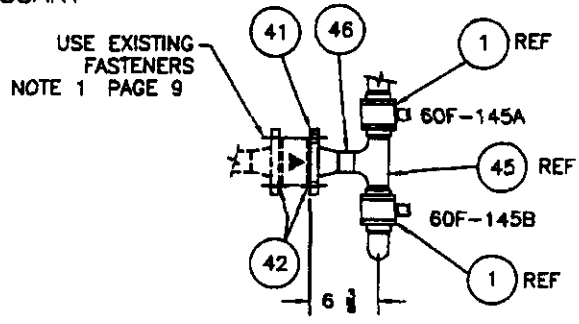

VIEW D2-D2
TYP 3 PLC S

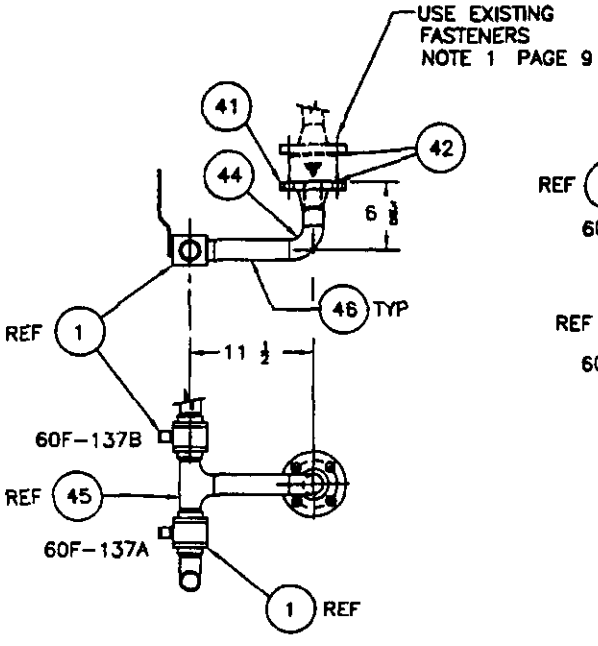

VIEW D3-D3
TYP 2 PLC S

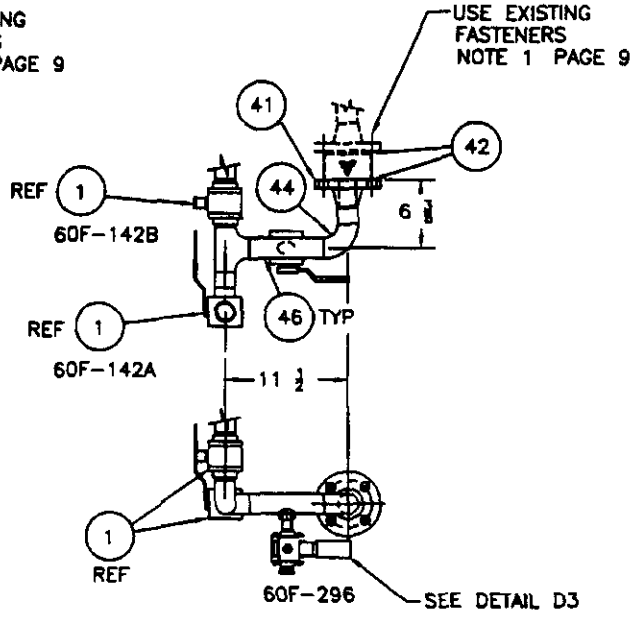

VIEW D4-D4

ENGINEERING CHANGE NOTICE CONTINUATION SHEET	DOCUMENT NO N/A	DATE 02/05/01	ECN 662006

ASSEMBLY SKETCH
NOT FOR DRAWING INCORPORATION
DIMENSIONS SHOWN ARE APPROXIMATE
FIELD VERIFY AND ADJUST AS NECESSARY

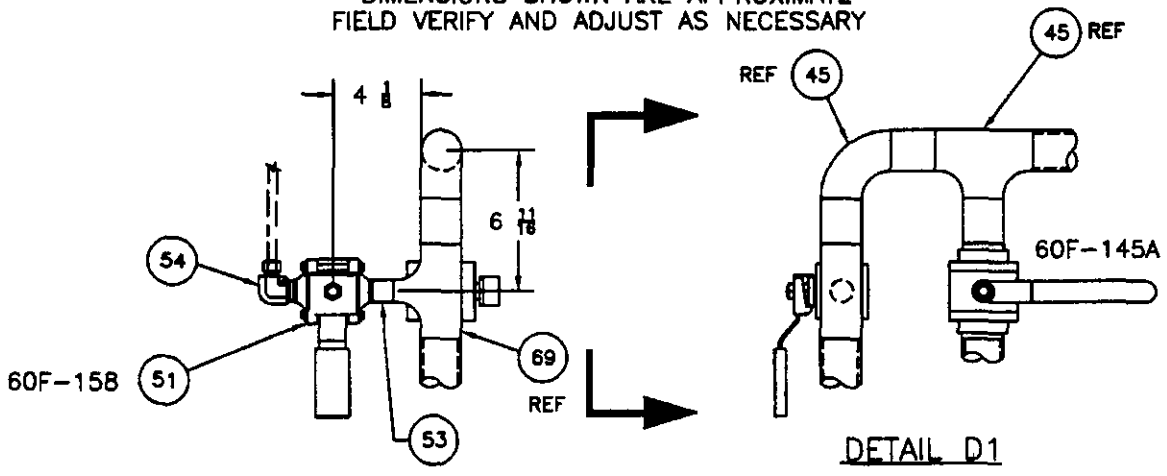

DETAIL D1

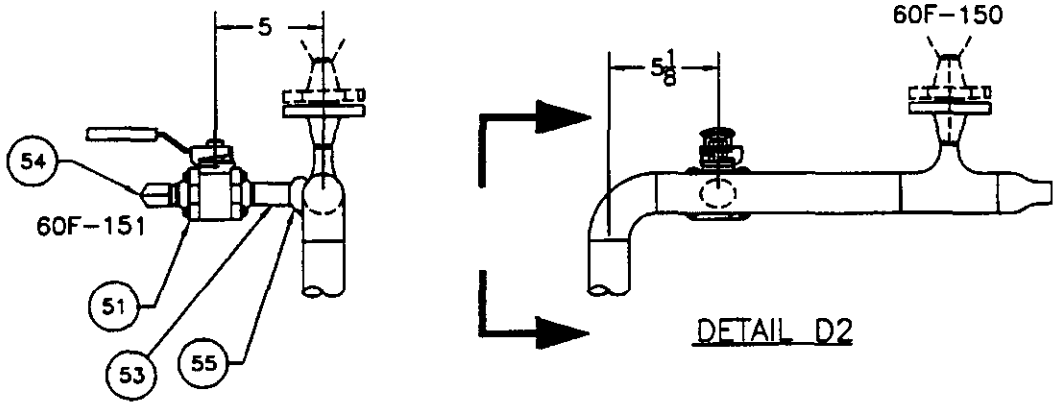

DETAIL D2

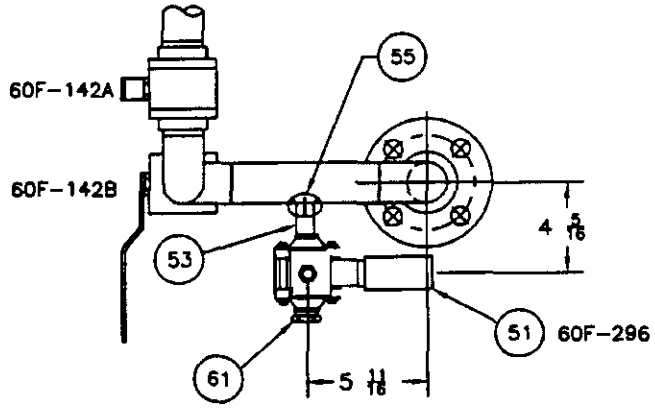

DETAIL D3

ENGINEERING CHANGE NOTICE CONTINUATION SHEET	DOCUMENT NO N/A	DATE 02/05/01	ECN 662006

ASSEMBLY SKETCH
NOT FOR DRAWING INCORPORATION
DIMENSIONS SHOWN ARE APPROXIMATE
FIELD VERIFY AND ADJUST AS NECESSARY

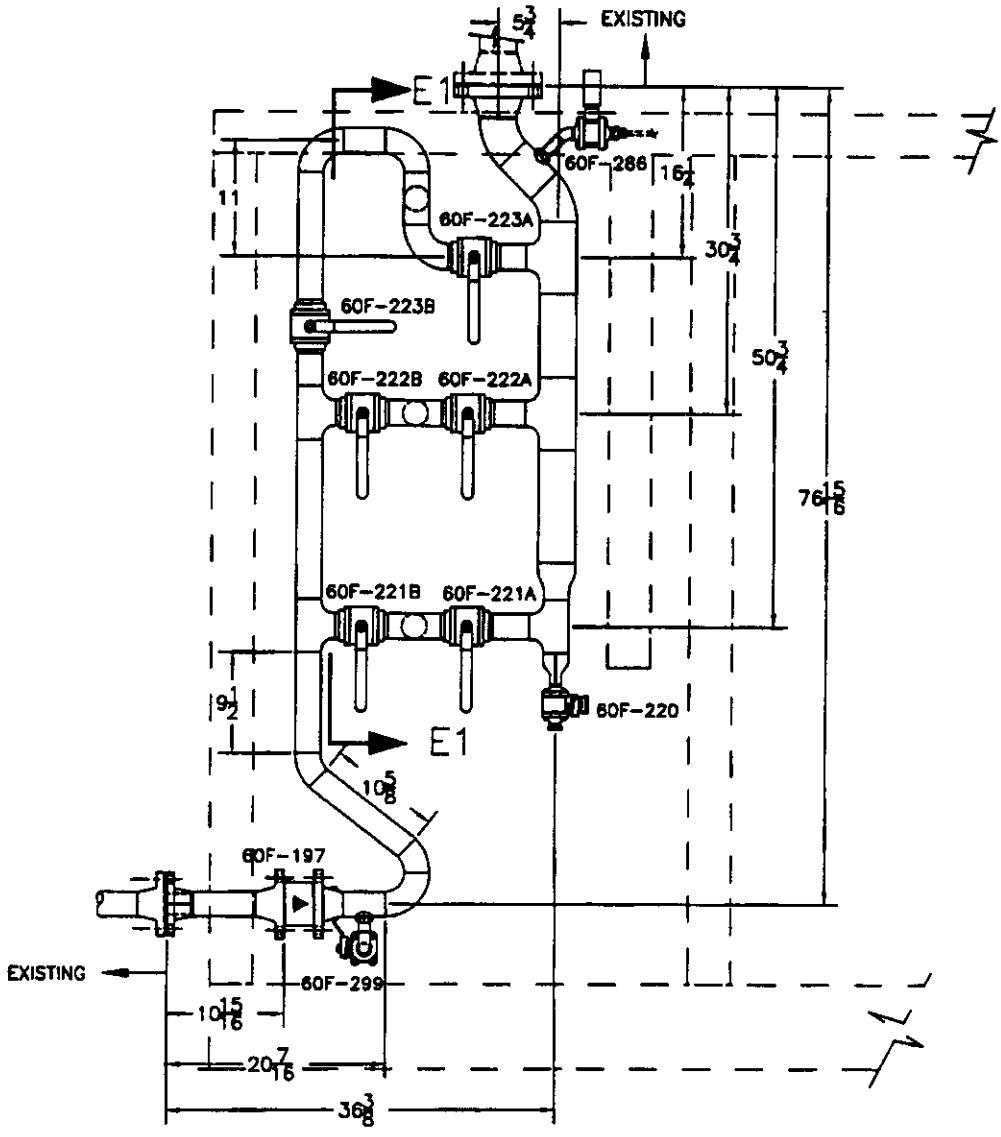

VIEW E-E SECOND RO DIMENSIONS

ENGINEERING CHANGE NOTICE CONTINUATION SHEET	DOCUMENT NO N/A	DATE 02/05/01	ECN 662006

ASSEMBLY SKETCH
NOT FOR DRAWING INCORPORATION

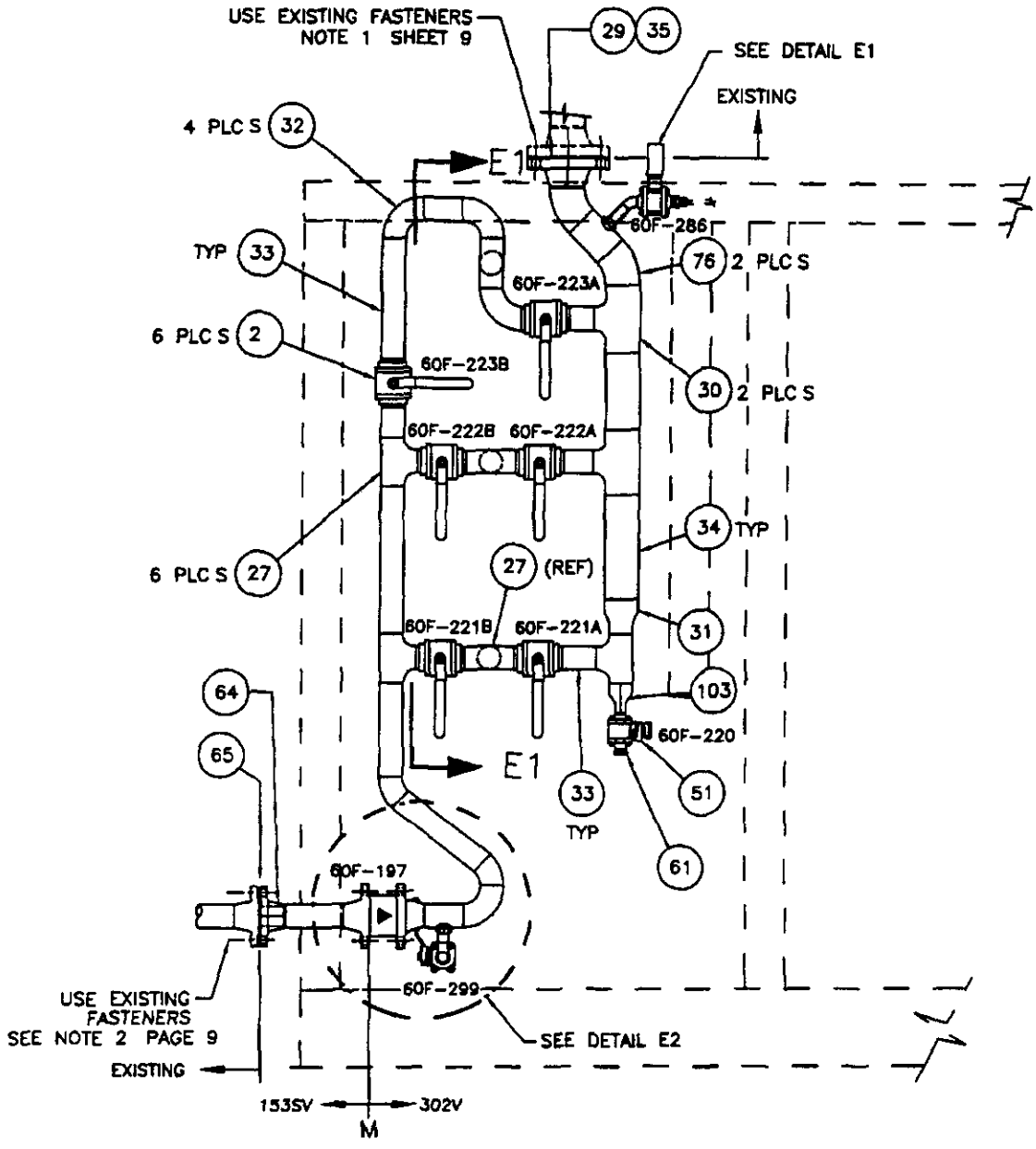

VIEW E-E SECOND RO PARTS CALLOUT

ENGINEERING CHANGE NOTICE CONTINUATION SHEET	DOCUMENT NO N/A	DATE 02/05/01	ECN 662006

ASSEMBLY SKETCH
NOT FOR DRAWING INCORPORATION

DIMENSIONS SHOWN ARE APPROXIMATE
FIELD VERIFY AND ADJUST AS NECESSARY

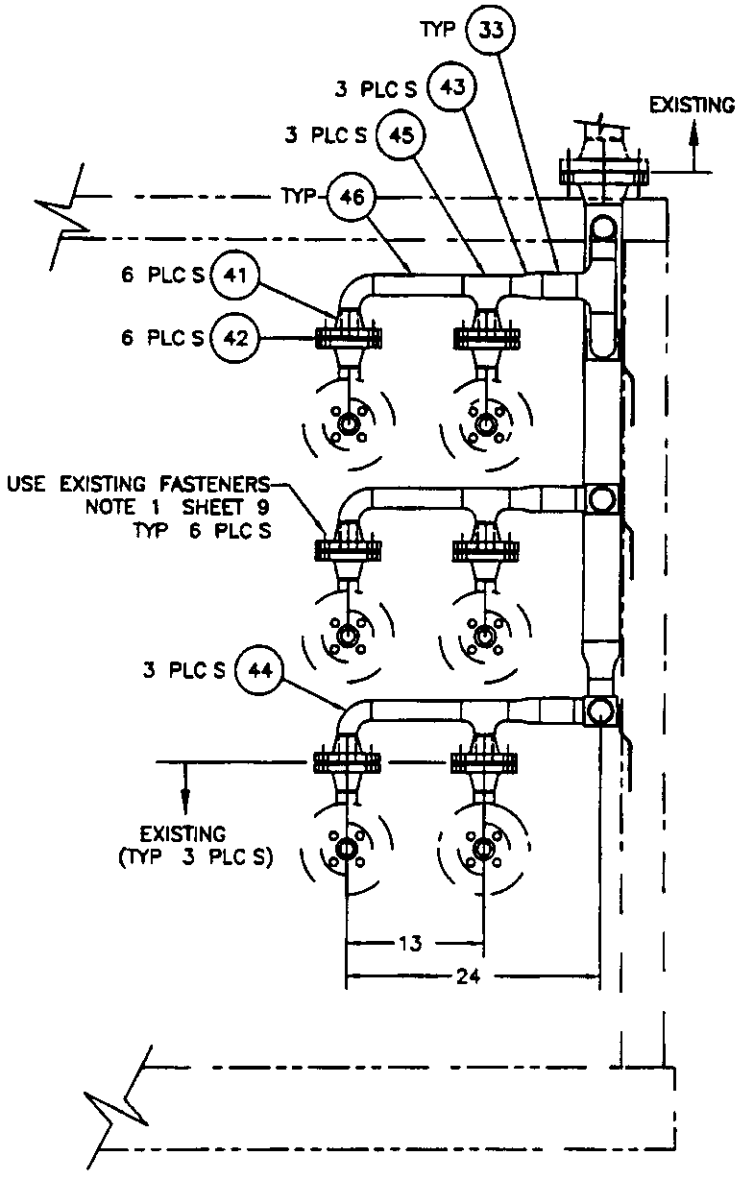

VIEW E1-E1 SECOND RO

ENGINEERING CHANGE NOTICE CONTINUATION SHEET	DOCUMENT NO N/A	DATE 02/05/01	ECN 662006

ASSEMBLY SKETCH
NOT FOR DRAWING INCORPORATION
DIMENSIONS SHOWN ARE APPROXIMATE
FIELD VERIFY AND ADJUST AS NECESSARY

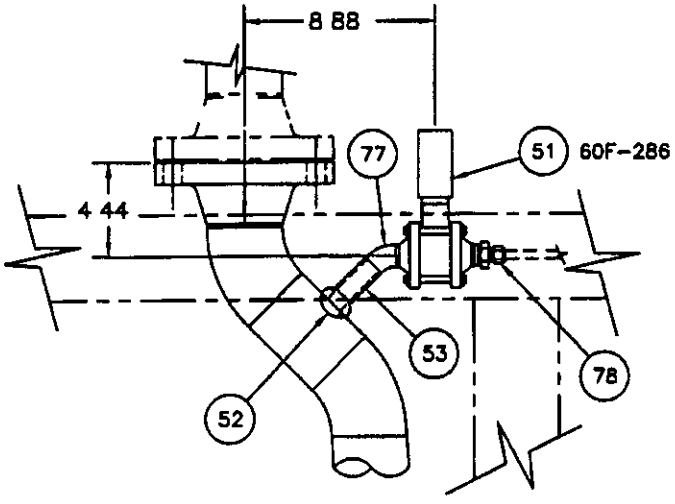

DETAIL E1

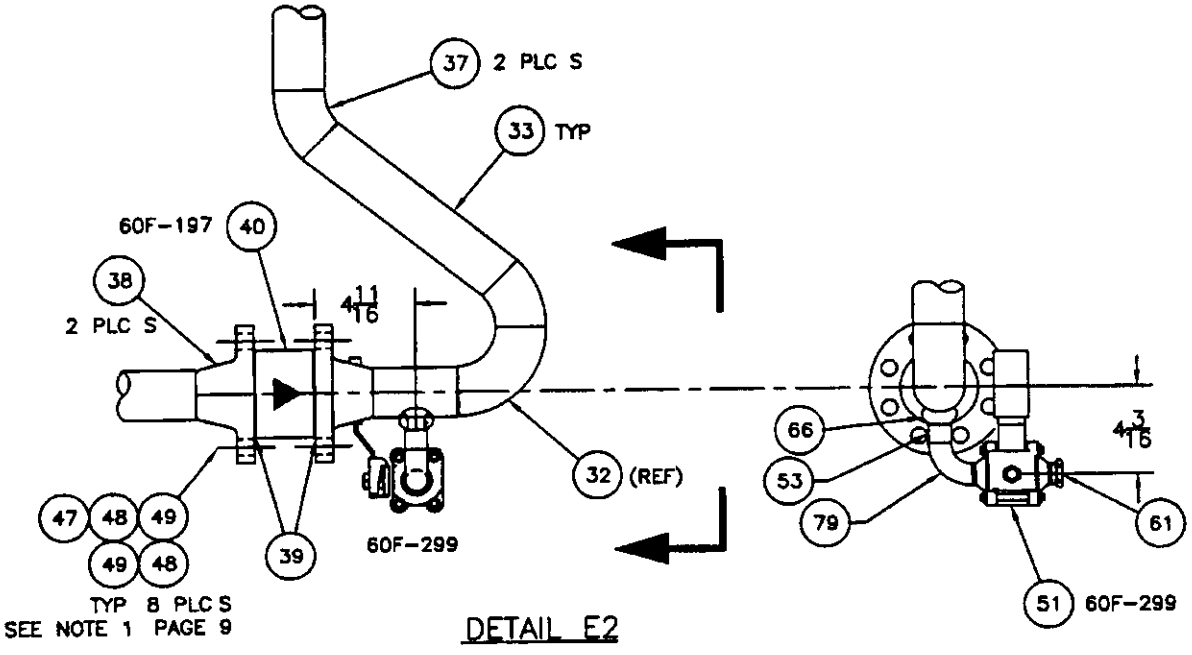

DETAIL E2

ENGINEERING CHANGE NOTICE CONTINUATION SHEET	DOCUMENT NO N/A	DATE 02/05/01	ECN 662006

ASSEMBLY SKETCH
NOT FOR DRAWING INCORPORATION

DIMENSIONS SHOWN ARE APPROXIMATE
FIELD VERIFY AND ADJUST AS NECESSARY

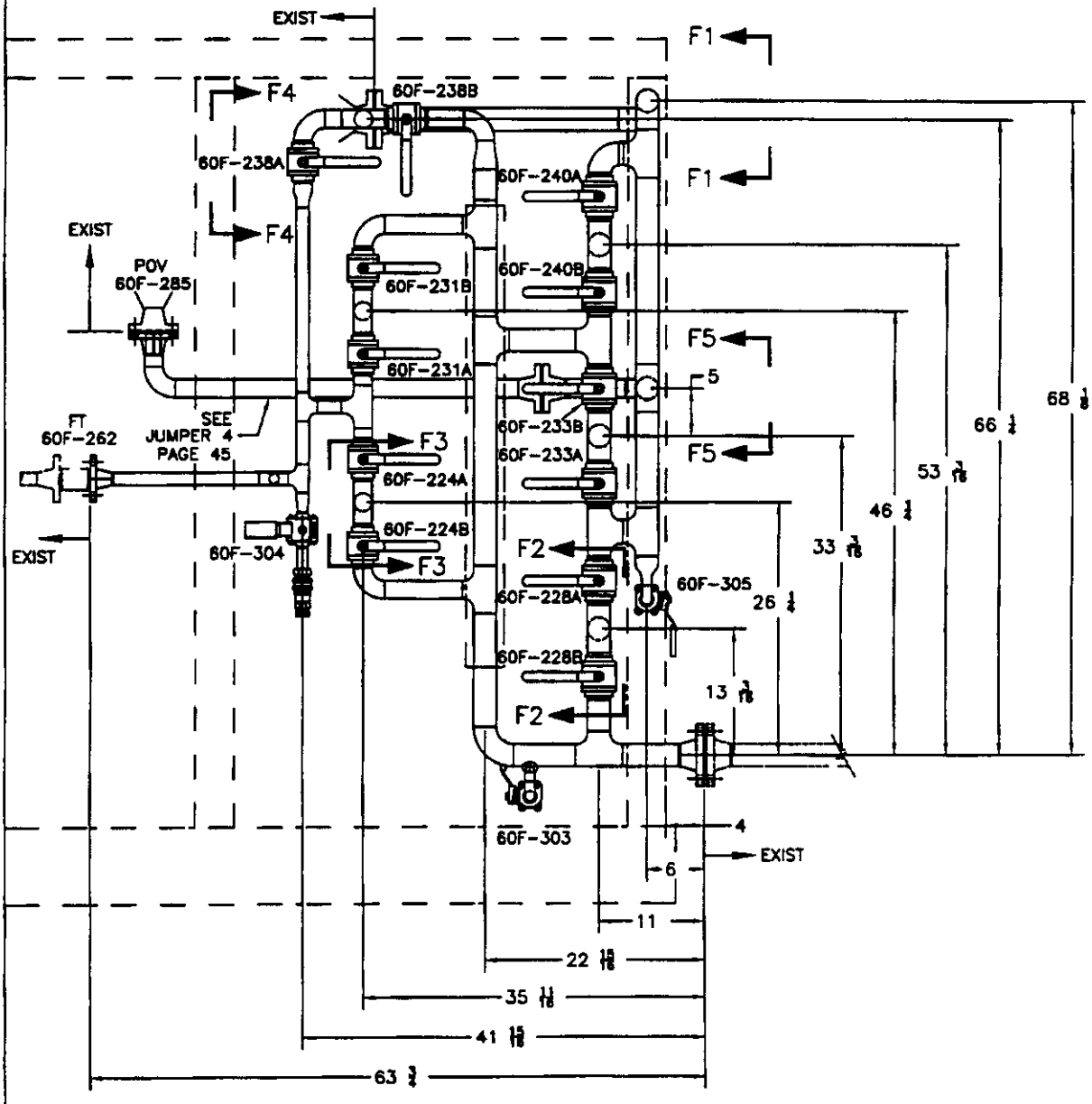

VIEW F-F DIMENSIONS, SECOND RO

ENGINEERING CHANGE NOTICE CONTINUATION SHEET	DOCUMENT NO N/A	DATE 02/05/01	ECN 662006

ASSEMBLY SKETCH
NOT FOR DRAWING INCORPORATION

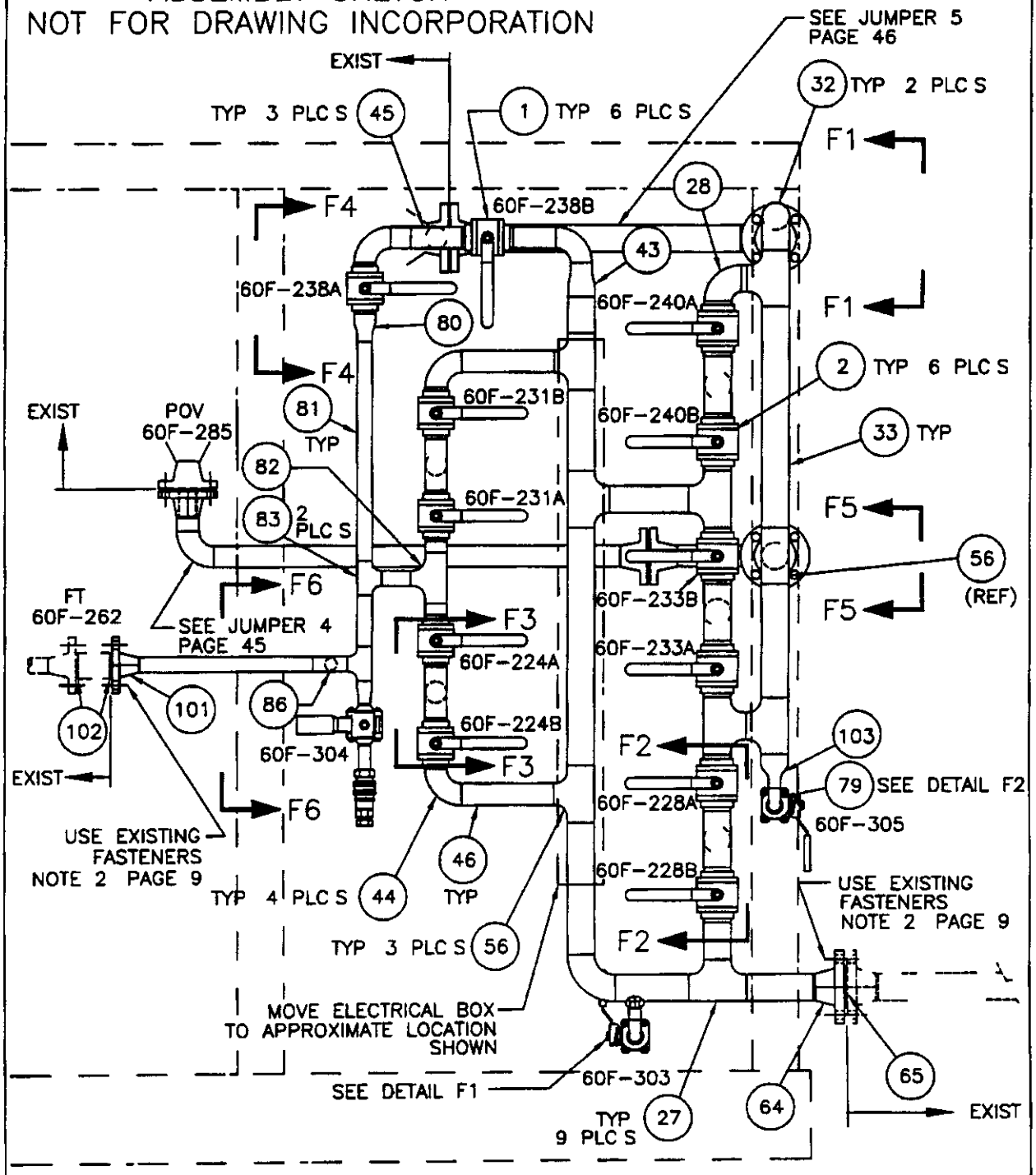

VIEW F-F PARTS CALLOUT, SECOND RO

ENGINEERING CHANGE NOTICE CONTINUATION SHEET	DOCUMENT NO N/A	DATE 02/05/01	ECN 662006

ASSEMBLY SKETCH
NOT FOR DRAWING INCORPORATION

DIMENSIONS SHOW ARE APPROXIMATE
FIELD ADJUST AS NECESSARY

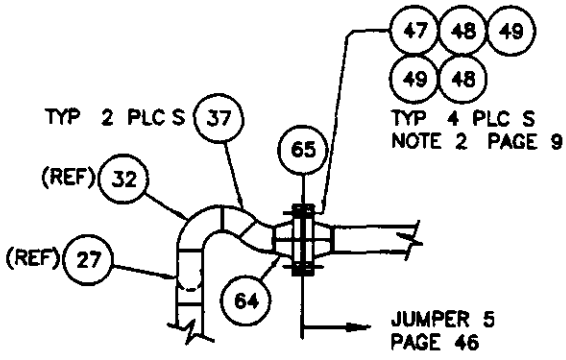

VIEW F1–F1

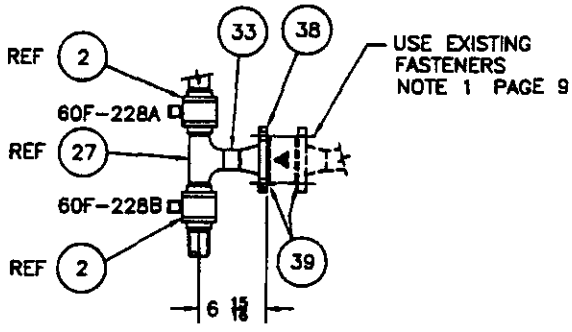

VIEW F2–F2
TYP 3 PLC S

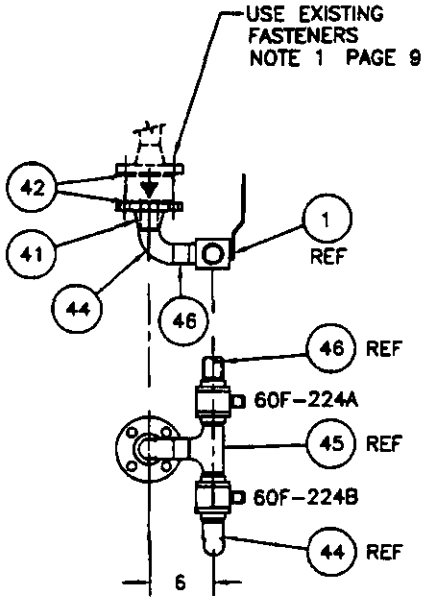

VIEW F3–F3
TYP 2 PLC S

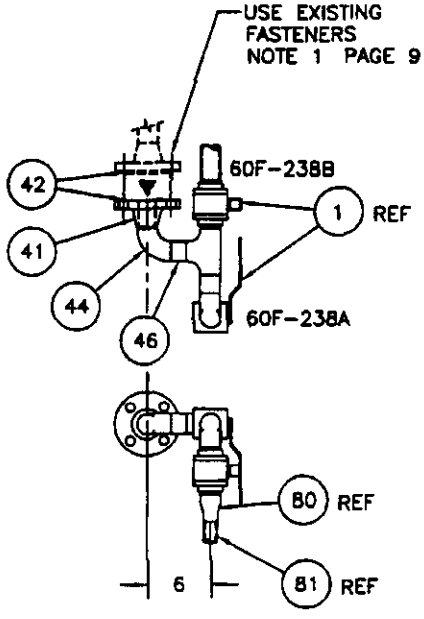

VIEW F4–F4
TYP 1 PLC S

ENGINEERING CHANGE NOTICE CONTINUATION SHEET	DOCUMENT NO N/A	DATE 02/05/01	ECN 662006

ASSEMBLY SKETCH
NOT FOR DRAWING INCORPORATION

DIMENSIONS SHOWN ARE APPROXIMATE
FIELD VERIFY AND ADJUST AS NECESSARY

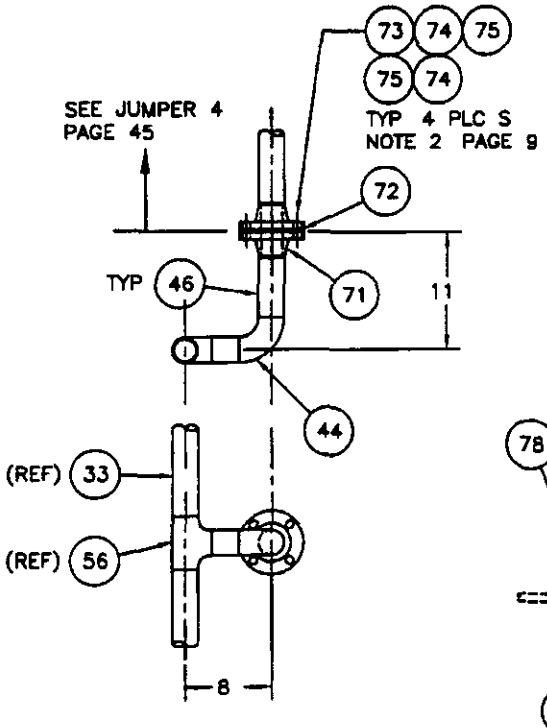

VIEW F5-F5
TYP 1 PLC S

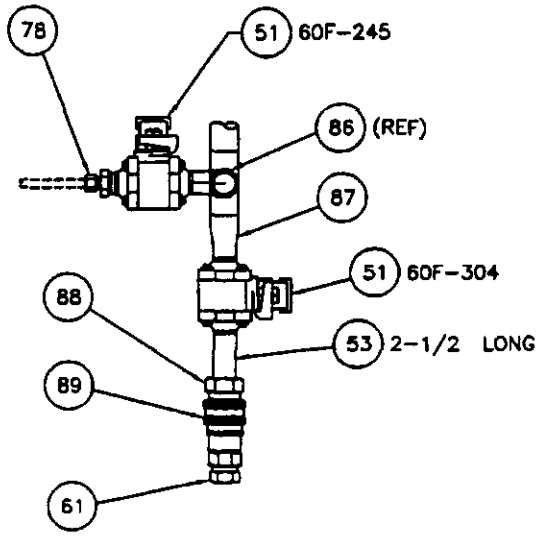

VIEW F6-F6
2X SCALE

ENGINEERING CHANGE NOTICE CONTINUATION SHEET	DOCUMENT NO N/A	DATE 02/05/01	ECN 662006

ASSEMBLY SKETCH
NOT FOR DRAWING INCORPORATION
DIMENSIONS SHOWN ARE APPROXIMATE
FIELD VERIFY AND ADJUST AS NECESSARY

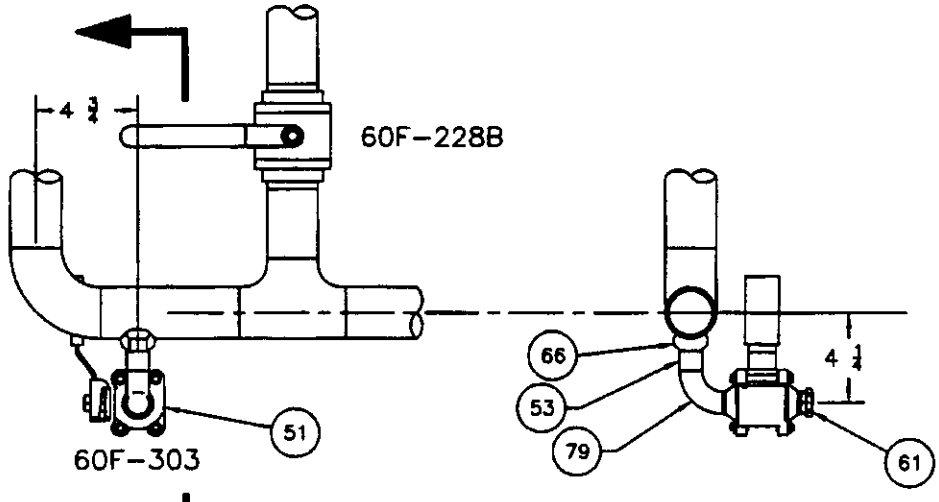

DETAIL F1

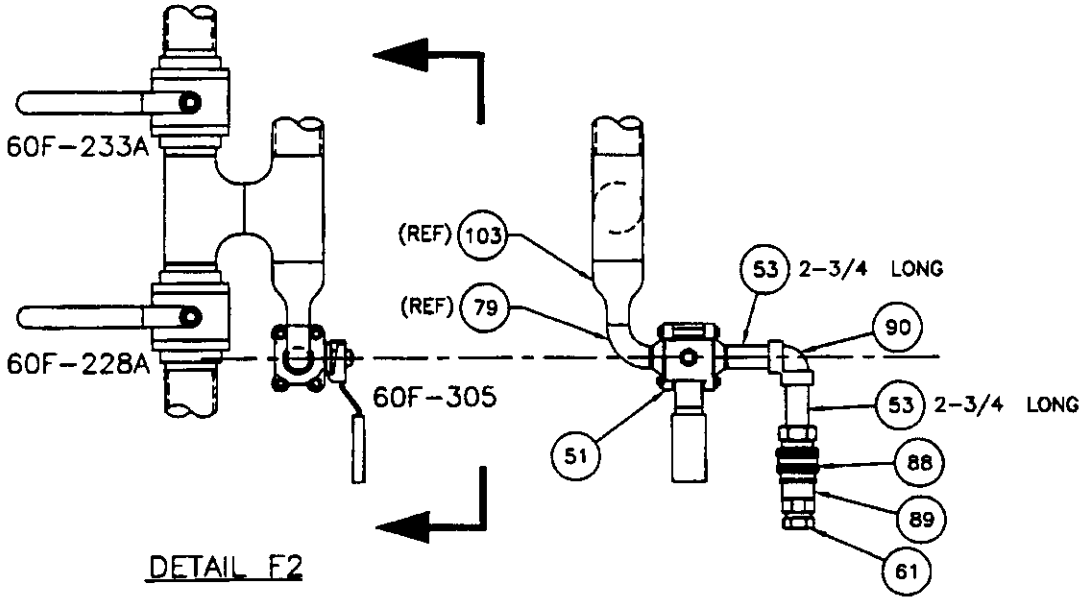

DETAIL F2

ASSEMBLY SKETCH
NOT FOR DRAWING INCORPORATION
DIMENSIONS SHOWN ARE APPROXIMATE
FIELD VERIFY AND ADJUST AS NECESSARY

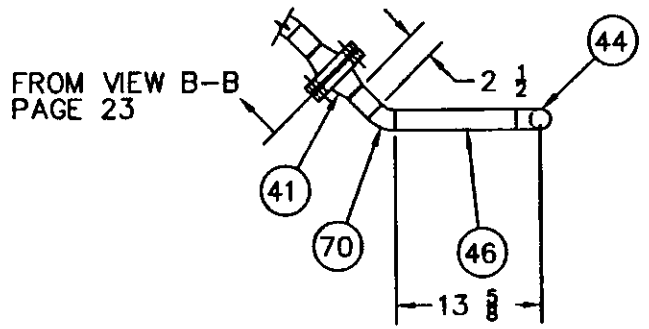

VIEW J1-J1

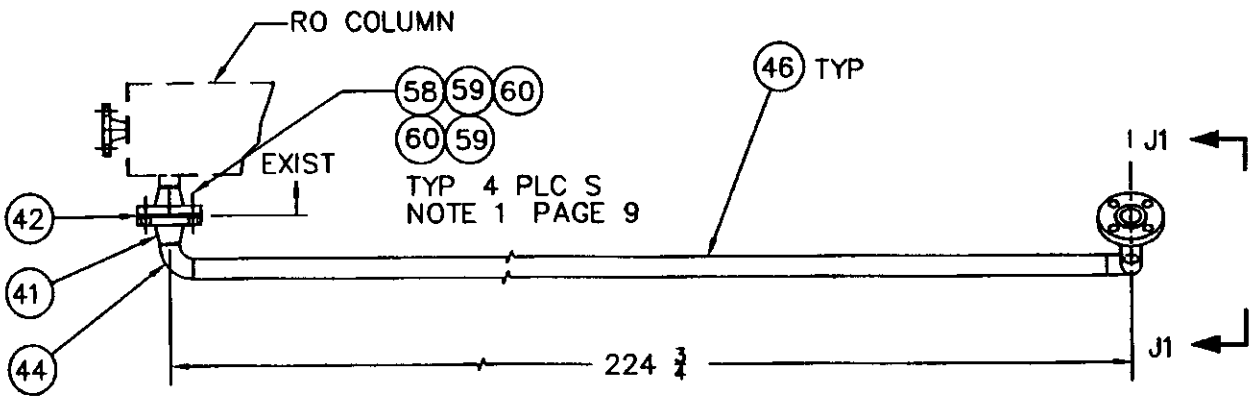

1ST RO JUMPER 1 DETAIL (SIDE VIEW)

TYPICAL 3 PLACES

ENGINEERING CHANGE NOTICE CONTINUATION SHEET	DOCUMENT NO	DATE	ECN
	N/A	02/05/01	662006

ASSEMBLY SKETCH
NOT FOR DRAWING INCORPORATION
DIMENSIONS SHOWN ARE APPROXIMATE
FIELD VERIFY AND ADJUST AS NECESSARY

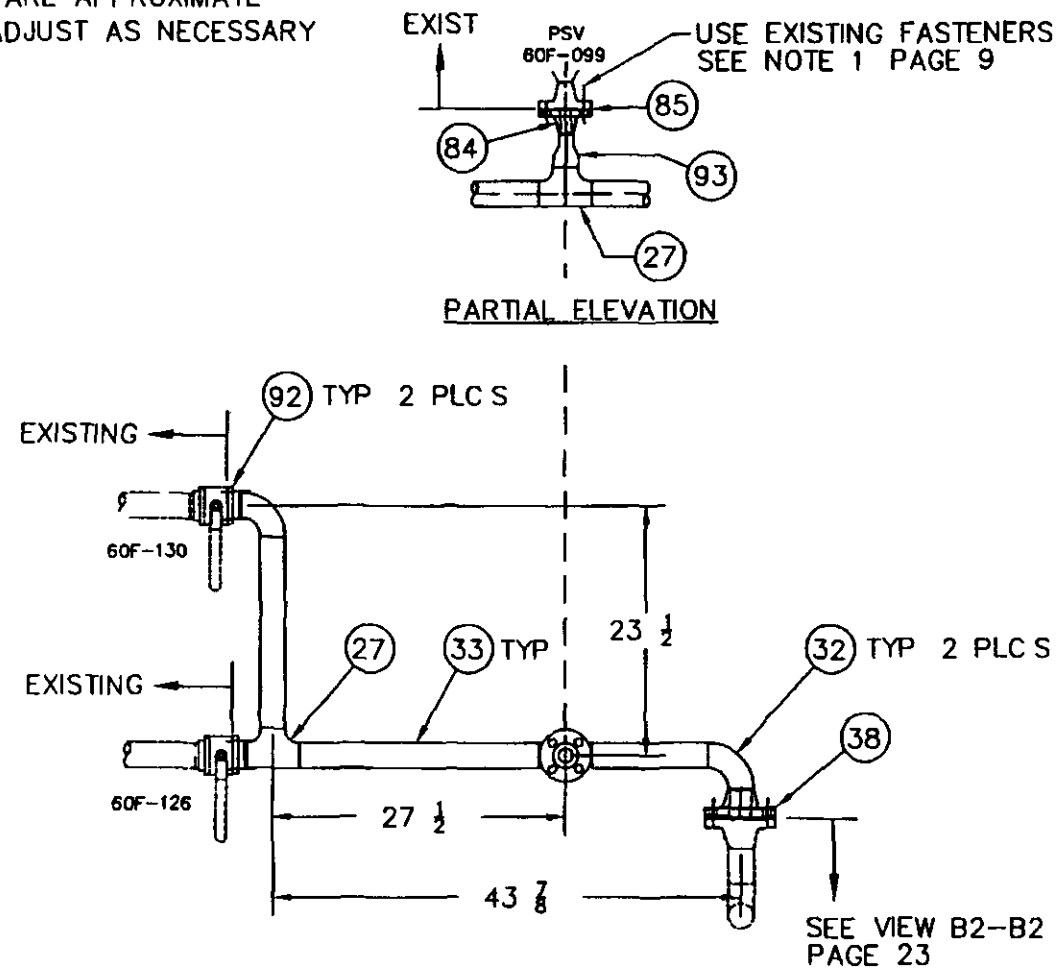

1ST RO JUMPER 2 DETAIL (PLAN VIEW)

ENGINEERING CHANGE NOTICE CONTINUATION SHEET	DOCUMENT NO	DATE	ECN
	N/A	02/05/01	662006

ASSEMBLY SKETCH
NOT FOR DRAWING INCORPORATION
DIMENSIONS SHOWN ARE APPROXIMATE
FIELD VERIFY AND ADJUST AS NECESSARY

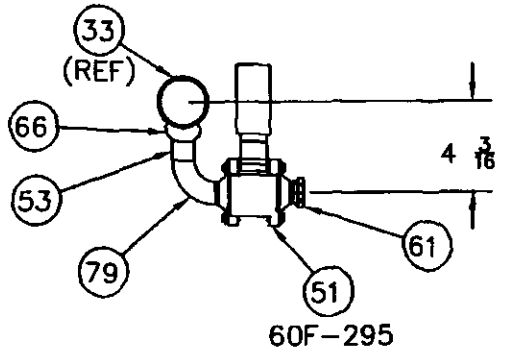

VIEW J3-J3

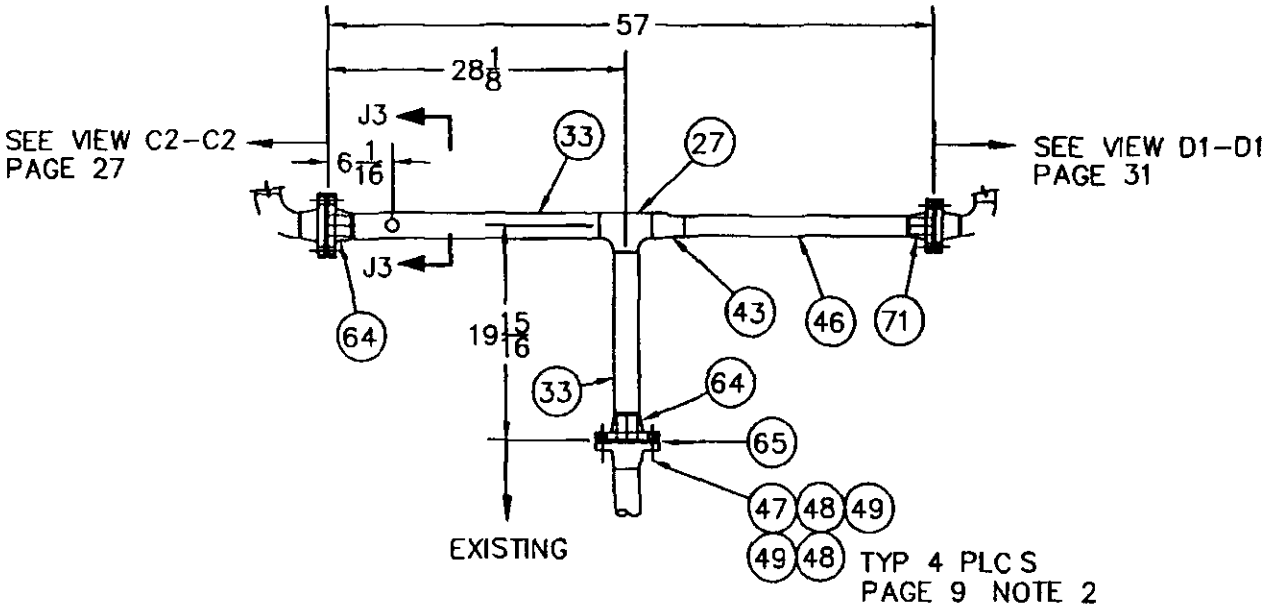

1ST RO JUMPER 3 DETAIL (PLAN VIEW)

ENGINEERING CHANGE NOTICE CONTINUATION SHEET	DOCUMENT NO N/A	DATE 02/05/01	ECN 662006

ASSEMBLY SKETCH
NOT FOR DRAWING INCORPORATION
DIMENSIONS SHOWN ARE APPROXIMATE
FIELD VERIFY AND ADJUST AS NECESSARY

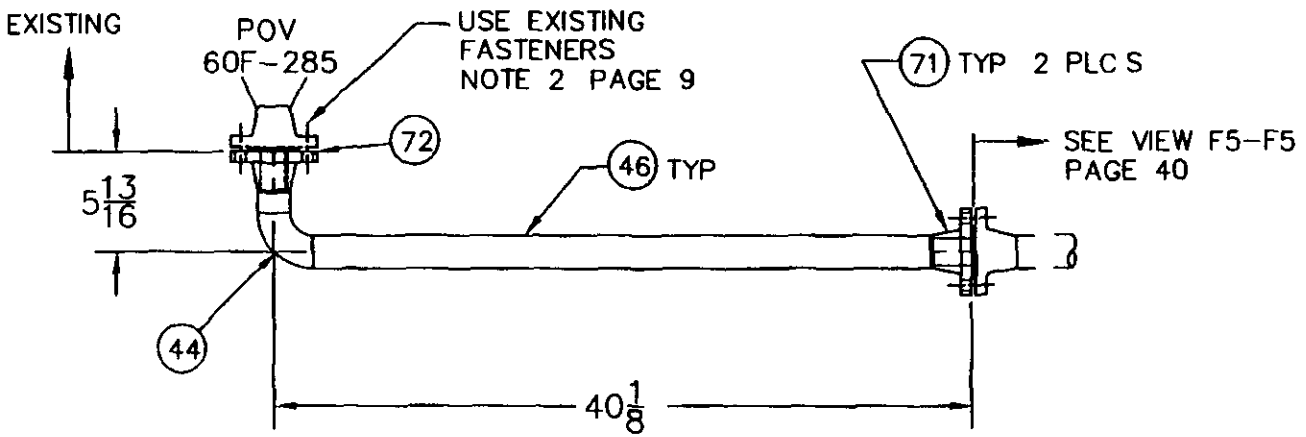

2ND RO JUMPER 4 DETAIL (SIDE VIEW)

ENGINEERING CHANGE NOTICE CONTINUATION SHEET	DOCUMENT NO	DATE	ECN
	N/A	07/23/01	662006

ASSEMBLY SKETCH
NOT FOR DRAWING INCORPORATION
DIMENSIONS SHOWN ARE APPROXIMATE
FIELD VERIFY AND ADJUST AS NECESSARY

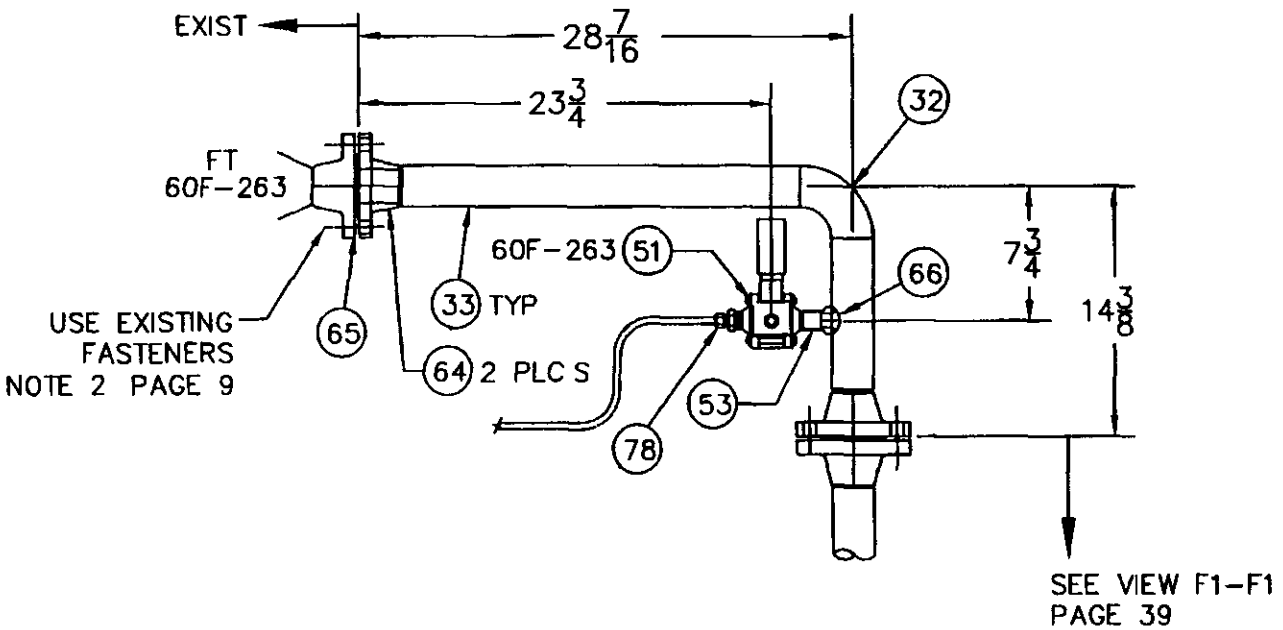

2ND RO JUMPER 5 DETAIL (PLAN VIEW)

ENGINEERING CHANGE NOTICE CONTINUATION SHEET	DOCUMENT NO	DATE	ECN
	N/A	07/23/01	662006

ITEM	QUANTITY	Description	Notes
PART 1 - 1-1/2" BALL VALVE ASSEMBLY WITH POSITION INSTRUMENTATION (PAGE 17)			
1	30	1-1/2" Ball Valve Assembly Consisting of the following 3 Parts: • 1-1/2" Ball Valve, 3-Piece Ball Valve, Standard Port, Body and End Pieces 316L SS, Ball and Stem 316 SS, Virgin PTFE Seats/Seals, SCH 10 Butt Weld Ends (BWE), Direct (ISO 5211 Type) Center Section, MCF Part Number **1-1/2"-SRS-66-TFT-BWE-I** • Position Indicator Mounting Kit, MCF Part Number **MK-50IND** • Valve Position Indicator and Puck, MCF Part Number **IND0118**	Vendor Contact: MCF Valves Houston, Texas 77018 Tel: (713) 869-3100 Fax: (713) 869-5511 Email: sales@mcfvalves.com
Part 2 - 2" BALL VALVE ASSEMBLY WITH POSITION INSTRUMENTATION (PAGE 18)			
2	24	2" Ball Valve Assembly Consisting of the following 3 Parts: • 2" Ball Valve, 3-Piece Ball Valve, Standard Port, Body and End Pieces 316L SS, Ball and Stem 316 SS, Virgin PTFE Seats/Seals, SCH 10 Butt Weld Ends (BWE), Direct (ISO 5211 Type) Center Section, MCF Part Number **2"-SRS-66-TFT-BWE-I** • Position Indicator Mounting Kit, MCF Part Number **MK-50IND** Valve Position Indicator and Puck, MCF Part Number **IND0118**	Vendor Same as Item 1
VIEW A-A FIRST RO (PAGE 19)			
		(Some Parts Identified in This View are Listed Under other views or details)	
27	32	2" SCH 10S Pipe Tee, Butt Weld Ends, ASTM A403 WP304	
28	7	2" SCH 10S Short Radius Elbow, Butt Weld Ends, ASTM A403 WP304	
29	2	3" Welding Neck Flange, SCH 10S, Raised Face, 300 #, ASME B16.5, ASTM A182-F304	
30	4	3" x 2" Reducing Tee, SCH 10S, Butt Weld Ends, ASTM A403 WP304	
31	2	3" x 2" Concentric Reducer, SCH 10S, Butt Weld Ends, ASTM A403 WP304	
32	25	2" SCH 10S Long Radius Elbow, Butt Weld Ends, ASTM A403 WP304	
33	~65 feet	2" SCH 10S Pipe, ASTM A312 TP304	
34	~10 feet	3" SCH 10S Pipe, ASTM A312 TP304	
35	2	3" Flat Ring Gasket, Flexitallic Style LS (or equal), Type 304SS/Flexicarb, ASME B16.5, 300#	

		VIEW A1-A1 FIRST RO (PAGE 20)	
		(Some Parts Identified in This View are Listed Under other views or details)	
37	14	2" SCH 10S 45 Degree Elbow, Butt Weld Ends, ASTM A403 WP304	
38	14	2" Welding Neck Flange, SCH 10S, Raised Face, 300 #, ASME B16.5, ASTM A182-F304	
39	18	2" Flat Ring Gasket, Flexitallic Style LS (or equal), Type 304SS/Flexicarb, ASME B16.5, 300#	
41	35	1-1/2" Welding Neck Flange, SCH 10S, Raised Face, 300 #, ASME B16.5, ASTM A182-F304	
42	45	1-1/2" Flat Ring Gasket, Flexitallic Style LS (or equal), Type 304SS/Flexicarb, ASME B16.5, 300#	
43	13	2" x 1-1/2" Concentric Reducer, SCH 10S, Butt Weld Ends, ASTM A403 WP304	
44	46	1-1/2" SCH 10S Long Radius Elbow, Butt Weld Ends, ASTM A403 WP304	
45	37	1-1/2" SCH 10S Pipe Tee, Butt Weld Ends, ASTM A403 WP304	
46	~105 feet	1-1/2" SCH 10S Pipe, ASTM A312 TP304	
47	AR	Stud, Continuous Threaded, 5/8-11UNC, ASTM A193, GR. B7 Steel, ANSI B1.1	
48	AR	Nut, Hexagon Semifinished "Heavy Series", 5/8-11UNC, ASTM A194, GR. 2H, ANSI B18.2.2	
49	AR	Lock Washer, 5/8"	
		DETAILS A1 to A3 (PAGE 19)	
		(Some Parts Shown in This View are indentified Under other views or details)	
51	22	3/4" Ball Valve, 3 Piece, SCH 10 Butt Weld on one end and ¾" Female NPT other end, 316 SS, Whitey 60 Series Valve, SS-65TW12P10-TF12	Suggested Vendor for Swagelok and Whitey: Seattle Valve & Fitting Co. 425-825-1115 (Phone) 425-825-1705 (Fax)
52	2	3" x ¾" Weldolet, SCH 10, 304 SS, ASTM A182	Paramount Supply
53	~5 feet	¾" SCH 10 Pipe, ASTM A312 TP304	
54	6	Male Elbow Tube Fitting, 3/8" Tube, ¾" NPT, Swagelok SS-600-2-12	
61	13	¾ NPT Male Pipe Plug, 304 SS	
66	8	2" x ¾" Weldolet, SCH 10, 304, ASTM A182	
79	5	¾" Long Radius Elbow, Butt Weld Ends, ASTM A403 WP304	

		VIEW B-B FIRST RO (PAGE 20)	
		(Some Parts Identified in This View are Listed Under other views or details)	
56	12	2" x 1-1/2" SCH 10S Reducing Tee, Butt Weld Ends, ASTM A403 WP304	
62	2	2" x ¾" SCH 10S Reducing Tee, Butt Weld Ends, ASTM A403 WP304	
		VIEW B1-B1, VIEW B2-B2 (PAGE 23)	
		(Some Parts Identified in This View are Listed Under other views or details)	
58	AR	Stud, Continuous Threaded, 3/4-10UNC, ASTM A193, GR. B7 Steel, ANSI B1.1	
59	AR	Nut, Hexagon Semifinished "Heavy Series", 3/4-10UNC, ASTM A194, GR. 2H, ANSI B18.2.2	
60	AR	Lock Washer, 3/4"	
70	8	1-1/2" SCH 10S 45 Degree Elbow, Butt Weld Ends, ASTM A403 WP304	
		VIEW B3-B3 (PAGE 24)	
		(Some Parts Identified in This View are Listed Under other views or details)	
40	2	2" Check Valve, Mueller Steam Specialty, Sure Check Valve, Model 74, 300 LB ANSI, ASTM A351 Grade CF8M	
64	11	2" Welding Neck Flange, SCH 10S, Raised Face, 150 #, ASME B16.5, ASTM A182-F304	
65	11	2" Flat Ring Gasket, Flexitallic Style LS (or equal), Type 304SS/Flexicarb, ASME B16.5, 150#	
		DETAIL B1 (PAGE 25)	
		(Some Parts Identified in This View are Listed Under other views or details)	
55	3	1-1/2" x ¾" Weldolet, SCH 10, 304, ASTM A182	

		VIEW C-C FIRST RO (PAGE 26)	
		(Some Parts Identified in This View are Listed Under other views or details)	
57	5	1-1/2" SCH 10S Short Radius Elbow, Butt Weld Ends, ASTM A403 WP304	
63	3	1-1/2" x ¾" Concentric Reducer, SCH 10S, Butt Weld Ends, ASTM A403 WP304	
		VIEWS C1-C1 to C5-C5 (PAGE 27)	
		(All Parts Identified in This View are Listed Under other views or details)	
		DETAILS C1 to C3 (PAGE 28)	
		(All Parts Identified in This View are Listed Under other views or details)	
		VIEW D-D FIRST RO PARTS CALLOUT (PAGE 30)	
		(Some Parts Identified in This View are Listed Under other views or details)	
69	1	1-1/2" x ¾" SCH 10S Reducing Tee, Butt Weld Ends, ASTM A403 WP304	
95	1	1-1/2" x 1/2" Reducing Tee, SCH 10S, Butt Weld Ends, ASTM A403 WP304	
96	1	1/2" Welding Neck Flange, SCH 10S, Raised Face, 300 #, ASME B16.5, ASTM A182-F304	
97	1	1/2" Flat Ring Gasket, Flexitallic Style LS (or equal), Type 304SS/Flexicarb, ASME B16.5, 300 #	
98	1	3/4" Welding Neck Flange, SCH 10S, Raised Face, 300 #, ASME B16.5, ASTM A182-F304	
99	1	3/4" Flat Ring Gasket, Flexitallic Style LS (or equal), Type 304SS/Flexicarb, ASME B16.5, 300 #	
100	~ 3 FT	3/4" SCH 10S Pipe, ASTM A312 TP304	

		VIEWS D1-D1 to D4-D4 (PAGE 31)	
		(Some Parts Identified in This View are Listed Under other views or details)	
71	5	1-1/2" Welding Neck Flange, SCH 10S, Raised Face, 150 #, ASME B16.5, ASTM A182-F304	
72	3	1-1/2" Flat Ring Gasket, Flexitallic Style LS (or equal), Type 304SS/Flexicarb, ASME B16.5, 150#	
73	AR	Stud, Continuous Threaded, 1/2-13UNC, ASTM A193, GR. B7 Steel, ANSI B1.1	
74	AR	Nut, Hexagon Semifinished "Heavy Series", 1/2-13UNC, ASTM A194, GR. 2H, ANSI B18.2.2	
75	AR	Lock Washer, 1/2"	
		DETAILS D1 to D3 (PAGE 32)	
		(ALL Parts Identified in This View are Listed Under other views or details)	
		VIEW E-E SECOND RO PARTS CALLOUT (PAGE 34)	
		(Some Parts Identified in This View are Listed Under other views or details)	
76	2	3" SCH 10S 45 Degree Elbow, Butt Weld Ends, ASTM A403 WP304	
103	2	2" x 3/4" Concentric Reducer, SCH 10S, Butt Weld Ends, ASTM A403 WP304	
		VIEW E1-E1 SECOND RO (PAGE 35)	
		(All Parts Identified in This View are Listed Under other views or details)	
		DETAILS E1 to E2 (PAGE 36)	
		(Some Parts Identified in This View are Listed Under other views or details)	
77	1	3/4" SCH 10S 45 Degree Elbow, Butt Weld Ends, ASTM A403 WP304	
78	3	Male Tube Connector, 3/8" Tube, ¾" Male NPT, Swagelok SS-600-1-12	

VIEW F-F PARTS CALLOUT, SECOND RO (PAGE 38)			
		(Some Parts Identified in This View are Listed Under other views or details)	
80	1	1-1/2" x 1" Concentric Reducer, SCH 10S, Butt Weld Ends, ASTM A403 WP304	
81	~5 feet	1" SCH 10S Pipe, ASTM A312 TP304	
82	1	1-1/2" x 1" SCH 10S Reducing Tee, Butt Weld Ends, ASTM A403 WP304	
83	2	1" SCH 10S Pipe Tee, Butt Weld Ends, ASTM A403 WP304	
86	1	1" x ¾" SCH 10S Reducing Tee, Butt Weld Ends, ASTM A403 WP304	
101	1	1" Welding Neck Flange, SCH 10S, Raised Face, 150 #, ASME B16.5, ASTM A182-F304	
102	2	1" Flat Ring Gasket, Flexitallic Style LS (or equal), Type 304SS/Flexicarb, ASME B16.5, 150#	
VIEWS F1 to F4 (PAGE 37)			
		(All Parts Identified in This View are Listed Under other views or details)	
VIEWS F5 to F6 (PAGE 40)			
		(Some Parts Identified in This View are Listed Under other views or details)	
87	1	1" x 3/4" Concentric Reducer, SCH 10S, Butt Weld Ends, ASTM A403 WP304	
88	2	Swagelok Quick Connect, Male Stem, ¾" Female NPT, Swagelok SS-QF12-S-12PF	
89	2	Swagelok Quick Connect, Female Body, ¾" Female NPT, Swagelok SS-QF12-B-12PF	
DETAIL F1 to F2 (PAGE 41)			
		(Some Parts Identified in This View are Listed Under other views or details)	
90	1	¾" NPT Pipe Elbow, 304 SS	
1ST RO JUMPER 1 DETAIL (SIDE VIEW) (PAGE 42)			
		(Some Parts Identified in This View are Listed Under other views or details)	

1ST RO JUMPER 2 DETAIL (PLAN VIEW) (PAGE 43)			
		(Some Parts Identified in This View are Listed Under other views or details)	
84	1	1" Welding Neck Flange, SCH 10S, Raised Face, 300 #, ASME B16.5, ASTM A182-F304	
85	1	1" Flat Ring Gasket, Flexitallic Style LS (or equal), Type 304SS/Flexicarb, ASME B16.5, 300#	
92	2	Adapter, Butt Weld, for Watts Series 8452 2" 3-Piece Ball Valve, Grade CF3M Stainless Steel	CB Engineering Pacific Inc Bellevue, Washington 98004 (425) 646-7202 (PH) (425) 646-7211 (FAX)
93	1	2" x 1" Concentric Reducer, SCH 10S, Butt Weld Ends, ASTM A403 WP304	
1ST RO JUMPER 3 DETAIL (PLAN VIEW) (PAGE 44)			
		(All Parts Identified in This View are Listed Under other views or details)	
2ND RO JUMPER 4 DETAIL (SIDE VIEW) (PAGE 45)			
		(All Parts Identified in This View are Listed Under other views or details)	
2ND RO JUMPER 5 DETAIL (PLAN VIEW) (PAGE 46)			
		(All Parts Identified in This View are Listed Under other views or details)	

Trademarks:

Flexicarb - Flexitallic Limited Corporation
Flexitallic - "Flexitallic" Gasket Company Corporation
Swagelok - Crawford Fitting Company Corporation

ATTACHMENT B - AUTHORIZATION BASES REVIEW FORM

ECN 662006 Page 54 of 54

Part A:

REFERENCE ITEM # Proposed Change / Discovery
Proposed Change/Discovery (circle one)

APPROVAL DESIGNATOR ~~TQSR~~ T

TITLE Replace 3-Way Valves on RO System 60F

DESCRIPTION 3-Way ball valves on the Reverse Osmosis (RO) system 60F will be replaced with two 2-way ball valves to allow for Operation of Clean In Place (CIP) system during normal RO system operation..

8/14/01

Originator Signature Date

Part B:

Does the referenced item:	(check one)
A. Increase risk from a hazard - to the workers &/or public beyond that previously analyzed, evaluated, and documented in the Authorization Bases?	NO x Yes/Maybe
B. Reduce the reliability or effectiveness of features, controls, procedures, or processes used to mitigate hazards?	NO x Yes/Maybe
C. Introduce a hazard not evaluated in the Authorization Bases?	NO x Yes/Maybe
D. Reflect new information on existing hazards beyond that currently documented in the Authorization Bases?	NO x Yes/Maybe

DETERMINATION BASES: Record complete justification and reference information below. Use Attachment 3 for continuations. *Maintain with submittal package.*

Replacement of 3-way valves will allow for continuous operation of RO system. Implementation of these changes falls within the existing authorization basis identified within the ASA (HNF-SD-ETF-ASA-001) and the Hazard Categorization for the Effluent Treatment Facility (WHC-SD-C018-HC-002).

PABI, Item Remains Open	No Impact, ABR Closed		
☐	☒	Authorization Bases Evaluator	9-20-01 Date
☐	☐	LWPF OSE Team Leader	Date

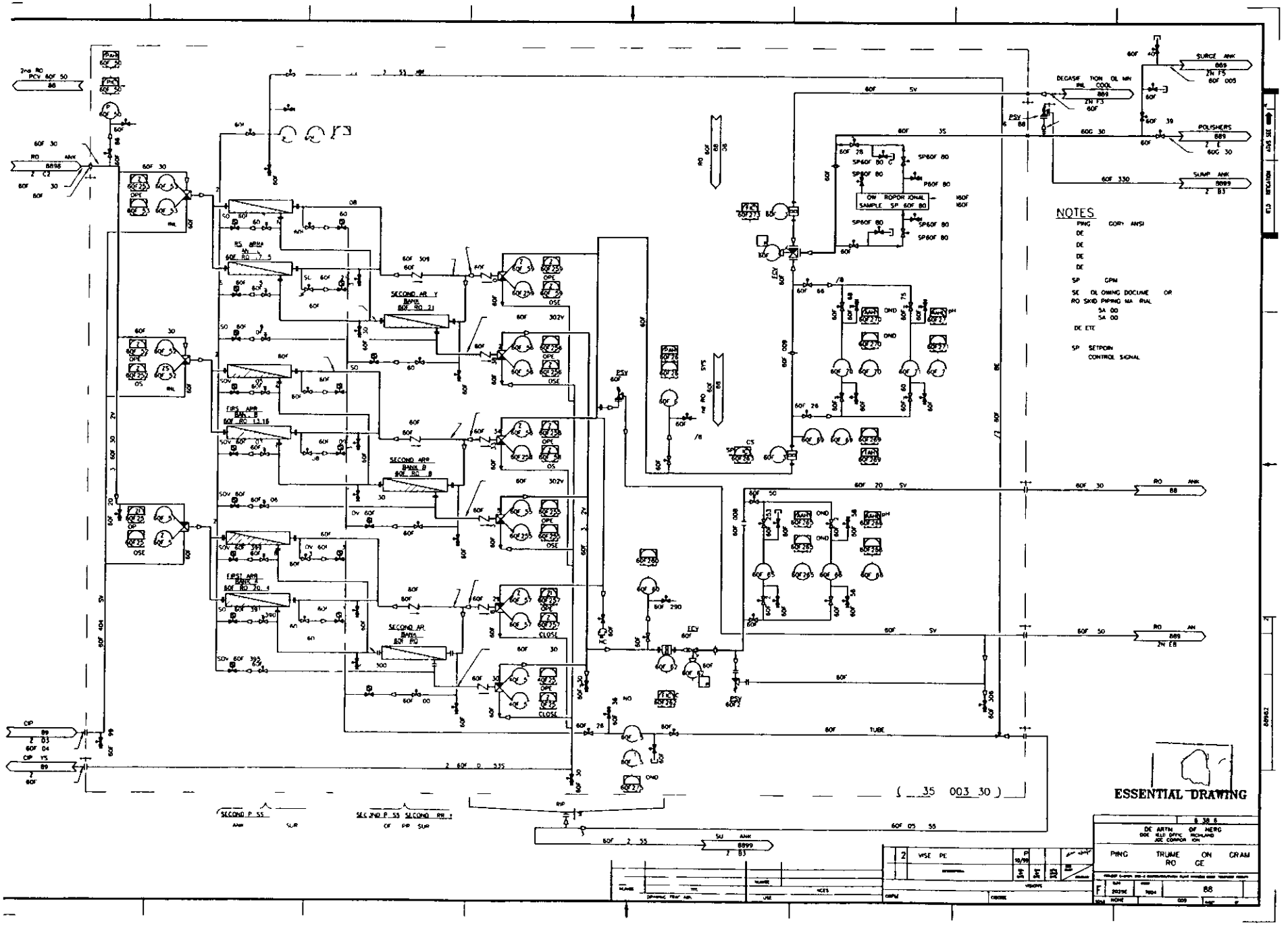
NOTES
ESSENTIAL DRAWING
SECOND AR Y BANK
FIRST AR BANK
SECOND AR BANK B
FIRST AR BANK
SECOND AR BANS
SURGE ANK
POLISHERS
SUMP ANK
DECASF TION OL MN COOL
ON ROPOR IONAL SAMPLE
TUBE
(35 003 30)

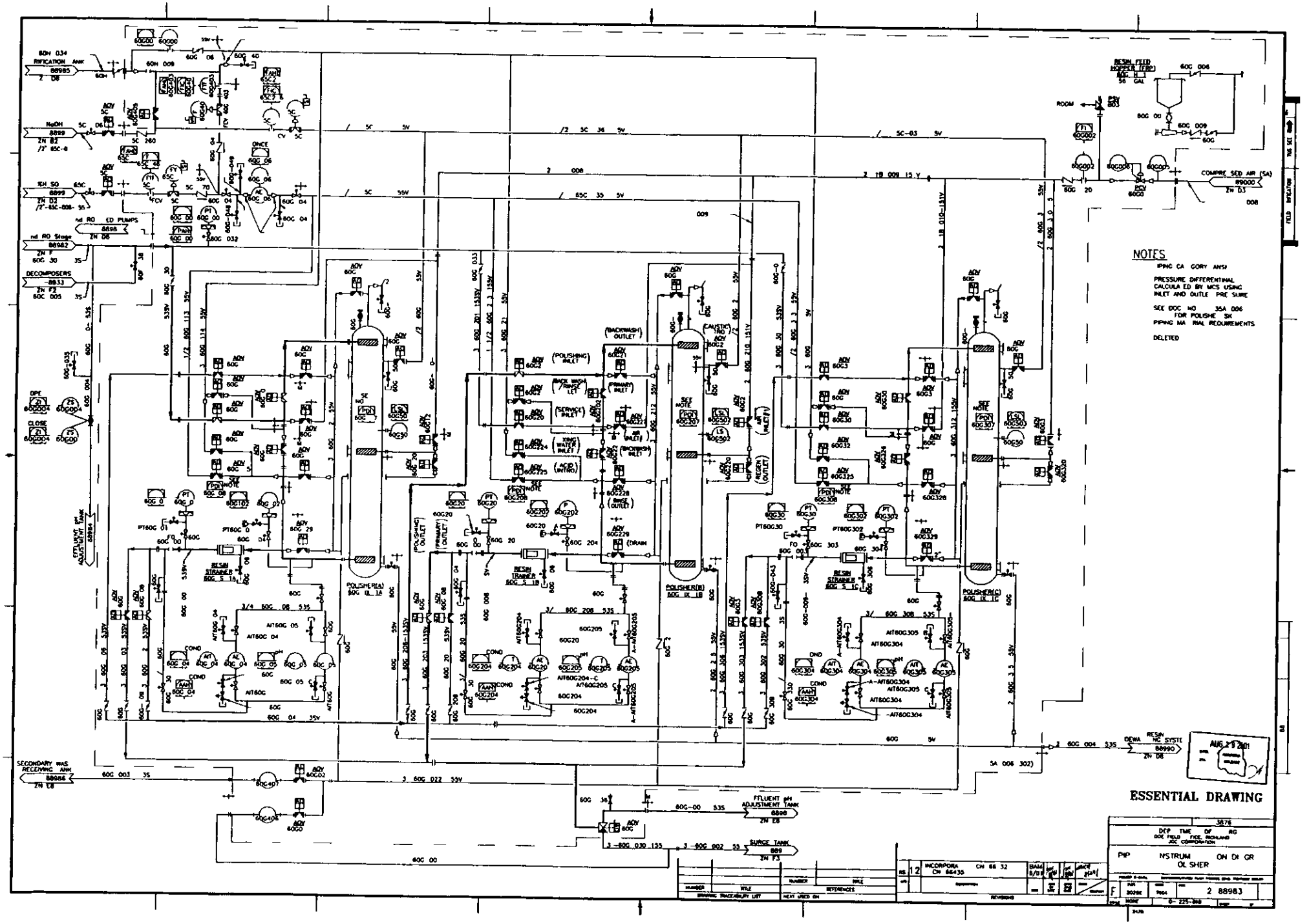
NOTES
PIPING CA GORY ANSI
PRESSURE DIFFERENTIAL CALCULA ED BY MCS USING INLET AND OUTLE PRE SURE
SEE DOC NO 35A 006 FOR POLISHE SK PIPING MA RIAL REQUIREMENTS
DELETED
ESSENTIAL DRAWING
POLISHER(A) 60G IX 1A
POLISHER(B) 60G IX 1B
POLISHER(C) 60G IX 1C
RESIN STRAINER 60G S 1A
RESIN TRAINER 60G S 1B
RESIN STRAINER 60G S 1C
RESIN FEED HOPPER (FRP)
COMPRE SED AIR (SA)
SECONDARY WAS RECEIVING ANK
FTLUENT pH ADJUSTMENT TANK
SURGE TANK
DEWA RESIN NG SYSTE
AUG 2 9 2001

S

ESSENTIAL

ENGINEERING CHANGE NOTICE

CPF 18

1 ECN 664323

Proj ECN

2 ECN Category (mark one)	3 Originator s Name Organization MSIN and Telephone No	4 USQ Required?	5 Date
Supplemental [X] Direct Revision [] Change ECN [] Temporary [] Standby [] Supersedure [] Cancel/Void []	LL Huth/3M500/S6 72/372 2771	[] Yes [X] No	8/28/01
	6 Project Title/No /Work Order No Provide Automated Acid Dilution Capability for Polisher Skid/CACN 101697 COA B000	7 Bldg /Sys /Fac No 2025E/60G 65C	8 ApprovalDesignator T
	9 Document Numbers Changed by this ECN (includes sheet no and rev) SEE BLOCK 13a	10 Related ECN No(s) N/A	11 Related PO No N/A

12a Modification Work	12b WorkPackage No	12c Modification WorkComplete	12d Restored to OriginalCondition(Temp or Standby ECN only)
[x] Yes (fill out Blk 12b) [] No (NA Blk 12b 12c 12d)	EL 98 00313/M	Design Authority/Cog Engineer Signature & Date	N/A Design Authority/Cog Engineer Signature & Date

13a Description of Change 13b Design Baseline Document? [x] Yes []No

Affected drawing H 2 88983 P&ID Polisher sht 1 rev 12

- Delete FAHL-65C146 FAHL 65C246 and FAHL 60G403 from drawing. Alarms are removed from MCS
- Change valve tag for 65C 106 to 65C 104 Tag number 65C 106 is used else where
- Material change break point is changed due to modification per ECN 664351

Affected Document HNF SD ETF OCD 001 Rev 6

- Page 58 Remove FIC 65C146 from Table
- Page 59 Remove FIC 65C246 from Table

See pages 3 5 for change details.

14a Justification (mark one)

Criteria Change []	Design Improvement [x]	Environmental []	Facility Deactivation []
As Found []	Facilitate Const []	Const Error/Omission []	Design Error/Omission []

14b Justification Details

The flow alarms serve no useful purpose for the polisher regeneration process The flow control is being done with flow control valve to a set point

Valve tag for the 4% caustic supply valve needs to be changed due to the valve number being duplicated

15 Distribution (include name MSIN and no of copies)

LL Huth	S6 72	1	TW Calihan	S6 71	1
KJ Lueck	S6 72	1	BA Messinger*	B4 39	1
CD Skogley	S6 72	1	CM Towne*	S6 74	1
RM Szelmeczka	S6 72	1	KH Bergsman	S6 72	1
MW Bowman	S6 72	1	JB Benton	S6 72	1
JM Isdell	B4 39	1	WCC Planning*	S6 71	1
DL Flyckt	S6 71	1	*1 Advanced Copy		

RELEASE STAMP

AUG 30 2001

DATE HANFORD RELEASE

STA. 30 ID 25

A 7900 013 2 (05/96) GEF095

ENGINEERING CHANGE NOTICE CONTINUATION SHEET	Page 2 of 5	1 ECN (use no from pg 1) 664323

16 Design Verification Required	17 Cost Impact ENGINEERING		CONSTRUCTION		18 Schedule Impact (days)	
[x] Yes	Additional	[NA] $	Additional	[NA] $	Improvement	[NA]
[] No	Savings	[NA] $	Savings	[NA] $	Delay	[NA]

19 Change Impact Review Indicate the related documents(other than the engineering documents identified on Side 1)that will be affected by the change described in Block 13 Enter the affected document number in Block 20

SDD/DD	[NA]	Seismic/Stress Analysis	[NA]	Tank Calibration Manual	[NA]
Functional Design Criteria	[NA]	Stress/Design Report	[NA]	Health Physics Procedure	[NA]
Operating Specification	[NA]	Interface Control Drawing	[NA]	Spares Multiple Unit Listing	[NA]
Criticality Specification	[NA]	Calibration Procedure	[NA]	Test Procedures/Specification	[NA]
Conceptual Design Report	[NA]	Installation Procedure	[NA]	Component Index	[X]
Equipment Spec	[NA]	Maintenance Procedure	[NA]	ASME Coded Item	[NA]
Const Spec	[NA]	Engineering Procedure	[NA]	Human Factor Consideration	[NA]
Procurement Spec	[NA]	Operating Instruction	[NA]	Computer Software	[X]
Vendor Information	[NA]	Operating Procedure	[X]	Electric Circuit Schedule	[NA]
OM Manual	[NA]	Operational Safety Requirement	[NA]	ICRS Procedure	[NA]
FSAR/SAR	[NA]	IEFD Drawing	[X]	Process Control Manual/Plan	[NA]
Safety Equipment List	[NA]	Cell Arrangement Drawing	[NA]	Process Flow Chart	[NA]
Radiation Work Permit	[NA]	Essential Materia Specification	[NA]	Purchase Requisition	[NA]
Environmental Impact Statement	[NA]	Fac Proc Samp Schedule	[NA]	Tickler File	[NA]
Environmental Report	[NA]	Inspection Plan	[NA]		[NA]
Environmental Permit	[NA]	Inventory Adjustment Request	[NA]		[NA]

20 Other Affected Documents (NOTE Documents listed below will not be revised by this ECN) Signatures below indicate that the signing organization has been notified of other affected documents listed below

Document Number/Revision	Document Number/Revision	Document Number Revision
ARP 60G 001 POP 60G-002		
SD ETF OCD 001		

21 Approval

	Signature	Date		Signature	Date
Design Authority	LL Huth	8/28/1	Design Agent	LL Huth	8/28/1
Cog Eng	LL Huth	8/28/01	PE		
og Mgr	KJ Lueck	8-28 01	QA		
QA			Safety		
Safe y			Design		
Environ			Environ		
Other INDEPENDENT REVIEW	KH Bergsman	8/28/01	Other		

DEPARTMENT OF ENERGY

Signature or a Control Number that tracks the Approval Signature

ADDITIONAL

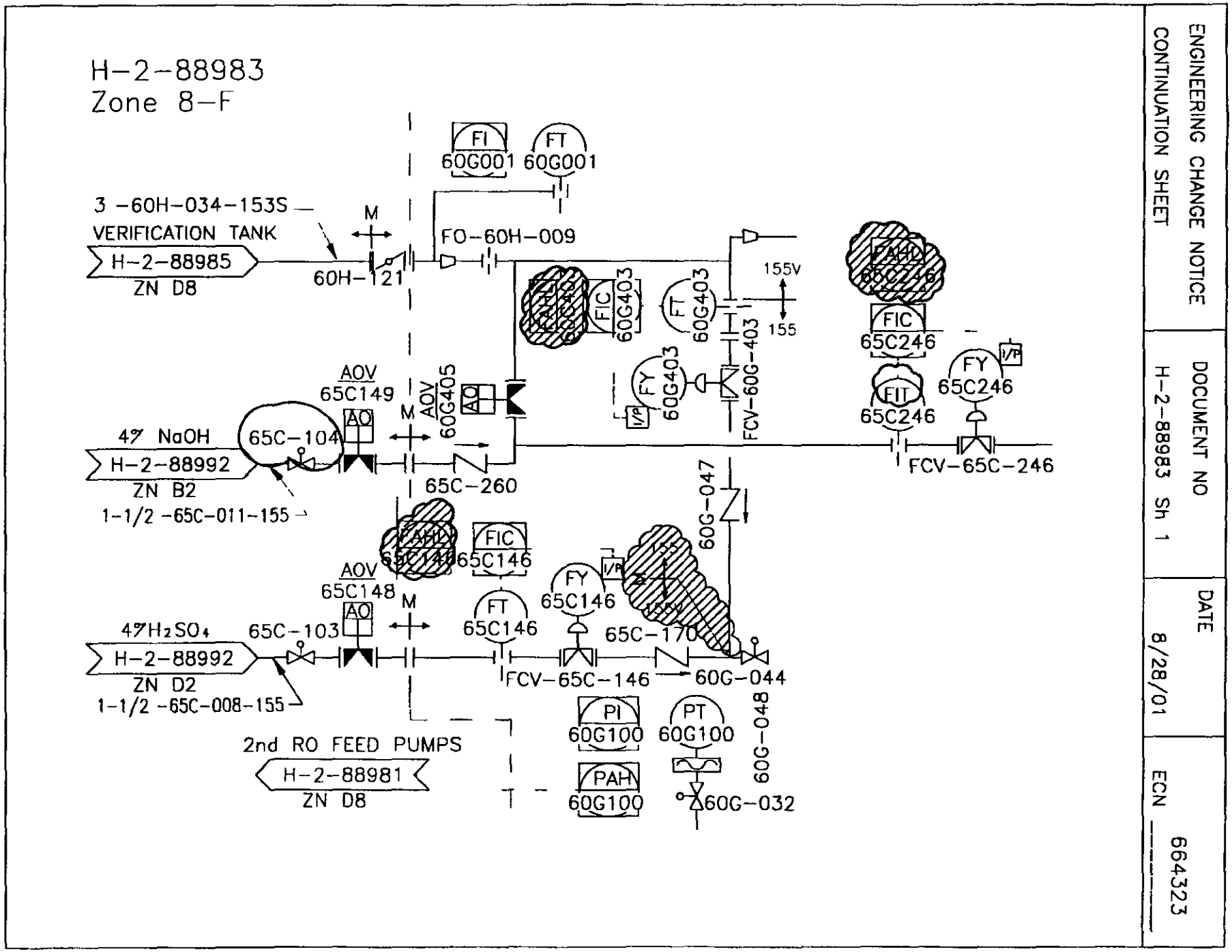

ENGINEERING CHANGE NOTICE
CONTINUATION SHEET

DOCUMENT NO
H-2-88983 Sh 1

DATE
8/28/01

ECN 664323

TABLE 26 65C CHEMICAL MAKEUP AND STORAGE (Chemical Reagent Feed System)

Tag No (PID No H 2 89337)	Name	Set Values and Functions	Remarks
FI 65C144 (88986)	Secondary Waste Receiving Tank H_2SO_4 Integrated Flow	SH (22 ~ 52) gal	Set value will be calculated by the operator
FI 65C145 (88988)	Concentrate Tank H_2SO_4 Integrated Flow	SH (0 ~ 1000) gal	Set value will be calculated by the operator
(Delete FIC 65C146)			
II 65C155 (88992)	92% H_2SO_4 Storage Tank Pump Current	FLA 10 2 A	FLA Full Load Amperage
II 65C156 (88982)	4% H_2SO_4 Solution Tank Pump Current	FLA 12 5 A	FLA Full Load Amperage
LI 65C201 (88992)	50% NaOH Storage Tank Level	AH 85 % Alarm Heater level off 31% AL 12 % Alarm Display NaOH SUPPLY REQUIRED ALL 6 % Alarm Stop 50% NaOH Storage Tank Pump 2025E 60C P 2	Process Design Values
PI 65C202 (88992)	50% NaOH Storage Tank Pump Discharge Pressure	Operating 40 55 psig	Head 77 ft Specific Gravity 1 52 (77 F)
FQI 65C203 (88992)	50% NaOH Integrated Flow	Operating flow rate 1 4 gpm SH 9 4 gal Close AOV 65C 030 65C051	Flowrate is set to 1 4 gpm by HV 65C029
LS 65C204 (88992)	50% NaOH Storage Tank Level	AH Alarm for overflow protection	Back up for LI 65C201
LI 65C211 (88992)	4% NaOH Solution Tank Level	AHH 98 % Alarm Stop 50 % NaOH Storage Tank Pump AH 95 % Alarm Close AOV 65C030 65C 051 SI 72 % Open AOV 65C030 65C051 Start up condition of polisher regeneration operation AL 20 % Stop 4% NaOH Solution Tank Pump 2025E 65C P 4	See equipment Process Calculation Polisher regeneration (V 135A 006 010) Caustic Exhaustion 90 gal Caustic Intro 528 gal Caustic/Acid Intro 528 gal Keep 573 gal between SL and AL

~~HNF-SD-EIF-OCD-001 Rev 6~~

ECN 664323 Page 4 of 5

TABLE 26 65C CHEMICAL MAKEUP AND STORAGE (Chemical Reagent Feed System)

Tag No (PID No H 2 89337)	Name	Set Values and Functions	Remarks
PI 65C212 (88992)	4% NaOH Solution Tank Pump Discharge Pressure	Operating 55 65 psig	Specific Gravity 1 04 (77 F)
TI 65C221 (88992)	50% NaOH Storage Tank Temperature	AH 110 149 F range Alarm restart temp for 65C P 2 AHH 110 150 F range Alarm shutdown for 65C P 2 SH 71 85 F range Heater off command SL 70 75 F range Heater on command AL 70 F Alarm	50 wt % NaOH solubility limit 66 F
TI -65C222 (88992)	4 % NaOH Solution Tank Temperature	Operating Range 60 134 F AH 130°F Alarm AHH 135 F Alarm shutdown 65C P-4 Close AOV-65C 030	
LS 65C243 (88984)	NaOH Dilution Pot Level	AL ON Alarm	Prevent Operation without NAOH
FI -65C244 (88986)	Secondary Waste Receiving Tank NaOH Integrated Flow	SH (2 ~ 72) gal	Set value will be calculated by the operator
FI 65C245 (88988)	Concentrate Tank NaOH Integrated Flow	SH 0 ~ 1000 gal	Set value will be calculated by the operator
(Delete FIC 65C246)			
II 65C255 (88992)	50% NaOH Storage Tank Pump Current	FLA 10 2 A	FLA Full Load Amperage
II 65C256 (88992)	4% NaOH Solution Tank Pump Current	FLA 12 5 A	FLA Full Load Amperage

~~HNF-SD-ETF-OCD-001 Rev 6~~

ECN 664323 Page 5 of 5

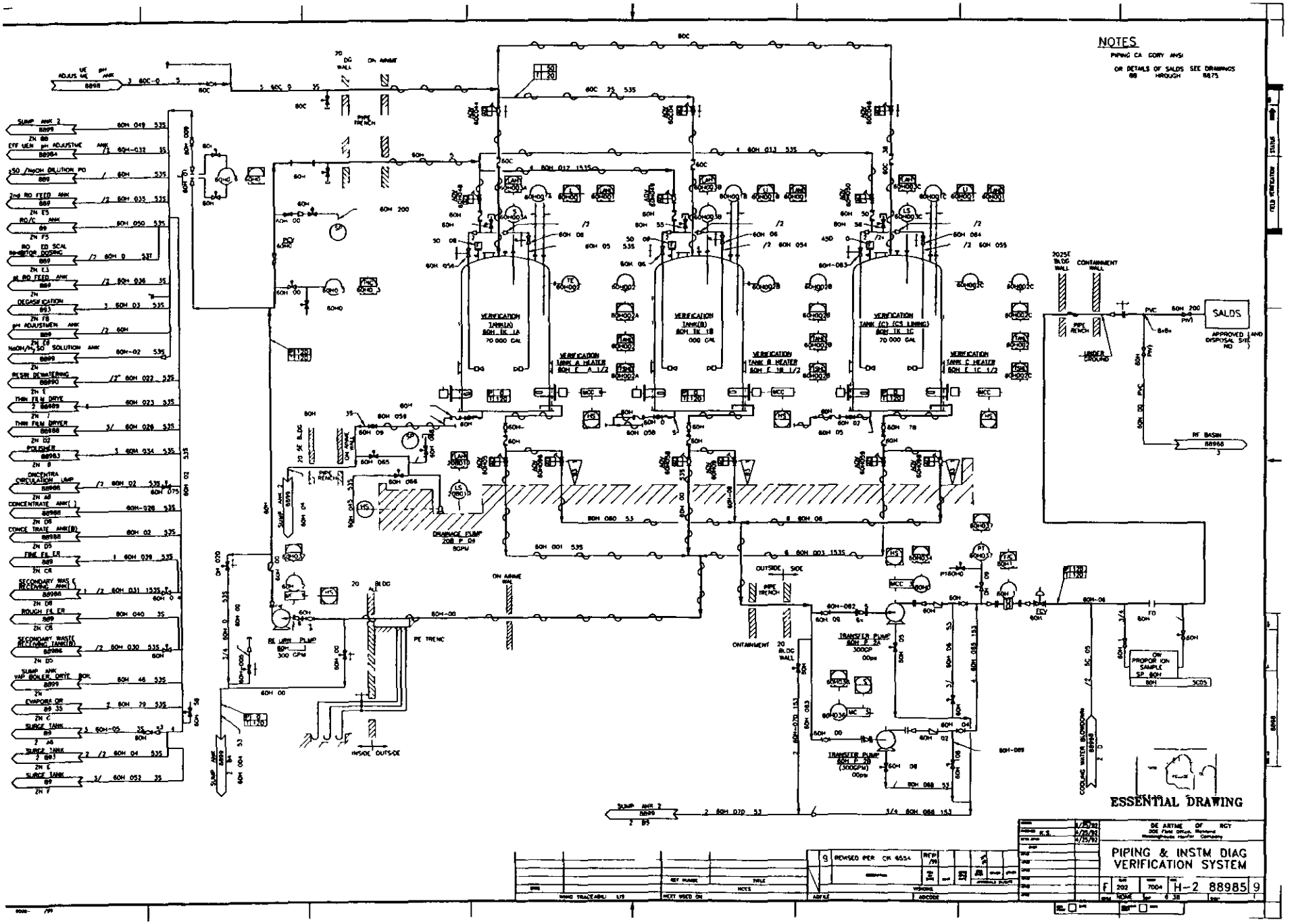
NOTES
PIPING CA CORY ANSI
OR DETAILS OF SALDS SEE DRAWINGS
HROUGH
VERIFICATION TANK(A) 70 000 GAL
VERIFICATION TANK(B) 000 GAL
VERIFICATION TANK (C) (CS LINING) 70 000 GAL
VERIFICATION TANK A HEATER
VERIFICATION TANK B HEATER
VERIFICATION TANK C HEATER
DRAINAGE PUMP
RE URN PUMP 300 GPM
TRANSFER PUMP
SALDS
APPROVED LAND DISPOSAL SITE
RF BASIN
ON PROPOR ION SAMPLE
ESSENTIAL DRAWING
PIPING & INSTM DIAG
VERIFICATION SYSTEM
H-2 88985 9

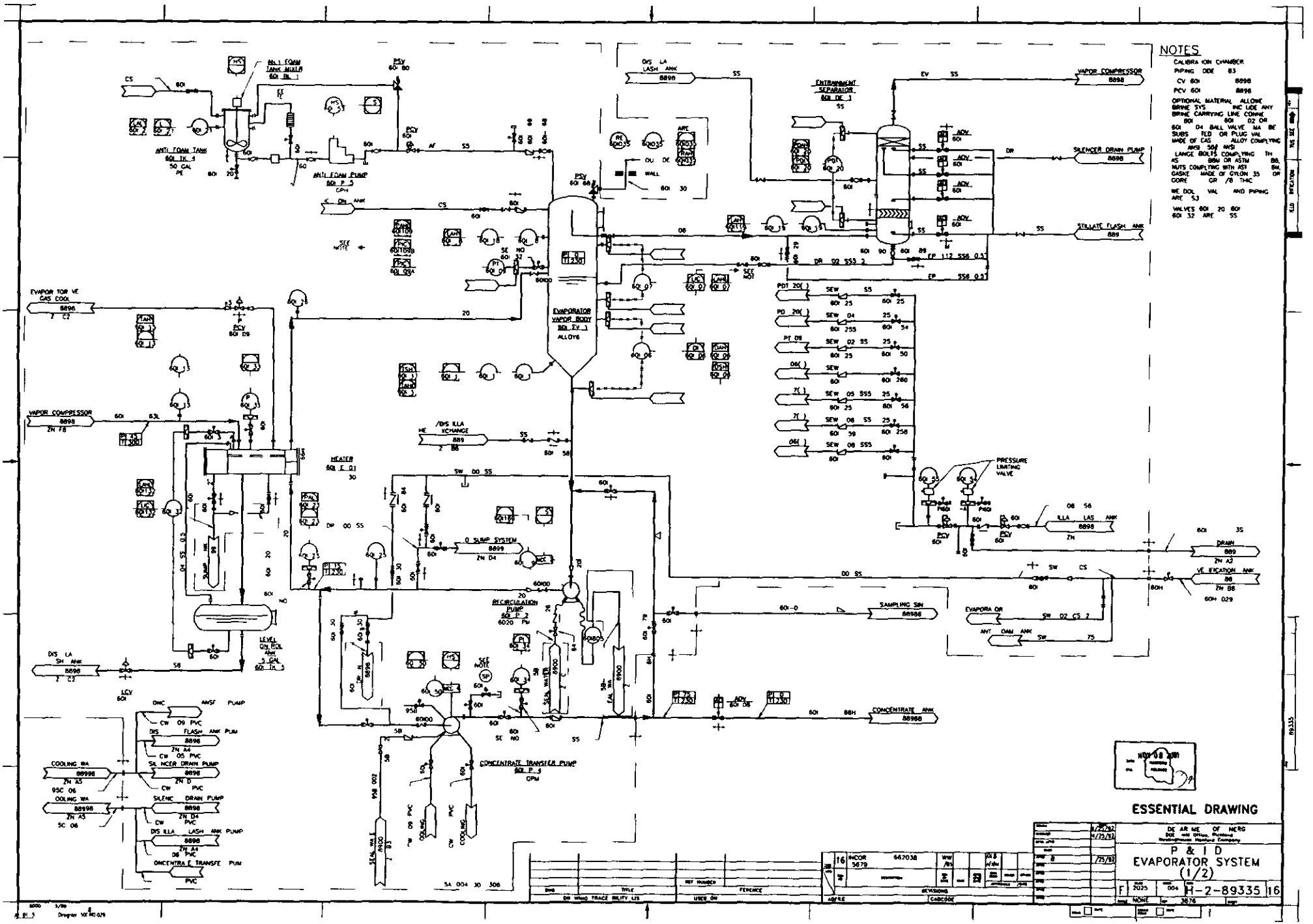
NOTES
CALIBRATION CHAMBER
PIPING CODE B3
CV 601 8898
PCV 601 8898
OPTIONAL MATERIAL ALLOWE
BRINE SYS INC UDE ANY
BRINE CARRYING LINE COMPONE
601 601 02 OR
601 04 BALL VALVE MA BE
SUBS TED OR PLUG VAL
MADE OF CAS ALLOY COMPLYING
ANSI 500# ANSI
LANGE BOLTS COMPLYING TH
AS 88M OR ASTM B8
NUTS COMPLYING WITH ASTI B8
GASKE MADE OF GYLON 35 OR
GORE GR /8 THRC
WE DOL VAL AND PIPING
ARE S3
VALVES 601 20 601
601 32 ARE S5
ESSENTIAL DRAWING
P & I D
EVAPORATOR SYSTEM
(1/2)
H-2-89335
EVAPORATOR VAPOR BODY
601 EV 1
ALLOY6
ENTRAINMENT SEPARATOR
601 DE 1
VAPOR COMPRESSOR
8898
SILENCER DRAIN PUMP
8898
STILLATE FLASH ANK
889
PRESSURE LIMITING VALVE
HEATER
601 E 01
RECIRCULATION PUMP
601 P 2
6020 PM
CONCENTRATE TRANSFER PUMP
601 P 4
GPM
SAMPLING SIN
8898B
CONCENTRATE ANK
8898B
DRAIN
889
ANTI FOAM TANK
601 TK 4
50 GAL
PE
ANTI FOAM PUMP
601 P 5
GPM
LEVEL
ON ROL
ANK
5 GAL
601 TK 5
COOLING WA
8898
ZN A5
95C 06
SC 06
DIS FLASH ANK PUM
8898
ZN A4
SILENCE DRAIN PUMP
8898
ZN D
SILENC DRAIN PUMP
8898
ZN D4
DIS ILLA LASH ANK PUMP
8898
ZN A4
06 PVC
CONCENTRA E TRANSFE PUM
PVC
EVAPOR TOR VE
GAS COOL
8898
VAPOR COMPRESSOR
8898
ZN F8
DIS LA
SH ANK
8898
ZN C2
/DIS ILLA
XCHANGE
889
ZN B8
Q SUMP SYSTEM
8899
ZN D4
ILLA LAS ANK
8898
ZN
VE EVACATION ANK
88
ZN B8
60H 029
EVAPORA OR
ANT OAM ANK
SW 02 CS 2
SW 75
DIS LASH ANK
8898
ZN B
NCOR
5679
662038
REVISIONS
CARCODE
DE AR ME OF NERG
P & I D
EVAPORATOR SYSTEM
(1/2)
H-2-89335
NONE
3676

S

ESSENTIAL

ENGINEERING CHANGE NOTICE

CPF 18

Page 1 of 29

1 ECN 664332

Proj ECN

2 ECN Category (mark one)	3 Originator's Name Organization MSIN and Telephone No	4 USQ Required?	5 Date
Supplemental ☒ Direct Revision ☐ Change ECN ☐ Temporary ☐ Standby ☐ Supersedure ☐ Cancel/Void ☐	DON SCULLY 3M500 S6-72 372-3592	☐ Yes ☒ No	09/21/01
	6 Project Title/No /Work Order No: ETF EVAPORATOR SYSTEM /BC30	7 Bldg /Sys./Fac. No: 2025E/60I	8 Approval Designator: T
	9 Document Numbers Changed by this ECN (includes sheet no and rev): See Block 13A	10 Related ECN No(s): N/A	11 Related PO No: N/A

12a Modification Work	12b Work Package No	12c Modification Work Completed	12d Restored to Original Condition (Temp or Standby ECNs only)
☒ Yes (fill out Blk 12b) ☐ No (NA Blks 12b 12c 12d)	EL-01-00449	Design Authority/Cog Engineer Signature & Date	N/A Design Authority/Cog Engineer Signature & Date

13a Description of Change — 13b Design Baseline Document? ☒ Yes ☐ No

1 H-2-89335 Sheet 1 Rev 15

See sheet 3 thru 7 of this ECN for CONSTRUCTION DETAILS And sheets 8 and 9 of this ECN for changes to H-2-89335

Piping is to be in accordance with ETF pipe class specification ADTECHS S-136H-001

pipe class SS4 with the exception that Flexitallic type LS gaskets and 316 SS Valves will be used

Piping shall be fabricated and tested per ASME B31 3 for normal fluid service

These changes remove existing differential pressure densitometer DT-60I-106 and replace it with a Dynatrol model CL 10 HY vibrating U-tube densitometer DT-60I-106
Related ECN-669008 will be generated by others for electrical changes

14a Justification (mark one)	14b Justification Details
Criteria Change ☒ Design Improvement ☐ Environmental ☐ Facility Deactivation ☐ As Found ☐ Facilitate Const ☐ Const Error/Omission ☐ Design Error/Omission ☐	Evaporator skid vendor (RCC) supplied densitometer did not indicate a correct brine density due to the high brine velocity existing at the lowe pressure tap during evaporator operation

15 Distribution (include name MSIN and no of copies)

DL Flyckt	S6-71	1			
MW Bowman	S6-72	1	DA Vasquez	S6-74	1
DE Scully	S6-72	1	RW Szelmeczka	S6-72	1
WCC Planning	S6-72	1	BA Messinger	S6-74	1
NJ Sullivan	S6-72	1	KJ Lueck	S6-72	1
JM Isdell	B4-39	1			
CD Skogley	S6-71	1			

= adavance copy

RELEASE STAMP

SEP 27 2001

DATE

HANFORD RELEASE

STA. 30

ID 25

A 7900-013 2 (10/97)

A 7900-013 1

ENGINEERING CHANGE NOTICE

1 ECN (use no from pg 1) 664 332 ~~318~~ 4/26/6

16 Design Verification Required	17 Cost Impact				18 Schedule Impact (days)	
	ENGINEERING		CONSTRUCTION			
☒ Yes	Additional ☐	$ N/A	Additional ☐	$ N/A	Improvement ☐	N/A
☐ No	Savings ☐	$ N/A	Savings ☐	$ N/A	Delay ☐	N/A

19 Change Impact Review Indicate the related documents (other than the engineering documents identified on Side 1) that will be affected by the change described in Block 13 Enter the affected document number in Block 20

SDD/DD	☐	Seismic/Stress Analysis	☐	Tank Calibration Manual	☐
Functional Design Criteria	☐	Stress/Design Report	☐	Health Physics Procedure	☐
Operating Specification	☐	Interface Control Drawing	☐	Spares Multiple Unit Listing	☐
Criticality Specification	☐	Calibration Procedure	☐	Test Procedures/Specification	☐
Conceptual Design Report	☐	Installation Procedure	☐	Component Index	☒
Equipment Spec	☐	Maintenance Procedure	☐	ASME Coded Item	☐
Const. Spec.	☐	Engineering Procedure	☐	Human Factor Consideration	☐
Procurement Spec	☐	Operating Instruction	☐	Computer Software	☐
Vendor Information	☒	Operating Procedure	☒	Electric Circuit Schedule	☐
OM Manual	☐	Operational Safety Requirement	☐	ICRS Procedure	☐
FSAR/SAR	☐	IEFD Drawing	☐	Process Control Manual/Plan	☐
Safety Equipment List	☐	Cell Arrangement Drawing	☐	Process Flow Chart	☐
Radiation Work Permit	☐	Essential Material Specification	☐	Purchase Requisition	☐
Environmental Impact Statement	☐	Fac. Proc Samp Schedule	☐	Tickler File	☐
Environmental Report	☐	Inspection Plan	☐	None	☐
Environmental Permit	☐	Inventory Adjustment Request	☒		☐

20 Other Affected Documents (NOTE Documents listed below will not be revised by this ECN) Signatures below indicate that the signing organization has been notified of other affected documents listed below

Document Number/Revision	Document Number/Revision	Document Number/Revision
POP-60I-003 REV AG-2		

21 Approvals

	Signature	Date		Signature	Date
Design Authority DE Scully	DE Scully	9/21/01	Design Agent BJ WILLIAMS	BJ Williams by DEScully per telecon	9/21/01
Cog Eng			PE		
Cog Mgr K J LUECK	KJ Lueck	9 26 01	QA		
QA			Safety		
Safety			Design		
Environ			Environ		
Other			Other		
(PEER REVIEW)H L Roach	H L Roach	9/26/01			
Rad Con					

DEPARTMENT OF ENERGY

Signature or a Control Number that tracks the Approval Signature

ADDITIONAL

ENGINEERING CHANGE NOTICE CONTINUATION SHEET	DOCUMENT NO N/A	DATE 9/21/01	ECN 664332

ASSEMBLY SKETCH NOT
FOR DRAWING INCORPORATION

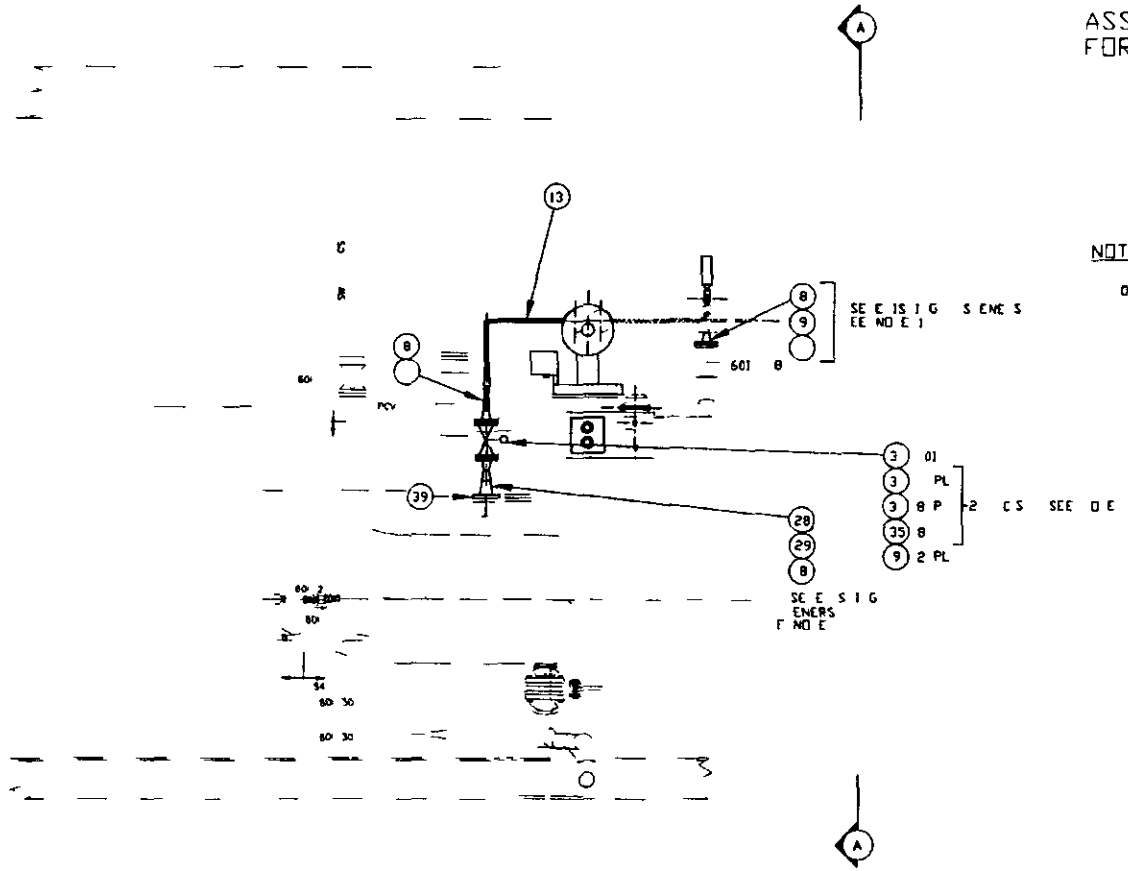

ELEVATION

NOTES

BASIC SEAL SADDLES
DOUBLE DOUBLE BS

ENGINEERING CHANGE NOTICE CONTINUATION SHEET	DOCUMENT NO N/A	DATE 9/21/01	ECN 664332

ASSEMBLY SKETCH NOT
FOR DRAWING INCORPORATION

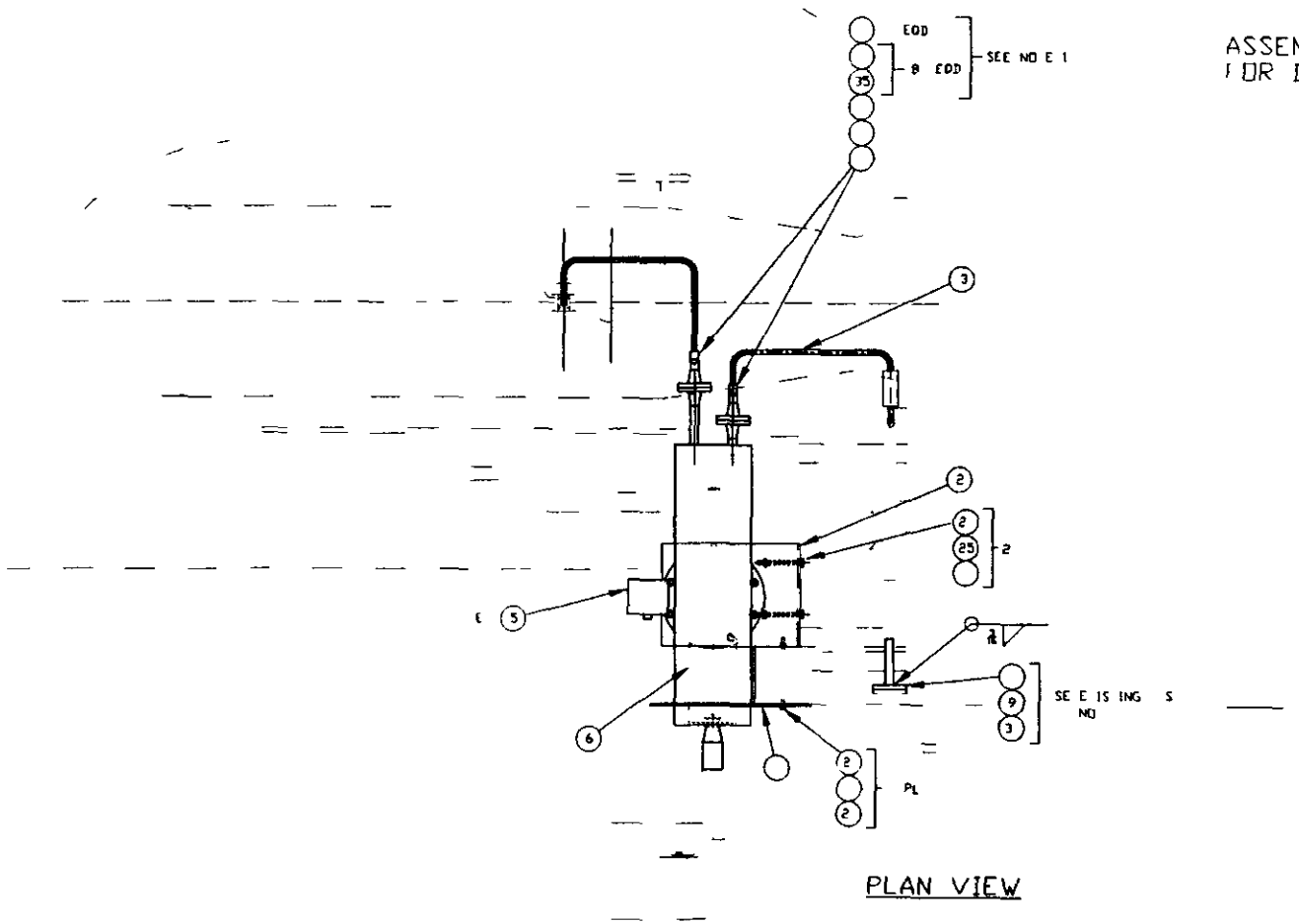

PLAN VIEW

NOTES

1 LUBRICATE ALL NUTS AND SESSES
OR DRAPS BS

ASSEMBLY SKETCH NOT
FOR DRAWING INCORPORATION

D ME DNS SHO RE RD
F E AND DJUS S E S

ENGINEER G CH NGE NOTICE CONTINU TION SHEET	DOCUMENT NO N/A	DATE 9/21/01	ECN 664332

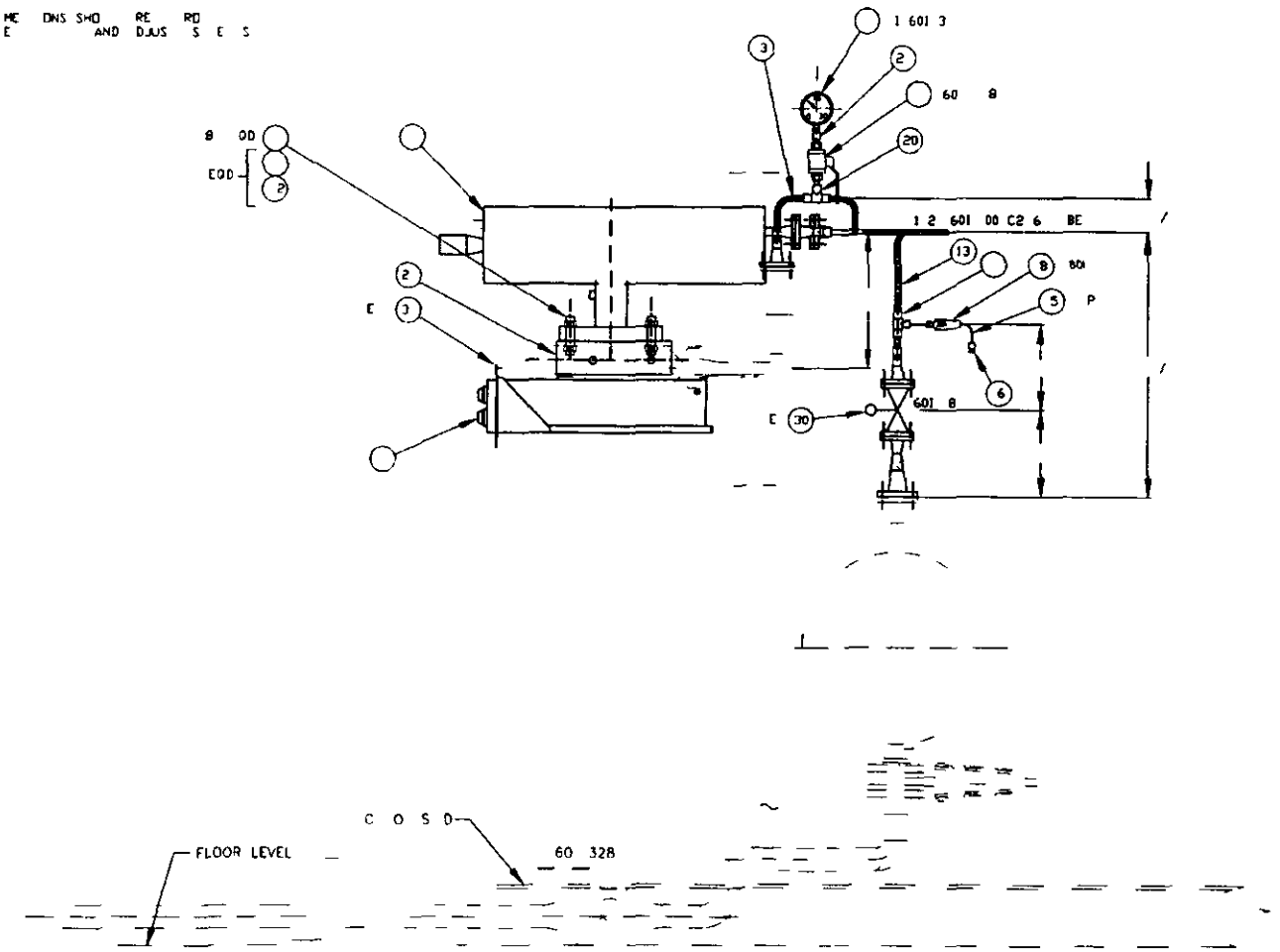

VIEW A-A

ENGINEERING CHANGE NOTICE CONTINUATION SHEET	DOCUMENT NO N/A	DATE 9/21/01	ECN 664332

ASSEMBLY SKETCH NOT
FOR DRAWING INCORPORATION

DIMENSIONS SHOWN REPRESENTS DESIGN DATUMS

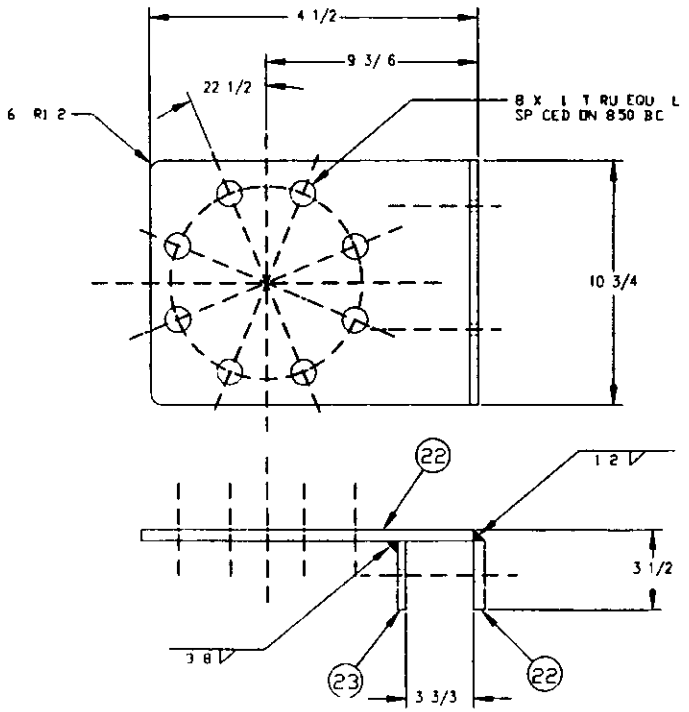

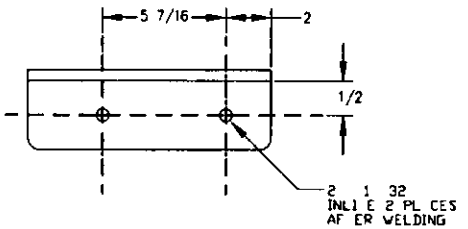

(2) MOUNTING BRKT CELL

ENGINEERING CHANGE NOTICE CONTINUATION SHEET	DOCUMENT NO N/A	DATE 9/21/01	ECN 664332

					DL UNC	S 3 B			
					NU HE INC	GR		34	
					HE NC	CN S			
						DK		36	
					NG RF 50				
		3 ING	E E	E	E	AR SHE S		38	
		NG GA E 50	AL	C		B SHE S		38	
					DL 9UNC	S GR		40	
					HE 8 9NC	S G 2H			
					HE NC	ARBO E			

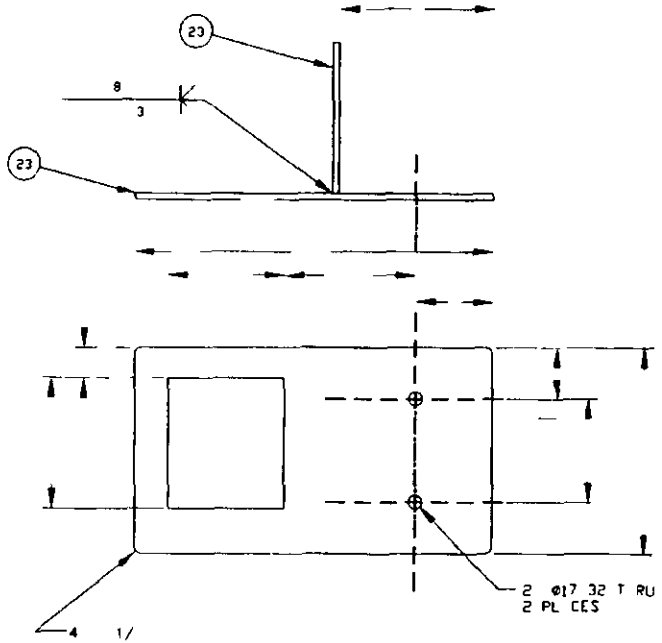

3 MOUNTING BRKT CONVERTER

PARTS LIST/MATERIAL LIST

BY								
					SSEMBL			
					MOUN NG BRK			
					MOUNT NG BR ON			
			01 38	HC 58	E 2 BE	DK		
				HY	DENSITY CE /HASTELLOY UBE / 50RF LANGED	AUTOMATION PROD. INC		
				STD	DENSITY ANALOG CONVERTER 20 MA OUTPUT 5V 50 60HZ	AUTOMATION PROD INC		
					BLT ANGE 2' RF 50	HA E C 2		
					NE ANGE RF 50 SC	HA E D 2		
					GASKE SP AL DUND PE S G IBE ING E I AR AL ALLO 6.25 ME AL NG STRI FDR 2 B RF ANGE FLE ALLIC S DR DUAL			
					DL S 5 UNC 2 DNG	S GR		
					NU HE HE #5 UNC	94 GR 2		
					SP ING 8	C BDN S E		
		AR			BE 2	HA D		
				HC	MALE EL DNNE DR BE D 2 IPE	AGE		
					AL VE	S AGE DK		
				HC 60	8 BE	AGE DK		
				HC	REDUC NG UN DN BE 3/8 BE	S AGE DK		
		AR			BE 8 9 ALL	HAS E D		
				5 30 02	GAUG 2' PRE SURE 30 PS VE DNNE PE 1009	SHC DF		
				HC	UN DN BE	AGE DK		20
				HC 8	EMA DA E 2 BE D NP	S AGE DK		
	AR					S 36		
AR						36		
					E D P SCRE 2 3UNC 1	GR S ZINC PL		
					HE 2 UNC	ASME GR 5 NC PL		
					HE SPR NG	NC		26
					HE AP SCRE 3UNC 2 DNG	HE GR CS ZINC PL		
					D NE NGE RF 50 CH	HA D 2 6		28
					DUC DNC D SC OS	HA E D 2		29
			60		E BAL 15 ANGE			30
		AR			IPE 2 SC 40	3 SS		

ENGINEERING CHANGE NOTICE CONTINUATION SHEET	DOCUMENT NO H-2-89335	DATE 9/21/01	ECN 664332

H-2-89335 REV 15
WAS CONDITION
ZN C-4 5 6

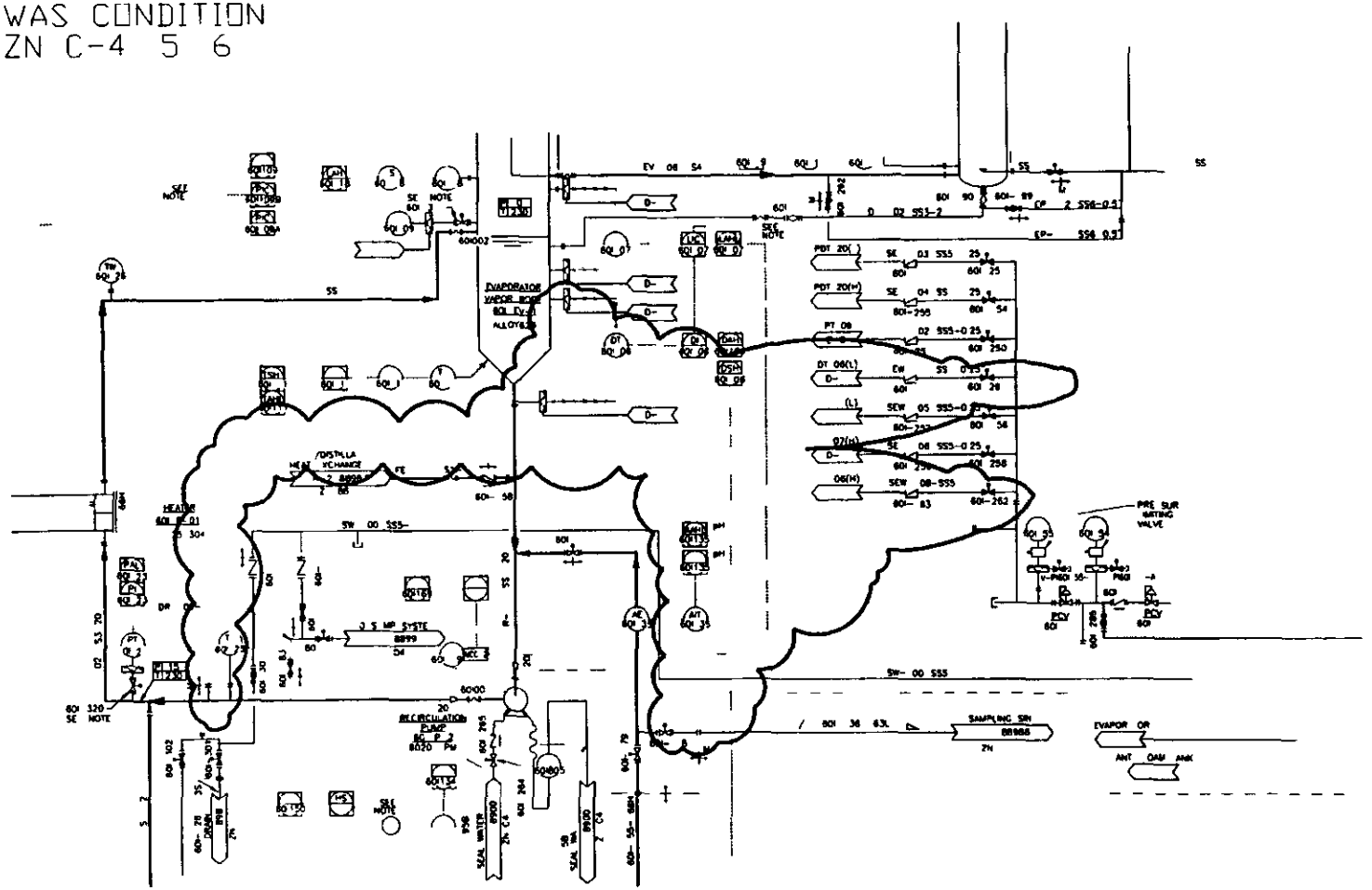

ENG NEER NG CHANGE NOTICE CONT NUATION SHEET	DOCUMENT NO H-2-89335	DATE 9/21/01	ECN 664332

H-2-89335 REV 15

TO BE CONDITION
ZN C-4 5 6

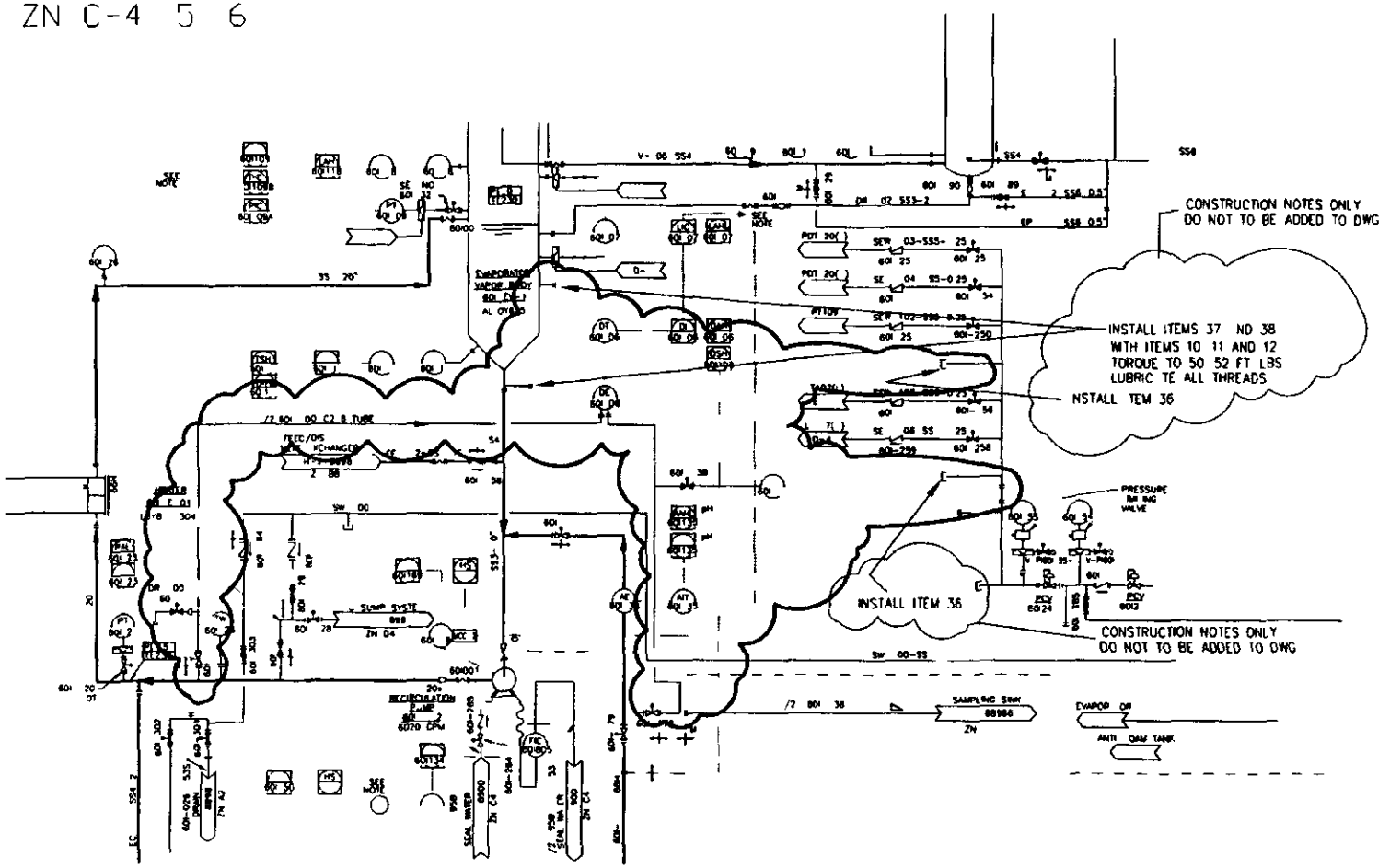

332 HJR 9/26/01

For ECN 664~~318~~ 9/20/01
Subj AFT Fathom Flow Analysis for Density Meter
From DE Scully

Introduction A flow analysis for an ETF evaporator brine density meter to be installed under ECN 664~~318~~ has been performed using AFT Fathom commercial software 332 HJR 9/26/01

Purpose The driving force for the brine flow through the 1/2" Dynatrol density meter tubing is the pressure head developed by the evaporator brine recirculation pump 60I-P-2 This pump has a nominal flow of 6020 gpm at 17 2' TDH The purpose of this analysis is to demonstrate that an adequate and appropriate brine flow will exist in the density meter when this recirculation pump is in operation

Method AFT Fathom, v 3 0 software is used to model the flow path and predict the flow rate though the density meter

Assumptions
1) The main pipe recirculation flow downstream of the density meter and 60I-P-4 takeoffs is assigned to be 6000 gpm (Q at P33) based on the operating point designated in the pump CVI and indicated on P&ID H-2-89335

2) Return flow from the 60I-P-4 recirculation pump is assigned to be 22 gpm (Q at P29) based on the nominal flow indicated in the evaporator skid CVI and indicated on P&ID H-2-89335

3) The total dynamic head (TDH) developed across the 60I-P-2 pump (PI) is 17 2 feet of fluid per CVI

4) The pressure at the 60I-P-2 outlet is assigned at 18 psig as indicated at PI-60I123 during pump operation

5) The K factor of 64 2 for the Dynatrol density meter (J11) was calculated using a pressure drop of 4 8 psi at a flow of 6 gpm (data supplied by Steve Sawyer of Dynatrol)

Results The modeling parameters and the results are shown in the attached AFT Fathom documents

- Flow System Block Diagram
- AFT Fathom 3 0 Input 9/18/01 12 54 PM
- AFT Fathom 3 0 Output 9/18/01 3 06 36 PM

The brine flow indicated by the analysis through the Dynatrol density meter is 2 136 gpm According to Dynatrol's Steve Sawyer the recommended flow is <6 gpm for water If there are suspended solids present in the fluid <4 gpm is preferred to reduce erosion of the thin-walled U-tube

File DENSITY FTH

Calculations by DE Scully 9/20/01 Checked by HJ Rowles 9/26/01

FLOW SYSTEM BLOCK DIAGRAM

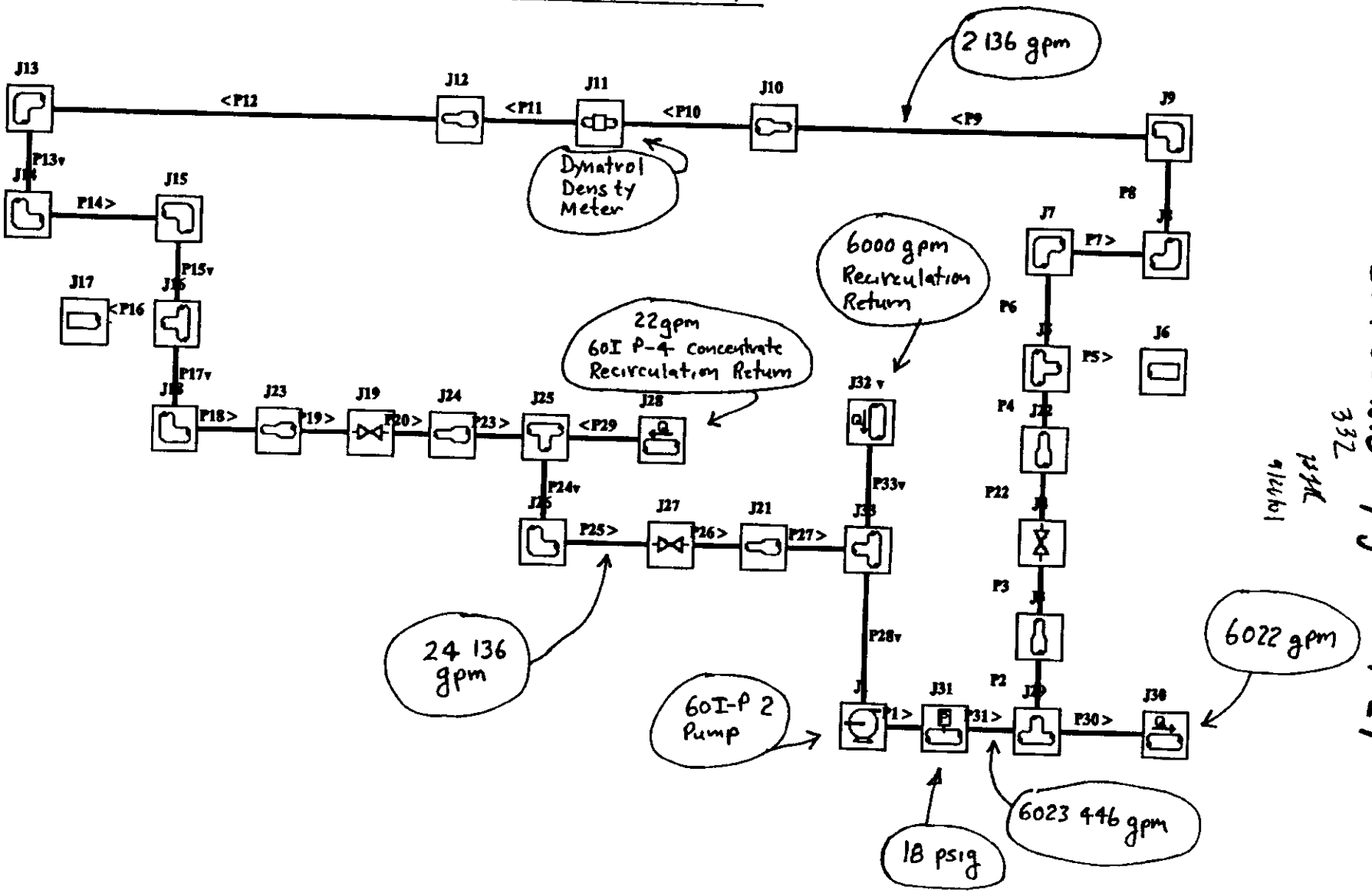

ECN 66438 page 11 of 29

332

PPL 1/22/01

File Untitled' Pipe Flow Analysis - 8/14/01

Title File Untitled Pipe Flow Analysis - 8/14/01

Number Of Pipes= 31
Number Of Junctions= 31

Head/Pressure Convergence= 0001 (Relative change)
Flow Rate Convergence= 0001 (Relative change)
Relaxation= AFT Fathom Automatic
Maximum Iterations= 10000

Constant Fluid Property Model
Fluid Unspecified
Density= 1 15 kg/liter
Viscosity= 20 centipoise
Vapor Pressure=
Gravitational Acceleration= 1 g
Atmospheric Pressure= 1 atm

Pipe	Name	Object Defined	Length	Length Units	Hydraulic Diameter	Hydraulic Diam Units	Roughness	Roughness Units	Losses (K)
1	Pipe	Yes	10	inches	18 812	inches	00015	feet	0
2	Pipe	Yes	5	inches	1 049	inches	00015	feet	0
3	Pipe	Yes	9 13	inches	622	inches	00015	feet	0
4	Pipe	Yes	8 98	inches	402	inches	000025	feet	0
5	Pipe	Yes	1	inches	402	inches	000025	feet	0
6	Pipe	Yes	9 38	inches	402	inches	000025	feet	0
7	Pipe	Yes	4 5	inches	402	inches	000025	feet	0
8	Pipe	Yes	13 5	inches	402	inches	000025	feet	0
9	Pipe	Yes	13 9	inches	402	inches	000025	feet	0
10	Pipe	Yes	1	inches	622	inches	00015	feet	0
11	Pipe	Yes	1	inches	622	inches	00015	feet	0
12	Pipe	Yes	6 31	inches	402	inches	000025	feet	0
13	Pipe	Yes	16 88	inches	402	inches	000025	feet	0
14	Pipe	Yes	3 5	inches	402	inches	000025	feet	0

ECN 664378 page 12 of 29
332
RHC 9/26/01

Pipe	Name	Object Defined	Length	Length Units	Hydraulic Diameter	Hydraulic Diam Units	Roughness	Roughness Units	Losses (K)
15	Pipe	Yes	3 825	inches	402	inches	000025	feet	0
16	Pipe	Yes	1	inches	402	inches	000025	feet	0
17	Pipe	Yes	3 825	inches	402	inches	000025	feet	0
18	Pipe	Yes	3 5	inches	402	inches	000025	feet	0
19	Pipe	Yes	1	inches	622	inches	00015	feet	0
20	Pipe	Yes	6	inches	622	inches	00015	feet	0
22	Pipe	Yes	1	inches	622	inches	00015	feet	0
23	Pipe	Yes	2	inches	1 049	inches	00015	feet	0
24	Pipe	Yes	12	inches	1 049	inches	00015	feet	0
25	Pipe	Yes	10	inches	1 049	inches	00015	feet	0
26	Pipe	Yes	16	inches	1 049	inches	00015	feet	0
27	Pipe	Yes	1	inches	18 812	inches	00015	feet	0
28	Pipe	Yes	30	inches	18 812	inches	00015	feet	0
29	Pipe	Yes	1	inches	1 049	inches	00015	feet	0
30	Pipe	Yes	1	inches	18 812	inches	00015	feet	0
31	Pipe	Yes	1	inches	18 812	inches	00015	feet	0
33	Pipe	Yes	1	inches	18 812	inches	00015	feet	0

Pipe	Junctions (Up Down)	Geometry	Material	Size	Type	Thermal Boundary	Overall U	Include Internal h
1	1, 31	Cylindrical Pipe	Steel	20 inch	schedule 40	Adiabatic	0	No
2	29, 3	Cylindrical Pipe	Steel	1 inch	schedule 40	Adiabatic	0	No
3	3, 4	Cylindrical Pipe	Steel	1/2 inch	schedule 40	Adiabatic	0	No
4	22, 5	Cylindrical Pipe	Unspecified			Adiabatic	0	No
5	5, 6	Cylindrical Pipe	Unspecified			Adiabatic	0	No
6	5, 7	Cylindrical Pipe	Unspecified			Adiabatic	0	No
7	7 8	Cylindrical Pipe	Unspecified			Adiabatic	0	No
8	8 9	Cylindrical Pipe	Unspecified			Adiabatic	0	No
9	9, 10	Cylindrical Pipe	Unspecified			Adiabatic	0	No
10	10, 11	Cylindrical Pipe	Steel	1/2 inch	schedule 40	Adiabatic	0	No

ECN 664308 page 13 of 29
332 9/20/01

Pipe	Junctions (Up,Down)	Geometry	Material	Size	Type	Thermal Boundary	Overall U	Include Internal h
11	11, 12	Cylindrical Pipe	Steel	1/2 inch	schedule 40	Adiabatic	0	No
12	12, 13	Cylindrical Pipe	Unspecified			Adiabatic	0	No
13	13, 14	Cylindrical Pipe	Unspecified			Adiabatic	0	No
14	14, 15	Cylindrical Pipe	Unspecified			Adiabatic	0	No
15	15 16	Cylindrical Pipe	Unspecified			Adiabatic	0	No
16	16, 17	Cylindrical Pipe	Unspecified			Adiabatic	0	No
17	16 18	Cylindrical Pipe	Unspecified			Adiabatic	0	No
18	18, 23	Cylindrical Pipe	Unspecified			Adiabatic	0	No
19	23, 19	Cylindrical Pipe	Steel	1/2 inch	schedule 40	Adiabatic	0	No
20	19 24	Cylindrical Pipe	Steel	1/2 inch	schedule 40	Adiabatic	0	No
22	4, 22	Cylindrical Pipe	Steel	1/2 inch	schedule 40	Adiabatic	0	No
23	24, 25	Cylindrical Pipe	Steel	1 inch	schedule 40	Adiabatic	0	No
24	25, 26	Cylindrical Pipe	Steel	1 inch	schedule 40	Adiabatic	0	No
25	26, 27	Cylindrical Pipe	Steel	1 inch	schedule 40	Adiabatic	0	No
26	27 21	Cylindrical Pipe	Steel	1 inch	schedule 40	Adiabatic	0	No
27	21, 33	Cylindrical Pipe	Steel	20 inch	schedule 40	Adiabatic	0	No
28	33, 1	Cylindrical Pipe	Steel	20 inch	schedule 40	Adiabatic	0	No
29	28, 25	Cylindrical Pipe	Steel	1 inch	schedule 40	Adiabatic	0	No
30	29, 30	Cylindrical Pipe	Steel	20 inch	schedule 40	Adiabatic	0	No
31	31, 29	Cylindrical Pipe	Steel	20 inch	schedule 40	Adiabatic	0	No
33	32, 33	Cylindrical Pipe	Steel	20 inch	schedule 40	Adiabatic	0	No

Pipe	Special Condition
1	None
2	None
3	None
4	None
5	None
6	None

ECN 6643 ~~HB~~ 332 page 14 of 29
9/14/01

Pipe	Special Condition
7	None
8	None
9	None
10	None
11	None
12	None
13	None
14	None
15	None
16	None
17	None
18	None
19	None
20	None
22	None
23	None
24	None
25	None
26	None
27	None
28	None
29	None
30	None
31	None
33	None

Area Change	Name	Object Defined	Special Condition	Elevation	Elevation Units	Initial HGL/Pressure

ECN 66 ~~4318~~ 332 Page 15 of 29

BJK 9/20/01

3	Area Change	Yes	N/A	0	feet	
10	Area Change	Yes	N/A	0	feet	
12	Area Change	Yes	N/A	0	feet	
21	Area Change	Yes	N/A	0	feet	
22	Area Change	Yes	N/A	0	feet	
23	Area Change	Yes	N/A	0	feet	
24	Area Change	Yes	N/A	0	feet	
Assigned Flow	Name	Object Defined	Special Condition	Elevation	Elevation Units	Initial HGL/Pressure
28	Assigned Flow	Yes	None	0	feet	
30	Assigned Flow	Yes	None	0	feet	
32	Assigned Flow	Yes	None	0	feet	
Assigned Pressure	Name	Object Defined	Special Condition	Elevation	Elevation Units	Initial HGL/Pressure
31	Assigned Pressure	Yes	N/A	2	feet	18
Bend	Name	Object Defined	Special Condition	Elevation	Elevation Units	Initial HGL/Pressure
7	Bend	Yes	N/A	0	feet	
8	Bend	Yes	N/A	0	feet	
9	Bend	Yes	N/A	0	feet	
13	Bend	Yes	N/A	0	feet	
14	Bend	Yes	N/A	0	feet	
15	Bend	Yes	N/A	0	feet	
18	Bend	Yes	N/A	0	feet	
26	Bend	Yes	N/A	0	feet	

ECN 6643 ~~318~~ 337 page 16 of 29

~~3~~ 18 JK 9/20/01

Dead End	Name	Object Defined	Special Condition	Elevation	Elevation Units	Initial HGL/Pressure
6	Dead End	Yes	N/A	0	feet	
17	Dead End	Yes	N/A	0	feet	
General Component	**Name**	**Object Defined**	**Special Condition**	**Elevation**	**Elevation Units**	**Initial HGL/Pressure**
11	General Component	Yes	None	0	feet	
Pump	**Name**	**Object Defined**	**Special Condition**	**Elevation**	**Elevation Units**	**Initial HGL/Pressure**
1	Pump	Yes	None	0	feet	
Tee or Wye	**Name**	**Object Defined**	**Special Condition**	**Elevation**	**Elevation Units**	**Initial HGL/Pressure**
5	Tee/Wye	Yes	N/A	0	feet	
16	Tee/Wye	Yes	N/A	0	feet	
25	Tee/Wye	Yes	N/A	0	feet	
29	Tee/Wye	Yes	N/A	0	feet	
33	Tee/Wye	Yes	N/A	0	feet	
Valve	**Name**	**Object Defined**	**Special Condition**	**Elevation**	**Elevation Units**	**Initial HGL/Pressure**
4	Valve	Yes	None	0	feet	
19	Valve	Yes	None	0	feet	
27	Valve	Yes	None	0	feet	

Area Change	Initial HGL/Pressure Units	Connected Pipes (+ = in,- = out)	Type	Geometry	Angle

ECN 664 ~~388~~ 332 Page 17 of 29

3		2,-3	Conical	Contraction	90
10		9,-10	Conical	Expansion	90
12		11,-12	Conical	Contraction	90
21		26,-27	Conical	Expansion	90
22		22,-4	Conical	Contraction	90
23		18 -19	Conical	Expansion	90
24		20 -23	Conical	Expansion	90
Assigned Flow	Initial HGL/Pressure Units	Connected Pipes (+ = in,- = out)	Type	Flow	Flow Units
28		-29	Inflow	22	gal/min
30		30	Outflow	6022	gal/min
32		-33	Inflow	6000	gal/min
Assigned Pressure	Initial HGL/Pressure Units	Connected Pipes (+ = in,- = out)	Pressure	Pressure Units	Temperature
31	psig	1,-31	18	psig	
Bend	Initial HGL/Pressure Units	Connected Pipes (+ = in,- = out)	Type	Angle (Degrees)	r/d
7		6,-7	Smooth Bend	90	3 7
8		7,-8	Smooth Bend	90	3 7
9		8,-9	Smooth Bend	90	3 7
13		12 -13	Smooth Bend	90	3 7
14		13 -14	Smooth Bend	90	3 7
15		14,-15	Smooth Bend	90	3 7
18		17,-18	Smooth Bend	90	3 7
26		24,-25	Smooth Bend	90	3 7

ECN 66438 page 18 of 29

Dead End	Initial HGL/Pressure Units	Connected Pipes (+ = in,- = out)			
6		5			
17		16			
General Component	Initial HGL/Pressure Units	Connected Pipes (+ = in,- = out)	Loss Model	Loss Value	
11		10,-11	K Constant	64 2	
Pump	Initial HGL/Pressure Units	Connected Pipes (+ = in,- = out)	Independent Variable	Ind Variable Units	Dependent Variable
1		28 -1	Vol Flow	gal/min	Head
Tee or Wye	Initial HGL/Pressure Units	Connected Pipes (+ = in,- = out)	Type	Loss Type	Angle
5		4,-6,-5	Sharp Straight	Pre Loss	90
16		-17 15,-16	Sharp Straight	Simple (no loss)	90
25		23 29 -24	Sharp Straight	Simple (no loss)	90
29		-2 31,-30	Sharp Straight	Simple (no loss)	90
33		33 -28,27	Sharp Straight	Simple (no loss)	90
Valve	Initial HGL/Pressure Units	Connected Pipes (+ = in,- = out)	Loss Model	Loss Value	Exit Valve
4		3,-22	K Constant	08	No
19		19,-20	K Constant	08	No
27		25 -26	K Constant	07	No

Area Change	Loss Factor						

ECN 664318 Page 19 of 29
332

3	2 205						
10	339						
12	1 403						
21	994						
22	1 403						
23	339						
24	42						
Assigned Flow	Loss Factor						
28	0						
30	0						
32	0						
Assigned Pressure	Temperature Units	Balance Energy					
31		No					
Bend	Loss Factor						
7	362						
8	362						
9	362						
13	362						
14	362						
15	362						
18	362						
26	306						

ECN 664378 332 Page 20 of 29

BPK 9/24/01

Dead End							
6							
17							
General Component							
11							
Pump	Dep Variable Units	Loss Constant a	Loss Constant b	Loss Constant c	Loss Constant d	Loss Constant e	Speed %
1	feet	17 2	0	0	0	0	100
Tee or Wye	Pipe A	Pipe B	Pipe C				
5	4	6	5				
16	17	15	16				
25	23	29	24				
29	2	31	30				
33	33	28	27				
Valve	Restricted Area	Restricted Area Units					
4							
19							
27							

Area Change	

ECN 66438 Page 21 of 29

3	
10	
12	
21	
22	
23	
24	
Assigned Flow	
28	
30	
32	
Assigned Pressure	
31	
Bend	
7	
8	
9	
13	
14	
15	
18	
26	
Dead End	

ECN 664 ~~344~~ 332 Page 22 of 29

BHK 9/20/01

6	
17	
General Component	
11	
Pump	Viscosity Correction
1	No
Tee or Wye	
5	
16	
25	
29	
33	
Valve	
4	
19	
27	

ECN 664-~~378~~ 332 Page 23 of 29

AHK 9/18/01

File Untitled Pipe Flow Analysis - 8/14/01

Title File Untitled Pipe Flow Analysis - 8/14/01
Analysis run on 9/18/2001 3 06 36 PM
Input File C \FATHOM\DENSITY FTH

Execution Time= 1 82 seconds
Total Number Of Head/Pressure Iterations= 8235
Total Number Of Temperature Iterations= 0
Total Number Of Flow Iterations= 69
Number Of Pipes= 31
Number Of Junctions= 31
Head Tolerance= 0001 relative change
Volumetric Flow Rate Tolerance= 0001 relative change
Relaxation= 2

Constant Fluid Property Model
Fluid Unspecified
Density= 1 15 kg/liter
Viscosity= 20 centipoise
Vapor Pressure=
Gravitational Acceleration= 1 g
Atmospheric Pressure= 1 atm

Total Inflow= 6023 gal/min
Total Outflow= 6023 gal/min
Maximum Pressure is 33 68 psia at Junction 3 Inlet
Minimum Pressure is 24 75 psia at Junction 1 Inlet

==========PUMP SUMMARY==========

Jct	Flow (gal/min)	DP (psid)	DH (feet)	Speed (%)	ideal hp (hp)	NPSHA (feet)	NPSHR (feet)
1	6024	8 575	17 20	100 0	30 13	N/A	N/A

==========VALVE SUMMARY==========

ECN 664 ~~318~~ 332 page 24 of 29
9/18/01

Jct	Type	Flow (gal/min)	DP (psid)	DH (feet)	P Inlet (psia)	Cv	K	State
4	REGULAR	2 136	3 153E-03	6 324E-03	33 62	40 81	0 08000	Open
19	REGULAR	2 136	3 153E-03	6 324E-03	26 97	40 81	0 08000	Open
27	REGULAR	24 14	0 04354	0 08733	26 19	124 1	0 07000	Open

WARNING Pipe 1 length is shorter than the elevation change (between Junction 1 and 31)
WARNING Pipe 31 length is shorter than the elevation change (between Junction 31 and 29)

Pipe	Vol Flow (gal/min)	dP Total (psid)	dP Friction (psid)	dP Gravity (psid)	dH (feet)	Min Pres (psfg)	P Inlet (psig)	P Outlet (psig)
1	6024 135	1 00121117	0 00409799	0 9971	0 00821971	2538	18 63	17 63
2	2 136	0 00401330	0 00401330	0 0000	0 00804985	2734	18 99	18 99
3	2 136	0 05928481	0 05928481	0 0000	0 11891289	2719	18 94	18 88
4	2 136	0 33424899	0 33424899	0 0000	0 67043337	2636	18 64	18 30
5	0 000	0 00000000	0 00000000	0 0000	0 00000000	2668	18 53	18 53
6	2 136	0 34908628	0 34908628	0 0000	0 70019387	2585	18 30	17 95
7	2 136	0 16747209	0 16747209	0 0000	0 33591390	2550	17 87	17 71
8	2 136	0 50241625	0 50241625	0 0000	1 00774163	2465	17 62	17 12
9	2 136	0 51730263	0 51730263	0 0000	1 03760058	2379	17 04	16 52
10	2 136	0 00064934	0 00064934	0 0000	0 00130244	2395	16 63	16 63
11	2 136	0 00064934	0 00064934	0 0000	0 00130244	2031	14 10	14 10
12	2 136	0 23483309	0 23483309	0 0000	0 47102593	1962	13 86	13 62
13	2 136	0 62820637	0 62820637	0 0000	1 26005022	1860	13 54	12 91
14	2 136	0 13025607	0 13025607	0 0000	0 26126636	1829	12 83	12 70
15	2 136	0 14317378	0 14317378	0 0000	0 28717658	1797	12 62	12 48
16	0 000	0 00000000	0 00000000	0 0000	0 00000000	1829	12 70	12 70
17	2 136	0 14235128	0 14235128	0 0000	0 28552682	1776	12 48	12 33
18	2 136	0 13025607	0 13025607	0 0000	0 26126636	1746	12 25	12 12
19	2 136	0 00064934	0 00064934	0 0000	0 00130244	1761	12 23	12 23

ECN 664 ~~118~~ 332 Page 25 of 29
9/24/01

Pipe	Vol Flow (gal/min)	dP Total (psid)	dP Friction (psid)	dP Gravity (psid)	dH (feet)	Min Pres (psfg)	P Inlet (psig)	P Outlet (psig)
20	2 136	0 03896044	0 03896044	0 0000	0 07814647	1755	12 23	12 19
22	2 136	0 00064934	0 00064934	0 0000	0 00130244	2719	18 88	18 88
23	2 136	-0 00454871	-0 00454871	0 0000	-0 00912377	1758	12 21	12 21
24	24 136	0 29275680	0 29275680	0 0000	0 58720873	1628	11 60	11 30
25	24 136	0 24396399	0 24396399	0 0000	0 48934059	1565	11 11	10 87
26	24 136	0 39034241	0 39034241	0 0000	0 78294501	1503	10 82	10 43
27	24 136	-0 00011668	-0 00011668	0 0000	-0 00023404	1503	10 44	10 44
28	6024 135	0 01229390	0 01229390	0 0000	0 02465898	1447	10 06	10 05
29	22 000	0 00191716	0 00191716	0 0000	0 00384543	1685	11 70	11 70
30	6022 000	0 00004095	0 00004095	0 0000	0 00008214	2682	18 62	18 62
31	6023 446	-0 99707228	0 00004096	-0 9971	0 00008216	2538	17 63	18 62
33	6000 000	0 00004069	0 00004069	0 0000	0 00008161	1450	10 07	10 07

Pipe	Reynolds No	Velocity (feet/sec)
1	5 823E+04	6 95368
2	3 703E+02	0 79294
3	6 245E+02	2 25533
4	9 662E+02	5 39931
5	0 000E+00	0 00000
6	9 662E+02	5 39931
7	9 662E+02	5 39931
8	9 662E+02	5 39931
9	9 662E+02	5 39931
10	6 245E+02	2 25533
11	6 245E+02	2 25533
12	9 662E+02	5 39931
13	9 662E+02	5 39931
14	9 662E+02	5 39931

ECN 664 ~~378~~ 332 Page 26 of 29

9/11/01

Pipe	Reynolds No	Velocity (feet/sec)
15	9 662E+02	5 39931
16	0 000E+00	0 00000
17	9 662E+02	5 39931
18	9 662E+02	5 39931
19	6 245E+02	2 25533
20	6 245E+02	2 25533
22	6 245E+02	2 25533
23	3 703E+02	0 79294
24	4 184E+03	8 95992
25	4 184E+03	8 95992
26	4 184E+03	8 95992
27	2 333E+02	0 02786
28	5 823E+04	6 95368
29	3 814E+03	8 16698
30	5 821E+04	6 95121
31	5 823E+04	6 95288
33	5 800E+04	6 92582

Jct	HGL Inlet (feet)	EGL Inlet (feet)	P Inlet (psia)	P Stag In (psia)	Mass Flow Into System (lbm/sec)	Vol Flow Into System (ft3/sec)	P Outlet (psia)
1	20 16	20 91	24 75	25 12	0 0000	0 000000	33 32
3	38 09	38 10	33 68	33 69	0 0000	0 000000	33 64
4	37 88	37 96	33 58	33 62	0 0000	0 000000	33 58
5	36 97	37 17	33 13	33 23	0 0000	0 000000	33 13
6	37 17	37 17	33 23	33 23	0 0000	0 000000	33 23
7	36 01	36 47	32 65	32 88	0 0000	0 000000	32 57
8	35 51	35 97	32 40	32 63	0 0000	0 000000	32 32
9	34 34	34 79	31 82	32 04	0 0000	0 000000	31 74
10	33 14	33 59	31 22	31 44	0 0000	0 000000	31 33

ECN 664 ~~338~~ 332 page 27 of 29

JMM 9/18/01

Jct	HGL Inlet (feet)	EGL Inlet (feet)	P Inlet (psia)	P Stag In (psia)	Mass Flow Into System (lbm/sec)	Vol Flow Into System (ft3/sec)	P Outlet (psia)
11	33 36	33 44	31 33	31 37	0 0000	0 000000	28 80
12	28 28	28 36	28 80	28 84	0 0000	0 000000	28 55
13	27 33	27 78	28 32	28 55	0 0000	0 000000	28 24
14	25 90	26 36	27 61	27 84	0 0000	0 000000	27 53
15	25 48	25 93	27 40	27 62	0 0000	0 000000	27 32
16	25 28	25 48	27 30	27 40	0 0000	0 000000	27 30
17	25 48	25 48	27 40	27 40	0 0000	0 000000	27 40
18	24 74	25 19	27 03	27 26	0 0000	0 000000	26 95
19	24 54	24 61	26 93	26 97	0 0000	0 000000	26 92
21	20 93	22 18	25 13	25 75	0 0000	0 000000	25 13
22	37 87	37 95	33 58	33 62	0 0000	0 000000	33 33
23	24 32	24 77	26 82	27 04	0 0000	0 000000	26 93
24	24 45	24 53	26 89	26 93	0 0000	0 000000	26 90
25	23 95	24 51	26 64	26 91	0 0000	0 000000	26 64
26	22 67	23 92	26 00	26 62	0 0000	0 000000	25 81
27	21 80	23 05	25 56	26 19	0 0000	0 000000	25 52
28	23 47	24 51	26 40	26 92	3 5190	0 049016	26 40
29	37 73	38 10	33 51	33 69	0 1103	0 001536	33 51
30	37 35	38 10	33 32	33 69	-963 2408	-13 417076	33 32
31	37 35	38 10	32 32	32 70	-0 1101	-0 001534	32 32
32	20 19	20 94	24 76	25 13	959 7219	13 368060	24 76
33	20 60	20 94	24 97	25 13	0 0000	0 000000	24 97

Jct	P Stag Out (psia)	HGL Outlet (feet)	EGL Outlet (feet)
1	33 70	37 36	38 11
3	33 68	38 00	38 07
4	33 62	37 87	37 95
5	33 23	36 97	37 17
6	33 23	37 17	37 17

ECN 66 ~~438~~ 332 page 28 of 29
9/26/01

Jct	P Stag Out (psia)	HGL Outlet (feet)	EGL Outlet (feet)
7	32 79	35 85	36 30
8	32 55	35 35	35 80
9	31 96	34 18	34 63
10	31 37	33 36	33 44
11	28 84	28 28	28 36
12	28 78	27 80	28 25
13	28 46	27 16	27 62
14	27 75	25 74	26 19
15	27 54	25 31	25 77
16	27 40	25 28	25 48
17	27 40	25 48	25 48
18	27 17	24 58	25 03
19	26 96	24 53	24 61
21	25 13	20 94	20 94
22	33 56	37 38	37 84
23	26 97	24 54	24 62
24	26 91	24 49	24 50
25	26 91	23 95	24 51
26	26 43	22 29	23 54
27	26 14	21 71	22 96
28	26 92	23 47	24 51
29	33 69	37 73	38 10
30	33 69	37 35	38 10
31	32 70	37 35	38 10
32	25 13	20 19	20 94
33	25 13	20 60	20 94

CPF 18

FMP-CS (Facility Modification Package – Coversheet) (Block 23)*

ESSENTIAL

Section 1: Design Package Identification

1. Mod Title:
Add Isolation Valves to Evaporator Instrument Flush Lines

2. USQ Required? NO **USQ #** N/A **CX #** N/A			**3. Assigned Lead Engineer:** H.L. Roach	**4. Design Authority:** D.E. Scully **Approval Designator:** T
5. Project No./Work Package No.: EL-01-00521/M	**6. Area** 200E	**7. Building** 2025E	8. System No.: 60I	
9. Related FMPs/Changes: N/A	10. Incorporates ECN/DCNs: N/A		11. Contract Mod. No.: N/A	12. Change Proposal No.: N/A
13. Lead Engineering Discipline: Mechanical	14. Affected Engineering Disciplines: N/A			

15. Change Description (description and reason for requested change):

Isolation valves are needed downstream of check valves 60I-257 and 60I-259 to allow for maintenance of check valves without having to empty the evaporator vapor body, 60I-EV-1. In addition this will allow for the piping stub connecting to the instrument diaphragm flush ring to be rammed open if plugged. A vent valve at the high point of the manifold header line is also required to allow the manifold header line to be drained.

Section 2: New or Changed Document:

16. Document	Revision	FMP Section	Revision	FMP Page	Release To Work?
H-2-89335-1	16	SKT-1	0	12	[X] Yes [ ] No
		SKT-2	0	13	[X] Yes [ ] No
		SKT-3	0	14	[X] Yes [ ] No
		SKT-4	0	15	[X] Yes [ ] No
		BOM – 1	0	16	[X] Yes [ ] No
					[ ] Yes [ ] No
					[ ] Yes [ ] No
					[ ] Yes [ ] No
					[ ] Yes [ ] No
Continuation Sheet Attached?					[ ] Yes [ ] No

Section 3: Design Authority Concurrence

17. Justification for Accepting or Rejecting Change

Design meets requirements. Design will eliminate problem list under (15) Change Description.

18. Design Authority Approval (Name, Signature, Date):

Name DE Scully / Signature DE Scully / Date 11/8/01

*Block numbers refer to block numbers on the FMP Flowchart (HNF-PRO-2001, Appendix A) and procedure steps within HNF-PRO-2001.

FMP-CS (Facility Modification Package – Coversheet) (Block 23)*

Section 4: Approval/Distribution (Name, Signature, Date)

Engineering Approvals	Approval Designator Reviews (Ref. HNF-PRO-233)	Management Reviews
19. Design Engineer (if different from the DA and Lead Engineer) Same as Lead	28. Quality Assurance N/A	37. Project Engineer N/A
20. Lead Engineer HL Roach 10/25/01 H.L. Roach	29. Safety N/A	38. Project Engineering Manager (when different from Engineering Management) N/A
21. Engineering Management K.J. Lueck KJ Lueck 11-8-01	30. Environmental N/A	39. Project Manager N/A
22.	31. Fire Protection N/A	40. Operations Manager (OM) N/A
23. Squad Check (when required; if more than one discipline involved, sign below) N/A	32. Radiological Control N/A	41. Ergonomics (when required by OM) N/A
24. Other	33. ALARA Review N/A	42. Field Execution Manager / Startup Manager N/A
25. Other	34. Other	43. Other
26. Other	35. Other	44. Other
27. Other	36. Other	45. Other

46. Modification work complete and field verified as complete for the construction activity (Block 22)*

Design Authority _____ Date _____

47. Distribution Name	MSIN
MW Bowman	S6-72
JM Isdell	B4-39 *H
DL Flyckt	S6-71
KJ Lueck	S6-72
SW Willis	S6-51 *H
HL Roach	S6-72
DE Scully	S6-72 *H
CD Skogley	S6-71
NJ Sullivan	S6-72
RW Szelmeczka	S6-72
DA Vasquez	S6-74
WCC Planning	S6-71 *H

*H - Advance Hardcopy

48. Release:

NOV 15 2001
DATE:
STA: 30
HANFORD RELEASE
ID: 25 AY

49.
[ ] Not Approved/Archive

_____/_____
Design Authority/Date

*Block numbers refer to block numbers on the FMP Flowchart (HNF-PRO-2001, Appendix A) and procedure steps within HNF-PRO-2001.

FMP-1 (Facility Modification Package – Engineering Request/Evaluation)

Engineering Request (Block 1)*

Requestor	Date	Need Date
DE Scully	10/08/2001	11/08/2001

FMP Title	Building/Room Number/System Number
Add Isolation Valves to Evaporator Instrument Flush Lines	2025E/131/60I

Problem Statement/Proposed Modification

Per the request of Operations/Maintenance (EL-01-00521/M) please provide an FMP for the installation of isolation valves for the following purge lines on the ETF evaporator skid:

- SEW-105-SS5-0.25" downstream of check valve 60I-257
- SEW-106-SS5-0.25" downstream of check valve 60I-259

Use ball valves to provide an open pathway. They will be "Normally Open". Locate the valves as close as reasonably possible to the instrument diaphragm flush rings. In normal evaporator operation these lines are purged each shift with hot evaporator distillate at 212°F.

Each valve will allow Maintenance to:

- remove the upstream piping and check valve to the next valve (60I-256, -258) without having to empty the evaporator vapor body
- allow the piping stub connecting to the instrument diaphragm flush ring to be rammed open if plugged.

The remaining instrument purge lines will not need these valve additions for the following reasons:

- the 2 purge lines for density meter DT-60I106 will be removed by ECN 664332 which will provide a new density meter
- the 2 diaphragms for the PDT-60I120 (entrainment separator) are in the vapor space (steam/air filled) of the vessel
- the diaphragm for PT-60I109 (vapor body) is in the vapor space (steam/air filled) of the vessel.

Also please provide a vent valve at the high point of the manifold header line that supplies the flush water to these purge lines to allow Maintenance to drain the header.

If you have any questions please contact me.

Lead Engineer Assigned (Block 2)*

Assigned Lead Engineer (Block 2)*	Date
HL Roach	10/09/2001

Approve for Engineering Evaluation (Block 3)*

Work Package Number	Estimated Evaluation Cost
EL-01-00521/M	4 mh

Engineering Management		Date
J Tueck	☒ Yes [ ] No	10-9-01

If not approved, reason not approved:

*Block numbers refer to block numbers on the FMP Flowchart (HNF-PRO-2001, Appendix A) and procedure steps within HNF-PRO-2001.

FMP-2 (Facility Modification Package – Engineering Evaluation/Estimate)

Engineering Evaluation (Block 4)*

Problem Analysis

Isolation valves are needed downstream of check valves 60I-257 and 60I-259 to allow for maintenance of check valves without having to empty the evaporator vapor body, 60I-EV-1. In addition this will allow for the piping stub connecting to the instrument diaphragm flush ring to be rammed open if plugged. A vent valve at the high point of the manifold header line is also required to allow the manifold header line to be drained.

Alternatives Considered

- Do Nothing
- Install the isolation and vent valves as requested

Preferred Solution

The only solution is the install the isolation and vent valves as requested or the problem will continue.

Cost and Schedule Estimate (Block 5)*

Estimated Construction Cost (Materials and Labor)	Estimated Engineering Cost	Total Estimated Cost
$1100	$800	$1900

Approve for Conceptual Phase (Block 6)*

Operations Manager N/A - Based on Approval of Work Package	N/A [X] Yes [ ] No	**Date** N/A	Cost Account Charge Number 111230
Design Authority DE Scully *DE Scully*	[X] Yes [ ] No	**Date** *11/8/01*	
Engineering Management KJ Lueck *K J Lueck*	[ ] Yes [ ] No	**Date** *11-8-01*	
Cost Account Manager N/A – Small Job	N/A [X] Yes [ ] No	**Date** N/A	

If not approved, reason not approved:

Design/Analysis Required (Block 7)*

[X] Yes [ ] No *DE Scully*	Date *11/8/01*

*Block numbers refer to block numbers on the FMP Flowchart (HNF-PRO-2001, Appendix A) and procedure steps within HNF-PRO-2001.

FMP-3A (Facility Modification Package – Preconceptual Plan and Design Documents)		
FMP Plan (Block 4)*		
Preconceptual Phase Plan		
Needed	**Design Input Documents**	**Notes**
	Functional Requirements Document (required for Line Item Projects)	
	Scope Description Document (required for General Plant Projects)	
X	Applicable Codes and Standards	ETF Pipe Class SS5, ANSI B31.3
	Applicable Regulatory Requirements	
X	Vendor Information	Catalog cut sheets for new valves and tube components
	Make/Buy Decision	
	Resource Plan for Engineering/Project Support	
X	Field measurements and notes	Walk down and field measurements taken
Design Analysis Documents		
	Engineering Study	
	Preliminary Design Calculations	
	Preliminary Safety Analysis/USQ Screen	
	Preliminary Environmental (NEPA) Review	
	Structures, Systems, and Components Functional Analysis	
X	Authorization Bases Review Form (WMH-331, Rev 2, 3.12)	Not Applicable – Inconsequential Change
Design Output Documents		
	Preconceptual Design Products	
	Engineering Drawings	
X	Procurement Specification	BOM, Page 16
	Construction Specification	
X	Installation Instruction	SKT-3, SKT-4
	Acceptance Test Plan	
X	Component Index File	Assign new valve numbers

*Block numbers refer to block numbers on the FMP Flowchart (HNF-PRO-2001, Appendix A) and procedure steps within HNF-PRO-2001.

FMP-3B (Facility Modification Package – Conceptual Plan)		
FMP Plan (Block 8)*		
Conceptual Phase Plan		
Needed	**Document**	**Notes**
X	Design Criteria	Meet ETF Pipe Class SS5
X	List of Baseline Documents to be modified	Page 8
X	List of Affected Documents	Page 9
	Design Verification Method/Plan	
X	Applicable Codes and Standards	Design per pipe class and ASME B31.3
	Conceptual Design Cost and Schedule	
	Preliminary USQ Screen	
	Environmental Screen/NEPA	
	Preliminary Job Hazard Analysis/Automated Job Hazard Analysis (AJHA)	
	Formal Hazards Analysis (if required)	
	Preliminary Safety Analysis Report	
	Fire Hazards Analysis (FHA)	
	Criticality Safety Evaluation Report (CSER)	
	Preliminary ALARA, Ergonomics, and Safety Review	
	3rd Party Inspector Review (e.g. NEC, Water Purveyor, Pressure Vessel)	
	Engineering Walkdowns/Surveys	
X	Drawing Searches	To determine available component numbers.
	Plant Forces Work Review	
	System Design Description	
	Long-Lead Equipment Specifications/Procurement	
	Construction Work Authorization Envelope	
	Interface Control Documents/Memoranda of Understanding/Memoranda of Agreement	
	Engineering Work Plan	
	Prepare Formal Conceptual Design	
	Quality Assurance Plan (Required for Line Items/General Plant Projects)	

*Block numbers refer to block numbers on the FMP Flowchart (HNF-PRO-2001, Appendix A) and procedure steps within HNF-PRO-2001.

FMP-3C (Facility Modification Package – Execution Plan)			
FMP Plan (Block 8)*			
Execution Phase Plan			
Detail Design			
Other Design Input Documents			
Needed	Document		Notes
X	Vendor Information		Valve and swagelok tube fitting data
Other Design Analysis Documents			
	Design Calculations		
X	Job Hazards Analysis/Automated Job Hazard Analysis		In Work Package
X	Design Verification		Peer Review
Design Output Documents			
	Detailed Design Drawings		
	Final USQ Screen		
	Procurement Specification		
	Construction Specification		
X	Acceptance Test Plan / Inspection Plan		In work package
X	Installation Instructions		SKT-3, SKT-4
X	Bill of Materials		BOM-1
	Required Permits		
		Hot Work Permit	
		Excavation Permit	
		Confined Space Permit	
		Radiation Work Permit	
		Elevated Work Permit	
X	Work Package		EL-01-00521/M
	Redline Drawing Set (s)		
Acceptance Testing and Turnover			
X	Acceptance Testing		In Work Package
	3rd Party Inspector Review (e.g. NEC, Water Purveyor, Pressure Vessel)		
	As-Built Set of Drawings		
	Punchlist		
X	Piping shall be inspected and tested per ASME B31.3 for normal fluid service		

*Block numbers refer to block numbers on the FMP Flowchart (HNF-PRO-2001, Appendix A) and procedure steps within HNF-PRO-2001.

FMP-4 (Facility Modification Package – Engineering Documents to be Modified)

List of Engineering Documents to be Modified (Blocks 8, 11)*

Document Number (Sheet/Pages, Rev)	Title	Outstanding ECN(s) DCN(s)/FMP(s)	Work Complete?
H-2-89335-1 / Rev 16	P & ID Evaporator System	None	N/A

Submit to Document Control? [ ] Yes [X] No

Design Authority KDSully Date 11/8/01

*Block numbers refer to block numbers on the FMP Flowchart (HNF-PRO-2001, Appendix A) and procedure steps within HNF-PRO-2001.

FMP-5 (Facility Modification Package – Potentially Affected Documents)

Potentially Affected Document (Blocks 8)*

Document Number/Revision	Document Owner (organization)	Technical Authority Notified	Date Notified
POP-601-003 / REV AG-3	LWPF Operations	DE Scully	10/25/01

*Block numbers refer to block numbers on the FMP Flowchart (HNF-PRO-2001, Appendix A) and procedure steps within HNF-PRO-2001.

FMP-6 (Facility Modification Package – Preliminary Evaluations/ Functional Requirements)

Perform Preliminary Evaluations (Block 9)*

The next available valve number based on drawing search for system 601 is 601-222. New valves were assigned valve numbers 601-222, 601-223, and 601-224 based on drawing search for available valve numbers.

Review of open ECN's showed no impact on this proposed change.

Functional Requirements, Design Criteria, and Acceptance Criteria (Block 10)*

Pipe, pipe components, tube, and tube components were selected based on requirements for ETF pipe classes SS5 and SS6. ETF pipe class requirements are specified in ETF Pipe Class Specification, ADTECHS S-136H-001. One exception to pipe class SS5 is that 0.035" wall tube will be used. ETF pipe classes SS5, and SS6 require that all piping shall be fabricated, inspected, and tested per ASME B31.3 for normal fluid service.

Must be design for 130 PSIG water service. Pipe, tube, and components that meets the requirements of SS5 and SS6 will satisfy this requirement.

Design Authority L D Bailey	**Date** 11/8/01	**Detailed Conceptual Design Document Required?**
Engineering Management N/A	**Date** N/A	[ ] Yes [X] No (Block 12)

*Block numbers refer to block numbers on the FMP Flowchart (HNF-PRO-2001, Appendix A) and procedure steps within HNF-PRO-2001.

FMP-7 (Facility Modification Package – Detailed Design/Verification)

Design Verification Record (Block 16)* [See drawings, calculations, specifications, and other design products]

Design Verification Method (Select method(s) and provide explanation of how to be performed):

[X] **Peer Review**

[ ] **Formal Design Review**

[ ] **Alternate Calculations**

[ ] **Qualification Testing**

Design Verification Details

Design satisfies design requirements and meets ETF pipe class requirements.

Design Verifier	**Date**
DE Scully DE Scully	11/08/01

*Block numbers refer to block numbers on the FMP Flowchart (HNF-PRO-2001, Appendix A) and procedure steps within HNF-PRO-2001.

11-15-01
DES/

FMP-8 (Facility Modification Package - Continuation Page)

FMP Section Title : SKT-1	Date: 10/18/01	H-2-89335-1, REV ~~15~~ 16

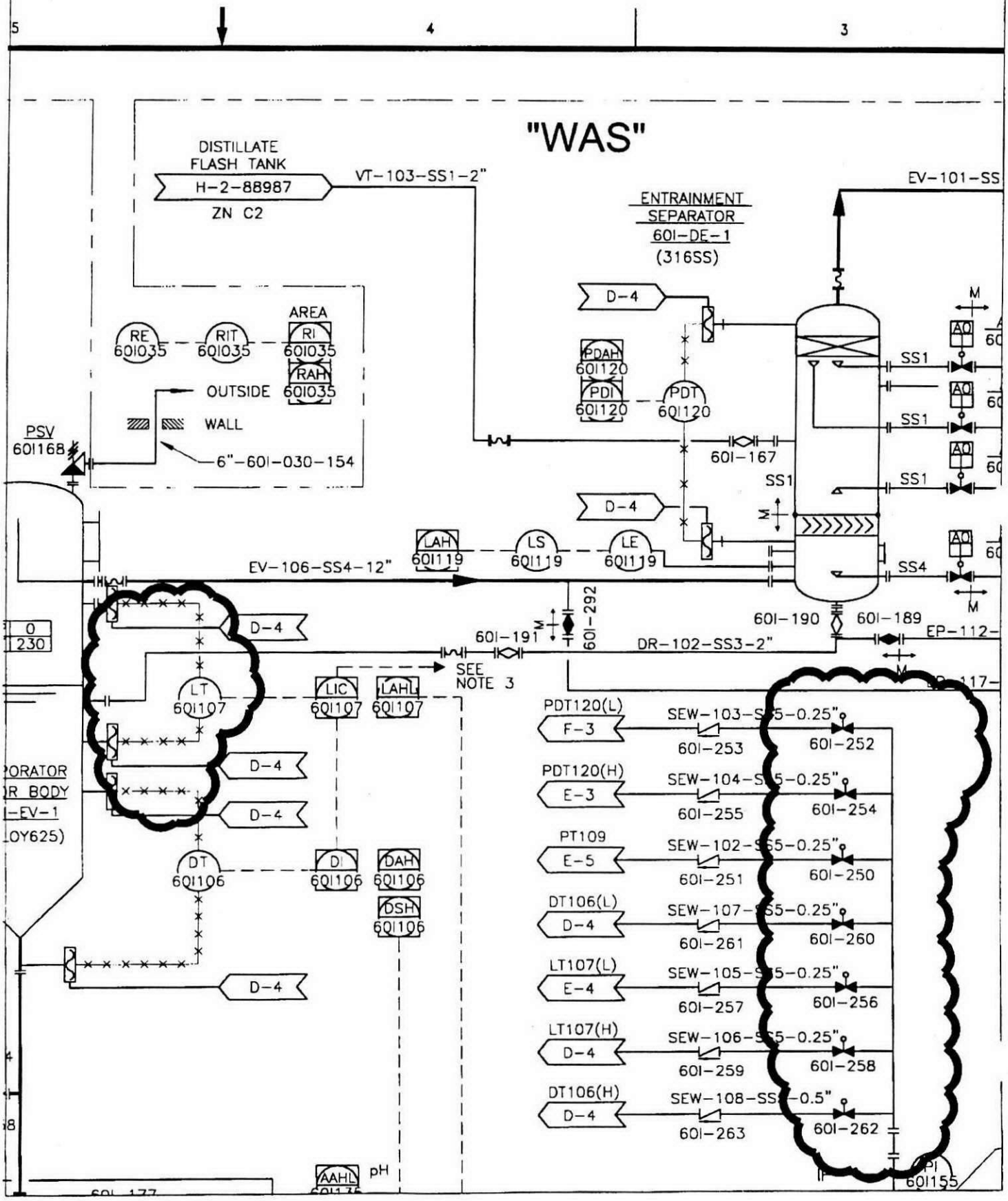

FMP 8 (Facility Modification Package Continuation Page)

FMP Section Title SKT 2	Date 10/18/01	H 2-89335 1 REV 16

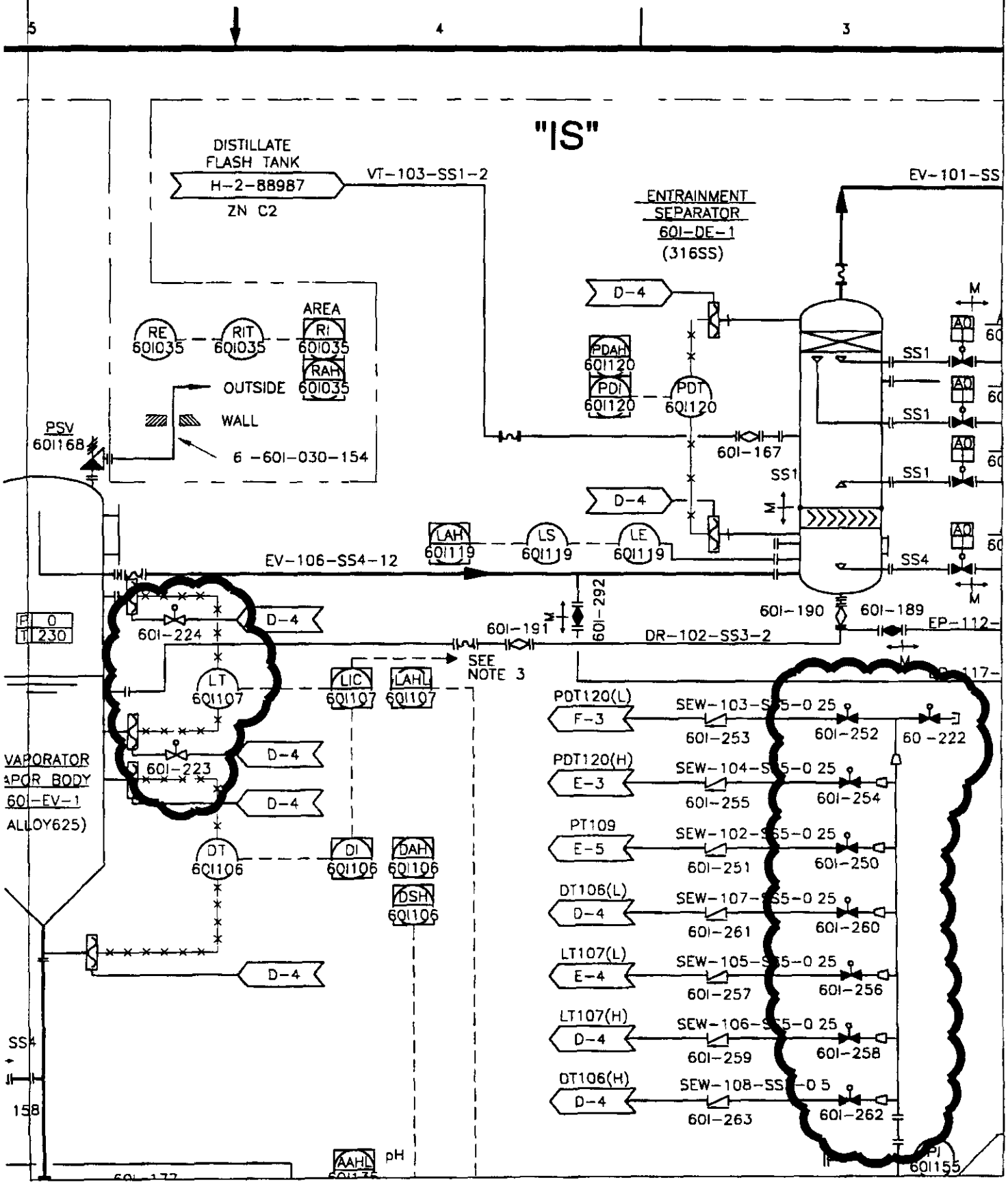

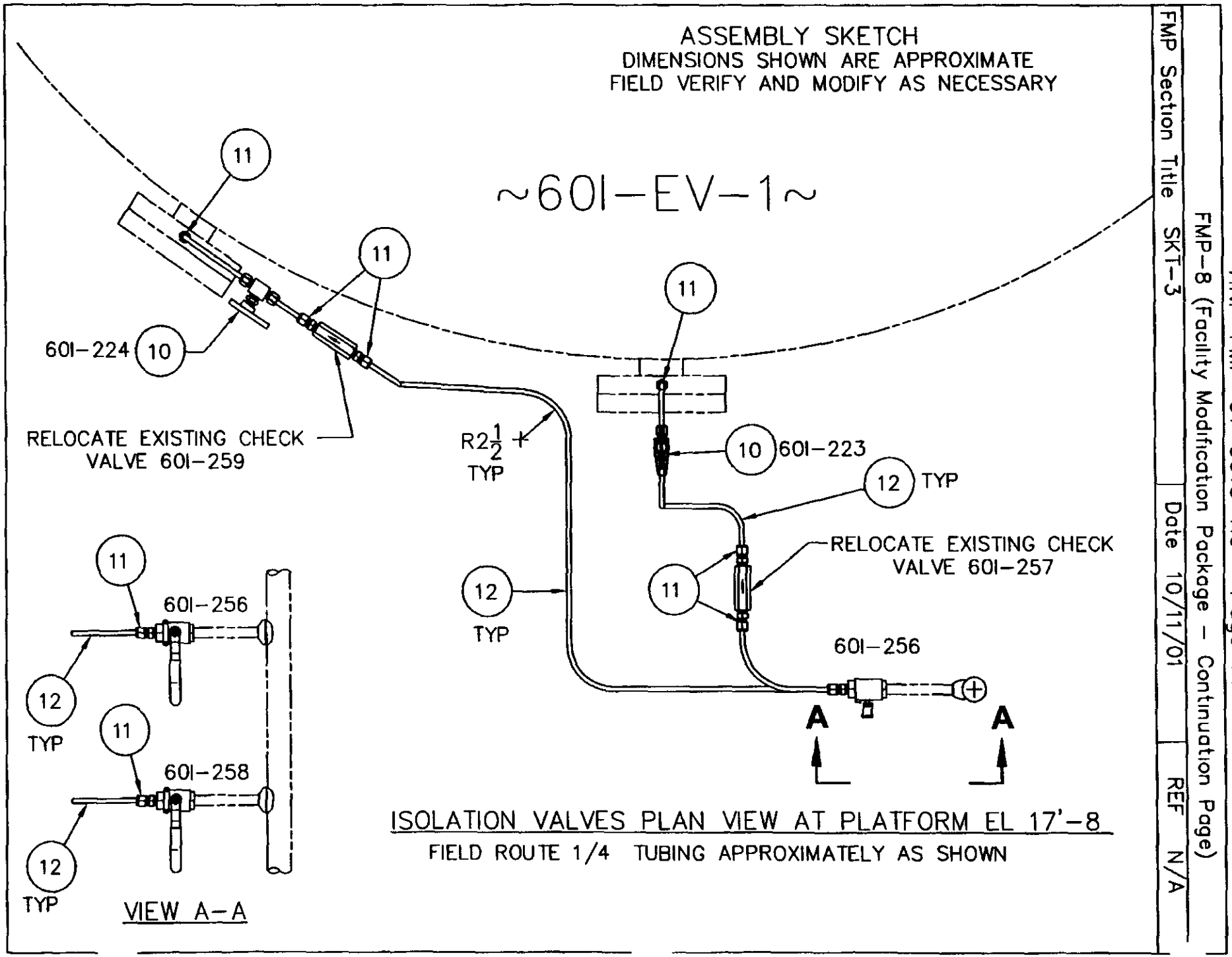

FMP Section Title	Date	REF
SKT-3	10/11/01	N/A

FMP-8 (Facility Modification Package - Continuation Page)

FMP-8 (Facility Modification Package – Continuation Page)

FMP Section Title SKT-4	Date 10/11/01	REF N/A

ASSEMBLY SKETCH
DIMENSIONS SHOWN ARE APPROXIMATE
FIELD VERIFY AND MODIFY AS NECESSARY

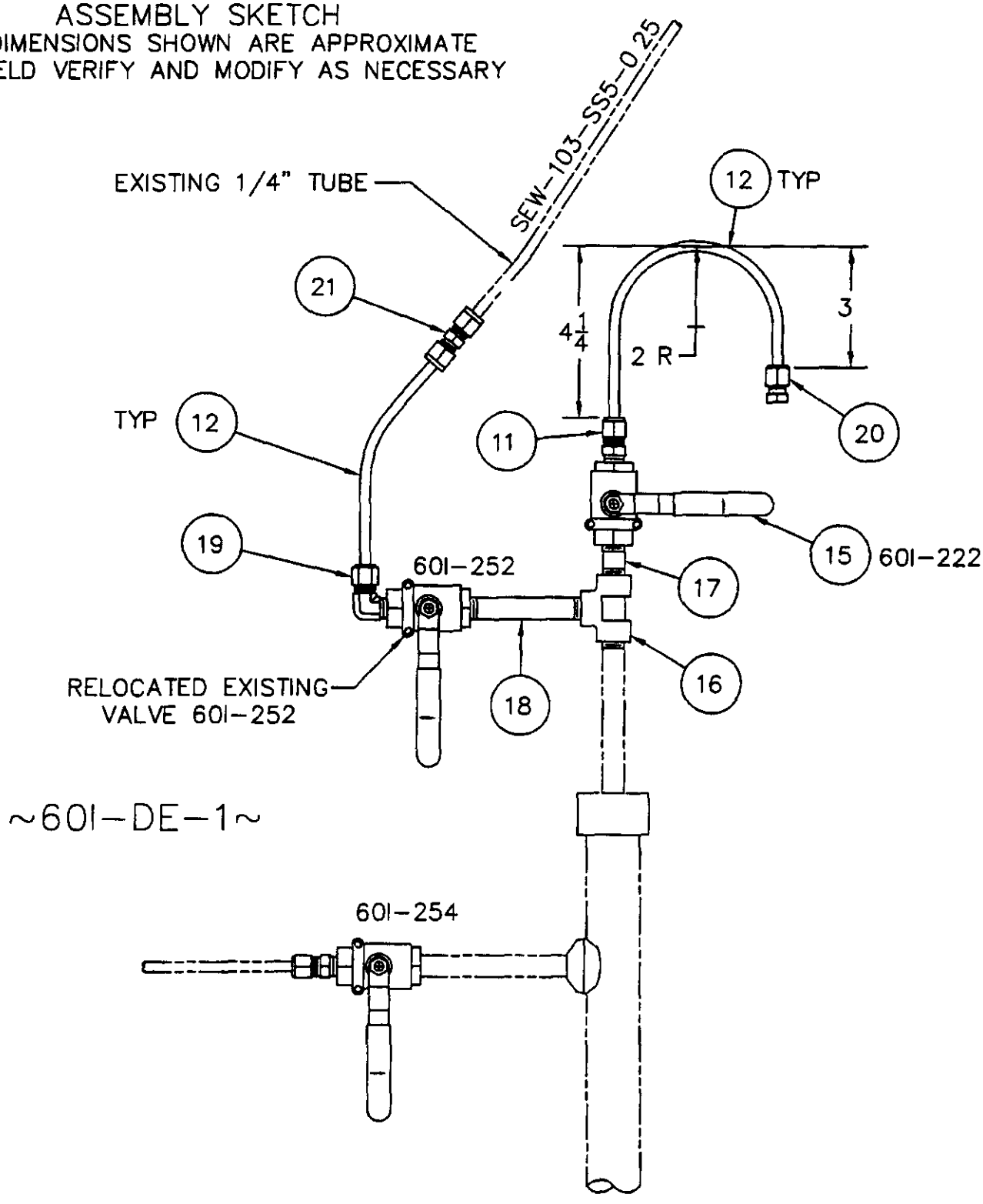

VENT VALVE DETAIL AT PLATFORM EL 25-9 1/2

FIELD ROUTE 1/4 TUBING APPROXIMATELY AS SHOWN

ITEM	QUANTITY	Description	Notes
		ISOLATION VALVE PLAN VIEW AT PLATFORM EL 17'-8" (PAGE x)	
10	2	¼ Ball Valve Fractional Swagelok Tube Fitting end connection ¼ Tube Size 316 SS Swagelok # SS-43S4	
11	9	Swagelok Male Connector ¼ NPT Male x ¼ tube size 316 SS Swagelok # SS 400 1-4	
12	AR	¼ x 0 035 316 SS Seamless Tube ASTM A269 TP316	
		VENT VALVE DETAIL AT PLATFORM EL 25'-9 ½" (PAGE x)	
		(Some Parts Identified in This View are Listed Under Other Views or Details)	
15	1	¼ Ball Valve ¼ Female NPT End Connections 316 SS Apollo #76-101-01	
16	1	¼ Pipe TEE ¼ NPT Female End Connections 304L SS ASTM A403 WP304L ASME B16 11	
17	1	¼ SCH 40 NPT Pipe Nipple 1-1/2 Long 304L SS ASTM A312 TP304L	
18	1	¼ SCH 40 NPT Pipe Nipple 3-1/2 Long 304L SS ASTM A312 TP304L	
19	1	¼ Swagelok Male Elbow ¼ NPT Male x ¼ Tube 316 SS Swagelok # SS-400-2-4	
20	1	Swagelok Tube Cap ¼ Tube 316 SS Swagelok # SS-400-C	
21	1	Swagelok Tube Union ¼ Tube 316 SS Swagelok # SS-400-6	

Trademarks

Swagelok Crawford Fitting Company

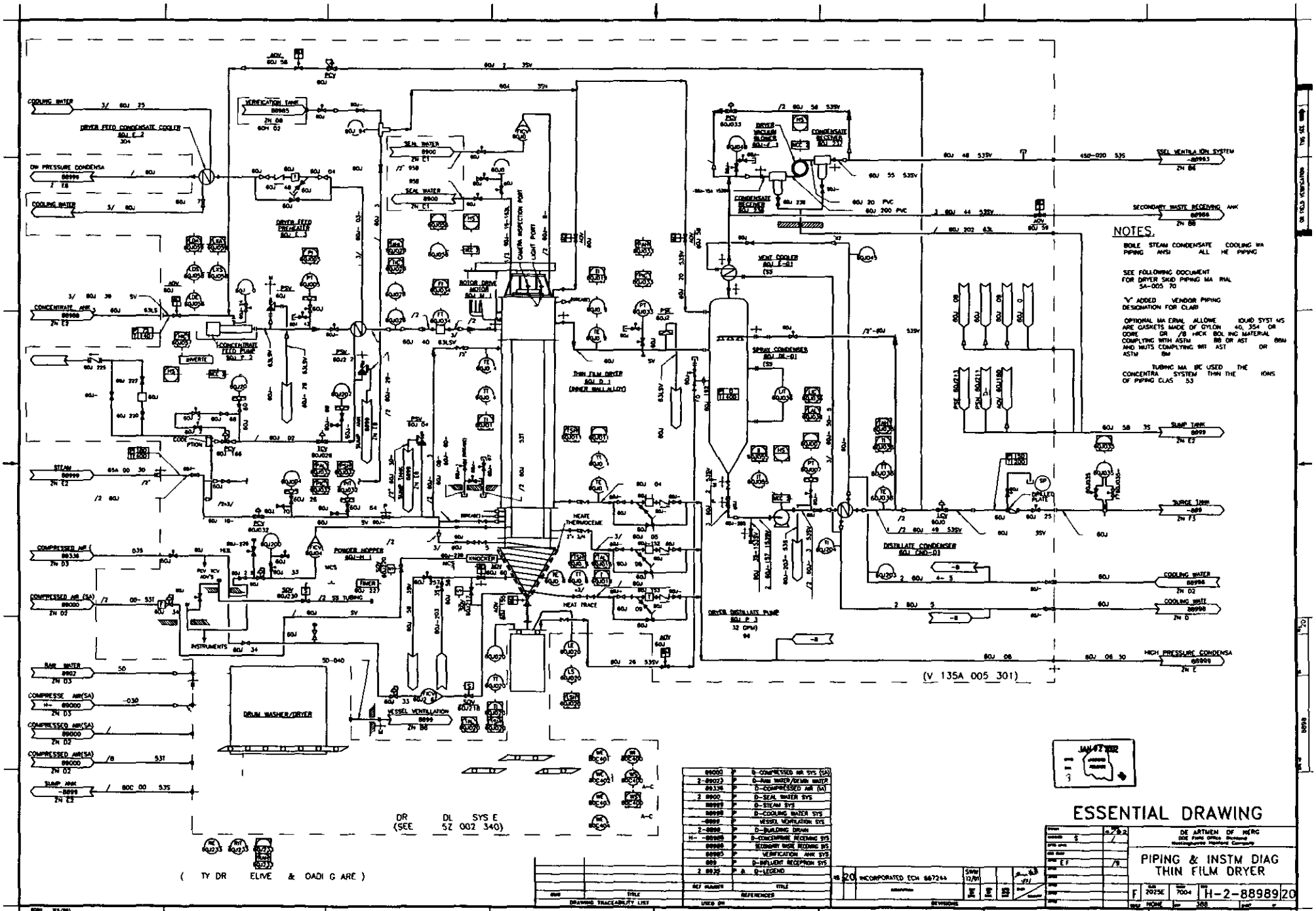
COOLING WATER
DRYER FEED CONDENSATE COOLER
ON PRESSURE CONDENSA
COOLING WATER
VERIFICATION TANK
DRYER FEED CONCENTRATE
SEAL WATER
SEAL WATER
CONCENTRATE ANK
CONCENTRATE FEED PUMP
INVERTE
STEAM
COMPRESSED AIR
COMPRESSED AIR (SA)
INSTRUMENTS
RAW WATER
COMPRESSE AIR(SA)
COMPRESSED AIR(SA)
COMPRESSED AIR(SA)
SUMP ANK
DRUM WASHER/DRYER
VESSEL VENTILLATION
POWDER HOPPER
KNOCKER
HEAT TRACE
HEATE THERMOCOUPLE
ROTOR DRIVE MOTOR
CAMERA INSPECTION PORT
LIGHT PORT
THIN FILM DRYER
(INNER WALL ALLOY)
DRYER VACUUM BLOWER
CONDENSATE RECEIVER
CONDENSATE RECEIVER
VENT COOLER
SPRAY CONDENSER
DISTILLATE CONDENSER
DRYER DISTILLATE PUMP
32 GPM
DRILLED PLATE
SEL VENTILA ION SYSTEM
SECONDARY WASTE RECEIVING ANK
SUMP TANK
SURGE TANK
COOLING WATER
COOLING WATER
HIGH PRESSURE CONDENSA
(V 135A 005 301)
DR DL SYS E
(SEE 5Z 002 340)
(TY DR ELIVE & OADI G ARE)
NOTES.
BOILE STEAM CONDENSATE COOLING WA
PIPING ANSI ALL HE PIPING
SEE FOLLOWING DOCUMENT
FOR DRYER SKID PIPING MA RIAL
5A-005 70
"V" ADDED VENDOR PIPING
DESIGNATION FOR CLARI
OPTIONAL MA ERIAL ALLOWE IQUID SYST MS
ARE GASKETS MADE OF GYLON 40, 354 OR
OORE GR /8 HICK BOL ING MATERIAL
COMPLYING WITH ASTM B8 OR AST B8M
AND NUTS COMPLYING WIT AST OR
ASTM B8M
TUBING MA BE USED THE
CONCENTRA SYSTEM THIN THE IONS
OF PIPING CLAS 53
ESSENTIAL DRAWING
DE ARTMEN OF NERG
PIPING & INSTM DIAG
THIN FILM DRYER
F 2025E 7004 H-2-88989 20
SCALE NONE
DRAWING TRACEABILITY LIST
REVISIONS
INCORPORATED ECN 667244

ENGINEERING CHANGE NOTICE

ESSENTIAL

Page 1 of 5

1 ECN 656781L

Proj ECN

2 ECN Category (mark one)	3 Originator's Name Organization MSIN and Telephone No	4 USQ Required?	5 Date
Supplemental [ ] Direct Revision [ ] Change ECN [ ] Temporary [X] Standby [ ] Supersedure [ ] Cancel/Void [ ]	DE SCULLY/3M500/S6-72/372-3592	[ ] Yes [X] No	06/16/00
	6 Project Title/No /Work Order No: Spool Pieces for Dryer Feed Preheater 60J-E-3	7 Bldg /Sys /Fac No: 2025E/60J	8 Approval Designator: NA
	9 Document Numbers Changed by this ECN (includes sheet no and rev): See Block 13a below	10 Related ECN No(s): 656828L	11 Related PO No: NONE

12a Modification Work	12b Work Package No	12c Modification Work Complete	12d Restored to Original Condition (Temp or Standby ECN only)
[X] Yes (fill out Blk 12b) [ ] No (NA Blks 12b 12c 12d)	EL-00-00317	Design Authority/Cog Engineer Signature & Date	Design Authority/Cog Engineer Signature & Date

13a Description of Change — 13b Design Baseline Document? [X] Yes [ ] No

H-2-88989, sht 1, rev 16

Remove dryer feed preheater 60J-E-3 Provide a 3/4" diameter schedule 40 SS304 screwed pipe spool piece for the feed line Provide a 3/4" diameter schedule 80 carbon steel screwed pipe spool piece for the steam line See p 4 of this ECN

Install, inspect, and test per ASME B31 3 for Category D service for the dryer feed line and ASME B31 1 for the steam line

H-2-89302, sht 172, rev 1

Remove definition of VD435195 per page 5 of this ECN This removes alarms and dryer trip on low dryer feed temperature

HNF-SD-ETF-OCD-001, rev 5, Table 19, p. 48 For TIC-60J028, delete "AL 100 F Alarm - Stop Concentrate Feed Pump "

14a Justification (mark one)

Criteria Change	[X]	Design Improvement	[ ]	Environmental	[ ]	Facility Deactivation	[ ]
As Found	[ ]	Facilitate Const	[ ]	Const Error/Omission	[ ]	Design Error/Omission	[ ]

14b Justification Details

The dryer feed preheater 60J-E-3 is plugged with solidified dryer feed salts precipitated from the groundwater feed This is likely the result of accumulation over years of operation From a process standpoint this equipment is deemed non-essential and can be temporarily removed

15 Distribution (include name MSIN and no of copies)

NC Teats	S6-72	1*	DE Scully	S6-72	1*
NJ Sullivan	S6-72	1	ST Willett	S6-71	1*
MW Bowman	S6-72	1	CD Skogley	S6-72	1
WPP Planning		1*	JM Isdell	B4-39	1*
DL Flyckt	S6-71	1	JL Foster	S6-71	1
RW Szelmeczka	S6-72	1	*adv cy		

RELEASE STAMP

JUN 16 2000

DATE: HANFORD RELEASE

STA. 30 ID 78

A 7900 013 2 (05/96) GEF095

ENGINEERING CHANGE NOTICE	Page 2 of 5	1 ECN (use no from pg 1) 656781L

16 Design Verification Required	17 Cost Impact				18 Schedule Impact (days)	
	ENGINEERING	N/A	CONSTRUCTION		N/A	
[X] Yes	Additional	[] $	Additional	[] $	Improvement	[]
[] No	Savings	[] $	Savings	[] $	Delay	[]

19 Change Impact Review: Indicate the related documents (other than the engineering documents identified on Side 1) that will be affected by the change described in Block 13 Enter the affected document number in Block 20

SDD/DD	[]	Seismic/Stress Analysis	[]	Tank Calibration Manual	[]
Functional Design Criteria	[]	Stress/Design Report	[]	Health Physics Procedure	[]
Operating Specification	[]	Interface Control Drawing	[]	Spares Multiple Unit Listing	[]
Criticality Specification	[]	Calibration Procedure	[]	Test Procedures/Specification	[]
Conceptual Design Report	[]	Installation Procedure	[]	Component Index	[]
Equipment Spec	[]	Maintenance Procedure	[]	ASME Coded Item	[]
Const. Spec	[]	Engineering Procedure	[]	Human Factor Consideration	[]
Procurement Spec.	[]	Operating Instruction	[]	Computer Software	[]
Vendor Information	[]	Operating Procedure	[X]	Electric Circuit Schedule	[]
OM Manual	[]	Operational Safety Requirement	[]	ICRS Procedure	[]
FSAR/SAR	[]	IEFD Drawing	[]	Process Control Manual/Plan	[]
Safety Equipment List	[]	Cell Arrangement Drawing	[]	Process Flow Chart	[]
Radiation Work Permit	[]	Essential Material Specification	[]	Purchase Requisition	[]
Environmental Impact Statement	[]	Fac Proc. Samp Schedule	[]	Tickler File	[]
Environmental Report	[]	Inspection Plan	[]		[]
Environmental Permit	[]	Inventory Adjustment Request	[]		[]

20 Other Affected Documents: (NOTE: Documents listed below will not be revised by this ECN) Signatures below indicate that the signing organization has been notified of other affected documents listed below

Document Number/Revision	Document Number/Revision	Document Number Revision
POP-605-001, Q-10		

21 Approvals

	Signature	Date		Signature	Date
Design Authority ST Willett	[signature]	6/16/00	Design Agent DE Scully	[signature]	6/16/00
Cog Eng ST Willett	[signature]	6/16/00	PE		
Cog Mgr NJ Sullivan	[signature]	6-16-00	QA		
QA			Safety		
Safety			Design		
Environ			Environ		
Other			Other (MCS Cog Engr)	[signature]	6/16/00
Design Verification (Independent Review)	[signature]	6-16-00			

Notes:

DEPARTMENT OF ENERGY

ADDITIONAL

A 7900 013 3 (05/96) GEF096

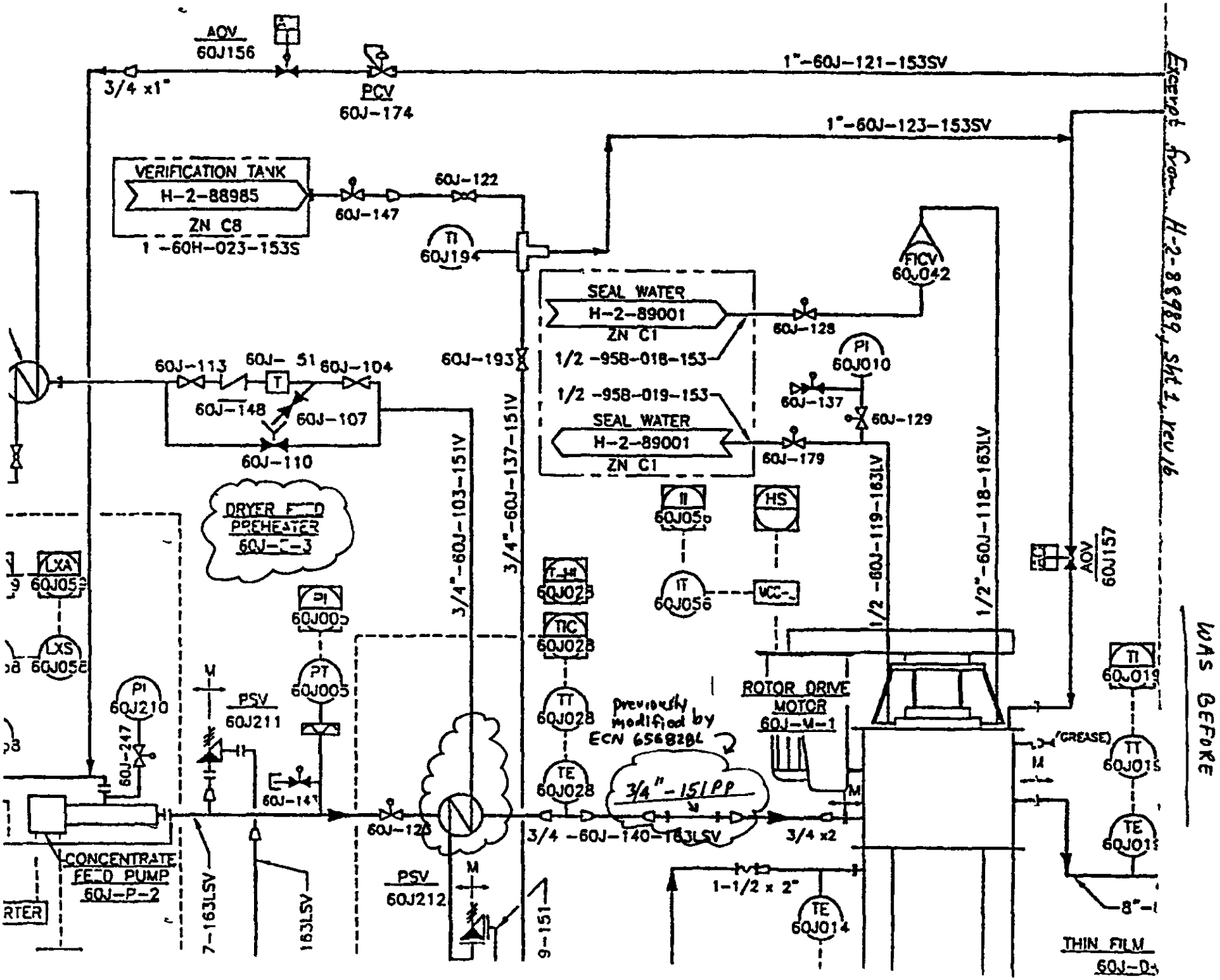
AOV
60J156
3/4 x1"
PCV
60J-174
1"-60J-121-153SV
1"-60J-123-153SV
VERIFICATION TANK
H-2-88985
ZN C8
1 -60H-023-153S
60J-147
60J-122
TI
60J194
SEAL WATER
H-2-89001
ZN C1
1/2 -958-018-153
1/2 -958-019-153
SEAL WATER
H-2-89001
ZN C1
60J-128
FICV
60J042
PI
60J010
60J-137
60J-129
60J-179
60J-193
60J-113
60J- 51
60J-104
60J-148
60J-107
60J-110
DRYER FEED
PREHEATER
60J-E-3
3/4"-60J-103-151V
3/4"-60J-137-151V
1/2 -60J-119-163LV
1/2"-60J-118-163LV
TI
60J05
HS
IT
60J056
VCC
AOV
60J157
LXA
60J059
LXS
60J058
PI
60J005
PT
60J005
TIC
60J028
TT
60J028
TE
60J028
PI
60J210
60J-247
PSV
60J211
60J-147
ROTOR DRIVE
MOTOR
60J-M-1
previously
modified by
ECN 656828L
3/4"-151PP
(GREASE)
TI
60J019
TT
60J015
TE
60J013
CONCENTRATE
FEED PUMP
60J-P-2
7-163LSV
163LSV
60J-126
PSV
60J212
9-151
3/4 -60J-140-163LSV
3/4 x2
1-1/2 x 2"
TE
60J014
8"-
THIN FILM
60J-D-
WAS BEFORE
Excerpt from H-2-88989, sht 1, rev 16
ECN 656781L
p 3/5

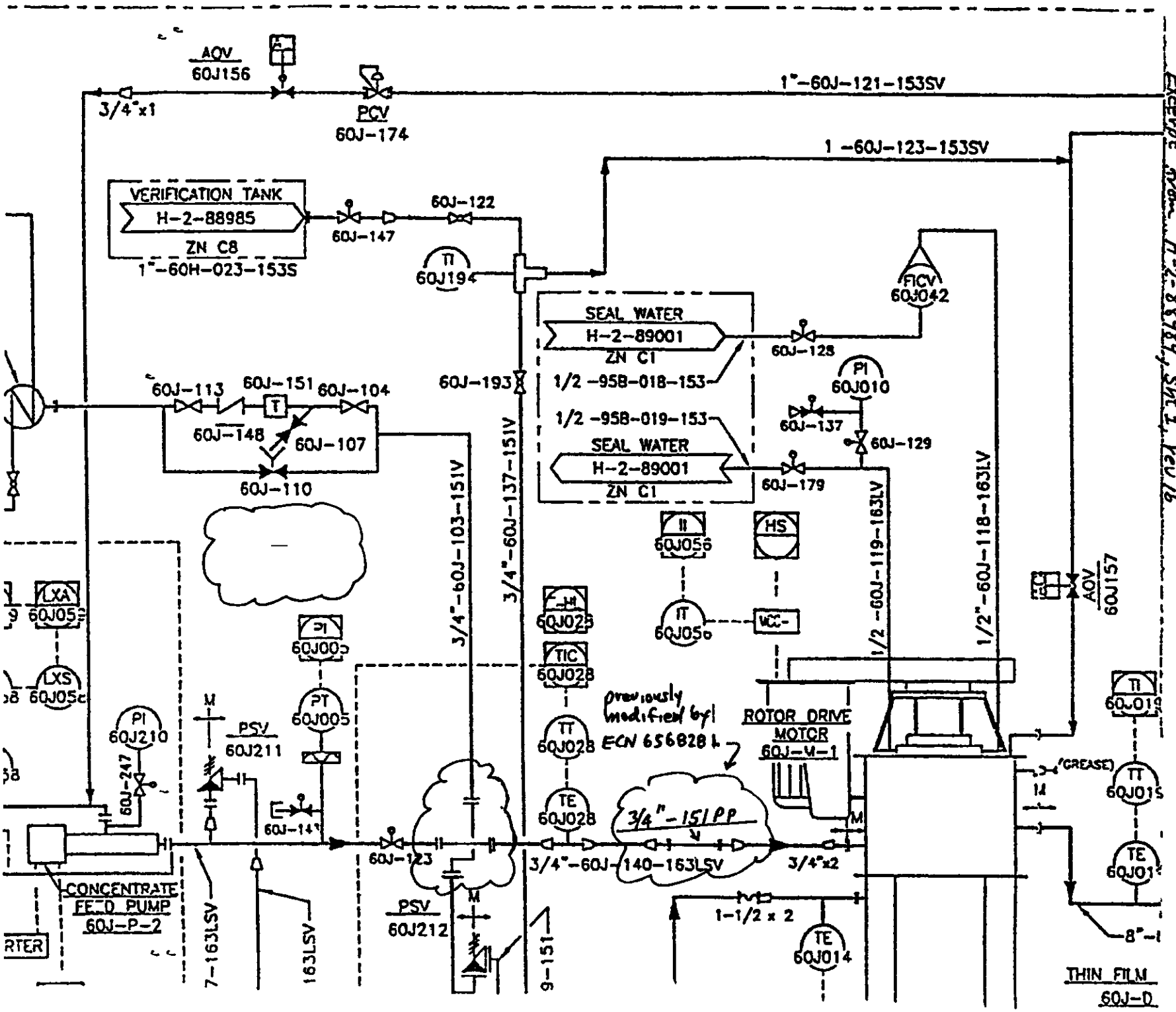
AOV
60J156
3/4"x1
PCV
60J-174
1"-60J-121-153SV
1 -60J-123-153SV
VERIFICATION TANK
H-2-88985
ZN C8
1"-60H-023-153S
60J-147
60J-122
TI
60J194
SEAL WATER
H-2-89001
ZN C1
1/2 -958-018-153
1/2 -958-019-153
SEAL WATER
H-2-89001
ZN C1
60J-128
FICV
60J042
PI
60J010
60J-137
60J-129
60J-179
60J-193
60J-113
60J-151
60J-104
60J-148
60J-107
60J-110
3/4"-60J-103-151V
3/4"-60J-137-151V
1/2 -60J-119-163LV
1/2"-60J-118-163LV
AOV
60J157
LXA
60J05
LXS
60J05
PI
60J210
60J-247
PSV
60J211
PI
60J005
PT
60J005
60J-141
60J-123
CONCENTRATE
FEED PUMP
60J-P-2
7-163LSV
163LSV
PSV
60J212
9-151
TI
60J056
TT
60J056
HS
VCC-
TIC
60J028
TT
60J028
TE
60J028
previously
modified by
ECN 656828 L
3/4"-151PP
3/4"-60J-140-163LSV
3/4"x2
ROTOR DRIVE
MOTOR
60J-M-1
(GREASE)
1-1/2 x 2
TE
60J014
TI
60J015
TT
60J015
TE
60J015
8"-
THIN FILM
60J-D
ECN 656781L
Except from H-2-88989, Sht 1, rev 16
IS NOW
P 4/5

ENGINEERING CHANGE NOTICE CONTINUATION SHEET	Page 5	ECN 656781L Date 6-16-00

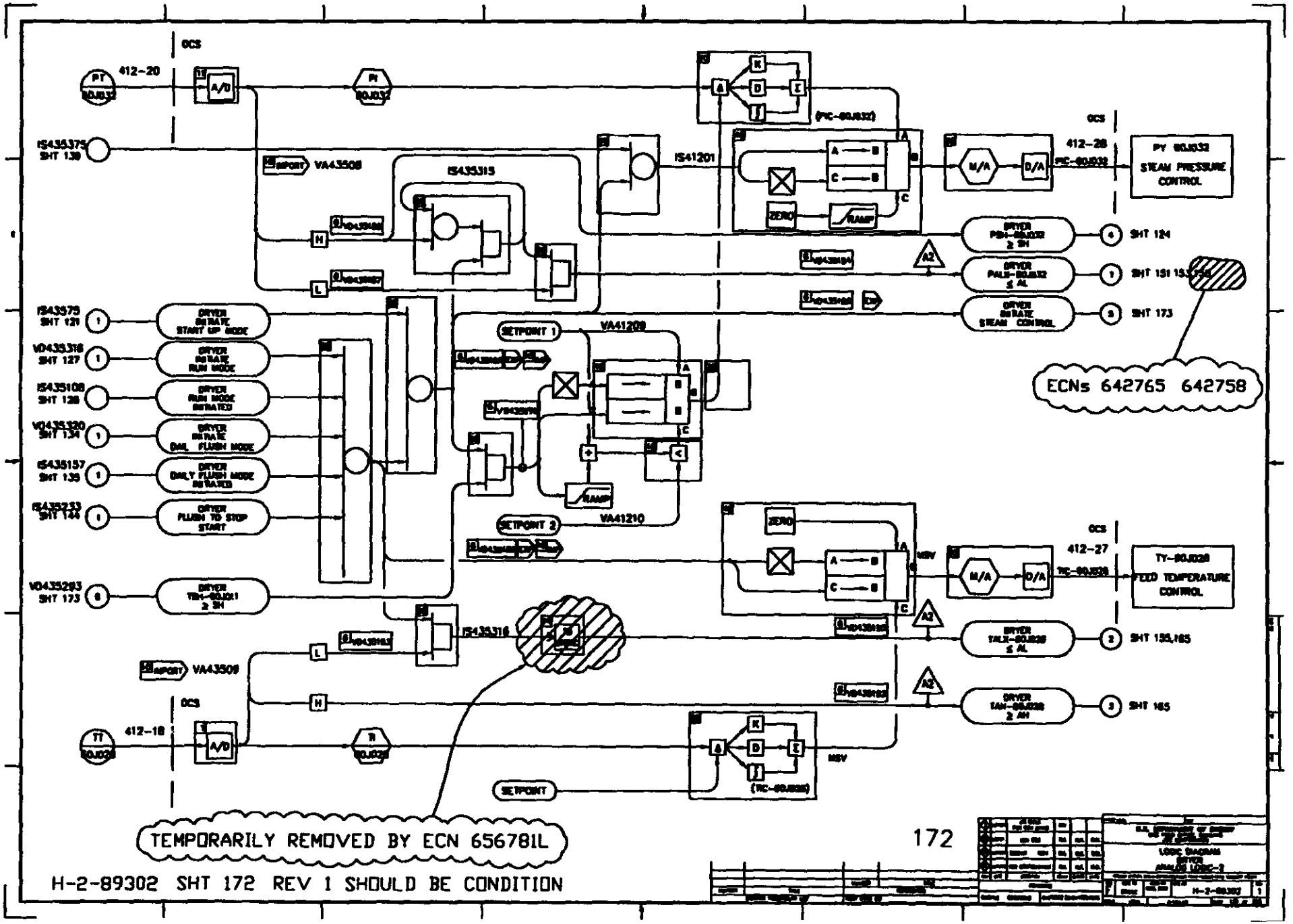

DON'T SAY IT — *Write It!*

DATE January 3 2002

TO DL Flyckt

FROM ST Willett S6-72

cc NJ Sullivan

Telephone 373-5535

SUBJECT Extension of ECN-656781/L, (TFD Spool Piece)

This DSI is written to request an extension for ECN 656781/L. This ECN was prepared to replace the plugged up pre-heater with spool piece for TFD feed line Extension of this ECN will not cause any problems in operation of Thin Film Dryer A permanent ECN was prepared and the Package EL-00-702 is currently in placed and should eliminate this temporary mod in January 2002

Concurrent.

JAN 07 2002

1/3/02 01-03-02

ST Willett DA

KJ Lueck, ENGR Manager

DL Flyckt Plant Manager

A-3000-723 (01/98)

S

CDF 18

ENGINEERING CHANGE NOTICE ESSENTIAL

Page 1 of 8

1 ECN 662046

Proj ECN

2 ECN Category (mark one)	3 Originator's Name Organization MSIN and Telephone No	4 USQ Required?	5 Date
Supplemental ☒	KD JUNT/3M500/S6-72/372-2771	☐ Yes ☒ No	7-25-01
Direct Revision ☐			
Change ECN ☐	6 Project Title/No /Work Order No	7 Bldg /Sys./Fac No	8 Approval Designator
Temporary ☐	DRYER FEED LINE ORIFICE FLUSH	2025E/60J	T
Standby ☐	9 Document Numbers Changed by this ECN (includes sheet no and rev)	10 Related ECN No(s)	11 Related PO No
Supersedure ☐	SEE BLOCK 13a	N/A	N/A
Cancel/Void ☐			

12a Modification Work	12b Work Package No	12c Modification Work Completed	12d Restored to Original Condition (Temp or Standby ECNs only)
☒ Yes (fill out Blk 12b)	EL-01-00390/W		N/A
☐ No (NA Blks 12b 12c 12d)		Design Authority/Cog Engineer Signature & Date	Design Authority/Cog Engineer Signature & Date

13a Description of Change

13b Design Baseline Document? ☒ Yes ☐ No

H-2-88988 SH 1 REV ~~16~~ 18 STV 8/24/01
H-2-88989 SH 1 REV 18
H-2-89131 SH 1 REV 4

DESCRIPTION/ LOCATION OF CHANGES
A) P&ID CHANGES ARE SHOWN ON PAGES 3 & 4
B) PIPING DRAWING CHANGES ARE SHOWN ON PAGE 5
C) FABRICATION DETAILS ARE SHOWN ON PAGES 6 AND 7
D) PARTS LIST AND FABRICATION NOTES ARE SHOWN ON PAGE 8

14a Justification (mark one)

- Criteria Change ☐
- Design Improvement ☒
- Environmental ☐
- Facility Deactivation ☐
- As-Found ☐
- Facilitate Const ☐
- Const. Error/Omission ☐
- Design Error/Omission ☐

14b Justification Details

ORIFICE 60J-005 WHICH HAS 2EA 0 106 DIA HOLES IS LOCATED IN THE 3/4 FEED LINE TO DRYER 60J-D-1 THE HOLES TEND TO PLUG WITH SEDIMENT AFTER A WEEK OR TWO OF DRYER OPERATION AN EXISTING PROCEDURE PROVIDES FOR BACK FLUSHING THIS ORIFICE THIS ECN WILL ENHANCE THE CLEANING OF THE HOLES BY SCOURING THE UPSTREAM SIDE OF THE ORIFICE

15 Distribution (include name MSIN and no of copies)

KD JUNT	S6-72	1	DE SCULLY	S6-72	1
NJ SULLIVAN	S6-72	1	CD SKOGLEY	S6-72	1
NW BOWMAN	S6-72	1	JM ISDELL	B4-39	1*
WCC PLANNING		1*	TH CALIHAN	S6-71	1
RW SZELMECZKA	S6-72	1	DK SMITH	S6-71	1
BA MESSINGER	B4-39	1*	ST WILLETT	S6-72	1*
LL HUTH	S6-72	1*			

*adv copy

RELEASE STAMP

AUG 24 2001
DATE:
HANFORD RELEASE
STA. 30
ID: 65

A 7900-013-2 (10/97)

A 7900-013-1

ENGINEERING CHANGE NOTICE

1 ECN (use no from pg 1): ECN 662046

16 Design Verification Required	17 Cost Impact				18 Schedule Impact (days)	
	ENGINEERING		CONSTRUCTION			
☒ Yes	Additional ☐	$ NA	Additional ☐	$ NA	Improvement ☐	NA
☐ No	Savings ☐	$ NA	Savings ☐	$ NA	Delay ☐	NA

19 Change Impact Review Indicate the related documents (other than the engineering documents identified on Side 1) that will be affected by the change described in Block 13 Enter the affected document number in Block 20

SDD/DD	☐	Seismic/Stress Analysis	☐	Tank Calibration Manual	☐
Functional Design Criteria	☐	Stress/Design Report	☐	Health Physics Procedure	☐
Operating Specification	☐	Interface Control Drawing	☐	Spares Multiple Unit Listing	☐
Criticality Specification	☐	Calibration Procedure	☐	Test Procedures/Specification	☐
Conceptual Design Report	☐	Installation Procedure	☐	Component Index	☒
Equipment Spec.	☐	Maintenance Procedure	☐	ASME Coded Item	☐
Const. Spec.	☐	Engineering Procedure	☐	Human Factor Consideration	☐
Procurement Spec	☐	Operating Instruction	☐	Computer Software	☐
Vendor Information	☒	Operating Procedure	☒	Electric Circuit Schedule	☐
OM Manual	☐	Operational Safety Requirement	☐	ICRS Procedure	☐
FSAR/SAR	☐	IEFD Drawing	☒	Process Control Manual/Plan	☐
Safety Equipment List	☐	Cell Arrangement Drawing	☐	Process Flow Chart	☐
Radiation Work Permit	☐	Essential Material Specification	☐	Purchase Requisition	☐
Environmental Impact Statement	☐	Fac. Proc Samp Schedule	☐	Tickler File	☐
Environmental Report	☐	Inspection Plan	☐		☐
Environmental Permit	☐	Inventory Adjustment Request	☐		☐

20 Other Affected Documents (NOTE Documents listed below will not be revised by this ECN) Signatures below indicate that the signing organization has been notified of other affected documents listed below

Document Number/Revision	Document Number/Revision	Document Number/Revision
POP-60J-001/R 12	NA	NA

21 Approvals

	Signature	Date		Signature	Date
Design Authority ST WILLETT	[signature]	8/13/01	Design Agent KD JUNT	[signature]	8-6 01
Cog Eng ST WILLETT	[signature]	8/13/01	PE		
Cog Mgr ~~NJ SULLIVAN~~ KJ LUECK	[signature]	8 23-01	QA		
QA			Safety		
Safety			Design		
Environ			Environ		
Other DE SCULLY	[signature]	8/2/01	Other LL HUTH	[signature]	8-15-01
(INDEPENDENT DESIGN REVIEW)					
HL ROACH	[signature]	8/2/01			

DEPARTMENT OF ENERGY

Signature or a Control Number that tracks the Approval Signature

ADDITIONAL

H-2-88988 SH 1 ZONE E2 AND E3 REVISE AS SHOWN IN CLOUDED AREA

"IS"

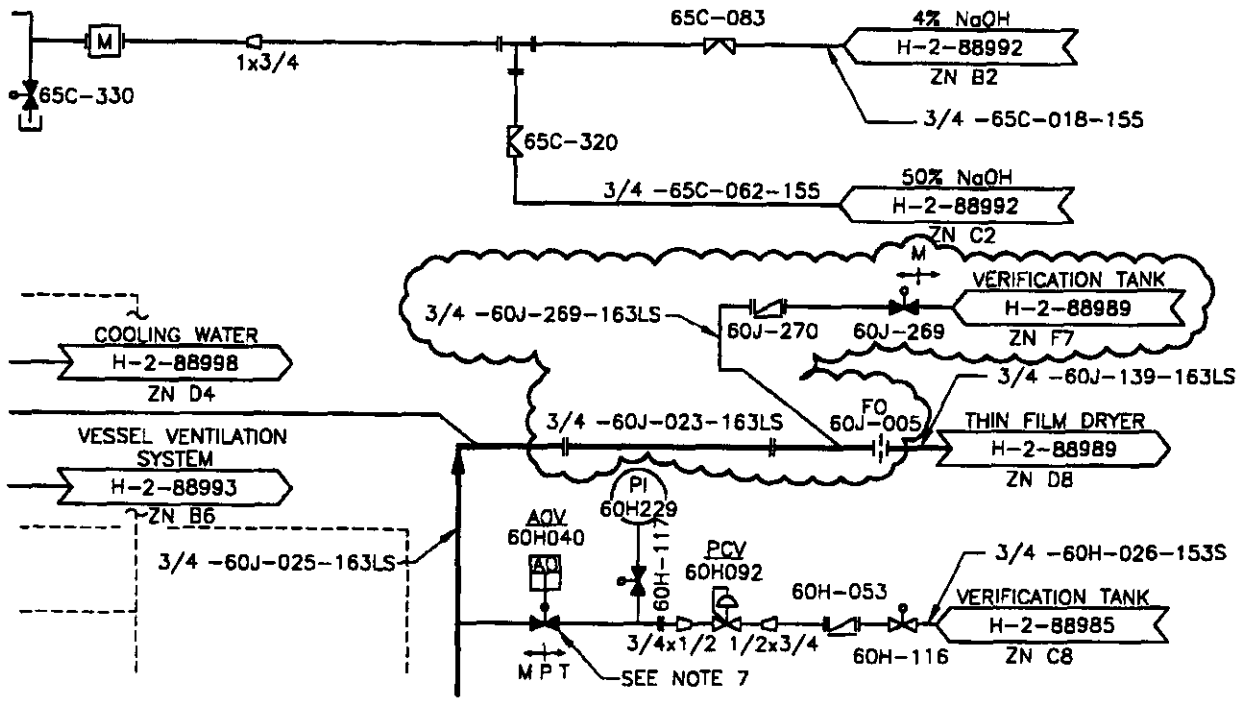

"WAS"

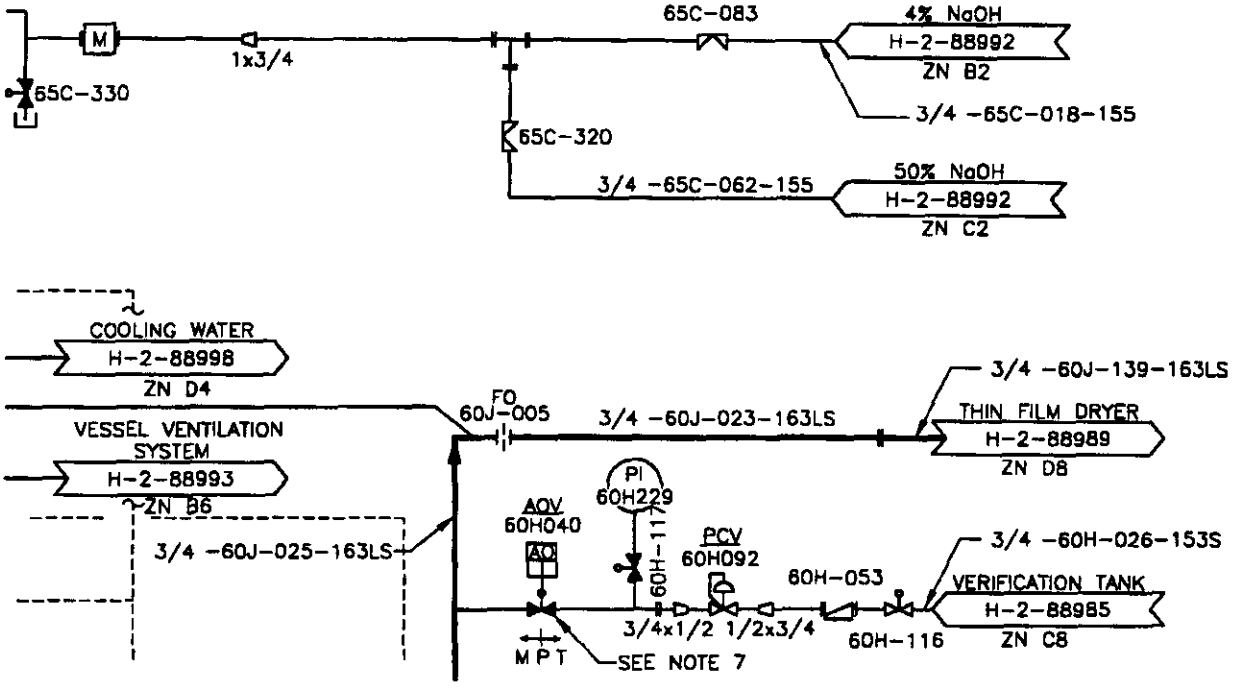

H-2-88989 SH 1 ZONE F7 REVISE AS SHOWN IN CLOUDED AREA

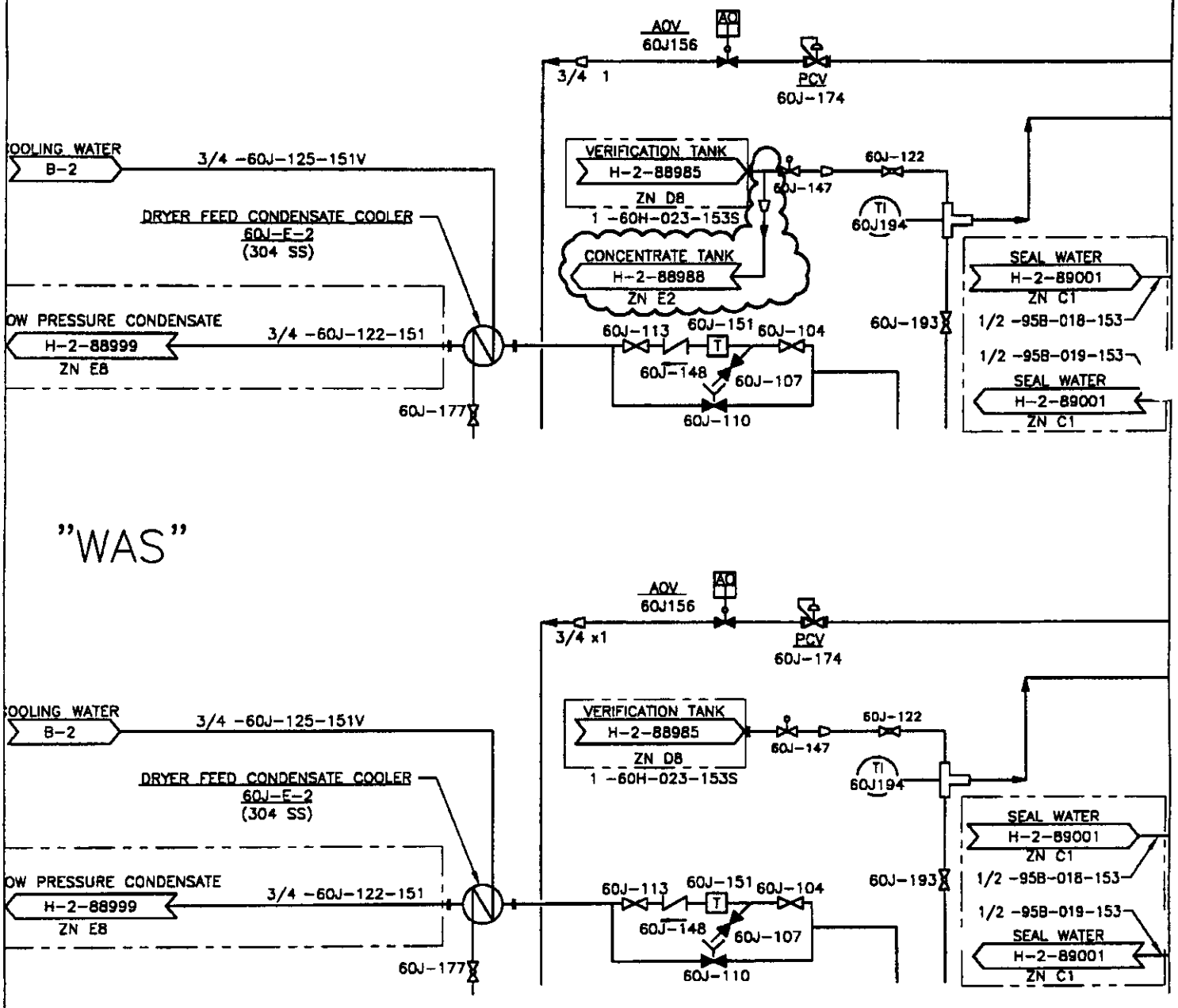

ENGINEERING CHANGE NOTICE CONTINUATION SHEET Page 5 of 8

1 ECN NO 662046

"IS"

H-2-89131 SH 1 ZONE E5 REVISE AS SHOWN INCLOUDED AREA

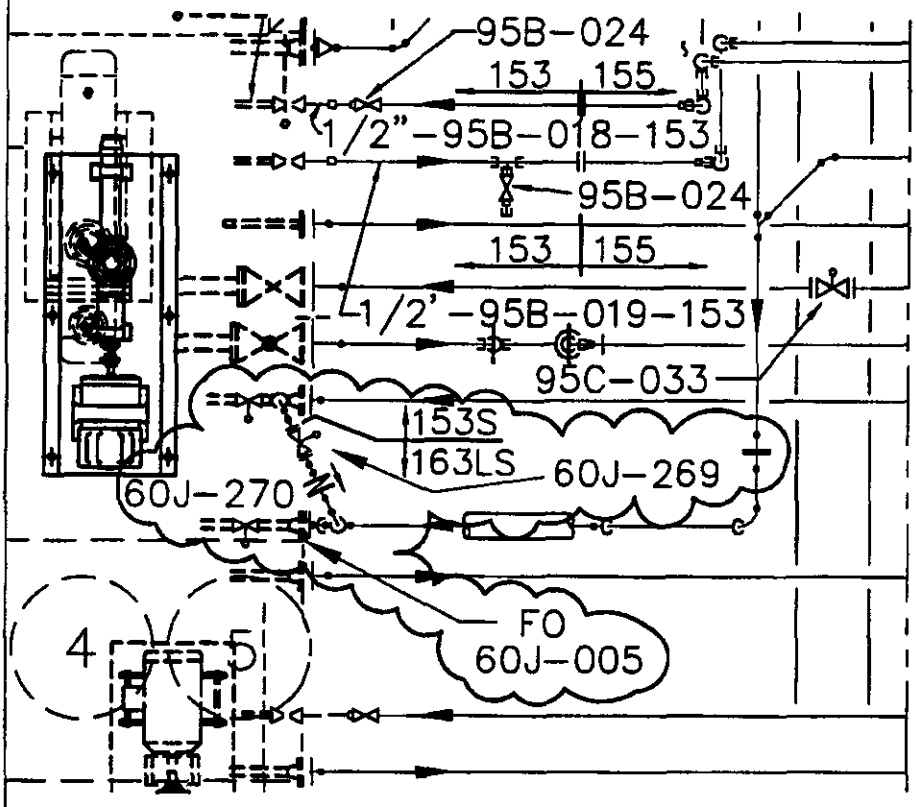

3/4 -95B-005-155
3/4"-95B-004-155
3/4'-60J-023-163LS
3/4 -60J-122-151
2"-95C-029-151
1"-60H-023-153S
3/4'-60J-023-163LS
1 -60J-106-301
1/2 -ID-035-153
1 -60J-145-153S

"WAS"

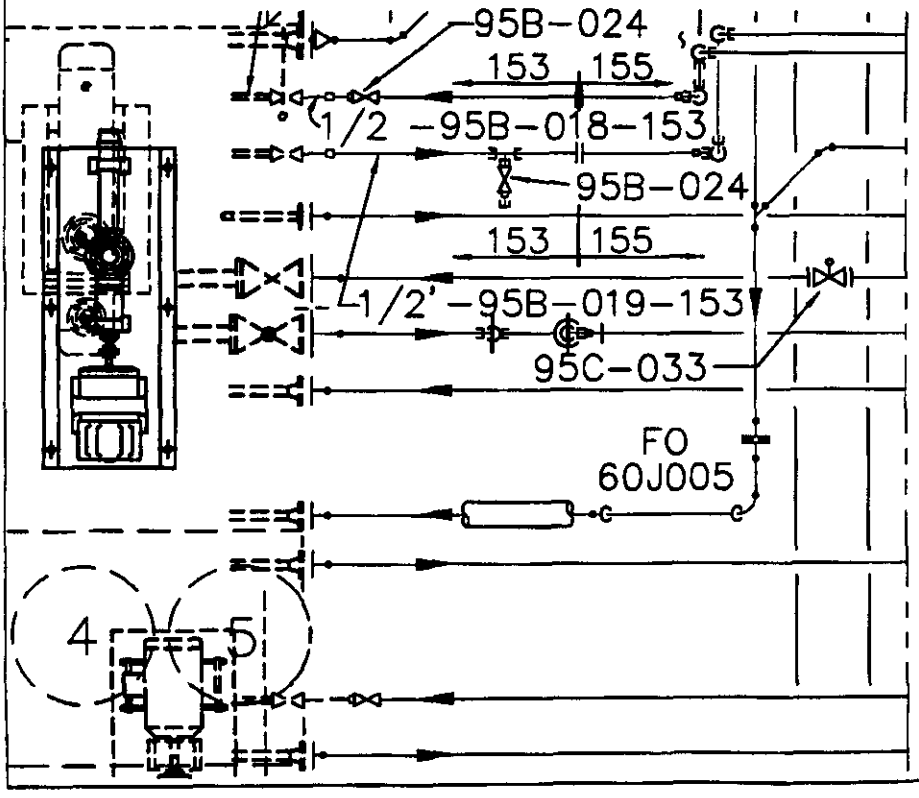

3/4 -95B-005-155
3/4 -95B-004-155
3/4'-60J-023-163LS
3/4"-60J-122-151
2 -95C-029-151
1"-60H-023-153S
3/4 -60J-023-163LS
1 -60J-106-301
1/2 -ID-035-153
1"-60J-145-153S

NOT FOR DRAWING INCORPORATION

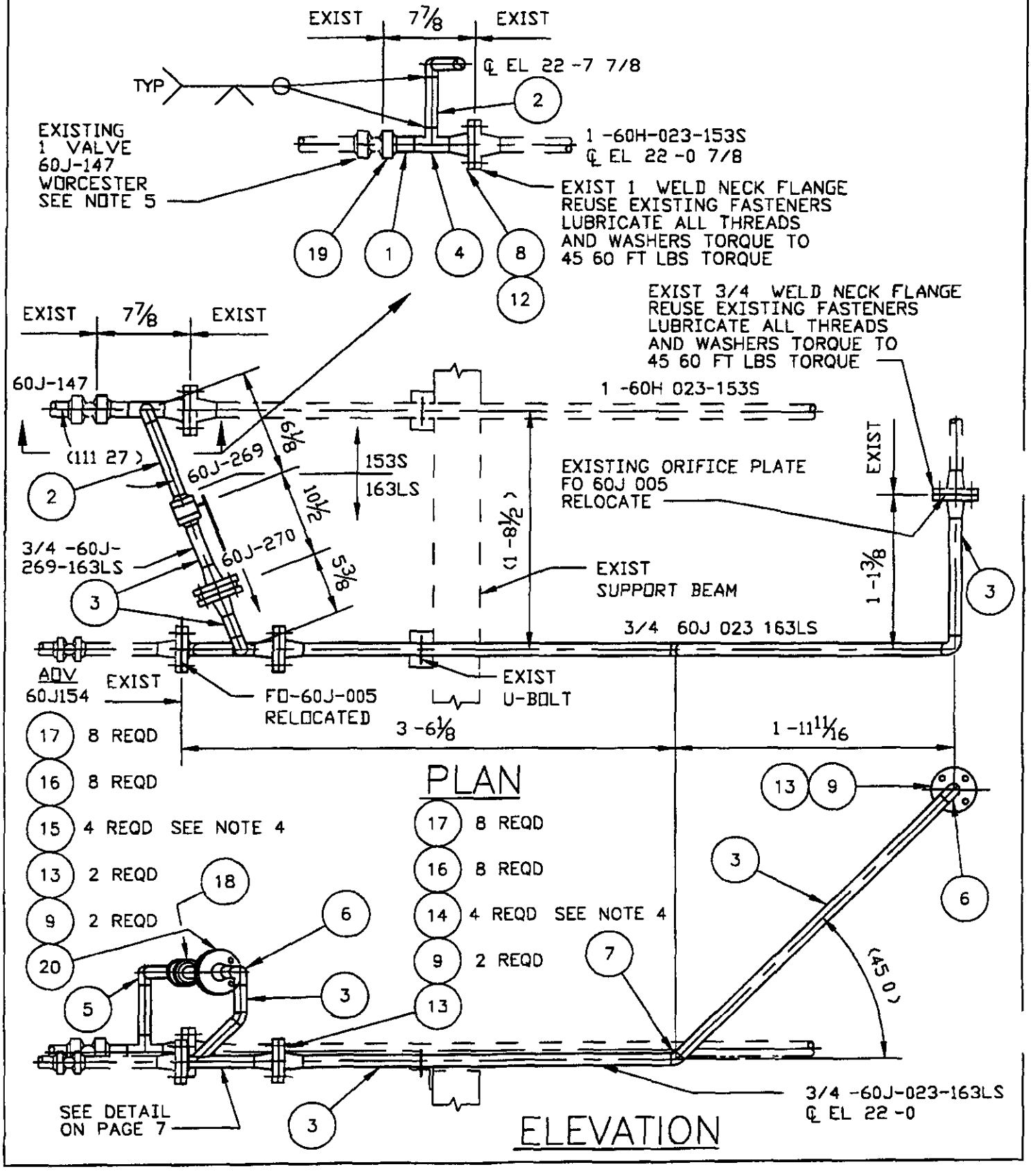

NOT FOR DRAWING INCORPORATION

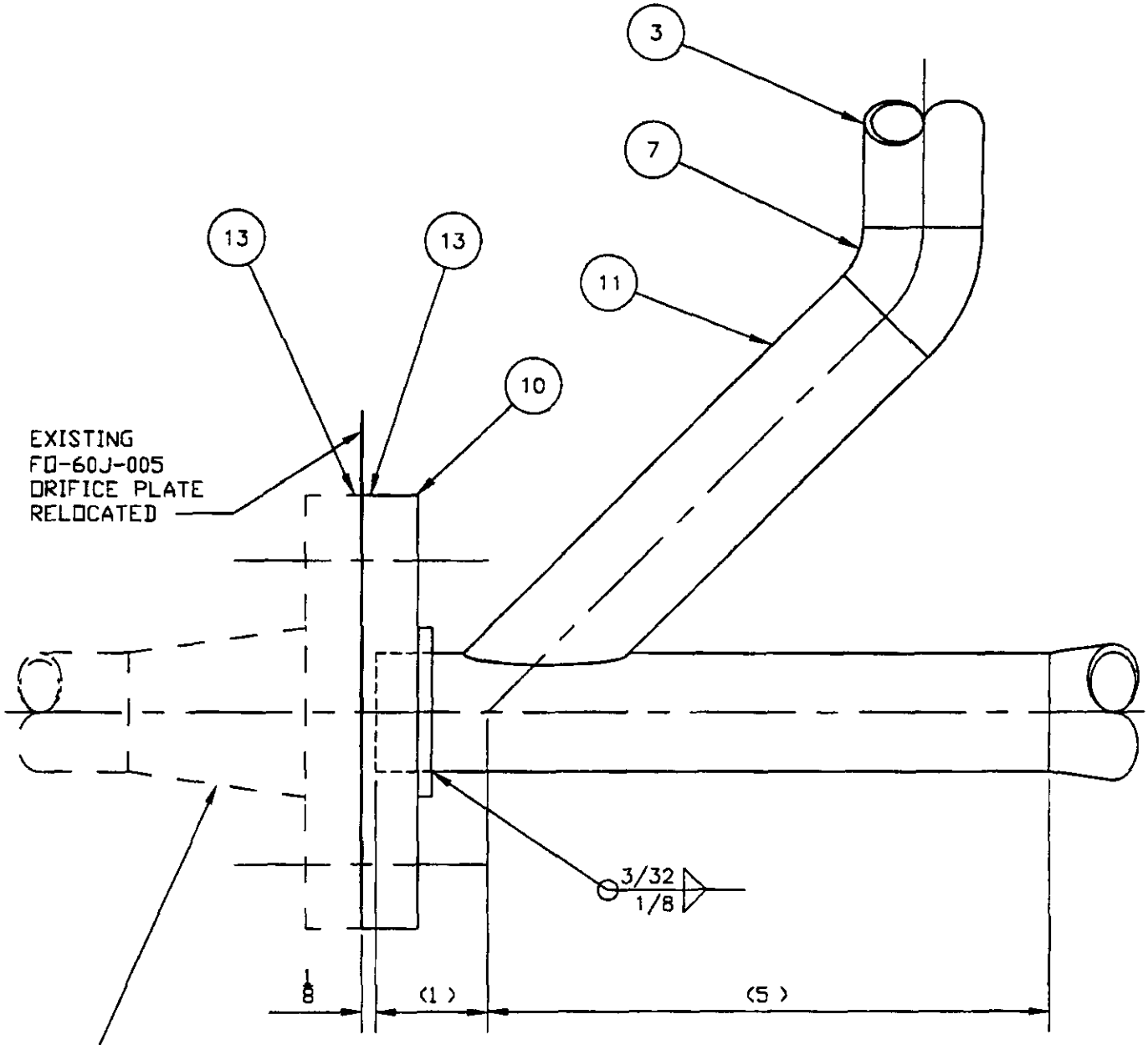

DETAIL

EXIST 3/4 WELD NECK FLANGE
REUSE EXISTING FASTENERS
LUBRICATE ALL THREADS
AND WASHERS TORQUE TO
45 60 FT-LBS TORQUE

NOT FOR DRAWING INCORPORATION

FABRICATION NOTES

1) PIPE AND MISCELLANEOUS FITTINGS PER SPECIFICATION S 136H 001 PIPE CODE 153S AND 163LS AND THIS ECN EXCEPT THAT FOR PIPE CODE 163LS SLIP ON FLANGE AND 45 DEGREE B W LATERAL MAY BE USED WHERE INDICATED
2) INSTALL INSPECT AND TEST NEW PIPING IN ACCORDANCE WITH ASME B31 3 AND ADDENDA FOR NORMAL FLUID SERVICE
3) FIELD VERIFY DIMENSIONS BEFORE FABRICATION
4) BOLT TORQUES 3/4 FLANGE - 45 60 FT LBS 1 FLANGE 45 60 FT LBS
LUBRICATE ALL THREADS AND WASHERS
5) DISASSEMBLE EXISTING 1 VALVE 60J 147 USE PARTS FROM PN 21 AS NEEDED FOR NEW SPOOL ASSEMBLY AND INSTALLATION

PARTS LIST

PN	QTY	DESCRIPTION	MATL/REF
1	AR	PIPE 1 SCHED 40S SEAMLESS	ASTM A312 GR TP 304 SST
2	AR	PIPE 3/4 SCHED 40S SEAMLESS	ASTM A312 GR TP 304 SST
3	AR	PIPE 3/4 SCHED 40S SEAMLESS	ASTM A312 GR TP 316L SST
4	1	TEE RED 1 x1 x3/4 SCHED 40S BTWLD	ASTM A403 WP 304 SST
5	1	ELBOW 90 3/4 SCHED 40S BTWLD	ASTM A403 WP 304 SST
6	2	ELBOW 90 3/4 SCHED 40S BTWLD	ASTM A403 WP 316L SST
7	2	ELBOW 45 3/4 SCHED 40S BTWLD	ASTM A403 WP 316L SST
8	1	FLANGE WELD NECK R F 1 CLASS 150	ASTM A182 F 304 SST
9	5	FLANGE WELD NECK R F 3/4 CLASS 150	ASTM A182 F 316L SST
10	1	FLANGE SLIP ON R F 3/4 CLASS 150	ASTM A182 F 316L SST
11	1	LATERAL 45 3/4 SCHED 40S TYPE 316L	ALASKAN COPPER & BRASS COMPANY
12	1	GASKET FLAT RING 1 CLASS 150 ANSI 16 5	TYPE 304 SS WITH FLEXICARB FILLER SPIRAL WOUND FLEXITALLIC STYLE CG OR EQUAL
13	6	GASKET FLAT RING 3/4 CLASS 150 ANSI 16 5	TYPE 316L SS WITH FLEXICARB FILLER SPIRAL WOUND FLEXITALLIC STYLE CG OR EQUAL
14	4	BOLT STUD THREADED FULL LENGTH 1/2 -13UNC-2A x 2 1/2 LONG ANSI B1 1	ASTM A193 GRADE B7 STEEL
15	4	BOLT STUD THREADED FULL LENGTH 1/2 -13UNC-2A x 2 3/4 LONG ANSI B1 1	ASTM A193 GRADE B7 STEEL
16	16	NUT HEAVY HEX 1/2 -13UNC-2B ANSI B18 2 2	ASTM A194 GR 2H
17	16	WASHER SPRING DISC NATIONAL BELLEVILLE 1/2	COML SST
18	1	VALVE BALL 3/4 STAINLESS STEEL SCH 40	WORCESTER #3/4-44-66UBW4
19	1	VALVE BALL 1 STAINLESS STEEL SCH 40	WORCESTER #1-44-66UBW4
20	1	VALVE CHECK STYLE FIV FLANGE INSERT VALVE	CHECK-ALL VALVE MFG CO #FIV-075-SS-B-1/2

S

ESSENTIAL

ENGINEERING CHANGE NOTICE

CPK 18

1 ECN 664330

Proj ECN

2 ECN Category (mark one)	3 Originator s Name Organization MSIN and Telephone No	4 USQ Required?	5 Date
Supplemental [X] Direct Revision [] Change ECN [] Temporary [] Standby [] Supersedure [] Cancel/Void []	H L Roach/3M500/S6 72/373 1985	[] Yes [X] No	09/05/2001
	6 Project Title/No /Work Order No Install Rinse Water Level Control on Thin Film Dryer/ CACN 101697 COA AJ60	7 Bldg /Sys /Fac No 2025E/60J	8 ApprovalDesignator T
	9 Document Numbers Changed by this ECN (includes sheet no and rev) H 2 88989 Sht 1 Rev ~~18~~ 19 RES 9/21/01	10 Related ECN No(s) N/A	11 Related PO No N/A

12a Modification Work	12b WorkPackage No	12c Modification WorkComplete	12d Restored to OriginalCondition(Temp or Standby ECN only)
[x] Yes (fill out Blk 12b) [] No (NA Blks 12b 12c 12d)	EL 01 00296/M	Design Authority/Cog Engineer Signature & Date	N/A Design Authority/Cog Engineer Signature & Date

13a Description of Change

13b Design Baseline Document? [x] Yes []No

Piping is to be in accordance with ETF Pipe Class Specification ADTECHS S-136H-001 pipe classes 153T and 163LS with the exceptions that Flexitallic type LS gaskets will be used under pipe class 163LS and 0 049 x ½ 316 SS tube will be used under pipe class 153T

Piping shall be fabricated and tested per ASME B31 3 for normal fluid service

See Continuation Sheet

14a Justification (mark one)

Criteria Change []	Design Improvement [X]	Environmental []	Facility Deactivation []
As Found []	Facilitate Const []	Const Error/Omission []	Design Error/Omission []

14b Justification Details

Installation of level control will allow the thin film dryer to be filled with rinse water without overflowing into spray condenser 60J-DE-01

15 Distribution (include name MSIN and no of copies)

MW Bowman	S6-72	1		CD Skogley	S6-71	1	
DA Vasquez	S6-74	1		KJ Lueck	S6-72	1	
ST Willett	S6-72	1	*H	RW Szelmeczka	S6-72	1	
JM Isdell	B4-39	1	H	CM Towne	S6-74	1	
PI Linn	S6-72	1		MJ Warn	S6-71	1	
BA Messinger	B4-39	1	H	RH Wight	S6-72	1	
HL Roach	S6-72	1	*H	WPP Planning	S6-71	1	H
DE Scully	S6-72	1					

(Advance Copy = H)

RELEASE STAMP

SEP 21 2001

DATE

HANFORD RELEASE

STA. 7

ID 25

A 7900 013 2 (05/96) GEF095

ENGINEERING CHANGE NOTICE CONTINUATION SHEET	Page 2 of 14	1 ECN (use no from pg 1) 664330

16 Design Verification Required	17 Cost Impact ENGINEERING		CONSTRUCTION		18 Schedule Impact (days)	
[x] Yes	Additional	[NA] $	Additional	[NA] $	Improvement	[NA]
[] No	Savings	[NA] $	Savings	[NA] $	Delay	[NA]

19 Change Impact Review Indicate the related documents(other than the engineering documents identified on Side 1)that will be affected by the change described in Block 13 Enter the affected document number in Block 20

SDD/DD	[NA]	Seismic/Stress Analysis	[NA]	Tank Calibration Manual	[NA]
Functional Design Criteria	[NA]	Stress/Design Report	[NA]	Health Physics Procedure	[NA]
Operating Specification	[NA]	Interface Control Drawing	[NA]	Spares Multiple Unit Listing	[NA]
Criticality Specification	[NA]	Calibration Procedure	[NA]	Test Procedures/Specification	[NA]
Conceptual Design Report	[NA]	Installation Procedure	[NA]	Component Index	[X]
Equipment Spec	[NA]	Maintenance Procedure	[NA]	ASME Coded Item	[NA]
Const Spec	[NA]	Engineering Procedure	[NA]	Human Factor Consideration	[NA]
Procurement Spec	[NA]	Operating Instruction	[NA]	Computer Software	[NA]
Vendor Information	[X]	Operating Procedure	[X]	Electric Circuit Schedule	[NA]
OM Manual	[NA]	Operational Safety Requirement	[NA]	ICRS Procedure	[NA]
FSAR/SAR	[NA]	IEFD Drawing	[NA]	Process Control Manual/Plan	[NA]
Safety Equipment List	[NA]	Cell Arrangement Drawing	[NA]	Process Flow Chart	[NA]
Radiation Work Permit	[NA]	Essential Materia Specification	[NA]	Purchase Requisition	[NA]
Environmental Impact Statement	[NA]	Fac Proc Samp Schedule	[NA]	Tickler File	[NA]
Environmental Report	[NA]	Inspection Plan	[NA]		[NA]
Environmental Permit	[NA]	Inventory Adjustment Request	[NA]		[NA]

20 Other Affected Documents (NOTE Documents listed below will not be revised by this ECN) Signatures below indicate that the signing organization has been notified of other affected documents listed below

Document Number/Revision	Document Number/Revision	Document Number Revision
POP-60J-001 Rev S-1		

21 Approvals

	Signature	Date		Signature	Date
Design Authority (Independent Design Review)	ST Willett	9/18/01	Design Agent	HL Roach	9/10/01
Cog Eng			PE		
Cog Mgr	KJ Lueck	9/20/01	QA		
QA			Safety		
Safety			Design		
Environ			Environ		
Other DE Scully	DE Scully	9/20/01	Other		
Rad Con					
Operations					

DEPARTMENT OF ENERGY

Signature or a Control Number that tracks the Approval Signature

ADDITIONAL

Drawing Changes are as follows

H-2-88989, SH 1, Zone D6

Remove ¾ X2 eccentric reducer

Install new ball valve 60J-155 downstream of FT60J034 on pipeline ¾ -60J-140-163LSV Show valve as open

Connect new pipeline ¾ -60J-270-163LS to existing pipeline ¾ -60J-140-163LSV downstream of ball valve 60J-155

Add additional set of flanges on pipeline ¾ -60J-140-163LSV between pipeline ¾ -60J-270-163LS branch and flange connection on dryer

H-2-88989, SH 1, Zone D6

Install new ball valve 60J-162 on pipeline ¾ -60J-270-163LS Show valve as closed

Show continuation of pipeline ¾ -60J-270-163LS to zone B4 of drawing

H-2-88989, SH 1, Zone D5

Connect new pipeline ½ -60J-271-153T to existing flange connection on pipeline 8 -60J-141-163LSV Label new pipeline ½ -60J-271-153T Show continuation of this new pipeline from drawing zone B3

Show material break at flange

H-2-88989, SH 1, Zone B4/B5

Show pipeline segment that is continued from drawing zones E6 and D5

Install new liquid level switch and liquid level indicator on pipeline segment Label liquid level switch as LSH-60J164 and liquid level indicator as LI-60J164 Show a ¾ x2 reducer upstream and downstream of the liquid level switch

Install new ball valve 60J-163 on pipeline downstream of LSH-60J164 Show valve as closed

Show ½"x3/4 reducer downstream of valve 60J-123 Show material break just downstream of reducer

ECN Construction Notes Only
Do Not Incorporate Onto Drawings

1 When installing level switch make sure the level switch is orientated so that the liquid will flow between the two blades on the switch as the liquid level rises in 2 pipe section

2 ETF Class 163LS flange connections

a) Gasket shall be flat ring Type 316L SST with flexicarb filler spiral wound flexitallic Style LS or Equal for 150 LB ANSI B16 5 raised face flanges

b) Lubricate all threads and washers

c) Flange bolt torque shall be in the range shown in the following table

FLANGE SIZE	TORQUE REQUIRED
¾	25-27 ft-lb
1	25-27 ft-lb
1-1/2	25-27 ft-lb
2	50-52 ft-lb

ECN No	Page
664330	4 OF 14

Ref Dwg	Sh	Rev
H-2-88989	1	19 ~~18~~ DEZ 9/21/01

Zone
AS SHOWN

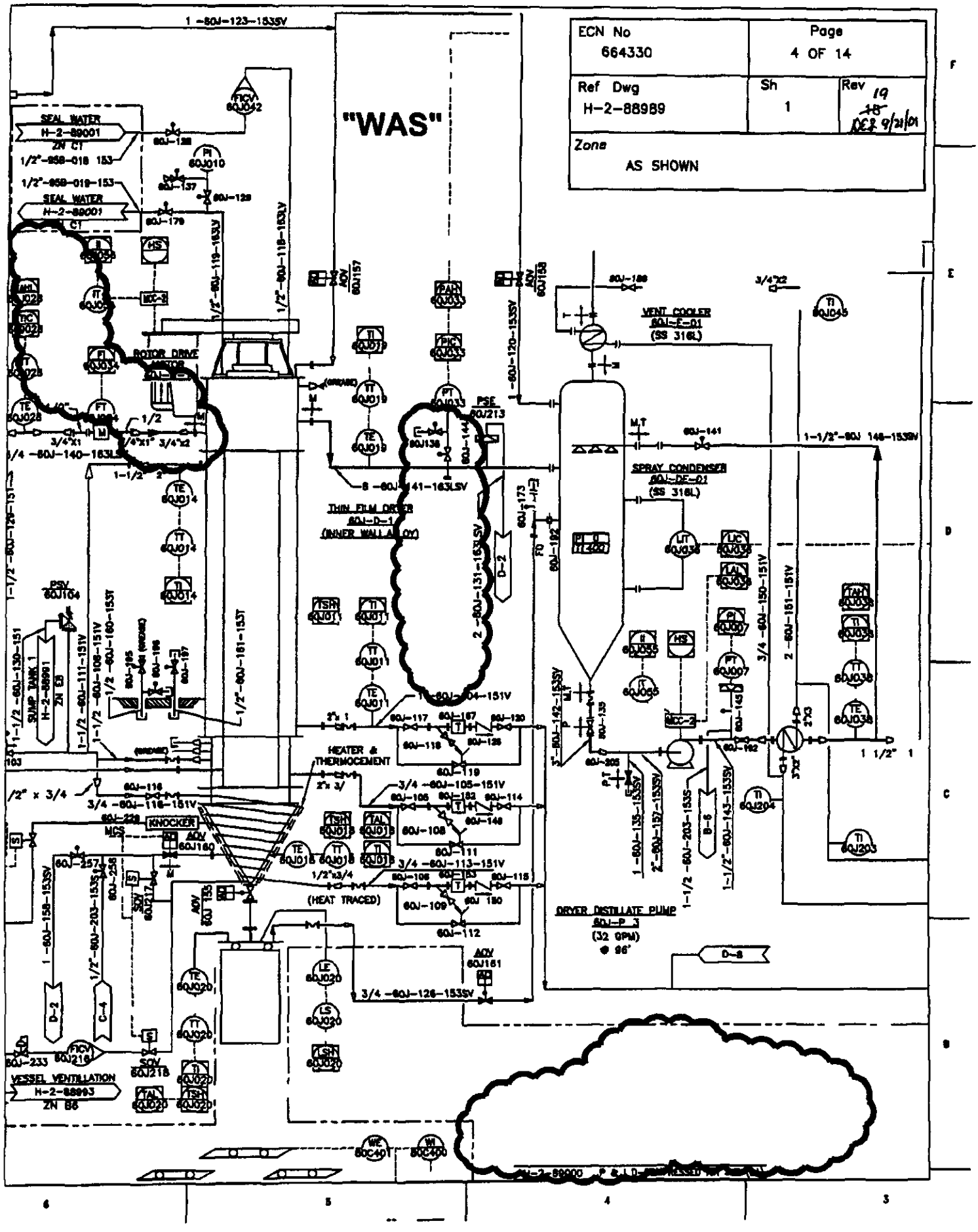

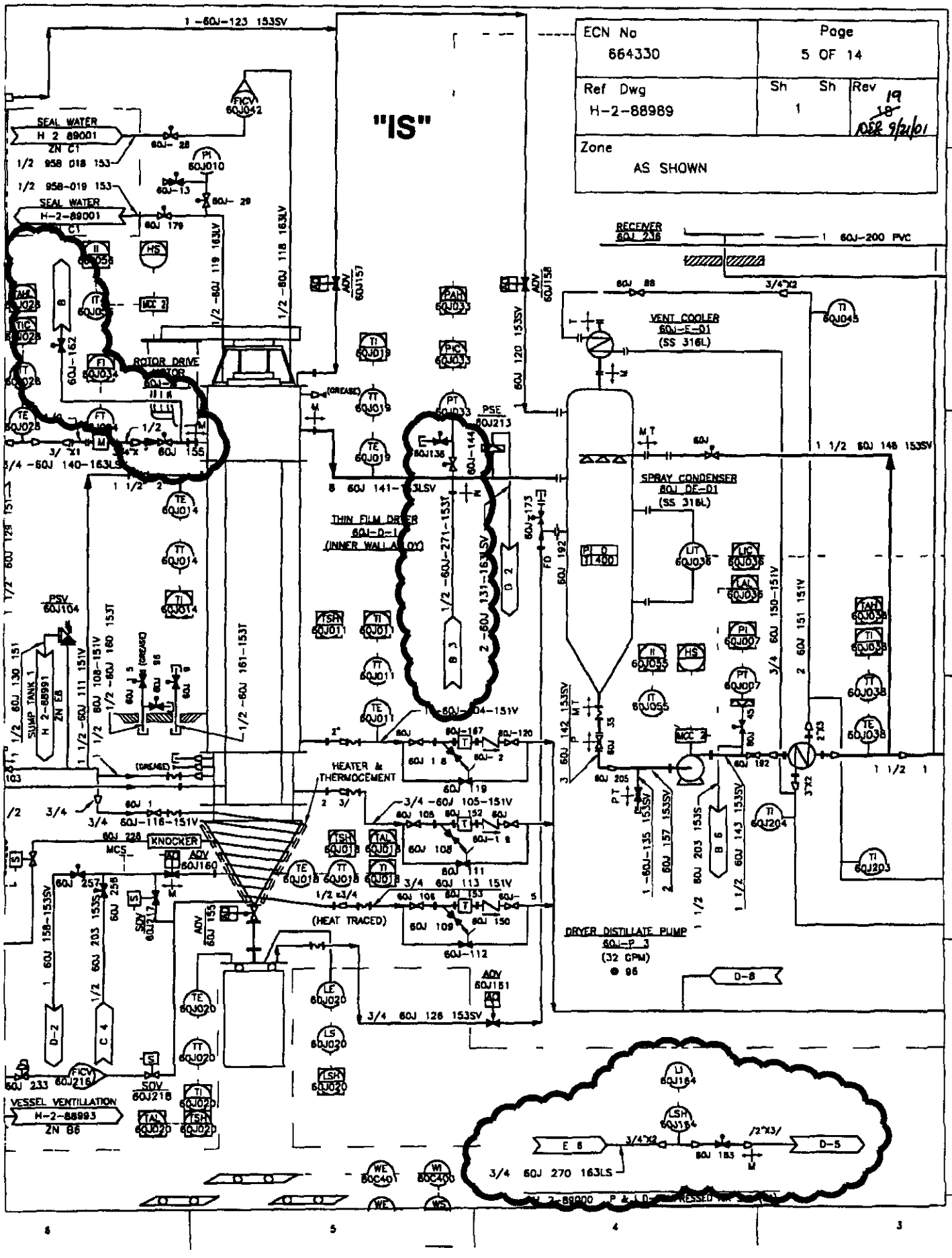
ECN No
664330
Page
5 OF 14
Ref Dwg
H-2-88989
Sh
1
Sh
Rev
19
Zone
AS SHOWN
"IS"
SEAL WATER
H 2 89001
ZN C1
SEAL WATER
H-2-89001
ROTOR DRIVE MOTOR
THIN FILM DRYER
60J-D-1
(INNER WALL ALLOY)
HEATER & THERMOCEMENT
(HEAT TRACED)
KNOCKER
VESSEL VENTILATION
H-2-88993
ZN B6
SUMP TANK 1
H 2-88991
ZN E8
RECEIVER
60J 236
VENT COOLER
60J-E-01
(SS 316L)
SPRAY CONDENSER
60J DE-01
(SS 316L)
DRYER DISTILLATE PUMP
60J-P 3
(32 GPM)
D-8
D-5
D-2
C 4
B 3
B 6
E 6
3/4 60J 270 163LS

ENGINEERING CHANGE NOTICE CONTINUATION SHEET	DOCUMENT NO N/A	DATE 9/04/01	ECN 664330

ASSEMBLY SKETCH
NOT FOR DRAWING INCORPORATION

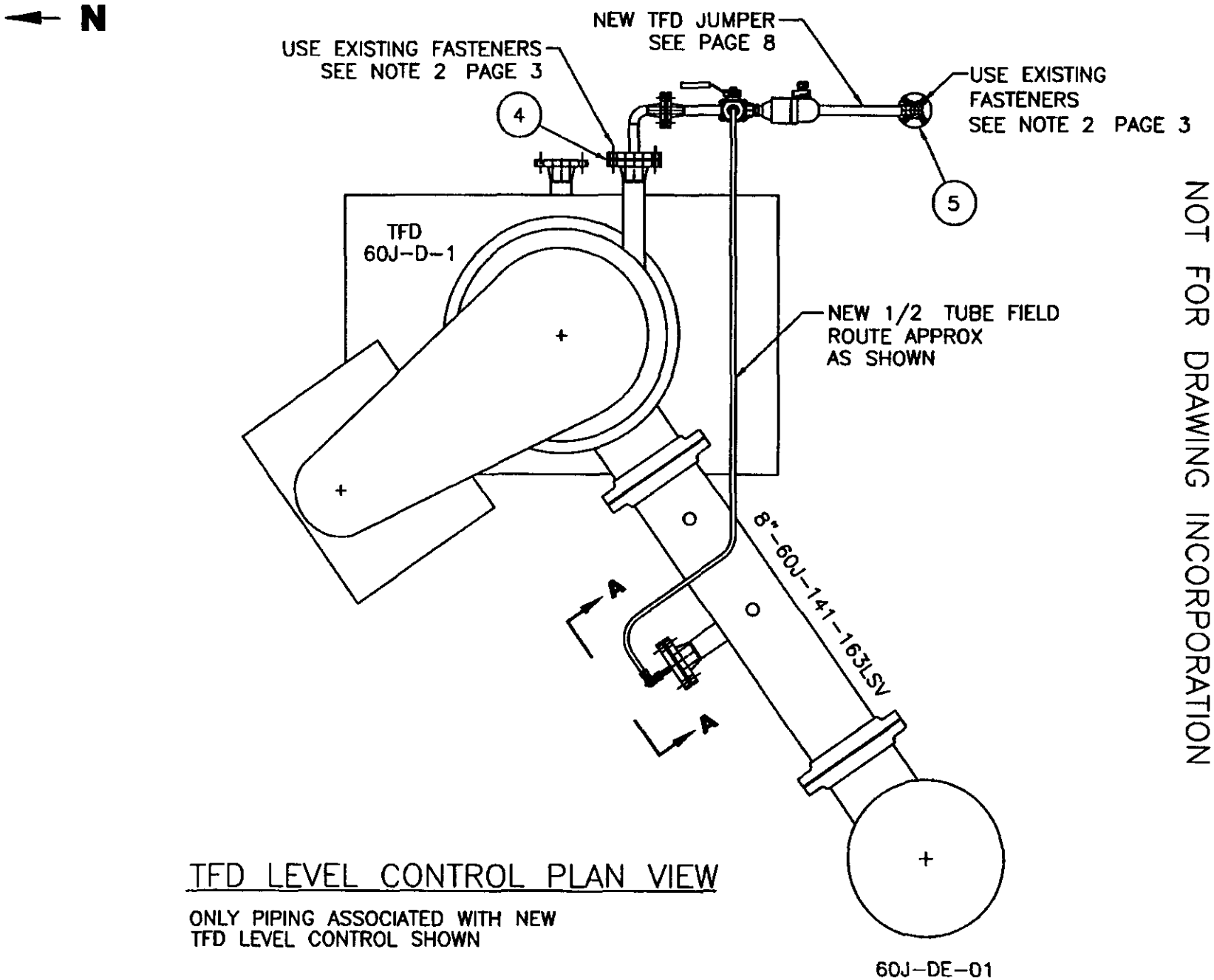

TFD LEVEL CONTROL PLAN VIEW

ONLY PIPING ASSOCIATED WITH NEW
TFD LEVEL CONTROL SHOWN

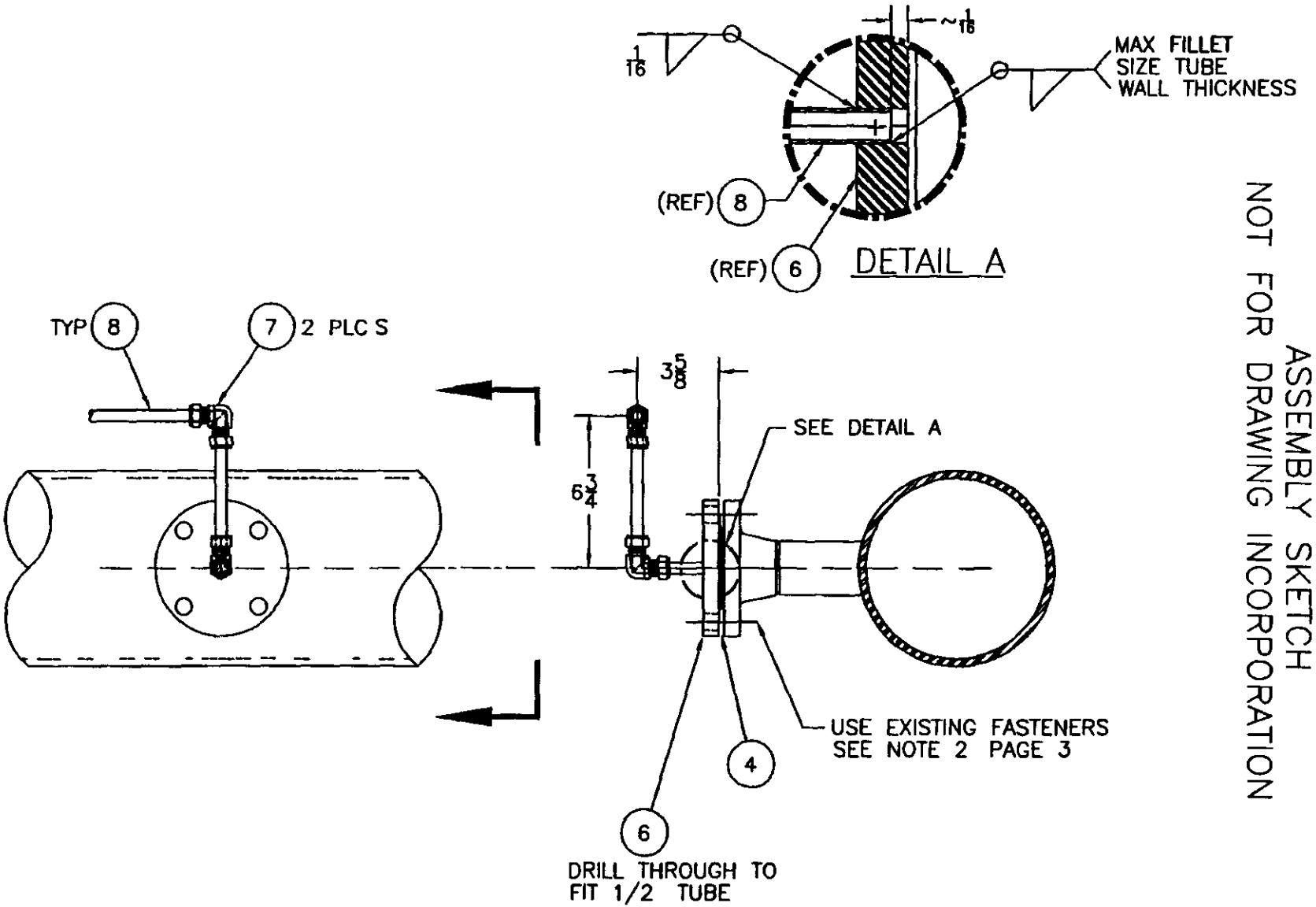

TFD LEVEL CONTROL VIEW A–A

DIMENSIONS SHOWN ARE APPROXIMATE
FIELD VERIFY AND ADJUST AS NECESSARY

ASSEMBLY SKETCH
NOT FOR DRAWING INCORPORATION

ENGINEERING CHANGE NOTICE CONTINUATION SHEET	DOCUMENT NO	DATE	ECN
	N/A	9/04/01	664330

ENGINEERING CHANGE NOTICE CONTINUATION SHEET	DOCUMENT NO N/A	DATE 9/04/01	ECN 664330

ASSEMBLY SKETCH
NOT FOR DRAWING INCORPORATION

DIMENSIONS SHOWN ARE APPROXIMATE
FIELD VERIFY AND ADJUST AS NECESSARY

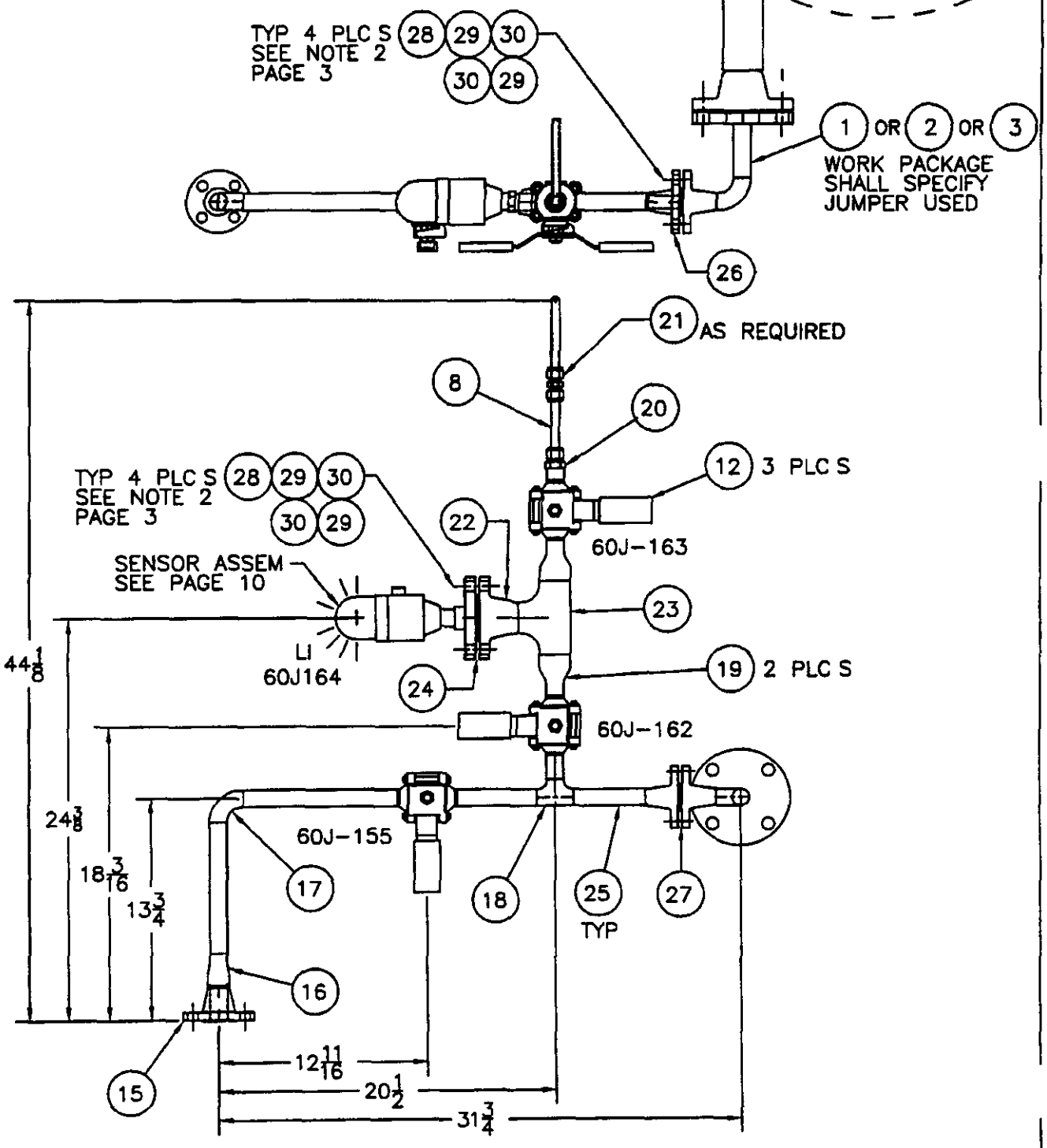

TFD LEVEL CONTROL JUMPER

ENGINEERING CHANGE NOTICE CONTINUATION SHEET	DOCUMENT NO N/A	DATE 9/19/01	ECN 664330

ASSEMBLY SKETCH
NOT FOR DRAWING INCORPORATION

DIMENSIONS SHOWN ARE APPROXIMATE
FIELD VERIFY AND ADJUST AS NECESSARY

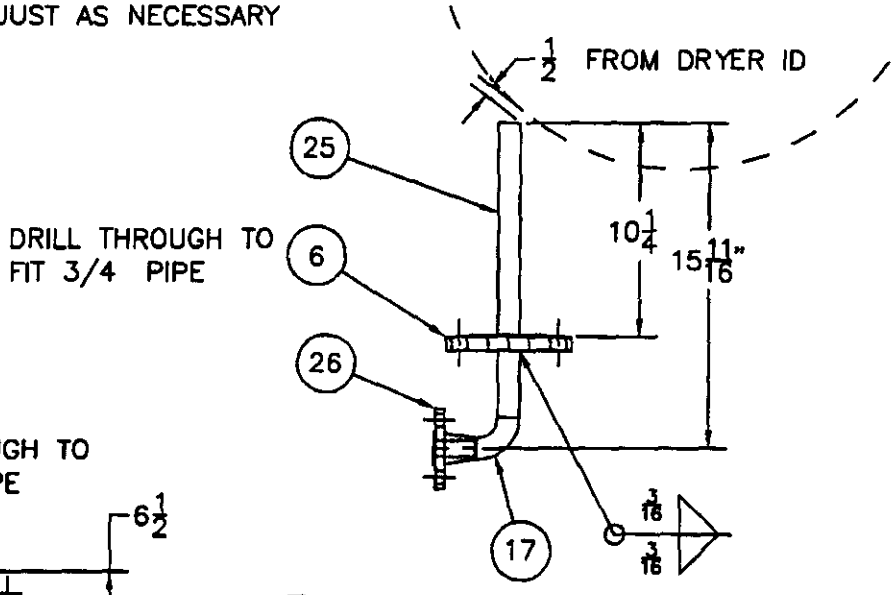

1 3/4 NOZZLE ASSEMBLY

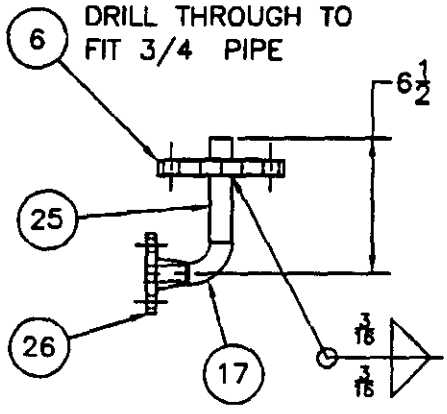

3 2 NOZZLE ASSEMBLY

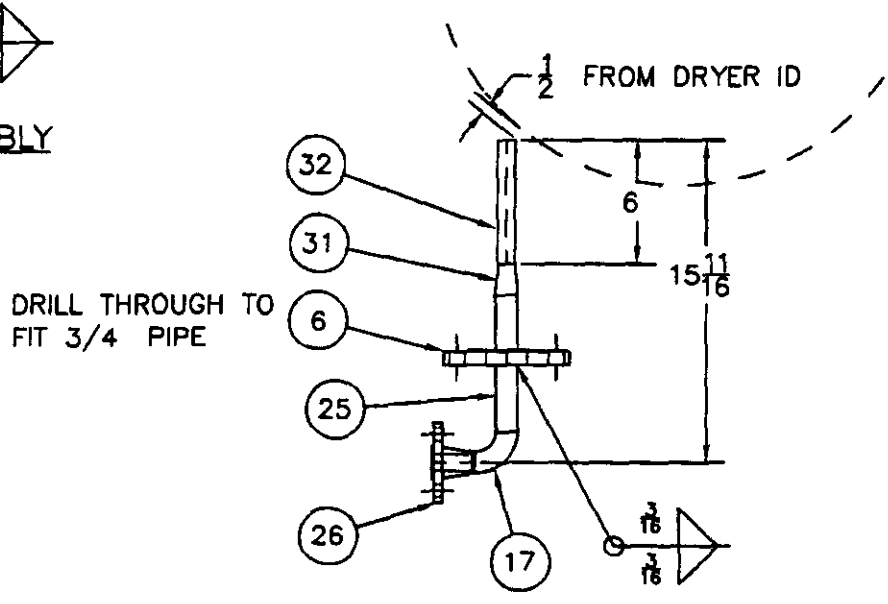

2 1/2 NOZZLE ASSEMBLY

NOTES

1 METAL STAMP JUMPERS WITH 664330-X WHERE X IS ITEM NUMBER (1 2 OR 3)

ENGINEERING CHANGE NOTICE CONTINUATION SHEET	DOCUMENT NO N/A	DATE 9/19/01	ECN 664330

ASSEMBLY SKETCH
NOT FOR DRAWING INCORPORATION

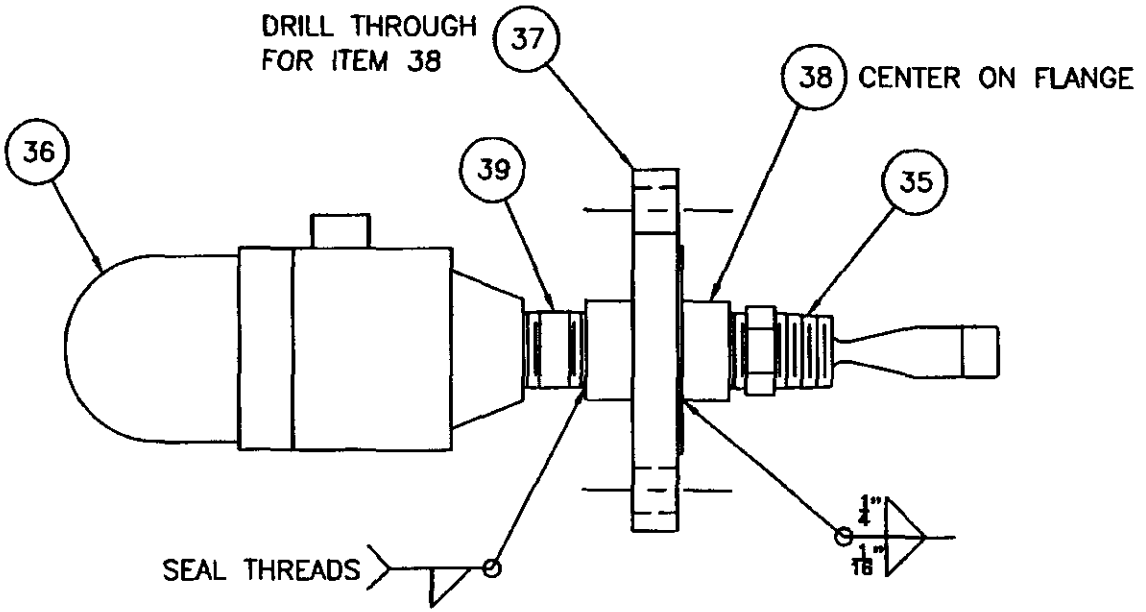

SENSOR ASSEMBLY

DIMENSIONS SHOWN ARE APPROXIMATE
FIELD VERIFY AND ADJUST AS NECESSARY

ITEM	QUANTITY	Description	Notes
		TFD LEVEL CONTROL PLAN VIEW (PAGE 6)	
4	2	2" Flat Ring Gasket, Flexitallic Style LS (or equal), Type 316L SS/Flexicarb, ASME B16.5, 150#	
5	1	1" Flat Ring Gasket, Flexitallic Style LS (or equal), Type 316L SS/Flexicarb, ASME B16.5, 150#	
		TFD LEVEL CONTROL VIEW A-A (PAGE 7)	
		(Some Parts Identified in This View are Listed Under Other Views or Details)	
6	4	2" Blind Flange, 316L SST, 150 LB. Raised Face, ANSI B16.5	
7	2	½" Tube Union Elbow, 316 SST, Swagelok # SS-810-9	
8	~8 ft	½" x 0.049" 316 SS Seamless Tube, ASTM A269	
		TFD LEVEL CONTROL JUMPER (PAGE 8)	
		(Some Parts Identified in This View are Listed Under Other Views or Details)	
12	3	3/4" Ball Valve, 3-Piece Ball Valve, Standard Port, Body and End Pieces 316L SS, Ball and Stem 316 SS, Virgin PTFE Seats/Seals, SCH 40 Butt Weld Ends (BWE), Direct (ISO 5211 Type) Center Section, MCF Part Number **3/4"-SRS-66-TFT-BWE-I**	Vendor Contact: MCF Valves Houston, Texas 77018 Tel: (713) 869-3100 Fax: (713) 869-5511 Email: sales@mcfvalves.com
15	1	1" Welding Neck Flange, SCH 40, Raised Face, 150 #, ASME B16.5, ASTM A182-F316L	
16	1	1" x ¾" Concentric Reducer, Seamless Butt weld Ends, SCH 40, ASTM A403, 316L SS	
17	4	¾" 90° Elbow, Seamless Butt Weld Ends, SCH40, 316L SS	
18	1	¾" TEE, Seamless Butt Weld Ends, SCH 40, 316L SS	
19	2	1-1/2" x ¾" Concentric Reducer, Seamless Butt weld Ends, SCH 40, ASTM A403, 316L SS	
20	1	Male Pipe Weld Connector, ¾" Pipe Size, ½" Tube Size, 316 SS, Swagelok # SS-810-1-12W	
21	AR	½" Tube Union, 316 SS, Swagelok # SS-810-6	
22	1	1-1/2" Welding Neck Flange, SCH 40, Raised Face, 150 #, ASME B16.5, ASTM A182-F316L	
23	1	1-1/2" TEE, Seamless Butt Weld Ends, SCH 40, 316L SS	

24	~4"	1-1/2" Flat Ring Gasket, Flexitallic Style LS (or equal), Type 316L SS/Flexicarb, ASME B16.5, 150#	
25	~49"	¾" SCH 40 Pipe, A312 TP316L	
26	4	¾"" Welding Neck Flange, SCH 40, Raised Face, 150 #, ASME B16.5, ASTM A182-F316L	
27	1	3/4" Flat Ring Gasket, Flexitallic Style LS (or equal), Type 316L SS/Flexicarb, ASME B16.5, 150#	
28	AR	Continuous Threaded Stud, ½-13UNC, ASTM A193, GR. B7 Steel, ANSI B1.1	
29	AR	Hexagon Semifinished "Heavy Series" Nut, ½-13UNC, ASTM A194, GR. 2H, ANSI B18.2.2	
30	AR	National Belleville Disc Spring, ½"	
NOZZLE ASSEMBLIES ITEMS 1, 2 AND 3 (PAGE 9)			
		(Some Parts Identified in This View are Listed Under Other Views or Details)	
31	1	3/4" x 1/2" Concentric Reducer, Seamless Butt weld Ends, SCH 40, ASTM A403, 316L SS	
32	6"	1/2" SCH 40 Pipe, A312 TP316L	

SENSOR ASSEMBLY (PAGE 10)			
		(Some Parts Identified in This View are Listed Under Other Views or Details)	
35	1	Tuning Fork Liquid Level Switch, Temp Range -40° F to 194° F, ¾"NPT, PP/Ryton construction, RyanHerco Stock # 6907-250, (Flowline LZ10-1402)	Vendor Contact: RyanHerco Kent, Washington (253) 395-1141 PH (253) 395-0995 FAX
36	1	Compact Relay Controller with Strobe Light Alert, For use with Item 13 (above), ¾" NPT thread for sensor, NEMA 4X Enclosure, RyanHerco Stock # 6908-013, (Flowline LC10-1002)	(Same as above)
37	1	1-1/2" Blind Flange, 316L SS, 150 LB. Raised Face, ANSI B16.5	
38	1	¾" NPT threaded full coupling, 316L SS, 3000 LB	
39	1	¾" NPT threaded Nipple, 2" long, 316L SS	

Trademarks:

Flexicarb - Flexitallic Limited Corporation
Flexitallic - "Flexitallic" Gasket Company Corporation
Swagelok - Crawford Fitting Company

ATTACHMENT B AUTHORIZATION BASES REVIEW FORM

Part A

ECN 664330
Page 14 of 14

REFERENCE ITEM Proposed Change / Discovery
(circle one)

APPROVAL DESIGNATOR TQSR

TITLE Install Rinse Water Level Control on Thin Film Dryer Sytem 60J

DESCRIPTION A liquid level switch will be installed on the Thin Film Dryer (TFD) to indicate liquid level when filling the TFD with rinse water

9/10/01
Originator Signature Date

Part B

Does the referenced item		(check one)
A	Increase risk from a hazard to the workers &/or public beyond that previously analyzed evaluated and documented in the Authorization Bases?	NO x Yes/Maybe
B	Reduce the reliability or effectiveness of features controls procedures or processes used to mitigate hazards?	NO x Yes/Maybe
C	Introduce a hazard not evaluated in the Authorization Bases?	NO x Yes/Maybe
D	Reflect new information on existing hazards beyond that currently documented in the Authorization Bases?	NO x Yes/Maybe

DETERMINATION BASES Record complete justification and reference information below Use Attachment 3 for continuations Maintain with submittal package

Implementation of these changes falls within the existing authorization basis identified within the ASA (HNF SD-ETF ASA-001) and the Hazard Categorization for the Effluent Treatment Facility (WHC SD-C018 HC 002)

PABI Item Remains Open	No Impact ABR Closed
☐	☒
☐	☐

9/20/01
Authorization Bases Evaluator Date

Date

S

ESSENTIAL

ENGINEERING CHANGE NOTICE

CPL 18

Page 1 of 15

1 ECN 664331

Proj ECN

2 ECN Category (mark one)	3 Originator s Name Organization MSIN and OTelephone No	4 USQ Required?	5 Date
Supplemental [X] Direct Revision [] Change ECN [] Temporary [] Standby [] Supersedure [] Cancel/Void []	H L Roach/3M500/S6 72/373 1985	[] Yes [X] No	09/20/2001
	6 Project Title/No /Work Order No Install New Spool Piece on Thin Film Dryer Feed Line/ CACN 101697 COA AJ60	7 Bldg /Sys /Fac No 2025E/60J	8 ApprovalDesignator T
	9 Document Numbers Changed by this ECN (includes sheet no and rev) See Block 13a	10 Related ECN No(s) 656781L	11 Related PO No N/A

12a Modification Work	12b WorkPackage No	12c Modification WorkComplete	12d Restored to OriginalCondition(Temp or Standby ECN only)
[x] Yes (fill out Blk 12b) [] No (NA Blks 12b 12c 12d)	EL 00 00712/M	Design Authority/Cog Engineer Signature & Date	N/A Design Authority/Cog Engineer Signature & Date

13a Description of Change

13b Design Baseline Document? [x] Yes []No

Documents Changed by this ECN

H-2-88989 Sht 1 Rev ~~18~~ 19 HH 9/27/01
H-2-88999 Sht 1 Rev ~~13~~ 14
H-2-89302 Sht 155 Rev 3
H-2-89302 Sht 165 Rev 2
H-2-89302 Sht 172 Rev 2

Description

Piping is to be in accordance with ETF Pipe Class Specification ADTECHS S-136H-001 pipe classes 163LS and 151 with the exceptions that Flexitallic type LS gaskets will be used

See Continuation Sheet

14a Justification (mark one)

Criteria Change []	Design Improvement [X]	Environmental []	Facility Deactivation []
As Found []	Facilitate Const []	Const Error/Omission []	Design Error/Omission []

14b Justification Details

This ECN will replace a temporary spool piece with a spool piece that is compliant with pipe class 163LS The spool piece replaces steam heated pre-heater 60J-E-3 The pipelines and associated components that supplied steam to this pre-heater will be removed The dryer feed pre-heater is no longer required

15 Distribution (include name MSIN and no of copies)

MW Bowman	S6-72	1		CD Skogley	S6-71	1	
DA Vasquez	S6-74	1		KJ Lueck	S6-72	1	
ST Willett	S6-72	1	*H	RW Szelmeczka	S6-72	1	
JM Isdell	B4-39	1	*H	CM Towne	S6-74	1	
PI Linn	S6-72	1		MJ Warn	S6-71	1	
BA Messinger	B4-39	1	H	RH Wight	S6-72	1	
HL Roach	S6-72	1	H	MC Teats	S6-72	1	H
DE Scully	S6-72	1		WPP Planning	S6-71	1	H

(Advance Copy = *H)

RELEASE STAMP

SEP 27 2001
DATE:
HANFORD RELEASE
STA. 3,U
ID: (27) 4

A 7900 013 2 (05/96) GEF095

ENGINEERING CHANGE NOTICE CONTINUATION SHEET	Page 2 of 15	1 ECN (use no from pg 1) 664331

16 Design Verification Required	17 Cost Impact ENGINEERING		CONSTRUCTION		18 Schedule Impact (days)	
[x] Yes	Additional	[NA] $	Additional	[NA] $	Improvement	[NA]
[] No	Savings	[NA] $	Savings	[NA] $	Delay	[NA]

19 Change Impact Review Indicate the related documents(other than the engineering documents identified on Side 1)that will be affected by the change described in Block 13 Enter the affected document number in Block 20

SDD/DD	[NA]	Seismic/Stress Analysis	[NA]	Tank Calibration Manual	[NA]
Functional Design Criteria	[NA]	Stress/Design Report	[NA]	Health Physics Procedure	[NA]
Operating Specification	[NA]	Interface Control Drawing	[NA]	Spares Multiple Unit Listing	[NA]
Criticality Specification	[NA]	Calibration Procedure	[NA]	Test Procedures/Specification	[NA]
Conceptual Design Report	[NA]	Installation Procedure	[NA]	Component Index	[X]
Equipment Spec	[NA]	Maintenance Procedure	[NA]	ASME Coded Item	[NA]
Const Spec	[NA]	Engineering Procedure	[NA]	Human Factor Consideration	[NA]
Procurement Spec	[NA]	Operating Instruction	[NA]	Computer Software	[NA]
Vendor Information	[NA]	Operating Procedure	[X]	Electric Circuit Schedule	[NA]
OM Manual	[NA]	Operational Safety Requirement	[NA]	ICRS Procedure	[NA]
FSAR/SAR	[NA]	IEFD Drawing	[NA]	Process Control Manual/Plan	[NA]
Safety Equipment List	[NA]	Cell Arrangement Drawing	[NA]	Process Flow Chart	[NA]
Radiation Work Permit	[NA]	Essential Materia Specification	[NA]	Purchase Requisition	[NA]
Environmental Impact Statement	[NA]	Fac Proc Samp Schedule	[NA]	Tickler File	[NA]
Environmental Report	[NA]	Inspection Plan	[NA]		[NA]
Environmental Permit	[NA]	Inventory Adjustment Request	[NA]		[NA]

20 Other Affected Documents (NOTE Documents listed below will not be revised by this ECN) Signatures below indicate that the signing organization has been notified of other affected documents listed below

Document Number/Revision	Document Number/Revision	Document Number Revision
POP-60J 001 Rev S-1		
HNF SD-CTF-OCD-001, REV 6		

21 Approvals

	Signature	Date		Signature	Date
Design Authority	ST Willett	9/26/01	Design Agent	HL Roach	9/25/01
(Independent Design Review)					
Cog Eng			PE		
Cog Mgr	KJ Lueck	9 26 01	QA		
QA			Safety		
Safety			Design		
Environ			Environ		
Other DE Scully		9/26/01	Other		
Rad Con					
Operations					
MC Teats		9/25/01	DEPARTMENT OF ENERGY		
			Signature or a Control Number that tracks the Approval Signature		
			ADDITIONAL		

Pipe Class 163LS piping shall be fabricated and tested per ASME B31 3 for normal fluid service Pipe Class 151 shall be fabricated and tested per ASME B31 1

Drawing Changes are as follows

Changes to drawing H-2-88989 SHT 1 is shown on page 5 The following summarizes the changes made to this drawing

- The steam supply line ¾ -60J-102-151V and all associated components are removed
- A pipe plug is shown upstream of where PSV-60J104 was removed
- The electric connection shown from TCV-60J028 to TIC-60J028 is removed
- On pipeline 1-1/2 -60J-129-151 where PSV-60J212 was removed a blind flange is shown
- The Dryer Feed Pre-heater 60J-E-3 is removed A flanged spool piece is shown where pre-heater 60J-E-3 was removed
- The steam condensate return pipeline ¾ -60J-103-151V and associated components are removed
- The cooling water lines that supplied water to the Dryer Feed Condensate Cooler 60J-E-2 are capped with a pipe union and plug

Changes to drawing H-2-88999 SHT 1 is shown on page 7 The following summarizes the changes made to this drawing

- Pipeline ¾ -60J-122-151 and associated ball valve 65A-030 is removed
- A blind flange is shown on the Condensate Tank 65A-TK-1 where pipeline ¾ -60J-122-151 connected to the tank

Changes to drawing H-2-89302 SHT 155 is shown on page 8

Changes to drawing H-2-89302 SHT 165 is shown on page 9

Changes to drawing H-2-89302 SHT 172 is shown on page 10

ECN Construction Notes Only
Do Not Incorporate Onto Drawings

1 The fabrication detail for the new spool piece is on page 11

2 The fabrication detail for blanking the condensate tank 65A TK 1 is shown on page 12

3 The fabrication detail for blanking the cooling water supply to 60J E 2 is shown on page 12

4 The fabrication detail for blanking the drain line from PSV 60J212 is shown on page 13

5 The fabrication detail for blanking steam supply to removed piping is shown on page 14

ECN No	Page
664331	4 OF 15

Ref Dwg	Sh	Rev
H-2-88989	1	~~18~~ 19

Zone: AS SHOWN

"WAS"

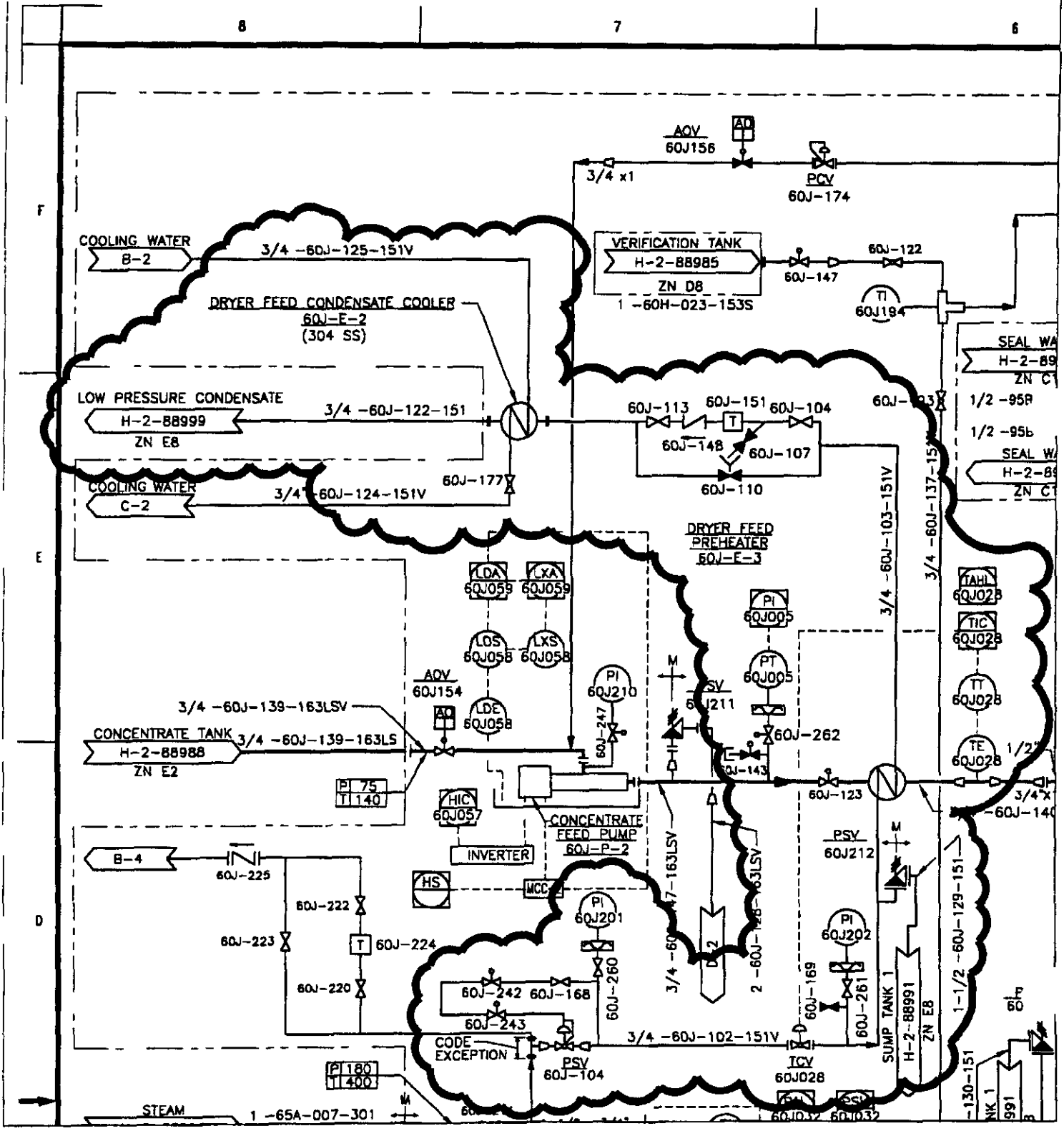

ECN No	Page
664331	5 OF 15

Ref Dwg	Sh	Rev
H-2-88989	1	18/19

Zone: AS SHOWN

9/27/01

"IS"

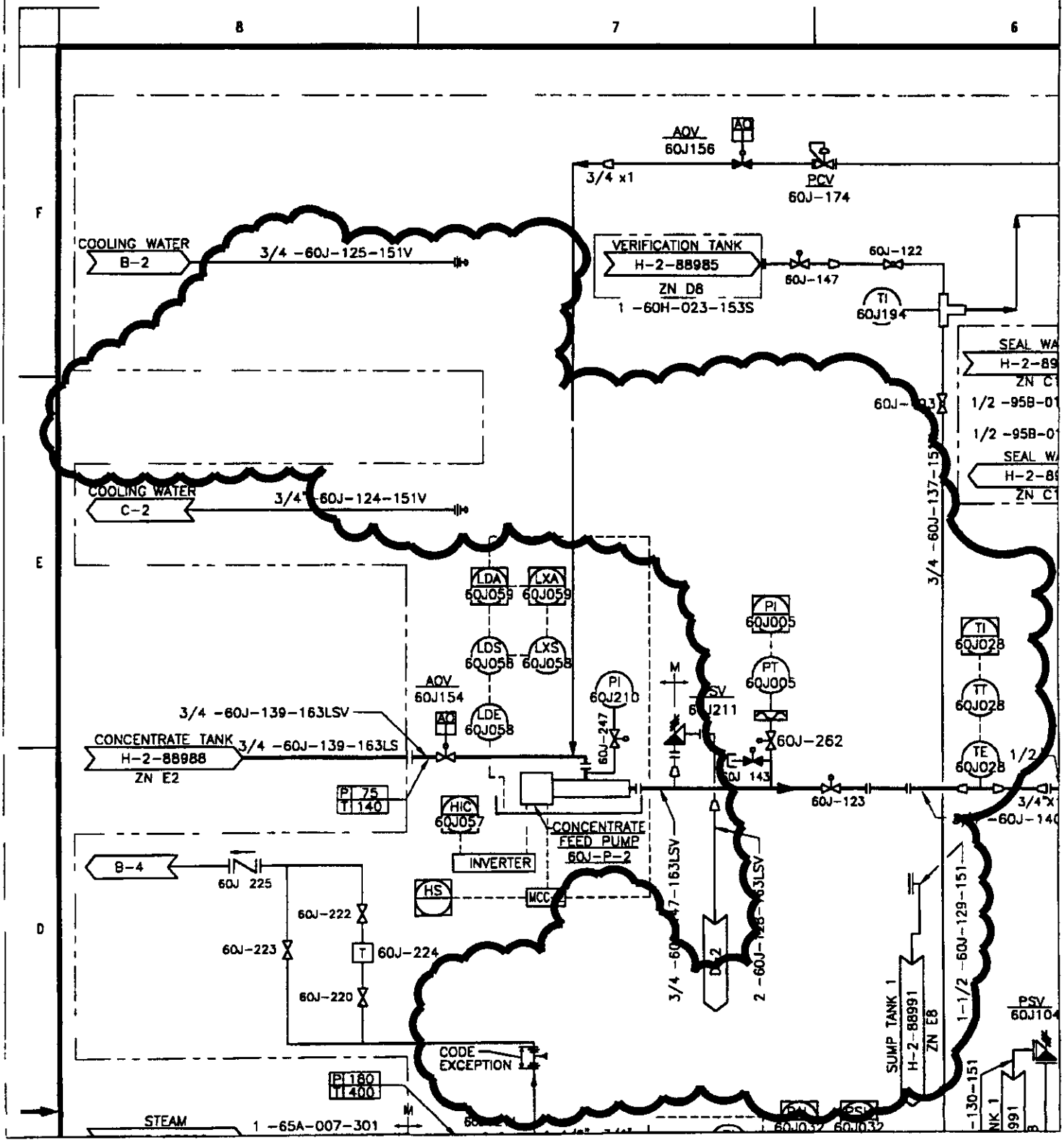

ECN No	Page
664331	6 OF 15

Ref Dwg	Sh	Rev
H-2-88999	1	~~13~~ 14

Zone: AS SHOWN

"WAS"

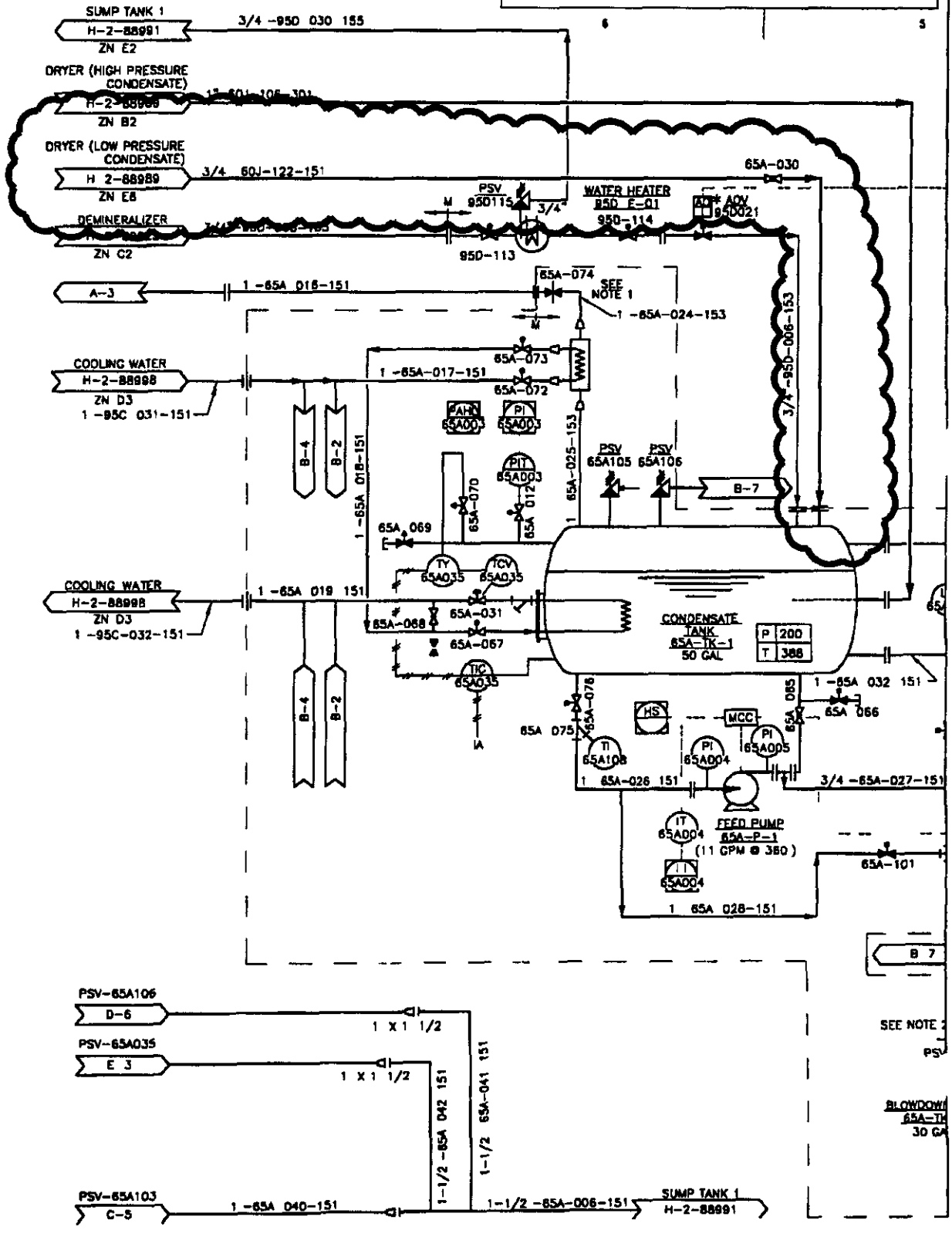

ECN No	Page
664331	7 OF 15

Ref Dwg	Sh	Rev
H-2-88999	1	~~13~~ 14

Zone: AS SHOWN

"IS"

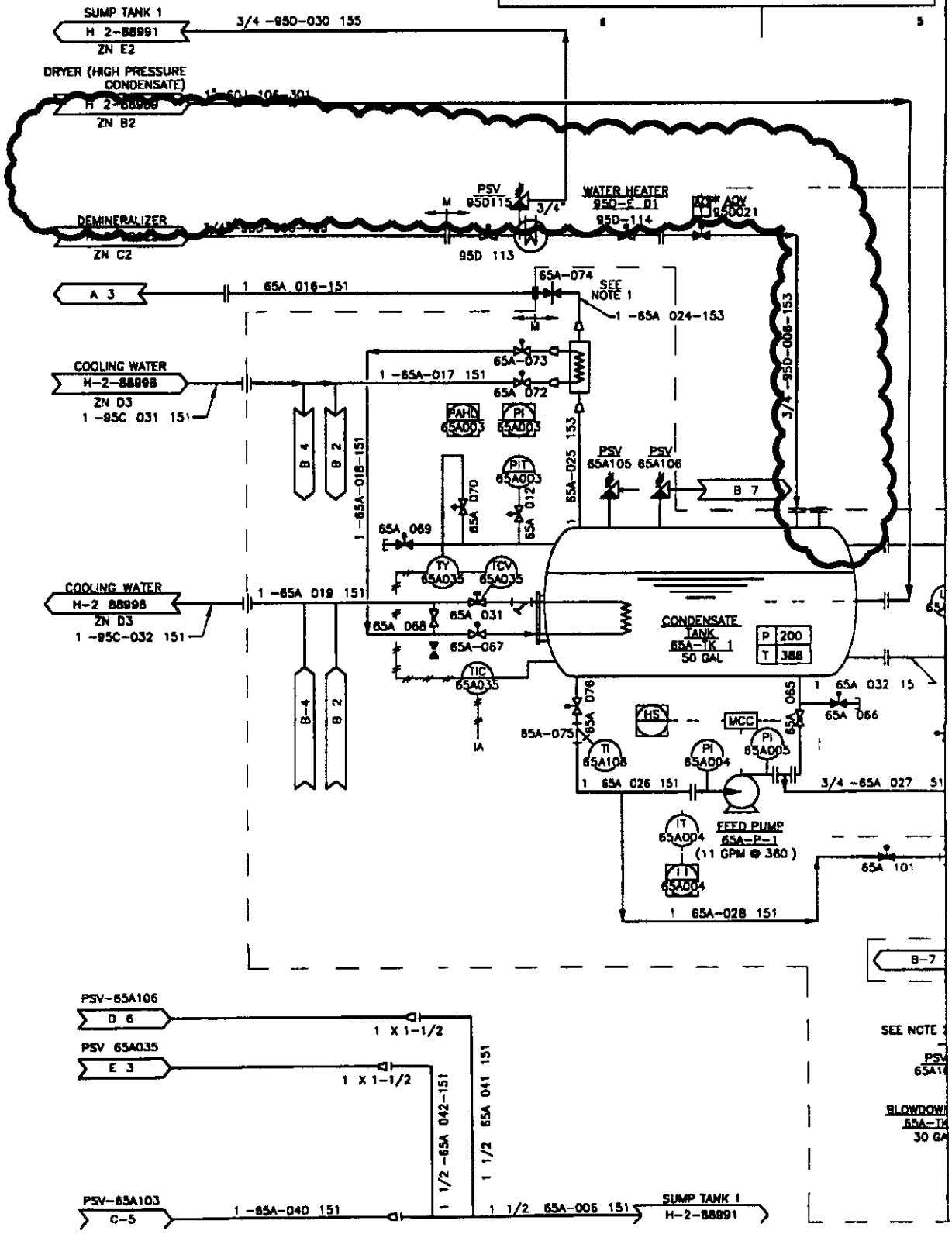

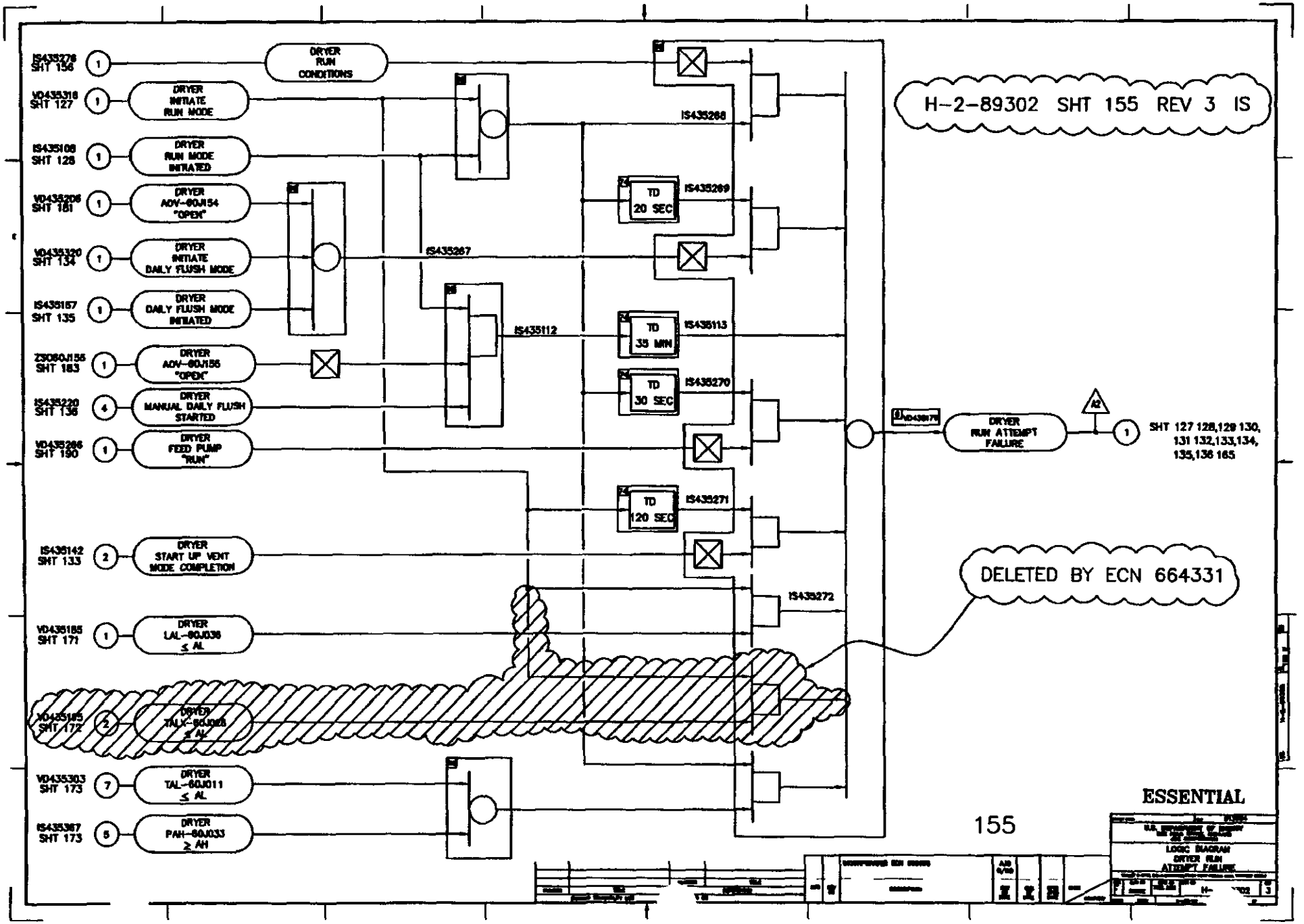
H-2-89302 SHT 155 REV 3 IS
DELETED BY ECN 664331
IS435278 SHT 156
DRYER RUN CONDITIONS
VD435318 SHT 127
DRYER INITIATE RUN MODE
IS435108 SHT 128
DRYER RUN MODE INITIATED
VD435206 SHT 181
DRYER AOV-60J154 "OPEN"
VD435320 SHT 134
DRYER INITIATE DAILY FLUSH MODE
IS435157 SHT 135
DRYER DAILY FLUSH MODE INITIATED
Z9080J156 SHT 183
DRYER AOV-60J156 "OPEN"
IS435220 SHT 136
DRYER MANUAL DAILY FLUSH STARTED
VD435286 SHT 190
DRYER FEED PUMP "RUN"
IS435142 SHT 133
DRYER START UP VENT MODE COMPLETION
VD435185 SHT 171
DRYER LAL-60J036 ≤ AL
VD435185 SHT 172
DRYER TALX-60J028 ≤ AL
VD435303 SHT 173
DRYER TAL-60J011 ≤ AL
IS435367 SHT 173
DRYER PAH-60J033 ≥ AH
IS435268
IS435269
IS435267
IS435112
IS435113
IS435270
IS435271
IS435272
TD 20 SEC
TD 35 MIN
TD 30 SEC
TD 120 SEC
DRYER RUN ATTEMPT FAILURE
A2
SHT 127 128,129 130, 131 132,133,134, 135,136 165
ESSENTIAL
155
LOGIC DIAGRAM DRYER RUN ATTEMPT FAILURE

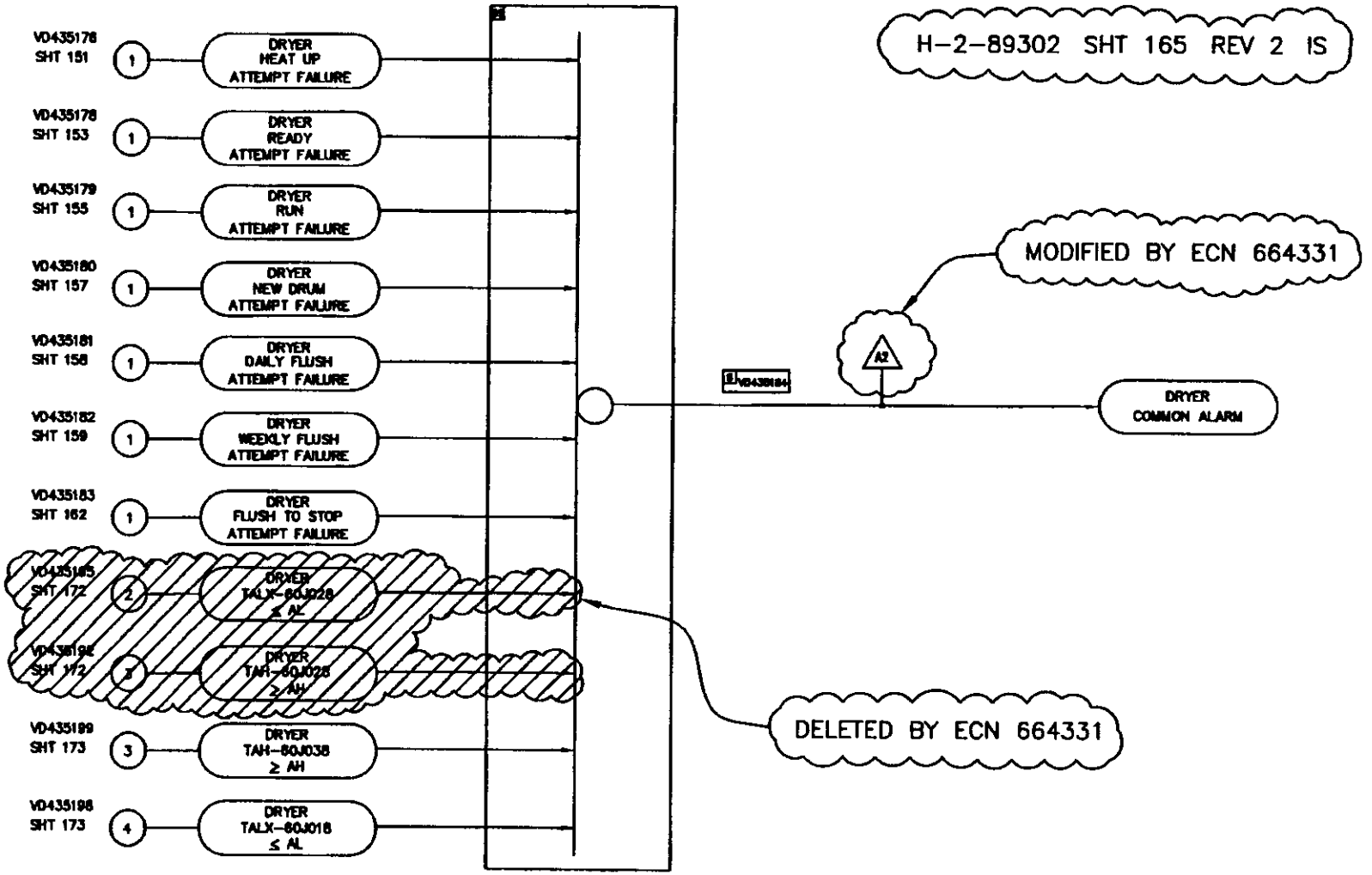
H-2-89302 SHT 165 REV 2 IS
MODIFIED BY ECN 664331
VD435178 SHT 151
DRYER HEAT UP ATTEMPT FAILURE
VD435178 SHT 153
DRYER READY ATTEMPT FAILURE
VD435179 SHT 155
DRYER RUN ATTEMPT FAILURE
VD435180 SHT 157
DRYER NEW DRUM ATTEMPT FAILURE
VD435181 SHT 158
DRYER DAILY FLUSH ATTEMPT FAILURE
VD435182 SHT 159
DRYER WEEKLY FLUSH ATTEMPT FAILURE
VD435183 SHT 162
DRYER FLUSH TO STOP ATTEMPT FAILURE
VD435185 SHT 172
DRYER TALX-60J028 ≥ AL
VD435186 SHT 172
DRYER TAH-60J028 ≥ AH
VD435189 SHT 173
DRYER TAH-60J038 ≥ AH
VD435198 SHT 173
DRYER TALX-60J018 ≤ AL
VD438184
A2
DRYER COMMON ALARM
DELETED BY ECN 664331

ESSENTIAL

ENGINEERING CHANGE NOTICE CONTINUATION SHEET	Page 10 of 15	ECN 664331
		Date 9/24/01

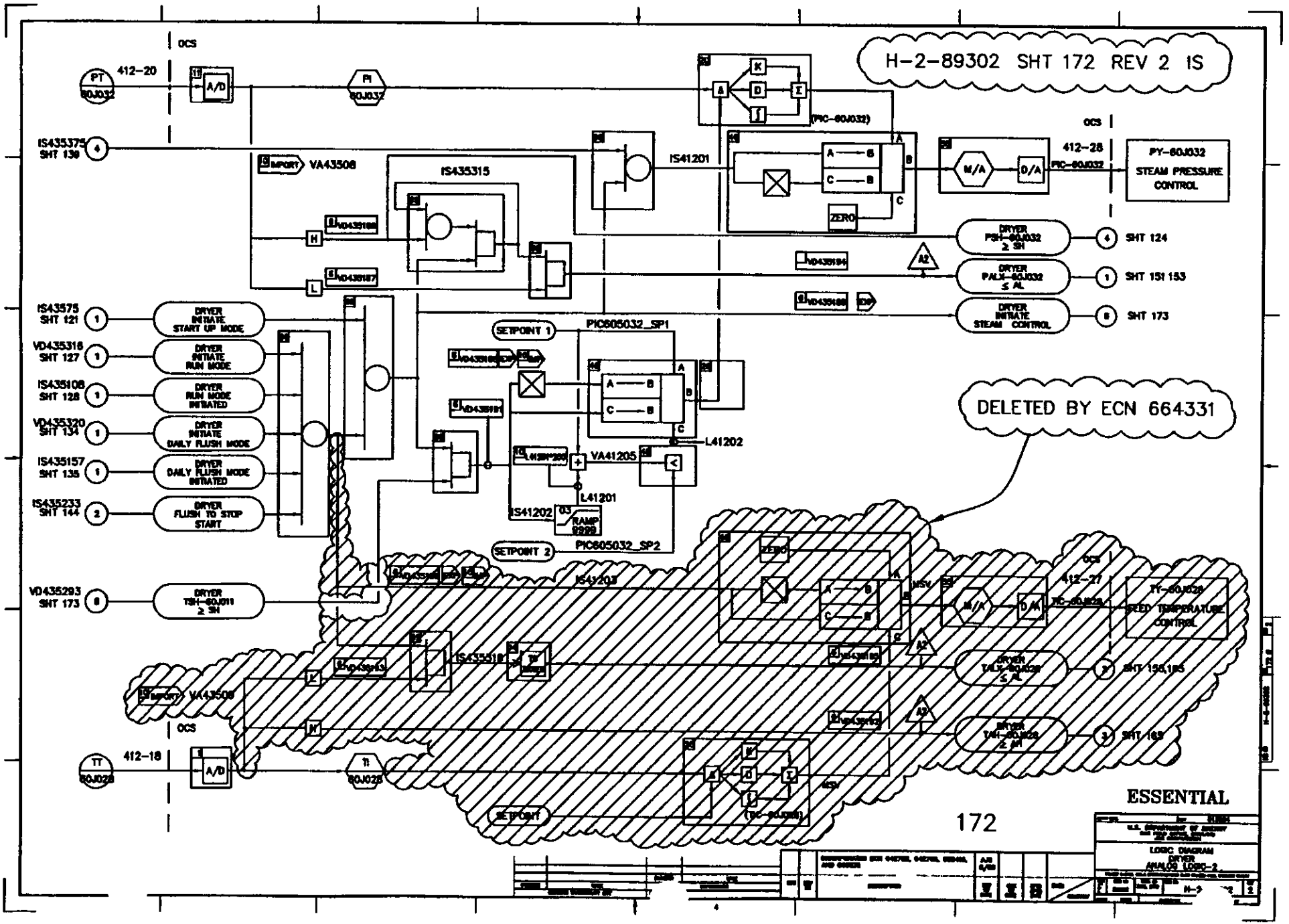

ENGINEERING CHANGE NOTICE CONTINUATION SHEET	DOCUMENT NO N/A	DATE 9/20/01	ECN 664331

ASSEMBLY SKETCH
NOT FOR DRAWING INCORPORATION

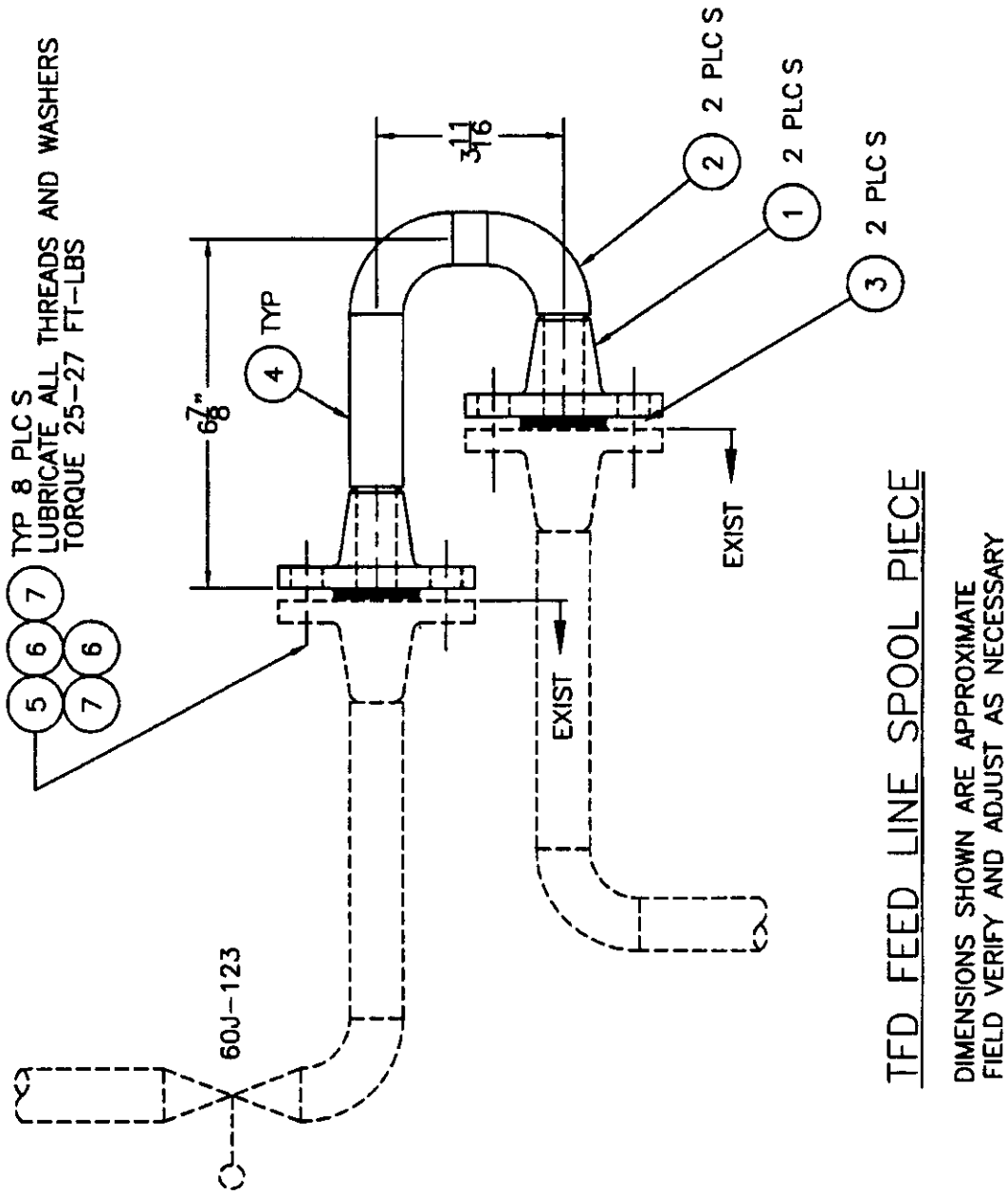

ENGINEERING CHANGE NOTICE CONTINUATION SHEET	DOCUMENT NO N/A	DATE 9/24/01	ECN 664331

ASSEMBLY SKETCH
NOT FOR DRAWING INCORPORATION

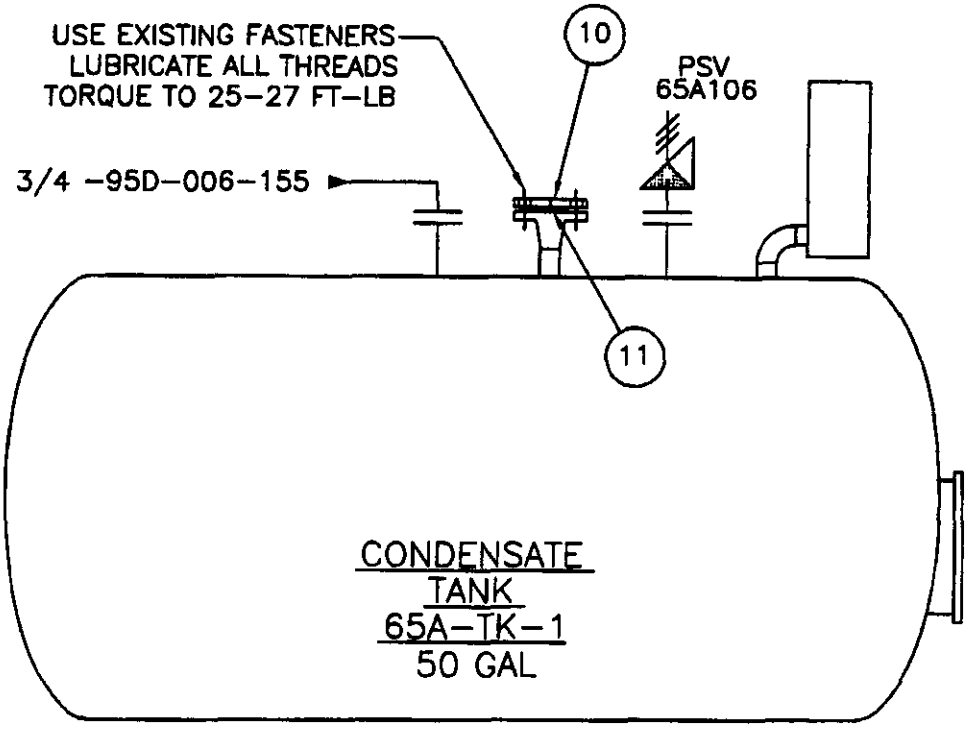

CONDENSATE RETURN BLANK

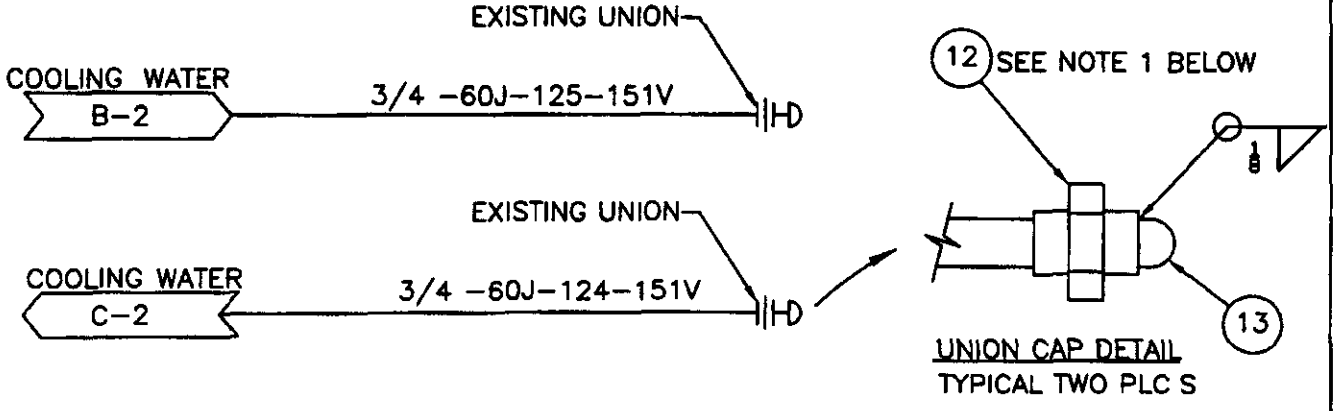

60J-E-2 COOLING WATER SUPPLY BLANK

FROM DRAWING P&ID H-2-88989 ZONE E8 AND F8

1 IF POSSIBLE MATE NEW UNION NUT GASKET AND MALE END TO UNION FEMALE END ON EXISTING PIPE

ENGINEERING CHANGE NOTICE CONTINUATION SHEET	DOCUMENT NO N/A	DATE 9/24/01	ECN 664331

ASSEMBLY SKETCH
NOT FOR DRAWING INCORPORATION

DIMENSIONS SHOWN ARE APPROXIMATE
FIELD VERIFY AND ADJUST AS NECESSARY

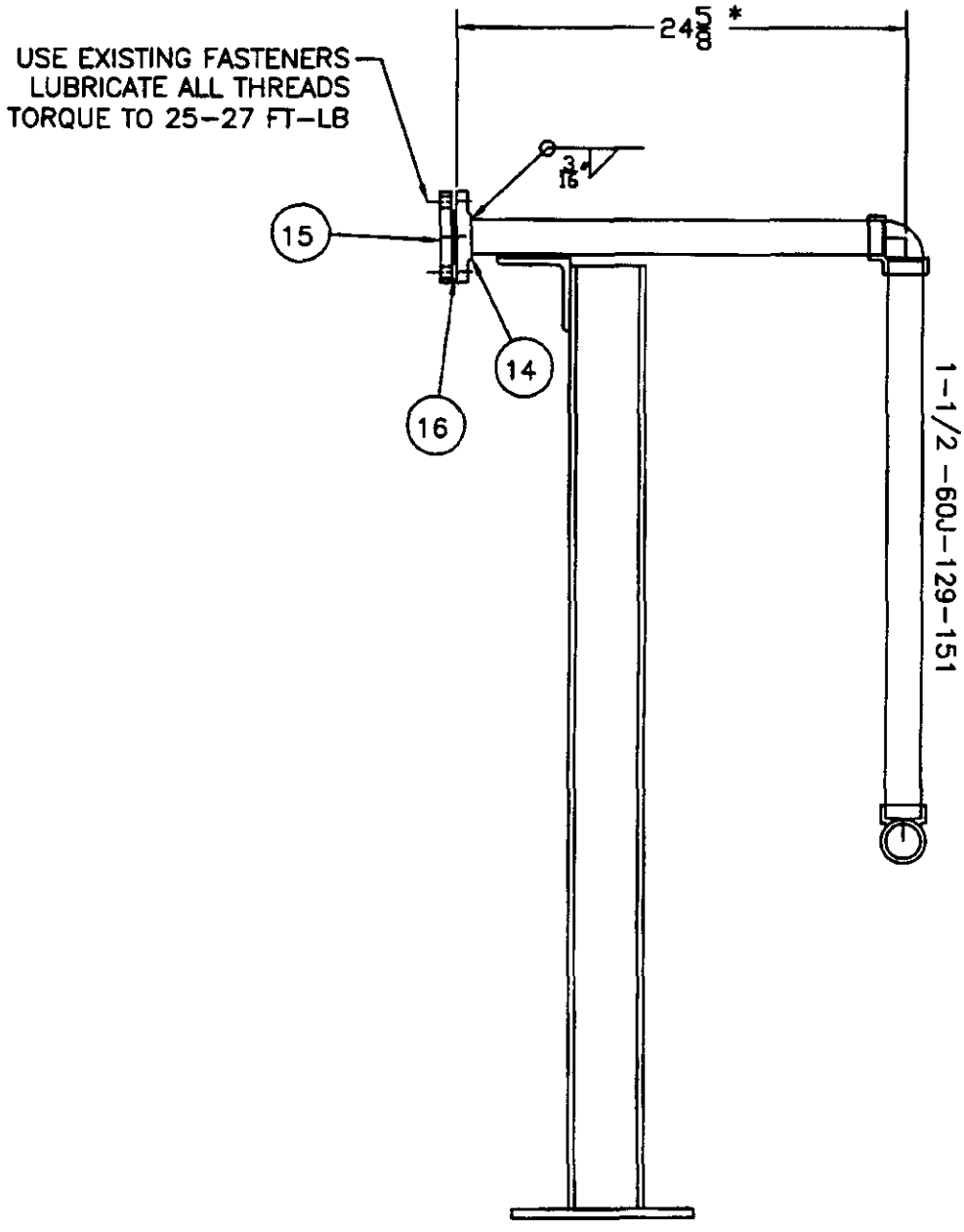

PSV-60J212 DRAIN BLANK

* CUT EXISTING PIPE TO APPROXIMATE DIMENSION SHOWN

ENGINEERING CHANGE NOTICE CONTINUATION SHEET	DOCUMENT NO N/A	DATE 9/24/01	ECN 664331

ASSEMBLY SKETCH
NOT FOR DRAWING INCORPORATION

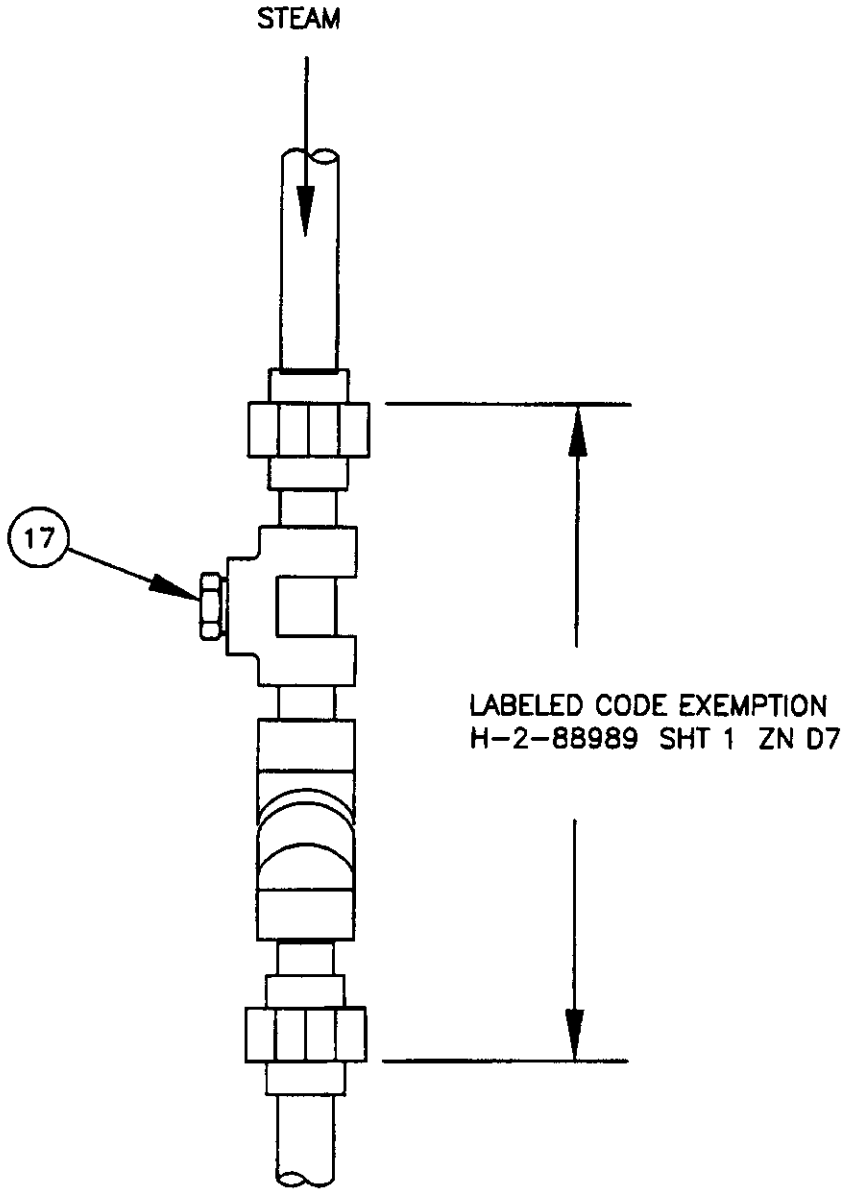

STEAM SUPPLY PLUG DETAIL

ITEM	QUANTITY	Description	Notes
		TFD FEED LINE SPOOL PIECE (PAGE 11)	
1	2	3/4 Welding Neck Flange SCH 40 Raised Face 150 # ASME B16 5 ASTM A182-F316L	
2	2	3/4 90 Elbow Seamless Butt Weld Ends SCH 40 316L SS	
3	2	3/4 Flat Ring Gasket Flexitallic Style LS (or equal) Type 316L SS/Flexicarb ASME B16 5 150#	
4	~6	3/4 SCH 40 Pipe A312 TP316L	
5	AR	Continuous Threaded Stud ½-13UNC ASTM A193 GR B7 Steel ANSI B1 1	
6	AR	Hexagon Semifinished Heavy Series Nut ½-13UNC ASTM A194 GR 2H ANSI B18 2 2	
7	AR	National Belleville Disc Spring ½	
		CONDENSATE RETURN BLANK and 60JE-2 COOLING WATER SUPPLY BLANK (PAGE 12)	
10	1	3/4 Blind Flange ASTM A105 150 LB Raised Face ANSI B16 5	
11	1	3/4 Flat Ring Gasket Flexitallic Style LS (or equal) Type 304 SS/Flexicarb ASME B16 5 150#	
12	2	3/4 Pipe Union ASTM A105 3000 # Socket Welded	
13	2	3/4 Pipe Cap Schedule 40 ASTM A234 Butt Welded	
		PSV-60J212 DRAIN BLANK (PAGE 13)	
14	1	1-1/2 Socket Weld Flange ASTM A105 ANSI std B16 5 150 # Raised Face	
15	1	1-1/2 Blind Flange ASTM A105 150 LB Raised Face ANSI B16 5	
16	1	1-1/2 Flat Ring Gasket Flexitallic Style LS (or equal) Type 304 SS/Flexicarb ASME B16 5 150#	
		STEAM SUPPLY PLUG DETAIL (PAGE 14)	
17	1	3/4" Male Pipe Plug NPT Threaded Carbon Steel	

Trademarks

Flexicarb Flexitallic Limited Corporation
Flexitallic Flexitallic Gasket Company Corporation